NATIONAL
SERVICE DATA

NATIONAL
AUTOMOTIVE
SERVICE

CAR MODELS
50
51
SERVICE DATA
FRONT SUSPENSION
UNIVERSALS

HOW AND WHERE TO LOOK FOR DATA

The Service Data is arranged by sections. Each Section has its own Tab and Special Index.

All subjects appear on the Car Model Pages. Here, Cross References direct you to the "Special Shop Notes" ahead of each Car Make and to separate Sections for the complete treatment of Individual Units, Types of Equipment, or Systems installed.

IMPORTANT: Use the Special and "Car Application" Indexes for each Section.

LOCATION OF SUBJECTS

This guide directs you to the SUB-HEADING under which the Subject appears on the Car Model Pages and to other Sections for complete treatment of Equipment Units and Systems. There are Special Indexes in each separate Section.

SUBJECT	CAR MODEL SECTION Page Sub-Heading	OTHER SECTIONS Equip. Units & Systems
ACCELERATING PUMP	Tune-Up & Carburetor	Carburetor Section
AIR CLEANER	Carb. Equipment	
ARMATURE NUMBERS	Starter & Generator	
AXLES (FRONT)	Front Suspension	Front Suspension Section
AXLES (REAR)	Rear Axle	Rear Axle & Suspension Section
AUTOMATIC ADVANCE	Tune-Up & Ignition	
AUTOMATIC CHOKE	Carb. Equipment	Carburetion Equip. Section
AUTOMATIC VALVE TAPPET TAKE-UP	Engine (Valves)	Miscellaneous Section
BATTERY	Battery	
BEARINGS	Engine & Shop Notes	
BRAKES & BOOSTERS	Brakes	Brake Section
BREAKER GAP	Tune-Up & Ignition	
BULB SPECIFICATIONS	Lighting	
*CAM ANGLE	Tune-Up & Ignition	
CAMBER	Front Suspension	Front Suspension Section
CAMSHAFT & BEARINGS	Engine & Shop Notes	
CAR WIRING DIAGRAM	Car Page	
CARBURETOR	Carburetor	Carburetor Section

*Delco-Remy Cam Angle specifications are correct with worn-in breaker arm rubbing block (plus or minus 2° to compensate for eccentricity and bearing wear). New breaker arm (with new rubbing block) should be set for 3° less Cam Angle than specified.

Auto-Lite Cam Angle specifications are correct for breaker gap specified by car manufacturer except where special gap setting specified under "Cam Angle" on car model page.

SUBJECT	CAR MODEL SECTION Page Sub-Heading	THER SECTIONS Equip. Units & Systems
CASTER	Front Suspension	Front Suspension Section
CLUTCH & CONTROLS	Clutch	Clutch & Control Section
COIL	Ignition	
COMPOUND CARBURETION	Carburetor	Carburetor Section
COMPRESSION PRESSURE	Tune-Up & Engine	
CONDENSER	Ignition	
CONNECTING RODS & BEARINGS	Engine & Shop Notes	
CONVERTIBLE TOP CONTROLS	Misc. Mechanical	Miscellaneous Section
COOLING SYSTEM	Cooling	
CRANKSHAFT & BEARINGS	Engine & Shop Notes	
CURRENT REGULATORS	Regulator	Electrical Equip. Section
CUTOUT RELAYS	Cutout Relay Or Regulator	Electrical Equip. Section
CYLINDER BORE	Engine & Shop Notes	
CYLINDER HEAD	Engine & Shop Notes	
CYLINDER SLEEVES	Engine & Shop Notes	
DIRECTION SIGNALS	Lighting	Electrical Equip. Section
DISTRIBUTOR	Ignition	Electrical Equip. Section
DRIVE-MASTER	Transmission	Transmission Section
DYNAFLOW DRIVE	Dynaflow Drive	Transmission Section
ELECTRIC HAND	Transmission	Transmission Section
ELECTROMATIC CLUTCH	Electromatic Clutch	Clutch & Control Section
ENGINE	Engine	
ENGINE MOUNTINGS	Engine & Shop Notes	
ENGINE NUMBER	Model Identification	

C NTINUED ON NEXT PAGE

LOCATION OF SUBJECTS (Continued)

SUBJECT	CAR MODEL SECTION Page Sub-Heading	THER SECTIONS Equip. Units & Systems
EN INE REM VAL	Engine & Shop Notes	
ENGINE TUNE-UP	Tune-Up	
FAST IDLE	Carb. Equipment	Carburetion Equip. Section
FIRIN RDER	Tune-Up	
FLOAT LEVEL	Tune-Up & Carburetor	Carburetor Section
FLUID DRIVES	Fluid Drive	Miscellaneous Section
FRONT END SHEET METAL	Shop Notes	
FR NT FENDERS	Shop Notes	
FR NT SUSPENSI N	Front Suspension	Front Suspension Section
FR NT WHEEL ALIGNMENT	Front Suspension	Front Suspension Section
FUEL GAUGE	Carb. Equipment	Carburetion Equip. Section
FUEL PUMP	Carb. Equipment	Carburetion Equip. Section
FUEL PUMP PRESSURE	Tune-Up	Carburetion Equip. Section
FUSES	Misc. Electrical	
GASOLINE GAUGE	Carb. Equipment	Carburetion Equip. Section
GEARSHIFTS	Transmission	Transmission Section
GENERATOR	Generator	
ENERATORS (SPECIAL)	Generator	Electrical Equip. Section
HAND BRAKE	Brakes	Brake Section
HEADLAMPS	Lighting	Electrical Equip. Section
HEAT C NTROL	Tune-Up	
HILL-HOLDER	Brakes	Brake Section
H D ALIGNMENT	Shop Notes	
H OD L CK	Shop Notes	
H RNS	Misc. Electrical	
HYDRA-MATIC DRIVE	Hydra-Matic Drive	Transmission Section
IDLE SPEED	Tune-Up & Carburetor	Carburetor Section
IGNITI N COIL	Ignition	
IGNITION SWITCH & L CK	Ignition	Electrical Equip. Section
IGNITION TIMING	Ignition Timing	
JET SPECIFICATI NS		Carburetor Section
LAMP BULB DATA	Lighting	
LIGHTING	Lighting	
LIGHTING FUSES	Misc. Electrical	
MAIN BEARINGS	Engine & Shop Notes	
MANIF LD HEAT C NTROL	Tune-Up	
N R L	Brakes	Brake Section
CTANE SELECT R	Ignition & Ignition Timing	
IL AUGE	Lubrication	Miscellaneous Section
IL PUMP	Lubrication & Shop Notes	
ILING SYSTEM	Lubrication & Shop Notes	
OIL PAN REMOVAL	Engine & Shop Notes	
RIGINAL BEARIN SIZES	Engine & Shop Notes	
RIGINAL BORE SIZES	Engine & Shop Notes	
RI INAL PIST N SIZES	Engine & Shop Notes	
VERDRIVES	Overdrives	Transmission Section
PISTONS	Engine & Shop Notes	
PIST N PINS	Engine & Shop Notes	
PISTON RINGS	Engine & Shop Notes	
PR PELLER SHAFT	Shop Notes	
RADIATOR	Shop Notes	
RADIAT R PRESSURE CAP	Cooling	
REAR AXLE & SUSPENSI N	Rear Axle	Rear Axle & Suspension Section

SUBJECT	CAR M DEL SECTION Page Sub-Heading	THER SECTI NS Equip. Units & Systems
REGULATOR	Regulator	Electrical Equip. Section
RELAY (CUTOUT)	Cutout Relay or Regulator	Electrical Equip. Section
RELAY (HORN)	Misc. Electrical	Electrical Equip. Section
RELAY (OTHERS)		Electrical Equip. Section
REPLACEMENT BEARINGS	Engine & Shop Notes	
REPLACEMENT PISTONS	Engine & Shop Notes	
REPLACEMENT PINS	Engine & Shop Notes	
REPLACEMENT RINGS	Engine & Shop Notes	
REPLACEMENT RODS	Engine & Shop Notes	
SERIAL NUMBER	Model Identification	
SELF-SHIFTING TRANS.	Self-Shifting Transmission	Transmission Section
SHOCK ABSORBERS	Shock Absorbers	Shock Absorber Section
SIMPLIMATIC TRANS.	Transmission	Transmission Section
SLOW-CLOSING THROTTLES	Carb. Equipment	Carburetion Equip. Section
SPARK PLUGS	Tune-Up	
SPRING SPECIFICATIONS		Front Suspension Section Or Rear Axle Section
STARTER & CONTROLS	Starter	Electrical Equip. Section
STEERING GEAR	Steering Gear	Steering Gear Section
SUPERCHARGER	Supercharger	Miscellaneous Section
SWITCHES (IGNITION)	Ignition	Electrical Equip. Section
SWITCHES (LIGHTING)	Lighting	
SWITCHES (STARTING)	Starter	Electrical Equip. Section
TAPPET CLEARANCE	Tune-Up & Valve Timing	
TEMPERATURE GAUGE	Cooling	Miscellaneous Section
THERMOSTAT	Cooling	
THERMOSTATIC RELAYS	Misc. Electrical	
THROTTLE CRACKER	Carb. Equipment	Carburetion Equip. Section
THROTTLE GUARD	Carb. Equipment	Carburetion Equip. Section
TIGHTENING SPECS.	Shop Notes	
TIMING CHAIN	Engine (Camshaft)	
TIMING GEARS	Engine (Camshaft)	
TOE IN	Front Suspension	Front Suspension Section
TOPS (POWER OPERATED)		Miscellaneous Section
TORQUE WRENCH READINGS	Shop Notes	
TRANSMISSION & CONTROLS	Transmission	Transmission Section
TUNE-UP	Tune-Up	
TWO-SPEED REAR AXLES	Rear Axle	Rear Axle & Suspension Section
UNIVERSAL JOINT	Universals	Universals Section
VACAMATIC TRANSMISSION	Transmission	Transmission Section
VACUMOTIVE DRIVE	Vacumotive Drive	Clutch & Control Section
VACUUM ADVANCE	Ignition	
VACUUM READING	Tune-Up	
VALVES	Engine	
VALVE LIFTERS	Engine	Miscellaneous Section
VALVE SPRINGS	Engine	
VALVE TIMING	Valve Timing	
VIBRATION DAMPENER	Shop Notes	
VOLTAGE REGULATOR	Regulator	Electrical Equip. Section
WATER PUMP	Cooling	Water Pump Section
WIND W RE ULAT RS	Misc. Mechanical	Miscellaneous Section
WINDSHIELD WIPERS	Misc. Mechanical	Miscellaneous Section
WIRIN DIA RAM	Car Model Page	

CAR MODEL INDEX

Model		Page
AMERICAR		
All Models		See Willys
AUBURN		
1936-37	654	10
1936-37	852, 852 Supercharged	13
AUSTIN		
All Models		See Bantam
BANTAM		
1937-39	60, 63	16
1940-41	65 Super Four	16
BUICK	SPECIAL SHOP NOTES	19
1936	40	26
1936	60, 80, 90	30
1937	37-40 Special 8	34
1937	37-60, 37-80, 37-90	38
1938	38-40, 60, 80, 90	42
1939	39-40, 60, 80, 90	46
1940	40-40, 50, 60, 70, 80, 90	50
1941	41-40, 40A, 50, 60, 70, 90	54
1942	42-40A, 40B, 50, 60, 70, 90	58
1946	46-40, 50, 70	62
1947	47-40, 50, 70	62
1948	48-40, 50, 70	62
CADILLAC	SPECIAL SHOP NOTES	67
1936	Series 60, 70, 75 V-8	73
1936	Series 80, 85 V-12	80
1936	Series 90 V-16	84
1937	37-60, 65, 70, 75, V8	76
1937	37-85 V12	80
1937	37-90 V16	84
1938	38-60, 60S, 65, 75 V8	88
1938	38-90 V16	96
1939	39-60S, 61, 75 V8	92
1939	39-90 V16	96
1940	40-60S, 62, 72, 75 V8	100
1940	40-90 V16	104
1941	41-60S, 61, 62, 63, 67, 75 V8	108
1942	42-60S, 61, 62, 63, 67, 75 V8	108
1946	46-60S, 61, 62, 75 V8	112
1947	47-60S, 61, 62, 75 V8	112
1948	48-60S, 61, 62, 75, 76 Comm'l. V8	112
CHEVROLET	SPECIAL SHOP NOTES	117
1936	FA, FC, FD Pass. Cars	127
1936	FB, R Trucks	127
1937	GA, GB Pass. Cars	131
1937	GC, S Trucks	131
1938	HA Mstr. Del., HB Mstr.	135
1938	HC, HD, HE, T Trucks	135
1939	JA Mstr. Del., JB Mstr. '85'	140
1939	JC, JD, JE, V Trucks	140
CHEVROLET (Continued)		
1940	KA, KB, KH Pass. Cars	145
1940	KC, KD, KE, W Trucks	145
1941	AG, AH Passenger Cars	150
1941	AJ, AK, AL, AN, Y Comm'l. & Truck	150
1942	BG, BH Passenger Cars	150
1942	BJ,BK,BL,BN,M Comm'l. & Truck	150
1946	DJ, DK Passenger Cars	156
1946	All Comm'l & Truck Models	162
1947	EJ, EK Passenger Cars	156
1947	All Comm'l & Truck Models	162
1948	FJ, FK Passenger Cars	156
1948	All Comm'l & Truck Models	162
CHRYSLER	SPECIAL SHOP NOTES	169
1936	C-7 Airstream 6	175
1936	C-8 Airstream 8	178
1936	C-9, C-10, C-11 Airflow	181
1937	C16 Royal	184
1937	C14 Imperial, C15 Cust. Imp.	187
1937	C17 Airflow	191
1938	C18 Royal	194
1938	C19 Imperial, C20 Cust. Imp.	198
1939	C22 Royal, Royal Windsor	202
1939	C23 Eight, C24 Cust. Imperial	206
1940	C25 Royal & Windsor	210
1940	C26 Eight, C27 Cust. Imperial	214
1941	C28 Royal & Windsor	218
1941	C30K Saratoga, C30N New Yorker	222
1941	C33 Crown Imperial	222
1942	C34S Royal, C34W Windsor	218
1942	C36K Saratoga, C36N New Yorker	222
1942	C37 Crown Imperial	222
1946-47	C38S Royal, C38W Windsor	228
1946-47	C38W Town & Country Six	228
1946-47	C39K Saratoga, C39N New Yorker	232
1946-47	C39 Town & Country Eight	232
1946-47	C40 Crown Imperial	232
1948	C38S Royal & C38W Windsor	228
1948	C38W Town & Country Six	228
1948	C39K Saratoga, C39N New Yorker	232
1948	C39N Town & Country Eight	232
1948	C40 Crown Imperial	232
CORD		
1936	810	238
1937	812 Std. & Schgd.	238
CROSLEY	SPECIAL SHOP NOTES	242
1939-40	A	244
1941	CB41	244
1942	CB42	244
1947	CC	247
1948	CC	247
DE SOTO	SPECIAL SHOP N TES	169
1936	S1 Airstream Six	252
1936	S2 Airflow Six	252
1937	S3	256
1938	S5	256
1939	S6	260
1940	S7 Deluxe & Custom	260
1941	S8 Deluxe & Custom	265
1942	S10S Deluxe, S10C Custom	265
1946-47	S11S Deluxe, S11C Custom	270
1948	S11S Deluxe & S11C Custom	270
DODGE	SPECIAL SHOP NOTES	169
1936	D2 Six	274
1937	D5	278
1938	D8	278
1939	D11 Special & Deluxe	282
1940	D14 Deluxe, D17 Special	286
1941	D19 Deluxe & Custom	286
1942	D22S Deluxe, D22C Custom	290
1946-47	D24 Deluxe & Custom	294
1948	D24 Deluxe & Custom	294
DUESENBERG		
1936-37	J, SJ Supercharged	298
FORD	SPECIAL SHOP NOTES	301
1936	68 V8 '85' Pass. Car	309
1936	67, 51 V8 '85' Trucks	309
1937	74 V8 '60' Pass. Car	313
1937	78 V8 '85' Pass. Car	317
1937	73, 75 V8 '60' Trucks	313
1937	77, 79 V8 '85' Trucks	317
1938	82A V8 '60' Pass. Car	313
1938	81A V8 '85' Pass. Car	317
1938	Trucks (All '60' Models)	313
1938	Trucks (All '85' Models)	317
1939	922A Pass. Car, 922C Comm. '60'	322
1939	91A Pass. Car Std. & Deluxe '85'	326
1939	91C Comm. '85', 99C Comm. '95'	326
1939	Trucks (all models)	330
1940	022A Pass. Car, 022C Comm. '60'	322
1940	01A Pass. Car Std. & Deluxe '85'	326
1940	01C Comm. '85', 09C Comm. '95'	326
1940	Trucks (all models)	330
1941	1GA 6 Cyl. Pass. Cars	340
1941	11A V8 '90' Pass. Cars	336
1941	11C, 1NC, 19C Commercial	344
1941	1ND, 1NY 4 Cyl. Truck	344
1941	Trucks (All 6 & V8 Models)	344
1942	2GA 6 Cyl. Pass. Cars	340
1942	21A V8 '90' Pass. Cars	336
1942	Commercial ('4', '6', 'V8' Models)	344
1942	Trucks ('4', '6', 'V8' Models)	344

CONTINUED N NEXT PAGE

CAR MODEL INDEX

Model		Page
FORD (Continued)		
1944-45	Trucks (V8 '100' Models)	349
1942-45	Jeep Army Model (GPW)	See Jeep
1946-47	6GA Six Cyl. Pass. Cars	354
1946-47	69A V8 Passenger Cars	358
1946-47	All Comm'l & Trucks (6 Cyl.)	349
1946-47	All Comm'l & Trucks (V8 100)	349
1948	Six Cyl. Pass. Cars	354
1948	V8 Passenger Cars	358
1948	F-1, 2, 3, 4, 5, 6 Trucks (6 Cyl.)	362
1948	F-1, 2, 3, 4, 5, 6 Trucks (V8)	362
1949	8HA Six Cyl. Pass. Cars	366
1949	8BA V8 Passenger Cars	370
FRAZER	SPECIAL SHOP NOTES	374
1947	F-47, Manhattan F-47C	376
1948	F-485, Manhattan F-486	376
GRAHAM	SPECIAL SHOP NOTES	380
1936	80, 80A Crus. Six	381
1936	90, 90-A Caval. Six	384
1936	110 Supercharged Six	384
1937	85 Crusader	381
1937	95 Cavalier	384
1937	116 & 120 Supercharger	384
1938-39	96 Standard & Special	388
1938-39	97 Supercharger	388
1940	107 Supercharger, 108	388
1940-41	109 Hollywood Supercharger	391
1941	113 Hollywood	391
HUDSON	SPECIAL SHOP NOTES	394
1936	63 Six	400
1936	64, 65, 66, 67 Eight	403
1937	73 Six	406
1937	74, 75, 76, 77 Eight	410
1938	89 '112' Model	414
1938	83 Six	406
1938	84, 85, 87 Eight	410
1939	90 '112', 90 Business Cars	418
1939	91, 92, 93 Sixes	422
1939	98 Business Cars	422
1939	95, 97 Eight	427
1940	40P Del., 40T Trav'lr, 40 Business	418
1940	41, 43 Sixes; 48 Business	422
1940	44, 45, 47 Eights	427
1941	10, 11, 12 Sixes; 10, 18 Business Cars	432
1941	14, 15, 17 Eight	438
1942	Six 20T, Deluxe Six 20P	432
1942	Super Six 21, Commodore 22	432
1942	Six, Business 20C, Big Boy 28	432
1942	Eight 24, 25, 27	438
1946	Super Six 51, Commodore Six 52	444
1946	Six Business Cars 58	444
1946	Super Eight 53, Commodore 54	448
HUDSON (Continued)		
1947	Super Six 171, Commodore 172	444
1947	Six Business Cars 178	444
1947	Super Eight 173, Commodore 174	448
1948	Super Six 481, Commodore 482	452
1948	Super Eight 483, Commodore 484	456
HUPMOBILE		
1936	618-G Six	460
1936	621-N Eight	464
1938	E-822 Six	460
1938	H-825 Eight	464
1939	R Skylark	460
1939	922-E Senior Six	460
1939	925-H Eight	464
1940	R Skylark	460
JEEP		
1942-45	Ford & Willys (Army Models)	468
1946	Willys Civilian Model	See Willys
KAISER	SPECIAL SHOP NOTES	374
1947	K-100 Special, K-101 Custom	474
1948	K-481 Kaiser, K-482 Custom	474
LAFAYETTE		
All Models		See Nash-Lafayette
LA SALLE	SPECIAL SHOP NOTES	67
1936	36-50	478
1937	37-50 V8	482
1938	38-50 V8	482
1939	39-50 V8	486
1940	40-50, 52 V8	490
LINCOLN	SPECIAL SHOP NOTES	494
1936-40	V-12	498
1936	H Zephyr	502
1937	HB Zephyr	502
1938	86H Zephyr	506
1939	96H Zephyr	506
1940	06H Zephyr & Cont'l	510
1941	16H Zephyr & Continental	510
1941	168H Custom	510
1942	26H Zephyr & Continental	514
1942	268H Custom	514
1946-47	66H Lincoln & Continental	518
1948	66H Lincoln & Continental	518
1949	9EL Lincoln	522
1949	9EH Cosmopolitan	522
MERCURY	1939-48 SPECIAL SHOP NOTES	301
	1949 SPECIAL SHOP NOTES	526
1939	99A, '95' V8	527
1940	09A, '95' V8	527
1941	19A 'V8'	532
1942	29A 'V8'	532
MERCURY (Continued)		
1946-47	69M 'V8'	536
1948	69M 'V8'	536
1949	9CM V8	540
NASH	SPECIAL SHOP NOTES	544
1936	3620 Ambassador Six	551
1936	3640-A, '400' Six	548
1936	3680 Ambassador Eight	554
1937	3720 Ambassador Six	556
1937	3780 Ambassador Eight	560
1938	3820 Ambassador Six	556
1938	3880 Ambassador Eight	560
1939	3920 Ambassador Six	564
1939	3980 Ambassador Eight	568
1940	4020 Ambassador Six	572
1940	4080 Ambassador Eight	576
1941	4140 '600' Six	580
1941	4160 Ambassador Six	584
1941	4180 Ambassador Eight	588
1942	4240 '600' Six	592
1942	4260 Ambassador Six	596
1942	4280 Ambassador Eight	600
1946	4640 '600' Six	604
1946	4660 Ambassador Six	609
1947	4740 '600' Six	604
1947	4760 Ambassador Six	609
1948	4840 '600' Six	604
1948	4860 Ambassador Six	609
NASH-LAFAYETTE	SPECIAL SHOP NOTES	544
1936	3610	614
1937	3710	617
1938	3810	617
1939	3910 Special & Deluxe	621
1940	4010	625
Later Models		See Nash
OLDSMOBILE	SPECIAL SHOP NOTES	628
1936	F-36 Six	632
1936	L-36 Eight	636
1937	F-37 Six	640
1937	L-37 Eight	644
1938	F-38 Six	640
1938	L-38 Eight	644
1939	F-39 '60', G-39 '70' Sixes	648
1939	L-39 '80' Eight	652
1940	F-40 '60', G-40 '70' Sixes	656
1940	L-40 '90' Cust. Cruiser Eight	660
1941	66, 76, 96 Sixes	664
1941	68, 78, 98 Eights	669
1942	66, 76 Sixes	664
1942	68, 78, 98 Eights	669
1946	66 Special Six	674
1946	76 Dynamic Cruiser Six	674

MODEL IDENTIFICATION

SERIAL NUMBER:—On right hand side of cowl under engine hood. Letter following serial number indicates body type. First No. 654-6501.

ENGINE NUMBER:—Stamped on front left hand upper half of crankcase. First number 6601 (654).

TUNE-UP

COMPRESSION:—Ratio—6.2-1. Std. aluminum head.
Pressure—Approximately 105 lbs. at cranking speed.

VACUUM READING:—Gauge should show steady reading of 20" with engine idling at 7-8 M.P.H.

FIRING ORDER: 1-5-3-6-2-4. See diagram.

SPARK PLUGS: Champion Type J-6. 14 mm. Metric. Gaps—.025".

IGNITION: See Coil, Condenser, and Distributor.
Breaker Gap—.018-.020" (after 1000 miles).
Cam Angle—Closed 38° (distr. °).
Automatic Advance—10° at 1500 RPM (distr.).

IGNITION TIMING: See Ignition Timing.
Standard Setting—3° BTDC. Flywheel mark '/' (1 tooth before DC mark '1/6') at indicator.

CARBURETION: See Carburetor & Carb. Equipment.
Idle Setting—Idle adjusting screw approximately midway between 'miss' and 'roll' points. Idle speed 7-8 MPH.
Float Level—Fuel level 5/8" below top edge of float bowl.
Accelerating Pump—Inner hole (Summer), outer hole (Winter).
Fuel Pump Pressure: 3½ lbs. maximum.

VALVES: See Valve Timing.
Tappet Clearance—.008-.010" all valves—running clearance with engine hot.

STARTING: See Battery, Starter, and Generator.

IGNITION

Ignition Switch:—Oakes-Hershey co-incidental ignition switch and steering post lock. Switch used on cars with Startix has two 'on' positions. Lower or 'STX' position of lever is normal running position with Startix operative. Upper or 'IGN' position should be used to check ignition or whenever automatic cranking is not desired.

COIL: Auto-Lite IG-4065. On right side of engine.
Ignition Current—2.5 amperes idling, 4.5-5.5 amperes at 6.0 volts with engine stopped.

CONDENSER: Auto-Lite No. IGB-1025.
Capacity—.20-.25 microfarads.

DISTRIBUTOR: Auto-Lite IGB-4318. Single breaker, 6 lobe cam, full automatic advance type.
Breaker Gap—.020-.024" (first 1000 miles with new points), .018-.020" (after first 1000 miles).
Cam Angle or Dwell—Closed 38°, Open 22° (distributor).
Breaker Arm Spring Tension—17-20 ozs.

Automatic Advance

Distributor Degrees	R.P.M.	Engine Degrees	R.P.M.
Start	300	0	600
2	540	4	1080
4	780	8	1560
6	1020	12	2040
8	1260	16	2520
10	1500	20	3000

Distributor Removal:—Mounted on cylinder head. To remove, take out hold-down screw in advance arm, lift distributor out.

IGNITION TIMING

Std. Setting	Flywheel Deg.	Piston Position
All engines	3° BTDC	.0042" BTDC

To Set Timing—With #1 piston on compression, turn engine over until piston is 3° before top dead center, stop when flywheel mark '/' lines up with indicator in inspection hole in flywheel housing. This mark is 3° or approximately 1 tooth before top dead center mark '1/6'. Then loosen advance arm clamp bolt, rotate distributor until contacts begin to open, tighten clamp bolt, see that rotor is opposite #1 segment in distributor cap.

CARBURETOR

Stromberg Model EX-22. 1¼" Single Barrel, Downdraft type with manual choke control.
For complete data, refer to Carburetor Index.
NOTE—Do not adjust carburetor until engine is warmed up so that engine will idle at hot or slow idling speed.
Idle Adjustment—With engine hot and choke valve fully released (choke button in against dash), set throttle stopscrew to idle engine at 7-8 M.P.H. Turn idle adjusting screw in until engine begins to miss, then turn screw out until engine begins to roll, finally turn screw in slowly until engine fires

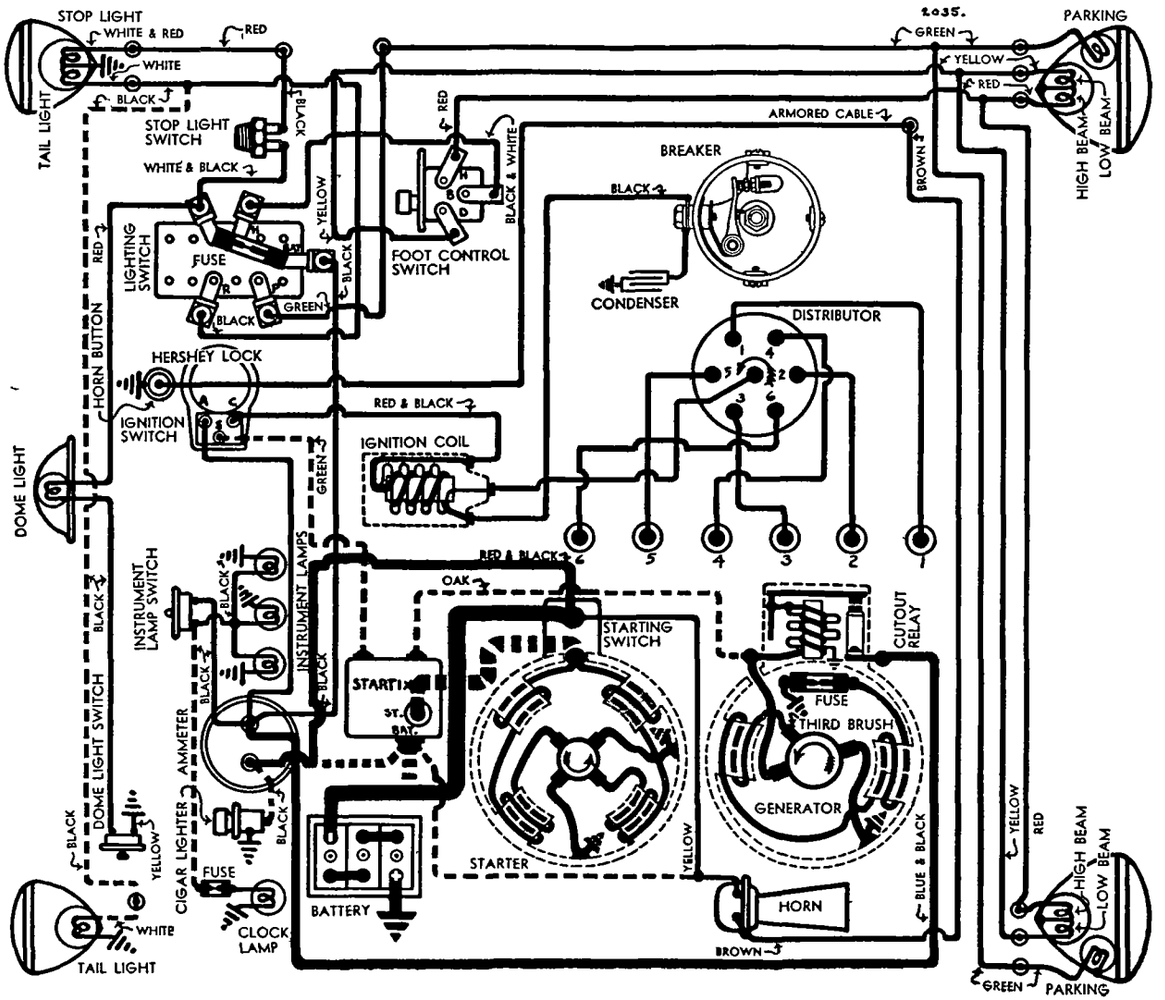

smoothly. Readjust throttle stopscrew for correct idling speed.

Accelerating Pump Setting—Pump lever has two holes for pump link engagement. Set as follows: Outer hole (Max. stroke)—Winter temperatures. Inner Hole (Min. stroke)—Summer temperatures.

Throttle Cracking:—No adjustment required.

CARB. EQUIPMENT

Air Cleaner:—AC. #1525997 oil-wetted type standard, heavy duty oil bath type optional.

Fuel Pump:—AC. Type B #1521814. Diaphragm type. *For complete data, refer to Carburetion Equip. Index.*

Gasoline Gauge:—K-S Telegauge hydrostatic type. K-S Part No. 5297 (dash unit), 5310 (tank unit). See article in Carburetion Section. *For complete data, refer to Carburetion Equip. Index.*

BATTERY

BATTERY:—U.S.L. Type RN-15A. 6 volt, 90 ampere hour capacity (20 hour rate).

Starting Capacity—115 amperes for 20 minutes.

Zero Capacity—300 amperes for 2.9 minutes.

Grounded Terminal—Positive (+) terminal.

Location—Under right hand front seat.

STARTER

Auto-Lite MAJ-4032 (Std.), MAJ-4035 (RHD). MAJ-4033 (with Startix). Armature No. MAJ-2006.

Drive—Inboard Bendix Type R11FX-10.

Cranking Engine—155 R.P.M. 170 amperes at 5.2 volts.

Rotation—Counter-clockwise at commutator end.

Brush Spring Tension—44-56 ozs. (MAJ-4032, 33), 31-42 ozs. (MAJ-4035) with new brushes.

Performance Data

Torque	R.P.M.	Volts	Amperes
0 ft. lbs.	4100	5.5	57
.3 "	2500	5.5	100
2.25 "	1450	5.0	200
4.6 "	960	4.5	300
7.3 "	575	4.0	400
10.3 "	225	3.5	500
12.0 "	Lock	3.0	550
17.0 "	Lock	4.0	750

Removal:—Starter flange mounted on right front face of flywheel housing. To remove, take out 3 flange mounting screws.

Starting Switch:—(MAJ-4032,35) SW-3737S. Mounted on starter and operated through pull cable by button on instrument panel. Pull required to close switch contacts must be 2.3 lbs. minimum measured at end of lever.

(MAJ-4033). Startix Type D. Automatic starting controlled by ignition switch. See article in Equipment Section.

For complete data, refer to Electrical Equipment Index.

GENERATOR

Auto-Lite Model GAR-4603-5. Armature GAR-2077. Air-cooled. Third brush control type.

Charging Rate Adjustment—Take off commutator cover band. Shift third brush by hand counter-clockwise to increase or clockwise to decrease charging rate. Brush held in position by friction.

Standard Charging Rate Setting—20 amperes (cold), 16 amperes (hot), 2300 R.P.M. or 25 M.P.H.

Performance Data

Cold			Hot		
Amperes	Volts	R.P.M.	Amperes	Volts	R.P.M.
0	6.4	720	0	6.4	760
4	6.8	860	4	6.8	925
8	7.25	1000	8	7.25	1125
12	7.7	1160	12	7.7	1350
16	8.1	1360	16	8.1	1680
20	8.5	1660	19.2	8.4	2600
22.4	8.8	2300			

Rotation—Counter-clockwise at commutator end.

Brush Spring Tension—24-36 ozs. (new brushes).

Field Current—3.70-4.10 amperes at 6.0 volts.

Field Fuse—5 ampere under cover on generator field frame near cutout relay.

Motoring Current—4.65-5.15 amperes at 6.0 volts.

Removal:—Pivot mounted at right front of engine. To remove, take out pivot bolts and clamp bolt.

Belt Adjustment:—Adjusted in usual mannner by swinging generator out. Belt tension should be just sufficient to drive generator and water pump without slipping.

CUTOUT RELAY

Auto-Lite Model CB-4021. Mounted on generator. *For complete data, refer to Electrical Equipment Index.*

Cuts In—6.5-7.25 volts, 800 R.P.M.

Cuts Out—.5-2.5 ampere discharge current.

Contact Gap—.015-.045".

Air Gap—.010-.030" with contacts closed.

LIGHTING

LIGHTING (654):—Headlamps. Lamps aimed straight ahead. Upper and lower beams controlled by foot selector switch on toeboard.

Switches

Lighting—Soreng-Manegold Model A-5640-A.

Foot Selector—Delco-Remy.

Stop Light—Motometer No. 58012 hydraulic type.

Bulb Specifications

Position	Candlepower	Mazda No.
Headlamps	32-32	2330
Parking, Instrmt., Clock	3	63
Stop and Tail	21-3	1158
Dome	6	81

MISC. ELECTRICAL

FUSES:—Lighting—20 ampere on lighting switch.

Clock Lamp—10 ampere on clock.

Generator Field—5 ampere on generator.

HORNS:—Schwarze Vibrator type. Current draw 6 amp.

ENGINE

ENGINE SPECIFICATIONS:—Lycoming Model WF. Six cylinder 'L' head type.

Bore—3 1/16". **Stroke**—4¾".

Displacement—210 cubic inches.

Rated Horsepower—22.5 (SAE).

Developed Horsepower—85 at 3500 R.P.M.

Compression Ratio and Pressure—6.2-1 Std. aluminum head. No optional ratios. Pressure approximately 105 lbs. at cranking speed.

Vacuum Reading—Gauge should show steady reading of approx. 20" with engine idling at 7-8 M.P.H.

PISTONS:—Nelson Bohnalite, aluminum alloy, split skirt, Invar Strut type.

Length—3¾".

Weight—16 ozs. (stripped), 21.92 ozs. (with rings and pin).

Removal—Pistons and rods removed from below.

Clearance—Top .020". Skirt .0015". See Fitting Pistons.

Replacement Pistons:—Pistons furnished .003" and .005" oversize.

Fitting New Pistons:—Use .0015" feeler stock ½" wide. Pull required to withdraw feeler from between piston and cylinder wall on side opposite slot must be between 5-10 lbs.

Installing Pistons:—Slot should be toward left or camshaft side of engine.

PISTON RINGS:—Two compression, two oil control rings per piston, all above pin. Lower ring grooves drilled with eight 1/16" oil drain holes (#3), eight 1/8" holes and oil holes to piston pin bosses (#4).

Ring	Width	End Gap	Side Clearance
Comp. (all)	⅛"	.006-.012"	.0015-.003"
Oil Cont. (3)	⅛"	.010-.013"	.001-.0025"
Oil Cont. (4)	3/16"	.010-.013"	.001-.0025"

PISTON PIN:—Diameter—.8750-.8748". **Length**—2.52-2.50". Pin is locked in rod. No bushing used in pist'n.

Pin Fit in Piston—Tight push fit at 70° F. (selective).

CONNECTING ROD:—Length—9½" (center-to-center). **Weight**—37.4 ozs. with bushings and caps.

Crankpin Journal Diameter—2⅛".

Lower Bearing—Spun babbitt-lined. No shims.

Clearance—.001-.0025" (total), .004-.009" (total side-play).

Bearing Adjustment:—Adjust by filing bearing caps when wear exceeds .004". No shims used.

Installing Rods:—Rods are numbered and must be installed in same numbered cylinders. Lower bearings are offset. Install rods with narrow half of bearing toward nearest main bearing. Oil jet holes in upper half of lower bearing must be toward camshaft side of engine.

CRANKSHAFT:—Four bearing. Integral counterwgts. **Journal Diameters**—2⅜" all bearings.

Clearance—.001-.00162".

Bearing Type—Bronze-backed, babbitt-lined.

Bearing Adjustment:—Take up bearings when wear exceeds .003". Check adjustment by assembling .002" feeler ½" wide between bearing and shaft. Crankshaft should turn by hand with feeler in place and bearing caps tight.

C NTINUED N NEXT PAGE

ENGINE

C NTINUED FROM PRECEDING PAGE

End Thrust: Taken by No. 3 intermediate bearing. Endplay .005" minimum, .010" maximum.

CAMSHAFT:—5 Bearing. Non-adjustable chain drive.

Bearing Type—Bronze and cast-iron.

Clearance—.0025-.0035".

End Thrust:—Taken by thrust button riveted to inside face of chain case cover. Endplay .015".

Timing Chain:—Whitney. Width 1¼". Pitch ½". Length 24½" or 49 links.

Camshaft Setting:—Sprockets are marked. Mesh chain with sprockets turned so there are 12 links on lower side of chain between marks. This is equal to 13 teeth inclusive of teeth meshed opposite marks. With sprockets in this position, pistons 1 and 6 will be on top dead center with dead center mark on flywheel at indicator on housing. This setting correct for all engines.

VALVES:—	Head Diameter	Stem Diameter	Length
Intake	1 9/16"	.3424-.3425"	5¼"
Exhaust	1 13/32"	.3420-.3425"	5¼"

	Seat Angle	Lift	Stem Clearance
Intake	30°	5/16"	.0045-.008"
Exhaust	45°	5/16"	.0045-.008"

Valve Guides:—Pressed in block and finish reamed to size providing correct stem clearance.

Valve Springs:—Springs have 'closed coils' at one end. Install springs with closed coil end up.

	Spring Pressure	Spring Length
Valve Closed	42-47 lbs.	2 3/16"
Valve Open	88-94 lbs.	1⅛"

VALVE TIMING

Tappet Clearance: .008-.010" all valves, engine hot.

Valve Timing:—See Camshaft Setting above.

Intake Valves—Open 7½° BTDC. Close 37½° ALDC.

Exhaust Valves—Open 50° BLDC. Close 5° ATDC.

NOTE—Figures correct with .012" tappet clearance.

To Check Valve Timing—Set tappet clearance #1 intake valve at .012". This valve should open with piston #1 .0253" before top dead center when flywheel mark '1/6' (dead center mark) is approximately 2.29 teeth before the indicator on the flywheel housing. Reset tappet clearance at .008-.010" with engine hot.

LUBRICATION

LUBRICATION:—Pressure. Gear type oil pump located in crankcase.

Normal Oil Pressure:—15 lbs. idling, 40 lbs. maximum engine R.P.M. with warm oil.

Oil Pressure Relief Valve:—Located in bracket bolted on left hand side of crankcase. Operates at 30 lbs. Adjustable by changing spacer washers between plug and relief valve spring (plug at lower end of bracket).

Crankcase Capacity:—6 quarts (refill).

CLUTCH

CLUTCH:—**Long Model 9AB-CS.** Single plate, dry disc type. See article in Clutch Section for relining and assembling directions.

See Clutch Section for complete data.

Facings—Moulded type, 2 required. Inside Diam. 5¾". Outside Diam. 9". Thickness .137".

Adjustment—Free movement of clutch pedal must be 1". To adjust, loosen transverse bolt at lower end of clutch pedal, change position of pedal (bolt hole is slotted).

Removal:—Drop drive shaft by disconnecting front universal, remove transmission, take off pan on underside of clutch housing. Take out capscrews mounting clutch on flywheel, turning all screws out evenly to relieve spring tension, remove clutch from below through pan opening.

FRONT SUSPENSION

Front Suspension:—Conventional 'I' beam section front axle with Reverse-Elliot ends and semi-elliptic springs.

Kingpin Inclination—7½° crosswise.

Camber—1½°. No adjustment.

Caster—3½-4°. Adjust by using wedge shims between spring and spring pad on axle.

Toe In—⅛-3/16". Adjust in usual manner by changing length of tie rod.

Tread—59" (front), 62" (rear).

STEERING GEAR

Steering Gear: Ross Model 140 Cam-and-Lever type.

See Steering Gear Section for complete data.

BRAKES

BRAKES:—**Service**—Bendix Hydraulic, Duo-Servo, single anchor type. Hand lever applies rear wheel brakes. See article in Brake Section for complete adjustment procedure.

See Brake Section for complete data.

Drum Diameter—12".

Lining—Moulded type. Width 1½". Thickness 3/16". Length 24 9/32" per wheel.

Clearance—.010" at heel and toe of each shoe.

Hand Brake Adjustment:—See Service Brakes.

MODEL IDENTIFICATION

SERIAL NUMBER: First No. 4501 (Eight 852), 34501 (Supercharged 852). Stamped on right side of cowl under engine hood.

ENGINE NUMBER:—Stamped on left hand upper half of crankcase at front of engine.

TUNE-UP

COMPRESSION:—Ratio—6.2-1 Std. aluminum head.

NOTE—6.5-1 al. head used on Schgd. 851.

Pressure—Approximately 105 lbs. at cranking speed.

VACUUM READING:—Gauge should show steady reading of 20" with engine idling at 5-6 MPH.

FIRING ORDER: 1-6-2-5-8-3-7-4. See diagram.

SPARK PLUGS: Eight—Champion J-6. 14 mm. Metric.

Supercharged Eight—Champion J-9. 14 mm.

Gaps—.025".

IGNITION: See Coil, Condenser, and Distributor.

Breaker Gap—.013-.017" (Eight—after 1000 miles), .018-.020" (Supercharged Eight).

Cam Angle—27.5° closed—Eight, 36° closed—Supercharged Eight (Distr. °).

Synchronization (Schgd. Eight)—Movable contacts open 45° (distr.) after fixed set.

Automatic Advance (Eight)—10° at 1500 RPM (distr.).

Automatic Advance (Schgd. Eight)—5½° at 2000 RPM (distr.).

IGNITION TIMING: See Ignition Timing.

Standard Setting—3-4° BTDC. Flywheel mark '/' (1-1½ teeth before DC mark '1/8') at indicator on right side of engine. NOTE—On Schgd. Eight, contacts open alternately at 45-45° (distr.) intervals.

CARBURETION: See Carburetor & Carb. Equipment.

Idle Setting—Two screws (Eight), one (Supercharged) midway between 'miss' and 'roll' points. Idle speed 5-6 MPH.

Float Level—Fuel level 15/32" (Eight), ⅝" (Supercharged Eight) below top edge of bowl.

Accelerating Pump—Inner hole (Summer), outer hole (Winter).

Fuel Pump Pressure: 3½ lbs. maximum.

VALVES: See Valve Timing.

Tappet Clearance—.008-.010" all valves, engine hot.

STARTING: See Battery, Starter, and Generator.

IGNITION

Ignition Switch:—Oakes Hershey type co-incidental ignition switch and steering post lock. Switch has two 'on' positions. Lower or 'STX' position of lever is normal running position with Startix operative. Upper or 'IGN' position should be used to check ignition or whenever automatic cranking is not desired.

COIL: Auto-Lite CE-4001G (Eight), CE-4001 (Supercharged Eight). Mounted on right side of engine.

Ignition Current—3 amperes idling, 4.5-5.5 amperes at 6.0 volts stopped.

CONDENSER: Auto-Lite No. IG-2671 (Eight), IGB-1025C (Supercharged Eight). Capacity—.20-.25 mfd.

DISTRIBUTOR (EIGHT): Auto-Lite IGP-4002. Single breaker, 8 lobe cam, full automatic advance type. No synchronization required.

Breaker Gap—.013-.017" (.015-.019" for first 1000 miles with new points).

Cam Angle or Dwell—Closed 27.5°. Open 17.5° with .017" breaker gap.

Breaker Arm Spring Tension—18 ozs. min., 20 ozs. max.

Automatic Advance

Distributor Degrees	Distributor R.P.M.	Engine Degrees	Engine R.P.M.
Start	300	0	600
2	540	4	1080
4	780	8	1560
6	1020	12	2040
8	1260	16	2520
10	1500	20	3000

DISTRIBUTOR (SCHGD. EIGHT): Auto-Lite IGH-4027. Two breaker, 4 lobe cam, full automatic advance. Contacts must be synchronized (see Timing).

Firing Interval—Contacts open alternately at 45° intervals corresponding to 90° engine firing intervals.

Breaker Gap—.018-.020".

Cam Angle or Dwell—Closed 36°. Open 9° with .020" gap (both sets together when synchronized).

Breaker Arm Spring Tension—16-20 ounces.

Automatic Advance

Distributor Degrees	Distributor R.P.M.	Engine Degrees	Engine R.P.M.
Start	400	0	800
1	700	2	1400
2	990	4	1980
3	1280	6	2560
4	1560	8	3120
5.5	2000	11	4000

Distributor Removal:—Mounted on cylinder head. To remove, take out hold-down screw in advance arm.

CONTINUED N NEXT PAGE

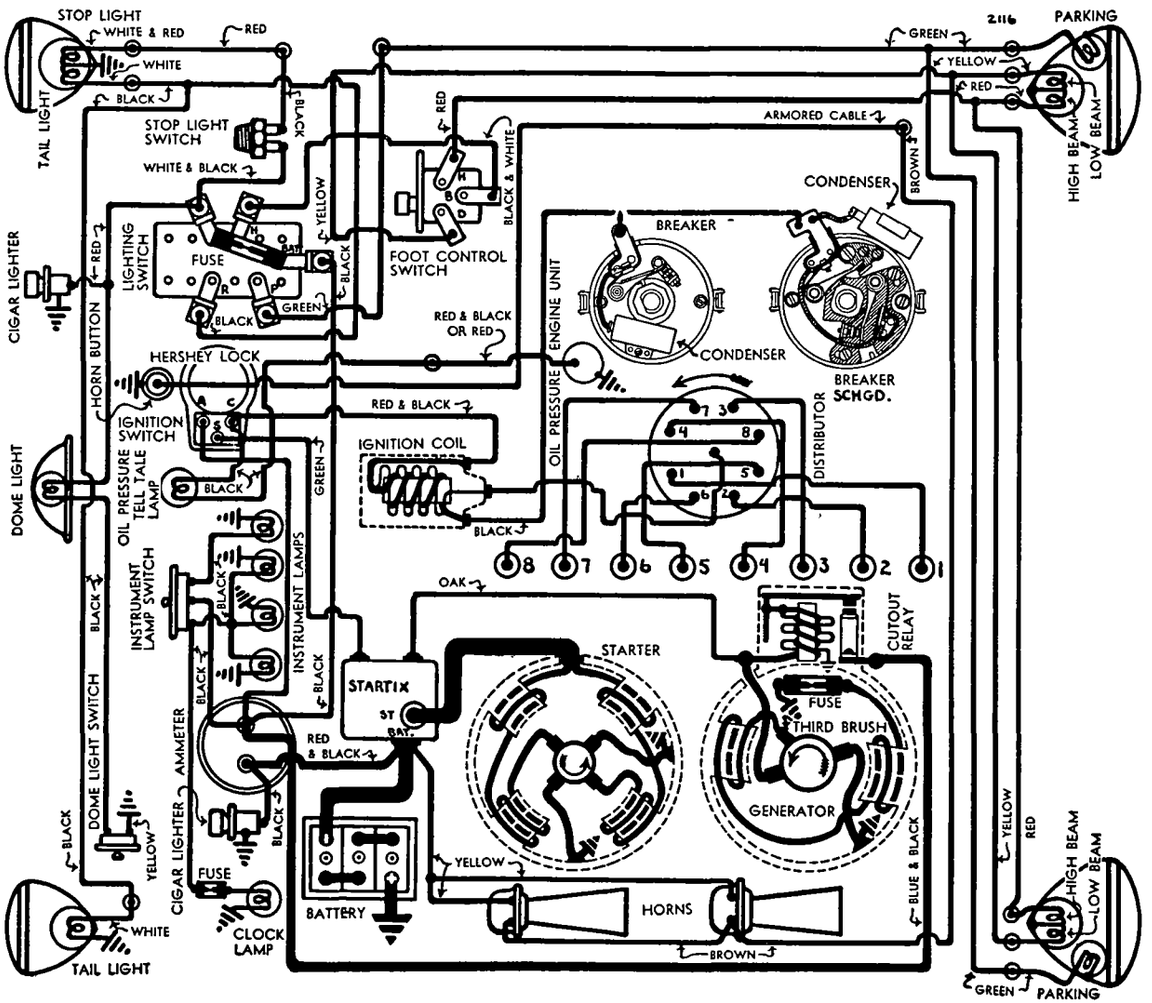

C NTINUED FR M PRECEDING PA E

IGNITION TIMING

Standard Setting: Flywheel Degs. Piston Position
All engines (Eight)..... 3° BTDC.....0042" BTDC
All engines (SChgd)....3-4° BTDC.....0042" BTDC
NOTE—No synchronization necessary on distributor model IGP-4002 (Eight).
Timing—With #1 piston on compression, turn engine over until piston is 3-4° before top dead center, stop when flywheel mark '/' lines up with indicator in inspection hole in right front face of flywheel housing. This mark is approximately 1-1½ teeth before the top dead center mark '1/8'. Then loosen advance arm clamp bolt, rotate distributor until contacts (stationary—mounted directly on breaker plate, on IGH-4027 distributor) begin to open, tighten clamp bolt, see that rotor is opposite #1 segment in distributor cap.
Synchronization (Movable Contacts)—Manufacturer recommends use of a Winn Synchrometer to synchronize contacts. No flywheel marks are provided and some type of equipment must be used for this purpose. Change position of movable sub-plate carrying second set of contacts by loosening two lockscrews and shifting plate until movable contacts open exactly 45° after stationary set. Distributor firing intervals are regular 45-45-45 distributor deg.

CARBURETOR

EIGHT

Carburetor (Eight): Stromberg Model EE-1, 1" dual downdraft type with manual choke control.
For complete data, refer to Carburetor Index.
Idle Adjustment—With engine hot, close throttle, see that choke control button on dash is in off position (choke valve fully released), set throttle stopscrew so that engine idles at 5-6 M.P.H. Turn inner idle adjusting screw in until engine misses, then turn screw out until engine begins to roll, finally turn screw in slowly until engine fires smoothly; repeat with outer idle adjusting screw. Readjust throttle stopscrew for correct idling speed.
Accelerating Pump Setting—Pump lever has two holes for pump link engagement. Set as follows:
Inner Hole (Min. stroke)—Summer temperatures.
Outer Hole (Max. stroke)—Winter temperatures.
Throttle Cracking—No adjustment required. See separate article in Carburetion Section.

SUPERCHARGED EIGHT

Carburetor (Schgd. 8):—Stromberg Model EX-32 1½" plain tube, downdraft type with manual choke control.
For complete data, refer to Carburetor Index.
Idle Adjustment—With engine hot, close throttle, see that choke control button on dash is in off position (choke valve fully released), set throttle stop screw so that engine idles at 5-6 M.P.H. Turn idle adjusting screw in until engine begins to miss, then turn screw out until engine begins to roll, finally turn screw in slowly until engine fires smoothly. Readjust throttle stopscrew for correct idling speed.
Accelerating Pump Setting—Pump lever has two holes for pump link engagement. Set as follows:
Inner Hole (Min. stroke)—Summer temperatures.
Outer Hole (Max. stroke)—Winter temperatures.

CARB. EQUIPMENT

Air Cleaner:—AC. #1525598 Il-wetted type standard, heavy duty Il-bath type optional.
Fuel Pump:—AC. Type B #1522146 diaphragm type
For complete data, refer to Carburetion Equip. Index.
Gasoline Gauge:—K-S Telegauge hydrostatic type. K-S Part No. 5297 (dash unit—both models), 5652 (tank unit—Eight), 5310 (tank unit—Schgd. 8).
For complete data, refer to Carburetion Equip. Index.

BATTERY

BATTERY:—U.S.L. Type XY-15A. 6 volt, 15 plate, 105 ampere hour capacity (20 hour rate).
Starting Capacity—122 amperes for 20 minutes.
Zero Capacity—300 amperes for 3.3 minutes.
Grounded Terminal—Positive (+) terminal.
Location—Under right hand front seat.

STARTER

Auto-Lite Model MAB-4063. Armature MAB-2006.
Drive—Inboard Bendix Type R11FX-10.
Cranking Engine—140 R.P.M. 160 amperes at 5.2 v.
Rotation—Counter-clockwise at commutator end.
Brush Spring Tension—44-56 ozs. (new brushes).

Performance Data

Torque	R.P.M.	Volts	Amperes
0 ft. lbs.	3700	5.5	60
.6 "	1910	5.5	100
3.4 "	1100	5.0	200
6.6 "	695	4.5	300
10.15 "	420	4.0	400
15.8 "	Lock	3.5	575
22.5 "	Lock	4.0	750

Removal:—Starter flange mounted on right front face of flywheel housing. To remove, take out 3 flange mounting screws.
Starting Switch:—Startix Type D. Automatic starting controlled by ignition switch. See article in Equipment Section.
For complete data, refer to Electrical Equipment Index.

GENERATOR

Auto-Lite Model GAR-4603-5. Armature GAR-2077. Air-cooled. Third brush control type.
Charging Rate Adjustment—Take off commutator band. Shift third brush by hand counter-clockwise to increase or clockwise to decrease charging rate. Brush held in position by friction.
Standard Charging Rate Setting—20 amperes (cold), 16 amperes (hot), 2300 R.P.M. or 25 M.P.H.

Performance Data

Cold			Hot		
Amperes	Volts	R.P.M.	Amperes	Volts	R.P.M.
0	6.4	720	0	6.4	760
4	6.8	860	4	6.8	925
8	7.25	1000	8	7.25	1125
12	7.7	1160	12	7.7	1350
16	8.1	1360	16	8.1	1680
20	8.5	1660	19.2	8.4	2600
22.4	8.8	2300			

Rotation—Counter-clockwise at commutator end.
Brush Spring Tension—24-36 ozs. (new brushes).
Field Current—3.70-4.10 amperes at 6.0 volts.
Field Fuse—5 ampere under cover on generator field frame near cutout relay.
Motoring Current—4.65-5.15 amperes at 6.0 volts
Removal:—Generator pivot mounted at right front of engine. To remove, take out pivot bolts and clamp bolt.
Belt Adjustment:—Adjusted in usual manner by swinging generator out until belt tension just sufficient to drive generator and water pump without slipping.

CUTOUT RELAY

Auto-Lite Model CB-4021. Mounted on generator.
For complete data, refer to Electrical Equipment Index.
Cuts In—6.5-7.25 volts, 800 R.P.M.
Cuts Out—.5-2.5 ampere discharge current.
Contact Gap—.015-.045".
Air Gap—.010-.030" with contacts closed.

LIGHTING

LIGHTING:—Headlamps—Headlamps aimed straight ahead. Upper and lower beams controlled by foot selector switch on toeboard.

Switches

Lighting—Soreng-Manegold Model A-5640-A.
Foot Selector—Delco-Remy.
Stop Light—Motometer No. 50812 hydraulic type.

Bulb Specifications

Position	Candlepower	Mazda No.
Headlamps	32-21	2320
Parking, Instrmt., Clock	3	63
Stop and Tail (L.H.)	21-3	1158
Tail (R.H.)	3	63
Dome	6	81

MISC. ELECTRICAL

FUSES:—Lighting—20 ampere on lighting switch.
Clock Lamp—10 ampere on clock.
Generator Field—5 ampere on generator.
HORNS:—Schwarze Vibrator type. Horn current 6 amperes each.

ENGINE

ENGINE SPECIFICATIONS:—Type—Lycoming Model GG and GH (Supercharged). 8 cylinder In Line, 'L' head.
Bore—3 1/16". **Stroke**—4¾".
Displacement—279.92 cubic inches.
Rated Horsepower—30.01 (SAE).
Developed Horsepower—115 at 3600 R.P.M., 150 at 4000 R.P.M. (Supercharged).
Compression Ratio and Pressure—6.2-1 Std. aluminum head. Pressure approximately 105 lbs. at cranking speed.
Vacuum Reading—Gauge should show steady reading of 20" with engine idling at 5-6 M.P.H.
PISTONS (EIGHT): Bohn, aluminum alloy, Invar strut, split skirt type.
Length—3¾".
Weight—16 ozs. stripped, 21.92 ozs. with rings and pin.
Removal—Pistons and rods removed from below.
Clearance—Top .00975-.00825", Skirt .0015".
Replacement Pistons:—Pistons furnished in .003" and .005" oversizes.
Fitting New Pistons:—Use .0015" feeler stock ½" wide inserted between piston and wall on side opposite slot to check clearance. Pull required to withdraw feeler must be between 5-10 lbs.
Installing Pistons:—Slot should be toward left or camshaft side.
PISTONS (SCHGD. EIGHT): Ray-Day, Ray-Day metal alloy type. **Length**—3¾".
Weight—14.40 ozs. stripped, 19.84 ozs. with rings and pins.
Removal—Pistons and rods removed from below.
Clearance—Top .01125-.01325". Skirt .002-.0025".
Fitting New Pistons:—Use .002" feeler ½" wide inserted between piston and cylinder wall at right

ENGINE

CONTINUED FROM PRECEDING PAGE

angles to pin bosses to check clearance. Pull required to withdraw feeler should be 6-11 lbs.

PISTON RINGS—(FOR BOHN PISTONS):—Two compression, two oil control rings per piston, all above pin. Oil ring grooves drilled with eight 1/16" oil drain holes (#3), eight ⅛" oil holes and oil holes to piston pin bosses (#4).

Ring	Width	End Gap	Side Clearance
Comp. (all)	⅛"	.008-.013"	.0015-.003"
Oil (#3)	⅛"	.008-.013"	.001-.0025"
Oil (#4)	3/16"	.008-.013"	.001-.0025"

PISTON RINGS—(ENGS. WITH RAY DAY PISTONS):—Two compression, one oil control ring per piston, all above pin. Rings are Perfect Circle #70 (comp.), #85 (oil control).

NOTE—Compression rings are stepped or grooved and must be installed with the groove downward.

Ring	Width	End Gap	Side Clearance
Comp. (all)	⅛"	.008-.013"	.0015-.003"
Oil Cont.	3/16"	.007-.015"	.001-.0025"

PISTON PIN:—Diameter—.8750-.8748". **Length**—2.520-2.500". Pin is locked in rod. No bushing used in piston. Pins furnished for service standard and .003" oversize.

Pin Fit in Piston—Tight push fit at 70°F.

CONNECTING ROD:—Length—9½".
Weight—2.34 lbs.
Crankpin Journal Diameter—2⅛".
Lower Bearing—Spun babbitt-lined type. No shims. Clearance—.001-.0025". Sideplay—.004-.009".

Bearing Adjustment:—Adjust by filing bearing caps when wear exceeds .004".

Installing Rods:—Rods are numbered and must be installed in same numbered cylinders. Lower bearings are offset. Install rod with narrow half of bearing toward nearest main bearing. Oil jet holes in upper half of lower bearing must be toward camshaft side of engine on all rods.

CRANKSHAFT:—Five bearing. Counterweights used on Supercharged only. Lanchester type vibration dampener used on all models.
Journal Diameters—2⅜" all bearings.
Bearing Type—Bronze-backed, babbitt-lined.
Clearance—.001-.00162".

Bearing Adjustment:—Take up bearings by filing bearing caps when wear exceeds .003". Check adjustment by assembling .002" feeler ½" wide between bearing and shaft. Crankshaft should turn by hand with feeler in place and bearing cap tight.

End Thrust:—Taken by center (#3) bearing. Endplay .005" minimum, .010" maximum.

CAMSHAFT:—Six bearing. Non-adjustable chain drive.
Bearing Type—Bronze and cast-iron (non-supercharged), steel-backed, babbitt-lined bushings (Supercharged). Clearance—.0025-.0035".

End Thrust:—Taken by thrust pin riveted on inside face of chain case cover. Endplay .015".

Timing Chain:—Whitney. Width 1" (non-supercharged), 1¼" (Supercharged). Pitch ½". Length 24½" or 49 links.

Camshaft Setting:—Sprockets are marked. Mesh chain with sprockets turned so that there are 12 links or 13 teeth (inclusive of teeth meshed opposite marks) between marks. With sprockets in this position, pistons #1 and 8 will be on top dead center with dead center mark on flywheel lined up with indicator on housing.

VALVES:—	Head Diameter	Stem Diameter	Length
Intake	1 9/16"	.3420-.3425"	5¼"
Exhaust	1 13/32"	.3420-.3425"	5¼"

	Seat Angle	Lift	Stem Clearance
Intake	30°	5/16"	.0045-.008"
Exhaust	45°	5/16"	.0045-.008"

Valve Guides:—Pressed in block and finish reamed to provide correct stem clearance (see table above).

Valve Springs:—Springs have 'closed coils' at one end. Install springs with closed coil end up.

	Spring Pressure	Spring Length
Valve Closed	42-47 lbs	2 3/16"
Valve Open	88-94 lbs	1⅞"

VALVE TIMING

Tappet Clearance: .008-.010" all valves, engine hot.

Valve Timing:—See Camshaft Setting above.
Intake Valves—Open 7½° BTDC. Close 37½° ALDC.
Exhaust Valves—Open 50° BLDC. Close 5° ATDC.
To Check Valve Timing—Set tappet clearance #1 intake valve at .012". This valve should open with piston #1 .0253" before top dead center when flywheel mark '1/8' (dead center mark) is approximately 2.29 teeth before the indicator on the flywheel housing. Reset tappet clearance at .008-.010" with engine hot.

LUBRICATION

LUBRICATION:—Pressure. Gear type oil pump located in crankcase.

Normal Oil Pressure:—15 lbs. idling, 40 lbs. at maximum engine R.P.M. with warm oil.

Oil Pressure Relief Valve:—Located in bracket bolted on left hand side of crankcase. Operates at 30 lbs. Adjustable by changing spacing washer between plug and relief valve spring (plug at lower end of bracket).

Crankcase Capacity:—8 quarts (refill).

SUPERCHARGER

SUPERCHARGER:—Centrifugal type mounted at left of engine and driven through accessory sprocket and shaft by separate chain in chain case. Chain is adjustable.

Chain Adjustment:—Accessory sprocket mounted on eccentric with slotted mounting holes. Adjusted by loosening screws and rotating eccentric to take up chain slack.

CLUTCH

CLUTCH:—Long Model 9AB-6CI. Single plate, dry disc type.
See Clutch Section for complete data.
Facings—Moulded type, 2 required. Inside Diam. 5½". Outside Diam. 9¾". Thickness .137".
Adjustment—Free movement of clutch pedal should be 1". To adjust, loosen transverse bolt at lower end of clutch pedal, change position of pedal (bolt is slotted).
Removal—Drop drive line (disconnect at front universal), remove transmission, take off pan under clutch housing, take out screws mounting clutch on flywheel, turning all screws out evenly, remove clutch from below through pan opening in housing.

TRANSMISSION

Detroit. Constant-mesh, synchro-mesh, helical gears (Second & High), sliding spur gears (Low & Reverse).
See Transmission Section for complete data.

Removal: Remove speedometer pinion assembly (not required on Dual-ratio cars with speedometer pinion in rear axle). Disconnect propeller shaft at front universal joint, remove hand brake lever. take out transmission mounting bolts, pull transmission straight back until clutch shaft is clear, lower transmission and remove.

UNIVERSALS

Mechanics Model 3C. Roller bearing type. Two used.
See Universals Section for complete data.

SHOCK ABSORBERS

Delco. Direct acting, hydraulic type.
See Shock Absorber Section for complete data.

REAR AXLE
STANDARD

Columbia Model 17000A-6. Semi-floating, Spiral Beval gear type with Hotchkiss Drive.
See Rear Axle Section for complete data.
Ratio—4.08-1 Std.
Backlash—.003-.005". Shim adjustment.

Removal: Disconnect propeller shaft at rear universal joint, disconnect hand brake linkage, hydraulic brake lines, and shock absorbers. Disconnect spring U-bolts and spring shackles, remove axle assembly from beneath car.

REAR AXLE
SPECIAL EQUIPMENT

Columbia Model 800A-5. Two-speed, semi-floating, Spiral Bevel gear type with Hotchkiss Drive.
See Rear Axle Section for complete data.
Ratio—4.55-1 (Low), 3.03-1 (High).

Removal: Same as for standard axle (above) after control unit vacuum lines have been disconnected.

CAUTION—Speedometer pinion assembly must be removed before axle shaft taken out (pinion mounted in axle housing). When re-installing speedometer pinion, see that pinion has .010" endplay.

FRONT SUSPENSION

Front Suspension:—Conventional 'I' beam section front axle with Reverse-Elliot ends and semi-elliptic springs.
Kingpin Inclination—7½° crosswise.
Caster—2° maximum without load, 3° maximum loaded. Adjusted by inserting wedge shims between spring and spring pad on axle.
Camber—1½°. No adjustment.
Toe In—⅛-3/16". Adjust in usual manner by changing length of tie rod.

STEERING GEAR

Steering Gear: Ross Model 615 Cam & Lever type.
See Steering Gear Section for complete data.

BRAKES

BRAKES:—Service—Bendix Hydraulic, Duo-Servo, single anchor type. Hand lever applies rear wheel brakes. See article in Brake Section for complete adjustment procedure.
See Brake Section for complete data.
Drum Diameter—12".
Lining—Moulded type. Width 2". Thickness 3/16". Length 24 9/32" per wheel.
Clearance—.010" at heel and toe of each shoe.

Hand Brake Adjustment:—See Service Brakes.

MODEL IDENTIFICATION

SERIAL NUMBER: First number 60-001 (Series 60), 63-001 (Series 63), 65-343 (Series 65). Stamped on left frame side member below engine oil level gauge (Series 60 and all Series 63, 65 Export Cars), on left side of cowl under engine hood (Series 63, 65).

ENGINE NUMBER: First number 60-001 (Series 60), 63-001 (Series 63), 65-501 (Series 65). Stamped on left side of crankcase directly above starter Bendix

TUNE-UP

COMPRESSION PRESSURE: 90 lbs. at 150 RPM. (60, 63), 135 lbs. at 200 RPM. (65).

VACUUM READING: Steady 18-20" idling at 7 MPH.

FIRING ORDER: 1-3-4-2. See diagram.

SPARK PLUGS: Auto-Lite A-9 (Series 60,63), Champion H-10 (Series 65). 14 mm. Metric.
Gaps—.025".

IGNITION: See Coil, Condenser, and Distributor.
Breaker Gap—.018" (.022" for new points).
Cam Angle—41° closed (with .020" gap).
Breaker Arm Spring Tension—17-20 ounces.
Automatic Advance—*See Distributor.*

IGNITION TIMING: See Ignition Timing.
Standard Setting—2° BTDC (Series 60, 63), 4° BTDC (Series 65) with DC mark on flywheel 3/16" (Series 60, 63), 3/8" (Series 65) ahead of indicator.

CARBURETION: See Carburetor & Carb. Equipment.
Idle Setting—Idle screw approximately 1½ turns open (on Tillotson carburetor, set screw ⅛ turn in from "missing" point). Idle speed 500 Engine RPM or 7 MPH. NOTE—See Carburetor for High Speed adjustment on Tillotson carburetor.
Float Level—1 5/32" bottom of float to throttle body gasket seat with needle valve closed.

VALVES: See Valve Timing.
Tappet Clearance (Series 60, 63)—.006" Intake, .009" Exhaust with engine warm (130° F.).
Tappet Clearance (Series 65)—.011" Intake, .012" Exhaust with engine warm.

STARTING: See Battery, Starter, and Generator.

IGNITION

Ignition Switch:—Douglas #2980 Ignition Lock Assembly. Coil connection not armored.
Ignition Lock—Douglas.

COIL: Auto-Lite Model IG-4065. Service Coil IG-4070. Mounted on the dash.
Ignition Current—2.5 amperes idling, 4.5 stopped.

CONDENSER: Auto-Lite No. IGB-1025.
Capacity—.20-.25 microfarads.

DISTRIBUTOR: Auto-Lite IGW-4105A, IGW-4105B, IGW-4105C. Single breaker, 4 lobe cam, full automatic advance type.
Breaker Gap—.018" (.022" for new set of points).
Cam Angle or Dwell—41° closed, 49° open (distributor degrees with .020" gap).)
Breaker Arm Spring Tension—17-20 ozs.
Rotation—Clockwise viewed from the top.

Automatic Advance—IGW-4105-A

Distributor Degrees	R.P.M.	Engine Degrees	R.P.M.
Start	300	0	600
.6	500	1.2	1000
1	600	2	1200
2	900	4	1800
3	1200	6	2400
4	1500	8	3000
5	1800	10	3600

Automatic Advance—IGW-4105-B

Distributor Degrees	R.P.M.	Engine Degrees	R.P.M.
Start	450	0	900
.4	500	.8	1000
2	700	4	1400
4	940	8	1880
6	1190	12	2380
8	1430	16	2860
10	1680	20	3360
11	1800	22	3600

Automatic Advance—IGW-4105-C

Start	400	0	800
2	800	4	1600
5	1400	10	2800
8	2000	16	4000
10	2400	20	4800

Removal:—Distributor mounted on bracket at front of engine. To remove, loosen clampscrew in mounting bracket, lift distributor out.

IGNITION TIMING

Std. Setting	Flywheel Degrees	Piston Pos.
Series 60, 63	2° BTDC	.0016" BTDC.
Series 65	4° BTDC	.0048" BTDC.

To Set Timing—With #1 piston on compression, turn engine over until piston reaches firing position when point on flywheel 3/16" (Series 60, 63), 3/8" (Series 65) ahead of dead center mark "/" lines up with indicator under cover on flywheel housing. Loosen distributor clampscrew, rotate distributor until contacts begin to open, tighten clampscrew.

CARBURETOR

SERIES 60 & 63

CARBURETION:—Carburetor. Tillotson Model M-10B. ¾" single barrel updraft type.
For complete data, refer to Carburetor Index.

NOTE—Carburetor has two adjustments (Idle or Low Speed, and High Speed) and adjustments must be made in correct order as given below. 'Preliminary' adjustment optional.

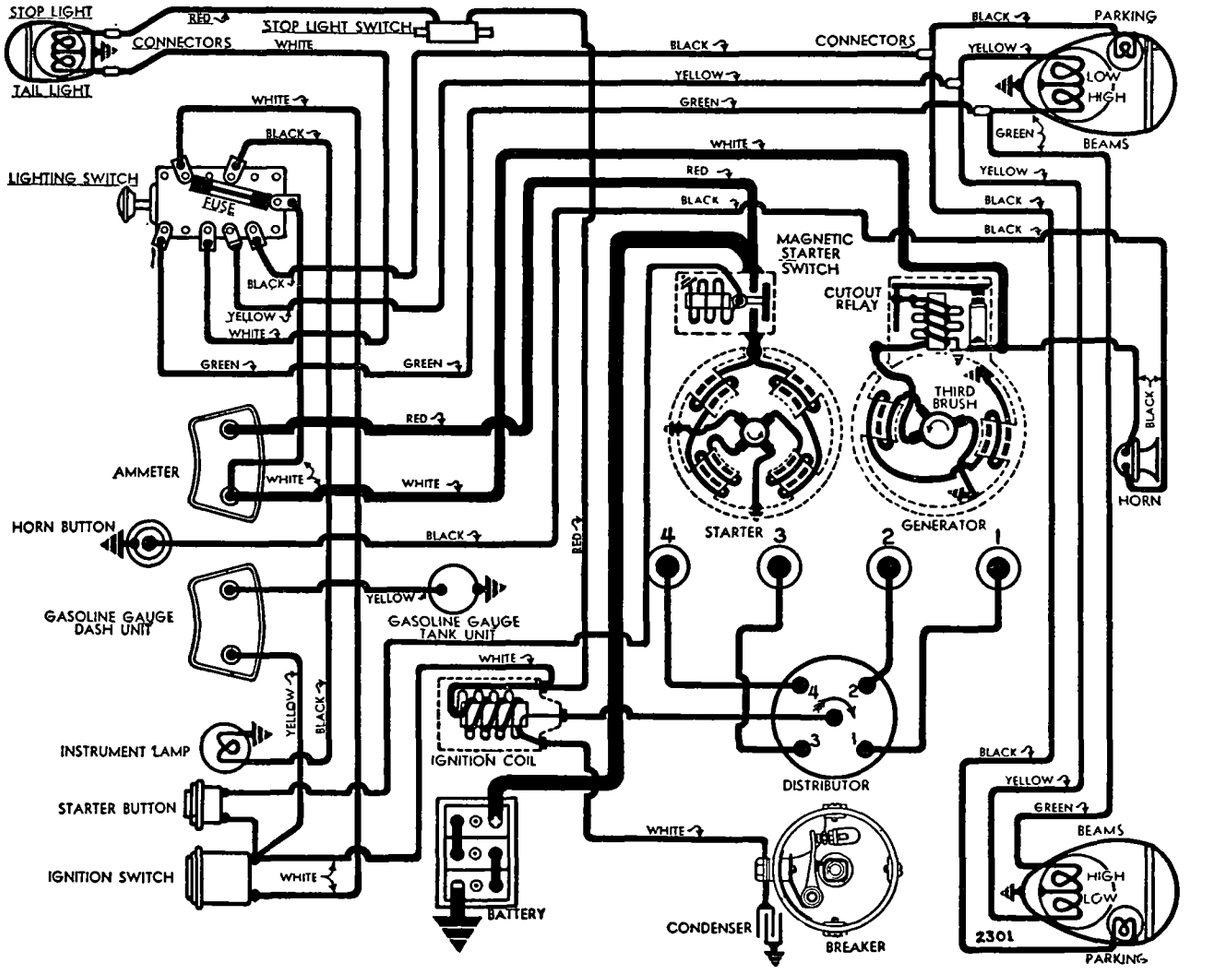

Preliminary Adjustment—Turn idling adjusting screw in lightly until seated, then back screw out 1½ turns. Turn high speed (main) adjusting needle in lightly until seated, then back needle out 1 turn. Start engine and run until it is thoroughly warmed **Idle Adjustment**—With engine warm and running, set throttle stopscrew so that idle speed is approximately 500 R.P.M. Turn idle adjusting screw out slowly until engine begins to miss, then turn screw in ⅛ turn. Reset throttle stopscrew for correct 500 R.P.M. idling speed. Engine should idle smoothly. **High Speed Adjustment**—Should be made with engine under load (can be made by jacking up rear wheels, engaging gears, and applying brakes just enough to secure temporary noticeable drag on engine or by opening throttle so that engine runs at speed equivalent to 30 M.P.H.). Turn main adjusting needle valve in until engine begins to slow down, then back needle out ⅛ turn (make adjustment slowly and determine end point exactly).

CARBURETOR

SERIES 65

CARBURETION:—Carburetor—Zenith Model 61A5. 13/16" single barrel updraft type.

For complete data, refer to Carburetor Index.

NOTE—This carburetor has Idle (low speed) adjustment only. No high speed adjustment used.

Idle Adjustment—With engine warm and idling, set idle adjusting screw so that engine fires smoothly. Idle screw should be set approximately 1½ turns out from inner seated position and setting should be varied only slightly. Set throttle stopscrew for idle speed of 7 MPH.

Float Level—Bottom of float at free end should be 1 5/32" from gasket seat of throttle body with needle valve closed (invert throttle body to check).

CARB. EQUIPMENT

Air Cleaner:—AC #A1529203. Oil-wetted type Std.

Gasoline Gauge:—Stewart (Stewart-Warner) Electric. Dash Unit—No. 99166 (Instrument Cluster), Tank Unit—No. 97550.

For complete data, refer to Carburetion Equip. Index.

BATTERY

U.S.L. Type RM-11A or Auto-Lite PN-11F. 6 volt, 11 plate, 67 ampere hour capacity (20 hour rate).
Starting Capacity—85 amperes for 20 minutes.
Zero Capacity—300 amperes for 1.6 minutes.
Grounded Terminal—Negative (—) terminal.
Dimensions—Width 7". Length 6 15/16". Height 8⅝".
Location—On right side of cowl under hood.

STARTER

STARTER:—Auto-Lite MAK-4001. Armature MAK-2006.
Drive—Special Inboard Bendix Type RCE11-10.
Rotation—Counter-clockwise at commutator end.
Brush Spring Tension—38-61 ozs. (new brushes).

Performance Data

Torque	R.P.M.	Volts	Amperes
0 ft. lbs.	5000	5.5	70
1.35 "	1880	5.0	200
.3 "	3240	5.5	100
3.1 "	1000	4.5	300
4.8 "	220	4.0	400
4.5 "	Lock	3.0	380
7.0 "	Lock	4.0	520

Removal:—Starter flange mounted on left front face of flywheel housing. To remove, take out flange mounting screws, remove starter with switch.

Starting Switch:—Magnetic type mounted on dash controlled by pushbutton on instrument panel.

GENERATOR

GENERATOR: Auto-Lite GAS-4104B or GAS-4139A.
Armature No. GAS-2076. Third brush control type.
Maximum Output—10 amperes (cold), 8 amperes (hot), 8.0 volts, 2600 RPM., 40 MPH., std. setting.
Charging Rate Adjustment—Remove commutator cover band, shift third brush by hand counter-clockwise to increase, clockwise to decrease charging rate. Third brush held in position by friction.

Cold Performance Data			Hot Performance Data		
Amperes	Volts	R.P.M.	Amperes	Volts	R.P.M.
0	6.4	880	0	6.4	975
2	6.6	985	2	6.8	1135
4	6.9	1100	4	7.0	1310
6	7.2	1230	6	7.35	1540
8	7.3	1420	8	7.7	1860
10	7.6	1650	10.2	8.0	2900
12	7.8	2000			
14	8.0	2800			

Rotation—Counter-clockwise at commutator end.
Brush Spring Tension—15-20 ozs. (new brushes).
Field Current—3.80-4.20 amperes at 6.0 volts.
Motoring Current—4.64-4.94 amperes at 6.0 volts.

Removal:—Generator cradle mounted at left front of engine with fan belt drive. To remove, loosen drive belt, take out clamp bolt in mounting clamp band, lift generator out.

Belt Adjustment:—Loosen fan shaft clamp nut, raise fan until belt can be pulled out of vertical line (midway between pulleys) not more than 1" with single finger pull, tighten clamp nut.

CUTOUT RELAY

Auto-Lite No. CB-4014. Mounted on generator.
For complete data, refer to Electrical Equipment Index.
Cuts In—6.5-7.25 volts, 5 MPH.
Cuts Out—.5-2.5 ampere discharge current (after charging at 15 amperes).
Contact Gap—.015-.045".
Air Gap—.010-.030" with contacts closed.

LIGHTING

LIGHTING:—Headlamps—Corcoran-Brown. Pre-focused type. Upper and lower beams controlled by lighting switch.
Headlamp Adjustment—Aim headlamp upper beam straight ahead at lamp center height.

Switches

Lighting—H.A. Douglas No. 5794.

Bulb Specifications

Position	Candlepower	Mazda No.
Headlamps	32-21	2320
Parking	1.5	55
Instrument	3	63
Stop & Tail	21-3	1158

MISC. ELECTRICAL

FUSES: Lighting—20 ampere. On lighting switch.
HORN:—Schwartze No. 93. Vibrator type.
Horn Current—7 amperes.

ENGINE

ENGINE SPECIFICATIONS:—Four cylinder, 'L' head type. Cylinders cast en-bloc and bolted to aluminum alloy crankcase (integral with flywheel housing).

SERIES 60 & 63

Bore—2.2". **Stroke**—3".
Displacement—45.6 cu.ins. **Rated HP.**—7.8 S.A.E.
Developed Horsepower—20 at 4000 R.P.M.
Compression Ratio—7.0-1 Al. or CI. head.
Compression & Vacuum Reading—*See Tune-Up.*

SERIES 65

Bore—2.26". **Stroke**—3.125"
Displacement—50.144 cu. ins. **Rated HP**—8.17.
Developed Horsepower—22 at 3800 RPM.
Compression Ratio—7.4-1 Std. Cast Iron head.
Compression & Vacuum Reading—*See Tune-Up.*

PISTONS:—Bohn Autothermic, aluminum alloy, steel strut, split skirt, cam ground type with tin-plate finish. **Length**—2.083".
Weight—5.125 ozs. (without rings or pin).
Removal—Pistons and rods removed from above.
Clearance—Top .0125-.017". Skirt .0005".
Replacement Pistons:—Pistons furnished in standard size and .003", .005", .010", .020", .030" oversize.
Fitting New Pistons:—Use .0025" feeler installed between pistons and cylinder wall on side opposite slot at right angles to piston pin. Pull required to withdraw feeler must be 7-12 lbs.
Installing Pistons:—Slot toward left hand side.

PISTON RINGS:—Two compression, one oil control ring per piston, all above pin. Oil ring groove drilled with oil drain holes.

Ring	Width	End Gap	Side Clearance
Compr.	.0925-.0935"	.010-.020"	.001-.0015"
Oil Contr.	.1235-.1240"	.010-.018"	.001-.0015"

Replacement Rings:—Furnished standard size and .003", .005", .010", .020", .030" oversize.

PISTON PIN:—Diameter—.6095". **Length**—1.9375". Pin is locked in connecting rod by clampscrew.
Pin Fit in Piston—Free to .0002" clearance. When correctly fitted and installed, 2 lbs. pressure at end of rod should be required to rock rod.
Replacement Pins:—Furnished .003", .005" oversize.

CONNECTING ROD:—Weight 11 ozs. **Length** 5.75".
Crankpin Journal Diameter (60, 63)—1 5/16"
Crankpin Journal Diameter (65)—1.25".
Lower Bearing—Spun babbitt-lined type. No shims.
Clearance—.0008-.0022". **Sideplay**—.004-.009".
Bearing Adjustment:—None (no shims). Replace rods. Do not file rods or bearing caps.
Installing Rods:—Lower bearings offset. Install with wide half away from center of engine.

CRANKSHAFT: 2 bearing (60, 63), 3 bearing (65).
Journal Diameters (60, 63)—2½" all bearings.
Journal Diameters (65)—1.9975" (1), 2.4975" (2, 3).
Bearings (60, 63)—Babbitt-lined bushings front (with separate retainer) and rear (with integral retainer).
Bearings (65)—Babbitt-lined bushings front (with integral retainer) and rear (with separate retainer). Center bearing conventional split type.
Clearance—.001-.003".
Bearing Adjustment:—None. Replace bearings. Crankcase should be heated to temperature of boiling water (212°) to remove and install bearings. To remove bearing retainers proceed as follows:
Front Bearing Removal—Remove timing gear cover, pull both timing gears, take out four capscrews in retainer flange, use gear puller to remove bearing.
Center Bearing Removal (65 only)—Conventional split type bearing.
Rear Bearing Removal—Remove transmission and Clutch (see Transmission and Clutch Sections for

CONTINUED N NEXT PAGE

ENGINE

CONTINUED FR M PRECEDIN PAGE

directions), remove flywheel by removing 4 bolts and prying centering flange off crankshaft carefully. Remove nuts on bolts in bearing retainer flange, screw capscrews in each of two tapped holes in retainer, turn screws up evenly to force retainer and bearing out.

FLYWHEEL NOTE—On 1937-38 engines flywheel secured by 1 nut on end of crankshaft.

Replacement Bearings:—.003", .006", .009" undersize.

End Thrust:—By rear bearing. **Endplay**—.004-.006".

CAMSHAFT:—Three bearing. Helical gear drive.

NOTE—Front camshaft bushing retained by setscrew in upper part of crankcase. Screw must be removed in order to remove bushing.

Bearing Type—Bronze Bushings. **Clearance**—.002".

Replacement Bearings:—Front bushing furnished finished to size. Other bushings must be reamed.

End Thrust:—By rear face of camshaft gear hub and front end of front camshaft bushing. When installing timing gears, install camshaft gear first, tighten nut securely with endplay removed and shaft free.

Timing Gears:—Cast iron helical gears.

Camshaft Setting:—Mesh marked crankshaft gear tooth between two marked teeth on camshaft gear.

VALVES:—Intake marked 'INL', exhaust 'EXH' under head.

Series 60, 63—Valve Specifications

	Head Diameter	Stem Diameter	Length
All Valves	1 1/32"	.279"	3¼"
	Seat Angle	**Lift**	**Stem Clearance**
All Valves	30°	.257"	.0022"

Series 65—Valve Specifications

	Head Diameter	Stem Diameter	Length
Intake Valves	1.125"	.279"	3.25"
Exhaust Valves	1.03125"	.279"	3.25"
	Seat Angle	**Lift**	**Stem Clearance**
All Valves	45°	.257"	.0012-.0032"

Valve Guides:—Pressed in block. Top of guide should be 1" below valve port. Finish ream new guides to inside diameter of .2807-.2817".

Valve Lifters:—Plunger type. Operate in individual guides in cylinder block. Guides removable from lower end after block removed from crankcase. Serviced by installing new lifter and guide assembly. **Lifter Clearance in Guide**—.001".

Valve Springs:—Spring free length 1.6875".

	Spring Pressure	Spring Length
Valve Closed	28 lbs.	1¼"
Valve Open	44 lbs.	1"

VALVE TIMING

Tappet Clearance (Series 60, 63)—.006" Intake, .009" Exhaust with engine warm (130° F.).

Tappet Clearance (Series 65)—.011" Intake, .012" Exhaust with engine warm.

Valve Timing:—See Camshaft Setting above.

Intake Valves—Open 19° BTDC. Close 50° ALDC.

Exhaust Valves—Open 57° BLDC. Close 12° ATDC.

To Check Timing—Check tappet clearance of #1 intake valve (.011" warm). This valve should open with piston 19° or .115" before top dead center when point on flywheel 1 5/32" before '/' (TDC) mark lines up with indicator on housing under pit cover.

LUBRICATION

LUBRICATION: Pressure system. Oil pump feeds oil to all main and connecting rod bearings, front and rear camshaft bearing (center camshaft bearing lubricated by splash).

NOTE—Oil pump is vane type (Series 60, 63), gear type (Series 65).

Oil Pump: Located in crankcase at rear of engine. To remove pump, remove cylinder block from crankcase, take off flat cover on crankcase over oil pump driving gear, pull this gear, remove woodruff key in shaft. Remove oil pan, take out two screws holding oil pump body to crankcase, withdraw pump. Install pump in same manner.

65 NOTE—Pump screen (on elbow on pump cover in crankcase should be cleaned at 10000 mile intervals (average conditions), 2000-3000 mile intervals (extremely dusty or dirty conditions).

Normal Oil Pressure: Over 10 lbs. at 30 MPH (Series 60, 63), 30 lbs. at 50 MPH (Series 65).

Oil Pressure Regulator:—Spring-loaded ball check valve type located on right hand side of crankcase above pump (in large plug). Not adjustable.

Crankcase Capacity:—6 pints or 3 quarts.

COOLING

COOLING:—**Circulation**—Thermo-syphon (no pump).

NOTE—When installing lower water connection on left hand side of cylinder block, install shortest screw in rear hole.

Capacity—6 qts. (60), 4 qts. (63), 6 qts. (65).

CLUTCH

CLUTCH:—**Rockford Model UCLA-3-1748. Single plate,** dry disc type.

See Clutch Section for complete data.

Facings—Moulded type, 2 used. Inside Diam. 6.5". Outside Diam. 8.4375". Thickness .125". NOTE—Front facing is riveted to face of flywheel (before Engine No. 65-500), or floats between flywheel and driven disc (after Engine No. 65-500), rear facing is riveted to pressure plate (all cars). Driven disc is not lined.

Adjustment—Clutch pedal free travel should be 2" (Series 60, 63), 1" (Series 65). Adjust by turning clevis on clutch throw-out link rod.

Removal:—Disconnect drive shaft at front universal flange, remove flywheel housing top cover, take out screws in flywheel housing rear cover, remove rear cover and transmission as a unit. Take out screws in clutch cover around flywheel rim (turn all screws out evenly to relieve pressure), lift clutch out.

NOTE—Car manufacturer recommends that engine be removed for easier access to clutch.

NOTE—When installing clutch, turn clutch cover screws in loosely (so that driven disc can be moved by hand), place transmission in position on mounting studs and maneuver driven disc so that clutch shaft enters disc hub and pilot bearing in crankshaft, remove transmission and tighten clutch cover screws securely (do not disturb clutch disc).

TRANSMISSION

TRANSMISSION:—**Warner Model AS1-T84E.** Constant mesh, synchro-mesh, helical gears (Second & High), sliding spur gears (Low & Reverse).

See Transmission Section for complete data.

Removal:—Disconnect drive shaft at front universal flange, drop shaft, take off nuts on transmission mounting studs, pull transmission back.

NOTE—If transmission removed for work on clutch, take out rear flywheel cover screws and remove transmission and cover as an assembly.

UNIVERSALS

UNIVERSAL JOINTS:—**Detroit Series 4100.** Roller bearing Ball and Trunnion type. 2 used.

See Universals Section for complete data.

REAR AXLE

REAR AXLE:—**Spicer Model 10.** Semi-floating, sprial bevel gear type with Hotchkiss drive.

See Rear Axle Section for complete data.

Ratio—5.87-1 (Series 60, 63), 5.25-1 (Series 65).

Backlash—.006-.008".

Removal:—Disconnect drive shaft at rear universal. Disconnect brake cables and shock absorber links. Free spring clips at axle housing (or disconnect spring shackles to remove springs with axle), remove axle assembly from beneath car.

Axle Shaft Removal—Remove wheel, take out four capscrews in bearing retainer flange, remove grease retainer, bearing shims, brake flange. Use axle shaft puller to remove shaft and bearing.

Wheel Bearing Adjustment:—Controlled by shims under bearing retainer at outer end of axle shaft. Remove wheel, take out capscrews in retainer, remove retainer to adjust. **Endplay**—.008".

SHOCK ABSORBERS

SERIES 60 & 63

SHOCK ABSORBERS:—**Own Make.** Double faced, adjustable, friction disc type. One at front, two at rear.

Servicing:—Center bolt should be removed, lubricated with light oil and replaced at 15,000 mile intervals. To remove center bolts on rear units, disconnect rear spring front shackle bolt. This will allow shock absorber to drop down and provide clearance.

NOTE—To eliminate squeaks in shock absorbers, remove friction disc (after taking out center bolts), clean with a scraper and roughen with tool (do not use emery or sandpaper), oil center bolt when replacing (keep oil off of discs).

SHOCK ABSORBERS

SERIES 65

SHOCK ABSORBERS (PASS. CARS):—**Monroe.** Front: Model 1415 (right), 1414 (left). Rear: Conv'tble Sedan 1422 (right), 1423 (left); Others Bantam No. 8899 (right), 8900 (left). Single acting, hydraulic

See Shock Absorber Section for complete data.

SHOCK ABSORBERS (STATION WAGON & COMM'L):—**Own Make.** Friction disc type. Same as used on previous models. See Series 60 data (above).

FRONT SUSPENSION

Front Suspension:—Conventional 'I' beam section front axle with transverse spring. Axle positioned by torque arm at each end.

Kingpin Inclination—1°30' crosswise.

Caster—11° (60, 63), 15° (65). Not adjustable

Camber—1°30'-1°45' (60, 63), 1°15' (65). Not adj.

Toe In—.0625-.125". Adjust tie rod.

Steering Geometry (Toe-out on turns)—With outer wheel turned 20°, inner wheel 24°18'.

STEERING GEAR

Steering Gear: Lavine Model A, Worm-and-Ball type (1937-38); Ross Model T-12 or S-12, Cam-and-Lever type (1939-40-41). NOTE—T-12 is Twin-lever type.

See Steering Gear Section for complete data.

BRAKES

BRAKES:—**Service**—Own Make. Four wheel, mechanical type. Hand lever applies all four service brakes.

Drums—Steel. Diameter 8".

Lining—Moulded type. Width 1.125". Thickness .1718". Length per wheel 17" (60, 63), 13" (65).

Clearance—Shoes are self-centralizing.

Hand Brake:—See Service Brakes above.

HOOD ASSEMBLY

1938-39 MODELS

HOOD SIDE PANEL REMOVAL: 1938 Models. Remove panel bolts at body and radiator shell, hood fastener rod screws at radiator shell, lift panel off.

1939 Models. Remove the panel bolt at the rear upper end of side panel at shroud bracket, loosen front fender to shroud bolts. Remove headlamps by taking out three ⅜" capscrews and two bolts holding side panels to headlamp reinforcement plate. Remove bolts holding side panel to front fender hood side and radiator shell, lift panel out.

1941-48 MODELS

HOOD LOCK: Hood hinged at both sides and can be raised from either side. '41 cars use lock handle (with model name 'Special', etc.) which must be pulled out and safety catch under handle which must be pushed in to release hood. On '42-48, press in on red dot on front end of handle and pull out on rear end of handle to release hood. Prop hood in open position by means of support on cowl.

CAUTION—Handle must be in open position when lowering hood, then locked.

1941-48 MODELS

HOOD REMOVAL: Unlatch both hood fasteners (at each side), release safety catches and lift hood off.

1941 MODELS

HOOD ADJUSTMENT: Hood Fastener. Fasteners must pass over and inside of ribs in fastener plates under edge of hood at each side. Outer edges of fasteners must be parallel to hood flanges when locked. Adjust by removing cotter pin holding operating link in rear fastener. Change operating link rod length by turning rod in or out of trunnion on handle until outer edge of fasteners are parallel to fender flange with fastener closed.

Hood Pilot—Adjust pilots in fender (to rear of each fastener) for proper hood fit to fender and cowl.

Grille to Hood Nose—Hood clearance between hood nose and top center grille strip should be ⅛". Adjust bolted bracket at top rear of grille on radiator stamped cover.

Rear Brackets—U shaped hood hinge located at upper rear corner of each front fender at cowl. These hinges or brackets prevent hood from contacting door if door opened as hood is raised. With hood raised, rear corner of hood must contact shroud. To adjust, bend outer edge of bracket until hood corner contacts shroud.

1942-48 MODELS

HOOD ADJUSTMENT: Hood Lock. Hood fastener tension can be adjusted by loosening bolt at each side of fastener loop and adjusting clips up or down until correct tension obtained. Hood fastener handle can be adjusted for proper opening and closing by loosening three bolts (two at top, one at bottom) on anchor plate and shifting plate to front or rear until handle seats properly. Fastener lever arm on anchor plate must snap past center and against stop to lock hood (check lever arm when adjusting lock handle).

Alignment—⅛" clearance between hood and shroud, front doors, and fenders should be maintained. To adjust hood, loosen two bolts at each hinge and shift hinges to front or to rear until proper hood fit obtained. Alignment between hood and body can be adjusted by loosening attaching bolts at ends of hood-reinforcement rods (bolt holes in ends of rods slotted providing variation of overall width of hood to fit hood to fenders and body uniformly).

FRONT END SHEET METAL

1939 MODELS

FRONT END ASSEMBLY: Radiator shell, fenders, fender skirts and hood sides all bolted together and mounted as one unit as follows: One bolt in center of radiator mounting strap engages slotted hole in front frame cross-member (shims on bolt control height, slotted hole permits entire assembly to be moved fore-and-aft or sideways for alignment). Five bolts on each fender skirt at rear attach assembly to body shroud panel (bolt hole clearance permits assembly to be raised or lowered for alignment). All parts of assembly must be bolted together so that exposed joints are flush.

Alignment—See that radiator to frame bolt (at front), five fender to shroud bolts on each side, and shroud to hood side bracket on each side are loose to permit movement. Install upper hood and hinge assembly leaving front and rear saddle bolts loose. Shift entire front end assembly backward or forward for correct hood opening, adjust height at front end by adding or removing shims on front mounting bolt, adjust height at rear by raising or lowering entire assembly on rear mounting bolts to meet shroud bracket (bend bracket if necessary). Center radiator shell at front hood hinge saddle by loosening strut rods (between shell and fender skirt brace) and bending shell in proper direction (hold in position while tightening strut rods).

Front Fender Removal—May be removed separately as follows: Remove capscrews and nuts at shroud (rear end), remove bolts holding fender skirt and side panel to fender, remove headlamp, remove fender bolts at radiator shell and grille.

1940 MODELS

FRONT END ASSEMBLY: Radiator, fenders, and headlamps mounted on front fender iron assembly and reinforcement plate extending under radiator shell, fender and headlamp with cross bar ahead of radiator core attached to fenders. Assembly held by one bolt in center of front frame cross-member and attached to body at hood side panels, front fenders and fender skirt.

FRONT FENDERS

1940 MODELS

FRONT FENDER REMOVAL: Fender forms hood side panel, headlamp shell and part of radiator shell. May be removed as follows: Disconnect headlamp wires at junction block and fresh air intake at dash. Remove radiator grille, lower front fender bolts at radiator lower panel and radiator pan, bolts and nuts at cowl (on Series 50, 70, remove trim pad at front door hinge pillar for access to nuts), bolts holding fender assembly to upper radiator shell panel, fender iron to mounting strap, lift fender off.

1941 MODELS

FRONT FENDER REMOVAL: Fender forms hood side panel, headlamp shell, and part of radiator shell. Fender can be removed as follows: Disconnect headlamp wires at rear of junction blocks. Remove stamped cover over radiator (fastened to upper flange of front fenders) and insert pin in hole to secure fender to radiator mounting strap. Remove radiator side grille (work from above after stamped cover removed). Remove fender bolts from top flange of skirt, radiator lower panel, and skirt at gravel deflector. Remove cowl trim board and nuts (inside car). Remove fender-to-rocker panel bolts at lower rear corner of fender. Remove fender-to-cowl bolt at hinge pillar and lift off fender.

1942-48 MODELS

FRONT FENDER REMOVAL: Front fender removal procedure is as follows: Disconnect headlamp and parking lamp wires from junction block and remove wires from clips on skirt and support under fender. Remove fender attaching bolts at following points: grille, lower tie panel, gravel deflector to skirt, at angle iron on body, at rocker panel (lower rear end of fender), at inner edge where fender attached to skirts. Fender can then be taken off car leaving skirts on car. To remove front skirt, take out attaching bolts at radiator pan along bottom and at skirt support at rear. Rear skirt can be removed as follows: With wires removed as for fender removal (above), disconnect heater and ventilator hoses from skirt, remove skirt-to-frame rail bolts at rear, take out three lower radiator core-to-mounting strap bolts, loosen top bolt (do not remove), remove skirt-to-hood baffle bolt, take off skirt.

1942 MODELS

FENDER EXTENSIONS: Front Fenders (40, 60, 90). Fender extensions mounted on front doors and can be removed as follows: Insert a thin flat tool under moulding to unlock clips and remove upper and lower mouldings. Remove bolts exposed by removal of mouldings and remove lower half of extension panel. Remove extension-to-body bolt and clamps at upper flange and take off upper half of panel. Rocker panel extension can be removed by taking out screws at upper and lower edges.

Front Fenders (50, 70)—Fender extensions on these models (including coupes which have extensions carried through full length of door) can be removed as follows: Insert a thin flat tool under upper moulding to unlock clips and remove moulding. Remove bolts under this moulding and under lower edge of extension (open door for access to these bolts, front bolt accessible by aligning hole in front fender rear support with bolt). On Coupe models, remove screws at rear bracket on door. Lift off lower panel. For removal of upper panel, take out bolts and clamps at upper flange and bolt holding brace to front brackets, remove panel. Rocker panel extension can be removed by taking out bolts underneath at extension brackets. NOTE—On 50, 70 Coupes, extension on body between door and rear fender is of one-piece construction and can be removed by taking off mouldings and bolts under mouldings, and taking out screws at lower and leading edge of extension.

Rear Fenders (50, 70 Sedans)—Rear fender extensions on these models are attached to rear doors and can be removed and installed as follows: Remove mouldings by taking out bolt at rear of each moulding from inside door and then unlock clips using a thin flat tool under mouldings. Take out bolts exposed by removal of mouldings and screws along inner edge of door. Release extension from clip at upper center edge by raising lower edge, take off extension. Rear rocker panel extension can be removed by taking out bolts to fender and bracket at rear of extension. Rear fender extension can be assembled as follows: Place clamp at 45° angle to ground with bolt in upper end of slot, and tighten bolt to door. Install extension on door and attach top and bottom bolts at inner edge loosely. Install two bolts attaching extensions to brackets on door at lower front under moulding and tighten securely. Lock extension to door by driving clamp upward as far as possible with a flat thin tool at flange of

C NTINUED N NEXT PA E

C NTINUED FR M PRECEDING PAGE

the inner extension panel. Install all bolts along edge of door and mouldings on extension. NOTE—Wheelhouse covers provided with adjustment between front and rear halves allowing in and out alignment with extension panel on rear door.

1946-48 MODELS

FENDER EXTENSIONS: Front Fender (Series 40)—Front fender extensions on these cars are attached to front door by brackets and bolts and clamps. **To remove extension,** open front door, remove bolts along lower edge and at front end (visible with door open), then carefully lift up on extension to free it from clamps along upper flange. **To install extension,** first make certain that clamps are located between bosses pressed in door panel and that clamp screws are tight in lower ends of upper holes in clamps (screws have shoulders to provide tension on clamps when screws are tight). Hook edge of extension upper flange over ends of clamps and carefully press extension down into place, install bolts at front end and along lower edge. Adjust as required so that constant clearance of 1/16" is secured between extension and fender.

Front Fender Front Section (Series 50, 70)—This section is attached to four brackets on front door by bolts. **To remove extension,** open front door, remove clamp at front upper corner, loosen three safety nuts retaining extension on upper bracket, remove all capscrews at front, rear, and lower brackets, move extension to rear to disengage bolts from upper bracket and lift off (NOTE—all screws and bolts are accessible through opening at bottom with the door open. **To install extension,** Reverse removal instructions (above) tightening the bolts in the front and rear brackets before tightening safety nuts in upper bracket (this will insure upper bolts being forced into place in slots in upper bracket). Install clamp at front upper corner with long edge over extension flange. Adjustment for alignment of extension with fender and rear section can be made by shifting brackets on door. Make certain that constant clearance of 1/16" is secured between extension and front fender. CAUTION—Install all mounting bolts with lockwasher and plain washer

Front Fender Rear Section (Series 50, 70)—This section attached to rear door (or rear quarter) by bolts to front and lower brackets, and is hooked to upper bracket on body. There is also a tab which slides under rear fender (or fender extension). **To remove extension,** open front door, remove bolts from front bracket and two lower brackets, slide extension forward and lift off. **To install extension,** engage tab under rear fender or fender extension, slide extension to rear to engage two hooks with pins on body bracket, install bolts in front lower brackets. Extension can be adjusted for alignment by shifting brackets on door panel. CAUTION—Install all mounting bolts with lockwasher and plain washer under bolt head.

Rear Fender Extension (Series 50, 70)—Attached to rear door by five screws and one clamp. **To remove extension,** open rear door, remove capscrew from support bracket (accessible through opening at bottom), remove four round-headed screws at inside rear edge of door, lift up on extension to free it from clamp at upper flange. **To install extension,** make certain that clamp located between bosses on door panel and that clampscrew is tight in lower end of upper hole in clamp (screw has shoulder to provide tension on clamp with screw tight). Hook edge of upper flange on extension over upper end of clamp and press extension down into place. Install the four round-headed screws in edge of door with plain washer and seal washer on each screw, install capscrew in support bracket with lockwasher and plain washer under screw head.

Rear Wheel Shield (All Series)—To remove shield, remove attaching bolt under front lower edge of shield (2-door models), open rear door and remove attaching bolt visible at front edge of shield (4-door models), raise forward end of shield to disengage hook at top, then tilt shield out at top to disengage hook at lower rear end. When installing shield on 4-door models, install front attaching bolt loosely, close door and align shield before tightening bolt.

TIGHTENING (TORQUE WRENCH) SPECIFICATIONS

1941-48 MODELS

	Ft. Lbs.	In. Lbs.
Spark Plugs (14 mm. type)	22-28	264-336
Cylinder Head Capscrews	65-70	780-840
Main Bearing Bolts	120-130	1440-1560
Connecting Rod Bolts (40,50)	45-50	540-600
Connecting Rod Bolts (60,70,90)	60-65	720-780
Piston Pin Clamp Bolt	25-30	300-360
Rocker Arm Bracket Capscrew	30-35	360-420
Flywheel to Crankshaft	45-55	540-660
Manifold Studs	25-30	300-360
Timing Chain Cover	15-20	180-240
Balancer Bolt	100-110	1200-1320
Diff. carrier to Axle Hous'g	20-25	240-300
Brake Backing Plate to Axle	35-40	420-480
Wheel Bolts	60-65	720-780
Pitman Arm Nut	70-75	840-900
Front Shock Abs. to frame	60-65	720-780
Lower Control Arm to frame	45-50	540-600
Body Bolts	25-30	300-360

1940 & PREVIOUS MODELS

	Ft. Lbs.	In. Lbs.
Cylinder Head Capscrews	65-70	780-840
Main Bearing Cap Screws	115-120	1380-1440
Connecting Rod Bolts (40,50)	45-50	540-600
" " " (60,70,80,90)	60-65	720-780
Rocker Arm Cap Screws	30-35	360-420

CYLINDER HEAD

CYLINDER HEAD INSTALLATION: Use Torque Indicating Wrench to tighten cylinder head capscrews, tighten in correct sequence as shown in the diagram. Cast Iron heads should be tightened cold and rechecked after engine has been run sufficiently to bring all parts to normal operating temperature.

BUICK

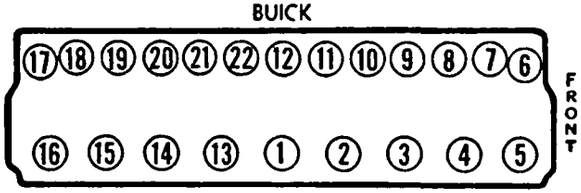

NOTE—On 1941-47 models using "crimped" head gaskets, cylinder head should be tightened initially and then the entire tightening procedure repeated to compensate for gradual flattening of crimping.

Tightening Torque—See Tightening (Torque Wrench) Specifications above.

1941 MODELS

COMPRESSION RATIO CHANGE (ON CARS WITH COMPOUND CARBURETION):—On engines with first type Cylinder Head (see Production Change Note below) and compression ratio of 7.0-1, compression ratio can be lowered to correct spark rap by installing thicker head gaskets as listed below. ***See Cylinder Head Gasket Installation data below.***

Model	Replacement Gasket	Compr. Ratio
40,50	No. 1323288①	6.67-1
60,70,90	No. 1297992②	6.68-1

①—This is production gasket used on later Series 41-40 cars with Single Carburetor.

②—This is 1940 type gasket which is .050" thick.

1941 MODELS

CYLINDER HEAD & COMPRESSION RATIO PRODUCTION CHANGE (All Models): For lower compression ratio on all Compound Carburetion engines, new cylinder heads with combustion chamber depth increased by .032" were used in production on all cars after following Engine Numbers: 4220016 (40 with Single Carburetor), 4208629 to 4210399 and all engines after 4215901 (40,50 with Compound Carburetion), 4197602 (60, 70, 90). See special head gasket data below. IMPORTANT NOTE—Since these new heads also used on 40 with Single Carburetor, new .050" gasket used (original gasket .070" thick) for approximately same compression ratio (6.5-1 first, 6.4-1 later). See Cyl. Head Gaskets below.

Cylinder Head Marking:—All cylinder heads machined for new compression ratio (above) marked 'L' at front end of spark plug cover face.

Cylinder Head Gaskets:—Gaskets unchanged on all Compound Carburetion Engines (.015" thick crimped type), change in compression ratio being effected by machining out head. On Series 41-40 with Single Carburetor, new thinner gasket (.050" thick—first type .070" thick) used to secure approximately same compression ratio with new head (same machined out head as used on other engines).

NOTE—This new Series 41-40 gasket, Part No. 1323288, may be used on 1940 Series 40 & 50 cars ***See Cylinder Head Gasket Installation data below.***

Compression Ratio & Head Gaskets

Car Model	Ratio	Gasket	Ratio	Gasket
40 Single Carb	6.5-1	1321396	6.4-1	1323288
40,50 Compd.	7.0-1	1320433	6.7-1	1320433
60,70,90 Compd	7.0-1	1320436	6.7-1	1320436

1941-42 MODELS

CYLINDER HEAD GASKET INSTALLATION: Lacquer coated gaskets are used on all models (see Series 40 Note following). Whenever cylinder head removed, head and block should be thoroughly cleaned to remove any trace of lacquer from old gasket. **Do not use any type of coating (gasket oil, or sealer) when installing this new lacquer-coated cylinder head gasket. Always use new gasket whenever cylinder head installed.** These gaskets are crimped type. 1941 Series 50 and 70 require special installation procedure (see paragraph following).

Series 40 Note:—Two types of head gaskets used on this model: 1) Engines with one carburetor .070" thick steelbestos type. 2) Engines with Compound Carburetion .015" thick crimped type.

1941 Engines:—Various gaskets may be found on these engines. See Compression Ratio Change (First Cars with Compound Carburetion) and Cylinder Head & Compression Ratio Production Change (All Models)

1941 SERIES 40 & 50

CYLINDER HEAD GASKET INSTALLATION (Series 50 & 70):—Engine dash protrudes over rear of engine and cylinder head must be pushed forward when it is removed in order to clear body. #16 push rod must be removed and installed with cylinder head in order to avoid damage to push rod. To install cylinder head and gasket with least possibility of damage to gasket, car manufacturer recommends following procedure be used: Loosen exhaust pipe and pull away from engine to allow clearance for gasket (carburetor and manifold assemblies may be left in position on exhaust pipe). Set cylinder head in position on top of engine before installing head gasket. Tilt head up on right side with edge of head resting on top of push rod cover. Tilt head up on left side just enough to insert cylinder head gasket from left side. Set head flat on block and gasket, align gasket with hole in head and block. To minimize possibility oil leak between edges of cylinder head gasket and push rod cover, head gasket should be pushed toward push rod cover as far as possible.

1946-47 MODELS

CYLINDER HEAD & GASKET: New type 1946-47 Cylinder Head for use with new type engine block (see Note below) has larger water passages at points where matching holes located in block (five holes at #8 cylinder, one vent hole at #1 cylinder). This head may be used on 1942 engines (intermediate water passages provided though not used when head installed on 1946-47 engine) with new type cylinder head gasket. **1946-47 Engine Block Note**—This block has five larger water openings at #8 cylinder and no holes between this point and #1 cylinder (vent hole only at #1 cylinder). Water circulation is rearward through the block, then forward in the head to the outlet. ***CAUTION—1942 type Cylinder Head and Gasket must not be used on 1946-47 Engines (smaller water passages at #8 cylinder will restrict water circulation and cause overheating)***

Cylinder Head Gasket—New 1946-47 Head Gasket has larger water holes at #8 and #1 cylinders to correspond with head and block passages (above). This gasket is crimped steel type, .015" thick, and may be used on 1942 engines (intermediate water holes provided).

CAUTION—This new type Head Gasket must always be used with new type Cylinder Head on 1946-47 engines. If 1942 type gasket used, smaller water passages at #8 cylinder will restrict water flow and cause overheating.

1941 MODELS

INSTALLING 14mm SPARK PLUGS ON FIRST CARS New 14 MM. spark plugs were installed to correct complaints of spark plugs fouling and causing uneven engine operation. These 14 mm. spark plugs are installed as follows:

Cylinder Head Fixture:—Wooden holding fixture should be made up so that head can be mounted on bench with spark plug holes vertical.

Drilling Cylinder Head:—With cylinder head mounted on fixture on bench, thoroughly clean spark plug recess and mount drill guide bushing, No. J-1747-1, on spark plug seat using extreme care to see that bushing seats squarely on seat. Use ½" twist drill in portable electric drill to drill out spark plug hole.

CAUTION—Bushing must be used to guide drill and bushing must be installed squarely on seat to insure holes being drilled properly in cylinder head.

Tapping Cylinder Head:—Use special tap guide bushing, No. J-1747-2, and regular 14 mm.-1.25 tap to thread each spark plug hole. Use extreme care to secure good threads.

Installing Spark Plugs & Cylinder Head:—When head is reworked as directed above, spark plug gasket seat will be tapered (not flat). Install spark plugs with one gasket. Check cylinder head gasket and install correct gasket for desired compression ratio as directed above (On first cars with compression ratio of 7.0-1, thicker gasket may be installed to lower compression ratio if complaints of spark rap being corrected). ***See Compression Ratio Change data above.***

ENGINE REMOVAL

1940 MODELS

ENGINE ASSEMBLY: Removal. Engine and transmission may be removed from car as follows: Remove hood and hood center hinge. Remove front end assembly (fenders and radiator) as a unit. Disconnect wires at junction boxes, radiator hose and other connecting parts. Remove battery, disconnect gear shift linkage, clutch linkage and fuel pump intake line. Take out screws attaching front of torque tube to transmission and bolts holding engine to engine mountings. **Do not loosen engine mountings on frame or complete realignment with rear axle will be required when engine installed.** Hoist engine and transmission assembly out of car.

Installation:—Lower engine and transmission carefully in place (engage torque tube connection without disturbing alignment). Tighten front engine support-to-mounting bolts and torque tube-to-transmission screws. Install transmission steady rest (use original number of shims at each end). Install rear engine support-to-mounting screws, raise rear of engine (with jack under transmission) until supports are clear of mountings at each side, then lower slowly until one support just rests on mounting and shim up opposite mounting to level engine supports. Install transmission steady rest brace rod (leave nuts at cross-member loose while tightening bolt at X-member, then tighten nuts at cross-member so that no tension placed on rod).

Alignment—To check alignment, roll car on level floor with front wheels set straight ahead. Rear wheel tracks should overlap front wheel tracks an equal amount on each side. To adjust engine alignment, shift rear engine mountings on frame and shim transmission steady rest mounting at each end so that universal ball joint is exactly in center of car.

ENGINE MOUNTINGS

1941-47 MODELS

ENGINE MOUNTINGS: Identification. Part numbers moulded in rubber section of mounting. When two part numbers used, part number determined by color name (black or red) following number. If rubber black use part number preceding the word black, if rubber red or mounting paint marked red, use part number preceding word red.

Front Mounting—On Series 40, 50, 60, 70 same mounting used (also same on both right and left sides). Series 40, 50 mounting installed with bolt flange to rear, Series 60, 70 to front. Series 90 use similar type but bolt holes are different and right and left mountings are not the same.

Center Mounting—Single mounting used on bottom front end of transmission. Mounting same for all series except that softer rubber used on Series 40, 50. Mounting secured to front face of transmission by two special head bolts, to top of frame cross-member by two bolts (bolt holes in support slotted for fore and aft positioning), and to forward side of cross member by one bolt and shims (to take up space for fore and aft positioning). Mounting not adjustable for up and down position.

Transmission Support Mounting:—Saddle type mounting under universal joint (torque ball) housing mounted on cross-member bolted to each leg of 'X' member. Brace rod connected between cross-member and under side of 'X' member. Shims provided at each end of cross-member. Softer rubber used in Series 40, 50 mounting. Install mounting with thin portion of rubber section to front. This mounting is a positioning member only (does not support weight of engine).

Engine Mounting Adjustment:—Loosen all mountings on frame, loosen transmission support rod at mounting, loosen transmission support cross-member at frame ends (with mounting tight at torque ball), and center torque tube and ball joint in frame X-member. For proper engine mounting adjustment proceed as follows: Tighten right and left front engine mountings to engine and frame. Tighten center engine mounting to transmission and frame cross-member (use shims to take up space between forward web of frame cross-member and lower mounting flange at lower bolt). Tighten transmission support mounting to transmission and transmission support (cross-member). Shim transmission support at frame ends without disturbing its normal position. Tighten rod at transmission support with no 'push' or 'pull' tension on rod.

1948 MODELS

'CONTROLLED FREQUENCY" ENGINE MOUNTINGS: Engine and transmission supported at 3 points on "Controlled Frequency" mountings (special synthetic rubber pads).

Front Mountings. At approximate center of crankcase at each side of engine. Mounting pads secured between brackets on frame and engine. Designed to support engine weight and provide torsional control.

Rear Mounting. At rear of transmission. Consists of: 1) Transmission Support (between legs of frame X-member), 2) Rubber Mounting Pad (on support under transmission rear bearing retainer), 3) Rubber Thrust Pad (between rear of support and thrust plate extending down from rear bearing retainer). Steel shims fitted between thrust pad and support. Mounting pad supports part of weight and thrust pad takes drive thrust from rear wheels.

Engine Mounting (& Centering) Adjustment:

1) **At front engine mountings.** Tighten brackets at frame and crankcase, loosen front mounting pad top stud nuts at engine bracket on each side.

2) **At rear mounting.** Tighten at following points: a) transmission support ends at frame X-member, b) mounting pad at support and at transmission rear bearing retainer, c) thrust pad to thrust plate stud nuts **at rear.** Then loosen thrust pad to transmission support stud nuts **at front.** Remove steel shims ahead of thrust pad.

3) **Then center engine as follows:** Distance between front edge of crankshaft balancer (at horizontal center line) and center of nearest shock absorber bolt head at each side must be equal. If require shift engine sidewise (oversize holes in en

CONTINUED ON NEXT PAGE

C NTINUED FROM PRECEDING PAGE

bracket at rubber mounting permit engine movement) until distance equal at each side (engine centered in frame). Tighten front mounting pad top stud nuts at each engine bracket.

4) **Shimming rear mounting.** Insert steel shims from above (with tabs upward on right side) to snugly fill space between front face of rubber thrust pad and rear face of transmission support (CAUTION—Engine and transmission must be seated normally on mounting pads). Tighten thrust pad to transmission support stud nuts at front. Then retighten front engine mounting pad stud nuts at each side of engine.

ENGINE ALIGNMENT

1939 MODELS

ENGINE & REAR AXLE ALIGNMENT (40, 60): New type drive (Inclined engine, front propeller shaft, frame mounted Universal Joint Ball) requires that engine and Universal Joint ball alignment must be accurately maintained for smooth and quiet operation. If alignment required by incorrect engine, rear axle, or universal removal, or if new frame installed, align engine as follows (NOTE—frame center-line marked on all frames at bottom rear flange of center cross-member plate).

Engine Installation:—Install engine mountings leaving all bolts finger-tight. Install engine, securely tighten bolts holding front support to front engine mountings, start (do not tighten) bolts holding engine to rear mountings. Attach rear axle to rear of transmission, tighten attaching screws (rear springs must not support car, support axle lightly at ball joint with jack, make certain that upward pressure not sufficient to affect alignment). Shift rear of engine sideways to align center mark on frame with mark on torque ball outer retainer (cold chisel marks), tighten front and rear engine mountings on frame. Check to see that flywheel housing contacts both rear engine mountings (use plain washers as shims, if required, to secure contact), tighten bolts holding engine on rear mountings.

Torque Ball Installation:—Install torque ball mounting assembly (mounting bracket and stud) on each rear leg of frame 'X' member with corrugated side of outer torque ball mounting washer (between frame and retainer) toward frame member. Loosen locknut on outer end of each torque ball mounting stud, adjust studs so that mounting washer is in solid contact with outer torque ball retainer but without exerting any pressure, tighten locknut on each stud partly (do not fully tighten locknut until after nut on opposite end of stud securely tightened). Install inner torque ball mounting washer (corrugated side toward frame member), lockwasher, and nut on each stud (do not tighten nut). Connect rear chassis springs and radius rod, install separate jack directly under each rear spring seat and allow jacks to support full weight of rear end of car. Tighten nuts on inner end of each torque ball mounting stud securely, then tighten torque ball mounting stud locknuts.

1939 MODELS

ENGINE ALIGNMENT (80, 90): Install and align engine as directed for Series 40, 60 above. Special torque ball installation and alignment procedure not required. See Transmission Steady Rest adjustment directions below.

TORQUE BALL ADJUSTMENT

1948 MODELS

TORQUE BALL: Operates between an inner and outer retainer bolted to transmission rear bearing retainer. Universal joint seal provided at rear of torque ball. Retainer packing backed with spring washer fitted at rear end of outer retainer (bears on torque ball). Shims provided between front flanged ends of inner and outer retainers for adjustment.

Torque Ball Adjustment: Proceed as follows:

Disassembly—Disconnect and move rear axle assembly to the rear. Take off thrust plate and torque ball assembly from transmission rear bearing retainer (on 40, 50, be sure to mark top of outer retainer and use mark for reassembly). Remove packing and spring washer from outer retainer. Clean all parts. Replace worn or damaged parts.

Reassembly and Adjustment—As follows:

1)—Install guide pins in upper bolt holes in transmission rear bearing retainer.

2)—Install one shim (with 3 notches in outer edge) and inner ball retainer (with oil drain hole and notch in edge down) on guide pins.

3)—Oil bearing surfaces of retainers and torque ball, and universal oil seal in torque ball with transmission lubricant.

NOTE—If universal oil seal replaced, install seal with feather edge in towards ball, use bar or flat piece of metal and press seal flush with boss on flange of ball. Leather must be soft and pliable (soaked in neatsfoot oil prior to installation).

4)—Assemble torque ball in outer retainer with "TOP" mark on ball and top of retainer (mark on 40, 50; flat portion on 70) together. RETAINER PACKING AND SPRING WASHER ARE NOT INSTALLED AT THIS POINT.

5)—Use Installing Tool J 2597 and push tool (sleeve and plug) through rear side of torque ball until leather edge of seal on plug (sleeve will drop off plug). Assemble torque ball and outer retainer (with TOP marks up) on guide pins, fill space between flanges of inner and outer retainers with shims (see Torque Ball Shims below). See that oil seal has seated on universal joint, remove tool plug.

Torque Ball Shims—Four thicknesses (marked by notches on outer edge) as follows:

3 Notches .....004-.006"	2 Notches .....009-.011"
1 Notch .....011-.013"	Unmarked .....013-.015"

6)—Install thrust plate and bolts in retainers (remove guide pins and install short bolts at these holes). DO NOT TIGHTEN BOLTS.

7)—Tighten retainer bolts evenly while continually moving torque ball by means of hardwood club inserted in end of universal joint. Use soft mallet and tap outer retainer if ball binds while tightening bolts. ***CAUTION—For proper centering of ball and retainers, torque ball must be moved while tightening retainer bolts.***

8)—Torque ball should require 5 to 10 lbs. drag with 5⅝" leverage (insert hardwood club in universal, attach spring scale in groove on club 5⅝" behind rear edge of universal). THIS IS CORRECT ADJUSTMENT WITHOUT OUTER RETAINER PACKING AND SPRING WASHER installed. If torque ball not within this tension, repeat centering operation and recheck tension. If further adjustment required, add torque ball shims if too tight, or remove shims if too loose (see Torque Ball Shims above) until correct adjustment secured.

9)—Disassemble torque ball and outer retainer for installation of outer retainer packing. Install spring washer in retainer with gap at top and edge away from flange. Select new packing (furnished 7/16", 15/32", and ½" long) to give snug fit in retainer against spring washer with thin forward edge extending into rounded portion of retainer. Re-install torque ball assembly (exactly as described above). Spring washer will be almost flat if packing correctly installed.

10)—Check torque ball tension. CORRECT ADJUSTMENT WITH OUTER RETAINER AND SPRING WASHER INSTALLED should be 15 to 20 lbs. with 5⅝" leverage. If tension too small, install longer packing. If tension too great, install shorter packing. ***CAUTION—Always use Tool J 2597 when installing torque ball to avoid damage to universal oil seal.***

11)—Re-install rear axle assembly.

ORIGINAL BORE

1936-42 MODELS

CYLINDER BORE SIZES: Original production (new engine) bore size indicated on all engines by number and color of paint marks on lower crankcase flange, under gasket, in line with each cylinder (not uniform for all cylinders of one block). See table below for sizes and markings.

.010" Oversize Production Engines:—Factory engines equipped with .010" (low limit) pistons marked by dash (—) following engine number.

Color Markings:—Cylinder bore paint marks on lower crankcase flange on right side extend from underneath oil pan gasket. Piston paint marks on underside of one or both piston bosses visible from below with oil pan removed (pistons need not be removed).

PISTONS

1936-40 MODELS

PISTONS (ORIGINAL & REPLACEMENT): Pistons graded for size in .0003" steps and marked by one or two color marks below pin bosses within piston skirt. Paper sticker on replacement pistons indicates piston size and cylinder bore for which intended. All replacement pistons furnished with pins fitted. See table below for piston size for all bore diameters.

Oversize Production Engines:—Some engines (marked by dash "—" following Engine Number) are factory-equipped with low limit of .010" Oversize Pistons (see .010" Oversize Table below for limits).

Dome Head Pistons (1938-40):—New 'Dome-shaped Head' pistons used on 1938-40 engines. See data following for piston changes made on these Dome Head pistons.

1938-39—Starting with 1938 Engine Number 3530562 (40), 3524480 (60,80,90) pistons were modified by cutting dome back 1/32" from piston edge, increasing land clearance to .023-.040" (40), .026-.033" (60,80,90), and relieving top edge of skirt (at horizontal slot.

1940—Same as 1938-39 above except that narrower top compression ring used (changed from ⅛" to 3/32"). This new ring has increased bearing surface in ring groove to prevent ring and land failure. Ring groove depth in piston increased from .148" to .166" (40,50), .162" to .179" (60,70,80,90). Top ring wall thickness increased from .140" to .155" (40,50), .155" to .172" (60,70,80,90).

1936-40 RIGINAL PRODUCTION PISTONS

Series 40, 50—Original Production

Piston Diameter 3 3/32", #1399803 ('36), 1394063 ('37), 1394421 ('38), 1394590 ('39), 1394812 ('40)

Piston & Engine Mark	Piston Diameter	Cylinder Diameter
1—Yellow	3.0892-3.0895"	3.0910-3.0913"
2—Yellow	3.0895-3.0898"	3.0913-3.0916"
1—Green	3.0898-3.0901"	3.0916-3.0919"
2—Green	3.0901-3.0904"	3.0919-3.0922"
1—White	3.0904-3.0907"	3.0922-3.0925"
2—White	3.0907-3.0910"	3.0925-3.0928"
1—Red	3.0910-3.0913"	3.0928-3.0931"
2—Red	3.0913-3.0916"	3.0931-3.0934"

Series 60, 70, 80, 90—Original Production

Piston Diameter 3 7/16", #1399804 ('36), 1394070 ('37), 1394422 ('38), 1394597 ('39), 1394823 ('40)

Piston & Engine Mark	Piston Diameter	Cylinder Diameter
1—Yellow	3.4340-3.4343"	3.4360-3.4363"
2—Yellow	3.4343-3.4346"	3.4363-3.4366"
1—Green	3.4346-3.4349"	3.4366-3.4369"
2—Green	3.4349-3.4352"	3.4369-3.4372"
1—White	3.4352-3.4355"	3.4372-3.4375"
2—White	3.4355-3.4358"	3.4375-3.4378"
1—Red	3.4358-3.4361"	3.4378-3.4381"
2—Red	3.4361-3.4364"	3.4381-3.4384"

1936-40 REPLACEMENT PISTONS

Series 40, 50—Replacement Piston Oversizes

.001" Oversize

Part number: 1399852 ('36), 1394064 ('37), 1394456 ('38), 1394591 ('39), 1394813 ('40)

Piston Marking	Piston Diameter	Cylinder Diameter
1—Red	3.0910-3.0913"	3.0928-3.0931"
2—Red	3.0913-3.0916"	3.0931-3.0934"

.005" Oversize

Part Number: 1399853 ('36), 1394065 ('37), 1394457 ('38), 1394592 ('39), 1394814 ('40)

1—Green	3.0948-3.0951"	3.0969-3.0972"
2—Green	3.0951-3.0954"	3.0972-3.0975"
1—White	3.0954-3.0957"	3.0975-3.0978"
2—White	3.0957-3.0960"	3.0978-3.0981"

.010" Oversize

Part Number: 1399854 ('36), 1394066 ('37), 1394458 ('38), 1394593 ('39), 1394815 ('40)

1—Green	3.0998-3.1001"	3.1019-3.1022"
2—Green	3.1001-3.1004"	3.1022-3.1025"
1—White	3.1004-3.1007"	3.1025-3.1028"
2—White	3.1007-3.1010"	3.1028-3.1031"

.015" Oversize

Part Number: 1399855 ('36), 1394067 ('37), 1394459 ('38), 1394594 ('39), 1394816 ('40)

1—Green	3.1048-3.1051"	3.1069-3.1072"
2—Green	3.1051-3.1054"	3.1072-3.1075"
1—White	3.1054-3.1057"	3.1075-3.1078"
2—White	3.1057-3.1060"	3.1078-3.1081"

.020" Oversize

Part Number: 1399856 ('36), 1394068 ('37), 1394460 ('38), 1394595 ('39), 1394821 ('40)

1—Green	3.1098-3.1101"	3.1119-3.1122"
2—Green	3.1101-3.1104"	3.1122-3.1125"
1—White	3.1104-3.1107"	3.1125-3.1128"
2—White	3.1107-3.1110"	3.1128-3.1131"

.030" Oversize

Part Number: 1399857 ('36), 1394069 ('37), 1394461 ('38), 1394596 ('39), 1394822 ('40)

1—Green	3.1198-3.1201"	3.1219-3.1222"
2—Green	3,1201-3.1204"	3.1222-3.1225"
1—White	3.1204-3.1207"	3.1225-3.1228"
2—White	3.1207-3.1210"	3.1228-3.1231"

Series 60, 70, 80, 90—Replacement Piston Oversizes

.001" Oversize

Part Number: 1399858 ('36), 1394071 ('37), 1394462 ('38), 1394598 ('39), 1394824 ('40)

Piston Marking	Piston Diameter	Cylinder Diameter
1—Red	3.4358-3.4361"	3.4378-3.4381"
2—Red	3.4361-3.4364"	3.4381-3.4384"

.005" Oversize

Part Number: 1399859 ('36), 1394072 ('37), 1394463 ('38), 1394599 ('39), 1394825 ('40)

1—Green	3.4396-3.4399"	3.4419-3.4422"
2—Green	3.4399-3.4402"	3.4422-3.4425"
1—White	3.4402-3.4405"	3.4425-3.4428"
2—White	3.4405-3.4408"	3.4428-3.4431"

.010" Oversize

Part Number: 1399860 ('36), 1394073 ('37), 1394464 ('38), 1394600 ('39), 1394826 ('40)

1—Green	3.4446-3.4449"	3.4469-3.4472"
2—Green	3.4449-3.4452"	3.4472-3.4475"
1—White	3.4452-3.4455"	3.4475-3.4478"
2—White	3.4455-3.4458"	3.4478-3.4481"

.015" Oversize

Part Number: 1399861 ('36), 1394074 ('37), 1394465 ('38), 1394601 ('39), 1394827 ('40)

1—Green	3.4496-3.4499"	3.4519-3.4522"
2—Green	3.4499-3.4502"	3.4522-3.4525"
1—White	3.4502-3.4505"	3.4525-3.4528"
2—White	3.4505-3.4508"	3.4528-3.4531"

.020" Oversize

Part Number: 1399862 ('36), 1394075 ('37), 1394466 ('38), 1394602 ('39), 1394828 ('40)

1—Green	3.4546-3.4549"	3.4569-3.4572"
2—Green	3.4549-3.4552"	3.4572-3.4575"
1—White	3.4552-3.4555"	3.4575-3.4578"
2—White	3.4555-3.4558"	3.4578-3.4581"

.030" Oversize

Part Number: 1399863 ('36), 1394076 ('37), 1394467 ('38), 1394603 ('39), 1394829 ('40)

1—Green	3.4646-3.4649"	3.4669-3.4672"
2—Green	3.4649-3.4652"	3.4672-3.4675"
1—White	3.4652-3.4655"	3.4675-3.4678"
2—White	3.4655-3.4658"	3.4678-3.4681"

1941 RIGINAL PRODUCTION PISTONS

PISTONS (ORIGINAL PRODUCTION): Piston graded for size in .0003" steps and marked by one or two color marks below pin bosses within skirt. Pistons fitted in .010" Oversize Production Engines are low limit .010" oversize pistons. All replacement pistons fitted with piston pins. See table below for original piston size for all original cylinder bore sizes.

Series 40, 50—Original Production

Piston Diameter 3 3/32"

Piston & Engine Mark	Piston Diameter	Cylinder Diameter
XX—Yellow	3.0886-3.0889"	3.0907-3.0910"
X —Yellow	3.0889-3.0892"	3.0910-3.0913"
• —Yellow	3.0892-3.0895"	3.0913-3.0916"
•• —Yellow	3.0895-3.0898"	3.0916-3.0919"
• —Green	3.0898-3.0901"	3.0919-3.0922"
•• —Green	3.0901-3.0904"	3.0922-3.0925"
• —White	3.0904-3.0907"	3.0925-3.0928"
•• —White	3.0907-3.0910"	3.0928-3.0931"
• —Red	3.0910-3.0913"	3.0931-3.0934"
•• —Red	3.0913-3.0916"	3.0934-3.0937"
• —Blue	3.0916-3.0919"	3.0937-3.0940"
•• —Blue	3.0919-3.0922"	3.0940-3.0943"

Series 60, 70, 90—Original Production

Piston Diameter 3 7/16"

Piston & Engine Mark	Piston Diameter	Cylinder Diameter
XX—Yellow	3.4334-3.4337"	3.4357-3.4360"
X —Yellow	3.4337-3.4340"	3.4360-3.4363"
• —Yellow	3.4340-3.4343"	3.4363-3.4366"
•• —Yellow	3.4343-3.4346"	3.4366-3.4369"
• —Green	3.4346-3.4349"	3.4369-3.4372"
•• —Green	3.4349-3.4352"	3.4372-3.4375"
• —White	3.4352-3.4355"	3.4375-3.4378"
•• —White	3.4355-3.4358"	3.4378-3.4381"
• —Red	3.4358-3.4361"	3.4381-3.4384"
•• —Red	3.4361-3.4364"	3.4384-3.4387"
• —Blue	3.4364-3.4367"	3.4387-3.4390"
•• —Blue	3.4367-3.4370"	3.4390-3.4393"

1941 REPLACEMENT PISTONS

PISTONS (REPLACEMENT SERVICE): Pistons furnished in following sizes for service (not graded and marked as for earlier car models).

Series 40, 50—Replacement Pistons

Nominal Size	Piston Diameter	Part Number
Standard①	3.0910-3.0922"	1393028
.005" Oversize	3.0966-3.0972"	1393029
.010" Oversize	3.1016-3.1022"	1393030
.015" Oversize	3.1066-3.1072"	1393031
.020" Oversize	3.1116-3.1122"	1393032
.030" Oversize	3.1216-3.1222"	1393033

Series 60, 70, 90—Replacement Pistons

Nominal Size	Piston Diameter	Part Number
Standard①	3.4358-3.4370"	1393034
.005" Oversize	3.4414-3.4420"	1393035
.010" Oversize	3.4464-3.4470"	1393036
.015" Oversize	3.4514-3.4520"	1393037
.020" Oversize	3.4564-3.4570"	1393038
.030" Oversize	3.4664-3.4670"	1393039

①—Standard size pistons supplied for service are all high limit pistons (or same as .001" oversize pistons). Therefore no .001" oversize furnished.

Piston Diameter—Measure at top of skirt at right angles to wrist pin bosses (greatest diameter) with pistons at 70° F. minimum.

CONTINUED N NEXT PAGE

PISTONS

C NTINUED FR M PRECEDIN PAGE

1942 PISTONS

PISTONS (ORIGINAL PRODUCTION): All pistons (cast-iron on 40A, 40B, 50; aluminum alloy on 60, 70, 90) graded for size in .0003" steps and marked by one or two color marks below pin bosses within skirt. Pistons fitted in .010" Oversize Production Engines are low limit .010" oversize pistons. All replacement pistons fitted with piston pins. See table below for piston size for all original cylinder sizes.

Series 40A, 40B, 50—Original Production (Cast-iron)
Piston Diameter 3 3/32"

Piston & Engine Mark	Piston Diameter	Cylinder Diameter
XX—Yellow	3.0887-3.0890"	3.0907-3.0910"
X —Yellow	3.0890-3.0893"	3.0910-3.1913"
• —Yellow	3.0893-3.0896"	3.0913-3.0916"
• •—Yellow	3.0896-3.0899"	3.0916-3.0919"
• —Green	3.0899-3.0902"	3.0919-3.0922"
• •—Green	3.0902-3.0905"	3.0922-3.0925"
• —White	3.0905-3.0908"	3.0925-3.0928"
• •—White	3.0908-3.0911"	3.0928-3.0931"
• —Red	3.0911-3.0914"	3.0931-3.0934"
• •—Red	3.0914-3.0917"	3.0934-3.0937"
• —Blue	3.0917-3.0920"	3.0937-3.0940"
• •—Blue	3.0920-3.0923"	3.0940-3.0943"

NOTE—1st 1500 cars equipped with alum. pistons.

Series 60, 70, 90—Original Production (Aluminum)
Piston Diameter 3 7/16"

Piston & Engine Mark	Piston Diameter	Cylinder Diameter
XX—Yellow	3.4328-3.4331"	3.4357-3.4360"
X —Yellow	3.4331-3.4334"	3.4360-3.4363"
• —Yellow	3.4334-3.4337"	3.4363-3.4366"
• •—Yellow	3.4337-3.4340"	3.4366-3.4369"
• —Green	3.4340-3.4343"	3.4369-3.4372"
• •—Green	3.4343-3.4346"	3.4372-3.4375"
• —White	3.4346-3.4349"	3.4375-3.4378"
• •—White	3.4349-3.4352"	3.4378-3.4381"
• —Red	3.4352-3.4355"	3.4381-3.4384"
• •—Red	3.4355-3.4358"	3.4384-3.4387"
• —Blue	3.4358-3.4361"	3.4387-3.4390"
• •—Blue	3.4361-3.4364"	3.4390-3.4393"

1942 MODELS

PISTON IDENTIFICATION: Original equipment 1942 (heavier) aluminum alloy pistons and new 1946 type (lighter) pistons now being furnished for service on 1942 cars are not interchangeable and may be identified by Casting Number (inside piston).

Aluminum Piston Casting Numbers

Series	Size	1942 Heavy Type	1946 Light Type
40, 50	Std., .005", .010" OS	1324716	1314308
40, 50	.015", .020", .030" OS	1324725	1319789
70	Std., .005", .010" OS	1324717	1315710
70	.015", .020", .030" OS	1324731	1319796

CAUTION—If necessary to mix these light and heavy pistons in a 1942 engine, pistons must be replaced in pairs (same type piston in paired cylinders as follows: No. 1 & 2, No. 3 & 4, No. 5 & 6, No. 7 & 8) to prevent engine roughness caused by difference of piston weight in paired cylinders.

1942 MODELS

PISTONS (REPLACEMENT SERVICE): Pistons now being furnished for service are 1946 aluminum alloy type and are lighter than aluminum alloy pistons furnished previously. *See Piston Identification and CAUTION paragraph above.* Refer to 1946 Replacement Piston data for parts numbers.

1946-48 MODELS

PISTON IDENTIFICATION: Original and replacement pistons furnished for service are new lighter weight aluminum alloy type and may be identified by Casting Number (inside piston) as follows:

Series	Size	Casting Number
40, 50	Std., .005", .010" OS	1314308
40, 50	.015", .020", .030" OS	1319789
70	Std., .005", .010" OS	1315710
70	.015", .020", .030" OS	1319796

►*CAUTION—Heavier type 1942 pistons must not be used in 1946-48 engines (will affect engine balance and cause roughness).*

1946-47-48 PISTONS

PISTONS (REPLACEMENT SERVICE): Pistons are lighter weight aluminum alloy type and are fitted with pins (pistons not furnished without pins).

Series 40, 50 Replacement Pistons

Part No.	Nominal Size	Piston Diameter
1393028	Standard①	3.0910-3.0922"
1393029	.005" Oversize	3.0966-3.0972"
1393030	.010" Oversize	3.1016-3.1022"
1393032	.020" Oversize	3.1116-3.1122"
1393033	.030" Oversize	3.1216-3.1222"

Series 70 Replacement Pistons

Part No.	Nominal Size	Piston Diameter
1393034	Standard①	3.4358-3.4370"
1393035	.005" Oversize	3.4414-3.4420"
1393036	.010" Oversize	3.4464-3.4470"
1393038	.020" Oversize	3.4565-3.4570"
1393039	.030" Oversize	3.4664-3.4670"

①—Standard pistons are "High Limit" type.

PISTON RINGS

1936-48 MODELS

REPLACEMENT PISTON RINGS: Car manufacturer supplies oversize rings in sizes listed below.

Ring Oversize	For Piston Oversizes
.010"	.005" to .010"
.020"	.011" to .020"
.030"	.021" to .030"

Replacement Ring Sets—Cylinder bores up to .005" maximum taper can usually be serviced by installing Perfect Circle X-90 piston ring set. To correct oil consumption in slightly worn engines, use new regular compression rings and two oil control rings of #3 type (which has narrower cylinder wall contact than #4 ring and gives more control during break-in) in both #3 and #4 piston ring grooves. **Piston Ring Tools (1940 & later)**—Use Service Tool KMO-297-E (Series 40, 50), KMO-297-D (on Series 60, 70, 90) for removing and installing rings.

Ring Fitting—Fit rings to specifications listed on Buick car pages (.010" min. end gap on all rings). **Excessive Oil Consumption Note**—When installing rings to correct this condition use a fine hone very lightly on all bores (just enough to dull glaze surface and not changing bore size). This will allow quicker break-in of new rings.

CONNECTING ROD & BEARINGS

1937-41 SERIES 40 & 50

REPLACEMENT CONNECTING RODS FOR PREVIOUS SERIES 40,50: New connecting rod, No. 1393255 used in 1942 (with cast-iron pistons). Previous rods can be replaced (singly or in sets) with this new rod. All rods in engines with cast-iron pistons must be of this new type.

CRANKSHAFT & MAIN BEARINGS

1937-48 MODELS

REPLACEMENT MAIN BEARINGS: Bearings are furnished reamed to size or unreamed as follows:
Unfinished Bearings—These bearings have extra babbitt stock and require special reaming equipment for finishing bearing to size.

Finished Bearings—Reamed bearings are furnished singly or in complete matched sets. NOTE—Bearing shells are assembled with .000" to .002" projection above cap and crankcase to provide for seating of bearings when caps tightened.

1941-48 MODELS

REAR MAIN BEARING OIL SEAL: Consists of oil slinger on crankshaft operating in groove to rear of rear main bearing. Groove in bearing cap has drain hole to return oil collected in groove to crankcase. A special packing ring gasket is assembled in a separate groove in crankcase and cap to rear of oil slinger. Vertical joint between cap and crankcase is sealed by cork gaskets.

Installation—Use new cork gaskets and special packing ring gasket. Install packing ring gasket in crankcase and allow 3/64" of gasket to protrude above face of bearing, repeat operation for cap. Packing will be compressed to a tight fit when cap tightened in place. CAUTION—Run engine slowly when first started to prevent damaging packing.

1942 MODELS

TIMING CHAIN COVER OIL SEAL: Consists of spring loaded synthetic rubber seal assembled in crankshaft opening in timing chain cover to prevent oil leaking out to hub of torsion balancer.

Installation—With timing chain cover out of engine and old seal and gasket removed from hole in cover, clean oil seal seat in cover. Install new gasket in hole, then press new seal in place with the small diameter (or side with garter spring) to rear. Timing chain cover oil seal driver (H.M. Tool No. J-1870) is available for properly seating seal in cover (center cover when installing on engine).

TAPPET CLEARANCE ADJUSTMENT

1941-48 MODELS

TAPPET CLEARANCE ADJUSTMENT PROCEDURE: .015" setting is road operating clearance (with oil and water temperatures stabilized). Since road operating oil and water temperatures cannot be obtained by running engine in shop for warm-up car manufacturer recommends following procedure (with variation in setting to compensate for different temperatures) for securing this setting: Run engine in shop at fast idle (700 RPM. min.) for 20 min., 30 minutes max., then adjust tappets using .017" feeler as 'Go', .018" feeler 'No Go' (if car has been run previously and engine oil is warm when shop warming up run started), or use .018" feeler

as 'Go', .019" feeler 'No Go' (if car not run previously and engine and oil are cold or at room temperature when shop warming up run started). CAUTION—Cars brought in from a hard run should be allowed to stand for 1 hour before tappet adjustment is made. Cars which have stood outside in cold weather should be warmed up for 30 minutes min. (shop run at fast idle) and then set tappet clearance .018" feeler 'Go', .019" 'No Go'.

VALVE SYSTEM

1939-48 MODELS

ROCKER ARMS AND COVERS: Rocker arms are mounted on tubular shaft and held against side of shaft brackets by spring installed on shaft between adjacent rocker arms. Shaft retained in brackets by pilot setscrew installed in top of #2 bracket. When installing rocker arms, make certain that lug on side of arm at adjusting screw end is toward bracket (all rocker arms Series 40, 50, intake rocker arms Series 60, 70, 80, 90). Exhaust rocker arms for Series 60, 70, 80, 90 are straight (no offset or reference lug). **Rocker Arm Clearance**—.002-.004".

Rocker Arm Lubrication Connection:—Metering restriction for oil feed to hollow rocker arm shaft located in cylinder head and oil pipe fitted directly into top of #1 bracket. #1 and #2 brackets are same part and shaft pilot screw is self-tapping type. NOTE—This type design used on late 1938 engines.

Rocker Arm Cover (1939):—Covers interchangeable with 1938 except that center stud not used on 1939 engines (plug center stud hole if 1938 cover used on 1939 engine, remove center stud if new cover used on 1938 engine, studs for new cover are ⅜" shorter and must be used with cover).

1941 MODELS

NO. 16 PUSHROD INSTALLATION & REMOVAL (Series 50 & 70): See cylinder head gasket installation (above) for removal and installation procedure.

OIL PUMP

1936-48 MODELS

OIL PUMP: Oil Pump Drive Change. New type drive used starting with 1939 model. Oil pump driven by tongue on end of distributor shaft engaging slot on end of pump shaft. Distributor shaft only pinned to drive gear (both shafts pinned to gear on previous models).

Drive Clearances—Drive shaft bearing .001-.0025". Drive gear backlash .003-.005".

Pump Gear Clearances—Idler gear bearing .001-.0025". Backlash .003-.006". End Clear. .0005-.004".

Relief Valve Clearance—.003-.006".

CLUTCH NOTES

1938-48 MODELS

CLUTCH PEDAL OVER-CENTER RETURN SPRING: Used on all models. Consists of spring connected to angular link attached to lower end of pedal or equalizer shaft and anchored to frame. This design allows spring to exert pressure to hold pedal down with clutch disengaged and out with clutch engaged. NOTE—Angular link not used on 38-40. **Adjustment**—Angular link is self-positioning on pedal shaft or equalizer shaft. Tighten frame mounting bolt nut as much as possible by turning nut up to limit of threads so that maximum spring tension is secured.

IMPORTANT—Spring tension must always be relieved (by backing off eye-bolt nut) before disconnecting clutch linkage.

1942-48 MODELS

CLUTCH YOKE BOOT ASSEMBLY: Consists of a flexible boot installed on release yoke to seal opening in flywheel housing. Boot is mounted on yoke at outer end by bolt which also attaches release rod nut lock and has a retainer spring at inner end which engages rim of hole in housing. When installing boot, make certain that spring fingers are properly engaged in housing and that release rod nut lock is correctly positioned.

NOTE—This boot first used on late 1942 cars.

TRANSMISSION NOTES

1938-40 MODELS (EXCEPT 39-40 & 39-60)

TRANSMISSION STEADY REST: Transmission support at universal joint housing which is part of engine mounting. Consists of cross-member bolted to leg of 'X' member at each end and to universal joint housing at center. A positioning brace rod is connected between steady rest and 'X' member. **Adjustment**—Bolt holes in frame and support are slotted and shims installed at each of support for for centering. Make certain that shims in place when installing steady rest, tighten nuts on two center bolts up tight against spacer, adjust steady rest so that no upward tension placed on transmission, adjust brace rod so that it is tight with no tension placed on rod. NOTE—Model 38-40 has one center screw (instead of two center bolts).

1941-47 MODELS

TRANSMISSION STEADY REST: See Transmission Support Mounting under ENGINE MOUNTING.

BRAKE NOTES

1937-38-39 MODELS

BRAKE ASSEMBLY REMOVAL FOR WORK ON FRONT SUSPENSION: To avoid necessity for bleeding wheel cylinder, proceed as follows:

40, 60—Remove wheel, disconnect tie rod ball stud, remove hub and drum assembly, free backing plate and wire assembly to frame (without disturbing brake shoe assembly or brake line).

80, 90—Remove wheel, disconnect tie rod ball stud, loosen one caster adjuster cap screw ½ turn (do not disturb other cap screw), remove upper caster adjuster bolt nut and lower caster adjuster nut, remove complete brake assembly (with steering knuckle, hub, and drum) and wire to frame.

ELECTRICAL SYSTEM NOTES

1946-47 MODELS

DISTRIBUTOR SHEARED DRIVE PIN CORRECTION & IMPROVED LUBRICATION: Some distributors on early cars did not have sufficient grease or facilities for greasing. These distributors (and distributors with frozen bearings) should be replaced (replaced by manufacturer under warranty). Distributors on which drive gear pin has sheared should be repaired by installing new pin, No. 822273, with sufficient number of No. 1848595 and No. 184-8596 washers for correct shaft endplay of .002-.007".

1946-47 MODELS

STARTER PINION ENGAGEMENT & DISENGAGEMENT CORRECTION: If starter drive clutch pinion does not engage with flywheel (on starters built before August 1, 1946), replace Shift Lever, Part No. 1884808, with redesigned part of same number which may be identified by zinc-plated finish (original lever painted black) which will correct interference between shift lever and collar. NOTE—Starters on which this correction has been made may be identified by spot of white paint on frame above name plate and by zinc-plated finish of lever. Starters built after Aug. 1, 1946 (Serial No. 6-H-1 up) have this new lever.

If Starter does not engage or cranks continuously (with new type Shift Lever described above)—Check for binding of solenoid contact disc and pushrod on terminal plate guide pin. Replace contact disc and pushrod assembly if guide hole is eccentric (replaced by manufacturer under warranty), straighten guide pin if bent.

MODEL IDENTIFICATION

SERIAL NUMBER:—First number—2,830,899. On right frame siderail at rear of right front wheel.

ENGINE NUMBER: First number 4-2,995,239. Stamped on right front of engine above crankcase ventilator.

TUNE-UP

COMPRESSION:—Ratio 5.55-1. Pressure 118 lbs. at 1000 R.P.M. r 96 lbs. (approx.) at cranking speed f 135 R.P.M.

VACUUM READING:—Gauge should show steady reading of 18-20" of HG. with engine idling at 400-450 R.P.M. or 7-8 M.P.H.

FIRING ORDER: 1-6-2-5-8-3-7-4. See diagram.

SPARK PLUGS: AC Type H-9. 18 mm. Metric.

Gaps—.020-.025".

NOTE—Gap may be set at .030" if necessary in extreme cases to secure good idling performance. This gap may result in high speed missing after some service.

IGNITION: See Coil, Condenser, and Distributor.

Breaker Gap—.015". Cam Angle—31° (closed).

►*CAUTION—Use of cam angle to set point gap not recommended by car manufacturer. If dwell meter used, make final check that gap within .0125-.0175".*

Automatic Advance—13° max. at 1050 RPM (distr.).

Vacuum Advance—6° distr. max. with 10-13" vac'm.

IGNITION TIMING: See Ignition Timing.

Std. Setting—2° BTDC. with flywheel mark 'ADV' at indicator in flywheel housing above starter.

CARBURETION: See Carburetor & Carb. Equipment.

Idle Setting—Both screws set midway between 'miss' and 'roll' points. Idle speed 400-440 RPM or 7-8 MPH.

Float Level—Fuel level 15/32" below top edge of bowl.

Accelerating Pump—Not adjustable.

Fuel Pump Pressure: 3½ lbs. maximum.

VALVES: See Valve Timing.

Tappet Clearance—.015" all valves, engine hot.

STARTING: See Battery, Starter, Generator, Regulator.

IGNITION

Ignition Switch:—Oakes Hershey type co-incidental ignition switch and steering post lock.

Ignition Lock—Briggs & Stratton.

COIL: Delco-Remy 536-H. On right side of engine block near distributor.

Ignition Current—2½ amperes idling, 4½ stopped.

CONDENSER: Delco-Remy Part No. 1855968.

Capacity—.20-.25 microfarad.

DISTRIBUTOR: Delco-Remy Model 663-F. Single breaker, 8 lobe cam, full automatic advance type with auxiliary vacuum spark control and Octane Selector.

Breaker Gap—.015". Limits .0125-.0175".

Cam Angle or Dwell—31° (closed), 14° (open).

Breaker Arm Spring Tension—19-23 ozs.

Automatic Advance

Distributor		Engine	
Degrees	R.P.M.	Degrees	R.P.M.
Start	250	3.5	500
7	400	14	800
13	1050	26	2100

Vacuum Spark Control—Vacuum unit mounted on side of distributor, linked directly to breaker plate. Provides additional advance at speeds greater than 18 M.P.H. except when engine is accelerated or operated with wide open throttle when spark is retarded by return spring within unit.

Vacuum Advance

Distr. Degrees	Eng. Degrees	Vacuum (" of HG)
Start	0°	5-7"
6°	12°	10-13"

Octane Selector—Adjustment at distributor providing advance or retard from standard setting (pointer midway on scale) to compensate for fuel characteristics. See Ignition Timing for setting.

Distributor Removal:—Mounted on right side of crankcase. To remove, take out two hold-down screws in mounting flange.

IGNITION TIMING

IGNITION TIMING:—Initial setting for fuel of 70 Octane rating as given. See Octane Selector for final setting.

	Flywheel Degrees	Piston Position
All Engines	2° BTDC	.0015" BTDC

To Set Timing (Synchroscope)—Recommended by manufacturer. Insert one Synchroscope lead in #1 terminal in distributor cap, clip other lead to #1 spark plug cable. Direct Synchroscope light on flywheel through inspection hole in front face of housing above starter. Idle engine at speed not more than 400 R.P.M. Note position of flywheel timing mark 'ADV/', loosen two distributor hold-down screws, rotate distributor slowly until timing mark coincides with reference line on housing, tighten

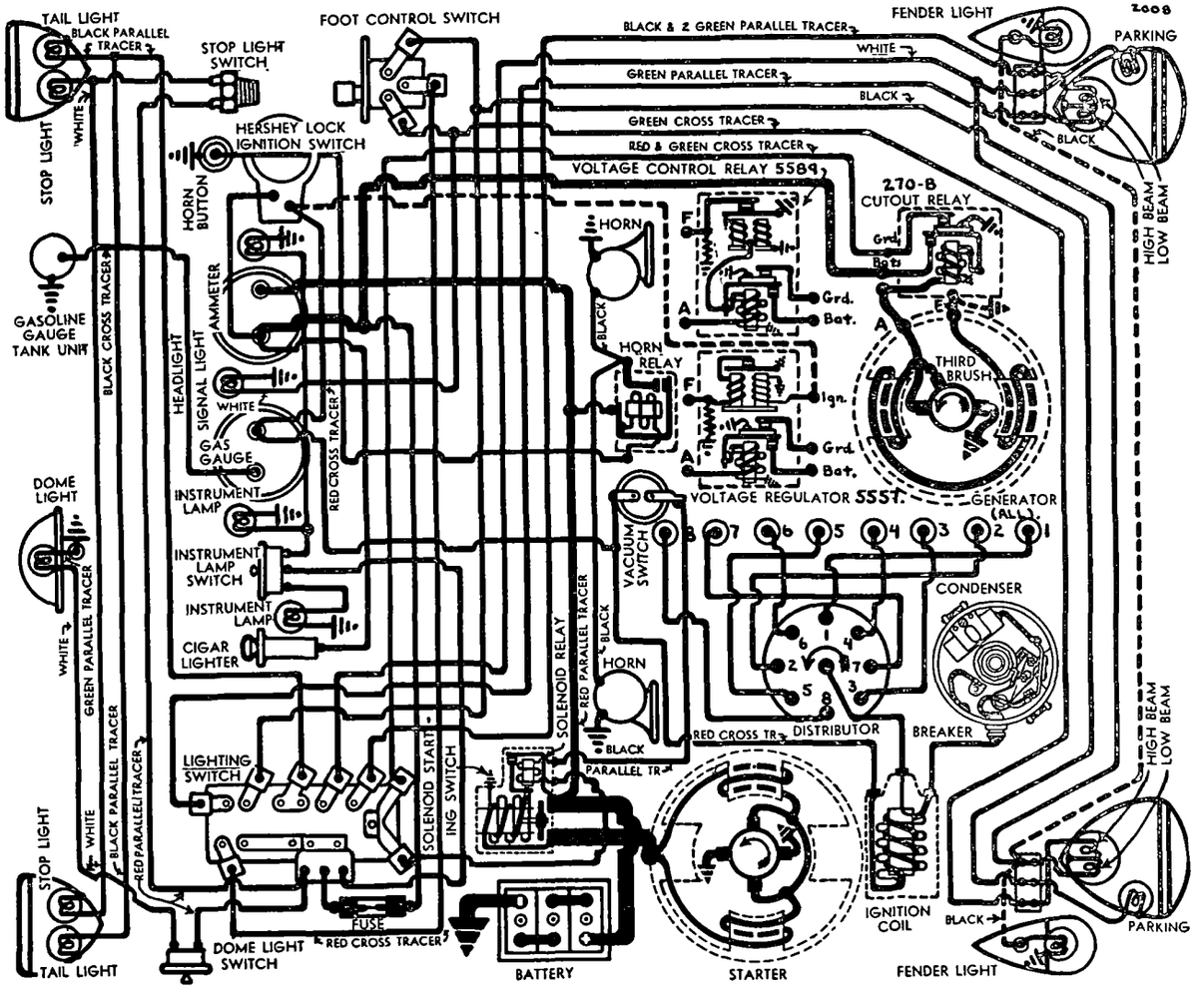

hold-down screws. If reference line on Octane Selector pointer does not coincide with center line on scale, loosen pointer lockscrew, shift pointer, tighten lockscrew.

NOTE—The 'ADV/' flywheel mark is less than ¼" before the dead center mark and is filled in with paint to be more easily distinguished.

To Set Timing (Without Synchroscope)—No means provided to crank engine (engage gears and roll car on floor). With #1 piston on compression, turn engine over until #3 exhaust valve (fifth valve from front of engine) begins to open, stop when flywheel mark 'ADV/' lines up with mark on housing (inspection hole in right front face of housing above starter). Use timing light or form spark gap between distributor high tension lead and housing to check contact opening. Loosen two hold-down screws, rotate distributor until contacts begin to open, tighten hold-down screws, loosen Octane Selector pointer lockscrew, center pointer reference line on scale, tighten lockscrw.

Octane Selector—Should be set for final ignition setting dependent upon fuel used. To adjust, loosen two distributor hold-down screws, rotate distributor clockwise so that pointer moves toward 'Low' end of scale for fuel of less than 70 Octane rating or counter-clockwise toward 'High' end of scale for fuel of higher rating until slight 'ping' noticeable at speeds between 10-15 M.P.H. but not at higher speeds when car is accelerated with wide open throttle.

CARBURETOR

CARBURETION:—Carburetor—Stromberg Model EE-1, 1" dual, downdraft type. See Carburetion Section for complete adjustment, overhaul, and Jet Specifications. *For complete data, refer to Carburetor Index.*

NOTE—Do not adjust carburetor until engine is thoroughly warmed up with choke valve wide open and idling at slow or hot idling speed.

Idle Adjustment—Adjust throttle stopscrew so that engine idles at 400-440 R.P.M. or 7-8 M.P.H. Turn idle adjusting screw for each carburetor barrel (in succession) in until engine begins to lag or miss, then turn screw out until engine begins to roll, finally turn screw in slowly until engine fires smoothly. Readjust throttle stopscrew for correct idling speed.

Accelerating Pump—Not adjustable.

CARB. EQUIPMENT

Fast Idle—Buick Cold Idle Control. See article in Carburetion Section.
For complete data, refer to Carburetion Equip. Index.

Accelerator Linkage Adjustment:—Linkage adjustment must be maintained to provide correct throttle opening for starting. With carburetor set for 7-8 M.P.H. idling speed and throttle button pushed in, rotate fast idle cam to extreme left against stop (fast idle position), adjust vacuum switch rod length so that switch lever reference line coincides with 'Fast Idle' line on housing. Hold cam in fast idle position, depress accelerator pedal, note throttle position when vacuum switch makes contact and starter operates. Gap between point f throttle stopscrew and cam must be at least 5/32".

Automatic Choke:—Delco-Remy Model 498-H.
For complete data, refer to Carburetion Equip. Index.
Choke Setting—Connecting rod is engaged in inner hole in automatic choke lever marked 'R' for standard setting. Shift to center hole if over-richness experienced. Outer hole marked 'H' used only to correct over-richness of highly volatile gasoline.

Air Cleaner:—AC. #1525959 or 1526659 oil-wetted type standard. #1525921 or 1526654 oil-bath type optional.

NOTE—Smaller main metering jets must be used with the heavy duty oil-bath type cleaners. See Stromberg Jet Specification table in Carburetion Section.

Fuel Pump: AC Type W, No. 1521854. Diaphragm type.
For complete data, refer to Carburetion Equip. Index.

Gasoline Gauge:—AC. Electric. #1515205 (dash unit), #1515416 (tank unit). See article in Carburetion Sec.
For complete data, refer to Carburetion Equip. Index.

BATTERY

BATTERY:—Delco, Type 13-J. 6 volt, 98 A.H. capacity (20 hour rate).

Starting Capacity—117 amperes for 20 minutes.

Zero Capacity—300 amperes for 3 minutes.

Grounded Terminal—Negative (—) terminal.

Location—Under right front seat.

STARTER

Delco-Remy Model 734-Z. Armature No. 823881.

Drive—Solenoid pinion shift and overrunning clutch.

Cranking Engine—135 R.P.M., 150 amperes at 4.5 volts.

Rotation—Counter-clockwise at commutator end.

Brush Spring Tension—24-28 ounces.

Performance Data

Torque	R.P.M.	Volts	Amperes
0 ft. lbs.	5000	5.0	65
12 " "	Lock	3.37	525

Removal:—Starter flange mounted on right front face of flywheel housing. To remove, take out flange capscrews.

Starting Switch:—Solenoid Switch Type 1512. Vacuum Switch Type 1594. Solenoid switch controlled through relay by vacuum switch operated by accelerator pedal with ignition "on".
For complete data, refer to Electrical Equipment Index.

Solenoid Switch

Closes against 70 lb. pull with ½" air gap drawing 65-71 amperes at 5 volts. Holds switch closed with draw of 12-14 amperes (hold-in coil only).

Solenoid Relay

Contacts Close—4 volts max. **Open**—1.6-2.0 volts.

Contact Gap—.030-.045". **Air Gap** .010-.014" closed.

Vacuum Switch

Contacts Close—10-14° rotation counter-clockwise from latch position.

Unlatch Action—3.4-4.6" of Hg. approximately 30° from latch position.

GENERATOR

STANDARD

Delco-Remy Model 936-C, Armature 1854856 (Std.), Model 931-Z, Armature 1853375 (Taxicab). Third brush control type. Voltage Control Relay (step voltage control) Optl. on 936-C, Std. on 931-Z. Ventilated by fan on drive pulley.

Charging Rate Adjustment—Connect test ammeter in charging line at 'BAT' terminal. On cars with step-voltage control, ground generator field 'F' terminal to frame. Loosen lockscrew on commutator end plate, shift third brush adjusting handle (visible through upper ventilating hole on commutator endplate) counter-clockwise to increase or clockwise to decrease charging rate. Tighten lockscrew and remove generator field ground.

Maximum Charging Rate—23 amperes (cold), 19 amperes (hot), 8.5-8.8 volts, 2760 R.P.M., 31 M.P.H. Manufacturer allows maximum generator output of 24 amperes (cold), 19 amperes (hot) with heavy accessory load when step-voltage unit is installed.

Performance Data

Model 936-C

	Amperes	Volts	R.P.M.
Cold	19-23	8.4-8.8	2400
Hot	16-20	8.1-8.5	3100

Model 931-Z

Cold	22-24	8.6-9.0	1300
Hot	13.5-16.5	7.7-8.1	1600-1800

Rotation—Counter-clockwise at commutator end.

Brush Spring Tension—22-26 ozs. (main), 16-20 ozs. (third brush).

Field Current—2.3-2.6 amperes (936-C), 3.5-4.0 amperes (931-Z) at 6.0 volts.

Motoring—500-700 R.P.M., 4.5-5.5 amperes at 6 volts.

Removal:—Generator pivot mounted at left front of engine. To remove, take out two pivot capscrews and one clamp bolt.

Belt Adjustment:—Loosen clamp bolt and pivot screws, pull generator away from engine until belt deflection midway between generator and fan pulleys is ½" with light pressure, tighten clamp bolt and screws.

GENERATOR

SPECIAL EQUIPMENT

CANADIAN GENERATOR: Delco-Remy 936-V. Armature No. 1854856. Third brush control in conjunction with Vibrating Voltage Regulator. All specifications, performance data, and adjustments same as for Model 936-W (Canadian production generator on Models 60, 80, 90). See next page.

SPECIAL GENERATORS:—**Model 961-N & 934-F.** Two brush type used with Double Core Type Voltage & Current Regulators Model 5832 (961-N), 5599 (934-F).
Refer to Buick Series 60, 80, 90 (1936) article (following) for complete data.

CUTOUT RELAY

Delco-Remy Model 270-B (Std. on Model 936-C Gen.). Mounted on generator. Has ground contacts for starter solenoid relay control.
For complete data, refer to Electrical Equipment Index.

Cuts In—6.75-7.5 volts, 900 R.P.M., 10 M.P.H.

Cuts Out—0-3.5 ampere discharge.

CONTINUED N NEXT PA E

CONTINUED FROM PRECEDING PAGE

Contact Gap—.018-.025".
Air Gap—.018-.022" with contacts closed.

REGULATOR

STANDARD

Delco-Remy Model 5589 (936-C), 5555 (931-Z). Voltage Control Relay. Cutout Relay and non-vibrating type regulator in single case. Cutout Relay has special 'ground' contacts for starter solenoid control. *For complete data, refer to Electrical Equipment Index.*

Cutout Relay

Cuts In—6.4-7.0 volts (5589), 6.3-6.9 volts (5555) at 900 RPM. or 10 MPH.
Cuts Out—3 amperes maximum discharge current.
Contact Gap and Air Gap—Same as for Mod. 270-B.

Voltage Control Relay

Contacts Open—8.35-8.65 volts at 70° F.
Contacts Close—7.3-7.7 volts at 70° F.
Contact Gap—.008-.013".
Contact Spring Tension—.7-.9 ounces.
Air Gap—.028-.040" between armature and core (armature down against lower stop), .028-.040" armature travel (between armature and lower stop).

REGULATOR

SPECIAL EQUIPMENT

Special Equipment: Delco-Remy Model 5557. Used on Model 936-V Generator (Canadian Equipment). Vibrating Voltage Regulator.
Refer to Buick Series 60, 80, 90 (1936) article (following) for complete data.

LIGHTING

LIGHTING:—Headlamps—Guide Multi-beam, Prefocused, cross-beam type with special non-interchangeable lenses. Headlamps aimed straight-ahead with lenses removed. Assymetrical passing beam (upper beam left hand headlamp, lower beam right hand headlamp) controlled by foot selector switch with lighting switch in fourth or 'Country Beam' position.
Headlamp Beam Indicator—Located at top of instrument cluster (above speedometer dial). Lighted whenever 'Country Beam' or upper headlamp beams are lighted.

Switches

Lighting—Delco-Remy Model 479-F,M, 479-L(Exp.).
Foot Selector—Delco-Remy Model 471-T.
Instrument Lamp—Delco-Remy Model 1404.
Stop Lamp—Hydraulic type on brake distributor mounted on left front leg of 'X' member.

Bulb Specifications

Position	Candlepower	Mazda No.
Headlamps	32-21	2320-L
Parking Bulbs (Std.)	1.5	55
Fender (Optl).	3	63-L
Instrument, Beam Indicator	1	51
Map Light	1.5	55
Tail	3	63-L
Stop	15	87-L
Dome	6	81-L

MISC. ELECTRICAL

FUSES:—Lighting—30 ampere in connector in lighting switch feed line (#6 terminal) from ammeter.

HORNS:—Klaxon Model K-33-S. Type 2051 (low note—right side), **Type 2052** (high note—left side). Vibrator type, blended tone, twin horns operated by horn relay.

Horn Type	Current at 6 volts	Air Gap
2051 Low Note	11-13	.042-.046"
2052 High Note	10-12	.032-.036"

Horn Relay:—Model 268-W. Requires .25 amperes at 2 volt minimum to close contacts. Current draw .8 amperes.
Contact Gap—.015-.025". **Spring Tension**—6-8 ozs.
Air Gap—.012-.017" with contacts closed.

ENGINE

ENGINE SPECIFICATIONS:—Type—8 cylinder 'T' head.
Bore—3 3/32". **Stroke**—3 7/8".
Displacement—233 cubic inches.
Rated Horsepower—30.63 (AMA).
Developed Horsepower—93 at 3200 R.P.M.
Compression Ratio & Pressure—5.55-1 Std. cast-iron head. Pressure 118 lbs. at 1000 R.P.M. or approximately 96 lbs. at cranking speed of 135 RPM.
Vacuum Gauge—Steady reading of 18-20" of HG. with engine idling at 400-450 R.P.M. or 7-8 M.P.H.
NOTE—To drop oil pan for work on engine, first remove front stabilizer by disconnecting frame brackets and stabilizer links at lower control arms.

PISTONS:—Buick Anolite, Aluminum alloy, 'T' slot, cam ground type with anodized finish (special hard oxide bearing surface). Pistons cannot be ground. Recondition cylinders to take finished replacement pistons.
Weight—13.75 ozs. (stripped), 19.6 ozs. (with rings).
Length—3 4/5".
Removal—Pistons and rods removed from above.
Clearance—Top of skirt .0021", Limits .0018-0024".

Replacement Pistons:—*See Buick Shop Notes*
Fitting New Pistons:—Check piston with micrometer gauge at point just below 'T' slot junction on both sides of vertical slot and below lower end of slot. Finish cylinder bore to size giving correct clearance. Feeler gauge ½" wide can be used on side opposite slot. Piston should fall of own weight with .0015" feeler and hold on .00225" feeler with engine temperature of 65-75° F.
Installing Pistons:—Slot should be toward left or away from camshaft.

PISTON RINGS:—Two compression, two oil control rings per piston all above pin. Both oil ring grooves drilled radially with ten ⅛" drain holes.
NOTE—Narrow heat deflector groove located above top ring groove. No ring fitted in this groove.

Ring	Width	End Gap	Side Clearance
Comp.	⅛"	.010-.015"	.002-.0035"
Oil Cont.	5/32"	.010-.018"	.0015-.003"

NOTE—Compression rings must be placed with undercut corner down. Service rings furnished .010", .020", .030" oversizes.

PISTON PIN:—Diameter 13/16". Length 2 11/16".
Pin is clamped in rod. Oversize pins not furnished. Pins are fitted and furnished with all replacement pistons.
Pin Fit in Piston—.0003-.0004" clearance at 70° F. or a hard push thumb fit.
NOTE—Use only 5½" wrench in tightening pin bolt to avoid damage to hollow pin.

CONNECTING ROD:—Weight 29.37 ozs. Length 7¼".
Crankpin Journal Diameter—2".
Lower Bearing—Spun-babbitt lined type.
Clearance—.0008-.0018". Sideplay .005-.010".
Bearing Adjustment:—Shims. Do not file rods or caps.
Installing Rods:—Cap and rod must line up. Install rod with mark toward rear of engine and oil spray hole in lower bearing upper half toward camshaft.
NOTE—Special diameter ground bolts used for cap and rod assembly. Common bolts must not be used.

CRANKSHAFT:—Five bearing. Integral counterweights.
Journal Diameters—#1, 2 5/16"; #2, 2⅜"; #3, 2 7/16"; #4, 2½"; #5, 2 9/16".
Bearing Type—Steel-backed, babbitt-lined. Bearings dowelled in crankcase and cap and assembled with .000-.002" projection. Line-ream new bearings.
Clearance—.0007-.0022". 1/32" clearance at each end.
Bearing Adjustment:—Shims provided. Do not file caps.
End Thrust:—Taken by #3 (center) bearing. Endplay .004-.007".

CAMSHAFT:—Five bearing. Non-adjustable chain drive.
Journal Diameters—#1, 2 5/32"; #2, 2⅛"; #3, 2 3/32"; #4, 2 1/16"; #5, 1 25/32".
Bearing Type—Steel-backed, babbitt-lined.
Clearance—.0005-.0035". Endplay .002-.006".
End Thrust:—Taken by thrust plate assembled between front bearing and camshaft sprocket.
Timing Chain:—Link-Belt. Width 1". Pitch .500". Length 24½" or 49 links.
Installing Chain—Install chain (new) with ¼"-⅜" slack midway between sprockets. Replace when sideplay exceeds 2" or chain becomes noisy.
Camshaft Setting:—Sprockets marked. Mesh chain on sprockets so that brass washers on link pins are opposite marked teeth on each sprocket. These chain markers are 10 links apart.

VALVES:

	Head Diameter	Stem Diameter	Length
Intake	1 17/32"	.3715-.3725"	4.5"
Exhaust	1 11/32"	.3711-.3719"	4.037"

	Seat Angle	Lift	Stem Clearance
Intake	45°	.332-.338"	.0015-.0035"
Exhaust	45°	.332-.338"	.0021-.0039"

NOTE—Exhaust valve stems are copper-plated.
Valve Guides:—Press fit in head. Install with undercut end up and finish ream to size for correct clearance.
Valve Springs:—Double springs on all valves.

Inner Spring	Pressure	Length
Valve Closed	21½-26½ lbs.	1 21/32"
Valve Open	53-59 lbs.	1 5/16"
Outer Spring	**Pressure**	**Length**
Valve Closed	31-36 lbs.	1 15/16"
Valve Open	81½-87½ lbs.	1 19/32"

Total Spring Pressure
Closed—52½-62½ lbs. Open—134½-146½ lbs.
NOTE—Tapers on valve keys and spring caps have been increased.
Valve Lifters—Single piece cast-iron. Lifter guide holes reamed in crankcase. Clearance .0005-.0025".
Rocker Arms:—Drop-forged fitted with steel-backed, babbitt-lined bushings.
Clearance—.0005"-.0025".
NOTE—When installing bushings see that oil hole to push rod ball lines up with hole in bushing.

VALVE TIMING

Tappet Clearance—.015" all valves. Engine hot.

Valve Timing:—See Camshaft Setting above. 'Timing Point' when valve .004" off seat with .015" tappet clearance or lash customarily listed instead of actual opening and closing points.

Timing Points

Intake Valves ....Open 8° BTDC.....Close 58° ALDC.
Exhaust Valves ..Open 58° BLDC.....Close 23° ATDC.

Opening and Closing Points

Intake Valves ..Open 21½° BTDC..Close 71° ALDC.
Exhaust Valves Open 71° BLDC..Close 36½° ATDC.

Valve Timing Check—#2 or #7 exhaust valve should be .150" open (actual opening as measured by dial indicator contacting valve spring cap), with #1 and 8 pistons on top dead center and flywheel mark 'TDC/1-8' at indicator in inspection hole in right front face of flywheel housing above starter.

LUBRICATION

LUBRICATION:—Pressure system from oil pump in crankcase through main oil channel in right side of crankcase.

Oil Pump:—Helical gear type in crankcase driven from distributor drive gear (slot in end of pump shaft engages lower pin in gear, upper pin engages distributor shaft). Ignition timing not disturbed by removal of pump.

Oil Pump Clearances—*See Buick Shop Notes.*

Normal Oil Pressure:—10 lbs. idling, 45 lbs. maximum at 35 M.P.H. and above.

Oil Pressure Regulator:—Operates at 45 lbs. Mounted on oil pump. Not adjustable.

Crankcase Capacity:—7 qts. (dry), 5 qts. (refill).

CLUTCH

CLUTCH:—**Own Make. Borg & Beck Driven Member.** Single plate, dry disc type. See article in Clutch Section for relining and assembling directions.
See Clutch Section for complete data.

Facings—Woven type, 2 required. Inside Diam. 6⅛". Outside Diam. 9½". Thickness .133".

Adjustment—Clearance between pedal and underside of toeboard must be ⅜-⅝". To adjust, loosen locknut and turn setscrew at rear of pedal above pedal stop. Free movement of clutch pedal must be ¾-1". To adjust, take out clevis pin connecting clutch rod and clutch fork, turn clevis on rod. One full turn of clevis changes pedal free movement 7/16".

Removal:—Remove rear end (take out flange bolts in front end of torque tube, pull rear end back to disconnect drive shaft at splined joint at universal), remove transmission and transmission support (support transmission at rear while it is being withdrawn), take off clutch pan, take out clutch mounting screws (turning all screws out evenly).

NOTE—When installing transmission support which is bolted to universal joint flange and frame, see that centering shims are in place at each end and that cross member is positioned so that rubber insulation is not compressed (bolt holes are slotted).

FRONT SUSPENSION

Front Suspension:—Independent, linked parallelogram type with coil springs. See article in Steering Section for description and adjustment procedure.
See Front Suspension Section for complete data.

NOTE—To avoid damage to brake assembly when work is being done on front suspension, disassemble as follows: Remove wheel, disconnect tie rod ball stud, loosen one caster adjuster capscrew one-half turn (do not disturb second capscrew or caster adjustment will be lost), remove upper and lower caster adjuster bolt nuts, remove complete steering knuckle, hub and brake drum assembly and wire to frame to prevent damage to brake hose.

King Pin Inclination—3½-4½° crosswise.
Camber—Minus ¼ to plus ¾°. No adjustment.
Caster—3-3½°. Adjustable.
Toe In—1/16-⅛". Adjustable.
Steering Geometry (Toe Out)—Outer wheel turned 20°, inner wheel 23¼° plus or minus ¾°. Check tie rod ends, steering arms, kingpin, or wheel bearings for loosesness.

STEERING GEAR

Steering Gear: Saginaw Worm-and-Double Roller type with center steering.
See Steering Gear Section for complete data.

BRAKES

BRAKES:—**Service**—Buick (Bendix) Hydraulic Single-anchor four-wheel type. Hand lever applies rear wheel brakes. See article in Brake Section for complete adjustment procedure.
See Brake Section for complete data.

NOTE—Wheel cylinder diameters are 1 1/16" (front wheels), 1" (rear wheels) and no part of assembly is interchangeable between front and rear wheels.

Brake Drum Diameter—12".

Brake Lining—Ferodo BZ-10 Woven type. Width 1¾". Thickness 3/16". Length 9 15/16" (primary shoe), 12¾" (secondary shoe) or 22 11/16". per wheel.

Brake Clearance—.010" plus or minus .002" at heel and toe of each shoe.

Hand Brake Adjustment:—See Service Brake Adjustment.

MODEL IDENTIFICATION

SERIAL NUMBER:—First number—2,830,899. On right frame siderail at rear of front wheel.

ENGINE NUMBER: First number (60) 6-3001000, (80) 8-3001000, (90) 9-3001000. Stamped on right front of engine above crankcase ventilator pipe.

TUNE-UP

COMPRESSION:—Ratio 5.45-1. Pressure—108 lbs. at 1000 R.P.M. or 94 lbs. (approx.) at cranking speed of 135 R.P.M.

VACUUM READING:—Gauge should show steady reading of 18-20" of HG. with engine idling at 400 R.P.M. or 7-8 M.P.H.

FIRING ORDER: 1-6-2-5-8-3-7-4. See diagram.

SPARK PLUGS: AC Type H-9. 18 mm. Metric. Gaps—.020-.025".

NOTE—In extreme cases gaps may be set at .030" if necessary to secure good idling performance. This setting may result in high speed missing after some service.

IGNITION: See Coil, Condenser, and Distributor. Breaker Gap—.015". Cam Angle 31° (closed).

►*CAUTION—Use of cam angle to set point gap not recommended by car manufacturer. If dwell meter used, make final check that gap within .0125-.0175".*

Automatic Advance—15° max. at 1300 RPM (distr.).

Vacuum Advance—6° max. (distr.) with 10-13" vacuum.

IGNITION TIMING: See Ignition Timing.

Std. Setting—10° BTDC. with flywheel mark 'ADV' at indicator in flywheel housing above starter.

CARBURETION: See Carburetor & Carb. Equipment.

Idle Setting—Both screws set midway between 'miss' and 'roll' points. Idle speed 400-440 RPM or 7-8 MPH.

Float Level—Fuel level 5/8" below top of bowl.

Accelerating Pump—Not adjustable.

Fuel Pump Pressure: 4½ lbs. maximum.

VALVES: See Valve Timing.

Tappet Clearance—.015" all valves, engine hot.

STARTING: See Battery, Starter, Generator, Regulator.

IGNITION

Ignition Switch:—Oakes Hershey type co-incidental ignition switch and steering post lock.

Ignition Lock—Briggs & Stratton.

COIL: Delco-Remy 536-H. On right side of engine block near distributor.

Ignition Current—2½ amperes idling, 4½ stopped.

CONDENSER: Delco-Remy Part No. 1855968.

Capacity—.20-.25 microfarad.

DISTRIBUTOR: Delco-Remy Model 663-E. Singl breaker, 8 lobe cam, full automatic advance type with auxiliary vacuum spark control and Octane Selector.

Breaker Gap—.015". Limits .0125-.0175".
Cam Angle or Dwell—31° (closed), 14° (open).
Breaker Arm Spring Tension—19-23 ozs.

Automatic Advance

Distributor Degrees	R.P.M.	Engine Degrees	R.P.M.
Start	250	3.5	500
7	400	14	800
15	1300	30	2600

Vacuum Spark Control—Vacuum unit mounted on side of distributor, linked directly to breaker plate. Provides additional advance at speeds greater than 15 M.P.H. except when engine is accelerated or operated with wide open throttle when spark is retarded by return spring within unit.

Vacuum Advance

Distr. Degrees	Eng. Degrees	Vacuum (" of HG)
Start	0°	5-7"
6°	12°	10-13"

Octane Selector—Adjustment at distributor providing advance or retard from standard setting (pointer midway on scale) to compensate for fuel characteristics. See Ignition Timing for setting.

Distributor Removal:—Mounted on right side of crankcase. To remove, disconnect vacuum line, take out two hold-down screws in mounting flange.

IGNITION TIMING

IGNITION TIMING:—Initial setting for fuel of 75 Octane rating as given. See Octane Selector for final setting.

	Flywheel Degrees	Piston Position
All engines	10° BTDC	.0442" BTDC

To Set Timing (with Synchroscope)—Recommended by manufacturer. Insert one Synchroscope lead in #1 terminal in distrubutor cap, clip second lead to #1 spark plug cable. Direct Synchroscope light at flywheel through timing inspection hole in right

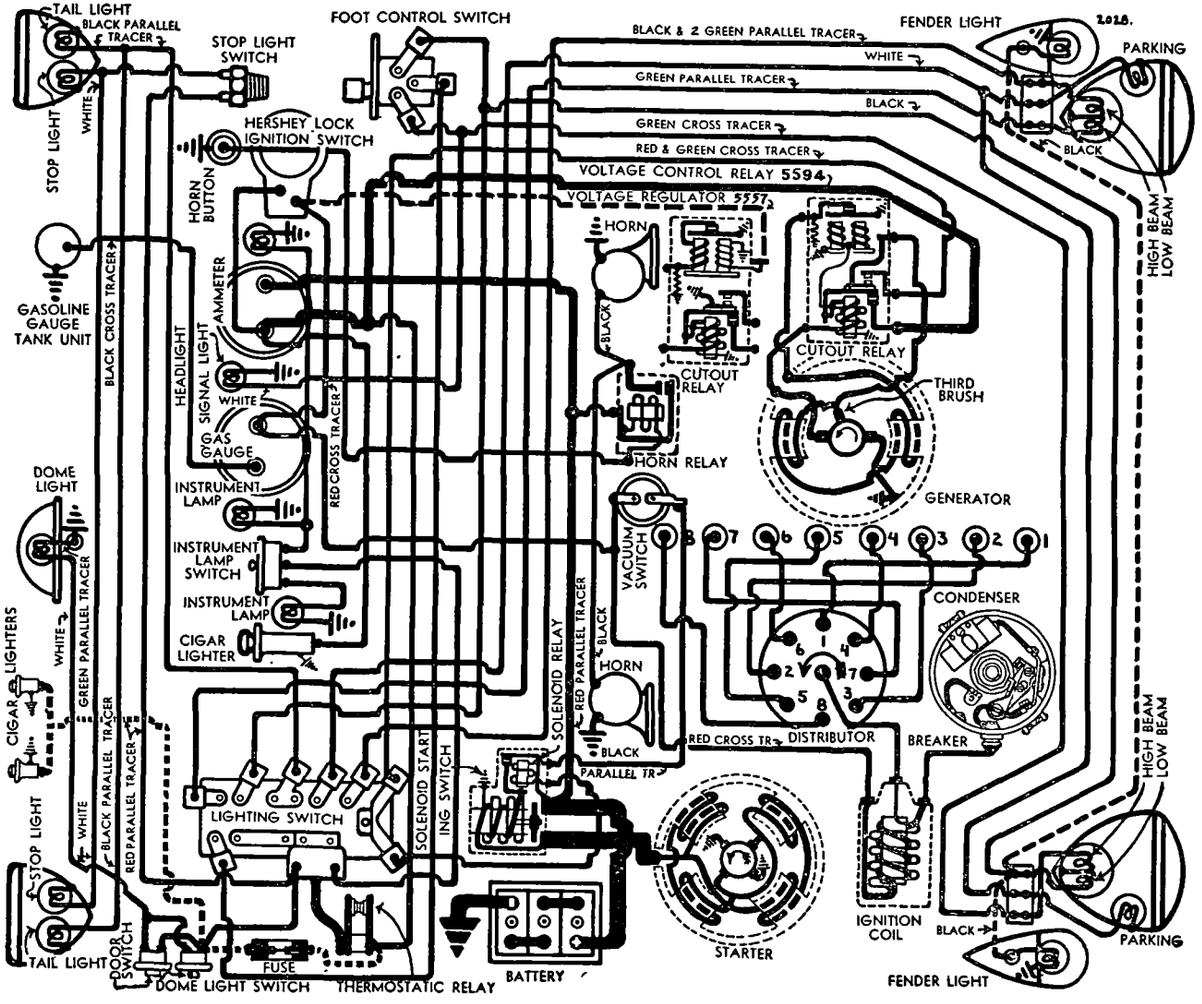

front face of flywheel housing above starter. Idle engine at speed not greater than 400 R.P.M. Note position of flywheel timing mark 'ADV/'. If 'ADV' line does not coincide with line on housing, loosen two distributor hold-down screws, rotate distributor slowly until lines coincide, tighten hold-down screws. Check position of Octane Selector pointer. If reference line on pointer does not coincide with center line of scale, loosen pointer lockscrew, shift pointer, tighten lock-screw.
NOTE—The 'ADV/' ignition timing mark filled with paint.

T Set Timing (Without Synchroscope)—No means provided to crank engine (engage gears and roll car to turn engine over). With #1 piston on compression, turn engine over until #3 exhaust valve (fifth valve from front of engine) begins to open, stop when flywheel mark 'ADV/' lines up with mark on flywheel housing (timing inspection hole in right front face of housing above starter). Use timing light or form spark gap between distributor high tension lead and housing to check contact opening. Loosen two distributor hold-down screws, rotate distributor until contacts begin to open, tighten hold-down screws. Check position of Octane Selector pointer. If reference line on pointer does not line up with center line on scale, loosen pointer lock-screw, shift pointer, tighten lockscrew.

Octane Selector—Should be adjusted for final ignition setting dependent upon Octane Rating of fuel used by car owner. Initial setting (above) correct for fuel of 75 Octane Rating. To adjust, loosen two distributor hold-down screws, rotate distributor clockwise so that pointer moves toward 'Low' end of scale for fuel of lower rating, or counter-clockwise (toward 'High' end of scale) for higher rating until a slight 'ping' is noticeable at speeds between 10 and 15 M.P.H. but not at higher speeds when car is accelerated with wide open throttle.

CARBURETOR

CARBURETION:—**Carburetor**—Stromberg Model EE-22 1¼" dual, downdraft type. See Carburetion Section for adjustment, overhaul and Jet Specifications.
For complete data, refer to Carburetor Index.

NOTE—Do not adjust carburetor until engine is thoroughly warmed up with choke valve wide open and idling at hot or slow idling speed.

Idle Adjustment—Set throttle stopscrew so that engine idles at 400 R.P.M. or 7-8 M.P.H. Turn idling adjusting screw for each carburetor barrel (in succession) in until engine begins to lag or miss, then turn screw out until engine begins to roll, finally turn screw in slowly until engine fires smoothly. Readjust throttle stopscrew for correct idling speed.

Accelerating Pump—Not adjustable.

Fast Idle:—Buick Cold Idle Control.
For complete data, refer to Carburetion Equip. Index.

Accelerator Linkage Adjustment:—Must be maintained to provide correct throttle opening for starting. With carburetor set for correct 7-8 M.P.H. hot idling speed and throttle button pushed in, rotate fast idle cam to extreme left against stop (fast idle position), adjust vacuum switch rod length so that switch lever reference line coincides with 'Fast Idle' line on housing. Hold cam in fast idle position, depress accelerator pedal, note throttle position when vacuum switch makes contact and starter operates. Gap between throttle stopscrew and cam must be at least 5/32" at this point.

Automatic Choke:—Delco-Remy Model 498-J.
For complete data, refer to Carburetion Equip. Index.

Choke Setting—Connecting rod is engaged in inner hole in automatic choke lever marked 'R' for standard setting. Shift to center hole if over-richness is experienced. Outer hole marked 'H' used only for over-richness due to highly volatile gasoline.

CARB. EQUIPMENT

Air Cleaner:—AC. #1525960 (60), #1525982 (80,90) oil-wetted type standard, #1526618 (60,80), #1526619 (90) oil-bath type optional.
NOTE—Smaller main metering jets must be used with the heavy-duty oil-bath type cleaner. See Jet Specification table in Carburetion Section.

Fuel Pump:—AC. Type AB #1521838. Diaphragm type combination fuel-and-vacuum pump.
For complete data, refer to Carburetion Equip. Index.

Gasoline Gauge:—AC. Electric. #1515205 (dash unit), #1515416 (60 tank unit), #1515415 (80,90 tank unit).
For complete data, refer to Carburetion Equip. Index.

BATTERY

BATTERY:—**Delco, Type 15-G. 6 volt, 15 plate, 114 amp. hour capacity (20 hour rate).**

Starting Capacity—137 amperes for 20 minutes.

Zero Capacity—300 amperes for 4.5 minutes.

Grounded Terminal—Negative (—) terminal.

Location—Under right front seat.

STARTER

Delco-Remy Model 727-W (Std.), 729-B (60 RHD). Armature No. 820158.

Drive—Solenoid pinion shift and overrunning clutch.

Cranking Engine—115 R.P.M., 175 amperes at 5 volts.

Rotation—Counter-clockwise at commutator end.

Brush Spring Tension—24-28 ounces.

Performance Data

Torque	R.P.M.	Volts	Amperes
0 ft. lbs.	5500	5	65
16 ft. lbs.	Lock	3	600

Removal:—Mounted on right front face of flywheel housing. To remove, take out capscrews.

Starting Switch:—Solenoid Switch Type 1512 (727-W), 1530 (729-B). Vacuum Switch Type 1601. Solenoid switch controlled through relay by vacuum switch operated by accelerator pedal with ignition 'on'.
For complete data, refer to Electrical Equipment Index.

Solenoid Switch Type 1512, 1530

Closes against 70 lb. pull with ½" air gap drawing 65-71 amperes at 5 volts. Holds switch closed with draw of 12-14 amperes (hold-in coil only).

Solenoid Relay & Vacuum Switch.
All data same as for Series 40 (preceding page).

GENERATOR

STANDARD

Delco-Remy Model 936-P (All Series). Armature No. 1854856. Third brush control type with Voltage Control Relay (step voltage control). Ventilated by fan on drive pulley.

Charging Rate Adjustment—Connect test ammeter in charging line at 'BAT' terminal, ground generator field 'F' terminal to frame. Loosen lockscrew on commutator end plate, shift third brush adjusting handle (visible through upper ventilating hole on commutator endplate) counter-clockwise to increase or clockwise to decrease charging rate. Tighten lockscrew and remove generator field ground.

Maximum Charging Rate—27 amperes (cold), 23 amperes (hot), 8.7-9.0 volts, 2770 RPM., approx. 36 M.P.H. Manufacturer allows maximum generator output of 24 amperes (cold), 19 amperes (hot) with heavy accessory load.

Performance Data

	Amperes	Volts	R.P.M.
Cold	23-27	8.8-9.0	3000
Hot	18-23	8.2-8.7	3200

Rotation—Counter-clockwise at commutator end.

Brush Spring Tension—22-26 ozs. (main), 16-20 ozs. (third).

Field Current—2.3-2.6 at 6 volts.

Motoring—500-700 R.P.M., 4.5-5.5 amperes at 6 volts.

Removal:—Generator pivot mounted at left front of engine. To remove, take out two pivot capscrews and one clamp bolt.

Belt Adjustment:—Belt deflection midway between generator and fan pulleys should be ½" with light pressure.

GENERATOR

SPECIAL EQUIPMENT

CANADIAN GENERATOR: Delco-Remy 936-W. Armature No. 1854856. Third brush conrtol in conjunction with vibrating voltage regulator. Ventilated by fan n drive pulley.

Charging Rate Adjustment—Adjusted by changing setting of voltage regulator. See Regulator data below and special article in Equipment Section. Do not shift third brush or run generator on open-circuit.

Maximum Charging Rate—As shown in table below. Reached at approx. 38 M.P.H. To check charging rate, connect test ammeter in charging line at 'BAT' terminal of regulator, voltmeter between 'GEN' terminal and ground, ground 'F' terminal to eliminate regulator action.

Performance Data

	Amperes	Volts	R.P.M.
Cold	23-27	8.8-9.0	3000
Hot	18-23	8.2-8.7	3200

Rotation, Brush Spring Tension, Field Current, Removal and Belt Adjustment same as for standard generator above.

SPECIAL GENERATORS:—**Model 961-N & 934-F.** Two brush type used with Double Core Type Voltage & Current Regulators Model 5832 (961-N), 5599 (934-F).
Refer to Buick Series 60,80,90 (1937) article following) for complete data.

REGULATOR

STANDARD

Delco-Remy Model 5594 (Std. Gen.). Voltage Control Relay. Cutout Relay and non-vibrating type Voltage Regulator in single case. Cutout Relay has special 'ground' contacts for starter solenoid control.
For complete data, refer to Electrical Equipment Index.

CONTINUED ON NEXT PAGE

C NTINUED FR M PRECEDING PAGE

Cutout Relay

Cuts In—6.4-6.8 volts, 900 R.P.M., 10 M.P.H.

Cuts Out—3 amperes maximum discharge current.

Contact Gap—.013-.025".

Air Gap—.018-.022" with contacts closed.

Voltage Control Relay

Contacts Open—8.35-8.65 volts at 70° F.

Contacts Close—7.3-7.7 volts at 70° F.

Contact Gap—.008-.013".

Contact Spring Tension—.7-.9 ounces.

Air Gap—.028-.040" between armature and core (armature down against lower stop), .028-.040" armature travel (between armature and lower stop).

REGULATOR

SPECIAL EQUIPMENT

Delc -Remy Model 5557 (Can. Gen.). Double Core Voltage Regulator (With 'IGN' Terminal). Cutout Relay and vibrating type Voltage Regulator. Cutout Relay has extra 'ground' contacts for starter solenoid control. *For data, refer to Electrical Equip. Index.*

Cutout Relay

Cuts In—6.5-7.25 volts.

Cuts Out—3 ampere max. discharge at 6.3 volts.

Contact Gap—.018-.025".

Air Gap—.018-.022" with contacts closed.

Voltage Regulator

Setting—7.55-7.85 volts at 70° F., 7.45-7.55 volts at 150° F. Regulator must be checked at these points.

Adjustment—Disconnect lead on 'IGN' terminal of regulator, connect jumper between 'IGN' and 'BAT' terminals, connect ammeter in charging line at 'BAT' terminal, connect voltmeter between 'IGN' terminal and ground. Operate generator at 2800-3000 R.P.M., adjust charging rate to 8-10 amperes, change regulator armature spring tension by bending spring hanger at lower end of spring slightly. NOTE—Regulator cover must be in place when tests are made. Do not operate generator on open-circuit.

Contact Gap—.015-.025".

Air Gap—.060-.070" between armature and center of core with armature down and fibre bumper just touching stop, .008-.013" between fibre bumper and stop with armature up.

LIGHTING

LIGHTING:—Headlamps—Guide Multi-beam, Prefocused, cros-beam type with special non-interchangeable lenses. Headlamps aimed straight-ahead with lenses removed. Assymetrical passing beam (upper beam left hand headlamp, lower beam right hand headlamp) controlled by foot selector switch with lighting switch in fourth or 'Country Beam' position.

Headlamp Beam Indicator—Located at top of instrument cluster (above speedometer dial). Lighted whenever 'Country Beam' or upper headlamp beams are lighted.

Switches

Lighting—Delco-Remy Model 479-F,N; 479-L (Exp.).

Foot Selector—Delco-Remy Model 471-T.

Instrument Lamp—Delco-Remy Model 1404.

Stop Lamp—Hydraulic type on brake distributor on outside of left front leg of 'X' member.

Bulb Specifications

Position	Candlepower	Mazda No.
Headlamps	32-21	2320-L
Parking Bulbs (Std.)	1.5	55
Fender (Optl).	3	63-L
Instrument, Beam Indicator	1	51
Map Light	1.5	55
Tail	3	63-L
Stop	15	87-L
Dome	6	81-L

MISC. ELECTRICAL

THERMOSTATIC RELAY:—Mounted on lighting switch (part of assembly). Non-adjustable. Contacts will remain closed with current of 25 amperes but will open in 1 min. with current of 38 amps. @ 70-80°F.

FUSES:—Dome Light and Rear Cigar Lighters (90). 30 ampere in connector in dome lamp feed wire from lighting switch at rear of instrument board.

HORNS:—Klaxon Model K-33-S. Type 2051 (low note—right side), Type 2052 (high note—left side). Vibrator type, blended tone, twin horns operated by relay. *Refer to Series 40 (preceding page) for all horn data.*

ENGINE

ENGINE SPECIFICATIONS:—Type 8 cylinder 'T' head.

Bore—3 7/16". **Stroke**—4 5/16".

Displacement—320.2 cubic inches.

Rated Horsepower—37.81 (AMA).

Developed Horsepower—120 at 3200 R.P.M.

Compression Ratio & Pressure—5.45-1 Std. cast-iron head. Pressure 108 lbs. at 1000 R.P.M. or approximately 95 lbs. at cranking speed of 135 R.P.M.

Vacuum Gauge—Steady reading of 18-20" of HG. with engine idling at 400 R.P.M. or 7-8 M.P.H.

NOTE—To drop oil pan for work on engine, first remove front stabilizer by disconnecting frame brackets and stabilizer links at lower control arms.

PISTONS:—Buick Anolite, Aluminum alloy, 'T' slot, Cam ground type with anodized finish (special hard oxide bearing surface). Pistons cannot be ground. Recondition cylinders to take finished replacement pistons.

Weight—22.56 ozs. (stripped), 25.81 ozs. (with rings).

Length—4.16".

Removal—Pistons and rods removed from above.

Clearance—Top of Skirt .0023". Limits .0020-.0026".

Replacement Pistons:—*See Buick Shop Notes.*

Fitting New Pistons:—Check piston with micrometer gauge at point just below 'T' slot junction on both sides of vertical slot and below lower end of slot. Finish cylinder bore to take replacement pistons. Feeler gauge ½" wide can be used on side opposite slot. Piston should fall of own weight with .0015" feeler and lock on .00225" feeler. Engine at 65-75° F.

Installing Pistons:—Slot should be toward left or away from camshaft.

PISTON RINGS:—Two compression, two oil control rings per piston all above pin. Both oil ring grooves drilled radially with ten ⅛" drain holes.
NOTE—Narrow heat deflector groove located above top ring groove. No ring fitted in this groove.

Ring	Width	End Gap	Side Clearance
Comp.	⅛"	.010-.015"	.002 -.0035"
Oil Cont.	5/32"	.010-.018"	.0015-.003"

NOTE—Install compression rings with undercut corner down. Rings furnished .010", .020", .030" oversize.

PISTON PIN:—Diameter ⅞". Length 2 31/32".
Pin is clamped in rod. Oversize pins not furnished. Pins fitted and furnished with all new pistons.

Pin Fit in Piston—.0003-.0004" clearance at 70°F. or a hard thumb push fit.
NOTE—Use only a 5½" wrench in tightening pin bolt to avoid damage to hollow pin.

CONNECTING ROD:—Weight 36.49 ozs. Length 8¼".

Crankpin Journal Diameter—2¼".

Lower Bearing—Spun-babbitt lined type.

Clearance—.0008-.0018". Sideplay .005-.010".

Bearing Adjustment:—Shims. Do not file rods or caps.

Installing Rods:—Cap and rod must line up. Install rod with mark toward rear and oil spray hole in lower bearing upper half toward camshaft.
NOTE—Special diameter ground bolts used for cap and rod assembly. Common bolts must not be used.

CRANKSHAFT:—Five bearing. Integral counterweights.

Journal Diameters—#1, 2 9/16"; #2, 2⅜"; #3, 2 11/16", #4, 2¾"; #5, 2 13/16".

Bearing Type—Steel-backed, babbitt-lined. Bearings dowelled in crankcase and cap and assembled with .000-.002" projection. Line ream new bearings.

Clearance—.0007-.0022".

Bearing Adjustment:—Shims. Do not file caps.

End Thrust:—Taken by #3 (center) bearing. Endplay .004-.007".
NOTE—Torsion balancer mounted ahead of fan pulley. Dynamically balanced before assembling and must be replaced as a complete assembly.

CAMSHAFT:—Five bearing. Non-adjustable chain drive

Journal Diameters—#1, 2 5/32"; #2, 2⅛"; #3, 2 3/32"; #4, 2 1/16"; #5, 1 25/32".

Bearing Type—Steel-backed, babbitt-lined.

Clearance—.0005-.0035". Endplay—.002-.006".

End Thrust:—Taken by thrust plate assembled between front bearing and camshaft sprocket.

Timing Chain:—Link-Belt. Width 1¼". Pitch .500". Length 50 links or 25".

Installing Chain—Install new chain with ¼"-⅜" slack midway between sprockets. Replace when sideplay is over 2" or chain becomes noisy.

Camshaft Setting:—Sprockets marked. Mesh chain on sprockets so that brass washers on link pins are opposite marked teeth on each sprocket. These chain markers are 10 links apart.

VALVES:	Head Diameter	Stem Diameter	Length
Intake	1 25/32"	.3715-.3725"	4 5/8"
Exhaust	1 7/16"	.3711-.3719"	4 1/5"

	Seat Angle	Lift	Stem Clearance
Intake	45°	.347-.348"	.0015-.0035"
Exhaust	45°	.347-.348"	.0021-.0039"

NOTE—Exhaust valve stems are copper-plated.

Valve Guides:—Press fit in head. Installed with undercut end up and finish reamed to size for correct stem clearance.

ENGINE

C NTINUED FR M PRECEDING PA E

Valve Springs:—Double springs on all valves.

Inner Spring	Pressure	Length
Valve Closed	21½-26½ lbs.	1 21/32"
Valve Open	53-59 lbs.	1 5/16"
Outer Spring	**Pressure**	**Length**
Valve Closed	31-36 lbs.	1 15/16"
Valve Open	81½-87½ lbs.	1 19/32"

Total Spring Pressure

Closed—52½-62½ lbs. **Open**—134½-146½ lbs.

NOTE—Tapers on valve keys and spring caps have been increased and parts are now copper-plated.

Valve Lifters:—Single piece cast-iron. Lifter guide holes reamed in crankcase. Clearance—.0005-.0025".

Rocker Arms:—Drop-forged fitted with steel-backed babbitt-lined bushings. **Clearance**—.0005-.0025".

NOTE—When installing bushings, see that oil hole to push rod ball lines up with hole in bushing. Water connections at each end of oil temperature regulator must be drawn down at same time rocker arm shaft brackets are bolted down. Run engine and check fittings for water leaks before replacing rocker arm valve cover.

VALVE TIMING

Tappet Clearance: 015" all valves, engine hot.

Valve Timing:—See Camshaft Setting above. 'Timing Point' when valve .004" off seat with .015" tappet clearance or lash customarily listed instead of actual opening and closing points.

Timing Points

Intake Valves ....Open 14° BTDC....Close 71° ALDC.
Exhaust Valves ....Open 56° BLDC....Close 25° ATDC.

Opening and Closing Points

Intake Valves ....Open 27° BTDC....Close 84½° ALDC.
Exhaust Valves ..Open 69° BLDC....Close 38½° ATDC.

Valve Timing Check—#2 or #7 exhaust valve should be .155" open (actual opening is measured by dial indicator contacting valve spring cap), with #1 and 8 pistons on top dead center and flywheel mark 'TDC/1-8' at indicator in inspection hole in right front face of flywheel housing above starter.

LUBRICATION

LUBRICATION:—Pressure system with oil pump in crankcase and main oil channel on right side.

Oil Pump:—Helical gear type in crankcase driven from distributor drive gear (slot in end of pump shaft engages lower pin in gear, upper pin engages distributor shaft). Ignition timing not disturbed by removal of pump.

Oil Pump Clearances—*See Buick Shop Notes.*

Normal Oil Pressure:—10 lbs. idling, 45 lbs. maximum at 35 M.P.H. and above.

Oil Pressure Regulator:—Operates at 45 lbs. Mounted on oil pump. Not adjustable.

Oil Temperature Regulator:—Consists of water tube running through rocker arm shaft. Disassemble and remove oil deposit in tube after considerable mileage. See Rocker Arms above for assembly directions.

Crankcase Capacity:—10 qts. (dry), 8 qts. (refill).

CLUTCH

CLUTCH:—**Own Make. Long Driven Member.** Single plate, dry disc type. See article in Clutch Section for relining and assembling directions.

See Clutch Section for complete data.

Facings—Woven type, 2 required. Inside Diam. 6½". Outside Diam. 11". Thickness .137".

Adjustment—Clearance between pedal and underside of toeboard must be ⅜-⅝". To adjust, loosen locknut and turn setscrew at rear of pedal above pedal stop. Free movement of clutch pedal must be ¾-1". To adjust, turn adjusting nut on rod connecting pedal and clutch throwout yoke. One full turn of adjusting nut changes pedal lash 5/16".

Removal:—Remove rear end (take out flange bolts in front end of torque tube, pull rear end back to disconnect drive shaft at splined joint at universal), remove transmission and transmission support (support transmission at rear while it is being withdrawn), take off clutch pan, take out clutch mounting screws (turning all screws out evenly).

NOTE—When installing transmission support which is bolted to universal joint flange and frame, see that centering shims are in place at each end and that cross member is positioned so that rubber insulation is not compressed (bolt holes are slotted).

FRONT SUSPENSION

Front Suspension:—Independent, linked parallelogram type with coil springs. See article in Steering Section for description and adjustment procedure.

See Front Suspension Section for complete data.

NOTE—To avoid damage to brake assembly when work is being done on front suspension, disassemble as follows: Remove wheel, disconnect tie rod ball stud, loosen one caster adjuster capscrew one-half turn (do not disturb second capscrew or caster setting will be lost), remove upper and lower caster adjuster bolt nuts, remove complete steering knuckle, hub and brake drum assembly and wire to frame to prevent damage to brake hose.

Kingpin Inclination—4½-5½° crosswise.

Camber—Minus ¼° to plus ¾°. No adjustment.

Caster—1¾-2¼°. Adjustable. **Toe In**—1/16-⅛".

Steering Geometry—Outer wheel turned 20°, inner wheel (60, 80) 23¾°, (90) 24° plus or minus ¾°.

STEERING GEAR

Steering Gear: Saginaw Worm-and-Double Roller type with center steering.

See Steering Gear Section for complete data.

BRAKES

BRAKES:—Buick (Bendix) Hydraulic, Single Anchor, four-wheel type. Hand lever applies rear brakes. See article in Brake Section for complete data.

See Brake Section for complete data.

NOTE—Wheel cylinder diameters are 1¼" (front), 1 3/16" (rear) and no part of assembly is interchangeable between front and rear wheels.

Brake Drum Diameter—12".

Brake Lining—Ferodo BZ-10 Woven type. Width 2". Thickness 3/16". Length 9 15/16" (primary shoe), 12¾" (secondary shoe) or 22 11/16" per wheel.

Brake Clearance—.010" plus or minus .002" at heel and toe of each shoe.

Hand Brake Adjustment:—**See Service Brakes.**

MODEL IDENTIFICATION

SERIAL NUMBER:—First number 2,999,497. On right frame siderail at rear of right front wheel.

ENGINE NUMBER:—1st number 4-3,166,225. On boss on lower right hand side of engine block behind starter. NOTE—Dash (-) following engine number indicates that engine factory-equipped with .010" oversize pistons.

TUNE-UP

COMPRESSION:—Ratio—5.7-1. Pressure—93-103 lbs. at 150 R.P.M. cranking speed.

VACUUM READING:—Steady reading of 18-20" with engine idling at 7-8 M.P.H.

FIRING ORDER: 1-6-2-5-8-3-7-4. See diagram.

SPARK PLUGS: AC No. 86 (sup. H-9). 14 mm. Metric. Gaps—.025".
NOTE—If necessary, gap may be set at .030" to secure good idling, however high speed missing may occur after some service.

IGNITION: See Coil, Condenser, and Distributor.
Breaker Gap—.015". Cam Angle 31° (closed).
►*CAUTION—Use of cam angle to set point gap not recommended by car manufacturer. If dwell meter used, make final check that gap within .0125-.0175".*
Automatic Advance—13° max. at 1650 RPM (distr.).
Vacuum Advance—6° max. (distr.) with 10-13" vacuum.

IGNITION TIMING: See Ignition Timing.
Std. Setting—6° BTDC. with flywheel mark 'ADV' at indicator in flywheel housing above starter.

CARBURETION: See Carburetor & Carb. Equipment.
Idle Setting—Both screws 5/8-7/8 turn (Marvel Carb.), 1 3/8 turns (Stromberg Carb.) open. Idle speed 7-8 MPH.
Float Level—Fuel level 3/4" (Marvel Carb.), 5/8" (Stromberg Carb.) below top edge of bowl.
Accelerating Pump (Marvel Carb.)—#1 hole (min. stroke) Summer, #4 hole (max. stroke) Winter.
Accelerating Pump (Stromberg Carb.)—Maximum stroke standard for all-weather operation.
Fuel Pump Pressure: 3 1/2 lbs. maximum.

VALVES: See Valve Timing.
Tappet Clearance—.015" all valves, engine hot.

STARTING: See Battery, Starter, Generator, Regulator.

IGNITION

Ignition Switch:—Oakes-Hershey type co-incidental ignition switch and steering post lock.
Ignition Lock—Briggs & Stratton. #45922 (cylinder), #45900 (case). Key Series—8000-9499.

COIL: Delco-Remy Model 536-H. On right side of engine block near distributor.
Ignition Current—2 1/2 amperes idling, 4 1/2 stopped.

CONDENSER: Delco-Remy Part No. 1865972.
Capacity—.20-.25 microfarad.

DISTRIBUTOR: Delco-Remy Model 663-Y. Single breaker, 8 lobe cam, full automatic advance type with integral vacuum spark control and Octane Selector.
Breaker Gap—.015". Limits .0125-.0175".
Cam Angle or Dwell—31° (closed), 14° (open).
Breaker Arm Spring Tension—19-23 ounces.

Automatic Advance

Distributor		Engine	
Degrees	R.P.M.	Degrees	R.P.M.
Start	250	2.0	500
6.0	500	12.0	1000
13.0	1650	26.0	3300

Vacuum Spark Control—Vacuum unit mounted on side of distributor, linked directly to breaker plate. Provides additional advance at speeds greater than 18 M.P.H. except when engine is accelerated or operated with wide open throttle when spark is retarded by return spring within unit.

Vacuum Advance

Distr. Degrees	Eng. Degrees	Vacuum (" of HG)
Start	0°	5-7"
6°	12°	10-13"

Octane Selector—*Consists of* adjustment at distributor providing 10° advance or retard from center '0' position. See Ignition Timing (below) for setting.

Distributor Removal:—Mounted on right side of crankcase. To remove, disconnect vacuum line, take out two hold-down screws in mounting flange.

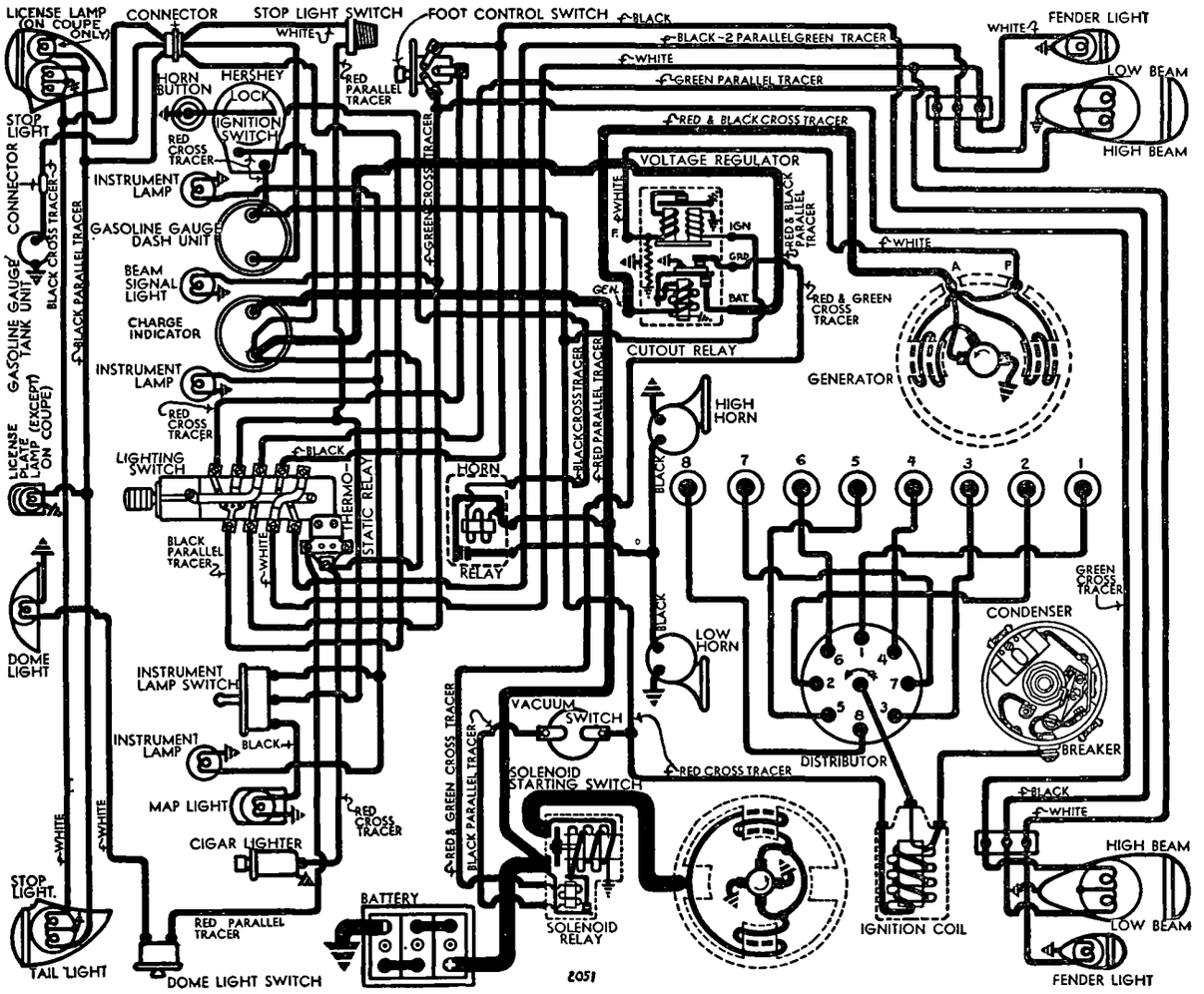

IGNITION TIMING

IGNITION TIMING:—Initial setting (standard for fuel of 70 Octane Rating) as given. See Octane Selector (following) for final setting.

	Flywheel Degrees	Piston Position
All Engines	6° BTDC	.0144" BTDC.

NOTE—'ADV/' mark on engines prior to #4-3,201,034 is 2° or ¼" BTDC. These first engines should be timed 6° BTDC. using the 2° mark as follows: With cars timed in usual manner (contacts opening with "ADV/" mark at indicator), then rotate distributor clockwise two graduations on the Octane Selector scale before tightening hold-down screws. This will give correct 6° setting.

To Set Timing (with Synchroscope)—Recommended by manufacturer. Insert one Synchroscope lead in #1 terminal in distributor cap, clip second lead to #1 spark plug cable. Direct Synchroscope light at flywheel through timing inspection hole in right front face of flywheel housing above starter. Idle engine at speed not greater than 400 R.P.M. or 8 M.P.H. Note position of flywheel timing mark 'ADV/'. If 'ADV/' line does not coincide with line on housing, loosen two distributor hold-down screws, rotate distributor slowly until lines coincide, tighten hold-down screws. If pointer on Octane Selector does not register at '0' mark loosen pointer lockscrew, shift to '0' mark, tighten lockscrew.

NOTE—'ADV/' mark filled with white paint. Do not confuse with top dead center mark which immediately follows 'ADV/' mark.

To Set Timing (Without Synchroscope)—To crank engine engage gears and roll car on floor (with ignition turned 'off'). Turn engine over until #1 piston on compression (#3 exhaust valve, fifth valve from front of engine, begins to open), stop when flywheel mark 'ADV/' lines up with mark on housing above starter. Turn ignition 'on' and form spark gap between distributor high tension lead and housing to check contact opening. Loosen two hold-down screws, rotate distributor until contacts begin to open, tighten hold-down screws. Center pointer on Octane Selector by loosening lockscrews and shifting pointer, tighten lockscrew.

Octane Selector—Adjust for fuel used. For fuels of less than 70 Octane rating (loosen two hold-down screws) shift pointer to 'Low' end of scale, for fuels of higher rating shift to 'High' side of scale. Slight 'ping' should be noticeable at speeds between 10-15 M.P.H. but not at higher speeds when car is accelerated with wide open throttle.

CARBURETOR

CARBURETION:—Carburetors—Stromberg Model AA-1 Marvel Model BD-1, CD-1B Late 1937. 1" dual, downdraft type. NOTE—Special types used for Std. and Optl. heavy-duty air cleaners.
For complete data, refer to Carburetor Index.

Idle Adjustment—With engine warm, choke valve wide open and engine idling at hot or slow idling speed, adjust throttle stopscrew so that engine idles at 7-8 M.P.H. Turn idle adjusting screw for each barrel (in succession) in until engine begins to lag r miss, then turn screws out until engine begins to roll, finally turn screws in slowly until engine fires smoothly. Final setting should be 1⅜ turns (Stromberg), ⅝-⅞ turns (Marvel) of screw from closed or seated position. Readjust throttle stopscrew for correct idling speed.

Accelerating Pump—(Stromberg). Two holes for pump engagement. Set for maximum stroke unless too rich a charge occurs on accelerating.

(Marvel)—Four holes for pump link engagement.
#1—Minimum stroke—summer driving.
#2—Interm. stroke—warm temperatures.
#3—Normal stroke—standard setting.
#4—Maximum stroke—winter driving.

Fast Idle:—Buick Cold Idle Control.
For complete data, refer to Carburetion Equip. Index.

Accelerator Linkage Adjustment:—Linkage adjustment must be maintained to provide correct throttle opening for starting. With carburetor set for 7-8 M.P.H. idling speed and throttle button pushed in, rotate fast idle cam to extreme left against stop (fast idle position), adjust vacuum switch rod length so that switch lever reference line lines up with 'Fast Idle' line on housing. Check accelerator pedal. Throttle should be wide open with pedal down against pedal stop (floor mat). Adjust by turning trunnion on accelerator rod. Accelerator rod spring length should be 9 15/16".

Automatic Choke:—Delco-Remy Model 490-A (Stromberg Carbs.), 498-H (Marvel BD-1), 1990001 (Marvel CD-1B).
For complete data, refer to Carburetion Equip. Index.

Fuel Volatility Selector—Change setting as required to provide correct choke action with fuel used. Std. setting second notch from 'Low' side of scale. Movement toward 'High' end compensates for too rich mixture, and toward 'Low' end for too lean mixture.

CARB. EQUIPMENT

Air Cleaner:—AC. #1528010 oil-wetted type standard. #1528011 oil-bath type optional.
NOTE—If heavy duty oil-bath type cleaner installed, main metering (Stromberg), or power jet and metering pin jet (Marvel) must be changed. See Jet Specification Tables for each carburetor in Carburetion Section.

Fuel Pump: AC Type W, No. 1521854. Diaphragm type.
For complete data, refer to Carburetion Equip. Index.

Gasoline Gauge:—AC. Electric #1515321 (dash unit), #1515444 (tank unit).
For complete data, refer to Carburetion Equip. Index.

BATTERY

BATTERY:—Delco, Type 13-J. 6 volt, 98 ampere hour capacity (20 hour rate).
Starting Capacity—117 amperes for 20 minutes.
Zero Capacity—300 amperes for 3.3 minutes.
Grounded Terminal—Negative (—) terminal.
Location—Right side under front seat.

STARTER

Delco-Remy Model 734-Z. Armature No. 823881.
Drive—Solenoid pinion shaft & overunning clutch.
Cranking Engine—135 R.P.M., 150 amps. at 4.5 volts.
Rotation—Counter-clockwise at commutator end.
Brush Spring Tension—24-28 ounces.

Performance Data

Torque		R.P.M.	Volts	Amperes
0	ft. lbs.	5000	5.0	65
12	" "	Lock	3.37	525

Removal:—Flange mounted on right front face of flywheel housing. To remove, take out flange capscrews.

Starting Switch: Delco-Remy Sol.Sw.1542.Vacuum Sw. 1594 (used with Marvel carburetor), 1607 (used with Stromberg carburetor). Solenoid switch controlled through relay by vacum switch operated by accelerator pedal with ignition 'on'. Accelerator pedal and hand throttle must be in fully 'off' position prior to starter operation.
For complete data, refer to Electrical Equipment Index.
NOTE—Solenoid switch should be used in servicing earlier models. Past switches not adaptable for use on 1937 models.

Solenoid Switch
Closes against 70 lb. pull with ½" air gap drawing 65-71 amperes at 5 volts. Holds switch closed with draw of 12-14 amperes (hold-in coil only).

Solenoid Relay
Contacts Close—1.9 volts max. Open—1.0-1.2 volts.
Contact Gap—.025-.045". Air Gap—.010-.013".

Vacuum Switch
Contacts Close—10-14° counter-clockwise (1594), clockwise (1607), from latch position.
Unlatch Action—3.4-4.6" of HG. approximately 30° from latch position.

GENERATOR
STANDARD

Delco-Remy Models 918-B, G. Armature 1866410. New type 'split-field' generator (one straight-shunt coil, one third-brush shunt coil—see wiring diagram) with fixed third brush and vibrating voltage regulator control.
NOTE—Field coils changed in production.
For complete data, refer to Electrical Equipment Index.
Charging Rate Adjustment—Adjusted by changing setting of voltage regulator. See Regulator data
Maximum Charging Rate—As given in table below. Reached at car speed of 40.8 M.P.H. To check charging rate, connect test ammeter in line at 'BAT' terminal of regulator, voltmeter between 'GEN' terminal and ground, ground 'F' terminal to eliminate regulator action.
NOTE—Do not operate generator on open-circuit.

Performance Data

	Amperes	Volts	R.P.M.
Cold	27-31	8.0	4000
Hot	25-28	8.0	4200

Rotation—Counter-clockwise at commutator end.
Brush Spring Tension—22-26 ounces (main), 16-20 ounces (third).
Field Current—Shunt (1.44-1.56 amps. at 6 volts), third brush (.89-.94 amperes at 6 volts).

Removal:—Generator pivot mounted at left front of engine. To remove, take out pivot capscrews and clamp screw.

Belt Adjustment:—Loosen clamp screw and pivot screws, pull generator away from engine until belt deflection midway between generator and fan pulleys is ½" with light presure, tighten clamp screws

GENERATOR
SPECIAL EQUIPMENT

Delco-Remy Models 961-N, 934-F. Both models two brush type used with Double Core Type Voltage & Current Regulators Model 5832 (961-N), 5599 (934-F).
Refer to Buick Series 60,80,90 (1937) article following) for complete data.

C NTINUED N NEXT PA E

CONTINUED FROM PRECEDING PA E

REGULATOR

Delco-Remy Model 5807. Double Core Type Voltage Regulator (With 'IGN' Terminal). Cutout Relay and vibrating type Voltage Regulator. Cutout Relay has extra 'ground' contacts for starter control.

For complete data, refer to Electrical Equipment Index.

Cutout Relay

Cuts In—6.9-7.6 volts, 8.1 M.P.H.

Cuts Out—0-3.0 amperes discharge at 6.3 volts.

Contact Gap—.020"

Air Gap—.020" with contacts closed.

Voltage Regulator

Setting—7.55-7.85 volts at 70° F., 7.45-7.55 volts at 150° F. Regulator is over-compensated for temperature and must be checked at these points.

Adjustment—Disconnect lead on 'IGN' terminal of regulator, connect jumper between 'IGN' and 'BAT' terminals, connect test ammeter in charging line at 'BAT' terminal, connect voltmeter between 'IGN' terminal and ground. Operate generator at 2800-3000 R.P.M., adjust charging rate to 8-10 amperes, change regulator armature spring tension by bending spring hanger at lower end of spring slightly NOTE—Regulator cover must be in place when testing. Do not run generator on open-circuit.

Contact Gap—.020".

Contact Spring Tension—2.7-3.5 ounces.

Air Gap—.063" between armature and center of core with armature down and fibre bumper touching stop; .010" between fibre bumper and stop with armature up.

LIGHTING

LIGHTING:—Headlamps—Guide Multi-beam, Pre-focused, cross-beam type with special non-interchangeable lenses. Foot selector switch provides for switching from upper beams to city beam (upper filaments, both lamps) with light switch in 3rd position and asymetrical passing beam (lower filament left headlamp, upper filament right headlamp) with switch in 4th position or 'country driving' position.

Headlamp Adjustment—Headlamps must be adjusted with lenses in place (beam with lenses removed is approximately 4° to right), upper beams lighted, car unloaded. Aim left hand headlamp (side movement controlled by screw under hood, up and down movement by screw in hole in bottom of lamp body) so that upper edge of hot spot is on horizontal line (at lamp center height) and left edge at lamp vertical center-line. Aim right hand headlamp for same beam height, but center hot-spot on lamp vertical center-line (right cut-off of hot spot approx. 8" to right of center-line.

Headlamp Beam Indicator—Located at top of speedometer dial. Lighted whenever upper beams are in use. NOTE—Bulb is 1 cp. #55.

Switches

Lighting—Delco-Remy Model 480-W, R (Export).

Foot Selector—Delco-Remy Model 471-T.

Instrument Lamp—Delco-Remy Model 1404.

Stop Lamp—Delco-Remy Model 476-S. Hydraulic type mounted in brake distributor.

Bulb Specifications

Position	Candlepower	Mazda No.
Headlamps	32-21	2320
Fender, Instrument, Map	1½	55
Stop and Tail	21-3	1154
License (Coupe incl'd)	3	63
Dome	6	81

MISC. ELECTRICAL

THERMOSTATIC RELAY:—Mod. No. 1865577. Mounted on lighting switch and may be replaced separately. Contacts open within 1 minute at 38 amperes (70° and remain closed with 25 amps. Non-adjustable.

Clock Fuse—2 ampere on clock.

HORNS:—Klaxon Model K-33-S. Type 2051 (low note—right side), Type 2052 (high note—left side). Vibrator type, blended tone twin horns operated by horn relay.

Horn Type	Current at 6 volts	Air Gap
2051 Low Note	11-13	.042-.046"
2052 High Note	10-12	.032-.036"

Horn Relay:—Mod. 271-A. Points close at 2.7-4.0 volts.

Contact Gap—.020". **Air Gap**—.015".

ENGINE

ENGINE SPECIFICATIONS:—8 cylinder, 'I' head.

Bore—3 3/32". **Stroke**—4⅛".

Displacement—248 cubic inches.

Rated Horsepower—30.63 (S.A.E.).

Developed Horsepower—100 at 3200 R.P.M.

Compression Ratio & Pressure—Std. 5.7-1 cast-iron head. Pressure 97-103 lbs. at 150 R.P.M. Check pressure with engine warm, all plugs removed, throttle wide open and starter cranking engine.

Vacuum Reading—18-20" steady at 7-8 M.P.H.

NOTE—To drop oil pan, remove front stabilizer.

PISTONS:—Buick anolite, aluminum alloy, 'T' slot, cam ground type. Refinish cylinders to take finished replacement pistons. **Length**—3 4/5".

Weight—13.75 ozs. (stripped), 19.6 ozs. (with rings).

Removal—Pistons and rods removed from above.

Clearance—Top of skirt .0021". Limits .0018-.0024".

Original Bore Size & Replacement Pistons:—*See Buick Special Shop Notes.*

Fitting New Pistons:—Micrometer Gauge—Check at points just below 'T' slot junction on both sides of vertical slot and below lower end of slot, finishing cylinder bore to size giving correct clearance.

Feeler Gauge—Use ½" wide stock inserted on side opposite slot. Piston should pass on .0015" feeler and hold on .00225" with engine at 65-75° F.

Installing Pistons:—Slot to left or away from camshaft.

PISTON RINGS:—2 compression, 2 oil control rings per piston all above pin. Oil ring grooves drilled radially with 5/32" drain holes (10 top groove, 8 lower groove).

Ring	Width	End Gap	Side Clearance
Compression	3/32"	.010-.015"	.0015-.003"
Oil Control	3/16"	.010-.015"	.0015-.003"

NOTE—'Top' mark on compression rings to top of piston. Rings furnished .010", .020", .030" versize.

PISTON PIN:—Diameter—13/16". **Length**—2 11/16". Pin clamped in rod. Oversize pins not furnished. Replacement pistons have pins fitted.

Pin Fit in Piston—.0003-.0004" at 70° F. or light finger push.

NOTE—5½" wrench only, for use on pin bolt.

CONNECTING ROD:—Weight—29.92 ozs. **Length**—7⅞".

Crankpin Journal Diameter—2".

Lower Bearing—Spun-babbitt lined type.

Clearance—.0008-.0018". Sideplay .005-.010".

Bearing Adjustment:—Shims. Do not file rods or caps.

Installing Rods:—Align cap and rod. Marks to rear of engine, oil spray hole toward camshaft.

NOTE—⅜" diameter ground bolts used for rod and cap assembly. Common bolts must not be used.

CRANKSHAFT:—5 bearing. Integral counterweights.

Journal Diameters—#1, 2 5/16"; #2, 2⅜"; #3, 2 7/16"; #4, 2½"; #5, 2 9/16".

Bearing Type—Steel-backed, babbitt-lined. Bearings dowelled in crankcase and cap and assembled with .000-.002" projection. Line-ream new bearings.

Clearance—.0007-.0022". 1/32" clearance at each end.

Replacement Bearings—*See Buick Shop Notes.*

Bearing Adjustment:—Shims. Do not file caps.

End Thrust:—Center (#3) bearing. Endplay .004-.007".

CAMSHAFT:—5 bearing. Non-adjustable chain drive.

Journal Diameters—#1, 2 5/32"; #2, 2⅛"; #3, 2 3/32"; #4, 2 1/16"; #5, 1¾".

Bearing Type—Steel-backed, babbitt-lined.

Clearance—.0005-.0035". Endplay .002-.006".

End Thrust:—Taken by thrust plate assembled between front bearing and camshaft sprocket.

Timing Chain:—Link-Belt. Width 1". Pitch .500". Length 24½" or 49 links.

Installing Chain—¼ - ⅜" play midway between sprockets on new chain. 1" maximum play if worn.

Camshaft Setting:—Mesh chain with copper-plated washers opposite mark on each sprocket. Chain markers 10 links apart.

VALVES:—	Head Diameter	Stem Diameter	Length
Intake	1 17/32"	.3715-.3725"	4 5/16"
Exhaust	1 11/32"	.3711-.3719"	4 3/64"

	Seat Angle	Lift	Stem Clearance
Intake	45°	.348"	.0015-.0035"
Exhaust	45°	.342"	.0021-.0039"

NOTE—Intake valves 'streamlined' tulip type.

Valve Guides:—Press fit in head. Install undercut end up. Finish ream to size for correct clearance.

Valve Springs:—Double springs on all valves.

Inner Spring	Pressure	Length
Valve Closed	15½-20½ lbs.	1 21/32"
Valve Open	45-51 lbs.	1 5/16"
Outer Spring	**Pressure**	**Length**
Valve Closed	26½-31½ lbs.	1 15/16"
Valve Open	63-73 lbs.	1 19/32"

Total Spring Pressure

Closed—42-52 lbs. Open—112-124 lbs.

NOTE—Valve springs not interchangeable with earlier models.

Valve Lifters:—Single piece,, cast-iron. Lifter guide holes reamed in crankcase. Clearance .0005-.0025".

Rocker Arms:—Drop-forged fitted with steel-backed, babbitt-lined bushings. Rocker arm shaft brackets are of aluminum alloy.

Clearance—.001-.003".

NOTE—Install bushings with oil holes aligned.

VALVE TIMING

Tappet Clearance: 015" all valves, engine hot.

Valve Timing: See Camshaft Setting above. "Timing Point' when valve .004" off seat with .015" tappet clearance or lash customarily listed instead of actual opening and closing points.

Timing Points

Intake Valves—Open 13° BTDC. Close 68° ALDC.
Exhaust Valves—Open 55° BLDC. Close 22° ATDC.

Opening and Closing Points

Intake Valves—Open 26° BTDC. Close 81½° ALDC.
Exhaust Valves—Open 68° BLDC. Close 35° ATDC.

Valve Timing Check:—#2 or #7 exhaust valve should be .145" open (actual opening as measured by dial indicator contacting valve spring cap), with #1 and 8 pistons on top dead center and flywheel mark 'TDC/1-8' lined up with indicator in inspection hole in right front face of flywheel housing above starter.

LUBRICATION

LUBRICATION:—Pressure with oil pump in crankcase.

Oil Pump:—Helical gear type in crankcase driven from distributor drive gear (slot in end of pump shaft engages lower pin in gear, upper pin engages distributor shaft). Ignition timing not disturbed by removal of pump.

Oil Pump Clearances—*See Buick Shop Notes.*

Normal Oil Pressure:—45 lbs. at normal speeds.

Oil Pressure Regulator:—Operates at 45 lbs. Mounted on oil pump. Not adjustable.

Crankcase Capacity:—7 qts. (dry), 6 qts. (refill).

CLUTCH

CLUTCH:—Own (with Long 10CF-CI driven member). Single plate, dry disc type.
See Clutch Section for complete data.

Facings—Woven type, 2 required. I.D. 6". O.D. 10". Thickness .125".

Adjustment—Clearance between pedal and underside of toeboard must be ⅜-⅝". To adjust, loosen locknut and turn setscrew at rear of pedal, above pedal stop. Free movement—¾-1". To adjust take out clevis pin connecting clutch rod and clutch fork, turn clevis on rod. One full turn equal to 3/16" free movement.

Removal:—Remove transmission (see Transmission Removal below), take off clutch pan, screw out cover mounting screws evenly, remove assembly from below.

TRANSMISSION

TRANSMISSION:—Buick. Synchro-mesh on second and high gears. All gears helical type.
See Transmission Section for complete data.

Removal:—Hoist rear of car by frame, disconnect rear brake cables at equalizer bar and brake tube connection on torque tube at rear of X-member, remove spring seat U-bolts, flange bolts on front of torque tube, pull axle assembly back withdrawing propeller shaft from ball and universal joint. Remove transmission rear support and mounting bolts. Support at rear while withdrawing unit to avoid clutch plate distortion.
NOTE—Centering shims at frame ends must be in place when installing rear transmission support.

UNIVERSALS

UNIVERSAL JOINT:—Spicer (Buick Design). Plain bearing type. 1 used.
See Universals Section for complete data.

REAR AXLE

REAR AXLE:—Buick, semi-floating, hypoid gear type with torque tube drive.
See Rear Axle Section for complete data.
Ratio—4.40-1.
Backlash—.008-.010". Shim adjustment.

Removal:—Axle shaft retained by horseshoe 'C' washer recessed in differential side gear. Remove housing cover, pinion shaft lockscrew, pinion shaft and spacer block, push axle shaft in, remove 'C' washer, withdraw shaft. For complete axle assembly removal see Transmission Removal (above) and disconnect rear spring shackles.
Wheel Bearing Adjustment—None.

SHOCK ABSORBERS

SHOCK ABSORBERS:—Delco. Model 1945-A, B (front), 1713-A, B (rear). Double acting, piston type.
See Shock Absorber Section for complete data.

FRONT SUSPENSION

Front Suspension:—Independent, linked parallelogram type with coil springs.
See Front Suspension Section for complete data.
NOTE—To avoid damage to brake hose for work on front suspension proceed as follows: remove wheel, disconnect tie rod ball stud, remove drum, knuckle and steering knuckle support (as a unit), wire to frame. Removing shock absorber bolts allows absorber unit to shift (caster will not be disturbed).

Kingpin Inclination—3½-4½° crosswise.

Camber—Minus ¼° to plus 1°. Not adjustable.

Caster—¼° plus or minus ⅜°. Adjustable.

Toe In—0-1/16". Adjustable.

Steering Geometry (Toe Out)—Inner wheel turned 23¼°, outer wheel 20°, plus or minus ¾°.

STEERING GEAR

Steering Gear: Saginaw Worm-and-Double Roller type with center steering.
See Steering Gear Section for complete data.

BRAKES

BRAKES:—Service—Bendix Hydraulic, single anchor type. Hand lever applies rear wheel service brakes.
See Brake Section for complete data.
Wheel Cylinders—Diameters: front 1 1/16", rear wheels 1". Front and rear assemblies not interchangeable.
Drum Diameter—12".
Lining—Ferodo BZ-10 woven. Length per wheel (front shoe 9 15/16", rear shoe 12¾"). Width 1¾". 3/16" thick.
Clearance—.010" plus or minus .002" heel and toe each shoe.
Braking Power—47% rear.

Hand Brake Adjustment:—See Service Brake (above).

MODEL IDENTIFICATION

NOTE:—Marvel equipped cars. Special Distributor, Starter Vacuum Switch & Automatic Choke used.

SERIAL NUMBER:—First number 2999497. On right frame siderail at rear of right front wheel.

ENGINE NUMBER:—First number (60) 6-3,176,225, (80) 8-3,176,225, (90) 9-3,176,225. Stamped on boss on lower right side of engine block behind starter. NOTE—Dash (-) following engine number indicates engine factory-equipped with .010" oversize pistons.

TUNE-UP

COMPRESSION:—Ratio—5.75-1 std. cast-iron head.
Pressure—100-106 lbs. at 150 R.P.M. Check pressure with engine warm, spark plugs removed, and starter cranking engine.

VACUUM READING:—18-20" steady at 7-8 M.P.H.

FIRING ORDER: 1-6-2-5-8-3-7-4. See diagram.

SPARK PLUGS: AC No. 86 (sup. H-9). 14 mm. Metric. **Gaps**—.025".
NOTE—In extreme cases gaps may be set at .030" if necessary to secure good idling performance. This may result in high speed missing after some service.

IGNITION: See Coil, Condenser, and Distributor.
Breaker Gap—.015". **Cam Angle** 31° (closed).
►*CAUTION—Use of cam angle to set point gap not recommended by car manufacturer. If dwell meter used, make final check that gap within .0125-.0175".*
Automatic & Vacuum Advance—*See Distributor.*

IGNITION TIMING: See Ignition Timing.
Std. Setting—10° BTDC. with flywheel mark 'ADV' at indicator in flywheel housing above starter.

CARBURETION: See Carburetor & Carb. Equipment.
Idle Setting—Both screws 5/8-7/8 turn (Marvel Carb.), 1 3/8 turns (Stromberg Carb.) open. Idle speed 7-8 MPH.
Float Level—Fuel level 3/4" (Marvel Carb.), 5/8" (Stromberg Carb.) below top edge of bowl.
Accelerating Pump (Marvel Carb.)—#1 hole (min. stroke) Summer, #4 hole (max. stroke) Winter.
Accelerating Pump (Stromberg Carb.)—Maximum stroke standard for all-weather operation.
Fuel Pump Pressure: 4 1/2 lbs. maximum.

VALVES: See Valve Timing.
Tappet Clearance—.015" all valves, engine hot.

STARTING: See Battery, Starter, Generator, Regulator.

IGNITION

Ignition Switch:—Oakes-Hershey type co-incidental Ignition switch and steering post lock.
Ignition Lock—Briggs & Stratton. #45922 (cylinder), #45900 (case). **Key Series**—8000-9499.

COIL: Delco-Remy Model 536-H. On right side of engine block near distributor.
Ignition Current—2 1/2 amperes idling, 4 1/2 stopped.

CONDENSER: Delco-Remy Part No. 1865972.
Capacity—.20-.25 microfarad.

DISTRIBUTOR: Delco-Remy Models 663-Z, 663-ZX. Single breaker, 8 lobe cam, full automatic advance type with integral vacuum spark control and Octane Selector.

Breaker Gap—.015". Limits .0125-.0175".
Cam Angle or Dwell—31° (closed), 14° (open).
Breaker Arm Spring Tension—19-23 ounces.

Automatic Advance—663-Z

Distributor		Engine	
Degrees	R.P.M.	Degrees	R.P.M.
Start	250	2	500
6	500	12	1000
8	825	16	1650

Automatic Advance—663-ZX

Start	250	2	500
6	500	12	1000
10	1140	20	2280

Vacuum Spark Control—Vacuum unit mounted on side of distributor, linked directly to breaker plate. Provides additional advance at speeds greater than 18 M.P.H. except when engine is acelerated or operated with wide open throttle when spark is retarded by return spring within unit.

Vacuum Advance

Distr. Degrees	Eng. Degrees	Vacuum (" of HG)
Start	0°	5-7"
5 1/2°	11°	10-13"

Octane Selector—Consists of adjustment at distributor providing 10° advance or retard from center '0' position. See Ignition Timing (below) for setting.

Distributor Removal:—Mounted on right side of crankcase. To remove, take out two mounting screws in mounting flange, disconnect vacuum line.

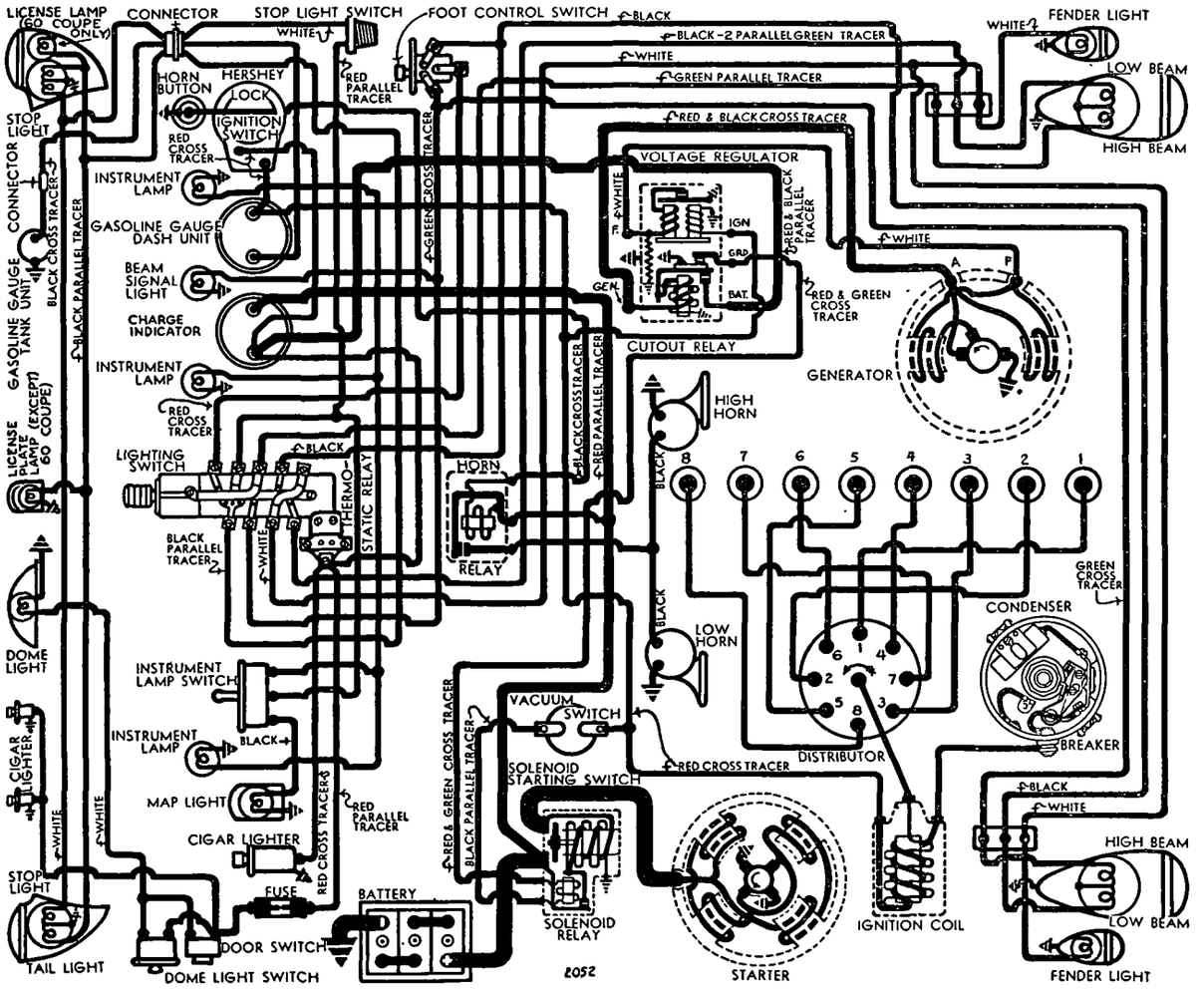

IGNITION TIMING

IGNITION TIMING:—Initial setting for fuel of 75 Octane rating. See Octane Selector for final setting.

	Flywheel Degrees	Piston Position
All Engines	10° BTDC	.0442" BTDC.

To Set Timing (with Synchroscope)—Recommended by manufacturer. Insert one Synchroscope lead in #1 terminal in distributor cap, clip second lead to #1 spark plug cable. Direct Synchroscope light at flywheel through timing inspection hole in right front face of flywheel housing above starter. Idle engine at speed not greater than 400 R.P.M. Note position of flywheel timing mark 'ADV/'. If 'ADV' line does not coincide with line on housing, loosen two distributor hold-down screws, rotate distributor slowly until lines coincide, tighten hold-down screws. Check position of Octane Selector pointer. If reference line on pointer does not coincide with center line of scale, loosen pointer lockscrew, shift pointer, tighten lockscrew.

NOTE—'ADV/' timing mark filled with paint.

To Set Timing (Without Synchroscope)—No means provided to crank engine (engage gears and roll car to turn engine over). With #1 piston on compression, turn engine over until #3 exhaust valve (fifth valve from front of engine) begins to open, stop when flywheel mark 'ADV/' lines up with mark on flywheel housing (timing inspection hole in right front face of housing above starter). Use timing light or form spark gap between distributor high tension lead and housing to check contact opening. Loosen two distributor hold-down screws, rotate distributor until contacts begin to open, tighten hold-down screws. Check position of Octane Selector pointer. If reference line on pointer does not line up with center line on scale, loosen pointer lockscrew, shift pointer, tighten lockscrew.

Octane Selector—Should be adjusted for final ignition setting dependent upon Octane Rating of fuel used by car owner. Initial setting (above) correct for fuel of 75 Octane Rating. To adjust, loosen two distributor hold-down screws, rotate distributor clockwise so that pointer moves toward 'Low' end of scale for fuel of lower rating, or counter-clockwise (toward 'High' end of scale) for higher rating until a slight 'ping' is noticeable at speeds between 10 and 15 M.P.H. but not at higher speeds when car is accelerated with wide open throttle.

CARBURETOR

CARBURETION:—**Carburetors**—Stromberg Model AA-2 or Marvel Mod. BD-1S (No. 10-1751 std. air cleaner), (No. 10-1752 heavy duty air cleaner). 1¼" dual downdraft types. Stromberg aircraft type.

For complete data, refer to Carburetor Index.

Idle Adjustment—With engine warm, choke valve wide open and engine idling at hot or slow idling speed, adjust throttle stopscrew so that engine idles at 7-8 M.P.H. Turn idle adjusting screw for each barrel (in succession) in until engine begins to lag or miss, then turn screws out until engine begins to roll, finally turn screws in slowly until engine fires smoothly. Final setting should be 1¼ turns (Stromberg), ⅝-⅞ turns (Marvel) of screw from closed or seated position. Readjust throttle stopscrew for correct idling speed.

Accelerating Pump (Stromberg)—Two holes for pump engagement. Set for maximum stroke unless too rich a charge occurs on accelerating.

(Marvel)—Four holes for pump link engagement.
#1—Minimum stroke—summer driving.
#2—Interm. stroke—warm temperatures.
#3—Normal stroke—standard setting.
#4—Maximum stroke—winter driving.

Fast Idle:—Buick Cold Idle Control.

For complete data, refer to Carburetion Equip. Index.

Accelerator Linkage Adjustment:—Linkage adjustment must be maintained to provide correct throttle opening for starting. With carburetor set for 7-8 M.P.H. idling speed and throttle button pushed in, rotate fast idle cam to extreme left against stop (fast idle position), adjust vacuum switch rod length so that switch lever reference line lines up with 'Fast Idle' line on housing. Check accelerator pedal. Throttle should be wide open with pedal down against pedal stop (floor mat). Adjust by turning trunnion on accelerator rod. Accelerator rod spring length should be 9 15/16".

Automatic Choke:—Delco-Remy Model 490-A (Stromberg Carburetors), 498-H, 1990001 (Marvel Carb.).

For complete data, refer to Carburetion Equip. Index.

Fuel Volatility Selector—Change setting as required to provide correct choke action with fuel used. Standard setting second notch from 'Low' side of scale (move toward 'high' end if mixture too rich, toward 'low' end of scale if mixture too lean).

CARB. EQUIPMENT

Air Cleaner:—AC. #1526989 oil-wetted type standard. #1528114 oil-bath optional.

NOTE—If heavy duty oil-bath type cleaner installed, main metering jet (Stromberg), or power jet and metering pin jet (Marvel) must be changed.

See Jet Specification Tables in Carburetor Section.

Fuel Pump:—AC. Type AB #1521838 (1st 10,000 cars) combination fuel-and-vacuum pump. Type AK #1523195 (after 1st 10,000 cars) fuel pump.

For complete data, refer to Carburetion Equip. Index.

Gasoline Gauge:—AC. Electric #1515321 (dash unit), #1515444 (tank unit—60), #1515440 (80, 90).

For complete data, refer to Carburetion Equip. Index.

BATTERY

BATTERY:—Delco, Type 15-G. 6 volt, 15 plate, 114 ampere hour capacity (20 hour rate).
Starting Capacity—137 amperes for 20 minutes.
Zero Capacity—300 amperes for 4.5 minutes.
Grounded Terminal—Negative (—) terminal.
Location—Under right front seat.

STARTER

Delco-Remy Model 727-W (Std.), 729-B (60 RHD). Armature No. 820158.
Drive—Solenoid pinion shift & overrunning clutch.
Cranking Engine—115 R.P.M., 175 amps. at 5 volts.
Rotation—Counter-clockwise at commutator end.
Brush Spring Tension—24-28 ounces.

Performance Data

Torque	R.P.M.	Volts	Amperes
0 ft. lbs.	5500	5	65
16 "	Lock	3	600

Removal:—Mounted on right front face of flywheel housing. To remove, take out capscrews.

Starting Switch:—Solenoid Switch 1542 (727-W), 1545 (729-B), Vacuum Switch 1594, 1607. Solenoid switch controlled through relay by vacuum switch operated by accelerator pedal with ignition 'on'.

For complete data, refer to Electrical Equipment Index.

Solenoid Switch Type 1542, 1545

Closes against 70 lb. pull with ½" air gap drawing 65-71 amperes at 5 volts. Holds switch closed with draw of 12-14 amperes (hold-in coil only).

Solenoid Relay

Contacts Close—1.9 volts max. Open—1.0-1.2 volts. Contact Gap—.025-.045". Air Gap—.010-.013".

Vacuum Switch

Contacts Close—10-14° counter- clockwise (1594), clockwise (1607), from latch position.
Unlatch Action—3.4-4.6" of HG. approximately 30° from latch position.

GENERATOR

STANDARD

Delco-Remy Models 918-A, F. Armature 1866410. New type 'Split-field' generator (one straight-shunt coil, one third-brush coil—see wiring diagram) with fixed third brush and vibrating voltage regulator
NOTE—Field coils changed in production.

For complete data, refer to Electrical Equipment Index.

Charging Rate Adjustment—Adjusted by changing setting of voltage regulator. See Regulator data.
Maximum Charging Rate—As given in table below. Reached at car speed of 46.5 (60), 44.5 (80), 41.9 (90) M.P.H. (cold). To check charging rate, connect test ammeter in line at 'BAT' terminal of regulator, voltmeter between 'GEN' terminal and ground, ground 'F' terminal to eliminate regulator action.
NOTE—Do not operate generator on open-circuit.

Performance Data

	Amperes	Volts	R.P.M.
Cold	27-31	8.0	4000
Hot	25-28	8.0	4200

Rotation—Counter-clockwise at commutator end.
Brush Spring Tension—22-26 ounces (main), 16-20 ounces (third).
Field Current—Shunt (1.44-1.56 amperes at 6 volts), third brush (.89-.94 amperes at 6 volts.)
Removal:—Generator pivot mounted at left front of engine. To remove, take out mounting screws.
Belt Adjustment:—Loosen clamp screw and pivot screws, pull generator away from engine until belt deflection midway between generator and fan pulleys is ½" with light pressure.

GENERATOR

SPECIAL EQUIPMENT

Police Service—Delco-Remy Model 961-N. Armature 1857866 or 934-F, Armature No. 1861561. Two brush type with voltage and current regulator control.
Charging Rate Adjustment—None. See Regulator.
Maximum Charging Rate—As follows:

Performance Data (Cold)

	Amperes	Volts	R.P.M.
961-N	25	8.0	1650
934-F	26	8.1-8.3	1325

Rotation—Counterclockwise at commutator end.
Field Current—2.0-2.2 amperes (961-N), 1.7-2.0 amperes (934-F) at 6.0 volts.
Brush Spring Tension—25 ounces each.
Mounting & Belt Adjustment:—Same as Std. (above).

REGULATOR

STANDARD

Delco-Remy Model 5807 (Std. Gen.). Double Core Type Voltage Regulator (with 'IGN' Terminal). Cut-out Relay and vibrating type voltage regulator in

CONTINUED ON NEXT PAGE

C NTINUED FR M PRECEDING PAGE

single case. Cutout Relay has extra 'ground' contacts for starter solenoid control.
For complete data, refer to Electrical Equipment Index.

Cutout Relay

Cuts In—6.9-7.6 volts, 9.1 (60), 8.8 (80), 8.2 (90) MPH.

Cuts Out—0-3.0 amperes discharge at 6.3 volts.

Contact Gap—.018-.025".

Air Gap—.018-.022" with contacts closed.

Voltage Regulator

Setting—7.5-7.9 volts Cold (70°), 7.4-7.6 volts at 150°F. Regulator is over-compensated for temperature and must be checked at these points.

Adjustment—Disconnect lead on 'IGN' terminal of regulator, connect jumper between 'IGN' and 'BAT' terminals, connect test ammeter in charging line at 'BAT' terminal, connect voltmeter between 'IGN' terminal and ground. Operate generator at 2800-3000 R.P.M., adjust charging rate to 8-10 amperes, change regulator armature spring tension by bending spring hanger at lower end of spring slightly NOTE—Regulator cover must be in place when tests are made. Do not operate generator on open circuit.

Contact Gap—.015-.025".

Contact Spring Tension—2.7-3.5 ounces.

Air Gap—.060-.070" between armature and center of core with armature down and fibre bumper touching stop; .008-.013" between fibre bumper and stop with armature up.

REGULATOR

SPECIAL EQUIPMENT

Delco-Remy Model 5832 (961-N Generator). 5559 (934-F). Double Core Type Voltage & Current Regulator. Same design as Std. Model 5807 (above) with additional Current Regulator unit.

Cutout Relay & Voltage Regulator

Specifications same as for Model 5807 (above).

Current Regulator

Setting—26-28 amperes (5832), 20-23 amperes (5599).

To Check—Disconnect lead at regulator 'IGN' terminal (to eliminate voltage regulator action), connect ammeter in charging line at 'BAT' terminal, operate generator, note ammeter reading (should equal setting above).

To Adjust—Same as Voltage Regulator (above).

Contact Gap, Contact Spring Tension, Fibre Bumper Air Gap—Same as Voltage Regulator (above).

Armature Air Gap—.075" between armature and center of core (armature down and fibre bumper against stop).

LIGHTING

Guide Multibeam (same as Series 40). *See Series 40 article (preceding) for complete data.*

Headlamp Beam Indicator—See Series 40.

Switches

Lighting—Delco-Remy Model 480-W, R (Export).

Foot Selector—Delco-Remy Model 471-T.

Instrument Lamp—Delco-Remy Model 1404.

Stop Lamp—Delco-Remy Model 476-S.

Bulb Specifications

Position	Candlepower	Mazda No.
Headlamps	32-21	2320
Fender, Instrument, Map	1½	55
Stop and Tail	21-3	1154
License (Coupe included)	3	63
Dome	6	81

MISC. ELECTRICAL

THERMOSTATIC RELAY:—Model No. 1865577. Mounted on lighting switch and may be replaced separately. Contacts open in 1 minute with 38 amperes (70° F), remain closed at 25 amperes. Not adjustable.

FUSES:—Dome Light & Rear Cigar Lighter (80, 90). 30 ampere in connector back of instrument panel. **Electric Clock.** Two ampere on clock.

HORNS:—Klaxon Model K-33-S. Type 2051 (low note—right side), Type 2052 (high note—left side). Vibrator type, twin horns operated by horn relay.

Horn Type	Current at 6 volts	Air Gap
2051 Low Note	11-13	.042-.046"
2052 High Note	10-12	.032-.036"

Horn Relay:—Model 271-A. Points close at 2.7-4.0 v. **Contact Gap**—.015-.030". **Air Gap**—.010-.025"

ENGINE

ENGINE SPECIFICATIONS:—8 cylinder, 'T' head.

Bore—3 7/16". **Stroke**—4 5/16".

Displacement—320.2 cubic inches.

Rated Horsepower—37.81 (S.A.E.).

Developed Horsepower—130 at 3400 R.P.M.

Compression Ratio & Pressure—Std. 5.75-1 cast-iron head. Pressure 100-106 lbs. at 150 R.P.M. Check pressure with engine warm, all plugs removed, throttle wide open and starter cranking engine.

Vacuum Reading—18-20" steady at 7-8 M.P.H.

NOTE—To drop oil pan, remove front stabilizer.

PISTONS:—Buick Anolite, aluminum alloy, 'T' slot, cam ground type. Refinish cylinders to take finished replacement pistons. **Length**—4.161-4.163".

Weight—22.56 ozs. (stripped), 25.80 ozs. (with rings).

Removal—Pistons and rods removed from above.

Clearance—Top of skirt .0023". Limits .0020-.0026".

Original Bore Size & Replacement Pistons:—*See Buick Special Shop Notes.*

Fitting New Pistons:—Micrometer Gauge—Check at points just below 'T' slot junction on both sides of vertical slot and below lower end of slot, finishing cylinder bores to give correct clearance. **Feeler Gauge**—Use ½" wide stock inserted on side opposite slot. Piston should pass on .0015" feeler and hold on .00225" with engine at 65-75° F.

Installing Pistons:—Slot away from camshaft.

PISTON RINGS:—Two compression, two oil control rings per piston all above pin. Oil ring grooves drilled radially with 5/32" drain holes (10 top groove 8 lower groove).

Ring	Width	End Gap	Side Clearance
Compression	3/32"	.010-.015"	.0015-.003"
Oil Control	3/16"	.010-.015"	.0015-.003"

NOTE—Install compression rings with mark 'Top' toward the top of piston. Oversize rings furnished in sizes .010", .020", and .030" oversize.

PISTON PIN:—Diameter—⅞". **Length**—3 1/16"
Pin clamped in rod. Oversize pins not furnished. Replacement pistons have pins fitted.

Pin Fit in Piston—.0003-.0004" at 70° F. or light finger push.
NOTE—5½" wrench only, for use on pin bolt.

CONNECTING ROD:—Weight—38.43 ozs. **Length**—8¼".

Crankpin Journal Diameter—2¼".

Lower Bearing—Spun-babbitt lined type.

Clearance—.0008-.0018". **Sideplay**—.005-.010".

Bearing Adjustment:—Shims. Do not file rods or caps.

Installing Rods:—Align cap and rod. Mark on rod and cap to rear of engine, oil hole toward camshaft. NOTE—7/16" diameter ground bolts used for rod and cap assembly. Common bolts must not be used.

CRANKSHAFT:—5 bearing. Integral counterweights.

Journal Diameters—#1, 2 9/16"; #2, 2⅝"; #3, 2 11/16"; #4, 2¾"; #5, 2 13/16".

Bearing Type—Steel-backed, babbitt-lined. Bearings dowelled in crankcase and cap.

Clearance—.0007-.0022".

Replacement Bearings—*See Buick Shop Notes.*

Bearing Adjustment:—Shims. Do not file caps.

End Thrust:—#3 (center) bearing. **Endplay** .004-.007"

CAMSHAFT:—5 bearing. Non-adjustable chain drive.

Journal Diameters—#1, 2 5/32"; #2, 2⅛"; #3, 2 3/32"; #4, 2 1/16"; #5, 1¾".

Bearing Type—Steel-backed, babbitt-lined.

Clearance—.0005-.0035". **Endplay**—.002-.006".

End Thrust:—Taken by thrust plate assembled between front bearing and camshaft sprocket.

Timing Chain:—Link-Belt. Width 1¼". Pitch .500". Length 50 links or 25".

Installing Chain—¼-⅜" play midway between sprockets on new chain. 1" maximum play if worn.

Camshaft Setting:—Mesh chain with copper-plated washers opposite mark on each sprocket. Chain markers 10 links apart.

VALVES:—	Head Diameter	Stem Diameter	Length
Intake	1 25/32"	.3715-.3725"	4⅜"
Exhaust	1 7/16"	.3711-.3719"	4 7/32"

	Seat Angle	Lift	Stem Clearance
Intake	45°	.347"	.0015-.0035"
Exhaust	45°	.348"	.0021-.0039"

NOTE—Intake valves 'streamlined' tulip type.

Valve Guides:—Press fit in head. Install undercut end up. Finish ream to size for correct clearance.

Valve Springs:—Double springs on all valves.

Inner Spring	Pressure	Length
Valve Closed	15½-20½ lbs.	1 21/32"
Valve Open	45-51 lbs.	1 5/16"
Outer Spring	**Pressure**	**Length**
Valve Closed	26½-31½ lbs.	1 15/16"
Valve Open	63-73 lbs.	1 19/32"

Total Spring Pressure
Closed—42-52 lbs. Open—112-124 lbs.

Valve Lifters:—Single piece, cast-iron. Lifter guide holes reamed in crankcase. Clearance .0005-.0025".

Rocker Arms:—Drop-forged fitted with steel-backed, babbitt-lined bushings. Rocker arm shaft brackets are of aluminum alloy (no oil temp. regulator). Clearance—.001-.003".
NOTE—Install bushings with oil holes aligned.

VALVE TIMING

Tappet Clearance: 015" all valves, engine hot.

Valve Timing: See Camshaft Setting above. "Timing Point' when valve .004" off seat with .015" tappet clearance or lash customarily listed instead of actual opening and closing points.

Timing Points

Intake Valves—Open 14° BTDC. Close 71° ALDC.
Exhaust Valves—Open 56° BLDC. Close 25° ATDC.

Opening and Closing Points

Intake Valves—Open 27° BTDC. Close 84½° ALDC.
Exhaust Valves—Open 69° BLDC. Close 38½° ATDC.

Valve Timing Check:—#2 or #7 exhaust valve should be .155" open (actual opening as measured by dial indicator contacting valve spring cap), with #1 and 8 pistons on top dead center and flywheel mark 'TDC/1-8' at indicator in inspection hole in right front face of flywheel housing above starter.

LUBRICATION

LUBRICATION:—Pressure with oil pump in crankcase.

Oil Pump:—Helical gear type in crankcase driven from distributor drive gear (slot in end of pump shaft engages lower pin in gear, upper pin engages distributor shaft). Ignition timing not disturbed by removal of pump.

Oil Pump Clearances—*See Buick Shop Notes.*

Normal Oil Pressure:—45 lbs. at normal speeds.

Oil Pressure Regulator:—Operates at 45 lbs. Mounted on oil pump. Not adjustable.

Crankcase Capacity:—9 qts. (dry), 8 qts. (refill).

CLUTCH

CLUTCH:—Own Make. Long Driven Member (11CF-CI) Single plate, dry disc type.

See Clutch Section for complete data.

Facings—Woven type, 2 required, 6½" I.D., 11" O.D., 9/64" thick.

Adjustment—Clearance between pedal and underside of toeboard must be ⅜-⅝". To adjust, loosen locknut, turn setscrew at rear of pedal above stop. Free movement of clutch pedal must be ¾-1". To adjust, turn nut on rod connecting pedal and yoke.

Removal:—Remove transmission (see Transmission Removal below), take off clutch pan, take out clutch cover mounting screws evenly, lower assembly.

TRANSMISSION

TRANSMISSION:—Buick. Synchro-mesh on second and high gears. All gears helical type.

See Transmission Section for complete data.

Removal:—Hoist rear of car by frame, disconnect rear brake cables at equalizer bar and brake tube connection on torque tube at rear of X-member, remove spring seat U-bolts, flange bolts on front of torque tube, pull axle assembly back withdrawing propeller shaft from ball and universal joint. Remove brake master cylinder, pedal support, transmission rear support and mounting bolts. Support at rear while withdrawing transmission.

NOTE—Replace centering shims in same position when installing rear transmission support.

UNIVERSALS

UNIVERSAL JOINT:—Spicer. (Buick Design). Plain bearing type. One used.

See Universals Section for complete data.

REAR AXLE

REAR AXLE:—Buick. Semi-floating, hypoid (60 only), spiral bevel gear type with torque tube drive.

See Rear Axle Section for complete data.

NOTE—Bronze bushing used at front end of propeller shaft on Series 90 only.

Ratio—3.9-1 (60), 4.222-1 (80), 4.625-1 (90).

Backlash (Pinion & Ring Gear)—.008-.010". Shims.

Removal:—Axle shaft retained by horseshoe 'C' washer (60), nut and cotter pin (80, 90), recessed in differential side gear. Remove housing cover, pinion shaft lockscrew, pinion shaft and spacer block, push axle shaft in, remove 'C' washer (60), nut and cotter pin (80, 90), withdraw shaft. For complete axle assembly removal disassemble axle as outlined under Transmission Removal, disconnect rear spring shackles, and withdraw housing from under car.

Wheel Bearing Adjustment—None.

SHOCK ABSORBERS

SHOCK ABSORBERS:—Delc . Model Nos. as follows:

	Model 60	Models 80, 90
Front	1945-A, B	1902-D, C
Rear	1713-A, B	1713-C, D

All shocks are double acting, hydraulic types.

See Shock Absorber Section for complete data.

FRONT SUSPENSION

Front Suspension:—Independent, linked parallelogram type with coil springs.

See Front Suspension Section for complete data.

Kingpin Inclination—3½-4½° (60), 4¼-5¼° (80), 4-5° (90).

Camber—Minus ¼° to plus 1°. No adjustment.

Caster—¼° plus or minus ⅜° (60), 0° plus or minus ⅜° (80, 90). Adjustable.

Toe In—0-1/16". Adjustable.

Steering Geometry—Outer wheel turned 20°, inner wheel 23¾° (60, 80), 24° (90) plus or minus ¾°.

See Buick Special Shop Notes for brake assembly removal for work on Front Suspension.

STEERING GEAR

Steering Gear: Saginaw Worm-and-Double Roller type with center steering.

See Steering Gear Section for complete data.

BRAKES

BRAKES:—Service—Bendix Hydraulic, single anchor type. Hand lever applies rear service brakes.

See Brake Section for complete data.

Series 60 Brake Specifications

All data same as for Series 40 except for lining width which is 2" for Series 60. *Refer to 1937 Series 40 article (preceding) for complete data.*

Series 80, 90 Brake Specifications

Wheel Cylinders—Diameters: front 1¼", rear wheels 1 3/16". Not interchangeable front and rear.

Drum Diameter—12" (80), 14" (90).

Lining—Woven (Ferodo BZ-10) type. Width 2". Thickness 3/16" (80), ¼" (90). Length per wheel front shoe 9 15/16" (80), 12 1/16" (90), rear shoe 12¾" (80), 14¾" (90).

Clearance—.010" + or — .002" at heel and toe.

Braking Power—47.4% rear.

Hand Brake Adjustment:—See Service Brake (above).

MODEL IDENTIFICATION

SERIAL NUMBER:—First number (All Series) 13219848 (Flint), 23238767 (South Gate, Calif.), 33245765 (Linden, N. J.). On right frame rail at dash.

ENGINE NUMBER:—Stamped on boss on right side of crankcase above starter. First number 40-, 60-, 80-, 90-3396937 (first number same for all models). NOTE—Dash (—) following engine number indicates engine equipped with .010" oversize pistons.

TUNE-UP

COMPRESSION:—Ratios and pressures as follows:

Model	Compression Ratio	Compression Pressure. 1000 RPM.	Cranking Spd.
38-40	6.15-1	126 lbs.	112 lbs.
38-60, 80, 90	6.35-1	130 lbs.	113.8 lbs.

VACUUM READING:—18-20" steady reading with engine idling at 7-8 MPH.

FIRING ORDER: 1-6-2-5-8-3-7-4. See diagram.

SPARK PLUGS: AC No. 46. 14 mm. Metric type. Gaps—.025". Limits .023-.028". NOTE—Gap may be set at .030", if necessary, to secure good idle. May cause high speed missing in use.

IGNITION: See Coil, Condenser, and Distributor. Breaker Gap—.015". Cam Angle 31° (closed).

►*CAUTION—Use of cam angle to set point gap not recommended by car manufacturer. If dwell meter used, make final check that gap within .0125-.0175".*

Automatic & Vacuum Advance—*See Distributor.*

IGNITION TIMING: See Ignition Timing. Std. Setting—4° BTDC (Series 40), 6° BTDC (Series 60, 80, 90) with flywheel mark 'ADV' at indicator in inspection hole in flywheel housing above starter.

CARBURETION: See Carburetor & Carb. Equipment. Idle Setting—Both screws ¾-1 turn (All Series—Marvel Carb.), 1 turn (40—Stromberg Carb.), 1¼ turn (60, 80, 90—Stromberg Carb.) open. Idle speed 7-8 MPH. (except Series 40 with Self-shifting Trans. —5-6 MPH. in Third Gear). Float Level—Fuel level 11/16" (Series 40—Marvel Carb.), ¾" (60, 80, 90—Marvel Carb.), 19/32" (All Series—Stromberg Carb.) below top of bowl. Accelerating Pump—#2 hole (medium stroke) std.

Fuel Pump Pressure: 3½ lbs. max. (Series 40—Type W Pump), 3 lbs. max. (Series 40—Type AF Pump), 4½ lbs. max. (Series 60, 80, 90).

MANIFOLD HEAT CONTROL:—Thermostatic coil type. Setting—Coil wind-up should be ¼ turn at 70°F With coil engaged on heat valve shaft, wind up outer end ¼ turn and engage prong on anchor stud. Thermostatic Coil Checking—To check thermostat on engine, install suitable lever 1½" long on forward end of heat valve shaft and hook spring balance to outer end of lever. With thermostatic coil and entire manifold at 70°F., pull required to start lever should be 5-6 ozs. (40), 8-9½ ozs. (60, 80, 90).

VALVES: See Valve Timing. Tappet Clearance—.015" all valves, engine hot.

STARTING: See Battery, Starter, Generator, Regulator.

IGNITION

Ignition Switch:—Oakes Steering Column & Ignition Lock No. 301615 (40, 60), 301616 (80, 90). Ignition Switch No. 301370.

Ignition Lock—Briggs & Stratton No. 45922 (Lock Cylinder). Key Series—8000-9499. Groove—15.

COIL: Delco-Remy Model 536-H. On right side of crankcase in front of distributor.
Ignition Current—2½ amperes idling, 4½ stopped.

CONDENSER: Delco-Remy Part No. 1869704.
Capacity—.20-.25 microfarad.

DISTRIBUTOR: Delco-Remy Model 1110801. Single breaker, 8 lobe cam, full automatic advance type with Vacuum Spark Control and Octane Selector adjustment.

Breaker Gap—.015". Limits .0125-.0175".

Cam Angle or Dwell—31° (closed), 14° (open).

Breaker Arm Spring Tension—22 oz.

Rotation—Counter-clockwise viewed from the top.

Distributor Degrees	Automatic Advance R.P.M.	Degrees	Engine R.P.M.
Start	250	3.5	500
7	400	14	800
13	1500	26	3000

Vacuum Spark Control Model 681-H. M unted on distributor and linked directly to breaker plate. Provides additional advance at speeds greater than 18 MPH. except when engine accelerated or operated with wide open throttle when spark is retarded by return spring. Plunger travel ⅛" Maximum.

Vacuum Advance.

Distr. Degrees	Eng. Degrees	Vacuum (" of HG)
Start	0	5-7"
5-6½°	10-13°	10-13"

Octane Selector—Consists of manual adjustment at distributor providing 10° advance (toward 'High' on scale), 10° retard (toward 'Low' on scale) from center position. See Ignition Timing (below) for setting.

Distributor Removal:—On right side of crankcase. Disconnect vacuum line, take out two hold-down screws in mounting flange, pull distributor up. NOTE—When installing distributor, see that cork oil seal in place in recess around shaft hole, turn

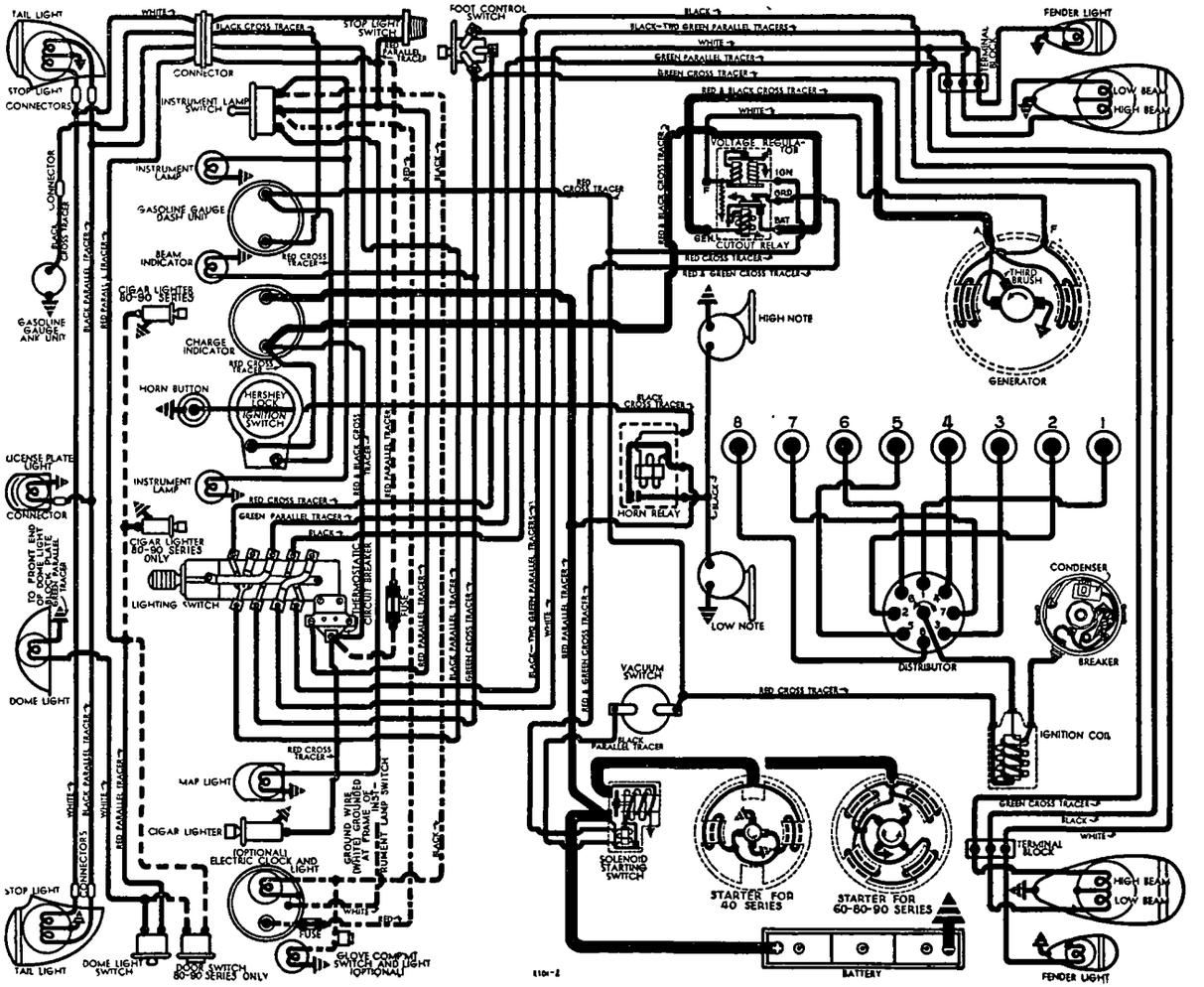

distributor shaft so that rotor opposite #1 segment, position distributor so that vacuum unit connection toward rear and parallel with center-line of engine, turn oil pump shaft with screwdriver so that slot lines up with pin in end of drive gear.

IGNITION TIMING

IGNITION TIMING:—Standard setting below for fuel of 70 Octane Rating (Series 40), 76, (60, 80, 90). See Octane selector for final setting.

	Flywheel Degrees	Piston Position
38-40	4° BTDC	.0063" BTDC.
38-60, 80, 90	6° BTDC	.0149" BTDC.

To Set Timing (With Synchroscope)—Recommended by manufacturer. Clip one synchroscope lead to #1 spark plug cable, insert other lead in distributor cap terminal from which #1 spark plug wire removed. Direct synchroscope on flywheel through inspection hole in right front face of housing above starter. Idle engine at 400 RPM. Max. Loosen two distributor hold-down screws, rotate distributor until ADV mark lines up with line on housing, tighten hold-down screws. Loosen Octane Selector pointer lockscrew (Allen wrench), center pointer on scale. See Octane Selector setting below.

To Set Timing (without Synchroscope)—With #1 piston on compression stroke, turn the engine over until 'ADV' mark on flywheel lines with reference line on housing at inspection hole in right front face of housing above starter. Adjust distributor so contacts just opening, center Octane Selector pointer (above), adjust Octane Selector

Octane Selector—Should be adjusted so that very light 'ping' secured when car accelerated between 10 and 20 MPH. in high gear with wide open throttle. To adjust, loosen the two distributor hold-down screws, rotate distributor and pointer toward 'High' end of scale for fuel of higher rating, or toward 'Low' end for fuel of lower rating.

NOTE—To correct excessive spark knock (not caused by incorrect spark plugs, inferior fuel, or incorrect timing) install special advance weight springs #1873545.

CARBURETOR

CARBURETION:—Marvel or Stromberg Carburetors, Dual, Downdraft, 1" (40), 1¼" (60, 80, 90) type. Special type used when heavy duty oil-bath air cleaners installed (different jet calibrations).

	Model	Std. Air Clnr.	Oil-bath Clnr.
40	Marvel CD-1B	10-1796	10-1797
40	Strmbg. AAV-1	A-18681	A-18691
60, 80, 90	Marvel CD-2B	10-1798	10-1799
60, 80, 90	Strmbg. AAV-2	A-18682	A-18692

For complete data, refer to Carburetor Index.

Idle Adjustment (All Models)—With engine warm and idling at slow idle speed with choke valve wide open (Automatic Choke and Fast Idle inoperative), set throttle stopscrew for 7-8 MPH. idling speed (except 40 with Self-shifting transmission, 5-6 MPH. in third gear), turn idle adjusting screw for each barrel (in succession) in until engine begins to lag or miss, then turn screw out until engine begins to roll, finally turn screw in slowly until engine fires smoothly. Final setting should be approximately 1 turn (40—AAV-1), 1¼ turn (60, 80, 90—AAV-2), ¾-1 turn (all models—CD-1B, CD-2B) of screw open. Readjust stopscrew for idling speed.

Accelerating Pump (All Models)—Three holes in throttle lever for pump link engagement:
#1 (Inner—Min.). Hot weather, high-test gas.
#2 (Center)—All-year standard setting.
#3 (Outer—Max.). Cold weather, low-test gas.

Fast Idle:—Buick Cold Idle Control for all models.
For complete data, refer to Carburetion Equip. Index.

Accelerator Linkage Adjustment:—Not required. See Automatic Choke & Starter Vacuum Switch data.

IMPORTANT NOTE—(Model 40 with Self-Shifting Transmission):—See Buick Self-Shifting Transmission article in Transmission Section for throttle control lever setting (must be checked whenever linkage disconnected or disturbed).

Automatic Choke:—Delco-Remy Carburetor Control Model 1990101 (all carburetor models).
For complete data, refer to Carburetion Equip. Index.

Volatility Selector Adjustment—Standard setting second notch on 'Low' side of scale. Turn adjusting nut toward 'High' end of scale for leaner setting, toward 'Low' end for richer setting.

CARB. EQUIPMENT

Air Cleaner:—AC. Oil-wetted type Std. #1528533 (40), 1528535 (others), Heavy duty oil-bath type Optl. #1528534 (40), 1528616 (others).

Fuel Pump:—AC fuel pump std. (40), combination fuel and vacuum pump std. (60, 80, 90), optl. (40). Type W #1521854 (40 Std., first 54000), Type AF #1523703 (40 Std., after 54000), Type AJ #1523687 (40 Optl.), Type AB #1521838 (Std. 60, 80, 90).
For complete data, refer to Carburetion Equip. Index.

Gasoline Gauge:—AC Electric. #1515347 (Dash Unit), #1515469 (40,60 Tank Unit), #1515468 (80,90 Tank).
For complete data, refer to Carburetion Equip. Index.

BATTERY

BATTERY:—Delco Model 17E-1. 6 volt, 17 plate, 115 ampere hour capacity (20 hour rate).
Starting Capacity—137 amperes for 20 minutes.
Zero Capacity—300 amperes for 4.3 minutes. Five second voltage—4.4 volts.
Grounded Terminal—Negative (—) terminal grounded to Coil mounting bolt on engine block.
Dimensions—Width 4". Length 19 5/16". Height 9".
Location—On right side under engine hood.

Series 80, 90 Export Battery:—Delco Model 17K-1. 6 volt, 17 plate, 112 A.H. Capacity (20 hr. rate).
Grounded Terminal—Negative (—) terminal.
Dimensions—Width 7". Length 10⅜". Height 8⅝".

STARTER

Delco-Remy 734-Z (40), 727-W, 729-B RHD (Others).
Armature—823881 (734-Z), 820158 (727-W, 29-B).
Drive—Overrunning clutch (solenoid pinion shift).
Rotation—Counter-clockwise at commutator end.
Cranking Engine—(40) 135 RPM., 150 amperes, 4.5 volts. (60, 80, 90) 115 RPM., 175 amperes, 5 volts.
Brush Spring Tension—24-28 ozs. each.

Performance Data—734-Z.

Torque	R.P.M.	Volts	Amperes
0 ft. lbs.	5000	5.0	65
12 "	Lock	3.37	525

Performance Data—727-W, 729-B.

0 ft. lbs.	5500	5.0	65
16 "	Lock	3.0	600

Removal:—Flange mounted on right front face of flywheel housing. To remove, take out capscrews.

Starting Switch:—Solenoid Switch No. 1542 (734-Z, 727-W), 1545 (729-B). Vacuum Switch No. 1868512 (part of Automatic Choke assembly). Solenoid controlled through relay by accelerator pedal.
For complete data, refer to Electrical Equipment Index.

Vacuum Switch.
Contacts close at 30-40° throttle opening. Open with 3-6" of Hg. (stay open with more than ½").

GENERATOR
STANDARD

Delco-Remy Model 1101052 (40), 1101053 (60), 1101055 (80, 90). Armature No. 1866789 (all models). Split-field type with fixed third brush and vibrating voltage regulator control.
For complete data, refer to Electrical Equipment Index.
NOTE—Generators same except for drive pulley. Interchangeable if correct pulley installed.

Pulley Specifications.

Groove	Top Width.	Diameter at rim.	Paint Color.
40	¾"	3½"	Black
60	⅞"	3¼"	Black
80, 90	⅞"	3½"	Aluminum

Charging Rate Adjustment—Adjusted by changing voltage regulator setting. See Regulator data.
Maximum Charging Rate—As given in table below. Reached at car speed of approx. 40 (40), 43 (60), 44 (80), 42 (90) MPH. cold. To check, connect test ammeter in line at 'BAT' terminal on regulator, voltmeter between 'GEN' terminal and ground, ground 'F' terminal to eliminate regulator action.

Performance Data.

	Amperes.	Volts.	R.P.M.
Cold	27-31	8.0	4000
Hot	25-28	8.0	4200

Rotation—Counter-clockwise at commutator end.
Brush Spring Tension—22-26 ounces (main), 16-20 ounces (third brush).
Field Current—1.44-1.56 amperes at 6.0 volts (Shunt field), .89-.94 amps. at 6.0 volts (3rd brush field).
Removal:—New type pivot mounting (generator hung below pivot bracket). Removed in same manner as previous models.
Belt Adjustment:—Loosen all clamp bolts and pivot bolts, pull generator out and up until belt deflection midway between gen. and fan pulleys is ½".

GENERATOR
SPECIAL EQUIPMENT

City Police—Delco-Remy Model 1105528. Used with Delco-Remy Regulator Model 5599.
Refer to Buick 1939 article for all data.

State Police—Delco-Remy Model 1105857. Used with Delco-Remy Regulator Model 1118237.
Refer to Buick 1940 article for all data.

REGULATOR

Delco-Remy Model 5807. Double Core Type Voltage Regulator (With 'IGN' Terminal). Cutout Relay and vibrating type Voltage Regulator. Cutout Relay has extra 'ground' contacts for starter control.
For complete data, refer to Electrical Equipment Index.

Cutout Relay

Cuts In—6.9-7.6 volts, approx. 800 RPM., 8 MPH.
Cuts Out—0-3 amperes discharge.
Contact Gap—.020". **Air Gap**—.020" (closed).

C NTINUED N NEXT PAGE

C NTINUED FROM PRECEDIN PA E

Voltage Regulator

Setting—7.5-7.9 volts (70°F), 7.4-7.6 volts (150°F). Regulator over-compensated for temperature and must be checked at these points.

Adjustment—Connect ammeter in charging line at 'BAT' terminal on regulator, disconnect lead on 'IGN' terminal and connect jumper between this terminal and 'BAT' terminal, connect voltmeter between 'IGN' terminal and ground. Operate generator at 2800-3000 RPM., adjust charging rate to 8-10 amperes (use variable rheostat or AVR set), adjust regulator by bending spring hanger at lower end of armature spring slightly.

NOTE—Regulator cover must be in place when testing. Do not run generator on open-circuit.

Contact Gap—.020". **Contact Sp. Tension**—2.7-3.5 oz. **Air Gap**—.063" between armature and center of core with armature down. .010" between fibre bumper and stop with armature up.

LIGHTING

LIGHTING:—Headlamps—Guide Multi-beam, pre-focused type with non-interchangeable lenses (marked 'right' and 'left' at top). Beams same as on 1937 models except Fender Lamps lighted whenever City Beam or asymetrical Passing Beam in use.

Headlamp Adjustment—Must be adjusted with lenses in place (beams 4° to right without lenses), With the Upper Beams 'on', aim left hand headlamp so that upper edge of bright spot is on horizontal line at lamp center height and left edge is at lamp vertical center-line (entire bright spot to right of vertical line). Aim right hand headlamp for same height but center bright spot on vertical center-line (right cut-off approx. 8" to right of center-line).

Headlamp Beam Indicator—In speedometer dial. Lighted whenever upper beams in use.

Switches

Lighting—D-R No. 1994501, 1995001 (Exp).
Foot Selector—Delco-Remy Model 471-T.
Instrument Light—Delco-Remy Model 1404.
Stop Light—Delco-Remy Model 476-S.

Bulb Specifications

Position	Candlepower	Mazda No.
Headlamps	32-21	2320
Fender, Instrument, Map	1½	55
Clock, Radio, Trunk	1½	55
Beam Indicator, Glove Cmpt.	1	51
Stop & Tail	21-3	1154
License Plate	3	63
Dome	6	81

MISC. ELECTRICAL

THERMOSTATIC RELAY:—No. 1865577. Mounted on lighting switch. Contacts remain closed with 25 ampere current but open within 1 minute with 38 ampere current (70°F). Non-adjustable

FUSES:—Dome Light & Rear Cigar Lgtrs. (80, 90)—30 ampere in connector back of instrument panel. **Electric Clock**—2 ampere on back of clock.

HORNS:—Klaxon Model K-33-S. Type 2051 (low note—right side), 2052 (high note—left side). Vibrator type blended tone twin horns operated by relay.

Horn Type	Current (at 6 volts)	Air Gap
2051 Low Note	11-13 amperes	.042-.046"
2052 High Note	10-12 amperes	.032-.036"

Horn Relay:—Model 271-A. Contact Gap—.020". **Contacts Close**—2.7-4.0 volts. **Air Gap**—.015".

ENGINE

SERIES 40

ENGINE SPECIFICATIONS:—8 cylinder, 'I' head.
Bore—3 3/32". **Stroke**—4⅛".
Displacement—248 cubic inches.
Rated Horsepower—30.63 (S.A.E.).
Developed Horsepower—107 at 3400 R.P.M.
Compression Ratio—6.15-1 cast-iron head.
Compression Pressure—110-118 lbs. at cranking speed. Cylinders should be uniform within 6 lbs.
Vacuum Reading—18-20" steady at 7-8 M.P.H.

PISTONS:—Buick new 'Dome-shaped head', Lo-Ex alloy, Tri-slot, cam ground type with anodized finish. Refinish cylinders to take finished replacement pistons. **Length**—4 9/32". **Weight**—14.5 ozs.
Removal—Pistons and rods removed from above.
Clearance—Land .018-.025". Skirt .0021" desired, .0015-.0021" limits. See Fitting (following).
Original Bore Size & Replacement Pistons:—*See Buick Special Shop Notes.*
Fitting New Pistons:—Micrometer Gauge—Check at points just below T-slot junction on both sides of vertical slot and below lower end of slot. Use light contact only. Clearance given above for 70°F.
Feeler Gauge—Piston (with pin) and engine must be 65-70°F. Insert ½x12" feeler in cylinder, piston (with pin parallel to crankshaft and T-slot on opposite side from feeler) should pass on .0015" feeler and hold on .00225" feeler.
Installing Pistons:—T-slot away from camshaft.

PISTON RINGS:—2 compression, 2 oil control rings per piston all above pin. Top compression ring carries relief on upper inner diameter. #2 comp. assembled with mark TOP toward piston head.

Ring	Width	End Gap	Side Clearance
Comp. (#1)	⅛"	.010-.015"	.0015-.003"
Comp. (#2)	3/32"	.010-.015"	.0015-.003"
Oil Control	3/16"	.010-.015"	.0015-.003"

Replacement Rings:—.010", .020", .030" oversize.

PISTON PIN:—Diameter—13/16". **Length**—2 11/16". Pin clamped in rod. Pins not furnished separately. **Pin Fit in Piston**—.0003-.0004" at 70°F. or easy finger push fit at room temperature.
NOTE—Use No. 25 wrench 5½" long on pin bolt.

CONNECTING ROD:—Weight—29.92 ozs. **Length**—7⅝".
Crankpin Journal Diameter—2".
Lower Bearing—Spun-babbitt lined type.
Clearance—.0008-.0018". **Sideplay**—.005-.010".
Bearing Adjustment:—Shims. Do not file rods or caps.
Installing Rods:—Align cap and rod. Mark on rod and cap to rear, oil hole to camshaft.
NOTE—Max. weight variation ⅛ oz. Special ground bolts used for cap assembly.

CRANKSHAFT:—5 bearing, integral counterweights with torsional balancer mounted on forward end.
Journal Diameters—#1, 2 5/16"; #2, 2⅜"; #3, 2 7/16"; #4, 2½"; #5, 2 9/16".
Bearing Type—Steel-backed, babbitt-lined. See Buick Shop Notes for replacement bearings.
Clearance—.0007-.0022".
Bearing Adjustment:—Shims. Do not file caps.
End Thrust:—Center (#3) bearing. **Endplay** .004-.008".

CAMSHAFT:—5 bearing. Non-adjustable chain drive.
Journal Diameters—#1, 2 5/32"; #2, 2⅛"; #3, 2 3/32"; #4, 2 1/16"; #5, 1¾".
Bearing Type—Steel-backed, babbitt bushings.
Clearance—.0005-.0035". **Endplay**—.002-.006".
End Thrust:—Taken by thrust plate assembled between front bearing and camshaft sprocket.
Timing Chain:—Link-Belt. Width 1". Pitch .500". Length 24½" or 49 links.
Camshaft Setting:—Mesh copper-plated washers (on chain) with marks on sprockets (on upper side).

VALVES:

	Head Diameter	Stem Diameter	Length
Intake	1 17/32"	.3715-.3725"	4 5/16"
Exhaust	1 11/32"	.3711-.3719"	4 3/64"

	Seat Angle	Lift	Stem Clearance
Intake	45°	.348"	.0015-.0035"
Exhaust	45°	.342"	.0021-.0039"

Valve Guides:—Press fit in block. Install with taper end to top. Finish ream to size.
Valve Springs:—Double springs on all valves. Free length: Inner 1⅞". Outer 2 5/16".

Inner Spring	Pressure	Length
Valve Closed	15½-20½ lbs.	1 21/32"
Valve Open	45-51 lbs.	1 5/16"
Outer Spring	**Pressure**	**Length**
Valve Closed	26½-31½ lbs.	1 15/16"
Valve Open	67-73 lbs.	1 19/32"

Valve Lifters:—Single piece, cast-iron. Lifter guide holes reamed in crankcase. **Clearance** .0005-.0025".
Rocker Arms:—Drop-forged fitted with steel-backed babbitt bushings. Rocker arm shaft brackets are of aluminum alloy. **Clearance**—.001-.003".

ENGINE

SERIES 60, 80, 90

ENGINE SPECIFICATIONS:—8 cylinder, 'I' head.
Bore—3 7/16". **Stroke**—4 5/16".
Displacement—320.2 cu. ins. **Rated H.P.**—37.81
Developed Horsepower—141 at 3600 R.P.M.
Compression Ratio—6.35-1 cast-iron head.
Compression Pressure—111-118 lbs. at cranking speed. Cylinders should be uniform within 6 lbs.
Vacuum Reading—18-20" steady at 7-8 M.P.H.

PISTONS:—Buick new 'Dome-shaped head', Lo-Ex alloy, Tri-slot, cam ground type with anodized finish. Refinish cylinders to take finished replacement pistons. **Length**—4 7/16". **Weight**—17.7 ozs.
Removal—Pistons and rods removed from above.
Clearance—Land .021-.028". Skirt .0023" desired, .0017-.0023" limits. See Fitting (following).
Original Bore Size & Replacement Pistons:—*See Buick Special Shop Notes.*
Fitting New Pistons:—Micrometer Gauge—Check at points just below T-slot junction on both sides of vertical slot and below lower end of slot. Use light contact only. Clearance given above for 70°F.
Feeler Gauge—Piston (with pin) and engine must be at 65-75°F. Insert ½x12" feeler in cylinder, piston (with pin parallel to crankshaft and T-slot on opposite from feeler) should pass on .0015" feeler and hold on .00225" feeler.
Installing Pistons:—T-slot away from camshaft.

PISTON RINGS:—2 compression, 2 oil control rings per piston all above pin. Top compression ring carries relief on upper inner diameter. #2 comp. assembled with face marked TOP toward piston head.

Ring	Width	End Gap	Side Clearance
Comp. (#1)	1/8"	.010-.015"	.0015-.003"
Comp. (#2)	3/32"	.010-.015"	.0015-.003"
Oil Control	3/16"	.010-.015"	.0015-.003"

Replacement Rings:—.010", .020", .030" oversize.

PISTON PIN:—Diameter—⅞". **Length**—3 1/16". Pin clamped in rod. Pins not furnished separately. **Pin Fit in Piston**—.0003-.0004" at 70°F. or easy finger push fit at room temperature.
NOTE—Use No. 25 wrench 5½" long on pin bolt.

CONNECTING ROD:—Weight—38.43 ozs. **Length**—8¼".
Crankpin Journal Diameter—2¼".
Lower Bearing—Spun-babbitt lined type.
Clearance—.0008-.0018". **Sideplay**—.005-.010".

ENGINE

CONTINUED FROM PRECEDING PAGE

Bearing Adjustment:—Shims. Do not file rods or caps.
Installing Rods:—Align cap and rod. Mark on rod and cap to rear of engine, oil hole to camshaft.
NOTE—Max. weight variation ⅛ oz. Special ground 7/16" diam. bolts used for cap assembly.
CRANKSHAFT:—5 bearing, integral counterweights with torsional balancer mounted on forward end.
Journal Diameters—#1, 2 9/16"; #2, 2⅝"; #3 2 11/16"; #4, 2¾"; #5, 2 13/16".
Bearing Type—Steel-backed, babbitt-lined. See Buick Shop Notes for replacement bearings.
Clearance—.0007-.0022".
Bearing Adjustment:—Shims. Do not file caps.
End Thrust:—Center (#3) bearing. **Endplay** .004-.008".
CAMSHAFT:—5 bearing. Non-adjustable chain drive.
Journal Diameters—#1, 2 5/32"; #2, 2⅛"; #3, 2 3/32; #4, 2 1/16"; #5, 1¾".
Bearing Type—Steel-backed, babbitt bushings.
Clearance—.0005-.0035". **Endplay**—.002-.006".
End Thrust:—Taken by thrust plate assembled between front bearing and camshaft sprocket.
Timing Chain:—Link-Belt. Width 1". Pitch .500". Length 50 links or 25".
Camshaft Setting:—Mesh copper-plated washers (on chain) with marks on sprockets (on upper side).

VALVES:	Head Diameter	Stem Diameter	Length
Intake	1 25/32"	.3715-.3725"	4 13/32"
Exhaust	1 7/16"	.3711-.3719"	4 7/32"

	Seat Angle	Lift	Stem Clearance
Intake	45°	.347"	.0015-.0035"
Exhaust	45°	.348"	.0021-.0039"

Valve Guides, Valve Springs, Valve Lifters and Rocker Arms: *See Series 40 Engine on preceding page for data.*

VALVE TIMING

Tappet Clearance: 015" all valves, engine hot.
Valve Timing (Series 40): See Camshaft Setting.
Timing Points
Intake Valves—Open 13° BTDC. Close 68° ALDC.
Exhaust Valves—Open 55° BLDC. Close 22° ATDC.
Opening and Closing Points
Intake Valves—Open 26° BTDC. Close 81½° ALDC.
Exhaust Valves—Open 68° BLDC. Close 35° ATDC.
Valve Timing (60, 80, 90): See Camshaft Setting.
Timing Points
Intake Valves—Open 14° BTDC. Close 71° ALDC.
Exhaust Valves—Open 56° BLDC. Close 25° ATDC.
Opening and Closing Points
Intake Valves—Open 27° BTDC. Close 84½° ALDC.
Exhaust Valves—Open 69° BLDC. Close 38½° ATDC.
NOTE—"Timing Point" when valve .004" off seat with .015" tappet clearance or lash customarily listed instead of actual opening and closing points.
Valve Timing Check:—#2 or #7 exhaust valve should be .145" (40), .155" (60, 80, 90) open (on dial indicator contacting valve spring cap), with #1 and 8 pistons on top dead center and flywheel mark 'TDC/1-8' at indicator in inspection hole in right front face of flywheel housing above starter.

LUBRICATION

LUBRICATION:—Pressure with oil pump in crankcase.
Oil Pump:—Helical gear drive from camshaft. Ignition timing not disturbed by pump removal.
Oil Pump Clearances—*See Buick Shop Notes.*
Normal Oil Pressure:—45 lbs. at 35 MPH.
Oil Pressure Regulator:—On pump. Opens at 45 lbs.
Crankcase Capacity—Dry 7 qts. (40), 9 qts. (60, 80, 90); Refill 6 qts. (40), 8 qts. (60, 80, 90).

COOLING

Capacity: 13¼ qts. (40), 17 qts. (60, 80, 90).
Water Pump:—Plain bushing, self-adjusting packing type (first 40, 60; all 80, 90), ball bearing packless type (40, 60 after Eng. No. 3524449).
See Water Pump Section for complete data.
Removal—Remove fan belt, pump mounting bolts. Lift off pump and fan assembly.
Thermostat:—Harrison. In cylinder head outlet.
Setting—Starts 148-153°F. Fully open 170-175°.

CLUTCH

CLUTCH: Own Make. Single plate, dry disc type.
NOTE—Driven Member is Long 10CF-CS (40), Borg & Beck type (60, 80, 90).
See Clutch Section for complete data.
Facings (Series 40)—Woven-joined type. Inside Diameter 6", Outside Diameter 10", Thickness .125".
Facings (60, 80, 90)—Molded-woven type. Inside Diameter 6½", Outside Diameter 11", Thickness ⅛".
Pedal Return Spring—See Buick Shop Notes.
Adjustment—Clearance between pedal and underside of toeboard must be ⅜-⅝". To adjust, loosen locknut, turn setscrew at rear of pedal above top. Free movement of pedal must be ¾-1". To adjust, turn nut on yoke end of inner equalizer lever (40, 60), or on pedal rod (80, 90).
Removal:—Remove Rear Axle (see Rear Axle) and Transmission (see Transmission). Take off clutch underpan; release tension on pedal return spring by backing off nut on eye bolt, disconnect clutch linkage at yoke, remove spring washer (retains release bearing support), pull yoke out (with release bearing). Mark cover and flywheel, remove mounting screws evenly and lower assembly out. NOTE—Metal spacers used between release levers and cover will facilitate removal of mounting screws.

TRANSMISSION

TRANSMISSION:—Buick—Constant mesh, synchro-mesh type with all helical gears.
See Transmission Section for complete data.
Removal:—Remove Rear Axle (see Rear Axle). Release nut on eye bolt of clutch pedal return spring. Remove pedal bracket and brake master cylinder. Take off steady rest rod, transmission support (with shims attached to each end), use Guide Pins (J-851) in upper mounting holes, withdraw transmission. NOTE—Brake master cylinder need not be removed on Series 40.
See Buick Special Shop Notes for Transmission Steady Rest Mounting data.

SELF-SHIFTING TRANSMISSION

SELF-SHIFTING TRANSMISSION (SERIES 40): Optional. Four speed type with automatic shifting.
See Transmission Section for complete data.

UNIVERSALS

UNIVERSAL JOINT:—Spicer (Buick design). Plain bearing type. One used.
See Universals Section for complete data.

REAR AXLE

REAR AXLE:—Buick—Semi-floating, hypoid gear type with torque tube drive.
See Rear Axle Section for complete data.
Ratio—4.40-1 (Series 40 Std.), 3.615-1 (40 with Self-shift trans.), 3.9-1 (60), 4.1818-1 (80), 4.555-1 (90).
Backlash—.006-.010".
Removal:—Hoist rear of car, remove front floor, brake conduit from torque tube, disconnect brake line at rubber hose connection (end of torque tube), rear shocks at bottom, rear radius rod at frame, coil springs at lower end (tie ends to bumper), disconnect torque tube at U-joint, pull assembly out.
Axle Shaft Removal—Remove housing cover, differential pinion shaft screw, shaft, and spacer block. Push axle assembly in, remove 'C' washer on inner end, withdraw shaft assembly. Right axle shaft ¾" (40, 60), 15/16" (80, 90) longer than left shaft.
Wheel Bearing Adjustment—None.
Rear Suspension:—Coil springs, conventional axle.
See Rear Axle Section for complete data.

SHOCK ABSORBERS

SHOCK ABSORBERS: Delco. Model 1947-A, B (40, 60 front), 1902-C, D (80, 90—front). 1100-S (all—rear). Double acting, hydraulic type. Direct acting (rear).
See Shock Absorber Section for complete data.

FRONT SUSPENSION

Front Suspension:—Independent, linked parallelogram type with coil springs.
See Front Suspension Section for complete data.
NOTE—See Buick Shop Notes for brake assembly removal for work on front suspension.
Kingpin Inclination—3½-4½° (40, 60), 4¼-5¼° (80), 4-5° (90).
Camber—Minus ¼° to plus 1°. Not adjustable.
Caster—Minus ⅞° plus or minus ⅜°. Adjustable.
Toe In—0-1/16". Adjustable.
Steering Geometry (Toe Out)—Inner wheel turned 23¼° (40), 23¾° (60, 80), 24° (90), outer wheel should be turned exactly 20° (All Series).

STEERING GEAR

Steering Gear: Saginaw Worm-and-Double Roller type.
See Steering Gear Section for complete data.

BRAKES

SERIES 40 & 60

BRAKES:—Service—Bendix hydraulic, rigid cylinder type. Hand lever applies rear service brakes.
See Brake Section for complete data.
Wheel Cylinders—Diameters: Front 1 3/32". Rear 1".
Drum—Centrifuse. 12".
NOTE—Drum turn down limit .030" cut.
Lining—Ferodo BZ-10 (woven—primary), Manhattan 2320-K (moulded—secondary). Length per wheel (front shoe 9 15/16", rear 12¾"). Width 1¾" (40), 2" (60). Thickness 3/16".
Clearance—.010" plus or minus .002" at heel and toe.
Hand Brake Adjustment:—See Service Brakes (above).

BRAKES

SERIES 80 & 90

BRAKES:—Service—Bendix hydraulic, rigid cylinder type. Hand lever applies rear service brakes.
See Brake Section for complete data.
Wheel Cylinders—Diam. Front 1¼". Rear 1 3/16".
Drum—12" (80), 14" (90). Cast-iron, ribbed.
Lining—Ferodo BZ-10 (woven—primary), Manhatten 2320-K (moulded—secondary). Length per wheel (front shoe 9 15/16"—80, 12 1/16"—90; rear 12¾"—80, 14¾"—90). Width 2". Thickness 3/16" (80), ¼" (90).
Clearance—.010" plus or minus .002" at heel and toe.
Hand Brake Adjustment:—See Service Brakes (above).

MODEL IDENTIFICATION

SERIAL NUMBER:—First number (all series) 13388547 (Flint), 23395088 (Calif.), 33405088 (Linden). On right frame side rail at dash.

ENGINE NUMBER:—First number (all series) 3572652 with prefix 4- (40), 6- (60), 8- (80), 9- (90). On boss on right side of crankcase above starter.

NOTE—Dash (—) following engine number indicates engine equipped with .010" oversize pistons.

TUNE-UP

COMPRESSION:— Compression Pressure.

Model.	Ratio.	1000 RPM.	Cranking Spd.
39-40	6.1-1	126 lbs.	112 lbs.
39-60,80,90	6.25-1	130 lbs.	113.8 lbs.

VACUUM READING:—18-20" steady at 7-8 M.P.H.

FIRING ORDER: 1-6-2-5-8-3-7-4. See diagram.

SPARK PLUGS: AC No. 46. 14 mm. Metric type. **Gaps**—.025".

IGNITION: See Coil, Condenser, and Distributor. **Breaker Gap**—.015". **Cam Angle** 31° (closed).

►*CAUTION—Use of cam angle to set point gap not recommended by car manufacturer. If dwell meter used, make final check that gap within .0125-.0175".*

Automatic & Vacuum Advance—*See Distributor.*

IGNITION TIMING: See Ignition Timing. **Std. Setting**—4° BTDC (Series 40), 6° BTDC (60, 80, 90) with flywheel mark "ADV" at indicator in housing inspection hole on right side above starter.

CARBURETION: See Carburetor & Carb. Equipment. **Idle Setting**—Both idle screws 1¾ turns (Carter Carb.), 1¼ turns (Stromberg Carb.) open. Idle speed 7-8 MPH. **Float Level (Carter Carb.)**—3/16" top of float to gasket seat on bowl cover with needle valve seated. **Float Level (Stromberg Carb.)**—Fuel level 19/32" below top edge of bowl. **Accelerating Pump**—#2 center hole (medium stroke) standard for all-season operation.

Fuel Pump Pressure: 3 lbs. max. (40), 4½ lbs. max. (60, 80, 90).

MANIFOLD HEAT CONTROL:—Thermostatic coil type. **Setting**—Coil wind-up ¼ turn at 70°F. With coil engaged on heat valve shaft, wind up outer end ¼ turn and engage prong on anchor stud. **Checking Thermostatic Coil**—To check on engine, install suitable lever 1½" long on forward end of heat valve shaft, hook spring balance to outer end of lever. With thermostatic coil and entire manifold at 70°F., pull required to start lever should be 5-6 ozs. (40), 8-9½ ozs. (60, 80, 90).

VALVES: See Valve Timing. **Tappet Clearance**—.015" all valves, engine hot.

STARTING: See Battery, Starter, Generator, Regulator.

IGNITION

Ignition Switch:—Oakes Steering Column & Ignition Lock No. 301833 (40,60), 301960 (40,60 RHD), 301832 (80,90), 301886 (80,90 RHD). Ignition Switch No. 301990 (all & 40,60 RHD), 301370 (80,90 RHD). **Ignition Lock**—Briggs & Stratton No. 45922 (Lock Cylinder). Key Series—8000-9499. Groove—15.

COIL: Delco-Remy 536-H. On right side of engine. **Ignition Current**—2½ amperes idling, 4½ stopped.

CONDENSER: Delco-Remy Part No. 1869704. Capacity—.18-.25 microfarad.

DISTRIBUTOR: Delco-Remy No. 1110801 (40, early 60), 1110805 (Later 60, All 80, 90). Single breaker, 8 lobe cam, full automatic advance type with integral vacuum spark control and Octane Selector.

Breaker Gap—.015". Limits .0125-.0175".

Cam Angle or Dwell—31° (closed), 14 (open.)

Breaker Arm Spring Tension—22 ozs.

Rotation—Counter-clockwise viewed from top.

Automatic Advance—1110801

Distributor Degrees	Distributor R.P.M.	Engine Degrees	Engine R.P.M.
Start	250	3.5	500
7	400	14	800
13	1500	26	3000

Automatic Advance—1110805.

Start	250	2	500
8	600	16	1200
13	1500	26	3000

Vacuum Spark Control 681-H—Integral type (on distributor, linked to breaker plate). Provides additional advance at speeds above 18 MPH. except when engine accelerated or operated with wide open throttle when spark retarded by return spring in unit. Plunger travel ⅛" maximum.

Vacuum Advance.

Distr. Degrees	Eng. Degrees	Vacuum (" of HG).
Start	0°	5-7"
5-6°	10-12°	10-13"

Distributor Removal:—Mounted on right side of crankcase. To remove, disconnect vacuum line, take out two hold-down screws in advance arm, lift out. NOTE—Oil pump now driven by tongue on lower end of distributor shaft. When installing distributor, mesh drive gear so that rotor at #1 segment in cap and normal timing secured with mounting screws approximately centered in slots.

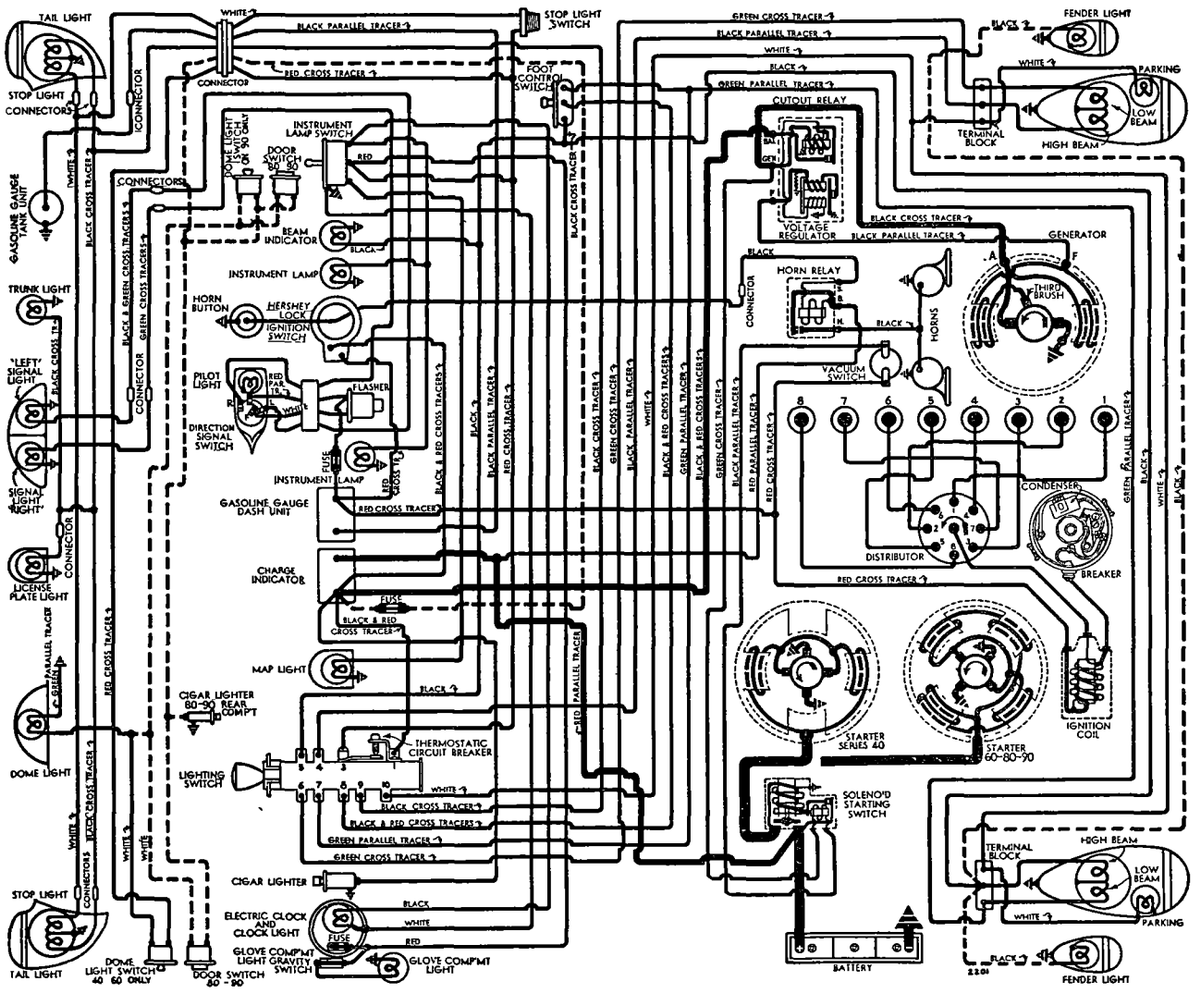

IGNITION TIMING

IGNITION TIMING:—Initial setting (regular fuel 40, Ethyl fuel 60,80,90) given below. See 'Final Ignition Setting' (following) for correction dependent on operating conditions and fuel used.

	Flywheel Degrees	Piston Position
39-40	4° BTDC	.0063" BTDC
39-60,80,90	6° BTDC	.0149" BTDC

Timing (With Synchroscope)—Connect synchroscope in #1 spark plug lead, direct light on flywheel through inspection hole in right front face of flywheel housing above starter. Idle engine at 400 RPM. maximum. Loosen two distributor hold-down screws, rotate distributor until 'ADV' mark lines up with indicator on flywheel housing, tighten screws (screws should be approximately centered in slots). See Final Ignition Setting below.

Timing (Without Synchroscope)—With #1 piston on compression, turn engine over until 'ADV' mark on flywheel lines up with reference mark on housing (inspection hole in right front face of housing above starter). Loosen two hold-down screws, rotate distributor until contacts just open.

Final Ignition Setting—Should be adjusted for fuel used so that light 'ping' secured when engine accelerated with wide open throttle between 10 & 20 MPH. To adjust, loosen two distributor hold-down screws, move distributor in small steps (until correct setting secured) counter-clockwise (if ping too severe), clockwise (if no pinging).

CARBURETOR

CARBURETION:—**Carburetor**—Carter WDO Model 419-S (40—first cars), 440-S (40—later cars), Stromberg Model AAV-26 (60, 80, 90). Dual downdraft types. NOTE—Special Stromberg type used on 60, 80, 90 models with heavy duty air cleaner (special jet calibrations—See Stromberg Jet Specifications).

For complete data, refer to Carburetor Index.

Idle Adjustment (All Models)—With engine warm and running at slow idle speed (choke valve wide open, fast idle inoperative), set throttle stopscrew for 7-8 MPH. idling speed, turn idle adjusting screw for each barrel (in succession) in until engine begins to lag or miss, then turn screw out until engine begins to roll, finally turn screw in until engine fires smoothly. Readjust idling speed. Final setting of idle screws should be approximately 1¾ turns (Carter), 1¼ turns (Stromberg) out from inner seated position.

NOTE—If vacuum gauge used for idling adjustment, turn screws evenly in 'rich' direction until gauge reading is 1" less than obtainable maximum.

Accelerating Pump Adjustment (All Models)—Three holes provided in pump arm (Carter), throttle lever (Stromberg) for pump link or rod connection. Recommended settings are as follows:

#1 (inner—Min.) Hot weather, high-test gasoline.
#2 (Center)—Std. normal all-year setting.
#3 (Outer—Max.) Cold weather, low-test gasoline.

Fast Idle:—Integral type built-in each carburetor.

For complete data, refer to Carburetion Equip. Index.

Setting (Carter)—Turn fast idle adjusting screw in to secure .018" throttle opening (gauge T109-44 between throttle valve edge and carburetor bore on side opposite idle port) with choke valve closed.

Setting (Stromberg)—Turn fast idle adjusting screw in to contact lowest step of fast idle cam, then back screw off ½ turn.

Automatic Choke:—Built-in on each carburetor.

For complete data, refer to Carburetion Equip. Index.

Setting (Carter)—1 Notch Rich (419-S), 1 Notch Lean (440-S) from center mark on piston housing.

Setting (Stromberg)—Inverted 'V' mark on cover scale to line up with reference mark on housing.

CARB. EQUIPMENT

Air Cleaner:—AC Oil-wetted type Std. #1528984 (40), 1528985 (60, 80, 90). Heavy duty oil-bath type Optl. #1528969 (40), 1528999 (60, 80, 90).

Fuel Pump:—AC diaphragm type. Type AF #1523703 (Std. 40). Combination fuel-and-vacuum pump AJ #1523687 (Optl. 40), AB #1523868 (60, 80, 90).

For complete data, refer to Carburetion Equip. Index.

Gasoline Gauge:—AC Electric. #1516034 (dash unit), #1515493 (Tank unit 40,60), #1515494 (80,90).

For complete data, refer to Carburetion Equip. Index.

BATTERY

BATTERY:—**Delco Model 17E-1.** 6 volt, 17 plate, 115 ampere hour capacity (20 hour rate).

Starting Capacity—137 amperes for 20 minutes.

Zero Capacity—300 amperes for 4.3 minutes. Five second voltage—4.4 volts.

Grounded Terminal—Negative (—) grounded to ignition coil mounting bolt on engine block.

Dimensions—Width 4". Length 19 5/16". Height 9".

Location—Under engine hood on right side.

Police Battery—Delco Model 19E-1. 6 volt, 19 plate, 125 A.H. capacity (20 hour rate).

Grounded Ter. & Location—Same as Std. (above).

STARTER

Delco-Remy Model 1107005 (Series40), 1107908 (60, 80, 90 Std.), 1107909 (60, 80, 90 RHD). All models have new pinion gear and clutch assembly.

Armature No. 1867897 (1107005), 820158 (1107908, 9).

Drive—Overrunning clutch (solenoid pinion shift).

Rotation—Counter-clockwise at commutator end.

Cranking Engine—(40) 135 RPM., 150 amperes, 4.5 volts. (60, 80, 90) 115 RPM., 175 amperes, 5 volts.

Brush Spring Tension—24-28 ounces.

Performance Data—1107005.

Torque	R.P.M.	Volts	Amperes
0 ft. lbs.	5000	5.0	65
12 "	Lock	3.37	525

Performance Data—1107908, 1107909.

0 ft. lbs.	5500	5.0	65
16 "	Lock	3.0	600

Removal:—Flange mounted on right front face of flywheel housing. To remove, take out capscrews.

Starting Switch:—Solenoid Switch No. 1542 (1107005, 1107908), 1545 (1107909). Vacuum Switch No. 1990126 (60,80,90), Carter Car Starter 192-10U superseded by 192-11U (40). Vacuum switch mounted on carburetor.

For complete data, refer to Electrical Equipment Index.

GENERATOR

STANDARD

Delco-Remy Model 1101052(40), 1101053(60), 1101055 (80, 90). Armature No. 1866789 (all). Split field type with fixed third brush and external vibrating voltage regulator control. Ventilated.

For complete data, refer to Electrical Equipment Index.

NOTE—Generators interchangeable except for drive pulley. See 1938 Buick pages for pulley data.

Charging Rate Adjustment—Change voltage regulator setting (not third brush). *See Regulator data.*

Maximum Charging Rate—See table below. Reached at approximately 43 MPH. (40), 45 MPH. (60, 90), 47 MPH. (80). To check generator output, connect ammeter in charging line at 'BAT' regulator terminal, ground 'F' terminal to eliminate regulator.

Performance Data.

	Amperes	Volts	R.P.M.
Cold	27-31	8.0	4000
Hot	25-28	8.0	4200

Rotation—Counter-clockwise at commutator end.

Brush Spring Tension—25 ozs. (main), 17 ozs. (3rd.).

Field Current—1.44-1.56 amperes at 6.0 volts (Shunt field), .89-.94 amperes at 6.0 volts (3rd. brush field).

Removal:—Pivot mounted at left front of engine. Take out pivot and clamp bolts.

Belt Adjustment:—Loosen pivot and clamp bolts, pull generator up and out until belt deflection midway between fan and generator is ½".

GENERATOR

SPECIAL EQUIPMENT

City Police Service—Delco-Remy Model No. 1105528 Armature 1861561. Two brush type with voltage and current regulation.

Charging Rate Adjustment—None. See Regulator.

Performance Data

	Amperes	Volts	R.P.M.
Cold	26	8.1-8.3	1325

Brush Spring Tension—25 ounces each.

Field Current—1.7-2.0 amperes at 6.0 volts.

Rotation, Mounting, Belt Adjustment—Same as Std. generator (above).

State Police Service—Delco-Remy Model No. 1105857 with Regulator Model 1118237. Two brush type with voltage and current regulation.

Refer to 1940 Buick article for complete data.

REGULATOR

STANDARD

Delco-Remy Model 5858. Double Core Type Voltage Regulator (No 'IGN' Terminal). Cutout Relay and vibrating type Voltage Regulator in case on dash. NOTE—This regulator does not have 'IGN' terminal or starter solenoid ground contact terminal

For complete data, refer to Electrical Equipment Index.

Cutout Relay.

Cuts In—6.3-6.9 volts, 800 RPM., 8 MPH. approx.

Cuts Out—0-4.0 amperes discharge current.

Contact Gap—.020". **Air Gap**—.020" (closed).

NOTE—Relay compensated for temperature. Closing voltage same cold and hot.

Voltage Regulator.

Setting—7.5-7.9 volts (70°F), 7.4-7.6 volts (150°F). Over-compensated for temperature and must be checked at these points.

Adjustment—Connect ammeter in charging line at 'BAT' regulator terminal, voltmeter between 'BAT' terminal and ground. Operate generator at 2800-3000 RPM., adjust charging current to 8-10 amperes (variable rheostat or 'AVR' set). Adjust by bending lower end of armature spring hanger slightly.

Contact Gap—.020". **Contact Spring**—3.5 ozs.

Air Gap—.063" between armature and center of core with armature down, .010" between fibre bumper and stop with armature up.

Caution—Regulator cover must be in place when testing. Do not run generator on open-circuit.

C NTINUED ON NEXT PA E

CONTINUED FR M PRECEDING PAGE

REGULATOR

SPECIAL EQUIPMENT

City Police—Delco-Remy Model 5599. Double Core Type Voltage & Current Regulator.
Refer to 1937 Buick Series 60, 80, 90 article for all data on this model.

State Police—Delco-Remy Model 1118237. Single Core Type Voltage & Current Regulator.
Refer to 1940 Buick article for complete data.

LIGHTING

LIGHTING:—Headlamps. Guide Multi-beam, pre-focused. Beam patterns same as for 1938 model (upper, lower, and asymetrical passing beam—see diagram). Headlamp bulbs centered in reflector (were 4° off center on previous model).

Headlamp Adjustment—With upper beams lighted, aim left hand lamp so that upper edge of bright spot at lamp center height and left edge at lamp vertical center-line (entire bright spot to right of center line). Aim right hand lamp for same height but center bright spot on lamp vertical center-line (right cut-off approx. 8" to right of center-line).

Beam Indicator—In speedometer dial. Lighted when upper beams in use.

Direction Signal—*Refer to Electrical Equip. Index.*

Switches.

Lighting—D.R. 1994508 (see note).
Beam Selector—D.R. 471-T, 1997002.
Instrument—D.R. 1404.
Light Switch Servicing—New type with wire terminals making direct contact with switch slide. To free wires, pry out lower end of terminal with screwdriver and pull wire out (see that ball shaped tip snaps into hole in side of switch when replacing). To remove switch knob, press spring at back of knob in, pull knob off shaft. To remove switch mounting nut, pull spring at rear of switch down, press shaft back to enter 7/32" Allen wrench.

Bulb Specifications.

Position	Candlepower	Mazda No.
Headlamps	32-21	2320
Parking, Instr., Clock	1.5	55
Radio, Trunk, Frt. Compt.	1.5	55
Indicator, Glove Compt.	1	51
Direction Signal Pilot	1	51
Stop & Tail	21-3	1154
License Plate	3	63
Direction Signal (rear)	21	1129
Dome	6	81

MISC. ELECTRICAL

THERMOSTATIC RELAY:—On lighting switch. Contacts remain closed with 25 amperes but open in 2 minutes with 38 amperes at 70° F. Non-adjustable.

FUSES:—Dome Light & Rear Cigar Lighters (80, 90)—30 ampere in connector back of instrument panel.
Direction Signal—6 ampere 'SFE' type in connector back of instrument panel.
Clock—2 ampere on back of clock.

HORNS:—Klaxon Model K-33-H. No. 1999501 (low note, right horn), 1999502 (high note, left horn). Vibrator type, blended tone, operated by horn relay.

Type	Current (at 6 volts)
1999501 Low Note	10-12 amperes
1999502 High Note	9-11 amperes

Horn Relay:—D.R. Models 271-A, 1116775.
Contact Gap—.020". **Air Gap**—.015" (closed).
Contacts Close—2.3-3.5 volts.

ENGINE

SERIES 40

ENGINE SPECIFICATIONS:—Own Model 40. 8 cylinder, 'I' head type. **Bore** 3 3/32". **Stroke** 4⅛".
Displacement—248 cubic ins. **Rated HP**—30.63.
Developed Horsepower—107 at 3400 RPM.
Compression Ratio—6.1-1 Std. cast-iron head.
Compression Pressure—126 lbs. at 1000 RPM., 112 lbs. at cranking speed (uniform within 6 lbs.).
Vacuum Reading—18-20" idling at 7-8 MPH.

PISTONS:—Modified type 'Dome head,' aluminum alloy, tri-slot, cam-ground, anodized type.
See Buick Shop Notes for description and all Replacement Piston specifications and data.
Length—4 9/32". **Weight**—14¼ ozs. (stripped).
Removal—Pistons and rods removed from above.
Clearance—.0021" (.0018-.0024") top of skirt.
Fitting New Pistons:—If micrometer used, check at points on each side of vertical slot at top of skirt, and at lower end of slot (light contact only). Clearance above correct for pistons at 70°F. If feeler gauge used, install ½" wide feeler between piston and cylinder wall on side opposite slot (piston inverted, pin parallel to crankshaft). Piston should pass on .0015" feeler, hold on .00225" feeler.
Installing Pistons:—Slot away from camshaft.

PISTON RINGS:—Two compression, two oil control rings, all above pin (narrow heat-dam groove above top ring). Both oil ring grooves drilled for oil drains. NOTE—Install top compression ring with relief on inner rim up, #2 ring with mark 'TOP' up.

Ring	Width	End Gap	Side Clearance
Compr. (#1)	1/8"	.010-.020"	.002-.004"
Compr. (#2)	3/32"	.010-.015"	.0015-.003"
Oil Contr.	3/16"	.010-.015"	.0015-.003"

Replacement Rings:—.010", .020", .030" oversize.

PISTON PIN:—Diameter .8127". Length 2 11/16".
Pin clamped in rod. Not furnished separately (all replacement pistons have pins installed).
Pin Fit in Piston—.0003-.0004" at 70°F. (easy finger push fit at room temperature).
NOTE—Use #25 wrench (5½") only on pin bolt.

CONNECTING ROD:—Length 7⅜". Weight 30¾ ozs. (maximum variation ⅛ ounce).
Crankpin Journal Diameter—2".
Lower Bearing—Spun babbitt-lined type.
Clearance—.0008-.0018". **Sideplay** .005-.010".
Bearing Adjustment:—Shims. Do not file rods or caps.
Installing Rods:—Marks on rod and cap toward rear of engine, oil hole toward camshaft. Align rod and cap. NOTE—Special ground bolts used on caps.

CRANKSHAFT:—5 bearing, integral counterweights.
Journal Diameters—#1, 2 5/16".; #2, 2⅜"; #3, 2 7/16"; #4, 2½"; #5, 2 9/16".
Bearings—Steel-backed, babbitt-lined type. *See Buick Shop Notes for Replacement Bearing data.*
Clearance—.0007-.0022".
Bearing Adjustment:—Shims. Do not file caps.
End Thrust:—Center (#3) bearing. **Endplay** .004-.008".

CAMSHAFT:—5 bearing. Non-adjustable chain drive.
Journal Diameters—#1, 2 5/32"; #2, 2⅛"; #3, 2 3/32"; #4, 2 1/16"; #5, 1¾".
Bearing Type—Steel-backed, babbitt bushings.
Clearance—.0005-.0035". **Endplay**—.004-.008".
End Thrust:—Thrust plate between front bearing and camshaft sprocket.
Timing Chain:—Link Belt. Width 1". Pitch .500", Length 24½" or 49 links.
Camshaft Setting:—Mesh copper-plated washers on chain with marks on sprockets (marks upward).

VALVES:—	Head Diam.	Stem Diam.	Overall Length
Intake	1 17/32"	3720"	5.1"
Exhaust	1 11/32"	3715"	5.1"

	Seat Angle	Lift	Stem Clearance
Intake	45°	348"	.0015-.0035"
Exhaust	45°	342"	.0021-.0039"

Valve Guides:—Press fit in head, installed with taper end up. Finish ream for correct clearance.
Valve Springs:—Double springs on all valves. Spring free length 1⅞" (inner), 2 5/16" (outer).

	Inner Spring. Pressure	Length	Outer Spring. Pressure	Length
Closed	15½-20½ lbs.	1 21/32"	26½-31½ lbs.	1 15/16"
Open	45-51 lbs.	1 5/16"	67-73 lbs.	1 19/32"

Valve Lifters:—Barrel type, cast-iron. Lifter guide holes reamed in block. Clearance .0005-.0025".
Rocker Arms:—*See Buick Shop Notes for installation and fitting directions.*

ENGINE

SERIES 60, 80, 90

ENGINE:—Own Series 60, 80, 90. 8 cylinder, 'I' or overhead valve type. **Bore**—3 7/16". **Stroke**—4 5/16".
Displacement—320.2 cubic inches. **Rated HP**—37.81.
Developed Horsepower—141 at 3600 RPM.
Compression Ratio—6.25-1 Std. cast-iron head.
Compression Pressure—130 lbs. at 1000 RPM, 113.8 lbs. at cranking speed (uniform within 6 lbs.).
Vacuum Reading—18-20" idling at 7-8 MPH.

PISTONS:—Modified 'Dome-head', aluminum alloy, tri-slot, cam ground, anodized finished type.
See Buick Shop Notes for description and all Replacement Piston specifications and data.
Length—4 7/16". **Weight**—17.3 ozs. (stripped).
Removal—Pistons and rods removed from above.
Clearance—.0023" (.0020-.0026") top of skirt.
Fitting New Pistons:—If micrometer used, check at points on each side of vertical slot at top of skirt, and at lower end of slot (light contact only). Clearance above correct for pistons at 70°F. If feeler gauge used, install ½" wide feeler between piston and cylinder wall on side opposite slot (piston inverted, pin parallel to crankshaft). Piston should pass on .0015" feeler and hold on .00225" feeler.
Installing Pistons:—Slot away from camshaft.

PISTON RINGS:—Two compression, two oil control rings, all above pin (narrow heat-dam groove above top ring). Both oil ring grooves drilled for oil drains. NOTE—Install top compression ring with relief on inner rim up, #2 ring with mark 'TOP' up.

Ring	Width	End Gap	Side Clearance
Compr. (#1)	1/8"	.010-.020"	.002-.004"
Compr. (#2)	3/32"	.010-.015"	.0015-.003"
Oil Contr.	3/16"	.010-.015"	.0015-.003"

Replacement Rings:—.010", .020", .030" oversize.

PISTON PIN:—Diameter ⅞". Length 3 1/16".
Pin clamped in rod. Not furnished separately (all replacement pistons have pin installed).
Pin Fit in Piston—.0003-.0004" at 70° F. (easy finger push fit at room temperature).
NOTE—Use #25 wrench (5½") only on pin bolt.

CONNECTING ROD:—Length 8¼". Weight 38½ ozs.
Crankpin Journal Diameter—2¼".
Lower Bearing—Spun babbitt-lined type.
Clearance—.0008-.0018". **Sideplay** .005-.010".

ENGINE

SERIES 60, 80, 90 CONTINUED

Bearing Adjustment:—Shims. Do not file rods or caps.
Installing Rods:—Marks on rod and cap toward rear of engine, oil hole toward camshaft. Align rod and cap. NOTE—Special ground bolts used on caps.

CRANKSHAFT:—5 bearing. Integral counterweights.
Journal Diameters—#1, 2 9/16"; #2, 2⅝"; #3, 2 11/16"; #4, 2¾"; #5, 2 13/16".
Bearings—Steel-backed, babbitt-lined type. *See Buick Shop Notes for replacement bearing data.*
Clearance—.0007-.0022".
Bearing Adjustment:—Shims. Do not file caps.
End Thrust:—Center (#3) bearing. **Endplay** .004-.008".

CAMSHAFT:—5 bearing. Non-adjustable chain drive.
Journal Diameters—#1, 2 5/32"; #2, 2⅛"; #3, 2 3/32"; #4, 2 1/16"; #5, 1¾".
Bearing Type—Steel-backed, babbitted bushings.
Clearance—.0005-.0035". **Endplay** .004-.008".
End Thrust:—Thrust plate between front bearing and camshaft sprocket.
Timing Chain:—Link Belt. Width 1". Pitch .500". Length 25" or 50 links.
Camshaft Setting:—Mesh copper-plated washers on chain with marks on sprockets (marks upward).

VALVES:—	Head Diam.	Stem Diam.	Overall Length
Intake	1 25/32"	.3720"	5¼"
Exhaust	1 7/16"	.3715"	5¼"

	Seat Angle	Lift	Stem Clearance
Intake	45°	.347"	.0015-.0035"
Exhaust	45°	.348"	.0021-.0039"

Valve Guides, Valve Springs, Valve Lifters and Rocker Arms: *See Series 40 Engine on preceding page for data.*

VALVE TIMING

Tappet Clearance:—.015" all valves—engine hot.
Valve Timing (Series 40): See Camshaft Setting.

Timing Points (Valve .004" Open).
Intake Valves — Open 13° BTDC. Close 68° ALDC.
Exhaust Valves—Open 55° BLDC. Close 22° ATDC.

Opening & Closing Points.
Intake Valves—Open 26° BTDC. Close 81½° ALDC.
Exhaust Valves—Open 68° BLDC. Close 35° ATDC.

Valve Timing (60, 80, 90): See Camshaft Setting.

Timing Points (Valve .004" Open).
Intake Valves — Open 14° BTDC. Close 71° ALDC.
Exhaust Valves—Open 56° BLDC. Close 25° ATDC.

Opening & Closing Points.
Intake Valves—Open 27° BTDC. Close 84½° ALDC.
Exhaust Valves—Open 69° BLDC. Close 38½° ATDC.

Valve Timing Check—With .015" tappet clearance, #2 or 7 exhaust valve should be .145" open (Series 40), .155" open (Series 60, 80, 90)—this is actual valve opening—use dial indicator) with #1 & 8 pistons on TDC and flywheel mark 'TDC/1-8' at indicator in inspection hole in right front face of flywheel housing.

LUBRICATION

LUBRICATION:—Pressure type. *See Buick Shop Notes for new oil pump drive and oil pump clearances.*
Normal Oil Pressure—45 lbs. at 35 MPH.
Oil Pressure Regulator—On pump. Opens at 45 lbs. Non-adjustable type.
Crankcase Capacity—Dry 7 qts. (Series 40), 9 qts. (60, 80, 90); Refill 6 qts. (40), 8 qts. (60, 80, 90).

COOLING

Capacity: 13¼ qts. (40), 17 qts. (60, 80, 90).
Water Pump:—New ball-bearing, packless type.
See Water Pump Section for complete data.
Removal—Remove fan belt, pump pulley mounting bolts, lift out pump and fan assembly.
Thermostat:—Harrison. In cylinder head outlet.
Setting—Open at 148-155°F.
Temperature Gauge:—AC #1510755 Thermo type.
See Miscellaneous Section for complete data.

CLUTCH

CLUTCH:—Own make with Borg & Beck 'Borglite' driven member. Single plate, dry disc type.
NOTE—Series 40 Clutch is "Crown Spring" type.
See Clutch Section for complete data.
Facings (Series 40)—Woven, grooved type. Inside Diameter 7". Outside Diameter 10". Thickness .125".
Facings (60, 80, 90)—Woven, grooved type. Inside Diameter 6½". Outside Diameter 10½". Thick. .125".
Adjustment:—Pedal free movement ¾-1" (adjusting clevis and locknut on link at clutch fork). Pedal toeboard clearance (underside) ⅞" (setscrew and locknut at lower end of pedal).
Removal:—Remove Rear Axle & Transmission (see below), take off clutch underpan, release return spring (back off nut on spring eyebolt), disconnect linkage, remove yoke and release bearing retainer, mark clutch and flywheel, take out mounting screws in clutch cover flange.
See Buick Shop Notes for 'Over-center' return spring installation and adjustment.

TRANSMISSION

TRANSMISSION: Own Make. 3-speed, helical gear constant-mesh, synchro-mesh (second and high), sliding gear (low & reverse), steering col. shift.
See Transmission Section for complete data.
Transmission Control:—Buick 'Handi-shift' type.
See Transmission Section for complete data.
Removal: Remove Rear Axle (see directions below), disconnect shift linkage at transmission case, remove Steady-Rest Rod and Support with shims attached to each end (NOTE—Not used on Series 40, 60), remove upper mounting bolts, install special guide pins (J-851), remove lower mounting bolts, pull transmission back and out. *For steering column shift linkage adjustments, see 1939 Buick Transmission Control article in Transmission Section.*
Transmission Steady Rest—*See Buick Shop Notes for installation and adjustment directions.*

UNIVERSALS

UNIVERSAL JOINT: Mechanics Type 2C (Series 40, 60), Spicer No. 302-2 (80, 90). One used.
See Universals Section for complete data.

REAR AXLE

REAR AXLE: Own Make. Semi-floating, hypoid gear type with torque tube drive. NOTE—New "straight line" drive used on Series 40, 60—see special removal instructions for these series below.
See Rear Axle Section for complete data.
Ratio—4.44-1 (Std. 40), 3.9-1 (Std. 60, Optl. 40), 3.615-1 (Optl. 60), 4.182-1 (80), 4.555-1 (90).
Backlash—.008-.010".
Removal (40, 60): Lift car, disconnect parking brake at equalizer, hydraulic brake line at frame connection, shock absorber links at lower end, axle end of rear radius rod, lower end of chassis springs (wire springs to bumper for clearance). Disconnect front end of front torque tube at transmission end plate. Remove nut, lockwasher, torque ball mounting washer at inner end of each torque ball mounting stud, take out bolts holding torque ball mounting assembly to frame on each side, remove rear axle assembly. **Do not loosen locknut on torque ball mounting stud or interchange torque ball mounting assemblies from one side of car to the other which will destroy Rear Axle and Engine alignment.** *See Buick Shop Notes for Aligning Instructions.*
Removal (80, 90): Lift car, disconnect the parking brake at equalizer, hydraulic brake line at frame connection, lower end of shock absorber links, equalizer bar at axle end, lower end of chassis springs (wire springs to bumper for clearance). Disconnect torque tube at universal joint ball, remove axle assembly.
Axle Shaft Removal:—Same as 1938 (see 1938 data).
Wheel Bearing Adjustment—None.
Rear Suspension:—Coil springs, conventional axle.
See Rear Axle Section for complete data.

SHOCK ABSORBERS

SHOCK ABSORBERS (40, 60): Delco. 1948A (right frt.) 1948-B (left frt.), 2103-A, E (right rear), 2103-B, F (left rear). Double acting, hydraulic type. NOTE—Rear Shocks are new parallel cylinder type. Valves on rear shocks were changed during production.
See Shock Absorber Section for complete data.

SHOCK ABSORBERS (80, 90):—Delco. Double acting, hydraulic type (inertia control on front shocks).

	Right Frt.	Right Rear.	Left Frt.	Left Rear.
Model 80	1902-D-60	1751-R	1902-C-60	1751-S
Model 90	1902-D-61	1751-R	1902-C-61	1751-S

See Shock Absorber Section for complete data.

FRONT SUSPENSION

Front Suspension:—Independent, linked parallelogram type with coil springs.
See Front Suspension Section for complete data.
Kingpin Inclination—3½-4½° (40, 60), 4¼-5¼° (80), 4-5° (90) Crosswise.
Camber—Minus ¼° to Plus 1°. Not adjustable.
Caster—Minus ⅞° plus or minus ⅜°. Adjustable.
Toe In—0-1/16". Adjustable.
Steering Geometry (Toe-out on Turns)—Inner wheel turned 22½° (40, 60), 23¾° (80), 24° (90) plus or minus ¾°, Outer wheel turned exactly 20°.

STEERING GEAR

Steering Gear: Saginaw Worm-and-Double Roller
See Steering Gear Section for complete data.

BRAKES

BRAKES:—Service—Bendix hydraulic type, duo-servo, single anchor type without eccentric adjustment. Hand lever applies rear wheel service brakes.
See Brake Section for complete data.
Drums—Centrifuse (Series 40, 60), Cast-iron (80, 90). Diameter 12" (40, 60, 80), 14" (90).
Lining—Woven (primary), moulded (secondary). Width 1¾" (40), 2" (60, 80, 90). Thickness ¼" (90), 3/16" (Others). Length 26 13/16" (90), 22 11/16" (Others).
Clearance—.015" both ends of secondary shoe.
Hand Brake:—See Service Brakes above.
NoRol:—Optional equipment.
See Brake Section for complete data.

MODEL IDENTIFICATION

SERIAL NUMBER:—First number (all series) 13596807 (Flint), 23601856 (Calif.), 33611856 (Linden). On right frame side rail at dash under hood.

ENGINE NUMBER:—First number (40,50) 3786214, (60, 70,80,90) 3812000 with prefix 4- (40), 5- (50), 6- (60), 7- (70), 8- (80), 9- (90). Stamped on boss on right side of crankcase to rear of fuel pump.
NOTE—Dash(—) following engine number indicates engine equipped with .010" oversize pistons.

TUNE-UP

COMPRESSION:—

Model	Compression Ratio	Pressure 1000 RPM.	Cranking Spd.
40-40, 50	6.1-1	126 lbs.	112 lbs.
40-60, 70, 80, 90	6.25-1	130 lbs.	114 lbs.

VACUUM READING:—Steady 18-20" idling at 7-8 MPH.

FIRING ORDER: 1-6-2-5-8-3-7-4. See diagram.

SPARK PLUGS: AC No. 46. 14 mm. Metric type.
Gaps—.025".

IGNITION: See Coil, Condenser, and Distributor.
Breaker Gap—.015". Cam Angle 31° (closed).
►*CAUTION—Use of cam angle to set point gap not recommended by car manufacturer. If dwell meter used, make final check that gap within .0125-.0175".*
Automatic & Vacuum Advance—*See Distributor.*

IGNITION TIMING: See Ignition Timing.
Std. Setting—4° BTDC (40,50), 6° BTDC (60,70,80,90) with flywheel mark "ADV" at indicator in inspection hole on right of housing above starter.

CARBURETION: See Carburetor & Carb. Equipment.
Idle Setting—Both idle screws ½-1¼ turns open (Carter Carb.), 1¼ turns open (Stromberg Carb.), Idle speed 7-8 MPH.
Float Level (Carter Carb.)—3/16" top of float to gasket seat on bowl cover with needle valve seated.
Float Level (Stromberg Carb.)—Fuel level 19/32" below top edge of bowl.
Accelerating Pump—#2 center hole (medium stroke) standard for all-season operation.
Fuel Pump Pressure: 4 lbs. maximum.

MANIFOLD HEAT CONTROL:—Thermostatic coil type.
Setting—Coil wind-up ¼ turn at 70° F. With coil engaged on heat valve shaft, wind up outer end ¼ turn and engage prong on anchor stud.

VALVES: See Valve Timing.
Tappet Clearance—.015" all valves, engine hot.

STARTING: See Battery, Starter, Generator, Regulator.

IGNITION

Ignition Switch:—Delco-Remy Model 1116276 (40, 50, 60, 70), 1116277 (40, 50, 60, 70—RHD), 1116280 (80, 90),1116281(80, 90—RHD). Coil connection armored.
NOTE—Ignition switch has 3 positions as follows: 1) 60° to right—Ign. OFF also LOCKED with key removed. 2) Vertical—Ign. ON with or without key in place. 3) 40° to left—Ign. OFF also UNLOCKED
Ignition Lock—Briggs & Stratton No. 85253.
Key Series—8000 to 9499. Groove—No. 15.

COIL: Delco-Remy Model 1115024, 1115026 (with radio). Mounted on engine side of dash. NOTE—Radio type coil has condenser installed under end cover.
Ignition Current—2½ amperes idling, 4½ stopped.

CONDENSER: Delco-Remy Part No. 1869704.
Capacity—.18-.25 microfarad.

DISTRIBUTOR: Delco-Remy 1110801 (Series 40, 50), 1110805 (60, 70, 80, 90). Single breaker, 8 lobe cam, full automatic advance type with integral vacuum spark control.
Breaker Gap—.015". Limits .0125-.0175".
Cam Angle or Dwell—31° (closed), 14° (open).
Breaker Arm Spring Tension—19-23 ounces.
Rotation—Counter-clockwise viewed from above.

Automatic Advance—1110801

Distributor Degrees	R.P.M.	Engine Degrees	R.P.M.
Start	250	3.5	500
7	400	14	800
13	1500	26	3000

Automatic Advance—1110805

Start	250	2	500
8	600	16	1200
13	1500	26	3000

Vacuum Spark Control 681-H—Integral type (on distributor, linked to breaker plate). Provides additional advance at speeds above 18 M.P.H. except when engine accelerated or operated with wide open throttle when spark retarded by return spring in unit. Plunger travel ⅛" maximum.

Vacuum Advance

Distr. Degrees	Eng. Degrees	Vacuum (" of HG).
Start	0	5-7"
5-6	10-12	10-13"

Distributor Removal:—Mounted on right side of crankcase. To remove, disconnect vacuum line, take out two hold-down screws in advance arm, lift out. NOTE—Oil pump driven by tongue on lower end of distributor shaft. When installing distributor, mesh drive gear so that rotor at #1 segment in cap and normal timing secured with mounting screws approximately centered in slots.

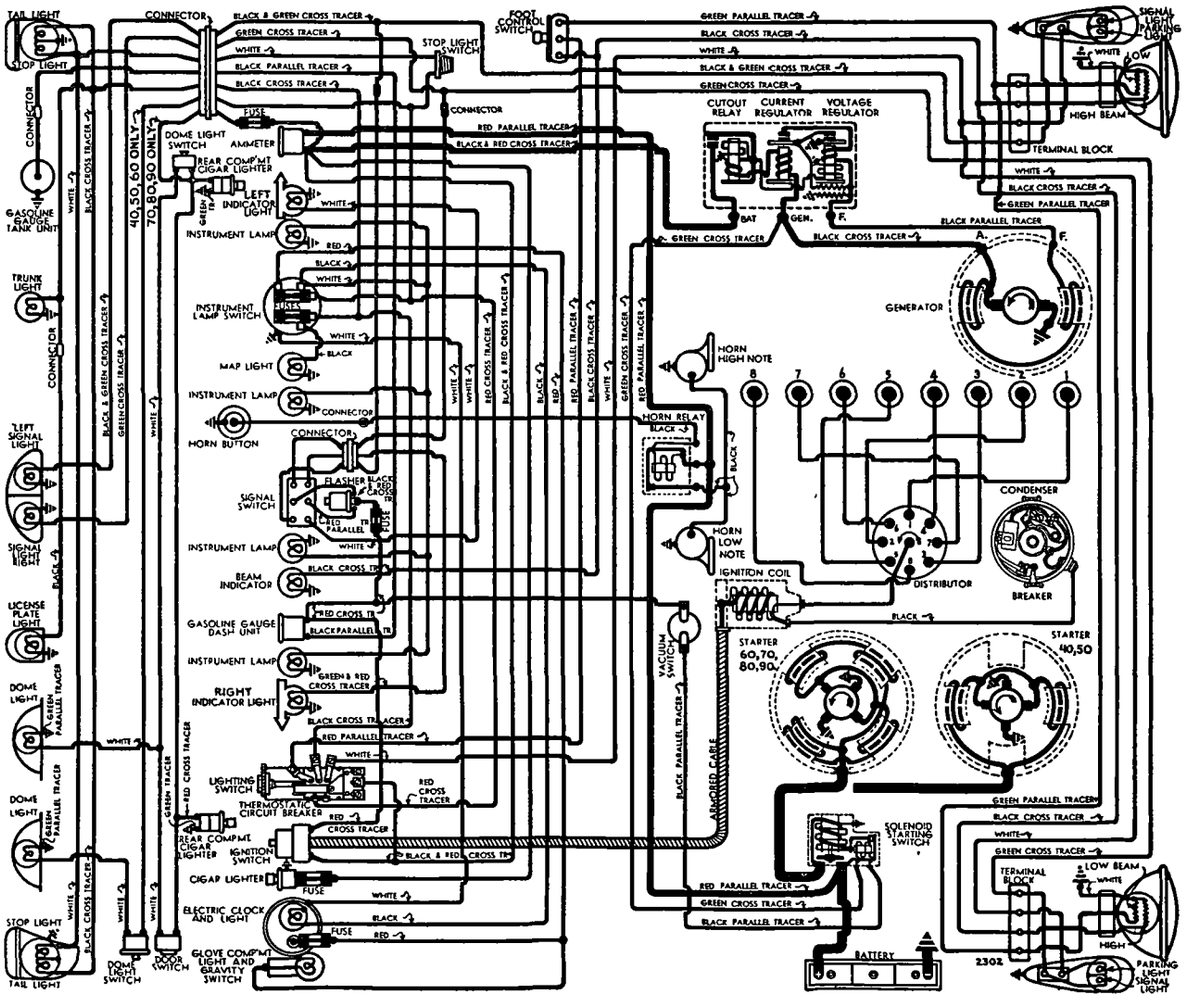

IGNITION TIMING

IGNITION TIMING:—Initial setting (regular fuel 40, 50, Ethyl fuel 60, 70, 80, 90) given below. See 'Final Ignition Setting' (following) for correction dependent on operating conditions and fuel used.

	Flywheel Degrees	Piston Position
40-40, 50	4° BTDC	.0063" BTDC.
40-60, 70, 80, 90	6° BTDC	.0149" BTDC.

Timing (With Synchroscope)—Connect synchroscope in #1 spark plug lead, direct light on flywheel through inspection hole in right front face of flywheel housing above starter. Idle engine at 400 RPM. maximum. Loosen two distributor hold-down screws, rotate distributor until 'ADV' mark lines up with indicator on flywheel housing, tighten screws (screws should be approximately centered in slots). See Final Ignition Setting below.

Timing (Without Synchroscope)—With #1 piston on compression, turn engine over until 'ADV' mark on flywheel lines up with reference mark on housing (inspection hole in right front face of housing above starter). Adjust distributor as above.

Final Ignition Setting—Should be adjusted for fuel used so that light 'ping' secured when engine accelerated with wide open throttle between 10 & 20 MPH. To adjust, loosen two distributor hold-down screws, move distributor in small steps counter-clockwise (if ping too severe), clockwise (if no ping).

CARBURETOR

CARBURETION:—Carburetor—Stromberg or Carter, 1" (40, 50), 1¼" (others) dual downdraft types.

	Carter	Stromberg
40, 50	440-S or 474-S	AAV-16
60, 70, 80, 90	448-S	AAV-26

For complete data, refer to Carburetor Index.

Idle Adjustment—With engine warm and running at slow idle speed (choke valve wide open, fast idle inoperative), set throttle stopscrew for 7-8 MPH. idling speed. Adjust idle adjusting screw for each barrel (in succession) until engine fires smoothly (approximately 1¼ turns—Stromberg, ½-1¼ turns—Carter, from inner seated position. Readjust idle speed.

NOTE—If vacuum gauge used for idling adjustment, turn screws evenly in 'rich' direction until gauge reading is 1" less than obtainable maximum.

Float Level (Carter)—3/16" from top of float to cover (gasket removed with needle valve seated.

Float Level (Stromberg)—Fuel level 19/32" below top edge of bowl with engine idling.

Accelerating Pump Setting—Three holes are provided in pump arm (Carter—remove dust cover), throttle lever (Stromberg) for pump rod connection. Recommended settings are as follows:

#1 (Inner—Min.) Hot weather, high-test gasoline.
#2 (Center)—Std. normal all-year setting.
#3 (Outer—Max.) Cold weather, low-test gasoline.

Fast Idle:—Integral type built-in each carburetor.
For complete data, refer to Carburetion Equip. Index.

Setting (Carter)—Adjust fast idle screw for .018" (440-S), .030" (448-S, 474-S) throttle opening with choke valve fully closed. NOTE—This .030" setting supersedes .012" originally specified for 448-S.

Setting (Stromberg)—Non-adjustable type.

Automatic Choke:—Carter Climatic Control (Carter), AAV-16, AAV-26 type (Stromberg).

For complete data, refer to Carburetion Equip. Index.

Setting (Carter)—1 Notch Lean (440-S, 474-S), 3 Notches Rich (448-S).

Setting (Stromberg)—Inverted 'V' mark on cover should line up with reference mark on housing.

CARB. EQUIPMENT

Air Cleaner:—AC #1529294 (40, 50), #1529307 (60, 70, 80, 90) oil-wetted type Std. Heavy duty oil-bath type optional.

Fuel Pump:—AC Type AJ #1537100 (40, 50), #1523992 (60, 70, 80, 90). Combination fuel-and-vacuum pump.
For complete data, refer to Carburetion Equip. Index.

Gasoline Gauge:—AC Electric type. Dash unit—#1515367 (all). Tank unit—#1516167 (40, 50, 60, 70), #1516176 (80, 9€'

For complete data, refer to Carburetion Equip. Index.

BATTERY

BATTERY:—Delco Model 17E1 (Std.), 17K2 (RHD except 40). 6 volt, 17 plate, 115 A. H. Capacity (20 hr. **Starting Capacity**—137 amperes for 20 minutes. **Zero Capacity**—300 amperes for 4.3 minutes. Five second voltage—4.4 volts. **Grounded Terminal**—Negative (—) grounded to bolt on engine. **Location** Right side under engine hood.

Taxicab Battery—Delco Model 19E-1. 6 volt, 19 plate, 130 ampere hour capacity (20 hour rate). **Grounded Terminal & Location**—Same as 17E-1.

STARTER

STARTER:—Delco-Remy 1107005 (40,50), 1107018 (40,50 RHD), 1107908 (60 to 90), 1107909 (60 to 90 RHD).
See Electrical Equipment Section for recommended correction for burning of starter commutators.

Armature 1867897 (1107005), 820158 (1107908, 9), 810601 (1107018).

Drive—Overrunning clutch (solenoid pinion shift). **Brush Spring Tension**—24-28 ounces. **Rotation**—Counter-clockwise at commutator end. **Cranking Engine**—(40, 50) 135 RPM., 150 amp., 4.5 volts. (60, 70 80, 90) 115 RPM., 175 amperes, 5 volts.

Performance Data—1107005, 1107018

Torque	R.P.M.	Volts	Amperes
0 ft. lbs	5000	5.0	65
12 "	Lock	3.37	525

Performance Data—1107908, 1107909

Torque	R.P.M.	Volts	Amperes
0 ft. lbs.	5500	5.0	65
16 "	Lock	3.0	600

Removal:—Flange mounted on right front face of flywheel housing. To remove, take out capscrews.

Starting Switch:—Solenoid Switch No. 1542 (1107005, 1107908), 1545 (1107018, 1107909). Vacuum Switch D-R. No. 1990127 (Stromberg Carb.), Carter Car Starter 192-10U superseded by 192-11U (Carter Carb). Vacuum switches mounted on carburetor.
For complete data, refer to Electrical Equipment Index.

GENERATOR

STANDARD

GENERATOR:—

Car Model	Delco-Remy Model	Pulley Diameter	Groove Width
40, 50	1102662	3 13/16"	13/16"
40 (3.9 Axle)	1102663	3 17/32"	13/16"
60, 70, 80	1102668	3 17/32"	15/16"
90	1102669	3 13/16"	15/16"

NOTE—Interchangeable when correct pulley installed. Two brush (shunt) type with current-voltage control.

Armature No.—1879002 (all models).

Charging Rate Adjustment—No adjustment at generator. Charging rate controlled by Voltage Regulator and maximum output by Current Regulator. **Maximum Charging Rate**—32-34 amperes, 8.0 volts, 2000 RPM. (cold), 2400 RPM (hot), or approx. 20 MPH. and above with load or discharged battery (Current Regulator setting). Actual charging rate controlled by Voltage Regulator.

Performance Data

	Amperes	Volts	R.P.M.
Cold	30*	8.0	1825

*—Not maximum output—See Current Regulator.

Brush Spring Tension—25 ounces each.

Field Current—1.75-1.9 amperes at 6.0 volts.

Rotation—Counter-clockwise at commutator end.

Removal—Pivot mounted at left front of engine. To remove, take out pivot and clamp bolts.

Belt Adjustment:—Loosen pivot and clamp bolts, pull generator up and out until belt deflection midway between fan and generator is ½".

GENERATOR

SPECIAL EQUIPMENT

SPECIAL GENERATORS:—Delco-Remy Model 1106404 (City Police), 1105852 or 1105857 (State Police). Two brush type. All data same as Std. Generator (above) except as follows:

Performance Data Cold

	Amperes	Volts	R.P.M.
1106404	35	8.0	1040
1105852, 7	40	8.0	1850

Field Current—1.77-2.0 amperes (1106404), 1.62-1.82 amperes (1105852,7) at 6.0 volts.

REGULATOR

REGULATOR:—Delco-Remy Model 1118201 (Std. Generators), 1118229 (1106404 Gen.), 1118237 (1105852, 1105857 Gen.). Single Core Type. Vibrating type voltage and current regulators in case on dash.

CAUTION—Check generator for grounded fields before changing regulator settings.
For complete data, refer to Electrical Equipment Index.

Cutout Relay

Cuts In—6.2-6.7 volts, hot, 880 RPM, 8-10 MPH.
Cuts Out—0-4.0 amperes discharge current.
Contact Gap—.020" (same for both sets).
Air Gap—.020" (with points just closed).

Voltage Regulator

Setting—7.2-7.4 volts hot (1118201), 7.0-7.2 volts hot (1118229 & 1118237) at operating temp.

To Check—Connect ammeter in charging line at 'BAT' regulator terminal, voltmeter between 'BAT' terminal and ground. Operate generator at 2800 RPM., adjust charging rate to 8-10 amperes (use variable rheostat or 'AVR' set). With regulator hot (150° F.), retard generator speed until cut-out relay points open, then increase generator speed to 2800 RPM. and check hot voltage setting (above).

To Adjust—Change regulator armature spring tension slightly by bending lower spring hanger for light (left) spring (or one spring if both alike) only. If further adjustment required, see Single Core Regulator article in Electrical Equipment Section for Heavy (or other spring) adjustment.

Air Gap—.070" between center of core and armature with contacts just closed.

C NTINUED ON NEXT PAGE

C NTINUED FR M PRECEDIN PAGE

Current Regulator

Setting—34-36 amperes (1118201, 1118229), 38-40 amperes (1118237) hot (at operating temperature).

To Check—Remove cover, connect short jumper from voltage regulator frame to upper contact support bracket (shorting out Voltage Regulator). Connect ammeter in charging line at 'BAT' regulator terminal. Turn on lights and accessories, operate generator and increase speed until output remains stationary (run until hot). Check setting with regulator at operating temperature.

To Adjust—Same as Voltage Regulator (previous page) except both springs are the same weight.

Air Gap—.080" (check same as Voltage Regulator).

LIGHTING

LIGHTING:—Headlamps—Guide 'Sealed Beam' type. ***For complete data, refer to Electrical Equipment Index.***

Headlamp Adjustment—Aim upper beam straight ahead with center of hot spot 3" below lamp center

Beam Indicator—In speedometer dial. Lighted when upper beams in use.

Direction Signal—***Refer to Electrical Equip. Index.***

Switches

Lighting—Delco-Remy 1995008.
Beam Selector—D-R. 1997006 (50, 70), 8 (Others).
Direction Signal—Delco-Remy 1995501 (All—LHD), 1995502 (All—RHD).

Bulb Specifications

Position	Candlepower	Mazda No.
Headlamps		Sealed Beam
Front Dir. Sig. & Park	21-3	1154
Instrument, Map, Clock	1.5	55
Radio, Trunk	1.5	55
Beam Indicator, Glove Compt.	1	51
Direction Signal Indicators	1	51
Stop & Tail	21-3	1154
License Plate	3	63
Rear Direction Signal	32	1133
Dome (except 46C & 66C)	6	81
Dome (46C & 66C only)	1.5	55

MISC. ELECTRICAL

THERMOSTATIC RELAY:—Delco-Remy. On lighting switch. Contacts remain closed with 30 amperes, open in 3 minutes with 42 amps. @ 70°. Not adj.

FUSES:—Dome Light & Rear Cigar Lighters (70,80,90)—30 ampere in feed wire at charge indicator.
Direction Signal—14 ampere in connector
Instrument Lamp Switch—Two 10 amperes. #1 Instrument & Clock Light, #2 Map Light &License. Clock—2 ampere under red button on back of clock.

HORNS:—Delco-Remy Model K-33-H. No. 1999501, 519 (low note, right horn), 1999502, 520 (high note, left horn). Vibrator type, blended tone, operated by horn relay. No. 1999501 & 502 on early cars.

Type	Current (at 6 volts)	Air Gap
1999501 (Low)	16-18 amperes	.044-.049"
1999502 (High)	15-17 amperes	.034-.039"
1999519 (Low)	19-21 amperes	.044-.049"
1999520 (High)	18-20 amperes	.034-.039"

Horn Relay:—Delco-Remy Model 1116775.
Contact Gap—.020". **Air Gap**—.015" (closed).
Contacts Close—2.75-4.0 volts.
NOTE—Use relays marked by bar over last 3 figures of part number to correct relay sticking.

ENGINE

SERIES 40 & 50

ENGINE SPECIFICATIONS:—Own 40, 50. 8 cylinder, 'I' head type. **Bore**—3 3/32". **Stroke**—4⅛".
Displacement—248 cu. ins. **Rated HP.**—30.63.
Developed Horsepower—107 at 3400 RPM.
Compression Ratio—6.1-1 Std. cast-iron head.
Compression Pressure—126 lbs at 1000 RPM., 112 lbs. at cranking speed (uniform within 6 lbs.).
Vacuum Reading—Steady 18-20" idling at 7-8 MPH.
For Engine Removal data refer to Buick Shop Notes.

PISTONS:—Modified 'Dome Head', aluminum alloy, tri-slot, cam ground, anodized finished type.
See Buick Shop Notes for description and all Replacement Piston specifications and data. **Length**—4 9/32". **Weight**—14¼ ozs. (Stripped), 20.16 (rings & pin). **Removal**—Pistons and rods removed from above. **Clearance**—.0021" (.0018-.0024") top of skirt.

Fitting New Pistons:—If micrometer used, check at points on each side of vertical slot at top of skirt, and at lower end of slot (light contact only). Clearance listed correct with pistons at 70° F. If feeler gauge used, install ½" wide feeler between piston and cylinder wall on side opposite slot (piston inverted, pin parallel to crankshaft). Piston should pass on .0015" feeler, hold on .00225" feeler.

Installing Pistons:—Slot away from camshaft.

PISTON RINGS:—Two compression (new top ring), two oil control rings, all above pin (heat-dam groove above top ring). Oil ring grooves drilled for oil drains. NOTE—Install top compression ring with relief up, #2 with mark 'TOP' up.

Ring	Width	End Gap	Side Clearance
Compr. ①	3/32"	.010-.020"	.0015-.003"
Oil Control	3/16"	.010-.015"	.0015-.003"

①—Wall thickness Top .155", #2 .140".

Replacement Rings:—***See Buick Shop Notes.***

PISTON PIN:—Diameter—.8127". **Length**—2 11/16". Pin clamped in rod. Not furnished separately (all replacement pistons have pins installed).
Pin Fit in Piston—.0003-.0004" at 70° F. (easy finger push fit at room temperature).
NOTE—Use #25 wrench (5½") only on pin bolt.

CONNECTING ROD:—Length—7⅝". **Weight**—30¾ ozs. Maximum weight variation ⅛ ounce.
Crankpin Journal Diameter—2".
Lower Bearing—Spun babbitt-lined type.
Clearance—.0008-.0018". **Sideplay**—.005-.010".

Bearing Adjustment:—Shims. Do not file rods or caps.

Installing Rods:—Marks on rod and cap toward rear of engine, oil hole to camshaft. Align rod and cap. NOTE—Use special ground bolts on rod caps.

CRANKSHAFT:—5 bearing, 8 integral counterweights.
Journal Diameters—#1, 2 5/16"; #2, 2⅜"; #3, 2 7/16"; #4, 2½"; #5, 2 9/16".
Bearings—Steel-backed, babbitt-lined type.
See Buick Shop Notes for Replacement Bearing data.
Clearance—.0007-.0022".

Bearing Adjustment:—Shims. Do not file caps.

End Thrust:—Center (#3) bearing. **Endplay** .004-.008".

CAMSHAFT:—5 bearing. Non-adjustable chain drive.
Journal Diameters—#1, 2 5/32"; #2, 2⅛"; #3, 2 3/32"; #4, 2 1/16"; #5, 1¾".
Bearing Type—Steel-backed, babbitt bushings.
Clearance—.0005-.0035". **Endplay**—.004-.008".

End Thrust:—Thrust plate between front bearing and camshaft sprocket.

Timing Chain:—Link-Belt. Width 1". Pitch .500". Length 24½" or 49 links. Initial slack ¼-⅜". 1" worn.
Camshaft Setting:—Mesh copper-plated washers on chain (10 links apart) with sprocket marks upward.

VALVES:—	Head Diam.	Stem Diam.	Overall Length
Intake	1 17/32"	.3720"	5.1"
Exhaust	1 11/32"	.3715"	5.1"

	Seat Angle	Lift	Stem Clearance
Intake	45°	.348"	.0015-.0035"
Exhaust	45°	.348"	.0021-.0039"

Series 50 Note—Cylinder head must be removed in order to take out #16 push rod.
Valve Guides:—Press fit in head, installed with taper end up. Finish ream for correct clearance.
Valve Springs:—Double springs on all valves. Spring free length 1⅞" (inner), 2 5/16" (outer).

	Inner Spring Pressure	Inner Spring Length	Outer Spring Pressure	Outer Spring Length
Closed	15½-20½ lbs.	1 21/32"	26½-31½ lbs.	1 15/16"
Open	45-51 lbs.	1 5/16"	67-73 lbs.	1 19/32"

Valve Lifters:—Barrel type, cast-iron. Lifter guide holes reamed in block. **Clearance**—.0005-.0025".
Rocker Arms:—***See Buick Shop Notes for installation and fitting directions.***

ENGINE

SERIES 60, 70, 80, 90

ENGINE SPECIFICATIONS:—Own 60, 70, 80, 90. 8 cylinder 'I' head type. **Bore** 3 7/16". **Stroke** 4 5/16".
Displacement—320.2 cu. ins. **Rated HP.**—37.81.
Developed Horsepower—141 at 3600 RPM.
Compression Ratio—6.25-1 Std. cast-iron head.
Compression Pressure—130 lbs. at 1000 RPM., 114 lbs. at cranking speed (uniform within 6 lbs.).
Vacuum Reading—Steady 18-20" idling at 7-8 MPH.
For Engine Removal data refer to Buick Shop Notes.

PISTONS:—Modified 'Dome Head', aluminum alloy, tri-slot, cam ground, anodized finished type.
See Buick Shop Notes for description and all Replacement Piston specifications and data. **Length** 4 7/16". **Weight**—17¼ ozs. (Stripped), 24.96 (rings & pin). **Removal**—Pistons and rods removed from abov . **Clearance**—.0023" (.0020-.0026") top of skirt.

Fitting New Pistons: Same as for Series 40 & 50 data listed in preceding column.

Installing Pistons:—Slot away from camshaft.

PISTON RINGS:—Two compression (new top ring), two oil control rings, all above pin (heat-dam groove above top ring). Oil ring grooves drilled for oil drains. NOTE—Install top compression ring with relief up, #2 with mark 'TOP' up.

Ring	Width	End Gap	Side Clearance
Compr. ①	3/32"	.010-.020"	.0015-.003"
Oil Control	3/16"	.010-.015"	.0015-.003"

①—Wall thickness Top .172", #2 .150".

Replacement Rings:—***See Buick Shop Notes.***

PISTON PIN:—Diameter—.8747". **Length**— 3 1/16". Pin clamped in rod. Not furnished separately (all replacement pistons have pin installed).
Pin Fit in Piston—.0003-.0004" at 70° F. (easy finger push fit at room temperature).
NOTE—Use #25 wrench (5½") only on pin bolt.

CONNECTING ROD:—Length 8¼". **Weight** 38 ozs. Maximum weight variation ⅛ ounce.
Crankpin Journal Diameter—2¼".
Lower Bearing—Spun babbitt-lined type.
Clearance—.0008-.0018". **Sideplay**—.005-.010".

Bearing Adjustment:—Shims. Do not file rods or caps.

Installing Rods:—Marks on rod and cap toward rear of engine, oil hole to camshaft. Align rod and cap. NOTE—Use special ground bolts on rod caps.

ENGINE

SERIES 60, 70, 80, 90 CONTINUED

CRANKSHAFT:—5 bearing, 8 integral counterweights.
Journal Diameters:—#1, 2 9/16"; #2, 2⅝"; #3, 2 11/16"; #4, 2¾"; #5, 2 13/16".
Bearings—Steel-backed, babbitt-lined type.
See Buick Shop Notes for bearing replacement data.
Clearance—.0007-.0022".

Bearing Adjustment:—Shims. Do not file caps.

End Thrust:—Center (#3) bearing. **Endplay** .004-.008".

CAMSHAFT:—5 bearing. Non-adjustable chain drive.
Journal Diameters—#1, 2 5/32"; #2, 2⅛"; #3, 2 3/32"; #4, 2 1/16"; #5, 1¾".
Bearing Type—Steel-backed, babbitt bushings.
Clearance—.0005-.0035". **Endplay**—.004-.008".

End Thrust:—Thrust plate between front bearing and camshaft sprocket.

Timing Chain:—Link-Belt. Width 1". Pitch .500". Length 25" or 50 links. Initial slack ¼-⅜". 1" worn.

Camshaft Setting:—Mesh copper-plated washers on chain (10 links apart) with sprocket marks upward.

VALVES:—	Head Diam.	Stem Diam.	Overall Length
Intake	1 25/32"	3720"	5¼"
Exhaust	1 7/16"	3715"	5¼"

	Seat Angle	Lift	Stem Clearance
Intake	45°	347"	.0015-.0035"
Exhaust	45°	342"	.0021-.0039"

Series 70 Note—Cylinder head must be removed in order to take out #16 push rod.

Valve Guides, Valve Springs, Valve Lifters and Rocker Arms: *See Series 40, 50 Engine data on preceding page.*

VALVE TIMING

Tappet Clearance:—.015" all valves—engine hot.

Valve Timing (40, 50)—See Camshaft Setting.
Timing Points (Valve .004" Open)
Intake Valves—Open 13° BTDC. Close 68° ALDC.
Exhaust Valves—Open 55° BLDC. Close 22° ATDC.
Opening & Closing Points
Intake Valves—Open 26° BTDC. Close 81½° ALDC.
Exhaust Valves—Open 68° BLDC. Close 35° ATDC.

Valve Timing (60, 70, 80, 90)—See Camshaft Setting.
Timing Points (Valve .004" Open)
Intake Valves—Open 14° BTDC. Close 71° ALDC.
Exhaust Valves—Open 56° BLDC. Close 25° ATDC.
Opening & Closing Points
Intake Valves—Open 27° BTDC. Close 84½° ALDC.
Exhaust Valves—Open 69° BLDC. Close 38½° ATDC.

Valve Timing Check—With .015" tappet clearance, #2 or 7 exhaust valve should be .145" open (Series 40, 50), .155" open (Series 60, 70, 80, 90)—actual valve opening—use dial indicator) with #1 & 8 pistons on TDC and flywheel mark 'TDC/1-8' at indicator (inspection hole, right front face of housing).

LUBRICATION

LUBRICATION:—Pressure type (gear type oil pump in crankcase). *See Buick Shop Notes for oil pump data.*
Normal Oil Pressure—45 lbs. at 35 MPH.
Oil Pressure Regulator—On pump. Opens at 45 lbs. Non-adjustable type.
Crankcase Capacity—Dry 8 qts. (40, 50), 10 qts. (60, 70, 80, 90). Refill 6 qts. (40, 50), 8 qts. (60, 70, 80, 90).

COOLING

Capacity: 13¼ qts. (Series 40,50), 17 qts. (60,70,80,90).

Water Pump:—Ball-bearing, packless type.
See Water Pump Section for complete data.
Removal—Remove fan belt, pump mounting bolts, lift off pump and fan assembly.

Thermostat:—Harrison. In cyl. hd. water outlet.
Setting—Opens at 148-155° F. Fully open 173°.

Temperature Gauge:—AC #1510906 Thermo gauge.
See Miscellaneous Section for complete data.

CLUTCH

CLUTCH:—Own make with Borg & Beck 'Borglite' driven member. Single plate, dry disc type.
NOTE—Series 40,50 Clutch is "Crown Spring" type.
See Clutch Section for complete data.
Facings (40, 50)—Spiral or Chevron wound woven type (Long), spiral wound, molded woven type (Borg & Beck). Inside Diameter 6¾" (Long), 6½" (Borg & Beck), Outside Diameter 10". Thickness .125".
Facings (60, 70, 80, 90)—Spiral wound, molded woven type. Inside Diameter 6½". Outside Diameter 10½". Thickness .125".

Adjustment:—Pedal free movement ¾-1" (adjusting clevis and locknut on link at clutch fork). Pedal toeboard clearance (underside) ⅞" (setscrew and locknut at lower end of pedal).

Removal:—Remove Rear Axle & Transmission (see below), take off clutch underpan, release return spring (back off spring eyebolt nut 50, 70, 80, 90), disconnect linkage, remove yoke and release bearing retainer, mark clutch and flywheel (reassemble to these marks), remove mounting screws in cover flange. NOTE—Metal spacers may be used between release levers and cover to relieve spring tension. *See Buick Shop Notes for 'Over-center' return spring installation and adjustment.*

TRANSMISSION

TRANSMISSION:—Own Make. All helical gear, constant-mesh, synchro-mesh (second and high), sliding gear (low and reverse) with new remote shift.
See Transmission Section for complete data.

Transmission Control:—Buick 'Handi-shift' type.
See Transmission Section for complete data.

Removal:—Remove Rear Axle (see below), disconnect shift linkage at transmission, remove rear transmission support (wire shims to ends of support for correct replacement) and steady rest rod, remove upper mounting bolts, install guide pins (J-851), remove lower mounting bolts, pull transmission out. *For steering col. shift linkage adjustments, see 1940 Buick Transmission Control article in Transmission Sec.*
Transmission Steady Rest—*See Buick Shop Notes for installation and adjustment instructions.*

UNIVERSALS

UNIVERSAL JOINT: Saginaw or Spicer No. 202-5 (Series 40, 50), No. 202-3 (60, 70, 80, 90). One used.
See Universals Section for complete data.

REAR AXLE

REAR AXLE: Own Make. Semi-floating, hypoid gear type with torque tube drive. NOTE—Series 40,50,60, 70 axle requires special removal instructions (below).
See Rear Axle Section for complete data.
Ratio—4.4-1 (Std. 40,50), 3.9-1 (Std. 60,70; Optl. 40), 3.6-1 (Optl. 60), 4.182-1 (80), 4.555-1 (90).
NOTE—Outer face of axle shaft flanges paint marked for identification as follows: White 4.4-1, Red 3.9-1, Blue 3.6-1.
Backlash—.008-.010".

Removal (40, 50, 60, 70): Hoist car, disconnect parking brake at equalizer, hydraulic brake line at fitting anchored to left channel iron-strut, lower end of shock absorber links, rear radius rod at axle end, lower end of chassis springs (tie springs to bumper for clearance). Disconnect torque tube at universal joint ball, remove axle assembly from beneath car.
►**Series 40, 50, 60, 70 Note**—Torque tube flanged at rear end and bolted to carrier but **these bolts should never be disturbed except for gasket replacement.**
Removal (Series 80, 90): Hoist car, disconnect parking brake at equalizer, hydraulic brake line at fitting anchored to left channel iron-strut, lower end of shock absorber links, rear radius rod at axle end, lower end of chassis springs (wire springs to bumper for clearance). Disconnect torque tube at universal joint ball, remove axle assembly from beneath car.
Axle Shaft Removal: *See Buick Rear Axle article.*
NOTE—Right hand axle shaft is ¾" (40, 50, 60, 70), 15/16" (80, 90), longer than left hand shaft.
Wheel Bearing Adjustment—None.

Rear Suspension:—Coil springs, conventional axle.
See Rear Axle Section for complete data.

SHOCK ABSORBERS

Delco. Double acting, hydraulic types as follows:
40, 50, 60, 70 Front—Model 1948-A (right & left).
40, 50, 60, 70 Rear—Model 2105-A, B (parallel cyl.).
80, 90 Front—Model 1902-E, F.
80, 90 Rear—Model 1751-R, S.
See Shock Absorber Section for complete data.

FRONT SUSPENSION

Front Suspension:—Independent, linked parallelogram type with coil springs.
See Front Suspension Section for complete data.
Kingpin Inclination—3½-4½° (Series 40,50,60,70), 4-5° (80, 90) Crosswise.
Camber—Neg. ¼° to Pos. 1°. Not adjustable.
Caster—⅜° (Series 40,50,60,70), 0° (80,90) plus or minus ⅜°. Adjustable.
Toe In—0-1/16". Adjust rods equally.
Steering Geometry (Toe-out on turns)—Inner wheel turned 22° (Series 40,50,60,70), 24° (80,90) plus or minus ¾°, Inner wheel turned exactly 20°.

STEERING GEAR

Steering Gear: Saginaw Worm-and-Double Roller
See Steering Gear Section for complete data.

BRAKES

BRAKES:—Service—Bendix hydraulic, duo-servo, single anchor type without eccentric adjustment. Hand brake applies rear wheel service brakes.
See Brake Section for complete data.
Drums—12" Centrifuse Type (Series 40, 50, 60, 70), 14" Cast Iron Type (80, 90).
Lining—Woven—Ferodo BZ-10 (primary), Moulded Manhattan Raybestos #2320K (secondary).

	Width	Thickness	①Length
40,50	1 3/4"	3/16"	9 15/16"-12 3/4"
60,70	2 1/4"	3/16"	10" -12 15/16"
80,90	2"	1/4"	12 1/16"-14 3/4"

①—Primary Shoe—Secondary Shoe.

Clearance—.015" at both ends of secondary shoe (with primary shoe forced out against drum).

Hand Brake:—See Service Brakes above.

NoRol: Optional. *See Brake Section for complete data.*

MISC. MECHANICAL

Power Operated Convertible Top: Vacuum Power type.
See Miscellaneous Section for complete data.

HOOD REMOVAL & ADJUSTMENT DATA, FRONT FENDER REMOVAL:—*See Buick Shop Notes.*

MODEL IDENTIFICATION

SERIAL NUMBER:—First number (all Series) 1-3880108 (Flint), 2-3892008 (Calif.), 3-3897008 (Linden). On tag on right side of dash under engine hood.

ENGINE NUMBER:—First number (all Series) 4074859 with model prefix as follows: 4- (40), 5- (50), 6- (60), 7- (70), 9- (90). On right side of crankcase behind oil filter (40, 50), above starter (60, 70, 90). NOTE—Dash (-) following engine number indicates engine equipped with .010" oversize pistons.

TUNE-UP

COMPRESSION PRESSURE: 142 lbs. (40—6.5-1 hd.), 148 lbs. (40, 50—7.0-1 hd.), 151 lbs. (60, 70, 90—7.0-1 hd.) at 1000 RPM.

►*For directions on lowering compression on first Compound Carburetion cars to correct complaints of spark rap, refer to Buick Special Shop Notes.*

VACUUM READING: Steady 18-20" idling 8-10 MPH.

FIRING ORDER:—1-6-2-5-8-3-7-4. See diagram.

SPARK PLUGS: AC No. 46. 14 mm. Metric type.
Gaps—.025" Limits .023-.028".
NOTE—Small (10 mm.) plugs used on first cars have been changed to above type.

IGNITION: See Coil, Condenser, and Distributor.
Breaker Gap—.015". **Cam Angle** 31° (closed).
►*CAUTION—Use of cam angle to set point gap not recommended by car manufacturer. If dwell meter used, make final check that gap within .0125-.0175".*
Automatic & Vacuum Advance—*See Distributor.*

IGNITION TIMING: See Ignition Timing.
Std. Setting—2° BTDC (Series 40—1 Carb.), 4° BTDC (40, 50—Cmpd. Carb.), 6° BTDC. (60, 70, 90) with flywheel mark "ADV" at indicator in housing inspection hole on right side above starter.

CARBURETION: See Carburetor & Carb. Equipment.
Idle Setting (Single Carb.)—Both idle screws ¾ turn open. Idle speed 8-10 MPH.
Idle Setting (Compound Carb.)—Refer to "Buick Compound Carburetion" article in Carburetor Section for complete tune-up procedure.
Float Level (Carter Carb.)—9/64" (float with cross-rib re-inforcement), 3/16" (float with vertical rib re-inforcement) from top seam of float to bowl cover with valve seated.
Float Level (Stromberg Carb.)—Fuel level 19/32" below top edge of bowl.
Accelerating Pump—#2 hole (center hole—medium stroke) standard for all-season operation.
Fuel Pump Pressure: 4 lbs. maximum.

MANIFOLD HEAT CONTROL:—Thermostatic coil type. **Setting**—Coil wind-up ¼ turn at 70°F. Adjust counterweight spring clip so edge of counterweight is approx. 7/16" (40 Single Carb.), ¾" (All Compd. Carb.) past vertical centerline of counterweight pivot with valve closed (pin must prevent valve striking body when closed or open).

►**VALVE TAPPET CLEARANCE:** *CAUTION—Feeler gauge used depends on engine temperature (do not use .015" feeler). See "Tappet Clearance Adjustment Procedure" in Buick Shop Notes to secure .015" lash at Road Operating Temperature.*
Valve Timing Check—*See Valve Timing.*

STARTING: See Battery, Starter, Generator, Regulator.

IGNITION

Ignition Switch:—Delco-Remy No. 1116296 (40, 60, 90 LHD), 1116297 (40, 60, 90 RHD), 1116313 (50, 70 LHD), 1116314 (50, 70 RHD). Same design as 1940.
Ignition Lock—Briggs & Stratton No. 85370.
Key Series—8000 to 9499. Groove—15.

COIL: Delco-Remy Model 1115024 Std., 1115026 (with Radio). On engine side of dash. NOTE—Radio type has condenser mounted under coil end cover.
Ignition Current—2½ amperes idling, 4½ stopped.

CONDENSER: Delco-Remy Part No. 1869704.
Capacity—.18-.25 microfarad.

DISTRIBUTOR: Delco-Remy 1110801. Single breaker, 8 lobe cam, full automatic advance type with auxiliary vacuum spark control.
Breaker Gap—.015". Limits .0125-.0175".
Cam Angle or Dwell—31° closed, 14° open.
Breaker Arm Spring Tension—19-23 ozs.

Rotation—Counter-clockwise viewed from above.

Distributor		Automatic Advance	Engine
Degrees	R.P.M.	Degrees	R.P.M.
Start	250	3.5	500
7	400	14	800
13	1500	26	3000

Vacuum Spark Control Model 681-H. On distributor Provides additional advance at speeds above 18 MPH. except when engine accelerated or operated with wide open throttle when spark retarded by return spring. **Plunger Travel**—⅛" max.

Vacuum Advance		
Distr. Degrees	Eng. Degrees	Vacuum (" of HG)
Start	0°	5-7"
5-6°	10-12°	10-13"

Distributor Removal:—Mounted on right side of crankcase. To remove, disconnect vacuum line, take out 2 hold-down screws in advance arm, lift out.

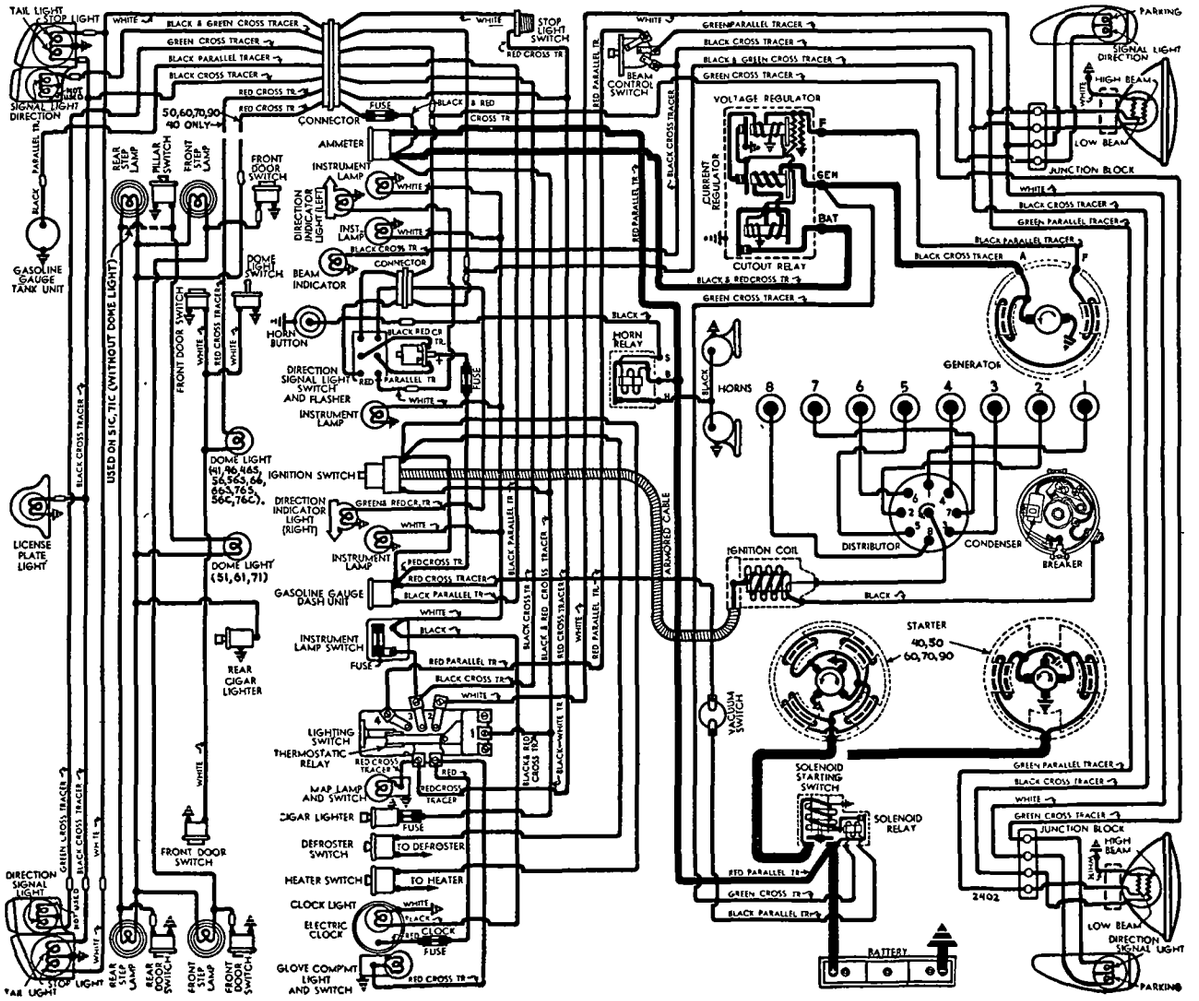

IGNITION TIMING

IGNITION TIMING:—Initial setting for fuel of 70 (40, 50), 76 (60, 70, 90) Octane Rating. See 'Final Ignition Setting' for fuel & operating condition correction.

	Flywheel Degrees	Piston Position
40 (1 Carburetor)	2° BTDC	.0015" BTDC.
40, 50 (2 Carb.)	4° BTDC	.0063" BTDC.
60, 70, 90 (2 Carb.)	6° BTDC	.0149" BTDC.

Timing Mark Note (40, 50)—Ignition mark is a 2° serrated section on flywheel. Use leading edge of mark (4°) for 40 & 50 with Compound Carburetion, trailing edge of mark (2°) for 40 with 1 Carb.

Timing (With Synchroscope)—Recommended method. Connect synchroscope to #1 spark plug, direct light on flywheel through inspection hole in right front face of housing. Idle engine at speed not greater than 350 RPM, loosen two distributor hold-down screws, rotate distributor until 'ADV' mark on flywheel (see 40, 50 note above), lines up with indicator. See Final Ignition Setting below.

Timing (Without Synchroscope)—With #1 piston on compression, turn engine over until 'ADV' mark on flywheel (see 40,50 note above) lines up with indicator. Adjust distributor as directed above.

Final Ignition Setting—Adjust for fuel used so slight 'ping' secured accelerating with wide open throttle between 10-20 MPH. To adjust, loosen distributor hold-down screws, rotate distributor in small steps counter-clockwise (if ping too severe), clockwise (if no ping). *See Compression Ratio change (to eliminate spark rap) above.*

CARBURETOR

CARBURETION:—Carburetor (Series 40—Single Carburetor)—Carter Type WCD Model 487-S or Stromberg Model AAV-16 Code 7-37. 1" dual downdraft *For special Tune Up & Idle Adjustment directions, refer to Carb. Index for 'Buick Compound Carburetion.'*

Compound Carburetion (Series 40,40A,50,60,70,90):—Two Carter Type WCD, or Stromberg Model AAV-16 & AA-1, carburetors used together. 1" dual downdraft types. *For Carburetor Production Changes, and Special Tune Up instructions required for Compound Carburetion, refer to Carburetor Index for 'Buick Compound Carburetion' and Buick (Carter) or Buick (Stromberg) Carburetor articles.*

IMPORTANT SERVICE NOTE—For instructions on Sealing of Manifolds (first cars), Compression Ratio and Spark Plug production changes, *refer to Carburetor Index for 'Buick Compound Carburetion' article.*

Accelerating Pump Setting (Front Carburetor only on Compound Carburetion Cars)—3 holes in throttle lever (Stromberg), 2 holes in pump arm (later type Carter Compd. Carb. only) for pump link connection. Adjust as follows (#1 & 3 only on Carter): #1 (Inner—Min.) Hot weather, high-test gasoline. #2 (Center—Med.) Std. normal all year setting. #3 (Outer—Max.) Cold weather, low-test gasoline.

Float Level (All Carburetors)—Adjust as follows:

Carter—9/64" for first type float (cross-rib reinforcement), 3/16" for second type float (11 vertical rib re-inforcement & all Later Compound Carburetor models. Measure from top seam of each float to bowl cover with valve seated. *Refer to Carter 'WCD' Carburetor article in Carburetor Section for Float Level Gauge & aligning data.*

Stromberg—Fuel level 19/32" below top edge of bowl with engine idling (5 lbs. pressure) or even with bottom of inspection hole on side of bowl). **Metering Jets & Rods**—*See Carter & Stromberg Jet Tables in Carburetor Section.*

Fast Idle (Front Carburetor only on Compound Carburetion Cars):—Integral (built in carburetor). *For complete data, refer to Carburetion Equip. Index.*

Setting (Carter)—Back off throttle stopscrew so throttle- valves closed. With choke valve tightly closed, adjust fast idle screw for .012" (487-S, 509-S, 528-S), .015" (490-S, 533-S), throttle opening (turn screw in 2½ turns from point where it just contacts high step of fast idle cam).

Setting (Stromberg)—Close choke valve against #53 drill (.0595"), adjust by bending fast idle cam connector rod so that locking lever on throttle valve shaft just clears loose lever on fast idle cam stud as throttle is opened and closed.

Automatic Choke (Front Carburetor only on Compound Carburetion Cars):—Climatic Control (Carter), AAV-16 Type (Stromberg). Built-in type. *For complete data, refer to Carburetion Equip. Index.*

Setting (Carter)—Centered (index mark on cover at reference mark on housing) for all models.

Setting (Stromberg)—1 Notch Lean (40—Single Carb.), 'V' mark on cover lined up with housing mark (All Cars with Compound Carburetion).

CARB. EQUIPMENT

Air Cleaner:—AC No. 1542111 (40), 1529803 (50,60,70, 90). Heavy duty oil-bath type. NOTE—Screen at forward end of air intake tube should be cleaned by blowing out with air (disconnect air tube).

Fuel Pump:—AC Type AJ. Pump Exchange Part No. 529 (40,50), 530 (60,70,90). Fuel-&-vacuum type. *For complete data, refer to Carburetion Equip. Index.*

Gasoline Gauge:—AC Electric. No. 1516304 (Dash Unit), 1516277 (Tank Unit exc. 90), 1516284 (90). *For complete data, refer to Carburetion Equip. Index.*

BATTERY

BATTERY:—Delco Model 17E2 (Std.), 17K2 (RHD.Exp). 6 volt, 17 plate, 120 Ampere Hour (20 hr. rate).
Starting Capacity—140 amperes for 20 minutes.
Zero Capacity—300 amperes for 4.5 minutes. Five second voltage—4.4 volts.
Grounded Terminal—Negative (—) to engine block.
Location—On right side under engine hood.

STARTER

STARTER:—Delco-Remy 1107005 (40,50), 1107018 (40,50 RHD), 1107908 (60,70,90), 1107909 (60,70,90 RHD).
Armature—1867897 (1107005), 820158 (1107908, 9), 810601 (1107018). **Brush Spring Tension**—24-28 ozs.
Drive—Solenoid pinion shift & overrunning clutch.
Rotation—Counter-clockwise at commutator end.
Cranking Engine—(40,50) 135 RPM, 150 amperes, 4.5 volts (60,70,90) 115 RPM, 175 amperes, 5 volts.

Performance Data—1107005, 1107018

Torque	R.P.M	Volts	Amperes
0 ft. lbs.	5000	5.0	65
12 "	Lock	3.37	525

Performance Data—1107908, 1107909

0 ft. lbs.	5500	5.0	65
16 "	Lock	3.0	600

Removal:—Flange mounted on right front face of flywheel housing. To remove, remove flange screws.

Starting Switch:—Solenoid Switch No. 1542 (1107005, 1107908), 1545 (1107018, 1107909) controlled by Vacuum Switch D-R No. 1990127 (Stromberg Carb.), Carter Car Starter No. 192-11U (Carter Carb.). *For complete data, refer to Electrical Equipment Index.*

GENERATOR

STANDARD

GENERATOR:—Two brush (shunt) type. Interchangeable on all models with correct pulley.
NOTE—Air scoop and heat deflector installed on commutator end on cars with Compound Carburetion.

Car Model	Delco-Remy Model	Pulley Diameter	Groove Width
40, 50	1102679	3 13/32"	11/16"
60, 70, 90	1102668	3 17/32"	15/16"

Armature—No. 1877806 (all models).
Charging Rate Adjustment—None (controlled by regulator and dependent on battery condition).
Maximum Charging Rate—32-34 amperes, 8.0 volts, 2400 RPM, 26 MPH (exc. 90), 24 MPH (90). Actual charging rate controlled by voltage regulator.

Performance Data

	Amperes	Volts	R.P.M.
Cold	30①	8.0	1825

①—Not maximum output. See Current Regulator.
Brush Spring Tension—25 ounces each.
Field Current—1.75-1.9 amperes at 6.0 volts.
Rotation—Counter-clockwise at commutator end.
Removal:—Generator pivot mounted at left front of engine. To remove, take out pivot and clamp bolts.
Belt Adjustment:—½" deflection with light pressure midway between generator and pump pulleys.

GENERATOR

SPECIAL EQUIPMENT

SPECIAL GENERATORS:—Delco-Remy Model 1106404 (40 Single Carb., All 60,70,90—City Police), 1106409 (40,50 Compd. Carb.—City Police), 1105857 (All—State Police). *Refer to the 1942 Buick article for complete data on these models and special regulators used with these generators.*

REGULATOR

REGULATOR:—Delco-Remy 1118201. Single Core Type. Vibrating Current & Voltage regulator on dash. *For complete data, refer to Electrical Equipment Index.*
CAUTION—Check generator for grounded field coils and leads before changing regulator settings to correct High Charging Rate or High Voltage.

Cutout Relay

Cuts In—6.2-6.7 volts hot.
Cuts Out—0-4.0 ampere discharge current.
Contact Gap—.020" (same for both sets).
Air Gap—.020" (with contacts just closed).

Voltage Regulator

Setting—7.2-7.4 volts hot (operating temperature). Should be checked with cover in place and hot.
To Check—Connect ammeter in charging line at regulator 'BAT" terminal, voltmeter between this terminal and ground. Operate generator at 2800 RPM., adjust charging rate to 8-10 amperes (use variable rheostat or AVR set). With regulator hot (150°F.), decrease generator speed until cutout relay contacts open, then increase speed to 2800 RPM. and check hot voltage setting (above).

C NTINUED ON NEXT PA E

C NTINUED FR M PRECEDING PAGE

To Adjust—Change regulator armature spring tension slightly by bending hanger at lower end of **one spring only.** If further adjustment required, see Single Core Regulator article in Electrical Equipment Section for other (2nd.) spring adjustment.

Air Gap—.070" between center of core and armature with contacts just closing (press down on armature to open contacts, release pressure, check gap at point where contacts just close).

Current Regulator

Setting—34-36 amperes hot (at operating temp.).
To Check—Remove regulator cover, connect short jumper between Voltage Regulator frame and upper contact support bracket (to short out Voltage Regulator), connect ammeter in charging line at regulater 'BAT' terminal, turn on car lights and accessories. Operate generator and increase speed until output remains constant. With regulator hot (150°F'), current reading should agree with setting (above).

To Adjust—Same as for Voltage Regulator (above).

Air Gap—.080" (check same as Voltage Regulator).

LIGHTING

LIGHTING:—Headlamps—Guide 'Sealed Beam' type. ***For complete data, refer to Electrical Equipment Index.***
Headlamp Adjustment—Aim upper beam straight ahead (hot spot center 3" below lamp center hght.).
Beam Indicator—In speedometer dial. Lighted when Upper Beams in use.
Direction Signal—***Refer to Electrical Equip. Index.***

Switches

Lighting—Delco-Remy No. 1995016.
Beam Selector—Delco Remy 1997008 or 1997009.
Directional Signal—Delco-Remy No. 1995503 (LHD-Brown), 1995504 (RHD-Brown), 1995507 (LHD-Grey), 1995508 (RHD-Grey).
Defroster, Heater, Dash Light—Delco-Remy 1997744.
Glove Comp't. Light & Switch—D-R. No. 1997747.

Bulb Specifications

Position	Candlepower	Mazda No.
Headlamps		Sealed Beam
Park & Frt. Dir. Signal	21-3	1154
Rear Direction Signal	21-3	1154
Instr., Map, Clock, Glove Compt.	1.5	55
Beam & Dir. Sig. Indicators	1	51
Stop & Tail	21-3	1154
Rear License	3	63
Courtesy (step)	15	88
Dome	6	82

MISC. ELECTRICAL

THERMOSTATIC RELAY:—Delco-Remy. On lighting switch. Contacts remain closed with 30 amperes, open in 3 minutes with 42 amps. at 70°. Not adj.

FUSES:—Dome Light (50, 60, 70, 90). 30 ampere. In connector in lead on back of instrument panel.
Cigar Lighter—30 ampere. In back of lighter.
Direction Signal—14 ampere. In connector.
Instrument Lights—10 ampere. On switch.
Clock—2 ampere. In connector in clock lead.
Heater & Defroster—14 ampere. On switches.

HORNS:—Delco-Remy No. 1999519 (Low Note, right horn), 1999520 (High Note, left horn). Vibrator type, blended tone, operated by horn relay.

Type	Current (at 6 volts)	Air Gap
1999519 (low note)	19-21 amperes	.045-.049"
1999520 (high note)	17-19 amperes	.035-.039"

Horn Relay:—Delco-Remy 1116775.
Contact Gap—.025". **Air Gap**—.015" (closed).
Contacts Close—2.75-4.0 volts.

ENGINE

SERIES 40 & 50

ENGINE SPECIFICATIONS:—Own 40, 50. 8 cylinder, 'I' head type. **Bore**—3 3/32". **Stroke**—4⅛".
Displacement—248 cu. ins. **Rated HP**—30.63.
Developed Horsepower—115 at 3500 RPM (40 Single Carb.), 125 at 3800 RPM (40 Comp. Carb., 50).
Compression Ratio—6.5-1 (First 40—Single Carb.), 6.4-1 (Later 40—Single Carb.), 7.0-1 (First 40,50—Compd. Carb.), 6.7-1 (Later 40, 50—Compd. Carb.). ***See Buick Shop Notes for Compression Ratio change, New Cylinder Heads, and special Head Gasket Data.***
Compression Pressure—142 lbs. (6.5-1 hd.), 148 lbs. (7.0-1 hd.) at 1000 RPM (uniform within 6 lbs.).
Vacuum Reading—Steady 18-20" idling 8-10 MPH. ***See Buick Shop Notes for Engine Mounting Adj. data.***

PISTONS:—Fireball, turbulator top, aluminum alloy, transverse slot, full skirt, cam ground type with anodized finish. No 'T-slot' used. ***See Buick Shop Notes for size identification (color marks) and Replacement Piston data.*** **Length**—4 5/16".
Weight—13.78 ozs. (stripped), 19.84 (rings and pin).
Removal—Pistons and rods removed from above.
Clearance—.0021" (.0018-.0024") at top of skirt.

Fitting New Pistons—If micrometer used, check at point 90° from pin hole just below transverse slot. Clearance listed correct with piston at 70°. If feeler gauge used, insert ½" x 12" feeler between piston and cylinder wall at right angle to pin bosses (piston inverted, pin parallel to crankshaft). Piston should pass on .0015" feeler, hold on .00225".

Installing Pistons:—Hollowed side to camshaft.

PISTON RINGS:—Two compression (#1 notched, #2 taper faced), two slotted oil rings (#3 heavy duty, #4 regular) per piston, all above pin (heat-dam groove above top ring groove.
NOTE—Install top compression ring with relief up, #2 compression with mark TOP up.

Ring	Width	End Gap	Side Clearance
Compr. ①	3/32"	.010-.020"	.0015-.0035"
Oil Control	3/16"	.010-.020"	.0015-.003"

①—Wall thickness Top .155", #2 .140".
Replacement Rings:—***See Buick Shop Notes for data.***

PISTON PIN:—Diameter—.8127". **Length**—2 11/16". Pin clamped in rod. Pins not furnished separately. All replacement pistons have fitted pins installed.
Pin Fit in Piston—.0003-.0004" @ 70° (easy finger push). NOTE—Pin clamp bolt tension 25-30 ft. lbs.

CONNECTING ROD:—Length—7⅝". **Weight**—28.46 ozs.
Crankpin Journal Diameter—2".
Lower Bearing—Spun babbitt-lined type.
Clearance—.0008-.0018". **Sideplay**—.005-.010".
Bearing Adjustment:—Shims. Do not file rods or caps.
Installing Rods:—Marks on rod and cap toward rear of engine, oil hole to camshaft. Align rod and cap. NOTE—Use special ground bolts & palnuts on caps.

CRANKSHAFT:—5 bearing, 8 integral counterweights.
Journal Diameters—#1, 2 5/16"; #2, 2⅜"; #3, 2 7/16"; #4, 2½"; #5, 2 9/16".
Bearings—Steel-backed, durex-lined, slip-in type. ***See Buick Shop Notes for Replacement Bearing data and Rear Main Oil Seal Installation.***
Clearance—.0007-.0022".
Bearing Adjustment:—Shims. Do not file caps.
End Thrust:—Center (#3) bearing. **Endplay** .004-.008".

CAMSHAFT:—5 bearing. Non-adjustable chain drive.
Journal Diameters—#1, 2 5/32"; #2, 2⅛"; #3, 2 3/32; #4, 2 1/16"; #5, 1¾".
Bearing Type—Steel-backed, babbitt bushings.
Clearance—.0005-.0035".
End Thrust:—Thrust plate between front bearing and camshaft sprocket. **Endplay**—.004-.008".
Timing Chain:—Link-Belt. Width 1". Pitch .500". Lgth. 24½" or 49 links. Initial slack ¼-⅜". 1" worn.
Camshaft Setting:—Mesh copper-plated washers on chain (10 links apart) with sprocket marks upward.

VALVES:—	Head Diam.	Stem Diam.	Overall Length
Intake	1 17/32"	.3720"	5 7/64"
Exhaust	1 11/32"	.3715"	5 7/64"

	Seat Angle	Lift	Stem Clearance
Intake	45°	.348"	.0015-.0035"
Exhaust	45°	.348"	.0021-.0039"

Series 50 Note—#16 push rod must be removed and installed with cylinder head. ***See Buick Shop Notes***
Valve Guides:—Press fit in head, installed with stepped end up. Finish ream for correct clearance.
Valve Springs:—Double springs on all valves. Spring free length 1⅞" (inner), 2 5/16" (outer).

	Inner Spring Pressure	Inner Spring Length	Outer Spring Pressure	Outer Spring Length
Closed	15½-20½ lbs.	1 21/32"	26½-31½ lbs.	1 15/16"
Open	45-51 lbs.	1 5/16"	67-73 lbs.	1 19/32"

Valve Lifters:—Barrel type, cast iron. Lifter guide holes reamed in block. **Clearance**—.0005-.0025".
Rocker Arms:—***See Buick Shop Notes for installation***

ENGINE

SERIES 60, 70, 90

ENGINE SPECIFICATIONS:—Own 60, 70, 90. 8 cylinder, 'I' head type. **Bore**—3 7/16". **Stroke**—4 5/16".
Displacement—320.2 cu.ins. **Rated HP**—37.81.
Developed Horsepower—165 at 3800 RPM.
Compression Ratio—7.0-1 (First cars), 6.7-1 (Later cars). ***See Buick Shop Notes for Compression Ratio change, new Cylinder Heads, and special service Cylinder Head Gasket data.***
Compression Pressure—151 lbs. at 1000 RPM (all cylinders uniform within 6 lbs.).
Vacuum Reading—Steady 18-20" idling 8-10 MPH. ***See Buick Shop Notes for Engine Mounting Adj. data.***

PISTONS:—Fireball, turbulator top, aluminum alloy, transverse slot, full skirt, cam ground type with anodized finish. No 'T-slot' used. ***See Buick Shop Notes for size identification (color marks) and Replacement Piston data.*** **Length** 4 9/16".
Weight—17.94 ozs. (stripped), approx. 1.56 lbs. (with rings and pin).
Removal—Pistons and rods removed from above.
Clearance—.0023" (.0020-.0026") at top of skirt.

Fitting New Pistons: Same as for Series 40 & 50 data listed in preceding column.

Installing Pistons:—Hollowed side to camshaft.

PISTON RINGS:—Two compression (#1 notched, #2 taper faced), two slotted oil rings (#3 heavy duty, #4 regular) per piston, all above pin (heat-dam groove above top ring). NOTE—Install top comp. ring with relief up, #2 with mark TOP up.

Ring	Width	End Gap	Side Clearance
Compr. ①	3/32"	.010-.020"	.0015-.0035"
Oil Control	3/16"	.010-.020"	.0015-.003"

①—Wall thickness Top .172", #2 .150".
Replacement Rings:—***See Buick Shop Notes for data.***

ENGINE

SERIES 60, 70, 90 CONTINUED

PISTON PIN:—Diameter—.8747". Length—3 1/16". Pin clamped in rod. Pins not furnished separately. All replacement pistons have fitted pins installed. **Pin Fit in Piston**—.0003-.0004" @ 70° (easy finger push). NOTE—Pin clamp bolt tension 25-30 ft. lbs.

CONNECTING ROD:—Length—8¼". Weight—35.58 ozs. **Crankpin Journal Diameter—2¼".** **Lower Bearing**—Spun babbitt-lined type. **Clearance**—.0008-.0018". **Sideplay**—.005-.010".

Bearing Adjustment:—Shims. Do not file rods or caps.

Installing Rods:—Marks on rod and cap toward rear of engine, oil hole to camshaft. Align rod and cap.

CRANKSHAFT:—5 bearing, 8 integral counterweights. **Journal Diameters**—#1, 2 9/16".; #2, 2⅝"; #3 2 11/16"; #4, 2¾"; #5, 2 13/16". **Bearings**—Steel-backed, durex-lined, slip-in type. *See Buick Shop Notes for Replacement Bearing data and Rear Main Bearing Oil Seal Installation.* **Clearance**—.0007-.0022".

Bearing Adjustment:—Shims. Do not file caps.

End Thrust:—Center (#3) bearing. **Endplay** .004-.008".

CAMSHAFT:—5 bearing. Non-adjustable chain drive. **Journal Diameters**—#1, 2 5/32"; #2, 2⅛"; #3, 2 3/32"; #4, 2 1/16"; #5, 1¾". **Bearing Type**—Steel-backed, babbitt bushings. **Clearance**—.0005-.0035".

End Thrust:—Thrust plate between front bearing and camshaft sprocket. **Endplay**—.004-.008".

Timing Chain:—Link-Belt. Width 1". Pitch .500". Length 25" or 50 links. Initial slack ¼-⅜". 1" worn.

Camshaft Setting:—Mesh copper-plated washers on chain (10 links apart) with sprocket marks upward.

VALVES:—

	Head Diam.	Stem Diam.	Overall Length
Intake	1 25/32"	.3720"	5¼"
Exhaust	1 7/16"	.3715"	5¼"

	Seat Angle	Lift	Stem Clearance
Intake	45°	.347"	.0015-.0035"
Exhaust	45°	.342"	.0021-.0039"

Valve Guides, Valve Springs, Valve Lifters and Rocker Arms: *See Series 40, 50 Engine data on preceding page.*

VALVE TIMING

►Tappet Clearance: *CAUTION—Feeler gauge used depends on engine temperature (do not use .015" feeler). See "Tappet Clearance Adjustment Procedure" in Buick Shop Notes to secure .015" lash at Road Operating Temperature.*

Valve Timing (Series 40, 50): See Camshaft Setting.

Timing Points (Valve .004" Open)

Intake Valves—Open 13° BTDC. Close 68° ALDC.
Exhaust Valves—Open 55° BLDC. Close 22° ATDC.

Opening and Closing Points

Intake Valves—Open 26° BTDC. Close 81½° ALDC.
Exhaust Valves—Open 68° BLDC. Close 35° ATDC.

Valve Timing (60, 70, 90): See Camshaft Setting.

Timing Points (Valve .004" Open)

Intake Valves—Open 14° BTDC. Close 71° ALDC.
Exhaust Valves—Open 56° BLDC. Close 25° ATDC.

Opening & Closing Points

Intake Valves—Open 27° BTDC. Close 84½° ALDC.
Exhaust Valves—Open 69° BLDC. Close 38½° ATDC.

Valve Timing Check—With .015" tappet clearance, #2 or 7 exhaust valve should be .145" open (Series 40, 50), .155" open (Series 60, 70, 90)—(actual valve opening—use dial indicator) with #1 & 8 pistons on TDC and flywheel mark 'U.D.C/1&8' at indicator (inspection hole, right front face of housing).

LUBRICATION

LUBRICATION:—Pressure type (gear type oil pump in crankcase). *See Buick Shop Notes for oil pump data.* **Normal Oil Pressure**—45 lbs. at 35 MPH. **Oil Pressure Regulator**—On pump. Opens at 45 lbs. **Crankcase Capacity**—Dry 8 qts. (Series 40, 50), 10 qts. (60,70,90), Refill—6 qts. (40,50), 8 qts. (60,70,90).

COOLING

Capacity (Series 40, 50)—13 qts. (14¼ with heater).
Capacity (60, 70, 90)—16¾ qts. (18 with heater).
Pressure Valve—In filler cap. Opens at 7 lbs.

Water Pump:—Ball-bearing, packless type. *See Water Pump Section for complete data.*

Thermostat:—Harrison. In cylinder head outlet. **Setting**—Opens at 148-155°F. Fully open 173°F.

Temperature Gauge:—AC #1511070 Thermo gauge. *See Miscellaneous Section for complete data.*

CLUTCH

CLUTCH:—Own Make with Borg & Beck 'Borglite' or Long Driven Member. Single plate, dry disc type. NOTE—Series 40, 50 clutch is "Crown Spring" type. *See Clutch Section for complete data.*

Facings (Series 40, 50)—Molded-woven (Borg & Beck), Woven (Long). Inside Diameter 6½" (Borg & Beck), 6¾" (Long). Outside Diameter 10". Thickness ⅛".

Facings (60, 70, 90)—Molded-woven (Borg & Beck), Woven (Long). Inside Diameter 6½". Outside Diameter 10½". Thickness ⅛".

NOTE—Install driven member oil baffle to rear.

Pedal Adjustment:—Free movement ¾-1" (adjusting screw and locknut on link at clutch fork). *See Buick Shop Notes for Pedal Return Spring data.*

Removal:—Remove Rear Axle & Transmission (see below), take off clutch underpan, disconnect linkage at yoke, remove clutch release bearing support by taking out spring washer in housing, pull out yoke (with release bearing) from fulcrum, mark clutch and flywheel (reassemble to marks), remove mounting screws in cover. NOTE—Metal spacers may be used between release levers and cover to relieve spring tension.

TRANSMISSION

TRANSMISSION:—Own Make. All helical gear, constant-mesh, synchro-mesh (second and high), sliding gear (low and reverse) with remote shift. *See Transmission Section for complete data.*

Transmission Control:—Buick 'Handi-shift' type. *See Transmission Section for complete data.*

Removal:—Remove Rear Axle (see below), remove rear transmission support (wire shims to ends of support for correct replacement) and steady rest rod, place engine jacks (J-1580) on frame cross member with pilot end in hole in housing at each side of engine mounting, tighten jacks to take load off mounting, disconnect shift linkage, remove transmission mounting bolts (install guide pins J-851) and 2 nuts freeing rear engine mounting (bolt heads seat in notches), adjust jacks to take strain off mounting bolts, remove transmission.

Transmission Support Mounting Adjustment—*See Buick Shop Notes.*

UNIVERSALS

UNIVERSAL JOINT: Saginaw or Spicer No. 202-5 (Series 40, 50, 60, 70), Saginaw (Series 90). One used. *See Universals Section for complete data.*

REAR AXLE

REAR AXLE:—Own Make. Semi-floating, hypoid gear type with torque tube drive. *See Rear Axle Section for complete data.* **Ratio**—4.4-1 (Std. 40-One Carb.), 4.1-1 (Std. 40, 50—Cmpd. Carb.), 3.9-1 (Std. 60, 70; Optl. 40—One Carb., 50), 3.6-1 (Optl. 60, 70), 4.2-1 (Std. 90). NOTE—Ratio stamped on underside of housing and paint marked on outer end of axle shaft flange as follows: White 4.4-1, None 4.1-1, Red 3.9-1, Blue 3.6-1, None 4.2-1 (90). **Backlash**—.006-.010". Screw adjustment.

Removal:—Hoist rear end of car. Disconnect parking brake at equalizer, hydraulic brake line at fitting anchored to left channel iron-strut, lower end of shock absorber links, rear radius rod at axle end, lower end of chassis springs (tie springs to bumper for clearance). Disconnect torque tube at universal joint ball, remove axle assembly from beneath car. **Series 40, 50, 60, 70 Note**—Torque tube flanged at rear end and bolted to carrier but **these bolts should never be disturbed except for gasket replacement.**

Axle Shaft Removal: *See Rear Axle Section article.*

Rear Suspension:—Coil springs, conventional axle. *See Rear Axle Section for complete data.*

SHOCK ABSORBERS

Delco—Double acting, hydraulic types as follows: **40, 50, 60, 70, 90 Front** Model 1948A (right & left). **40, 50, 60, 70 Rear**—Model 2105-C, D (parallel cyl.). **90 Rear**—Model 1757-A, B. *See Shock Absorber Section for complete data.*

FRONT SUSPENSION

Front Suspension:—Independent, linked parallelogram type with coil springs. *See Front Suspension Section for complete data.* **Kingpin Inclination**—3½° crosswise with 1⅛° Camber 40,50,60,70) 4¾° with ⅞° Camber (Series 90). **Camber (Std. Springs)**—Neg. ⅛° to Pos 1⅛° (40, 50, 60, 70), Neg. ⅜° to Pos. ⅞° (90). **Caster**—Positive ⅜° ± ⅜°. Adjustable. **Toe In**—0-1/16". Adjust both tie rods equally. **Steering Geometry Inner wh'l 22°±¾°. Outer 20°.**

STEERING GEAR

Steering Gear: Saginaw Ball Bearing Worm-and-Nut *See Steering Gear Section for complete data.*

BRAKES

BRAKES:—Service—Bendix hydraulic, duo-servo, single anchor type without eccentric adjustment. Hand lever applies rear wheel service brakes. *See Brake Section for complete data.* **Drums**—12" Centrifuse type (Series 40, 50, 60, 70), 14" Cast Iron type (Series 90). **Lining**—Woven—Ferodo BZ-10-2C (primary shoe), Moulded Manhattan Raybestos #2320K (secondary).

	Width	Thickness	①Length
40, 50	1¾"	3/16"	9 15/16"—12¾"
60, 70	2¼"	3/16"	10"—12 15/16"
90	2 "	¼"	12 1/16"—14¾"

①—Primary Shoe—Secondary Shoe.

Clearance—.015" at both ends of secondary shoe with primary shoe forced out against drum.

Hand Brake:—See Service Brakes above.

NoRol: Optional. *See Brake Section for complete data.*

MISC. MECHANICAL

Power Operated Convertible Top: Vacuum Power type. *See Miscellaneous Section for complete data.*

HOOD ADJUSTMENT, FRONT FENDER REMOVAL & CAP ADJUSTMENT:—*Refer to Buick Shop Notes.*

MODEL IDENTIFICATION

SERIAL NUMBER:—First No. (All Series) 1-4257742 (Flint), 2-4273684 (South Gate, Calif.), 3-4263684 (Linden, N. J.). On tag on right side of body dash panel under engine hood. NOTE—Prefix (1, 2, 3-) indicates assembly plant as indicated above.

ENGINE NUMBER:—First No. (All Series) 4457941 with model prefix as follows: A- (40A), 4- (40B), 5- (50), 6- (60), 7- (70), 9- (90). On right side of crankcase ahead of oil filter (40A,B,50), above starter (60,70,90). NOTE—Dash (-) following engine number indicates engine equipped with .010" oversize pistons.

TUNE-UP

COMPRESSION PRESSURE: 112 lbs. (40A, 40B with one carburetor), 115 lbs. (all others) cranking speed.

VACUUM READING:—Steady 18-20" idling 8-10 MPH.

FIRING ORDER:—1-6-2-5-8-3-7-4.

SPARK PLUGS:—AC No. 46. 14 MM. Metric type.
Gaps—.025". Limits .023-.028".

IGNITION: See Coil, Condenser, and Distributor.
Breaker Gap—.015". **Cam Angle 31°** (closed).

►*CAUTION—Use of cam angle to set point gap not recommended by car manufacturer. If dwell meter used, make final check that gap within .0125-.0175".*

Automatic & Vacuum Advance—*See Distributor.*

IGNITION TIMING: See Ignition Timing.
Std. Setting—4° BTDC (Series 40—One Carb.), 6° BTDC (40, 50—Cmpd. Carb.), 6° BTDC (60, 70, 90) with flywheel mark "ADV" at indicator in housing inspection hole on right side above starter.

CARBURETION: See Carburetor & Carb. Equipment.
Idle Setting (Single Carb.)—Both idle screws ¾ turn open. Idle speed 8-10 MPH.

Idle Setting (Compound Carb.)—Refer to "Buick Compound Carburetion" article in Carburetor Section for complete tune-up procedure.

Float Level (Carter Carb.)—9/64" (float with cross-rib re-inforcement), 3/16" (float with vertical rib re-inforcement) from top seam of float to bowl cover with valve seated.

Float Level (Stromberg Carb.)—Fuel level 19/32" below top edge of bowl.

Accelerating Pump—#2 hole (center hole—medium stroke) standard for all-season operation.

Fuel Pump Pressure: 4¾ lbs. maximum.

MANIFOLD HEAT CONTROL:—Thermostatic coil type. **Setting**—Coil wind-up ¼ turn at 70°F. Adjust counterweight spring clip so edge of counterweight is approx. 7/16" (40 Single Carb.), ¾" (All Compd. Carb.) past vertical centerline of counterwgt. pivot (valve closed). Pin must prevent valve striking body.

►**VALVE TAPPET CLEARANCE:** *CAUTION—Feeler gauge used depends on engine temperature (do not use .015" feeler). See "Tappet Clearance Adjustment Procedure" in Buick Shop Notes to secure .015" lash at Road Operating Temperature.*

Valve Timing Check—*See Valve Timing.*

STARTING: See Battery, Starter, Generator, Regulator.

IGNITION

Ignition Switch:—Delco-Remy No. 1116313 (40-A LHD), 1116296 (40-B, 60, 90 LHD), 1116297 (40-B, 60, 90 RHD), 1116325 (50, 70 LHD), 1116332 (50, 70 RHD). Three position switch (same design as 1941). **Ignition Lock**—Briggs & Stratton No. 85371. **Key Series**—8000 to 9499. **Groove**—No. 15.

COIL: Delco-Remy Model No. 1115024 Std., No. 1115026 (with Radio). On engine side of dash. NOTE—Radio type has condenser mounted under coil end cover. **Ignition Current**—2½ amperes idling, 4½ stopped.

CONDENSER: Delco-Remy Part No. 1869704. **Capacity**—.18-.25 microfarad.

DISTRIBUTOR: Delco-Remy 1110801 with 681H Vacuum Spark Control (all Series). Full automatic advance type with auxiliary vacuum spark control. Breaker Gap—.015". Limits .0125-.0175". **Cam Angle or Dwell**—31° closed, 14° open. **Breaker Arm Spring Tension**—19-23 ozs.

Rotation—Counter-clockwise viewed from above.

Distributor Degrees	Automatic Advance R.P.M.	Degrees	Engine R.P.M.
Start	250	3.5	500
7	400	14	800
13	1500	26	3000

Vacuum Spark Control Model 681-H. On distributor (integral type linked directly to breaker plate). Provides additional advance at speeds above 18 MPH. except when engine accelerated or operated with wide open throttle when spark retarded by return spring. **Plunger Travel**—⅛" max.

Vacuum Advance

Distr. Degrees	Eng. Degrees	Vacuum (" of HG)
Start	0°	5-7"
5-6°	10-12°	10-13"

Distributor Removal:—Mounted on right side of crankcase. To remove, disconnect vacuum line, take out 2 hold-down screws in advance arm, lift out.

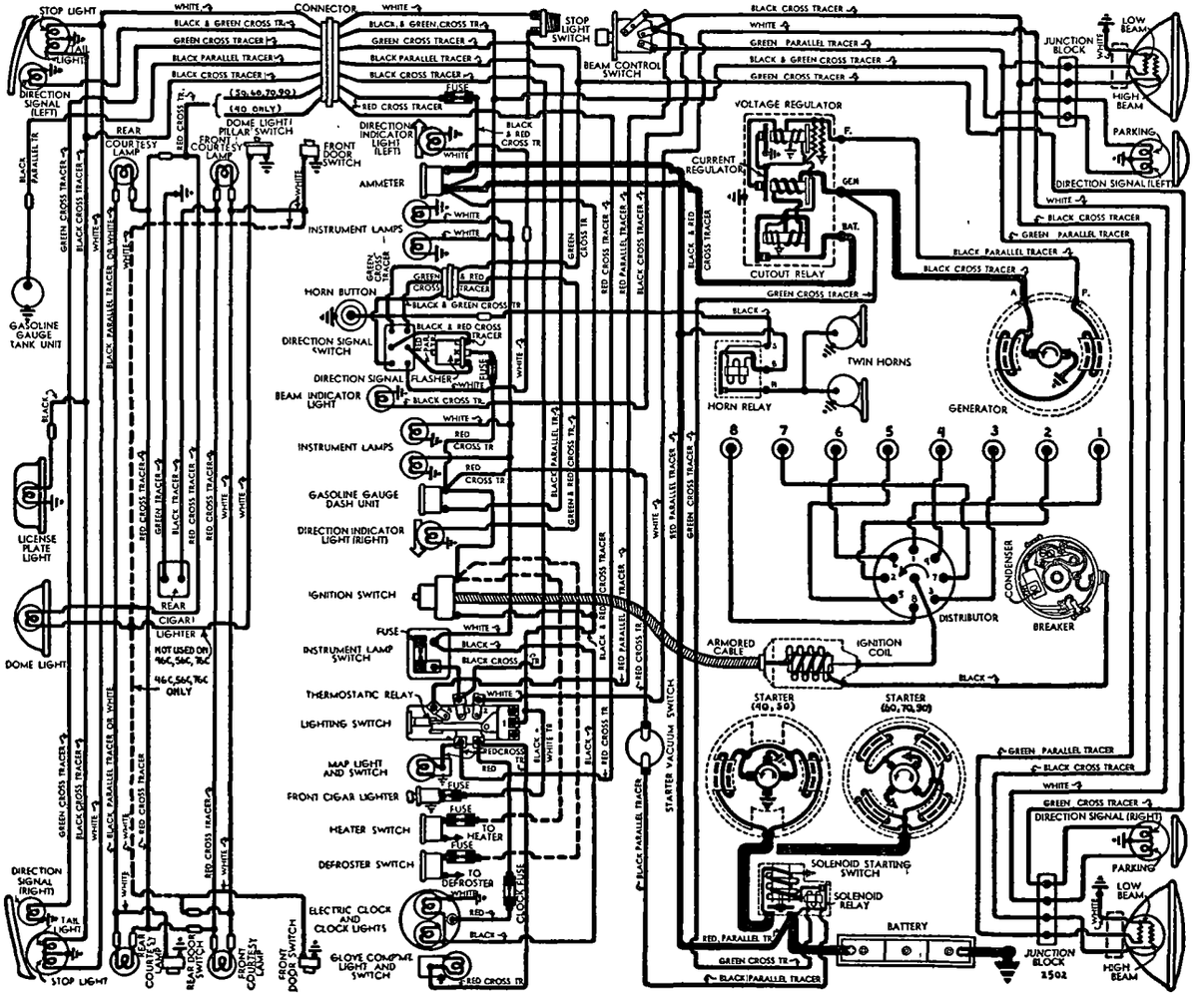

IGNITION TIMING

IGNITION TIMING:—For 74-76 Octane (regular) fuel (40A, 40B Single Carb.), 78-80 Octane (Ethyl) fuel (All Compound Carburetion Cars).

	Flywheel Deg.	Piston Pos.
40A, B; 50 (Single Carb.)	4° BTDC	.0063" BTDC.
40A, B; 50 (Compd. Carb.)	6° BTDC	.0144" BTDC.
60, 70, 90	6° BTDC	.0149" BTDC.

Timing Mark Note (40A,B,50)—Ignition mark is 2° serrated section on flywheel. Use leading edge of mark (6°) for 40A,B,50 with Compound Carburetion, trailing edge of mark (4°) for 40A,B,50 with 1 Carb.

Timing (with Synchroscope)—Connect synchroscope in #1 spark plug lead, direct light on flywheel through inspection hole in right front face of housing. **Idle engine at speed not greater than 350 RPM,** loosen two distributor hold-down screws, rotate distributor until 'ADV' mark on flywheel (see Timing Mark above for Models 40-A, 40-B, 50) lines up with indicator. See Final Ignition Setting

Timing (without Synchroscope)—With #1 piston on compression, turn engine over until 'ADV' mark on flywheel (see Timing Mark above for Models 40-A, 40-B, 50) lines up with indicator on housing. Adjust distributor as directed above.

Final Ignition Setting—Adjust for fuel used so slight 'ping' secured accelerating with wide open throttle between 10-20 MPH. To adjust, loosen distributor hold-down screws, rotate distributor in small steps counter-clockwise (if ping too severe), clockwise (if no ping noted).

CARBURETOR

CARBURETION:—Single Carburetor (Series 40-A, B before Motor No. 4540297). Carter Type WCD Model 487-S or Stromberg AAV-16 Code 7-37. 1" dual type.

Single Carburetor (Series 40A, B; 50 beginning with Motor No. 4540297):—Carter WCD Model 551-S or Stromberg AAV-16 Code 7-66. 1" dual downdraft type.

Single Carburetor (Series 60, 70 beginning with Motor No. 4540297):—Carter WCD Model 549-S or Stromberg AAV-26 Code 7-57. 1¼" dual downdraft type. *Refer to Carb. Index (Buick Compound Carburetion) for special Tune Up and Idle Adjustment Directions.*

Compound Carburetion (Series 40-A, 40-B, 50, 60, 70, 90):—Two Carter Type WCD, or Stromberg Model AAV-16 & AA-1, carburetors used together. 1" dual downdraft types. *For Carburetor Production Changes, and Special Tune Up instructions required for Compound Carburetion, refer to the Carburetor Index for 'Buick Compound Caburetion' and Buick (Carter) or Buick (Stromberg) Carburetor articles.*

Accelerating Pump Setting (Front Carburetor only on Compound Carburetion Cars)—3 holes in throttle lever (Stromberg), 2 holes in pump arm (Carter all models) used for pump link connection. Adjust as follows (#1 and 3 only on Carter Compd.): #1 (Inner—Min.) Hot weather, high-test gasoline. #2 (Center—Med.) Std. normal all year setting. #3 (Outer—Max.) Cold weather, low-test gasoline.

Float Level (All Carburetors)—Adjust as follows:

Carter—3/16" from top seam of float to machined surface of bowl cover (remove gasket and invert to check). Adjust both floats exactly alike. Set floats vertically so that sides aligned with indicator bosses cast on bowl cover (or use Carter gauge T109-162).

Stromberg—Fuel level 19/32" below top edge of bowl with engine idling (level even with bottom of inspection hole on side of bowl).

Metering Jets & Rods—*Refer to Carburetor Index for Carter & Stromberg Downdraft Carburetor Jet Tables.*

Fast Idle (Front Carburetor only on Compound Carburetion Cars):—Integral (built-in carburetor). *For complete data, refer to Carburetion Equip. Index.*

Setting (Carter)—Back off throttle stopscrew so throttle valves closed. With choke valve tightly closed, adjust fast idle screw for .012" (487-S, 528-S, 551-S), .015" (533-S), .018" (549-S) throttle opening by turning screw in 2½ turns from point where it just contacts high step of fast idle cam.

Setting (Stromberg)—Close choke valve against #53 drill (.0595"), adjust by bending fast idle cam connector rod so that locking lever on the throttle valve shaft just clears loose lever on fast idle cam stud as throttle is opened and closed.

Automatic Choke (Front Carburetor only on Compound Carburetion Cars):—Climatic Control (Carter), AAV-16 Type (Stromberg). Built-in type. *For complete data, refer to Carburetion Equip. Index.*

Setting (Carter)—Centered (index mark on cover at reference mark on housing) for all models.

Setting (Stromberg)—1 Notch Lean (40A, B; 50 with Single Carburetor), At Index with 'V' mark on cover centered on housing mark (All Other Models).

CARB. EQUIPMENT

Air Cleaner:—AC No. 1542111 (40-A, 40-B Single Carb.). 1542218 (All Cars with Compd. Carb.). Use Replacement Filter Element Assembly: #1542137 (for 1542111), #1542179 (for 1542218). NOTE—Silencer used on air intake on Compd. Carb. cars.

Fuel Pump:—AC 'AJ' #1537337—Exch. No. 529 (40-A, 40-B, 50), #1537338—Exch. No. 530 (60, 70, 90). Fuel & vacuum type. **Pressure**—4¾ lbs. (4-5¼). *For complete data, refer to Carburetion Equip. Index.*

Gasoline Gauge:—AC Electric. No. 1516304 (Dash Unit), 1516277 (Tank Unit, exc. 90), 1516284 (90). *For complete data, refer to Carburetion Equip. Index.*

BATTERY

BATTERY:—(40A,B; 50) Delco 15E-2. 15 plate, 100 ampere hour capacity (20 hour rate).

Starting Capacity—120 amperes for 20 minutes.

Zero Capacity—300 amperes for 3.5 minutes. Five second voltage—4.25 volts.

Grounded Terminal—Negative(—) to engine block.

Location—On right side under engine hood.

(60, 70, 90) Delco 17E-2. 17 plate, 120 AH. capacity.

Starting Capacity—140 amperes for 20 minutes.

Zero Capacity—300 amperes for 4.5 minutes. Five second voltage—4.4 volts.

Grounded Terminal & Location—See 15E-2 above.

STARTER

STARTER:—Delco-Remy 1107049 (40,50), 1107057 (40,50 RHD), 1107929 (60,70,90), 1107935 (60,70,90 RHD).

Armature 1867897 (1107049, 57), 820158 (1107929, 35).

Drive—Solenoid pinion shift & overrunning clutch.

Rotation—Counter-clockwise at commutator end.

Brush Spring Tension—24-28 ounces.

Cranking Engine—(40, 50) 135 RPM, 150 amperes, 4.5 volts (60,70,90) 115 RPM, 175 amperes, 5 volts.

Performance Data—1107049, 1107057

Torque	R.P.M.	Volts	Amperes
0 ft. lbs.	5000	5.0	65
12 "	Lock	3.37	525

Performance Data—1107929, 1107935

Torque	R.P.M.	Volts	Amperes
0 ft. lbs.	5500	5.67	65
16 "	Lock	3.0	600

Removal:—Flange mounted on right front face of flywheel housing. To remove, remove flange screws.

Starting Switch:—Delco-Remy Solenoid Switch No. 1118019 controlled by Delco-Remy Vacuum Switch No. 1990127 (for Stromberg Carburetors), or Carter Car Starter No. 192-11U (Carter Carburetor). *For complete data, refer to Electrical Equipment Index.*

GENERATOR

GENERATOR:—Delco-Remy 1102679 (40, 50 Std.), 1102668 (60, 70, 90 Std.), 1106409 (City Police 40—1 Carb.), 1106404 (City Police—All Compd. Carb.), 1105857 (All State Police). Two Brush (shunt) type Std. generators interchangeable between models with correct pulley. NOTE—Generators on Compd. Carb. cars have air scoop and heat deflectors on commutator end.

Armatures—No. 1877806 (1102668, 1102679 Gens.).

Pulley Note—Pulleys on Std. Gen. can be identifled as follows: Pulley Diameter 3 13/32" (40,50), 3 17/32" 60, 70, 90); Groove Width 11/16" (40, 50), 15/16" (60, 70, 90).

Charging Rate Adjustment—None (see Regulator).

Maximum Charging Rate—32-34 amperes, 8.0 volts 2400 RPM or 25 MPH (40A,70), 24MPH (40B,50,90), 26 MPH (60). Actual charging rate controlled by voltage regulator.

Performance Data—Cold

	Amperes	Volts	R.P.M.
1102668, 79	30①	8.0	1825
1106404, 9	35①	8.0	1040
1105857	40①	8.0	1850

①—Not maximum output. See Current Regulator.

Brush Spring Tension—25 ounces each.

Field Current—1.75-1.9 amperes (1102668, 79), 1.77-2.0 amperes (1106404, 9), 1.62-1.82 amperes (1105857) at 6.0 volts.

Rotation—Counter-clockwise at commutator end.

Removal:—Generator pivot mounted at left front of engine. To remove, take out pivot and clamp bolts.

Belt Adjustment:—½" deflection with light pressure midway between generator and pump pulleys.

REGULATOR

REGULATOR:—Delco-Remy 1118201 (1102668,79 Gen.), 1118229 (1106404,9 Gen.). 1118237 (1105857 Gen.).

Single Core Type. Voltage & Current Regulator. *For complete data, refer to Electrical Equipment Index.*

CAUTION—Check generator for grounded field coils and leads before changing regulator settings to correct High Charging Rate or High Voltage.

Cutout Relay

Cuts In—6.2-6.7 volts hot.

Cuts Out—0-4.0 ampere discharge current.

Contact Gap—.020" (same for both sets).

Air Gap—.020" (with contacts just closed).

Voltage Regulator

Setting—7.2-7.4 volts (1118201), 7.0-7.2 volts (1118229, 1118237) Hot (at operating temperature).

To Check—Connect ammeter in charging line at regulator 'BAT' terminal, voltmeter between this terminal and ground. Operate generator at 2800 RPM., adjust charging rate to 8-10 amperes (use variable rheostat or AVR set). With regulator hot (150°F), decrease generator speed until cutout relay contacts open, then increase speed to 2800 RPM. and check hot voltage setting (above).

To Adjust—Change regulator armature spring tension slightly by bending hanger at lower end of one spring nly. If further adjustment required, see Single Core Regulator article in Electrical Equip-

CONTINUED N NEXT PAGE

CONTINUED FROM PRECEDING PAGE

ment Section for other (2nd) spring adjustment.
Air Gap—.070" between center of core and armature with contacts just closing (press down on armature to open contacts, release pressure, check gap at point where contacts just close).

Current Regulator

Setting—34-36 amperes (1118201, 1118229), 38-40 amperes (1118237) hot (at operating temperature).
To Check—Remove regulator cover, connect short jumper between Voltage Regulator frame and upper contact support bracket (to short out Voltage Regulator), connect ammeter in charging line at regulator 'BAT' terminal, turn on car lights and accessories. Operate generator and increase speed until output remains constant. With regulator hot (150° F.), reading should agree with setting (above).
To Adjust—Same as for Voltage Regulator (above).
Air Gap—.080" (check same as Voltage Regulator).

LIGHTING

LIGHTING:—Headlamps—Guide 'Sealed Beam' type. *For complete data, refer to Electrical Equipment Index.*
Headlamp Adjustment—Aim upper beam straight ahead (hot spot center 3" below lamp center height).
Beam Indicator—In top edge of speedometer dial. Lighted when Upper (Country) beam in use.
Direction Signal—*Refer to Electrical Equip. Index.*

Switches

Lighting—Delco-Remy No. 1995016.
Beam Selector—Delco-Remy No. 1997010.
Directional Signal—Delco-Remy. Two types used: Plastic LHD—1995510 (Brown), 1995513 (Pearl Grey). Die Cast—1995503 (LHD Brown), 199507 (LHD Grey), 1995504 (RHD Brown), 1995508 (RHD Grey).
Map Light—Delco-Remy No. 1997762.
Glove Compt. D-R 1997747 (40,60,90), 1997771 (50,70).

Bulb Specifications

Position	Candlepower	Mazda No
Headlamps	Sealed Beam	
Park & Front Dir. Signal	21-3	1154
Rear Direction Signal	21	1129
Instr., Map, Clock, Glove Compt.	1.5	55
Trunk (50,70), Radio	1.5	55
Beam & Dir. Sig. Indicators	1	51
Stop & Tail	21-3	1154
Rear License	3	63
Dome, Courtesy (Step)	6	82

MISC. ELECTRICAL

THERMOSTATIC RELAY:—Delco-Remy. On lighting switch. Contacts remain closed with 30 amperes, open in 3 minutes with 42 amps. at 70°F. Not adj.

FUSES:—Dome Light & Rear Cigar Lighters (50, 60, 70, 90 & 41SE). 30 ampere. Back of instrument panel.
Cigar Lighters—30 ampere. In back of lighter.
Direction Signal—14 ampere. In connector.
Instrument Lights—14 ampere. On back of switch.
Clock—2 ampere. In connector in clock lead.
Convertible Top—9 ampere. In switch feed line.

HORNS:—Delco-Remy No. 1999519 or 543 (Low Note, right horn), 1999520 or 544 (High Note, left horn). Vibrator type, blended tone, operated by relay.

Type	Current (at 6 volts)	Air Gap
519 or 543 (low)	19-21 amperes	.044-.049"
520 or 544 (high)	18-20 amperes	.034-.039"

Horn Relay:—Delco-Remy Model 1116775.
Contact Gap—.025". **Air Gap**—.015" (closed).
Contacts Close—2.75-4.0 volts.

ENGINE

SERIES 40 & 50

ENGINE SPECIFICATIONS:—Own 40, 50. 8 cylinder, 'I' head type. **Bore**—3 3/32". **Stroke**—4⅛".
Displacement—248 cubic ins. **Rated HP**—30.63.
Developed Horsepower—110 at 3400 RPM (40 Single Carb.), 118 at 3600 RPM (40 Compd. Carb., 50).
Compression Ratio—6.0-1 (40 Single Carb.), 6.3-1 (40 Compound Carb., 50) cast-iron heads.
Compression & Vacuum Reading—*See Tune-up data. Refer to Buick Shop Notes for Cylinder Head Gasket Installation & Engine Mounting Adjustment data.*
PISTONS:—Cast iron, cam ground, turbulator top, full skirt, with Lubrite finish. **Length**—4¼".
Refer to Buick Shop Notes for Original Cylinder and Piston Size Identification (color marks).
Weight—1.528 lbs. with bushings), 1.898 lbs. (with rings and pin).
Removal—Pistons and rods removed from above.
Clearance—.0017-.0023" at top of skirt (65-75°F).
Fitting Cast Iron Pistons: Pistons must only be fitted with piston and block at 65-75°F. If micrometer used, check piston at top of skirt 90° from pin hole, cylinders at smallest diameter between top and center of bore 90° from crankshaft. If feeler gauge used, insert ½" x 12" feeler between piston and cylinder wall at right angle to pin bosses (piston inverted, pin parallel to crankshaft). Piston should pass through bore of own weight on .0015" feeler, hold of own weight on .00225".
Replacement Pistons: *See Buick Shop Notes for new 1946 type Replacement service pistons.*
Installing Pistons:—Head hollow side to camshaft.
PISTON RINGS:—4 rings, all above pin. #1 Compression (upper inner edge stepped), #2 Comp. (taper faced, side marked TOP up), #3 & #4 Oil (slotted type, both alike & can be installed either side up.

Ring	Width	End Gap	Side Clearance
Compression①	3/32"	.010-.020"	.0015-.0035"
Oil Control	3/16"	.010-.020"	.0015-.003"

①—Wall Thickness: Top .155", #2 .135".
Replacement Rings:—*Refer to Buick Shop Notes.*
PISTON PIN:—Diameter—.8124-.8129". **Length**—2 11/16". Pin clamped in rod. Pins not furnished separately. All replacement pistons have fitted pins installed.
Pin Fit in Piston—.0003-.0004" at 70° (easy finger push). NOTE—Pin clamp bolt tension 25-30 ft. lbs.
CONNECTING ROD:—Length—7⅝". **Weight**—28.46 ozs.
NOTE—New shot-blasted rod (Part No. 1393255) used with Cast Iron pistons. *Refer to Buick Shop Notes for Rod Replacement data (previous models).*
Lower Bearing Diameter—2".
Lower Bearing—Spun babbitt-lined type.
Clearance—.0008-.0018". **Sideplay**—.005-.010".
Bearing Adjustment:—Shims. Do not file rods or caps.
Installing Rods:—Marker on rod and cap toward rear of engine, oil hole to camshaft. Align rod and cap. NOTE—Use special ground bolts & palnuts on caps.
CRANKSHAFT:—5 bearing, 8 integral counterweights.
Bearing Diameters—#1, 2 5/16"; #2, 2⅜"; #3, 2 7/16"; #4, 2½"; #5, 2 9/16".
Bearings—Steel-backed, durex-lined, slip-in type. Finished bearings replaced in complete sets only. *Refer to Buick Shop Notes for Replacement Bearing servicing and Rear Main Bearing Oil Seal Installation.*
Clearance—.0007-.0025".
Bearing Adjustment:—Shims. Do not file caps.
End Thrust:—Center (#3) bearing. **Endplay** .004-.008".
CAMSHAFT:—5 bearing. Non-adjustable chain drive. *See Buick Shop Notes for Timing Chain Cover Oil Seal.*
Bearing Diameters—#1, 2 5/32"; #2, 2⅛"; #3, 2 3/32"; #4, 2 1/16"; #5, 1¾".
Bearing Type—Steel-backed, babbitt bushings.
Clearance—.0005-.0035".
End Thrust:—Thrust plate between front bearing and camshaft sprocket. **Endplay**—.004-.008".
Timing Chain:—Link-Belt. Width 1". Pitch .500". Lgth. 24½" or 49 links. Initial slack ¼-⅜". Worn 1".
Camshaft Setting:—Mesh copper-plated washers on chain (10 links apart) with sprocket marks upward.

VALVES:—	Head Diam.	Stem Diam.	Overall Length
Intake	1 17/32"	.3715-.3725"	5 7/64"
Exhaust	1 11/32"	.3711-.3719"	5 7/64"

	Seat Angle	Lift	Stem Clearance
Intake	45°	.348"	.0015-.0035"
Exhaust	45°	.342"	.0021-.0039"

Valve Guides:—Press fit in head, install with stepped end up. Ream for proper clearance on valve stem.
Valve Springs:—Double springs on all valves. Spring free length 1 19/32" (inner), 2 11/32" (outer).

	Inner Spring		Outer Spring	
	Pressure	Length	Pressure	Length
Closed	17½-22½ lbs.	1 11/16"	29½-34½ lbs.	1 1/16"
Open	43-54 lbs.	1 5/16"	74-80 lbs.	1 1/16"

Valve Lifters:—Barrel type. Diam. .9975-.9985". Guide holes reamed in block. **Clearance**—.0005-.0025".
Rocker Arms:—*Refer to Buick Shop Notes for data.*

ENGINE

SERIES 60, 70, 90

ENGINE SPECIFICATIONS:—Own 60, 70, 90. 8 cylinder, 'I' head type. **Bore**—3 7/16". **Stroke**—4 5/16".
Displacement—320.2 cubic ins. **Rated HP**—37.81.
Developed Horsepower—165 at 3800 RPM.
Compression Ratio 6.7-1 (2 Carb.), 6.3-1 (1 Carb.).
Compression & Vacuum Reading—*See Tune-up data. Refer to Buick Shop Notes for Cylinder Head Gasket Installation & Engine Mounting Adjustment data.*
PISTONS:—Fireball, turbulator top, aluminum alloy, transverse slot, full skirt, cam ground type with anodized finish. No. 'T-slot' used. **Length** 4 9/16".
Refer to Buick Shop Notes for Original Cylinder and Piston Size (color marks) & Replacement Pistons.
Weight—1.178 lbs. (stripped), 1.658 lbs. (complete, including rings and pin).
Removal—Pistons and rods removed from above.
Clearance—.0026-.0032" at top of skirt (65-75°F).
Fitting New Pistons:—Piston fits should only be made with piston and block at 65-75°F. If micrometer used, check piston at top of skirt 90° from pin hole, cylinders at smallest diameter between top and center of bore 90° from crankshaft. If feeler gauge used, insert ½" x 12" feeler between piston and cylinder wall at right angle to pin bosses (piston inverted, pin parallel to crankshaft). Piston should pass through bore of own weight on .002" feeler, hold of own weight on .00275" feeler.
Replacement Pistons: *See Buick Shop Notes for new 1946 type Replacement service pistons.*
Installing Pistons:—Head hollow side to camshaft.
PISTON RINGS:—4 rings, all above pin. #1 Compression (upper inner edge stepped), #2 Comp. (taper faced, side marked TOP up), #3 & #4 Oil (slotted type, both alike & can be installed either side up.

Ring	Width	End Gap	Side Clearance
Compression①	3/32"	.010-.020"	.0015-.0035"
Oil Control	3/16"	.010-.020"	.0015-.003"

①—Wall thickness: Top .165", #2 .145".
Replacement Rings:—*Refer to Buick Shop Notes.*
PISTON PIN:—Diameter—.8744-.8749". **Length**—3 1/16". Pin clamped in rod. Pins not furnished separately. All replacement pistons have fitted pins installed.

ENGINE

CONTINUED FROM PRECEDING PAGE

Pin Fit in Piston—.0003-.0004" at 70° (easy finger push). NOTE—Pin clamp bolt tension 25-30 ft. lbs.

CONNECTING ROD:—Length—8¼". **Weight**—35.58 ozs.
Lower Bearing Diameter—2¼".
Lower Bearing—Spun babbitt-lined type.
Clearance—.0008-.0018". **Sideplay**—.005-.010".
Bearing Adjustment:—Shims. Do not file rods or caps.
Installing Rods:—Marker on rod and cap toward rear of engine, oil hole to camshaft. Align rod and cap.

CRANKSHAFT:—5 bearing, 8 integral counterweights.
Bearing Diameters—#1, 2 9/16"; #2, 2⅝"; #3, 2 11/16"; #4, 2¾"; #5, 2 13/16".
Bearings—Steel-backed, durex-lined, slip-in type. Finished bearings replaced in complete sets only. *Refer to Buick Shop Notes for Replacement Bearing Servicing and Rear Main Bearing Oil Seal Installation.*
Clearance—.0007-.0025".
Bearing Adjustment:—Shims. Do not file caps.
End Thrust:—Center (#3) bearing. **Endplay** .004-.008".

CAMSHAFT:—5 bearing. Non-adjustable chain drive. *See Buick Shop Notes for Timing Chain Cover Oil Seal.*
Bearing Diameters—#1, 2 5/32"; #2, 2⅛"; #3, 2 3/32"; #4, 2 1/16"; #5, 1¾".
Bearing Type—Steel-backed, babbitt bushings.
Clearance—.0005-.0035".
End Thrust:—Thrust plate between front bearing and camshaft sprocket. **Endplay**—.004-.008".
Timing Chain:—Link-Belt. Width 1". Pitch .500". Length 25" or 50 links. Initial slack ¼-⅜". Worn 1".
Camshaft Setting:—Mesh copper-plated washers on chain (10 links apart) with sprocket marks upward.

VALVES:	Head Diam.	Stem Diam.	Overall Length
Intake	1 25/32"	.3715-.3725"	5¼"
Exhaust	1 7/16"	.3711-.3719"	5¼"

	Seat Angle	Lift	Stem Clearance
Intake	45°	.347"	.0015-.0035"
Exhaust	45°	.348"	.0021-.0039"

Valve Guides:—Press fit in head, install with stepped end up. Ream for proper clearance on valve stem.
Valve Springs:—Double springs on all valves. Spring free length 1 19/32" (inner), 2 11/32" (outer).

	Inner Spring Pressure	Length	Outer Spring Pressure	Length
Closed	17½-22½ lbs.	1 11/16"	29½-34½ lbs.	1 15/16"
Open	48-54 lbs.	1 5/16"	74-80 lbs.	1 13/16"

Valve Lifters:—Barrel type. Diam. .9975-.9985". Guide holes reamed in block. **Clearance**—.0005-.0025".
Rocker Arms:—*Refer to Buick Shop Notes for data.*

VALVE TIMING

►**Tappet Clearance:** *CAUTION—Feeler gauge used depends on engine temperature (do not use .015" feeler). See "Tappet Clearance Adjustment Procedure" in Buick Shop Notes to secure .015" lash at Road Operating Temperature.*

Valve Timing (Series 40, 50): See Camshaft Setting.
Timing Points (Valve .004" Open)
Intake Valves—Open 13° BTDC. Close 68° ALDC.
Exhaust Valves—Open 55° BLDC. Close 22° ATDC.
Opening and Closing Points
Intake Valves—Open 26° BTDC. Close 81½° ALDC.
Exhaust Valves—Open 68° BLDC. Close 35° ATDC.

Valve Timing (60, 70, 90): See Camshaft Setting.
Timing Points (Valve .004" Open)
Intake Valves—Open 14° BTDC. Close 71° ALDC.
Exhaust Valves—Open 56° BLDC. Close 25° ATDC.
Opening & Closing Points
Intake Valves—Open 27° BTDC. Close 84½° ALDC.
Exhaust Valves—Open 69° BLDC. Close 38½° ATDC.
Valve Timing Check—With .015" tappet clearance, #2 or 7 exhaust valve should be .145" open (Series 40, 50), .155" open (Series 60, 70, 90)—(actual valve opening—use dial indicator) with #1 & 8 pistons at TDC and flywheel mark 'U.D.C./1&8' at indicator (inspection hole under cover above starter).

LUBRICATION

LUBRICATION:—Pressure type (gear type oil pump in crankcase. *See Buick Shop Notes for Oil Pump data.*
Normal Oil Pressure:—45 lbs. at 35 MPH.
Oil Pressure Regulator:—On pump. Opens at 45 lbs.
Crankcase Capacity—Dry—7½ qts. (Series 40, 50), 9 qts. (60, 70, 90). Refill—5½ qts. (40, 50), 7 qts. (60, 70, 90).

COOLING

Capacity (Series 40, 50)—13 qts. (14¼ with heater).
Capacity (60, 70, 90)—16¾ qts. (18 with heater).
Pressure Valve—In filler cap. Opens at 7 lbs.
Water Pump:—Ball-bearing, packless type. *See Water Pump Section for complete data.*
Thermostat:—Harrison. In cylinder head outlet.
Setting—Opens at 148-155°F. Fully open 173°F.
Temperature Gauge:—AC #1511070 Thermo gauge. *See Miscellaneous Section for complete data.*

CLUTCH

CLUTCH:—Own Make with Borg & Beck 'Borglite' or Long Driven Member. Single plate, dry disc type. NOTE—Series 40, 50 Clutch is "Crown Spring" type. *See Clutch Section for complete data.*
Facings (Series 40, 50)—Woven type. Inside Diameter 6". Outside Diameter 10". Thickness ⅛".
Facings (60, 70, 90)—Woven type. Inside Diameter 6½". Outside Diameter 10½". Thickness ⅛".
Pedal Adjustment:—Free movement ¾-1" (adjusting screw and locknut on link at clutch fork). Toeboard clearance set by rubber bumper under toeboard.
Removal:—Remove Rear Axle & Transmission (see below), take off clutch underpan, disconnect linkage at yoke, remove clutch release bearing support by taking out spring washer in housing, pull out yoke (with release bearing) from fulcrum, mark clutch and flywheel, remove cover mounting screws. NOTE—Metal spacers may be used between release levers and cover to relieve spring tension.

TRANSMISSION

TRANSMISSION:—Own Make. All helical gear, constant-mesh, synchro-mesh (second & high), sliding gear (low & reverse) with steering col. shift. *See Transmission Section for complete data.*
Transmission Control:—Buick 'Handi-shift' type. *See Transmission Section for complete data.*
Removal:—Remove Rear Axle (see below), remove rear transmission support (wire shims to ends of support for correct replacement) and steady rest rod, place engine jacks (J-1580) on frame cross member with pilot end in hole in housing at each side of engine mounting, tighten jacks to take load off mounting, disconnect shift linkage, and remove transmission mounting bolts (install guide pins J-851), remove 2 nuts freeing rear engine mounting (bolt heads seat in notches), adjust jacks to take strain off mounting bolts, remove transmission.
Transmission Support Mounting Adjustment—*See Buick Shop Notes.*

UNIVERSALS

UNIVERSAL JOINT: Saginaw or Spicer No. 202-5 (Series 40), No. 202-13 (Series 50). Saginaw type only (Series 60, 70, 90). One used. *See Universals Section for complete data.*

REAR AXLE

REAR AXLE:—Own Make. Semi-floating, hypoid gear type with torque tube drive. *See Rear Axle Section for complete data.*
Ratio—4.4-1 (Std. 40B, 50), 4.1-1 (Std. 40A, 70; Optl. 40B), 3.9-1 (Std. 60), 4.55-1 (Std. 90).
NOTE—Ratio is stamped on underside of housing. Axles not paint marked on end of axle shaft flange except for 4.44-1 Ratio axle—White.
Backlash—.006-.010". Screw adjustment.
Removal:—Hoist rear end of car. Disconnect parking brake at equalizer, hydraulic brake line at fitting anchored to left channel iron-strut, lower end of shock absorber links, rear radius rod at axle end, lower end of chassis springs (tie springs to bumper for clearance). Disconnect torque tube at universal joint ball, remove axle assembly from beneath car. **Series 40, 50, 60, 70 Note**—Torque tube flanged at rear end and bolted to carrier but **these bolts should never be disturbed except for gasket replacement.**
Axle Shaft Removal:—See Buick Rear Axle article.
Wheel Bearing Adjustment—None.
Rear Suspension:—Coil springs, conventional axle. *See Rear Axle Section for complete data.*

SHOCK ABSORBERS

Delco—Double acting, hydraulic types as follows: **40, 50, 60, 70 Front**—Model 1948A (right & left). **40, 50, 60, 70 Rear**—Model 2105-C, D (parallel cyl.). **90 Front**—Model 1948A. **90 Rear**—Model 1757-A, B. *See Shock Absorber Section for complete data.*

FRONT SUSPENSION

Front Suspension:—Independent, linked parallelogram type with coil springs. *See Front Suspension Section for complete data.*
Kingpin Inclination—4¼° crosswise (40, 50, 60, 70), 5¼° crosswise (90) with ⅜° Camber.
Camber—⅜° Positive (Limits ⅞° Pos. to ⅝° Neg.). Must be alike for both wheels within ¾°.
Caster—⅜° Positive (Limits 1⅛° Pos. to 0°). Must be alike for both wheels within ½°.
Toe In—1/16-⅛". Adjust both tie rods equally.
Steering Geometry—With inner wheel turned 21½° ±¾°, outer wheel turned exactly 20°.

STEERING GEAR

Steering Gear: Saginaw Ball Bearing Worm-and-Nut *See Steering Gear Section for complete data.*

BRAKES

BRAKES:—Service—Bendix hydraulic, duo-servo, single anchor type without eccentric adjustment. Stepon lever applies rear wheel service brakes. *See Brake Section for complete data.*
Drums—12" Centrifuse type (Series 40, 50, 60, 70), 14" Cast Iron type (Series 90).
Lining—Woven—Ferodo BZ-10-2C (primary shoe), Moulded Manhattan Raybestos #2320K (secondary).

	Width	Thickness	①Length
40, 50	1¾"	3/16"	9 15/16"—12¾"
60, 70	2¼"	3/16"	10"—12 15/16"
90	2 "	¼"	12 1/16"—14¾"

①—Primary Shoe—Secondary Shoe.
Clearance—.015" at each end of secondary (rear) shoe with primary shoe forced out against drum.
Hand Brake:—Stepon type. See Service Brakes above.
NoRol: Optional. *See Brake Section for complete data.*

MISC. MECHANICAL

Power Operated Convertible Top: Electric type. *See Miscellaneous Section for complete data.*

HOOD ADJUSTMENT, FRONT FENDER REMOVAL, FRONT & REAR FENDER EXTENSION ADJUSTMENT: *See Buick Shop Notes.*

MODEL IDENTIFICATION

STARTING SERIAL NUMBERS

Year	Flint Mich.	South Gate, Cal.	Linden N. J.	Kansas City, Kan.
1946	1 4364445	2 4380001	3 4390001	———
1947	1 4524131	2 4530001	3 4542001	4 4536001
1948	1-4801266	2-4820001	3-4824001	4-4830001

	Atlanta Ga.
1948	6-4834001

Location—On plate on right side of cowl under hood ('46-47), on left front door hinge post ('48).
Identification—First digit of number indicates the assembly plant as follows: 1) Flint, 2) California, 3) Linden, 4) Kansas City, 6) Atlanta.

ENGINE NUMBER: Stamped on boss on right side of crankcase below pushrod cover.
1946 Numbers—First numbers as follows:
4558037 4 (for 40), 4558037 5 (for 50), 4558297 7 (70).
1948 Numbers—First numbers as follows:
49998814 (for 40), 49998815 (for 50), 49998817 (70).
Identification—Last digit of number indicates the Series: 4—Series 40, 5—Series 50, 7—Series 70.

TUNE-UP

COMPRESSION PRESSURE: 112 lbs. (for 40 and '46-47 50), 114 lbs. (1948 50 and All 70), 118 lbs. (for 1948 Dynaflow) at cranking speed.

VACUUM READING: Steady 18-20" idling at 8 MPH. or 450 RPM. for all models.

FIRING ORDER: 1-6-2-5-8-3-7-4.

SPARK PLUG GAPS: .025". Limits .023-.028".
Plug Type: AC No. 48. 14 mm. Metric.

IGNITION: *See Coil, Condenser, and Distributor.*
Breaker Gap—.015". Limits .0125-.0175".
Cam Angle or Dwell—31° closed, 14° open.
►*CAUTION—Use of cam angle to set point gap not recommended by car manufacturer. If dwell meter used, make final check that gap within .0125-.0175".*
Breaker Arm Spring Tension—19-23 ounces.
Automatic & Vacuum Advance—*See Distributor.*

IGNITION TIMING: 4° BTDC. (40, 50), 6° BTDC. (70).
►*CAUTION—Ignition timing should be set within yellow band of flywheel mark for proper engine performance.*
Timing Procedure—*See Ignition Timing.*
Flywheel Mark—"ADV. 4°" (for 40, 50), "ADV. 6°" (for 70) followed by yellow knurled section on flywheel ⅛" wide which gives timing range of 1° (4-5° for 40, 50; 6-7° for 70). Index mark located on edge of timing hole under cover on housing above starter.
Final Ignition Setting—Very light "ping" may occur with part throttle on a hard pull, or during acceleration between 10-20 MPH. with wide open throttle.

CARBURETION: *See Carburetor & Carb. Equipment.*
Idle Setting—Both idle screws approximately 1 turn (½-1) turn open and set for smooth idle (turn screws out for richer mixture). Idle speed 8 MPH. or 450 RPM.
Float Level (Carter)—3/16" (608S, SA; 609S, SA), 5/32" (608SC, 609SC, 663S, 664S) top of each float to gasket seat on cover with valve seated (invert to check). Fuel level even with bottom of inspection hole on sid of float bowl with engine idling.
Float Level (Stromberg Carb.)—Fuel level 19/32" below top edge f float bowl or even with bottomof inspection hole on side of bowl, engine idling.
Accelerating Pump (Carter Carb.)—2 holes in arm. Inner hole minimum charge, Outer hole maximum. NOTE—No seasonal pump adjustment on 608S, SA and 609S, SA carburetors.
Accelerating Pump (Stromberg Carb.)—Center hole (med. stroke) normal for all-seasonal operation.
Fuel Pump Pressure—4½-5½ lbs. at pump outlet port or 4-5 lbs. at carburetor inlet.

MANIFOLD HEAT CONTROL: Thermostatic coil type.
Setting—Thermostatic coil wind-up should be ¼ turn at 70° F. Adjust counterweight spring clip so that edge of counterweight is approximately 7/16" past vertical center line of pivot with valve closed

►**VALVE TAPPET CLEARANCE:** *CAUTION—Feeler gauge used depends on engine temperature (do not use .015" feeler). See "Tappet Clearance Adjustment Procedure" in Buick Shop Notes to secure .015" lash at Road Operating Temperature.*
Valve Timing Check—*See Valve Timing.*

STARTING: *See Battery, Starter, Generator, Regulator.*

IGNITION

IGNITION SWITCH ('46-47): D-R No. 1116296 (Series 40 LHD.), 1116297 (Series 40 RHD.), 1116325 (Series 50, 70 LHD. exc. Conv.), 1116357 (Series 50, 70 LHD. Convertible), 1116332 (Series 50, 70 RHD.).
NOTE—Armored cable used on 1946-47 cars only.

IGNITION SWITCH (1948): Delco-Remy Numbers:
Special—1116359 (LHD), 1116297 (RHD).
Super & Rdmstr.—1116360 (LHD), 1116332 (RHD).
Convertible (Super & Rdmstr.)—1116361 (LHD).
NOTE—Switch on Convertible has silver contacts.
Ignition Lock—Briggs & Stratton No. 85370 (Lock Cylinder), No. 85317 (Lock Case).
Key Series—8000 to 9499. **Groove**—No. 15.

COIL: Delco-Remy Nos.: 1115024 (Early 1946), **1115026** with radio condenser (Late 1946, All 1947, RHD Cars 1948), **1115328** (1948 LHD Cars). NOTE—Armored cable not used with 1115328 coil.
Location—On engine side of dash (1946-47 cars), on right side of engine (1948 cars).
Ignition Current—2½ amperes idling, 4½ stopped.

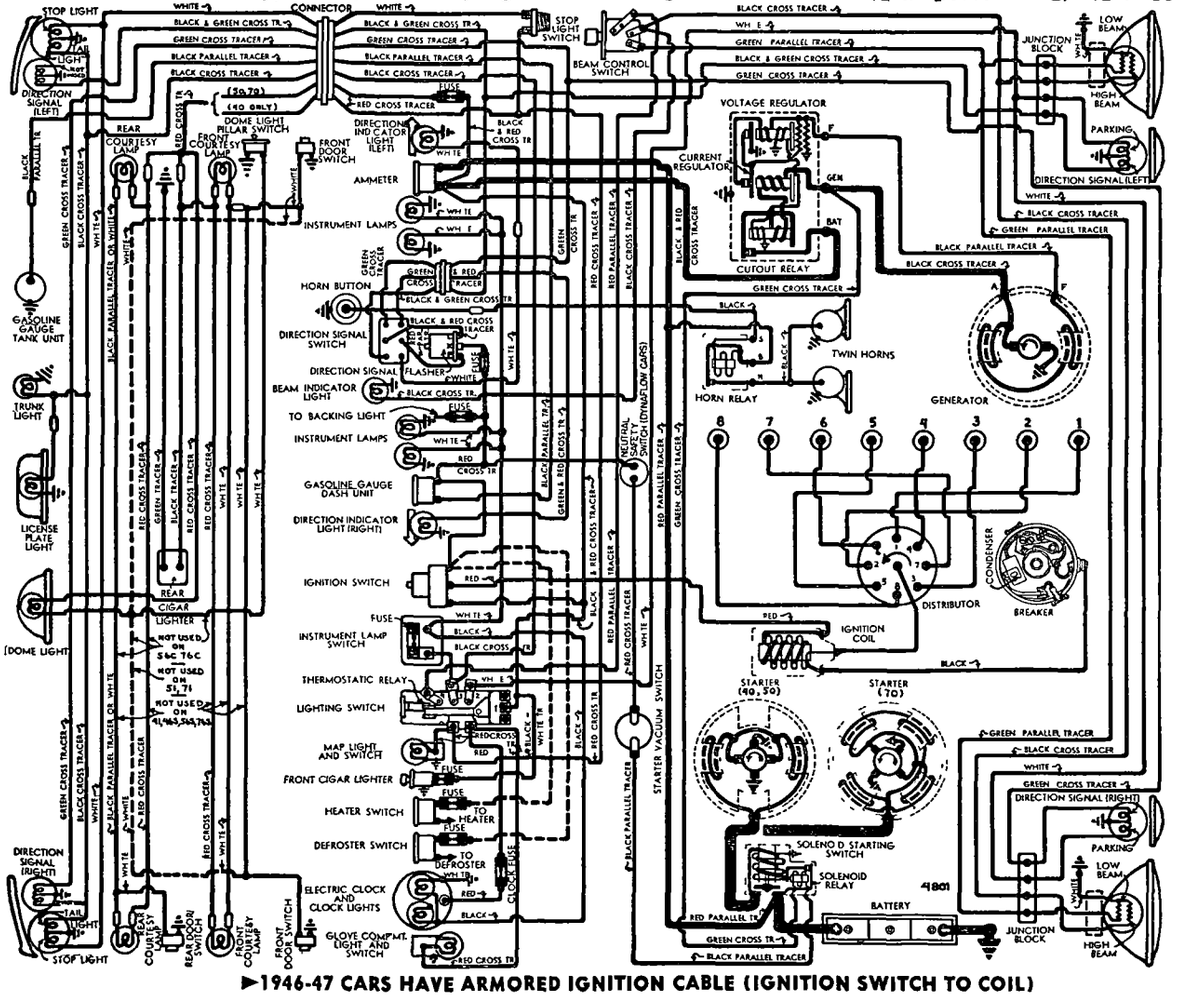

►1946-47 CARS HAVE ARMORED IGNITION CABLE (IGNITION SWITCH TO COIL)

CONDENSER: Delco-Remy Part No. 1869704.
Capacity—.18-.25 microfarad.

DISTRIBUTOR: Delco-Remy No. 1110801. Single breaker, full automatic advance type with auxiliary vacuum spark control and manual adjustment

►*1946-47 CAUTION—To Correct Sheared Drive Gear Pins and Improve Lubrication on Early Distributors, see "Electrical System Notes" in Buick Shop Notes.*
Breaker Gap—.015". Limits .0125-.0175".
Cam Angle—31° closed, 14° open.

►*CAUTION—Use of cam angle to set point gap not recommended by car manufacturer. If dwell meter used, make final check that gap within .0125-.0175".*
Breaker Arm Spring Tension—19-23 ounces.
Rotation—Counter-clockwise viewed from above.

Distributor **Automatic Advance** Engine

Degrees	R.P.M.	Degrees	R.P.M.
Start	250	3.5	500
7	400	14	800
13	1500	26	3000

Vacuum Spark Control: Delco-Remy No. 681-H. Integral type (mounted on distributor, linked directly to breaker plate). Provides additional advance at speeds above 18 MPH. except when engine accelerated or operated with wide open throttle when spark retarded by return spring within unit. Maximum plunger travel ⅛".

Vacuum Advance

Distr. Degrees	Eng. Degrees	Vacuum (" of HG)
Start	0°	5-7"
5½°	11°	10-13"

Distributor Removal: Mounted on right side of crankcase. To remove, disconnect vacuum line, take out two hold-down screws in advance arm, lift out.

IGNITION TIMING

Std. Setting	Flywheel Degrees	Piston Pos.
Series 40①, 50③	4° BTDC	.0063" BTDC.
Series 70②	6° BTDC	.0149" BTDC.

①—Regular Fuel. ②—Ethyl Fuel.
③—Regular Fuel 1946-47, Ethyl Fuel 1948.

►*CAUTION—Ignition timing should be set within yellow band of flywheel mark for proper engine performance.*
Flywheel Mark—"ADV. 4°" (for 40, 50), "ADV. 6°" (for 70) followed by yellow knurled section on flywheel ⅛" wide which gives timing range of 1° (4-5° for 40, 50; 6-7° for 70). Index mark located on edge of timing hole under cover on housing above starter.

►**TIMING MARK NOTE**—On first 1946 cars, timing mark on Series 40, 50 is a ¼" wide knurled section on flywheel, painted yellow, with leading edge marked "ADV. 4°" and trailing edge marked "2°"; on Series 70, mark is a yellow painted line stamped "ADV. 6°". *On these early 1946 cars, set ignition at leading edge of timing mark or within ⅛" (1°) of leading edge.*

Timing (With Synchroscope)—Connect synchroscope to #1 spark plug lead, direct light on flywheel through inspection hole in right front face of housing. Idle engine at **speed not greater than 350 RPM.**, loosen two distributor hold-down screws, rotate distributor until "ADV" mark on flywheel (see Flywheel Mark Note above) lines up with indicator, tighten hold-down screws. Refer to Final Ignition Setting

Timing (Without Synchroscope)—With #1 cylinder on compression, turn engine over until "ADV" mark on flywheel lines up with indicator in inspection hole in right front face of housing. Loosen two distributor hold-down screws, rotate distributor until contacts begin to open, tighten hold-down screws.

Final Ignition Setting—*Must be within yellow band of flywheel mark (leading edge desired).* If timing advanced, engine roughness may result even with high octane fuel. If timing retarded to overcome heavy "ping", engine performance and economy will be lessened (higher octane fuel should be used). A very light "ping" may occur with part throttle on a hard pull, or during acceleration with wide open throttle between 10-20 MPH. Do not retard timing to eliminate this light "ping."

CARBURETOR

Carter WCD or Stromberg AAV types. Dual (double barrel) downdraft types with Automatic Choke.

Series	Carter WCD	Stromberg
40, 50 ('46-47)	608S, SA, SC	AAV-16 Code 7-66
40, 50 (1948)	663S	①AAV-167 Code 7-69
70 (1946-47)	609S, SA, SC	AAV-26 Code 7-57
70 (1948)	664S	①AAV-267 Code 7-70

①—Equipped with new Stromberg Vacuum Starting Switch.

Code No. (Stromberg)—Stamped either on body or on a metal tag attached to the body.
See Carburetor Section for complete data.

Adjustment (Idle Setting, Accelerating Pump Setting, and Float Level)—***See Tune-up data.***

Metering Jets & Rods—***See Carburetor Section for Carter & Stromberg Jet Specifications.***

Throttle Linkage Adjustment (Synchro-Mesh Transmission): Check linkage for smooth operation of throttle valve from closed to wide open position (pedal correctly secured to floor, pedal rod free in hole in floor mat, return spring proper tension for closed position). Wide open throttle stop should be accelerator pedal striking floor mat (not throttle lever stop striking boss on carburetor). Adjust as follows: With linkage disconnected at throttle operating ball joint, open throttle valve to wide open position against stop, have man press accelerator against floor mat, adjust ball joint so screw will just enter upper hole in throttle lever, turn ball joint 1 or 2 turns clockwise, connect ball joint to throttle lever. Check choke unloader operation.

Throttle Linkage Adjustment (Dynaflow Drive Cars): With engine idling at 450 RPM., clearance between **edge of bracket** (attached to dash at lower end of vertical equalizer shaft) and **ear on lever** (just above shaft operating lever) should be 1/32-1/16" (adjust at ball joint end of throttle operating rod). Check wide open position of throttle valve with engine stopped and adjust at ball joint (as above) to secure wide open throttle position with pedal striking floor mat (not throttle lever stop striking boss on carburetor). Check choke unloader operation. Check Dash-Pot Setting (following).

Dash Pot Setting (Dynaflow Drive Cars): Turn adjusting screw on lever ahead of dash pot plunger for 1/64-1/32" clearance between fast idle cam and fast idle screw with choke valve held closed.

Fast Idle: Carter Dual (WCD) Carburetor type or Stromberg Type (AAV-16, 26, 167, 267 Carburetors).
See Carburetion Equipment Section for data.
Setting (Carter Carb.)—Adjust fast idle screw on throttle shaft lever for .012" (Ser. 40, 50: 608S, SA), .015" (40, 50: 608SC, 663S), .018" (70: All carbs.) throttle opening with choke valve tightly closed and screw on "high" step of fast idle cam.
Setting (Stromberg)—Close choke valve on #53 (.0595") drill rod, adjust by bending fast idle cam rod so that locking lever on throttle valve shaft just clears loose lever on fast idle cam stud as throttle is opened and closed.

Automatic Choke: Carter Climatic Control (Dual Carb.) or Stromberg AAV-16, 26, 167, 267 Type.
See Carburetion Equipment Section for complete data.
Setting (Carter Carb.)—Centered (index mark on cover centered on reference mark on housing).
Setting (Stromberg)—"V" mark on cover one graduation Lean (40, 50), Centered (70).

CARB. EQUIPMENT

Air Cleaner: AC. No. 1542101 (40, 50), 1542436 (70) heavy duty oil-bath type.
Filter Element—AC 1543732 (40, 50), 1528460 (70).
Servicing—Clean and refill with 1 pint of SAE. No. 50 engine oil at 5000 mile intervals.

Fuel Pump: AC. Type AJ. Diaphragm type combination fuel-and-vacuum pump.
Exchange Pump Type—AC No. 529 (40, 50), 530 (70).
Pressure—4½-5½ lbs. at fuel pump outlet port or 4-5 lbs. at carburetor inlet.
See Carburetion Equipment Section for data.

Gasoline Gauge: AC Electric type.
Dash Unit—AC No. 1516304 ('46-47), 1517078 ('48).
Tank Unit—AC No. 1516277.
See Carburetion Equipment Section for data.

BATTERY

Delco Type 15E2 or 15E4 (40, 50), 17E2 or 17E4 (70), 17K4 (Export 50, 70), 19E4 (Optl. Comm'l). 6 Volt.

Capacity—No. Plates	20 Hr. Rate	Starting (20 Min.)
15E2, 4	100 A.H.	120 Amperes
17E2, 4	120 A.H.	140 Amperes
17K4	115 A.H.	137 Amperes
19E4	130 A.H.	150 Amperes

Zero Capacity—	300 Amps. (0°F) 5-Second Voltage
15E2, 4	3.5 Minutes 4.25 Volts
17E2, 4	4.5 Minutes 4.4 Volts
17K4	4.3 Minutes 4.4 Volts
19E4	5.3 Minutes 4.35 Volts

Grounded Terminal—Negative (—) to engine block.
Location—On right hand side under engine hood.

STARTER

Delco Model No. 1107049 (40, 50 LHD.), 1107929 (70 LHD.), 1107057 (40, 50 RHD.), 1107935 (70 RHD.).
Armature 1867897 (1107049, 57), 820158 (1107929, 35).

►*1946-47 CAUTION—To correct Starter Shifts which will not engage or disengage, see "Electrical System Notes" in Buick Shop Notes.*
Drive—Overrunning clutch (solenoid pinion shift).
Rotation—Counter-clockwise at commutator end.
Brush Spring Tension—24-28 ozs.
Cranking Engine—40, 50) 90 RPM, 150 amperes, 4.5 volts; (70) 90 RPM, 175 amperes, 5 volts.

Performance Data—1107049, 57

Torque	R.P.M.	Volts	Amperes
0 ft. lbs.	5000	5.0	65
12 "	Lock	3.37	525

Performance Data—1107929, 35

0 ft. lbs.	5500	5.67	65
16 "	Lock	3.0	600

CONTINUED ON NEXT PAGE

C NTINUED FR M PRECEDING PA E

Removal: Starter is flange mounted on right front face of flywheel housing. To remove, disconnect cables, remove flange mounting screws.

Starting Switch: Delco-Remy Solenoid No. 1118019 controlled by Vacuum Switch on Carburetor.
Vacuum Switch (Carter Carburetors)—Carter Car Starter Model 192-11U.
Vacuum Switch ('46-47 Stromberg)—Delco-Remy No. 1990127 for AAV-16 & AAV-26 carburetors.
Vacuum Switch (1948 Stromberg)—Stromberg No. 385000 for AAV-167 & AAV-267 carburetors.
See Electrical Equipment Section for complete data.
Dynaflow Neutral Safety Switch—Delco-Remy 1997838. Connected in starter control curcuit so that starter operative only with selector lever in "N" Neutral or "P" Parking position.
See Dynaflow Drive article in Transmission Section for Neutral Safety Switch Adjustment.

GENERATOR

Delco-Remy Model No. 1102679 (40, 50), 1102668 (70). Two brush (shunt) type with voltage and current regulation. NOTE—Generators are interchangeable between models if correct pulley is installed.
Armature—Delco-Remy No. 1877806.
Charging Rate Adjustment—None (see Regulator).
Maximum Charging Rate—32-34 amperes, 8.0 volts, 2400 RPM or approx. 25 MPH.

Performance Data

	Amperes	Volts	R.P.M.
Cold	30①	8.0	1825

①—Not maximum output. See Current Regulator.
Brush Spring Tension—25 ounces each.
Field Current—1.75-1.9 amperes at 6.0 volts.
Rotation—Counter-clockwise at commutator end.

Removal: Generator pivot mounted at left front of engine. To remove, disconnect leads, take out pivot and clamp bolts.

Belt Adjustment: ½" belt deflection with light pressure at point midway between generator and fan.

REGULATOR

Delco-Remy Model 1118201. Single Core Type. Voltage and current regulator.
See Electrical Equipment Section for complete data.
CAUTION—Check generator for grounded field coils and leads before changing regulator settings to correct High Charging Rate or High Voltage.

Cutout Relay

Cuts In—6.2-6.7 volts hot.
Cuts Out—0-4.0 ampere discharge current.
Contact Gap—.020" (same for both sets).
Air Gap—.020" (with contacts just closed).

Voltage Regulator

Setting—7.2-7.4 volts hot (operating temperature). Regulator over-compensated for temperature. Should be checked with cover in place and hot.
Air Gap—.070" between center of core and armature with contacts just closing (press down on armature to open contacts, release pressure, check gap at point where contacts just close).
Checking & Adjustment—*See Electrical Equip. Section.*

Current Regulator

Setting—34-36 amperes hot (operating temp.).
Air Gap—.080" (check same as Voltage Regulator).
Checking & Adjustment—*See Electrical Equip. Section.*

LIGHTING

Headlamps: Guide "Sealed Beam" type.
See Electrical Equipment Section for complete data.
Adjustment—Aim upper beam straight ahead (hot spot center 3" below lamp center height at 25 ft.).
Beam Indicator—In upper edge of speedometer dial. Lighted when Upper (Country) Beam in use.

Direction Signal: *See Electrical Equipment Section.*
Direction Signal Indicators—In center of right and left instrument clusters. Lighted when direction signal operating.

Switches

Lighting—Delco-Remy No. 1995016.
Beam Selector—D-R No. 1997008, 1997015 (RHD).
Instrument—Delco-Remy No. 1997762.
Glove Compt.—Delco-Remy 1997747 (40), 1997771 (50, 70).
Direction Signal ('46-47)—D-R 1995527 LHD Metallic Brown), 1995503 (LHD—Brown), 1995507 (LHD—Light Grey), 1995525 (LHD—Dark Grey), 1995528 (RHD—Metallic Brown), 1995504 (RHD—Brown), 1995508 (RHD—Light Grey), 1995526 (RHD—Dark Grey), 1995535 (LHD-Beige), 1995536 (RHD-Beige).
Direction Signal (1948)—Delco-Remy 1995537 (std. LHD), 1995539 (Dynaflow Cars), 1995538 (RHD).
Back-Up Light—Delco-Remy No. 1997825 (regular transmission), 1997839 (Dynaflow Drive Cars).

Bulb Specifications

Position	Candlepower	Mazda No.
Headlamps	45-35 Watt	92500
Park & Frt. Dir. Sig.	21-3	1154
Rear Dir. Sig. (50, 70)	21-3①	1154
Rear Dir. Sig. (40)	21	1129
Beam & Dir. Sig. Indicators	1	51
Instr., Map, Clock, Radio	1.5	55
Glove & Trunk Compt.	1.5	55
Dome & Courtesy	6	82
Stop & Tail	21-3	1154
Rear License	3	63L

①—21 cp. (3 cp. filament not used).

MISC. ELECTRICAL

THERMOSTATIC RELAY: Delco-Remy. On lighting switch (protects lighting circuits). Contacts remain closed with 30 amperes, open in 3 minutes with current of 42 amperes at 70°F. Not adjustable.

FUSES: Clock—2 ampere SFE. In clock lead.
Instr. & Clock Lights—14 amp. SFE. On switch.
Direction Signal—14 ampere SFE. In flasher lead.
Cigar Lighter (Front)—15 ampere. In lighter.
Cigar Lighter (Rear) & Dome Light (50, 70)—30 ampere. In connector back of instrument panel.

HORNS: Delco-Remy No. 1999519 (Low Note—Right Horn), 1999520 (High Note—Left Horn). Vibrator type, blended tone, twin horns operated by relay.

	Current (at 6 volts)	Air Gap
1999519 (Low Note)	19-21 amperes	.044-.049"
1999520 (High Note)	18-20 amperes	.034-.039"

Horn Relay: Delco-Remy No. 1116775.
Contacts Close—2.75-4.0 volts.
Contact Gap—.025" **Air Gap** .015" (contacts closed).

ENGINE

ENGINE SPECIFICATIONS (SERIES 40, 50): Eight Cylinder, Overhead Valv ("I" Head) type.
Bore—3 3/32". **Stroke**—4⅛".
Displacement—248 cu. ins. **Rated H. P.**—30.63.
Developed H.P. (All 40, '46-47 50)—110 at 3600 RPM.
Developed H.P. (1948 50)—115 at 3600 RPM.
Compression Ratio (All 40, '46-47 50)—6.3-1.
Compression Ratio (1948 50)—6.6-1.
1948 NOTE—.050" thick Steelbestos gasket on 40, .015" thick sheet steel gasket used on Series 50.
Compression & Vacuum Reading—*See Tune-up data.*

ENGINE SPECIFICATIONS (SERIES 70): Eight cylinder, Overhead Valve ("I" Head) type.
Bore—3 7/16". **Stroke**—4 5/16".
Displacement—320.2 cu. ins. **Rated H. P.**—37.81.
Developed Horsepower—144 (70), 150 (Dynaflow Drive) at 3600 RPM.
Compression Ratio—6.6-1 Std., 6.9-1 Dynaflow Cars.
Compression & Vacuum Reading—*See Tune-Up data.*

TIGHTENING TORQUES: *See Buick Shop Notes.*

CYLINDER HEAD: Tightening Torque & Cylinder Head Diagram—*See Buick Shop Notes.*

►**New 1946-47 Type Cylinder Head & Gasket:** See Buick Shop Notes for new type Cylinder Head and Head Gasket required for use with new 1946-47 Engine

►*CAUTION—1942 type Cylinder Head and Gasket must not be used on 1946-47 engines (smaller water passages at #8 cylinder will restrict water circulation and cause overheating).*

►**1948 NEW "CONTROLLED FREQUENCY" ENGINE MOUNTINGS:** *See Buick Shop Notes.*

PISTONS: New light weight aluminum alloy, four ring, Turbulator Top, Cam ground, transverse slot type with Anodized finish.

►*CAUTION—Do not install 1942 type heavier pistons in 1946-47 engines (will affect engine balance). See Buick Shop Notes for Piston Identification and Interchangeability.*
Weight—13.776 ozs. (40, 50), 17.94 ozs. (70) stripped.
Length—4 21/64" (40, 50), 4 9/16" (70).
Removal—Pistons and rods removed from above.
Clearance—See Fitting New Pistons.

	Top Land	Top — Skirt — Bottom	
Series 40, 50	.023-.030"	.0021"	①
Series 70	.026-.033"	.0023"	②

①—.00185" clearance ('46-47), .0016" ('48).
②—.0020" clearance ('46-47), .0018" ('48).

Replacement Pistons: *See Buick Shop Notes.*

Fitting New Pistons: Use feeler stock ¼" wide ("GO" gauge), ½" wide ("NO GO" gauge) and 12" long suspended in cylinder at right angles to engine centerline, invert piston in cylinder. With piston and cylinder clean and dry and at 70°F., piston should pass through cylinder of own weight with "GO" gauge and should hold its own weight with "NO GO" gauge as follows:

Clearance Limits	"GO" Feeler Gauge	"NO GO"
Series 40, 50	.0018-.0023"	.0015" .002"
Series 70	.0020-.0026"	.0015" .002"

►NOTE—Cylinder walls on 1946-47 engines are "Lubrited" after finishing to provide protective coating and prevent scuffing and scoring during break-in. This coating is black and will wear through in service. Cylinders in service showing this black-and-bright surface are normal.
1948 Note—Cylinder walls not Lubrited (coated).

Installing Pistons: Hollow side of piston head toward camshaft side of engine.

PISTON RINGS: Two compression, two slotted oil control rings per piston, all above pin.
1948 Note—New "Flex-fit" bottom oil ring used.

ENGINE

CONTINUED FROM PRECEDING PAGE

1946-47 Piston Rings

Ring	Width	End Gap	Side Clearance
①Comp. (#1, 2)	3/32"	.015"	.0015-.0035"
Oil (#3, 4)	3/16"	.015"	.0015-.003"

1948 Piston Rings

Ring	Width	End Gap	Side Clearance
①Compr. (#1,2)	3/32"	.015"	.0015-.0035"
Oil (#3)	.1875"	.015"	.0015-.0035"
Oil (#4)	.1860"	②	.0015-.0035"

①—Wall Thickness .160" (40, 50 Upper), .140" (40, 50 Lower), .170" (70 Upper), .150" (70 Lower).
②—Width of oil ring gap .0015" (segmental).

Replacement Rings: *See Buick Shop Notes.*

PISTON PIN: Clamped in rod (pin hole in new pistons diamond-bored and oil-grooved).
Diameter—13/16" (40, 50), 7/8" (70).
Length—2 11/16" (40, 50), 3 1/16" (70).
Pin Fit in Piston—.0003-.0004" clearance or easy finger push fit at 70°F.

Replacement Pins: Pins are fitted and furnished with new pistons (pistons not furnished without pins).

CONNECTING ROD: Length—7⅝" (40, 50), 8¼" (70).
Weight—28.464 ozs. (40, 50), 35.584 ozs. (70).
Crankpin Journal Diameter—2" (40, 50), 2¼" (70).
Lower Bearing—Centrifugal cast (spun) babbitt.
Clearance—.0008-.0018". **Sideplay**—.005-.010".

Bearing Adjustment: Shims. Do not file rods or caps.

Replacement Bearings: Install replacement rods.

Installing Rods: Marks on rods and bearing caps together and toward rear of engine. Oil hole toward camshaft.

CRANKSHAFT: Five bearing, counterweighted type.
Bearing Diameters (40, 50)—#1, 2 5/16"; #2, 2⅜"; #3, 2 7/16"; #4, 2½"; #5, 2 9/16".
Bearing Diameters (70)—#1, 2 9/16"; #2, 2⅝"; #3,2 11/16"; #4, 2¾"; #5, 2 13/16".
Bearings—Steel-backed, Durex lined, slip-in type. Replacement bearings furnished singly or in sets.
Clearance—.0007-.0025".

Bearing Adjustment: Solid shims. Do not file caps.

Replacement Bearings: *See Buick Shop Notes for data and Rear Main Bearing Oil Seal installation.*

End Thrust: #3 (center bearing). Endplay .004-.008"

CAMSHAFT: 5 bearing. Non-adjustable chain drive.
Bearing Diameters (All Series)—#1, 2 5/32"; #2, 2⅛"; #3, 2 3/32"; #4, 2 1/16"; #5, 1¾".
Bearing Type—Steel-backed, babbitt bushings.
Clearance—.0005-.0035".

End Thrust: Thrust plate between front bearing and camshaft sprocket. **Endplay**—.004-.008".

Timing Chain: Link belt. Width 1". Pitch .500". Length 49 links or 24½" (40, 50), 50 links or 25" (70).

Camshaft Setting: Mesh copper-plated washers on chain (10 links apart) with sprocket marks (crankshaft and camshaft turned so that marks are up).

VALVES:

Series 40, 50

	Head Diameter	Stem Diameter	Length
Intake	1 17/32"	.3715-.3725"	5 7/64"
Exhaust	1 11/32"	.3715"	5 7/64"

	Seat Angle	Lift	Stem Clearance
Intake	45°	.348"	.0015-.0035"
Exhaust	45°	.342"	.0021-.0039"

Series 70

	Head Diameter	Stem Diameter	Length
Intake	1 25/32"	.3720"	5¼"
Exhaust	1 7/16"	.3715"	5¼"

	Seat Angle	Lift	Stem Clearance
Intake	45°	.347"	.0015-.0035"
Exhaust	45°	.348"	.0021-.0039"

Valve Guides: Press fit in head. Install with stepped end up. Ream for proper clearance of valve stem.

Valve Springs: Double Springs on all valves. Spring free length 1 29/32" (inner), 2 11/32" (outer).

	Inner Spring Pressure	Inner Spring Length	Outer Spring Pressure	Outer Spring Length
Closed	20 lbs.	1 21/32"	32 lbs.	1 15/16"
Open	51 lbs.	1 5/16"	77 lbs.	1 19/32"

Valve Lifters: Diameter .9975-.9985". Barrel type. **Clearance**—.0005-.0025".

Rocker Arms: *See Buick Shop Notes.*

VALVE TIMING

►**Tappet Clearance:** *CAUTION—Feeler gauge used depends on engine temperature (do not use .015" feeler). See "Tappet Clearance Adjustment Procedure" in Buick Shop Notes to secure .015" lash at Road Operating Temperature.*

Valve Timing: See Camshaft Setting above.

Timing Points (Valve .004" Open)

Series 40, 50
Intake Valves—Open 13° BTDC. Close 68° ALDC.
Exhaust Valves—Open 55° BLDC. Close 22° ATDC.

Series 70
Intake Valves—Open 14° BTDC. Close 71° ALDC.
Exhaust Valves—Open 56° BLDC. Close 25° ATDC.
Valve Timing Check—With .015" tappet clearance, #2 or #7 exhaust valve should be .145" open (Series 40, 50), .155" open (Series 70), with #1 & 8 pistons at top dead center and flywheel mark "UDC/1&8" at indicator in inspection hole in right front face of housing. NOTE—This is actual valve opening and should be checked with dial indicator mounted on cylinder head.

LUBRICATION

Engine Oiling System: Pressure to main bearings, connecting rod lower bearings, camshaft bearings, timing chain, and rocker arms. Oil pump mounted in crankcase. NOTE—Screen located in cylinder head under rocker arm oil lead restricted fitting should be removed and cleaned at 10000 mile intervals (disconnect oil line and remove fitting).
Crankcase Capacity—Refill—5½ qts. (40, 50), 7 qts. (70). Dry Capacity 6½ qts. (40, 50), 8 qts. (70).
NOTE—If oil filter is dry, add 1½ qts. to capacities
Normal Oil Pressure—35 lbs. at 35 MPH.
Oil Pressure Regulator—On oil pump housing. Opens at 45 lbs. No adjustment.

Oil Pump: *See Buick Shop Notes.*

Crankcase Ventilation: Filter in oil filler breather cap and in crankcase ventilator inlet on left side of engine. Outlet pipe mounted on right side of engine.
Servicing—Wash **both** filter elements in kerosene every 5000 miles (when carb. air cleaner serviced).

COOLING

Cooling System: Pressure type with pressure valve (relief valve) in filler cap. Re-circulation of water through engine (with thermostat closed) is controlled by separate spring-loaded by-pass valve
Capacity—Without Heater—13 qts. (40, 50), 16¾ qts. (70), With heater—14¼ qts. (40, 50), 18 qts. (70).
Pressure Valve—AC No. 850509 (Std. pressure cap). Opens at 7 lbs. (std.), 13 lbs. (Dynaflow cars).

Water Pump: Packless, sealed ball-bearing type.

►*1948 NOTE*—2 types of pumps used (different seal design), interchangeable as assemblies (parts not furnished for first type). *NOTE—Pumps identified by casting number 1330139 (1st), 1336756 (2nd).*
See Water Pump Section for complete data.
Belt Adjustment—*See Generator Belt Adjustment.*

Thermostat: Harrison. In cylinder head water outlet.
Setting—Starts to open 152°F. Fully open 173°F.

Temperature Gauge: AC 1511070 '46-47, 1512091 '48.
See Miscellaneous Section for complete data.

CLUTCH

Own Make with Borg & Beck or Long Driven Member. Single plate, dry disc type. Series 40, 50 clutches are "Crown Spring" type.
See Clutch Section for complete data.
Facings—Woven type, 2 required.

	Inside Diam.	Outside Diam.	Thickness
Series 40, 50	6"	10"	.125" (⅛")
Series 70	6½"	10½"	.125" (⅛")

Pedal Adjustment: Free travel ¾-1". Adjust by loosening locknut and turning adjusting nut on release rod linking cross-shaft lever to clutch fork. Pedal positioned by rubber bumper under toeboard.

Clutch Over-Center Spring: *See Buick Shop Notes.*

Removal:—Remove Rear Axle & Transmission (see below), take off clutch underpan, disconnect linkage at yoke, remove clutch release bearing support by taking out spring washer in housing, pull out yoke (with release bearing) from fulcrum, mark clutch and flywheel, remove cover mounting screws.

TRANSMISSION

Own Make. All Helical Gear, constant-mesh, synchro-mesh (Second & High), sliding gear (Low & Reverse) with steering column mounted shift control. *See Transmission Section for complete data.*

Transmission Control: Buick type remote control.
See Transmission Section for complete data.

Removal (1946-47): Remove Rear Axle, then remove rear transmission support (wire shims to ends of support for correct replacement) and steady rest rod, place engine jacks (J-1580) on frame cross member with pilot end in hole in housing at each side of engine mounting, tighten jacks to take load off mounting, remove selector and shift levers, transmission mounting bolts (install guide pins J-851), remove 2 nuts freeing rear engine mounting (bolt heads seat in notches), adjust jacks to take strain off mounting bolts, remove transmission. *See Buick Shop Notes for Transmission Support Mounting adjustment data on 1946-47 cars.*

Removal (1948): Disconnect Rear Axle (see Rear Axle), drain transmission, fill with clean gasoline or kerosene and run approx. 15 seconds in Neutral, drain cleaner. Disconnect speedometer cable, lower shift rod, and selector rod. (On 40, 50 only, take out toggle spring and extension, remove shift lever and lock washer from selector shaft—hold shift lever in neutral when removing attaching bolt—remove outer selector lever). Install support bar (see Note

CONTINUED ON NEXT PAGE

CONTINUED FROM PRECEDING PAGE

below) under rear end of oil pan positioning left hook over frame between brake master cylinder and clutch release equalizer, tighten nuts on two hooks evenly. Remove transmission mounting as follows: Disconnect rubber thrust pad from rear of transmission support by taking off 3 nuts and bolt plate, remove shims from behind support, disconnect mounting pad on top of support by taking out 2 attaching bolts and bolt plate, raise engine by turning up on nuts on two support hooks evenly to take load off transmission support, take out transmission support (disconnect at frame ends), and remove thrust pad from thrust plate. Install guide pins J-851 in place of two top mounting bolts, remove remaining mounting bolts, pull transmission straight back and lower from car.

For instructions on Shimming Rear Mounting when installing transmission on 1948 cars, see "Engine Mountings" in Buick Shop Notes.

Engine Support Bar Note—Consists of length of 2 x 4 (approx. width of frame) with hole through each end to take hooked rods (hook rests on top of frame. Raise and lower support by nuts on rods.
Lubrication Note—When transmission reinstalled in car, inject ½ pint of transmission lubricant through universal joint yoke before attaching torque tube to transmission.

DYNAFLOW DRIVE

OPTL. ON 1948 ROADMASTER SERIES 70

Own Make. Torque Converter and hydraulically operated planetary unit with manual control.
See Transmission Section for complete data.

►**Throttle Linkage Adjustment and Dash Pot Setting on Dynaflow Drive Cars:** *See CARBURETOR.*
Lubrication—Check fluid level in transmission every 1000 miles, drain and refill every 10,000 miles.

►*Use only Special Buick Oil for Dynaflow Drive.*
Capacity—11 quarts.

Checking Fluid Level—Engine must be idling with selector lever at "N" (neutral) and transmission oil warm. Raise right side of floor mat, take off cover in floor above transmission, lift out oil gauge rod. Add fluid to "FULL" mark level with engine idling.

►*CAUTION—Engine must be idling with transmission in Neutral and transmission oil warm when checking Dynaflow Drive Fluid Level.*

UNIVERSALS

Saginaw (All Series) or Spicer 202-13X (40, 50). One used (in torque ball at rear of transmission).
See Universals Section for complete data.

REAR AXLE

Own Make. Hypoid Gear, Semi-floating type with Torque Tube Drive. *See Rear Axle Section for data.*

►**CAUTION**—Gear Set and Case Assembly on 1946-47 cars are heavier than parts used on 1942 cars.
See Buick Rear Axle article in Rear Axle Section for parts identification and interchangeability data.
Ratio—4.454-1: Std. 40, 50. 4.1-1: Std. 70 and Late Dynaflow, Optl. 40, 50. 3.9-1: Std. on Early Dynaflow. 3.64-1: Optl. 70.
Backlash—.006-.010". Screw adjustment.

Removal:—Hoist rear end of car. Disconnect parking brake at equalizer, hydraulic brake line at fitting anchored to left channel iron-strut, lower end of shock absorber links, rear radius rod at axle end, lower end of chassis springs (tie springs to bumper for clearance). Disconnect torque tube at universal joint ball, remove axle assembly from beneath car.

►*CAUTION—Torque tube should not be disconnected from carrier (except for gasket replacement).*

Axle Shaft Removal:—See Buick Rear Axle article.
Wheel Bearing Adjustment—None.

Rear Suspension: Coil springs & conventional axle.
See Rear Axle Section for complete data.

SHOCK ABSORBERS

Delco Model 1948-A (front), Model 2105-C,D (rear). Double acting, hydraulic (parallel cylinder rear).
See Shock Absorber Section for complete data.

FRONT SUSPENSION

Front Suspension: Independent, linked parallelogram type with coil springs.
See Front Suspension Section for complete data.
Kingpin Inclination—4¼° crosswise for ⅜° Camber.
Camber—⅜° Positive (⅞° Pos. to ⅝° Neg.) and equal for both wheels within ¾°. At curb weight.
Caster—⅜° Positive (¼° Pos. to 1½° Pos.) equal for both wheels within ½°. At curb weight. Adjustable.
Toe In—1/16-⅛".Adjust both tie rods equally.
Steering Geometry (Toe out on Turns)—With outer wheel turned 20°, inner wheel turned 21½° ± ¾°.

STEERING GEAR

Saginaw. Ball bearing Worm-and-Nut type.
See Steering Gear Section for complete data.

BRAKES

Service: Bendix Hydraulic, Duo-servo, Single Anchor type **without Eccentric Adjustment.** Parking "Step-on" lever applies rear wheel service brakes.
See Brake Section for complete data.
Drums—Cast Iron type. Diameter 12".
Lining—Moulded type (all shoes). Width 1¾" (40, 50), 2¼" (70). Thick. 3/16". Lgth. per whl. 23 1/16".
Clearance—.015" at both ends of secondary (rear) shoe with primary shoe forced out against drum.

Hand (Parking) Brake: See Service Brakes (above).

NoRol: Optional. *See Brake Section for complete data.*

MISC. MECHANICAL

Power Operated Convertible Tops, Windows, & Front Seat: Hydro-Lectric type (hydraulic actuation with motor-driven pump supplying oil under pressure).
See Miscellaneous Section for complete data.

HOOD ASSEMBLY

1938-40 MODELS

HOOD & SIDE PANEL REMOVAL: Hood hinged at cowl and lifts from forward end. To raise hood, tilt radiator ornament back to free manual catch and automatic safety catch (See Note below), grasp forward edge of hood and lift up. NOTE—1938 V8 Models and all V16 Models equipped with manual safety catch under front edge of hood.

Side Panels—Upper corners secured by 2 bolts ('38), 2 screws ('39 & '40). Lower edge held by clips (all '38, V8 except 75 '39, V16 '40), by thumbscrews (75 & 90 '39), by three screws (V8 '40). To remove panel, take out screws or loosen bolts in upper corners, free lower edge by freeing from clips or removing screws, lift panel off.

Side Panel Rattle Note 38-50—To eliminate rattles at panel clamps along lower edge, install short rubber tubes (Part No. 1428136) over clamp ends. Loose horizontal chrome strips on side panels may be tightened by removing panel and crimping louvre metal at points where strips have loosening in service. Rubber wedges (Part No. 1428099) to be installed between vertical braces and metal vanes of louvres are available to correct chrome strip rattle.

1941-47 MODELS

HOOD LOCK: Radiator ornament controls manual and automatic safety catch. To raise hood, tilt ornament back, lift up on forward edge of hood. CAUTION—Do not hold radiator ornament down when closing hood (will damage manual catch).

Hood Latch Bar Adjustment—Hood latch bar should be ¾" above lower edge of hood reinforcing panel (under hood nose) with radiator ornament down. This clearance can be obtained by lengthening or shortening radiator ornament link at turnbuckle. Latch bar catches on radiator shroud provided with elongated mounting holes and catches should be moved forward until hood fits snugly when closed.

1948 MODELS

HOOD LOCK (60S, 61, 62): Hood hinged at cowl with locking handle at lower left side of instrument panel. Safety catch under front edge of hood.

Lock Plate Adjustment—Loosen four lock plate capscrews at radiator shroud, lower hood slowly to allow pilot to center lock plate, raise hood without disturbing position of plate, tighten capscrews. Check hood safety catch as directed below.

CAUTION—If lock plate tightened out of position, it is possible hood may be locked so that it cannot be opened.

Hood Lock Control Cable Adjustment—Raise hood, push hood lock handle on instrument panel in, loosen lock cable anchor block screw, adjust for 1/16" clearance between anchor block and lock plate action lever, tighten anchor block screw.

Hood Safety Lock Catch Adjustment—Raise hood, loosen 2 safety lock catch capscrews on radiator shroud, lower hood until safety latch engages catch, position catch for a minimum of ¼" engagement on latch, tighten capscrews.

1948 MODELS

HOOD LOCK (75, 76): Hood hinged at cowl with radiator ornament hood lock. Ornament controls both lock and safety catch.

Hood Ornament Adjustment—Close hood, set ornament on high point of cam (midway between locked and unlocked position), insert ¼" drill between goddess and top of ornament base just ahead of and touching ornament hook (setting correct when drill touches at these three points). To adjust, loosen lower jam nuts, shift striker pin to rear (if clearance excessive) or to front (if insufficient clearance), tighten jam nuts. Tension to unlock hood should be 25-30 lbs. (check with spring scale hooked under neck of goddess). Adjust by raising or lowering striker pin and roller (without disturbing fore-and-aft position).

1941 MODELS

HOOD REMOVAL: Hood and side panels are integral. To remove hood, raise hood and prop front end up. Remove counter-balancing springs by removing clevis pin on cowl at top of springs (41-60S only), use tool J-1638 to remove springs at bottom (all other models). Remove two shoulder capscrews from hood links-to-cowl bracket, lift hood off. CAUTION—Do not loosen or remove cowl brackets which control hood alignment.

Hood Alignment—If hood alignment necessary when hood re-installed, see Front Sheet Metal Assembly Alignment below for directions.

Hood Spring Note—Right and left hood springs not interchangeable. Install springs with top hook offset toward rear of car.

1942-47 MODELS

HOOD REMOVAL: All Models except 75. To remove hood, raise hood and prop front end up. Disconnect hood prop at each side by taking out pivot pin in lower end of prop at fender alignment bracket. Mark hood hinge position on cowl (when re-assembled to these marks hood alignment will be retained). Remove three cap screws at each hinge and lift off hood assembly.

Model 75—To remove hood, raise hood, prop front end up. Remove counter-balancing springs at bottom using Tool J-1638, take out two shoulder cap screws from hood links to cowl bracket, lift off hood.

1948 MODELS

HOOD REMOVAL: Remove nut in strainer at hood center moulding. Take out two hood-to-hinge bolts at each hinge (if shims used at this point, replace same number when reassembling). Lift off hood panel.

Hood Alignment—Hood fit to cowl can be adjusted by adding or removing shims at hood-to-hinge bolts. Hood panel bolt holes are enlarged to permit fore-and-aft or side-to-side hood adjustments.

FRONT END SHEET METAL

1941 MODELS

FRONT GRILLE REMOVAL: Raise hood, disconnect parking light wires. Remove six Phillip's head screws from radiator grille-to-fender at front, six countersunk screws from radiator grille-to-shroud top flange. Lift radiator grilles out and remove parking lights from back of grilles. To remove vertical fins, remove attaching clips holding fins in place and disassemble fins.

Grille Alignment—If grille alignment required when grilles re-installed, see Sheet Metal Assembly Alignment below for directions.

1942-47 MODELS

RADIATOR GRILLE REMOVAL: All Models (exc. 75). Raise hood, disconnect parking light wires at fender junction blocks and remove parking lights. Take out grille-to-fender screw behind each parking light and cross recessed grille-to-fender screw below light. Take off fog lamp bezel (or cover plate if lamp not used), remove two hex head screws under each bezel. Disconnect fender-to-bumper shields from each end of central grille-to-bumper shield by removing 2 screws in each end of central shield. Remove grille to lower air deflector screws (one at each side) and 2 grille to center air baffle. Take off rubber hood pilot and remove six countersunk grille-to-radiator shroud top flange screws. Tilt grille forward and lift grille off car.

Model 75—Raise hood, disconnect park light wires. Remove six cross recessed radiator grille-to-fender screws at front, six countersunk radiator grille-to-shroud top flange screws. Lift radiator grilles out and remove parking lights from back of grilles. Remove vertical fins by taking off attaching clips.

1948 MODELS

RADIATOR GRILLE REMOVAL: Remove bumper (take out 2 bolts in mounting bracket on each side of frame). Remove painted lower grille fin (2 bolts in each end, 4 bolts along rear edge at bottom). Take out 6 cross head screws from top of grille, remove anti-squeak (between grille and shroud), remove grille.

Grille Installation—Reverse removal instructions.

1948 MODELS

RADIATOR SHROUD REMOVAL: Remove radiator grille (see above). Remove wiring harness from shroud after disconnecting wires at right front fender junction block and at horns. Remove horns and hood lock plate. Remove all bolts and capscrews around edge of shroud and fender-to-fender support bolts. Move right front fender away from shroud after loosening 4 fender-to-frame bolts. Lift out shroud.

Shroud Installation—Hold shroud in position by installing 4 capscrews at top of shroud to radiator support. Reverse removal instructions (above) but fender-to-fender support bolts should not be tightened until hood lock plate has been adjusted properly (see HOOD LOCK above) and fender-to-hood alignment has been made. Then tighten fender-to-fender support bolts and 4 fender-to-frame bolts at right fender.

1940 MODELS

FRONT SHEET METAL ASSEMBLY: Radiator, radiator grilles and front fenders all bolted together (may be removed or installed as a unit). One bolt in center of radiator support engages enlarged hole in frame front cross member (enlarged hole permits moving entire assembly fore-and-aft, shims under mounting bolt control height). Fender-to-body bolt holes also enlarged to permit shifting assembly.

Alignment—Assembly must be aligned in following order: 1) Install and center hood (proper clearance at cowl must also be secured). 2) Install fender and grille assembly (leaving bolts loose), align with hood and tighten bolts. 3) Adjust radiator tie rods and tighten for snug fit (check radiator shutter for free movement). NOTE—Do not attempt to change front end alignment by shifting tie rods

1941 MODELS

FRONT SHEET METAL ASSEMBLY ALIGNMENT: Assembly consists of Hood, Fenders, Radiator Core, Grilles and casings, baffles, and cradle assembly. Individual parts may be removed and installed separately without affecting alignment but if most parts removed, or if alignment required, entire assembly should be aligned as follows:

Alignment—With fenders off, assemble radiator core, grille casings, baffles, and cradle assembly loosely on front cross-member. Install hood loosely

C NTINUED N NEXT PAGE

CONTINUED FR M PRECEDING PA E

on cowl hinge brackets and see that brackets are loose on cowl. With hood down, push cowl hinge brackets up until links strike on brackets (41-60S) or on hinge bracket flange (all other models), install lower front cowl hinge bracket-to-cowl bolts and tighten securely. Force back end of each bracket down (loop wire over notch in ear at back end of bracket and pull down on wire with pry bar hooked under frame) so that hood wrapped tightly to cowl, tighten lower rear bolt on each cowl hinge bracket securely, raise hood and tighten upper bolt in each bracket securely. Assemble front fenders loosely to radiator casing and baffle assemblies, remove kick pad in front compartment, install rear fender bolt nuts loosely from inside car. Align fenders to hood, door panel, and radiator casing assembly and tighten all mounting screws and nuts securely. Tighten radiator assembly on front cross-member (shim cradle, if necessary, to keep fenders aligned).

Front Fender Tail Alignment (41-60S)—Loosen screw in front face of door under weather strip and two screws in bottom face of door and align fender tail to front fender. Tighten screws.

Sheet Metal Clearances—3/32" at hood-to-fender catwalk and hood-to-radiator casing, ⅛" at hood-to-cowl (at top) and hood-to-door (at top), 5/32" hood-to-door (at bottom).

1942-47 MODELS

FRONT SHEET METAL ASSEMBLY ALIGNMENT: All Models except 75. Entire alignment procedure listed below required where Front Sheet Metal Assembly has been removed or disassembled. Where one piece only removed, follow procedure for that particlar part. After radiator cradle, shroud assembly, grille and front fenders have been assembled loosely, align parts in following order:

1—Hood. With hood down, push hinge brackets up until link strikes on brackets, then tighten lower front bolt on both brackets. Force rear end of each bracket down (loop wire over notch in ear at rear end of bracket and pull down on wire with pry bar hooked under frame) so that hood wrapped securely to cowl with ⅛" hood-to-cowl clearance, tighten lower rear bolt with brackets held in this position. Raise hood and tighten upper bolt in each bracket.

2—Grille. Tighten screws at front end attaching radiator grille, shroud assembly, front fenders and shields. Fit top of grille with hood contacting six rubber bumpers evenly and securely. If proper fit not secured, shift entire front end assembly (shims between radiator support and bracket on frame control up-and-down positioning, enlarged radiator support hole permits fore-and-aft and crosswise positioning). With front end assembly properly positioned, tighten support bolt securely.

3—Fenders. Shift rear end of fenders to secure ⅛" clearance with hood and front edge of doors (bolt holes in cowl and fender brackets enlarged to allow proper positioning at these points). After correct clearance obtained, tighten bracket bolts first, then tighten fender-to-body bolt just ahead of rear bulkhead. With fender screws and bolts securely tightened, adjust fender dust shield plate under fender so that rubber anti-squeak around plate makes tight contact with underside of fender (this tight fit must be secured to prevent dirt and splash entering engine compartment), then tighten 9 plate-to-fender screws, 4 (5 on left) plate-to-frame bolts.

4—Fender Extension. Enlarged attaching bolt holes permit vertical and horizontal positioning of extension with bottom of fender. To obtain clearance for top of fender extension with door open, fenders must be adjusted (See Fenders above).

5—Fender Moulding. Moulding on fender must be positioned to line up with extension moulding since this extension moulding can be adjusted up-and-down at the front only.

6—Rocker Sill Extension. This extension bolted to body and is adjustable fore-and-aft to permit its being bolted to rear of fender. Vertical positioning required for 5/32" fender extension clearance.

FRONT FENDERS

1942-47 MODELS

FRONT FENDER REMOVAL: All Models except 75. Front fender can be removed as follows; Raise hood, disconnect all wires at fender junction block, remove air intake tube by disconnecting tube at fender and dash. Take off parking lamp and remove radiator grille-to-fender screw behind light, and cross recessed grille-to-fender screw below light. Take off fog lamp bezel (or cover plate if lamp not used), remove two hex head screws under each bezel. Free fender-to-bumper shield from center bumper shield by taking out two screws. Remove screws at rear of fender (two at rocker sill, one at body at lower corner of fender). Remove fender dust shield plate under fender by taking out nine fender-to-plate screws and four (five on left fender) plate-to-frame bolts. Remove two fender-to-bracket screws at cowl and three fender-to-radiator shroud screws (from below). Free fender by taking out fender-to-fender support bolt (from above)

1948 MODELS

FRONT FENDER REMOVAL: Remove wheel and bumper. Disconnect headlamp wires at junction block. Remove flexible air hose. Remove fender bolts as follows: 1 bolt at cowl, 2 nuts at rocker panel extension (under Fender), 2 fender splash pan-to-frame bolts, 3 frame side bar bolts, 1 lower radiator shroud bolt, 2 lower grille fin bolts, 4 radiator shroud bolts at top, 1 fender support bracket bolt. Work fender to front to clear door moulding, remove fender.

Left Front Fender Note. In addition to the above the following must also be removed to take off left fender: Remove wiring harness from clamp on air duct. Free hood lock cable from fender. Remove Windshield Washer Assembly. Disconnect antenna lead and hoses. Remove fuel line clamp from fender and disconnect gas line from fuel pump.

Front Fender Installation—Reverse removal instructions given above. Fender bolt holes are enlarged for fore-and-aft positioning and can be raised or lowered to fit door and hood by use of shims at fender-to-fender support bolt and at fender-to-cowl bolt.

ENGINE REMOVAL

1942-48 MODELS

ENGINE REMOVAL: Remove the engine assembly from car as follows: Jack up all four wheels and install a stand at each wheel, drain cooling system; disconnect battery cables, engine ground strap (at right front engine support), universal joints at each end of propeller shaft, and support engine at rear with a bar or jack. Loosen transmission and slide back into frame X-member and place support under front end of transmission. (NOTE—Hydra-Matic transmission must be removed from car—Refer to Transmission Section for the Hydra-Matic Drive article for removal data). Remove clutch release mechanism from clutch housing. Take off hood (see Hood Removal above). Disconnect and remove accessories from cowl and engine (heater hose, radio ground cables, windshield washer, etc.). Take off all water hoses, air cleaner, carburetor, carburetor control linkage, fan belt, generator and water pump belt, generator, fan, and distributor. Disconnect exhaust pipe at right manifold and gasoline line at fuel pump. Place board or piece of sheet metal over radiator core to prevent damage to core while hoisting engine out of car. Loop rope under crankshaft pulley, then up and around exhaust crossover manifold. Attach hoist to rope and tighten hoist to take slack out of rope, then disconnect front engine supports (one on each side). Engine can then be lifted out of chassis.

1948 Cars—Remove distributor on these cars to avoid hitting cowl when engine hoisted from chassis.

CYLINDER HEAD

1936-48 MODELS

CYLINDER HEAD INSTALLATION: Use Torque Indicating Wrench to tighten cylinder head capscrews, tighten in sequence from the center of the head outwards. Cast Iron heads should be tightened cold and rechecked after the engine has been run and thoroughly warmed up.

V8 Models. Two capscrews at water outlet connection are ½" longer and **must not be used at any other location** (will break through water jacket and damage block). These capscrews may be identified by larger head.

V16 Models. Install short capscrews along lower edge of head, coat all screws with white lead before installation (necessary to prevent water leaks).

CADILLAC & LA SALLE V8

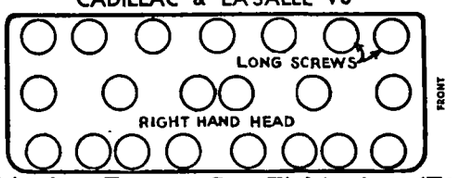

Tightening Torque—See Tightening (Torque Wrench) Specifications below.

1938-40 MODELS

CYLINDER HEAD IDENTIFICATION (V8 MODELS): Cadillac 72, 75; La Salle 50, 52. Same cylinder head used on both (provides higher compression ratio on 72, 75). All production cylinder heads marked with piston displacement and compression ratio as follows: Right Hand Head 322-625 and 346-670, Left Hand Head—322-625 (La Salle 50, 52), 346-670 (Cadillac 72, 75). Replacement heads marked with both ratios (both right and left hand heads).

1938 Note—Early 346-670 heads marked 346-680.

Cadillac V8 (except 72, 75) — These engines equipped with cylinder heads having 6.25-1 ratio. These heads must be used on these models only.

1937-48 MODELS

LOWERING COMPRESSION RATIO: Special shims available for installation between cylinder head and block to reduce compression ratio for use of low octane fuel or special operating conditions.

TIGHTENING (TORQUE WRENCH) SPECIFICATIONS

1946-47-48 MODELS

	Ft. Lbs.	In. Lbs.
Cylinder Head Bolts	70-75	840-900
Main Bearing Caps	140-150	1680-1800
Connecting Rod Bolts	60-65	720-780
Flywheel to Crankshaft	65-70	780-840
Engine Rear Supports	50-60	600-720
Intake & Exhaust Manifold	25-30	300-360
Crankshaft Counterweights	145-155	1620-1740
Fan Support to Bracket	85-95	1020-1140
Clutch Cover Mounting Screws	20-25	240-300
Diff. Carrier to Axle Housing	30-35	360-420
Axle Shaft Hub Nuts	285-315	3420-3780
Wheel Mounting Nuts	110-120	1320-1440
Brake Backing Plate to Axle	35-40	420-480
Steering Gear to Frame	40-45	480-540
Steering Wheel Nut	45-50	540-600
Front Shock Absorber Bolts	85-95	1020-1140
Front Susp. Arm to Frame	60-70	720-840
Hydra-Matic Drive Cars:		
Trans. to Bell Housing	80-90	960-1080
Bell Housing to Crankcase	45-50	540-600
Flywheel to Flywheel Cover	30-35	360-420
Flywheel to Crankshaft	70-75	840-900

1941-42 MODELS

	Ft. Lbs.	In. Lbs.
Cylinder Head Capscrews	70-75	840-900
Main Bearing Caps	130-140	1560-1680
Connecting Rod Bolts	50-60	600-720
Flywheel to Crankshaft	65-70	780-840
Engine Rear Supports	50-60	600-720
Intake & Exhaust Manifold	25-30	300-360
Crankshaft Counterweights	145-155	1620-1740
Fan Support to Bracket	85-95	1020-1140
Clutch Cover Mounting Screws	18-22	216-264
Diff. Carrier to Axle Housing	30-35	360-420
Axle Shaft Hub Nuts	285-315	3420-3780
Wheel Mounting Nuts	110-120	1320-1440
Brake Backing Plate to Axle	35-40	420-480
Steering Gear to Frame	40-45	480-540
Steering Wheel Nut	45-50	540-600
Front Shock Absorber Bolts	100-115	1200-1380
Front Susp. Arm to Frame	60-70	720-840
Hydra-Matic Drive Cars:		
Trans. to Bell Hous'g	80-90	960-1080
Bell Hsg. to Crkcase. ('41)	70-75	840-900
Bell Hsg. to Crkcase. ('42)	45-50	540-600
Flywheel to Flywheel Cover	20-25	240-300
Flywheel to Crankshaft	80-90	960-1080

1940 & PREVIOUS MODELS

Cylinder Head Capscrews	70-75	840-900
Main Bearing Caps (V8)	130-140	1560-1680
Main Bearing Caps (V16)	100-110	1200-1320
Connecting Rod Bolts	55-60	660-720
Wrist Pin Clamp Screw (V16)	20-25	240-300
Intake & Exhaust Manifold	25-30	300-360
Flywheel to Crankshaft	65-70	780-840
Spark Plugs (10 MM. Type)	7-10	84-120
Spark Plugs (14 MM. Type)	35-40	420-480
Front Suspension:		
Susp'n Arms to Frame (V8 except 75)	60-70	720-840
Susp'n Arms to Frame (75, 90)	85-100	1020-1200
Diff'tial Carrier to Housing	30-35	360-420

ORIGINAL BORE & PISTONS

1941-48 MODELS

ORIGINAL PRODUCTION ENGINE BORE & PISTON SIZES: Cylinder bores and pistons graded in sizes listed below. Can be identified as follows:

Cylinder Bore Marking—Letter stamped on top of block at outer edge of cylinder bore and **position of letter indicates size variation** as follows:

1941-42 Models—3 sizes for each letter. "—" if letter to **left** of bore center, "+" if to **right** of bore center, centered under bore if not "+" or "—".

1946-47-48 Models—2 sizes for each letter. "—" if letter to left of bore center, "+" if to right of bore center.

Piston Marking—Letter is marked on piston head.

1941 Piston & Cylinder Sizes

Letter①	Piston Size	Cylinder Size
A	3.4979-3.4981"	3.5000-3.5002"
B	3.4981-3.4983"	3.5002-3.5004"
C	3.4983-3.4985"	3.5004-3.5006"
D	3.4985-3.4987"	3.5006-3.5008"
E	3.4987-3.4989"	3.5008-3.5010"
H	3.4989-3.4991"	3.5010-3.5012"
J	3.4991-3.4993"	3.5012-3.5014"
K	3.4993-3.4995"	3.5014-3.5016"
L	3.4995-3.4997"	3.5016-3.5018"
M	3.4997-3.4999"	3.5018-3.5020"

1942-48 Piston & Cylinder Sizes

Letter①	Piston Size	Cylinder Size
A	3.4976-3.4978"	3.5000-3.5002"
B	3.4978-3.4980"	3.5002-3.5004"
C	3.4980-3.4982"	3.5004-3.5006"
D	3.4982-3.4984"	3.5006-3.5008"
E	3.4984-3.4986"	3.5008-3.5010"
H	3.4986-3.4988"	3.5010-3.5012"
J	3.4988-3.4990"	3.5012-3.5014"
K	3.4990-3.4992"	3.5014-3.5016"
L	3.4992-3.4994"	3.5016-3.5018"
M	3.4994-3.4996"	3.5018-3.5020"

①—Cylinder bore letter to left of center of bore indicates —, to right of center +.

CAUTION—Cylinder bores should always be measured with micrometer to make certain that bore has not been enlarged in field without being marked 'oversize'.

PISTONS

1937-42 MODELS

REPLACEMENT PISTONS (WITH RINGS AND PIN): aluminum alloy, T-slot, cam ground pistons with anodized finish furnished for service in sizes (with piston skirt diameter limits) listed below.

V8 Engine Note—Starting with 1939 engines, pistons have wider top land with narrower (3/32") top compression ring (⅛" ring prior to 1939).

CADILLAC V8 & LA SALLE V8 (Up to 1941)

Nominal Size	Piston Skirt Diameter La Salle V8	Cadillac V8
Standard	3.3726-3.3746"	3.4979-3.4999"
.010" Oversize	3.3831-3.3846"	3.5084-3.5099"
.020" Oversize	3.3931-3.3946"	3.5184-3.5199"
.030" Oversize	3.4031-3.4046"	3.5284-3.5299"

CADILLAC V8 (1942)

Nominal Size	Piston Skirt Diameter
Standard	3.4976-3.4996"
.010" Oversize	3.5084-3.5099"
.020" Oversize	3.5184-3.5199"
.030" Oversize	3.5284-3.5299"

CADILLAC V16 (1938-40)

Nominal Size	Piston Skirt Diameter
Standard	3.2483-3.2503"

CAUTION—Cylinder bores should always be measured with micrometer (1¼" below top of block and at right angles to crankshaft) to make certain that bore has not been enlarged by refinishing in the field without being marked 'oversize.'

1946-47-48 MODELS

REPLACEMENT PISTONS (WITH RINGS AND PIN): Three ring type pistons with piston rings placed lower on piston to provide better lubrication and reduce scuffing. Finished replacement pistons are furnished in the following sizes:

Nominal Size	Piston Skirt Diameter
Standard	3.4979-3.4999"
.010" Oversize	3.5089-3.5099"
.020" Oversize	3.5189-3.5199"
.030" Oversize	3.5289-3.5299"

1941-48 MODELS

FITTING NEW PISTONS: Pistons should be fitted by Micrometer Gauge Method or Feeler Gauge Method as described below to the following Skirt Clearance (with proper allowance for temperature variation):

Year	Skirt Clearance①
1941 Engines	.0020-.0022"
1942-48 Engines	.0023-.0025"

①—This is proper clearance with engine block and piston at 70° F. Subtract .0001" clearance (or 2/5 lb. pull on feeler gauge) for each 5.5° increase in piston temperature over 70°, add .0001" clearance (or 2/5 lb. pull) for each 5.5° decrease in piston temperature below 70°.

Micrometer Gauge Method:—Measure cylinder bore with micrometer gauge at point 1¼" below top edge and at right angles to crankshaft. Set inside micrometer at cylinder bore size, **then measure this gauge length with same outside micrometer used to measure piston.** This method will eliminate any error introduced by using different gauges to measure cylinder and piston. Use outside micrometer to measure piston diameter at upper corner of "T" slot (adjacent to "T" slot and ⅛" below horizontal slot —piston must be measured at this point since skirt tapered with .0005-.002" larger diameter at lower end). Select piston of correct size to give skirt clearance listed above.

Feeler Gauge Method:—Use ½" feeler stock .002", .0025", or .003" thick (see Feeler Gauge Note and table below) on side of piston directly over "T" slot (center feeler on slot) with lower rounded end of feeler extending ½" down on piston skirt past horizontal slot (feeler must not extend further down on piston skirt because skirt is tapered with greater diameter at bottom). Install piston and feeler in cylinder with piston right side up and feeler toward side, measure pull required to withdraw feeler. Pull will vary in accordance with thickness of feeler gauge used and with piston temperature. See table below for correct pull for each feeler gauge thickness to obtain proper skirt clearance listed above.

Feeler Pull	Piston Clearance (70°F.)		
(In lbs.)	.002" Feeler	.0025" Feeler	.003" Feeler
1	.00225"	.00275"	.00326"
2	.002"	.00252"	.00304"
3	.00175"	.00228"	.0028"
4	.0015"	.00205"	.00258"
5	.00125"	.00182"	.00235"
6	.001"	.00157"	.00213"
7	.00075"	.00133"	.0019"

CONTINUED N NEXT PA E

C NTINUED FR M PRECEDIN PA E

Feeler Gauge Note—Feeler gauges used for piston clearance measurement should be clean and smooth with lower end rounded. Rusted or wrinkled feelers should be discarded and rough edges should be honed to prevent scratching cylinder wall.

PISTON RINGS

1946-47-48 MODELS

REPLACEMENT PISTON RINGS: Piston rings are furnished separately and as sets for these engines as listed below. Rings are new types as follows:

Compression Ring—Type 200. Rings are 5/64" wide with "recess" or step on inner edge and must be installed with this step upward.

Oil Ring—Type XWS 85. Slotted type.

Piston Ring Part Numbers

Size	Compr. Ring	Oil Ring	Ring Set
Standard	1451157	1451710	1097584
.010" Oversize	1451619	1451711	1097585
.020" Oversize	1451617	1451712	1097586
.030" Oversize	1451618	1451713	1097587

PISTON PINS

1936-40 V8 MODELS

PISTON PIN SERVICING (V8 MODELS): Removal. Heat piston in boiling water to expand pin hole, push pin out by hand from ribbed boss end (one boss marked by raised rib on underside within piston). Do not use arbor press to remove pins.

Pin Bushing in Connecting Rod:—Split type. Press ut old bushing in arbor press (use sudden jerk to start bushing). Use special tool kit No. HM-250 to install new bushings. Insert bushing with split at right angles to rod center-line, and oil hole lined up with oil hole in rod, press bushing into rod with special bushing replacer and arbor press. Finish bushing by pressing burnishing bar through bushing (use kerosene as lubricant) using 2 or 3 ton arbor press, check pin fit, repeat burnishing operation until correct clearance secured.

Installing Pin:—Heat piston in boiling water, coat pin with engine oil, press pin in by hand from side opposite ribbed boss.

1941-48 MODELS

PISTON PIN FITTING: Piston pin holes in piston have bearingized finish and, if oversize pins are installed, holes should be honed to proper size as follows: Use Piston Pin Hone, Part No. KMO-336, mount hone in vise and revolve piston on hone slowly by hand—**do not use electric drill to drive hone.** Use very fine abrasive (Grit No. 240A), washing abrasive out frequently with gasoline or kerosene. CAUTION—Always wash piston thoroughly before inserting pin to gauge for size. Pins should be a free hand press fit in each piston boss with no perceptible play at 70° (clearance .0001-.0003" '41, .00005-.0001" '42-48).

1938-40 V16 MODELS

PISTON PIN REMOVAL & INSTALLATION V16: Rod web split at pin hole with clampscrew below pin (pin hole not split open) and pin must be removed and installed as follows: With locking screw removed, use tool J-1167 to spread split end of connecting rod, then tap pin out of piston and rod with brass drift. Install in same manner.

CONNECTING ROD & BEARINGS

1936-48 MODELS

PLASTIGAGE FOR CHECKING BEARING CLEARANCE: Connecting rod and main bearing clearance can be checked as follows: Remove cap, wipe crankshaft journal and bearing insert free of oil, place piece of Plastigage across bearing, install cap (on connecting rods, crank pin should be at bottom dead center), tighten cap bolts to specified torque (see Tightening Specifications). Remove cap, check widest width of flattened Plastigage with scale on envelope. Replace rod bearings if over .0045", main bearings if over .005".

1937-48 MODELS

CONNECTING RODS (V8 MODELS): Rods are split at an angle at lower end to permit removal through top of block. Caps doweled in rod and held by special capscrews (unequal length) with lockwashers

Removal (Starting 1939)—Car manufacturer recommends that connecting rod bearing caps be removed as follows: Use a blunt brass punch approx. diameter of bolt head and 3 or 4" long, place punch against bolt head directly in line with bolt, tap punch solidly with a heavy hammer which will loosen bolt threads. Use Connecting Rod Bolt Remover Tool J-1498 (assemble socket on bolt head, turn down hexagonal cap on lower end of tool until wrench wedged in position between floor and bolt to be removed) and loosen bolt by turning T-handle.

Installation—Special type connecting rod bearing cap bolts and lock washers used. When tightening bolts use a wrench with 12" handle (do not use Remover Tool J-1498 to tighten bolts). Numbers on rods must be toward bottom of engine and correspond and be on the same side as number on cap.

Bearing Removal & Installation—Bearing shells should be replaced when clearance exceeds .0045". Bearing shells can be replaced by taking off caps as described above, rods need not be removed. Bearing halves not interchangeable (upper half has oil holes for piston pin and cylinder wall lubrication). Install bearing shells with tangs engaging grooves in cap and rod. Align oil holes in upper half and rod.

CRANKSHAFT & MAIN BEARINGS

1937-48 MODELS

MAIN BEARING SERVICING: Bearing Removal. Bearing upper halves can be 'rotated' out without removing crankshaft. Install flattened cotter pin in oil hole in crankshaft so that pin engages bearing, turn crankshaft in reverse direction to push bearing out.

Main Bearing Installation—Clean all oil lines and the crankcase thoroughly. Then install the new upper bearing halves in same manner as old bearings removed ('rotate' bearings in place with cotter pin installed in oil hole, make certain that locating lug is in correct position).

Rear Main Bearing Oil Seal Installation—Remove crankshaft and rear main bearing shells (to avoid damage), clean all old packing out of groove in crankcase and bearing cap, use tool J-1177 to install new packing as follows: Install length of new packing in groove in crankcase, drive packing up into place with tool J-1177 by pounding on tool handle with hammer, hold tool in position and cut off each end of packing flush with bearing edge. Install packing in bearing cap in same manner. When installing rear main bearing cap in engine, install new cork plugs in grooves on each side of bearing cap to prevent oil leaks at this point. Plugs should be well greased to facilitate installation.

CAMSHAFT & BEARINGS

1936-48 MODELS

CAMSHAFT: Removal—Remove engine front dust pan, fan, generator, carburetor and manifolds, distributor, fuel pump, valve lifter assemblies, radiator core, crankshaft pulley, timing chain cover, camshaft retaining plate, and camshaft.

1941 & Earlier Models—Front Grille must also be removed to take out camshaft on these cars.

►***CAUTION—Camshaft thrust plate must be installed with widest space to left of camshaft (to the right when viewed facing front of engine).***

Camshaft Bushing Servicing—Remove old bushings by pressing them out of bearing supports using tool J-829 (transmission and flywheel housing must be removed to take out rear bushing). To install new bushings, coat bushings with white lead, install front bushing first, then rear bushing, finally center bushing. Use tool J-829 to press bushings in place and pilot tool in two other bushings while pressing third bushing in place. *CAUTION*—Make certain that oil holes in each bushing lined up with oil leads in support.

1938-40 V16 MODELS

CAMSHAFT SERVICING (V16 MODELS): Camshaft must be removed for all service operations.

Removal & Installation:—Remove front end assembly (radiator & frt. fenders) as unit, disconnect the flexible pipes from gasoline lines to fuel pumps and jack up front of engine, remove crankshaft balancer and pulley, chain case cover, timing chain and camshaft sprocket, valves, valve lifters, vacuum pump and operating plunger. Install special camshaft tool J-1210 (attach by turning tool into tapped hole for sprocket screw), withdraw camshaft. When installing camshaft, make certain that front camshaft bearing is properly installed.

VALVE SYSTEM

1936-48 V8 MODELS

VALVE SERVICING: Valve Removal & Installation. Valve lifter assemblies must be removed before valves can be taken out. Use valve lifter J-257-X to compress springs for removal and installation of valve spring retainers and locks. Check valves for correct length (before installing lifters) with tool J-1055 measuring distance from end of valve stem to heel of cam (cam lobe turned 180° away from valve). If valve stem too long, grind off end of stem so that gauge will slide into place with valve seated. If tool not available, check clearance between end of valve stem and valve lifter plunger with plunger pressed down in lifter cylinder (lifter must be drained of oil for this check). Clearance should be .030-.070".

Assembling Valve Lifters—Two types of valve lifters used starting 1948 production. Assemble lifters as follows:

Body & Plunger Type. Install plunger (with spring under head) in cylinder, lock spring into cylinder by twisting plunger clockwise. Install body in lifter bracket, place lock ring in groove on upper end of body, and fill body with clean engine oil. Finally insert plunger and cylinder assembly in body. When installing lifter assemblies on engine, valve lifter bodies should be filled with oil and tool J-827 used to install lifter brackets in engine.

Unit Type. Turn plunger upside down and install ball, ball retainer, spring, and body over upturned end of plunger. Turn assembly right side up, fill plunger with oil (move ball with piece of wire to permit oil to fill body), refill plunger with oil. Install plunger cap on plunger (push plunger cap just far enough to expose groove on inner diameter of body), use Lock Wire Installer Tool J-2730 to install plunger cap lock wire. Install lifter in lifter bracket, place lock ring in groove on upper end of lifter body.

►*CAUTION—Oil will be forced out of lifter if plunger cap pushed down beyond groove on inner diameter of body (for installation of plunger cap lock ring) before lifter installed in engine.*

Valve Lifter Servicing—Oil the tops of the lifter assemblies after they have been installed. Connect oil feed pipes at supply end only and crank engine until all air is expelled from pipes, then connect pipes to lifter bracket connection. Check clearance between lifter and valve stem with plunger spring fully compressed and plunger seated in cylinder (all oil forced out). This clearance should be .030-.070". *See Valve Lifters in Miscellaneous Section for Hydraulic Valve Lifter data.*

OILING SYSTEM

1936-48 MODELS

LUBRICATION SYSTEM SERVICING: Before installing new main and connecting rod bearings, or when installing lifters in engine in which sludge noted in valve compartment, clean entire engine lubricating system thoroughly as follows: Remove oil pump and baffle, remove plug at front end of crankcase oil header, blow out oil lines by applying kerosene and air (use kerosene gun) at upper end of valve silencer feed line and at oil header opening. Wash down valve chambers and crankcase with compressed air and kerosene. Check and clean small hole at lower end of each connecting rod, clean any clogged oil lines with wire brush. Clean oil pump, baffle, float screen, regulator valve, and oil pan with compressed air and kerosene.

NOTE—Oil filter used on 1936-37 V8 Models. Filter must be removed on these cars.

►**1946-48 Oil Lifter Lubrication Line Note**—New "inertia" type fitting located in this oil line. Oil is required to make a 90° turn before entering the lifter line and foreign particles in the oil tend to be carried past this point rather than entering the line and being carried to the lifters.

1938-40 MODELS

LUBRICATION SYSTEM SERVICING (V16 MODEL): Clean oil passages in block in same manner as for V8 models. If auxiliary relief valve for hydraulic valve lifter lines removed (located at rear of left hand lifter passage) make certain that relief hole turned so that oil will flow against camshaft and not on oil pump gears when valve reinstalled. Do not disturb plugs in crankcase directly above each valve lifter oil passage.

OIL PUMP

1936-38 MODELS

Oil Pump Specifications ('36-'38):—Drive gear backlash .018" max., Endplay .003-.010" (new), .015" (worn). Driveshaft clearance in bushing .001-.0025" (new), .010" (worn). Pump gear clearance in body .0025-.0085" (new), Endplay .002-.004" (new), .015" (worn).

1939-48 MODELS

Oil Pump Specifications: Pump body and drive shaft clearance—.0010-.0025" (new), .005" (worn limit). Pump body and pump gear clearance—.002-.004" (new), .006" (worn limit). Pump gear endplay —.001-.004" (new), .006" (worn limit). Pump drive gear backlash—.008-.012" maximum.

Oil Pressure Regulator Specifications—Clearance between valve plunger and housing—.0020-.0035". (new), .005" (worn limit). Regulator spring pressure—5¾-6¼ lbs. at 1 13/32". Spring free length 2 25/64".

COOLING SYSTEM

1939 MODELS

FAN PULLEY REPLACEMENT (V8 MODELS): Two types of fan pulleys used in production. Second type (also used for service replacement) carries metal reinforcement cup 5/64" thick on inner side of hub.

Cadillac V8—New hub must be installed whenever pulley replaced. No allowance necessary for reinforcement cup (pulley attached to rear face of new hub before hub installed).

La Salle—When replacing first type pulley with second type, driving hub must be forced back 5/64" on shaft to maintain fan belt alignment (allowing for reinforcement cup thickness). When pressing hub on shaft, use end of shaft (not bearing) for support. NOTE—New fan hub must be installed whenever old hub removed from shaft in order to secure proper press fit on shaft.

RADIATOR

1938-40 MODELS

RADIATOR REMOVAL (ALL SERIES): To remove radiator core, drain cooling system, remove hoses and radiator tie rods, disconnect shutter rod at thermostat (V8). Remove air cleaner (V8), ignition coils (V16), generator, fan and inlet elbow on left fuel pump (V16). Disconnect headlamp wires at block on right fender and remove harness from radiator (V8). Take out radiator mounting screws at each side and lift out core.

1941-48 MODELS

RADIATOR CORE REMOVAL: Drain radiator, remove radiator hoses, air cleaner and fan. Take out radiator-to-cradle assembly screws, lift out core.
1941 Note—Thermostat-to-shutter rod must be disconected at thermostat in radiator top tank.

1941 MODELS

RADIATOR SHUTTER THERMOSTAT: Shutter Control Rod Adjustment—With cooling system cold (below thermostat opening temperature of 150°), disconnect thermostat lever from shutter control rod, loosen locknut and turn clevis on thermostat end of rod to lengthen rod until clevis eye is 1/16" past hole in thermostat lever (rod 1/16" too long), tighten locknut and connect rod (align clevis and lever by forcing rod to right). This setting provides initial pressure on shutters which tends to keep them closed when cold.

Thermostat Checking—To check thermostat for correct operation on car, disconnect shutter control rod and note force required to open thermostat when cold (below opening temperature of 150°). Pull of 45-50 lbs. on spring scale hooked to thermostat stem should be required to open thermostat. If pull is less than 45 lbs., remove thermostat and check as follows: Place thermostat on brick in pan of water (thermostat must not come in contact with surface of pan), insert thermometer in water to check temperature, heat water and note thermostat operation. At 175°F, thermostat stem should raise 9/16" to open position and at 190°, stem should support weight of 20 lbs. without closing (Std. Thermostat). High-Reading thermostat should open 9/16" at 190°F. and support 20 lb. weight at 205°F. Before replacing thermostat check shutters for sticking or binding.

Radiator Shutter Checking—To check shutters for free operation, disconnect and remove control rod, hook spring scale in place of rod. Pull required to open shutters should not exceed 4 lbs. If pull exceeds 4 lbs., lubricate shutters and remove any cause of binding or sticking.

CLUTCH NOTES

1938-48 MODELS

CLUTCH BALANCING: Make certain that balance marks lined up when clutch installed on flywheel, then check balance by running engine at speed of 24-30 MPH. with rear wheels jacked up and note if any excessive vibration apparent. If vibration noted, re-balance clutch as follows: Install one or two ⅛" thick washers with 5/16" hole on clutch cover mounting capscrew (start at point where clutch drilled for balancing), repeat test and note if vibration increased or decreased. Add or remove washers at each mounting capscrew until satisfactory balance secured.

Clutch Housing Removal (V16):—Clutch must be removed before housing can be taken off engine (housing will not clear clutch and flywheel).

1936-48 MODELS

CLUTCH LOCKING PIN REMOVAL (ALL MODELS): Replacement clutches furnished by car manufacturer equipped with three locking pins or blocks (one under each release lever). Pins released when clutch installed and cover plate tightened. **These pins must be removed.** Pins that are not removed will drop in clutch housing and may cause damage when car operated.

TRANSMISSION NOTES

1941 MODELS

TRANSMISSION EXTENSION HOUSING: Production Change—Two types of extension housing used in production (changed after first 3500 cars) as noted below. First type housing must be changed to second type on these first cars, if rear axle with optional gear ratio installed, to permit installation of different speedometer pinion for new axle ratio. Second type housing only furnished for service.

Extension Housing (First Type)—Permits mounting of speedometer pinion for standard rear axle ratio only. Must be changed to second type if rear axle ratio changed.

Extension Housing (Second Type)—May be identified by letter 'R' stamped on transmission case under speedometer cable opening. This housing permits mounting of speedometer pinion for standard and all optional rear axle ratios.

C NTINUED ON NEXT PAGE

CONTINUED FR M PRECEDING PA E

PROPELLER SHAFTS

1946-47-48 MODELS

COMMERCIAL CAR PROPELLER SHAFTS: Two shafts are used with center (sealed) bearing at rear of front shaft mounted in support assembly attached to brackets on frame. Sliding joint formed at rear end of rear shaft. Yoke at transmission uses threaded plug and is prevented from slipping by snap ring on transmission shaft.

Front Propeller Shaft Removal—Disconnect front and intermediate universal joints by taking out capscrews on opposite trunnion bearing caps at each joint. Take off 4 nuts from rubber insulator studs on bearing support (CAUTION—Do not disturb support mounting brackets at frame or original factory alignment will be upset).

Center Bearing Disassembly—Take off yoke on rear end of front shaft, slide off flat washer and deflector. Press center bearing support assembly off rear end of shaft. Remove deflector from front side of of bearing support and press bearing and rubber cushion out of support. Separate bearing from cushion.

Correction of Drive Line Wear—New yokes with undersize splines available for replacement on Commercial Cars with click at splines and splineways (after very high mileage). Yokes available for end of transmission shaft and on end of front propeller shaft. Splineways on yokes are a few thousandths undersize and can be driven on shafts.

REAR STABILIZER

1939 MODELS

REAR STABILIZER (60S, 75, 90): Installation. Rear stabilizer link requires no readjustment from original factory setting. If stabilizer removed from car, reassemble in following order: With car at curb weight (no passenger load), attach stabilizer to axle first, then to frame bracket. Tighten adjusting nuts without disturbing position of rod.

MODEL IDENTIFICATION

SERIAL NUMBER:—Same as engine number. Located on top of crankcase behind fan support. First number 6010001 (60), 3110001 (70, 75).

ENGINE NUMBER:—First number—36-60, 6010001; 36-70, 75, 3110001. Stamped on top of crankcase, behind fan support.

TUNE-UP

COMPRESSION:—Ratio 6.25-1 Std. 5.75-1 Optl. Pressure—155 lbs. (60), 170 lbs. (70, 75) at 1000 R.P.M. or approximately 105-110 lbs. at cranking speed for std. 6.25-1 head.

VACUUM READING:—Gauge should show steady reading of 20-21" with engine idling at 6 M.P.H.

FIRING ORDER: 1-8-7-3-6-5-4-2. See diagram.
Cylinder Numbering—Front to rear:
LEFT BANK—1-3-5-7. RIGHT BANK—2-4-6-8.

SPARK PLUGS: AC Type K7. 14 mm. Metric.
Gaps—.025-.030".

IGNITION: See Coil, Condenser, and Distributor.
Breaker Gap—.015" Cam Angle 31° (closed).
Automatic & Vacuum Advance—*See Distributor.*

IGNITION TIMING: See Ignition Timing.
Std. Setting—4° BTDC. with crankshaft pulley mark "IG/A" at indicator on front of engine.

CARBURETION: See Carburetor & Carb. Equipment.
Idle Setting—Both idle screws set midway between "miss" and "roll" points. Idle speed 6 MPH.
Float Level—Fuel level 5/8" below top edge of bowl.
Accelerating Pump—Not adjustable.
Fuel Pump Pressure: 4½ lbs. maximum.

VALVES: See Valve Timing.
Tappet Clearance—None in service (automatic hydraulic type take-up).

STARTING: See Battery, Starter, Generator, Regulator.

IGNITION

Ignition Switch:—Delco-Remy Model 431-L (60), 431-Z (60 RHD.), 435-A (70, 75). Switch and cable connected to ignition coil by armored cable.
Ignition Lock—Briggs & Stratton No. 45792 (Lock cylinder). Key Series—8000-9499. Groove—#15.

COIL: Delco-Remy Model 539-C. Mounted on dash.
Ignition Current—2.2 amperes idling, 4.4 stopped.

CONDENSER: Delco-Remy Part No. 1855968.
Capacity—.20-.25 microfarad.

DISTRIBUTOR: Delco-Remy Model 663-G. Single breaker, 8 lobe cam, full automatic advance type with auxiliary spark control and manual adjustment.
Breaker Gap—Set at .015". Limits .012-.018".
Cam Angle or Dwell—31° closed, 14° open.
Breaker Arm Spring Tension—19-23 ounces.

Automatic Advance

Distributor Degrees	R.P.M.	Engine Degrees	R.P.M.
Start	500	1	1000
12	2000	24	4000

Vacuum Spark Control—Integral with distributor. Mounted on housing and linked directly to breaker plate. Provides additional advance for speeds above idling except when engine is accelerated or operated with wide open throttle when spark is retarded by return spring in unit.

Vacuum Advance

Distr. Degrees	Eng. Degrees	Vacuum (" of HG)
Start	0°	9-11"
7½°	15°	16-18"

Distributor Removal:—Mounted between cylinder banks at rear of engine. Take out two capscrews in mounting bracket.

NOTE—When installing distributor on engine, turn crankshaft to firing position for #1 piston, mesh distributor drive gear to that slot in upper end of shaft is offset toward rear of engine.

IGNITION TIMING

IGNITION TIMING:—Setting for all engines is as follows. See Manual Adjustment section below.

	Flywheel Degrees	Piston Position
All engines	4° BTDC	.0069" BTDC

To Set Timing (Using Synchroscope)—Recommended by manufacturer. Clip Synchroscope lead to #1 spark plug and direct light on crankshaft pulley at front of engine. Idle engine, loosen hold-down screw in advance arm, rotate distributor until pulley mark 'IG/A' which is 4° before top dead center mark 'C.1/6' lines up with pointer on chain case cover, tighten hold-down screw.

Timing (Without Synchroscope)—Turn engine over until #1 piston (front piston left block) reaches firing position 4° before top dead center on compression stroke, stop when crankshaft pulley mark 'IGN' at front of engine lines up with pointer on chain case cover, loosen hold-down screw in advance arm, rotate distributor until contacts begin to open, tighten hold-down screw.

Manual Adjustment—With ignition set as above, slight 'ping' should be noticeable when engine is accelerated with wide open throttle at speeds below 15 M.P.H. If ping is too severe, loosen hold-down screw in advance arm, rotate distributor one graduation on scale counter-clockwise to retard spark, repeat test. Adjustment permits 10° advance or retard from center 'O' position.

CONTINUED ON NEXT PAGE

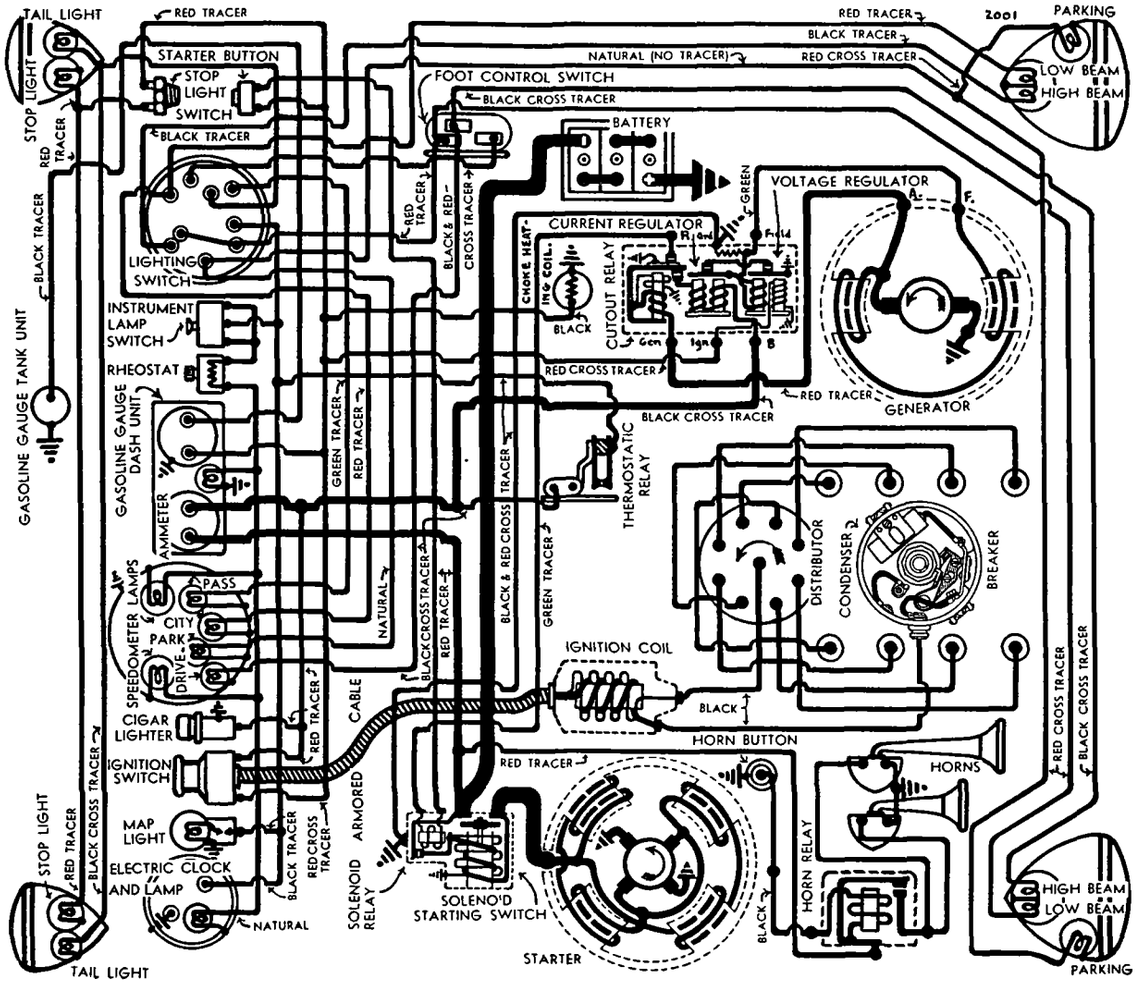

C NTINUED FROM PRECEDIN PA E

NOTE—Check engine for faulty spark plugs, excessive carbon deposits or localized 'hot spots' before changing the manual adjustment.

CARBURETOR

CARBURETION:—Carburetor—Stromberg Model EE-25, 1¼" Dual, downdraft type. See Carburetion Section for adjustment, overhaul, and Jet Specifications.
For complete data, refer to Carburetor Index.
Settings (Idle Setting, Float Level, Accelerating Pump): *See Tune-Up data.*
Fast Idle—Integral with Carburetor. See article on Fast Idle and Automatic Choke as used on EE-15 & EE-25 Carburetors in Carburetion Section.
For complete data, refer to Carburetion Equip. Index.
Automatic Choke:—Triple Range Automatic and manual choke control. See article on Automatic Choke as used on EE-15 and EE 25 Carburetors in Carburetion Section.
For complete data, refer to Carburetion Equip. Index.

CARB. EQUIPMENT

Air Cleaner:—AC. #1525988 oil-wetted type standard, #1525966 oil-bath type optional.
NOTE—Smaller main metering jets must be used in carburetor when heavy duty oil-bath type cleaner is used. See Stromberg Jet Specifications in Carburetion Section.
Fuel Pump:—AC. Type AB. #1522119 combination fuel and vacuum pump. See article in Carburetion Sec.
For complete data, refer to Carburetion Equip. Index.
Gasoline Gauge:—AC. Electric. #1515303 (dash unit—all models), #1515419 (tank unit—60), #1515420 tank unit—70, 75). See article in Carburetion Sec.
For complete data, refer to Carburetion Equip. Index.

BATTERY

BATTERY:—(60) Delco, Type 17-K. 6 volt, 17 plate, 110 ampere hour capacity (20 hour rate).
Starting Capacity—131 amperes for 20 minutes.
Zero Capacity—300 amperes for 4.4 minutes.
Grounded Terminal—Positive (+) terminal.
Location—Under left front seat (all models).
(Model 70, 75) Delco, Type 17-D. 6 volt, 17 plate, 130 ampere hour capacity (20 hour rate).
Starting Capacity—156 amperes for 20 minutes.
Zero Capacity—300 amperes for 5.0 minutes.
Grounded Terminal & Location—Same as above.

STARTER

Delco-Remy Model 727-V, 729-C (36-60 RHD). Armature No. 820158.
Drive—Overrunning Clutch and manual pinion shift operated by solenoid switch.
Rotation—Counter-clockwise at commutator end.
Brush Spring Tension—24-28 ounces.

Performance Data

Torque	R.P.M.	Volts	Amperes
0 ft. lbs.	5500	5.0	65
16 ft. lbs.	Lock	3.0	600

Removal:—Flange mounted on right front face of flywheel housing. To remove, take out flange mounting screws, pull starter forward and remove from below.
Starting Switch:—Solenoid Switch Type 1512 (727-V), 1532 (729-C). Pushbutton Switch Type 1405 (60), 1407 (70, 75). Solenoid switch controlled through relay by push button on instrument board. Operative only with ignition 'on.'
For complete data, refer to Electrical Equipment Index.

GENERATOR

Delco-Remy Model 961-E. Armature No. 1857866. Straight shunt (two brush) type with external voltage and current regulation. Ventilated by fan on drive pulley.
Charging Rate Adjustment—No adjustment at generator. Charging rate controlled by Voltage Regulator and maximum output controlled by Current Regulator. See Control Unit section below and special article in Equipment Section.
Maximum Charging Rate—20 amperes (cold) with discharged battery as indicated on test ammeter connected in charging line at 'BAT' terminal on control unit. Decreases as battery comes up on charge. Generator output constant at all speeds above 1700 R.P.M. or 20 M.P.H.

Performance Data—Generator Cold

Amperes	Volts	R.P.M.
22	8.0	1550

Rotation—Counter-clockwise at commutator end.
Brush Spring Tension—22-26 ounces.
Field Current—1.7-1.9 amperes at 6.0 volts.
Removal:—Pivot mounted at left front of engine. To remove, take off left front wheel, remove cover in dust shield under left front fender by taking out three screws. Take out two generator pivot bolts and one clamp bolt, remove generator through opening.
Belt Adjustment:—Loosen generator pivot bolts and clamp bolt, pull generator out until belt deflection midway between pulleys is ⅞-1" (measured from straightedge with ⅞" projection at center laid along belt).

REGULATOR

Delco-Remy Model 5559. Double Core Type Voltage & Current Regulator (With 'IGN' Terminal). Cutout Relay and vibrating Voltage & Current Regulators
For complete data, refer to Electrical Equipment Index.
NOTE—Units are sealed. Performance can be checked as directed below without breaking seals. Seals must be broken and cover removed (voiding warranty) to make adjustments.

Cutout Relay

Cuts In—6.9-7.6 volts, 12 M.P.H.
Cuts Out—3 ampere max. discharge at 6.3 volts.
Contact Gap—.018-.025".
Air Gap—.018-.022" with contacts closed.

Voltage Regulator

Setting—7.55-7.85 volts at 72° F., 7.45-7.55 volts at 150° F. Regulator is over-compensated for temperature and must be checked at these points.
Checking & Adjustment—*See Electrical Equipment Section.*
Contact Gap—.015-.025".
Contact Spring Tension—3.5 ozs. minimum.
Air Gap—.060-.070" between armature and core with armature down so that fibre bumper just touches stop, .007-.010" between fibre bumper and stop with armature up.

Current Regulator

Setting—20-22 amperes.
Checking & Adjustment—*See Electrical Equipment Section.*
Contact Gap—.015-.025".
Contact Spring Tension—3.5 ozs. minimum.
Air Gap—.070-.080" between armature and core with armature down so that fibre bumper just touches stop, .007-.010" between fibre bumper and stop with armature up.

LIGHTING

LIGHTING:—Headlamps—Guide Multi-beam, Pre-focused, Cross-beam type with special non-interchangeable lenses. Headlamps aimed straight-ahead with lenses removed. Asymetrical passing beam (upper beam left hand headlamp, lower beam right hand headlamp), controlled by foot selector switch with lighting switch in 'Country Driving' position.
Headlamp Beam Indicators—Consists of four bulbs in lower half of speedometer which illuminate markers as follows:
City—Lower beam both headlamps.
Drive—Upper beam both headlamps.
Pass—Assymetrical passing beam (see above).
Park— Parking bulbs in headlamps.

Switches

Lighting—Delco-Remy Model 487-P (L. H. S. R.), 487-N (R.H.S.R.), 487-R (L.H. or R.H.S.R.).
Foot Selector—Delco-Remy Mod. 471-Z,471-U(RHD)
Instrument Lamp—Delco-Remy Model 1406 (60), Model 1364 (70, 75).
Stop Lamp—Hydraulic type on distributor at rear of brake master cylinder.

Bulb Specifications

Position	Candlepower	Mazda No.
Headlamp (Right)	50-32	2530-L
Headlamp (Left)	32-32	2330-L
Instrmt., Map, Qtr., Step, Tail	3	63
Parking, Clock	1.5	55
Beam Indicators	1	51
Stop, Dome	15	87

NOTE—Headlamp bulbs are Pre-focused, 'Long-life' type. In all states where 50 cp. bulbs are prohibited, the 32-32 cp. 2330-L bulb is used in both headlamps.

MISC. ELECTRICAL

THERMOSTATIC RELAY:—Model 411-A. Contacts remain closed with current of 25 amperes but open within one minute with load of 38 amperes. Non-adjustable.

HORNS:—Klaxon Model K-33-B, Type 1855 (low note), 1856 (high note). Vibrator type, twin horns with blended tone operated by horn relay.

Horn Type	Current at 6 Volts	Air Gap
1855	12-14	.045-.050"
1856	11-13	.036-.040"

Horn Relay:—Model 266-T. Requires .25 amperes at 2 volts min. to close contacts. Current draw .8 amps.
Contact Gap—.015-.025". **Spring Tension**—6-8 ozs.
Air Gap—.012-.017" with contacts closed.

ENGINE

ENGINE SPECIFICATIONS:—8 cylinder, 90 degree 'Vee' 'L' head type.
Bore—3⅜" (60), 3½" (70, 75). **Stroke**—4½".
Displacement—322 cu. in. (60), 346 cu. in. (70, 75).
Rated Horsepower—36.45 (60), 39.20 (70, 75).
Developed Horsepower—125 (60), 135 (70, 75) at 3400 R.P.M. Std. 6.25-1 head.
Compression Ratio—6.25-1 Std. cast-iron head. Optl. 5.75-1 cast-iron head.
Compression & Vacuum Reading—*See Tune-Up.*
NOTE—Upper crankcase and two cylinder blocks cast in one piece. Two cylinder head capscrews for water outlet elbow ½" longer than others and must be used for this purpose only. Cylinder head gaskets Part No. 1412661 (60), 1412662 (70, 75) are interchangeable (left and right banks) and must be installed with triangular hole on inner edge to rear.

ENGINE

CONTINUED FROM PRECEDING PAGE

PISTONS:—Lynite, Lo-Ex aluminum alloy, 'T' slot, Cam ground type with anodized finish (special hard oxide formed on bearing surface).
Length 4⅛". **Weight** 16.88 oz.(60), 18.304 (70,75).
Removal—Pistons and rods removed from above.
Clearance—Top .023" (60), .025" (70, 75). Bottom of skirt .0019" (60), .0021" (70, 75). See Fitting Pistons.

Replacement Pistons:—Finished anodized pistons furnished as follows:

	Model 36-60	36-70 ,75
Standard	3.3726-3.3746"	3.4979-3.4999"
.003" Oversize	3.3761-3.3776"	3.5014-3.5029"
.005" Oversize	3.3781-3.3796"	3.5034-3.5049"
.010" Oversize	3.3831-3.3846"	3.5084-3.5099"
.015" Oversize	3.3881-3.3896"	3.5135-3.5149"

NOTE—Cylinder bores in same block held within .002" limits. Max. cylinder bore out-of-round .0005".

Fitting New Pistons:—Check piston diameter with micrometer gauge at right angles to pin hole just below lower ring groove and ½" above lower edge. Using ½" feelers inserted between piston and cylinder wall on side opposite slot, piston should drop of its own weight with .002" feeler and hold its own weight on .0025" feeler.

Installing Pistons:—T-slot to left for all pistons.

PISTON RINGS:—Two compression, two oil control rings per piston, all above pin. Lower ring grooves drilled radially with oil drain holes. Heat deflector groove above top compression ring groove.

Ring	Width	End Gap	Side Clearance
Compression	1/8"	.007-.012"	.0015-.0028"
Oil Control	5/32"	.007-.015"	.0013-.0026"

NOTE—Worn limits for all rings .025" (End Gap), and .004" (Side Clearance).

PISTON PIN: Diameter—⅞". **Length** 2 15/16" (60), 3 1/16" (70, 75). Pin floats in piston and rod. Held by retaining rings. Split type bushing used in pin hole in rod. See NOTE below.
Pin Fit in Piston—.0004" press fit (rib end), .0001" clearance or free fit at 70° F. (other end).
Pin Fit in Rod Bushing—.0002-.0008" (new), .0015" max. (worn).

Removal:—Remove snap rings, place piston in boiling water for one minute, then push pin out by hand from rib end (one boss ribbed on underside).
NOTE—In removing and installing split-type bushing an arbor press and special tool kit (Tool No. HM-250) are necessary. Bushings must be pressed in, expanded, then burnished to give correct clearance.

CONNECTING ROD:—Weight 41.26 ozs. **Length** 8¾".
Crankpin Journal Diameter—2.4590-2.4595".
Lower Bearing—Removable steel-backed, babbitt-lined shell type. No shims.
Clearance—.001-.0025" (new), .006" max. (worn). Sideplay .003-.006".

Bearing Adjustment:—None (no shims). Replace bearings. Do not file rods or caps.
NOTE—New lock washers (Part No. 1415487) must be used under connecting rod bolts. Wrench for tightening bolts must not be longer than 12". Tool No. J-835 recommended by manufacturer.

Installing Rods:—Numbers on bearing cap and rod must correspond and must point toward oil pan.
NOTE—Crankpin out-of-round .002" maximum.

CRANKSHAFT:—3 bearing, 6 counterweights, #2 and 5 held by capscrews, all others integral.
Journal Diameters—2½" all bearings.
NOTE—Journal out-of-round .002" maximum.
Bearing Type—Removable steel-backed, babbitt-lined shells. New bearings require no line-reaming.
Clearance—.0015" (new), .004" (worn).

Bearing Adjustment:—None (no shims). Replace bearings. Do not file caps. Upper halves rotated in and out with 'T' shaped cotter pin in oil passage.
NOTE—When reinstalling rear main bearing cap use new wooden plugs in grooves.

End Thrust:—Taken by center (#2) bearing. Endplay .001-.005" (new), .010" (worn).

CAMSHAFT:—3 bearing. Non-adjustable chain drive.
Journal Diameters—#1 and 2, 2.4076-2.4083"; #3, 2.0014-2.0021".
Bearing Type—Removable steel-backed, babbitt-lined bushings.
Clearance—.002-.004" (new), .005" (worn limit).
NOTE—Use Tool J-829 to remove and install bearings. Bearing out-of-round must not exceed .002".

End Thrust:—Taken by thrust plate behind sprocket. No endplay permissible.

Timing Chain:—Morse #3377. Width 1¼". Pitch ⅜". Length 23¼" or 62 links.
Installing Chain—Install chain 'endless' as an assembly with both sprockets. Use Tool J-836 to pilot camshaft sprocket when installing on shaft.

Camshaft Setting:—Sprockets are marked. Install chain with sprocket '0' marks adjacent and in line with straightedge across the shaft centers.

VALVES:—

	Head Diameter	Stem Diameter	Length
Intake	1.876-1.886"	.3415-.3425"	5 33/64"
Exhaust	1.626-1.636"	.3405-.3415"	5 33/64"

	Seat Angle	Lift	Stem Clearance
Intake	45°	11/32"	.001-.0023"
Exhaust	45°	11/32"	.002-.0033"

NOTE—Valve lifter assemblies must be removed before valve springs can be compressed to remove spring keepers and free valves. Use Tool J-827 to hold plungers down when re-installing lifters.

Valve Guides:—Removable. Pressed in block with long stepped end down and finish reamed to provide clearance of .001-.0023" Int., .002-.0033" Exh.

Valve Springs:—Free length 2.210".

	Spring Pressure	Length
Valve Closed	62-69 lbs	1 15/16"
Valve Open	140-151 lbs	1 9/16"

Valve Lifters:—Mushroom type with Automatic valve tappet takeup. See article in Equipment Section
See Miscellaneous Section for complete data.

VALVE TIMING

Tappet Clearance:—None in service (hydraulic type lifter). *See Valve Servicing in Cadillac Shop Notes.*

Valve Timing:—See Camshaft Setting above.
Intake Valves—Open at TDC. Close 42° ALDC.
Exhaust Valves—Open 52° BLDC. Close 10° ATDC.
To Check Valve Timing—Intake valve for cylinder #1 (front cylinder—left bank) should open with piston on top dead center when mark 'C.1/6' on crankshaft pulley lines up with pointer.

LUBRICATION

LUBRICATION:—Pressure system with main oil channel located in left hand crankcase wall.

Oil Pump:—Gear type located in oil pan at rear of engine. Driven through idler gear from camshaft.
Oil Pump Drive Clearances—Drive shaft bushing .001-.0025" (new), .010" (worn). Endplay in accessory idler gear .002-.006" (new), .010" (worn). Endplay in spiral gear on drive shaft .003-.010" (new), .015" (worn). Backlash in spiral drive gears .018" max.
Oil Pump Gear Clearances—Pump body and gears .0025-.0085" (new), .010" (worn). Pump gear endplay .002-.004" (new), .015" (worn).
Normal Oil Pressure:—15 lbs. idling, 30 lbs. at 60 M.P.H.
Oil Pressure Regulator:—Operates at 30 lbs. Located on oil pump. Not adjustable.
Crankcase Capacity:—7 qts. refill.

CLUTCH

CLUTCH:—Long Model 11CF-CI (60), 11CF-CL (70, 75). Semi-centrifugal single plate, dry disc type.
See Clutch Section for complete data.
Facings—Woven type, 2 required. Inside Diam. 6½". Outside Diam. 11". Thickness .135-.139".
Adjustment—Free movement of clutch pedal should be ⅞-1⅛". Adjust by turning nut on forward end of pedal rod directly below pedal equalizer link.
Removal—Disconnect front universal joint, remove from propeller shaft, remove cross member carrying transmission rear support; remove front propeller shaft housing and propeller shaft (70, 75 only); disconnect clutch release mechanism (70, 75 only); remove transmission (pull straight back to avoid distortion to clutch disc), drop clutch housing pan and remove clutch release yoke retaining screw (60 only). Prick punch clutch cover, spring pressure plate and flywheel (install in same position to maintain balance), take out clutch mounting bolts, turning all bolts out evenly. Remove clutch.
NOTE—On Series 36-60 cars keep transmission in high gear or install brace across face of case to hold clutch connection in position, preventing high-speed synchronizing drum from pulling out of splines.
See Cadillac Shop Notes for clutch locking pin removal on replacement clutches.

FRONT SUSPENSION

Front Suspension: Independent linked parallelogram type.
CAUTION—Series 36-60 after Engine No. 6014008 equipped with re-designed Front Suspension which requires different adjustment procedure over first type used on first 4008 cars.
See Front Suspension Section for complete data.
Kingpin Inclination—4°51' (60), 5°38' (70, 75).
Caster—1½-2° (60), ¾-1¼° (70, 75).
Camber—¼-1° (60), 0-½° (70, 75).
Toe In—0-1/16".
Steering Geometry—Inner wheel turned 21¾-23¼° (60), 22-23½° (70, 75), outer wheel turned 20°.

STEERING GEAR

Steering Gear: Saginaw Worm-and-Double Roller
See Steering Gear Section for complete data.

BRAKES

BRAKES:—Bendix Hydraulic, single anchor type. Hand lever applies rear wheel service brakes.
See Brake Section for complete data.
Wheel Cylinders—Diameters: front 1 1/16" (60), 1¼" (70, 75), rear 15/16" (60), 1 1/16" (70, 75). No part of assembly is interchangeable.
Drum Diameter—11.995-12.005" (60), 13.995-14.005" (70, 75). Out-of-round .007" max. Run ut (installed) .010" maximum.
Lining—Moulded (primary), woven (secondary). Width 2" (60), 2¼" (70, 75). Thickness 3/16" (60), ¼" (70, 75). Length 10⅛"-60, 12¼"-70, 75 (frt. wh. primary), 13"-60, 15"-70, 75 (all others).
Clearance—.010" between lining and drum.
Hand Brake Adjustment:—See Service Brake.

MODEL IDENTIFICATION

SERIAL NUMBER: Same as engine number (below). Visible from left side with engine hood raised.

ENGINE NUMBER:—First number (60) 6030001, (65) 7030001, (70, 75) 3130001. Stamped on left side of crankcase at rear of left cylinder block.

TUNE-UP

COMPRESSION:—**Ratio**—6.25-1 Std. 5.75-1 Optl. **Pressure**—155 lbs. at 1000 RPM or approximately 105-110 lbs. at cranking speed (Std. 6.25-1 head).

VACUUM READING:—20-21" steady reading with engine idling at 6 M.P.H.

FIRING ORDER: 1-8-7-3-6-5-4-2. See diagram.

SPARK PLUGS: AC No. 45 (sup. K-7). 14 mm. Metric. Gaps—.025-.030".

IGNITION: See Coil, Condenser, and Distributor. **Breaker Gap**—.015". **Cam Angle** 31° (closed). **Automatic Advance**—12° max. at 2000 RPM (distr.).

IGNITION TIMING: See Ignition Timing. **Std. Setting**—5° BTDC. with crankshaft pulley mark "IG/A" at indicator on front of engine.

CARBURETION: See Carburetor & Carb. Equipment. **Idle Setting**—Both idle screws set midway between "miss" and "roll" points. Idle speed 6 MPH. **Float Level**—Fuel level 5/8" below top of bowl. **Accelerating Pump**—Inner hole (min.)—Summer, Outer hole (max.)—Winter.

Fuel Pump Pressure: 4½ lbs. maximum.

VALVES: See Valve Timing. **Tappet Clearance**—None in service (automatic hydraulic take-up).

STARTING: See Battery, Starter, Generator, Regulator.

IGNITION

Ignition Switch:—Delco Remy Mod. 435-K (60), 435-H (65, 70, 75). Connected to coil by armored cable.

Ignition Lock—Briggs & Stratton. #45792 (cylinder), #80203 (case). **Key Series**—8000-9499.

COIL: Delco-Remy Model 539-C. Mounted on dash. **Ignition Current**—2.2 amperes idling, 4.4 stopped.

CONDENSER: Delco-Remy Part No. 829107. **Capacity**—.20-.25 microfarad.

DISTRIBUTOR: Delco-Remy Model 665-G. Single breaker, 8 lobe cam, full automatic advance type with manual adjustment. NOTE—No vacuum spark control.

NOTE—Distributor rotation clockwise (viewed from above) which is reversed from 1936 model. Distributor driven by oil pump drive gear.

Breaker Gap—Set at .015". Limits .0125-.0175".

Cam Angle r Dwell—31° closed, 14° open.

Breaker Arm Spring Tension—19-23 ounces.

Automatic Advance

Distributor		Engine	
Degrees	**R.P.M.**	**Degrees**	**R.P.M.**
Start	500	1	1000
3	820	6	1640
6	1200	12	2400
9	1600	18	3200
12	2000	24	4000

Removal:—Distributor mounted between cylinder banks at rear of engine. T remove, take out two capscrews in mounting bracket.

NOTE—When installing distributor on engine, turn crankshaft to firing position for #1 piston, mesh distributor drive gear so that slot in upper end of shaft is offset toward left or rear of engine.

IGNITION TIMING

IGNITION TIMING:—Setting for all engines (with fuel of 70 Octane Rating) as follows. See Manual Adjustment section below for final setting giving best performance with type of fuel regularly used.

Flywheel Degrees	Piston Position
5° BTDC	.0114" BTDC

To Set Timing (With Synchroscope)—Recommended by manufacturer. Clip Synchroscope lead to #1 spark plug, direct light on crankshaft pulley at front of engine. Idle engine, loosen hold-down screw in advance arm, rotate distributor until 'IG/A' mark on pulley (which is 5° before dead center mark 'C.1/6') appears to line up with pointer on chain case cover, tighten hold-down screw. Adjust for fuel (see Manual Adjustment).

Timing (Without Synchroscope)—Turn engine over to firing position for piston #1 (front piston, left bank) with mark 'IG/A' on crankshaft pulley (5° before dead center mark 'C.1/6' lined up with pointer on chain case. Loosen hold-down screw on advance arm, center pointer on scale, tighten hold-down screw on advance arm. Loosen advance arm clamp bolt, rotate distributor until contacts begin to open, tighten clamp bolt. Adjust for fuel (see Manual Adjustment).

Manual Adjustment—Slight ping should be evident at speeds below 15 M.P.H. when car accelerated with wide open throttle. To adjust, loosen hold-down screw on advance arm, rotate distributor one graduation, on scale clockwise (if ping too severe) counter-clockwise (if no ping noted), repeat test, adjust until best performance secured.

NOTE—Check engine for faulty spark plugs, excessive carbon deposits, localized hot spots, or lean

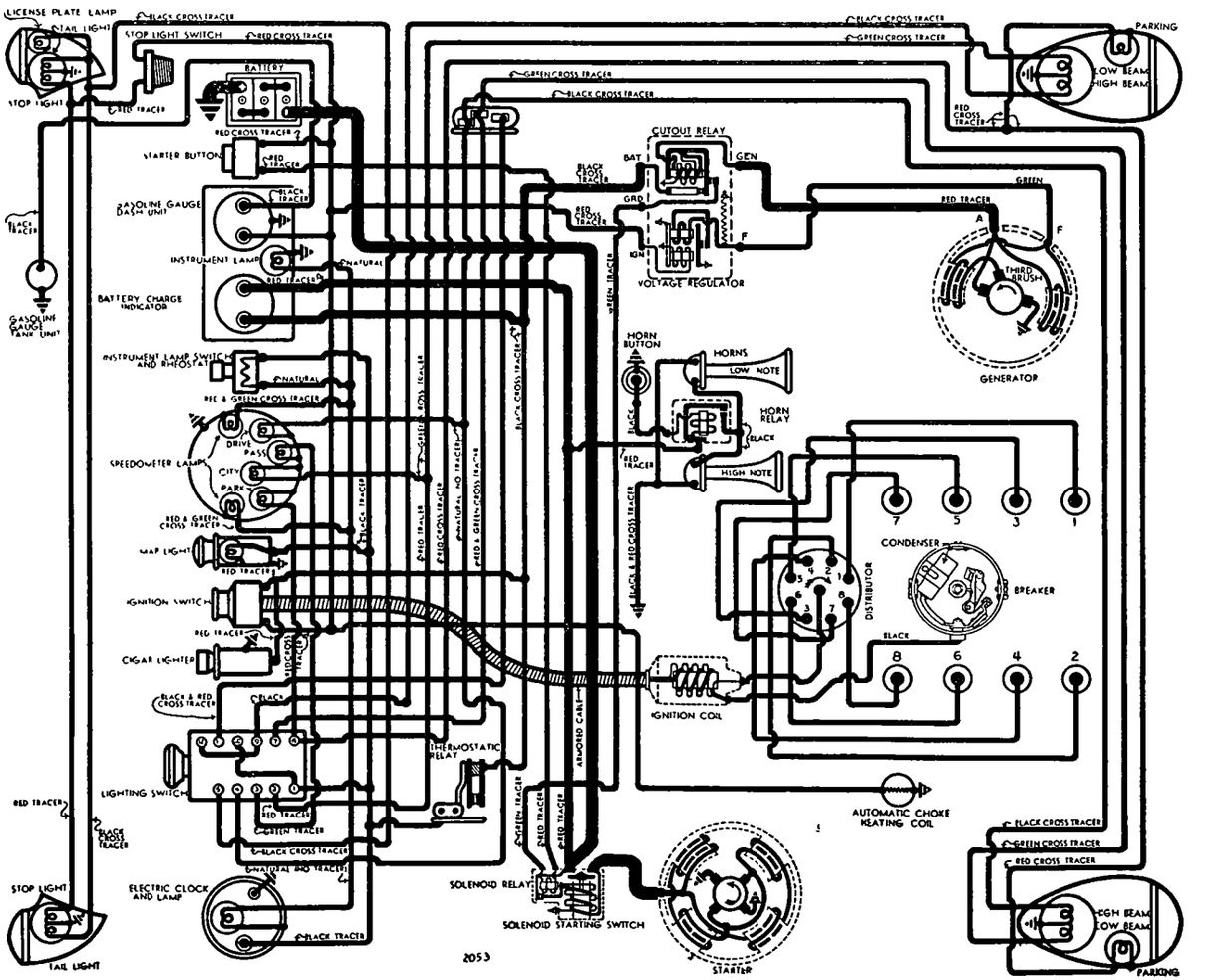

Refer to 1937 V12 diagram for Series 70,75 Generator and Regulator wiring.

carburetor setting before changing manual adjustment.

CARBURETOR

CARBURETION:—Carburetor—Stromberg Mod. AA-25, 1¼" Dual, Downdraft, Aircraft type.
For complete data, refer to Carburetor Index.
Idle Adjustment—Engine must be warmed up so that Automatic Choke and Fast Idle are inoperative. Set throttle lever stopscrew so that engine idles at 6 M.P.H. Turn each idle adjusting screw in until engine begins to miss, then turn screws out until engine begins to roll, finally turn screws in slowly until engine fires smoothly. Both screws must be adjusted equally. Readjust throttle stopscrew for correct idling speed.

Accelerating Pump Setting—Engage pump link in proper hole in throttle lever for seasonal requirements as follows:
Inner Hole (Min. stroke)—Summer temperatures.
Outer Hole (Max. stroke)—Winter temperatures.

Fast Idle:—Integral with carburetor. No adjustment.
For complete data, refer to Carburetion Equip. Index.

Automatic Choke:—Integral with carburetor (linked directly to choke valve shaft). No adjustment.
For complete data, refer to Carburetion Equip. Index.

CARB. EQUIPMENT

Air Cleaner:—AC. #1528136 Std., #1528137 Heavy Duty, Oil-bath type.

Fuel Pump:—AC. Mod. AB #1522119. Diaphragm type combination fuel-and-vacuum pump.
For complete data, refer to Carburetion Equip. Index.

Gasoline Gauge:—AC. Electric type. No. 1515338 (Dash unit), 1515442 (Tank unit—60); 1515420 (Tank unit Series 65, 70, 75).
For complete data, refer to Carburetion Equip. Index.

BATTERY
SERIES 60 & 65

BATTERY:—Delco, Type 17-K. 6 volt, 17 plate, 110 amp. hour capacity (20 hour rate).

Starting Capacity—131 amperes for 20 minutes.

Zero Capacity—300 amperes for 4.4 minutes.

Grounded Terminal—Positive (+) terminal.

Location—Under left front seat.

BATTERY
SERIES 70 & 75

BATTERY:—Delco, Type 17-D. 6 volt, 17 plate, 130 amp. hour capacity (20 hour rate).
Starting Capacity—156 amperes for 20 minutes.
Zero Capacity—300 amperes for 5.5 minutes.
Grounded Terminal—Positive (+) terminal.
Location—Under left front seat.

STARTER

Delco-Remy Model 727-V, 729-F (60 RHD). Armature No. 820158. Overrunning Clutch and solenoid pinion shift type.

Rotation—Counter-clockwise at commutator end.

Brush Spring Tension—24-28 ounces.

Performance Data

Torque	R.P.M.	Volts	Amperes
0 ft. lbs.	5500	5.0	65
16 "	Lock	3.0	600

Removal:—Starter flange mounted on right front face of flywheel housing. To remove, take out flange mounting screws, pull starter forward, remove from below.

Starting Switch:—Solenoid Switch Type 1542. Push-button Switch Type 1389 (60), Type 1407 (65,70,75). switch controlled through relay in switch case by pushbutton on instrument panel.
For complete data, refer to Electrical Equipment Index.

Solenoid Switch Specifications

Closes against 70 lbs. pull with ½" air gap drawing 65-71 amperes at 5 volts. Holds switch closed with current draw of 12-14 amperes (hold-in coil only).

Solenoid Relay Specifications

Contacts Close—1.9 volts max. **Open**—1.0-1.2 volts.
Contact Gap—.025-.045". **Air Gap**—.010-.013" (closed)

GENERATOR
SERIES 60 & 65

Delco-Remy Model 918-C. Armature No. 1866789. New type 'Split-Field' generator (one straight-shunt coil, one third-brush coil—see diagram) with fixed third brush and vibrating voltage regulator control. NOTE—Field coils changed in production.
For complete data, refer to Electrical Equipment Index.

Charging Rate Adjustment—No adjustment at generator (fixed third brush). Adjusted by changing setting of Voltage Regulator. See Regulator data below.

Maximum Charging Rate—As given in table below. Reached at 4000 R.P.M. or 51 M.P.H. Actual charging rate controlled by Voltage Regulator and dependent on battery condition. To check generator output, connect test ammeter in charging line at 'BAT' terminal on regulator, voltmeter between 'GEN' terminal and ground, ground 'F' terminal to eliminate regulator action.

NOTE—Do not operate generator at excessive speed with regulator cut out. Do not operate generator on open-circuit.

Performance Data

	Amperes	Volts	R.P.M.
Cold	27-31	8.0	4000
Hot	25-28	8.0	4200

Rotation—Counter-clockwise at commutator end.

Brush Spring Tension—22-26 ounces (main), 16-20 ounces (third brush).

Field Current—1.44-1.56 amperes (shunt), .89-.94 amperes (third brush field) at 6.0 volts.

Removal:—Generator flange mounted between cylinder banks at front of engine. To remove, take out 2 bolts in mounting flange, slip off drive belt, lift generator out.

Belt Adjustment:—Loosen flange mounting bolts, lift generator up (pivots on left bolt, right bolt hole slotted to permit this movement) until slight amount of slack noted between generator and water pump pulleys, tighten mounting bolts.

NOTE—Fan driven by separate belt, adjusted by loosening mounting nut on fan bracket.

GENERATOR
SERIES 70 & 75

Delco-Remy Model 961-K. Armature No. 1857866. Two brush, straight shunt, 'Peak Load' type with external voltage and current regulation. Ventilated by fan on drive pulley.

Charging Rate Adjustment—No adjustment at generator. Charging rate controlled by Voltage Regulator and maximum output controlled by Current Regulator. See Control Unit section below.

Maximum Charging Rate—25 amperes (cold) maximum at 1650 R.P.M. or 20 M.P.H. and above with discharged battery (Current Regulator Setting). Actual charging rate controlled by Voltage Regulator and dependent on battery condition.

Performance Data—Generator Cold

Amperes	Volts	R.P.M.
25	8.0	1650

Rotation—Counter-clockwise at commutator end.
Brush Spring Tension—22-26 ounces (all).
Field Current—2.0-2.2 amperes at 6.0 volts.

Removal:—Generator flange mounted between cylinder banks at front of engine. To remove, take out 2 bolts in mounting flange, slip off drive belt, lift generator out.

Belt Adjustment:—Loosen flange mounting bolts, lift generator up (pivots on left bolt, right bolt hole slotted to permit this movement) until slight amount of slack noted between generator and water pump pulleys, tighten mounting bolts.
NOTE—Fan driven by separate belt, adjusted by loosening mounting nut on fan bracket.

REGULATOR
SERIES 60 & 65

Delco-Remy Model 5817. Double Core Type Voltage Regulator (With 'IGN' Terminal). Cutout Relay and vibrating type Voltage Regulator. Cutout Relay has extra 'ground' contacts for starter control.
For complete data, refer to Electrical Equipment Index.

Cutout Relay

Cuts In—6.9-7.6 volts.
Cuts Out—0-3.0 ampere discharge current.
Contact Gap—.018-.025".
Air Gap—.018-.022" with contacts closed.

Voltage Regulator

Setting—7.55-7.85 volts at 70° F., 7.45-7.55 volts at 150°F. Regulator over-compensated for temperature and must be checked at these points.

Adjustment—Disconnect lead on 'IGN' regulator terminal, connect jumper between 'IGN' and 'BAT' terminals, connect ammeter in charging line at 'BAT' terminal, connect voltmeter between 'IGN' terminal and ground. Operate generator at 2800-3000 R.P.M., adjust charging rate to 8-10 amperes. Adjust regulator armature spring tension by bending spring hanger at lower end of armature spring slightly until setting is as given above.

NOTE—Regulator cover must be in place when tests made. Do not operate generator on open-circuit.
Contact Gap—.015-.025".
Contact Spring Tension—2.7-3.5 ounces.
Air Gap—.060-.070" between armature and center of core with armature down so that fibre bumper just touches stop, .008-.013" between fibre bumper and stop with armature up.

REGULATOR
SERIES 70 & 75

Delco-Remy Model 5818. Double Core Type Voltage & Current Regulator (With 'IGN' Terminal). Cutout Relay and vibrating type Voltage & Current Regulators. Cutout Relay has special 'ground' contacts for starter solenoid control.
For complete data, refer to Electrical Equipment Index.

C NTINUED N NEXT PA E

CONTINUED FR M PRECEDIN PA E

NOTE—Cover or regulator case is sealed. Units can be checked without breaking seals. Seals must be broken to remove cover for adjustments.

Cutout Relay

Cuts In—6.7-7.6 volts.

Cuts Out—0-3.0 amperes discharge current.

Contact Gap—.018-.025".

Air Gap—.018-.022" with contacts closed.

Voltage Regulator

Setting—7.55-7.85 volts at 70° F., 7.45-7.55 volts at 150° F. Regulator over-compensated for temperature and must be checked at these points.

Checking—To check without breaking seal, disconnect lead at 'IGN' terminal on case, connect jumper between 'IGN' and 'BAT' terminals, connect test ammeter in charging line at 'BAT' terminal, connect voltmeter between 'IGN' terminal and ground. Operate generator at 2800-3400 R.P.M., adjust charging rate to 8-10 amperes. Voltmeter reading should agree with setting above.

NOTE—Cover should be in place when tests are made. Do not operate generator on open-circuit.

Adjusting—Seal must be broken and cover removed. With ammeter and voltmeter connected as above, set regulator by bending spring hanger at lower end of armature spring slightly until performance is correct (with cover in place). Remove jumper and restore original connections.

Contact Gap—.015-.025".

Contact Spring Tension—3.5 ozs. minimum.

Air Gap—.060-070" between armature and center of core with armature down so that fibre bumper just touches stop, .008-.013" between fibre bumper and stop with armature up.

Current Regulator

Setting—26 amperes.

Checking—To check without breaking seal, disconnect 'IGN' lead at regulator, connect test ammeter in charging line at 'BAT' terminal. Operate generator and check performance.

NOTE—Do not allow generator voltage to exceed 8.5 volts with voltage regulator inoperative.

Adjusting—Seal must be broken and cover removed. Set regulator by bending spring hanger at lower end of armature spring slightly until performance is as noted above (cover must be in place when testing). Restore original connections.

Contact Gap—.015-.025".

Contact Spring Tension—3.5 ozs. minimum.

Air Gap—.070-.080" between armature and center of core with armature down so that fibre bumper just touches stop, .008-.013" between fibre bumper and stop with armature up.

NOTE—Repolarize generator whenever Control Unit disconnected or removed by connecting jumper between 'GEN' and 'BAT' terminals momentarily after all leads connected. Disconnect 'BAT' lead first, connect this lead last.

LIGHTING

LIGHTING:—Headlamps—Guide Multi-beam, Pre-focused type with special non-interchangeable lenses. Asymetrical passing beam (upper beam left hand headlamp, lower beam right hand headlamp) controlled by foot selector switch with lighting switch in third or Country Driving position.

NOTE—With lighting switch in second position, foot selector switch controls upper driving beam and lower city beam (for both headlamps).

Headlamp Adjustment—With driving (upper beam) lighted and lenses in place, aim left hand headlamp so that upper edge of hot spot is at lamp center height and left edge is at vertical line for lamp center (entire hot spot to right of this center line) at 25'. Aim right hand headlamp for same height but center hot spot on lamp-center vertical line (right cut-off of hot spot about 1' to right of center-line).

Headlamp Indicators—Consists of 4 bulbs in speedometer dial which illuminate markers as follows:

City—Lower beam, both headlamps.

Drive—Upper beam, both headlamps.

Pass—Special passing beam (see above).

Park—Parking bulbs in headlamps lighted.

Switches

Lighting—Delco-Remy Model 480-S, 480-N (Exp.).

Foot Selector—Delco-Remy Model 471-T, 471-U (RHD).

Bulb Specifications

Position	Candlepower	Mazda No.
R. H. Headlamp (see note)	32-50	2530-L
L. H. Headlamp	32-32	2330-L
Parking, Instrument	1½	55
Clock, Indicators	1	51
Map, Quarter, License	3	63
Stop and Tail	21-3	1154-L
Dome	15	87

NOTE—In states where this bulb not legal, 32-32 cp., 2330-L bulb used in both headlamps. Type 1154 has stop pin which insures correct installation of bulb.

MISC. ELECTRICAL

THERMOSTATIC RELAY:—Part No. 1866707. Mounted on lighting switch. Contacts open within 1 minute with load of 38 amperes. Not adjustable.

HORNS:—Delco-Remy Model K-33-D, Type 1965 (low note), 1966 (high note). Vibrator type, twin horns with blended tone. Operated by horn relay.

Horn Type	Current at 6 volts	Air Gap
1965	12-14 amperes	.045-.050"
1966	11-13 amperes	.036-.040"

Horn Relay Model 271-A:—Contacts close at 2.7-4.0 volts.

Contact Gap—.015-.030".

Air Gap—.010-.014" with contacts closed

ENGINE

ENGINE SPECIFICATIONS:—Own. 8 cylinder, 90° Vee, 'L' head type. Upper crankcase and cylinder blocks cast Enbloc. **Bore**—3½". **Stroke**—4½".

Displacement—346 cu. ins. **Rated HP.**—39.20.

Developed Horsepower—135 HP. at 3400 R.P.M.

Compression Ratio—6.25-1 Std. 5.75-1 Optl.

Compression Pressure—155 lbs. at 1000 R.P.M. or approx. 105-110 lbs. at cranking speed (std. head).

See Cadillac Special Shop Notes for cylinder head installation instructions, and lowering compression ratio.

Vacuum Reading—Steady 20-21" at idle speed.

PISTONS:—Lynite or Bohn Lo-Ex aluminum alloy, 'T' slot, Cam Ground type with Anodized finish (special hard oxide bearing surface). **Length**—4⅛".

Weight—18.30 oz. stripped. 25.13 oz. complete.

Removal—Pistons and rods removed from above.

Clearance—Skirt .0021". See Fitting New Pistons.

Replacement Pistons:—Finished anodized pistons furnished Std. (3.4979-3.4999"), .003" (3.5014-3.5029"), .005" (3.5034-3.5049"), .010" (3.5084-3.5099"), .015" (3.5135-3.5149") oversize.

NOTE—Hold all cylinders in same block within .002" size limits. Max. out-of-round .0005".

Fitting New Pistons:—Check piston diameter with micrometer gauge at right angles to pin hole just below lower ring groove and also ½" above lower edge. If feeler gauges (⅜-½" wide) used, insert feeler next to T-slot. Piston should fall of own weight with .002" feeler, hold tight on .0025" feeler.

Installing Pistons:—Slot to left, for all pistons.

PISTON RINGS:—Two compression, two oil control rings per piston, all above pin.

Ring	Width	End Gap	Side Clearance
Compression	1/8"	.007-.012"	.0015-.0028"
Oil Control	5/32"	.007-.015"	.0013-.0026"

NOTE—Worn limits .025" (gap), .004" (side clear.).

Replacement Rings: .003",.005",.010",.015",.030" oversize.

PISTON PIN:—Diameter ⅞". **Length** 3 1/16". Pin floats in piston and rod. Held by locking rings.

See Cadillac Shop Notes for special pin removal and installation instructions.

Pin Fit in Piston—.0004" press fit (ribbed end), .0001" clearance or free fit at 70° F. (plain end).

Pin Fit in Rod Bushing—.0002-.0008" clearance (new), .0015" (worn limit).

CONNECTING ROD:—Weight 37.472 oz. **Length** 8¾".

Crankpin Journal Diameter—2.4590-2.4595".

Lower Bearing—Steel-backed, babbitt-lined.

Clearance—.0015-.0025" (new), .006" Max. (worn).

Sideplay—.003-.006".

Bearing Adjustment:—None (no shims). Replace bearings. Do not file rods or caps.

See Cadillac Special Shop Notes for connecting rod data and bearing installation.

Installing Rods:—Numbers on rods and bearing caps on same side and installed in same numbered cylinders with marks down toward oil pan.

CRANKSHAFT:—3 bearing. 6 counterweights.

Journal Diameters—2½" all bearings.

Bearing—Steel or bronze backed, babbitt-lined.

Clearance—.0015" (new), .004" (worn limit).

ENGINE

C NTINUED FR M PRECEDIN PA E

Bearing Adjustment:—None (no shims). Replace bearings. Do not file bearing caps.
See Cadillac Special Shop Notes for main bearing removal instructions.

End Thrust:—Taken by center bearing. Endplay .001-.005" (new), .010" Max. (worn).

CAMSHAFT:—3 bearings. Non-adjustable chain drive.
Journal Diameters—#1 and 2, 2.4071-2.4078"; #3, 2.0009-2.0016".

Bearing Type—Steel-backed, babbitt-lined.
Clearance—.0027-.0037" (new), .005" (worn limit).
See Cadillac Special Shop Notes for Camshaft Bushing removal and installation instructions.

End Thrust:—Taken by thrust plate behind camshaft sprocket. No endplay should be permitted.

Timing Chain:—Morse Type C #3682-RX Side guide type. Width 1¼". Pitch ⅜". Length 23¼" or 62 links.
NOTE—Install chain 'endless' as an assembly with sprockets. Use tool J-836 to pilot camshaft sprockets.

Camshaft Setting:—Sprockets marked. Mesh chain with sprockets turned so that '0' marks are adjacent and in line with straightedge across centers.

VALVES:—	Head Diameter	Stem Diameter	Length
Intake	1.876-1.886"	.3415-.3425"	5 33/64"
Exhaust	1.626-1.636"	.3405-.3415"	5 33/64"

	Seat Angle	Lift	Stem Clearance
Intake	45°	.335"	.001-.0023"
Exhaust	45°	.345"	.002-.0033"

NOTE—Worn limit for valve stem-to-guide clearance .006" Intake, .005" Exhaust.
See Cadillac Special Shop Notes for valve removal and installation instructions.

Valve Guides:—Pressed in block with long stepped end down and reamed to correct size.

Valve Lifters:—Wilcox-Rich 'Zero-lash' type hydraulic mushroom type in removable guide brackets.
See Miscellaneous Section for complete data.
Clearance—.001-.0025" (new), .005" (worn).

Valve Springs:—	Pressure	Length
Valve Closed	66 lbs.	1.926"
Valve Open	145 lbs.	1.581"

VALVE TIMING

Tappet Clearance:—None in service (hydraulic type lifter). *See Valve Servicing in Cadillac Shop Notes.*

Valve Timing:—See Camshaft Setting above.
Intake Valves—Open at TDC. Close at 42° ALDC.
Exhaust Valves—Open 52° BLDC. Close 10° ATDC.
To Check Timing—Intake valve for #1 cylinder opens with piston on top dead center when 'C.1/6' on vibration dampener lines up with pointer.

LUBRICATION

LUBRICATION:—Pressure system with gear type oil pump located in crankcase.
See Cadillac Special Shop Notes for oil pump data and lubrication system servicing.

Normal Oil Pressure—30 lbs. at 60 MPH. 15 lbs. idle.
Oil Pressure Regulator—Located on oil pump. Operates at 30 lbs. Not adjustable.
Crankcase Capacity—7 qts. (refill).

COOLING

COOLING SYSTEM:—Water Pump. Centrifugal type. Belt-driven in tandem with generator.
See Miscellaneous Section for complete data.

Water Capacity: 25 quarts.

Thermostat:—Mounted in radiator top tank, linked to radiator shutters by rod on forward side.
Setting—(Std. Type) Starts to open 148-153°F., fully open at 170°F. (High Reading Type—use with heaters). Starts to open 163-168°F. Fully open 185°F.
Shutter Adjustment—Adjust clevis on threaded end of rod to secure 1/16" tensions (shutters closed).

CLUTCH

CLUTCH:—Long Model 11CF-CL. Semi-centrifugal, single plate dry disc type.
See Clutch Section for complete data.

Facings—Woven type. 2 required. Inside Diameter 6½". Outside Diameter 11". Thickness .137".

Adjustment:—Free movement of pedal should be ⅞-1⅛". To adjust, turn nut on forward end of connector link in front of clutch fork.
See Cadillac Shop Notes for clutch locking pin removal on replacement clutches.

Removal:—Remove transmission (see Transmission Section below), drop clutch housing pan, punch mark clutch cover, pressure plate, and flywheel to insure correct installation, take out 6 mounting bolts in cover flange, remove clutch from below.

TRANSMISSION

TRANSMISSION:—Own Make. Constant-mesh helical gear (second), synchro-mesh (second and high), sliding helical gear (low and reverse).
See Transmission Section for complete data.

Removal:—With car on blocks, remove floor boards, disconnect drive shaft at front universal joint, support engine with jack under oil pan (use wooden block to avoid damage to pan), free transmission extension at rear support cross-member, disconnect engine support stabilizer (all except 60) on right hand side (take out pin at forward end), disconnect exhaust pipe brace, free cross-member carrying engine rear support (4 bolts at each end on 60, 2 bolts on other models), disconnect speedometer cable. Take out transmission mounting capscrews, pull transmission straight back (plug clutch connection shaft bearing drain hole as soon as it is accessible to prevent lubricant loss). NOTE—When installing, shift transmission in reverse and remove plug.

UNIVERSALS

UNIVERSAL JOINTS:—Mechanics Model 3-C. Needle bearing type.
See Universals Section for complete data.

REAR AXLE

REAR AXLE:—Own make. Hypoid gear (60), Spiral-bevel gear (65, 70, 75). Semi-floating type with Hotchkiss drive.
See Rear Axle Section for complete data.
NOTE—Manufacturer recommend Differential Carrier Assembly be returned to factory for servicing.
Ratio—3.69-1 (60), 4.30-1 (65, 70, 75). No optl. ratios.
Backlash—.004-.008". Screw adjustment.

Removal:—Disconnect drive shaft at rear universal, remove axle shafts (see below), remove capscrews on differential carrier flange, pull carrier assembly out without disturbing axle housing.
Axle Shaft Removal—Jack up car, remove rear wheels, pull wheel hub and brake drum assembly, disconnect brake line and remove backing plates (bleed brake line when re-installed). Use tool J-838, pull shaft and bearing assembly out.
NOTE—Early axle shafts have no locating shoulder for wheel bearing. Install bearing with 5/32" clearance between inner edge of hub and bearing.

Wheel Bearing Adjustment:—None (sealed type).

SHOCK ABSORBERS

SHOCK ABSORBERS:—Delco. 1946C, D (60 front), 1751A, B (60 rear), 1951D, C (65, 70, 75 front), 2052A, B (65, 70, 75 rear). Double acting, hydraulic type.
See Shock Absorber Section for complete data.

FRONT SUSPENSION

Front Suspension:—Independent linked parallelogram type with coil springs.
See Front Suspension Section for complete data.
Kingpin Inclination—4° 51' (60), 5° 38' (65, 70, 75).
Caster—¼-1° (60), 0° plus or minus ¼° (65, 70, 75). Car weight on wheels, equal within ¼°.
Camber—¼-1° (60). 0-½° (65, 70, 75). Equal within ¼° at both wheels.
Toe In—1/16-3/32" (at rest), 0-1/16" (in motion).
Steering Geometry—Inner wheel turned 21¾-23¼° (60), 22-23½° (65, 70, 75). Outer wheel 20° (all).

STEERING GEAR

Steering Gear: Saginaw Worm-and-Roller type.
See Steering Gear Section for complete data.

BRAKES

BRAKES:—Service—Bendix hydr., Duo-servo. Single Anchor type. Hand lever applies rear serv. brakes.
See Brake Section for complete data.
Drum Diameter—12" (60, 65, 70), 14" (75). Centrifuse type. Out-of-round .007" max. Run-out (installed) .010" max. Drum turndown limit .030" cut.
Lining—Molded type. Width 2¼" (except 60, 65, 70 rear wheels), 2" (60, 65, 70 rear wheels only); Thickness 3/16" (60, 65, 70), ¼" (75); Length (per shoe) 12 15/16" (60, 65, 70), 12¼" (75—front shoe front brakes), 15" (75—all others).
Clearance—.010" for all models.

Hand Brake:—See Service Brakes above.

MODEL IDENTIFICATION

SERIAL NUMBER: Same as engine number (below). Visible from right side with engine hood raised.

ENGINE NUMBER: First number 4110001 (1936), 4130001 (1937). Stamped on crankcase on generator drive housing.

TUNE-UP

COMPRESSION:—Ratio—6.0-1 Std. 5.65-1 Optional. Pressure—145 lbs. at 1000 R.P.M., 160 lbs. at 3200 R.P.M. or aproximately 100-105 lbs. at cranking speed for standard 6.0-1 head.

VACUUM READING:—Gauge should show steady reading of 20-21" with engine idling at 320 R.P.M.

FIRING ORDER: 1-4-9-8-5-2-11-10-3-6-7-12. See diagram for spark plug cable connections on distributor.

SPARK PLUGS: AC No. 84 (sup. G-7). 18 mm. Metric. Gaps—.025-.030".

IGNITION: See Coil, Condenser, and Distributor.
Breaker Gap—.020". Cam Angle 37° (closed).
Synchronization—Movable contacts open 37½° (distr.) after fixed set (unequal 37½-22½-37½° intervals).
Automatic Advance—19° max. at 1400 RPM (distr.).

IGNITION TIMING: See Ignition Timing.
Std. Setting—4° BTDC (1936), 10° BTDC (1937) with flywheel mark "IG/A" at indicator under inspection hole cover in flywheel housing. NOTE—Contacts open alternately at 37½-22½-37½° intervals.

CARBURETION: See Carburetor & Carb. Equipment.
Idle Setting—Metering pin turned out not more than ¼ turn past point where smooth running secured (approx. 4 turns open). Idle speed 320 Eng. RPM. Carburetors must be equalized. See Carburetor article for complete instructions.
Float Level—Fuel level 13/16-15/16" below top edge of float bowl.
Fuel Pump Pressure: 4¼ lbs. maximum.

VALVES: See Valve Timing.
Tappet Clearance—None in service (automatic hydraulic type take-up used).

STARTING: See Battery, Starter, Generator, Regulator.

IGNITION

Ignition Switch: Delco-Remy Model 435-A (1936), 435-J (1937). Switch & Cable Assembly. Connected to coil by armored cable.
Ignition Lock—Briggs & Stratton. #45792 (cylinder), #80203 (case). Key Series—8000-9499.

COIL: Delco-Remy Model 553-E. Two Coil unit.
Ignition Current—(For each coil)—2.2 amps. idling, 4.4 amperes stopped.

CONDENSER: Delco-Remy Part No. 1837231.
Capacity—.20-.25 microfarad.

DISTRIBUTOR: Delco-Remy 667-C. Double breaker, 6 lobe cam, full automatic advance with manual adjustment (See Timing). Contacts open alternately, 37½° and 22½° intervals, corresponding to 75° and 45° firing intervals of engine (unequal firing intervals cause by 45° included angle between cylinder banks). Contacts must be synchronized (see Timing).
Breaker Gap—Set at .020". Limits .018-.024".
Cam Angle or Dwell—Closed 37°, Open 23° (distr.). Each set operates independently.
Breaker Arm Spring Tension—17-21 ounces.

Automatic Advance

Distributor		Engine	
Degrees	R.P.M.	Degrees	R.P.M.
Start	300	2	600
12	800	24	1600
16	1100	32	2200
19	1400	38	2800

Distributor Removal:—Mounted between cylinder banks at front of engine. Take out two capscrews in mounting bracket.

NOTE—When installing distributor on engine, turn crankshaft to firing position for #1 piston, mesh distributor drive gear so that slot in upper end of shaft is offset toward front of engine.

IGNITION TIMING

IGNITION TIMING:—Setting for all engines as follows. See Manual Adjustment section below.

	Flywheel Degrees	Piston Pos.
1936	4° BTDC	.0058" BTDC.
1937	10° BTDC	.0369" BTDC.

Timing (Stationary Contacts)—Loosen hold-down screw in advance arm, center distributor pointer on quadrant scale by rotating distributor, tighten hold-down screw, take off cover plate over inspection hole in flywheel housing. With #1 piston on compression, crank engine by jacking up one rear wheel, placing car in gear and turning wheel, stop with piston before top dead center when flywheel mark 'IG/A'

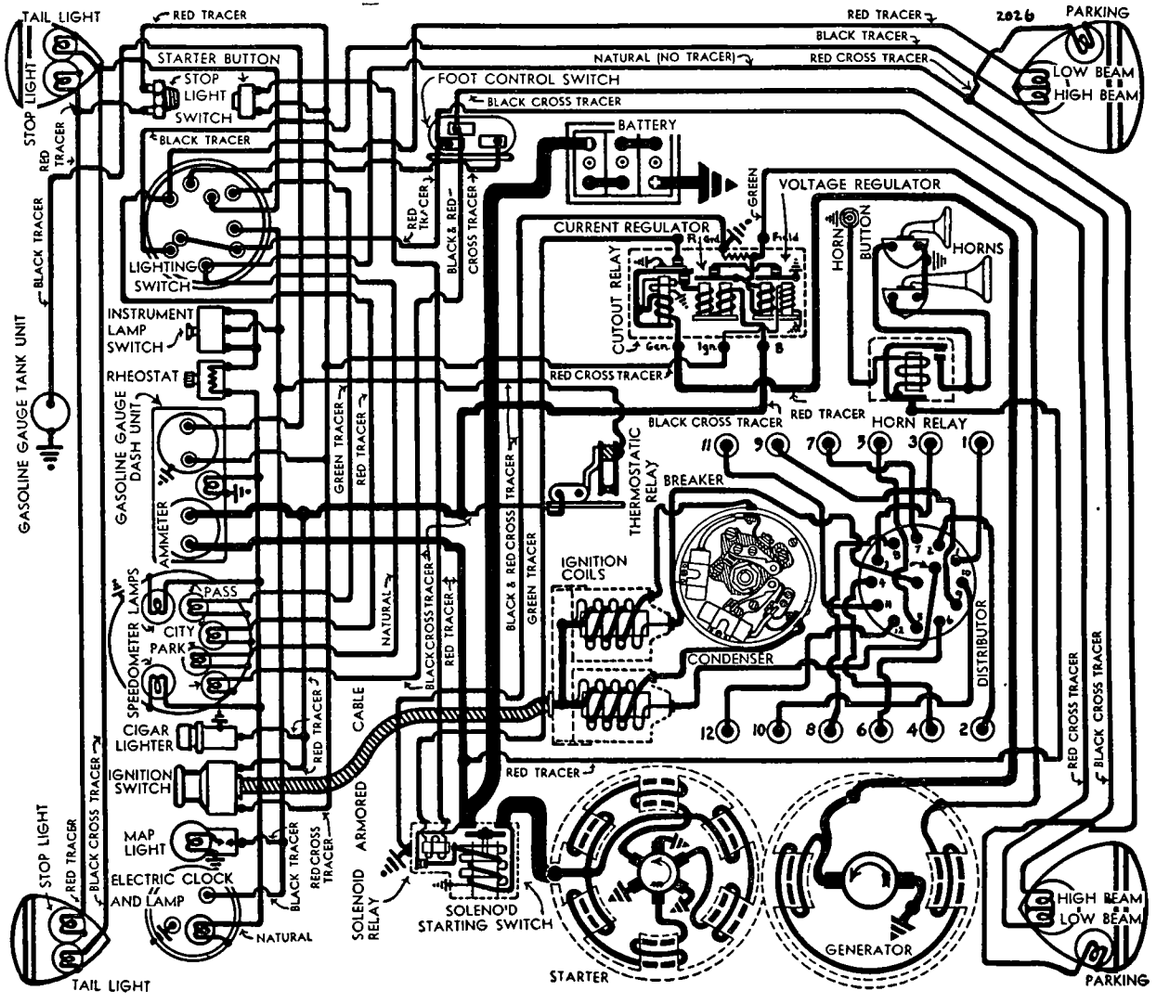

1936 V12 SERIES 36-80 & 36-85

lines up with indicator on housing, loosen taper lock screw in center of breaker cam, carefully locate cam so that stationary contacts (mounted directly on breaker plate) are beginning to open, tighten locking screw. check rotor position and spark plug cable connections (see diagram). Then synchronize movable contacts as directed below.

Synchronization (Movable Contacts)—1st method: Turn engine over 75° or slightly less than ¼ revolution to firing position of piston #4, stop when flywheel mark 'IG/A' lines up with indicator on housing, loosen lock screws on movable sub-plate (carrying second set of contacts), turn eccentric adjusting screw until contacts begin to open, tighten locking screws.

Synchronization—2nd Method: Use synchronizing tool, Cadillac Part No. 109224. Install tool and adjust so that stationary contacts begin to open when pointer opposite farthest indicating point on quadrant 'R.H.', turn engine over until pointer is directly opposite '12 L.H.' mark on quadrant. Loosen lockscrews on movable sub-plate, turn eccentric adjusting screw until contacts open, tighten lockscrew.

Manual Adjustment—With ignition set as above, slight 'ping' should be noticeable when engine is accelerated with wide open throttle at speeds below 15 M.P.H. If ping is too severe, loosen hold-down screw on pointer, rotate distributor one graduation on scale clockwise to retard spark, repeat test. Adjustment permits advance or retard of 10° from center 'O' position.

NOTE—Check engine for faulty spark plugs, excessive carbon deposits or localized 'hot spots' before changing the manual adjustment.

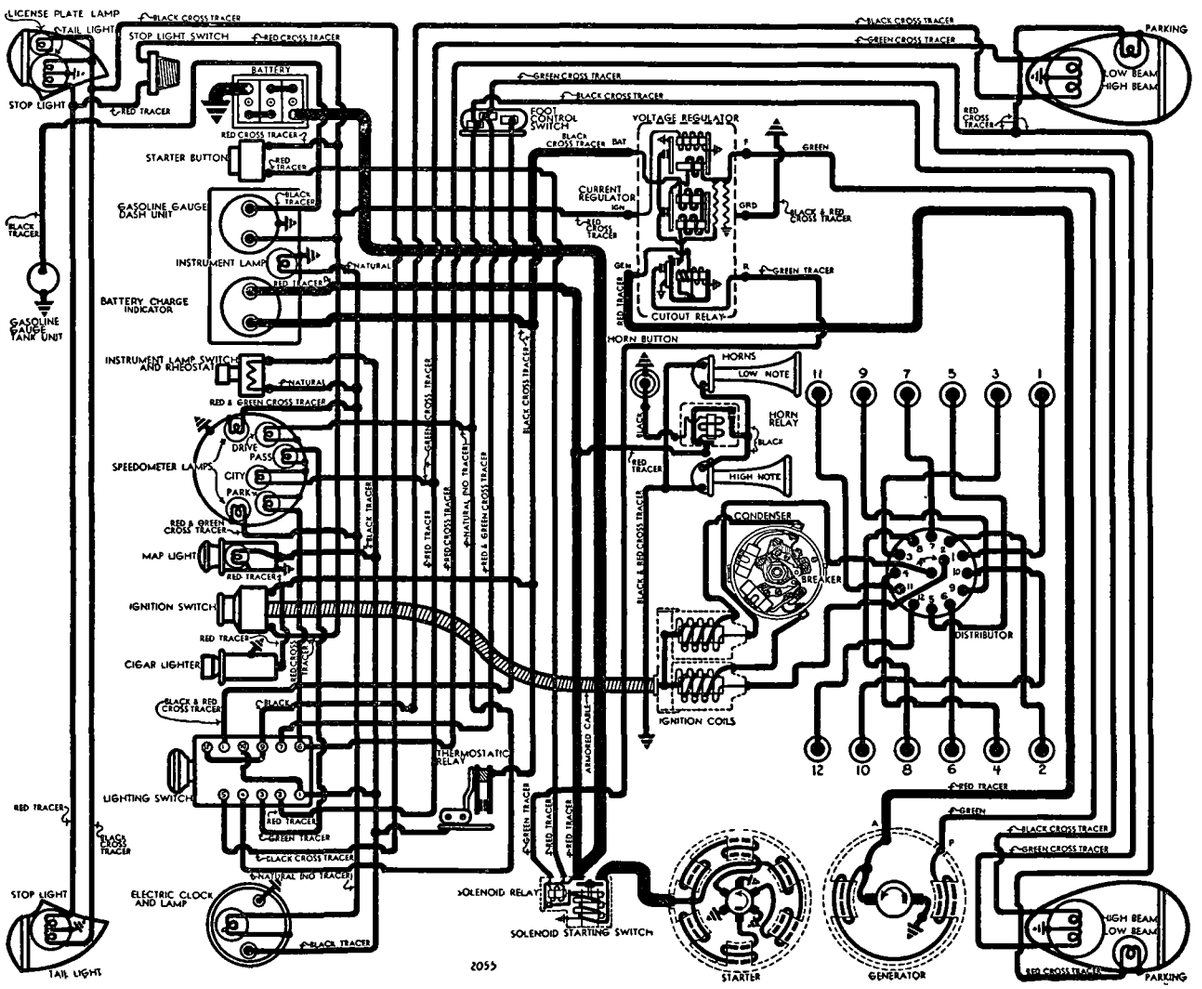

1937 V12 SERIES 37-85

CARBURETOR

CARBURETION: Carburetor—Detroit Model 51, 1½" expanding vane or air valve, updraft type. One carburetor used for each bank with interconnected throttles.

NOTE—Carburetor throttles must be synchronized.

For complete data, refer to Carburetor Index.

Automatic Choke:—Detroit semi-automatic type.

For complete data, refer to Carburetion Equip. Index.

CARB. EQUIPMENT

Air Cleaner: AC. No. 1526626 oil-wetted type (1936), No. 1528123 heavy duty oil-bath type (1937).

Fuel Pump:—AC. Type D #1522149. Diaphragm type.

For complete data, refer to Carburetion Equip. Index.

NOTE—AC. Type K #1521542 vacuum pump mounted as separate unit.

Gasoline Gauge: AC Electric type. Dash Unit—1515303 (1936), #1515338 (1937). Tank Unit—#1515428 (1936), #1515420 (1937).

For complete data, refer to Carburetion Equip. Index.

BATTERY

BATTERY:—Delco, Type 21-D. 6 volt, 21 plate, 164 ampere hour capacity (20 hour rate).

Starting Capacity—195 amperes for 20 minutes.

Zero Capacity—300 amperes for 7.1 minutes.

Grounded Terminal—Positive (+) terminal.

Location—Under left front seat.

STARTER

Delco-Remy Model 580 (Std.), SM-1748 (RHD). Armature No. 1837058.

Drive—Solenoid pinion shift and overrunning clutch type with reduction gears.

Rotation—counter-clockwise (armature shaft) at commutator end.

Brush Spring Tension—36-40 ounces each.

Performance Data

Torque	R.P.M.	Volts	Amperes
0 ft. lbs.	2200	5.7	70
35 ft. lbs	Lock	3.0	600

Removal:—Flange mounted on rear face of flywheel housing at right of transmission. T remove, take out 3 flange capscrews.

Starting Switch: Solenoid Switch No. 1515 or 1547. Pushbutton Switch 1405 or 1407. Switch controlled through relay by pushbutton on instrument panel. Operative only with ignition "on."

For complete data, refer to Electrical Equipment Index.

Solenoid Switch Specifications

Closes against 70 lb. pull with ½" air gap drawing 65-71 amperes at 5 volts. Holds switch closed with current draw of 12-14 amperes (hold-in coil nly).

Solenoid Relay

Contacts Close—1.9 volts Max. Open—1.0-1.2 volts. Contact Gap—.035". Air Gap—.010" (closed).

CONTINUED N NEXT PA E

CONTINUED FR M PRECEDIN PA E

GENERATOR

Delco-Remy Model 933-M. Armature No. 1854448. Two brush, straight shunt, 'Peak Load' type with external voltage and current regulation. Air cooled type.

Charging Rate Adjustment—No adjustment at generator. Charging rate controlled by Voltage Regulator and maximum output controlled by Current Regulator. See Control Unit section below.

Maximum Charging Rate—26 amperes (cold) with discharged battery as indicated on test ammeter connected in line at 'BAT' terminal on Control Unit. Decreases as battery comes up on charge. Generator output constant at all speeds above 1700 R.P.M. or 20 M.P.H.

Performance Data—Generator Cold

Amperes	Volts	R.P.M.
26	8.0	1600

Rotation—Counter-clockwise at commutator end.

Brush Spring Tension—22-26 ounces.

Shunt Field Current—1.7-2.0 amperes at 6 volts.

Removal:—Flange mounted on rear face of timing chain case at right of engine. To remove, disconnect water pump drive coupling, take out flange mounting screws. Chain adjustment automatic, requires no attention during life of chain.

REGULATOR

Delco-Remy 5559 or 5818. Double Core Voltage & Current Regulator (With 'IGN' Terminal). Cutout Relay and vibrating type Voltage & Current Regulators. Cutout Relay has special 'ground' contacts for starter solenoid control.

For complete data, refer to Electrical Equipment Index.

NOTE—Cover of regulator case is sealed. Units can be checked without breaking seal. Seals must be broken to remove cover for adjustments.

Cutout Relay

Cuts In—6.7-7.6 volts.

Cuts Out—0-3.0 ampere discharge current.

Contact Gap—.018-.025".

Air Gap—.018-.022" with contacts closed.

Voltage Regulator

Setting—7.55-7.85 volts at 70° F., 7.45-7.55 volts at 150° F. Regulator over-compensated for temperature and must be checked at these points.

Checking—To check without breaking seal, disconnect lead at 'IGN' terminal on case, connect jumper between 'IGN' and 'BAT' terminals, connect test ammeter in charging line at 'BAT' terminal, connect voltmeter between 'IGN' terminal and ground. Operate generator at 2800-3400 R.P.M., adjust charging rate to 8-10 amperes. Voltmeter reading should agree with setting above.

NOTE—Cover should be in place when tests are made. Do not operate generator on open-circuit.

Adjusting—Seal must be broken and cover removed. With ammeter and voltmeter connected as above, set regulator by bending spring hanger at lower end of armature spring slightly until performance is correct (with cover in place). Remove jumper and restore original connections.

Contact Gap—.015-.025".

Contact Spring Tension—3.5 ozs. minimum.

Air Gap—.060-.070" between armature and center of core with armature down so that fibre bumper just touches stop, .008-.013" between fibre bumper and stop with armature up.

Current Regulator.

Setting—24-26 amperes.

Checking—To check without breaking seal, disconnect 'IGN' lead on regulator, connect test ammeter in charging line at 'BAT' terminal. Operate generator and check performance.

NOTE—Do not allow generator voltage to exceed 8.5 volts with voltage regulator inoperative.

Adjusting—Seal must be broken and cover removed. Set regulator by bending spring hanger at lower end of armature spring slightly until performance is as noted above (cover must be in place when testing). Restore original connections.

Contact Gap—.015-.025".

Contact Spring Tension—3.5 ounces minimum.

Air Gap—.070-.080" between armature and center of core with armature down so that fibre bumper just touches stop, .008-.013" between fibre bumper and stop with armature up.

NOTE—Repolarize generator whenever Control Unit disconnected or removed by connecting jumper between 'GEN' and 'BAT' terminals momentarily after all leads connected. Disconnect 'BAT' lead first, connect this lead last.

LIGHTING

LIGHTING:—Headlamps—Guide Multi-beam, Pre-focused type, with special non-interchangeable lenses. Asymetrical passing beam (upper beam left hand headlamp, lower beam right hand headlamp) controlled by foot selector switch with lighting switch in third or Country Driving position.

NOTE—With lighting switch in second position, foot selector switch controls upper driving beam and lower city beam (for both headlamps).

Headlamp Adjustment:—With driving (upper beam) lighted and lenses in place, aim left hand headlamp so that upper edge of hot spot is at lamp center height and left edge is at vertical line for lamp center (entire hot spot to right of this center line) at 25 feet. Aim right hand headlamp for same height but center hot spot on lamp-center vertical line (right cut-off of hot spot about 1 foot to right of center-line).

Headlamp Indicators—Consits of 4 bulbs in speedometer dial which illuminates markers as follows:
City—Lower beam, both headlamps.
Drive—Upper beam, both headlamps.
Pass—Special passing beam (see above).
Park—Parking bulbs in headlamps lighted.

Switches

Lighting (1936)—Delco-Remy Model 487-P (LHSR), 487-N (RHSR), 487-R (LH or RHSR).

Lighting (1937)—Delco-Remy Model 480-S (LHD), 480-N (RHD).

Beam Selector—Delco-Remy Model 471-Z (1936 LHD), 471-T (1937 LHD), 471-U (1936-37 RHD).

Bulb Specifications

Position	Candlepower	Mazda No.
R. H. Headlamp (see note)	32-50	2530
L. H. Headlamp	32-32	2330
Parking, Instrument	1½	55
Clock, Indicators	1	51
Map, Quarter, License	3	63
Tail (1936)	3	63
Stop (1936)	15	87
Stop & Tail (1937)	21-3	1154
Dome	15	87

NOTE—In states where this bulb not legal, 32-32 cp., 2330 bulb used in both headlamps. Type 1154 bulb has stop pin which insures correct installation.

MISC. ELECTRICAL

THERMOSTATIC RELAY: Delco-Remy 411-A (1936), No. 1866707 (1937). Mounted on lighting switch. Contacts remain closed with current of 25 amperes but open in 1 minute with load of 38 amperes. Not adjustable.

HORNS:—Delco-Remy Model K-33-B, Type 1855 (low note), 1856 (high note). Vibrator type, blended tone, twin horns. Operated by horn relay.

Horn Type	Current at 6 volts	Air Gap
1855	12-14 amperes	.045-.050"
1856	11-13 amperes	.036-.040"

Horn Relay Model 271-A:—Contacts close at 2.7-4.0 volts.
Contact Gap—.015-.030".
Air Gap—.010-.014" with contacts closed.

ENGINE

ENGINE SPECIFICATIONS: 12 cylinder, "I" or overhead valve type. Cylinder blocks for each bank cast en-bloc and separate from crankcase.
Bore—3⅛". **Stroke**—4".
Displacement—368 cu. ins.
Rated Horsepower—46.9.
Developed Horsepower—150 at 3600 RPM.
Compression Ratio—6.0-1 Std., 5.65-1 Optl. Lower compression ratio may be secured by installing special thick head gaskets.
Compression Pressure—145 lbs. at 1000 RPM or approximately 100-105 lbs. at cranking speed.
Vacuum Reading—20-21" steady at 320 RPM.

PISTONS:—Lynite, Lo-Ex aluminum alloy. 'T' slot, Cam gound type with anodized finish (special hard oxide formed on bearing surface).
Length—3 5/16". **Weight**—11.712 ozs. stripped, 16.976 ozs. with rings, pin, and locking screw.
Removal—Pistons and rods removed from below.
Clearance—Top .019", Bottom .002". See Fitting New Pistons.

Replacement Pistons:—Finished anodized pistons furnished .005", .015" oversize or reground blocks with pistons fitted furnished .015", .030" oversize.
NOTE Cylinder bores in same block held within .002" limits. Max. cylinder bore out-of-round .0005".

Fitting New Pistons:—Check piston with micrometer gauge at point just below and to left of 'T' slot junction midway between pin holes with piston at 70° F. Check cylinder bore with micrometer, finish to size giving correct clearance. Feeler gauges ⅜-½" wide can be used on side opposite slot. Piston should fall of own weight with .0015" feeler and lock on .002"

Installing Pistons:—Install pistons with slot to left as viewed from the driver's seat.

ENGINE

CONTINUED FROM PRECEDING PAGE

PISTON RINGS:—Three compression, one oil control ring per piston, all above pin. Lower ring groove drilled radially with oil drain holes. Heat deflector groove above top compression ring groove.

Ring	Width	End Gap	Side Clearance
Comp (80, 85)	⅛"	.007-.012"	.0015-.0028"
Oil Cont	5/32"	.007-.015"	.0013-.0026"

NOTE—Worn limits on all rings .025" (End Gap) and .004" (Side Clearance).

PISTON PIN:—Diameter ⅞". Length 2.810-2.815". Pin is locked in piston by locking screw in one boss. Heat piston in boiling water and push pin out from lock-screw end (in from opposite end to install).

Pin Fit in Piston—Locking screw end .0004" press fit or hand push fit with piston at 200-210° F. Free end .0001" clearance or hand push fit at 70° F.

Pin Fit in Rod Bushing—.0002-.0008" (new), .0015" (worn).

NOTE—To remove and install split-type bushing manufacturer recommends special tool kit (No. HM-250). Bushings must be pressed in with an arbor press, expanded, then burnished.

CONNECTING ROD:—Weight 31.856 ozs. Length 9¼".

Crankpin Journal Diameter—2½".

Lower Bearing—Spun babbitt. No shims.

Clearance—.001-.0025". Sideplay .004-.007".

Bearing Adjustment:—None (no shims). Do not file caps. Replace rods.

Installing Rods:—Numbers on rods and caps must correspond and must be toward bottom of engine.

CRANKSHAFT: Four bearing type with integral counterweights.

Journal Diameters—2 ⅝" (all bearings).

Bearing Type—Removable steel-backed, babbitt-lined shells. New bearings require no line reaming.

Clearance—.001" (new), .004" (worn limit).

Bearing Adjustment:—None (no shims). Replace bearings (upper halves rotated in or out with 'T' shaped cotter pin in oil passage). Do not file caps.

NOTE—Use new wooden plugs with rear bearing cap.

End Thrust:—Taken by #3 main bearing. Endplay .001-.005".

CAMSHAFT: Four bearing type. Duplex chain drive with automatic take-up.

Journal Diameters—#1, 2"; all others 2⅛".

Clearance—.0011-.0026" (new), .005" (worn limit).

End Thrust:—Taken by thrust plate at rear of camshaft sprocket. Endplay .005-.015". Replace plate if endplay exceeds .015".

Timing Chain:—Morse #766 Duplex. Width 1½". Pitch ⅜". Length 41¼" or 110 links. See Equipment Section for complete data on Morse automatic idler sprocket.

See Miscellaneous Section for complete data.

Camshaft Setting:—Sprockets are marked. Mesh chain with sprockets turned so that 'O' marks are adjacent and in line with a straightedge across the shaft centers.

VALVES:—	Head Diam.	Stem. Diam.	Length
Intake	1.509-1.515"	.3392-.3397"	6 9/64"
Exhaust	1.384-1.390"	.3392-.3397"	6 9/64"

	Seat Angle	Lift	Stem Clearance
Intake	45°	11/32"	.001-.0025"
Exhaust	45°	11/32"	.001-.0015"

Valve Tappet Clearance Take-up—Automatic hydraulic type built in rocker arm assembly on cylinder head. CAUTION—Clearance must be checked whenever valves ground or replaced.

See Miscellaneous Section for complete data.

Valve Guides:—One piece, removable. Install with long stepped end up and finish ream to correct clearance.

Valve Springs:—Double springs used on all valves.

NOTE—If valve spring pressure (installed) is less than 48 lbs. after valve grinding, correct by installing special .040" spacer, Part No. 889407, under valve spring retainer (will increase pressure 10.9 lbs.).

Inner Spring	Spring Pressure	Length
Valve Closed	18-21 lbs.	1¾"
Valve Open	49-54 lbs.	1 7/16"

Outer Spring	Spring Presure	Length
Valve Closed	48-52 lbs.	1 15/16"
Valve Open	111-120 lbs.	1 9/16"

Valve Lifters:—Roller type lifters or cam slides operating in individual removable guides. Clearance in guide .001-.0025" (new), .005" (worn limit). Roller clearance on pin .0017-.003" (new), .004" (worn).

VALVE TIMING

Tappet Clearance—None (automatic take-up).

Valve Timing:—See Camshaft Setting above.

Intake Valves—Open at TDC. Close at 44° ALDC.

Exhaust Valves—Open at 39° BLDC. Close at 5° ATDC.

To Check Valve Timing—No. 1 intake valve should open with piston on top dead center when flywheel mark '1C/11' lines up with indicator.

LUBRICATION

LUBRICATION:—Pressure system from oil pump in crankcase through oil tube in oil pan.

Oil Pump:—Gear type in crankcase. Driven through tongue-and-slot coupling by gear on camshaft.

Oil Pump Drive Clearances—Drive shaft bushing .001-.0025" (new), .010" (worn limit). Drive gear endplay .009-.015" (new), .020" (worn limit). Drive gear backlash .018" maximum.

Oil Pump Gear Clearances—Pump body and gears .0025-.0085" (new), .010" (worn limit). Pump gear endplay .002-.004" (new), .015" (worn limit).

Normal Oil Pressure—30 lbs. at 60 M.P.H.

Oil Presure Regulator—Operates at 14 lbs. Not adjustable. Under plug on front of chain case cover.

Crankcase Capacity: 9 quarts.

CLUTCH

CLUTCH—SERIES 80, 85:—Long Model 11CF-C. Semi-centrifugal, single plate, dry disc type.

See Clutch Section for complete data.

Facings—Woven type. 2 required. Inside Diameter 6½". Outside Diameter 11". Thickness .137".

Adjustment—Free movement of clutch pedal should be ⅞-1⅛". Adjust by turning nut on forward end of pedal rod directly below pedal equalizer link.

Removal—Clutch removed in same manner as on V8 Series 70 & 75. ***Refer to 1936 or 1937 Cadillac V8 articles for complete removal directions.***

See Cadillac Shop Notes for clutch locking pin removal on replacement clutches.

FRONT SUSPENSION

Front Suspension:—Independent, linked parallelogram type with coil springs.

See Front Suspension Section for complete data.

Kingpin Inclination—5° 38' Crosswise.

Caster—¾-1¼° (1936), 0° plus or minus ¼° (1937).

Camber—0°-½°.

Toe In—0-1/16" (all models).

Steering Geometry—Inner wheel turned 22-23½°, outer wheel 20° (all models).

NOTE—When checking camber, springs must be compressed sufficiently so that distance from lower face of frame sidemember to top face of spring lower support is 5 3/16" on all models.

STEERING GEAR

Steering Gear: Saginaw Worm-and-Double Roller type.

See Steering Gear Section for complete data.

BRAKES

BRAKES—SERIES 80, 85:—Bendix Hydraulic, Single Anchor type. Hand lever applies rear wheel service brakes.

See Brake Section for complete data.

Drum Diameter—14". Out-of-round .007" max. Run-out (installed) .010" maximum.

Lining—Molded (Primary 1936, All Shoes 1937), Woven (Secondary 1936 only). Width 2¼". Thickness ¼". Length 12¼" (Front Wheel Primary Shoe) 15" (all others).

Clearance—.010" for each shoe.

Hand Brake: See Service Brakes above.

MODEL IDENTIFICATION

SERIAL NUMBER:—Same as engine number. Stamped on generator drive chain housing on crankcase (visible from right side with engine hood up). First number 5110001 (1936) 5130301 (1937).

ENGINE NUMBER: Same as Serial Number (above).

TUNE-UP

COMPRESSION:—**Ratio**—6.0-1 Std. 5.65-1 Optl.

Pressure—154 lbs. at 1000 R.P.M., 172 lbs. at 3200 R.P.M., or approximately 100-105 lbs at cranking speed for standard 6.0-1 head.

VACUUM READING:—Gauge should show steady reading of 20-21" with engine idling at 320 R.P.M.

FIRING ORDER: 1-8-9-14-3-6-11-2-15-10-7-4-13-12-5-16. See wiring diagram for spark plug cable connection on distributor cap.

SPARK PLUGS: AC No. 84 (sup. G6). 18 mm. Metric. **Gaps**—.025-.030".

IGNITION: See Coil, Condenser, and Distributor.

Breaker Gap—.016". **Cam Angle** 31° (closed).

Synchronization—Movable contacts open 22½° (distr.) after fixed set. Regular 22½-22½° firing intervals.

Automatic Advance—17° max. at 1100 RPM (distr.).

IGNITION TIMING: See Ignition Timing.

Std. Setting—4° BTDC. with flywheel mark "IG/A" at indicator under inspection hole cover on housing. NOTE—Contacts open alternately at regular 22½°-22½° (distr.) firing intervals.

CARBURETION: See Carburetor & Carb. Equipment.

Idle Setting—Metering pin turned out not more than ¼ turn from point where smooth running secured (approx. 4 turns open). Idle speed 320 Engine RPM. Carburetors must be equalized. See Carburetor article for instructions.

Float Level—Fuel level 13/16"-15/16" below top edge of bowl.

Fuel Pump Pressure: 4¼ lbs. maximum.

VALVES: See Valve Timing.

Tappet Clearance—None in service (automatic hydraulic type take-up used).

STARTING: See Battery, Starter, Generator, Regulator.

IGNITION

Ignition Switch:—Delco-Remy Model 431-F (1936) 435-R (1937). Switch and cable assembly. Connected to coil unit by armored cable.

Ignition Lock—Briggs & Stratton No. 45792 (cylinder). **Key Series**—8000-9499.

COIL: Delco-Remy 553-E. Two coil unit assembled as unit with ignition switch.

Ignition Current—(For each coil)—2.2 amperes idling, 4.4 amperes stopped.

CONDENSER: Delco-Remy Part No. 1837963. **Capacity**—.20-.25 microfarad.

DISTRIBUTOR: Delco-Remy 4118. Double breaker 8 lobe cam, full automatic advance. Contacts open alternately at 22½° intervals corresponding to 45° firing intervals of engine. Contacts must be synchronized (see Timing).

Breaker Gap—Set at .016". Limits .014-.018".

Cam Angle r Dwell—Closed 31°. Open 14° (distributor degrees). Each set operates independently and controls one coil.

Breaker Arm Spring Tension—17-21 ounces.

Automatic Advance

Distributor		Engine	
Degrees	R.P.M.	Degrees	R.P.M.
Start	200	2.5	400
8.25	600	16.5	1200
17	1100	34	2200

Distributor Removal:—Mounted between cylinder banks at front of engine. Take out two capscrews in mounting bracket.

NOTE—When installing distributor on engine, turn crankshaft to firing position for #1 piston, mesh distributor drive gear so that slot in upper end of shaft is offset toward front of engine.

IGNITION TIMING

IGNITION TIMING:—Setting for all engines as follows. See Manual Adjustment section below.

Flywheel Degrees	Piston Position
All engines ..... 4° BTDC	.....0058" BTDC

Timing (Stationary Contacts)—Loosen hold-down screw in advance arm, center distributor pointer on quadrant scale by rotating distributor, tighten hold-down screw, take off cover plate over inspection hole in flywheel housing. With #1 piston on compression, crank engine by jacking up one rear wheel, placing car in gear and turning wheel, stop with piston 4° before top dead center when flywheel mark 'IG/A' (which is 4° before top dead center mark 'C/1-15') lines up with indicator on housing, loosen taper lock screw in center of breaker cam, carefully locate cam so that stationary contacts (mounted directly on breaker plate) are beginning to open, tighten locking screw, check rotor position and spark plug cable connections (see diagram). Then synchronize movable contacts as directed below.

Synchronization (Movable Contacts)—1st method: Turn the engine over 45° or exactly ⅛ revolution to firing postion of piston #8, stop when fly-

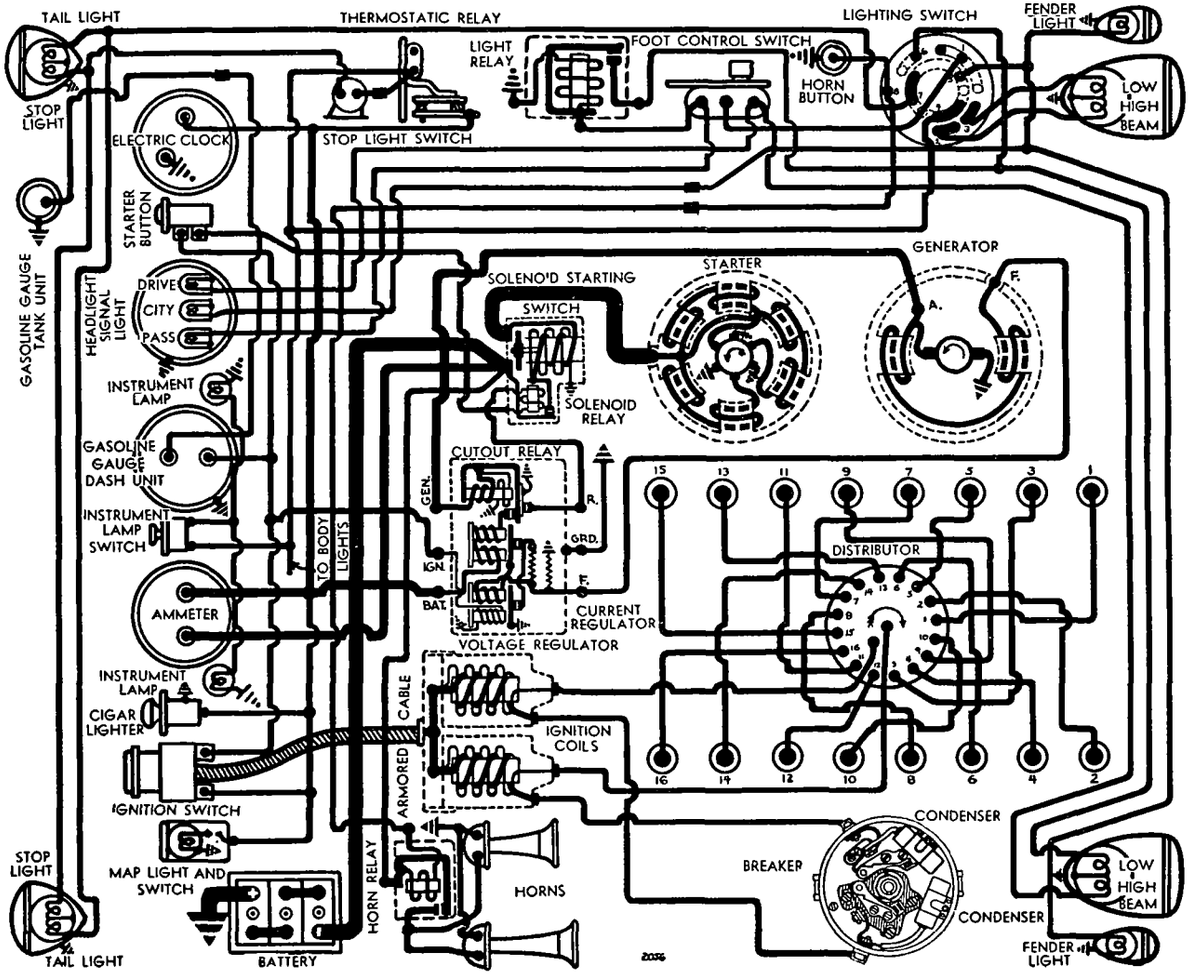

wheel mark 'IG/A' lines up with indicator on housing, loosen lock screws on movable sub-plate (carrying second set of contacts), turn eccentric adjusting screw until contacts begin to open, tighten locking screws.

Synchronization—2nd Method: Use synchronizing tool, Cadillac Part No. 109224. Install tool and adjust so that stationary contacts begin to open when pointer opposite farthest indicating point on quadrant 'R.H.', turn engine over until pointer is directly opposite '16 L.H.' mark on quadrant. Loosen lockscrews on movable sub-plate, turn eccentric adjusting screw until contacts open, tighten lockscrew.

Manual Adjustment—With ignition set as above, slight 'ping' should be noticeable when engine is accelerated with wide open throttle at speeds below 15 M.P.H. If ping is too severe, loosen hold-down screw on pointer, rotate distributor one gradution on scale clockwise to retard spark, repeat test. Adjustment permits advance or retard of 10° from center 'O' position.

NOTE—Check engine for faulty spark plugs, excessive carbon deposits or localized 'hot spots' before changing the manual adjustment.

CARBURETOR

CARBURETION:—Carburetor—Detroit Model 51, 1½" expanding vane or air valve, updraft type. One carburetor used for each bank with interconnected throttles.

NOTE—Carburetor throttles must be synchronized.

For complete data, refer to Carburetor Index.

Automatic Choke:—Detroit semi-automatic type.

For complete data, refer to Carburetion Equip. Index.

CARB. EQUIPMENT

Air Cleaner:—AC. #1526626 oil-wetted type standard.

Fuel Pump:—AC. Type D #1522149. Diaphragm type.

For complete data, refer to Carburetion Equip. Index.

NOTE—AC. Type K #1521542 vacuum pump mounted as separate unit.

Gasoline Gauge:—AC Electric. #1515135 (Dash unit—1936), #1515335 (Dash unit—1937), #1515059 (Tank unit—all models).

For complete data, refer to Carburetion Equip. Index.

BATTERY

BATTERY:—Delco, Type 25-A. 6 volt, 25 plate, 196 ampere hour capacity (20 hour rate).

Starting Capacity—234 amperes for 20 minutes.

Zero Capacity—300 amperes for 9.5 minutes.

Ground Terminal—Positive (+) terminal.

Location—Under right front fender. Accessible from engine compartment with right hood raised.

STARTER

Delco-Remy Model 580. Armature 1837058.

Drive—Solenoid pinion shift and overrunning clutch type with reduction gears.

Rotation—Counter-clockwise (armature shaft) at commutator end.

Brush Spring Tension—36-40 ounces each

Performance Data

Torque	R.P.M.	Volts	Amperes
0 ft. lbs.	2200	5.7	70
35 ft. lbs.	Lock	3.0	600

Removal:—Flange mounted on rear face of flywheel housing at right of transmission. To remove, take out 3 flange capscrews.

Starting Switch:—Solenoid Switch Type 1515. Push-button Switch 1379 or 1407. Solenoid sw. controlled through relay by push button on instrument board. Operative only with ignition 'on'.

For complete data, refer to Electrical Equipment Index.

Solenoid Switch Specifications

Closes against 70 lb. pull with ½" air gap drawing 65-71 amperes at 5 volts. Holds switch closed with current draw of 12-14 amperes (hold-in coil only).

Solenoid Relay

Contacts Close—4 volts max. **Open**—1.6-2.0 volts.
Contact Gap—.030-.045" **Air Gap**—.010-.014" (closed)

GENERATOR

Delco-Remy Model 933-M. Armature 1854448. Two brush, straight shunt, 'Peak Load' type with external voltage and current regulation. Air cooled type.

Charging Rate Adjustment—No adjustment at generator. Charging rate controlled by Voltage Regulator and maximum output controlled by Current Regulator. See Control Unit section below.

Maximum Charging Rate—26 amperes (cold) with discharged battery as indicated on test ammeter connected in line at 'BAT' terminal on Control Unit. Decreases as battery comes up on charge. Generator output constant at all speeds above 1700 R.P.M. or 20 M.P.H.

Performance Data—Generator Cold

Amperes	Volts	R.P.M.
26	8.0	1600

Rotation—Counter-clockwise at commutator end.

Brush Spring Tension—22-26 ounces.

Shunt Field Current—1.7-2.0 amperes at 6 volts.

Removal:—Flange mounted on rear face of timing chain case at right of engine. To remove, disconnect water pump drive coupling, take out flange mounting screws. Chain adjustment automatic, requires no attention during life of chain.

REGULATOR

Delco-Remy Model 5559 or 5818. Double Core Voltage & Current Regulator (With 'IGN' Terminal). Cutout Relay and vibrating type Voltage & Current Regulators. Cutout Relay has special 'ground' contacts for starter solenoid control.

For complete data, refer to Electrical Equipment Index.

NOTE—Cover of regulator case is sealed. Units can be checked without breaking seals. Seals must be broken to remove cover for adjustments.

Cutout Relay

Cuts In—6.7-7.6 volts.

Cuts Out—3.0 ampere discharge current.

Contact Gap—.018-.025".

Air Gap—.018-.022" with contacts closed.

Voltage Regulator

Setting—7.55-7.85 volts at 70° F. 7.45-7.55 volts at 150° F. Regulator over-compensated for temperature and must be checked at these points.

Checking—To check without breaking seal, disconnect lead at 'IGN' terminal on case, connect jumper between 'IGN' and 'BAT' terminals, connect test ammeter in charging line at 'BAT' terminal, connect voltmeter between 'IGN' terminal and ground. Operate generator at 2800-3000 R.P.M., adjust charging rate to 8-10 amperes. Voltmeter reading should agree with setting above.

NOTE—Cover should be in place when tests are made. Do not operate generator on open-circuit.

Adjusting—Seal must be broken and cover removed. With ammeter and voltmeter connected as above, set regulator by bending spring hanger at lower end of armature spring slightly until performance is correct (with cover in place). Remove jumper and restore original connections.

Contact Gap—.015-.025".

Contact Spring Tension—3.5 ozs. minimum.

Air Gap—.060-.070" between armature and center of core with armature down so that fibre bumper just touches stop, .008-.013" between fibre bumper and stop with armature up.

Current Regulator

Setting—24-26 amperes.

Checking—To check without breaking seal, disconnect 'IGN' lead on regulator, connect test ammeter in charging line at 'BAT' terminal. Operate generator and check performance.

NOTE—Do not allow generator voltage to exceed 8.5 volts with voltage regulator inoperative.

Adjusting—Seal must be broken and cover removed. Set regulator by bending spring hanger at lower end of armature spring slightly until performance is as noted above (cover must be in place when testing). Restore original connections.

Contact Gap—.015-.025".

Contact Spring Tension—3.5 ounces minimum.

Air Gap—.070-.080" between armature and center of core with armature down so that fibre bumper just touches stop, .008-.013" between fibre bumper and stop with armature up.

NOTE—Repolarize generator whenever Control Unit disconnected or removed by connecting jumper between 'GEN' and 'BAT' terminals momentarily after all leads connected. Disconnect 'BAT' lead first, connect this lead last.

LIGHTING

LIGHTING:—Headlamps—Guide Multi-beam, Pre-focused type with special non-interchangeable lenses. Asymetrical passing beam (upper beam left hand headlamp, lower beam right hand headlamp) controlled by foot selector switch with lighting switch in Country Driving position.

Headlamp Adjustment—With driving (upper beams) lighted and lenses in place, aim left hand headlamp so that upper edge of hot spot is at lamp center height and left edge is at lamp-center vertical line (entire hot spot to right of this line) at 25 feet. Aim right hand headlamp for same height but center hot spot n lamp-center vertical line

CONTINUED ON NEXT PAGE

C NTINUED FROM PRECEDING PAGE

with right hand cut-off of hot spot about 1 foot to right of center line.

Headlamp Indicators—Consists of 3 bulbs in special dial on instrument board which are lighted as follows:

Drive—Upper beam, both headlamps.

City—Lower beam, both headlamps.

Pass—Asymetrical passing beam (see above).

Switches

Lighting—Delco-Remy Model 487-H, K (Exp.).

Foot Selector—Delco-Remy Model 471-Z (1936) 471-T (1937).

Stop Light—Delco-Remy Model 474-R (1936 only).

Bulb Specifications

Position	Candlepower	Mazda No.
R.H. Headlamp (see Note)	32-50	2530
L.H. Headlamp	32-32	2330
Parking, Instrument	1½	55
Clock, Indicators	1	51
Map, Quarter, License	3	63
Stop & Tail	21-3	1154
Dome	15	87

NOTE—In states where this bulb not legal, 32-32 cp., 2330 bulb used in both headlamps. Type 1154 bulb has stop pin which insures correct installation.

MISC. ELECTRICAL

THERMOSTATIC RELAY:—Model 411-A. Mounted on dash. Contacts remain closed with current of 25 amperes but open within one minute with load of 38 amperes at 70-80° F. Not adjustable.

HORNS:—Delco Model K-33-B Type 1855 (low note), 1856 (high note). Blended tone twin horns, operated by horn relay. Vibrator type.

Horn Type	Current at 6 volts	Air Gap
1855	12-14 amperes	.045-.050"
1856	11-13 amperes	.036-.040"

NOTE—Horns identified by letter stamped on front of power unit cover and projectors must be assembled as follows: 'S'—low note, short projector, 'L'—high note, long projector.

Horn Relay Model 266-TK (1936) 271-A (1937):—Contacts close at 2.7-4.0 volts.

Contact Gap—.015-.030".

Air Gap—.010-.014" with contacts closed.

ENGINE

ENGINE SPECIFICATIONS: 16 Cylinder, "I" or overhead valve, 45° Vee type. Cylinder blocks for each bank cast enbloc and separate from crankcase.

Bore—3". **Stroke**—4".

Displacement—452 cu. ins.

Rated Horsepower—57.5.

Developed Horsepower—185 at 3800 RPM.

Compression Ratio—6.0-1 Std. 5.65-1 Optl. Lower compression ratio may be secured by installing special thick head gaskets.

Compression Pressure—154 lbs. at 1000 RPM or approximately 100-105 lbs. at cranking speed.

Vacuum Reading—20-21" steady reading with engine idling at 320 R.P.M.

PISTONS:—Lynite Lo-Ex aluminum alloy, "T" slot, cam ground type with anodized finish. **Length** 3 5/16".

Weight—10.96 ozs. (stripped), 16.144 ozs. (with rings, pin, and locking screw).

Removal—Pistons and rods removed from below.

Clearance—Top .018". Bottom .0018". See Fitting New Pistons.

Replacement Pistons:—Finished pistons furnished .005" and .015" oversize. Reground blocks (pistons fitted) furnished .015", .030" oversize (exchange basis). Hold all bores in same block within .002" limit and maximum out-of-round to .0005".

Fitting New Pistons:—If micrometer used, check cylinder bore and pistons (just below and to left of "T" slot junction midway between pin holes with piston at 70°). If feeler gauges (⅜-½" wide) used, install on side opposite slot. Piston should fall of own weight with .0015" feeler and hold on .002" feeler.

Installing Pistons:—Slot to left (viewed from driver's seat) for all pistons in both banks.

PISTON RINGS:—Three compression, one oil control ring per piston, all above pin (no ring in heat deflector groove at top). Lower ring groove drilled with oil drain holes.

Ring	Width	End Gap	Side Clearance
Comp.	.0930-.0935"	.007-.012"	.0015-.0028"
Oil Cont.	.1540-.1550"	.007-.015"	.0013-.0026"

NOTE—Worn limits .025" (end gap), .004" (side clearance).

PISTON PIN:—Diameter .8742-.8745", **Length** 2.810-2.815". Pin locked in piston by locking screw in one boss. To remove pins, heat piston in boiling water, push out at lockscrew end (install from opposite end).

Pin Fit in Piston—.0004" press fit or hand push fit with piston at 200-210° F. (lockscrew boss), .0001" clearance or hand push fit at 70° F. (free end).

Pin Fit in Rod Bushing—.0002-.0008" clearance (new), .0015" (worn limit).

CONNECTING ROD:—Weight 31.856 ozs. Length 9¼".

Crankpin Journal Diameter—2.4995-2.500".

Lower Bearing—Spun babbitt. No shims.

Clearance—.0015". Sideplay .004-.007".

Bearing Adjustment:—None. Replace rods. Do not file bearing caps.

Installing Rods:—Numbers on rods and caps must correspond and point down toward oil pan.

CRANKSHAFT: Five bearing type with integral counterweights.

Journal Diameters—2⅝" all bearings.

Bearing Type—Removable steel-backed, babbitt-lined. No shims.

Clearance—.001" (new), .004" (worn limit).

Bearing Adjustment:—None. Replace bearings. Do not file caps. Rotate upper halves in or out without removing crankshaft.

End Thrust: Taken by #3 bearing.

Endplay—.001-.005"

CAMSHAFT: Five bearing type. Duplex chain drive with automatic take-up idler sprocket.

Journal Diameters—#1, 2"; all others 2⅛".

Clearance—.0011-.0026" (new), .005" (worn limit).

End Thrust:—Taken by thrust plate at rear of camshaft sprocket. Endplay .005-.015". Replace plate when endplay exceeds .015".

Timing Chain:—Morse #766 Duplex. Width 1½". Pitch .375". Length 41¼" or 110 links. See Mechanical Equipment Section for data on Morse automatic idler.

See Miscellaneous Section for complete data.

Camshaft Setting:—Sprockets marked. Mesh chain with sprockets turned so that '0' marks are adjacent and in line with straightedge across shaft centers.

VALVES:—	Head Diameter	Stem Diameter	Length
Intake	1.509-1.515"	.3392-.3397"	6.220-6.228"
Exhaust	1.384-1.390"	.3392-.3397"	6.220-6.228"

	Seat Angle	Lift	Stem Clearance
Intake	45°	.3476"	.0015"
Exhaust	45°	.3476"	.0025"

Valve Tappet Clearance Take-up—Automatic hydraulic type built in rocker arm assembly on cylinder head. CAUTION—Clearance must be checked whenever valves ground or replaced.

See Miscellaneous Section for complete data.

Valve Guides:—Pressed in head with long stepped end up and finish reamed for correct clearance.

Valve Lifters:—Roller type in individual removable guides. Clearance in guide .001-.0025" (new), .005" (worn limit). Roller clearance on pin .0017-.003" (new), .004" (worn limit).

Valve Springs:—Double springs used on all valves.

	Inner Spring	Outer Spring
Valve Closed	19.5 lbs., 1.751"	50 lbs., 1.922"
Valve Open	51.5 lbs., 1.407"	115.5 lbs., 1.578"

NOTE—Whenever valves reconditioned, check spring pressure. Total for both springs should be 48-63 lbs. (measure with Tool No. J-444). Minor variations can be corrected by installing .040" spacers (Part No. 889407) under valve spring retainers. Each spacer increases pressure 11 lbs.

VALVE TIMING

Tappet Clearance:—None (automatic take-up).

Valve Timing:—See Camshaft Setting above.

Intake Valves—Open at TDC. Close 44° ALDC.

Exhaust Valves—Open 39° BLDC. Close 5° ATDC.

To Check Valve Timing—#1 intake valve should open with piston on top dead center when flywheel mark "1C/15" lines up with indicator.

LUBRICATION

LUBRICATION: Pressure system. Gear type oil pump mounted in crankcase.

Oil Pump Drive Clearances—Drive Shaft Bushing .001-.0025" (new), .010" (worn limit). Drive gear end play .009-.015" (new), .020" (worn limit). Drive gear backlash .018" maximum.

Oil Pump Gear Clearances—Between pump body and gears .0025-.0085" (new), .010" (worn limit). Pump gear endplay .002-.004" (new), .015" (worn limit).

Normal Oil Pressure—30 lbs. at 60 M.P.H.

Oil Pressure Regulator—Located under plug on front face of chain case cover. Opens at 14 lbs. Not adjustable.

Crankcase Capacity—10 quarts.

CLUTCH

CLUTCH (90):—Own make. Double plate, dry disc type.

See Clutch Section for complete data.

Facings—Woven type, 4 required. Inside Diameter 6½". Outside Diameter 11". Thickness .135-.145".

Adjustment:—Free movement of pedal should be 1¼-1½". To adjust, turn adjusting nut on pedal rod.

Removal:—Remove transmission (see Transmission Section below). Take off four nuts on studs by which center driving plate mounted on flywheel (nuts accessible through holes in rear driving plate), remove clutch assembly.

TRANSMISSION

TRANSMISSION:—Own Make. Constant mesh, synchro-mesh, helical gears (second and high), sliding spur gear for low and reverse.

See Transmission Section for complete data.

Removal (90):—Disconnect universal joints and remove drive shaft, remove transmission rear support (as unit with cross-member), remove front propeller shaft and housing, disconnect clutch release mechanism, take out transmission mounting screws, pull transmission straight back (clutch housing integral with transmission case).

UNIVERSALS

UNIVERSAL JOINTS: Mechanics Model 4C. Needle bearing type. Two used.

See Universals Section for complete data.

REAR AXLE

REAR AXLE: Own Make. Three-quarter floating type with spiral bevel gears and Hotchkiss Drive.

See Rear Axle Section for complete data.

NOTE—Manufacturer recommends Differential Carrier Assembly be returned to factory for servicing.

Ratio—4.64-1 Std., 4.07-1, 4.31-1, 4.41-1 Optl.

Backlash—.004-.008". Screw adjustment.

Removal:—Disconnect drive shaft at rear universal, remove axle shafts (see below), remove capscrews on differential carrier flange, pull carrier assembly out without disturbing axle housing.

Axle Shaft Removal (90):—Jack up rear end, remove wheel, take out capscrews in driving hub flange, pull driving hub and axle shaft out as an assembly.

Wheel Bearing Adjustment:—None required.

SHOCK ABSORBERS

SHOCK ABSORBERS:—Delco Hydraulic, double acting type.

	Front	Rear
90	1950D, C	2050C, D

See Shock Absorber Section for complete data.

FRONT SUSPENSION

Front Suspension:—Independent, linked parallelogram type with coil springs.

See Front Suspension Section for complete data.

Kingpin Inclination—4° (1936), 4°30' (1937).

Caster—1° (1936), 0° plus or minus ¼° (1937).

Camber—¾-1½° (1936), 0-½° (1937).

Toe In—0 to 1/16". Adjustable.

Steering Geometry—Inner wheel turned 22-23½°, outer wheel 20°.

STEERING GEAR

Steering Gear: Saginaw Worm-and-Double Roller type.

See Steering Gear Section for complete data.

BRAKES

1936 M DELS

BRAKES—SERIES 90:—Service—Own Make. Internal-expanding, self-energizing, mechanically operated, vacuum power type. Hand lever applies rear service wheel brakes.

See Brake Section for complete data.

Drum Diameter—15.995-16.005". Out-of-round .007" maximum. Run-out (installed) .010" maximum.

Lining—Woven type. Width 2" (all shoes).

	Thickness	Length per Shoe
Top (aluminum) Shoe	.245-.260"	15 19/32"
Lower (steel) Shoe	.183-.198"	14¼"

Clearance—.007" (approximate).

Hand Brake Adjustment:—See Service Brakes.

Power Unit:—Bendix internal valve type vacuum cylinder mounted on frame 'X' member and linked to equalizer lever between front and rear wheel brake cross shafts.

See Brake Section for complete data.

BRAKES

1937 M DELS

BRAKES:—Service—Bendix hydraulic, single anchor type with vacuum power operation (90 only). Hand lever applies rear wheel service brakes.

See Brake Section for complete data.

Drum Diameter—14".

Lining—Molded (Primary Shoes), Woven (Secondary Shoes). Width 2¼". Thickness ¼". Length per shoe 12¼" (Front Wheel Primary Shoe), 15" (all others).

Clearance—.010" for each shoe.

Hand Brake:—See Service Brakes above.

Power Unit (Series 90):—Bendix internal valve type Vacuum Power cylinder linked to brake pedal lever.

See Brake Section for complete data.

ENGINE HOOD & SIDE PANEL REMOVAL:—*See Cadillac Special Shop Notes for instructions.*

MODEL IDENTIFICATION

SERIAL NUMBER:—Same as engine number below.

ENGINE NUMBER:—First number (60) 8270001, (60S) 6270001, (65) 7270001, (75) 3270001. Stamped on left side of crankcase at rear of left cylinder block and on left frame side member in rear of front engine support.

TUNE-UP

COMPRESSION:—**Ratio**—6.25-1 (Std. 60, 60S, 65), 6.70-1 (Std. 75), 5.75-1 (Optl.—all models).

Pressure—155 lbs. (60, 60S, 65), 170 lbs. (75) at 1000 R.P.M. or approximately 105-110 lbs. (60, 60S, 65), 110-115 lbs. (75) at cranking speed.

VACUUM READING:—Gauge should show steady reading of 20-21" with engine idling at 6 M.P.H.

FIRING ORDER: 1-8-7-3-6-5-4-2. See diagram for cylinder numbering and spark plug connections.

SPARK PLUGS: AC No. 45. 14 mm. Metric type.
Gaps—.025-.027".

IGNITION: See Coil, Condenser, and Distributor.
Breaker Gap—.015". **Cam Angle** 31° (closed).
Automatic Advance—12° max. at 2000 RPM (distr.).

IGNITION TIMING: See Ignition Timing.
Std. Setting—5° BTDC. with crankshaft pulley mark "IG/A" at indicator on front of engine.

CARBURETION: See Carburetor & Carb. Equipment.
Idle Setting—Both idle screws midway between "miss" and "roll" points. Idle speed 7-8 MPH.
Float Level—Fuel level 5/8" below top edge of bowl.
Accelerating Pump—Inner hole (minimum stroke) normal setting.
Fuel Pump Pressure: 4½ lbs. maximum.

VALVES: See Valve Timing.
Tappet Clearance—None in service (automatic hydraulic type take-up used).

STARTING: See Battery, Starter, Generator, Regulator.

IGNITION

Ignition Switch:—Delco-Remy 435-K (60, 60S), 1116255 (others). Connected to coil by armored cable.
Ignition Lock—Briggs & Stratton No. 45792 (Lock Cylinder). Key Series—8000 to 9499. Groove—15.

COIL: Delco-Remy Model 539-C. Mounted on dash.
Ignition Current—2.2 amps. idling, 4.4 stopped.

CONDENSER: Delco-Remy Part No. 1869704.
Capacity—.20-.25 microfarads.

DISTRIBUTOR: Delco-Remy Model 1110604. Single breaker, 8 lobe cam, full automatic advance type with manual adjustment at distributor.
Breaker Gap—.0125-.0175".
Cam Angle or Dwell—31° closed, 14° open.
Breaker Arm Spring Tension—22 ounces.
Rotation—Clockwise viewed from top.

Automatic Advance

Distributor		Engine	
Degrees	R.P.M.	Degrees	R.P.M.
Start	500	1	1000
3	820	6	1640
6	1200	12	2400
9	1600	18	3200
12	2000	24	4000

Removal:—Distributor mounted between cylinder banks at rear of engine. To remove, take out two capscrews in mounting bracket.

NOTE—When installing distributor on engine, turn crankshaft to firing position for #1 piston, mesh distributor drive gear so that slot in upper end of shaft is offset toward rear of engine.

IGNITION TIMING

IGNITION TIMING:—Setting below for fuel ratings as follows:—60 & 65—70 octane rating, 75—ethylized or other high octane fuel. NOTE—See Manual Adjustment (following) for final setting giving best performance with type of fuel regularly used.

Flywheel Degrees	Piston Position
5° BTDC	.0114" BTDC

To Set Timing (With Synchroscope)—Recommended by manufacturer. Clip Synchroscope lead to #1 spark plug, direct light on crankshaft pulley at front of engine. Idle engine, loosen hold-down screw in advance arm, rotate distributor until 'IG/A' mark on pulley (which is 5° before dead center mark 'C.1/6' appears to line up with pointer on chain case cover, tighten hold-down screw. Adjust for fuel (see Manual Adjustment).

Timing (Without Synchroscope)—Turn engine over

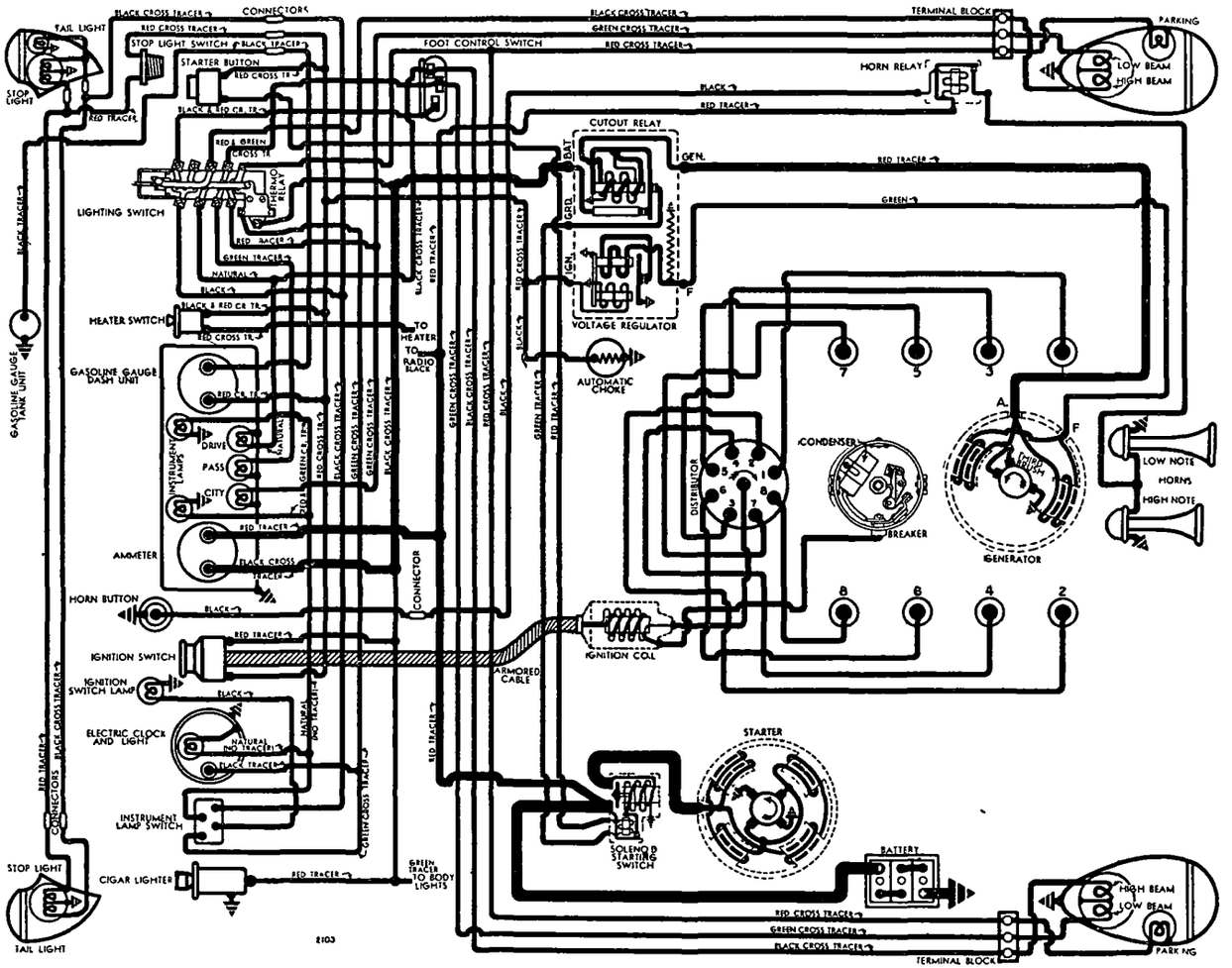

►SEE CADILLAC V16 (1938-39) DIAGRAM FOR SERIES 75 GENERATOR & REGULATOR WIRING

to firing position for piston #1 (front piston, left bank) with mark 'IG/A' on crankshaft pulley (5° before dead center mark 'C.1/6') lined up with pointer on chain case. Loosen hold-down screw on advance arm, center pointer on scale, tighten hold-down screw on advance arm. Loosen advance arm clamp bolt, rotate distributor until contacts begin to open, tighten clamp bolt. Adjust for fuel (see Manual Adjustment).

Manual Adjustment—Slight ping should be evident at speeds below 15 M.P.H. when car accelerated with wide open throttle. To adjust, loosen hold-down screw on advance arm, rotate distributor one graduation on scale clockwise (if ping too severe), counter-clockwise (if no ping noted), repeat test, adjust until best performance is secured. NOTE—Check engine for faulty spark plugs, excessive carbon deposits, localized hot spots, or lean carburetor setting before changing manual adjustment.

CARBURETOR

CARBURETION:—Carburetor—Stromberg Model AAV-25, 1¼" dual downdraft, aircraft type.

For complete data, refer to Carburetor Index.

NOTE—If engine idled after cold starting, open throttle momentarily. New choke design requires opening of throttle for proper choke release.

Idle Adjustment—With engine warm (fast idle and automatic choke inoperative) adjust throttle stop-screw so that engine idles at 6 M.P.H. Turn each idle adjusting screw in until engine begins to miss, then turn screws out until engine begins to roll, finally turn screws in slowly until engine fires smoothly. Both screws must be adjusted equally. Readjust throttle stopscrew for correct idling speed if necessary.

Accelerating Pump Setting—Two holes provided in throttle lever for pump link engagement. Set as follows:
Inner hole (short stroke)—Normal operation.
Outer hole (long stroke)—Winter temperatures.

Fast Idle:—Integral with carburetor. No adjustment.
For complete data, refer to Carburetion Equip. Index.

Automatic Choke:—Integral with carburetor (linked directly to choke valve shaft). No adjustment.
For complete data, refer to Carburetion Equip. Index.

CARB. EQUIPMENT

Air Cleaner:—AC. #1528572 oil bath type used in conjunction with oil vent #864384.

Fuel Pump:—AC. Type AB #1523694. Diaphragm type. Combination fuel-and-vacuum pump.
For complete data, refer to Carburetion Equip. Index.

Gasoline Gauge:—AC. Electric type. #1515346 (dash unit), #1515461 (tank unit).
For complete data, refer to Carburetion Equip. Index.

BATTERY

SERIES 60, 60S, 65

BATTERY (60, 60S, 65):—Delco, Type 17-K-1. 6 volt, 17 plate, 112 AH. capacity (20 hour rate).
Starting Capacity—135 amperes for 20 minutes.
Zero Capacity—300 amperes for 4.3 minutes. Five second voltage—4.38 volts.
Grounded Terminal—Positive (+) terminal. Grounded to frame. Engine grounded to same point on right frame side member by strap connector (second ground at left front of engine on some models).
Dimensions—Length 10⅜". Width 7". Height 8⅝". **Location**—Under hood on right side. NOTE—To remove, take out through bolt on outer edge (under fender), raise battery carrier and battery to free clamps from frame and lower assembly to floor.

BATTERY

SERIES 75

BATTERY (75):—Delco, Type 17-D. 6 volt, 17 plate, 135 AH. capacity (20 hour rate).
Starting Capacity—156 amperes for 20 minutes.
Zero Capacity—300 amperes for 5.5 minutes. Five second voltage—4.6 volts.
Dimensions—Length 11¾". Width 7". Height 9⅜".
Grounded Terminal & Location—As above.

STARTER

Delco-Remy Model 727-V (Std. All Models), 1107904 (RHD. Series 60).
Armature—No. 820158.
Drive—Overrunning clutch (solenoid pinion shift).
Rotation—Counter-clockwise at commutator end.
Brush Spring Tension—24-28 ounces.

Performance Data

Torque	R.P.M.	Volts	Amperes
0 ft. lbs.	5500	5.0	65
16 "	Lock	3.0	600

Removal:—Starter flange mounted on right front face of flywheel housing. To remove, take out flange mounting screws, pull starter forward, remove from below.

Starting Switch:—Solenoid Switch Type 1542. Push-button Switch Type 1996001. Solenoid Switch controlled through relay in case by pushbutton on instrument panel.
For complete data, refer to Electrical Equipment Index

Solenoid Switch Specifications

Closes against 70 lbs. pull with ½" air gap drawing 65-71 amperes at 5 volts. Holds switch closed with current draw of 12-14 amperes (hold-in coil only).

Solenoid Relay Specifications

Contacts Close—1.9 volts Max.
Contacts Open—1.0-1.2 volts.
Contact Gap—.035". **Air Gap**—.010" (closed).

GENERATOR

SERIES 60, 60S, 65

Delco-Remy Model 1101051 (Series 60, 60S), 1101054 (65). Armature No. 1866789. Split-field type with fixed third brush and vibrating voltage regulator control.

For complete data, refer to Electrical Equipment Index.

Charging Rate Adjustment—Adjusted by changing regulator setting. See Regulator data.

Maximum Charging Rate—As given in table below. Reached at 4000 R.P.M. or 50 M.P.H. cold. To check charging rate, connect test ammeter in line at 'BAT' terminal on regulator, voltmeter between 'GEN' terminal and ground, ground 'F' terminal to eliminate regulator action.

NOTE—Do not operate generator on open-circuit.

Performance Data

	Amperes	Volts	R.P.M.
Cold	27-31	8.0	4000
Hot	25-28	8.0	4200

Rotation—Counter-clockwise at commutator end.

Brush Spring Tension—22-26 ounces (main), 16-20 ounces (third brush).

Field Current—1.44-1.56 amperes at 6.0 volts (Shunt field), .89-.94 amperes at 6.0 volts (third brush field).

Removal:—Flange mounted at front of engine between cylinder banks. Belt driven in tandem with water pump (separate belt for fan). To remove, take out two flange mounting bolts.

Belt Adjustment:—Loosen both generator mounting bolts, lift generator up until only slight slack evident in belt (pivots on left bolt, right bolt hole slotted).

NOTE—Fan driven by separate belt with adjustment at fan bracket.

GENERATOR

SERIES 75

Delco-Remy Model 1102652. Armature No. 1857866. Two brush (shunt) peak-load type with external vibrating type voltage and current regulation.
For all data on this generator (including wiring diagram), see Cadillac V16 (1938-39) article.

REGULATOR

SERIES 60, 60S, 65

Delco-Remy Model 5817. Two-unit Double Core Type Voltage Regulator (With 'IGN' Terminal). Cutout Relay and vibrating Voltage Regulator. Cut-out Relay has special 'ground' contacts for starter solenoid control.
For complete data, refer to Electrical Equipment Index.

Cutout Relay

Cuts In—6.9-7.6 volts.
Cuts Out—0-3.0 amperes discharge.
Contact Gap—.020". **Air Gap**—.020" (closed).

Voltage Regulator

Setting—7.5-7.9 volts (70°F.), 7.4-7.6 volts (150° F). Regulator over-compensated for temperature and must be checked at these points.

Adjustment—Connect ammeter in charging line at 'BAT' terminal on regulator, disconnect lead on 'IGN' terminal and connect jumper between this terminal and 'BAT' terminal, connect voltmeter between 'IGN' terminal and ground. Operate generator at 2000-3000 R.P.M., adjust charging rate to 8-10 amperes (use variable rheostat or AVR set), adjust regulator by bending spring hanger at lower end of armature slightly.

NOTE—Regulator cover must be in place when making tests. Do not operate generator on open-circuit.

Contact Gap—.020". **Contact Sp. Tens.**—2.7-3.5 ozs.

Air Gap—.063" between armature and center of core with armature down. .010" between fibre bumper and stop with armature up.

REGULATOR

SERIES 75

Delco-Remy Model 5818. Double Core Type Voltage and Current Regulator (with "IGN" Terminal).
For all data on this Regulator (including wiring diagram), see Cadillac V16 (1938-39) article.

CONTINUED ON NEXT PAGE

CONTINUED FROM PRECEDIN PA E

LIGHTING

LIGHTING:—Headlamps—Guide Multi-beam, prefocused type with non-interchangeable lenses (marked 'Right' and 'Left' at top). Asymetrical passing beam (upper beam left hand headlamp, lower beam right hand headlamp) controlled by foot selector switch with lighting switch in Country Driving position.

NOTE—With lighting switch in second position (City), foot selector switch controls upper 'driving' beam and lower 'City' beam (for both headlamps).

Headlamp Adjustment—Adjust lamps only with doors in place. Aim right hand headlamp so that top edge of high intensity spot is on horizontal line at lamp center height and centered on vertical lamp-center line. Aim left hand headlamp for same height but high intensity spot must be to right of vertical lamp-center line. Adjusting screw for up-and-down motion accessible through hole in bottom of each lamp, screw for side motion on inner side of each lamp body (accesible after removing spring-retained cup).

Headlamp Indicators—Located on lower edge of speedometer panel. Marked as follows:

Drive—Upper beam, both headlamps.

Pass—Special passing beam (see above).

City—Lower beam, both headlamps.

Switches

Lighting—D-R No. 1994502, 1995005 (Exp.).

Dimmer—D-R Model 471-T, 471-U (RHD).

Dash Lamp—D-R Model 1406.

Bulb Specifications

Position	Candlepower	Mazda No.
Headlamps	32-32	2330
Stop and Tail	21-3	1154
Parking	1½	55
License, Quarter	3	63
Dome	15	87
Instrument, Clock, Ind.	1	51

MISC. ELECTRICAL

THERMOSTATIC RELAY:—No. 1866467. Mounted on lighting switch. Contacts remain closed with 25 ampere current but open within 1 minute with 38 ampere current (70°F.). Non-adjustable.

HORNS:—Klaxon Model K-33-D. Type 1967 (low note—left side), 1968 (high note—right side). Vibrator type, blended tone, twin horns operated by horn relay.

NOTE—Horns mounted vertically behind radiator grille with horn relay on left front fender dust shield. Grille must be removed for horn service.

Horn Type	Current (at 6 volts)	Air Gap
1967 Low Note	12-14 amperes	.045-.050"
1968 High Note	11-13 amperes	.036-.040"

Horn Relay:—Model 271-A. **Contact Gap**—.020".

Contacts Close—2.7-4.0 volts. **Air Gap**—.015".

ENGINE

ENGINE SPECIFICATIONS:—Own. 8 cylinder, 90° Vee, 'L' head type. Upper crankcase and cylinder blocks cast Enbloc. **Bore**—3½". **Stroke**—4½".

Displacement—346 cu. ins. **Rated HP.**—39.20.

Developed Horsepower—135 (60, 60S, 65), 140 (75) at 3400 R.P.M.

Compression Ratio—6.25-1 (Std. 60, 60S, 65), 6.70-1 (Std. 75), 5.75-1 Optl. (all models).

See Cadillac Special Shop Notes for cylinder head identification and interchangeability data.

Compression Pressure—155 lbs. (60, 60S, 65), 170 lbs. (75) at 1000 R.P.M. or approximately 105-110 lbs. (60, 60S, 65), 110-115 lbs. (75) at cranking speed.

Vacuum Reading—Steady 20-21" at idle speed.

PISTONS:—Lynite or Bohn Lo-Ex aluminum alloy, "T" slot, Cam Ground type with Anodized finish (special hard oxide bearing surface). **Length**—4⅛". **Weight**—18.30 oz. stripped. 25.13 oz. complete.

Removal:—Pistons and rods removed from above

Clearance—Skirt .0021". See Fitting New Pistons.

Replacement Pistons:—*See Cadillac Shop Notes.* NOTE—Hold all cylinders in same block within .002" size limits. Max. out-of-round .0005".

Fitting New Pistons:—Check piston diameter with micrometer gauge at right angles to pin hole just below lower ring groove and also ½" above lower edge. If feeler gauges (⅜-½" wide) used, insert feeler next to T-slot. Piston should fall of own weight with .002" feeler, hold tight on .0025" feeler.

Installing Pistons:—Slot to left, for all pistons.

PISTON RINGS:—Two compression, two oil control rings per piston, all above pin.

Ring	Width	End Gap	Side Clearance
Compression	1/8"	.007-.012"	.0015-.0028"
Oil Control	5/32"	.007-.015"	.0013-.0026"

NOTE—Worn limits .025" (gap), .004" (side clear.).

Replacement Rings: .003", .005", .010", .015", .030" oversize.

PISTON PIN:—Diameter ⅞". **Length** 3 1/16". Pin floats in piston and rod. Held by locking rings.

See Cadillac Shop Notes for special pin removal and installation instructions.

Pin Fit in Piston—.0004" press fit (ribbed end), .0001" clearance or free fit at 70° F. (plain end).

Pin Fit in Rod Bushing—.0002-.0008" clearance (new), .0015" (worn limit).

CONNECTING ROD:—Weight 37.472 oz. **Length** 8¾".

Crankpin Journal Diameter—2.4590-2.4595".

Lower Bearing—Steel-backed, babbitt-lined.

Clearance—.0015-.0025" (new), .006" Max. (worn)

Sideplay—.003-.006".

Bearing Adjustment:—None (no shims). Replace bearings. Do not file rods or caps.

NOTE—Use new lockwashers under bearing cap bolts. Use only 12" wrench to tighten (Tool J-835).

Installing Rods:—Numbers on rods and bearing caps on same side and installed in same numbered cylinders with marks down toward oil pan.

CRANKSHAFT:—3 bearing. 6 counterweights.

Journal Diameters—2½" all bearings.

Bearing—Steel or bronze backed, babbitt-lined.

Clearance—.0015" (new), .004" (worn limit).

Bearing Adjustment:—None (no shims). Replace bearings. Do not file bearing caps. Upper halves can be rotated out without removing shaft.

See Cadillac Special Shop Notes for Rear Main Bearing oil seal renewal (new type).

End Thrust:—Taken by center bearing. Endplay .001-.005" (new), .010" Max. (worn).

CAMSHAFT:—3 bearings. Non-adjustable chain drive.

Journal Diameters—#1 and 2, 2.4071-2.4078"; #3, 2.0009-2.0016".

Bearing Type—Steel-backed, babbitt-lined.

Clearance—.0027-.0037" (new), .005" (worn limit).

See Cadillac Special Shop Notes for Camshaft Bushing removal and installtion instructions.

End Thrust:—Taken by thrust plate behind camshaft sprocket. No endplay should be permitted.

Timing Chain:—Morse Type C #3682-R Side guide type. Width 1¼". Pitch ⅜". Length 23¼" or 62 links. NOTE—Install chain 'endless' as an assembly with sprockets. Use tool J-836 to pilot camshaft sprocket

Camshaft Setting:—Sprockets marked. Mesh chain with sprockets turned so that '0' marks are adjacent and in line with straightedge across centers.

VALVES:—	Head Diameter	Stem Diameter	Length
Intake	1.876-1.886"	.3415-.3425"	5 33/64"
Exhaust	1.626-1.636"	.3405-.3415"	5 33/64"

	Seat Angle	Lift	Stem Clearance
Intake	45°	.335"	.001-.0023"
Exhaust	45°	.345"	.002-.0033"

NOTE—Worn limit for valve stem-to-guide clearance .006" Intake, .005" Exhaust.

See Cadillac Special Shop Notes for valve removal and installation instructions.

Valve Guides:—Pressed in block with long stepped end down and reamed to correct size.

Valve Lifters:—Wilcox-Rich 'Zero-lash' type hydraulic lifters. Lifters are mushroom type operating in removable guide brackets.

See Miscellaneous Section for complete data.

Clearance—.001-.0025" (new), .005" (worn).

Valve Springs:—	Pressure	Length
Valve Closed	66 lbs	1.926"
Valve Open	145 lbs	1.581"

VALVE TIMING

Tappet Clearance:—None in service (hydraulic type lifter). *See Valve Servicing in Cadillac Shop Notes.*

Valve Timing:—See Camshaft Setting above.

Intake Valves—Open at TDC. Close at 42° ALDC.

Exhaust Valves—Open 52° BLDC. Close 10° ATDC.

To Check Timing—Intake valve for #1 cylinder opens with piston on top dead center when 'C.1/6' on crankshaft pulley lines up with pointer.

LUBRICATION

LUBRICATION:—Pressure system with gear type oil pump located in crankcase.

See Cadillac Special Shop Notes for oil pump data.

Normal Oil Pressure—25 lbs. at 30 M.P.H.

Oil Pressure Regulator—Located on oil pump. Operates at 30 lbs. Not adjustable.

Crankcase Capacity—7 qts. (refill).

COOLING

Capacity—24 qts. (60S), 25 qts. (others).

Pressure Valve—In radiator filler cap. Opens at 3½-4½ lbs.

Water Pump: Centrifugal type with self-adjusting packing. Belt driven in tandem with generator.

See Water Pump Section for complete data.

Thermostat:—Mounted in radiator top tank, linked to radiator shutters by rod on forward side.

Setting—(Std. Type) Starts to open 148-153°F., fully open at 170°F. (High Reading Type—use with heaters). Starts to open 163-168°F. Fully open 185°F.

Shutter Adjustment—Adjust clevis on threaded end of rod to secure 1/16" tension on thermostat with shutters closed.

CLUTCH

CLUTCH:—Long Model 11CF-CI. Semi-centrifugal, single plate, dry disc type.

See Clutch Section for complete data.

Facings—Woven joined type, 2 required. Inside Diam. 6½". Outside Diam. 11". Thickness .125".

Adjustment:—Free movement of pedal should be ⅞-1⅛". To adjust, turn nut on forward end of connector link in front of clutch fork.

Removal:—Remove transmission (see Transmission Section below), drop clutch housing pan, punch mark clutch cover, pressure plate, and flywheel to insure correct installation, take out mounting bolts in cover flange, remove clutch from below.

See Cadillac Shop Notes for clutch locking pin removal (on replacement clutches) and clutch balancing data.

TRANSMISSION

TRANSMISSION:—Own make. Constant-mesh helical gear (second), synchro-mesh (second and high), sliding helical gear (low and reverse).

See Transmission Section for complete data.

Transmission Control—Own make. Remote control, type (shift lever mounted on steering column).

See Transmission Section for complete data.

Removal:—Disconnect shifter rods at levers on left hand side of case, disconnect drive shaft at front universal joint, support engine with jack under oil pan (use wooden block to avoid damage to pan), free transmission extension at rear support crossmember, disconnect engine support stabilizer on right hand side (take out pin at forward end), disconnect exhaust pipe brace, disconnect speedometer cable. Take out transmission mounting capscrews, pull transmission straight back (plug clutch connection shaft bearing drain hole as soon as it is accessible to prevent lubricant loss).

UNIVERSALS

UNIVERSAL JOINTS:—Mechanics Model 3-C. Needle bearing type, 2 used.

See Universals Section for complete data.

REAR AXLE

REAR AXLE:—Own Make. Hypoid gear, semi-floating type with Hotchkiss drive.

See Rear Axle Section for complete data.

NOTE—Manufacturer recommend Differential Carrier Assembly be returned to factory for servicing.

Ratio—3.92-1 (60, 60S), 4.58-1 (65, 75).

Backlash—.004-.008". Screw adjustment.

Removal:—Disconnect drive shaft at rear universal, remove axle shafts (see below), remove capscrews on carrier flange, pull carrier assembly out.

Axle Shaft Removal—Jack up car, remove rear wheels, pull wheel hub and brake drum assembly, disconnect brake line and remove backing plates. Use tool J-838, pull shaft and bearing assembly out.

Wheel Bearing Adjustment:—None (sealed type).

SHOCK ABSORBERS

SHOCK ABSORBERS:—Delco. Front—1946-E,F(60,60S), 1951-C, D (65, 75). Rear—1751-E, F (60), G, H (60S), 2052-A, D (65, 75). Double acting type.

See Shock Absorber Section for complete data.

FRONT SUSPENSION

Front Suspension:—Independent linked parallelogram type with coil springs.

See Front Suspension Section for complete data.

Kingpin Inclination—4°51' (60, 60S), 5°38' (65, 75)

Caster—(60, 60S) Neg. ¼° to Neg. 1¼°, (65, 75) Neg. ¼° to Pos. ¼° at curb weight (gasoline tank full).

Camber—Neg. ¼° to Pos. ½° (all). Adjustable.

Toe In—1/32-3/32" (at rest), 0-1/16" (in motion).

Steering Geometry—Inner wheel turned 23½° (60, 75), 23¾° (60S, 65). Outer wheel 20° (all).

STEERING GEAR

Steering Gear: Saginaw Worm-and-Roller type.

See Steering Gear Section for complete data.

BRAKES

BRAKES:—Service—Bendix hydraulic, Duo-servo, Single Anchor type. Hand lever applies rear brakes.

See Brake Section for complete data.

Braking Power—54½% Front (60, 60S, 65), 58% Front (75), 45½% Rear (60, 60S, 65), 42% Rear (75).

Brake Drums—Diameter 11.995-12.005" (60, 60S, 65), 13.995-14.005" (75). Centrifuse type.

Lining—Moulded type. Width 2¼" (Front—all models, Rear—75 only), 2" (Rear—60, 60S), 2½" (Rear—65). Thickness 3/16" (60, 60S, 65), ¼" (75). Length per shoe 12 15/16" (60, 60S, 65), 12¼" (75—front primary shoe), 15" (75—all others).

Clearance—.010" for all models.

Hand Brake:—See Service Brakes above.

ENGINE HOOD & SIDE PANEL REMOVAL:—*See Cadillac Shop Notes for instructions.*

MODEL IDENTIFICATION

SERIAL & ENGINE NUMBER:—First number (60S) 6290001, (61) 8290001, (75) 3290001. Stamped on left side of crankcase at rear of left cylinder block and on left frame side member opposite steering gear.

TUNE-UP

COMPRESSION:—Rati 6.25-1 (Std. 60S, 61), 6.70-1 (Std. 75), 5.75-1 (Opti. all models). Pressure—155 lbs. (60S, 61), 170 lbs. (75) at 1000 R.P.M. or approximately 105-110 lbs. (60S, 61), 110-115 lbs. (75) at cranking speed.

VACUUM READING: Steady 20-21" idling at 7-8 MPH.

FIRING ORDER: 1-8-7-3-6-5-4-2. See diagram.

SPARK PLUGS: AC No. 104. 10 mm. Metric type.

Gaps—.025-.030".

NOTE—1939 spark plugs are new small type and must not be tightened excessively (7-10 ft. lbs.).

IGNITION: See Coil, Condenser, and Distributor.

Breaker Gap—.015" (.0125-.0175").

Cam Angle—31° (closed).

Automatic Advance—12° max. at 2000 RPM (distr.).

IGNITION TIMING: See Ignition Timing.

Std. Setting—5° BTDC. with crankshaft pulley mark "IG/A" at indicator on front of engine.

CARBURETION: See Carburetor & Carb. Equipment.

Idle Setting—Both idle screws midway between "miss" and "roll" points. Idle speed 7-8 MPH.

Float Level—Fuel level 5/8" below top of bowl.

Accelerating Pump—Inner hole (min. stroke) normal.

Fuel Pump Pressure: 4½ lbs. maximum.

VALVES: See Valve Timing.

Tappet Clearance—None in service (automatic hydraulic type take-up used).

STARTING: See Battery, Starter, Generator, Regulator.

IGNITION

Ignition Switch:—Delco-Remy Model 1865711 (61), 1116255 (60S, 75). Connected to coil by armored cable.

Ignition Lock—Briggs & Stratton No. 45792. Key Series—8000 to 9499. Groove—No. 15.

COIL: Delco-Remy Model 1115128. Mounted on dash.

Ignition Current—2.2 amperes idling, 4.4 stopped.

CONDENSER: Delco-Remy Part No. 1869704.

Capacity—.20-.25 microfarad.

DISTRIBUTOR: Delco-Remy Model 1110604. Single breaker, 8 lobe cam, full automatic advance type with manual adjustment at distributor.

Breaker Gap—.0125-.0175".

Cam Angle or Dwell—31° closed, 14° open (distr.).

Breaker Arm Spring Tension—22 ounces.

Rotati n—Clockwise viewed from the top.

Automatic Advance

Distributor Degrees	Distributor R.P.M.	Engine Degrees	Engine R.P.M.
Start	500	1	1000
3	820	6	1640
6	1200	12	2400
9	1600	18	3200
12	2000	24	4000

Manual Adjustment—Permits 10° advance or retard from center position. See Ignition Timing for adjustment.

Removal:—Distributor mounted between cylinder banks at rear of engine. To remove, take out two capscrews in mounting bracket. NOTE—When installing distributor, turn crankshaft to firing position for #1 piston, mesh distributor drive gear so slot in upper end of shaft is offset toward rear or left hand side of engine.

IGNITION TIMING

IGNITION TIMING:—As given below for fuel of 70 Octane rating (60S, 61), Ethylized or high-octane fuel (75). See Manual Adjustment (following) for correction dependent on fuel regularly used.

Flywheel Degrees	Piston Position
5° BTDC	.0114" BTDC

Timing (With Synchroscope)—This method recommended by manufacturer. Clip synchroscope lead to #1 spark plug, direct light on crankshaft pulley, idle engine. Loosen hold-down screw in advance arm, rotate distributor until 'IG/A' mark on pulley (5° before dead center Mark 'C.1/6') appears in line with pointer on chain case cover, tighten hold-down screw. Adjust for fuel (see Manual Adjustment).

Timing (Without Synchroscope)—Turn engine ver to firing position for #1 piston (front piston, left bank) with crankshaft pulley mark 'IG/A' (5° be-

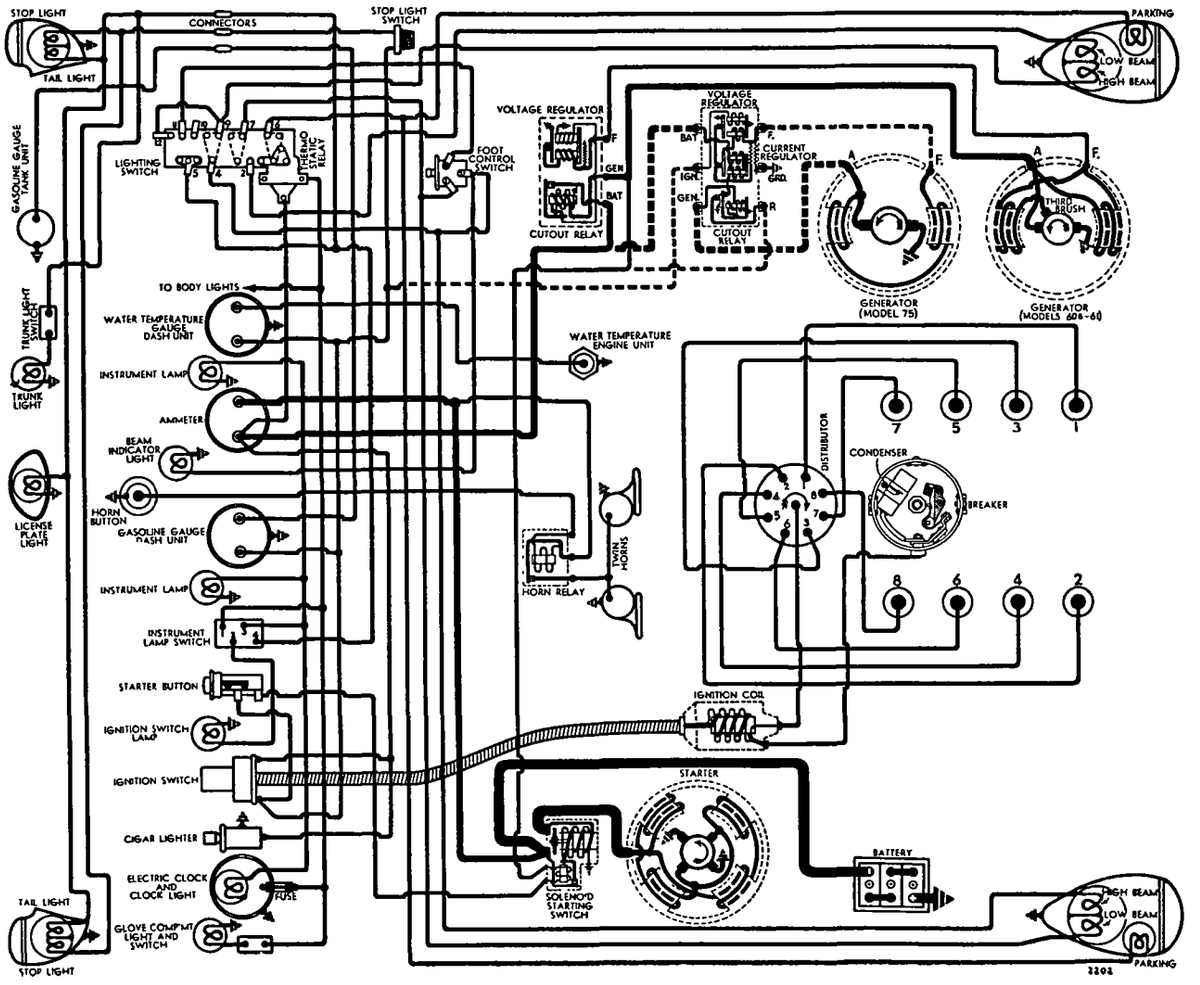

f re dead center mark 'C.1/6') lined up with pointer on chain case cover. Loosen hold-down screw in advance arm, center pointer on scale, tighten screw. Loosen advance arm clamp bolt, rotate distributor until contacts begin to open, tighten clamp bolt, check Manual Adjustment.

Manual Adjustment—Should be set for slight ping when accelerating engine with wide open throttle at speeds below 15 M.P.H. To adjust, loosen hold-down screw in advance arm, rotate distributor clockwise (if ping too severe), counter-clockwise (if no ping noted) one graduation at a time until correct performance secured.

NOTE—Check engine for faulty spark plugs, excessive carbon deposits, localized hot spots, lean carburetor setting before changing adjustment to correct pinging.

CARBURETOR

CARBURETION:—Carburetor—Stromberg Model AAV-26, 1¼" dual, downdraft type.
For complete data, refer to Carburetor Index.

Idle Adjustment—With engine warm so that Automatic Choke and Fast Idle inoperative, set throttle stopscrew for 7-8 MPH. idling speed. Turn each idle adjusting screw (one for each barrel) in until engine begins to miss, then turn screws out until engine begins to roll, finally turn screws in slowly until engine fires smoothly. Reset stopscrew for correct 7-8 MPH. idling speed.

Accelerating Pump Setting—Throttle lever has two holes for pump link engagement. Connect as follows:
Inner Hole (Min. Stroke)—Normal setting.
Outer Hole (Max. Stroke)—When greater charge required.

Fast Idle:—Integral type built-in carburetor.
For complete data, refer to Carburetion Equip. Index.
Setting—Turn fast idle adjusting screw in until it contacts lowest step of fast idle cam, then back screw off ½ turn.

Automatic Choke:—Integral type built-in carburetor.
For complete data, refer to Carburetion Equip. Index.
Setting—Inverted 'V' mark on cover scale should line up with reference mark on housing.

CARB. EQUIPMENT

Air Cleaner:—AC #1528980 oil-bath type used in conjunction with #864384 crankcase ventilator cleaner.

Fuel Pump:—AC Type AB #1523866. Diaphragm type, combination fuel-and-vacuum pump.
For complete data, refer to Carburetion Equip. Index.

Gasoline Gauge:—AC Electric type. #1515361 (dash unit), #1515485 (60S, 61), #1515486 (75) tank unit.
For complete data, refer to Carburetion Equip. Index.

BATTERY

BATTERY:—Delco Model 17K-1. 6 volt, 17 plate, 112 A.H. Capacity (20 hour rate).

Starting Capacity—135 amperes for 20 minutes.

Zero Capacity—300 amperes for 4.3 minutes. Five second voltage 4.38 volts.

Grounded Terminal—Positive (+) grounded to frame (engine grounded to same point n right side of frame by strap—second ground at left front corner of engine on some models).

Dimensions—Length 10⅜". Width 7". Height 8⅝".

Location—Under right front fender (accessible from engine compartment).

Commercial Battery—Delco Model 19-Q. 6 volt, 19 plate, 122 A.H. Capacity (20 hour rate).

Starting Capacity—140 amperes for 20 minutes.

Zero Capacity—300 amperes for 4.8 minutes. Five second voltage 4.5 volts.

Dimensions—Same as 17K-1 except Height 8 9/16".

Grounded Terminal, Location—See 17K-1 above.

STARTER

Delco-Remy Model 1107912 Std., 1107913 60S RHD.

Armature—No. 820158 (all models).

Drive—Solenoid pinion shift (overrunning clutch).

Rotation—Counter-clockwise at commutator end.

Brush Spring Tension—24-28 ounces.

Performance Data

Torque	R.P.M.	Volts	Amperes
0 ft. lbs.	5500	5.0	65
16 ft. lbs.	Lock	3.0	600

Removal:—Flange mounted on right front face of flywheel housing. To remove, take out flange mounting screws, pull starter forward and remove from below.

Starting Switch:—Solenoid Switch Type 1542 (all). Mounted on starter, controlled through relay (in switch) by Control Switch Type 1996003 on instrument panel.
For complete data, refer to Electrical Equipment Index.

Solenoid Switch Specifications

Closes against 70 lb. pull with ½" air gap drawing 65-71 amperes at 5 volts. Holds switch closed with current draw of 12-14 amperes (hold-in coil only).

Solenoid Relay Specifications

Contacts Close—1.9 volts max. **Open**—1.0-1.2 volts.
Contact Gap—.035". **Air Gap**—.010" (closed).

GENERATOR

SERIES 60S, 61,

Delco-Remy Model No. 1101056. Armature Number 1866789. Split-field type with fixed third brush and vibrating type voltage regulator control.
For complete data, refer to Electrical Equipment Index.

Charging Rate Adjustment—See regulator setting below. Do not attempt to change third brush position.

Maximum Charging Rate—29 amperes, 8.0 volts, 4000 R.P.M., 50 M.P.H. with discharged battery. Actual charging rate determined by regulator and dependent on battery condition. To check charging rate, connect ammeter in charging line at regulator 'BAT' terminal, voltmeter between 'GEN' terminal and ground, ground regulator 'F" terminal to eliminate regulator action. NOTE—Do not operate generator on open-circuit.

Performance Data

	Amperes	Volts	R.P.M.
C ld	27-31	8.0	4000
Hot	25-28	8.0	4200

Rotation—Counter-clockwise at commutator end.

Brush Spring Tension—25 ozs. (main), 17 ozs. (3rd).

Field Current—1.44-1.56 amperes at 6.0 volts (shunt field), .89-.94 amperes at 6 volts (third brush field).

Removal:—Flange mounted between cylinder banks at front of engine, belt driven in tandem with water pump (separate belt for fan). To remove, take out flange mounting bolts.

IMPORTANT AIR SCOOP NOTE—When installing air scoop on generator, make certain that raised portion provides clearance at terminals and that scoop does not cover drive end oil cup.

Belt Adjustment:—Loosen generator mounting bolts, lift generator up until only slight slack evident in belt (new type belt engages bottom of pulley groove not sides), tighten bolts. Generator pivots on left hand bolt, right bolt hole slotted. NOTE—Fan belt adjustment provided at fan bracket.

GENERATOR

SERIES 75

Delco-Remy Model 1102654. Armature No. 1873866. Two brush, shunt, peak-load type with vibrating voltage and current regulator control.
Refer to 1938-39 Cadillac V16 article for all data on this two-brush generator.

Removal & Belt Adjustment—Same as for Models 60S and 61 given above.

REGULATOR

SERIES 60S, 61

Delco-Remy Model 5860. 2-unit Double Core Type Voltage Regulator (No 'IGN' Terminal). Cutout Relay and vibrating type Voltage Regulator.
For complete data, refer to Electrical Equipment Index.

Cutout Relay

Cuts In—6.3-6.9 volts (relay compensated for temperature—closing voltage same Cold and Hot).

Cuts Out—0-4.0 ampere discharge current.

Contact Gap—.020". **Air Gap**—.020" (closed).

Voltage Regulator

Setting—7.5-7.9 volts at 70°F., 7.4-7.6 volts at 150°F. Regulator over-compensated for temperature and must be checked at these points.

Adjustment—Connect ammeter in charging line at regulator 'BAT' terminal, voltmeter between 'BAT" terminal and ground. Operate generator at 2800-3000 R.P.M., adjust charging rate to 8-10 amperes (use variable rheostat or 'AVR' set), adjust regulator by bending spring hanger at lower end of armature spring slightly to secure setting shown above.

CAUTION—Regulator cover must be in place when testing. Do not operate generator on open-circuit.

Contact Gap—.020". **Contact Spring Tension 3.5 ozs.**

Air Gap—.063" between armature and center f core with armature down, .010" between fibre bumper and stop with armature up.

REGULATOR

SERIES 75

Delco-Remy Model 5867 (for Series 39-75). Vibrating Voltage & Current Regulator.
Refer to 1938-39 Cadillac V16 article for all data on this Current-Voltage Regulator.

C NTINUED ON NEXT PAGE

C NTINUED FR M PRECEDIN PAGE

LIGHTING

LIGHTING:—Headlamps—Guide Multi-beam, pre-focused type (lenses not interchangeable, marked 'Right' and 'left'). Asymetrical passing beam (upper beam left lamp, lower beam right lamp) controlled by beam selector switch with lighting switch in Country Driving position. NOTE—With lighting switch in City (second) position, beam selector switch controls upper and lower driving beams.

Headlamp Adjustment—Adjust only with lenses in place. Aim left hand lamp so that top edge of high intensity spot is at horizontal line at lamp center height and entire high intensity spot to right of lamp vertical center-line. Aim right hand lamp for same height and center high intensity spot on lamp vertical center-line. Adjusting screw for vertical movement at bottom of lamp, screw for horizontal movement at engine side of lamp body under snap-in plug.

Headlamp Indicator (1939)—Above center of speedometer dial. Lighted whenever Driving (upper beam) in use.

Switches

Lighting—D-R. No. 1994506, 480-R Export.
Beam Selector—D-R. No. 1997002, 471-T.

Bulb Specifications

Position	Candlepower	Mazda No.
Headlamps	32-21	2320
Parking, Instr., Clock	1½	55
Glove & Trunk Comp.	1½	55
Indicator, Ign. Lock, Radio	1	51
Stop & Tail	21-3	1154
License, Fender	3	63
Dome, Quarter	15	87

MISC. ELECTRICAL

THERMOSTATIC RELAY:—No. 1865577. On lighting switch. Contacts remain closed with 25 amperes but open in 2 minutes with 38 amperes at 70°F. Not adjustable.

HORNS:—Klaxon Model K-33-H. No. 1999501 (low note), Type 1999502 (high note). New 'Seashell', vibrator type, blended tone, twin horns operated by relay.

Type	Current (at 6 volts)	Air Gap
1999501 (low note)	10-12 amperes	.042-.046"
1999502 (high note)	9-11 amperes	.032-.036"

Horn Relay:—D-R Models 271-A, 1116775.
Contact Gap—.020". **Air Gap** .015" (closed).
Contacts Close—2.3-3.5 volts.

ENGINE

ENGINE SPECIFICATIONS:—Own. 8 cylinder, 90° Vee, 'L' head type. Upper crankcase and cylinder blocks cast Enbloc. **Bore**—3½". **Stroke**—4½"

Displacement—346 cu. ins. **Rated HP.**—39.20.

Developed Horsepower—135 (60S, 61), 140 (75) at 3400 R.P.M.

Compression Ratio—6.25-1 (Std. 60S, 61; Optl. 75), 6.70-1 (Std. 75; Optl. 60S, 61), 5.75-1 (Optl. all). *See Cadillac Shop Notes for Cylinder Head Installation, Identification (on 75), and Lowering Compression Ratio.*

Compression Pressure—155 lbs. (60S, 61), 170 lbs. (75) at 1000 R.P.M. or approximately 105-110 lbs. (60S, 61), 110-115 lbs. (75) at cranking speed.

Vacuum Reading—Steady 20-21" idling at 7-8 MPH.

PISTONS:—Lynite or Bohn Lo-Ex aluminum alloy, 'T' slot, Cam Ground type with Anodized finish (special hard oxide bearing surface). **Length**—4⅛". **Weight**—18.30 ozs. (stripped. 25.13 ozs. (complete). **Removal**—Pistons and rods removed from above. **Clearance**—Skirt .0020-.0025". See Fitting Pistons.

Replacement Pistons:—*See Cadillac Shop Notes.*

Fitting New Pistons:—Check piston diameter with micrometer gauge at right angles to pin hole just below lower ring groove and also ½" above lower edge. If feeler gauges (⅜-½" wide, 7-10" long) used, insert feeler next to T-slot. Piston should fall through bore of own weight on .002" feeler, and hold on .0025" feeler. NOTE Cylinder bore out-of-round .0005" max., taper .0003".

Installing Pistons:—Slot to left, for all pistons.

PISTON RINGS:—Two compression, two oil control rings per piston, all above pin.

Ring	Width	End Gap	Side Clearance
Comp. (Top)	3/32"	.007-.012"	.0023-.0041"
Comp. (#2)	⅛"	.007-.012"	.0013-.0026"
Oil Control	5/32"	.007-.015"	.0013-.0026"

Replacement Rings: .003",.005",.010",.015",.030" oversize.

PISTON PIN:—Diameter—⅞. **Length**—3 1/16". Pin floats in piston and rod. Held by locking rings. *See Cadillac Shop Notes for special pin removal and installation instructions.*

Pin Fit in Piston—.0004" press fit (ribbed end), .0000" clearance or free fit at 70° F. (plain end).

Pin Fit in Rod Bushing—.0002-.0008" clearance (new), .0018" (worn limit).

CONNECTING ROD:—Weight 37.472 ozs. **Length** 8¾".

Crankpin Journal Diameter—2.4590-2.4595".

Lower Bearing—Steel-backed, babbitt-lined type.

Clearance—.0015-.0025" (new). .0045" Max. (worn).

Sideplay—.008-.014".

Bearing Adjustment:—None (no shims). Replace bearings. Do not file rod or caps. *See Cadillac Shop Notes for connecting rod and bearing installation data.*

Installing Rods:—Numbers on rods and bearing caps on same side and installed in same numbered cylinders with marks down toward oil pan.

CRANKSHAFT:—3 bearing. 6 counterweights. *See Cadillac Shop Notes for main bearing servicing and rear main bearing oil seal renewal.*

Journal Diameters—2½" all bearings.

Bearings—Steel or bronze backed, babbitt-lined.

Clearance—.0015-.0025" (new), .005" (worn).

Bearing Adjustment:—None (no shims). Replace bearings. Do not file bearing caps. Upper halves can be rotated out without removing crankshaft.

End Thrust:—Taken by center (#2) bearing.

Endplay—.001-.005" (new), .010" Max. (worn).

CAMSHAFT:—3 bearing, non-adjustable chain drive. *See Cadillac Shop Notes for camshaft bushing data.*

Journal Diameters—#1 and #2, 2.4071-2.4078"; #3, 2.0009-2.0016".

Bearing Type—Steel-backed, babbitt-lined.

Clearance—.0015-.0033" (new), .0045" (worn).

End Thrust:—Taken by thrust plate behind camshaft sprocket. No endplay should be permitted.

Timing Chain:—Morse Type C #3682-R Side Guide type. Width 1¼". Pitch ⅜". Length 23¼" or 62 links.

NOTE—Install chain 'endless' as an assembly with sprockets. Use Tool J-836 to pilot camshaft sprocket.

Camshaft Setting:—Sprockets marked. Mesh chain with sprockets turned so that '0' marks are adjacent and in line with a straightedge across shaft centers.

VALVES:—

	Head Diameter	Stem Diameter	Length
Intake	1.876-1.886"	.3415-.3425"	5 33/64"
Exhaust	1.625-1.636"	.3405-.3415"	5 33/64"

	Seat Angle	Lift	Stem Clearance
Intake	45°	.335"	.0012-.0032"
Exhaust	45°	.345"	.0022-.0042"

NOTE—Worn limit for stem clearance .005" (all valves). Valve heads not slotted.
See Cadillac Shop Notes for valve servicing.

Valve Guides:—Press in block (long step end down).

Valve Lifters:—Wilcox-Rich 'Zero-lash' type hydraulic lifters (mushroom type) in removable brackets. *See Miscellaneous Section for complete data.*

Clearance—.0010-.0024" (new), .0035" (worn).

Valve Springs:—Free length 2.210".

	Spring Pressure	Length
Valve Closed	66 lbs.	1.926"
Valve Open	145 lbs.	1.581"

VALVE TIMING

Tappet Clearance:—None in service (hydraulic type lifter). *See Valve Servicing in Cadillac Shop Notes.*

Valve Timing:—See Camshaft Setting above.

Intake Valves—Open at TDC. Close 42° ALDC.

Exhaust Valves—Open 52° BLDC. Close 10° ATDC.

To Check Timing—#1 cylinder (front—left bank) intake valve should open with piston at TDC and mark 'C.1/6' on crankshaft pulley aligned with chain case cover pointer.

LUBRICATION

LUBRICATION:—Pressure (gear type oil pump in crankcase). *See Cadillac Shop Notes for oil pump data.*

Normal Oil Pressure:—15 lbs. idling, 25 lbs. at 30 MPH.

Oil Pressure Indicator:—Opens at 30 lbs. On oil pump. Non-adjustable. **Crankcase Capacity**—7 quarts.

COOLING

Capacity—24½ quarts.

Pressure Valve—In radiator cap. Opens 3½-4½ lbs. *See Cadillac Shop Notes for radiator core removal and fan pulley replacement instructions.*

Water Pump:—Self-adjusting packing type. *See Water Pump Section for complete data.*

Removal—Drain water, remove pump belt, pump hose and pump mounting screws. Lift pump out.

Thermostat:—Mounted in radiator top tank, linked to radiator shutters by rod on forward side.

Setting—(Std. Type) Starts to open 148-153° F., fully open at 170° F. (High Reading Type—use with Heaters) Starts to open 163-168°F. Fully open 185°F.

Shutter Adjustment—Adjust clevis on threaded end of rod to secure 1/16" tension (shutters closed).
Temperature Gauge:—AC. Electric. #1510773 (dash unit), #1510774 (engine unit).
See Miscellaneous Section for complete data.

CLUTCH

CLUTCH:—**Long Model 11CF-CI.** Semi-centrifugal, single plate, dry disc type. *Refer to Mech. Equip. Index. See Clutch Section for complete data.*
Facings—Woven joined type, 2 required. Inside Diam. 6½". Outside Diam. 11". Thickness .123-.127".
Adjustment:—Free movement of pedal should be ⅞-1⅛" (adjusting nut on connector link at fork).
Removal:—Remove transmission (see below), drop clutch housing pan, punch mark clutch cover, pressure plate, and flywheel (re-install to these marks), remove 6 cover screws (release tension evenly).
See Cadillac Shop Notes for clutch locking pin removal (on replacement clutches) and clutch balancing data.

TRANSMISSION

TRANSMISSION:—**Own Make.** Constant-mesh, synchro-mesh, helical gear (sliding gear low & reverse).
See Transmission Section for complete data.
Transmission Control:—Remote steering col. shift.
See Transmission Section for complete data.
Removal:—Support engine with jack under rear end of oil pan (use wooden block to avoid damage to pan), remove propeller shaft (disconnect front and rear universals), free transmission extension at engine rear support, remove crossmember with engine rear support, disconnect speedometer cable, remove shifter rods from levers at transmission, support transmission at rear, take out mounting screws, pull straight back (plug clutch connection shaft bearing drain hole as soon as accessible to prevent lubricant loss), lower front end of transmission and remove

UNIVERSALS

UNIVERSAL JOINTS:—**Mechanics Model 3C.** Needle bearing type.
See Universals Section for complete data.

REAR AXLE

REAR AXLE:—**Own Make.** Hypoid gear, semi-floating type with Hotchkiss drive.
See Rear Axle Section for complete data.
NOTE—Manufacturer recommends Differential Carrier assembly be returned to factory for servicing.
Ratio—3.92-1 (60S, 61). 4.58-1 (75).
Backlash—.004-.010". Screw adjustment.
Removal:—Disconnect drive shaft at rear universal, remove axle shafts (see below), remove capscrews on carrier flange, pull carrier assembly out.
Axle Shaft Removal—Remove rear wheels, take off axle shaft nut, pull wheel hub and brake drum, disconnect brake line and remove backing plate. Pull shaft and bearing assembly out (use Tool J-838).
Wheel Bearing Adjustment—None.
See Cadillac Shop Notes for Rear Stabilizer Adjustment for Models 60S, 75.

SHOCK ABSORBERS

Delco. Double Acting, hydraulic type. Models used on each car as follows:

	Front	Rear
60S ('39)	1946-E, F	1751-G, H
61 ('39)	1946-G, H	1751-V, W
75 ('39)	1951-C, D	2010-C, D

See Shock Absorber Section for complete data.

FRONT SUSPENSION

Front Suspension:—Independent linked parallelogram type with coil springs.
See Front Suspension Section for complete data.
Kingpin Inclination—5°44' (60S), 5°6' (61), 5°1' (75).
Caster—Pos. ¼° to Neg. 1¼° (60S), Neg. ¼° to Neg. 2¼° (61), 0° plus or minus ¼° (75).
Camber—Neg. ¼° to Pos. ½° (60S), Neg. ¼° to Pos. ¾° (61), 0° to Pos ½° (75). Equal within ½°.
Toe In—1/32-3/32" (at rest), 0-1/16" (in motion).
NOTE—On Model 61, adjusting sleeve at wheel end of each tie rod provided for toe in adjustment.
Steering Geometry—Inner wheel turned 22¼-23¾° (61), 22¾-24¼° (60S, 75). Outer wheel turned 20°.

STEERING GEAR

Steering Gear: Saginaw Worm-and-Double Roller type.
NOTE—New type steering linkage with idler arm attached to right frame sidemember on 61.
See Steering Gear Section for complete data.

BRAKES

BRAKES:—**Service.** Bendix hydraulic, duo-servo, single anchor type (no eccentric on 60S, 61). Hand lever applies rear wheel service brakes.
See Brake Section for complete data.
Drums—Centrifuse. Diameter—11.995-12.005" (60S, 61), 13.995-14.005" (75).
Lining—Moulded. Length per shoe—Front 11 17/32" (60S, 61), 13 21/32" (75); Rear 12 31/32" (60S, 61), 15 1/32" (75). Width 2" (except 75 front wheel), 2¼" (75 front). Thickness 3/16" (60S, 61), ¼" (75).
Clearance—.015" both ends of secondary shoe (60S, 61), .010" (75).
Braking Power—45½% rear (60S, 61), 43-44% (75).
Hand Brake:—See Service Brakes.

HOOD & SIDE PANEL REMOVAL:—*See Cadillac Special Shop Notes for complete instructions.*

MODEL IDENTIFICATION

SERIAL NUMBER: Same as Engine Number.

ENGINE NUMBER: First number 5270001 (1938), 5290001 (1939). Stamped on upper rear of left hand cylinder block below head.

TUNE-UP

COMPRESSION:—**Ratio**—6.75-1 Std., 6.08-1 Optl. Standard head requires use of Ethylized fuel.
Pressure—180 lbs. at 1000 R.P.M. for standard head or approximately 110-115 lbs. at cranking speed.

VACUUM READING: Steady 20-21" idling at 7-8 MPH.

FIRING ORDER: 1-4-9-12-3-16-11-8-15-14-7-6-13-2-5-10. See diagram for spark plug cable connections on distributor caps.

SPARK PLUGS: AC No. 45 (1938), No. 104 (1939), 14 mm. Metric (1938), 10 mm. Metric (1939).
Gaps—.032". Limits .030-.035".
NOTE—1939 spark plugs are new small type and must not be tightened excessively (7-10 ft. lbs.).

IGNITION: See Coil, Condenser, and Distributor.
Breaker Gap—.015". **Cam Angle**—31° (closed).
Synchronization—Movable contacts (in left hand distributor) open 22½° (distr.) after fixed set.
Automatic Advance—10° max. at 2000 RPM (distr.).

IGNITION TIMING: See Ignition Timing.
Std. Setting—6° BTDC with vibration dampener mark "IG/A" at indicator on front of engine.
NOTE—Contacts open alternately at regular 22½-22½° (distr.) intervals.

CARBURETION: See Carburetor & Carb. Equipment.
Idle Setting—Both idle screws ¼-1 turn open. Idle speed 7-8 MPH. NOTE—Both carburetors must be equalized—refer to Carburetor data (following).
Float Level—13/64" top of float gasket to gasket seat on cover with needle valve seated.
Accelerating Pump—Not adjustable.
Fuel Pump Pressure: 4½ lbs. maximum.

VALVES: See Valve Timing.
Tappet Clearance—None in service (automatic hydraulic type take-up used).

STARTING: See Battery, Starter, Generator, Regulator.

IGNITION

Ignition Switch:—Delco-Remy No. 1116256 (switch and cable). Connected to coil unit by armored cable.
Ignition Lock—Briggs & Stratton No. 45792. Key Series—8000 to 9499. Groove—No. 15.

COIL: Delco-Remy 553-E. Two coil unit mounted on bracket at radiator top. Coil Cover No. 1854013.
Current—2.2 amperes idling, 4.4 stopped (each).

CONDENSER: Delco-Remy No. 1869707 (two used—both in left hand distributor). **Capacity**—.18-.25 mfd.

DISTRIBUTOR: Delco-Remy No. 1110601 (Left), 1110602 (Right). Two distributors are used, left hand distributor contains entire breaker mechanism and times ignition for the engine in addition to distributing high tension current to spark plugs of left hand cylinder bank. Right hand distributor does not have breaker mechanism and distributes high tension current to spark plugs of right hand cylinder bank.

IMPORTANT—**Distributor Change.** First left hand distributors had 'flat' advance curve causing knock around 50 M.P.H. and should be replaced, whenever found on cars in service, by later type distributor marked 'X' or 'L' stamped on number plate.

Type—Double breaker, 8 lobe cam, full automatic advance with manual adjustment at distributor.
Firing Interval—Movable contacts open 22½° (distr). after fixed set. Must be synchronized (see Timing).
Breaker Gap—.0125-.0175".
Cam Angle or Dwell—31° closed, 14° open (distr.). Each set operates independently.
Breaker Arm Spring Tension—22 ounces.
Rotation—Clockwise viewed from the top (L.H. No. 1110601), Counter-clockwise (R.H. No. 1110602).

Automatic Advance

Distributor Degrees	R.P.M.	Engine Degrees	R.P.M.
Start	800	1½	1600
10	2000	20	4000

Manual Adjustment—Permits 10° advance or retard from center position. See Ignition Timing for adjustment.
Removal:—Distributor for each bank mounted at right and left hand side at front of engine. To remove, take out hold-down screw in advance arm, lift up to disengage coupling (does not disturb drive gear).
Distributor Installation Note—Drive slot not offset and distributors must be installed as follows: With crankshaft turned to #1 firing position (IG/A mark on dampener at front of engine lined up with pointer), install both distributors with rotors pointing forward and to left (L. H.—33° to left from straight ahead position, R. H.—60° to left).
Distributor Drive Shaft Installation—Distributor cannot be timed unless shafts correctly installed as follows: With crankshaft and timing gear marks lined up, install special Distributor Shaft Setting Gauge #J-1212 in distributor support dowel holes,

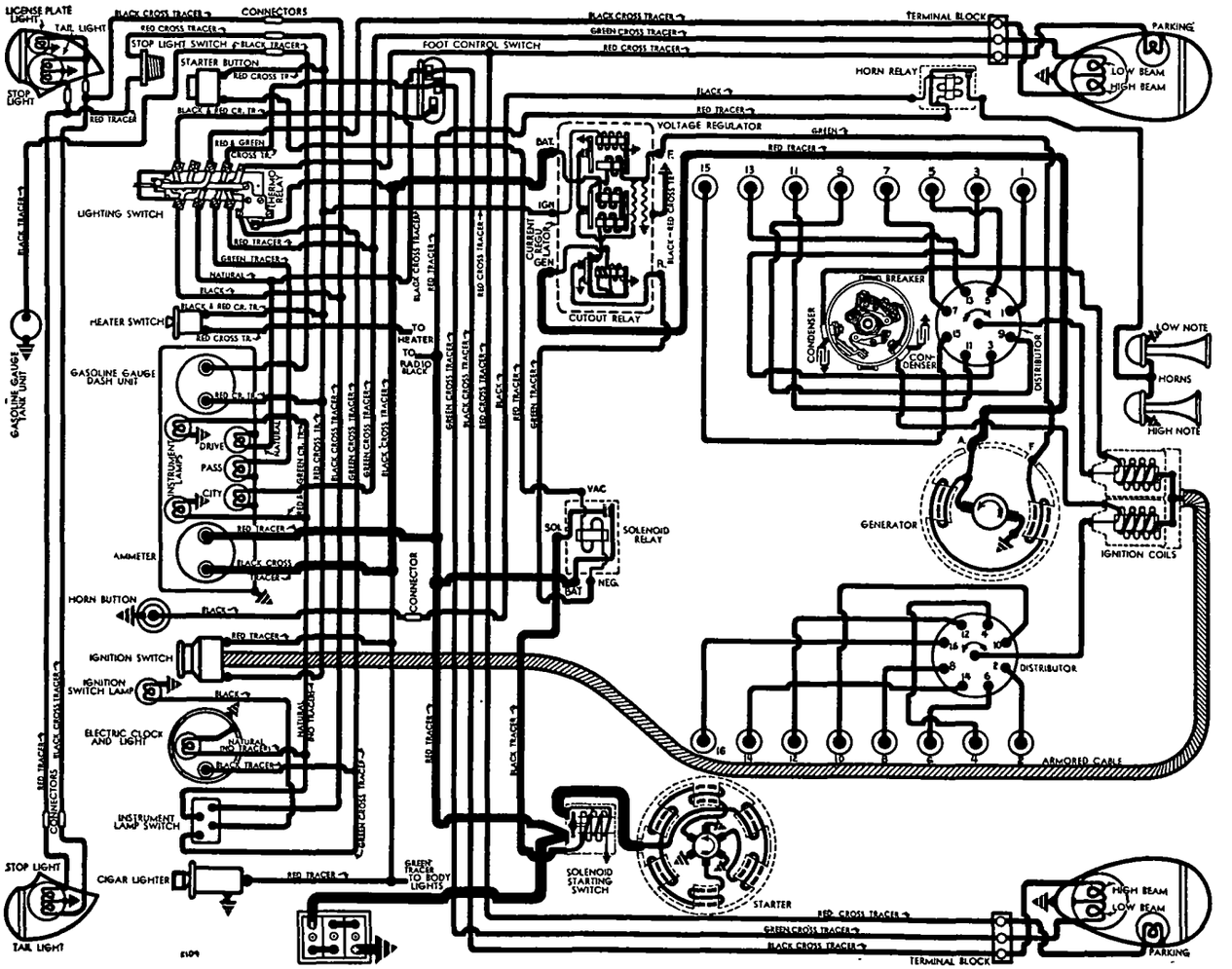

1938 V16 SERIES 38-90

note pointer positions. Remove gauge, install distributor drive shafts, check with gauge (slots must line up with pointer).

IGNITION TIMING

IGNITION TIMING:—Standard setting (for Ethylized fuel) given below. See Manual adjustment for correction dependent on fuel regularly used.

Flywheel Degrees	Piston Position
6° BTDC	.0112" BTDC

Timing (Stationary Contacts)—Loosen thumbscrew on pointer arm, center pointer on scale, tighten thumbscrew. With #1 piston on compression (front cylinder, left bank), turn engine over until mark 'IG/A' on vibration dampener (which is 6° before TDC mark 'C/1-15') lines up with pointer on chain case cover. Loosen advance arm clampscrew on left hand distributor, rotate distributor until stationary contacts (mounted directly on breaker plate) begin to open, tighten clampscrew. Then synchronize.

Synchronization (Timing Movable Contacts)—Manufacturer recommends distributor removal and synchronization on test fixture (set movable contacts to open 22½° (distr.) after fixed set. To synchronize on engine, turn engine over 45° or ⅛ revolution to firing position for #4 cylinder with 'IG/A' mark on dampener lined up with pointer. Remove distributor cap and rotor, loosen two lockscrews on movable sub-plate (on which movable contacts mounted), turn eccentric adjusting screw until contacts begin to open, tighten lockscrews. Check Manual Adjustment setting.

Manual Adjustment—Should be set for slight ping when accelerating engine with wide open throttle at speeds below 15 M.P.H. To adjust, loosen pointer thumbscrew, rotate distributor clockwise (if ping too severe), counter-clockwise (if no ping noted) one graduation on scale at a time until satisfactory performance secured. NOTE—Before changing manual adjustment, accelerate engine up to at least 60 MPH (critical point is 50 MPH.). If engine pings, check for fuel being used, faulty spark plugs, carbon deposits, lean carburetor setting which will cause pre-ignition.

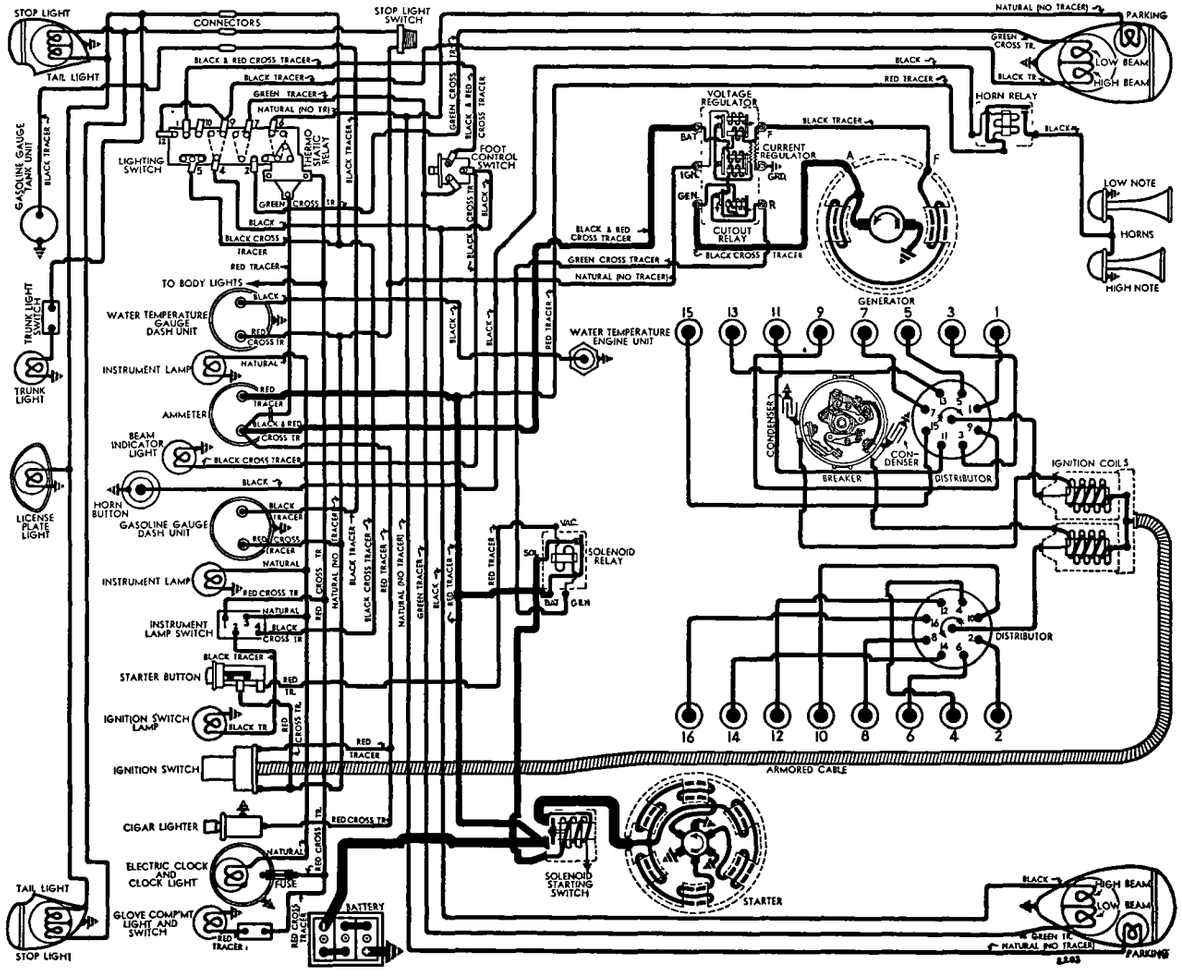

1939 V16 SERIES 39-90

CARBURETOR

CARBURETION:—**Carburetors**—Carter WDO Type 407-S (Left hand), 408-S (Right hand). 1⅛" dual, downdraft type. One carburetor used for each cylinder bank with interconnected throttle controls.

For complete data, refer to Carburetor Index.

NOTE—Carburetors must be synchronized or equalized at both idle and part throttle position.

Idle Adjustment—With engine warmed up so that Automatic Chokes and Fast Idles inoperative, adjust each carburetor as follows: Set throttle lever stopscrew for 7-8 MPH. idling speed. Turn each idle adjusting screw (one for each barrel, two per carburetor) in until engine begin to lag or miss, then turn screw out slowly until engine fires smoothly. Readjust throttle stopscrew for correct idling speed of 300 R.P.M. After adjusting both carburetors, equalize as follows:

Equalizing Carburetors—Use mercury column 'U' tube connected to ⅛" pipe plug openings in long leg of each intake manifold (do not connect gauge to vacuum balancing tube between carburetors). Disconnect throttle rods, idle engine, note mercury levels in tube. Adjust throttle stopscrew at each carburetor so that engine idles at 7-8 MPH. and mercury level is equal in each tube. Adjust right throttle rod length (trunnion with fine threads on rod near carburetor) so that rod can be connected without disturbing throttles or unbalancing mercury levels. Open throttle to 1000 RPM. engine speed (use foot throttle, not hand throttle), make any necessary re-adjustment to secure equal mercury column levels. If adjustment made recheck idle setting (idle speed equalization more important and should be favored).

Accelerating Pump Setting—Not adjustable.

Fast Idle:—Integral type. Built-in each carburetor.

For complete data, refer to Carburetion Equip. Index.

Setting—Adjust fast idle screw for .026" throttle opening with choke valve fully closed.

Automatic Choke:—Integral. Built-in each carburetor.

For complete data, refer to Carburetion Equip. Index.

Setting—Center index mark on notch on thermostatic coil housing to line up with mark on piston plate housing with carburetor cold (70°F).

CARB. EQUIPMENT

Air Cleaner:—AC #1528718 heavy duty oil-bath type. (one cleaner used for each carburetor). NOTE—Crankcase ventilator air cleaner is AC #1528732.

Fuel Pump:—AC Type AU (2 used). #1523695 (R.H.), #1523696 (L.H.). Diaphragm type. One pump used for each carburetor. NOTE—Fuel lines inter-connected, one pump only may operate at idling speed.

For complete data, refer to Carburetion Equip. Index.

Vacuum Pump: AC Type K, No. 1523394 (1938), 1523906 (1939). Separate unit mounted between cylinder banks at rear of engine.

For complete data, refer to Carburetion Equip. Index.

Gasoline Gauge: AC Electric type. Dash unit—No. 1515346 (1938), 1515361 (1939). Tank Unit—No. 1515461 (1938), 1515486 (1939).

For complete data, refer to Carburetion Equip. Index.

C NTINUED N NEXT PA E

C NTINUED FR M PRECEDING PAGE

BATTERY

BATTERY:—Delco Model 21-D (Replacement—21-C). 6 volt, 21 plate, 164 A.H. Capacity (20 hour rate).
Starting Capacity—195 amperes for 20 minutes
Zero Capacity—300 amperes for 7.1 minutes. Five second voltage—4.7 volts.
Grounded Terminal—Positive (+) grounded to frame (engine grounded to same point by strap from starter support bolt—second ground at left front of engine on some models).
Dimensions—L'gth. 13 9/16". Width 7". Hgt. 9 5/32".
Location—Under right hand front seat.

STARTER

Delco-Remy Model 714. Armature No. 1868165.
Drive—Solenoid shift and overrunning clutch.
Rotation—Counter-clockwise at commutator end.
Brush Spring Tension—36-40 ounces each.

Performance Data

Torque	R.P.M.	Volts	Amperes
0 ft. lbs.	3000	5.0	70
19 ft. lbs.	Lock	3.0	500

Removal:—Flange mounted on right front face of flywheel housing. To remove, take off cover in right side pan, take out flange mounting screws, remove starter and switch assembly from below.
Starting Switch:—Solenoid No. 1555 (on starter). Solenoid Relay No. 268-M (mounted separately on dash). Solenoid switch controlled through relay by instrument switch D-R #1996001 ('38), 1996003 ('39).
For complete data, refer to Electrical Equipment Index.

GENERATOR

Delco-Remy Model 1102651 (1938), 1102655 (1939).
NOTE (Model 75 Generator)—All data below except Mounting and Belt Adjustment applies also to Model 1102652 and 1102654 generators used on Models 38-75 and 39-75.
Armature—1868601 (1102651 Gen.), 1874318 (1102655 Gen.), 1857866 (for 1102652), 1873866 (for 1102654).
Type—Two-brush, shunt, peak-load type with external vibrating Voltage and Current regulation. Ventilated by scoop and fan on drive pulley.
Charging Rate Adjustment—No adjustment at generator. See Voltage and Current Regulator data.
Maximum Charging Rate—30 amperes, 8.0 volts, 1700 R.P.M., 17 M.P.H. and above with discharged battery (Current Regulator setting). Actual charging rate determined by Voltage Regulator and dependent on battery condition.

Performance Data (Cold)

Amperes	Volts	R.P.M.
25 ①	8.0	1650

①—Not maximum output. See Current Regulator.
Rotation—Counter-clockwise at commutator end.
Brush Spring Tension—25 ounces each.
Field Current—2.0-2.2 amperes at 6.0 volts.
Removal (1938): Generator flange mounted on rear of fan pulley bracket between cylinder banks and driven by friction wheel bearing on inner rim of drum on rear of fan pulley. To remove, take out two flange mounting screws.
Drive Adjustment—Check fan belts and adjust first. Loosen generator mounting screws, back off adjusting screw locknut, turn adjusting screw in until pull required to rotate generator is 9-12 lbs. as measured by spring scale hooked to outer rim of generator cooling fan tangent to rim. Adjust cold and check at several points on driving ring.
Removal (1939): Generator mounted on slide on fan bracket between cylinder banks at front of engine and driven by short belt from fan pulley. To remove, take out mounting bolt in slot on slide mounting.
Belt Adjustment—Loosen mounting bolt on slide mounting under generator, lift generator up to remove slack from belt, tighten mounting bolt.

REGULATOR

Delco-Remy Model 5818 (1938), 5867 (1939). Double Core Type Voltage & Current Regulator (with "IGN" Terminal). Consists of Cutout Relay, and vibrating type voltage and current regulators. Cutout Relay has special "ground" contacts for starter control.
For complete data, refer to Electrical Equipment Index.
V8 Series 75 Note—All data below applies to these same model regulators used on the 75 Series Cars.

Cutout Relay

Cuts In—6.7-7.6 volts (5818), 6.9-7.6 volts (5867).
Cuts Out—0-4.0 amperes discharge current.
Contact Gap—.020". **Air Gap**—.020" (closed).

Voltage Regulator

Setting—7.5-7.9 volts at 70°F., 7.4-7.6 volts at 150°F. Regulator over-compensated for temperature and must be checked at these temperatures.
To Check (without breaking seals)—Disconnect lead on regulator 'IGN' terminal, connect jumper between this terminal and 'BAT' terminal, connect test ammeter in charging line at 'BAT' terminal, voltmeter between 'IGN' terminal and ground. Operate generator at 2900-3400 RPM., adjust charging current to 8-10 amperes (use variable rheostat or AVR set), check voltmeter reading (see Setting).
To Adjust (with cover removed)—Change regulator armature spring tension by bending hanger at lower end of spring slightly. Repeat check. NOTE—Cover must be in place when testing. Do not operate generator on open-circuit.
Contact Gap—.020". **Contact Spring Tension** 3.5 ozs.
Air Gap—.063" between armature and core (armature down so fibre bumper just touches stop), .010" between fibre bumper and stop (armature up).

Current Regulator

Setting—24-26 amperes (5818), 28-30 (5867).
To Check (Without breaking seals)—Disconnect lead on regulator 'IGN' terminal (to eliminate voltage regulator action), connect ammeter in charging line at 'BAT' terminal, operate generator, note reading.
To Adjust—Same as Voltage Regulator (above).
NOTE—Do not allow generator voltage to exceed 8.5 volts with voltage regulator disconnected. Repolarize generator whenever disconnected by connecting jumper between 'GEN' and 'BAT' terminals momentarily (after all leads connected but before operating).
Specifications—Contact Gap, Spring Tension, Fibre Bumper Clearance same as for Voltage Regulator. Armature air gap should be .075".

LIGHTING

LIGHTING:—Headlamp Beam System & Adjustment—Same as for corresponding V8 models. See 1938 or '39 V8 articles for data (including Beam Indicators).

Switches—1938

Lighting—D-R. No. 1994502, 1995005 Exp.
Foot Selector—D-R. No. 471-T, 471-U Exp.
Dash Lamp—D-R Model 1406.

Switches—1939

Lighting—D-R. No. 1994506, 480-R Export.
Beam Selector—D-R. No. 1997002, 471-U RHD.

Bulb Specifications

Position	Candlepower	Mazda No.
Headlamps	32-32	2330
Parking, Instr., Clock	1½	55
Glove & Trunk Compt.	1½	55
Indicator, Ign. Lock, Radio	1	51
License, Fender	3	63
Stop & Tail	21-3	1154
Dome, Quarter	15	87

MISC. ELECTRICAL

THERMOSTATIC RELAY:—No. 1865577. On lighting switch. Contacts remain closed with 25 amperes but open in 2 minutes with 38 amps. at 70°. No adjustm't.
HORNS:—Klaxon. D-R. Model K-33D Type 1967 (low note—left hand), 1968 (high note—right hand). Vibrator type, twin horns (behind grille) operated by relay (mounted on left front fender dust shield).

Horn Type	Current (at 6 volts)	Air Gap
1967 Low Note	12-14 amperes	.045-.050"
1968 High Note	11-13 amperes	.036-.040"

Horn Relay:—D-R. Models 271A, 1116775.
Contact Gap—.020". **Air Gap**—.015" (closed).
Closing Voltage—2.3-3.5 volts.

ENGINE

ENGINE SPECIFICATIONS:—16 cylinder, 135° Vee, 'L' head. Cylinder banks and crankcase cast integral.
NOTE—Install shorter cylinder head capscrews along lower edge of head. Coat all screws with white lead to prevent leaks.
Bore—3¼". **Stroke**—3¼". **Displacement** 431 cu. ins.
Rated Horsepower—67.6.
Developed Horsepower—185 at 3600 R.P.M.
Compression Ratio—6.75-1 Std. 6.08-1 Optl.
Compression Pressure—180 lbs. at 1000 R.P.M. or approximately 110-115 lbs. at cranking speed.
Vacuum Reading—Steady 20-21" idling at 7-8 MPH.
PISTONS:—Lynite & Bohn, Lo-Ex aluminum alloy, 'T' slot, Cam Ground type with Anodized finish (special hard oxide bearing surface). **Length**—3¾".
Weight—15.28 oz. (stripped). 21.136 oz. (complete).
Removal—Pistons and rods removed from above.
Clearance—.002-.0025". See Fitting New Pistons.
Replacement Pistons:—*See Cadillac Shop Notes.*
Fitting New Pistons:—If micrometer used, check piston skirt at largest diameter (adjacent to T slot) at two points, ½" from lower edge of skirt, and 1¼" down from head. If feeler gauge used, install ⅜-½" wide feeler next to T slot. Piston should fall through bore of own weight on .002" feeler and hold tightly on .0025" feeler.
Installing Pistons: Slot to left for all pistons.
PISTON RINGS:—Two compression, one oil control ring per piston, all above pin.

Ring	Width	End Gap	Side Clearance
Comp. (top)	3/32"	.007-.015"	.0030-.0043"①
Comp. (#2)	1/8 "	.007-.015"	.0015-.0025"
Oil Cont.	3/16"	.007-.015"	.001-.002 "

①—.0015-.0025" (1938).
NOTE—Worn limits—.025" gap, .004" side clearance.
Replacement Rings: .003" .005" .010" .015" .030" OverS.
PISTON PIN:—Diameter—13/16". **Length**—2 25/32".
Pin is locked in rod by locking screw. Oil grooves broached for full length of pin hole in piston.
Pin Fit in Piston—.0001-.0006" clearance (new), .0018" (worn limit).

ENGINE

CONTINUED FROM PRECEDING PAGE

See Cadillac Shop Notes for special pin removal and installation instructions.

Replacement Pins:—Undersizes not furnished.

CONNECTING RODS:—Weight 24.528 ozs. Length 6⅜".
Crankpin Journal Diameter—1.9988-1.9993".
Lower Bearing—Steel-backed, babbitt-lined.
Clearance—.001-.0025" (new), .006" (worn limit).
Sideplay—.004-.008" (1938), .008-.014" (1939).
Bearing Adjustment:—None (no shims). Replace bearings. Do not file connecting rods or caps.
Installing Rods:—Numbers on rods and caps must correspond and point down toward pan, all rods.

CRANKSHAFT:—9 bearing. Integral counterweights.
See Cadillac Special Shop Notes for Rear Main Bearing Oil Seal renewal.
Journal Diameters—2½" all bearings.
Bearing Type—Steel-backed, babbitt-lined.
Clearance—.0015-.0025" (new), .005" (worn limit).
Bearing Adjustment:—None (no shims). Replace bearings. Do not file bearing caps. Bearing upper halves can be rotated out without removing crankshaft. *See Cadillac Shop Notes for instructions.*
End Thrust:—Taken by #5 (center) bearing. Endplay .001-.005" (new), .010" (worn limit).

CAMSHAFT:—Five bearing. Non-adjustable chain drive.
See Cadillac Special Shop Notes for Camshaft removal and installation instructions.
Bearing Type—Steel-backed, babbitt bushings.
Clearance—.0013-.0025" (new), .004" (worn limit).
End Thrust:—Taken by thrust plate flange at front bearing. Endplay .005-.015" (new), .020" (worn limit).
Timing Chain:—Morse Type C #3682-R. Width 1¼". Pitch ⅜". Length 23¼" or 62 links.
Camshaft Setting:—Sprockets are marked. Mesh chain with sprockets turned so that marks are adjacent and in line with straightedge across shafts.

VALVES:—	Head Diameter	Stem Diameter	Length
Intake	1.495-1.505"	.3415-.3425"	5 19/32"
Exhaust	1.370-1.380"	.3405-.3415"	5 39/64"

	Seat Angle	Lift	Stem Clearance
Exhaust	45°	.302"	.0010-.0030"
Intake	45°	.290"	.0020-.0040"

NOTE—Worn limit for stem clearance .005".
Valve Guides: Pressed in block with tapered end up (1938), down (1939).
Valve Lifters:—Wilcox-Rich 'Zero-lash' type hydraulic lifters. Barrel type operating in reamed holes.
See Miscellaneous Section for complete data.
NOTE—Two sizes of lifter used, must be re-installed in same guide hole from which removed. Larger size lifter used in holes marked by yellow paint 'X' or stamped 'B' below valve spring. First lifters not marked for size, later larger lifter stamped 'B' in oil groove. Valves must be removed first.
Lifter Clearance .0015-.0025" (new), .0035" (worn).
Valve Springs: Free length 2.130" (1938), 2.210" (1939).

1938 Springs	Pressure	Length
Valve Closed	49 lbs.	1.812"
Valve Open	95.5 lbs.	1.510"

1939 Springs	Pressure	Length
Valve Closed	50 lbs.	1 25/32"
Valve Open	100 lbs.	1 15/32"

Important—Valve Spring 'Howl' Correction—No dampener used on first cars and springs may develop howl similar to axle gear noise. Correct by installing new Spring and Dampener assemblies No. 1428284 and lower retainers No. 1428295 (32 of each required). These are latest type internal dampener. First type dampener (external type) is satisfactory but interferes with rapid valve removal.

VALVE TIMING

Tappet Clearance:—None in service (hydraulic type lifter used). See Valve Lifter data above.
Valve Timing:—See Camshaft Setting above.
Intake Valves—Open 6° BTDC. Close 28° ALDC.
Exhaust Valves—Open 44° BLDC. Close 12° ATDC.
To Check Timing—No. 1 intake valve should open with piston 6° or .0112" before top dead center with the ignition mark 'IG/A' for this cylinder in line with the pointer on the chain case cover.

LUBRICATION

LUBRICATION:—Pressure system. Main oil header in left crankcase wall (feed from pump) for main, connecting rod, and camshaft bearings. Pipe from this header through filter feeds oil header above each line of valve lifters.
Oil Pump:—Helical gear type. In rear of crankcase.
Normal Oil Pressure:—25 lbs. at 30 M.P.H.
Oil Pressure Regulator:—Piston type built in oil pump. Operates at 28 lbs. Not adjustable.
Crankcase Capacity:—11 quarts.

COOLING

Capacity—30 quarts.
Pressure Valve—In radiator filler cap. Opens at 6½-7 lbs. (1938), 7 lbs. (1939).
Water Pump: Centrifugal, packless type. Two pumps used (one pump for each bank, driven in tandem with fan pulley by double Vee belt).
See Water Pump Section for complete data.
Pump Removal—Drain cooling system, back off belt adjustment, disconnect hose, take out mounting screws in pump flange.
Belt Adjustment:—Loosen two mounting bolts on fan bracket, lift fan pulley and bracket assembly up (right bolt hole slotted, pivots on left bolt), until all slack removed from belts, tighten bolts.
NOTE—Replace belts together as matched set.
Thermostat:—Mounted on rear of radiator top tank.
Setting (Std. Type)—Starts to open at 148-153° F., fully open at 170° F. **(High Reading Type)** for use with heater: Starts 163-168°, Fully open 185°F.
Shutter Adjustment—Disconnect shutter rod at lever on front of radiator top tank, loosen locknut, turn clevis so that rod extends 1/16" past lever (provides slight tension with shutters closed).
Temperature Gauge (1939): AC Electric Type. #1510773 (dash unit), #1510774 (engine unit).
See Miscellaneous Section for complete data.

CLUTCH

CLUTCH:—Long Model 12CB-11½C. Single plate, dry disc type. No adjustment required.
See Clutch Section for complete data.
Facings—Spiral wound type, 2 required. I.D. 7", O.D. 11½". Thickness .125".
Adjustment—Clutch pedal free travel should be ⅞-1⅛". To adjust, turn nut at forward end of connecting rod at clutch fork.
Removal:—Remove transmission (see Transmission Removal below), take off clutch housing underpan, take out clutch mounting screws in cover flange, remove clutch through pan opening at bottom.
See Cadillac Shop Notes for special clutch housing note clutch locking pin removal (on replacement clutches) and clutch balancing data.

TRANSMISSION

TRANSMISSION:—Own make. All helical gear type. Constant-mesh, synchro-mesh (second and high), sliding gear (low and reverse).
See Transmission Section for complete data.
Transmission Control: Remote steering col. shift.
See Transmission Section for complete data.
Removal: Remove propeller shaft (disconnect front and rear universals), free transmission extension at engine rear support, remove crossmember with engine rear support, disconnect speedometer cable, remove shifter rods from levers on transmission case, support transmission at rear and take out mounting screws, pull transmission straight back plug clutch connection shaft bearing drain hole as soon as accessible to prevent lubricant loss, lower front end of transmission and remove from car.

UNIVERSALS

UNIVERSAL JOINTS:—Mechanics Model 3C. Two used.
See Universals Section for complete data.

REAR AXLE

REAR AXLE:—Own make. Hypoid gear, semi-floating type with Hotchkiss drive.
See Rear Axle Section for complete data.
NOTE—Manufacturer recommends Differential Carrier assembly returned to factory for servicing
Ratio—4.31-1 Std. **Backlash**—.004-.008".
Removal: *See corresponding V8 article for data.*
Wheel Bearing Adjustment—None (sealed type).

SHOCK ABSORBERS

SHOCK ABSORBERS:—Delco Model 1951-C, D (front), 2052-A, B (Rear '38), 2010-C, D (Rear '39). Double acting, hydraulic. Inertia control on rear shocks.
See Shock Absorber Section for complete data.

FRONT SUSPENSION

Front Suspension:—Independent, linked parallelogram type with coil springs.
See Front Suspension Section for complete data.
Kingpin Inclination—5°38' ('38), 5°1' ('39).
Caster—Neg. ¼° to Pos. ½° ('38), 0° ± ¼° ('39).
Camber—Neg. ¼° to Pos. ½° ('38), 0° to Pos. ½° ('39). Adjustable.
Toe In—1/32-3/32" (at rest), 0-1/16" (in motion).
Steering Geometry (Toe-out on turns)—Inner wheel turned 23½° (1938), 22¾-24¼° (1939), Outer wheel turned exactly 20°.

STEERING GEAR

Steering Gear: Saginaw Worm-and-Double Roller type with offset steering column and universal joint connection (Mechanics type).
See Steering Gear Section for complete data.

BRAKES

BRAKES:—Service. Bendix hydraulic, Duo-servo, single anchor type with rigid wheel cylinders. Hand lever applies rear wheel service brakes.
See Brake Section for complete data.
Brake Drums—Diameter 14". Centrifuse type.
Lining—Moulded type. Width 2¼". Thickness ¼".

	1938 — Length	1939
Front Primary	12¼"	13 21/32"
Rear Primary	15 "	13 21/32"
Secondary	15 "	15 1/32"

Clearance—.010" for heel and toe at each shoe.
Hand Brake:—See Service Brakes above.

ENGINE HOOD, SIDE PANEL REMOVAL & FRONT SHEET METAL ASSEMBLY ALIGNMENT:—*See Cadillac Shop Notes.*

MODEL IDENTIFICATION

SERIAL & ENGINE NUMBER:—First number (60S) 6320001, (62) 8320001, (72) 7320001, (75) 3320001. On crankcase at rear of left cylinder block and on left frame side member opposite steering gear.

TUNE-UP

COMPRESSION: Ratio 6.25-1 (60S, 62), 6.7-1 (72, 75).

Pressure:—	At 1000 RPM.	At Cranking Speed
6.25-1	155 lbs.	Approx. 105-110 lbs.
6.70-1	170 lbs.	Approx. 110-115 lbs.

VACUUM READING:—Steady 20-21" idling 7-8 MPH.

FIRING ORDER: 1-8-7-3-6-5-4-2. See diagram.

SPARK PLUGS: AC No. 104. 10 mm. Metric type.
Gaps—.025"-.030".
NOTE—These plugs are new small type. Do not tighten excessively (7-10 ft. lbs. tension).

IGNITION: See Coil, Condenser, and Distributor.
Breaker Gap—.015". Cam Angle 31° (closed).
Automatic Advance—12° max. at 2000 RPM (distr.).
Vacuum Advance—9° (distr.) with 15-18" of vacuum.

IGNITION TIMING: See Ignition Timing.
Std. Setting—5° BTDC. with crankshaft pulley mark "IG/A" at indicator on front of engine.

CARBURETION: See Carburetor & Carb. Equipment.
Idle Setting—Both idle screws set midway between "miss" and "roll" points. Idle speed 7-8 MPH.
Float Level—Fuel level 5/8" below top of bowl.
Accelerating Pump—Inner hole (min. stroke) normal.
Fuel Pump Pressure: 4¾ lbs. maximum.

VALVES: See Valve Timing.
Tappet Clearance—None in service (automatic hydraulic type take-up used).

STARTING: See Battery, Starter, Generator, Regulator.

IGNITION

Ignition Switch:—Delco-Remy Model 1116282 (62, 72), 1116275 (60S, 75). Armored cable coil connection.
Ignition Lock—Briggs & Stratton No. 45792. Key Series—8000 to 9499. Groove—No. 15.

COIL: Delco-Remy No. 1115128. Mounted on dash.
Ignition Current—2.2 amperes idling, 4.4 stopped.

CONDENSER: Delco-Remy Part No. 1869704.
Capacity—.18-.25 microfarad.

DISTRIBUTOR: Delco-Remy Model 1110806. Single breaker, 8 lobe cam, full automatic advance type with vacuum spark control and manual adjustment.
Breaker Gap—.0125-.0175".
Cam Angle or Dwell—31° closed, 14° open (distr.).
Breaker Arm Spring Tension—19-23 ounces.
Rotation—Clockwise viewed from above.

Automatic Advance

Distributor Degrees	R.P.M.	Engine Degrees	R.P.M.
Start	500	1	1000
12	2000	24	4000

Vacuum Spark Control 1116020. Integral type (on distributor, linked to breaker plate). Provides additional advance at speeds above idling except when engine accelerated or operated with wide open throttle when spark retarded by return spring within unit. Plunger travel 13/64" maximum.

Vacuum Advance

Distr. Degrees	Eng. Degrees	Vacuum (" of HG)
Start	0°	5.5-7.5"
9°	18°	15-18"

Manual Adjustment—Permits 10° advance or retard from center position. See Ignition Timing for adjustment.

Removal:—Distributor mounted between cylinder banks at rear of engine. To remove, disconnect vacuum line, take out two hold-down screws in advance arm, lift out. NOTE—When installing distributor, turn crankshaft to firing position for #1 cylinder, mesh distributor drive gear with slot in upper end of drive shaft offset toward left-hand or rear side of engine (narrow portion of coupling toward rear).

IGNITION TIMING

IGNITION TIMING:—Setting for 72 octane fuel (60S, 62), premium 'Ethyl' fuel (72, 75). See Manual Adjustment (following) for correction dependent on operating conditions and fuel regularly used.

Flywheel Degrees	Piston Position
5° BTDC	.0114" BTDC

Timing (With Synchroscope)—This method recommended by manufacturer. Clip synchroscope lead to

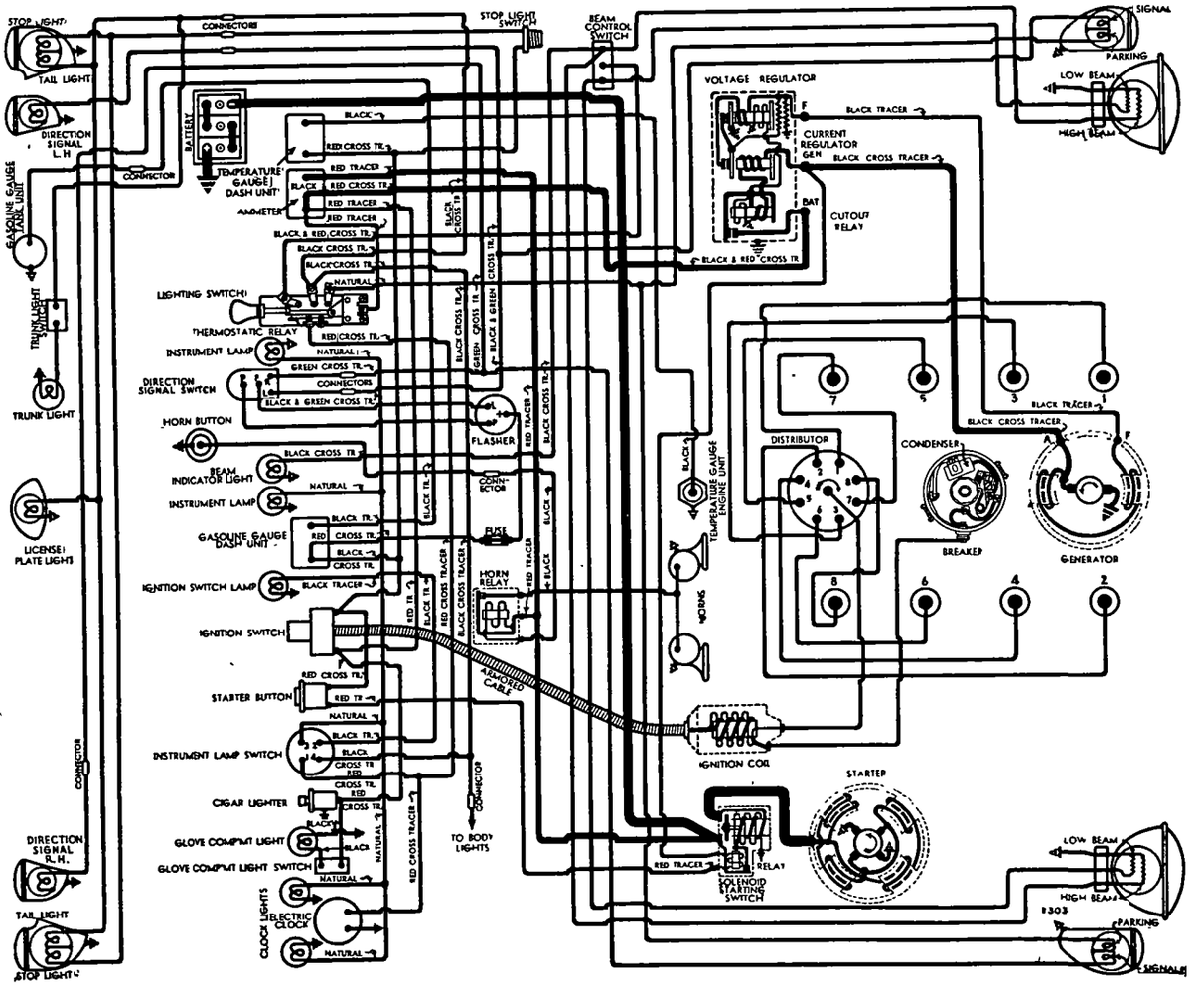

#1 spark plug, direct light on crankshaft pulley, idle engine. Loosen hold-down screw in advance arm, rotate distributor until 'IG/A' mark on pulley (5° before dead center Mark 'C.1/6) appears in line with pointer on chain case cover, tighten hold-down screw. Adjust for fuel (see Manual Adjustment).

Timing (Without Synchroscope)—Turn engine over to firing position for #1 piston (front piston, left bank) with crankshaft pulley mark 'IG/A' (5° before dead center mark 'C.1/6') lined up with pointer on chain case cover. Loosen hold-down screw in advance arm, center pointer on scale, tighten screw. Loosen advance arm clamp bolt, rotate distributor until contacts begin to open, tighten clamp bolt, check Manual Adjustment.

Manual Adjustment—Should be set for slight ping when accelerating engine with wide open throttle at speeds below 15 M.P.H. To adjust, loosen hold-down screw in advance arm, rotate distributor clockwise (if ping too severe), counter-clockwise (if no ping noted) one graduation at a time until correct performance secured.

NOTE—Check engine for faulty spark plugs, excessive carbon deposits, localized hot spots, lean carburetor setting before changing adjustment to correct pinging.

CARBURETOR

CARBURETION:—Carburetor—Stromberg Model AAV-26. 1¼" dual downdraft type.
For complete data, refer to Carburetor Index.

Idle Adjustment—With engine warm and running at slow idle speed (choke valve wide open, fast idle inoperative), set throttle stopscrew for 7-8 MPH idling speed. Adjust idle adjusting screw for each barrel until engine fires smoothly (turn screws in for leaner mixture.) Readjust idle speed.

Accelerating Pump Setting—Throttle lever has two holes for pump link engagement. Connect as follows: Inner Hole (Min. Stroke)—Normal setting. Outer Hole (Max. Stroke)—When richer charge required.

Float Level—Fuel level ⅝" below top edge of bowl.

Fast Idle:—Integral (built-in carburetor). Non-adjustable. ***See article in Carburetion Equipment Section.***

Fast Idle Setting—Not adjustable.

Automatic Choke:—Integral type built-in carburetor.
For complete data, refer to Carburetion Equip. Index.

Choke Setting—Center '0' mark on scale opposite mark on housing.

CARB. EQUIPMENT

Air Cleaner:—AC #1529298 (60S,62,72), #1528980 (75) heavy duty oil-bath type.

Fuel Pump:—AC Type AX #1537088 Diaphragm type combination fuel-and-vacuum pump.
For complete data, refer to Carburetion Equip. Index.

Gasoline Gauge:—AC Electric type. #1515368 (dash unit), #1516155 (tank unit—60S,62), #1516190 (tank unit—72), #1516156 (tank unit—75).
For complete data, refer to Carburetion Equip. Index.

BATTERY

BATTERY:—Delco 17K-2. 17 plate, 115 AH. capacity.
Starting Capacity—137 amperes for 20 minutes.
Zero Capacity—300 amperes for 4.3 minutes. Five second voltage 4.4 volts.
Grounded Terminal—Positive (+) terminal.
Engine Ground—Strap connector at right front engine support.
Dimensions—Length 10⅜". Width 7". Height 8⅝".
Location—Under left front floor (62, 72), under right side of engine hood outside frame (60S, 75).

Commercial Battery—Delco Model 19Q-1. 6 volt, 19 plate, 125 A. H. Capacity (20 hour rate).
Starting Capacity—145 amperes for 20 minutes.
Zero Capacity—300 amperes for 5.0 minutes. Five second voltage 4.5 volts.
Dimensions—Same as 17K-2 except Height 8 9/16".
Grounded Terminal, Location—See 17K-2 above.

STARTER

Delco-Remy Model 1107912 (All LHD., 72, 75 RHD). 1107911 (60S, 62 RHD). Armature No. 820158 (all models).
Drive—Overrunning clutch (solenoid pinion shift).
Rotation—Counter-clockwise at commutator end.
Brush Spring Tension—24-28 ounces.

Performance Data

Torque	R.P.M.	Volts	Amperes
0 ft. lbs.	5500	5.0	65
16 "	Lock	3.0	600

Removal:—Flange mounted on right front face of flywheel housing. To remove, take out flange mounting screws, pull starter forward and remove from below.

Starting Switch:—Solenoid Switch Type 1542 (all). Mounted on starter, controlled through relay (in switch) by Control Switch Type 1996005 on instrument panel.
For complete data, refer to Electrical Equipment Index.

Solenoid Switch Specifications

Closes against 70 lb. pull with ½" air gap drawing 65-71 amperes at 5 volts. Holds switch closed with current draw of 12-14 amperes (hold-in coil only).

Solenoid Relay Specifications

Contacts Close—1.9 volts max. Open—1.0-1.2 volts. Contact Gap—.035". Air Gap—.012".

GENERATOR

Delco-Remy Model 1102661. Armature No. 1878211, Two brush with current-voltage control.
Charging Rate Adjustment—No adjustment at generator. Charging rate controlled by Voltage Regulator and maximum output by Current Regulator. ***See Regulator data following.***
Maximum Charging Rate—32 amperes min. (hot), 8.0 volts, 2450 RPM, 27 MPH (60S,62), 24.5 MPH (72, 75) and above with load or discharged battery (Current Regulator setting). Actual charging rate controlled by Voltage Regulator and dependent on battery condition.

Performance Data

	Amperes	Volts	R.P.M.
Cold	30*	8.0	1750

*—Not maximum output—See Current Regulator.

Rotation—Counter-clockwise at commutator end.
Brush Spring Tension—25 ounces each.
Field Current—1.75-1.9 amperes at 6.0 volts.

Removal:—Flange mounted between cylinder banks at front of engine, belt driven in tandem with water pump (separate belt for fan). To remove, take out flange mounting bolts.

IMPORTANT AIR SCOOP NOTE—When installing air scoop on generator, make certain that raised portion provides clearance at terminals and that scoop does not cover drive end oil cup.

Belt Adjustment:—Loosen generator mounting bolts, lift generator up until only slight slack evident in belt (belt engages bottom of pulley groove not sides), tighten bolts. Generator pivots on left hand bolt, right bolt hole slotted. NOTE—Fan belt adjustment provided at fan bracket.

REGULATOR

Delco-Remy Model 1118202. "Single Core" Type. Vibrating Voltage & Current regulator on dash.

CAUTION—Check generator for grounded fields before changing regulator settings.
For complete data, refer to Electrical Equipment Index.

Cutout Relay

Cuts In—6.2-6.7 volts (hot).

Cuts Out—0-4.0 amperes discharge current.

Contact Gap—.020" (same for both sets).

Air Gap—.020" (with points just closed).

Voltage Regulator

Setting—7.2-7.4 volts hot (operating temperature). Regulator over-compensated for temperature.

To Check—Connect ammeter in charging line at 'BAT' regulator terminal, voltmeter between 'BAT' terminal and ground. Operate generator at 2800 RPM, adjust charging rate to 8-10 amperes (use variable rheostat or 'AVR' set). With regulator at hot operating temperature, retard generator speed until cut-out relay points open, then increase generator speed to 2800 RPM and check hot voltage setting (above).

To Adjust—Change regulator armature spring tension slightly by bending lower spring hanger for **light (left) spring (or one spring if both alike) only.** If further adjustment required, see Single Core Regulator article in Electrical Equipment Section for Heavy (or other spring) adjustment.

Air Gap—.070" between center of core and armature with contacts just closed.

Current Regulator

Setting—34-36 amperes hot (at operating temp.).

To Check—Remove cover, connect short jumper from voltage regulator frame to upper contact support bracket (shorting out Voltage Regulator). Connect ammeter in charging line at 'BAT' regulator terminal. Turn on lights and accessories, operate generator and increase speed until output remains stationary (run until hot). Check setting with regulator at operating temperature.

To Adjust—Change regulator armature spring tension slightly by bending lower spring hanger for one spring. If further adjustment required see Single Core Regulator article in Electrical Equipment Section for adjustment of other spring.

Air Gap—.080" (check same as Voltage Regulator).

CONTINUED N NEXT PAGE

CONTINUED FR M PRECEDING PAGE

LIGHTING

LIGHTING:—Headlamps—Guide 'Sealed Beam' type. *For complete data, refer to Electrical Equipment Index.*

Headlamp Adjustment—Aim upper beam straight ahead with center of hot spot 3" below lamp center height.

Beam Indicator—On speedometer face. Lighted whenever Country (upper) beam in use.

Direction Signal—*Refer to Electrical Equip. Index.*

Switches

Lighting—Delco-Remy 1995010.

Beam Selector—D-R 1997002, 471-U (60, 75 RHD).

Bulb Specifications

Position	Candlepower	Mazda No.
Headlamps		Sealed Beam
Front Indic. & Park	21-3	1154
Instr., Clock, Radio	1.5	55
Glove & Trunk Comp't	1.5	55
Beam Indicator, Ign. Lock	1	51
Stop & Tail	21-3	1154
*Rear Indicator (Early)	21-3	1154
*Rear Indicator (Later)	32	1133
License Plate	3	63
Dome & Quarter	15	87

*—When replacing Rear Indicator Bulb use same type bulb as formerly used (1154 double contact—1133 single contact) in order for circuit to function properly.

MISC. ELECTRICAL

THERMOSTATIC RELAY:—Delco-Remy. On lighting switch. Contacts remain closed with 30 amperes, open in 3 minutes with 42 amps. @ 70°. Not adj.

FUSES:—Direction Signal—9 ampere. In Flasher lead under instrument panel.

Fog Lights—20 ampere. On switch.

Radio & Under Seat Heater—14 amperes each.

HORNS:—Delco-Remy Model K-33-H. No. 1999501, 519 (low note), 1999502, 520 (high note). Vibrator type, blended tone, operated by horn relay. Horn set 1999501 & 502 used on early cars.

Type	Current (at 6 volts)	Air Gap
1999501 (Low)	16-18 amperes	.044-.049"
1999502 (High)	15-17 amperes	.034-.039"
1999519 (Low)	19-21 amperes	.044-.049"
1999520 (High)	18-20 amperes	.034-.039"

Horn Relay:—Delco-Remy Model 1116775.

Contact Gap—.020". **Air Gap**—.015" (closed).

Contacts Close—2.75-4.0 volts.

ENGINE

ENGINE SPECIFICATIONS:—Own. 8 cylinder, 90° Vee, L head type. Upper crankcase and cylinder blocks cast Enbloc. **Bore**—3½". **Stroke**—4½".

Displacement—346 cu. ins. **Rated HP**—39.20.

Developed Horsepower—135 (60S, 62), 140 (72, 75) at 3400 RPM.

Compression Ratio—6.25-1 (Std. 60S, 62; Optl. 72, 75), 6.7-1 (Std., 72, 75; Optl. 60S, 62), 5.75-1 (Optl.). *See Cadillac Shop Notes for Cylinder Head Installation, Identification (on 72, 75), and Lowering Compression Ratio.*

Compression Pressure—155 lbs. (60S, 62), 170 lbs. (72, 75) at 1000 RPM or approximately 105-110 lbs. (60S, 62), 110-115 lbs. (72, 75) at cranking speed.

Vacuum Reading—Steady 20-21" idling at 7-8 MPH.

PISTONS:—Lynite or Bohn Lo-Ex aluminum alloy, "T" slot, Cam Ground type with Anodized finish (special hard oxide bearing surface). **Length**—4⅛". **Weight**—18.30 ozs. (stripped), 25.10 ozs. (complete). **Removal**—Pistons and rods removed from above. **Clearance**—Skirt .0020-.0025". See Fitting Pistons.

Replacement Pistons:—*See Cadillac Shop Notes.*

Fitting New Pistons:—Check piston diameter with micrometer gauge at right angles to pin hole just below lower ring groove and also ½" above lower edge. If feeler gauges (⅜-½" wide, 7-10" long) used, insert feeler next to T-slot. Piston should fall through bore of own weight on .002" feeler, and hold on .0025" feeler. NOTE—Cylinder bore out-of-round .0005" maximum, taper .0003".

Installing Pistons:—T-slot to left, for all pistons.

PISTON RINGS:—2 compression, 2 oil control rings per piston, all above pin. Oil ring grooves drilled.

Ring	Width	End Gap	Side Clearance
Compr. (Top)	3/32"	.007-.012"	.0023-.0041"
Compr. (#2)	⅛"	.007-.012"	.0013-.0026"
Oil Control	5/32"	.007-.015"	.0013-.0026"

Replacem't Rings:—.003",.005",.010",.015",.030" oversize.

PISTON PIN:—Diameter—⅞. **Length**—3 1/16". Pin floats in piston and rod. Held by locking rings. *See Cadillac Shop Notes for pin servicing data.*

Pin Fit in Piston—.0004" press fit (ribbed end), .0000" clearance or free fit at 70° F. (plain end).

Pin Fit in Rod Bushing—.0002-.0008" clearance (new), .0018" (worn limit).

CONNECTING ROD:—Weight 37.472 ozs. **Length** 8¾".

Crankpin Journal Diameter—2.4590-2.4595".

Lower Bearing—Steel-backed, babbitt-lined type.

Clearance—.0015-.0025" (new), .0045" Max. (worn).

Sideplay—.008-.014".

Bearing Adjustment:—None (no shims). Replace bearings. Do not file rod or caps. *See Cadillac Shop Notes for connecting rod and bearing installation data.*

Installing Rods:—Numbers on rods and bearing caps on same side and installed in same numbered cylinders with marks down toward oil pan.

CRANKSHAFT:—3 bearing with 6 counterweights. *See Cadillac Shop Notes for main bearing servicing and rear main bearing oil seal renewal.*

Journal Diameters—2½" all bearings.

Bearings—Removable steel-backed, babbitt-lined.

Clearance—.0015-.0025" (new), .005" Max. (worn).

Bearing Adjustment:—None (no shims). Replace bearings. Do not file bearing caps.

End Thrust:—Taken by center (#2) bearing.

Endplay—.001-.005" (new), .010" Max. (worn).

CAMSHAFT:—3 bearing, non-adjustable chain drive. *See Cadillac Shop Notes for camshaft bushing data.*

Journal Diameters—#1 and #2, 2.4071-2.4078"; #3, 2.0009-2.0016".

Bearing Type—Steel-backed, babbitt bushings.

Clearance—.0015-.0033" (new), .0045" Max. (worn).

End Thrust:—Taken by thrust plate behind camshaft sprocket. No endplay should be permitted.

Timing Chain:—Morse Type C #3682-R Side Guide type. Width 1¼". Pitch ⅜". Length 23¼" or 62 links. NOTE—Install chain 'endless' as an assembly with sprockets. Use Tool J-836 to pilot camshaft sprocket.

Camshaft Setting:—Sprockets marked. Mesh chain with sprockets turned so that '0' marks are adjacent and in line with a straightedge across shaft centers.

VALVES:—	Head Diameter	Stem Diameter	Length
Intake	1.876-1.886"	.3415-.3425"	5 33/64"
Exhaust	1.626-1.636"	.3405-.3415"	5 33/64"

	Seat Angle	Lift	Stem Clearance
Intake	45°	.335"	.0012-.0032"
Exhaust	45°	.345"	.0022-.0042"

NOTE—Stem clearance worn limit .005" (all valves). Valve heads not slotted. *See Cadillac Shop Notes for valve servicing.*

Valve Guides:—Press in block (long step end down).

Valve Lifters:—Wilcox-Rich 'Zero-lash' type hydraulic lifters (Mushroom type) in removable brackets. *See Miscellaneous Section for complete data.*

Clearance—.0010-.0024" (new), .0035" (worn).

Valve Springs:—Free length 2.210".

	Spring Pressure	Spring Length
Valve Closed	66 lbs.	1.926"
Valve Open	145 lbs.	1.581"

VALVE TIMING

Tappet Clearance:—None in service (hydraulic type lifter). *See Valve Servicing in Cadillac Shop Notes.*

Valve Timing:—See Camshaft Setting above.

Intake Valves—Open at TDC. Close 42° ALDC.

Exhaust Valves—Open 52° BLDC. Close 10° ATDC.

Valve Timing Check—#1 cylinder (front-left bank) intake valve should open with piston at TDC and mark 'C.1/6' on crankshaft pulley aligned with chain case cover pointer (on right side).

LUBRICATION

LUBRICATION:—Pressure type (gear type pump in crankcase). *See Cadillac Shop Notes for oil pump data.*

Normal Oil Pressure:—15 lbs. idling, 25 lbs. at 30 MPH.

Oil Pressure Regulator:—Opens at 30 lbs. On oil pump. Non-adjustable. **Crankcase Capacity**—7 quarts.

COOLING

COOLING SYSTEM:—Capacity—24½ quarts. *See Cadillac Shop Notes for radiator core removal.*

Water Pump:—Self-adjusting packing type. *See Water Pump Section for complete data.*

Thermostat:—Mounted in radiator top tank, linked to radiator shutters by rod on forward side.

Setting—(Std. Type) Starts to open 153-158° F., fully open at 175° F. (High Reading Type—use with Heaters) Starts to open 168-173° F. Fully open 190°.

Shutter Adjustment—Adjust clevis on threaded end of rod to secure 1/16" tension (shutters closed).

Temperature Gauge:—AC Electric. #1510773 (dash unit), #1510774 (engine unit). *See Miscellaneous Section for complete data.*

CLUTCH

CLUTCH:—Long Model 11CF-10½CI (60S, 62), 11CF-TI (72,75). Semi-centrifugal, single plate, dry disc type.
See Clutch Section for complete data.
NOTE—Borg & Beck Model 11A6 (marked #945) Single plate, dry disc type with 'Borglite' driven member used on early cars.
See Clutch Section for complete data.
Facing (Long)—Spiral or Chevron wound (spiral grooved) woven, 2 used. Inside Diam. 7". Outside Diam. 10½" (60S, 62), 11" (72, 75). Thickness .137".

Pedal Adjustment:—Pedal free travel ⅞-1⅛" (adjusting nut on connector link at clutch fork).

Removal: Remove transmission (see below), drop clutch housing pan, punch mark clutch cover, pressure plate and flywheel, remove 6 cover screws.
NOTE—Install driven disc with oil guard (cover over dampener springs) to rear.
See Cadillac Shop Notes for clutch locking pin removal (on replacement clutches) and balancing data.

TRANSMISSION

TRANSMISSION:—Own Make. All helical gear, constant-mesh, synchro-mesh (second & high), sliding gear (low & reverse) with remote shift.
See Transmission Section for complete data.

Transmission Control:—Remote steering col. shift.
See Transmission Section for complete data.

Removal:—Support engine with jack under rear end of oil pan (use wooden block to avoid damage to pan), remove propeller shaft (disconnect front and rear universals), free transmission extension at engine rear support, remove crossmember with engine rear support, disconnect speedometer cable, remove shifter rods from levers at transmission, support transmission at rear, take out mounting screws, pull straight back (plug clutch connection shaft bearing drain hole as soon as accessible to prevent lubricant loss), lower front end of transmission and remove.

UNIVERSALS

UNIVERSAL JOINTS:—Mechanics 3C. Needle bearing.
See Universals Section for complete data.

REAR AXLE

REAR AXLE:—Own Make. Hypoid gear, semi-floating type with Hotchkiss drive. NOTE—Manufacturer recommends Carrier Assembly serviced by factory.
See Rear Axle Section for complete data.

Ratio—3.92-1 (60S, 62), 4.31-1 (72), 4.58-1 (75).

Backlash—.004-.010". Screw adjustment.

Removal:—Disconnect rear universal, remove axle shafts (see below), and carrier flange capscrews.

Axle Shaft Removal:—Remove wheel, axle shaft nut, dust seal from rim of drum, pull off hub and drum, disconnect brake line and remove backing plate. Pull shaft and bearing assembly (use Tool J-838).

Wheel Bearing Adjustment—None.

SHOCK ABSORBERS

SHOCK ABSORBERS:—Delco. Front—1946-G, H (except 75), 1951-C, D (75). **Rear**—1751-G, H (60S), V, W (62); 2007-N, P (72), 2010-C, D (75). Double acting, hydraulic.
See Shock Absorber Section for complete data.

FRONT SUSPENSION

Front Suspension:—Independent linked parallelogram type with coil springs.
See Front Suspension Section for complete data.

Kingpin Inclination—5°6' (60S, 62), 5°1' (72, 75).

Caster—Neg. 1¾° to Neg. 2¾° (60S, 62, 72), Neg. ½° to Neg. 1° (75). Equal within ½°.

Camber—0 to Pos. ¾° (except 75), 0 to Pos. ½° (75).

Toe In—1/32-3/32" (at rest). Adjusters at outer end of each rod (except 75), turn tie rods (75).

Steering Geometry (Toe-out on turns)—Inner wheel turned 22¼-23¾° (except 75), 22¾-24¼° (75). Outer 20°.

STEERING GEAR

Steering Gear (Series 60S, 62, 75): Saginaw Worm-and-Double Roller type.
See Steering Gear Section for complete data.

Steering Gear (Series 72): Saginaw Ball Bearing Worm-and-Nut (recirculating ball) type.
See Steering Gear Section for complete data.

BRAKES

BRAKES:—Service. Bendix hydraulic, duo-servo, single anchor type (eccentric on 75 only). Hand lever applies rear wheel service brakes.
See Brake Section for complete data.

Drums—Centrifuse. Diameter—11.995-12.005" (60S, 62, 72), 13.995-14.005" (75).

Lining—Molded. Length—Primary 11 17/32" (60S, 62, 72), 13 21/32" (75); Secondary 12 31/32" (60S, 62, 72), 15 1/32" (75). Width—Front wheel 2¼". Rear 2" (60S, 62), 2½" (72), 2¼" (75). Thickness 3/16" (60S, 62, 72), ¼" (75).

Clearance—.015" both ends of secondary shoe—with primary shoe forced out against drum (60S, 62, 72). .010" both ends of secondary shoe with primary just free of drag (75).

Hand Brake:—See Service Brakes above.

MISC. MECHANICAL

Power Operated Convertible Top: Vacuum Power type.
See Miscellaneous Equipment Section for complete data.

ENGINE HOOD, SIDE PANEL REMOVAL & FRONT SHEET METAL ASSEMBLY ALIGNMENT:—*See Cadillac Shop Notes.*

MODEL IDENTIFICATION

SERIAL & ENGINE NUMBER:—First number 5320001. On upper rear corner of left hand cylinder block below head and on frame opposite steering gear.

TUNE-UP

COMPRESSION:—**Ratio**—6.75-1 (requires Ethyl fuel). 6.08-1 optional.
Pressure—180 lbs. at 1000 RPM for standard head or approximately 110-115 lbs. at cranking speed.

VACUUM READING:—Steady 20-21" idling at 7-8 MPH.

FIRING ORDER: 1-4-9-12-3-16-11-8-15-14-7-6-13-2-5-10. See diagram for spark plug cable connections on each distributor cap.

SPARK PLUGS: AC No. 104. 10 mm. Metric type.
Gaps—.032". Limits .030-.035".
NOTE—These small plugs must not be tightened excessively (7-10 ft. lbs. tension).

IGNITION: See Coil, Condenser, and Distributor.
Breaker Gap—.015". **Cam Angle** 31° (closed).
Synchronization—Movable contacts (in left hand distributor) open 22½° (distr.) after fixed set.
Automatic Advance—10° max. at 2000 RPM (distr.).

IGNITION TIMING:. See Ignition Timing.
Std. Setting—6° BTDC. with vibration dampener mark "IG/A" at indicator on front of engine.
NOTE—Contacts open alternately at regular 22½-22½° (distr.) intervals.

CARBURETION: See Carburetor & Carb. Equipment.
Idle Setting—Both idle screws ¼-1 turn open. Idle speed 7-8 MPH. NOTE—Both carburetors must be equalized—see Carburetor data (following).
Float Level—13/64" top of float to gasket seat on cover with needle valve seated.
Accelerating Pump—Not adjustable.
Fuel Pump Pressure: 4½ lbs. maximum.

VALVES: See Valve Timing.
Tappet Clearance—None in service (automatic hydraulic type tappet clearance take-up used).

STARTING: See Battery, Starter, Generator, Regulator.

IGNITION

Ignition Switch:—Delco-Remy No. 1116283 (switch and cable). Connected to coil unit by armored cable.
Ignition Lock—Briggs & Stratton No. 45792. Key Series—8000 to 9499. Groove—No. 15.

COIL: Delco-Remy 553-E. Two coil unit mounted on bracket at radiator top. Coil Cover No. 1854013.
Current—2.2 amperes idling, 4.4 stopped (each).

CONDENSER: Delco-Remy No. 1869707 (two used—both in left hand distributor). **Capacity**—.18-.25 mfd.

DISTRIBUTOR: Delco-Remy 1110601 (Left), 1110602 (Right). Two used (left hand distributor times ignition for entire engine, right hand distributor distributes high tension current to spark plugs of right hand cylinder bank only and has no breaker mechanism. Same design as used on 39-90.
Type—Double breaker, 8 lobe cam, full automatic advance with manual adjustment at distributor.
Firing Interval—Movable contacts open 22½° (distr.) after fixed set. Must be synchronized (see Timing).
Breaker Gap—.0125-.0175".
Cam Angle or Dwell—31° closed, 14° open (distr.). Each set operates independently.
Breaker Arm Spring Tension—19-23 ounces.
Rotation—Clockwise viewed from top (L.H. No. 1110601), counter-clockwise (R.H. No. 1110602).

Automatic Advance

Distributor		Engine	
Degrees	R.P.M.	Degrees	R.P.M.
Start	800	1½	1600
10	2000	20	4000

Manual Adjustment—Permits 10° advance or retard from center position. See Ignition Timing for adjustment.

Removal:—Distributor for each bank mounted at right and left hand side at front of engine. To remove, take out hold-down screw in advance arm, lift up to disengage coupling (does not disturb drive gear).

Distributor Installation Note—Drive slot not offset and distributors must be installed as follows: With crankshaft turned to #1 firing position (IG/A mark on dampener at front of engine lined up with pointer), install both distributors with rotors pointing forward and to left (L. H.—33° to left from straight ahead position, R. H.—60° to left).

Distributor Drive Shaft Installation—Distributor cannot be timed unless shafts correctly installed as follows: With crankshaft and timing gear marks lined up, install special Distributor Shaft Setting Gauge #J-1212 in distributor support dowel holes, note pointer positions. Remove gauge, install distributor drive shafts, check with gauge (slots must line up with pointer).

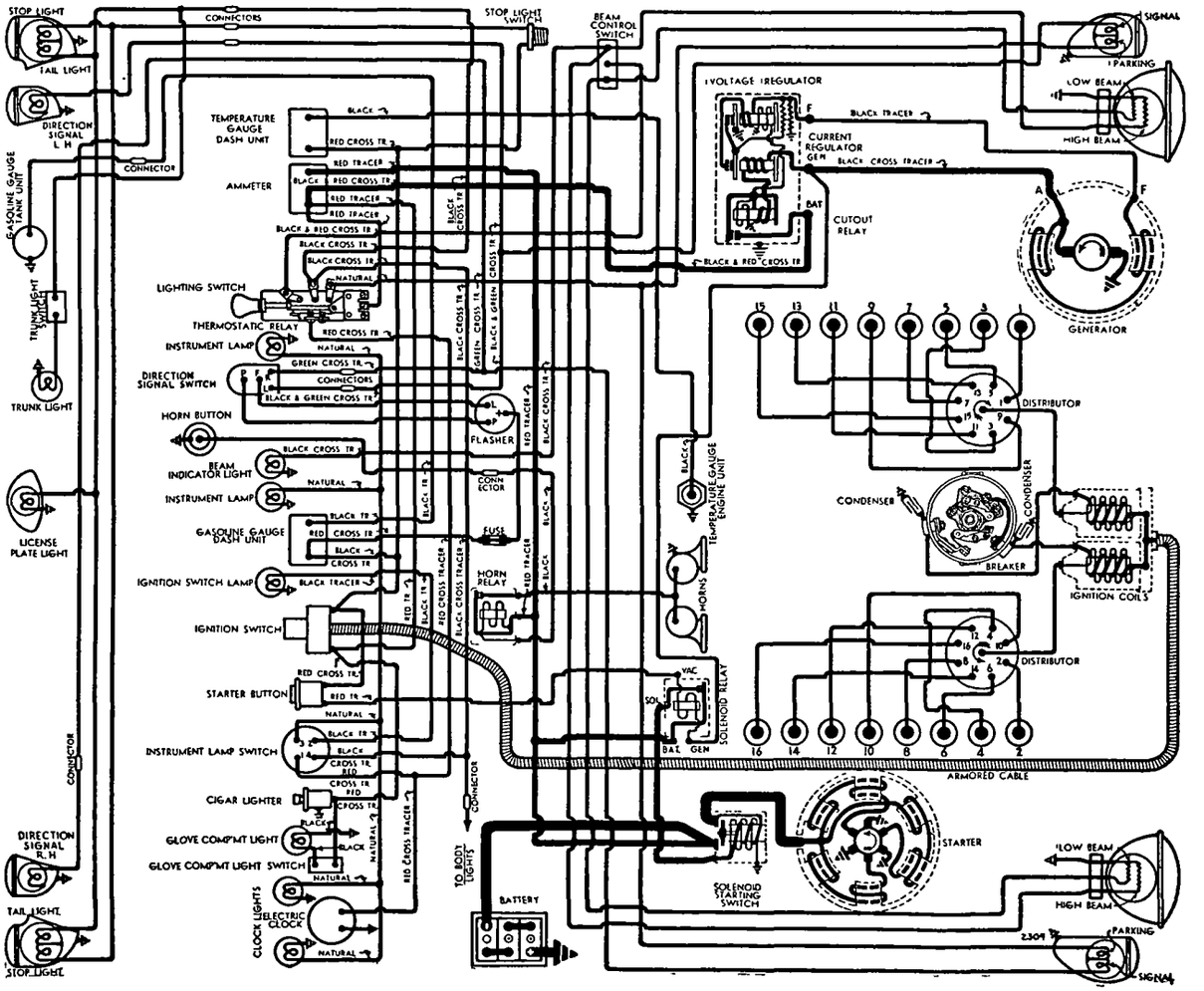

IGNITION TIMING

IGNITION TIMING:—Standard setting (Ethyl fuel): See Manual adjustment for correction dependent on fuel regularly used.

Flywheel Degrees	Piston Position
6° BTDC.	.0112" BTDC.

Timing (Stationary Contacts)—Loosen thumbscrew on pointer arm, center pointer on scale, tighten thumbscrew. With #1 piston on compression (front cylinder, left bank), turn engine over until mark 'IG/A' on vibration dampener (which is 6° before TDC mark 'C/1-15') lines up with pointer on chain case cover. Loosen advance arm clampscrew on left hand distributor, rotate distributor until stationary contacts (mounted directly on breaker plate) begin to open, tighten clampscrew. Then synchronize.

Synchronization (Timing Movable Contacts)—Manufacturer recommends distributor removal and synchronization on test fixture (set movable contacts to open 22½° (distr.) after fixed set. To synchronize on engine, turn engine over 45° or ⅛ revolution to firing position for #4 cylinder with 'IG/A' mark on dampener lined up with pointer. Remove distributor cap and rotor, loosen two lockscrews on movable sub-plate (on which movable contacts mounted), turn eccentric adjusting screw until contacts begin to open ,tighten lockscrews. Check Manual Adjustment setting.

Manual Adjustment—Should be set for slight ping when accelerating engine with wide open throttle at speeds below 15 M.P.H. To adjust, loosen pointer thumbscrew, rotate distributor clockwise (if ping too severe), counter-clockwise (if no ping noted) one graduation on scale at a time until satisfactory performance secured. NOTE—Before changing manual adjustment, accelerate engine up to at least 60 MPH (critical point is 50 MPH.). If engine pings, check for fuel being used, faulty spark plugs, carbon deposits, lean carburetor setting which will cause pre-ignition.

CARBURETOR

CARBURETION:—**Carburetors**—Carter WDO Type 407-S (Left hand), 408-S (Right hand). 1⅛" dual, downdraft type. One carburetor used for each cylinder bank with interconnected throttle controls.

For complete data, refer to Carburetor Index.

NOTE—Carburetors must be synchronized or equalized at both idle and part throttle position.

Idle Adjustment—With engine warmed up so that Automatic Chokes and Fast Idles inoperative, adjust each carburetor as follows: Set throttle lever stopscrew for 7-8 MPH. idling speed. Turn each idle adjusting screw (one for each barrel, two per carburetor) in until engine begins to lag or miss, then turn screw out slowly until engine fires smoothly. Readjust throttle stopscrew for correct idling speed of 300 R.P.M. After adjusting both carburetors, equalize as follows:

Equalizing Carburetors—Use mercury column 'U' tube connected to ⅛" pipe plug openings in long leg of each intake manifold (do not connect gauge to vacuum balancing tube between carburetors). Disconnect throttle rods, idle engine, note mercury levels in tube. Adjust throttle stopscrew at each carburetor so that engine idles at 7-8 MPH. and mercury level is equal in each tube. Adjust right throttle rod length (trunnion with fine threads on rod near carburetor) so that rod can be connected without disturbing throttles or unbalancing mercury levels. Open throttle to 1000 RPM. engine speed (use foot throttle, not hand throttle), make any necessary re-adjustment to secure equal mercury column levels. If adjustment made recheck idle setting (idle speed equalization more important).

Accelerating Pump Setting—Not adjustable.

Float Level—13/64" from top of float to cover (gasket removed) with needle seated.

Fast Idle—Integral type. Built-in each carburetor. ***For complete data, refer to Carburetion Equip. Index.***

Fast Idle Setting—Adjust fast idle screw for .026" throttle opening with choke valve fully closed.

Automatic Choke:—Integral. Built-in each carburetor. ***See article in Carburetion Equipment Section.***

Choke Setting—Set center index mark to coincide with mark on carburetor flange.

CARB. EQUIPMENT

Air Cleaner:—AC #1528718 heavy duty oil-bath type (one cleaner used for each carburetor). NOTE—Crankcase ventilator air cleaner is AC #1528732.

Fuel Pump:—AC Type AU (2 used). #1523695 (R.H.), #1523696 (L.H.). Diaphragm type. One pump used for each carburetor. NOTE—Fuel lines inter-connected, one pump only may operate at idling speed. ***For complete data, refer to Carburetion Equip. Index.***

Vacuum Pump—AC Type K #1523906 (separate unit) mounted between cylinder banks at rear.

Gasoline Gauge:—AC Electric type. #1515368 (dash unit), #1515461 (tank unit). ***For complete data, refer to Carburetion Equip. Index.***

BATTERY

BATTERY:—**Delco 19Q1. 19 Plate, 125 AH. Cap. (20 hr.).**

Starting Capacity—145 amperes for 20 minutes.

Zero Capacity—300 amperes for 5.0 minutes. Five second voltage—4.5 volts.

Dimensions—10⅜" long, 7" wide, 8 9/16" high.

Grounded Terminal—Positive (+) terminal.

Engine Ground—Strap connector at right front engine support.

Location—Under hood on right side outside frame.

STARTER

STARTER:—**Delco-Remy 783. Armature No. 1868165.**

Drive—Overrunning clutch (solenoid pinion shift).

Rotation—Counter-clockwise at commutator end.

Brush Spring Tension—36-40 ounces each.

Performance Data

Torque	R.P.M.	Volts	Amperes
0 ft. lb	3000	5.0	70
19	Lock	3.0	500

Removal:—Flange mounted on right front face of flywheel housing. To remove, take off cover in right side pan, take out flange mounting screws, remove starter and switch assembly from below.

Starting Switch:—Solenoid No. 1555 (on starter). Solenoid Relay No. 268-M (mounted separately on dash). Solenoid switch controlled through relay by pushbutton No. 1996005 on instrument panel. ***For complete data, refer to Electrical Equipment Index.***

Solenoid Switch Specifications

Closes against 70 lb. pull with ½" air gap drawing 65-71 amperes at 5 volts. Holds switch closed with current draw of 12-14 amperes (hold-in coil only).

Solenoid Relay Specifications

Contacts Close—3.2 volts max. **Open**—1.6-2.0 volts. **Contact Gap**—.035". **Air Gap** .010" (contacts closed).

GENERATOR

GENERATOR:—**Delco-Remy 1102666. Armature 1878429.** Two brush type with current-voltage control.

Charging Rate Adjustment—No adjustment at generator. Charging rate controlled by Voltage Regulator and maximum output by Current Regulator.

Maximum Charging Rate—32 amperes min. (hot), 8.0 volts, 2450 RPM, 25 MPH and above with load or discharged battery (Current Regulator setting). Actual charging rate controlled by Voltage Regulator and dependent on battery condition.

Performance Data

	Amperes	Volts	R.P.M.
Cold	30*	8.0	1825

*—Not maximum output—see Current Regulator.

Rotation—Counter-clockwise at commutator end.

Brush Spring Tension—25 ounces each.

Field Current—1.75-1.9 amperes at 6.0 volts.

Removal:—Mounted on slide on fan bracket at front of engine between cylinder banks. To remove, take out mounting bolt in slot on slide mounting.

Belt Adjustment:—Loosen mounting bolt on slide mounting under generator, lift generator up to remove slack from belt, tighten mounting bolt.

REGULATOR

Delco-Remy Model 1118202. "Single Core" Type. Vibrating type voltage and current regulators in case on dash.

CAUTION—Check generator for grounded fields before changing regulator settings. ***For complete data, refer to Electrical Equipment Index.***

Cutout Relay

Cuts In—6.2-6.7 volts (hot).
Cuts Out—0-4.0 amperes discharge current.
Contact Gap—.020" (same for both sets).
Air Gap—.020" (with points just closed).

Voltage Regulator

Setting—7.2-7.4 volts hot (operating temperature). Regulator over-compensated for temperature.

To Check—Connect ammeter in charging line at 'BAT' regulator terminal, voltmeter between 'BAT' terminal and ground. Operate generator at 2800 RPM., adjust charging rate to 8-10 amperes (use variable rheostat or 'AVR' set). With regulator at hot operating temperature, retard generator speed until cutout relay points open, then increase generator speed to 2800 RPM and check hot voltage setting (above).

To Adjust—Change regulator armature spring tension by bending lower spring hanger for **light (left) spring (or one spring if both alike) only.** If further

C NTINUED ON NEXT PAGE

C NTINUED FR M PRECEDING PA E

adjustment required, see Single Core Regulator article in Electrical Equipment Section for heavy (or other) spring adjustment.

Air Gap—.070" between center of core and armature with contacts just closed.

Current Regulator

Setting—34-36 amperes hot (at operating temp.).

To Check—Remove cover, connect short jumper from voltage regulator frame to upper contact support bracket (shorting out Voltage Regulator). Connect ammeter in charging line at 'BAT' regulator terminal. Turn on lights and accessories, operate generator and increase speed until output remains stationary (run until hot). Check setting with regulator at operating temperature.

To Adjust—Change regulator armature spring tension slightly by bending lower spring hanger for one spring. If further adjustment required see Single Core Regulator article in Electrical Equipment Section for adjustment of other spring.

Air Gap—.080" (check same as Voltage Regulator).

LIGHTING

LIGHTING:—Headlamps—Guide 'Sealed Beam' type.
For complete data, refer to Electrical Equipment Index.

Headlamp Adjustment—Aim upper beam straight ahead with center of hot spot 3" below lamp center

Beam Indicator—On speedometer face. Lighted whenever Country (upper) beam in use.

Direction Signal—***Refer to Electrical Equip. Index.***

Switches

Lighting—Delco-Remy 1995010.

Beam Selector—Delco-Remy 1997002.

Bulb Specifications

Position	Candlepower	Mazda No.
Headlamps		Sealed Beam
Front Indi. & Park	21-3	1154
Instr., Clock, Radio	1.5	55
Glove & Trunk Comp't	1.5	55
Beam Indicator, Ign. Lock	1	51
Stop & Tail	21-3	1154
*Rear Indicator (Early)	21-3	1154
*Rear Indicator (Later)	32	1133
License Plate	3	63
Dome & Quarter	15	87

*—When replacing Rear Indicator Bulb use same type bulb as formerly used (1154 double contact—1133 single contact) in order for circuit to function

MISC. ELECTRICAL

THERMOSTATIC RELAY:—Delco-Remy. On lighting switch. Contacts remain closed with 30 amperes, open in 3 minutes with 42 amps. @ 70°. Not adj.

FUSES:—Direction Signal—9 ampere. In Flasher lead under instrument panel.

Fog Lights—20 ampere. On switch.

Radio & Under Seat Heater—14 amperes each.

HORNS:—Klaxon. D-R. Model K-33D Type 1967 (low note—left hand), 1968 (high note—right hand). Vibrator type, blended tone, twin horns operated by relay. NOTE—Horns mounted vertically behind radiator grille with horn relay on left front fender dust shield. Remove grille for horn service.

Horn Type	Current (at 6 volts)	Air Gap
1967 Low Note	12-14 amperes	.045-.050"
1968 High Note	11-13 amperes	.036-.040"

Horn Relay:—D-R. Model 1116775.

Contact Gap—.020". **Air Gap**—.015" (closed).

Contacts Close—2.75-4.0 volts.

ENGINE

ENGINE SPECIFICATIONS:—16 cylinder, 135° Vee, 'L' head. Cylinder banks and crankcase cast integral.
See Cadillac Shop Notes for head installation data.

Bore—3¼". **Stroke** 3¼".

Displacement—431 cu. ins. **Rated HP.**—67.60.

Developed Horsepower—185 HP. at 3600 R.P.M.

Compression Ratio—6.75-1 Std. 6.08-1 Optl.

Compression Pressure—180 lbs. at 1000 R.P.M. or approximately 110-115 lbs. at cranking speed.

Vacuum Reading—Steady 20-21" idling at 7-8 MPH.

PISTONS:—Lynite & Bohn Lo-Ex aluminum alloy, 'T' slot, cam ground type with anodized finish (special hard oxide bearing surface). **Length**—3¾".

Weight—15.28 ozs. (stripped), 21.136 ozs. (complete).

Removal—Pistons and rods removed from above.

Clearance—.0020-.0025" skirt. See Fitting Pistons.

Replacement Pistons:—***See Cadillac Shop Notes.***

Fitting New Pistons:—Check piston diameter with micrometer gauge at right angles to pin hole just below lower ring groove and also ½" above lower edge. If feeler gauges (⅜-½" wide, 7-10" long) used, insert feeler next to T-slot. Piston should fall through bore of own weight on .002" feeler and hold on .0025" feeler. NOTE—Cylinder bore out-of-round .0005" Max., taper .0003".

Installing Pistons:—Slot to left, for all pistons.

PISTON RINGS:—Two compression, one oil control ring per piston, all above pin.

Ring	Width	End Gap	Side Clearance
Comp. (Top)	3/32"	.007-.015"	.0030-.0043"
Comp. (#2)	⅛"	.007-.015"	.0013-.0026"
Oil Control	3/16"	.007-.015"	.0013-.0026"

Replacement Rings: .003",.005",.010",.015",.030" oversize.

PISTON PIN:—Diameter—13/16". **Length**—2 25/32".
Pin is locked in rod by locking screw. Oil grooves broached for full length of pin hole in piston.
See Cadillac Shop Notes for special pin removal and installation instructions.

Pin Fit in Piston—.0001-.0006" clearance (new), .0018" (worn).

Replacement Pins:—Undersizes not furnished.

CONNECTING ROD:—Weight 24.528 ozs. **Length** 6⅜".

Crankpin Journal Diameter—1.9988-1.9993".

Lower Bearing—Steel-backed, babbitt-lined.

Clearance—.0015-.0025" (new), .0045" (worn).

Sideplay—.008-.014".

Bearing Adjustment:—None (no shims). Replace bearings. Do not file connecting rods or caps.

Installing Rods:—Numbers on rods and bearing caps on same side and installed in same numbered cylinders with marks down toward oil pan.

CRANKSHAFT:—9 bearing, integral counterweights.
See Cadillac Shop Notes for main bearing servicing and rear main bearing oil seal renewal.

Journal Diameters—2½ all bearings.

Bearings—Steel-backed, babbitt-lined type (except center bearing which is bronze-backed type).

Clearance—.0015-.0025" (new), .005" Max. (worn).

Bearing Adjustment:—None (no shims). Replace bearings. Do not file bearing caps. Upper halves can be rotated out without removing crankshaft.

End Thrust:—Taken by #5 (center) bearing.

Endplay—.001-.005" (new), .010" (worn).

CAMSHAFT:—5 bearing, non-adjustable chain drive.
See Cadillac Shop Notes for camshaft removal and installation instructions.

Bearing Type—Steel-backed, babbitt bushings.

Clearance—.0013-.0025" (new), .004" (worn).

End Thrust:—Taken by thrust plate flange at front bearing. **Endplay** .005-.015" (new), .020" (worn).

Timing Chain:—Morse Type C #3682-R. Width 1¼". Pitch ⅜". Length 23¼" or 62 links.

Camshaft Setting:—Sprockets marked. Mesh chain with sprockets turned so that '0' marks are adjacent and in line with a straightedge across shaft centers.

VALVES:—	Head Diameter	Stem Diameter	Length
Intake	1.495-1.505"	.3415-.3425"	5 19/32"
Exhaust	1.370-1.380"	.3405-.3415"	5 39/64"

	Seat Angle	Lift	Stem Clearance
Intake	45°	.290"	.0010-.0030"
Exhaust	45°	.302"	.0020-.0040"

NOTE—Worn limit for stem clearance .005" (all valves). Valve heads not slotted.

Valve Guides:—Pressed in block (taper end down).

Valve Lifters:—Wilcox-Rich 'Zero-lash' type hydraulic lifters. Barrel type operating in reamed holes.
See Miscellaneous Section for complete data.

NOTE—Two sizes of lifter used, must be re-installed in same guide hole from which removed. Large lifter stamped 'B' in oil groove. Large guide hole stamped 'B' beside hole. Valves must be removed first.

Lifter Clearance—.0015-.0025" (new), .0035" (worn).

Valve Springs:—Damper used at bottom. Free length 2.074".

	Spring Pressure	Length
Valve Closed	50 lbs.	1 25/32"
Valve Open	100 lbs.	1 15/32"

VALVE TIMING

Tappet Clearance:—None (automatic take-up used).

Valve Timing:—See Camshaft Setting above.

Intake Valves—Open 6° BTDC. Close 28° ALDC.

Exhaust Valves—Open 44° BLDC. Close 12° ATDC.

To Check Timing—#1 cylinder (front—left bank) intake valve should open with piston 6° or .0112" before top dead center with ignition mark 'IG/A' aligned with pointer on chain case cover. NOTE—Intake opening and ignition timing same point.

LUBRICATION

LUBRICATION:—Pressure system. Main oil header in left crankcase wall (feed from pump) for main, connecting rod, and camshaft bearings. Pipe from

this header through filter feeds oil header above each line of valve lifters (non-adjustable auxiliary relief valve at rear of left line).

Oil Pump:—Helical gear type. In rear of crankcase.

Normal Oil Pressure:—15 lbs. idling, 25 lbs. at 30 MPH.

Oil Pressure Regulator:—Piston type built in oil pump. Opens at 30 lbs.

Crankcase Capacity:—11 quarts.

COOLING

COOLING SYSTEM:—Capacity—30 quarts.

See Cadillac Shop Notes for radiator core removal.

Pressure Valve—In radiator filler cap. Opens at 7 lbs.

Water Pump:—Packless type, sealed ball-bearing shaft (2 used—one pump for each bank, driven in tandem with fan pulley by double Vee belt).

See Water Pump Section for complete data.

Removal—Drain cooling system, back off belt adjustment, remove hose and pump mounting screws.

Belt Adjustment:—Loosen two mounting bolts on fan bracket, lift fan pulley and bracket assembly up (right bolt hole slotted, pivots on left bolt), until all slack removed from belt, tighten bolts.

NOTE—Replace belts together as matched sets.

Thermostat:—Harrison. In radiator top tank. Linked to radiator shutters by rod on forward side.

Setting—(Std. Type) Starts to open 153-158° F., fully open at 175° F. (High Reading Type—use with Heaters) Starts to open 168-173° F. Fully open at 190° F.

Shutter Adjustment—Disconnect shutter rod at lever on front of radiator top tank, loosen locknut, turn clevis so that rod extends 1/16" past lever (provides slight tension with shutters closed).

Temperature Gauge:—AC Electric. #1510773 (dash unit), #1510774 (engine unit).

See Miscellaneous Section for complete data.

CLUTCH

CLUTCH:—Long Model 12CB-11½. Single plate, dry disc type. No adjustment required.

See Clutch Section for complete data.

Facings—Spiral or chevron wound woven (spirally grooved), 2 used. Inside Diam. 7". Outside Diam. 11½". Thickness .137".

Adjustment:—Free movement of pedal should be ⅞-1⅛" (adjusting nut on connector link at fork).

Removal:—Remove transmission (see below), drop clutch housing pan, punch mark clutch cover, pressure plate, and flywheel (re-install to these marks), remove 12 cover screws (release tension evenly).

See Cadillac Shop Notes for clutch housing note, locking pin removal (replacement clutches) & balancing data.

TRANSMISSION

TRANSMISSION:—Own Make. Constant-mesh, synchro-mesh, all helical gear type (sliding gear, low & reverse).

See Transmission Section for complete data.

Transmission Control:—Remote steering col. shift.

See Transmission Section for complete data.

Removal:—Remove propeller shaft, free transmission extension at engine rear support, remove crossmember (with engine rear support), disconnect speedometer cable, remove shifter rods from levers at transmission, support transmission at rear, take out mounting screws, pull straight back (plug clutch connection shaft bearing drain hole as soon as accessible to prevent lubricant loss), lower front end of transmission and remove from car.

UNIVERSALS

UNIVERSAL JOINTS:—Mechanics Model 3C. Needle bearing type. Two used.

See Universals Section for complete data.

REAR AXLE

REAR AXLE:—Own Make. Hypoid gear, semi-floating type with Hotchkiss drive.

See Rear Axle Section for complete data.

NOTE—Manufacturer recommends Differential Carrier Assembly be returned to factory for servicing.

Ratio—4.31-1. Backlash—.004-.010". Screw adj.

Removal:—Disconnect drive shaft at rear universal, remove axle shafts (see below), remove capscrews on carrier flange, pull carrier assembly out.

Axle Shaft Removal—Remove rear wheels, take off axle shaft nut, pull wheel hub and brake drum, disconnect brake line and remove backing plate. Pull shaft and bearing assembly out (use Tool J-838).

Wheel Bearing Adjustment—None.

SHOCK ABSORBERS

SHOCK ABSORBERS:—Delco Model 1951-C, D (front), 2010-C, D (rear). Double acting, hydraulic type.

See Shock Absorber Section for complete data.

FRONT SUSPENSION

Front Suspension:—Independent linked parallelogram type with coil springs.

See Front Suspension Section for complete data.

Kingpin Inclination—5°1' crosswise.

Caster—Neg. ½° to Neg. 1°. Adjustable.

Camber—0° to Pos. ½°. Shim adjustment.

Toe In—1/32-3/32" (at rest), 0-1/16" (in motion).

Steering Geometry (Toe-out on turns)—Inner wheel turned 22¾-24¼°, outer wheel 20°.

STEERING GEAR

Steering Gear: Saginaw Worm-and-Double Roller type with offset steering column and universal joint connection (Mechanics type).

See Steering Gear Section for complete data.

BRAKES

BRAKES:—Service. Bendix hydraulic, duo-servo, single anchor type with eccentric adjustment and rigid wheel cylinders. Hand lever applies rear service wheel brakes.

See Brake Section for complete data.

Drums—Centrifuse. Diameter 13.995-14.005".

Lining—Moulded. Length per shoe 13 21/32" (primary), 15 1/32" (secondary). Width 2¼". ¼" thick.

Clearance—.010" at each end of secondary shoe.

Braking Power—43% rear, 57% front wheels.

Hand Brake:—See Servic Brakes.

HOOD REMOVAL & INSTALLATION DATA, GRILLE REMOVAL, FRONT SHEET METAL ASSEMBLY ALIGNMENT:—*See Cadillac Shop Notes.*

MODEL IDENTIFICATION

SERIAL & ENGINE NUMBER: Stamped on left frame side member opposite steering gear and on left side of crankcase to rear of cylinder block. First numbers as follows:

	1941	1942
60S	6,340,001	6,380,001
61	5,340,001	5,380,001
62	8,340,001	8,380,001
63	7,340,001	7,380,001
67	9,340,001	9,380,001
75	3,340,001	3,380,001

TUNE-UP

COMPRESSION:—**Ratio**—7.25-1 Std. Ratio may be lowered by installing special shims between head and block.

Pressure—182 lbs. at 1000 RPM. or 100-105 lbs. at cranking speed.

VACUUM READING: 20-21" steady idling at 7-8 MPH.

FIRING ORDER:—1-8-7-3-6-5-4-2 with cylinders numbered as shown on diagram.

SPARK PLUGS:—AC No. 104. 10 MM. Metric.
Gaps—.025-.030".
NOTE—Use special wrench J-1275 and tighten plugs just enough for good gasket seal (do not use torque wrench with these small plugs).

IGNITION: See Coil, Condenser, and Distributor.
Breaker Gap—.015". **Cam Angle** 31° (closed).
Automatic Advance—12° max. at 2000 RPM (distr.).
Vacuum Advance—9° (distr.) with 15-18" of vacuum.

IGNITION TIMING: See Ignition Timing.
Std. Setting—5° BTDC. with crankshaft timing disc mark "IG/A" at indicator on front of engine.

CARBURETION: See Carburetor & Carb. Equipment.
Idle Setting—Both idle screws set midway between "miss" and "roll" points (Stromberg Carb.), ½-1½ turns open (Carter Carb. '41), ¾-1¾ turns open (Carter Carb. '42). Idle speed 7-8 MPH. (cars with Std. Trans.), exactly 375 Engine RPM. (cars with Hydra-Matic Drive).
Float Level (Carter Carb.)—⅛" (1941), 9/64" (1942) from top of float to gasket seat on cover.
Float Level (Stromberg Carb.)—Fuel level ⅝" below top edge of bowl.
Accelerating Pump—Inner hole (short stroke) normal setting. NOTE—1941 Carter Carburetor not adjustable.

Fuel Pump Pressure: 4¾ lbs. maximum.

VALVES: See Valve Timing.
Tappet Clearance—None in service (automatic hydraulic type take-up used).

STARTING: See Battery, Starter, Generator, Regulator.

IGNITION

IGNITION SWITCH: Delco-Remy. No. 1116298 (60S, 61, 63, 67 '41), 1116299 (62, 75 '41), 1116327 (60S, 62 '42), 1116328 (61, 63, 67, 75 '42), 1116309 (All RHD. Cars '41), 1116329 (All RHD. Cars '42). Switch connected to ignition coil by armored cable.
Ignition Lock—Briggs & Stratton No. 85373. Key Series—8000 to 9499. Groove—No. 15.

COIL: Delco-Remy 1115128. Mounted on the dash.
Ignition Current—2.2 amperes idling, 4.4 stopped.

CONDENSER: Delco-Remy Part No. 1869704.
Capacity—.18-.25 mfd.

DISTRIBUTOR: Delco-Remy 1110807. Single breaker, 8 lobe cam, full automatic advance type with auxiliary vacuum spark control and manual adjustment.
Breaker Gap—.0125-.0175".
Cam Angle or Dwell—31° closed, 14° open (.015" gap).
Breaker Arm Spring Tension—19-23 ounces.
Rotation—Clockwise viewed from above.

Automatic Advance

Distributor Degrees	Distributor R.P.M.	Engine Degrees	Engine R.P.M
Start	500	1	1000
12	2000	24	4000

Vacuum Spark Control 1116030. On distributor (integral type linked directly to breaker plate). Provides additional advance at speeds above idling except when engine acelerated or operated with wide open throttle when spark retarded by return spring within unit. **Plunger Travel**—13/64" total.

Vacuum Advance

Distr. Degrees	Eng. Degrees	Vacuum (" of HG)
Start	0°	5.5-7.5"
9°	18°	15-18"

Manual Adjustment—Permits 10° advance or retard from center position. See Ignition Timing (below).

Removal:—Distributor mounted between cylinder banks at rear of engine. To remove, disconnect vacuum line, take out two hold-down screws in advance arm, lift distributor out.

Installation Note—Turn crankshaft to firing position for #1 cylinder, mesh distributor driven gear with driving gear on camshaft so that slot in upper

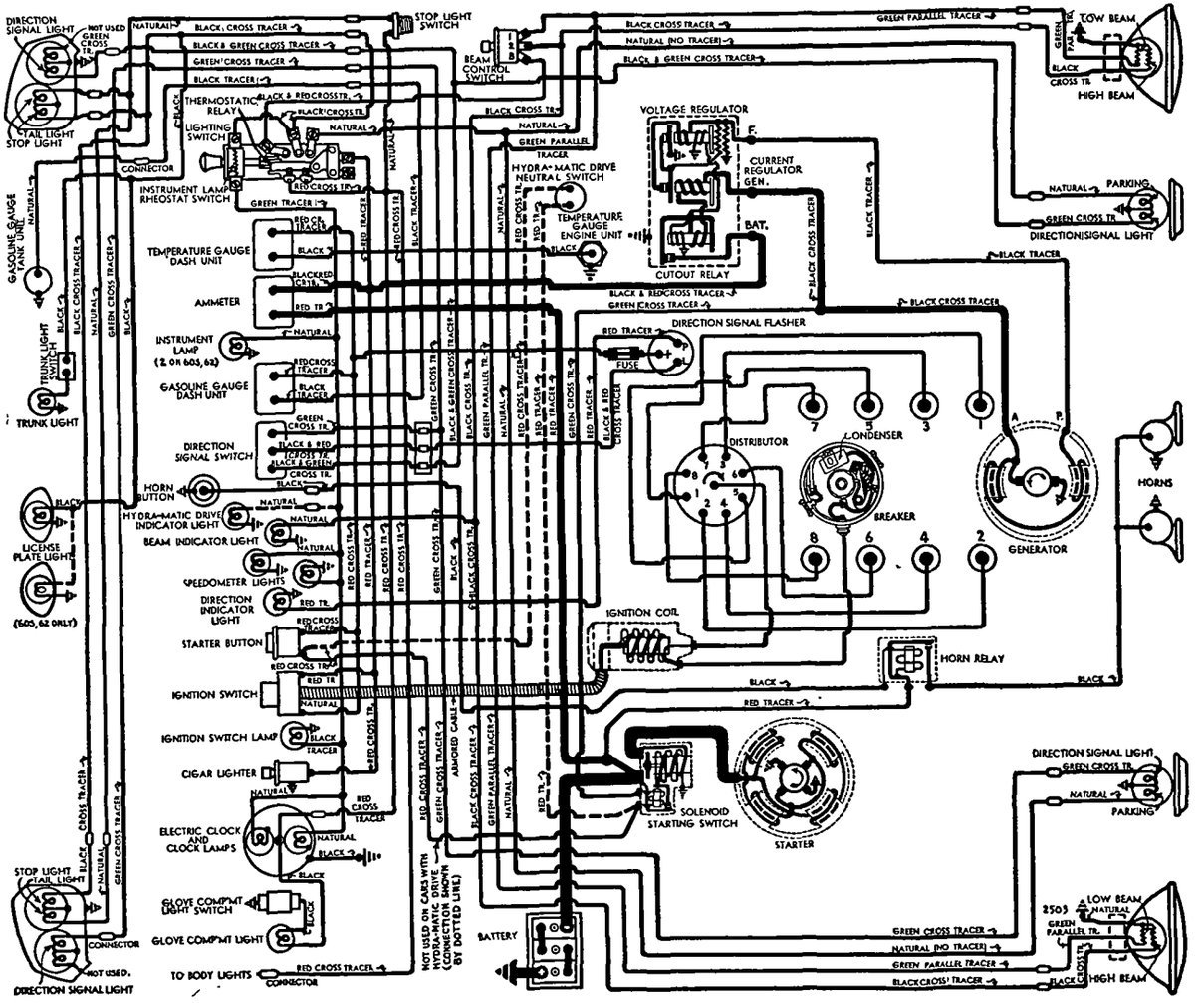

end of drive shaft coupling is offset toward left or rear of engine (narrow part of coupling to left or rear). CAUTION—See that oil pump driveshaft properly lined up (pump may be damaged by pushing shaft down if not aligned).

IGNITION TIMING

IGNITION TIMING:—Setting as given for Ethyl fuel. See Manual Adjustment (following) for correction for fuel of other Octane Rating.

	Flywheel Degrees	Piston Position
All Engines	5° BTDC	.0114" BTDC.

Timing (With Synchroscope)—Recommended method. Disconnect vacuum line at distributor (to avoid damage to unit), clip synchroscope lead to #1 spark plug, idle engine and direct synchroscope light on timing disc behind crankshaft pulley at front of engine. Loosen advance arm clamp bolt, rotate distributor until 'IG/A' mark on timing disc (5° before top dead center mark 'C.1/6') lines up with pointer on chain case cover, tighten clamp bolt, reconnect vacuum line (hold connection with wrench while tightening), check setting for fuel used (see Manual Adjustment below).

Timing (Without Synchroscope)—Turn engine over to firing position for #1 piston (front cylinder left bank) with 'IG/A' mark on timing disc behind crankshaft pulley in line with pointer on chain case cover and distributor rotor at #1 segment in distributor cap. Adjust distributor as directed above.

Manual Adjustment—Should be set for slight ping when accelerating engine with wide open throttle at speeds below 15 MPH. To adjust, loosen holddown screw in advance arm, rotate distributor clockwise (if ping too severe), counter-clockwise (if no ping noted) one graduation at a time. CAUTION—Check engine for faulty spark plugs, excessive carbon deposits, localized hot spots or lean carburetor setting before changing adjustment to correct pinging.

CARBURETOR

CARBURETION:—**Carburetor**—Stromberg Model AAV-26 (1941-42), or Carter Model WDO Type 506-S (1941), Carter Model WCD Type 486-S (1942). 1¼" Dual, downdraft type with Fast Idle and Automatic Choke.
For complete data, refer to Carburetor Index.

Idle Adjustment (All Carburetors)—With engine warm so that choke valve wide open and fast idle inoperative, set throttle stopscrew for slow idle speed of 7-8 MPH. (Std.), exactly 375 Eng. RPM. (Hydra-matic Drive Cars). Adjust both idle screws (1 for each barrel) exactly alike so that engine idles smoothly (turn screws in for leaner mixture). Recheck idle speed. ***See Hydra-matic Drive article in Transmission Section for complete linkage adjustm'ts on cars with Hydra-matic Drive.***

Accelerating Pump Setting—On Stromberg carburetor, and 1942 Carter Carburetor, two holes provided for pump rod engagement as follows:

Inner Hole (short stroke)—Normal setting.

Outer Hole (long stroke)—for maximum discharge.

NOTE—1941 Carter Carburetor not adjustable.

Float Level—Check each model as follows:

Carter—⅛" (1941), 9/64" (1942) from top of float to machined surface (gasket seat) of bowl cover with needle valve seated. Remove gasket and invert assembly to check level.

Stromberg—Fuel level ⅝" below top edge of bowl with engine idling (5 lbs. pressure) or even with bottom of inspection plug hole on side of bowl. Float level 1 13/32" from bottom of floats to gasket surface on bowl cover with valve seated (invert to check) or even with vertical guides of checking tool KMO-269-S-7 (Stromberg No. T-24971) with tool installed on gasket. Floats must be set alike.

Metering Jets & Rods—***See Carter & Stromberg Jet Tables in Carburetor Section for complete data.***

Fast Idle:—Integral (built-in each carburetor).
For complete data, refer to Carb. Equip. Index.

Setting (Carter—1941)—With stopscrew set for 7-8 MPH. hot or slow idle speed, close choke valve so that fast idle screw on high lobe of fast idle cam, adjust screw so that clearance between throttle stopscrew and stop on carburetor casting is .023"

Setting (Carter—1942)—Hold choke valve tightly closed, adjust fast idle screw (on opposite end of throttle shaft from regular throttle stopscrew) for .015" throttle opening (use Gauge T109-44).

Setting (Stromberg)—To check, hold throttle stopscrew against high lobe of fast idle cam, move choke valve toward closed position as far as possible, check remaining choke valve opening with #32 drill (.116"). To adjust, bend fast idle connector rod at point below choke valve for correct valve opening.

Automatic Choke:—Climatic Control (Carter), AAV-26 type (Stromberg). Built-in carburetor.
For complete data, refer to Carb. Equip. Index.

Setting (Carter)—Reference mark on thermostat cover centered on housing scale.

Setting (Stromberg)—'V' mark on thermostat cover in line with reference mark on housing (1941 and 1942 Code 205-10A carburetors marked "13" on cover), 2 Notches Rich (1942 Code 205-10 carburetors marked "19" on cover).

CARB. EQUIPMENT

Air Cleaner: AC No. 1529928 (60S '41), 1529929 (62, 67, 75 '41), 1529297 (61, 63 '41), 1542260 (All Models '42). Heavy duty oil-bath type. NOTE—Replacement Filter Element Assembly for 1942 air cleaner is No. 1542261.

Fuel Pump: AC Type AX. Exchange No. 521 (except 61, 63 '41), No. 522 (61, 63 '41). Combination fuel-and-vacuum type.

Pressure—4¾ lbs. max. (3½-5 lbs.).
For complete data, refer to Carb. Equip. Index.

Gasoline Gauge: AC Electric. Dash Unit No. 1515368 (All models '41, 61, 63, 67, 75 '42), 1516372 (60S, 62 '42). Tank Unit No. 1516269 ('41-42 Models except 75), 1516155 (75 '41-42).
For complete data, refer to Carb. Equip. Index.

BATTERY

BATTERY:—**Delco Model 17K3.** 6 volt, 17 plate, 115 Ampere Hour Capacity (20 hour rate).

Starting Capacity—137 amperes for 20 minutes.

Zero Capacity—300 amperes for 4.3 minutes. Five second voltage, 4.4 volts.

Grounded Terminal—Positive (+) to frame bracket.

Engine Ground—Strap connector from right front engine mounting bracket to frame bracket. On cars with Radio, additional ground strap connected from rear of right hand cylinder head to dash.

Location—On outside of right frame siderail at rear of engine comp't. Accessible with hood raised.

Dimensions—Length 10⅜". Width 7". Height 8 11/16".

Commercial Models—Delco 19-Q3. 6 volt, 19 plate, 125 Ampere Hour Capacity (20 hour rate).

Starting Capacity—145 amperes for 20 minutes.

Zero Capacity—300 amperes for 5.0 minutes. Five second voltage 4.5 volts.

Dimensions & Grounded Terminal—Same as 17K3

STARTER

Delco-Remy Model 1107928 (1941 exc. 75 RHD), 1107931 (1942 ex. 75 RHD.), 1107925 (75 RHD. Cars).

Armature—No. 820158 (all models).

Drive—Overrunning clutch & solenoid pinion shift.

Rotation—Counter-clockwise at commutator end.

Brush Spring Tension—24-28 ozs. each.

Performance Data

Torque	R.P.M.	Volts	Amperes
0 ft. lbs.	5500	5.0	65
16 "	Lock	3.0	600

Removal:—Starter flange mounted on right front face of flywheel housing. To remove, take out flange mounting screws, pull starter forward and remove from below.

Starting Switch:—Delco-Remy Solenoid Switch No. 1542. Mounted on starter and controlled by Push-button Switch No. 1996021 on instrument panel and Neutral Safety Switch (cars with Hydra-Matic Drive).
For complete data, refer to Electrical Equipment Index.

Neutral Safety Switch—Delco-Remy No. 1997750 (1941), 1997766 (1942). Connected in starter solenoid circuit on Hydra-Matic Drive cars so that starter operative only with shift lever in Neutral.
Refer to Hydra-Matic Drive article in Transmission Section for Neutral Switch adjustment directions.

GENERATOR

Delco-Remy Model 1102661 or 1102693 (Std.), 1102686 or 1102694 (Hydra-Matic Drive Cars). Two brush, shunt type with current and voltage control.
NOTE—Generators are alike except for pulleys.

Armature—1878211 (1102661 & 1102686 Generators), 1879002 (1102693 and 1102694 generators).

Charging Rate Adjustment—No adjustment at generator. Charging rate controlled by Voltage Regulator and max. output by Current Regulator.

Maximum Charging Rate—32 amperes, 8.0 volts, 2450 RPM. or 27 MPH. (60S, 61, 62, 63), 25 MPH. (67, 75, & 62, 75 Comml.). Current Regulator Setting (with load or discharged battery). Actual charging rate controlled by Voltage Regulator (dependent on battery).

Performance Data

	Amperes	Volts	R.P.M.
Cold	30①	8.0	1750

①Not maximum output. See Current Regulator.

Rotation—Counter-clockwise at commutator end.

Brush Spring Tension—25 ozs. each.

Field Current—1.75-1.9 amperes at 6.0 volts.

C NTINUED ON NEXT PAGE

C NTINUED FROM PRECEDING PAGE

Removal:—Generator flange mounted between cylinder banks at front of engine and belt driven in tandem with water pump (separate drive belt for fan). To remove, take out flange mounting bolts.

Belt Adjustment:—Loosen generator mounting bolts, raise generator (pivots on left bolt, right bolt hole slotted) until belt deflection is ¾-⅞" midway between generator and crankshaft pulleys.

Fan Belt—Adjust to same tension by raising fan bracket.

REGULATOR

REGULATOR:—Delco-Remy 1118202. Single Core Type. Vibrating Current & Voltage Regulator on dash. *For complete data, refer to Electrical Equipment Index.* CAUTION—Check generator for grounded field coils and leads before changing regulator settings to correct High Charging Rate or High Voltage.

Cutout Relay

Cuts In—6.2-6.7 volts hot, 800 generator RPM.
Cuts Out—0-4.0 ampere discharge current.
Contact Gap—.020" (same for both sets).
Air Gap—.020" (with contacts just closed).

Voltage Regulator

Setting—7.2-7.4 volts hot (operating temperature). Should be checked with cover in place and hot.

To Check—Connect ammeter in charging line at regulator 'BAT' terminal, voltmeter between this terminal and ground. Operate generator at 2800 RPM., adjust charging rate to 8-10 amperes (use variable rheostat or AVR set). With regulator hot (150°F.), decrease generator speed until cutout relay contacts open, then increase speed to 2800 RPM. and check hot voltage setting (above).

To Adjust—Change regulator armature spring tension slightly by bending hanger at lower end of **one spring only.** If further adjustment required, see Single Core Regulator article in Electrical Equipment Section for other (2nd.) spring adjustment.

Air Gap—.070" between center of core and armature with contacts just closing (press down on armature to open contacts, release pressure, check gap at point where contacts just close).

Current Regulator

Setting—34-36 amperes hot (at operating temp.).

To Check—Remove regulator cover, connect short jumper between Voltage Regulator frame and upper contact support bracket (to short out Voltage Regulator), connect ammeter in charging line at regulater 'BAT' terminal, turn on car lights and accessories. Operate generator and increase speed until output remains constant. With regulator hot (150°F), current reading should agree with setting (above).

To Adjust—Same as for Voltage Regulator (above).

Air Gap—.080" (check same as Voltage Regulator).

LIGHTING

LIGHTING:—Headlamps—Guide 'Sealed Beam' type. *For complete data, refer to Electrical Equipment Index.*

Headlamp adjustment—Aim upper beam straight ahead (hot spot center 3" below lamp center hght).

Beam Indicator—In upper left face of speedometer dial. Lighted when Country (upper) beams in use.

Direction Signal—*Refer to Electrical Equip. Index.* Pilot light in upper right face of speedometer dial flashes when Direction Signal operating.

Switches

Lighting—Delco-Remy No. 1995015 (1941), 1995023 (1942). Switch has instrument light rheostat on handle.

Beam Selector—Delco-Remy No. 1997008 (1941 and 1942 RHD. cars), 1997010 (1942).

Direction Signal—Delco-Remy No. 1995505 (Std. '41), 1995506 (RHD. '41), 1995509 (Std. '42 exc. Hydra-Matic Cars), 1995511 (Hydra-Matic Drive Cars '42), 1995512 (RHD. '42).

Bulb Specifications

Position	Candlepower	Mazda No.
Headlamps		Sealed Beam
Park & Frt. Dir. Signal	21-3	1154
Rear Direction Signal	21-3	1154
Beam & Dir. Sig. Indicators	1	51
Instrument, Clock, Radio	1.5	55
Glove Comp't., Trunk	1.5	55
Ignition Lock	1	51
Stop & Tail	21-3	1154
Rear License Plate	3	63
Dome, Quarter	15	87

MISC. ELECTRICAL

FUSES:—Direction Signal—9 ampere. In connector in feed wire on back of instrument panel near Flasher.
Convertible Top Motor—9 ampere. In switch lead.
Center Partition Division Glass Motor—30 ampere.

THERMOSTATIC RELAY:—Delco-Remy. On lighting switch. Contacts remain closed with 30 amperes, open in 3 minutes with 42 amps. at 70°. Not adj.

HORNS: Delco-Remy Model K-33-H. No. 1999537 (Low Note '41), 1999538 (High Note '41), 1999577 (Low Note '42), 1999578 (High Note '42). Vibrator type, blended tone, twin horns operated by relay.

NOTE—Horns mounted in front of radiator below filler plate, Low Note horn—right, high note—left.

Type	Current (at 6 volts)	Air Gap
1999537 Low Note	19-21 amperes	.045-.050"
1999577 Low Note	19-21 amperes	.047-.052"
1999538 High Note	18-20 amperes	.036-.040"
1999578 High Note	18-20 amperes	.039-.044"

Horn Relay:—Delco-Remy No. 1116775.
Contact Gap—.025". **Air Gap**—.015" (closed).
Contacts Close—2.75-4.0 volts.

ENGINE

ENGINE SPECIFICATIONS:—Own. 8 cylinder, 90° Vee, L head type. Upper crankcase and cylinder blocks cast Enbloc. **Bore**—3½". **Stroke**—4½".

Displacement—346 cu. ins. **Rated HP**—39.20.

Developed Horsepower—150 at 3400 RPM.

Compression Ratio—7.25-1 Std. cast-iron head. *See Cadillac Shop Notes for Cylinder Head Installation and Shims for Lowering Compression Ratio.*

Compression Pressure—182 lbs. at 1000 RPM or 100-105 lbs. at cranking speed.

Vacuum Reading—Steady 20-21" idling at 7-8 MPH.

PISTONS:—Lynite or Bohn Lo-Ex aluminum alloy, 'T' slot, cam ground, anodized finish. **Length**—4⅛".

Weight—Stripped 18.30 ozs. (1941), 18.32 ozs. (1942); Complete 25.10 ozs. (1941), 25.46 ozs. (1942).

Removal—Pistons and rods removed from above.

Clearance—.0020-.0022" (1941), .0023-.0025" (1942) at top of skirt (at 70° F.).

Original Bore & Piston Sizes, Replacement Pistons:—*See Cadillac Shop Notes for sizes and markings.*

Fitting New Pistons:—*See Cadillac Shop Notes for micrometer and feeler gauge data.*

Installing Pistons:—T-slot to left, for all pistons.

PISTON RINGS:—4 rings, all above pin (heat-dam groove above top ring). #1 Compression (PC Type 200—upper inner edge notched), #2 Comp. (70—lower outer edge notched), #3 Oil (X-90) & #4 Oil (85) slotted types. Drain holes in oil ring grooves.

Ring	Width	End Gap	Side Clearance
Compr. (Top)	3/32"	.007-.023"	.0023-.0041"
Compr. (#2)	⅛"	.007-.023"	.0013-.0026"
Oil Control	5/32"	.007-.023"	.0013-.0026"

NOTE—End gap .007-.012" (Compr. Rings), .007-.015" (Oil Ring) for 1941 models.

Replacem't Rings:—.003" .005" .010" .015" .030" oversize.

PISTON PIN:—Diameter—⅞". **Length**—3 1/16". Floating type. *See Cadillac Shop Notes for oversize pin data.*

Pin Fit in Piston—.0001-.0003" (New 1941), .00005-.0001" (New 1942) or free hand press fit in each piston boss at 70°F. Worn limit .0006" (1941), .0007" (1942).

Pin Fit in Rod Bushing—.0002-.0008" clearance (New), 0018" (Worn limit 1941), .0014" (Worn liimt (1942).

CONNECTING ROD: Weight 37.472 ozs. (1941), 37.68 ozs. (1942). **Length** 8¾".
Crankpin Journal Diameter—2.4590-2.4595".
Lower Bearing—Steel-backed, babbitt-lined type.
Clearance—.0015-.0025" (new), .0045" Max. (worn).
Sideplay—.008-.014".

Bearing Adjustment:—None (no shims). Replace bearings. Do not file rods or caps. *See Cadillac Shop Notes for connecting rod bearing removal & installation.*

Installing Rods:—Numbers on rods and bearing caps on same side and toward bottom of engine.

CRANKSHAFT:—3 bearing with 6 counterweights. *See Cadillac Shop Notes for main bearing servicing and rear main bearing oil seal renewal.*
Journal Diameters—2½" all bearings.
Bearings—Removable steel-backed, babbitt-lined.
Clearance—.0015-.0025" (new), .005" Max. (worn).

Bearing Adjustment:—None (no shims). Replace bearings. Do not file bearing caps.

End Thrust:—Taken by center (#2) bearing.
Endplay—.001-.005" (new), .010" Max. (worn).

CAMSHAFT:—3 bearing, non-adjustable chain drive. *See Cadillac Special Shop Notes for Camshaft Removal and Camshaft Bushing data.*
Journal Diameters—#1 and #2, 2.4071-2.4078"; #3, 2.0009-2.0016".
Bearing Type—Steel-backed, babbitt bushings.
Clearance—.0015-.0033" (new), .0045" Max. (worn).

End Thrust:—Taken by thrust plate behind camshaft sprocket. No endplay should be permitted.

Timing Chain: Link-Belt, Type 3766TWC-19 (1941), 3766TC-15 (1942). Width 1 11/32" (1941), 1⅛" (1942), Pitch ⅜", Length 23¼" or 62 links.
NOTE—Install chain 'endless' as an assembly with sprockets. Use Pilot Tool J-836 on end of camshaft.

Camshaft Setting:—Sprockets marked. Mesh chain with sprockets turned so that '0' marks are adjacent and in line with a straightedge across shaft centers.

ENGINE

C NTINUED FROM PRECEDING PAGE

VALVES:—

	Head Diameter	Stem Diameter	Length
Intake	1.876-1.886"	.3415-.3425"	5 33/64"
Exhaust	1.626-1.636"	.3405-.3415"	5 33/64"

	Seat Angle	Lift	Stem Clearance
Intake	45°	.335"	.0012-.0032"
Exhaust	45°	.345"	.0022-.0042"

NOTE—Stem clearance worn limit .005" (all valves). *See Cadillac Shop Notes for valve servicing.*

Valve Guides:—Press in block (long step end down).

Valve Lifters:—Wilcox-Rich 'Zero-lash' type hydraulic lifters (Mushroom type) in removable brackets. *See Miscellaneous Section for complete data.*

Clearance—.0010-.0024" (new), .0035" (worn).

Valve Springs:—Free length 2.210".

	Spring Pressure	Spring Length
Valve Closed	63½ lbs	1.926"
Valve Open	145 lbs	1.581"

VALVE TIMING

Tappet Clearance:—None in service (hydraulic type lifter). *See Valve Servicing in Cadillac Shop Notes.*

Valve Timing:—See Camshaft Setting above.

Intake Valves—Open at TDC. Close 42° ALDC.

Exhaust Valves—Open 52° BLDC. Close 10° ATDC.

Valve Timing Check—#1 cylinder (front-left bank) intake valve should open with piston at TDC and mark 'C.1/6' on crankshaft pulley aligned with chain case cover pointer (on right side).

LUBRICATION

LUBRICATION:—Pressure type (gear type oil pump in crankcase). *See Cadillac Shop Notes for oil pump data and oil pressure regulator specifications.*

Normal Oil Pressure:—15 lbs. idling, 25 lbs. at 30 MPH.

Oil Pressure Regulator:—Opens at 30 lbs. On oil pump. Non-adjustable. **Crankcase Capacity**—7 quarts.

COOLING

COOLING SYSTEM:—**Capacity**—25 quarts.

Pressure Valve—In filler cap, opens at 9 lbs.

Water Pump:—Self-adjusting packing type. *See Water Pump Section for complete data.*

Thermostat (1941): Mounted in radiator top tank, linked to radiator shutters by rod on forward side. **Setting**—(Std. Type) Starts to open 153-158° F., fully open 175° F. (High Reading Type—use with Heaters) Starts to open 168-173° F. Fully open 190°. *See Cadillac Shop Notes for Thermostat Tests and Radiator Shutter servicing and Radiator Core removal.*

Thermostat (1942): New blocking type mounted in radiator inlet elbow (by-pass for re-circulation when thermostat closed). NOTE—Shutters not used on 1942 models.

Setting (Std.)—Starts to open at 161° F. *See Cadillac Special Shop Notes for Radiator Core removal data.*

Temperature Gauge:—AC Electric. #1510773 (dash unit—except 60S, 62 '42), 1511175 (Dash Unit 60S, 62 '42). No. 1510774 (Engine Unit—all models). *See Miscellaneous Section for complete data.*

CLUTCH

CLUTCH:—Long Model 11CF-10½TI (61, 62, 63, 60S), 11CF-TI (67, 75, 62 & 75 Comm'l). Semi-centrifugal, single plate, dry disc type. *See Clutch Section for complete data.*

Facings—Woven (spirally grooved) type, 2 required. Inside Diameter 7" (all). Outside Diameter 10½" (61, 62, 63, 60S), 11" (others). Thickness .135".

Pedal Adjustment:—Pedal free travel ⅞-1⅛" (adjusting nut on connector link at clutch fork).

Removal:—Remove transmission (see below), drop clutch housing pan, remove release yoke and sleeve, punch mark clutch cover, pressure plate and flywheel, remove 6 cover screws. NOTE—Install driven member with oil guard to rear. *See Cadillac Shop Notes for clutch locking pin removal (on replacement clutches) and balancing data.*

TRANSMISSION

TRANSMISSION:—Own Make. All helical gear, constant-mesh, synchro-mesh (second and high), sliding gear (low and reverse) with remote shift. *See Transmission Section for complete data.*

Production Change—*See Cadillac Shop Notes for Transmission Extension Housing change.*

Transmission Control:—Remote steering col. shift. *See Transmission Section for complete data.*

Removal:—Support engine with jack under rear end of oil pan (use wooden block to avoid damage to pan), remove propeller shaft (disconnect front and rear universals), free transmission extension at engine rear support, remove crossmember with engine rear support, disconnect speedometer cable, remove shifter rods from levers at transmission, support transmission at rear, take out mounting screws, pull straight back (plug clutch connection shaft bearing drain hole as soon as accessible to prevent lubricant loss), lower front end of transmission and remove.

HYDRA-MATIC DRIVE

HYDRA-MATIC DRIVE (OPTL.):—Own Make—Consists of fluid coupling & automatic transmission. *See Transmission Section for complete data.*

UNIVERSALS

UNIVERSAL JOINTS:—Mechanics 3C. Needle bearing. NOTE—One piece propeller shaft used. Slip joint at rear of transmission ahead of front universal. *See Universals Section for complete data.*

REAR AXLE

REAR AXLE:—Own Make. Hypoid gear, semi-floating type with Hotchkiss drive. NOTE—Manufacturer recommends Carrier Assembly be serviced by factory. *See Rear Axle Section for complete data.*

Ratio—3.77-1 (Std. 61, 62, 63, 60S; Optl. 67, 75). **3.36-1** Economy (Optl. 61, 62, 63, 60S). **4.27-1** (Std. 67, 75, 62 & 75 Comm'l.). **4.58-1** (75 Special Bus).

NOTE—Ratio identified by number stamped on bottom of differential case beneath pinion shaft as follows: 3.77-1 (no mark), 3.36-1 ("6"), 4.27-1 ("4").

Backlash—.004-.010". Screw adjustment.

Removal:—Disconnect rear universal (do not disengage spline joint at transmission), remove axle shafts (see below) and carrier mounting bolt nuts.

Axle Shaft Removal:—Remove wheel, dust cap and axle shaft nut. Pull hub and drum, disconnect brake line, remove brake backing plate. Pull shaft and bearing assembly (use Tool J-838).

Wheel Bearing Adjustment—None.

SHOCK ABSORBERS

SHOCK ABSORBERS:—Delco. FRONT 1946-G, H (all). REAR 1754-N, P (61, 62, 63, 60S), 2008-C, D (67), 2007-N, P (75), 1751-V, W (62 & 75 Comm'l.). Double acting, opposed-piston, hydraulic types. *See Shock Absorber Section for complete data.*

FRONT SUSPENSION

Front Suspension:—Independent, linked parallelogram type with coil springs. *See Front Suspension Section for complete data.*

NOTE—Specifications below correct with car at curb weight (car unloaded with full gas tank).

Kingpin Inclination—5°51' crosswise (for 0° camber).

Caster—Neg. 1¾° to Neg. 2¾°. Equal within ½°.

Camber—Neg. ⅜° to Pos. ⅜°. Equal within ½°.

Toe In—1/32-3/32" (at rest). Loosen clamp bolts, turn adjusters at outer end of each rod equally.

Steering Geometry (Toe-out on turns)—Outer wheel turned 20°. Inner wheel as follows:

	61, 62, 63, 60S	67, 75, 62 & 75 Comm'l.
Left turn	25°25'	24°7'
Right turn	24°42'	23°6'

STEERING GEAR

STEERING:—Steering Gear—Saginaw Ball Bearing Worm-and-Nut (Recirculating Ball) type. *See Steering Gear Section for complete data.*

BRAKES

BRAKES:—Service—Bendix hydraulic, duo-servo, single anchor type without eccentric adjustment. Hand lever applies rear wheel service brakes. *See Brake Section for complete data.*

Drums—Centrifuse. Diameter 11.995-12.005".

Lining—Molded. Length 11 17/32" (primary), 12 31/32" (secondary). Width 2¼" (front), 2" (rear 61, 62, 63, 60S), 2½" (rear Others), Thickness 3/16".

Clearance—.015" at both ends of secondary shoe with primary shoe forced out against drum.

Hand Brake:—See Service Brakes above.

MISC. MECHANICAL

Power Operated Convertible Top: Vacuum Power (1941), Electric Type (1942). *See Miscellaneous Section for complete data.*

HOOD LOCK (1946-47): Press back on radiator ornament to free manual and safety catches, lift hood up.

HOOD LOCK (48-61, 62, 60S): Pull release knob at lower left side of instrument panel, release safety catch under front edge of hood, raise front end of hood.

HOOD LOCK ADJUSTMENT, HOOD REMOVAL & INSTALLATION, RADIATOR GRILLE REMOVAL & INSTALLATION, RADIATOR SHROUD REMOVAL & INSTALLATION, FENDER REMOVAL & INSTALLATION: *See Cadillac Shop Notes.*

MODEL IDENTIFICATION

ENGINE SERIAL NUMBER: Stamped on right front of crankcase above water pump and on right frame side member to rear of engine support bracket.

1946-47 ENGINE SERIAL NUMBERS

Series	Wheelbase	1946 First Number:	1947
60S Special	133"	6,400,001	6,420,001
61	126"	5,400,001	5,420,001
62	129"	8,400,001	8,420,001
75	136"	3,400,001	3,420,001
75 Comm'l	163"	3,400,001	3,420,001

1948 ENGINE SERIAL NUMBERS

Series	Wheelbase	First 1948 Number
48-61	126"	486100000
48-62	126"	486200000
48-60S Special	133"	486000000
48-75	136"	487500000
48-76 Commercial	163"	487600000

Identification—First two figures indicate year, third and fourth figures indicate model (last five figures numbered consecutively regardless of series).

ENGINE UNIT NUMBER: Stamped on lower end of rough flat surface on crankcase behind right hand block (directly above boss for clutch housing locating pin).

1948 Numbers	Engine Unit Number Std. Transmission	Hydra-Matic
48-60S, 61, 62	8-K-1 up	9-K-1 up
48-75, 76	2-K-1 up	9-K-1 up

TUNE-UP

COMPRESSION: Pressure—100-105 lbs. at cranking speed (7.25-1 Std. Cast iron head).

VACUUM READING: Steady 20-21" idling at 7-8 MPH.

FIRING ORDER: 1-8-7-3-6-5-4-2 (Cyl. Nos. 1-3-5-7 Left Bank, 2-4-6-8 Right Bank, front-to-rear).

SPARK PLUG GAP: .028-.032".
Plugs—AC No. 104. 10 mm. Metric type.

►*CAUTION—Tighten plugs just enough for good gasket seal. Do not use Torque Wrench.*

IGNITION: *See Coil, Condenser, and Distributor.*
Breaker Gap—.015" Limits .0125-.0175".
Cam Angle—31° closed (with .015" gap).
Breaker Arm Spring Tension—19-23 ozs.
Automatic & Vacuum Advance—*See Distributor.*

IGNITION TIMING: 5° BTDC.
Timing Procedure—*See Ignition Timing.*
Timing Mark—'IG/A' on timing disc behind crankshaft pulley lined up with pointer on chain case.
Manual Adjustment Setting—Set for slight ping accelerating with wide throttle below 15 MPH.

CARBURETION: *See Carburetor & Carb. Equipment.*
Idle Setting—Adjust both screws exactly alike for smooth idle (½-1½ turns open for Carter). Turning screws out gives richer mixture.
Idle Speed (standard)—375-380 RPM.
Idle Speed (Hydra-Matic)—375 RPM. with selector lever in drive (DR) position.
Float Level (Carter)—9/64" from top of each float to gasket seat on cover with valve seated (invert to check). Fuel level even with bottom of inspection plug hole on side of bowl with engine idling.
Float Level (Stromberg)—Fuel level ⅝" below top edge of bowl or even with bottom of inspection hole on side of bowl with engine idling.
Accelerating Pump (Carter)—No adjustment.
Accelerating Pump (Stromberg)—Inner hole Normal, outer hole (max. stroke) used when required.

Fuel Pump Pressure: 4¾ lbs. (3½-5) max.

VALVE TAPPET CLEARANCE: None in service (automatic hydraulic type tappet take-up).
Valve Timing Check—*See Valve Timing.*

STARTING: *See Battery, Starter, Generator, Regulator.*

IGNITION

IGNITION SWITCH ('46-47) Delco-Remy 1116327 (60S 62), 1116328 (61, 75, 75 Comm'l '46), 1116383 (75 Comm'l '47). Connected to ignition coil by armored cable.
Ignition Lock—Briggs & Stratton No. 85373 (Uncoded), 85372 (Coded).
Key Series—8000 to 9499. **Groove**—No. 15.

IGNITION SWITCH (1948): Delco-Remy No. 1116451.
Ignition Lock—Briggs & Stratton No. 45791 (Uncoded), 45792 (Coded).
Key Series—8000 to 9499. **Groove**—No. 15.

COIL: Delco-Remy 1115129 ('46-47), 1115380 ('48). On dash. Armored cable on 1946-47 only.
Ignition Current—2.2 amperes idling, 4.4 stopped.

CONDENSER: Delco-Remy Part No. 1869704.
Capacity—.18-.25 microfarad.

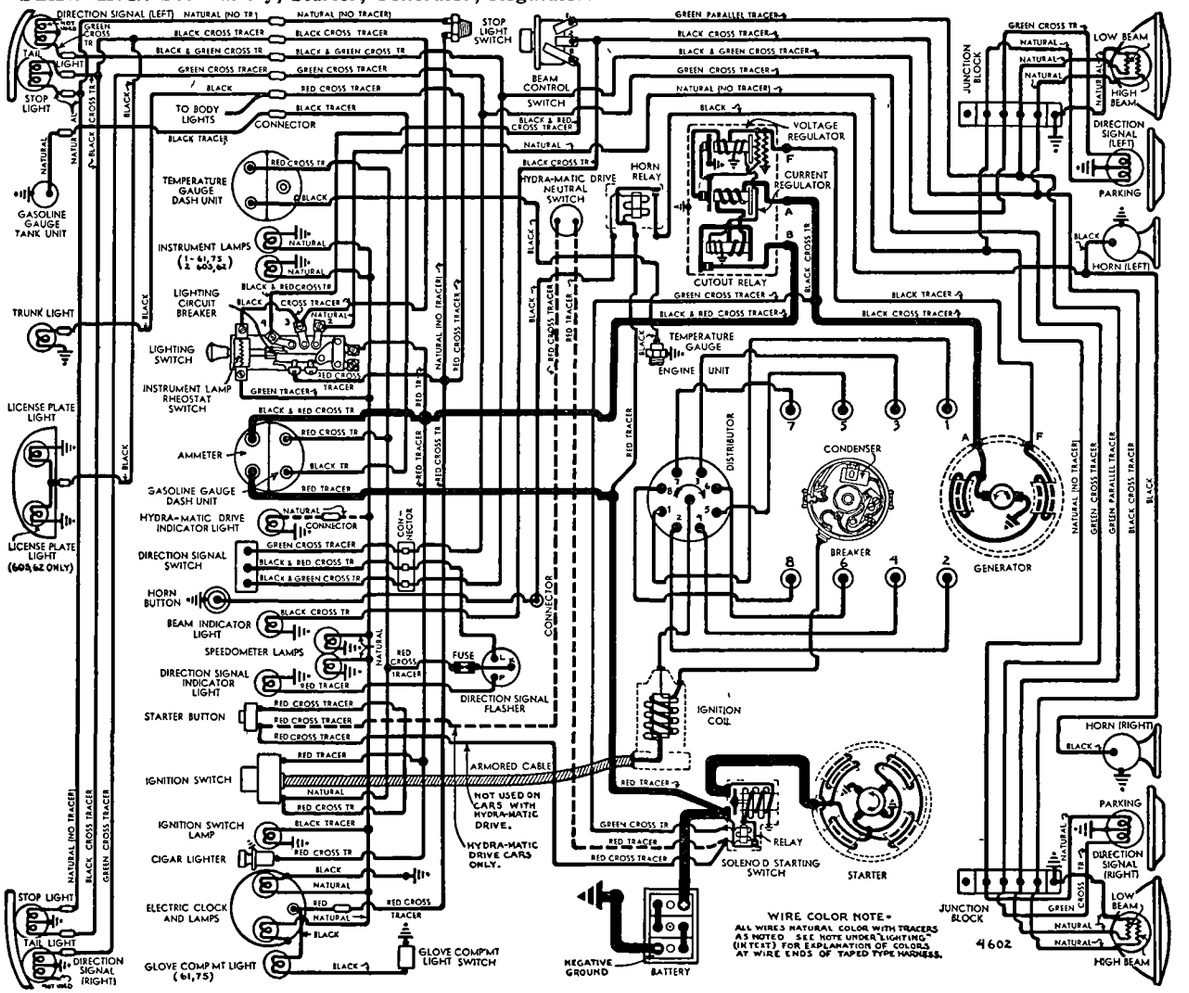

►SEE 1946 WIRE HARNESS CHANGE NOTE (UNDER LIGHTING) FOR WIRE COLORS
1946-47 CADILLAC V8

DISTRIBUTOR: Delco-Remy No. 1110807. Full automatic advance type with auxiliary vacuum spark control and manual adjustment ("octane selector").
Breaker Gap—.015". Limits .0125-.0175".
Cam Angle—31° closed (with .015" gap).
Breaker Arm Spring Tension—19-23 ozs.
Rotation—Clockwise viewed from above.

Automatic Advance

Distributor Degrees	R.P.M.	Engine Degrees	R.P.M.
Start	500	1	1000
12	2000	24	4000

Manual Adjustment—Permits 10° advance or retard from center position. See Ignition Timing (below).

Vacuum Spark Control: Delco-Remy No. 1116030. Integral type linked directly to breaker plate). Provides additional advance at speeds above idling except when engine accelerated or operated with wide open throttle when spark retarded by return spring within unit. **Plunger Travel**—13/64" total.

Vacuum Advance

Distr. Degrees	Eng. Degrees	Vacuum (" of HG)
Start	0°	5.5-7.5"
9°	18°	15-18"

Removal:—To remove distributor, disconnect vacuum line, remove 2 hold-down screws in advance arm.
Installation Note—Turn crankshaft to top dead center position for No. 1 cylinder ("C. 1/6" timing disc mark in line with pointer on chain case cover). Set distributor loosely in support, mesh distributor driven gear with bronze idler gear so that distributor rotor is at No. 1 plug wire in cap. CAUTION—See that oil pump drive shaft properly lined up (to avoid damaging pump).

IGNITION TIMING

	Flywheel Degrees	Piston Position
Std. Setting	5° BTDC	.0114" BTDC.

For 80 octane fuel. See Manual Adjustment (below) for other fuels.

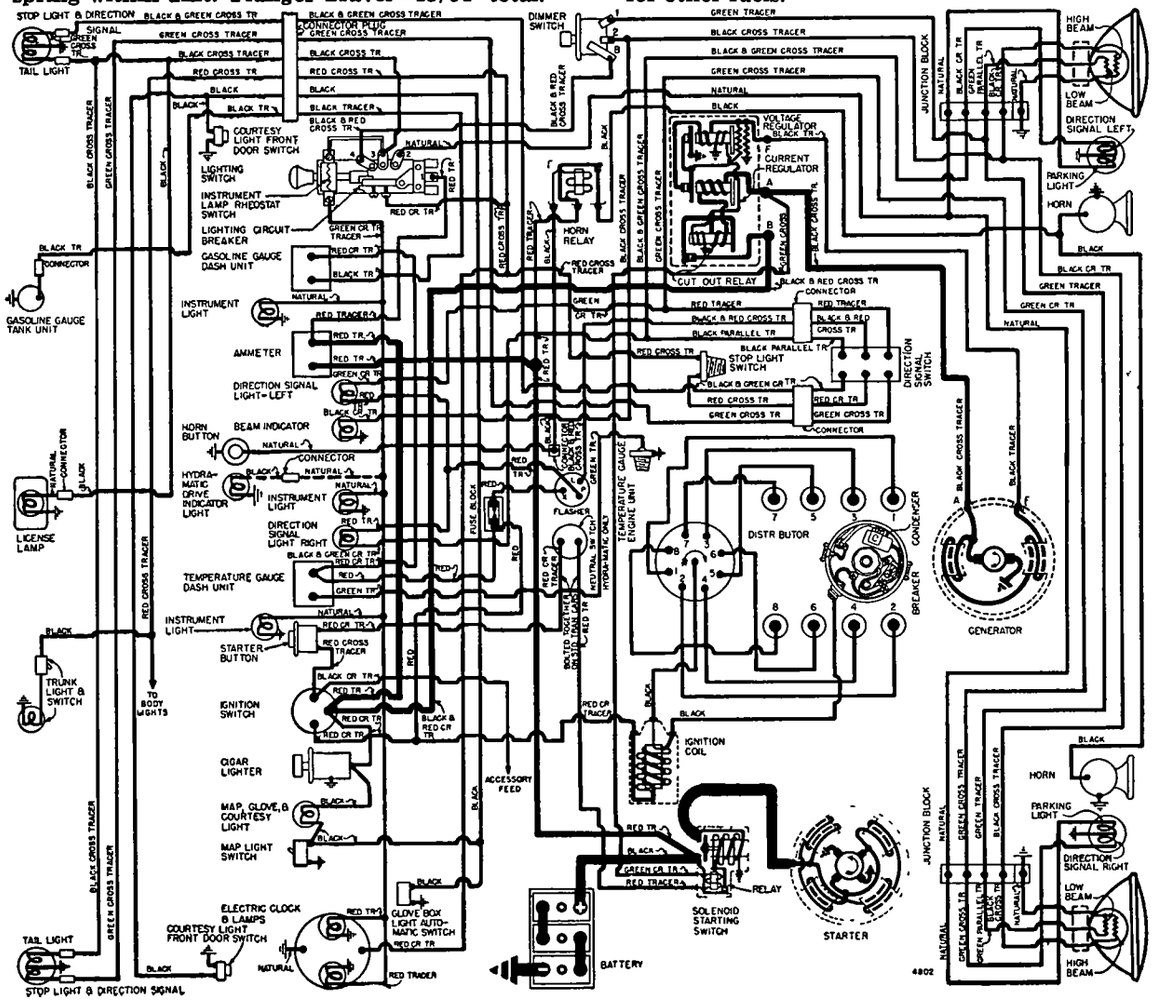

1948 CADILLAC V8

Timing Mark—"IG/A" on timing disc behind crankshaft pulley lined up with pointer on chain case.

Timing (With Synchroscope)—Recommended method. Disconnect vacuum line at distributor (to avoid damage to unit), clip synchroscope lead to #1 spark plug, idle engine and direct synchroscope light on timing disc behind crankshaft pulley at front of engine. Loosen advance arm hold-down screw, center pointer on scale, tighten screw. Loosen advance arm clamp bolt, rotate distributor until 'IG/A' mark on timing disc (5° before top dead center mark 'C.1/6' lines up with pointer on chain case cover, tighten clamp bolt, reconnect vacuum line (hold connection with wrench while tightening). See Manual Adjustment (below).

Timing (Without Synchroscope)—Disconnect vacuum line at distributor (to avoid damaging vacuum unit). Turn engine over to firing position for #1 piston (front cylinder, left bank) with 'IG/A' mark (5° before top dead center mark 'C.1/6') on timing disc behind crankshaft pulley lined up with pointer on chain case cover. Adjust distributor as directed above until contacts just open.

Manual Adjustment—Should be set for slight ping when accelerating engine with wide open throttle at speeds below 15 MPH. To adjust, loosen holddown screw in advance arm, rotate distributor clockwise (if ping too severe), counter-clockwise (if no ping noted) one graduation at a time. CAUTION—Check engine for faulty spark plugs, excessive carbon deposits, localized hot spots or lean carburetor setting before changing adjustment to correct pinging.

CARBURETOR

Year	Carter WCD	Stromberg
1946-47	595S	AAV-26 Code 205-14, A, B
1948	595S, SA	AAV-26 Code 205-14B

1¼" dual (double barrel) downdraft types with automatic choke.

Casting No. (Carter)—No. 456 on face of flange.

Code No. (Stromberg)—Stamped either on the body or on a metal tag attached to body.

See Carburetor Section for complete data.

Settings (Idle Setting, Float Level, and Accelerating Pump): ***See Tune-Up data.***

Hydra-Matic Throttle Linkage Adjustment: ***See Cadillac Hydra-Matic Drive article in Transmission Section.***

Metering Jets & Rods—***Refer to Carburetor Index for Carter & Stromberg Downdraft Carb. Jet Tables.***

Fast Idle: Carter Dual (WCD) Carburetor type or Stromberg Type (for AAV-26 Carburetor).

See Carburetion Equipment Section for data.

Setting (Carter)—Hold choke valve tightly closed, adjust fast idle screw (on opposite end of throttle shaft from regular throttle stopscrew) for .018" throttle opening (use Gauge T109-44).

Setting (Stromberg) Hold throttle stopscrew against high lobe of fast idle cam, move choke valve toward closed position as far as possible, check choke valve opening. Adjust by bending fast idle connector rod so that choke valve opening is .098" (#40 drill rod).

Automatic Choke: Carter Climatic Control (Dual carburetor) or Stromberg Type (AAV-26 Carburetor).

See Carburetion Equipment Section for data.

C NTINUED ON NEXT PA E

C NTINUED FROM PRECEDING PAGE

Setting (Carter)—Reference mark on thermostat coil housing centered on scale on choke housing.

Setting (Stromberg)—'V' mark on thermostat cover in line with reference mark on housing.

CARB. EQUIPMENT

Air Cleaner:—AC #1542260 heavy duty oil-bath type. Use Replacement Filter Element Assembly #1542261.

Servicing—Drain, clean, and refill with 1 pint SAE No. 50 (Summer), No. 40 (Winter) engine oil at 2000 mile intervals. NOTE—Clean filter element in oil filler cap when crankcase drained.

Fuel Pump: AC Type AX. No. 1523575, 1537088, or 1539089. Fuel & Vacuum type.

Replacement Pump—AC No. 575.

Pressure—4¾ lbs. (3½-5) maximum.

See Carburetion Equipment Section for data.

Gasoline Gauge: AC. Electric type.

Dash Unit ('46-47 Series 60S, 62)—AC No. 1516372.

Dash Unit ('46-47 Series 61, 75)—AC No. 1515368.

Dash Unit (1948 All Series)—AC No. 1516971.

Tank Unit—AC 1516269 (60S, 61, 62), 1516155 (75, 76).

See Carburetion Equipment Section for data.

BATTERY

STANDARD

Delco 17K3 or 4. 6 volt, 17 plate, 115 Ampere Hour Capacity (20 hour rate).

►*CAUTION—Battery is reversed in carrier from previous models and NEGATIVE TERMINAL is now grounded.*

Starting Capacity—137 amperes for 20 minutes.

Zero Capacity—300 amperes for 4.3 minutes. Five second voltage, 4.4 volts.

Grounded Terminal—Negative (—) to frame.

Engine Ground—Strap connector from right front engine mounting bracket to frame bracket.

Location—In engine compartment on right side.

Dimensions Length 10⅜". Width 7". Height 8 11/16".

COMMERCIAL MODELS

Delco 19Q3 or 4. 6 volt, 19 plate, 125 Ampere Hour Capacity (20 hour rate).

Starting Capacity—145 amperes for 20 minutes.

Zero Capacity—300 amperes for 5.0 minutes. Five second voltage 4.5 volts.

Dimensions & Grounded Terminal—Same as above.

STARTER

Delco-Remy Model 1107931. Armature No. 820158.

►NOTE—On cars with Hydra-Matic Drive, starter operative only with Selector Lever in neutral (starter solenoid relay circuit controlled by Hydra-Matic Drive Neutral Safety Switch).

Drive—Overrunning clutch (solenoid pinion shift).

Rotation—Counter-clockwise at commutator end.

Brush Spring Tension—24-28 ozs. each.

Performance Data

Torque	R.P.M.	Volts	Amperes
0 ft. lbs.	5500	5.67	65
16 "	Lock	3.0	600

Removal:—Starter flange mounted on right front face of flywheel housing. To remove, take out flange mounting screws, pull starter out.

Starting Switch:—Delco-Remy Solenoid Switch No. 1118102. Mounted on starter and controlled by Push-button Switch No. 1996009 on instrument panel and Neutral Safety Switch 1997766 (on Hydra-Matic).

See Electrical Equipment Section for complete data.

GENERATOR

Delco-Remy Model 1102693. Armature No. 1879002. Two brush type with voltage and current regulation.

►*NOTE—Same generator as used on previous cars but polarity is reversed for Negative Ground.*

►**Pulley Note to Increase Charging Rate**—Use No. 1882988 pulley (O. D. of front flange 3 1/16"—std. pulley No. 1878203 O. D. 3 17/32").

Charging Rate Adjustment—None. See Regulator.

Maximum Charging Rate—34-36 amperes at 8.0 volts, 27 MPH (current regulator setting—with load or discharged battery). Actual charging rate controlled by voltage regulator and dependent on battery condition.

Performance Data

	Amperes	Volts	R.P.M.
Cold	30①	8.0	1750

①—Not maximum output. See Current Regulator.

Rotation—Counter-clockwise at commutator end.

Brush Spring Tension—25 ozs. each.

Field Current—1.75-1.9 amperes at 6.0 volts.

Removal:—Generator flange mounted between cylinder banks at front of engine and belt driven in tandem with water pump (separate drive belt for fan). To remove, take out flange mounting bolts.

Belt Adjustment:—Loosen generator mounting bolts, raise generator (pivots on left bolt, right bolt hole slotted) until belt deflection is ¾-⅞" when pushing belt inward midway between generator and crankshaft pulleys.

►*CAUTION—Belts are new heat-and-oil resistant synthetic rubber type (must be set to exact specifications).*

Fan Belt—Adjust to same specifications as Generator Belt by changing fan bracket position.

REGULATOR

Delco-Remy Model No. 1118242. Single Core Type. Vibrating type voltage and current regulator.

►*CAUTION—This regulator used with Negative Battery Ground and generators used with it must be Polarized for this same polarity.*

CAUTION—Check generator for grounded field coils and leads before changing regulator settings to correct High Charging Rate or High Voltage.

Cutout Relay

Cuts In—6.2-6.7 volts hot, 800 gen. RPM.

Cuts Out—0-4.0 ampere discharge current.

Contact Gap—.020" (same for both sets).

Air Gap—.020" (with contacts just closed).

Voltage Regulator

Setting—7.2-7.4 volts hot (operating temperature).

Regulator over-compensated for temperature. Should be checked with cover in place and hot.

Air Gap—.070" between center of core and armature with contacts just closing (press down on armature to open contacts, release pressure, check gap at point where contacts just close).

Checking & Adjustment—*See Electrical Equip. Section.*

Current Regulator

Setting—34-36 amperes hot (operating temp.).

Air Gap—.080" (check same as Voltage Regulator).

Checking & Adjustment—*See Electrical Equip. Section.*

LIGHTING

►**1946 WIRE HARNESS PRODUCTION CHANGE:** Two types of harness with **different wire colors** used as follows:

1. Braided Loom Assembly—Individual wires in this type harness are marked with colored tracers as indicated on wiring diagram.

2. Taped Assembly—Individual wires in this type harness are any color and do not follow color code shown in wiring diagram. Ends of each wire are stained with individual colors to provide identification. These stained-end wires can be related to the color code shown in the wiring diagram as follows:

Stained End (Taped Wiring Harness)	Tracer Color (Braided Wiring Harness)
Black	Black or Natural, Black Tracer
Blue	Natural, Black Cross Tracer
Brown	Natural, Black & Red Cross Tracer
Green	Natural, Green Cross Tracer
Orange	Natural, Red Cross Tracer
Orange & Black	Natural, Black & Green Cross Tr.
Red	Natural, Red Tracer
Yellow	Natural, Green Tracer
Yellow & Orange	Natural, Green Parallel Tracer
Not stained	Natural

Headlamps: Guide "Sealed Beam" type.

See Electrical Equipment Section for complete data.

Adjustment—Aim upper beam straight ahead (hot spot center 3" below lamp center height at 25 ft.).

Beam Indicator—In upper left face of speedometer dial ('46-47), in center of instr. panel (1948). Lighted when Country (upper) Beam in use.

Direction Signal: *See Electrical Equipment Section.*

Dir. Signal Indicator ('46-47)—In upper right face of speedometer dial. One indicator only.

Dir. Signal Indicators (1948)—Left and Right Turn Indicators located below each end of speedometer dial.

Switches

Lighting ('46-47)—Delco-Remy No. 1995023.

Lighting (1948)—Delco-Remy No. 1995031.

Instrument—Part of Lighting Switch. Rheostat operated by turning Lighting Switch Knob.

Beam Selector—Delco-Remy No. 1997008.

Direction Signal ('46-47)—Delco-Remy No. 1995523 (1995524 for cars with Hydra-Matic Drive).

Direction Signal (1948)—Delco-Remy No. 1995531.

Stop Light—Cadillac No. 1328118.

1946-47—Bulb Specifications

Position	Candlepower	Mazda No.
Headlamps		Sealed Beam
Park & Front Dir. Signal	21-3	1154
Rear Direction Signal①	21-3	1154
Beam & Dir. Sig. Indicators	1	51
Hydra-Matic Drive Indic.	1	51
Instr., Clock, Ign. Switch	1.5	55
Glove Comp't., Trunk	1.5	55
Stop & Tail	21-3	1154
Rear License	3	63
Dome, Quarter, Courtesy	15	88

①—21 cp. filament only used.

1948—Bulb Specifications

Position	Candlepower	Mazda No.
Headlamps	Sealed Beam	4030
Park & Front Dir. Signal	21-3	1154
All Indicators	1	51
Instrument, Clock, Trunk	1.5	55
Map Light	3	64
Stop (Rear Dir. Sig.) & Tail	21-3	1154
Rear License	3	63
Dome	15	88
Back Up Light	21	1129

MISC. ELECTRICAL

FUSES: Direction Signal—9 ampere behind panel.
Automatic Heating System—6 ampere (60S, 61, 62), 9 ampere (75). On heater switch.
Ventilating Defroster Heater—20 ampere. In blower lead.

THERMOSTATIC RELAY: Delco-Remy. On lighting switch. Contacts remain closed with 30 amperes, open in 3 minutes with 42 amps. at 70° F. Not adj.

HORNS: Delco-Remy No. 1999537 (Low Note, right horn), No. 1999538 (High Note, left horn). Vibrator type, blended tone, twin horns operated by relay.

Type	Current (at 6 volts)	Air Gap
1999537 (Low Note)	19-21 amperes	.044-.049".
1999538 (High Note)	18-20 amperes	.034-.039"

Horn Relay:—Delco-Remy Model 1116775.
Contact Gap—.025". Air Gap—.015" (closed).
Contacts Close—2.75-4.0 volts.

ENGINE

ENGINE SPECIFICATIONS: Own. 8 cylinder, 90° Vee L head type. Upper crankcase and cylinder blocks cast Enbloc. **Bore—3½". Stroke—4½".**
Displacement—346 cu. ins. Rated HP—39.20.
Developed Horsepower—150 at 3400 RPM.
Compression Ratio—7.25-1 Std. cast-iron head.
Compression & Vacuum Reading—*See Tune-up data.*

ENGINE REMOVAL: *See Cadillac Shop Notes.*

TIGHTENING TORQUES: *See Cadillac Shop Notes.*

CYLINDER HEAD: Tightening Torque—*See Cadillac Shop Notes.*

PISTONS: Aluminum alloy, three-ring, cam ground, T-slot type with Anodized finish.
NOTE—Rings are mounted lower than on previous type pistons and piston has heat-dam groove above top ring.
Weight—1.197 lbs. (stripped), 1.593 lbs. (complete).
Length—4⅛".
Removal—Pistons and rods remove from above.
Clearance—.0023-.0025".

Original Piston & Cylinder Bore Sizes: *See Cadillac Shop Notes.*

Replacement Pistons: *See Cadillac Shop Notes.*

Fitting New Pistons: *See Cadillac Shop Notes.*

Installing Pistons: T-slot to left on all pistons.

PISTON RINGS: Two compression, one oil control ring per piston, all above pin.

Ring	Width	End Gap	Side Clearance
Compr. (#1,2)	5/64"	.007-.023"	.0022-.0035"
Oil Contr. (#3)	3/16"	.007-.023"	.0013-.0026"

Installing Rings—Notched inner edge of both compression rings must be upward.

Replacement Rings: Furnished Std. Size and .010", .020", .030" Oversize.

PISTON PIN: Diameter ⅞". Length 3 1/16".
Floating type with locking ring at each end. Pin hole in piston bosses have bearingized finish.
Pin Fit in Piston—.00005-.0001" (new), .0007" (worn) or free hand-press fit at 70° F. in each boss.
Pin Fit in Rod Bushing—.0002-.0008" clearance (new), .0014" (worn limit).

Replacement Pins: Std., .001", .003" Oversize. *Piston Pin Fitting, see Cadillac Shop Notes.*

CONNECTING ROD: Length 8¾". Weight 2.355 lbs.
Crankpin Journal Diameters—2.460".
Lower Bearing—Removable, steel-backed, Morraine Durex 100A (copper nickel matrix with babbitt overlay) lined type. No shims.
Clearance—.0008-.0025" (new), .005" max. (worn).
Sideplay—.008-.014".

Bearing Adjustment:—None (no shims). Replace bearings. Do not file rods or caps. *Refer to Cadillac Shop Notes for Rod Bearing Removal & Installation. and use of Plastigage for checking bearing clearance.*

Installing Rods:—Numbers on rods and bearing caps on same side and toward bottom of engine.

CRANKSHAFT: 3 bearing with 6 counterweights. *See Cadillac Shop Notes for servicing of main bearings and rear main bearing oil seal renewal.*
Journal Diameters—2.4990-2.4995" (all bearings).
Bearings—Removable, steel-backed, Morraine Durex "300" (copper nickel matrix with babbitt overlay) lined type. No shims.
Clearance—.0008-.0025" (new), .005" max. (worn).
NOTE—Use Plastigage to check bearing clearance as described in Cadillac Shop Notes.

Bearing Adjustment:—None (no shims). Replace bearings. Do not file bearing caps.

End Thrust:—Taken by center (#2) bearing.
Endplay—.001-.005" (new), .010" Max. (worn).

CAMSHAFT: 3 bearing. Non-adjustable chain drive.
NOTE—Camshaft is cast iron. Use care to prevent misalignment when removing & installing shaft. *Refer to Cadillac Shop Notes for Camshaft Removal and Camshaft Bushing servicing data.*
Journal Diameters—#1 and #2, 2.4071-2.4078"; #3, 2.0009-2.0016".
Bearing Type—Steel-backed, babbitt bushings.
Clearance—.0015-.0033" (new), .0045" Max. (worn).

End Thrust:—Taken by thrust plate behind camshaft sprocket. No endplay should be permitted.

Timing Chain:—Link-Belt Type 3766-TC-15. Width 1⅛". Pitch ⅜". Length 23¼" or 62 links. NOTE—Install chain 'endless' as an assembly with sprockets. Use Pilot Tool J-836 on end of camshaft.

Camshaft Setting:—Sprockets marked. Mesh chain with sprockets turned so that '0' marks are adjacent and in line with a straightedge across shaft centers.

VALVES:	Head Diameter	Stem Diameter	Length
Intake	1.876-1.886"	.3415-.3425"	5 33/64"
Exhaust	1.626-1.636"	.3405-.3415"	5 33/64"

	Seat Angle	Lift	Stem Clearance
Intake	45°	.335"	.0023"①
Exhaust	45°	.345"	.0025"②

①—.0005-.0025" (new), .005" (worn limit).
②—.0015-.0035" (new), .005" (worn limit).
See Cadillac Shop Notes for Valve & Lifter servicing.

Valve Guides:—Press in block (long step end down). Guides have "Ferrox" finish for longer service.
NOTE—Counterbore at top of guides is 1/16" larger in diameter and 3/16" deeper than on 1942 cars.

Valve Lifters:—Wilcox-Rich 'Zero-lash' type hydraulic lifters (Mushroom type) in removable brackets.
►**1948 Note**—Two types of valve lifters are used:
Body & Plunger Type. Same as used on earlier models. Can be identified by exposed plunger spring at top.
Unit Type. Serviced as complete unit only. No spring used at upper end.
See Miscellaneous Section for complete data.
Clearance—.0010-.0024" (new), .0035" (worn).

Valve Springs:—Free length 2.210".

	Spring Pressure	Spring Length
Valve Closed	60-67 lbs.	1 59/64"
Valve Open	139.5-150.5 lbs.	1 37/64"

VALVE TIMING

Tappet Clearance:—None in service (hydraulic type lifter). *See Valve Servicing in Cadillac Shop Notes.*

Valve Timing:—See Camshaft Setting above.
Intake Valves—Open at TDC. Close 42° ALDC.
Exhaust Valves—Open 52° BLDC. Close 10° ATDC.
Valve Timing Check—#1 cylinder (front-left bank) intake valve should open with piston at TDC and mark 'C.1/6' on crankshaft pulley aligned with chain case cover pointer (on right side).

LUBRICATION

Engine Oiling System: Pressure to main bearings, connecting rod lower bearings and piston pins (rifle-drilled rods), camshaft bearings, timing chain, and hydraulic valve lifters. Oil pump located at rear of engine in oil pan.
►NOTE—An "Inertia type" fitting is located in the oil line to hydraulic valve lifters (oil forced to make 90° turn before entering lifter line, foreign particles in oil tend to be carried past this line).
Crankcase Capacity—7 quarts.
Normal Oil Pressure—25 lbs. at 30 MPH. (15 lbs. idling).
Oil Pressure Regulator—Located on oil pump. Opens at 30 lbs. Not adjustable.
See Cadillac Shop Notes for Oil Regulator data.

Oil Pump: *See Cadillac Shop Notes for Specifications.*

Crankcase Ventilation: Filter in oil filler (inlet) cap. Exhausts through openings in valve cover into conduit leading to cored opening in rear of block and out through outlet pipe in right rear corner of oil pan.
Servicing—Wash and re-oil filter in filler cap every 2000 miles (oil change period).

Oil Gauge ('46-47 Series 60S, 62): AC No. 1506290.
('46-47 Series 61, 75)—AC No. 1505912.
(1948 All Series)—AC No. 1507086.

COOLING

Cooling System: Pressure type with pressure valve (relief valve) in filler cap. Re-circulation (with thermostat closed) provided by by-pass from left cylinder bank outlet to water pump inlet.
Capacity—25 quarts (without heater).
27 quarts with Cadillac Automatic Heating System.
26 quarts with Cadillac Ventilating Defroster Heater.
Pressure Cap—AC No. 850558 (Radiator Filler Cap). Opens at 8¼-9¼ lbs.
NOTE—15 lb. cap available for extreme service.

Water Pump: Self-adjusting packing type.
See Water Pump Section for complete data.

CONTINUED ON NEXT PAGE

C NTINUED FR M PRECEDING PAGE

Belt Adjustment—*See Generator Belt Adjustment.*

Thermostat ('46-47): Cadillac No. 1444874. Dole. **1948 Type**—Cadillac No. 1453784 (std.), No. 1454715 (high opening). Fulton Sylphon. Blocking type in radiator inlet elbow (accessible by removing elbow). **Setting (standard)**—Starts to open 150-155°F.① **Setting (High Opening)**—Starts to open 165-170°F.① ①—When testing at atmospheric pressure.

Temperature Gauge: AC. Electric Thermo-gauge. **Dash Unit ('46-47 Series 60S, 62)**—AC No. 1511732. **Dash Unit ('46-47 Series 61, 75)**—AC No. 1511737. **Dash Unit (1948 All Series)**—AC No. 1511896. **Engine Unit**—AC No. 1511734 ('46-47), 1512015 ('48). *See Miscellaneous Section for complete data.*

CLUTCH

Long 11CF-10½TI (60S, 61, 62) 11CF-TI (75, 76). Semi-centrifugal, single plate, dry disc type. *See Clutch Section for complete data.* **Facings**—Woven type. I.D. 7" (all models). O.D. 10½" (60S, 61, 62), 11" (75, 76). Thickness .137" (all).

Pedal Adjustment:—Pedal free travel ⅞-1⅛" (adjusting nut on connector link at clutch fork).

Removal:—Remove transmission (see below), drop clutch housing pan, remove release yoke and sleeve, punch mark clutch cover, pressure plate and flywheel, remove 6 cover screws. NOTE—Install driven member with oil guard to rear. *Refer to Cadillac Shop Notes for clutch locking pin removal (on replacement clutches) and balancing data.*

TRANSMISSION

STANDARD

Own Make. Constant-mesh, synchro-mesh (Second & High), sliding gear (Low & Reverse), all helical gear type with remote (steering column mounted) control. *See Transmission Section for complete data.*

Transmission Control: Remote (steering column mounted) type. *See Transmission Section for complete data.*

Removal:—Support engine with jack under rear end of oil pan (use wooden block to avoid damage to pan), disconnect rear universal joint and remove propeller shaft, free transmission extension at engine rear support, remove crossmember with engine rear support, disconnect speedometer cable, remove shifter rods from levers at transmission, support transmission at rear, take out mounting screws, pull straight back (plug clutch connection shaft bearing drain hole as soon as accessible to prevent lubricant loss), lower front end of transmission and remove.

HYDRA-MATIC DRIVE

PTIONAL EQUIPMENT

Own Make. Consists of Fluid Coupling and automatic self-shifting Four-Speed Transmission. Optional on all models. *See Transmission Section for complete data.*

Lubrication—Check fluid level in transmission every month or every 1000 miles. Drain and refill after first 6000 miles and every 12000 miles thereafter. Use only "Cadillac Hydra-Matic Fluid."

Capacity—Approximately 12½ qts. (refill).

Checking Fluid Level—Clean all sand, lint, and dirt away from sheet metal cover in floor under right front corner of front compt. rug. Run engine for approx. 1½ minutes at speed equivalent to 20 MPH. with selector lever in "Neutral". Remove sheet metal cover from floor for access to dip stick, reduce engine speed to slow idle, measure level with dip stick, add fluid until level is at "FULL" mark with engine idling.

►*CAUTION—Engine must be running at slow idle speed when checking Hydra-Matic Drive Fluid Level.*

Linkage Adjustment—*See Hydra-Matic Drive article in Transmission Section.*

Removal: *See Hydra-Matic Drive article in Transmission Section.*

UNIVERSALS

Mechanics Model 3-C. Needle bearing type. Two used (three used on Commercial Cars). *See Universals Section for complete data.*

Propeller Shaft (Pass. Cars): One shaft used of one-piece design with slip joint formed on rear of transmission mainshaft in extension housing. (Commercial Cars)—Two shafts used with center bearing support at rear of front shaft. *For Removal and Installation of Commercial Car Propeller Shafts, see Cadillac Shop Notes.*

REAR AXLE

Own Make. Hypoid Gear, Semi-floating type with Hotchkiss Drive. *See Rear Axle Section for complete data.* NOTE—Manufacturer recommends that Carrier Assembly be serviced by the factory (see Carrier Assembly Removal below). **Ratio**—Hydra-Matic Drive ratio is available as special "economy ratio" on cars with std. synchro-mesh transmission.

	Synchro-mesh Trans.	Hydra-Matic Drive
60S, 61, 62	3.77-1 (no mark)	3.36-1 (6)
75 & Comm'l	4.27-1 (4)	3.77-1 (7)

NOTE—Ratio identification mark (following ratios in table above) stamped on bottom of differential case beneath center of pinion shaft.

Backlash—.003-.010". Screw adjustment.

Removal:—Disconnect rear universal (do not disengage spline joint at transmission), remove axle shafts (see below) and carrier mounting bolt nuts.

Axle Shaft Removal:—Remove hub cap, wheel, and axle shaft nut. Pull hub and drum, disconnect brake line, remove brake backing plate. Pull shaft and bearing assembly (Tool J-838). NOTE—Install new oil seal & bleed brake line which was disconnected **Wheel Bearing Adjustment**—None.

►*CAUTION—Wheel bearings are sealed (permanently lubricated) and should be checked when axle shafts are out. Replace bearings that spin freely indicating lack of grease.*

SHOCK ABSORBERS

Delco. Double acting, opposed piston, hydraulic types (front & rear). Model Nos. as follows:

	Front	Rear
60S, 61, 62	1946-G,H	1754-N,P
75	1946-G,H	2007-N,P
Commercial (75 & 76)	1946-G,H	1751-V,W

See Shock Absorber Section for complete data.

FRONT SUSPENSION

Front Suspension:—Independent, linked parallelogram type with coil springs. *See Front Suspension Section for complete data.* NOTE—Specifications below correct with car at curb weight (car unloaded with full gas tank). **Kingpin Inclination**—5°51' crosswise (0° Camber). Caster ('46-47)—Neg. 1¾° to Neg. 2¾°. Caster (1948)—Neg. ½° to Pos. ½°. Equal within ½°. **Camber**—Neg. ⅜° to Pos. ⅜°. Equal within ½°. **Toe In**—1/32-3/32" (at rest). Loosen clamp bolts, turn adjusters at outer end of each rod equally. **Steering Geometry (Toe-out on turns)**—Outer wheel turned 20°. Inner wheel as follows:

	Left Turn	Right Turn
60S, 61, 62	25°25'	24°42'
75 & Comm'l. (75 & 76)	24°7'	23°6'

STEERING GEAR

Saginaw. Ball bearing Worm-and-Nut type (re-circulating ball type). *See Steering Gear Section for complete data.*

BRAKES

Service: Bendix Hydraulic, Duo-servo, Single Anchor type **without Eccentric Adjustment.** Hand lever applies rear wheel service brakes. *See Brake Section for complete data.* **Drums**—Centrifuse. Diameter 12" (11.995-12.005"). NOTE—Drum out-of-round limit is .007" and re-machining limit (to true up drums) is .030" max. **Lining**—Molded type (all models).

	60S,61,62	75	Commercial
Width (Front)	2¼"	2¼"	2¼"
Width (Rear)	2"	2½"	2½"
Thickness	3/16"	3/16"	3/16"
Length (Fwd.Shoe)	11 17/32"	11 17/32"	12 31/32"
Length (Rev.Shoe)	12 31/32"	12 31/32"	12 31/32"

Fwd.—Forward or Primary (front) shoe. Rev.—Reverse or Secondary (rear) shoe. **Clearance**—.007-.010" at each end of each shoe or .015" at both ends of secondary shoe with primary shoe forced out against drum. **Braking Power**—55.8% Front, 44.2% Rear (60S, 61, 62, 75); 50% Front & Rear (Commercial 75 & 76).

Hand (Parking) Brake: See Service Brakes above.

MISC. MECHANICAL

Power Operated Convertible Tops, Windows, & Front Seat: Hydro-Lectric type (hydraulic actuation with motor-driven pump supplying oil under pressure for power cylinders). *See Miscellaneous Section for complete data.*

HOOD ASSEMBLY

1940 MODELS

HOOD LOCK & HOOD ADJUSTMENT: Hood is Alligator type with hood control knob located under left side of instrument panel. To open hood, pull out on control knob (hood will raise slightly), reach under front of hood opening, press up on safety catch tab, lift hood up.

Hood Alignment (At Cowl):—Raise hood, remove side panels (see below), release hood hinge springs, close and lock hood. Loosen hood hinge to cowl bolts, shift hood to secure uniform spacing between cowl and rear edge of hood, tighten hinge bolts and assemble springs, raise hood and install side panels. To center hood, remove counterbalancing springs, loosen hinge mounting screws and shift hood sideways.

(At Radiator Grille)—If distance between hood and grille greater at center than at sides, raise hood and place two thin pieces of wood between side panels and hood to support hood, place two pieces of wood between two bottom louvres of grille (one on each side of center molding—pieces must fit snugly between louvres), place short jack between lower radiator splash guard and frame front cross-member (with short piece of wood between jack and splash guard). Pump jack slowly until hood distance at center slightly less than at sides (will even up when jack released), release jack and check alignment. To center hood at front, loosen radiator support bolts at front cross-member and adjust radiator brace rods.

Hood Lock Adjustment:—Raise hood, loosen lockscrews on control cable adjusting sleeve (in slot on baffle at top of grille), push dash control knob all the way in, see that latch plate in locked position, move adjusting sleeve until it contacts lever on latch, then tighten lockscrew securely.

Side Panel Removal:—Raise hood, remove side panel attaching screws (on upper edge, screws located in bracket at rear end, at radiator shell, and in edge of grille—grille upper baffle can be removed, if necessary, for access to these screws), lift panel out.

Radiator Grille Removal:—Raise hood fully, remove bolts attaching hood latch lower plate to grille, remove baffle. Reach through opening between radiator and grille, remove screws attaching grille to fenders. Remove screws on each side attaching grille to hood front side panels, remove grille. NOTE—Lower baffle is riveted to grille. If baffle being replaced, bolts may be used instead of rivets.

1941 MODELS

HOOD LOCK & HOOD ADJUSTMENT: Alligator type hood with control knob under left side of instrument panel. To open hood, pull out on control knob (hood will raise slightly), reach under front of hood opening, press up on safety catch, lift hood.

Hood Lock Adjustment:—Hood latching lever located beneath grille plate. To adjust, raise hood, loosen lock screw on control cable adjusting sleeve (in hole in grille plate), push dash control knob all the way in, see that latch plate in locked position, move sleeve to contact latch lever, tighten lock screw.

Hood Alignment (at Cowl):—Cowl panel and hinge bracket holes slotted for hood adjustment. To adjust, raise hood, release hood springs, loosen front and rear hinge bracket-to-cowl attaching bolts at each side, close hood. Position hood for proper alignment (while closed). Hold rear end of hood firmly on cowl and tighten rear hinge bracket bolt at each side (inside of cowl). Raise hood, tighten front hinge bracket-to-cowl bracket bolt at each side, connect hinge springs.

(At Radiator Grille)—Clearance between hood nose and top of radiator grille should be 1/16". To adjust, turn hood locking bolt in or out of retainer for correct clearance, tighten lock nut.

1942-48 PASSENGER CARS

HOOD LOCK & HOOD ADJUSTMENT: Alligator type hood with control knob under left side of instrument panel. To open hood, pull out on control knob (hood will raise slightly), reach under front end of hood, press up on safety catch, lift hood up.

Hood Lock Adjustment:—Correct hood locking action determined by positioning of lock plate on top baffle. Lock plate secured to baffle by four screws (screw holes in plate slotted and allow fore-and-aft movement). To adjust, loosen four screws in plate, lower hood **(do not close hood)** just enough to allow lock bolt on hood to position lock plate (lock bolt should be centered in latch opening), raise hood, and without disturbing position of plate, tighten plate screws. Adjust lock bolt under nose of hood for proper closing tension and hood fit with radiator grille. There should be 1/16" spacing between hood and grille. CAUTION—Lock plate adjustment must be made whenever plate removed or screws loosened. If screws tightened with plate in extreme forward position, lock bolt on hood will force latch back and catch under plate (hood will lock but will not release).

Hood Alignment:—Proper positioning of hood with cowl (hood panels should be seated firmly on cowl), front doors, and along fenders can be obtained by means of slotted holes at each hinge (upper and rear holes slotted in cowl, lower front hole slotted in hinge plate). Fit of hood nose with radiator grille can be secured by means of lock bolt under nose of hood. To adjust, raise hood, disconnect hood hinge spring at lower end on each side (CAUTION—Use care, springs under heavy tension), loosen bolts at each hinge plate, remove lock bolt, close hood, loosen 2 cowl-to-hinge plate bolts from inside car (in recess above cowl kick pads) on each side. Shift hood (with front doors closed) until proper fit obtained. Then tighten 2 bolts at each side inside car (hood should be held down snugly on cowl while these bolts are tightened), open hood, tighten front lower bolt at each hinge plate on cowl, connect lower end of each spring to cowl bracket. Install hood lock bolt and adjust as necessary.

Hood Clearances—Maintain following clearances when adjusting hood to eliminate noise and present good appearance:

5/32" minimum, 7/32" maximum, between rear edge of hood and cowl hood ledge and front edge of doors.

1/16" between underside of hood and top of grille across front.

1/8" between underside of hood and top of fender.

Hood Hinge Spring Bracket Correction to prevent leaks in Front Comp.: On early 1942 cars, drill a ¼" hole at lowest point in bottom of each hood hinge bracket to prevent water accumulation which may run into front compartment. NOTE—This hole provided in production on later cars.

FRONT END SHEET METAL

1939-40 MODELS

FRONT END REMOVAL: Front Fenders, Radiator, & Grille may be removed as a unit for work on front of engine or for Independent Suspension Unit removal as follows: Remove hood ('39), raise hood, loosen lockscrew at hood lock control cable adjusting sleeve and disconnect cable ('40). Drain radiator, disconnect upper and lower hose connections. Remove radiator brace rod bolts at top of radiator support. Disconnect headlamp wires at terminal block at each side, remove wiring harness from clip at the radiator. Take out the fender bolts at body and running boards. Remove 2 radiator support bolt nuts (at frame cross member). Attach chain hoist under outside flange of radiator and raise assembly to clear chassis. Align hood when assembly re-installed.

1941 MODELS

FRONT END REMOVAL: Front Fenders, Radiator, & Grille may be removed as a unit for work on front of engine or for Independent Suspension Unit removal as follows: Raise hood, loosen lockscrew at hood lock control cable adjusting sleeve and disconnect cable. Drain radiator and disconnect upper and lower hose connections. Remove bolts attaching radiator brace rod to top of radiator support. Disconnect headlamp wires from junction block on each side, remove wiring harness from clip at radiator. Remove bolts attaching fenders to body, two fender skirt brace bolts at frame, nuts from 2 bolts attaching radiator support to front cross-member. From under fenders, remove sheet metal screws from lower grille panel reinforcing strips across openings in panel under bumper brackets. Remove front end sheet metal assembly from car.

Radiator Grille Removal:—Raise hood, disconnect hood latch control cable at latch and at clip to rear of latch, remove one grille-to-fender screw at each side on top, working through opening between grille and radiator core remove one bolt and three nuts at each side and center baffle-to-lower baffle bolt, remove grille molding bolt nuts along bottom and at each side (below fenders and lower grille panel). Pull grille assembly off car.

Lower Baffle & Lower Grille Panel Removal:—Remove Radiator Grille (see above). Working from beneath fenders (all bolts and screws under fenders), remove two lower panel-to-fender return flange bolts, two sheet metal screws attaching reinforcing strips across bottom of bumper bracket openings in panel, three lower baffle-to-side baffle sheet metal screws. Remove baffle. Lower baffle and grille panel riveted together and must be removed and installed as an assembly. Use 3/16" x ½" stove bolts when reassembling lower baffle and lower grille panel.

1942-48 PASSENGER CARS

FRONT END REMOVAL: Pass. Cars. Front Fenders, Radiator, and Grille may be removed as a unit for work on front of engine or for Independent Suspension Unit removal as follows: Remove front bumper, hood (disconnect 2 hinge arms from hood panel at each side). Disconnect light and horn wires from junction, hood latch cable and conduit at latch and left fender. Drain radiator and disconnect hoses. Then proceed as follows on each side of car: Remove frame bolt from rear lower flange of side baffle, 2 fender-to-hinge spring bracket bolts, 1 fender-to-

CONTINUED ON NEXT PAGE

FRONT END SHEET METAL

CONTINUED FROM PRECEDIN PAGE

cowl bracket bolt, 1 fender skirt-to-frame brace bolt at fender, 3 fender rear baffle-to-fender bolts (under fender), 1 body sill moulding bolt at front (free front half of moulding from rocker panel), 1 fender-to-step plate bolt (at outer front end of step plate). Remove 2 radiator support-to-front cross-member bolts. Free wiring harness from clips on right fender, radiator core and support, and from left fender and pull harness back toward cowl on left side. Remove Front End Assembly (spring rear ends of fenders out to provide clearance of fender skirt brackets with fender rear baffles).

Radiator Grille Removal (1942-46): Raise hood and disconnect latch cable at swivel, loosen clamp on lock plate, pull cable back through grommet in top baffle, remove right front lock plate screw (holds upper end of grille baffle), remove top baffle (3 screws on each side, 4 across the front). Remove the following from in back of side baffle under each fender: nut from bolt staked in grille, lower stud nut from parking lamp, bolt attaching side baffle, fender return flange, and angle bracket. Remove the following from in back of grille: nut from bolt staked in grille on upper edge (one on each side), upper stud nut from parking lamp, 3 sheet metal bolts in lower flange of vertical grille reinforcements (1 at center, 1 at each side in line with edge of radiator), grille baffle-to-lower-baffle bolt (at center). Remove grille center molding bolt (under lower baffle). Remove 8 trim molding-to-gravel guard clips (4 on each side) under gravel guard. Pull out parking lamps. Remove grille assembly (pry loose if necessary). NOTE—When reinstalling grille, be sure parking lamps in place.

Radiator Grille Removal (1947): Grille is new type one piece assembly (die cast upper moulding is only part serviced separately). To remove, open hood, remove 3 hexagonal-head sheet metal screws on each side (attaching upper radiator baffle to front fenders), and four clutch-head sheet metal screws across front (attaching upper baffle to grille moulding). Remove round slotted-head bolt on right side of hood latch, unsnap control cable from left front fender clip, move upper radiator baffle to one side. Remove two nuts and washers on each side (attaching upper grille moulding to inside corners of front fenders), remove nuts and washers on each side (attaching parking lamps to grille), remove four hexagonal-head sheet metal screws (attaching grille supports to lower radiator baffle). From beneath fender on each side, remove nuts and washers (attaching parking lamps to front fenders), lift parking lamps out (lamps can be placed on radiator filler panel where they will be out of the way without disconnecting wiring), remove sheet metal screws (attaching grille to front fenders). From beneath front of car, remove twelve sheet metal screws and washers (attaching lower grille moulding to radiator filler panel). Remove grille assembly from car. Remove four hexagonal-head sheet metal screws attaching outer ends of upper grille moulding to grille, remove eighteen sheet metal screw retainers and 4 from upper grille moulding.

1942-47 TRUCKS

FRONT END REMOVAL: Trucks. On conventional trucks Front End Sheet Metal Assembly can be removed as follows: Remove hood, radiator brace rods, front bumper, fender bolts at cowl and running boards, and radiator support to front cross-member bolts at frame. Drain radiator and disconnect radiator hoses. Disconnect all wires from junction blocks at each side. On 1½ ton trucks, pull front end assembly to the front to clear fan shroud.

1947-48 TRUCKS

FRONT END REMOVAL (TRUCKS): On conventional trucks, front end sheet metal assembly can be removed as a unit as follows: Remove hood assembly, drain radiator, disconnect radiator hoses. Disconnect horn wires and all electrical wiring at junction blocks on both fender skirts, remove wiring harness from retainer clips on fender skirts and radiator core support. Relieve fender brace rod tension by backing off front hexagonal nut as necessary, disconnect brace rods by taking out capscrews attaching brace rods to dash at each side, remove rods. Take out capscrews, plate, and spacer attaching radiator core support to front frame cross-member. Remove screws on each side attaching rear of fender skirt to toeboard (accessible from inside cab by lifting floor mat). Remove bolts attaching rear of front fenders to cowl on each side (accessible from underneath). Raise front sheet metal assembly sufficiently to clear front bumper face bar and radiator grille filler panel, lift assembly out.

FRONT FENDERS

1942-47 MODELS

FENDER CAP: Cap is attached to front door by means of three bolts on door along upper edge which engage slotted openings in flange of cap and two brackets on lower edge of door which are attached to flat tabs under lower edge of cap. To remove cap, remove step plate (free moulding for access to step plate screws), remove 2 bracket screws on lower edge of cap, loosen 3 bolts on upper inner edge of cap, lift cap off these bolts. Caps can be fitted to fenders by means of slotted holes in door brackets and in upper flange of cap.

TIGHTENING (TORQUE WRENCH) SPECIFICATIONS

ALL MODELS

	Ft. Lbs.	In. Lbs.
Cylinder Head Capscrews	75-80	900-960
Main Bearing Bolts	100-110	1200-1320
Con. Rod Nuts	40-50	480-600
Rocker Arm Support Bolts	25-30	300-360
Crankcase Frt. End Plate	15-20	180-240
Timing Gear Cover Screws	6-7½	72-90
Manifold Clamp Bolts	15-20	180-240
Manifold Stud Nuts	25-30	300-360
Clutch Mounting Bolts	25-30	300-360
Clutch Housing Bolts	45-55	540-660
Flywheel Bolts	50-65	600-780
Oil Pan Flange Bolts	6-7½	72-90
Oil Pan Corner Bolts	12½-15	150-180
Oil Distr. Cover Screws	6-7½	72-90
Water Pump Mtg. Bolts	25-30	300-360
Fuel Pump Mtg. Bolts	15-20	180-240
Spark Plugs (see Note)	10-12	120-144
Pitman Arm Bushing Nuts	30-40	360-480
Prop. Shaft Flange Nut	160-280	1920-3360
Axle Flange Bolts (Trucks)	85-95	1020-1140

NOTE—New M-8 thin-shell plugs (marked by groove on shell above threads) must not be tightened more than 12 ft. lbs.

CYLINDER HEAD

CYLINDER HEAD INSTALLATION: Use Torque Indicating Wrench to tighten cylinder head capscrews, tighten in correct sequence as shown in the diagram. Cast Iron heads should be tightened cold and rechecked after engine has been run sufficiently to bring all parts to normal operating temperature. **Tightening Torque**—See Tightening (Torque Wrench) Specifications below.

CHEVROLET

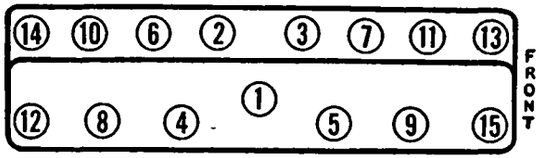

REPLACEMENT CYLINDER BLOCKS

1942-47 MODELS

REPLACEMENT CYLINDER BLOCKS (Installing 1948 Block on 1942-47 Models): Both the 1948 type 216" Engine and 235" Engine Cylinder Blocks are furnished as service replacements for 1942-47 models.

►***CAUTION—When installing these blocks on 1942-47 models, make the following changes:***

Oil Pump Screen Cover Support & Pipe Assembly: New type, Part No. 3835365, must be installed to prevent interference between oil suction pipe and the new 1948 type main bearing cap bolt heads.

Oil Suction Pipe and Oil Pan Clearance: On 1942-46 216" Engines, oil pan must be reworked to provide clearance between oil suction pipe and upper edge of oil pan tray at point opposite #4 connecting rod. Peen tray and pan, as required, to provide 1/32" clearance at this point (CAUTION—do not bend oil suction pipe as it will interfere with connecting rod). On all engines, check alignment of oil suction and oil delivery pipes. Misalignment may cause seizure of distributor shaft.

Oil Delivery Pipe: New pipe must always be installed due to variation in length of pipe on these engines. Coupling sleeves are loose on new pipes and will be clamped (to establish pipe length between couplings) when couplings are tightened initially.

1941 Model Note: If 1948 type block installed on 1941 models, flywheel must also be replaced. Use following parts (depending on size of clutch used):

	Flywheel Part No.	Attaching Bolts
9" Clutch	839776	839756
10¾" Clutch	839753	①839756

①—Bolt Lock, Part No. 839690, also used.

ENGINE REMOVAL

1940 MODELS

ENGINE REMOVAL: Drain radiator and cylinder block, remove hood and side panels (see above). Remove Fenders, Radiator, and Grille as an assembly (see Front End Removal above). Disconnect generator leads and free wiring loom from support clip, remove battery and starting cables. Disconnect distributor low and high tension leads, take out ignition coil mounting screws, lay coil on cowl. Disconnect gas line at fuel pump, throttle and choke controls at carburetor, and accelerator rod at bellcrank. Disconnect exhaust pipe from manifold. Remove front floor mat and floor plate over trans-

mission, disconnect vacuum and air lines at shift cylinder, disconnect piston rod lever from transmission (See Chevrolet Transmission Control article in the Transmission Section for directions and adjustment instructions when shift cylinder re-installed). Disconnect clutch pedal link and pull-back spring. Remove bolts in universal joint ball retainer, slide retainer and ball back on shaft, take out 4 screws holding universal trunnion bearings on front yoke, remove trunnion bearings. Remove 4 bolts from transmission rear support, remove front and side engine mounting bolts, remove bolts in starter cross-shaft. Remove third cylinder head bolt from rear on left side, install engine lifting eye bolt in this bolt hole, attach hoist and lift engine until clear of mountings, pull engine forward and lift to clear front cross-member, then roll chassis back until engine is free. When engine re-installed, adjust mountings and align engine hood as directed above.

1941-48 PASSENGER CARS

ENGINE REMOVAL: Drain radiator and cylinder block of all cooling liquid and remove the hood. Remove Fenders, Radiator, and Grille as an assembly (see Front End Removal above). Disconnect generator leads and free wiring loom from support clip, remove battery and starting cables. Disconnect distributor low and high tension leads, take out ignition coil mounting screws, lay coil on cowl. Disconnect gas line at fuel pump, throttle and choke controls at carburetor, and accelerator rod at bell-crank. Disconnect exhaust pipe from manifold. Remove front floor mat and floor plate over transmission, disconnect vacuum and air lines at transmission shift cylinder. Remove outer half of the reactionary metal boot (work under car) by taking out two bolts fastening halves together. On all cars except Cabriolet proceed as follows: Loosen reactionary lever assembly-to-transmission operating shaft clamp bolt, drive assembly from shaft carefully, disconnect selector rod from selector lever by taking out cotter pin in transmission end of rod, remove 3 vacuum cylinder bracket-to-transmission capscrews and move assembly clear of transmission. On Cabriolet only proceed as follows: Disconnect vacuum cylinder piston rod and valve link from reactionary lever system (to prevent upsetting vacuum valve adjustment, replace clevis pin thru piston rod yoke and valve link). Then for all cars continue as follows: Disconnect clutch pedal link and pull-back spring. Remove bolts in universal joint ball retainer, slide retainer and ball back on shaft, take out 4 screws holding universal trunnion bearings on front yoke, remove trunnion bearings. Remove 4 bolts from transmission rear support, remove front and side engine mounting bolts, remove bolts in starter cross-shaft. Remove third cylinder head bolt from rear on left side, install engine lifting eye bolt in this bolt hole, attach hoist and lift engine until clear of mountings, pull engine forward and lift to clear front cross-member, then roll chassis back until engine is free. When engine re-installed, adjust mountings, align hood (see above).

1947-48 TRUCKS

ENGINE REMOVAL (TRUCKS): Drain radiator, cylinder block, and oil pan. Remove hood assembly. Remove front end sheet metal assembly (including radiator and fenders) as a unit (see Front End Removal above). Disconnect cables at starter switch terminal (tape battery cable), disconnect coil lead at reversing switch, remove coil mounting screws and lay coil on top of dash, disconnect engine ground strap, generator leads at generator, and horn wires. Disconnect fuel line at fuel pump, choke and throttle control cables at carburetor, and remove air cleaner. Disconnect oil gauge line at engine, remove temperature gauge engine unit from cylinder head, disconnect vacuum lines (windshield wiper and Hydrovac) at manifold. Remove exhaust pipe-to-manifold bolts, remove starter pedal, disconnect accelerator pedal from rod. Remove transmission floor pan cover in cab, disconnect transmission control rods (models with steering column shift), or remove transmission cover and gearshift lever assembly and install temporary cardboard cover on case (models with floor-mounted gearshift). Remove hand brake lever, disconnect speedometer drive cable and clutch link to clutch pedal arm. Drain transmission case, disconnect propeller shaft (see Notes below for each model). Take out bolts in rear engine mounting, remove front engine mounting. Remove third cylinder head bolt from rear on left side, install engine lifting eye bolt in this position, attach hoist. Remove engine, clutch, and transmission from the chassis as a unit. When re-installing engine, see Engine Mounting Adjustment instructions (following).

ENGINE MOUNTINGS

1940-47 MODELS

REPLACEMENT ENGINE MOUNTINGS (1940-47 Passenger Cars): New 1948 type Side Support Cushion Assemblies (Side Mountings) and Transmission Support Assembly (Rear Mounting) as listed below can be installed on all cars except Cabriolet models. Side mountings must be installed in pairs (can be used on 1935-47 cars). Rear Mounting can be installed separately or with new side mountings on 1940-47 cars. Rear mounting is new one-piece type and requires installation of new type lock plate which also serves as a stop for transmission countershaft. Adjust mountings as directed for 1948 cars.

NOTE—These mountings used on late 1947 cars.

1940-47 Replacement Mountings

Side Support Cushion Assy. (R. H.)	756056
Side Support Cushion Assy. (L. H.)	756057
Transmission Support Assy.	756100
Transmission Support Bolt Lockplate	3683693

1940-47 PASSENGER CARS

ENGINE MOUNTINGS: *See Replacement Mountings above.*

Adjustment (Original Equip. Type)—Tighten front engine mounting bolts (replace mounting if oil-soaked), tighten rear mounting bolts at transmission and frame cross-member (studs tight in case). Clearance between cross-member and "U" section plate should be .005-.015" and equally spaced fore-and-aft (limits the fore-and-aft engine movement). If clearance excessive, remove mounting and bend plate to obtain correct clearance. Tighten side engine mounting bracket bolts. Take out engine side mounting bolts, check clearance between mounting and bracket at each side, clearance must be 1/32-1/16" (if clearance excessive, use a 3/8" plain washer for proper clearance, if clearance less than 1/32", loosen bracket mounting bolts and push mounting up (if necessary, remove brackets and file mounting holes with round file to secure proper clearance). Tension on both side mountings must be equal.

1948 PASSENGER CARS

ENGINE MOUNTINGS (1948 Passenger Cars): Mountings consist of one-piece vulcanized rubber type assemblies as follows:
Front Mounting—Same as used on previous cars.
Side Mountings—New right and left hand (not interchangeable) type with rubber in "shear". These mountings must be adjusted when installed on car
Rear Mounting—New one-piece vulcanized assembly which does not require adjustment (replaces former "U" channel plate type).

Adjustment of Pass. Car Engine Mountings: Install side mountings with lug on mounting at edge of engine bracket. Shim between mounting and brackets so that clearance is zero plus or minus 1/16" before tightening mounting bolts. Bolt holes in frame bracket are offset. Rear engine mounting should be bolted to frame cross-member first and then bolted to transmission with engine and transmission weight on mounting (bolt holes slotted to provide alignment between transmission and mounting). Lock the mounting bolts in the transmission with the special lock plate. Replace engine mountings whenever they become oil-soaked.

1940-47 TRUCKS

ENGINE MOUNTINGS: Adjustment. Tighten front engine mounting bolts and side engine mounting bracket bolts securely.

1947-48 TRUCKS

ENGINE MOUNTINGS (Trucks): Consist of insulated type front and rear mountings as follows:
Front Mounting—Engine mounting bushings are imbedded in rubber insulator assembled between lower retainer and upper plate with a shield on top of the assembly. This mounting should be checked for clearance when installed and periodically in service.

Rear Mounting—Two insulated units. Bolted to bracket on clutch housing and bracket on frame. No adjustment required (keep mounting bolts tight).

Adjustment of Truck Engine Mountings: Check new front engine mounting, and remove and check mounting in service, as follows: With mounting removed from engine, fit insulator into lower retainer and place upper plate on top. Hold parts firmly together and make certain that rubber insulator fits tightly between retainer and plate and that engine mounting bushings project above upper plate (necessary to prevent oil shield contacting upper plate). Replace insulators which do not pass this test. Check clearance between upper edge of lower retainer and lower face of upper plate. If clearance more than 5/64", replace lower retainer. If clearance less than 3/64", grind off top edge of lower retainer. (CAUTION—do not attempt to shim the support). When installing mounting, tighten engine-to-mounting bolts tightly, mounting-to-frame bolts securely but not excessively tight (self-locking type nuts). Rear engine mountings do not require adjustment and mounting bolts should be kept tight.

CONTINUED N NEXT PAGE

ENGINE MOUNTINGS

CONTINUED FR M PRECEDIN PAGE

1941-42 MODELS

ENGINE ROUGHNESS CORRECTION: 1941-42 Passenger Cars. If engine vibration not corrected by tune up and customary procedure, check transmission support assembly as follows: Loosen 4 bolts holding transmission to frame cross-member, jack up transmission until support just clears cross-member, tighten bolts holding support to cross-member. Check clearance at 'U' section plate which should be .005-.015" at front and rear (correct by removing plate and bending for correct clearance).

PISTONS

1936-48 MODELS

REPLACEMENT PISTONS: Finished pistons with fitted pins and bushings furnished as follows:

1936—All Models

Part No.	Size
837601	Standard
601306	.003" Oversize
601305	.010" Oversize
601304	.020" Oversize
601303	.030" Oversize
601302	.040" Oversize

1937-40 Passenger Cars

602697	Standard
609008	.005" Oversize
602285	.010" Oversize
602286	.020" Oversize
602287	.030" Oversize
602288	.040" Oversize

1937-40 Trucks

602806	Standard
602807	.003" Oversize
602808	.010" Oversize
602809	.020" Oversize
602810	.030" Oversize
602811	.040" Oversize

1941-48 Passenger Cars

605260	Standard
605261	.003" Oversize
609014	.005" Oversize
605262	010" Oversize
602263	.020" Oversize
602264	.030" Oversize
602265	.040" Oversize

1941-48 Trucks (216" Engine)

605276	Standard
609015	.005" Oversize
605278	.010" Oversize
605279	.020" Oversize
605280	.030" Oversize
605281	.040" Oversize

1941-48 Trucks (235" Engine)

605474	Standard
605489	.003" Oversize
605490	.010" Oversize
605491	.020" Oversize
605492	.030" Oversize
605493	.040" Oversize

CAUTION—Service Pistons carry markings stamped on head. S1, S2, etc. (size symbol), letter H, etc. (weight symbol). Marks on all pistons installed should be alike to give smooth engine operation.

CRANKSHAFT & MAIN BEARINGS

1936-48 MODELS

REPLACEMENT MAIN BEARINGS: New "precision" type bearings now furnished for all models as listed below. These bearings supersede previous type which require line-boring after installation.

►*NOTE—Precision type bearings do not require line-boring or reaming after installation.*

1936 Main Bearings

Sizes—Standard & .010", .030" Undersize (part number includes upper and lower bearing half).

►*INSTALLATION CAUTION—Precision type bearings must be installed initially as COMPLETE SET.*

1937-47 Main Bearings

Sizes—Standard & .002", .010", .020", .030" Undersize (part number includes upper and lower half)

Identification Markings—Front (#1) and Rear (#4) marked "V" on inner surface of dowel (1937-39 rear bearings have two oil grooves). Intermediate (#2 & #3) marked "I" on inner surface of dowel (#3 lower half does not have dowel).

►*INSTALLATION CAUTION—Precision type bearings must be installed initially as COMPLETE SET.*

1948 Main Bearings

Sizes—Standard & .002", .010", .020", .030" Undersize (part number includes upper and lower half).

►*NOTE—Bearings can be installed singly (same type as used in original production).*

1948 MODELS

MAIN BEARING INSTALLATION (Without Removing Engine or Crankshaft from Chassis): Upper bearing halves can be replaced by following procedure (bearings doweled in place and cannot be "rotated" out):

Main Bearing Replacement (Pass. Cars): Remove radiator (see Radiator removal), remove fan belt and vibration dampener (see Vibration Dampener removal). Loosen all rocker arm screws to relieve tension on camshaft. Remove spark plugs. Raise car and support securely on stands so car is level and approximately 8" off floor. Remove transmission floor pan cover. Remove clutch housing underpan. Remove transmission rear support-to-crossmember bolts. Disconnect gearshift selector rod from transmission selector lever. Raise rear end of engine and place bar (1" x 1" square and 26" long) behind flywheel and under clutch housing with ends resting on second cross-member brace (this will support engine weight). Release clutch fork from ball. Remove transmission mounting bolts, slide transmission back approximately ¾". Remove oil pan and timing gear cover. Remove oil pump and screen cover assembly. Rotate crankshaft to position allowing removal of all bearing caps. **Mark timing gears to insure re-meshing gears in same relative position.** Then install new bearings as follows:

Bearing Installation—Loosen but do not remove all main bearing cap bolts sufficiently to allow crankshaft to drop down approximately ⅜". Remove **front intermediate** and **rear** main bearing caps (other bearing caps will support crankshaft), remove old bearings from bearing cap and crankcase (if old bearings do not drop down with crankshaft, tap bearings lightly to free dowel). Install new bearings, locating dowel on back of bearing shell in hole in crankcase, and pressing bearing up in place (bearing should snap into place and hold if it has correct spread). Re-install bearing cap, using .006" shim thickness (three .002" shims) on each side of cap, tighten bearing caps just enough to support crankshaft. Repeat above procedure at **front** and **rear intermediate** bearings (NOTE—Rear intermediate bearing is close fit in crankcase and may not go up into place until crankshaft lifted up). After all bearings replaced, place a jack under rear intermediate bearing cap and carefully raise crankshaft into position. Keep crankshaft horizontal during this operation (CAUTION—Make certain that timing gears meshed in accordance with marks made before crankshaft dropped). Tighten all bearing caps snugly, then adjust main bearings as directed on car model page.

Main Bearing Replacement (Trucks): Remove radiator (see Radiator removal), remove fan belt and vibration dampener (see Vibration Dampener removal). Loosen all rocker arm screws to relieve tension on camshaft. Remove spark plugs. Take off transmission floor pan cover and clutch housing underpan and extension. Disconnect transmission control rods on side of transmission case (½ & ¾ Ton), remove hand brake lever from transmission mounting stud (Other Trucks). Remove transmission (see Transmission removal instructions for each model on car model page). Remove oil pan and timing gear cover. Romove oil pump and screen cover assembly. Rotate crankshaft to position allowing removal of all bearing caps. **Mark timing gears to insure re-meshing of gears in same relative position.** Then install new bearings as directed for Pass. Cars

1940-48 MODELS

CRANKSHAFT OIL SEALS: Rear Seal. Special rear main bearing cap (mounted on four bolts with two locating dowels) with wick type oil seal installed in groove in cap and crankcase used. Seal bears on outer rim of crankshaft flange (oil slinger and check valve in oil return hole in bearing cap have been discontinued). To install new seal in bearing cap, insert packing in groove and roll firmly in place with rounded tool (roll from both ends toward center). Use round block of wood (same diameter as crankshaft flange) to hold packing in place, cut both ends off evenly and flush with bearing cap face. Install upper half of seal in crankcase in same manner with engine out of car.

Front (Timing Gear Cover) Oil Seal—Spring-loaded leather type installed in pocket in timing gear cover. To install new seal, place seal on special Oil Seal Replacer J-995 with free end of leather toward end of tool, seat seal in cover with few light hammer blows on tool. NOTE—Timing gear cover must be centered on crankshaft when installed on engine to prevent balancer damaging oil seal. To install cover, coat seal with grease, install centering guide J-966 on crankshaft, install cover and tighten cover screws.

1936-48 MODELS

FLYWHEEL INSTALLATION: Sealing of Mounting Bolts. To prevent oil leaks through flywheel bolt holes into clutch, it is recommended that a small amount of Permatex Formagasket No. 2 be placed in each bolt hole in crankshaft flange before installing the flywheel. Wipe face of flange and flywheel mounting surface clean (any foreign material on mounting surface will cause loosening and failure of the mounting bolts).

Installing Flywheel—Use new lock plates each time flywheel bolts are disturbed. Tighten all bolts evenly to 50-65 ft.lbs. and lock each bolt by bending corner of lock plate up against flat on bolt. Check flywheel for runout after installation with a dial indicator. Runout at face and rim of flywheel must not exceed .008".

VIBRATION DAMPENER

1936-48 MODELS

HARMONIC BALANCER: Service as complete assembly only (component parts not serviced separately). NOTE—Balancer used on 1941 and later cars cannot be used on 1940 and earlier models. Part Numbers of Balancer assembly as follows:

Models	Part No.	Hub Width	Diameter
1936	601359		
1937-40	603447	2¾"	6 5/32"
1941-48 216" Eng	605203	3"	6 5/32"
1941-48 235" Eng	605635		7 1/4"

Removal—Remove Front End Assembly as a unit first (see directions above). Use Chevrolet Harmonic Balancer Puller and Driver (consists of puller body, puller screw and pinned driver head), attach puller body to balancer by means of 2 capscrews in two tapped holes in balancer, pull balancer by turning up puller screw.

Installation—Place driver in starting crank jaws of balancer, install puller body (as above), line up keyway in balancer and key in crankshaft, turn puller screw down to contact driver, then use puller screw as driver and drive balancer in place.

IMPORTANT—1936-38 type Replacement Balancer retained by two capscrews. These screws must be removed in order to install Chevrolet Tool when installing balancer on engine. If Chevrolet tool not used, remove screws after balancer installed.

CAMSHAFT & BEARINGS

1938-48 MODELS

CAMSHAFT BEARINGS: Installation. Oil groove extends 70° around bearing from oil hole. To insure proper alignment with oil hole in block, mark front of bore opposite oil hole. Align oil hole in bearing with mark (with groove toward bottom of engine away from oil hole in block), press bearings in, stake in place, and line-ream (see below).

Reaming—Special reamer with four cutters on one bar recommended by car manufacturer (for proper alignment). Insert reamer through #1, #2, and #3 bearings. Start reamer cutters in all four bearings at the same time (wash metal cuttings away with liberal supply of kerosene while reaming), turn reamer slowly until cutters pass through bearings. Remove reamer by rotating in same direction as when reaming bearings and withdraw from engine. Bearing cuttings must be blown out with compressed air. Install camshaft and check bearing clearances with narrow feeler gauge. Clearance should be .002-.004". Install expansion plug to rear of rear bearing.

TIMING GEARS

1936-39 MODELS

REPLACEMENT TIMING GEARS: Crankshaft gear (steel) and camshaft gear (fibre) furnished as follows:

	Crankshaft Gear	Camshaft Gear
1936 Engines	837677①	838436③
1937-39 Engines	839259②	838436③

①—Stamped "35-6". ②—Has 1¼" center hole.
③—Part number stamped on gear.

1940-48 MODELS

REPLACEMENT TIMING GEARS: Crankshaft Gear—Steel type Replacement gear now furnished (same as 1948 original equipment type) has relocated keyway which retards valve timing 4° from original valve timing on 1940-47 engines.

►***VALVE TIMING CHANGE (With Replacement Timing Gear)—See "Valve System" below.***

Camshaft Gear—Fibre type used on all 216" Engines and 235" Engine before 1948. New aluminum gear with steel hub used on 1948 235" Engine and furnished for replacement on 1947-48 235" Engines.

►***CAUTION—Special crankshaft gear with "crowned" teeth must be used with aluminum camshaft gear.***

	Crankshaft Gear	Camshaft Gear
All Engines	839259②	838436③
1947-48 235" Engine	3835371④	⑤

②—3⅛" O. D. with 1¼" center hole
③—Has part number stamped on gear.
④—3⅛" O D Stamped "71".
⑤—Furnished as Unit with 3835371 Crankshaft gear under Part No. 3847620

1936-48 MODELS

TIMING GEAR ALIGNMENT: Gear alignment controlled by gaskets installed between Camshaft Thrust Plate and Crankcase Front End Plate (Front End Plate now installed with one gasket between plate and block and this gasket thickness not varied for alignment adjustment). Check gear alignment as follows

Gear Alignment—With Front End Plate installed on block, place a new Camshaft Thrust Plate and two Thrust Plate Gaskets, No. 839100, in position over camshaft hole in end plate. Check alignment by placing straightedge on thrust plate and noting if gear shoulder on crankshaft is in alignment. If straightedge strikes shoulder, add additional gasket under thrust plate. When correct gasket thickness determined for correct alignment, note number of gaskets and **install these gaskets** under thrust plate when camshaft assembly installed.

1936-48 MODELS

TIMING GEAR INSTALLATION: Gears are press fit on crankshaft and camshaft and must be removed and installed as follows.

Crankshaft Gear—To remove gear, attach Puller T126-R by threading puller screws in tapped holes in gear, pull gear off. When installing gear, make certain that two woodruff keys installed in crankshaft keyways, drive gear on shaft until it seats against shoulder on shaft.

Camshaft Gear—To remove gear, install Gear Remover J-971 on shaft in back of gear (remover consists of support sleeve), place camshaft assembly in arbor press (CAUTION—Thrust plate must be positioned so that it will not be damaged by woodruff key in shaft as shaft pressed out), press shaft out of gear. To install gear, place shaft in arbor press (support shaft securely directly back of front bearing journal), install thrust plate, place woodruff key in shaft keyway, press gear on shaft until thrust plate just turns freely (clearance between back of thrust plate and front bearing journal must not exceed .003"). This clearance will give correct camshaft endplay of Free to .003" maximum. When installing camshaft in engine, make certain that correct gasket thickness installed in back of thrust plate (see Gear Alignment data above), tighten thrust plate capscrews through hole in camshaft gear. ***CAUTION—Press on steel hub only when installing camshaft gear (pressure on composition or aluminum gears will cause damage).***

TAPPET CLEARANCE ADJUSTMENT

1936-48 MODELS

ENGINE NORMALIZING PROCEDURE (For Valve Tappet Clearance Adjustment): Clearance changes while engine is warming up. Adjust only after engine has been 'normalized' as follows: Run engine at 600 RPM and check oil temperature with thermometer at overflow pipe on valve rocker shaft connector until no change noted in oil temperature for period of five minutes (oil temperature will become stabilized at some point between 150-225° F.). This normalizing period will be from 5 to 30 minutes depending on engine temp. when started.

VALVE SYSTEM

1940-47 MODELS

VALVE TIMING CHANGE (1940-47 Cars & Trucks with Replacement Crankshaft Gear): Valve Timing will be changed by installation of replacement Crankshaft Gear which is new type (as used on 1948 and late 1947 engines—see Note). This gear is furnished for all engines beginning with 1940 under same part number as former type gear (Part No. 839259) and has changed keyway location which **retards valve timing 4° from original specifications** given for these 1940-47 engines.

►***CAUTION—On all 1940-47 Engines with the above Crankshaft Gear, disregard original Valve Timing data and use new Valve Timing given below.***

NOTE—This new Crankshaft Gear, and new Valve Timing specifications, apply to 1947 Engines (Flint production only) beginning with Engine No. 572254, as well as to all 1948 Engines (Flint & Tonawanda production).

Valve Timing
(With new No. 839259 Crankshaft Gear)

Intake Valves—Open 1° ATDC. Close 39° ALDC.
Exhaust Valves—Open 42° BLDC. Close 9° ATDC.
Valve Timing Check—Crank engine until #1 exhaust valve closed, tighten tappet adjusting screw until all tappet clearance is just removed. Crank engine until this exhaust valve opens and just starts to close, continue to crank engine until triangular mark on flywheel lines up with pointer in inspection hole in housing. Mount dial gauge on rocker shaft support so that indicator spindle contacts #1 exhaust valve adjusting screw. Set indicator dial at .044". Crank engine until indicator hand just stops moving. Indicator should read zero plus or minus .004". Reset tappet clearance.

LATE 1947 & 1948 MODELS

VALVE STEM OIL SEAL INSTALLATION: Seal consists of a flat synthetic rubber ring installed in **lower** groove on valve stem (upper groove is for split type valve locks) and is retained by the valve cap (special longer type valve cap used—can be identified by 1/16" deep annular groove on top face). Install seals during valve assembly as follows: With valve in place in cylinder head, install lower spring seat, valve spring, valve cap. Compress spring and valve cap so that lower groove is exposed within cap, install seal ring in lower groove (CAUTION—seal must seat in groove and be flat), install split type locks, relieve spring tension and check to see that cap retains seal and locks properly.
NOTE—Valve cap covers or "umbrellas" not used with these new type oil seals.

CONTINUED ON NEXT PAGE

VALVE SYSTEM

C NTINUED FR M PRECEDING PA E

1936-48 MODELS

VALVE GUIDE INSTALLATION: Use special valve guide drivers J-1089 (Intake), J-1090 (Exhaust) to install guides. Drivers have stop-collars which correctly position guides so that distance from cylinder head to top of guide is 1 1/16" (Intake), 61/64" (Exhaust). After guides installed, finish ream to inside diameter of .343".

Replacement Precision Valve Guide Note—Service guides furnished for replacement are precision type and require only finish reaming after installation for straightening of guide bore (formerly guides unfinished and required rough reaming also). Guides furnished under following Part Numbers:

	1940 & Earlier	1941 & Later
Intake Guide	3688758	3688760
Exhaust Guide	3688759	3688761

NOTE—These are new part numbers which supersede earlier precision type guide part numbers.

1937-40 MODELS

ROCKER ARMS: Two types of intake arms used. Install arms with slight angle toward front of engine for cylinders #1, 3, 5; angle toward rear for #2, 4, 6. All exhaust rocker arms straight. Replace worn rocker arms and worn shafts. Replacement arms furnished with finished bushings installed.

Assembly (1937-38-39)—Assemble rocker arm shafts with open ends toward center of engine. Use special bolt and washer for rocker arm and shaft assembly (washer prevents oil leak around bolt). Assemble spring to brass coupling, place elbow pipe on coupling (press elbow back on spring), install coupling on rear shaft (elbow can then be assembled on front shaft), turn up coupling nut on oil pipe.

Assembly (1940)—Open ends of shafts must be toward center of engine with baffle pressed in open end of rear rocker shaft vertical. Oil pipe connector is a brass sleeve which slips over end of each shaft and should be installed on shafts first and rocker assemblies then installed as a unit. CAUTION—Tighten rocker arm shaft support nuts to 25-30 ft. lb. tension only. Excessive tightening may distort shaft and cause rocker arms to bind.

1941-48 MODELS

ROCKER ARMS: Diamond bored and "granodized" (no bushings) and fit directly on rocker arm shafts. Four different types of rocker arms are used (offset at an angle) as follows:

	Part Number	Forge Number
Intake—Left Hand	839463	839465
Intake—Right Hand	839464	839466
Exhaust—Left Hand	839459	839461
Exhaust—Right Hand	839460	839462

Identification—Number cast on side of arm thus: **Left Hand Exhaust (marked 1 or 9), Right Hand Exhaust (0 or 2), Left Hand Intake (3 or 5), Right Hand Intake (4 or 6).** Number carried on side of each arm (also indicates manufacturing plant).

Installation—Install rocker arms in the following order (numbered from front to rear) on each shaft.

Front Shaft	Rear Shaft
1—L.H. Exhaust (1 or 9)	7 —L. H. Intake (3 or 5)
2—R.H. Intake (4 or 6)	8 —R.H. Exhauset (0 or 2)
3—L.H. Intake (3 or 5)	9 —L. H. Exhaust (1 or 9)
4—R.H. Exhaust (0 or 2)	10—R.H. Intake (4 or 6)
5—L.H. Exhaust (1 or 9)	11—L.H. Intake (3 or 5)
6—R.H. Intake (4 or 6)	12—R.H. Exhaust (0 or 2)

Rocker arms installed on tubular shafts and held against side of shaft brackets by spring installed on shaft between adjacent rocker arms and locked in position by hairpin spring installed in groove in plugged end of each shaft. Rocker shafts must be removed and installed as an assembly. Shafts should be assembled as follows: Open end of each shaft must be toward the center, stamped steel baffle in open end of rear shaft must be in vertical position, connect shafts by slipping brass oil connector over open end of each shaft.

OILING SYSTEM

1940-48 MODELS

OIL DISTRIBUTOR: Distributor is located in recess in left side of engine block (under cover plate). CAUTION—Inner and outer gaskets used with valve assembly plate must not be interchanged.

Removal—To dismantle oil distributor, take out three screws in cover plate, remove cover plate, outer gasket, valve assembly plate, inner gasket.

Assembly—Install cork gasket with **two center holes** between valve assembly plate and block, and use cork gasket with **center cut out** between valve assembly plate and cover, tighten cover screws.

1937-48 MODELS

OIL LEAD TO VALVE ROCKER ARMS: Installation. New assembly must be used whenever lead is removed from engine. To install proceed as follows: insert pipe in block, coat threads of nipple with white lead and screw in block (on right side), install nipple and sleeve nut on lower end of pipe (left side of block) and secure in place, then bend pipe in upward loop and connect to oil distributor, bend pipe on right side of engine to clear push rod cover and bend upper end so that it passes through hole in cylinder head, connect pipe to valve rocker shaft coupling. Run engine and check for leaks.

1937-48 MODELS

REPLACEMENT TIMING GEAR OIL NOZZLE: On these models, regular production timing gear oil nozzle is pressed and flared in place in the engine front end plate. Nozzle cannot be serviced, and if replacement is necessary, new front end plate No. 607872 must be installed.

1937-48 MODELS

CHECKING OILING SYSTEM: Oil nozzle height, oil trough height, aiming of oil nozzles, and connecting rod dipper height should be checked whenever oil pan removed. This check requires use of special gauges. CAUTION—Beginning with 1947, all engines (216" & 235") have same oil pan and special checking gauge used for each type (see below).

Oil Pan Trough Height—Use combination Oil Trough Depth & Connecting Rod Dipper Height Gauge No. J-969-2A (Regular 216" Engine), J-1646-A (235" Engine 1941-46), J-1541 (235" Eng. 1947-48). With oil pan gasket removed, place gauge on pan flanges with center pin extending down toward troughs. Slide gauge along pan so that pin passes over edges of trough at center. Pin should clear edge of trough and clearance at this point should not exceed .015". If pin strikes trough, grind edge of trough down for clearance, if clearance greater than .015", reweld any loose trough welds or replace oil pan. Check each trough in this manner.

Connecting Rod Dipper Height—Use same gauge as for Oil Pan Trough Height check (above). Turn crankshaft until connecting rod is at bottom of stroke, place gauge over connecting rod with the two gauge side pins resting on the oil pan mounting face of the crankcase, slide gauge over dipper. Low "Go" step of gauge should pass over dipper and high "No Go" step should not. If low step does not pass over dipper, tap dipper down with light hammer, if high step of gauge clears dipper, install new higher dipper. Check all dippers in this manner.

Oil Nozzle Height and Nozzle Aim—To check, with Oil Pan Target Gauge J-696-1 (for regular and Heavy Duty Engines), Install gauge and position it with dowels engaging screw holes in oil pan. Install Water Nozzle J-793-3 in main oil line. Tilt oil pan 45° so that nozzles are not covered by water in troughs. Use enough water to just straighten water streams from nozzles. Nozzle streams must hit holes in gauge. Use Oil Nozzle Wrench J-793-5 to adjust nozzles so that each water stream passes through center of its target hole. Recheck oil nozzle height

Oil Nozzle Height Note (1942 & Previous Cars). Use Oil Nozzle Depth Gauge J-969-3 to check oil nozzle height for connecting rod dipper clearance. Hook end of gauge over pan rail, position gauge in trough with side marked 'FRONT' toward front of oil pan. Open end of nozzle in trough should clear gauge. Check all nozzles in this manner.

RADIATOR

1939-40 MODELS

RADIATOR CORE REMOVAL: To remove radiator, core proceed as follows: Drain radiator, disconnect upper hose and remove lower hose. Remove hood assembly and moulding ('39), raise hood and remove side panels ('40) as directed above. Disconnect radiator brace rod at front end. Loosen brace rod at dash (allowing brace to be turned up for core clearance). Remove wiring harness from top of core. Take out water pump and fan assembly ('39). Remove two bolts on each side which hold radiator core in support, tilt top of core to rear to clear support and lift out.

1941 MODELS

RADIATOR CORE REMOVAL: To remove radiator, core (without disturbing grille), drain radiator, remove lower hose connection, disconnect upper hose. Pull out control knob on dash and raise hood, disconnect front end of radiator brace rods, loosen both sides of brace rod at dash and turn rod up to allow clearance for radiator core. Remove headlamp wiring harness from clip at each top corner of radiator core. Remove 2 core-to-shell bolts at each side, tilt top of core to rear and lift out.

1942-48 PASSENGER CARS

RADIATOR CORE REMOVAL: Passenger Cars. To remove radiator core, prop up hood in wide open position, drain cooling system, then working from under front end of car remove radiator drain cock and drain hose (on lower right front side of radiator). Disconnect radiator hoses at radiator (loosen hose clamps at water pump and cylinder head outlet so that hoses can be turned to provide clearance when lifting out core). Free wiring harness from radiator support and top tank. Remove carburetor air cleaner. Remove 4 core band-to-radiator support bolts (one at top, one at bottom, on each side). Turn fan to place wide spacing between blades at side, lift core straight up until outlet strikes cross brace on support, lay core back toward engine so outlet clears brace, lift core out.

1942-47 TRUCKS

RADIATOR CORE REMOVAL: Open hood and prop hood in open position with the hood brace, drain cooling system and remove all hoses. Remove 2 radiator brace bolts at radiator support and loosen brace rod nuts at dash (brace rod should be raised when removing core). Remove fan (take out 4 bolts in water pump pulley). Free wiring harness from radiator. Remove radiator core-to-support bolts (at sides inside fender skirt). Move fan shroud to the side and maneuver shroud around radiator support brace attaching bolt, lift shroud out. lift core out.

1947-48 TRUCKS

RADIATOR CORE REMOVAL: Trucks. Raise hood and block in open position. Drain cooling system by removing drain plug. Disconnect and remove inlet and outlet hoses. Remove radiator mounting bolts from radiator support, lift radiator up and out.

NOTE—On models with radiator shroud, push shroud back and down over fan blades for clearance.

PROPELLER SHAFT

1941-42 TRUCK MODELS

►**Replacement Support Bearing (For 1941-46 Trucks):** New 1947 type (with improved sealing and greater stability) furnished for replacement use on these trucks. Complete assembly furnished in special Propeller Shaft Bearing Support Kit, Part No. 609037 (same part number as first type support kit). ***See 1947 type Propeller Shaft Support Bearing for all data on this new type.***

Lubrication Note—New type support bearing has grease fitting for lubrication of the double row ball-bearing. Use regular chassis lubricant.

PROPELLER SHAFT SUPPORT BEARING (Orig. Type on ¾ Long WB., 1, 1½ Ton Trucks): These models use two propeller shafts with 3 needle bearing universal joints and a support bearing ahead of intermediate universal (195" wheelbase School Bus chassis uses 4 universals, 3 shafts, and 2 support bearings). Support bearing Assembly consists of a single row sealed type ball-bearing mounted on rear end of front propeller shaft ahead of intermediate universal front yoke with an inner dust shield assembled on each side of bearing and an outer dust shield (in two halves) mounted over outer race of bearing. A rubber cushion seats around this outer dust shield and inside a sleeve on the support bracket. Support bracket is attached to frame cross-member by 2 bolts. An additional dust shield is assembled on shaft against shoulder on rear of shaft and extends over sleeve in support bracket (this shield need not be disturbed for support bearing servicing).

Removal and Installation—Remove front propeller shaft by disconnecting front and intermediate universals and removing 2 support bearing bracket-to-frame bolts. Remove front yoke of intermediate universal. Wet rubber cushion (to soften soap used to install cushion), clamp support bracket in vise and work shaft out of support. Remove the rubber cushion from bearing by hand. Use screw type puller J-1619 mounted in vise to withdraw bearing from shaft (jaws on tool engage outer race of bearing). Tap dust shield off outer race of bearing. Wash all parts of assembly (except bearing) in good cleaner. Check bearing and replace if rough or excessive endplay present. To reassemble, press outer dust shield (tw halves) on outer race of bearing, install one inner dust shield on shaft (with raised portion of inner circumference toward bearing), drive bearing on shaft with universal joint yoke, install the other inner dust shield, assemble rubber cushion over bearing, coat outer side of cushion with soft soap, slide support bracket in place on rubber cushion, install front yoke of intermediate universal (must be turned 90° from rear yoke of front universal). Make certain that rear yoke of intermediate universal is in same plane as front yoke of rear universal on rear propeller shaft (for correct alignment of all universals). Install assembly on truck.

1941-47 ¾ TON TRUCK

PROPELLER SHAFT SUPPORT BEARING (¾ Ton Short Wheelbase and Special Models): Equipped with three universal joints (the intermediate and rear joints are exposed needle bearing types, front universal is equipped with bushing type joint enclosed in ball housing), two propeller shafts (rear shaft exposed, front shaft enclosed type), and a support bearing ahead of intermediate universal mounted in rear end of front propeller shaft housing. Support bearing Assembly consists of a single row sealed type ball-bearing on rear end of front propeller shaft ahead of intermediate universal front yoke mounted in rear end of front propeller shaft housing. A ring is assembled on the shaft ahead of bearing, and a dust shield behind the bearing. A rubber cushion is assembled on end of housing and seats in sleeve in support bracket.

Removal and Installation—Remove Front Propeller Shaft by disconnecting intermediate universal, slide front universal ball retainer back on housing after removing 4 attaching bolt, and removing support bearing bracket-to-frame bolt nuts. Remove front yoke of intermediate universal, and bearing dust shield. Wet rubber cushion (to soften the soap used to install cushion), clamp the support bracket in vise and withdraw housing. Remove rubber cushion by hand. Slip ball retainer off over end of housing. Remove bearing retainer snap ring and drive shaft and bearing out of housing with a brass drift. Use arbor press to remove bearing from shaft. Wash all parts of assembly (except bearing) in good cleaner. Check bearing and replace if endplay excessive or bearing runs rough. Check leather oil seal in housing (do not remove unless a new seal to be installed—leather should be soaked in light engine oil and edge should curl towards the front when installed). Check bushing in front end of housing and replace if worn. To reassemble, press bearing on shaft with an arbor press, install shaft and bearing in housing (tap outer race of bearing with soft drift to seat bearing), insert snap ring, slip universal ball retainer over housing (a new cork packing should be shellacked to retainer), install rubber cushion on housing, coat cushion with soft soap, install support bracket over rubber cushion, install bearing dust shield and intermediate universal front yoke. When installing assembly on truck, lubricate universal ball before assembling ball retainer. Also fill front universal housing with 1 pint of S.A.E. 90 transmission lubricant (use also for intermediate joint).

1946 TRUCK MODELS

►**Replacement Support Bearing (For 1946 Trucks):** New 1947 type (with improved sealing and greater stability) furnished for replacement use on these trucks. Complete assembly furnished in special Propeller Shaft Bearing Support Kit, Part No. 609037 (same part number as first type support kit). ***See 1947 data below.***

PROPELLER SHAFT SUPPORT BEARING (Orig. Type on 1, 1½, 2 Ton Trucks except C-O-E 109" WB. Model). Same as 1941-42 type (above) except for redesigned support bearing mounting as follows:

Support Bearing & Mounting—Bearing is double row ball bearing (not sealed) fitted with grease fitting for lubrication in service. Bearing is installed in retainer with inner seal and snap ring at each end. Retainer and bearing assembly is mounted on rear end of front propeller shaft with dust seal at each end and spring lock wire and shield at rear end between retainer and universal joint yoke.

Removal & Installation—See 1947 type (below).

1947 TRUCK MODELS

PROPELLER SHAFT SUPPORT BEARING: 1 Ton, 1½ Ton, 2 Ton Trucks (except Cab-over-Engine 109" WB. Model): Propeller shaft assemblies are same type as used on 1941-42 models (above). Support bearing is new type double row ball-bearing (not sealed) with grease fitting for lubrication in service. Bearing retainer is new type with wide neoprene insulator band and is used with new combination felt-and-neoprene dust shields.

Removal & Installation—Propeller shafts and support bearing assemblies are removed in same manner as 1941-42 type (above). To install new 1947 type support bearing, proceed as follows:

Install double row ball bearing in bearing retainer (both sides of bearing are the same), install snap ring in retainer on each side of bearing making certain that rings are seated in grooves. Install dust shield spacer in rear end of retainer with prongs in toward bearing. Soak dust shields (combination felt and neoprene) in SAE. No. 40 or 50 engine oil until thoroughly saturated (or until all bubbling stops), press one dust shield in each end of bearing retainer with **neoprene side in toward bearing,** stake dust shields in place securely at six points around retainer rim. Install retainer insulator in groove on outer surface of bearing retainer, install retainer assembly in propeller shaft bearing support (NOTE—Insulator is impregnated with paraffin to facilitate installation) making certain that lubricant fitting boss on bearing retainer engages slot in support, install lubricant fitting in this boss. Install bearing support assembly on rear end of front propeller shaft (see Propeller Shaft Note below) with lubricant fitting end of assembly toward splined end of shaft, so that bearing seats against shoulder on shaft (bearing should be snug on shaft and can be forced to seating position against shoulder with universal joint flange). Install propeller shaft flange and dust shield assembly (see Note) on shaft, inserting end of flange through bearing dust shield, until flange seats against bearing, screw flange retaining nut in threaded hole in end of shaft, tighten nut with torque of 160-280 ft.lbs., secure nut with cotter pin. Install assembly in truck. Lubricate bearing (see Lubrication data below).

Propeller Shaft Note—When installing new type bearing support assembly on trucks prior to 1944

C NTINUED ON NEXT PAGE

CONTINUED FROM PRECEDING PAGE

production, make certain that there are no sharp edges on spline end of shaft that might cut or damage dust shields during assembly. Polish the end of the shaft with fine emery or crocus cloth.

Propeller Shaft Flange & Dust Shield Assembly—If dust shield not installed on propeller shaft flange, install shield as follows: Press dust shield on flange hub, with open (concave) side of shield away from yoke end of flange, until shield seats firmly against shoulder on flange. Polish hub of shaft flange with fine emery or crocus cloth to remove all rough spots which might damage support bearing dust shield when flange installed (end of flange hub passes through dust shield and bears against bearing).

Lubrication of Support Bearing: Lubricate bearing with chassis lubricant through special lubricant fitting until lubricant appears at pop-off valve in fitting. When new bearing assembly first placed in service, lubricant will leak past seals at both ends of bearing until proper clearance secured for operation of the bearing. No further leakage should occur after this initial period.

Periodic Lubrication—Lubricate this bearing at each regular chassis lubrication period.

1948 TRUCK MODELS

PROPELLER SHAFT SUPPORT BEARING: 1 Ton, 1½ Ton, 2 Ton Trucks (except Cab-over-Engine Short WB. Model): Support bearing is new single row permanently lubricated ball bearing in new type mounting with "grease traps" packed with water proof grease to prevent entrance of dirt and water. Propeller shaft design unchanged.

Removal & Installation: Propeller shafts are removed and installed in same manner as on previous models. Support bearing should be serviced as follows:

Removal—Split intermediate universal joint by removing two trunnion bearing "U" bolts (tape or wire bearings in place). Remove bolts attaching bearing support bracket to frame cross-member. Remove universal flange retaining nut, remove flange, pull support assembly off rear end of front propeller shaft. Place support assembly in arbor press using a piece of tubing to apply pressure on rubber cushion (tubing should clear slinger and be snug fit in bracket), press bearing and cushion assembly out of bracket. Remove cushion and grease retainers from bearing.

Servicing—Clean rubber cushion with pure denatured alcohol, replace cushion if cracked, hardened, or distorted. Check bearing by rotating inner race slowly by hand. CAUTION—Do not attempt to remove oil seal retainers from bearing and do not clean bearing with gasoline or solvent which will wash lubricant out (requiring new bearing).

Assembly & Installation—See that grease deflectors on propeller shaft and universal joint yoke are tight (staked on shaft by prick punching at two points). Assemble grease slinger on outer bearing race (one at each side), force bearing and slinger assembly into rubber cushion. Coat outer surface of rubber cushion with brake fluid, place support bracket on arbor press with flanged side up, position bearing and cushion squarely in flanged end of bracket bore, use piece of tubing to press on rubber cushion only and press assembly in bracket until face of grease retainer is flush with flanged end of bracket (CAUTION—this position important to provide clearance between grease retainers and grease deflectors, if assembly pressed too far in bracket, turn bracket over and press assembly out to correct position). Pack grease retainers on both sides of bearing with waterproof grease (grease used to keep out dirt and water—does not lubricate bearing). Install support bearing and bracket assembly on end of front propeller shaft making certain that grease slingers lined up with bearing hole and that flanged end of bracket is forward. Install intermediate universal joint yoke on end of shaft, tighten yoke retaining nut to 160-280 ft. lbs. Then check clearance between rear edge of propeller shaft dust shield and front face of bearing support bracket. This clearance should be ½" plus or minus 1/32" Install bolts, lockwashers, and nuts attaching bearing support to frame cross-member, tighten nuts.

TRANSMISSION NOTES

1937-47 TRUCK MODELS

REPLACEMENT COVER PLATE INCORRECT ASSEMBLY (Causing Low Speed Disengagement): If transmission jumps out of Low Gear (resulting from limited gear engagement), or overshifts in Reverse, after installation of Replacement Transmission Cover Plate Assembly, Part No. 590859, remove and check the cover plate for incorrect assembly as directed below. All cover plates which are found to have the guide plate incorrectly assembled should be replaced.

Cover Plate Check for Incorrect Assembly—The incorrect assembly is caused by Shifter Interlock Guide Plate having been welded in place in cover upside-down so that guide pin slot is incorrectly placed. To check cover, measure from inside edge of stop pad at front of cover (see Note) to edge of guide pin slot (half-round slot approximately midway between stop pads) and likewise measure from inner edge of stop pad at rear to edge of guide pin slot. These measurements should be 13/16" (front), ¾" (rear). If cover plate not correctly assembled, measurements will be reversed (¾" front, 13/16" rear) and cover plate should be replaced.

Cover Plate Note—Front of cover plate can be identified (when making measurements) by fact that two mounting bolt holes across front edge are closer together than holes along rear edge.

REAR AXLE NOTES

1938-48 MODELS

AXLE SHAFT (PASSENGER CARS): Installation. Assemble new oil deflector, gasket (with shellac or paint on both sides), line up extra hole (center of three closest together) with notch in hub flange in axle shaft (also oil pocket in oil deflector with this notch), insert six new bolts and peen into place in countersink around bolt holes in flange using special Peening Tool and Anvil so that these parts are riveted together. NOTE—Axle shafts are of unequal length, longer shaft used on right side.

1940 Axle Shaft Production Change—On later cars, brake drum retained by two 'zipon' type nuts instead of screws (zipon nuts used on all 1941 and later cars).

Axle Shaft Note—Shafts unequal in length (right shaft longer). Part numbers are as follows:

1938 Passenger Cars

	Part No.	Length	Marking
Left Axle Shaft	602969	28⅝"	——
Right Axle Shaft	602970	29⅝"	——

1939-40 Passenger Cars

Left Axle Shaft	603617	28⅝"	——
Right Axle Shaft	603618	29⅝	——

1941-48 Passenger Cars

Left Axle Shaft	3657313	29⅛"	"GM-13"
Right Axle Shaft	3657314	30⅛"	"GM-14"

Endplay Adjustment—When installing shaft, select correct spacer block (see below) so that when installed on pinion shaft between inner ends of axle shafts, shaft endplay will be from a Free Fit to .014" maximum clearance.

Axle Spacer (Pass. Cars)—Three spacer blocks furnished which provided four sizes as follows:
Part No. 472547—Narrow (1.0105").
Part No. 473603—Medium (1.0195" & 1.0295")
Part No. 597254—Wide (1.0345").

Above dimensions are measured across the ground surfaces and spacers should be installed with ground surface toward the axle shaft end. Medium spacer ground on all four sides and may be installed either way to secure the two different sizes.

1940-48 ½ TON TRUCK
1940-42 ¾ & 1 TON TRUCKS

AXLE SHAFT (½, ¾, & 1 TON TRUCKS): Shafts are heavier construction than Passenger Car type.
Installation—Assemble new oil deflector, gasket (coat both sides with heavy shellac or paint), line up extra hole (center hole of closely grouped three holes) with notch in hub flange on axle shaft (oil pocket in oil deflector should also be aligned with this notch), install six special bolts, forcing heads down to deflector, and peen shoulder on bolts into countersink around bolt holes in flange using Special Peening Tool and Anvil so that these parts are riveted together. Check endplay (below).

1940 Axle Production Change—On later ½ & ¾ Ton models (not ¾ Ton Special), brake drum is attached to axle shaft flange by two 'Zipon' type nuts installed on diametrically opposite wheel bolts and special attaching screws are not used (axle shaft flange not drilled for these screws although screw holes provided in drums so that drums can be used on either type axle shaft). Both types of axle shafts (with and without drum attaching screw holes) furnished for service.

Axle Shaft Note—Shafts unequal in length (right shaft longer). Part numbers are as follows:

1940-Early 1941 ½ Ton Truck

	Part No.	Length	Marking
Left Axle Shaft	3656861	28 11/16"	"61"
Right Axle Shaft	3656862	29 11/16"	"62"

Late 1941-1947 ½ Ton Truck
1940-42 ¾ & 1 Ton Truck

Left Axle Shaft	3652341	28 11/16"	"41"
Right Axle Shaft	3652342	29 11/16"	"42"

Late 1947-1948 ½ Ton Truck

Left Axle Shaft	3683161	29½"	"GM-161"
Right Axle Shaft	3683162	30½"	"GM-162"

Endplay Adjustment—When installing shaft, select correct spacer block (see below) so that with spacer installed on pinion shaft between inner ends of axle shafts, shaft endplay will be from a Free fit to .014" maximum clearance.

Axle Spacer (Trucks)—Two spacer blocks furnished which provide three sizes as follows:
Part No. 370217—Narrow (1.1485").
Part No. 372515—Wide (1.1575" & 1.1675").
These dimensions are taken across ground surfaces.

NOTE—Spacers should be installed with ground surface toward axle shaft end. Wide Spacers are ground on all four sides (giving two sizes listed).

1940 MODELS

AXLE SHAFT VENT CHANGE (½ & ¾ Ton Trucks): Location of axle vent changed in production from torque tube to axle housing (top left side 8" from vertical centerline). If lubricant pumps out of Torque Tube vent on early models, correct this condition by providing new vent as follows:

Axle Vent Service Change—Remove torque tube vent and plug this opening with pipe plug. Provide new vent by drilling ⅛" hole through first axle housing cover bolt to left of top bolt and inserting 1/16" cotter pin through this hole (bend cotter pin to prevent it falling out in service). CAUTION—If late type carrier & Torque Tube Assembly (without vent) is used with first type Axle Housing (without vent), a vent must be provided by drilling 11/32" hole in top of axle housing 8" to left of vertical centerline of axle. Thread hole with ⅛" tapered pipe tap, install #3652364 regular production vent. NOTE—If desired, vent may be provided by drilling housing cover bolt instead of installing this production vent (see directions above).

1946-47 MODELS

REVACYCLE DIFFERENTIAL PINION & SIDE GEARS: New type "Revacycle" gears (superseding "Involute" gears used on previous models) are used on the following models:

Passenger Cars

All Models 1946-47-48

Truck Models

¾ & 1 Ton Truck 1946-47-48
Other Trucks with Two-Speed Axle ①1946-47-48
①—Beginning with 1946 Axle Serial No. BV-1781.

Revacycle gears have new tooth shape and **must be used together** (not interchangeable with previous type Involute gears except in complete sets).
CAUTION—Any attempt to use Revacycle and Involute gears together will result in noisy operation and early failure (difference in tooth shape will result in very little tooth contact).

Identification of Gears—Revacycle and Involute gears can be distinguished by tooth shape as well as by markings placed on the gears for this purpose. Tooth characteristics are as follows:

Side Gears—Revacycle gear teeth are narrower at heel (larger diameter) end than Involute gears and top of tooth is **same width from heel to toe** (Involute gear teeth taper from heel to toe). See Parts List below for special gear markings.

Pinion Gears—Revacycle gears have top of tooth of **same width from heel to toe** as on side gears (Involute gear teeth taper from heel to toe) and inner end of Revacycle gear teeth are shorter than on Involute gears. Pinion gears for Passenger Car models can also be distinguished by over all diameter of gear at inner (toe) end of teeth. Revacycle gears are 1 28/64" while Involute gears are 1 37/64" in diameter. See Parts list below for other markings.

Involute Gears

Car or Truck Model	Part Numbers Side Gear	Pinions
Passenger Cars (1937-42)	3651053①	472515
½ Ton Comm'l (1937-48)	3652344	370225
¾ & 1 Ton (1937-42)	3652344	370225
Two-Speed Axle (1939-46)③	3651184②	②3651424
1½ Ton (1936-48)	370445	370446
2 Ton (1942-48)	3661874	370446

①—Stamped "GM39" on end of hub.
②—Stamped "2234-K-63" on inner face of gear.
③—1946 Axles before Serial No. BV-1781.

Revacycle Gears

Car or Truck Model	Part Numbers Side Gear	Pinions
Passenger Cars (1946-48)	3682122⑤	⑥3682121
¾ & 1 Ton (1946-48)	3681056	3681055
Two-Speed Axle (1946)④	3682229⑦	⑧3682228
Two-Speed Axle (1947-48)⑨	3682526⑩	⑪3682492

④—Axle Serial No. BV-1781 Up with mechanical shift control.
⑤—Stamped "GM-R" on end of hub.
⑥—Marked by daub of yellow paint on inner face.
⑦—Stamped 2234-V-204 on inner face of gear.
⑧—Stamped 2233-Z-104 on chamfer on small end of teeth.
⑨—Axles with Vacuum shift control.
⑩—Stamped 2234-T-202.
⑪—Stamped 2233-F-110.

1946-48 TRUCKS

TWO-SPEED AXLE SHIFTING COMPLAINTS (With Vacuum Shift Control): If vacuum shift is hard to operate or sticks in one position, this may be caused by vacuum shift control valve shaft being tight or frozen in valve body. Correct this trouble as follows: Disconnect pipe fittings at back of valve body and speedometer adapter operating rod at lever on end of valve shaft. Take off cap nut and washer and remove valve operating lever from valve shaft. Remove two screws mounting valve assembly on instrument panel, remove valve assembly. Remove cotter pin from valve shaft, drive valve shaft out of valve body by carefully tapping on threaded end of shaft with a soft hammer. Examine shaft for evidence of seizing (usually occurs near washer brazed on shaft). Remove excess metal from shaft with a file, then polish shaft with fine emery or crocus cloth. Lubricate shaft lightly with Gredag No. 213½ or other graphite grease (CAUTION—Do not use mineral oil—will cause failure of rubber disc in valve assembly). Re-install shaft, reassemble valve assembly and install on truck.

1946-47 TRUCK MODELS

INCORRECT SPEEDOMETER READING (1946-47 Trucks with Two-Speed Rear Axle): If speedometer reads too high in Low Gear, and too low in High Gear, this may be caused by incorrect assembly of speedometer adapter shift lever. To correct this complaint, remove small shift lever on top of speedometer adapter case, turn lever ½ turn or 180°, re-install lever. This will reverse direction of shift and speedometer should read correctly.
NOTE—When lever correctly installed, small hole for attachment of operating rod will be toward front of truck. The other end of the operating rod should be connected in the outer hole of the lever on the vacuum shifter valve shaft.

REAR SPRING SEAT & SHACKLE

1938-48 PASSENGER CARS

REAR SPRING SEATS (ALL PASSENGER CARS): Bracket welded on front of housing at each spring. Spring seat attached to bracket by means of rubber bushed bolt (spacer sleeve through which bolt passes, used to prevent collapse of bracket when tightening bolts with great deal of pressure). Rubber washers used between bracket and each end of spring seat. Spring seat attached to springs through conventional U-bolts. IMPORTANT—When reassembling spring seat to bracket (when installing rear axle), eye bolt nut must not be tightened until all other connections made and car weight resting on all 4 wheels.

1938-42 TRUCKS

REAR SPRING SEATS (TRUCKS): Fitting Seats. Whenever rear spring seats are adjusted, clearance between spring seat and rear axle housing must be checked as follows: Block up rear of car under frame side rails, drop rear of spring by disconnecting spring shackle, take out spring U-bolts, remove spring seats (lower spring cap secured by means of 2 screws). File face of each spring seat half evenly (place in bench vise) until spring seat gives slight drag when placed on housing and rotated. CAUTION—File both halves evenly.

NOTE—This type spring seat used on ½ Ton Model only for 1941-42.

Rear Spring Noise (1941 ¾ & 1½ Ton Panel Trucks). May be caused by excessive sideplay of rear springs which is accentuated by panels. Correct by installing special .010" thick shim, No. 3667063 on spring pins at front end, or upper and lower pins at rear (shackle end) of spring to correct excessive sideplay.

Rear Spring shifting on Seat (Early 1941 ¾ Ton Trucks). To correct this complaint on early 1941 models with ¼" thick spring center bolt, replace bolt with new ⅜" type, Part No. 1288224, which will assist in keeping spring centered on axle.

1940-42 MODELS

REAR SPRING REAR SHACKLE (PASS. CARS): Two type of shackles have been used as follows:
Threaded Design—Threaded bushing and tapered pin type. Used on all '40 cars, part '41-42 cars.

Tight Shackle Pin Correction—If shackle pins tight or seized, remove pin and bushing assembly from rear spring hanger, enlarge eye in hanger approximately .005-.010" with a drift, install new pin and bushing assembly.

Rubber-Bushed Design—New type used on some '41-'42 cars. Shackle assembly consists of outer shackle plate with two pins serrated through plate and swaged in place, two split-type synthetic rubber bushings (each bushing consists of two halves with a shoulder on the outer end of each half), an inner shackle plate, and two castellated lock nuts. Rubber bushings extend out ¼" beyond space between two shackle plates when tightened in place. When inner plate bottoms on pin shoulders (by tightening lock nuts) excess rubber (¼" extension) forced into eye and around pins forming a tightly locked joint.

Servicing—Rubber-bushed shackle may be removed by merely raising car to relieve load, removing two lock nuts and inner shackle plate (releasing

C NTINUED N NEXT PAGE

CONTINUED FR M PRECEDIN PAGE

pressure on bushings) and taking out outer shackle plate with pins, and removing bushings from spring and hanger eyes. Shackle can be installed as follows: Raise car to properly position spring hanger and spring eye for shackle installation, clean bushing holes, bushings (inside and outside), shackle plates and pins, install bushings in spring and hanger eyes with shoulder on each half on outside, install shackle plate with pins (insert pins through bushings with pins extending in toward center of car), install inner shackle plate, tighten lock nuts half way on pins, set car on wheels at curb weight (no load or passengers in car), bounce rear end of car to seat bushings, then without disturbing normal rest position of car, tighten lock nuts on inner shackle until plate bottoms on shoulders of pins. These shackles require no lubrication.

STEERING NOTES

1946 TRUCK MODELS

STEERING ARM & TIE ROD CHANGES (1½ & 2 TON TRUCKS): Steering arms on trucks with heavy-duty front axle changed in production to provide greater tire clearance when 20x6.0 wheels and tires used (axle changed to move tie rod ends of arms in toward center line 25/32"). Special Tie Rods are used with each type of Steering Arm and correct type must be installed (proper toe-in adjustment cannot be secured if wrong type tie rod is used). A total of **three different types of Steering Arms and Tie Rods have been used on these models.**

Replacement of Steering Arms & Tie Rods: All types not furnished for service (none of first type and limited number of second type available). If one steering arm of early types being replaced, it will be necessary to **replace the other steering arm and tie rod** also to maintain correct steering geometry and permit correct toe-in adjustment to be secured. Part Nos. are as follows:

	Steering Arm & Third Arm (RH)		Steering Arm (LH)	
Type	Part No.	Forge No.	Part No.	Forge No.
1st.	3681151	3681145	3681147	3681147
2nd.	3682189	3682133	3682135	3682135
3rd.	3685153	3685157	3678185	3678185

Forge No. Note—This number is located between the two bolt holes in the arm and can be used to identify the various types.

Tie Rod (less Tie Rod Ends)

Type	Part No.	Length
1st.	3681850	47 9/16"
2nd.	3682119	46 25/32"
3rd.	3685160	46 1/16"

IGNITION REVERSING SWITCH

1941-48 MODELS

REMOVAL OF REVERSING SWITCH FROM CARS & TRUCKS: If necessary to remove the reversing switch on models equipped with this unit, make all changes as noted below (CAUTION—Condenser must be changed to new lower capacity unit when ignition system operated without reversing switch):

1. **Remove Reversing Switch from Starter**—Disconnect wires at reversing switch, remove switch from starter. Grind off unthreaded portion of switch attaching screws and **re-install these screws** in starter frame to plug holes.
2. **Discard Reversing Switch Harness**—Disconnect reversing switch wires at distributor and ignition coil and discard this harness.
3. **Install New Coil-to-Distributor Lead**—Connect new low tension wire, Part No. 5288968, between ignition coil terminal and outer terminal (away from engine) on distributor.
4. **Install new lower-capacity Condenser**—Remove and discard original .3 mfd. condenser, No. 1882239, (can be identified by figure .3 stamped on terminal clip). Install new .2 mfd. condenser, No. 1869704, (can be identified by longer lead), using same mounting clamp bracket.

►***CAUTION—This lower-capacity condenser must be used in all ignition systems without reversing switch.***

5. **Ground Distributor Breaker Plate**—Disassemble inner (toward engine) distributor terminal and remove insulator washer from terminal post. Remove paint and thoroughly clean distributor housing around terminal post so that a good ground secured at this point, re-install flat washer and nut on terminal post (omission of insulator washer will ground terminal to housing when nut tightened).

CAB-OVER-ENGINE NOTES

1939-47 MODELS

REMOTE CONTROL TYPE GEARSHIFT LEVER: Removal. Disconnect gearshift lever at top of engine cover, loosen wire on cloth boot, raise boot above transmission cover tower. Remove nut from stub gearshift lever and raise reverse latch Bowden cable support *onto top of lever.* Use gearshift lever removing tool K-353 to remove lever assembly from transmission cover. When installing lever, see that end of reverse latch shift rod seats in upper part of 'U' shaped bracket at end of reverse latch Bowden cable and that retaining nuts are tight so that rod anchored in bracket.

1939-40 MODELS

ENGINE COVER REMOVAL: To take off engine cover proceed as follows: Remove seat cushion and seat back, take out 4 bolts on cover at gear shift lever and raise assembly to rear, remove floor mats on each side, remove engine cover screws (at rear and at front on each side). Lift engine cover out by raising forward end and pulling out towards front.

NOTE—Right floor pan has hand hole for access to engine oil stick, crankcase oil filler pipe, and for lubrication of distributor and starter.

Left Floor Pan Note—Whenever floor pan removed, disconnect accelerator linkage by passing wire through accelerator spring and pull it upward exposing cotter pin retainer, then pull cotter pin out.

1939-40 MODELS

FRONT COWLING REMOVAL: Take out 6 retaining screws on each side (2 top screws nuts accessible through side ventilators—not used on late models), remove 2 screws at top of cowling and take off radiator filler cap. Lift cowling up and forward. When replacing cowling, rubber insulators at upper screws must be installed between cowling and dash at each side. NOTE—With cowling removed, radiator may be taken out allowing access to water pump, fan belt, harmonic balancer, generator and front engine mountings.

1941-48 MODELS

STEERING GEAR LUBRICATION FITTING: Steering gear on these models is mounted at sharp angle and special extension oiler, Part No. 3661598, is installed in steering gear housing to maintain correct lubricant level (higher level necessary to insure lubrication of upper bearing). **This oiler must not be replaced with conventional filler plug or fitting (will cause failure of upper bearing).**

NOTE:—To remove oil pan for work on engine, drop right hand tie rod. On Master Model FD with conventional axle it may be necessary to bend lip of front cross member or hoist engine so that oil pan will clear.

MODEL IDENTIFICATION

FLEET 'ECONOMY' MODEL NOTE:—All models available with special Economy Engine and rear axle ratios as follows:

Model	Axle Ratio	Top Speed (No Governor)
FB, FC	4.11-1	
FC	3.82-1	65 M.P.H.
FB	3.82-1	60 M.P.H.
R	6.16-1	
R	5.43-1	51 M.P.H.

These models identified by special name plate on instrument panel stating that performance curtailed in interest of economy and by plate on valve rocker arm cover listing special tune up specifications (see note) and by prefix 'V' on engine number.

NOTE—Economy engine fitted with special carburetor (painted gray) which has throttle stop pin limiting throttle opening to half-throttle and requires special spark plug gap, tappet clearance, and engine oil. See data below. Throttle stop pin may be removed to permit top speed if necessary. See article on carburetor in Carburetion Section.

SERIAL NUMBER:—First number—1001. Prefixes 1-FA-03 indicate assembly plant (1 to 21), Model (FB, FC, RA, RB, RC, RD), and month (01 to 12). Located on right front sill (passenger cars), or on dash (trucks).

ENGINE NUMBER:—First number—5500179. Prefixed by letter indicating model as follows: M—FC passenger cars. K—FB commercial cars. T—R Trucks. No prefix used on Master FA, FD passenger cars. Economy engines indicated by 'V' (V, VM, VK, VT). Number is stamped on boss on right side of block back of fuel pump.

TUNE-UP

COMPRESSION:—Ratio 6.0-1 Std. Pressure 102 lbs. actual pressure at cranking speed or 90 lbs. minimum with all cylinders alike within 5-10 lbs.

VACUUM READING:—Gauge should show steady reading of 20-22" of HG. with engine idling at 400 RPM

FIRING ORDER: 1-5-3-6-2-4. See diagram.

SPARK PLUGS: AC Type K-11. 14 mm. Metric type.
Gaps—.032-.035" (Std.), .040" (Econ. Engine).

IGNITION: See Coil, Condenser, and Distributor.
Breaker Gap—.018". **Cam Angle** 35° (closed).
Breaker Arm Spring Tension—17-21 ounces.
***Automatic & Vacuum Advance**—See Distributor.*

IGNITION TIMING: See Ignition Timing.
Std. Setting—5° BTDC. with flywheel mark (steel ball) at indicator in inspection hole in right front face of flywheel housing.

CARBURETION: See Carburetor & Carb. Equipment.
Idle Setting—Idle screw 1-2 turns open. Idle speed 400 Engine RPM. or 7 MPH.
Float Level—⅜" top of float at free end to gasket seat on cover with needle valve seated.
Accelerating Pump—Outer hole—Summer, Inner hole—Extremely cold weather.

Fuel Pump Pressure: 3½ lbs. maximum.

►**VALVE TAPPET CLEARANCE:** *CAUTION—Engine temperature must be "normalized" before adjusting. See "Tappet Clearance Adjustment" in Chevrolet Shop Notes.*

Cars & Trucks—.006-.008" Intake, .013-.015" Exhaust, with engine "normalized".

Trucks (for continuous full throttle operation)—.010" Intake, .020" Exh., with engine "normalized".

Economy Engine—.010" Intake, .016" Exhaust, with engine "normalized".

Valve Timing Check: *See Valve Timing.*

STARTING: See Battery, Starter, Generator, Regulator.

IGNITION

IGNITION SWITCH: Delco-Remy. Model 431-P (Pass. Cars), 431-Y (Comml. & Truck). Connected to coil by armored cable.
Ignition Lock—Briggs & Stratton.

COIL: Delco-Remy Model 536-D. Mounted on right side of engine block directly above distributor.
Ignition Current—2.5 amperes idling, 4.8 stopped.

CONDENSER: Delco-Remy Part No. 1861709.
Capacity—.20-.25 microfarad.

DISTRIBUTOR: Delco-Remy Model 645-T. Single breaker, 6 lobe cam, full automatic advance type with vacuum spark control and Octane Selector.
Breaker Gap—.018". Limits .018-.024".
Cam Angle or Dwell—Closed 35°. Open 25°.
Breaker Arm Spring Tension—17-21 ozs.
Rotation—Clockwise viewed from above.

Automatic Advance

Distributor		Engine	
Degrees	R.P.M.	Degrees	R.P.M.
Start	300	2.25	600
14	1500	28	3000

CONTINUED ON NEXT PA E

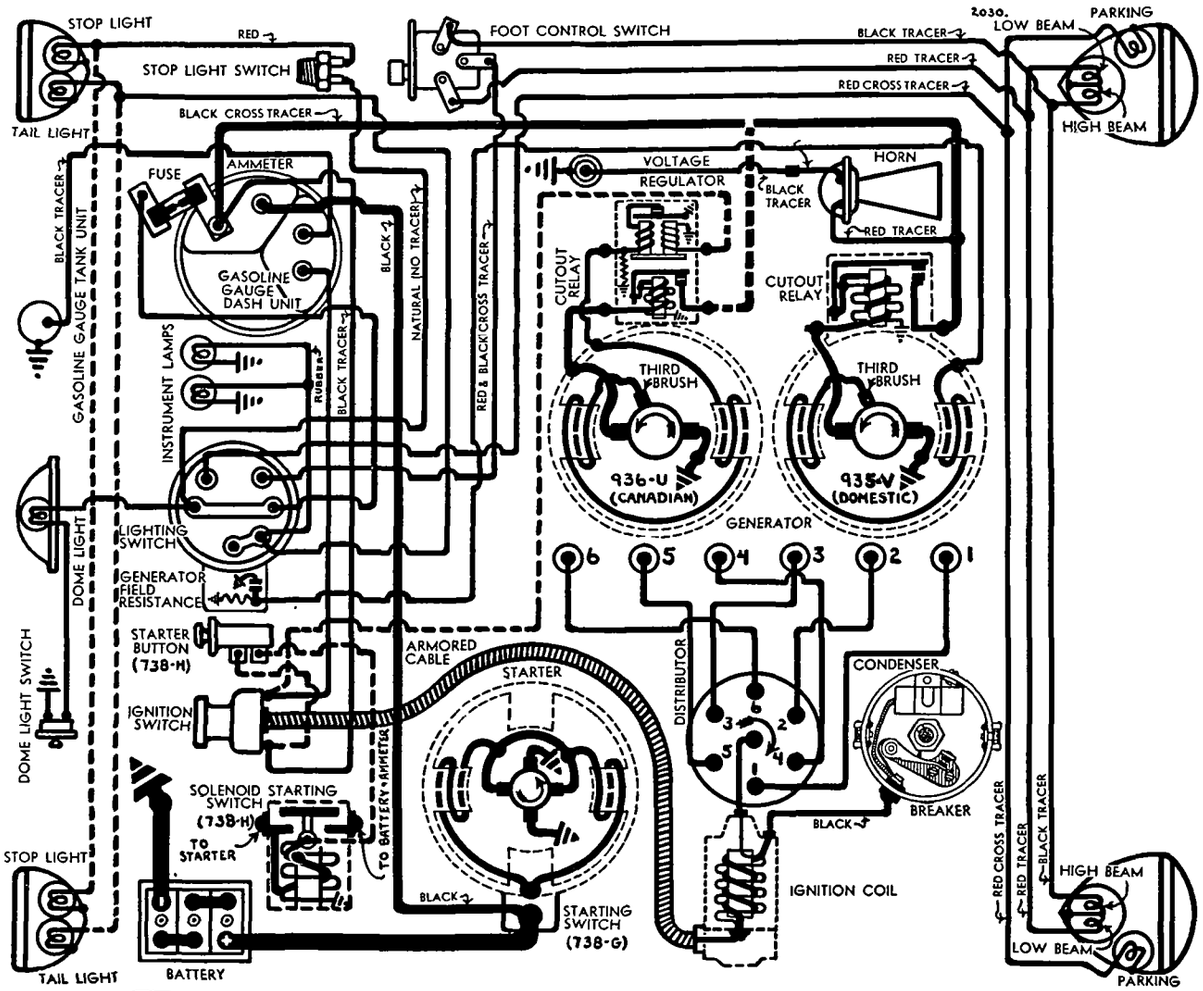

GENERATOR TO LIGHT SWITCH (& RESISTANCE) LEAD NOT USED ON STANDARD FC & TRUCK MODELS

CONTINUED FROM PRECEDING PAGE

Vacuum Spark Control Model 680-L—Mounted on Octane Selector and linked to distributor advance arm. Provides additional advance except when engine is suddenly accelerated (retarded by return spring within unit) or at high speeds with wide open throttle (vacuum port in carburetor cut off by throttle valve shaft).

Vacuum Advance		
Distr. Degrees	Eng. Degrees	Vacuum (" of HG)
Start	0°	4.5"
8½°	17°	9-11"

Octane Selector—Consists of adjustment at distributor providing 10° advance or retard from standard ignition setting to compensate for fuel rating. See Ignition Timing below.

Removal:—Distributor mounted on right side of crankcase. To remove, loosen clamp bolt in advance arm (does not disturb Octane Selector mounting).

IGNITION TIMING

IGNITION TIMING:—Initial setting with Octane Selector set at 'O' as follows. See Octane Selector for final setting.

Flywheel Degrees	Piston Position
All engines ..... 5° BTDC	.0097" BTDC.

To Set Timing (Neon Light)—Recommended by manufacturer. Mount timing light so that it is directed on flywheel through inspection hole in right front face of housing. Clip one lead to #1 spark plug. Set Octane Selector at 'O' on scale by turning thumb nut. Idle engine, loosen advance arm clamp bolt, rotate distributor until steel ball timing mark on flywheel lines up with pointer on housing. Tighten clamp bolt.

Timing (Without Neon Light)—With #1 piston on compresion, turn engine over until piston is 5° or .0097" before top dead center, stop when steel ball timing mark on flywheel lines up with pointer in inspection hole in right front face of housing, loosen advance arm clamp bolt, rotate distributor until contacts begin to open, tighten clamp bolt.

Final Setting (Octane Selector)—Provides 10° advance or retard from standard setting to compensate for fuel. For maximum performance and economy, road test car, advance Octane Selector setting until slight ping is noticeable when accelerating with wide open throttle.

NOTE—If ping is objectionable at 20-25 MPH speed, this can be eliminated by installing Vacuum Spark Control Stop or Spacer No. 602111. Provides 5° retard without same loss of economy resulting from retarding Octane Selector setting.

CARBURETOR

CARBURETION:—**Carburetor**—Carter Model 319-S superseded by Model 334-S (Std. Engines), Mod. 335-S (Economy Engine). 1¼" downdraft type.

For complete data, refer to Carburetor Index.

Idle Adjustment—With engine warm, adjust throttle stopscrew so that speed is 400 R.P.M. Turn idle adjusting screw in until engine begins to miss, turn screw out until engine begins to roll, finally turn screw in slowly until engine fires smoothly. Readjust throttle stopscrew for correct speed.

Accelerating Pump Setting—Pump lever (under dust cover) has three holes for pump link engagement. Change setting for seasonal requirements as follows:
Outer Hole—Normal summer weather.
Inner Hole—Extremely hot weather or high altitude
Upper Hole—Extremely cold weather.

Accelerator Linkage Adjustment:—⅛" clearance between top of accelerator slot and Starterator lever and ⅜-½" free travel between end of Starterator link and starter switch spring seat must be maintained to provide proper accelerator lead for easy starting. See article on Starterator in Equipment Section.

For complete data, refer to Electrical Equipment Index.

CARB. EQUIPMENT

Air Cleaner: AC No. 1526603 (Pass. Cars), 1525978 (Comml. & Truck) oil-wetted type std., No. 1526764 (1525983 with governor) oil-bath type optional.

Fuel Pump:—AC. Type W #1521812. Diaphragm type.
For complete data, refer to Carburetion Equip. Index.

Gasoline Gauge:—AC. Electric #1515207 dash unit; 1515405 tank unit (Pass. Cars), 1515427 tank unit (Comml.), 862723 tank unit (Comml. & Trucks).
For complete data, refer to Carburetion Equip. Index.

BATTERY

STANDARD MODEL

BATTERY:—(Std. Model FC) Delco, Type 13-AA. 6 volt, 13 plate, 86 ampere hour capacity (20 hour rate).
Starting Capacity—102 amperes for 20 minutes.
Zero Capacity—300 amperes for 3.0 minutes.
Grounded Terminal—Negative (—) terminal.
Location—On right side under front floor.

BATTERY

MASTER & TRUCK MODELS

Master Models FA, FD; Comml. & Truck)—Delco Type 15-T or 15-X. 6 volt, 15 plate, 94 ampere hour capacity (20 hour rate).
Starting Capacity—115 amperes for 20 minutes.
Zero Capacity—300 amperes for 3.3 minutes.
Grounded Terminal & Location—Same as above.

STARTER

Delco-Remy Model 738-G, 738-H (RHD). Armature No. 1847432.
Drive—Bendix Barrel Type No. A-1718.
Cranking Engine—65 R.P.M.
Rotation—Counter-clockwise at commutator end.
Brush Spring Tension—24-28 ounces each.

Performance Data

Torque	R.P.M.	Volts	Amperes
0 ft. lbs.	5000	5.0	65
12 ft. lbs.	Lock	3.37	525

Removal:—Starter flange mounted on right front face of flywheel housing. To remove, take out flange mounting screws.

Starting Switch (Std., Comml., Trucks): Delco-Remy No. 362941. On starter, operated by pedal.
Master Models—Starterator operated by accelerator pedal with Delco-Remy Type 1575 vacuum unit.
For complete data, refer to Electrical Equipment Index.
RHD. Cars (738-H Starter)—Delco-Remy Type 1503 magnetic switch controlled by Model 1378 switch.
For complete data, refer to Electrical Equipment Index.

GENERATOR

STANDARD & TRUCK M DELS

Delco-Remy Model 946-C. Armature No. 1841027. Third brush control type. Ventilated by drive pulley fan.

Charging Rate Adjustment—Loosen lockscrew on commutator end plate, remove. cover band, shift third brush by hand counter-clockwise to increase or clockwise to decrease charging rate, tighten locking screw.

Maximum Charging Rate—15 amperes (cold), 1600 R.P.M. or 20-25 M.P.H.

Performance Data

	Amperes	Volts	R.P.M.
Cold	15-17	7.9-8.2	1700
Hot	10-12	7.4-7.7	1800

Rotation—Counter-clockwise at commutator end.
Brush Spring Tension—16 ozs. (all brushes).
Field Current—3.5-4.5 amperes at 6.0 volts.

Removal & Belt Adjustment: See following page for data.

GENERATOR

MASTER MODELS

Delco-Remy Model 935-V. Armature No. 1854856. Third brush regulation, lighting switch control. Field resistance on switch is shorted out with lamps turned on, increasing generator output. Special switch position between 'Off' and 'Park' provides this high charging rate with lamps off. See 'Lamp Control Generators' in Equipment Section. Ventilated by fan on drive pulley.

For complete data, refer to Electrical Equipment Index.
Charging Rate Adjustment—Third brush set for maximum safe output at factory. Manufacturer recommends that position of third brush not be changed. To check charging rate, ground field terminal on generator to frame, use test ammeter to check output, shift third brush by hand counter-clockwise to increase or clockwise to decrease charging rate, remove field ground.
Maximum Charging Rate—20 amperes (cold), 15 amperes (hot), 2400 R.P.M., 26-27 M.P.H.

Performance Data

	Amperes	Volts	R.P.M.
Cold	19-23	8.4-8.8	2800
Hot	16-20	8.1-8.5	3100

Rotation—Counter-clockwise at commutator end.
Brush Spring Tension—22-26 ounces (main), 16-20 ounces (third brush).
Field Current—2.3-2.6 amperes at 6.0 volts.
Field Resistance—Std. 1 ohm. Optional ¾ ohm and 1½ ohm. Should be changed only for unusual operating conditions, excessive night driving, etc.

Removal & Belt Adjustment: See following page for data.

GENERATOR

CANADIAN MODELS

Delco-Remy Model 936-U. Armature No. 1854856. Special fixed third brush control type with external vibrating voltage regulator. Ventilated by fan on drive pulley.
NOTE—Third brush is set for maximum safe output and must not be disturbed.
Charging Rate Adjustment—Adjusted by changing setting of voltage regulator. See Regulator data below and special article in Equipment Section. Do not operate generator on open circuit.

Maximum Charging Rate—As given in table below. To check charging rate, connect ammeter in charging line at 'BAT' terminal of regulator, voltmeter between 'GEN' terminal and ground, ground 'F' terminal to eliminate regulator action.

Performance Data

	Amperes	Volts	R.P.M.
Cold	23-27	8.8-9.0	3000
Hot	18-23	8.2-8.7	3200

Rotation—Counter-clockwise at commutator end.

Brush Spring Tension—22-26 ozs. (main), 16-20 ozs. (third brush).

Field Current—2.3-2.6 amperes at 6.0 volts.

Removal (All models):—Generator pivot mounted at left front of engine with fan belt drive. To remove, take out two pivot bolts, one clamp bolt.

Belt Adjustment (All models):—Belt adjusted in usual manner by loosening clamp bolt and swinging generator away from engine.

GENERATOR

SPECIAL EQUIPMENT

SPECIAL GENERATORS:—Models 934-F, 961-N. Two brush types used with Double Core Type Voltage & Current Regulators 5599 (934-F), 5832 (961-N). *Refer to 1938 Chevrolet article for complete data.*

CUTOUT RELAY

Delco-Remy Model 265-G (Used with 946-C & 935-V Generators). Mounted on generator.

For complete data, refer to Electrical Equipment Index.

Cuts In—6.75-7.5 volts, 675 R.P.M., 8 M.P.H.

Cuts Out—0-2.5 amperes discharge current.

Contact Gap—.015-.025".

Air Gap—.012-.017" with contacts closed.

REGULATOR

Delco-Remy Model 5588 (936-U Gen.). Double Core Type Voltage Regulator (With 'IGN' Terminal). Cutout Relay and vibrating type Voltage Regulator.

For complete data, refer to Electrical Equipment Index.

Cutout Relay

Cuts In—6.9-7.6 volts.

Cuts Out—3 ampere maximum discharge at 6.3 volts

Contact Gap—.018-.025".

Air Gap—.018-.022" with contacts closed.

Voltage Regulator

Setting—7.55-7.85 volts at 70° F., 7.45-7.55 volts at 150° F. Regulator is over-compensated for temperature and must be checked at these points.

Adjustment—Disconnect lead on 'IGN' terminal of regulator, connect jumper between 'IGN' and 'BAT' terminals, connect ammeter in charging line at 'BAT' terminal, connect voltmeter between 'IGN' terminal and ground. Operate generator at 2800-3000 R.P.M., adjust charging rate to 8-10 amperes, change regulator armature spring tension by bending spring hanger at lower end of spring slightly until setting is as given above.

NOTE—Regulator cover must be in place when tests are made. Do not operate generator on open circuit.

Contact Gap—.015-.025".

Contact Spring Tension—2.7-3.5 ounces.

Air Gap—.060-.070" between armature and center of core with armature down so that fibre bumper just touches stop, .008-.013" between fibre bumper and stop with armature up.

LIGHTING

LIGHTING:—**Headlamps**—Guide Multi-beam, Pre-focused type. Headlamps aimed straight ahead. Upper and lower beams controlled by foot selector switch.

Switches

Lighting—Delco-Remy Model 479-R (FC), 479-P (FB, R), 479-Y (FA, FD).

Beam Selector—Delco-Remy 471-P, 471-W (RHD).

Stop Light—Delco-Remy 476-U (FC, FA, FD), 474-Y (FB, R). Hydraulic type mounted at rear of brake master cylinder.

Bulb Specifications

Position	Candlepower	Mazda No.
Headlamps	32-21	2320
Parking	1½	55
Instrument	1	51
Stop, Tail	3	63
Dome	6	81

MISC. ELECTRICAL

FUSES:—**Lighting**—15 ampere on back of ammeter. **Stop Light (R-1½ ton model)**—15 ampere in cartridge type holder in stop light lead (lead taken from ignition switch on this model).

HORNS:—Klaxon Model K-31 Type 1359 (FC), K-26-L Type 1601 (FA, FD, FB, R). Vibrator type.

Type	Current at 6 volts	Air Gap
K-31-1359	5.0-7.5	.020-.022"
K-26L-1601	6.5-8.5	.025-.029"

ENGINE

ENGINE SPECIFICATIONS:—6 cylinder, 'I' head.

Bore—3 5/16". **Stroke**—4".

Displacement—206.8 cu. ins. **Rated H.P.**—26.3.

Developed Horsepower—79 at 3200 R.P.M.

Compression Ratio—6.0-1 Std. cast-iron head.

Compression & Vacuum Reading—*See Tune-Up.*

PISTONS:—Cast iron, tin-plated, cam ground type with greater clearance across pin bosses. Pistons are tin-plated to thickness of .0005-.001" after finishing and cannot be ground. Use finished replacement pistons.

Weight—28¾ ozs. (stripped). **Length**—3 11/16".

Removal—Pistons and rods removed from above.

Clearance—.0145" Top. .0015-.003" Skirt.

Replacement Pistons:—Finished pistons furnished .003", .010", .020", .030", .040" oversize.

Fitting New Pistons:—Use feeler gauge at right angles to pin bosses to check clearance. Piston should pass through bore on .002" feeler and lock on .003" feeler.

PISTON RINGS:—Two compression, one oil control ring per piston all above pin. Lower ring groove drilled radially with oil drain holes.

Ring	Width	End Gap	Side Clearance
Comp.	⅛"	.005-.015"	.0015-.003"
Oil Cont.	3/16"	.013-.021"	.0015-.0025"

NOTE—Compression ring face tapered and marked 'Top' on upper side. Install rings with this mark toward top of piston. Rings furnished .005", .010", .015", .020", .030", .040", oversize.

PISTON PIN:—**Diameter** .990-.9895". **Length** 2 29/32". Pin is locked in rod. Pin bosses in piston bronze-bushed. New pistons furnished with bushings and pins fitted. Pins furnished standard and .003", .005", .010" oversize.

Pin Fit in Piston Bushing—Light thumb push fit.

CONNECTING ROD:—**Weight** 31⅝ ozs. **Length** 7½". **Crankpin Journal Diameter**—2⅛".

Lower Bearing—Spun-babbitt lined type.

Clearance—.0005-.002". Sideplay .004-.011".

Bearing Adjustment:—Solid shims. Remove shims from each side equally to secure 'snap fit' (rod should snap from one side to the other with a light tap of 8 oz. ball pein hammer). Bearing loose if rod can be moved by hand.

Installing Rods:—Install rods in same numbered cylinders as indicated by numbers stamped on rod and cap with these numbers together and toward camshaft side of engine. Oil hole in cap should be away from camshaft. Assemble oil dippers on rod caps with mouth of dipper toward camshaft.

CRANKSHAFT:—3 bearing. Integral counterweights.

Journal Diameters—#1, 2 1/16"; #2, 2⅛"; #3, 2 3/16".

Bearing Type—Steel-backed, babbitt-lined removable type. See Replacement Main Bearings.

Clearance—.001-.003".

Replacement Main Bearings New "Precision" type (**do not require line-boring**) furnished Std. size and .010" and .030" undersize.

CAUTION—Complete bearing set (3 bearings) must be installed initially on engines not previously equipped with "precision" bearings.

Bearing Adjustment:—Shims. Remove shims until there is a heavy drag on the crankshaft, then replace one .002" shim.

End Thrust:—Taken by center bearing. Endplay .004-.007". Adjusted by replacing bearing.

NOTE—Oil slinger clearance at rear end of crankshaft must be .002-.032".

CAMSHAFT—Three bearing. Gear driven.

Journal Diameters—#1, 1 13/16"; #2, 1 25/32"; #3, 1⅝".

Bearing Type—#1 machined in crankcase. #2, 3 steel-backed, babbitt-lined type pressed in crankcase and staked to prevent movement.

Clearance—.002-.0035". Check at center bearing.

NOTE—When replacing center bearing manufacturer recommends use of special driver and alignment pin to align oil holes and distributor drive. Ream distributor hole and line-ream bearings. #1 bearing serviceable only by using special reamer to ream hole in crankcase and then installing bearing and new standard camshaft.

CONTINUED ON NEXT PAGE

ENGINE

CONTINUED FR M PRECEDIN PA E

End Thrust:—Taken by thrust plate in back of camshaft gear. **Endplay**—Free to .003". Adjusted by changing gear position on shaft. See Timing Gear Note.

Timing Gears:—Steel (crankshaft), Bakelite-Fabric (camshaft). Backlash between gears .002-.005".

NOTE—Camshaft gear press fit on shaft. Remove and install gear in arbor press with camshaft out of engine using special sleeve to support hub. Use new thrust plate and press gear on shaft until no endplay (between gear and thrust plate) is perceptible but gear is free to turn.

Camshaft Setting:—Mesh marked tooth on crankshaft gear with marked space between teeth on camshaft gear. Marked tooth on crankshaft gear is third counter-clockwise from space in line with key way. Marked space on camshaft gear is thirteenth space clockwise from space in line with keyway. (12 teeth between these points.)

VALVES:—	Head Diameter	Stem Diameter	Length
Intake	1 45/64"	11/32" (nom.)	5 7/32"
Exhaust	1 15/32"	11/32" (nom.)	4 1/32"

	Seat Angle	Lift	Stem Clearance
Intake	30°	.316"	.001-.003"
Exhaust	30°	.319"	.002-.004"

NOTE—Stem sizes nominal. Check with special 'No-go' gauge.

Valve Guides: Straight type without sholder.
Replacement Valve Guides: New "precision" type (do not require rough reaming).
Valve Guide Installation—*See "Valve System" in Chevrolet Shop Notes.*

Valve Springs:—Variable spaced coil type. Install with close-coil end toward cylinder head (down).

	Spring Pressure	Length
Valve Closed	45 lbs.	1 7/8"
Valve Open	98 lbs.	1 9/16"

Valve Lifters:—Single piece cast-iron with ground contact face. Oversize lifters not furnished.

Pushrod Springs:—Spring mounted on each pushrod above valve lifter. To remove pushrods, take out three bolts in spring retainer to release spring tension, remove 'C' washer under spring, withdraw pushrod. Install in same manner.

Rocker Arms:—Intake arms have left and right hand angles. Intake arm with left hand angle must be installed on #2, 4, 6 cylinders, right hand angle on #1, 3, 5 cylinders.

VALVE TIMING

►**VALVE TAPPET CLEARANCE:** *CAUTION—Engine temperature must be "normalized" before adjusting. See "Tappet Clearance Adjustment" in Chevrolet Shop Notes.*

Cars & Trucks—.006-.008" Intake, .013-.015" Exhaust, with engine "normalized".

Trucks (for continuous full throttle operation)—.010" Intake, .020" Exh., with engine "normalized".

Economy Engine—.010" Intake, .016" Exhaust, with engine "normalized".

VALVE TIMING: See Camshaft Setting.

Intake Valves—Open 4° BTDC. Close 34° ALDC.

Exhaust Valves—Open 47° BLDC. Close 4° ATDC.

To Check Timing—No flywheel marks. With intake valve tappet clearance set at .006" (hot), #1 intake valve should begin to open with piston 4° or .0061" before top dead center when point on flywheel approximately 1½ teeth before dead center point lines up with pointer on inspection hole in right front face of flywheel housing.

LUBRICATION

LUBRICATION:—Pressure and positive splash system used. Rifle-drilled passages in block to main bearings.

Oil Pump:—Vane type in crankcase driven through tongue-and-slot coupling from camshaft gear.

Normal Oil Pressure:—12 lbs. at 50 M.P.H.

Oil Distributor:—On left side of crankcase. Proportions oil between high pressure points (crankshaft, camshaft bearings, timing gears) and low pressure points (oil troughs, rocker arm shaft). Overflow pipe returns excess oil from rocker arm shaft.

NOTE—Oil pipe to rocker arm shaft passes through water jacket in center of block. When replacing check for water leaks at block connections.

Checking Connecting Rod Oiling System:—Check whenever oil pan taken off engine. Use special gauge to check dipper height (on connecting rod bearing cap) and oil trough height (same gauge). Use special target gauge to check oil nozzle jets (use water under pressure, bend nozzle with special tool until jet strikes hole in target gauge). Check nozzles with special height gauge after this adjustment to make certain that rods will clear.

Crankcase Capacity—5 qts. refill.
NOTE—SAE #10-W oil recommended for Economy engine. Oil heavier than #20 must not be used at any time in this engine.

CLUTCH

Own Make. Single plate, dry disc type.
See Clutch Section for complete data.

Facings—Molded-braided (FA, B, C, D), moulded (RA, B, C, D). Inside Diam. 6¼" (all), Outside Diam. 9" (FA, B, C, D), 10" (RA, B, C, D). Thickness ⅛".

Adjustment—Clearance between pedal and underside of floor board must be ½". To adjust, loosen two nuts at side of pedal, move pedal stop forward or backward. Free movement of pedal must be 1". To adjust, loosen checknut (upper), and turn adjusting nut (lower) on clutch fork connecting link.

Removal:—Disconnect universal (see Note for Std. Model), remove transmission underpan and transmission rear cross member, lift propeller shaft and slide transmission out using pilot studs to hold transmission. Disconnect clutch linkage, take out capscrew holding throwout fork in flywheel housing, take out fork, force springs holding sleeve to throw-out levers over ends of levers and remove sleeve. Take out nine capscrews mounting clutch cover on flywheel, turning out screws evenly until spring pressure is released.

NOTE—On Standard model, universal joint ring is riveted (On Master model universal joint is split by taking bolts out of this ring) and rear end must be freed and pulled back to disengage drive shaft at splined joint back of universal.

FRONT SUSPENSION

Front Suspension Std. FC., Mstr. FD:—Conventional 'I' beam front axle with semi-elliptic springs.
Kingpin Inclination—7°10' plus or minus 1°. Angle on both wheels must be same within ½°.

Caster—2¾° (St.FC), 1¾° (FB), 2¾° (R), 3° (Mstr. FD) plus or minus ½°. Must be same within ¼° on both wheels. Adjusted by inserting wedge shims between spring and spring pad.

Camber—1° plus or minus ½°. Must be same within ¼° on both wheels. No adjustment. Axle may be bent cold for minor corrections.

Toe In—5/64-⅛". Adjusted in usual manner by turning tie rod to increase or decrease length.

Steering Geometry—Inner wheel turned 23°, outer wheel 20°. Check tie rod ends and kingpin for looseness, replace steering arms.

Front Suspension Master Model FA:—Independent 'Knee Action' Type. See article in Steering Section for adjustments. Specifications below correct with car weight supported by horses at wheel spindle inner bearing cone (necessary for use of Chevrolet testing equipment).
See Front Suspension Section for complete data.

Wheel Setting (Suspension Unit Height)—Should be 5⅜" (Spare at rear), 4⅜" (With fender wells) from bottom of kingpin support to bottom of brake flange plate.

Kingpin Inclination—7¾° crosswise.

Camber—¼°. No adjustment provided.

Kingpin Caster—0°. Caster effect secured by trailing wheel behind suspension unit.

Toe In—1/16-3/32" measured at hub height on center of tire tread.

Steering Geometry—Inner wheel 23°, outer 20°

STEERING GEAR

Steering Gear: Saginaw Worm-and-Sector type (Standard, Comml., Trucks), Worm-and-Roller type (Master).
See Steering Gear Section for complete data.

BRAKES

BRAKES:—Own design. Four-wheel hydraulic type. Hand brake lever applies rear wheel brakes. See article in Brake Section for complete adjustment instructions.
See Brake Section for complete data.

Wheel Cylinders—Diameters, (Mstr. FA, FD & FB) Front wheel 1¼", Rear wheel 1 3/16". (Std.FC) Front wheel 1⅛", Rear wheel 1 1/16". (R) Front wheel 1¼", Rear wheel 1½". Not interchangeable.

Brake Drum Diameter—11".

Lining—Semi-moulded (Std.FC), Moulded (Mstr. FA, FD), (FB). Width 1¾". Thickness 3/16". Length 22⅝" per wheel.

Brake Clearance—Adjusting cover backed off 4 notches from slight drag position.

Hand Brake Adjustment:—See Service Brake.

NOTE:—Oil Pan Removal—To remove oil pan for work on engine on Master Deluxe and Master models, the Engine-Side-Support Tie-Bar (cross-member under engine) should be dropped first. This cross-member is bolted to bottom of frame side rails.

MODEL IDENTIFICATION

FLEET 'ECONOMY' MODEL NOTE:—Special economy engine available for all models. May be identified by prefix 'V' on engine number, and special Service Plate on Pushrod Cover listing special service specifications for this model. Carburetor used on this model has stop-pin which limits throttle opening to half-throttle.

SERIAL NUMBER:—First number 1001. Prefixes 1-GA-05, indicate assembly plant (1-21), Model (GA, GB, GC, SA, SB, SC, SD) and month (01-12). Located on right side of cowl under hood.

ENGINE NUMBER:—First number—1. Prefixed by a letter indicating model: 'K' Commercial Model GC, 'T' Model S trucks. Economy engines indicated by 'V' (VK, VT). Engine number stamped on boss on right side of cylinder block back of fuel pump.

TUNE-UP

COMPRESSION PRESSURE: 112 lbs. at 65 RPM.

VACUUM READING: Steady 20-22" idling at 400 RPM.

FIRING ORDER: 1-5-3-6-2-4. See diagram.

SPARK PLUGS: AC No. 47 (sup. K-11). 14 mm. Metric. **Gaps—.040"**

IGNITION: See Coil, Condenser, and Distributor.
Breaker Gap—.018" Cam Angle 35° (closed).
Automatic & Vacuum Advance—*See Distributor.*

IGNITION TIMING: See Ignition Timing.
Std. Setting—5° BTDC. with flywheel mark (steel ball) at indicator in inspection hole in right front face of housing.

CARBURETION: See Carburetor & Carb. Equipment.
Idle Setting—Idle screw 1-2 turns open, Idle speed 400 Engine RPM or 7 MPH.
Float Level—⅜" top of float to gasket seat on cover with needle valve seated.
Accelerating Pump—Outer hole—Summer weather, Upper hole—extremely cold weather.
Fuel Pump Pressure: 3 lbs. maximum.

►**VALVE TAPPET CLEARANCE:** ***CAUTION—Engine temperature must be "normalized" before adjusting. See "Tappet Clearance Adjustment" in Chevrolet Shop Notes.***

Cars & Trucks—.006-.008" Intake, .013-.015" Exhaust, with engine "normalized".

Trucks (for continuous full throttle operation)—.010" Intake, .020" Exh., with engine "normalized".

Economy Engine—.010" Intake, .016" Exhaust, with engine "normalized".

Valve Timing Check: ***See Valve Timing.***

STARTING: See Battery, Starter, Generator, Regulator.

IGNITION

Ignition Switch:—Delco-Remy Model 435-F (pass.), 431-Y (commercial and truck). Connected to coil by armored cable.
Ignition Lock—Briggs & Stratton No. 45792 (cylinder), #80203 (case). Key Series—8000-9499.

COIL: Delco-Remy Model 536-D. Mounted on right side of engine directly above distributor.
Ignition Current—2.5 amperes idling, 4.8 stopped.

CONDENSER: Delco-Remy Part No. 1861709.
Capacity—.20-.25 microfarad.

DISTRIBUTOR: Delco-Remy Model 649-G. Single breaker, 6 lobe cam, full automatic advance with vacuum spark control and Octane Selector.
Breaker Gap—Set at .018". Limits .018-.024".
Cam Angle or Dwell—Closed 35°. Open 25°.
Breaker Arm Spring Tension—17-21 ounces.
Rotation—Clockwise viewed from above.

Distr. Degrees	Automatic Advance R.P.M.	Eng. Degrees	R.P.M.
Start	300	1.75	600
25	1800	50	3600

Vacuum Spark Control Model 681-F. Mounted on Octane Selector and linked to distributor advance arm. Provides additional advance above idling except under full throttle (retarded by return spring).

Distr. Degrees	Vacuum Advance Eng. Degrees	Vacuum (" of HG)
Start	0°	4.5"
7½°	15°	8-10"

Octane Selector—Consists of adjustment at distributor providing 10° advance or retard from standard ignition setting to compensate for fuel

Removal:—Distributor mounted on right side of crankcase. To remove, loosen clamp bolt in advance arm (Octane Selector mounting not disturbed).

IGNITION TIMING

	Flywheel Degrees	Piston Position
All Engines	5° BTDC	.0091" BTDC.

To Set Timing (Neon Light)—Recommended by manufacturer. Mount timing light so that it is directed on flywheel through inspection hole in right front face of housing. Clip one lead to #1 spark plug. Set Octane Selector at '0' on scale by turning thumbnut. Idle engine, loosen advance arm clamp bolt, rotate distributor until steel ball timing mark on flywheel lines up with pointer on housing.

CONTINUED N NEXT PA E

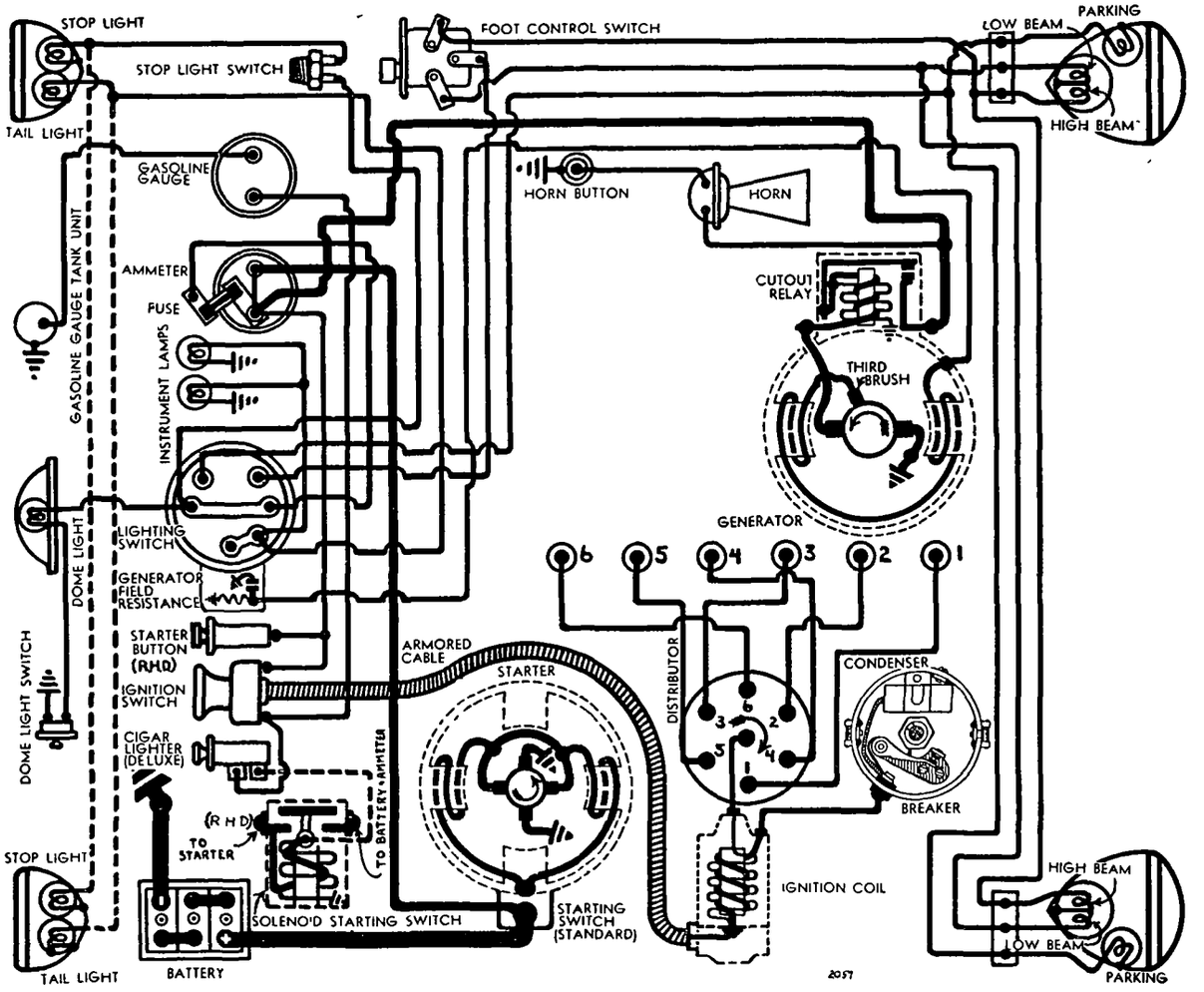

C NTINUED FR M PRECEDIN PA E

Timing (Without Neon Light)—With #1 piston on compression, turn engine over until piston is 5° or .0091" before top dead center, stop when steel ball timing mark on flywheel lines up with pointer in inspection hole in right front face of housing, loosen advance arm clamp bolt, rotate distributor until contacts begin to open, tighten clamp bolt.
Final Setting (Octane Selector)—Advance setting until slight ping accelerating with full throttle.

CARBURETOR

Carter W1 (Chevrolet) Type 346-S (Std.), 358-S (Economy Engine). 1¼" downdraft type.
For complete data, refer to Carburetor Index.

►**Engine Running Backward Correction**—*See Field & Production changes in Carburetor article.*

Settings (Idle Setting, Float Level, Accelerating Pump): *See Tune-Up.*

NOTE—Lean and rich metering rods available to compensate for fuel or altitude requirements. See Jet Specification table in Carburetion Section.

Throttle Cracking (GA): Controlled by Starterator. Adjust linkage. ***For instructions, refer to "Chevrolet Starterator" article in Electrical Equipment Section.***

CARB. EQUIPMENT

Air Cleaner:—AC. #1528013 (GA, GB), #1525978 (GC, SA, SB, SC, SD), oil-wetted type standard. #1526764 (GA, GB, GC, SA, SB, SC, SD, no governor), #1525983 (GC, SA, SB, SC, SD—with governor).

Fuel Pump:—AC. Type AF #1523089. Diaphragm type.
For complete data, refer to Carburetion Equip. Index.

Gasoline Gauge:—AC. Electric. Dash unit—#1515322 (GA), #1515536 (GB), #1510163 (GC, SA, SB, SC, SD). Tank unit—#1515405 (GA, GB—except 2 pass. coupe), #1515441 (GA, GB—2 pass. coupe only). #1515438 (GC). #1515427 (SA, SB, SC, SD).
For complete data, refer to Carburetion Equip. Index.

BATTERY

PASSENGER CARS

BATTERY (GA, GB):—Delco, Type 17-M. 6 volt, 17 plate, 100 AH. capacity (20 hour rate).
Starting Capacity—115 amperes for 20 minutes.
Zero Capacity—300 amperes for 3.5 minutes.
Grounded Terminal—Negative (—) terminal.
Location—Right side under front floor.

C MMERCIAL & TRUCKS

(GC, SA, SB, SC, SD) Delc , Type 15-X. 6 volt, 15 plate, 94 AH. capacity (20 hour rate).
Starting Capacity—115 amperes for 20 minutes.
Zero Capacity—300 amperes for 3.3 minutes.
Grounded Terminal & Location—Same as above.

STARTER

Delco-Remy Model 739-A (Std.), 739-C (RHD). Armature No. 1847432 (all models).
Drive—Bendix Barrel Type A-1718.
Cranking Engine—65 R.P.M.
Rotation—Counter-clockwise at commutator end.
Brush Spring Tension—24-28 ounces each.

Performance Data

Torque	R.P.M.	Volts	Amperes
0 ft. lbs	5000	5.0	65
12 ft. lbs	Lock	3.37	525

Removal:—Flange mounted n right front face of flywheel housing. To remove, take out flange mounting screws.

Starting Switch (GA):—Starterator perated by accelerator pedal with Type 1576 vacuum unit control (start—2" of HG.; full travel 5/16"—6.5" f HG.). See article in Electrical Equipment Section
For complete data, refer to Electrical Equipment Index.

Starting Switch (GB, GC, S):—No. 1859020. Mounted on starter. Operated by starting pedal on toeboard.

Starting Switch (739-C):—Type 1528 Magnetic Switch controlled by Pull Switch 1378 on instrument panel.
For complete data, refer to Electrical Equipment Index.

GENERATOR

STANDARD

Delco-Remy Model 948-R. Armature No. 1853593. Third brush regulation, lighting switch control. Field resistance on switch is shorted out with lamps turned on, increasing generator output. Special switch position between 'Off' and 'Park' provides this high charging rate with lamps off. Ventilated

NOTE—Lighting Switch Control Spacer (Part. No. 596831) may be installed on switch for cars requiring high charging rate (winter driving or high accessory load). Spacer holds switch button out in first position.

See article on Lamp Control Generators in Electrical Equipment Section.

Charging Rate Adjustment—Third brush set for maximum safe output at factory. Manufacturer recommends that position of third brush not be changed. To check charging rate, ground field terminal on generator to frame, use test ammeter to check output, shift third brush by hand counter-clockwise to increase or clockwise to decrease charging rate, remove ground.

Maximum Charging Rate—21 amperes (cold), 18 ampere (hot), 2400 R.P.M., 26-30 M.P.H.

Performance Data

	Amperes	Volts	R.P.M.
Cold	19-23	8.4-8.8	2800
Hot	16-20	8.1-8.5	3100

Rotation—Counter-clockwise at commutator end.

Brush Spring Tension—22-26 oz. (main), 16-20 (3rd).

Field Current—2.3-2.6 amperes at 6.0 volts.

Removal:—Pivot mounted at left front of engine with fan belt drive. To remove, take out two pivot bolts, one clamp bolt.

Belt Adjustment:—Belt adjusted in usual manner by loosening clamp bolt and swinging generator away from engine.

GENERATOR

CANADIAN MODELS

Delco-Remy Model 960-G. Fixed third brush control type with external vibrating voltage regulator.

NOTE—Third brush is set for maximum safe output and must not be disturbed.

Charging Rate Adjustment—Adjusted by changing setting of voltage regulator. See Regulator data
Maximum Charging Rate—As given in table below. To check charging rate, connect ammeter in charging line at 'BAT' terminal of regulator, voltmeter between 'GEN' terminal and ground, ground 'F' terminal to eliminate regulator action.

Performance Data

	Amperes	Volts	R.P.M.
Cold	23-27	8.8-9.0	3000
Hot	18-23	8.2-8.7	3200

All other data as given above for 948-R Generator.

GENERATOR

SPECIAL EQUIPMENT

SPECIAL GENERATORS:—**Models 934-F, 961-N.** Two brush types used with Double Core Type Voltage & Current Regulators 5599 (934-F), 5832 (961-N). ***Refer to 1938 Chevrolet article for complete data.***
Other Types—Model 1106403 (City Police), 1105851 or 1105856 (State Police). Two brush types used with new Single Core Type Voltage & Current Regulators 1118229 (1106403), 1118237 (1105851,6). ***Refer to 1940 Chevrolet article for complete data.***

CUTOUT RELAY

WITH 948-R GENERATOR

Delco-Remy Model 265-G. Mounted on generator.
For complete data, refer to Electrical Equipment Index.
Cuts In—6.75-7.5 volts, 800 R.P.M., 8-9 MPH.
Cuts Out—0-2.5 amperes discharge current.
Contact Gap—.015-.025".
Air Gap—.012-.017" with contacts closed.

REGULATOR

WITH 960-G GENERATOR

Delco-Remy Model 5814 (960-G Gen.). Double Core Type Voltage Regulator (With 'IGN' Terminal).
For complete data, refer to Electrical Equipment Index.

Cutout Relay

Cuts In—6.9-7.6 volts.
Cuts Out—3 ampere max. discharge at 6.3 volts.
Contact Gap—.018-.025".
Air Gap—.018-.022" with contacts closed.

Voltage Regulator

Setting—7.55-7.85 volts at 70° F., 7.45-7.55 volts at 150° F. Regulator is over-compensated for temperature and must be check at these points.
Checking & Adjustment—*See Elec. Equip. Section.*
Contact Gap—.015-.025".
Contact Spring Tension—2.7-3.5 ounces.
Air Gap—.060-.070" between armature and center of core with armature down and fibre bumper touching stop; .008-.013" between fibre bumper and stop with armature up.

LIGHTING

LIGHTING:—**Headlamps**—Guide, Multi-beam, pre-focused type. Upper and lower beams controlled by foot selector switch with lighting switch in full out position.
Adjustment—Aim headlamps straight ahead. Top of beam should be 36¼" (passenger cars), 39½" (GC trucks), 43½" (S trucks—or 42" if state law requires) above floor at 25 feet. Large adjusting nut located inside radiator shell in back of radiator

Switches

Lighting—Delco-Remy Model 485-Z.
Foot Selector—Delco-Remy Model 471-P.
Stop Light—Delco-Remy Model 476-U. Hydraulic type mounted at rear of brake master cylinder.

Bulb Specifications

Position	Candlepower	Mazda No.
Headlamps	32-21	2320
Parking, Instrument	1½	55
Stop, Tail	3	63
Dome	6	81

MISC. ELECTRICAL

FUSES:—**Lighting**—20 ampere on back of ammeter.
HORNS:—Klaxon Model K-16-2301 (GB), K-26-H-2251 (all others). Single horn, vibrator type.

Type	Current at 6 volts	Air Gap
K-16-2301	5-7.5 amperes	.020-.022"
K-26-H-2251	6.5-8.5 amperes	.025-.029"

ENGINE

ENGINE SPECIFICATIONS:—Own. 6 cyl., 'I' head type.
Bore—3½". Stroke—3¾".
Displacement—216.5 cu. ins. **Rated H.P.**—29.4.
Developed Horsepower—85 at 3200 R.P.M. (GA, GB Master), 78 at 3200 R.P.M. (GC, SA, SB, SC, SD
Compression Ratio—6.25-1 Std. cast-iron head.
Compression & Vacuum Reading—*See Tune-Up.*

PISTONS:—New type Cast-iron, domed head, cam ground, tin-plated, with slipper type skirt. Recondition engines to take finished replacement pistons (hone for .003" oversize, bore and hone for other sizes). See Replacement Pistons.
Weight—22.7 ozs. (without rings or pin). NOTE—Special pistons (1½ ozs. heavier than Pass. car type) used on Trucks after April 1, 1937.
Length—3 59/64". Pistons balanced by grinding off bottom of skirt so that all pistons not equal (height above pin same for all pistons).
Removal—Pistons and rods removed from above.
Clearance—Top .006-.013". Skirt .0015-.003". See Fitting New Pistons.

Replacement Pistons: *See Chevrolet Shop Notes.*

Fitting New Pistons:—Use feeler gauges between piston and cylinder wall at right angles to pin bosses. Piston should pass through bore on .002" feeler and lock on .003" feeler.

PISTON RINGS:—Two compression, one oil control ring per piston, all above pin. Oil ring slotted or drilled type. Oil ring groove drilled with oil drain holes. Compression and slotted type oil ring furnished .005", .010", .015", .020", .030", .040" oversize; Drilled type oil ring .005", .010", .015", .020" oversize. Unit pkg. is 12 compression or 6 oil rings.

NOTE—Compression rings have tapered face. Install with word 'Top' up.

Ring	Width	End Gap	Side Clearance
Comp.	⅛"	.004-.014"	.0015-.0035"
Oil Cont.	3/16"	.004-.014"	.0015-.0035"

NOTE—Use .002" feeler to check side clearance. Top ring should be very free, middle ring free, oil ring tight.

PISTON PIN:—Diameter—.8645-.8650". Length—3 3/32". Pin is locked in rod and pin bosses in piston are bronze bushed. New pistons furnished with bushings and pins fitted. Pins furnished standard and .003", .005", .010" oversize.

Pin Fit in Piston Bushings—Thumb push fit (not heated).

CONNECTING ROD:—Length 6 13/16". Weight 28 ozs.
Crankpin Journal Diameter—2.311-2.312".
Lower Bearing—Spun-babbitt lined type.
Clearance—.0005-.002". Sideplay .004-.011".

Bearing Adjustment:—Solid shims. Remove shims to secure 'snap fit' (bearing tight to hand but rod should snap from one side to other with light tap of 8 oz. hammer), **then replace .002" shim for clearance.** With correct adjustment, rod should move from side to side with two-finger pressure.

Installing Rods:—Install rods in same numbered cylinders indicated by numbers on rod and caps with these numbers together and toward camshaft side. Assemble oil dippers on rod caps with mouth of dipper toward camshaft.

CRANKSHAFT:—4 bearing. Integral counterweights. Harmonic Balancer mounted on forward end.
See Chevrolet Special Shop Notes for balancer data.

Journal Diameters—#1, 2.6835-2.6845"; #2, 2.7145-2.7155"; #3, 2.7455-2.7465"; #4, 2.7765-2.7775".
Bearing Type—Steel-backed, babbitt-lined type. Bearings are "doweled" in place by projection on shell engaging hole in crankcase and bearing cap.
Clearance—.002-.004".

►*NOTE—Replacement "precision" type bearings do not require line-boring or reaming.*

Replacement Bearings: New "precision" type furnished Std. size and .002", .010", .020", .030" Undersize. NOTE—Bearings marked on inner surface of dowel: "V" for #1 and #4, "I" for #2 and #3.

►*CAUTION—Complete bearing set (4 bearings) must be installed on engines not previously equipped with replacement "precision" bearings.*

Bearing Adjustment:—Solid shims. Remove shims until slight drag on crankshaft secured, then replace one .002" shim for clearance. If unequal number, install extra shim on camshaft side.

End Thrust:—Taken by #3 main bearing. Adjusted by replacing bearing. Endplay .004-.007".
NOTE—Oil slinger clearance at rear end of crankshaft must be .002-.032".

CAMSHAFT:—Four bearing. Gear driven.
Journal Diameters—#1, 2.0282-2.0292"; #2, 1.9657-1.9667"; #3, 1.9032-1.9042"; #4, 1.8407-1.8417".
Bearing Type—Steel-backed, babbitt-lined bushings. Pressed in crankcase and staked to prevent movement.
NOTE—Line-ream new bushings
Clearance—.002-.004".

End Thrust:—Taken by thrust plate behind camshaft gear. Endplay Free to .003". Adjusted by changing gear position on shaft.

Timing Gears:—Crankshaft gear Steel. Camshaft gear Bakelite & Fabric composition. Gear run-out (maximum) .003" crankshaft gear, .004" camshaft
Backlash—.002-.005".
See Chevrolet Special Shop Notes for timing gear installation instructions.

Camshaft Setting:—Gears marked. Mesh marked tooth of crankshaft gear with marked space between teeth on camshaft gear.

VALVES:—	Head Diameter	Stem Diameter	Length
Intake	1 41/64"	.3407-.3417"	6 5/64"
Exhaust	1 15/32"	.3397-.3407"	4 13/16"

	Seat Angle	Lift	Stem Clearance
Intake	30°	5/16"	.001-.003"
Exhaust	30°	5/16"	.002-.004"

NOTE—Exhaust valves marked 'GM37EXHAUST'

Valve Guides: Straight type without shoulder.

Replacement Valve Guides: New "precision" type (do not require rough reaming).
Valve Guide Installation—*See "Valve System" in Chevrolet Shop Notes.*

Valve Springs:—Check by compressing springs to 1½". Pressure should be 104-112 lbs.

	Spring Pressure	Spring Length
Valve Closed	42-48 lbs.	1⅞"
Valve Open	94-102 lbs.	1 9/16"

NOTE—Install spring with close-coil end toward cylinder head. Use round springs caps on intake valves, hexagonal caps on exhaust valves.

Valve Lifters:—Cast-iron type with ground contact face. Oversize lifters not furnished.

Pushrod Springs:—Spring mounted on each pushrod above valve lifter. To remove pushrods, take out three bolts in spring retainer, remove 'C' washer under spring, withdraw pushrod. Install in same manner.

Rocker Arms:—Two types of intake rocker arms used. Install arms with slight angle toward front of engine for cylinders #1, 3, 5; angle toward rear for #2, 4, 6. All exhaust rocker arms are straight. Assemble rocker arm shafts with open ends toward center of engine.

VALVE TIMING

►**VALVE TAPPET CLEARANCE:** *CAUTION—Engine temperature must be "normalized" before adjusting. See "Tappet Clearance Adjustment" in Chevrolet Shop Notes.*

Cars & Trucks—.006-.008" Intake, .013-.015" Exhaust, with engine "normalized".

Trucks (for continuous full throttle operation)—.010" Intake, .020" Exh., with engine "normalized".

Economy Engine—.010" Intake, .016" Exhaust, with engine "normalized".

VALVE TIMING: See Camshaft Setting.
Intake Valves—Open 9° BTDC. Close 29° ALDC.
Exhaust Valves—Open 52° BLDC. Close 1° BTDC.
To Check Timing—No flywheel marks provided. With intake tappet clearance set at .006", #1 intake valve should open with piston 9° or .0294" BTDC. when point on flywheel aproximately 3.475 teeth before top dead center lines up with indicator in inspection hole in right front face of flywheel housing.

LUBRICATION

LUBRICATION:—Pressure and positive splash system similar to previous models except for oil pump.

Oil Pump:—New gear type located in crankcase. Install pump gears with ground face toward cover.

Normal Oil Pressure:—13.5 lbs. at 50 M.P.H.

Oil Pressure Regulator:—Located in oil pump cover. Operates at 75 lbs. Not adjustable. Pressure normally controlled by Oil Distributor.

Oil Distributor:—Mounted on left side of crankcase. Proportions oil between high pressure points (crankshaft bearings, camshaft bearings, timing gears) and low pressure points (connecting rod oil troughs and rocker arms). Overflow pipe returns excess oil
See Chevrolet Special Shop Notes for installing oil lead (through block) to valve rocker arms.

Checking Oiling System: Check entire system (Dipper Height, Oil Pan Trough Height, Oil Nozzle Height and Aim each time oil pan removed. *See "Oiling System" in Chevrolet Shop Notes.*

Crankcase Capacity:—5 quarts.

CLUTCH

CLUTCH:—Own make. Single plate, dry disc type.
See Clutch Section for complete data.

Facings—Asbestos composition. 2 required. Inside Diameter 6¼". Outside Diameter 9" (GA,B,C), 10" (SA,B,C,D). Thickness ⅛".

Adjustment (GA, GB)—Pedal free travel must be 1". To adjust, loosen locknut and turn adjusting nut on connecting link stud at clutch throw-out fork.

CONTINUED N NEXT PAGE

C NTINUED FR M PRECEDIN PA E

(GC, SA, SB, SC, SD)—Loosen locknut on lever at lower end of clutch pedal, back off locknut on adjusting screw on lower end of lever, turn adjusting screw for 1" free travel.

Removal:—Remove transmission (see Transmission Section). With flywheel underpan off, take out alternate clutch mounting screws, then turn remaining screws out evenly, remove clutch from below.

NOTE—On Model GC, block levers with 1/32" washers so levers will clear.

TRANSMISSION

PASS. CARS & HALF-TON

TRANSMISSION (GA, GB, GC):—Own make. Constant mesh, helical gear (second only), Synchro-mesh (second and high). Low and reverse—sliding spur

See Transmission Section for complete data.

Removal:—Disconnect pull rods on brake cross-shaft, remove left hand cross-shaft bracket, remove shaft. Take out speedometer cable and gear assembly (screwed into universal joint retainer). Take out screws in ball collar flange, slide ball and collar back on propeller shaft, remove bolts in universal joint ring, split joint. Remove top mounting bolts in flywheel housing and install guide pins, remove flywheel underpan, take out lower mounting screws. Take out bolts holding transmission mounting and support to cross-member. Slide transmission straight back on guide pins and remove.

NOTE—On Model GC with 4 Spd. Transmission, remove transmission support cross-member and take out 2 screws on brake cylinder bracket on transmission case.

TRANSMISSION

THER TRUCKS

TRANSMISSION (SA, SB, SC, SD):—Own make. 4 speed, sliding spur gear type (all speeds). This transmission optional on Model GC.

See Transmission Section for complete data.

Removal:—Same as for passenger cars (above) except that nuts holding front propellor shaft assembly to cross-member should be removed and front propellor shaft dropped down. Split universal joint by removing trunnion bearing lock springs and driving trunnion bearings out.

UNIVERSALS

UNIVERSAL JOINTS:—Own make. Plain bushing type. One used (except SA, SB, SC, SD with additional intermediate universal on frame cross-member).

See Universals Section for complete data.

REAR AXLE

PASSENGER CARS

REAR AXLE (GA, GB):—Own make. Semi-floating, Hypoid gear type with Torque Tube drive.

See Rear Axle Section for complete data.

Ratio—4.22-1 (GA), 3.73-1 (GB). 3.73-1 axle marked by prefix 'C' on serial number on differential carrier. No prefix for 4.22-1 axle.

Backlash—.004-.008". Screw adjustment.

Removal:—Jack up rear end of car (or use chain hoist), remove rear wheels, disconnect hydraulic brake line and brake cables, disconnect shock absorber links at spring seats, disconnect nuts on 'U' bolts holding rear springs to spring seats. Disconnect spring shackles and drop springs, pull axle assembly back to free shaft at splined joint in rear of transmission.

Wheel Bearing Adjustment:—None (sealed type).

Axle Shaft Removal:—Wheel bolted directly to flange on outer end of shaft. Axle shaft retained by 'C' washer at inner end in differential case. To remove shaft, remove wheel, take out two machine screws in brake drum, remove drum, install clamp on wheel brake cylinder. Take off axle housing cover, remove differential pinion shaft screw, pull out pinion shaft, remove axle shaft spacer. Push axle shaft in, remove 'C' washer at inner end, pull shafts out. When installing new shaft, use new bolts in axle flange (pressed in flange), new oil deflector, and new gasket. Shellac or paint both sides of gasket for good oil seal and line up extra hole (center of three closest together) with notch in hub flange in axle shaft. Oil pocket in oil deflector should also be in line with this notch.

NOTE—Axle shaft spacers furnished in three sizes: 1.0105", 1.0195", 1.0295" across ground faces. Select spacer so that clearance between ends of axle shafts and spacer is Free to .014".

REAR AXLE

HALF-TON TRUCK

REAR AXLE (GC):—Own make. Semi-floating, spiral bevel gear type with torque tube drive.

See Rear Axle Section for complete data.

Ratio—4.11-1 or 3.82-1 Std. 3.82-1 axle identified by prefix 'F' in front of serial number on differential carrier (no prefix for 4.11-1 axle).

Backlash—.004-.006". Screw adjustment.

Removal:—Same as for passenger car models above.

REAR AXLE

OTHER TRUCKS

REAR AXLE (SA, SB, SC, SD):—Own make. Full floating, Spiral bevel gear type with torque tube drive.

See Rear Axle Section for complete data.

Ratio—5.428-1 or 6.166-1 Std. 6.166-1 axle identified by prefix 'H' in front of serial number on differential carrier (no prefix for 5.428-1 axle).

Backlash—.008-.010". Screw adjustment.

Removal:—Remove two nuts holding front propellor shaft to cross-member, drop unit, remove capscrews holding ball collar to housing, slide ball back on rear axle shaft housing, remove trunnion bearing lock rings, drive trunnion bearings from place, split universal joint and drop rear axle propeller shaft. Remove rear yoke from end of rear axle propeller shaft and ball and collar from housing. Remove axle shafts (see below), remove nuts holding differential carrier in housing, pull third member assembly (differential carrier and shaft assembly) from housing.

Axle Shaft Removal—Remove capscrews which attach axle shaft flange to wheel hub. Install two screws in holes located between regular mounting screw holes, turn screws in to start axle shaft, remove shaft. Wheel bearing adjustment not disturbed by axle removal.

Wheel Bearing Adjustment:—With axle shaft removed, tighten adjusting nut (within wheel hub on outer end of axle housing) moderately tight while rotating hub, install star lock on adjusting nut, note alignment of lock tangs with notches in outer edge of adjusting nut, bend lock tang into notch on adjusting nut. Rotate wheel hub by hand to note that bearings seated and that wheel turns freely. Install locknut and draw up tight, bend lock tang into notch in locknut.

NOTE—Wheel bearings now lubricated from differential case (no oil seal used at differential side bearing). Soft stamped steel plate used under hub bolt heads, and wheel bearing oil seal is spring-backed to retain lubricant. When replacing axle shaft, see that new type .020" vellumoid gasket is in place between axle flange and wheel hub.

SHOCK ABSORBERS

SHOCK ABSORBERS:—Delco Hydraulic single-acting type std. on all models except GA (GA has double acting shock absorber built in the Knee Action

See Shock Absorber Section for complete data.

Model	Front	Rear
GA	1068386, 7	1431V, W
GB	1200P, N	1200M, L

FRONT SUSPENSION

Front Suspension (GA):—Chevrolet Knee-Action type

See Front Suspension Section for complete data.

NOTE—Specifications below correct with car weight supported on horses at inner bearing cone (wheels removed for use of special test equipment).

Height (Suspension Unit Setting)—4⅞" from bottom of kingpin support to bottom of brake flange

Kingpin Inclination—7° 45' crosswise.

Caster—0° (kingpin). Caster effect secured by trailing wheel center.

Camber—¼° (¼-¾°). No adjustment.

Toe In—1/16-3/32". Adjustable.

Steering Geometry—Inner wheel 23°. Outer 20°.

Front Suspension (GB, GC, SA, SB, SC, SD):—Conventional 'I' beam section front axle with Reverse Elliott ends and semi-elliptic springs.

Kingpin Inclination—7° 10' crosswise.

Caster—2¼° (GB), 1¾° (GC), 2¾° (SA, B, C, D) plus or minus ½° and equal for both wheels within ¼°.

Camber—1° plus or minus ½° and equal within ¼° for both wheels. Axle may be bent cold for minor corrections.

Toe In—5/64-⅛". Adjusted in usual manner by turning tie rod to increase or decrease length.

Steering Geometry—Inner wheel 23°. Outer 20°.

STEERING GEAR

Steering Gear: (GA) Saginaw Worm-and-Roller type. (Other Models) Saginaw Worm-and-Sector type.

See Steering Gear Section for complete data.

BRAKES

BRAKES:—Service—Own design, hydraulic type. Hand brake lever applies rear wheel service brakes.

See Brake Section for complete data.

Wheel Cylinders—Diameters—1¼" (front—all), 1 3/16" (rear—GA, GB, GC), 1½" (rear—SA, SB, SC, SD). Not interchangeable.

Drum Diameter—11" (GA, GB, GC), 12" (SA, B, C, D—front), 14" (SA, B, C, D,—rear).

Lining—Moulded type. Special lining on SA, B, C, D.

Model	Width	Thickness	Length
GA, GB, GC	1¾"	3/16"	22⅝"
SA, B, C, D Frt.	2"	.243-.250"	28⅞"
" Rear	3"	.250"	35 13/16"

NOTE—Lengths as given are per wheel.

Clearance—Adjusting cover backed off 4 notches (GA, GB, GC all wheels), 5 notches (SA, SB, SC, SD front wheels), adjusting pinion shaft backed off ¾ turn (SA, SB, SC, SD rear wheels) from slight drag position.

Hand Brake:—See Service Brakes above.

NOTE:—Oil Pan Removal—On passenger car models, the Engine-Side-Support Tie-Bar (cross-member under engine) should be dropped first. This cross-member bolted to bottom of frame side rails.

MODEL IDENTIFICATION

FLEET MODEL NOTE:—Special Economy engine available for all models. Engine identified by code letter 'V' stamped ahead of engine number and special tune-up specification plate on Push Rod Cover listing special tune up data for this model. Engine standard except for these specifications and Carburetor which has stop-pin designed to limit throttle opening to half-throttle.

SERIAL NUMBER:—First number 1001. Prefixes 1-HA-03, indicate assembly plant (1-21), Model (HA,HB, HC, HD, HE, TA, TB, TC, TD) and month (01-12). Located on right side of body under hood (front of dash—Trucks).

ENGINE NUMBER:—First Engine number (Flint) 1,187,822, (Buffalo) 1. Prefixes as follows: Flint—Passenger car (none), ½ Ton Commercial (K), All others (T). Buffalo—Passenger cars (B), ½ Ton Commercial (BK), All others (BT). Economy engine indicated by 'V' thus VK, VKB, etc. Engine number stamped on boss on right side of block

TUNE-UP

COMPRESSION:—Ratio—6.25-1 cast-iron head.

Pressure—112 lbs. at 65 R.P.M. (cranking speed), 159 lbs. max. (each cylinder within 5-10 lbs.).

VACUUM READING:—Steady 20-22" with engine idling.

FIRING ORDER: 1-5-3-6-2-4. See diagram.

SPARK PLUGS: AC No. 46. 14 mm. Metric type.
Gaps—.040".

IGNITION: See Coil, Condenser, and Distributor.
Breaker Gap—.018" **Cam Angle** 35° (closed).
Automatic Advance—25° max. at 1800 RPM (distr.).
Vacuum Advance—7½° distr. with 8-10" vacuum.

IGNITION TIMING: See Ignition Timing.
Std. Setting—5° BTDC. with flywheel mark (steel ball) at inspection hole on right of housing.

CARBURETION: See Carburetor & Carb. Equipment.
Idle Setting—Idle screw 1-2 turns open. Idle speed 400 Engine RPM or 7 MPH.
Float Level—⅜" top of float to gasket seat on cover with needle valve seated.
Accelerating Pump—Lower hole (med. stroke) normal.
Fuel Pump Pressure. 3 lbs. maximum.

MANIFOLD HEAT CONTROL:—Thermostatic coil type. Wind up spring just enough to slip over pin on manifold (approximately ½ turn)—IMPORTANT—excessive tension may cause detonation, sticking of heat control valve and poor performance.

Anti-rattle Spring Installation—Part No. 602799. Should be installed to stop noise (do not increase thermostatic spring tension). To install, rotate valve to 'heat off' position, insert spring in valve shaft slot, hold counterweight 3/16" above 'heat on' position, bend anti-rattle spring until it just contacts stop pin on manifold.

▶VALVE TAPPET CLEARANCE: *CAUTION—Engine temperature must be "normalized" before adjusting. See "Tappet Clearance Adjustment" in Chevrolet Shop Notes.*

Cars & Trucks—.006-.008" Intake, .013-.015" Exhaust, with engine "normalized".

Trucks (for continuous full throttle operation)—.010" Intake, .020" Exh., with engine "normalized".

Economy Engine—.010" Intake, .016" Exhaust, with engine "normalized".

Valve Timing Check: *See Valve Timing.*

STARTING: See Battery, Starter, Generator, Regulator.

IGNITION

Ignition Switch:—Delco-Remy model 435-F (passenger cars), 431-Y (commercial and trucks). Connected to coil by armored cable.

Ignition Lock—Briggs & Stratton No. 45792 (Lock cylinder). Key Series 8000 to 9499. Groove—No. 15.

COIL: Delc -Remy Model 536-D. Mounted on right side of engine above distributor.

Ignition Current—2.5 amperes idling, 4.8 stopped.

CONDENSER: Delco-Remy Part No. 1869704.

Capacity—.20-.25 microfarad.

DISTRIBUTOR: Delco-Remy No. 1110008. Single breaker, 6 lobe cam, full automatic advance type with vacuum spark control and Octane Selector.

Breaker Gap—Set at .018". Limits .018-.024".

Cam Angle or Dwell—35° (closed), 25° (open).

Breaker Arm Spring Tension—20 ounces.

Rotation—Clockwise viewed from top.

Automatic Advance

Distributor Degrees	R.P.M.	Engine Degrees	R.P.M.
Start	300	1.75	600
25	1800	50	3600

CONTINUED N NEXT PAGE

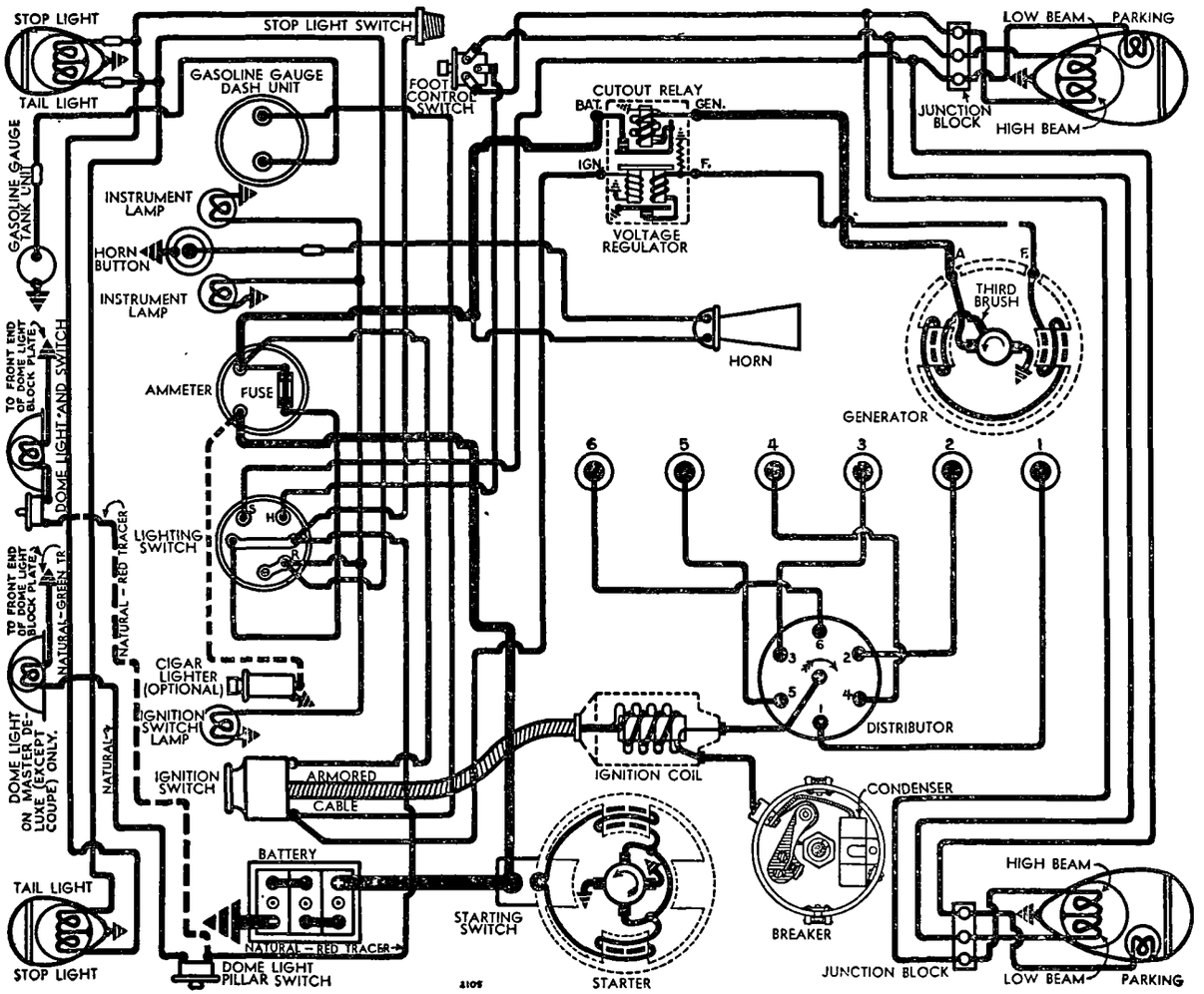

CONTINUED FR M PRECEDING PAGE

Vacuum Spark Control Model 681-F (early cars with ⅛" tubing), 1116009 (cars with 3/16" tubing). On Octane Selector and linked to distributor advance arm. Provides additional advance except when engine is suddenly accelerated (retarded by return spring within unit) or at high speeds with wide open throttle (vacuum port in carburetor cut off by throttle valve shaft).

Vacuum Advance

Distr. Degrees	Eng. Degrees	Vacuum (" of HG)
Start	0°	4 5"
7½°	15°	8-10"

Octane Selector—Consists of adjustment at distributor providing 10° advance or retard from standard ignition setting to compensate for fuel

Removal:—Distributor mounted on right side of crankcase. To remove, loosen clamp bolt in advance arm (Octane Selector mounting not disturbed).

IGNITION TIMING

IGNITION TIMING:—Initial setting with Octane Selector set at '0' as follows. See Octane Selector for final setting.

	Flywheel Degrees	Piston Position
All Engines	5° BTDC	.0091" BTDC.

►**Excessive Pinging Correction**—*See Field & Production changes in Carburetor article.*

To Set Timing (Neon Light)—Recommended by manufacturer. Mount timing light so that it is directed on flywheel through inspection hole in right front face of housing. Clip one lead to #1 spark plug. Set Octane Selector at 'O' on scale by turning thumbnut. Idle engine, loosen advance arm clamp bolt, rotate distributor until steel ball timing mark on flywheel lines up with pointer on housing.

Timing (Without Neon Light)—With #1 piston on compression, turn engine over until piston is 5° or .0091" before top dead center, stop when steel ball timing mark on flywheel lines up with pointer in inspection hole in right front face of housing, loosen advance arm clamp bolt, rotate distributor until contacts begin to open, tighten clamp bolt.

Final Setting (Octane Selector)—Advance setting until slight ping accelerating with full throttle

CARBURETOR

CARBURETION:—**Carburetor**—Carter Model 391-S, (Std. all models), 358-S (Econ. models). 1¼" downdraft type. *For data, refer to Carburetor Index.*

►**Engine Running Backward Correction**—*See Field & Production changes in Carburetor article.*

Idle Adjustment—With engine warm and choke valve wide open, adjust throttle stopscrew to idle engine at 400 R.P.M. Turn idle adjusting screw in until engine begins to miss, then turn screw out until engine begins to roll, finally turn screw in slowly until engine fires smoothly. Final setting should be 1-2 turns of screw from inner seated position. Recheck idle speed.

Accelerating Pump Setting—Pump lever under dust cover at top of carburetor has three holes for pump link engagement. Settings as follows:

Lower Hole (med. stroke)—Std. gasoline.

Upper Hole (long stroke)—Cold climates.

Inner Hole (short stroke)—Hot climates, high test fuel or high altitudes.

Metering Rods & Jets—*Refer to Carter Carburetor Jet Specification Table in Carburetor Section for data.*

Throttle Cracker:—Consists of a lug on the starting pedal linkage which engages the accelerator linkage to open throttle 1/3 for starting. No adjustment

CARB. EQUIPMENT

Air Cleaner:—AC #1528524 (Pass cars), 1525978 (Trucks) oil-wetted type Std., #288 (all models) #1525983 (Comml.) heavy duty oil bath type Optl.

Fuel Pump:—AC. Type AF #1523089 diaphragm type. AM #1523271 fuel and vacuum pump Optl. *For complete data, refer to Carburetion Equip. Index.*

Gasoline Gauge:—AC. Electric. **Dash Unit**—(HA, HB) #1515345, (all others) #1515207. **Tank Unit**—(HA, HB—except coupe) #1515463, (HA, HB—coupe only) #1515464, (com'l & trucks) #1515465, (panel & OOH) #1515466, (com'l chassis) #1515467. *For complete data, refer to Carburetion Equip. Index.*

BATTERY

PASSENGER CARS

Delco 17-M (Chevrolet), 17-P (Delco Replacement). 6 volt, 17 plate, 100 amp. hr. capacity (20 hr. rate).
Starting Capacity—115 amperes for 20 minutes.
Zero Capacity—300 amperes for 3.3 minutes. Five second voltage—4.2 volts.
Grounded Terminal—Negative (—) terminal. Grounded to rear of transmission case.
Dimensions—Width 7". Lgth. 10 9/16". Hgt. 7 7/16".
Location—Right side under front floor.

BATTERY

COMMERCIAL & TRUCKS

Delco 15X (Chevrolet), 15AA (Delco Replacement). 6 volt, 15 plate, 94 AH capacity (20 hour rate).
Grounded Terminal—Negative (—) terminal.
Dimensions—Width 7". Length 8 15/16". Height 8 11/16". All other data same as passenger car

STARTER

Delco-Remy Model 1107001. Armature No. 1867897.
Drive—Overrunning clutch and manual pinion shift operated by starting pedal.
Rotation—Counter-clockwise at commutator end.
Cranking Engine—65 RPM. Approx. 150 amps., 5 5 volts.
Brush Spring Tension—24-28 ounces each.

Performance Data

Torque	R.P.M.	Volts	Amperes
0 ft. lbs.	5000	5.0	65
12 " "	Lock	3.37	525

Removal:—Flange mounted on right front face of flywheel housing. To remove, disconnect cable and ammeter lead, take out flange mounting capscrews

Starting Switch:—Part No. 820052. Mounted on starter. Operated by starting pedal.

GENERATOR

PASSENGER CARS

Delco-Remy Model 1100004. Armature No. 1866789. Fixed third brush type with external vibrating voltage regulator.

NOTE—Third brush is clamped in position for maximum safe output and must not be disturbed.

Charging Rate Adjustment—Adjusted by changing setting of voltage regulator. See Regulator data.

Maximum Charging Rate—As given in table below. Reached at car speed of 30-35 M.P.H. To check charging rate, connect test ammeter in line at 'BAT' terminal of regulator, voltmeter between 'GEN' terminal and ground, ground 'F' terminal to eliminate regulator action.

NOTE—Do not operate generator on open circuit.

Performance Data

	Amperes	Volts	R.P.M.
Cold	26-30	8.0	3400
Hot	25-28	8.0	3600

Rotation—Counter-clockwise at commutator end.

Brush Spring Tension—22-26 ounces (main), 16-20 ounces (third).

Field Current—2 3-2.6 amperes at 6 volts.

Removal:—Pivot mounted at left front of engine. To remove, take out two pivot, one clamp bolt.

Belt Adjustment:—Loosen clamp bolts and pivot bolt. Swing generator out until belt sideplay midway between fan and generator pulleys is 1½".

GENERATOR

COMMERCIAL & TRUCKS

Delco-Remy Model 948-R. Third brush regulation, lighting switch control type. Field resistance on switch is shorted out with lamps 'on', increasing generator output. Special switch position between 'Off' and 'Park' provides this high charging rate with lights off Ventilated by fan on drive pulley.

Refer to preceding 1939 Chevrolet article for all data on this generator and 265-G Cutout Relay.

GENERATOR

SPECIAL EQUIPMENT

SPECIAL GENERATORS:—**Model 1106403 (City Police), 1105851 or 1105856 (State Police.)** Two brush types used with new Single Core Type Voltage & Current Regulator.

Refer to 1940 Chevrolet article for complete data.

Other Types—Model 934-F, Armature 1861851 (City Police & Delivery); Model 961-N, Armature 1857866. Two brush types with vibrating voltage and current regulator control.

Charging Rate Adjustment—None. See Regulator.

Maximum Charging Rate—For each model as follows:

Performance Data (Cold)

	Amperes	Volts	R.P.M.
934-F	26	8 1-8.3	1325
961-N	25	8.0	1650

Rotation—Counter-clockwise at commutator end.

Field Current—1.7-2 0 amperes (934-F), 2 0-2 2 amperes (961-N) at 6.0 volts.

Brush Spring Tension—25 ounces each.

Mounting & Belt Adjustment:—Same as Std (above).

REGULATOR

PASSENGER CARS

Delco-Remy Model 5814 (1100004 Gen.). Double Core Type Voltage Regulator (With 'IGN' Terminal). Cutout Relay and vibrating type Voltage Regulator

For complete data, refer to Electrical Equipment Index.

Cutout Relay

Cuts In—6.9-7.6 volts.

Cuts Out—0-3.0 amps. maximum discharge.

Contact Gap and Air Gap—.020".

Voltage Regulator

Setting—7.5-7.9 volts at 70° F., 7.4-7.6 volts at 150°F. Regulator is over-compensated for temperature and must be checked at these points.

Adjustment—Disconnect lead on 'IGN' terminal of regulator, connect jumper between 'IGN' and 'BAT' terminals, connect test ammeter in charging line at 'BAT' terminal, connect voltmeter between 'IGN' terminal and ground. Operate generator at 30-35 M.P.H. (or 2800-3000 R.P.M.), adjust charging rate to 8-10 amperes, change regulator armature spring tension by bending spring hanger at lower end of spring slightly until setting is as given above.

Contact Gap—.020". **Contact Sp. Tens.**—2.7-3.5 ozs.

Air Gap—.063" between armature and center of core with armature down and fibre bumper touching stop; .010" between fibre bumper and stop with armature up.

REGULATOR

SPECIAL EQUIPMENT

Delco-Remy Model 5559 (Model 934-F Generators), 5832 (961-N Gen.). Double Core Type Voltage and Current Regulator. Same design as Pass. Car Model 5814 (above) with additional Current Regulator *For complete data, refer to Electrical Equip. Index.*

Cutout Relay & Voltage Regulator

Specifications same as Model 5814 (above) except Voltage Setting for Model 5599 which is listed below (Voltage Setting for 5832 same as 5814 above).

Voltage Setting (5599)—7.0-7.4 volts Cold (70°F), 6.95-7.15 volts Hot (150°F).

Current Regulator

Setting—20-23 amperes (5599), 26-28 amperes (5832).

To Check—Disconnect lead at regulator 'IGN' terminal (to eliminate voltage regulator action), connect ammeter in charging line at 'BAT' terminal, operate generator, note ammeter reading which should equal setting given above.

To Adjust—Same as Voltage Regulator (above).

Contact Gap, Contact Spring Tension, Fibre Bumper Air Gap—Same as Voltage Regulator (above).

Armature Air Gap—.075" between armature and center of core (armature down and fibre bumper against stop).

LIGHTING

LIGHTING:—Headlamps—Guide, Multi-beam, prefocused type. Upper and lower beams controlled by switch on toeboard with lighting switch 'on'.

Headlamp Adjustment—Aim headlamps straight ahead. Top of beam should be 36¼" (passenger cars). 39½" (½ton), 40" (¾, 1 ton), 43½" (1½ ton or 42" if state law requires) above floor at 25 feet.

Switches

Lighting—D-R No. 1994001 (Pass. Cars), 485-Z (Comm'l & Truck), 479-E, 1995002 (Special Equip.).

Dimmer—Delco-Remy Model 471-P.

Stop Light—D-R Model 476-U. Hydraulic type.

Bulb Specifications

Position	Candlepower	Mazda No.
Headlamps	32-21	2320
Parking, Instrument	1½	55
Ignition lock lamp	1½	55
Stop (Pass. Cars)	3	63
Stop (Trucks)	15	87
Tail	3	63
Dome	6	81

MISC. ELECTRICAL

FUSES:—Lighting—20 ampere on back of ammeter.

HORNS:—Klaxon. Model K-16-2303 (HB), K-26-H-2251 (all others). Single horn, vibrator type.

Type	Current at 6 volts	Air Gap
K-16-2303	5.0-7.5 amperes	.020-.022"
K-26-H-2251	6.5-8.5 amperes	.025-.029"

ENGINE

ENGINE SPECIFICATIONS:—Own. 6 cyl., 'I' head type.

Bore—3½". **Stroke**—3¾".

Displacement—216.5 cubic inches.

Rated Horsepower—29.4 (S.A.E.).

Developed Horsepower—85 at 3200 (passenger cars), 78 at 3200 (all others).

Compression Ratio—6.25-1 Std. cast-iron head.

Compression & Vacuum Reading—*See Tune-Up.*

PISTONS:—Cast-iron, domed head, cam ground, tin-plated, with slipper type skirt. Recondition engines to take finished replacement pistons (hone for .003" oversize, bore and hone for larger sizes). See Replacement Pistons. **Length**—4 11/64".

Weight—30.72 ozs. (including bushing—passenger cars). 32.96 ozs. (including bushing—trucks).

TRUCK PISTON NOTE—Marked by two ¼"x3/16" bosses on bottom of pin bosses at piston side wall. Must not be interchanged with Pass. car type (heavier).

Removal—Pistons and rods removed from above.

Clearance—Top .006-.013". Skirt .0015-.003". See Fitting New Pistons (below).

Replacement Pistons:—Finished pistons with bushings and pins fitted furnished standard and .003", .010", .020", .030", and .040" oversize.

Fitting New Pistons:—Use feeler gauges between piston and cylinder wall at right angles to pin bosses. Piston should pass through bore on .002" feeler (with light pressure) and lock on .003" feeler.

PISTON RINGS:—Two compression, one oil control ring per piston, all above pin. Oil ring slotted or drilled type. Oil ring groove drilled with oil drain holes. Rings furnished standard and .005", .010", .015", .020", .030" and .040" oversize.

NOTE—Compression rings have tapered face. Install with word "TOP" toward top of piston.

Ring	Width	End Gap	Side Clearance
Comp.	⅛"	.004-.014"	.0015-.003"
Oil Cont.	3/16"	.004-.014"	.002-.0035"

NOTE—Use .002" feeler to check side clearance. #1 ring very free, #2 just free, #3 light drag.

PISTON PIN:—Diameter—.865". **Length**—3 9/64". Pin locked in rod, pin bosses in piston bronze bushed. New pistons have bushings and pins fitted. Pins furnished std. and .003", .005", .010" oversize.

Pin Fit in Piston—Thumb push fit (room temp.).

CONNECTING ROD:—Length 6 13/16". **Weight** 28.3 oz.

Crankpin Journal Diameter—2.311-2.312".

Lower Bearing—Spun-babbit lined type.

Clearance—.0005-.002". **Sideplay**—.004-.011".

Bearing Adjustment:—Solid shims. Remove shims (equally from both sides) to secure 'snap fit' (bearing tight to hand but rod should snap from one side to other with light tap of 8 oz. hammer), **then replace .002" shim for clearance.** If unequal number, install extra shim on camshaft side. With correct adjustment, rod should move from side to side with two finger pressure.

Installing Rods:—Install rods in same numbered cylinders indicated by numbers on rod and caps with these numbers together and toward camshaft side. Assemble oil dippers on rod caps with mouth of dipper toward camshaft.

NOTE—Check dipper heights with J-969-2 gauge.

CRANKSHAFT:—4 bearing. Integral counter weights with harmonic balancer mounted on forward end. *See Chevrolet Shop Notes for balancer data.*

Journal Diameters—#1, 2.6835-2.6845"; #2, 2.7145-2.7155"; #3, 2.7455-2.7465"; #4, 2.7765-2.7775".

Bearing Type—Steel-backed, babbitt-lined type. Bearings are "doweled" in place by projection on shell engaging hole in crankcase and bearing cap.

Clearance—.002-.004".

►*NOTE—Replacement "precision" type bearings do not require line-boring or reaming.*

Replacement Bearings: New "precision" type furnished Std. size and .002", .010", .020", .030" Undersize.

NOTE—Bearings marked on inner surface of dowel: "V" for #1 and #4, "I" for #2 and #3.

►*CAUTION—Complete bearing set (4 bearings) must be installed on engines not previously equipped with replacement "precision" bearings.*

Bearing Adjustment:—Solid shims. Remove shims until slight drag on crankshaft secured, then **replace one .002" shim for clearance.** If unequal in number, install extra shim on same side for all bearings.

End Thrust:—Taken by #3 main bearing. Adjusted by replacing bearing. **Endplay**—.004-.007".

NOTE—Oil slinger clearance at rear end of crankshaft must be .002-.032".

CAMSHAFT:—Four bearing. Gear driven.

Journal Diameters—#1, 2.0282-2.0292"; #2, 1.9657-1.9667"; #3, 1.9032-1.9042"; #4, 1.8407-1.8417".

Bearing Type—New type steel-backed, babbitt-lined with oil grooves. *See Chevrolet Special Shop Notes for camshaft bushing installation instructions.*

Clearance—.002-.0035".

End Thrust:—Taken by thrust plate behind camshaft gear. Endplay—Free fit to .003" max. Adjusted by changing gear position on shaft.

Timing Gears:—Crankshaft gear Steel. Camshaft gear Bakelite & fabric composition. Gear run-out (maximum) .003" crankshaft, .004" camshaft.

CONTINUED N NEXT PAGE

ENGINE

CONTINUED FR M PRECEDING PAGE

Backlash—.002-.005".
See Chevrolet Special Shop Notes for timing gear installation instructions.

Camshaft Setting:—Gears marked. Mesh marked tooth of crankshaft gear with marked space between teeth on camshaft gear.

VALVES:—Marked 38 on head. 1938 exhaust valve new design (more metal under head).

	Head Diameter	Stem Diameter	Length
Intake	1 23/32"	.3407-.3417"	6 1/16"
Exhaust	1 15/32"	.3397-.3407"	4 13/16"

	Seat Angle	Lift	Stem Clearance
Intake	30°	.305"	.001-.003"
Exhaust	30°	.3195"	.002-.004"

Valve Guides:—Straight type (no shoulder).

Replacement Valve Guides: New "precision" type (do not require rough reaming).
Valve Guide Installation—*See "Valve System" in Chevrolet Shop Notes.*

Valve Springs:—New 9 coil springs used. Cannot be used on previous models. Free length 2 7/32". Check spring compressed to 1½". Pressure should be 125-133 lbs.

	Spring Pressure	Spring Length
Valve Closed	42- 48 lbs.	1.821"
Valve Open	111-119 lbs.	1.505"

NOTE—Install spring with close-coiled end toward cylinder head. Use round spring caps on intake valves, hexagonal caps on exhaust valves.

Valve Lifters:—Cast-iron type with ground contact face. Oversize lifters not furnished.

Rocker Arms:—*See Chevrolet Shop Notes for data.*

VALVE TIMING

►**VALVE TAPPET CLEARANCE:** *CAUTION—Engine temperature must be "normalized" before adjusting. See "Tappet Clearance Adjustment" in Chevrolet Shop Notes.*

Cars & Trucks—.006-.008" Intake, .013-.015" Exhaust, with engine "normalized".

Trucks (for continuous full throttle operation)—.010" Intake, .020" Exh., with engine "normalized".

Economy Engine—.010" Intake, .016" Exhaust, with engine "normalized".

VALVE TIMING: See Camshaft Setting.
Intake Valves—Open 9° BTDC. Close 29° ALDC.
Exhaust Valves—Open 52° BLDC. Close 1° BTDC.
To Check Timing—No flywheel marks provided. With intake tappet clearance set at .006", #1 intake valve should open with piston 9° or .0294" BTDC. when a point on the flywheel approximately 3.475 teeth before top dead center lines up with indicator in inspection hole in right front face of housing.

LUBRICATION

LUBRICATION:—Pressure and positive splash system. Gear type oil pump in crankcase.
Oil Pump Installation—Assemble ground side of driven gear toward cover. Oil Pump assembly mounted to crankcase by tapered set screw and lock nut. Screw must be firmly seated in tapered hole in pump body and set with lock nut.

Normal Oil Pressure:—13.5 lbs. at 50 M.P.H.

Oil Pressure Regulator:—Located in oil pump cover. Operates at 75 lbs. Not adjustable. Pressure normally controlled by Oil Distributor.

Oil Distributor:—Mounted on left side of crankcase. Proportions oil between high pressure points (crankshaft bearings, camshaft bearings, timing gears) and low pressure points (connecting rod oil troughs and rocker arms). Overflow pipe returns excess oil from rocker arm shafts.
See Chevrolet Shop Notes for installing oil lead (through block) to valve rocker arms.

Checking Oiling System:—*See Chevrolet Shop Notes.*

Crankcase Capacity:—5 quarts.

COOLING

COOLING SYSTEM:—Water Pump. Centrifugal, belt-driven, with self-adjusting type packing.
See Water Pump Section for complete data.

Thermostat:—Mounted in cylinder head water outlet.
Setting—Start to open 142°F (#3108572—Standard), 150°F (#985127—non-permanent anti-freeze used with overflow return tank #985319), 162°F. (#985128 permanent anti-freeze), 170° F. (Econ. Engines).

Water Capacity:—14 quarts (Standard). 15½ quarts (Trucks with heavy duty radiators).

CLUTCH

CLUTCH:—Own Make. Entirely new design, single plate, dry disc type with diaphragm spring serving as clutch spring and release levers, and ball throwout bearing. Two sizes, with larger pressure plate and cover used on HD, HE and T models. Diaphragm spring interchangeable on either clutch.
See Clutch Section for complete data.

►**Clutch Rattle Correction**—*See Service Notes in Chevrolet Clutch article in Clutch Section.*

Facings—Woven and formed asbestos. 2 used. Inside Diameter 6¼" (HA,B,C), 7" (HD,HE,T). Outside Diam. 9" (HA,B,C), 10¾" (HD,HE,T). Thickness ⅛" (HA,B,C), .122-.138" (HD,HE,T).

Adjustment (HA, HB)—Pedal free travel must be ¾-1". To adjust loosen locknut and turn adjusting nut on connecting link stud at clutch throwout fork.

All others—Loosen locknut on lever at lower end of clutch pedal, back off locknut on adjusting screw on lower end of lever, turn adjusting screw for ¾-1" free travel.

Removal:—Remove transmission (see Transmission Section). With flywheel underpan off, take out throwout bearing from fork, fork mounting (using ⅞" and ¾" wrench) and fork. Support clutch with Clutch Pilot Tool K-411, loosen cover mounting bolts (one turn at a time) until spring pressure released and remove assembly from below. NOTE—When reassembling turn flywheel to place 'X' mark at bottom, install cover assembly with 'X' mark on cover in line with 'X' mark on flywheel.

TRANSMISSION

ALL MODELS EXCEPT 1½ TON TRUCK

TRANSMISSION (HA, HB, HC, HD, HE):—Own Make. Constant mesh, helical gear (second only), Synchromesh (second and high). Low and reverse—sliding spur gear. NOTE—HC transmission same as HA, HB except that case longer permitting interchangeability with 4 spd. transmission. HD, HE transmission same as HC except that carburized gears used (identified by prefixes 'Y' or 'Z' before assembly number on boss at rear of transmission case cover).
See Transmission Section for complete data.

Removal (HA, HB, HC):—Disconnect pull rods on brake cross-shaft, remove left hand cross-shaft bracket, remove shaft. On HC remove hand brake lever from transmission case. Take out speedometer cable and gear assembly (screwed in universal joint ball retainer). Use jack under front end of torque tube. Take out screws in ball collar flange, slide ball and collar back on propeller shaft, remove bolts in universal joint ring, split joint. Lower jack until propeller shaft clears transmission. Remove top mounting bolts in flywheel housing and install guide pins, remove flywheel underpan, take out lower mounting screws. Take out bolts holding transmission mounting and support to cross-member. Slide transmission straight back on guide pins and remove. NOTE—On Model HC with 4 Spd. Transmission, remove transmission support cross-member and take out two screws on brake cylinder bracket on transmission case.

Removal (HD, HE):—Remove hand brake lever from transmission case. Take out speedometer cable and gear assembly (screwed in front universal joint ball retainer). Remove capscrews on front universal joint, remove bolts on frame cross-member freeing propeller shaft, slide ball back, split front joint by removing trunnion bearing lock rings and driving trunnion bearings out. Disconnect cross-member at frame ends and lower assembly to floor. Remove transmission using guide pins as directed for HA, HB, HC.

TRANSMISSION

1½ TON TRUCKS

TRANSMISSION (TA, TB, TC, TD):—Own Make. 4 speed, sliding spur gear type (all speeds). This transmission optional on Models HC, HD, HE.
See Transmission Section for complete data.

Removal:—Same as for HD, HE (above) except that two nuts holding front propeller shaft assembly should be removed and front propeller shaft dropped down.

UNIVERSALS

UNIVERSAL JOINTS:—Own Make. Plain bushing type. One used (except HD, HE, TA, TB, TC, TD with intermediate universal on frame cross-member).
See Universals Section for complete data.

REAR AXLE

PASSENGER CARS

REAR AXLE (HA, HB):—Own Make. Semi-floating, Hypoid gear type with Torque tube drive.
See Rear Axle Section for complete data.

Ratio—4.22-1 (HA), 3.73-1 (HB). 3.73-1 axle marked by prefix 'C' or 'CB' on serial number on differential carrier. Straight number or prefix 'B' on 4.22-1 axle.

Backlash—.004-.008". Screw adjustment.

See Chevrolet Shop Notes for data on new type spring seats on 1938 models.

Removal:—Jack up rear end of car (use chain hoist), remove rear wheels, disconnect hydraulic brake line and brake cables, disconnect shock absorber links at axle, remove 'I' bolt nut and withdraw bolt freeing spring seat from housing bracket (not necessary to disturb 'U' bolts). Disconnect spring shackles and drop springs (with spring seats attached), pull axle

assembly back to free shaft at splined joint in rear of transmission.

Wheel Bearing Adjustment—None.

Axle Shaft Removal:—Wheel bolted directly to flange on outer end of shaft. Axle shaft retained by 'C' washer at inner end of differential case (shafts unequal length—use long shaft on right side). To remove shaft, remove wheel, take out two machine screws in brake drum, remove drum, install clamp on wheel brake cylinder. Take off axle housing cover, remove differential pinion shaft screw, pull out pinion shaft, remove axle shaft spacer. Push axle shaft in, remove 'C' washer at inner end, pull shafts out.

See Chevrolet Shop Notes for axle shaft installation instructions and axle shaft spacer sizes.

REAR AXLE
½, ¾, 1 TON TRUCKS

REAR AXLE (HC, HD, HE):—**Own Make.** Semi-floating, spiral bevel gear type with Torque Tube drive.

See Rear Axle Section for complete data.

Ratio—4.11-1 (standard). 3.82-1 (optional HC only). Axles identified by prefixes stamped on carrier as follows: 4.11-1—straight number or 'B' on HC, HD; 'T' or 'TB' on HE. 3.82-1—'F' or 'FB'.

Backlash—.004-.006". Screw adjustment.

Removal:—Same as for passenger cars except that new type spring seat not used and spring 'U' bolts must be disconnected instead.

NOTE—Axle shaft spacers furnished in three sizes: 1.1485", 1.1575", 1.1675". Fit as directed for passenger car models above.

REAR AXLE
1½ TON TRUCKS

REAR AXLE (TA, TB, TC, TD):—**Own Make.** Full floating, spiral bevel gear type with Torque Tube drive.

See Rear Axle Section for complete data.

Ratio—5.43-1 or 6.16-1 standard. Identified by first letter in serial number on top right hand side of differential housing as follows: 5.43-1—'T'; 6.16-1—'H.'

Backlash—.008-.010". Screw adjustment.

Removal:—Remove two nuts holding front propeller shaft to cross-member, drop unit, remove capscrews holding ball collar to housing, slide ball back on rear axle shaft housing, remove trunnion bearing lock rings, drive trunnion bearings from place, split universal joint and drop rear propeller shaft. Remove rear yoke from end of rear propeller shaft and ball and collar from housing. Remove axle shafts (see below), remove nuts holding differential carrier in housing, pull third member assembly (differential carrier and shaft assembly) from housing.

Axle Shaft Removal—Remove 8 capscrews which attach axle shaft flange to wheel hub and capscrew lock. Install two screw in holes located between regular mounting screw holes, turn screws in to start axle shaft, remove shaft. Use new steel lock when replacing capscrews. Wheel bearing adjustment not disturbed by axle shaft removal.

Wheel Bearing Adjustment:—With axle shaft removed, tighten adjusting nut (within wheel hub on outer end of axle housing) moderately tight while rotating hub, install star lock on adjusting nut, note alignment of lock tangs with notches in outer edge of adjusting nut, bend back tang into notch on adjusting nut. Rotate wheel hub by hand to note that bearings seated and that wheel turns freely. Install locknut and draw up tight, bend lock tang into notch in locknut.

See Chevrolet Shop Notes for wheel bearing oil seal and gasket data.

SHOCK ABSORBERS

SHOCK ABSORBERS:—**Delco**—Hydraulic single-acting type standard on all models except HA (HA has double acting shock absorber built in Knee Action unit). Double acting type optional.

See Shock Absorber Section for complete data.

Model	Front	Rear
HA	10688388, 9	1431-V, W
HB, HC, HD	1201-A, B	1201-C, D
HE	1201-A, B	None

FRONT SUSPENSION

Front Suspension (HA):—Chevrolet Knee-Action type independent suspension with kingpins mounted on floating type plain bushings.

See Front Suspension Section for complete data.

NOTE—Specifications below correct with car weight supported on horses at inner bearing cone (wheels removed for use of special test equipment).

Height (Suspension Unit Setting)—4⅞" (plus or minus ⅛") from bottom of kingpin support to bottom of brake flange plate.

Kingpin Inclination—7¾° crosswise.

Caster—0° (kingpin). Caster effect secured by trailing wheel center.

Camber—¼°. No adjustment.

Toe In—1/16-3/32". Adjustable.

Steering Geometry—Inner wheel 23°, outer 20°.

Front Suspension (All models except HA):—Conventional 'I' beam section front axle with Reverse-Elliott ends and semi-elliptic springs.

NOTE—'Floating' type kingpin bushings on HB.

Kingpin Inclination—7°10' plus or minus 1° crosswise.

Caster—2¼° (HB), 1¾° (HC, HD, HE), 2¾° (TA, B, C, D), plus or minus ½°. Controlled by a caster shim ('I' beam spacer) inserted between spring and spring pad on axle.

Camber—1° plus or minus ½°. Axle may be bent cold for minor corrections.

Toe In—5/64-⅛". Adjusted in usual manner by turning tie rod to increase or decrease length.

Steering Geometry—Inner wheel 23°. Outer 20°.

STEERING GEAR

Steering Gear: (Passenger Cars) Saginaw Worm-and-Roller type. **(Trucks)** Saginaw Worm-and-Sector.

See Steering Gear Section for complete data.

BRAKES

BRAKES:—**Service**—Own design, hydraulic type. Hand brake lever applies rear wheel service brakes.

See Brake Section for complete data.

Wheel Cylinders—Diameters—1¼" (front—all), 1 3/16" (rear—HA, HB, HC, HD), 1⅜" (rear—HE), 1½" (rear—TA, B, C, D). Not interchangeable.

Drum Diameter—11" (all—HA, HB, HC, HD; front—HE). 14" (front—TA, B, C, D; rear—HE). 16" (rear—TA, B, C, D).

Lining—Moulded type. Semi-moulded (TA, B, C, D).

Model	Width	Thickness
HA, B, C, D (HE—front)	1¾"	.187-.194"
HE (rear)	2"	.265-.272"
TA, B, C, D (front)	2"	.243-.250"
TA, B, C, D (rear)	3"	.243-.250"

Clearance—Adjusting cover backed off 4 notches (HA, B, C, D, E all wheels), 5 notches (TA, B, C, D front wheels), adjusting pinion shaft backed off ¾ turn (TA, B, C, D rear wheels) from slight drag position.

Hand Brake:—See Service Brakes above.

FRONT END ASSEMBLY REMOVAL:—Should be removed as a unit for work on front of engine. *See Chevrolet Shop Notes for directions.*

NOTE:—**Oil Pan Removal**—On passenger car models, the Engine-Side-Support Tie-Bar (frame crossmember for engine side mountings) must be unbolted from frame for oil pan removal. *See Chevrolet Shop Notes for Engine Mounting adjustment.*

MODEL IDENTIFICATION

FLEET MODEL NOTE:—Special Economy Engine available for all models. Identified by code letter 'V' stamped ahead of engine number and special tune-up specification plate on push rod cover listing special settings for this model. Engine standard except for these settings and special carburetor which has stop-pin to limit throttle opening to half-throttle.

SERIAL NUMBER:—First number 1001 with model prefix as follows: JA (Master Deluxe), JB (Master), JC (Half ton), JD (¾ ton), JE (¾ ton special), VA, VB, VC, VD (1½ ton), VE, VF, VG, VH (1½ ton Cab-over Engine). On plate on right side of cowl under engine hood.

ENGINE NUMBER:—First No. 1915447 (Flint), B10503 (Buffalo) with special prefix for each model as follows: Pass. Cars (Buffalo)—B (no prefix for Flint); Comm'l. ½ Ton—K (Flint), KB (Buffalo); All Other Trucks—T (Flint), TB (Buffalo).

TUNE-UP

COMPRESSION:—**Ratio**—6.25-1 Std. Cast-iron head.
Pressure—112 lbs. at 65 RPM. cranking speed. Minimum pressure 90 lbs., cylinders even within 5-10 lbs.

VACUUM READING:—Steady 20-22" with engine idling.

FIRING ORDER: 1-5-3-6-2-4. See diagram.

SPARK PLUGS: AC No. 44. 14 mm. Metric type.
Gaps—.040"

IGNITION: See Coil, Condenser, and Distributor.
Breaker Gap—.018" **Cam Angle** 35° (closed).
Automatic Advance—25° max. at 1800 RPM (distr.).
Vacuum Advance—8° distr. with 12-15" vacuum.

IGNITION TIMING: See Ignition Timing.
Std. Setting—5° BTDC with flywheel mark (steel ball) at inspection hole on right of housing.

CARBURETION: See Carburetor & Carb. Equipment.
Idle Setting—Idle screw 1-2 turns open (downdraft types), ½-1½ turns open (updraft types). Idle speed 400 Eng. RPM or 7 MPH.
Float Level—½" top of float to gasket seat on cover (downdraft types), 1/32-1/16" top of float to top edge of bowl (updraft types).
Accelerating Pump—Lower hole (medium stroke) normal.

Fuel Pump Pressure: 3¾ lbs. maximum.

MANIFOLD HEAT CONTROL:—Thermostatic type. When installing, wind up spring just enough to slip end over manifold pin (½ turn approx.). NOTE—Excessive tension may cause sticking of valve, detonation and poor performance.
Anti-Rattle Spring—Install anti-rattle spring No. 602799 to correct noise. See 1938 Chevrolet data for instructions. Do not increase thermostatic coil spring tension.

►**VALVE TAPPET CLEARANCE:** *CAUTION—Engine temperature must be "normalized" before adjusting. See "Tappet Clearance Adjustment" in Chevrolet Shop Notes.*
Cars & Trucks—.006-.008" Intake, .013-.015" Exhaust, with engine "normalized".
Trucks (for continuous full throttle operation)—.010" Intake, .020" Exh., with engine "normalized".
Economy Engine—.010" Intake, .016" Exhaust, with engine "normalized".

Valve Timing Check: *See Valve Timing.*

STARTING: See Battery, Starter, Generator, Regulator.

IGNITION

Ignition Switch:—D-R. Model 435-F (Pass. Cars), 1116263 (Comml & Trucks). Connected to coil by armored cable.
Ignition Lock—Briggs & Stratton No. 45792. Key Series—8000 to 9499. Groove—No. 15.

COIL: Delco-Remy Model 536-D. On right side of engine near distributor.
Ignition Current—2.5 amperes idling, 4.8 stopped.

CONDENSER: Delco-Remy Part No. 1869704.
Capacity—.18-.25 microfarad.

DISTRIBUTOR: Delco-Remy No. 1110008. Single breaker, 6 lobe cam, full automatic advance type with vacuum spark control and Octane Selector.
Breaker Gap—.018". Limits .018-.024".
Cam Angle or Dwell—35° closed, 25° open (distr.).
Breaker Arm Spring Tension—20 ounces.
Rotation—Clockwise viewed from above.

Automatic Advance

Distributor		Engine	
Degrees	R.P.M.	Degrees	R.P.M.
Start	300	1.75	600
25	1800	50	3600

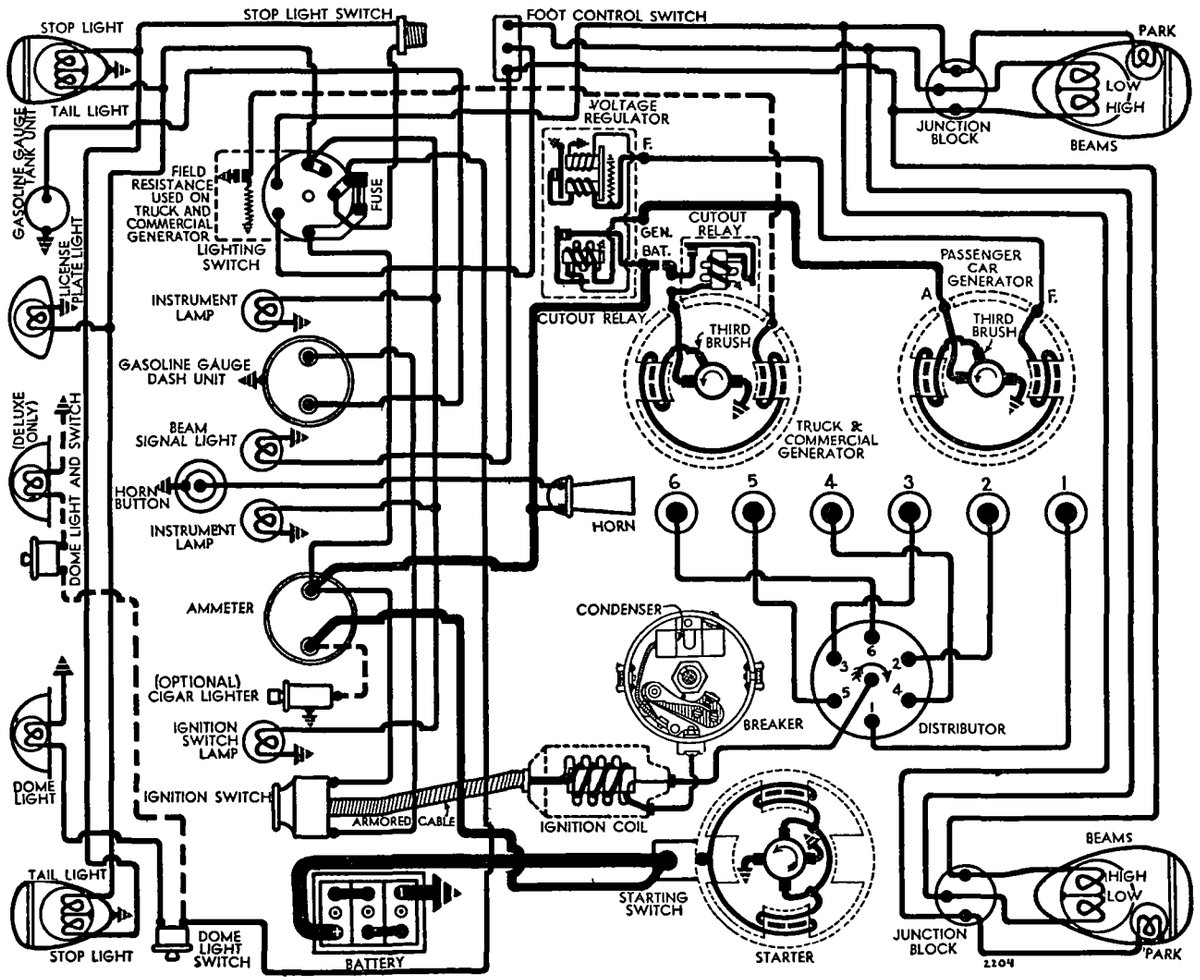

Vacuum Spark Control No. 1116011—Mounted on Octane Selector, linked to advance arm. Provides additional advance except when engine accelerated (spark retarded by return spring in unit) or at high speed with wide open throttle (vacuum port cut off by throttle valve shaft). Plunger travel 7/32".

Vacuum Advance

Distr. Degrees	Eng. Degrees	Vacuum (" of HG)
Start	0	6" Min.
8	16	12-15"

Octane Selector—Adjustment at distributor provides 10° advance or retard from center 'O' position. See Ignition Timing for adjustment instructions.

Removal:—On right side of crankcase. To remove, loosen advance arm clamp bolt (does not disturb Octane Selector).

IGNITION TIMING

IGNITION TIMING:—Initial setting as follows (see Octane Selector for final setting dependent on fuel used):

	Flywheel Degrees	Piston Position
All Engines	5° BTDC	.0091" BTDC

Timing (Neon Light)—This method recommended. Attach Neon Timing Light to #1 spark plug, direct light on flywheel through inspection hole in right front face of housing. Set Octane Selector pointer at 'O' on scale. Idle engine, loosen advance arm clamp bolt, rotate distributor until steel ball timing mark on flywheel appears in line with pointer. Tighten clamp bolt and check Octane Selector setting.

Timing (Without Neon Light)—With #1 piston on compression, turn engine over until piston is 5° or .0091" BTDC. when steel ball timing mark on flywheel lines up with pointer in inspection hole in right front face of housing. Set Octane Selector pointer at 'O' on scale, loosen advance arm clamp bolt, rotate distributor until contacts are just opening, tighten bolt, check Octane Selector setting.

Octane Selector Setting—Road test car and set Octane Selector for slight ping when accelerating engine with wide open throttle to secure maximum performance and economy with fuel regularly used. To adjust, loosen hold-down screw, move distributor and scale counter-clockwise to advance spark, clockwise to retard spark, tighten hold-down screw.

CARBURETOR

Carter W1 (Chevrolet) Model 420S (Cars & Trucks), 434S (Economy Engine). 1¼" single barrel, downdraft type.

See Carburetor Section for complete data.

►**Metering Rod Production Changes and Engine Running Backward Correction**—*See Field and Production Changes in Carburetor article in Carburetor Section.*

Cab-Over-Engine Truck—Carter BB Updraft Models 412S & 447S. 1¼" single barrel, updraft types.

See Carburetor Section for complete data.

Idle Adjustment—With engine warm and choke valve wide open, set throttle lever stopscrew so that engine idles at 400 R.P.M., turn idle adjusting screw in until engine begins to miss, out until engine rolls, finally turn screw in slowly until engine fires smoothly. Final setting should be 1-2 turns open of the screw from inner seated position. Readjust throttle stopscrew for correct idling speed.

NOTE—Special metering rods available for Altitude and special service. See Carter Jet Table in Carburetor Section.

Accelerating Pump Setting—Pump lever (under dust cover on float bowl on 420-S, 434-S) has three holes for pump link connection (2 holes nly on 412-S). Adjust as follows:
Lower Hole (Med. stroke)—Normal temperatures.
Inner (Min.)—Hot weather, high test fuel.
Upper (Max.)—Extreme cold weather.

Throttle Cracker:—Consists of a lug welded on accelerator rod which opens throttle when starter pedal depressed for starting. No adjustment.

CARB. EQUIPMENT

Air Cleaner:—AC #1528524 (Pass. cars) #1525978 (Comm'l & Trucks) oil-wetted type Std.; #1528964 (all), #1525983 (Can. Trucks with Governor), heavy duty, oil-bath type Optl. NOTE—#1529053 crankcase vent air-cleaner used on cars and trucks with vacuum gear shift.

Fuel Pump:—AC Type AF #1523089. Diaphragm type. Type AM #1523271 fuel-and-vacuum pump Optl.
For complete data, refer to Carburetion Equip. Index.

Gasoline Gauge:—AC Electric. Dash Units—#1515355 (Pass. cars), 1515207 (Comm'l. & Trucks). Tank units—#1515483 (Pass. cars), 1515484 (2 Pass. Coupe & Sedan Delvry.), 1515482 (Comm'l. & Trucks), 1515466 (Comm'l with cowl), 1515467 (Comm'l with cowl—long chassis).
For complete data, refer to Carburetion Equip. Index.

BATTERY

BATTERY (PASS. CARS):—Delco Model 17-M. 6 volt, 17 plate, 100 A.H. Capacity (20 hr. rate).
Starting Capacity—115 amperes for 20 minutes.
Zero Capacity—300 amperes for 3.3 minutes. Five second voltage—4.25 volts.
Dimensions—Length 10 9/16". Width 7". Hgt. 7 7/16"
Grounded Terminal—Negative (—) grounded to rear of transmission.
Location—On right side under front floor.

Comm'l. & Trucks—Delco Model 15-X. 6 volt, 15 plate, 94 A.H. Capacity (20 hour rate).
Starting Capacity—115 amperes for 20 minutes.
Zero Capacity—300 amperes for 3.3 minutes. Five second voltage—4.2 volts.
Dimensions—L'gth 8 15/16". Width 7". Hgt. 8 11/16"

Special Equipment—Delco Model 17-J. 6 volt, 17 plate, 125 A.H. Capacity (20 hour rate).
Starting Capacity—149 amperes for 20 minutes.
Zero Capacity—300 amperes for 5.5 minutes. Five second voltage—4.6 volts.
Dimensions—Length 10 9/32". Width 7". Hgt. 9⅛".

STARTER

Delco-Remy Model 1107009. Armature No. 1867897.
Drive—Manual pinion shift & overrunning clutch.
Rotation—Counter-clockwise at commutator end.
Brush Spring Tension—24-28 ounces.
Cranking Engine—65 RPM., 150 amperes, 5.5 volts.

Performance Data

Torque	R.P.M.	Volts	Amperes
0 ft. lbs	5000	5.0	65
12 "	Lock	3.37	525

Removal:—Flange mounted on right front face of flywheel housing. To remove, disconnect cable (tape end), take out capscrews, remove starter and switch.

Starting Switch:—No. 820052. Mounted on starter and perated by starting pedal.

GENERATOR

PASS. CARS AND C-O-E TRUCKS

Delco-Remy Model 1100004. Armature No. 1866789. Fixed third brush control with vibrating voltage regulator. Ventilated by fan on drive pulley.

Charging Rate Adjustment—By changing Regulator setting. See Regulator data. NOTE—Third brush clamped in place for maximum rated output. Do not disturb.

Maximum Charging Rate—As shown in table below. Reached at 38.1 (JA), 43.2 (JB), 35.4 (VE-H) MPH. To check, connect ammeter in charging line at regulator 'BAT' terminal, voltmeter between 'GEN' terminal and ground, ground 'F' terminal to eliminate regulator action. NOTE—Do not operate generator on open-circuit.

Performance Data

	Amperes	Volts	R.P.M.
Cold	26-30	8.0	3400
Hot	25-28	8.0	3600

Rotation—Counter-clockwise at commutator end.
Brush Spring Tension—25 ozs. (main), 17 ozs. (third brush).
Field Current—2.3-2.6 amperes at 6.0 volts.

Removal:—Pivot mounted at left front of engine. To remove, take out pivot and clamp bolts.

Belt Adjustment:—Swing generator away from engine until sideplay at point midway between generator and fan pulleys is 1½" with light pressure.

GENERATOR

TRUCKS (EXCEPT C-O-E)

Delco-Remy Model 948-R. Armature 1853593. Third brush control with lighting switch controlled field resistance. Ventilated.
See 'Delco-Remy Lamp Load Type Generator—Light Switch Controlled Field Resistance' article in Electrical Equipment Section for data.

Charging Rate Adjustment—Third brush set for maximum rated output (2 commutator bars from nearest main brush) and should not be disturbed. See Electrical Equipment Section for recommended resistance unit changes if battery under- or overcharged.

Maximum Charging Rate—21 amperes (cold), 18 amperes (hot), 2800 RPM. or 27.8 (JC), 28.9 (JD), 32.3 (JE), 27.5 (VA-D) MPH. To check, connect ammeter in charging line at cutout relay, ground field terminal to eliminate field resistance.

Performance Data

	Amperes	Volts	R.P.M.
Cold	19-23	8.4-8.8	2800
Hot	16-20	8.1-8.5	3100

Rotation, Brush Spring Tension, Field Current, Removal & Belt Adjustment—Same as 1100004 generator above.

GENERATOR

SPECIAL EQUIPMENT

SPECIAL GENERATORS:—Model 1106403 (City Police), 1105851 or 1105856 (State Police.) Two brush types used with new Single Core Type Voltage & Current Regulator.
Refer to 1940 Chevrolet article for complete data.

C NTINUED N NEXT PAGE

CONTINUED FROM PRECEDIN PAGE

REGULATOR

PASS. CARS AND C-O-E TRUCKS

Delco-Remy Model 5858 (1100004 Gen.). Double Core Type Voltage Regulator (No 'IGN' Terminal). Cutout Relay and vibrating type Voltage Regulator.

For complete data, refer to Electrical Equipment Index.

Cutout Relay

Cuts In—6.3-6.9 volts, 800 RPM., 8-9 MPH.

Cuts Out—0-4.0 ampere discharge current.

Contact Gap—.020". **Air Gap**—.020" (closed).

NOTE—Relay compensated for temperature. Closing voltage same cold and hot.

Voltage Regulator

Setting—7.5-7.9 volts (70° F), 7.4-7.6 volts (150°F). Regulator over-compensated for temperature and must be checked at these points.

Adjustment—Connect ammeter in charging line at regulator 'BAT' terminal, voltmeter between 'GEN' terminal and ground. Operate generator at speed of 2800-3000 RPM, adjust charging rate to 8-10 amperes (use variable rheostat or AVR set), adjust regulator by bending spring hanger at lower end of armature spring slightly to secure setting shown above. CAUTION—Regulator cover must be in place when tests made. Do not operate generator on open-circuit.

Contact Gap—.020". **Contact Spring Tension**—3.5 oz.

Air Gap—.063" between armature and center of core (armature down so fibre bumper touches stop), .010" between fibre bumper and stop (armature up).

CUTOUT RELAY

TRUCKS (EXCEPT C-O-E)

Delco-Remy Model 265-G (used with 948-R Gen.).

For complete data, refer to Electrical Equipment Index.

Cuts In—7.0-7.5 volts, 800 RPM., 8-9 MPH.

Cuts Out—0-3.0 ampere discharge current.

Contact Gap—.020". **Contact Spring Tension**—3.5 oz.

Air Gap—.015" (contacts closed).

LIGHTING

LIGHTING:—Headlamps—Guide, pre-focused type with upper and lower beams controlled by beam selector switch on toeboard.

Headlamp Adjustment—Aim each headlamp so that hot spot centered on vertical line drawn 16⅛" (Pass. cars), 16" (Trucks) to right or left of car center-line with upper edge of hot spot 35 7/32" (JA), 36 5/32" (JB), 39½" (JC), 40" (JD, JE), 43½" (VA-H) or 42" (VA-H—if required by state laws). To adjust, turn screw on bottom of lamp back of lense rim for vertical movement, screw under plug on engine side of lamp for horizontal movement.

Beam Indicator (Pass. Cars)—In speedometer dial. Lighted when upper (driving) beams in use.

Switches

Lighting—D-R No. 1994004 (Pass. Cars), 1994005 (Comm'l. & Truck). 479-E, 1995002 (Heavy Duty).

Beam Selector—D-R No. 471-P, 1997003.

Stop Light—D-R No. 476-U.

Bulb Specifications

Position	Candlepower	Mazda No.
Headlamps	32-21	2320
Parking	1½	55
Beam Ind., Ign. Lock	1	51
Instrument (Pass. Cars)	1½	55
Tail, Stop (Pass. Cars)	3	63
Stop & Tail (Coupes)	21-3	1154
License Plate (With Trunk)	3	63
Dome	15	87

MISC. ELECTRICAL

FUSES:—Lighting—30 ampere. On lighting switch. **Clock**—2 amperes. On clock.

HORNS:—Klaxon. Delco-Remy Model K-16 No. 1999901 (JB), Model K-26H Type 1999801 (all others). Vibrator type.
Current—5-7.5 amperes (K-16), 6.5-8.5 (K-26H).

ENGINE

ENGINE SPECIFICATIONS:—Own. 6 cyl., 'I' head type.
Bore—3½". **Stroke**—3¾".
Displacement—216.5 cu. ins. **Rated HP.**—29.4.
Developed Horsepower—85 HP. at 3200 R.P.M. (passenger cars). 78 HP. at 3200 R.P.M. (all others).
Compression Ratio—6.25-1 Std. cast-iron head.
Compression & Vacuum Reading—*See Tune-Up.*

ENGINE MOUNTING:—***See Chevrolet Shop Notes for Adjustment directions.***

PISTONS:—Passenger Cars. Cast-iron, domed head, cam ground, tin-plated, with slipper type skirt. If oversize pistons to be installed, hone for .003" oversize, rebore and hone for larger oversizes.
Trucks—Same as for Passenger Cars except 1½ ozs. heavier and two ¼"x3/16" bosses on bottom of pin bosses at piston side wall. **Length**—4 11/16".
Weight—25½ oz. stripped (Pass.), 27 (Trucks).
Removal—Pistons and rods removed from above.
Clearance—Top .0145-.019". Skirt .0015-.003".
Replacement Pistons: *See Chevrolet Shop Notes.*
Fitting New Pistons:—Use feeler gauges between piston and cylinder wall at right angles to pin bosses. Piston should pass through bore on .002" feeler (with light push only) and lock on .003" feeler. NOTE—Bore taper or out-of-round not to exceed .001".

PISTON RINGS:—Two compression, one oil control ring per piston, all above pin. Oil ring slotted or drilled type. Oil ring groove drilled with oil drain holes. NOTE—Compression ring face tapered for 'break-in'. Install side marked 'TOP' toward top

Ring	Width	End Gap	Side Clearance
Comp.	.1235-.1240"	.004-.014"	.0015-.0035"
Oil Contr.	.1860-.1865"	.004-.014"	.0015-.0035"

NOTE—Use .002" feeler to check side clearance. #1 ring very free, #2 ring just free, #3 light drag.
Replacement Rings: .005", .010", .015", .020", .030", .040" OS.

PISTON PIN:—Diameter .8645-.8650". **Length** 3.135-3.165". Pin locked in rod, pin bosses in piston bronze bushed. New pistons fitted with bushings and pins.
Pin Fit in Piston—Thumb push fit (room temp.).
Replacement Pins:—Std. & .003", .005", .010" oversize.

CONNECTING ROD:—Length 6 13/16". **Weight** 28.3 oz.
Crankpin Journal Diameters—2.311-2.312".
Lower Bearing—Spun-babbitt lined type.
Clearance—.001-.0025". **Sideplay**—.004-.011" (side clearance between rod and pin bosses .025").
Bearing Adjustment:—Solid shims used. Remove shims (equally from both sides) to secure 'snap fit' (bearing tight to hand but should snap from one side to other with light tap of 8 oz. hammer), **then replace .002" shim for clearance.** If unequal number of shims, install extra shim on camshaft side. With correct adjustment, rod should move from side to side with two finger pressure.
Installing Rods:—Install rods in same numbered cylinders indicated by numbers on rods and caps with these numbers together and toward camshaft side. Assemble oil dippers on rod caps with mouth to camshaft. NOTE—Check dipper heights, Gauge J969-2.

CRANKSHAFT:—4 bearing, integral counterweights with new rubber type balancer on front end.
See Chevrolet Shop Notes for Balancer data.
Journal Diameters—#1, 2.6835-2.6845"; #2, 2.7145-2.7155"; #3, 2.7455-2.7465"; #4, 2.7765-2.7775".
Bearing Type—Steel-backed, babbitt-lined type. Bearings are "doweled" in place by projection on shell engaging hole in crankcase and bearing cap.
Clearance—.002-.004".
►***NOTE—Replacement "precision" type bearings do not require line-boring or reaming.***
Replacement Bearings: New "precision" type furnished Std. size and .002", .010", .020", .030" Undersize. NOTE—Bearings marked on inner surface of dowel: "V" for #1 and #4, "I" for #2 and #3.
►***CAUTION—Complete bearing set (4 bearings) must be installed on engines not previously equipped with replacement "precision" bearings.***
Bearing Adjustment:—Solid shims. Remove shims until slight drag on crankshaft secured when turned by hand, **then replace one .002" shim for clearance.** If unequal in number, install extra shim on same side for all bearings.
End Thrust:—Taken by #3 main bearing. Replace if clearance exceeds .011". **Endplay**—.004-.007" (new).

CAMSHAFT:—Four bearing. Gear driven.
Journal Diameters—#1, 2.082-2.0292"; #2, 1.9657-1.9667"; #3, 1.9032-1.9042"; #4, 1.8407-1.8417".
Bearing Type—New type steel-backed, babbitt-lined bearings with oil grooves (same as 1938).
See Chevrolet Shop Notes for Camshaft Bearing data.
Clearance—.002-.004".
End Thrust:—Taken by thrust plate behind camshaft gear. **Endplay**—Free fit to .003" max. Adjusted by changing gear position on shaft.
Timing Gears:—Crankshaft gear Steel. Camshaft gear Bakelite & fabric composition. Maximum gear run-out .003" crankshaft. .004" camshaft.
Backlash—.002-.005". ***See Chevrolet Shop Notes for Timing Gear installation instructions.***
Camshaft Setting:—Gears marked. Mesh marked tooth of crankshaft gear with marked space between teeth on camshaft gear.

VALVES:—New type (no slot in head).

	Head Diameter	Stem Diameter	Length
Intake	1 41/64"	.3407-.3417"	6 5/64"
Exhaust	1 15/32"	.3397-.3407"	4 13/16"

	Seat Angle	Lift	Stem Clearance
Intake	30°	.305"	.001-.003"
Exhaust	30°	.3195"	.002-.004"

ENGINE

CONTINUED FR M PRECEDIN PA E

Valve Guides:—Straight cut type on cylinder head.

Replacement Valve Guides: New "precision" type (do not require rough reaming).

Valve Guide Installation—*See "Valve System" in Chevrolet Shop Notes.*

Valve Springs:—9 coil type spring used. Free length 2 7/32". Using Valve Spring Tester Tool U15 spring tension should be 125-133 lbs. compressed to 1½".

	Spring Pressure	Spring Length
Valve Closed	49-56 lbs.	1 13/16"
Valve Open	121-133 lbs.	1½"

NOTE—Install spring with closed-coil end toward cylinder head. Use round spring caps on intake valves, hexagonal caps on exhaust valves.

Valve Lifters:—Cast-iron type with ground contact face. Oversize lifters not furnished.

Clearance—.001". Free fit in guide holes.

Rocker Arms:—*See Chevrolet Shop Notes for data.*

VALVE TIMING

►**VALVE TAPPET CLEARANCE:** *CAUTION—Engine temperature must be "normalized" before adjusting. See "Tappet Clearance Adjustment" in Chevrolet Shop Notes.*

Cars & Trucks—.006-.008" Intake, .013-.015" Exhaust, with engine "normalized".

Trucks (for continuous full throttle operation)—.010" Intake, .020" Exh., with engine "normalized".

Economy Engine—.010" Intake, .016" Exhaust, with engine "normalized".

VALVE TIMING: See Camshaft Setting.

Intake Valves—Open 9° BTDC. Close 29° ALDC.

Exhaust Valves—Open 52° BLDC. Close 1° BTDC.

To Check Timing—With #1 intake valve tappet clearance set at .006", valve should open with piston 9° or .0294" BTDC. with point on flywheel 3.475 teeth before 'U/C' mark in line with indicator in hole in right front face of flywheel housing.

LUBRICATION

LUBRICATION:—Pressure and positive splash system.

Oil Pump Installation—Assemble ground side of driven gear toward cover. Oil pump assembly mounted on crankcase by tapered set screw and lock nut (must seat firmly in tapered hole in pump).

Normal Oil Pressure:—13.5 lbs. at 50 M.P.H.

Oil Pressure Regulator:—Located on oil pump cover. Opens at 75 lbs. Non-adjustable type. Pressure normally controlled by Oil Distributor.

Oil Distributor:—Same design as used on previous models except that by-pass channel and metering restriction added on high pressure side of valve so that rocker arms and other low pressure points oiled immediately when engine started.

See Chevrolet Shop Notes for instructions on installing oil lead (through block) to Valve Rocker Arms.

Checking Oiling System:—*See Chevrolet Shop Notes.*

Crankcase Capacity:—5 quarts (refill).

COOLING

COOLING SYSTEM:—Capacity, 14 qts. (all except Cab-Over-Engine). 16½ qts. (Cab-Over-Engine Trucks).

See Chevrolet Shop Notes for Radiator Core Removal

Water Pump:—Packless, ball-bearing shaft type.

See Water Pump Section for complete data.

Thermostat:—Harrison. In cyl. head water outlet.

Setting—Starts to open 140°F (Std. #3108572), 148° (#985127 for non-permanent anti-freeze), 160° (#985128 Fleet Economy models and others with perm. anti-freeze or overflow tank #985319).

Temperature Gauge:—AC. #1510759 (Master Deluxe), #1510163 (Commercial and Truck models).

See Miscellaneous Section for complete data.

CLUTCH

CLUTCH:—Own Make. Diaphragm spring type. Single plate, dry disc type. 9" disc used on pass. cars and ½ ton trucks, 11" disc on all others.

See Clutch Section for complete data.

►**Clutch Rattle Correction**—*See Service Notes in Chevrolet Clutch article in Clutch Section.*

Facings—Moulded, 2 required. Inside Diam. 6¼" (pass. cars, ½ ton), 7" (others). Outside Diam. 9" (pass. cars, ½ ton), 10¾" (others). Thick. ⅛".

Adjustment:—Pedal free travel must be ¾-1". To adjust, loosen check nut and turn adjusting nut on connecting link stud at clutch throwout fork.

Removal:—Remove transmission (see below) and flywheel underpan. Take out throwout bearing from fork, pry fork loose from ball, remove fork mounting (use a ⅞" and ¾" wrench). Support clutch with Clutch Pilot Tool K-411, loosen 6 cover bolts (one turn at a time) until spring pressure released and remove assembly from below. NOTE—When assembling plate on cover, line up '0' marks on pressure plate lug and cover. Line up 'X' marks on cover and flywheel when installing clutch assembly.

TRANSMISSION

PASS. CARS & ½, ¾, 1 TON TRUCKS

TRANSMISSION (JA, JB, JC, JD, JE):—Own Make. Constant mesh, synchro-mesh with helical gears (second), sliding spur gear (low & reverse).

JC Transmission—Same as JA, JB except that case longer (to interchange with 4 spd. transmission).

JE, JD Transmission—Same as JC transmission except that carburized gears used (identifed by prefixes 'Y' or 'Z' before assembly number.

See Transmission Section for complete data.

Transmission Control (Pass. Cars):—Remote control steering column shift, vacuum assistor type. Optl.

See Transmission Section for complete data.

Removal (JA, JB, JC):—Remove floor-and-toeboard plate, disconnect 3 pull rods at brake cross shaft bracket, remove shaft. On JC take off hand brake lever at transmission case. Take out speedometer cable and gear assembly (screwed in universal joint ball retainer). Use jack under front end of torque tube. Take out screws in ball collar flange, slide ball and collar back on propeller shaft, remove bolts in universal joint ring, split joint. Lower jack until propeller shaft clears transmission. Take out rear transmission mounting bolts. Remove 2 top mounting capscrews and install guide pins, take out lower flywheel mounting capscrews and flywheel underpan. Slide transmission to rear on guide pins until free of clutch disc and remove assembly.

NOTE—On passenger car models with remote control shift, disconnect air and vacuum lines, selector rod at bell crank, and control rod at protective boot (replace clevis pin). On Model JC with 4 sp. transmission, remove frame cross member (to lower propeller shaft housing) and take out 2 brake cylinder mounting bracket screws from case.

Removal (JD, JE):—Remove hand brake lever from transmission case. Take out speedometer cable and gear assembly (in front universal joint ball retainer). Remove front propeller shaft (remove mounting screws at rear universal, unbolt frame cross member at frame and lower shaft assembly, take out rear universal ball collar capscrews, slide ball and collar to rear, split rear joint by removing trunnion bearing lock rings and driving bearings out, pull front propeller shaft with ball-bearing and housing out to rear as an assembly, then remove front universal joint ball housing by removing ball collar capscrews and sliding housing out to rear exposing rear yoke of front joint). Remove transmission using guide pins as directed for JA, JB, JC

TRANSMISSION

1½ TON & C- -E TRUCKS

TRANSMISSION (VA, B, C, D, E, F, G, H):—Own Make. 4 speed sliding spur gear type (all speeds). Optional equipment on Models JC, JD, JE.

See Transmission Section for complete data.

Transmission Control (Cab-Over-Engine):—Remote control type. *See Chevrolet Shop Notes for data.*

Removal:—Same as for JD, JE (above) except that rear universal joint support mounted on underside of frame cross member.

NOTE—Models VE and VF (Cab-Over-Engine) use only one propeller shaft (with Hotchkiss drive). To free propeller shaft, remove 4 flange mounting bolts at front universal flange and lower propeller shaft to floor. Then proceed as outlined for JA, JB, JC.

UNIVERSALS

UNIVERSAL JOINTS:—Own Make. Plain bushing type. One used (Pass. cars and ½ ton truck), two used (all others). Models VE and VF used sealed type joints with Hotchkiss drive.

See Universals Section for complete data.

REAR AXLE

PASSENGER CARS

REAR AXLE (Pass. Cars):—Own Make. Semi-floating, hypoid gear type with Torque tube drive.

See Rear Axle Section for complete data.

Ratio—4.222-1 (JA), 3.727-1 (JB). 3.727-1 axle marked by prefix 'C' or 'CB' on serial number n carrier. Straight number or prefix 'B' on 4.222-1.

Backlash—.004-.008". Screw adjustment.

Removal:—Raise rear end of car. Remove rear wheels and brake drums, clamp brake wheel cylinders, free hand brake cables at pull rods and clamps on frame, disconnect brake line at axle housing, and shock absorber 'I' bolts at spring seats. Remove spring 'U' bolts and disconnect spring shackles to drop springs, pull axle back to free front end of shaft.

See Chevrolet Shop Notes for rear spring seat data.

Wheel Bearing Adjustment—None.

Axle Shaft Removal:—Wheel bolted directly to flange on outer end of shaft. Axle shaft retained by 'C' washer at inner end in differential case (shafts unequal in length—use long shaft on right side). To

C NTINUED ON NEXT PA E

C NTINUED FR M PRECEDING PAGE

remove shaft, remove wheel, two machine screws in drum, remove drum, clamp wheel cylinder. Take off axle housing cover, remove differential pinion shaft screw, pull out pinion shaft, remove axle shaft spacer. Push axle shaft in, remove 'C' washer (on inner end of shaft), pull axle shaft out. *See Chevrolet Shop Notes for axle shaft installation data and spacer sizes.*

REAR AXLE

½, ¾, 1 TON TRUCKS

REAR AXLE (½ & ¾ Ton):—**Own Make.** Semi-floating, spiral bevel gear type with Torque tube drive. *See Rear Axle Section for complete data.*

Ratio—4.11-1 (standard). 3.82-1 (optional JC only). Axles identified by prefixes stamped on carrier as follows: 4.11-1—straight number or 'B' on JC, JD; 'T' or 'TB' on JE. 3.82-1—prefix 'F' or 'FB'.

Backlash—.006-.010". Screw adjustment.

Removal:—Same as for passenger cars (above).

REAR AXLE

1½ T N & C-O-E TRUCKS

REAR AXLE (1½ Ton Trucks):—**Own Make.** Full floating, spiral bevel gear type with Torque tube drive (except VE, VF), Hotchkiss drive (VE, VF). *See Rear Axle Section for complete data.*

Ratio—5.43-1 or 6.17-1 standard. Identified by first letter in serial number on top right side of differential housing as follows: 5.43-1—'T', 6.17-1—'H'.

Backlash—.006-.010". Screw adjustment.

Removal:—On Models VE, VF with Hotchkiss drive, propeller shaft can be lowered by taking out bolts in driving flange at rear universal (bolted directly to rear axle pinion shaft). On all other models rear universal joint must be split as follows: remove 2 mounting nuts at frame cross member, lower propeller shafts, take out rear universal ball collar capscrews, slide ball back on housing, take out trunnion bearing lock rings and drive bearings out, split universal joint and lower rear propeller shaft, remove rear yoke from rear propeller shaft and ball and collar from housing. Then take out axle shafts (see below) and carrier mounting screws. Pull carrier assembly out (on all Models except VE, VF, propeller shaft assembly withdrawn with carrier). *See Chevrolet Shop Notes for rear spring seat data.*

Axle Shaft Removal:—Take out 8 capscrews in axle shaft flange at outer end and capscrew lock, install 2 screws in tapped holes in flange (between regular screw holes) and turn these screws up evenly to loosen shaft, remove shaft. NOTE—Replace Vellumoid axle shaft flange gasket every fourth time, new steel capscrew lock under capscrew every time and turn up tangs on lock plate at screws. Wheel bearing adjustment not disturbed for shaft removal.

Wheel Bearing Adjustment:—With axle shaft removed, tighten adjusting nut (within wheel hub on outer end of axle housing) moderately tight while rotating hub, install star lock on adjusting nut, note alignment of lock tangs with notches in outer edge of adjusting nut, bend back tang into notch on adjusting nut. Rotate wheel hub by hand to note that bearings seated and that wheel turns freely. Install locknut and draw up tight, bend lock tang into notch in locknut. *See Chevrolet Shop Notes for wheel bearing oil seal and gasket data.*

REAR AXLE

SPECIAL TRUCK EQUIPMENT

REAR AXLE (TWO-SPEED TYPE):—**Optl. on trucks.** *See Rear Axle Section for complete data.*

SHOCK ABSORBERS

SHOCK ABSORBERS:—**Delco.** Hydraulic single acting type standard except JA (new parallel cylinder double acting type), JB (direct acting type on front only). Double acting optl. on trucks. *See Shock Absorber Section for complete data.*

Model	Front	Rear
JA (Mstr. Deluxe)	2200-A, B	2100
JB (Master)	1116-M	1201-C, D
JC (½ Ton Truck)	1430-CA, DA	1430-LA, MA
JD (¾ Ton), JE (Spec.)	1430-CA, DA	1431-X, Y

FRONT SUSPENSION

Front Suspension (JA):—New design 'S.L.A.' (short & long arm) or parallelogram type with coil springs.

NOTE—Entire suspension unit assembly may be removed from the car as a unit. *See Front Suspension Section for complete data.*

NOTE—Make all checks with car weight on wheels (curb weight—car ready for road but no load).

Frame Height—Install special gauges at front and rear ends of car to level frame when checking. Clearance between top of rear axle housing and lower face of frame side rail is 7 7/32". This adjustment must be made first to check specifications.

Kingpin Inclination—4¾° plus or minus ½°.

Caster—0° plus or minus ½°. Adjustable.

Camber—Neg. ¼° (wheel tilts in at top), + or —½°

Toe In—0-1/16". Adjust left tie rod (right non-adj.).

Steering Geometry (Toe out on turns)—Outer wheel turned 20°. Inner wheel 24° + or — 2°. Non-adj.

Front Suspension (All models except JA):—Conventional 'I' beam section front axle with Reverse Elliott ends and semi-elliptic springs.

NOTE—Floating type kingpin bushings used on JB.

Kingpin Inclination—7°10' + or — 1° crosswise.

Caster—2¼° (JB), 1¾° (JC, JD, JE), 2¾° (VA, B, C, D), 3° (VE, F, G, H), plus or minus ½°. Adjust by use of caster shims between spring and spring pad on axle for 2° variation. Over 2° use tools.

Camber—1° plus or minus ½°. Axle may be bent cold for minor corrections.

Toe In—5/64-⅛". Adjust by turning tie rod.

Steering Geometry (Toe out on turns)—Outer wheel turned 20°. Inner wheel turned 23° + or — 2°.

STEERING GEAR

Steering Gear: (Passenger Cars) Saginaw Worm-and-Roller Type. **(Trucks)** Worm-and-Sector type. *See Steering Gear Section for complete data.*

BRAKES

BRAKES:—**Service.** Own design, hydraulic type. Hand brake lever applies rear service brakes. *See Brake Section for complete data.*

Wheel Cylinders—Diameters 1¼" (front wheel), 1 3/16" (rear—JA, B, C, D), 1⅜" (rear—JE), 1½" (rear—1½ Ton).

Drums—Cast-iron, steel web. Pressed steel (1½ Ton). Diameters—11" (all—JA, B, C, D; front—JE), 14" (rear—JE, front—1½ Ton), 16" (rear—1½ Ton).

Lining—Moulded type used.

Model	Width	Thickness	Length
JA, B, C, D; JE (front)	1¾"	3/16"	22⅝"
JE (rear only)	2"	3/16"	38½"
1½ Ton (front)	2"	¼"	28⅞"
1½ Ton (rear only)	3"	¼"	35 13/16"

Clearance—Adjusting cover backed off 4 notches (JA, B, C, D, E all wheels), 5 notches (1½ Ton, front wheels), adjusting pinion shaft backed off ¾ turn (1½ Ton, rear wheels) from slight drag position.

Braking Power—47½% rear (JA, B, C D) 54¾% (JE), 59% (V).

Hand Brake:—See Service Brakes above.

HOOD SIDE PANEL, RADIATOR GRILLE AND FRONT SHEET METAL UNIT REMOVAL: *See Chevrolet Shop Notes.*

CAB-OVER-ENGINE & DUBL DUTI PANEL NOTE:— *See Chevrolet Shop Notes for Engine Cover Removal & Front Cowling Removal (for access to engine).*

MODEL IDENTIFICATION

FLEET MODEL NOTE:—Special Economy Engine available on all models. Identify by Tune Up Specification Plate on push rod cover listing special settings for this model. Special carburetor (434-S) has stop-pin limiting throttle opening to half-throttle.

SERIAL NUMBER:—First number 1001 with model prefix as follows: KA (Special Deluxe), KH (Master Deluxe), KB (Master), KC (½ Ton), KD (¾ Ton), KE (¾ Ton Special), WA, WB (1½ Ton), WC (School Bus), WD, WE, WF (1½ Ton Cab-over-Engine). On plate on right front floor (pass. cars), on right side of cowl under hood (Trucks except Cab-over-Engine), on plate on rear side of dash (Cab-over-Engine Trucks).

ENGINE NUMBER:—First No. 2697268 (Flint), B-105462 (Buffalo) with special prefix for each model as follows: Pass. Cars—None (Flint), B (Buffalo); Half Ton—K (Flint), KB (Buffalo); ¾ & ¾ Ton Special—AT (Flint), ATB (Buffalo); 1½ Ton—T (Flint), TB (Buffalo); 1½ Ton Cab-over-engine—H (Flint only), Dubl Duti Panel—E (Flint only). Stamped on right side of block to rear of distributor.

TUNE-UP

COMPRESSION:—**Ratio**—6.25-1 Std. cast-iron head. **Pressure**—112 lbs. at 65 RPM cranking speed. Minimum pressure 90 lbs. (cylinders even with 5-10 lbs.).

VACUUM READING:—Steady 18-21" with engine idling.

FIRING ORDER: 1-5-3-6-2-4. See diagram.

SPARK PLUGS: AC No. 44. 14 mm. Metric type. **Gaps**—.040"

IGNITION: See Coil, Condenser, and Distributor.
Breaker Gap—.018" **Cam Angle** 35° (closed).
Automatic & Vacuum Advance—*See Distributor.*

IGNITION TIMING: See Ignition Timing.
Std. Setting—5° BTDC with flywheel mark (steel ball) at inspection hole on right of housing.

CARBURETION: See Carburetor & Carb. Equipment.
Idle Setting—Idle screw 1-2 turns open (downdraft types), ½-1½ turns open (updraft types). Idle speed 400 Eng. RPM or 7 MPH.
Float Level—½" top of float to gasket seat on cover (downdraft types), 1/32-1/16" top of float to top edge of bowl (updraft types).
Accelerating Pump—Lower hole (medium stroke) normal.
Fuel Pump Pressure: 3¾ lbs. maximum.

MANIFOLD HEAT CONTROL:—Thermostatic type. Check coil wind-up when tuning engine. Spring should be wound up just enough to slip end over manifold pin (approximately ½ turn). **NOTE**—Excessive tension may cause sticking of valve, detonation and poor performance.
Anti-rattle Spring—To correct rattles, install No. 602799 anti-rattle spring (do not increase thermostatic coil tension). With valve rotated to heat off position, insert spring in slot in valve shaft, hold shaft counterbalance weight 3/16" above Heat On position, bend spring until it just touches stop pin

►**VALVE TAPPET CLEARANCE:** *CAUTION—Engine temperature must be "normalized" before adjusting. See "Tappet Clearance Adjustment" in Chevrolet Shop Notes.*
Cars & Trucks—.006-.008" Intake, .013-.015" Exhaust, with engine "normalized".
Trucks (for continuous full throttle operation)—.010" Intake, .020" Exh., with engine "normalized".
Economy Engine—.010" Intake, .016" Exhaust, with engine "normalized".

Valve Timing Check: *See Valve Timing.*

►*CAUTION—Valve Timing changed when new Replacement Crankshaft Gear installed.*

STARTING: See Battery, Starter, Generator, Regulator.

IGNITION

Ignition Switch:—Delco-Remy No. 1116272 (Pass. Cars), 1116287 (Pass. Cars—Canada), 1116278 (Trucks), 1116263 (Trucks with flat cowl), 1116279 (Cab-over-engine). 1116291, 1116292 (Trucks, Can.).
Ignition Lock—Briggs & Stratton No. 45792.
Key Series—8000 to 9499. **Groove**—No. 15.

COIL: Delco-Remy Model 536-D. On right side of engine near distributor.
Ignition Current—2.5 amperes idling, 4.8 stopped.

CONDENSER: Delco-Remy Part No. 1869704.
Capacity—.18-.25 microfarad.

DISTRIBUTOR: Delco-Remy No. 1110052. Single breaker, 6 lobe cam, full automatic advance type with vacuum spark control and Octane Selector.
Breaker Gap—.018". Limits .018-.024".
Cam Angle or Dwell—35° closed, 25° open (distr.).
Breaker Arm Spring Tension—17-21 ounces.
Rotation—Clockwise viewed from above.

Automatic Advance

Distributor Degrees	R.P.M.	Engine Degrees	R.P.M.
Start	400	4	800
5½	600	11	1200
18½	1550	37	3100

CONTINUED N NEXT PA E

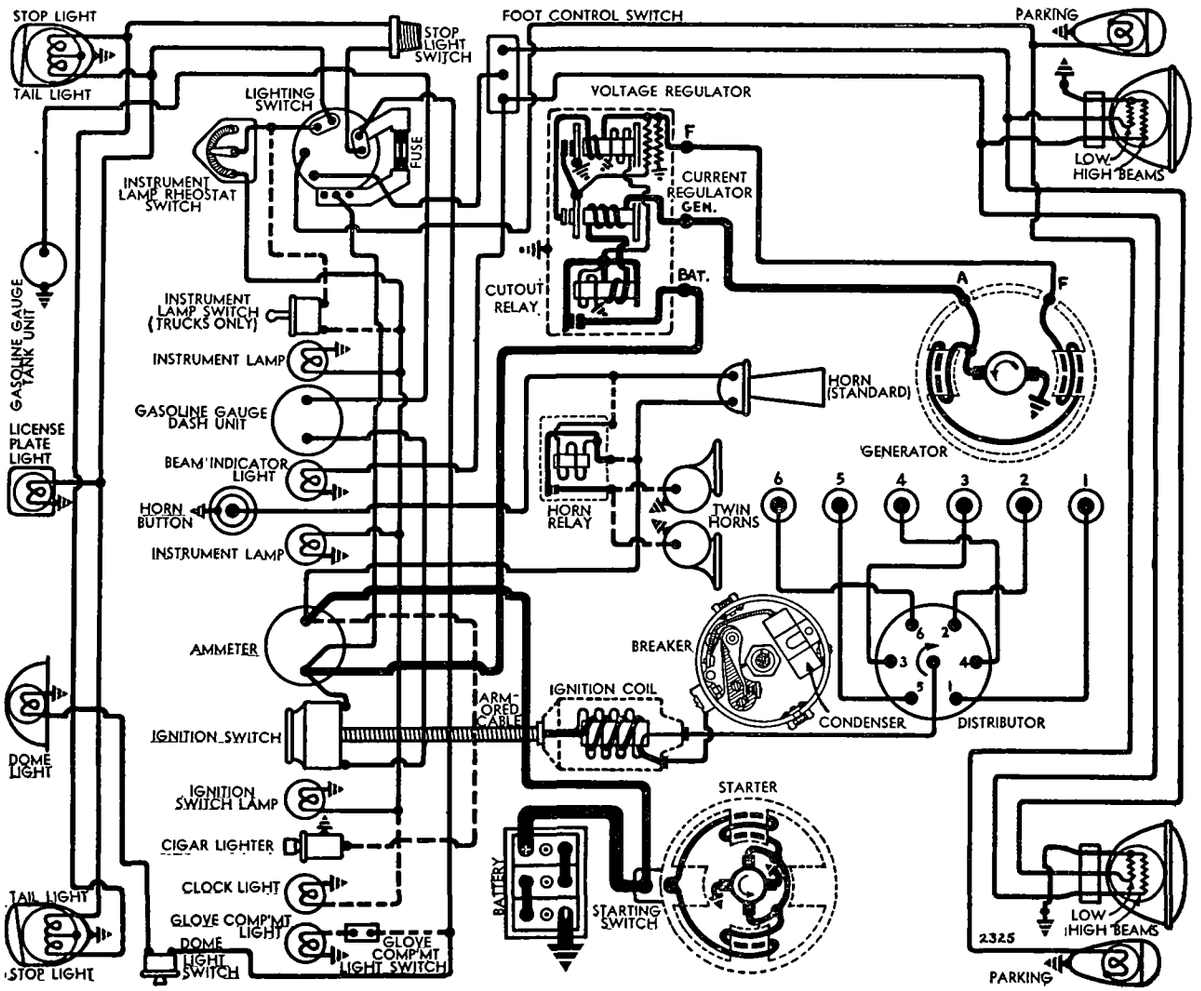

CONTINUED FROM PRECEDING PAGE

Vacuum Spark Control No. 1116011—Mounted on Octane Selector, linked to advance arm. Provides additional advance except when engine accelerated (spark retarded by return spring in unit) or at high speed with wide open throttle (vacuum port cut off by throttle valve shaft). Plunger travel 7/32".

Vacuum Advance		
Distr. Degrees	Eng. Degrees	Vacuum (" of HG)
Start	0	6" Min.
8	16	12-15"

Octane Selector—Adjustment at distributor provides 10° advance or retard from center 'O' position. See Ignition Timing for adjustment instructions.

Removal:—On right side of crankcase. To remove, loosen advance arm clamp bolt (does not disturb Octane Selector).

IGNITION TIMING

IGNITION TIMING:—Initial setting as follows (see Octane Selector for final setting dependent on fuel used):

	Flywheel Degrees	Piston Position
All Engines	5° BTDC	.0091" BTDC.

Timing (Ncon Light)—This method recommended. Attach Neon Timing Light to #1 spark plug, direct light on flywheel through inspection hole in right front face of housing. Set Octane Selector pointer at 'O' on scale. Idle engine, loosen advance arm clamp bolt, rotate distributor until steel ball timing mark on flywheel appears in line with pointer. Tighten clamp bolt and check Octane Selector.

Timing (Without Neon Light)—With #1 piston on compression, turn engine over until piston is 5° or .0091" BTDC. when steel ball mark on flywheel lines up with pointer in inspection hole in right front face of housing. Adjust distributor as above.

Octane Selector Setting—Road test car and set Octane Selector for slight ping when accelerating engine with wide open throttle to secure maximum performance and economy with fuel regularly used. To adjust, loosen hold-down screw, move distributor and scale counter-clockwise to advance spark, clockwise to retard spark, tighten hold-down screw.

CARBURETOR

CARBURETION:—**Carburetor**—Carter Model W1, No. 420-S (Std.), 434-S (Econ. Engines). 1¼" single barrel downdraft type. 420-S carburetor painted Black and marked '365' on flange, 434-S painted Brown and marked '373'. NOTE—These carburetors same models as used on 1939 but have new specifications.

See article in Carburetor Section for complete data

►**Carburetor "Popping Back" Correction**—*See Field & Production Changes in Carburetor article in Carburetor Section.*

Cab-over-Engine & Dubl Duti Panel—Carter BB1, Model 447-S, 1¼" single barrel, updraft type.

For complete data, refer to Carburetor Index.

Idle Adjustment—With engine warm and choke valve wide open, set throttle stopscrew so engine idles at 450-500 RPM. (except Cab-over-Engine), 300-375 RPM. (Cab-over-Engine Truck). Turn idle adjusting screw in (leaner mixture), out (richer mixture) until engine fires smoothly. Final setting should be 1-2 turns (420-S, 434-S), ½-1¼ turns (447-S) out from inner seated position. Readjust throttle stopscrew for correct idling speed.

NOTE—Special metering rods (420-S, 434-S), metering jets (447-S) available for special service. See Carter and Carter (B&B) Jet Specification Tables

Accelerating Pump Setting—Pump lever under dust cover on bowl has 3 holes for pump link connection (420-S, 434-S), throttle lever has 2 holes for pump link, no Med.Stroke (447-S). Connect link as follows:

Lower (Med. stroke)—Normal temp. Std. fuel.
Inner (Min. stroke)—Hot weather or high-test fuel.
Upper (Max. stroke)—Extremely cold weather.

Float Level (420-S, 434-S)—½" from top of float at free end to gasket seat on cover with valve closed

Float Level (447-S)—Top of float 1/32-1/16" below top edge of bowl (gasket removed) with valve closed.

Throttle Cracker:—New adjustable type. Opens throttle 1/3 when starter pedal depressed.

Adjustment—Set carburetor idle speed at 450-500 RPM. Loosen locknut, turn adjusting screw on accelerator rod bellcrank (left side of engine) until clearance between end of screw and throttle control bellcrank is .030" (use feeler gauge), tighten locknut. Loosen locknut and adjust bolt in accelerator rod for 1/16" clearance between head of bolt and lug on starter cross-shaft.

CARB. EQUIPMENT

Air Cleaner:—AC #1528524 (Pass. Cars without Governor), #1529264 (Pass. Cars with Governor), #1525978 (Trucks) oil-wetted type Std. Heavy duty oil-bath type Air Cleaner Optl. on all models.

Fuel Pump:—AC Type AF. #1523089 Diaphragm type Std. Type AM #1523271 fuel & Vacuum type Optl.

For complete data, refer to Carburetion Equip. Index.

Gasoline Gauge:—AC Electric. Dash Unit No. 1515369 (first—medium brown dial), 1516221 (later—light brown dial) Tank Unit No. 1516182 (Pass. Cars except—#1516183 Coupe & Sedan Delivery only).

For complete data, refer to Carburetion Equip. Index.

BATTERY

BATTERY (STD):—**Delco Model 15X1. 6 volt, 15 plate, 100 ampere hour capacity (20 hour rate).**

Starting capacity—120 amperes for 20 minutes.

Zero Capacity—300 amperes for 3.6 minutes. Five second voltage 4.2 volts.

Dimensions—Lgth. 8 15/16". Width 7". Hgt. 8 11/16".

Grounded Terminal—Negative (—) grounded to clutch housing below starter pedal pull-back spring (Pass. Cars), to rear of transmission (Trucks).

Location—In engine compartment on right side (Pass. Cars), under right front floor (Trucks), under right cab seat (Cab-over-Engine Trucks).

Special Battery—Delco Model 19Q1. 6 volt, 19 plate, 125 ampere hour capacity (20 hour rate).

Grounded Terminal & Location—See above.

STARTER

STARTER:—**Delco-Remy Model 1107009, Armature 1867897 (Std); 1107023, Arm. 810601 (RHD Cars).**

See Electrical Equipment Section for recommended correction for burning of starter commutators.

Drive—Manual pinion shift (1107009), Solenoid pinion shift (1107023) with overrunning clutch.

Rotation—Counter-clockwise at commutator end.

Brush Spring Tension—24-28 ounces each.

Cranking Engine—65 RPM., 150 amperes, 5.5 volts.

Performance Data

Torque	R.P.M.	Volts	Amperes
0 ft. lbs	5000	5.0	65
12 " "	Lock	3.37	525

Removal:—Flange mounted on right front face of flywheel housing. To remove, disconnect cable take out capscrews, remove starter and switch.

Starting Switch (1107009):—No. 820052. Mounted on starter and operated by starting pedal. (1107023)—Solenoid No. 1546 mounted on starter controlled by Pushbutton Switch D-R 1996006.

For complete data, refer to Electrical Equipment Index.

GENERATOR

GENERATOR:—**Delco-Remy Model 1102667. Armature 1879002 (Std.), Model 1102677 (Door-to-door Dlvry), 1106403 (State Police & U.S. Govt.), 1105851 & 6 (State Police), 934-F (Optl.).** Two brush types with voltage & current regulation. Ventilated.

Charging Rate Adjustment—No adjustment at generator. Charging rate controlled by Voltage Regulator, maximum output by Current Regulator.

Maximum Charging Rate—38-40 amperes, 7.55-7.85 volts, 1900 RPM. Cold; 34-36 amperes, 7.45-7.55 volts, 2300 RPM. Hot. Reached at 25 MPH (KA, KH, KC), 27 MPH. (KB. KE), 23 MPH. (KD), 22 MPH. (WA, B, D, E, F), 19 MPH. (WC Bus). Actual charging rate controlled by Regulator and dependent on battery

Performance Data Cold.

	Amperes①	Volts	R.P.M.
1102667	30	8.0	1750
1102677	26	8.0	1450
1106403	35	8.0	1040
1105851, 6	40	8.0	1850
934-F	26	8.0	1325

①—Not maximum output. See Current Regulator.

Brush Spring Tension—25 ounces each.

Rotation—Counter-clockwise at commutator end.

Field Current—1.75-1.9 amps. (1102667 & 1102677), 1.62-1.82 amps. (1105851, 6), 1.77-2.0 amps. (1106403), 1.7-2.0 amps. (934-F), all at 6.0 volts.

Removal:—Generator pivot mounted at left front of engine. To remove, take out pivot and clamp bolts.

Belt Adjustment:—Swing generator away from engine until belt sideplay at point midway between generator & fan pulleys is 1½" (light pressure).

REGULATOR

REGULATOR:—**Delco-Remy 1118201 (1102667 Gen.), 1118233 (1102677 Gen.), 1118229 or 1118232 (1106403 Gen.), 1118221 (934-F Gen.), 1118237 (1105851, 6 Gens.), Single Core Type.** Vibrating voltage and current regulators in single case on dash.

NOTE—1118229 Regulator used for Negative Battery Grd., 1118232 with Positive Battery Grd.

For complete data, refer to Electrical Equipment Index.

CAUTION—Check generator for grounded fields before changing regulator settings.

Cutout Relay

Cuts In—6.2-6.7 volts (hot), 800 RPM., 8.7 MPH. (KA, KH), 9.5 MPH. (KB), 8.5 MPH. (KC), 8 MPH. (KD, KE), 7.5 MPH. (WA, B, D, E, F), 7 MPH. (WC).

Cuts Out—0-4.0 amperes discharge current.

Contact Gap—.020" (same for both sets).

Air Gap—.020" (with points just closed).

Voltage Regulator

Setting—7.2-7.4 volts (1118201), 7.0-7.2 volts (All Others) hot (at operating temperature).

To Check—Connect ammeter in charging line at regulator 'BAT' terminal, voltmeter between 'BAT' terminal and ground. Operate generator at 2800 RPM., adjust charging rate to 8-10 amperes (use variable rheostat or 'AVR' set). With regulator hot (150° F.), slow generator speed until cutout relay points open, then increase speed to 2800 RPM. and check hot voltage setting (above).

To Adjust—Change regulator armature spring tension slightly by bending lower spring hanger for **light (left) spring (or one spring if both alike) only.** If further adjustment required, see Single Core Regulator article in Electrical Equipment Section

Air Gap—.070" between center of core and armature with contacts just closed.

Current Regulator

Setting—34-36 amperes (1118201), 24-26 amperes (1118233) 34-36 amperes (1118229 & 1118232), 38-40 amperes (1118237), 26-28 amperes (1118221) hot.

To Check—Remove cover, connect short jumper from voltage regulator frame to upper contact support bracket (to short out Voltage Regulator). Connect ammeter in charging line at regulator 'BAT' terminal. Turn on lights and accessories, operate generator and increase speed until output remains stationary (run until hot). Check setting with regulator at operating temperature.

To Adjust—Same as for Voltage Regulator (above) except that both springs are alike.

Air Gap—.080" (check same as Voltage Regulator).

LIGHTING

LIGHTING:—**Headlamps**—Guide 'Sealed Beam' type. ***For complete data, refer to Electrical Equipment Index.***

Headlamp Adjustment—Aim upper beam straight ahead with center of hot spot 3" below lamp center

Beam Indicator—On face of speedometer dial.

Switches.

Lighting—Delco-Remy No. 1994014 (Pass. Cars—Instr. lamp rheostat in handle), 1994015 (Trucks).

Instrument—Delco-Remy 1404 (Trucks only).

Beam Selector—Delco-Remy 1997003, 1997002 (Can.).

Glove Compt. Light—D-R. 1997721 (Spec. Del.).

Stop Light—Delco-Remy 476-U (hydraulic type).

Bulb Specifications

Position	Candlepower	Mazda No.
Headlamps	Sealed Beam	
Parking, License Plate	3	63
Instr., Glove Compt., Ign. (1½ Ton)	1½	55
Beam Ind. (all), Ign. (exc. 1½ Ton)	1	51
Stop & Tail (exc. 1½ Ton)	21-3	1154
Stop, Tail (1½ Ton)	3	63
Dome	6	81

MISC. ELECTRICAL

FUSES:—**Lighting**—30 ampere. On switch.
Clock—2 ampere. On clock.

HORNS:—**Pass. Cars**—Delco-Remy No. 1999509 (Low Canada), 1999520 (High Note—Canada). Twin horns

Trucks—No. 1999801 Vibrator type single horn.

	Current (at 6 volts)	Air Gap
1999509, 1999519	19-21 amperes	.044-.049"
1999510, 1999520	18-20 amperes	.034-.039"
1999801	7-9 amperes	.027-.033"

Horn Relay:—Delco-Remy 1116775. Used with twin horns on Pass. Car. **Contacts Close**—2.75-4.0 volts. **Contact Gap**—.020". **Air Gap**—.015" (closed).

ENGINE

ENGINE SPECIFICATIONS:—**Own.** 6 cyl., 'T' head type.
Bore—3½". **Stroke**—3¾".
Displacement—216.5 cu. ins. **Rated HP.**—29.4.
Developed Horsepower—85 at 3400 RPM (Pass. Cars), 78 at 3200 RPM (Trucks except Cab-over-Engine), 80 at 3100 RPM (Cab-over-Engine Trucks).
Compression Ratio—6.25-1 Std. cast-iron head.
Compression Pressure—112 lbs. at 65 RPM (cranking speed), 90 lbs. min. Max. variation 5-10 lbs.
Vacuum Reading—Steady 18-21" with engine idling.

Engine Removal & Mounting Adjustment:—***See Chevrolet Shop Notes for instructions.***

Cylinder Head Installation:—Use new gasket and install with mark 'This Side Up' upward. Use guide pins to align head.

PISTONS:—**Pass. Cars**—Cast gray iron, dome head, cam ground, tin-plated with slipper type skirt.
Trucks—Same as Pass. Cars except 1½ ozs. heavier and may be identified by small forged boss on lower center of each piston pin boss.
Weight—25.3 ozs. (Pass. Car), 26.9 ozs. (Trucks) with bushings installed. **Length**—4 11/64".
Removal—Pistons & rods removed from above.
Clearance—.0147-.0183" Top, .0017-.0023" Skirt.

Replacement Pistons:—Finished pistons with bushings and pins fitted furnished Standard and .003", .010", .020", .030", .040" oversize. NOTE—Hone cylinder for .003" oversize, rebore and hone for other sizes (rebore .002" less than piston oversize, finish by honing for piston clearance below). Bore taper and out-of-round must not exceed .001".

Fitting Pistons:—Use feeler gauge between piston and cylinder wall at right angles to pin bosses. Piston should pass through bore with light pressure on .002" feeler and lock on .003" feeler.

PISTON RINGS:—Two compression, one oil control ring per piston, all above pin. Oil ring groove drilled for oil drainage. NOTE—Compression rings have tapered face. Install with mark 'TOP' upward.

Ring	Width	End Gap	Side Clearance
Compr.	.1235-.1240"	.005-.015"	.0015-.0035"
Oil Cont.	.1860-.1865"	.005-.015"	.0015-.0035"

Check side clearance with .002" feeler. #1 ring very free, #2 ring just free, #3 ring light drag.

Replacement Rings:—Furnished Standard and .005", .010", .015", .020", .030", .040" oversize.

PISTON PIN:—**Diameter** .8645-.8650". **Length** 3.135-3.165". Pin locked in rod, piston bronze bushed. NOTE—New pistons fitted with bushings and pins.
Pin Fit in Piston—Thumb push fit (room temp.).

Replacement Pins:—Std. & .003", .005", .010" oversize.

CONNECTING ROD:—**Length** 6 13/16". **Weight** 28.3 ozs.
Crankpin Journal Diameters—2.311-2.312".
Lower Bearing—Spun babbitt- lined type.

Clearance—.001-.0025". **Sideplay**—.004-.012" (side clearance between rod and pin bosses .025").

Bearing Adjustment:—Solid shims. Remove shims equally at both sides to secure 'snap fit' (bearing tight to hand but should snap from one side to other with light tap of 8 oz. hammer), **then replace one .002" shim for clearance (if unequal number, place extra shim on camshaft side). Rod should snap from side to side with one hand pressure with proper fit.** NOTE—Palnuts used on rod bolts. Use new palnut, install with open side toward end of bolt, turn finger tight against rod nut, then tighten ¼-⅓ turn additional.

Installing Rods:—Numbers on rods and caps must be together and installed in same numbered cylinder with numbers and pin clamp bolt toward camshaft side. Install oil dippers on rods with mouth toward camshaft side of engine. Check dipper heights. ***See Chevrolet Shop Notes for instructions.***

CRANKSHAFT:—4 bearing, integral counterweights. NOTE—New type rear bearing oil seal (no slinger). ***See Chevrolet Shop Notes for Oil Seal and Crankshaft Balancer servicing data.***
Journal Diameters—#1, 2.6835-2.6845"; #2, 2.7145-2.7155"; #3, 2.7455-2.7465"; #4, 2.7765-2.7775".
NOTE—Journal taper or out-of-round limits .001", Run-out limits for #2 & #3 bearings .002".

Bearing Type—Steel-backed, babbitt-lined type. Bearings are "doweled" in place by projection on shell engaging hole in crankcase and bearing cap.
Clearance—.002-.004".

►***NOTE—Replacement "precision" type bearings do not require line-boring or reaming.***

Replacement Bearings: New "precision" type furnished Std. size and .002", .010", .020", .030" Undersize. NOTE—Bearings marked on inner surface of dowel: "V" for #1 and #4, "I" for #2 and #3.

►***CAUTION—Complete bearing set (4 bearings) must be installed on engines not previously equipped with replacement "precision" bearings.***

Bearing Adjustment:—Solid shims. Remove shims until slight drag secured when shaft turned by hand, **then replace one .002" shim for clearance (if** unequal number of shims used, place extra shim on same side for all bearings).

End Thrust:—Taken by #3 bearing (adjusted by facing new bearings). **Endplay**—.004-.007".

CAMSHAFT:—Four bearing. Helical gear drive.
Journal Diameters—#1, 2.0282-2.0292"; #2, 1.9657-1.9667"; #3, 1.0932-1.0942"; #4, 1.8407-1.8417".
NOTE—Journal out-of-round limits .001". Run-out limits .002" (straighten if excessive).
Bearing Type—Steel-backed, babbitt-lined bushings. ***See Chevrolet Shop Notes for bearing installation and line-reaming instructions.*** **Clearance**—.002-.004".

End Thrust:—Taken by thrust plate behind camshaft gear (adjusted by changing gear position on shaft).
Endplay—Free to .003" maximum.

Timing Gears:—Crankshaft gear Steel. Camshaft gear Bakelite & Fabric. Maximum gear run-out .003" crankshaft, .004" camshaft.
Replacement Timing Gears—***See Chevrolet Shop Notes.***

►***CAUTION—Replacement Crankshaft Gear has relocated keyway and will change Valve Timing on these engines when replacing original type crankshaft gear. See Valve Timing.***

Timing Gear Installation & Alignment—***See "Timing Gears" in Chevrolet Shop Notes.***
Timing Gear Backlash—.002-.005".

Camshaft Setting:—Gears punchmarked. Mesh marked tooth of crankshaft gear with marked space between teeth of camshaft gear.

CONTINUED ON NEXT PAGE

ENGINE

C NTINUED FR M PRECEDIN PAGE

VALVES:—

	Head Diameter	Stem Diameter	Length
Intake	1 41/64"	.3407-.3417"	6 5/64"
Exhaust	1 15/32"	.3397-.3407"	4 13/16"

	Seat Angle	Lift	Stem Clearance
Intake	30°	.2947"	.001-.003"
Exhaust	30°	.3118"	.002-.004"

Valve Guides: Straight cut type on cylinder head.

Replacement Valve Guides: New "precision" type (do not require rough reaming).
Valve Guide Installation—*See "Valve System" in Chevrolet Shop Notes.*

Valve Springs:—Free length 2 7/32". When checked with U15 Tester, spring pressure should be 125-133 lbs. at 1½".

	Pressure	Length
Valve Closed	49-56 lbs.	1 13/16"
Valve Open	121-133 lbs.	1½"

NOTE—Install springs with close-coil end toward cylinder head. Use round valve caps on Intake Valves, hexagonal caps on Exhaust Valves.

Valve Lifters:—New type with pushrod seat brazed on top. Clearance—.001" (free fit in guide holes).

Rocker Arm Assembly:—*See Chevrolet Shop Notes.*

VALVE TIMING

►**VALVE TAPPET CLEARANCE:** *CAUTION—Engine temperature must be "normalized" before adjusting. See "Tappet Clearance Adjustment" in Chevrolet Shop Notes.*

Cars & Trucks—.006-.008" Intake, .013-.015" Exhaust, with engine "normalized".

Trucks (for continuous full throttle operation)—.010" Intake, .020" Exh., with engine "normalized".

Economy Engine—.010" Intake, .016" Exhaust, with engine "normalized".

VALVE TIMING: See Camshaft Setting.

►**VALVE TIMING CHANGE:** *Valve Timing is retarded 4°* **on engines equipped with new Replacement Crankshaft Gear.**

ORIGINAL VALVE TIMING SPECIFICATIONS
►for Engines with Original Crankshaft Gear

Intake Valves—Open 3° BTDC. Close 35° ALDC.
Exhaust Valves—Open 46° BLDC. Close 5° ATDC.

NEW VALVE TIMING SPECIFICATIONS
►for Engines with new Replacement Crankshaft Gear

Intake Valves—Open 1° ATDC. Close 39° ALDC.
Exhaust Valves—Open 42° BLDC. Close 9° ATDC.

Valve Timing Check (All Engines)—With #1 intake valve tappet clearance set at .006", valve should open with piston 3° BTDC. (1.158 flywheel teeth before "U/C" flywheel mark) **for engines with original type crankshaft gear,** or piston 1° ATDC. (.386 flywheel teeth after "U/C" flywheel mark) **for engines with new replacement crankshaft gear.**

LUBRICATION

LUBRICATION:—Pressure and positive splash system. Same as 1939 except for redesigned oil pan, new Oil Distributor (in block), and new type Overflow Pipe Connector at rocker arm shafts. *See Chevrolet Shop Notes for Oil Distributor, and Rocker Arm Oil Lead and Overflow Pipe servicing.*

Oil Pump Installation—Assemble ground side of idler gear toward cover. Oil pump assembly mounted in crankcase by tapered setscrew. See that screw seated firmly in tapered hole in pump housing before tightening locknut.

Normal Oil Pressure:—15 lbs. at 40 MPH. (KA,KH,KC), 15 lbs. at 43 MPH. (KB), 25 lbs. at 36 MPH. (KD), 25 lbs. at 40 MPH. (KE), 15 lbs. at 30 MPH. (WC Bus), 15 lbs. at 32 MPH. (Other Trucks).

Oil Pressure Regulator:—Located on oil pump cover. Opens at 75 lbs. Non-adjustable type. Pressure normally controlled by Oil Distributor.

Oil Distributor:—*See Chevrolet Shop Notes for data.*

Checking Oiling System:—Should be checked whenever pan removed. *See Chevrolet Shop Notes for data.*

Crankcase Capacity:—5½ qts. dry, 5 qts. refill (all).

COOLING

COOLING SYSTEM:—Capacity—14 qts. (except Cab-over-Engine), 16½ qts. (Cab-over-Engine).
See Chevrolet Shop Notes for Radiator Core Removal.

Water Pump:—Packless, ball-bearing type. NOTE—Pumps interchangeable on all models (except fan).
See Water Pump Section for complete data.

Thermostat:—Harrison. In cylinder head outlet.
Setting—Starts to open at 142° F. (Std.), 150° (for Alcohol Anti-freeze). 160° F. (for Permanent Anti-freeze & Economy Engines).

CLUTCH

CLUTCH:—Own Make. Diaphragm spring, single plate, dry disc type. NOTE—Clutch with 9" disc used on Pass. Cars & ½ Ton, 11" disc on all others.
See Clutch Section for complete data.

►**Clutch Rattle Correction**—*See Service Notes in Chevrolet Clutch article in Clutch Section.*

Facings—Moulded type, 2 used. Inside Diam. 6⅛" (Pass. Cars & ½ Ton), 7" (Others). Outside Diam. 9⅛" (Pass. Cars & ½ Ton), 10¾" (Others). Thickness .135" (Pass. Cars & ½ Ton), .140" (Others).

Adjustment:—Pedal free travel must be ¾-1". To adjust, loosen checknut and turn adjusting nut on connecting link at clutch throwout fork.

Removal:—Remove Transmission and flywheel underpan (see Transmission Removal below), remove throwout bearing from fork, remove fork by prying fork off ball, remove fork mounting (use ⅞ & ¾" wrench). Install Clutch Pilot Tool K-411 (to support clutch), loosen all six cover bolts evenly, remove assembly from below. CAUTION—Do not allow pressure plate to hang on retracting springs.

TRANSMISSION

PASS. CARS & ½, ¾ TON TRUCKS

TRANSMISSION (KA, KB, KC, KD, KE, KH):—Own Make. Constant mesh, synchro-mesh (Second & High), sliding gear (Low & Reverse), all helical gear type. NOTE—All transmissions similar except Pass. Car type has remote control shift mechanism in side cover, Truck type has carburized type gears.
See Transmission Section for complete data.

►**High Gear Disengagement Correction**—*See Service Notes in 1940 Chevrolet 3-Speed Transmission article in Transmission Section.*

Transmission Control (Pass. Cars):—Remote control steering column shift, vacuum-power type Std.
See Transmission Section for complete data.

►**Gearshift Lever Flutter (Idle or High Speed) Correction**—*See Service Notes in 1940 Chevrolet Transmission Control article in Transmission Section.*

Removal (KA, KB, KC, KH):—On Pass. Cars, remove floor mat and transmission cover in floor, disconnect and remove vacuum-power cylinder (see Chevrolet Transmission Control article in Transmission Section for complete data and adjust. procedure instructions when re-installed). On Half Ton, remove hand brake lever on transmission case (see Note for 4 Spd. Trans. below). Disconnect cables on brake cross-shaft at rear of transmission, remove cross-shaft. Disconnect and remove speedometer cable and driven gear assembly. Take out capscrews in universal joint ball collar, slide ball and collar back on shaft housing. Take out four capscrews holding universal joint needle bearing trunnions on front yoke, remove trunnions (use care not to lose needle bearings), push front end of propeller shaft down for clearance. Remove 4 bolts holding transmission rear mounting on frame cross-member, remove 2 top transmission mounting screws, install guide pins in these holes, remove flywheel underpan and lower mounting screws, slide transmission out.

Half Ton Note—When 4 Spd. Transmission used, take out 2 capscrews in master cylinder mounting bracket and remove frame cross-member so that propeller shaft can be dropped down for clearance.

Removal (KD, KE):—Same as other truck models

TRANSMISSION

1½ TON & C-O-E TRUCKS

TRANSMISSION (WA, B, C, D, E, F):—Own Make. Four speed, sliding spur gear type. Optl. on KC, KD, KE.
See Transmission Section for complete data.

Transmission Control (Cab-over-Engine):—Remote control type. *See Chevrolet Shop Notes for data.*

Removal:—Remove floor boards, hand brake lever from transmission case, speedometer cable. Take out bolts in front universal ball retainer (on rear of transmission), slide retainer and ball back on shaft housing, remove universal joint trunnion lock rings, drive trunnions out of rear yoke to 'split' universal, slide yoke back on shaft. Remove two bolts mounting front shaft assembly on cross-member (at rear universal), lower assembly and pull front propeller shaft and rear universal assembly off drive shaft. Take out 2 top transmission mounting screws, install guide pins in these holes. Remove flywheel underpan, take out lower transmission mounting screws, slide transmission back

UNIVERSALS

UNIVERSAL JOINTS:—Own Make. Needle bearing 'cross' type.
See Universals Section for complete data.

REAR AXLE

PASS. CARS & ½, ¾ T N TRUCKS

REAR AXLE (KA, KB, KC, KD, KE, KH):—Own Make. Semi-floating, hypoid gear type with Torque Tube drive. All axles similar in design except that KC, KD, KE Truck axles are heavier construction.
See Rear Axle Section for complete data.

►**Correction to prevent axle lubricant pumping out on ½ & ¾ Ton**—*See "Rear Axle Notes" in Chevrolet Shop Notes for Axle Vent Change.*

►**Axle Vent Change on ½ & ¾ Ton**—*See "Rear Axle Notes" in Chevrolet Shop Notes.*

Ratio—4.11-1 (KA, KH), 3.73-1 (KB), 4.11-1 (½ Ton KC), 4.55-1 (¾ Ton KD, ¾ Ton Spec. KE). NOTE—Passenger car axles may be identified by prefix letter of part number stamped on top right side of differential housing as follows: 4.11-1—'B' or no letter, 3.73-1—'C' or 'CB' (Optl. on KA, KH).

Backlash—.005-.008" (all). Screw Adjustment.

Removal:—Raise rear end of car, remove rear wheels and brake drums, install clamps on wheel brake cylinders, disconnect hand brake cables and remove cables from cable clamps on frame, disconnect brake line at axle housing and shock absorber 'I' bolts at spring seats. Remove spring 'U' bolts, disconnect spring shackles and drop springs. Pull axle back to free front end of drive shaft, remove assembly from under car. *See Chevrolet Shop Notes for Rear Spring Seat data & Correction for Binding Shackles.*

Axle Shaft Removal:—Wheel bolted directly on flange on outer end of shaft. Shaft retained by 'C' washer on inner end of differential case. To remove axle shaft, remove wheel, take out two machine screws in brake drum (or two 'Zipon' nuts on wheel studs on later ½ & ¾ Ton only), remove drum, install clamp on brake cylinder. Remove housing cover, differential pinion shaft screw, pinion shaft and axle shaft spacer. Push axle shaft in, remove 'C' washer on inner end of shaft, pull shaft out. NOTE—Axle shafts unequal in length, use longer shaft on right side. Truck axle shafts are heavier construction.

See Chevrolet Shop Notes for Axle Shaft Installation, Spacer data, and Endplay adjustment.

REAR AXLE

1½ TON & C-O-E TRUCKS

REAR AXLE (WA, B, C, D, E, F):—**Own Make.** Full-floating, Hypoid gear type with Torque Tube drive. NOTE—WD model (107⅝"WB.) has Hotchkiss drive.

See Rear Axle Section for complete data.

Ratio—5.43-1 Std. (except WC Bus—6.17-1), 6.17-1 Optl. NOTE—Axles identified by prefix letter on part number stamped on top right side of differential housing as follows: 5.43-1—'B' or no letter, 6.17-1 'H' or 'HB'. **Backlash**—.005-.008".

Removal:—See Model WD Note below. On all other models, take out bolts in front universal joint ball retainer (back of transmission), slide retainer and ball back on shaft housing, remove universal trunnion bearing lock rings, drive trunnion bearings out of rear yoke to 'split' universal, slide yoke back on shaft. Remove two bolts mounting front propeller shaft on frame cross-member (at rear universal), lower assembly and pull front propeller shaft and rear universal assembly off rear drive shaft. Remove axle shafts (see below), take out differential carrier mounting bolts in axle housing, pull differential carrier & drive shaft forward to clear.

Model WD Note—Disconnect drive shaft by taking out four bolts in rear universal yoke.

See Chevrolet Shop Notes for Rear Spring Seat data.

Axle Shaft Removal:—Bend lock plate lugs away from capscrew heads, take out 8 capscrews in axle shaft flange, install two ½"x13 capscrews in tapped holes in flange (between regular screw holes), turn these screws up evenly to loosen shaft, withdraw shaft and aluminum gasket. NOTE—Use new aluminum gasket and lock when axle shaft installed.

Wheel Bearing Adjustment:—Remove axle shaft (above), locknut and adjusting nut lock (within wheel hub), use J-870 wrench and tighten adjusting nut tight, then back off 45°, see that wheel hub turns freely by hand, install lock and locknut, bending lock tangs in notches on both nuts.

REAR AXLE

TRUCKS (SPECIAL EQUIPMENT)

REAR AXLE (TWO SPEED):—Optl. on all Trucks.

See Rear Axle Section for complete data.

Ratio—5.64-1 & 8.22-1. Backlash—.006-.012".

Removal:—Same as regular truck axle (above) except that front propeller shaft should be disconnected from cross-member & rear universal should be 'split'.

Axle Shaft Removal & Wheel Bearing Adjustment:—Same as regular truck axle (above) except that axle shaft retained by studs with locking sleeves under nuts. Use 2 7/16" x 14 screws to loosen shaft.

SHOCK ABSORBERS

SHOCK ABSORBERS:—**Delco Hydraulic type.** Parallel cylinder type front & rear (KA, KH), Direct acting type front, single acting rear (KB), Single acting front & rear (KC, KD, KE). Double acting type Optl. on all other Truck Models.

See Shock Absorber Section for complete data.

FRONT SUSPENSION

Front Suspension (KA, KH):—Independent, parallelogram type with coil springs.

See Front Suspension Section for complete data.

NOTE—Make checks with car weight on wheels and special gauges installed front & rear to level frame.

Kingpin Inclination—4¾° ± ½°.

Caster—0° ± ½°. Adjustable.

Camber—Negative ¼° ± ½°. Adjustable.

Toe-In—0-1/16". Adjust left tie rod only.

Steering Geometry—Outer wheel 20°, Inner 24° ± 2°.

Front Suspension (Others):—Conventional 'I' beam section front axle with Reverse-Elliott ends and semi-elliptic springs. NOTE—Kingpin bushings 'floating' type on KB, KC, KD, KE models.

Kingpin Inclination—7°10' (except Cab-over-Engine), 8° (Cab-over-Engine) ± 1° crosswise.

Caster—2¼° (KB), 1¾° (KC, KD, KE), 2¾° (WA, WB, WC), 3° (WD, WE, WF) ± ½°. Adjust by installing wedge shims between spring and axle (up to 2°), use tools for greater corrections.

Camber—1° ± ½°. Bend cold for minor corrections.

Toe-In—5/64-⅛". Adjust by turning tie rod.

Steering Geometry—Outer wheel 20°, Inner 23° ± 2°.

STEERING GEAR

Steering Gear: (Passenger Cars) Saginaw Worm-and-Roller Type. **(Trucks)** Worm-and-Sector type.

See Steering Gear Section for complete data.

►**Truck Steering Gear 'Squawk' Correction**—*See Saginaw (1940 Chevrolet Truck) Worm-&-Sector type article in Steering Gear Section for data.*

BRAKES

BRAKES:—**Service—Own Make.** Hydraulic type. Hand lever applies rear service brakes.

See Brake Section for complete data.

Wheel Cylinders—Diameter 1¼" (front wheels—all), 1 3/16" (rear—KA, B, C, D, H), 1⅜" (rear—KE), 1½" (rear—others). Size stamped on housing.

Drums—Cast iron, steel web (except WA, B, C), Pressed steel (WA, B, C). Diameters 11" (all KA, B, C, D, front KE), 14" (rear KE, front WA, B, C, D, E, F), 16" (rear WA, B, C, D, E, F).

Lining—Moulded type on all models.

Model	Width	Thickness	Length
KA,B,C,D,H,KE(front)	1¾"	3/16"	22⅝"
KE (rear)	2"	17/64"	38½"
WA,B,C,D,E,F (front)	2"	17/64"	28⅞"
WA,B,C,D,E,F (rear)	3"	17/64"	35 13/16"

Clearance—Adjusting Cover backed off 4 Notches (KA, B, C, D, E, H all wheels), 5 Notches (WA, B, C, D, E, F front wheels), adjusting pinion shaft backed off ¾ turn (WA, B, C, D, E, F rear wheels) from slight drag position.

Braking Power—47½% Rear (KA, B, C, D, H), 54¾% Rear (KE), 59% Rear (WA, B, C, D, E, F).

Hand Brake:—See Service Brakes above.

MISC. MECHANICAL

Power Operated Convertible Top: Vacuum Power type.
See Miscellaneous Section for complete data.

HOOD LOCK ADJUSTMENT, RADIATOR GRILLE & FRONT END SHEET METAL UNIT REMOVAL: *See Chevrolet Shop Notes.*

MODEL IDENTIFICATION

FLEET MODEL NOTE:—Special Economy Engine available for all models. May be identified by special Tune Up Specification Plate on Push Rod Cover listing special settings and Fleet Car Identification Plate on instrument panel to right of the glove compartment. Special carburetor used has stop-pin to limit throttle opening to ½ throttle.

TRUCK MODELS: Model designation for 1941 and 1942 Trucks are as follows:

1941	1942	Nominal Rating	Wheelbase
AK	BK	½ Ton	115"
AJ①	BJ①	½ Ton	115"
AL	BL	¾ Ton	125¼"
AN	BN	¾ Ton Long WB	134½"
YR	MR	1 & 1½ Ton	134½"
YS	MS	1½ Ton	160"
YU②	MU②	1½ Ton	109" ③
YV②	MV②	1½ Ton	132½"③
YW②	MW②	1½ Ton	158" ③
YT	MY	School Bus	160"
YT	MT	School Bus	195" ③

① Dubl-Duti Model. ②Cab-over-Engine Model.
③ ⅛" longer for 1941 model.

SERIAL NUMBER: Stamped on plate on right front floor (1941 Pass. Cars), on plate on front side of body under hood (1942 Pass. Cars), on right side of cowl under hood (Trucks exc. C-O-E), rear side of dash (C-O-E Trucks). First number 1001 (all models) with model prefix as follows:

Car Model	1941	1942
Master Deluxe (Stylemaster)	AG	BG
Special Deluxe (Fleetmaster) Fleetline	AH	BH
Trucks	As given in Truck Model Note (above).	

ENGINE NUMBER:—Stamped on right side of crankcase to rear of distributor. First No. 1001 (each plant) with model prefix code letters as follows:

Model	1941 — Prefix — 1942
Passenger Cars	AA① — BA
Half-Ton	AD② — BD
Dubl-Duti	AM — BM
¾ Ton & ¾ Ton Spec.	AAF③ — BBF
1½ Ton (Std. Eng.)	AF④ — BF
1½ Ton (H. D. Eng.)	AG — BG
1½ Ton C-O-E (Std. Eng.)	AJ — BJ
1½ Ton C-O-E (H. D. Eng.)	AL — BL

①—Flint only. AC—Buffalo (Tonawanda).
②—Flint only. AE—Buffalo (Tonawanda).
③—Flint only. AAN—Buffalo (Tonawanda).
④—Flint only. AN—Buffalo (Tonawanda).

TUNE-UP

COMPRESSION PRESSURE: 110 lbs. min. at cranking speed (all cylinders equal within 5-10 lbs).

VACUUM READING:—20-22" steady at idling speed.

FIRING ORDER:—1-5-3-6-2-4. See diagram.

SPARK PLUGS:—AC No. 104- (Pass. Car), 104 (Truck), 10 mm. Metric. NOTE—Use only 104— on Pass. Cars.
Gaps—.040".
CAUTION—Do not tighten these small plugs excessively (15 ft. lbs. or finger tight plus ½-¾ turn).

IGNITION: See Coil, Condenser, and Distributor.
Breaker Gap—.018" in service. Limits .015-.022". Set new points at .020-.024" (to allow for seating).
Cam Angle or Dwell—39° closed, 21° open.
Breaker Arm Spring Tension—17-21 ounces.
Automatic & Vacuum Advance—*See Distributor.*

IGNITION TIMING: See Ignition Timing.
Std. Setting—5° BTDC. with flywheel mark (steel ball) at inspection hole on right of housing.

CARBURETION: See Carburetor & Carb. Equipment.
Idle Setting—Idle screw 1¼-2¼ turns open (downdraft types), ½-1½ turns open (updraft type). Idle speed 450-500 Engine RPM.
Float Level—½" top of float to gasket seat on cover (downdraft types exc. 515-S, 570-S), ⅜" (515-S, 570-S), 1/32-1/16" top of float to top edge of float bowl (updraft type).
Accelerating Pump—Downdraft types not adjustable. Inner hole—Summer, Outer hole—winter (updraft type).

Fuel Pump Pressure: 3¾ lbs. maximum.

MANIFOLD HEAT CONTROL:—Thermostatic type. Check when tuning engine. Spring should be wound up just enough to slip end over manifold pin (approx. ½ turn). CAUTION—Excessive tension may cause valve to stick, detonation, poor performance.
Anti-Rattle Spring Note—See the 1940 Chevrolet article for spring installation to correct rattles.

►**VALVE TAPPET CLEARANCE:** *CAUTION—Engine temperature must be "normalized" before adjusting. See "Tappet Clearance Adjustment" in Chevrolet Shop Notes.*
Cars & Trucks—.006-.008" Intake, .013-.015" Exhaust, with engine "normalized".
Trucks (for continuous full throttle operation)—.010" Intake, .020" Exh., with engine "normalized".
Economy Engine—.010" Intake, .016" Exhaust, with engine "normalized".

Valve Timing Check: *See Valve Timing.*

►*CAUTION—Valve Timing changed when new Replacement Crankshaft Gear installed.*

STARTING: See Battery, Starter, Generator, Regulator.

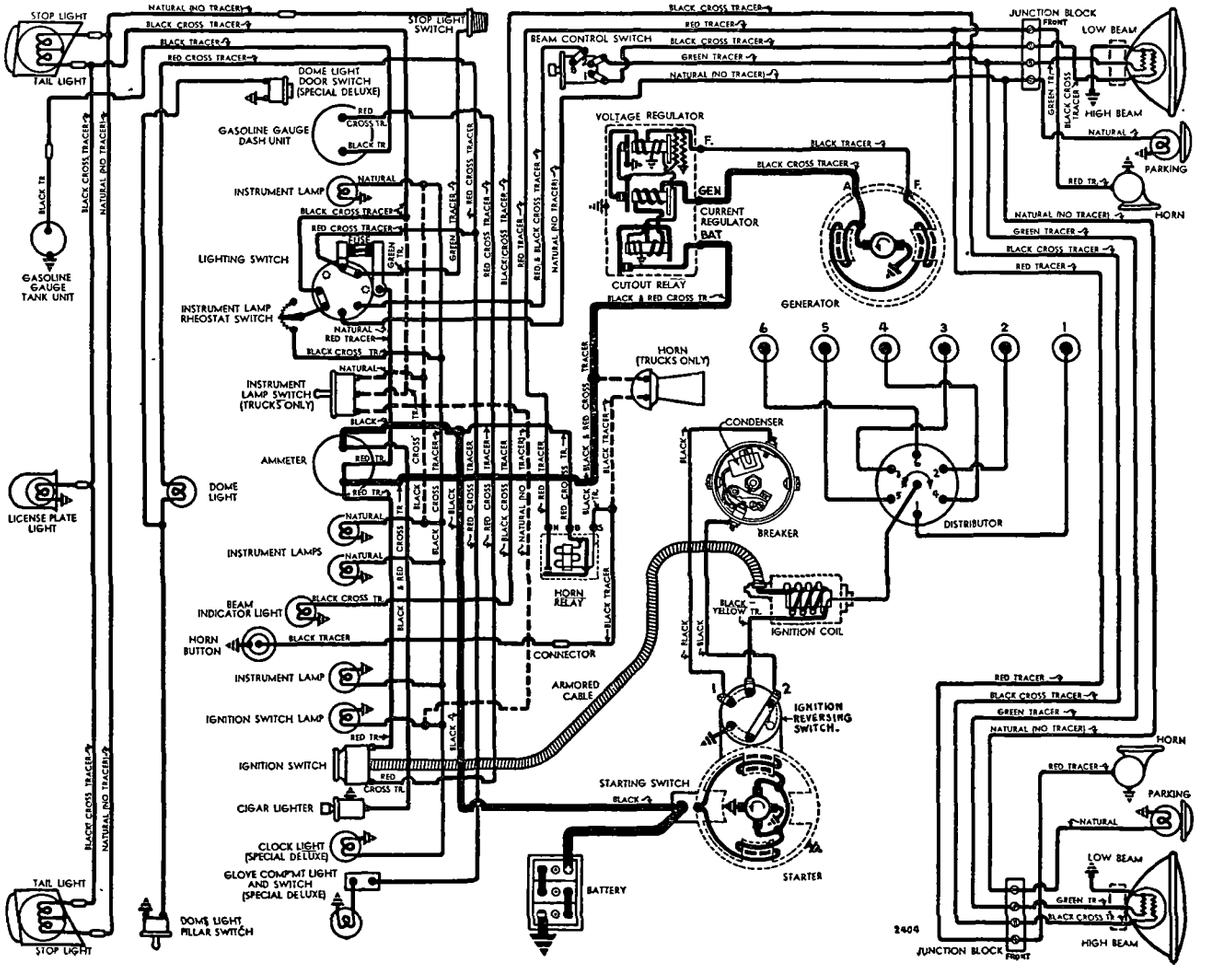

IGNITION

Reversing Switch: Delco-Remy No. 1997738 (1941—1107033 Starter), No. 1997752 (1941—1107047 Starter), No. 1997765 (1942—1107054 Starter), No. 1997768 (1942—1107053 Starter). Mounted on starter. See wiring diagram for connections.
For complete data, refer to Electrical Equipment Index.

►**Removing Reversing Switch from Ignition Circuit**—If switch removal necessary, *see "Ignition Reversing Switch" in Chevrolet Shop Notes for re-working procedure.*

Ignition Switch: Delco-Remy type. Connected to coil by armored cable. Type used on each model as follows: No. 1116304 (U. S. Pass. Cars), 1116315 (Can. Pass. Cars), 1116341 (Comml. & Truck 1941), 1116291 (Comml. & Truck 1942), 1116302 (Comml. & Truck less W. S. 1941), 1116342 (Comml. & Truck less W. S. 1942), 1116349 (Comml. & Truck Canada), 1116278 (Comml. & Truck less W. S. Canada), 1116343 (C-O-E Truck), 1116348 (C-O-E Truck Canada).

NOTE—No. 1997754 used on 1942 Sport Sedan.

Ignition Lock—Briggs & Stratton No. 45792.
Key Series—8000 to 9499. **Groove**—No. 15.

COIL: Delco-Remy No. 1115141 (exc. Sport Sedan), 1115142 (1942 Sport Sedan). Mounted on right side of engine near distributor.

Ignition Current—2.5 amperes idling, 4.5 stopped.

CONDENSER: Delco-Remy Part No. 1882239.

►*CAUTION—This condenser used only on cars with REVERSING SWITCH. Must not be used without switch.*

Capacity—.28-.34 microfarad.

DISTRIBUTOR: Delco-Remy 1110090. Single breaker, 6 lobe cam, full automatic advance type with separate vacuum spark control and Octane Selector adjustment. NOTE—New type with insulated breaker plate and ground terminal for Reversing Switch

Breaker Gap—.018" in service. Limits .015-.022". Set new points at .020-.024" (to allow for seating).
Cam Angle—39° closed, 21° open.
Breaker Arm Spring Tension—17-21 ozs.
Rotation—Clockwise viewed from above.

Automatic Advance

Distributor Degrees	R.P.M.	Engine Degrees	R.P.M.
Start	350	3	700
6.5	600	13	1200
10.25	1000	20.5	2000
19	1700	38	3400

Vacuum Spark Control—Delco-Remy 1116026 (1941), 1116033 (1942), 1116043 (Inv. flare coupling), 1116011 (1942—Canadian). Mounted on the Octane Selector and linked to advance arm. Provides additional advance at speeds above idling except when engine accelerated or operated with wide open throttle when spark retarded by return spring
Plunger Travel—17/64" (1116026,33), 7/32" (1116011)

Vacuum Advance—1116026, 33

Distr. Degrees	Eng. Degrees	Vacuum (" of HG)
Start	0°	7-8.5"
10°	20°	16.5-18.5"

Vacuum Advance—1116011

Start	0°	6-8"
8°	16°	12.5-14.5"

Octane Selector—Adjustment on distributor provides 10° advance or retard from center '0' position. See Ignition Timing for adjustment instructions.

Removal:—Distributor mounted on right side of crankcase. To remove, loosen advance arm clamp bolt (does not disturb vacuum connections).

IGNITION TIMING

IGNITION TIMING:—See Octane Selector (below) for final setting

	Flywheel Degrees	Piston Position
All Engines	5° BTDC	.0091" BTDC

Timing (Neon Light)—Recommended method. Connect neon light to #1 spark plug, direct light on flywheel through inspection hole in right front face of housing. Set Octane Selector pointer at '0'. Idle engine, loosen advance arm clamp bolt, rotate distributor until ignition mark (steel ball insert in flywheel) lines up with pointer. Tighten clamp bolt and check Octane Selector setting.

Timing (Without Neon Light)—With #1 piston on compression, turn engine over until piston is 5° or .0091" before top dead center with ignition mark (steel ball insert in flywheel) at pointer in inspection hole in right front face of housing. Adjust distributor as directed above.

Octane Selector Setting—Set for slight ping when accelerating engine with wide open throttle. To adjust, loosen hold-down screw, move distributor and scale counter-clockwise to advance spark (if no ping), clockwise to retard spark (if too severe).

►*CAUTION*—See that noise (like a ping) not caused by accelerator rod striking intake or exhaust manifold (at point where rod passes between manifolds).

CARBURETOR

Carter W1 (Chevrolet) Model 483-S or 574-S (Std. Pass. Cars & Trucks), Model 492-S (Fleet Economy Model), 515-S or 570-S (Special Govt. Truck). 1¼" downdraft type.
See Carburetor article in Carburetor Section.

►**1942 Accelerator Rod and Starter Linkage Binding Correction**—*See Field & Production Changes in Carburetor article in Carburetor Section.*

Cab-over-Engine & Dubl Duti Panel—Carter BB, 489-S (Early 1941), 517-S used with new manifold (Late 1941, and 1942). 1¼" updraft types.
See Carburetor Section for complete data.

►**1941 Updraft Carburetor and Manifold Production Change**—*See Field & Production Changes in Carburetor article in Carburetor Section.*

Idle Adjustment—With engine warm and choke valve wide open, set throttle stopscrew so engine idles at 450-500 RPM. Adjust idle adjusting screw so that engine fires smoothly (turn screw in for leaner mixture). Final setting should be 1¼-2¼ turns open (downdraft models), ½-1½ turns open (updraft models). Recheck idle speed.

Accelerating Pump Setting (489-S, 517-S)—Connect pump link in hole in throttle lever as follows:
Inner Hole (Short Stroke)—Summer temperatures.
Outer Hole (Long Stroke)—Winter temperatures.

Accelerating Pump Setting (other models)—Not adjustable.

Float Level (483-S, 492-S, 515-S, 570-S, 574-S)—½" (except ⅜" on 515S, 570S) from top of float at free end to gasket seat on cover with valve closed.

Float Level (489-S, 517-S)—Top of float 1/32-1/16" below top edge of bowl (gasket off), valve seated.

Metering Rods & Jets—*See Carter and Carter (B&B) Jet Tables in Carburetor Section for complete data.*

Throttle Cracker:—Opens throttle ⅓ for starting.

Adjustment—With carburetor correctly set for 450-500 RPM. idle speed, loosen locknut and adjust bolt so that clearance between head of bolt and lug on starter pedal cross-shaft is ⅛", tighten locknut.

►**1942 Accelerator Rod and Starter Linkage Binding Correction**—*See Field & Production Changes in Carburetor article in Carburetor Section.*

CARB. EQUIPMENT

Air Cleaner: AC No. 1529667 (Pass. Cars), No. 1529264 (Pass. Cars with Governor). Oil-wetted type. Use Replacement Filter Element Assembly #1 (1529667), #2 (1529264). Heavy duty oil-bath type cleaner Optl. NOTE—Oil-bath type cleaner std. on C-O-E Trucks.

Fuel Pump: AC Model AF, No. 1523089. Diaphragm type. Exchange Pump No. 429.

Pressure—3¾ lbs. maximum.
For complete data, refer to Carburetion Equip. Index.

Gasoline Gauge: AC Electric type. No. 1516293 (Dash Unit 1941), 1516405 (Dash Unit 1942), 1516280 (Tank Unit 1941-42 Pass. Cars).
For complete data, refer to Carburetion Equip. Index.

BATTERY

BATTERY:—Delco Model 15X-3. 6 volt, 15 plate, 100 ampere hour capacity (20 hour rate).
Starting Capacity—120 amperes for 20 minutes.
Zero Capacity—300 amperes for 3.6 minutes. Five second voltage 4.2 volts.
Grounded Terminal—Negative (—) terminal.
Location—In engine compartment on right side (Pass. cars), under front floor on right side (Trucks).

Special Batteries—Delco Models 17K-3, 17-Q-3, 19Q-3. 6 volt, 17 plate (17K-3, 17Q-3), 19 plate, 19Q-3).
Grounded Terminal & Location—Same as above.

STARTER

Delco-Remy Model 1107033 or 1107047 (LHD. 1941), 1107054 (LHD. 1942), 1107038 (RHD. 1941), 1107053 (RHD. 1942).

►**1942 Accelerator Rod and Starter Linkage Binding Correction**—*See Field & Production Changes in Carburetor article in Carburetor Section.*
Armature—No. 1867897 (1107033 and 1107054).
Drive—Overrunning clutch and manual pinion shift (LHD. models), solenoid pinion shift (RHD. models).
Rotation—Counter-clockwise at commutator end.
Brush Spring Tension—24-28 ozs. each.
Cranking Engine—65 RPM., 150 amperes, 5.5 volts.

Performance Data

Torque	R.P.M.	Volts	Amperes
0 ft. lbs.	5000	5.0	65
12 "	Lock	3.37	525

Removal:—Starter flange mounted on right front face of flywheel housing. To remove, disconnect starting pedal linkage and Reversing Switch wires. Take out flange mounting screws, remove starter & switch.

Starting Switch (LHD. Cars): Delco-Remy No. 820052 mounted on starter. Operated by starting pedal. **(RHD. Cars)**—Delco-Remy Solenoid Switch No. 1546 (1941), 1118102 (1942) controlled through relay by pushbutton switch No. 1996018 on instrument panel.
For complete data, refer to Electrical Equipment Index.

CONTINUED N NEXT PA E

C NTINUED FROM PRECEDING PA E

GENERATOR

Delco-Remy Model 1102667 (Standard), Armature 1879002. Two brush type (Current&Voltage control).

Special Generators—For special service as follows: **1102677** (Door-to-door), **1106403** (City Police), **1105851, 1105856** (State Police); **1106406** (Boston Police), **934-F and 1102674** (Special).

Charging Rate Adjustment—None. Charging rate controlled by Voltage Regulator, maximum output by Current Regulator. See Regulator data below.

Maximum Charging Rate (Std. Gen.)—38-40 amperes (cold), 7.3-7.7 volts, 2400 RPM., 25.5 MPH. (Pass. Cars). Actual charging rate controlled by Voltage Regulator.

Performance Data—Cold

	Amperes①	Volts	R.P.M.
1102667, 74	30	8.0	1750
1102677	26	8.0	1450
1105851, 6	40	8.0	1850
1106403, 6	35	8.0	1040
934-F	26	8.0	1325

①—Not maximum output—See Current Regulator

Rotation—Counter-clockwise at commutator end.

Brush Spring Tension—25 ozs. each.

Field Current—1.75-1.9 amps. (1102667, 674, 677), 1.62-1.82 amps. (1105851, 6), 1.77-2.0 amps. (1106403, 406), 1.7-2.0 amps. (934-F) at 6.0 volts.

Removal:—Generator pivot mounted at left front of engine. To remove, take out pivot and clamp bolts.

Belt Adjustment:—Swing generator away from engine until belt side play at point midway between generator and fan pulleys is 1½" (light pressure).

REGULATOR

Delco-Remy Model 1118201 (1102667 & 1102674 Gen.). 1118233 (1102677 Gen.), 1118237 (1105851, 6 Gen.), 1118229 (1106403, 6 Gens. with Neg. Grd.), 1118232 (1106403, 6 Gens. with Pos. Grd.), 1118221 (934-F).

Single Core Type. Voltage & Current Regulators. *For complete data, refer to Electrical Equipment Index.*

CAUTION—Check generator for grounded field coils and leads before changing regulator settings to correct High Charging Rate or High Voltage.

Cutout Relay

Cuts In—6.2-6.7 volts hot.
Cuts Out—0-4.0 ampere discharge current.
Contact Gap—.020" (same for both sets).
Air Gap—.020" (with contacts just closed).

Voltage Regulator

Setting—7.2-7.4 volts (1118201), 7.0-7.2 volts (all others) at operating temperature (hot).
Checking & Adjustment—*See Electrical Equipment Section.*
Air Gap—.070" between center of core and armature with contacts just closing (press down on armature to open contacts, release pressure, check gap at point where contacts just close).

Current Regulator

Setting—34-36 amperes (1118201, 1118229, 1118232), 24-26 amperes (1118233), 26-28 amperes (1118221), 38-40 amperes (1118237) hot (at operating temp.).
Checking & Adjustment—*See Electrical Equipment Section.*
Air Gap—.080" (check same as Voltage Regulator).

LIGHTING

LIGHTING:—**Headlamps**—Guide 'Sealed Beam' type. *For complete data, refer to Electrical Equipment Index.*

Headlamp Adjustment—Aim upper beam straight ahead (hot spot center 3" below lamp center height).

Beam Indicator—Dot on upper edge of speedometer dial (above '50'). Lighted when upper beams in use.

Direction Signal—*Refer to Electrical Equip. Index.*

Switches

Lighting—Delco-Remy 1994022 (Pass. Cars), 1994017 (Comm'l. & Truck), 1997718 (State Police), 1995013 (Army). NOTE—1994022 switch (Pass. Cars) has instrument light rheostat in switch handle.
Beam Selector—Delco-Remy No. 1997008.
Instrument (Comml. & Truck)—Delco-Remy 1404.
Glove Compt. Light—Delco-Remy No. 1997787.
Stop Light—Delco-Remy 1997725 (1941 & 1942 Early Comml. & Truck), 1997901 (1942—All Pass. Cars & later Comml. & Truck). NOTE—No. 1997901 is a mechanically operated switch (linked to brake pedal).

Bulb Specifications

SEE 1946-47-48 CHEVROLET PASS. CAR PAGES

MISC. ELECTRICAL

FUSES:—**Lighting**—30 ampere. On back of light switch. **Convertible Top Motor**—9 ampere. In switch lead.

HORNS: Delco. Vibrator type twin horns operated by relay (Pass. Cars), No. 1999801 vibrator type single horn (Comml. & Truck). Passenger car horn numbers as follows:

	High Note	Low Note
1941 Std. Type	1999534	1999533
1941 Optl. Penetone	1999840	1999839
1942 Model BG	1999840	1999839
1942 Model BH	1999546	1999545

Horn Specifications

Type	Current (at 6 volts)	Air Gap
1999801	7-9 amperes	.027-.033"
1999533, 45	19-21 amperes	.044-.049"
1999534, 46	18-20 amperes	.034-.039"
1999839	7-11 amperes	.032-.038"
1999840	6-10 amperes	.021-.025"

Horn Relay (Pass. Cars):—Delco-Remy No. 1116775. **Contact Gap**—.025". **Air Gap**—.015" (closed). **Contacts Close**—2.75-4.0 volts.

ENGINE

STANDARD

ENGINE SPECIFICATIONS:—6 cylinder, valve-in-head **Bore**—3½". **Stroke** 3¾". **Displacement**—216.5 cu. ins. **Rated HP**—29.4. **Developed Horsepower**—90 HP at 3300 RPM (Passenger Cars and Trucks except Cab-Over-Engine), 87 HP. at 3300 RPM (Cab-Over-Engine Trucks).

►NOTE—New larger updraft carburetor and intake manifold used on late 1941 Cab-Over-Engine models for increased power. May be installed on early models. *Refer to Carburetor Index for 'Carter (B&B) Updraft Carburetor' article for complete data.*

Compression Ratio—6.50-1 Std. cast-iron head.
Compression & Vacuum Reading—*See Tune-Up.*

Engine Removal & Engine Mounting Adjustments, *See Chevrolet Shop Notes for data.*

►**Engine Roughness Correction**—*See "Engine Mountings" in Chevrolet Shop Notes.*

Cylinder Head Installation:—Use new gasket and install with mark 'This Side Up' upward. Use cylinder head guide pins to align head.

PISTONS:—**Passenger Cars**—Cast-iron, flat head, cam ground, tin plated with slipper type skirt.
Trucks—Same as Pass. Cars except 1½ ozs. heavier and may be identified by a small forged boss on the lower center of each piston pin boss.
Weight—26.9 ozs. (Pass. Cars), 29.1 ozs. (Trucks) with piston pin bushings. **Length**—3¾".
Removal—Pistons and rods removed from above.
Clearance—Top .0147-.0183". Skirt .0017-.0023".

Replacement Pistons: *See Chevrolet Shop Notes.*

Fitting Pistons:—Use feeler gauge between piston and cylinder wall at right angles to pin bosses. Piston should pass through bore with light pressure on .002" feeler and lock on .003" feeler.

PISTON RINGS:—Two compression, one oil control ring per piston, all above pin. Oil ring groove drilled for oil drainage. NOTE—Taper faced compression ring used. Install with side mark 'TOP' upward.

Ring	Width	End Gap①	Side Clearance
Compr.	.1235-.1240"	.005-.015"	.0015-.003"
Oil Cont.	.1860-.1865"	.005-.015"	.002-.0035"

①—Worn end gap limit 1/32" maximum.

Replacement Rings:—Furnished standard size and .005", .010", .020", .030", .040" oversize.

PISTON PIN:—**Diameter**—.8645-.8650". **Length**—3.135-3.165". Pin locked in rod, piston bronze bushed.
Pin Fit in Piston—Thumb push fit (room temp.).

Replacement Pins:—Std. & .003", .005", .010" oversize. NOTE—New pistons fitted with bushings and pins.

CONNECTING ROD:—**Length 6 13/16". Weight** 28.3 ozs. (1941), 30.7 ozs. (1942).
Crankpin Journal Diameters—2.311-2.312".
Lower Bearing—Spun babbitt-lined type.
Clearance—.001-.0025". **Sideplay**—.004-.012" (side clearance between rod and pin bosses .025" min.).

Bearing Adjustment:—Solid shims. Remove shims equally at both sides to secure 'snap fit' (rod tight to hand but should snap from one side to other with light tap of 8 oz. hammer), **then replace one .002" shim for clearance** (if unequal number, place extra shim on camshaft side). Rod should snap from side to side with one hand pressure with proper bearing fit.

Palnut Note—Palnuts used to lock rod bolts. Use new palnut, install with open side toward end of bolt, turn finger tight against rod nut, then tighten ½ turn additional.

Installing Rods:—Numbers on rods and caps must be together and installed in same numbered cylinder with numbers and pin clamp bolt toward camshaft side. Install oil dippers on rods with mouth toward camshaft side of engine. Check dipper heights. *See Chevrolet Shop Notes for Oil Dipper Height data.*

CRANKSHAFT:—4 bearing, 7 integral counterweights. NOTE—Wick-type rear bearing oil seal (no slinger). *See Chevrolet Shop Notes for Crankshaft Front and Rear Oil Seals and Harmonic Balancer servicing data.* **Journal Diameters**—#1, 2.6835-2.6845"; #2, 2.7145-2.7155"; #3, 2.7455-2.7465"; #4, 2.7765-2.7775".

NOTE—Journal taper or out-of-round limits .001". Run-out limits for #2 and #3 bearings .002".

Bearing Type—Steel-backed, babbitt-lined type. Bearings are "doweled" in place by projection on shell engaging hole in crankcase and bearing cap. **Clearance**—.002-.004".

ENGINE

CONTINUED FROM PRECEDING PAGE

►*NOTE—Replacement "precision" type bearings do not require line-boring or reaming.*

Replacement Bearings: New "precision" type furnished Std. size and .002", .010", .020", .030" Undersize.

NOTE—Bearings marked on inner surface of dowel: "V" for #1 and #4, "I" for #2 and #3.

►*CAUTION—Complete bearing set (4 bearings) must be installed on engines not previously equipped with replacement "precision" bearings.*

Bearing Adjustment:—Solid shims. Remove shims until slight drag secured when shaft turned by hand, **then replace one .002" shim for clearance** (if unequal number of shims used, place extra shim on same side for all bearings).

End Thrust: Taken by #3 bearing (adjusted only by replacing bearing). **Endplay**—.004-.007".

CAMSHAFT:—Four bearing. Helical gear drive.
Journal Diameters—#1, 2.0282-2.0292; #2, 1.9657-1.9667"; #3, 1.9032-1.9042"; #4, 1.8407-1.8417".
NOTE—Journal out-of-round limits .001". Run-out limits .002" (straighten if excessive).
Bearing Type—Steel-backed, babbitt-lined bushings. *See Chevrolet Shop Notes for Camshaft Bearing installation and line-reaming instructions.*
Clearance—.002-.004".

End Thrust:—Taken by thrust plate behind camshaft gear (gear position controlls endplay). *See Timing Gear installation in Chevrolet Shop Notes for data.*
Endplay—Free fit to .003" maximum.

Timing Gears:—Crankshaft gear Steel. Camshaft gear Bakelite & Fabric. Maximum gear run-out .003" crankshaft, .004" camshaft.
Replacement Timing Gears—*See Chevrolet Shop Notes.*

►*CAUTION—Replacement Crankshaft Gear has relocated keyway and will change Valve Timing on these engines when replacing original type crankshaft gear. See Valve Timing.*
Timing Gear Installation & Alignment—*See "Timing Gears" in Chevrolet Shop Notes.*
Timing Gear Backlash—.002-.005".

Camshaft Setting:—Gears punchmarked. Meshmarked tooth of crankshaft gear with marked space between teeth of camshaft gear.

VALVES:	Head Diameter	Stem Diameter	Length
Intake	1 41/64"	.3407-.3417"	6.205-6.235"
Exhaust	1 15/32"	.3400-.3407"	4.839-4.869"

	Seat Angle	Lift	Stem Clearance
Intake	30°	.2947"	.001-.003"
Exhaust	30°	.3118"	.002-.004"

NOTE—1941-42 valves not interchangeable with earlier models.

Valve Guides:—Pressed in head (new types—longer exhaust guide used—guides not interchangeable

Replacement Valve Guides: New "precision" type (do not require rough reaming).
Valve Guide Installation—*See "Valve System" in Chevrolet Shop Notes.*

Valve Springs:—Free length 2⅛". When checked with U15 Tester, spring pressure should be 125-133 lbs. at 1½".

	Spring Pressure	Length
Valve Closed	49-56 lbs.	1 13/16"
Valve Open	121-133 lbs.	1½"

NOTE—New umbrella type valve spring cap covers used on Intake Valves only (diverts oil from valve end of rocker arm out over spring, reducing oil on valve stem thereby diminishing oil consumption and exhaust smoke when idling). Install springs with close-coil end toward cylinder head. Use round (umbrella type) valve caps on intake valves, octagonal caps on exhaust valves.

Valve Lifters:—Same as 1940 (pushrod seat brazed on top). **Clearance**—.001" (free fit in guide holes).

Rocker Arm Assembly:—New Armasteel type (no bushing used). 4 different types of arms. *See Chevrolet Shop Notes for Rocker Arm data.*

ENGINE

SPECIAL HEAVY DUTY TRUCK TYPE

SPECIAL 235 CUBIC INCH OPTIONAL TRUCK ENGINE:—Available as a regular production option on all 1½ Ton Heavy Duty & C-O-E Trucks.

Servicing:—All service operations and clearances same as for Regular Engine except for connecting rod oiling system adjustment *Refer to Std. Engine (preceding) for complete data.*

Non-interchangeable Parts:—Parts are interchangeable between the Regular Engine and the Special 235 Cubic Inch Engine except as follows: Cylinder Block and Crankcase, Cylinder Block Assembly (Short Motor), Push Rods (approximately ¾" longer on large engine and identified by shoulder just below cup at top end), Valve Tappets, Camshaft, Piston and Pin Assembly, Piston Rings (Compression and Oil Control), Crankshaft, Connecting Rod, Harmonic Balancer, Oil Pan, Oil Pan Pipe Assembly, Oil Distributor to Valve Rocker Shaft Pipe Assembly, Oil Pump Screen Cover Support Assembly.

ENGINE SPECIFICATIONS (235 CUBIC INCH OPTIONAL TRUCK ENGINE):—6 cylinder, valve-in-head
Bore—3 9/16". **Stroke**—3 15/16".
Displacement—235.5 cu. ins. **Rated HP**—30.4.
Developed Horsepower—93 HP. (except C-O-E), 90 HP. (C-O-E Trucks) at 3100 RPM.

►NOTE—Increased power obtained on late Cab-Over-Engine Trucks by use of larger carburetor and intake manifold (may be installed on early models). *Refer to Carburetor Index for 'Carter (B&B) Updraft Carburetor' article for data.*

Compression Ratio—6.62-1 std. cast-iron head.

See Special 235 Cubic Inch Optional Truck Engine Note above for Servicing and Non-interchangeable Parts.

VALVE TIMING

►**VALVE TAPPET CLEARANCE:** *CAUTION—Engine temperature must be "normalized" before adjusting. See "Tappet Clearance Adjustment" in Chevrolet Shop Notes.*

Cars & Trucks—.006-.008" Intake, .013-.015" Exhaust, with engine "normalized".

Trucks (for continuous full throttle operation)—.010" Intake, .020" Exh., with engine "normalized".

Economy Engine—.010" Intake, .016" Exhaust, with engine "normalized".

VALVE TIMING: See Camshaft Setting.

►**VALVE TIMING CHANGE:** *Valve Timing is retarded 4°* on engines equipped with new Replacement Crankshaft Gear.

ORIGINAL VALVE TIMING SPECIFICATIONS
►for Engines with Original Crankshaft Gear
Intake Valves—Open 3° BTDC. Close 35° ALDC.
Exhaust Valves—Open 46° BLDC. Close 5° ATDC.

NEW VALVE TIMING SPECIFICATIONS
►for Engines with new Replacement Crankshaft Gear
Intake Valves—Open 1° ATDC. Close 39° ALDC.
Exhaust Valves—Open 42° BLDC. Close 9° ATDC.

Valve Timing Check—First remove all tappet clearance from #1 exhaust valve, turn engine over until this valve just starts to close with triangular mark on flywheel in line with pointer in inspection hole in right front face of flywheel housing, mount dial indicator on rocker shaft support with stem contacting #1 exhaust valve adjusting screw, set dial to exactly .036" (engines with original type crankshaft gear), .044" (engines with new replacement crankshaft gear). Turn crankshaft until indicator hand just stops moving. Timing is correct if indicator reading is ZERO plus or minus .004". Reset tappet clearance at correct running figure (above).

LUBRICATION

LUBRICATION:—Pressure and positive splash system. *See Chevrolet Shop Notes for Oil Distributor, and Rocker Arm Lead & Overflow Pipe servicing.*
Oil Pump Installation—Assemble ground side of idler gear toward cover. Oil pump assembly mounted in crankcase by tapered setscrew. See that screw seated firmly in tapered hole in pump housing before tightening locknut.
CAUTION—Use only proper Chevrolet gasket when assembling pump cover. Gasket controls pump gear clearance.

Normal Oil Pressure:—14 lbs. at 21 MPH (Pass. Cars), 14 lbs. at 2000 RPM (Trucks).
Oil Pressure Regulator:—Located on oil pump cover. Opens at 75 lbs. Non-adjustable type. Pressure normally controlled by Oil Distributor Valve on left side of engine which opens at 15 lbs.
Oil Distributor:—*See Chevrolet Shop Notes for data.*
Checking Oiling System:—Should be checked whenever pan removed. *See Chevrolet Shop Notes for data.*
Crankcase Capacity:—5½ qts. dry, 5 qts. refill (All).

COOLING

Capacity: 14 qts. (1941 Pass. Cars), 15 qts. (1942 Pass. Cars), 14 qts. (1941-42 Trucks exc. C-O-E), 16½ qts. (1941-42 C-O-E Trucks). NOTE—Special Optl. Truck radiator capacity is 16 qts.).
See Chevrolet Shop Notes for Radiator Core Removal.
Water Pump:—New two outlet packless type with sealed ball-bearing shaft. NOTE—Pumps not interchangeable with earlier models (same on all 1941-42 models except for fan).
See Water Pump Section for complete data.
Thermostat:—Harrison. In cylinder head outlet.
Setting—Starts to open at temperature indicated below (this figure marked on valve).

Part No.	Opening Temp.	Fully Open
3113995 (Std.)	140-147° F.	170° F.
985128 (Econ. Engine)	160° F.	
985127 (Alcohol Anti-Freeze)	148-155° F.	173° F
985787 (Perm. Anti-Freeze)	166-174° F.	194° F.

CONTINUED ON NEXT PAGE

CONTINUED FR M PRECEDING PAGE

CLUTCH

PASS. CARS & HALF-TON

CLUTCH:—Own Make. Diaphragm spring, single plate, dry disc type. NOTE—New clutch driven member (with revised spring cushions), clutch linkage (for proper release of new driven member) and flywheel oil groove (just inside clutch plate driving surface to prevent any excess grease thrown out by clutch pilot bearing from reaching facings) used.
See Clutch Section for complete data.

►**Clutch Rattle Correction**—*See Service Notes in Chevrolet Clutch article in Clutch Section.*

Facings—Woven asbestos, 2 used. Inside Diam. 6⅛". Outside Diam. 9⅛". Thickness .132-.138".

Adjustment:—Pedal free travel ¾-1". To adjust, loosen checknut and turn adjusting nut on connecting link at clutch throwout fork. NOTE—Use finger pressure (not foot) when checking free travel.

Removal:—Remove transmission and flywheel underpan (see Transmission Removal below). Remove throwout bearing from fork, remove fork by prying fork off ball, remove fork mounting (use ¾" wrench). Install Clutch Pilot Tool K-411 (to support clutch), loosen all six cover bolts evenly, remove assembly from below. CAUTION—Do not allow pressure plate to hang on retracting springs (support by hand). When installing clutch align 'X' mark on cover with 'X' mark on flywheel.

CLUTCH

TRUCKS (EXCEPT HALF-TON)

Own Make. Single Plate, diaphragm spring, dry disc type. Truck clutch larger than Pass. car type.
NOTE—Driven member vibration dampener now equipped with 6 (coil) springs instead of 8.
See Clutch Section for complete data.

►**New Heavier Replacement Clutch Pedal Pull-back Spring for 1941 Trucks**—*See 1941 Chevrolet Clutch article in Clutch Section.*

Facings—Woven asbestos, 2 used. Inside Diam. 7". Outside Diam. 10¾". Thickness .137-.143".

Adjustment & Removal:—Same as passenger car. *See Passenger Car Clutch data above.*

TRANSMISSION

PASSENGER CARS

TRANSMISSION:—Own Make. All helical gear type. Constant-mesh, synchro-mesh (second and high), sliding gear (low and reverse).
See Transmission Section for complete data.

Transmission Control:—Remote control type, steering column shift with vacuum power.
See Transmission Section for complete data.

►**Gearshift Lever Rattle Correction (for all cars) & Cementing of Vacuum Shift Cylinder Tubing (on Cabriolet)**—*See 1941-42 Chevrolet Transmission Control article in Transmission Section.*

Removal (except Cabriolet):—Remove front floor mat and floor cover over transmission. Remove outer half of reactionary lever metal boot (work under car) by taking out two bolts fastening halves together. Loosen 3 vacuum cylinder bracket-to-transmission capscrews and reactionary lever assembly-to-transmission operating shaft clamp bolt. Drive assembly from end of shaft with care. Disconnect selector rod from selector lever after removing cotter pin from transmission end of selector rod. Remove 3 vacuum cylinder bracket-to-transmission capscrews and move assembly (bracket, vacuum cylinder and reactionary levers) away from transmission. Disconnect pull rod and brake cables from brake cross shaft and remove cross-shaft. Disconnect speedometer cable. Remove 4 universal joint ball collar-to-retainer capscrews and slide ball back on propeller shaft housing. Remove 4 capscrews which secure front trunnion bearings to the front yoke. Remove 2 front yoke trunnion bearings and split the joint. Push front end of propeller shaft down for clearance. Remove 4 rear transmission mounting-to-frame cross member bolts. Remove two upper transmission-to-clutch housing capscrews and insert guide pins. Remove clutch underpan and two lower transmission-to-clutch housing capscrews. Slide transmission back and lift out through opening in floor.

Removal (Cabriolet):—Transmission removal on this model differs from regular passenger car removal (above) due to use of special 'VK' frame. Removal procedure for Cabriolet as follows: Remove front floor mat and floor cover over transmission. Remove outer half of reactionary lever metal boot by taking out two bolts fastening halves together. Disconnect selector rod from selector lever after removing cotter pin from transmission end of selector rod. Disconnect gearshift control rod by removing cotter pin, washer and anti-rattle spring from transmission end of rod. Disconnect vacuum cylinder piston rod and valve link from reactionary levers. **To prevent upsetting vacuum valve adjustment, replace clevis pin through piston rod yoke and valve link.** Remove vacuum cylinder from mounting bracket. Disconnect pull rod and brake cables from brake cross-shaft and remove cross-shaft. Disconnect speedometer cable. Remove 4 universal joint ball collar-to-retainer capscrews and slide ball back on propeller shaft housing. Remove 4 capscrews which secure front trunnion bearings to front yoke. Remove 2 front yoke trunnion bearings and split the joint. Push front end of propeller shaft down for clearance. Remove 4 rear transmission mounting-to-frame cross member bolts. Remove two upper transmission-to-clutch housing capscrews and insert guide pins. Remove clutch underpan and two lower transmission-to-clutch housing capscrews. Slide transmission back until clutch shaft just free of driven member, raise rear end sufficient to remove transmission rear mounting (free mounting from transmission and move it forward enabling removal of mounting through opening in frame). Pull transmission back and turn it toward the left as required for sufficient clearance to lift it out through opening in floor.

TRANSMISSION

3-SPEED TRUCK TYPE

Own Make (Std. on ½, ¾ Ton Trucks)—3-speed, all helical gear type. Constant-mesh, synchro-mesh (Second and High), sliding gear (Low and Reverse).
See Transmission Section for complete data.

Removal:—See 4 Spd. Transmission Removal (below).

TRANSMISSION

4-SPEED TRUCK TYPE

Own Make (Optl. ½, ¾ Ton. Std. Other Trucks). 4-speed, sliding spur gear type.
See Transmission Section for complete data.

►**1941 Truck Low & Reverse Gear Ratio Production Change**—*See 1941 Chevrolet Truck 4-Speed Transmission article in Transmission Section.*

Transmission Control (Cab-Over-Engine):—Remote control type. *See Chevrolet Shop Notes for data.*

Removal (½ Ton): Remove floor boards. Disconnect speedometer cable. Remove hand brake lever from transmission. Remove 4 universal joint ball collar-to-retainer capscrews and slide ball back on propeller shaft housing. Remove 4 capscrews which secure trunnion bearings to front yoke. Remove 2 front yoke trunnion bearings and split the joint. Push front end of propeller shaft down for clearance (NOTE—On 4 spd. transmission, frame cross member must be removed to drop shaft). Remove 2 upper transmission-to-clutch housing capscrews and insert guide pins, remove clutch underpan and take out 2 lower mounting capscrews and slide transmission out and remove. NOTE—On 4 spd. type, remove 2 brake master cylinder bracket screws.

Removal (¾ Ton): Remove floor boards. Disconnect speedometer cable. Remove hand brake lever from transmission. Split center universal joint by removing two trunnion bearing 'U' clamps (tape or wire trunnions together to prevent losing bearings). Remove 4 universal ball retainer-to-transmission bolts and slide retainer back on tube. Remove center bearing support bracket-to-frame cross member bolt nuts. Pull front propeller shaft assembly to rear, remove transmission using guide pins.

Removal (C-O-E 109" WB.): Same as for ¾ Ton except that one propeller shaft only used. Split front universal and remove transmission (as above).

Removal (All Others):—Remove floor boards. Disconnect speedometer cable. Remove hand brake lever from transmission. Split front universal joint by removing two trunnion bearing 'U' clamps (tape or wire trunnions together to prevent losing bearings). Remove center bearing support bracket-to-frame cross member bolts. Pull front propeller shaft assembly to front to free from rear shaft. Then remove transmission as directed for ½ & ¾ Ton Truck models above.

UNIVERSALS

UNIVERSAL JOINT:—Own Make—Needle bearing "cross" type (1941 Pass. Cars & ½ Ton), bushing type (¾ Ton front joint only 1941), new type with special treated trunnion pins and trunnion bearings (1942 Pass. Cars, ½ Ton, and ¾ Ton front joint only).
See Universals Section for complete data.

Spicer Type: Needle bearing type (used on other Truck models).
See Universals Section for complete data.
SERVICE NOTE—Floating bushings available for replacement of needle bearings used in first type 1941 Chevrolet universal joint.
Refer to 'Chevrolet Universal Joint' article in the Universals Section for complete service data.

Propeller Shaft Support Bearing (Trucks): *See Chevrolet Special Shop Notes for servicing instructions.*

REAR AXLE

PASSENGER CARS

REAR AXLE:—Own Make. Semi-floating, Hypoid gear type with Torque Tube drive.
See Rear Axle Section for complete data.
Ratio—4.11-1 Standard. 3.73-1 Optional.
NOTE—Axles may be identified by prefix on serial number (located on top of the differential carrier casting on the right side of the center rib) as follows: 4.11-1—AG or AJ (1941), 2AG, 2AJ or BG (1942), 3.73-1—AH or AP (1941), 2AH, 2AP or BH (1942).
Backlash—.005-.007". Screw adjustment.

Removal:—Raise rear of car, remove rear wheels and brake drums, install clamps on wheel brake cylinders, disconnect hand brake cables from idler lever and remove cables from cable clamps on frame, disconnect brake line at axle housing and shock absorber 'I' bolts at spring seats. Remove spring 'U' bolts, disconnect spring shackles and drop springs. Pull axle assembly back to free front end of drive shaft. Withdraw axle assembly.

Rear Spring Rear Shackle Note—2 types used in production. First type same as 1940. Second type rubber bushed and requires no lubrication. *See Chevrolet Shop Notes for Rear Spring Rear Shackle (two types) and Rear Spring Seat servicing data.*

Axle Shaft Removal:—Wheel bolted directly on flange on outer end of axle shaft. Shaft retained by 'C' washer on inner end of differential case. To remove axle shaft, remove wheel, take out two 'zipon' brake drum retaining nuts (on second wheel stud at either side of drain hole in drum), remove drum, install clamp on wheel brake cylinder. Remove axle housing cover, differential pinion shaft lock screw, pinion shaft and axle shaft spacer. Push axle shaft in, remove "C" washer on inner end, withdraw shaft.

Installation—Assemble new oil deflector, gasket (coat both sides with heavy shellac or paint), line up extra hole (center hole of closely grouped three holes) with notch in hub flange on axle shaft (oil pocket in oil deflector should also be aligned with this notch), install six special bolts, forcing heads down to deflector, and peen shoulder on bolts into countersink around bolt holes in flange using Special Peening Tool and Anvil so that these parts are riveted together. Check endplay adjustment (below). NOTE—Right shaft longer than left.

Endplay Adjustment—When installing shaft, select correct spacer block (see below) so that with spacer installed on pinion shaft between inner ends of axle shafts, shaft endplay will be from a Free fit to .014"

Axle Spacer (Passenger Car)—Three spacer blocks furnished which give four sizes as follows: Narrow —1.0105". Medium—1.0195" and 1.0295". Wide—1.0345".

(Trucks)—Two spacer blocks furnished which give three sizes as follows: Narrow—1.1485". Wide—1.1575" and 1.1675". **These dimensions are taken across ground surfaces.**

NOTE—Spacers should be installed with ground surface toward axle shaft end. Medium (Passenger Car), Wide (Truck) Spacers are ground on all four sides (giving two different sizes as listed above).

REAR AXLE

½ & ¾ TON TRUCKS

Own Make. Semi-floating, hypoid gear type with Torque Tube Drive (½ Ton), Hotchkiss Drive (¾ Ton).
See Rear Axle Section for complete data.
Ratio—4.11-1 (½ Ton), 4.55-1 (Dubl Duti & ¾ Ton).
Backlash—.005-.008". Screw adjustment.

►**Early 1941 ¾ Ton Truck Rear Spring Shifting & 1941 ¾ Ton Panel Rear Spring Noise Corrections**—*See "Rear Spring Seat & Shackle" in Chevrolet Shop Notes.*

Removal, Axle Shaft Removal, Endplay Adjustment: Same as for Passenger Car (above) except that on ¾ Ton model, propeller shaft can be disconnected at rear universal for Rear Axle Removal.
See Passenger Car Rear Axle (above) for data.

REAR AXLE

1½ TON TRUCKS

Own Make. Full-floating, hypoid gear type with Hotchkiss Drive.
See Rear Axle Section for complete data.
Ratio—6.17-1 Std., 5.43-1 Optl. NOTE—Axles identified by prefix letters on part number stamped on top right side of differential housing as follows: 6.17-1—AR or AS (1941), 2AR, 2AS, BR, or BS (1942), 5.43-1—AT or AW (1941), 2AT, 2AW, or BT (1942).
Backlash—.005-.008". Screw adjustment.

►**1941 1½ Ton Panel Rear Spring Noise Correction**—*See "Rear Spring Seat & Shackle" in Chevrolet Shop Notes.*

Removal:—Remove differential cover and axle shafts (see below). Disconnect rear universal by removing two U-bolts from rear yoke (wire trunnions to retain bearings). Slide shaft forward and lower to floor. Remove differential carrier mounting bolts.

Axle Shaft Removal:—Bend lock plate lugs away from capscrew heads, take out 8 capscrews in axle shaft flange, install two ½" x 13 capscrews in tapped holes in flange (between regular screw holes), turn screws up evenly to loosen shaft, withdraw shaft and aluminum gasket. NOTE—Use new aluminum gasket and lock plate when shaft installed.

Wheel Bearing Adjustment:—Remove axle shaft (see above), locknut and adjusting nut lock (within wheel hub), use J-870 wrench and tighten adjusting nut tight, then back off 45°, see that wheel hub turns freely by hand, install lock and locknut, bending lock tangs in notches on both nuts.

TRUCKS SPECIAL EQUIPMENT

REAR AXLE (TWO SPEED):—Optl. on all Trucks.
See Rear Axle Section for complete data.
Ratio—5.64-1 & 8.22-1 Std. 6.17-1 & 8.22-1 Optl.
Backlash—.006-.012". Screw adjustment.
All other data same as for regular axle above.

SHOCK ABSORBERS

Passenger Cars—Delco Model 2200-A, B (Front), 2100-A,B (rear). Double acting, hydraulic, parallel cylinder type. Same as 1940 types except for valve changes due to increased car weight. NOTE—New type rear shock absorber links used on 1942 cars.
See Shock Absorber Section for complete data.

►**Shock Absorber Valve Change to correct 'Crunching' Noise in Front Shock Absorber**—New valve (part #1069124) released during production. Valve marking same as first type. *For complete data, refer to the 'Delco Parallel Cylinder Type' Shock Absorber article in the Shock Absorber Section.*

Truck Models—Delco. Single acting Front and Rear (½ Ton & ¾ Ton). Double acting type Optl.
See Shock Absorber Section for complete data.

FRONT SUSPENSION

PASSENGER CARS

Front Suspension (Passenger Cars): Independent, linked parallelogram type with coil springs.
NOTE—1941 type has larger wheel spindles, new front wheel inner bearings, and longer springs than 1940 design; 1942 type has longer springs than 1941
See Front Suspension Section for complete data.

►**'Crunching' Noise Correction**—See Shock Absorber Valve Change Note above.

NOTE—Make checks with car weight on wheels and special gauge installed at front to level frame.
Kingpin Inclination—4¾° ± ½°.
Caster—0° ± ½°. Adjustable.
Camber—Negative ¼° ± ½°. Adjustable.
Toe In—0-1/16". To adjust, loosen clamp bolts at each end of left tie rod and turn rod. When tightening clamp bolts, tie rod ends must be in alignment with ball studs (to prevent binding).
Steering Geometry—Outer wheel 20°, Inner 24° ± 2°.

TRUCKS

Front Suspension (Trucks): Conventional "I" beam section front axle with Reverse Elliott ends and semi-elliptic springs.
Kingpin Inclination—7°10' (All models except C-O-E and 1942 School Bus), 8° (C-O-E & 1942 School Bus) plus or minus 1° crosswise.
Caster—1¾° (½ & ¾ Ton), 2¾° (1 and 1½ Ton except C-O-E), 3° (C-O-E) plus or minus ½°. Use wedge shims for corrections up to 2°, use bending tools if greater correction required.
Camber—1° ± ½°. Bend cold for minor corrections.
Toe-In—5/64-⅛". Adjust by turning tie rod.
Steering Geometry—Outer wheel 20°, Inner 23° ± 2°.

STEERING GEAR

Steering Gear: Saginaw (Chervolet Pass. Car Type) Worm-and-Roller type (Pass. Cars), Saginaw ball Bearing Worm-and-Nut type (Trucks).
NOTE—Truck Steering Gear changed during 1942
See Steering Gear Section for complete data.

BRAKES

PASSENGER CARS

BRAKES:—Service—Own Make. Hydraulic type. Hand lever applies rear wheel service brakes.
See Brake Section for complete data.
Wheel Cylinders—Diameter: 1¼" (front), 1 3/16" (rear). Sizes stamped under adjusting cup lock spring on wheel cylinder housing.
Drums—Cast iron rim, steel web. Diameter 11".
Lining—Moulded type. Width 1¾". Thickness 3/16". Length per wheel 22⅝".
Clearance—Adjusting Cover (on wheel cylinder) backed off 4 Notches from slight drag position.
Hand Brake:—See Service brakes above.

TRUCKS

BRAKES: Service—Own Make. Hydraulic type. Hand lever applies rear service brakes.
See Brake Section for complete data.
Wheel Cylinders—Diameter 1¼" (front wheels—all models), 1 3/16" (rear wheels—½, ¾ Ton), 1⅜" (rear wheels—¾ Ton Special), 1½" (rear wheels—other models). Size stamped on housing under adjusting cup lock spring.
Drums—Diameter 11" (½, ¾ Ton & front wheel ¾ Ton Special, 14" (rear wheel ¾ Ton Special, front wheels other models), 16" (rear wheel others).
Lining—Moulded type.

Model	Width	Thickness	Length
½, ¾ Ton	1¾"	3/16"	22⅝"
¾ Ton Spec. (Front)	1¾"	3/16"	22⅝"
¾ Ton Spec. (Rear)	2 "	17/64"	38½"
All Others (Front)	2 "	17/64"①	28⅞"
All Others (Rear)	3 "	17/64"	35 13/16"

①—¼" on 1941 Models exc. C-O-E which was 17/64".
Clearance—Adjusting cover backed off 4 Notches (½, ¾, ¾ Ton Special), 5 Notches (All Other Models —Front Wheels), adjusting pinion backed off ¾ turn (All Others—Rear Wheels) from slight drag.
Hand Brake: See Service Brakes above.

MISC. MECHANICAL

Power Operated Convertible Top: Vacuum Power (1941), Electric Type (1942).
See Miscellaneous Section for complete data.

HOOD LOCK: Hood is Alligator type. To raise hood, pull out lock button on instrument panel, pull forward on safety catch under front edge of hood.
Hood Lock Adjustment—*See Chevrolet Shop Notes.*

FRONT END SHEET METAL, RADIATOR GRILLE, & FENDER CAP REMOVAL & INSTALLATION: *See Chevrolet Shop Notes.*

MODEL IDENTIFICATION

Series 1946	1947	1948	Model Designation
DJ	EJ	FJ	Stylemaster
DK	EK	FK	Fleet Master & Fleetline

FLEET MODEL NOTE: Special Economy Engine available for all models. May be identified by special Tune Up Specification Plate on Push Rod Cover listing special settings and Fleet Car Identification Plate on instrument panel to right of the glove compartment. Special carburetor used (has stop-pin which limits throttle opening to ½ throttle).

SERIAL NUMBER: First No. 1001 with model prefix as indicated in model designation above. Stamped on plate on right front body hinge pillar (Pass. Cars),

ENGINE NUMBER: Stamped on right side of crankcase to rear of distributor with prefix to indicate engine type and plant as follows:

Engine Type	Flint	Tonawanda
1946 Pass. Cars	DAA	DAM
1947 Pass. Cars	EAA	EAM
1948 Pass. Cars	FAA	FAM

TUNE-UP

COMPRESSION PRESSURE: 110 lbs. minimum (cylinders equal within 5-10 lbs.) at cranking speed of 210-220 RPM.

VACUUM READING: Steady 17-21" at idling speed.

FIRING ORDER: 1-5-3-6-2-4.

SPARK PLUG GAPS: .040".
Plug Type—AC No. M-8 (see Note). 10 mm.
►*No. 104 can be used for sustained high speeds.*
M-8 Spark Plug Note—Improved type plug with increased clearance between insulator and shell (to prevent carbon and lead deposits forming in this area and causing short or misfiring at 45-60 MPH car speed) now available and can be identified by groove at base of shell directly above threads. All M-8 plugs are new aluminum oxide insulator type with skirt at lower end around electrode designed to retain heat and burn off carbon deposits.
►**M-8 Installation Caution**—Use steel gasket with these plugs. Install plugs finger tight, then tighten with wrench (11/16" deep socket) an additional ½-¾ turn (with new gasket), ⅛-¼ turn (old gasket) or with torque of 15 ft. lbs. (except new type M-8 plugs with identifying groove—10-12 ft. lbs).
CAUTION—Do not overtighten new type M-8 plugs (with identifying groove). These plugs have thin shell and must not be tightened more than 10-12 ft. lbs.

IGNITION: *See Coil, Condenser, and Distributor.*
Breaker Gap—.018" in service. Limits .015-.022". Set new points at .020-.024" (to allow for seating).
Cam Angle or Dwell—39° closed, 21° open.
Breaker Arm Spring Tension—17-21 ozs.
Automatic & Vacuum Advance—*See Distributor.*

IGNITION TIMING: 5° BTDC.
Timing Procedure—*See Ignition Timing.*
Timing Mark—Steel ball insert in flywheel lined up with pointer in inspection hole in right front face of housing with Octane Selector set at "0". Then adjust Octane Selector as follows:
Octane Selector Setting—Set for slight ping when accelerating engine with wide open throttle.

CARBURETION: *See Carburetor & Carb. Equipment.*
Idle Setting—1¼-2¼ turns open (screw set for smooth idle with warm engine—turn out for richer mixture).
Idle Speed—450-500 RPM. with warm engine.
Float Level—½" top of float to gasket seat (machined surface) on cover with valve seated (invert to check).
Accelerating Pump—No seasonal adjustment.
Fuel Pump Pressure—4 lbs. maximum.

MANIFOLD HEAT CONTROL: Thermostatic type. Check for free operation when tuning engine. Spring should be wound up just enough to slip end over manifold pin (approx. ½ turn). CAUTION—Excessive tension may cause valve to stick with detonation and poor performance.

►**VALVE TAPPET CLEARANCE:** *CAUTION—Engine temperature must be "normalized" before adjusting. See "Tappet Clearance Adjustment" in Chevrolet Shop Notes.*
Std. Engine—.006" (.006-.008") Intake, .013" (.013-.015") Exhaust with engine normalized.
Economy Engine—.010" Intake, .016" Exhaust with engine normalized.

Valve Timing Check: *See Valve Timing.*
►*CAUTION—1948 Engines have new Valve Timing (applies also to 1946-47 Engines with new Replacement Timing Gear).*

STARTING: *See Battery, Starter, Generator, Regulator.*

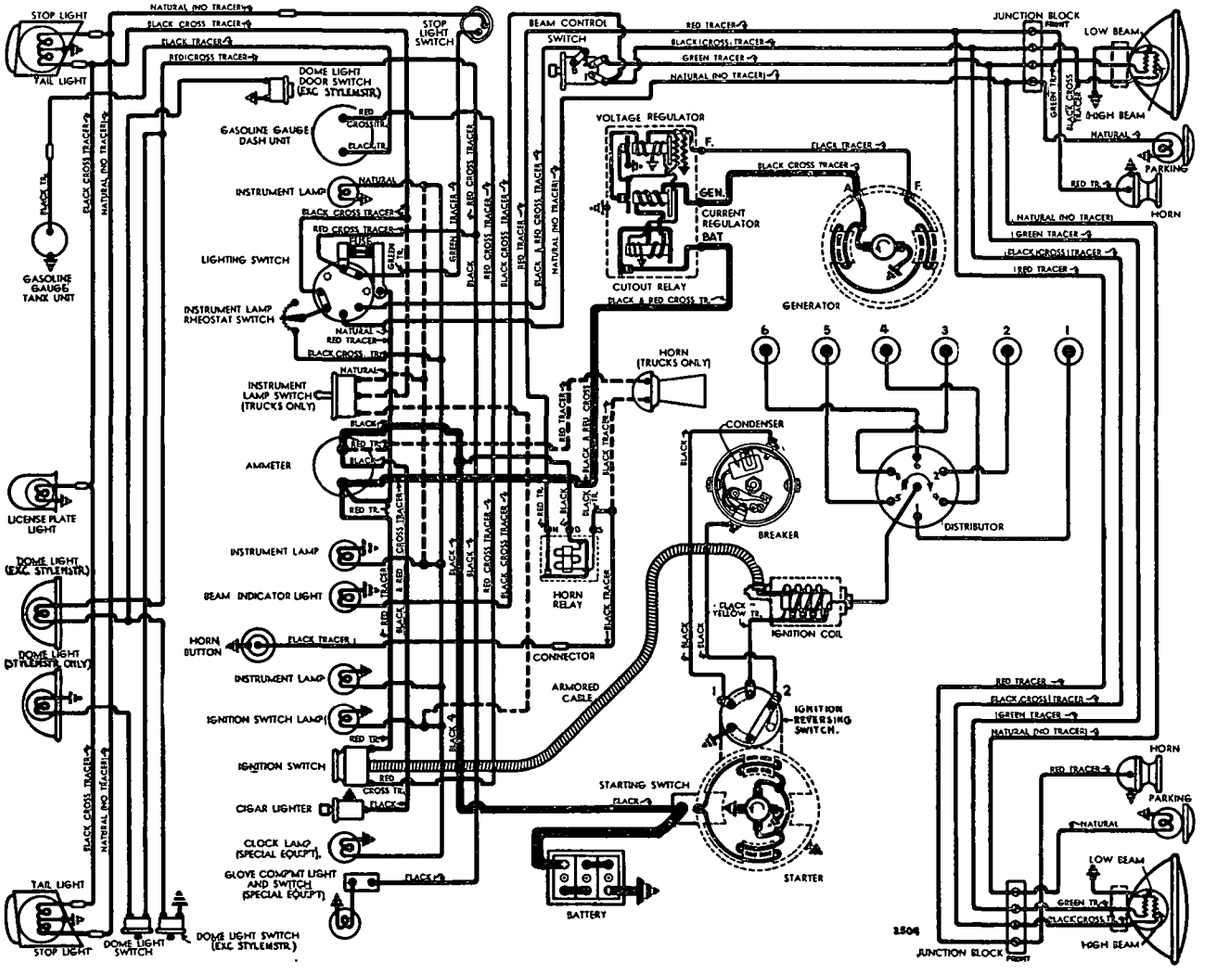

1946-47 CARS (SEE 1948 DIAGRAM F R IGNITION WIRING WITHOUT REVERSING SWITCH)
►NOTE—ARM RED CABLE (IGNITI N SWITCH T C IL) N T USED ON 1947 CARS

IGNITION

1946-47-48 (WITH REVERSING SWITCH)

IGNITION SWITCH: Delco-Remy. (1946) No. 1116304, (1947) No. 1116454, (1948) No. 1116452. Armored cable (switch to coil) used on 1946 type only.
1948 Switch Note—Has special "Off-Unlocked" position (to right of "On" position).
Ignition Lock—Briggs & Stratton Lock Cylinder.
(1946-47)—No. 45792 (Coded), 45791 (Uncoded).
(1948)—No. 600114 (Coded), 600088 (Uncoded).
Key Series—No. 8000 to 9499. Groove—No. 15.

Ignition Reversing Switch: Delco-Remy No. 1907122. Mounted on starter and operated by starting pedal
See Electrical Equipment Section for complete data.

►**Removing Reversing Switch from Ignition Circuit**—If switch removal necessary, *see "Ignition Reversing Switch" in Chevrolet Shop Notes for re-working data.*

IGNITION COIL: Delco-Remy (1946) No. 1115141, ('47-48) No. 1115380. On engine above distributor.
1946 Note—Armored cable from coil to switch.
Ignition Current—2.5 amperes idling, 4.5 stopped.

CONDENSER: Delco-Remy Part No. 1882239.

►***CAUTION—This condenser used only on cars with REVERSING SWITCH. Must not be used without switch.***
Capacity—.28-.34 microfarad.

DISTRIBUTOR: Delco-Remy No. 1110090. Single breaker, 6 lobe cam full automatic advance type with vacuum spark control and Octane Selector
NOTE—Distributor has insulated breaker plate and ground terminal for use with Reversing Switch.

►**Distributor Change for use Without Reversing Switch**—*See "Ignition Notes" in Chevrolet Shop Notes.*
Breaker Point Set—Delco-Remy No. 1882391.
Breaker Gap—.018" in service. Limits .015-.022". Set new points at .020-.024" (to allow for seating).
Cam Angle—39° closed, 21° open.
Breaker Arm Spring Tension—17-21 ozs.
Rotation—Clockwise viewed from above.

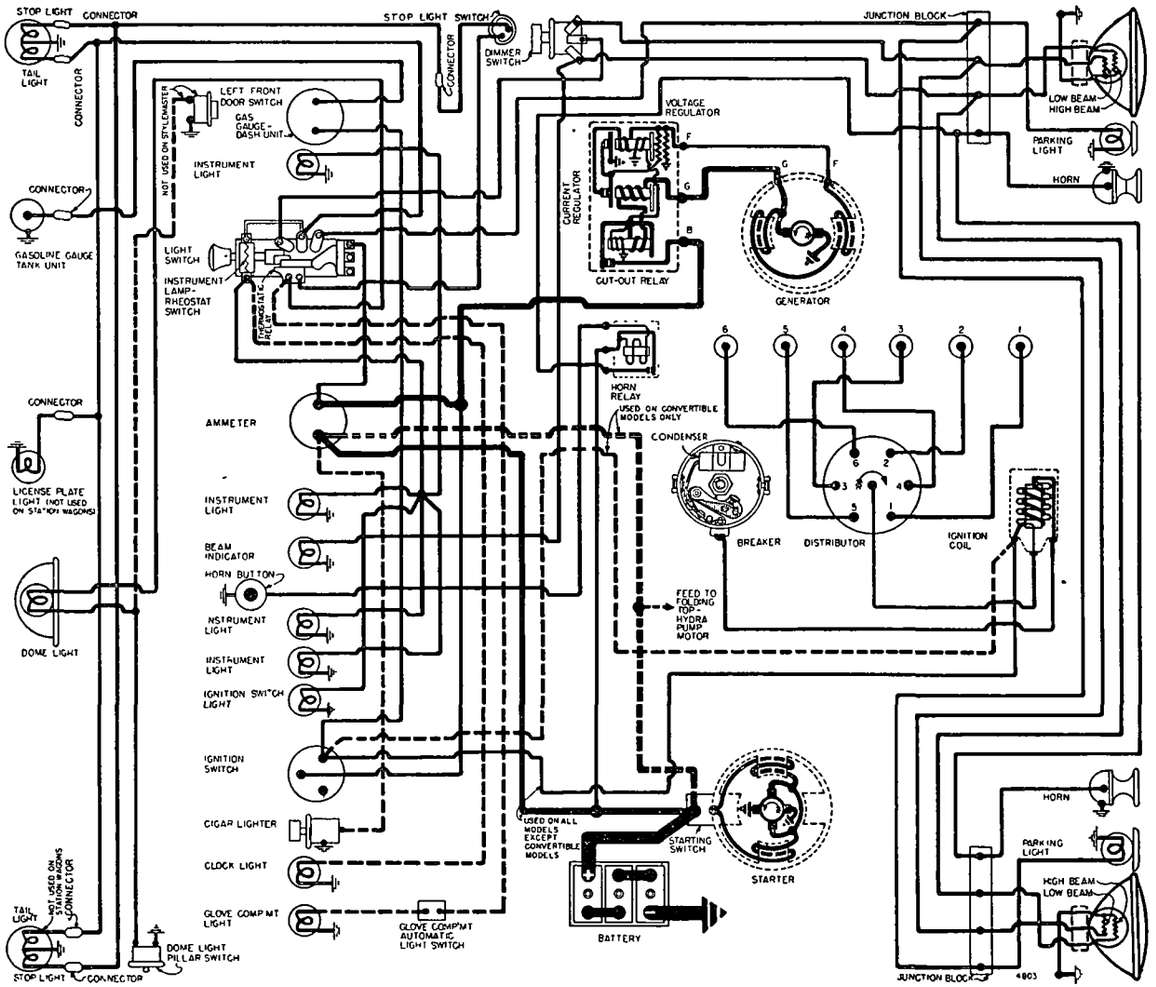

1948 CARS (SEE 1946-47 DIAGRAM FOR REVERSING SWITCH USED ON FIRST CARS)

Distr. Degrees	Automatic Advance RPM	Eng. Degrees	RPM.
Start	350	3	700
6.5	600	13	1200
12.25	1000	20.5	2000
19	1700	38	3400

Octane Selector—Adjustment on distributor provides 10° advance or retard from center '0' position. See Ignition Timing for adjustment instructions.

Vacuum Spark Control: Delco-Remy No. 1116043. On Octane Selector, linked to advance arm. Provides additional advance at speeds abov idling except when engine accelerated or operated with wide open throttle when spark retarded by return spring in unit. **Plunger Travel—17/64".**

Vacuum Advance

Distr. Degrees	Eng. Degrees	Vacuum (" of HG)
Start	0°	7-8.5"
10°	20°	16-19"

Removal:—Distributor mounted on right side of crankcase. To remove, loosen advance arm clamp bolt (does not disturb vacuum connections).

IGNITION

LATE 1948 (WITHOUT REVERSIN SWITCH)

IGNITION SWITCH: Same as listed above.
COIL: Delco-Remy No. 1115380. Above distributor.
Ignition Current—2.5 amperes idling, 4.5 stopped.

CONDENSER: Delco-Remy Part No. 1869704.

►***CAUTION—This condenser must be used for ignition systems without reversing switch.***
Capacity—.18-.25 microfarad.

DISTRIBUTOR: Delco-Remy No. 1112353. Single breaker, 6 lobe cam, full automatic advance type with vacuum spark control and Octane Selector.

►NOTE—This distributor has larger breaker plate grounded directly to housing and special breaker point set.
Breaker Point Set—Delco-Remy No. 1855720.
Breaker Gap—.018" in service. Limits .015-.022". Set new points at .020-.024" (to allow for seating).
Cam Angle—39° closed, 21° open.
Breaker Arm Spring Tension—17-21 ozs.
Rotation—Clockwise viewed from above.
Automatic & Vacuum Spark Advance—See first type No. 1100090 Distributor above.

IGNITION TIMING

Std. Setting	Flywheel Degrees	Piston Position
All Engines	5° BTDC	.0091" BTDC

NOTE—See Octane Selector Setting (below) for final setting dependent on operating conditions
Timing (Neon Light)—Recommended method. Connect neon light to #1 spark plug, direct light on flywheel through inspection hole in right front face of housing. Set Octane Selector pointer at '0'. Idle engine, loosen advance arm clamp bolt, rotate distributor until ignition mark (steel ball insert in flywheel) lines up with pointer. Tighten clamp bolt and check Octane Selector setting.
Timing (Without Neon Light)—With #1 piston on compression, turn engine over until piston is 5° or .0091" before top dead center with ignition mark (steel ball insert in flywheel) at pointer in inspection hole in right front face of housing. Adjust distributor as directed above.

CONTINUED ON NEXT PAGE

C NTINUED FR M PRECEDING PAGE

Octane Selector Setting—Set for slight ping when accelerating engine with wide open throttle. To adjust, loosen hold-down screw, move distributor and scale counter-clockwise to advance spark (if no ping), clockwise to retard spark (if too severe).

CARBURETOR

Carter (Chevrolet) Type 574S (Std.), 616S (Econ. Models). 1¼", single barrel, downdraft types with manual choke control. NOTE—Carburetors marked by Casting No. 421 (574S), 432 (616S) on flange.
See Carburetor Section for complete data.

Settings (Idle Setting, Float Level, and Accelerating Pump): *See Tune-Up data.*
Metering Rod & Jets—*See Carter Jet Table in Carburetor Section for complete data.*

Throttle Cracker (1946): Opens throttle 1/3 for starting. To adjust, with idle speed correctly set at 450-500 RPM., loosen locknut and adjust bolt on accelerator pedal rod lug for ⅛" clearance between head of bolt and lug on starter pedal cross-shaft.

CARB. EQUIPMENT

Air Cleaner (Pass. Cars): AC No. 1529667 oil-wetted type Std. No. 1528964 heavy duty oil-bath type Optl. Filter Element AC No. 1528152.
Servicing (Oil-wetted Type)—Remove and wash filter element in gasoline, re-oil by dipping in engine oil at 2000 mile intervals or more often if required by operating conditions.
Servicing (Oil-bath Type)—Remove and wash filter element in gasoline, clean oil reservoir and fill to level of indicator line (approx. 1 pint) with SAE No. 50 engine oil (summer temperatures) at 2000 mile intervals or more often if required.

Fuel Pump: AC Type AF, No. 1523089. Diaphragm type.
Replacement Pump—AC No. 429.
Pressure—4 lbs. maximum.
See Carburetion Equipment Section for data.

Gasoline Gauge: AC electric type. AC Nos.:
Dash Unit—(1946) No. 1516405, (1947-48) 1516991.
Tank Unit—No. 1516280 (All Models).
See Carburetion Equipment Section for data.

BATTERY

Delco Type 15X-3 (First), 15AA-4 (Later). 6 volt, 15 Plate, 100 Ampere Hour (20 hour rate).
Starting Capacity—120 amperes for 20 minutes.
Zero Capacity—300 amperes for 3.6 minutes. Five second voltage 4.2 volts.
Grounded Terminal—Negative (—) terminal.
Dimensions—Length 9". Width 7". Height 8⅝".
Location—In engine compartment on right side

STARTER

Delco-Remy—Various models used as follows:
1107061 (With Rev. Switch)—First LHD. cars.
1107055 (No Rev. Switch)—Later LHD. cars.
1107063 (With Rev. Switch)—First RHD. cars.
1107076 (No Rev. Switch)—Later RHD. cars.
Armature—Delco-Remy No. 1867897.
Drive—Overrunning clutch and manual pinion shift (LHD. Starters), solenoid pinion shift (RHD. Starters).
Rotation—Counter-clockwise at commutator end.
Brush Spring Tension—24-28 ozs. each.
Cranking Engine—65 RPM., 150 amperes, 5.5 volts.

Performance Data

Torque	R.P.M.	Volts	Amperes
0 ft. lbs	5000	5.0	65
12 "	Lock	3.37	525

Removal:—Starter flange mounted on right front face of flywheel housing. To remove, disconnect starting pedal linkage and Reversing Switch wires. Take out flange mounting screws, remove starter and switch.

Starting Switch (1107055 & 1107061 Starters): Delco-Remy No. 820052. Mounted on starter. Pedal operated.
(1107063 & 1107076 Starters)—Delco-Remy solenoid switch on starter, controlled by pushbutton switch No. 1996031 on instrument panel.
See Electrical Equipment Section for complete data.

GENERATOR

Delco-Remy Model 1102667 (Std.), 1102677 (Spec. Equip.), 1106403 (City Police). Two brush (shunt) types with voltage and current regulation. Ventilated by fan on drive pulley.
Armature No.—1879002 (1102667), 1881389 (1102677).
Charging Rate Adjustment—None. See Regulator.
Maximum Charging Rate (Std. Gen.)—36 amperes, 7.4 volts, 2400 RPM. or 25.7 MPH. (Pass. Cars).

Performance Data—Cold

	Amperes①	Volts	R.P.M.
1102667	30	8.0	1750
1102677	26	8.0	1450
1106403	35	8.0	1040

①—Not maximum output—See Current Regulator.
Rotation—Counter-clockwise at commutator end.
Brush Spring Tension—25 ozs. each.
Field Current—1.75-1.9 amperes (1102667 & 1102677), 1.77-2.0 amperes (1106403) at 6.0 volts.

Removal:—Generator pivot mounted at left front of engine. To remove, take out pivot and clamp bolts.

Belt Adjustment: Loosen clamp bolt, swing generator out for ¾" belt deflection (light pressure) midway between generator and fan pulleys.

REGULATOR

Delco-Remy Model 1118201 (1102667 Gen.), 1118233 (1102677 Gen.), 1118229 (1106403 Gen.). Vibrating type Voltage and Current Regulators in case with Cutout Relay.
See Electrical Equipment Section for complete data.
CAUTION—Check generator for grounded field coils and leads before changing regulator settings

Cutout Relay

Cuts In—6.2-6.7 volts hot.
Cuts Out—0-4.0 ampere discharge current.
Contact Gap—.020" (same for both sets).
Air Gap—.020" (with contacts just closed).

Voltage Regulator

Setting—7.2-7.4 volts Hot (1118201), 7.0-7.2 volts Hot (All Others) at operating temperature.
Checking & Adjustment—*See Electrical Equipment Section.*
Air Gap—.070" between center of core and armature with contacts just closing (press down on armature to open contacts, release pressure, check gap at point where contacts just close).

Current Regulator

Setting—34-36 amperes (1118201, 1118229), 24-26 amperes (1118233) Hot or at operating temperatures.
Checking & Adjustment—*See Electrical Equipment Section.*
Air Gap—.080" (check same as Voltage Regulator).

LIGHTING

Headlamps: Guide "Sealed Beam" type. Upper and lower beams controlled by Beam Selector Switch on toeboard.
See Electrical Equipment Section for complete data.
Adjustment—Aim upper beams straight ahead (hot spot center 3" below lamp center height at 25 ft.).
Beam Indicator—Red dot on speedometer dial. Lighted when upper beams in use.

Direction Signal: *See Electrical Equipment Section.*
Direction Signal Indicator—Pilot light in switch case. Lighted when Right or Left Dir. Signal "on".

Switches

Lighting—Delco-Remy. (1946-47) No. 1994022 (1948) 1995031. Switch has instrument light rheostat (controlled by rotating switch knob).
Beam Selector—Delco-Remy No. 1997008.
Glove Box—Delco-Remy 1997742 or 1997834.
Stop Light—Delco-Remy No. 1997901 (mechanical type operated by brake pedal arm).
Stop Light (Panel & Suburban)—Delco-Remy No. 594504 or 594505.

Bulb Specifications

Position	Candlepower	Mazda No.
Headlamps		Sealed Beam
Parking (Without Dir. Sig.)	3	63
Parking & Direc. Signal	21-3	1154
Instrument, Spdmtr.	1½	55
Clock, Glove Compt.	1½	55
Beam Indicator	1	51
Tail & Stop (See Note)	21-3	1154
Rear License Plate	3	63
Dome	6	82

MISC. ELECTRICAL

LIGHTING FUSE (1946-47): 30 ampere. On back of lighting switch (protects lighting circuits).

LIGHTING CIRCUIT BREAKER (1948): 30-ampere thermostatic type. On back of lighting switch (protects lighting circuits).

HORNS (Passenger Cars): Delco-Remy No. 1999533 (Low Note), 1999534 (High Note). Vibrator type twin horns operated by horn relay.

Type	Current (at 6 volts)	Air Gap
1999533 (low note)	19-21 amperes	.044-.049"
1999534 (high note)	18-20 amperes	.034-.039"

Horn Relay (Pass. Cars):—Delco-Remy No. 1116775.
Contact Gap—.025". **Air Gap**—.015" (closed).
Contacts Close—2.75-4.0 volts.

ENGINE

ENGINE SPECIFICATIONS: Own 216". Six Cylinder, Valve-in-Head type.
Bore—3½" (3.4995-3.5015"). **Stroke**—3¾".
Displacement—216.5 cubic inches. **Rated HP**—29.4.
Developed Horsepower—90 at 3300 RPM.
Compression Ratio—6.5-1 Std. Cast Iron Head.
Compression & Vacuum Reading—*See Tune-up data.*

ENGINE REMOVAL: *See Chevrolet Shop Notes.*

ENGINE MOUNTINGS (Installation & Adjustment): *See Chevrolet Shop Notes.*

TIGHTENING TORQUES: *See Chevrolet Shop Notes.*

CYLINDER HEAD INSTALLATION: *See Chevrolet Shop Notes.*
Cylinder Head Gasket Note—Use new gasket and install with side marked "THIS SIDE UP" as indicated. Use two cylinder head guide pins (installed in front and rear holes on manifold side) to align head with block and maintain head gasket position.

ENGINE

C NTINUED FR M PRECEDING PAGE

PISTONS: Passenger Cars. Cast alloy iron, flat head, cam ground, tin plated type with slipper skirt.

Trucks—Same as Passenger Car type except heavier. Truck pistons marked with small boss on underside of each piston pin boss. CAUTION—Do not interchange pistons (must be alike in one engine).

Weight—1.56 lbs. (Pass. Cars). **Length**—3.75" min.

Removal—Pistons and rods removed from above.

Clearance—Top .0155-.0235". Skirt selective fit. See Fitting Pistons.

Replacement Pistons: *See Chevrolet Shop Notes.*

NOTE—To install new pistons, hone cylinder for .005" oversize, rebore and hone for other sizes (rebore .002" less than piston oversize, finish by honing for piston clearance below). Bore taper and out-of-round must not exceed .001".

Fitting New Pistons:—Use feeler gauge between piston and cylinder wall at right angles to pin bosses. Piston should pass through bore with light pressure on .0015" feeler and lock on .003" feeler.

PISTON RINGS: Two taper face compression rings (with greatest diameter at bottom), one oil control ring per piston, all above pin. Oil ring groove drilled for oil drainage. NOTE—New wide-slot, quick-seating oil rings used on 1947-48 engines.

Ring	Width	End Gap①	Side Clearance
Compr.	.1235-.1240"	.005-.015"	.0015-.003"
Oil Conr.	.1860-.1865"	.005-.015"	.002-.0035"

①—End Gap limit 1/32" max. (worn).

②—Side clearance check—smaller feeler should be free, larger feeler should produce a heavy drag.

Installing Rings—Mark "TOP" on side of compression rings must be upward.

Replacement Rings:—Furnished Standard size and .005", .020", .030", .040" Oversize.

Expander Type Rings—Furnished for use in cylinder bores of indicated oversizes as follows: Standard (Bore Std. to .009" Oversize), .020" Oversize (Bore .010" to .029" Oversize—ring gaps must be filed for bores less than .020" Oversize), .030" Oversize (Bore .030" to .039" Oversize), .040" Oversize (Bore .040" to .049" Oversize).

PISTON PIN: Diameter.—.8645-8650". **Length** 3.135-3.165". Pin locked in rod (piston bronze bushed). **Pin Fit in Piston**—Thumb push fit (at room temp.).

Replacement Pins:—Std. & .003", .005", .010" oversize. NOTE—New pistons fitted with bushings and pins. If bushings reamed, use piston pin bushing fixture to insure reaming at right angles to piston skirt.

CONNECTING ROD: Length 6 13/16". Weight 30.7 ozs.
Crankpin Journal Diameter—2.311-2.312".
Lower Bearing—Spun high-lead babbitt lined.

►*NOTE*—1948 bearings are new thin-wall babbitt type and rods are 1/16" narrower to fit new crankshaft.

Clearance—.0003-.0013" selective fit (see Bearing Adjustment following).

Sideplay—.004-.012" at lower end (rod to crankpin), .015" minimum at upper end (rod to piston pin boss).

Bearing Adjustment:—Solid shims. Remove shims equally at both sides to secure 'snap fit' (rod tight to hand but should snap from one side to the other with light tap of 8 oz. hammer), **then replace one .002" shim on one side for clearance** (if unequal number, place extra shim on camshaft side). Bearing clearance correct when rod can be snapped back and forth on crankpin with one hand (grasp bearing cap between thumb and index finger to test).

Palnut Note—Palnuts used to lock rod bolt nuts. Use new palnut (install with open side toward end of bolt), turn palnut up finger tight against rod bolt nut, then tighten palnut ½ turn additional.

Installing Rods:—Numbers on rods and caps must be together and installed in same numbered cylinder with numbers and pin clamp bolt toward camshaft side. Install oil dippers on rods with mouth toward camshaft side of engine. Check dipper height.

Dipper Height Adjustment—*See "Oiling System" in Chevrolet Shop Notes.*

CRANKSHAFT: 1948 crankshaft new heavier four-bearing type with integral counterweights and vibration dampener (harmonic balancer).

Vibration Dampener Data—*See Chevrolet Shop Notes.*
Journal Diameters—#1, 2.6835-2.6845"; #2, 2.7145-2.7155"; #3, 2.7455-2.7465"; #4, 2.7765-2.7775".

NOTE—Journal taper or out-of-round limits .001". Run-out limits for #2 and #3 journals .002".

Bearing Type—Steel-backed, babbitt-lined type. Bearings are "doweled" in place by projection on shell engaging hole in crankcase and bearing cap.

►*NOTE*—1948 bearings are new "Precision" type thin-wall babbitt (can be replaced singly).

►*Precision type bearings do not require line-boring or reaming (all replacement bearings precision type).*

►*CAUTION—#1 (front) and #2 (front intermediate) bearings similar in appearance but must not be interchanged. #2 bearing marked by letter "I" in oil groove.*

Clearance—(1946-47) .002-.004", (1948) .0007-.0024" selective fit. See bearing Adjustment (below).

►*NOTE—Precision type bearings can be replaced singly. Entire set must be installed initially on 1946-47 engines not previously equipped with "precision" bearings.*

Bearing Adjustment:—Solid shims. Remove shims until slight drag secured when shaft turned by hand, **then replace one .002" shim on one side for clearance** (if unequal number of shims used, place extra shim on same side for all bearings).

Replacement Bearings: New "Precision" type bearings furnished for all engines Std. size and .002", .010", .020", .030" Undersize. NOTE—Bearings for 1947 & previous engines stamped "V" on inner surface of dowel.

►*CAUTION—Complete bearing set (4 bearings) must be installed initially on 1946-47 engines not previously equipped with these precision bearings.*

►**Bearing Installation**—*Not necessary to remove crankshaft or engine from car. See "Crankshaft & Main Bearings" in Chevrolet Shop Notes.*

Bearing Cap Installation—Intermediate (#2 & 3) bearing caps marked for identification. Install #2 cap with mark "FRONT" toward front of engine, #3 cap with mark "REAR" toward rear of engine.

►*CAUTION—Rear intermediate (#3) bearing is special flanged type (takes end thrust).*

Crankshaft Oil Seal Servicing: *See Chevrolet Shop Notes for Front (Timing Gear Cover) and Rear Oil Seals.*

End Thrust: Taken by #3 (rear intermediate) bearing. To check endplay, force crankshaft to rear, check clearance at rear of #3 bearing. Adjust by replacing bearing.

Endplay—.004-.007".

CAMSHAFT: Four bearing type. Helical gear drive.
Journal Diameters—#1, 2.0282-2.0292"; #2, 1.9657-1.9667"; #3, 1.9032-1.9042"; #4, 1.8407-1.8417".

NOTE—Journal out-of-round limits .001". Run-out limits .002" (straighten if run-out excessive).

Bearing Type—Steel-backed, babbitt-lined bushings (staked in place). NOTE—New bearings must be line-reamed. **Clearance**—.002-.004".

Bearing Installation—*See Chevrolet Shop Notes.*

End Thrust:—Taken by thrust plate behind camshaft gear (gear position on shaft controls endplay).
Endplay Adjustment—*See Chevrolet Shop Notes.*
Endplay—Free fit to .003" maximum.

Timing Gears: Crankshaft gear steel. Camshaft gear Bakelite and Fabric composition.

Max. Gear Runout—.003" crankshaft, .004" camshaft.

►**1948 235" Truck Engine Timing Gear Set**—New aluminum camshaft gear with bonded steel hub used with crankshaft gear having crowned teeth.

Replacement Timing Gears—*See Chevrolet Shop Notes.*

►*CAUTION—Replacement crankshaft gear (with relocated keyway) will change Valve Timing on 1946-47 engines equipped with previous type gear. See Valve Timing.*

Timing Gear Installation & Alignment—*See "Timing Gears" in Chevrolet Shop Notes.*

Timing Gear Backlash—.003-.004".

Camshaft Setting:—Gears punch marked. Punch marks on both gears must be lined up and directly opposite each other.

►*CAUTION—Above timing marks correct for all engines but valve timing different on Late 1947 & 1948 engines with new crankshaft gear (and earlier engines with this gear as replacement). See Valve Timing.*

VALVES:	Head Diam.	Stem. Diam.	Length
Intake	1 41/64"	.3410-.3417"	6.205-6.235"
Exhaust	1 15/32"	.3400-.3407"	4.839-4.869"

	Seat Angle	Lift	Stem Clearance
Intake	30°	.2941"	.001-.003"
Exhaust	30°	.3118"	.002-.004"

►**Valve Identification Note**—1946-47 Valves (without valve stem oil seals) marked "41" and have 1 stem groove. 1947-48 Valves (with valve stem oil seal) marked "GM" and have 2 stem grooves.

Valve Installation (1946-47 Type without Valve Stem Oil Seals): Use special valve spring cap for each valve (INTAKE—.080" thick, round, double flanged

C NTINUED ON NEXT PAGE

ENGINE

CONTINUED FROM PRECEDING PAGE

or stamped "IN", EXHAUST—Octagonal or round and stamped "X") and umbrella type cap cover (INTAKE—⅝" overall height, EXHAUST—¼" overall height). NOTE—Cap covers reduce amount of oil on valve stems, controlling oil consumption and smoking when idling.

Valve Installation (1947-48 Type with Valve Stem Oil Seals): Special synthetic rubber oil seal ring installed in groove in valve stem directly below seat locks (retained by valve cap). NOTE—New type longer valve spring cap is used (interchangeable for intake & exhaust valves—may be identified by 1/16" annular groove on top surface). No cap covers used with this type assembly.

Valve Stem Oil Seal Installation—*See "Valve System" in Chevrolet Shop Notes.*

Valve Guides: New precision type. Pressed in head.

Valve Guide Installation—*See "Valve System" in Chevrolet Shop Notes.*

Valve Springs: Install springs with closed-coil end toward cylinder head. Check springs with KMO-607 Tester, replace if outside limits of 124-140 lbs. at 1½". Spring free length 2⅛".

	Spring Pressure	Length
Valve Closed	53-63 lbs.	1.821"
Valve Open	124-140 lbs.	1.505"

Valve Lifters: Barrel type with pushrod seat brazed on upper end. Lifter diameter .989-.990".

Clearance—.001" (selective free fit).

Rocker Arm Assembly: Armasteel type (no bushings). Four types of rocker arms used as follows:

Intake—No. 839463 (Left), 839464 (Right).

Exhaust—No. 839459 (Left), 839460 (Right).

Rocker Shaft Diameter—.7910-.7917" (bore diameter in rocker arm .7925-.7935").

Rocker Arm Assembly & Installation—*See "Valve System" in Chevrolet Shop Notes.*

VALVE TIMING

►**VALVE TAPPET CLEARANCE:** *CAUTION—Engine temperature must be "normalized" before adjusting. See "Tappet Clearance Adjustment" in Chevrolet Shop Notes.*

Std. Engine—.006" (.006-.008") Intake, .013" (.013-.015") Exhaust with engine normalized.

Economy Engine—.010" Intake, .016" Exhaust with engine normalized.

VALVE TIMING: See Camshaft Setting above.

►*VALVE TIMING CHANGE—New Valve Timing used on Late 1947 Engines (Beginning Flint No. 572254) & All 1948 Engines.*

1946-47 VALVE TIMING

►Before 1947 Flint Engine No. 572254

►(with Original Crankshaft Gear)

Intake Valves—Open 3° BTDC. Close 35° ALDC.

Exhaust Valves—Open 46° BLDC. Close 5° ATDC.

1947-48 VALVE TIMING

►Beginning 1947 Flint Engine No. 572254

►*CAUTION—This new Valve Timing applies also to 1946-1947 Engines with new Replacement Crankshaft Gear.*

Intake Valves—Open 1° ATDC. Close 39° ALDC.

Exhaust Valves—Open 42° BLDC. Close 9° ATDC.

Valve Timing Check—Remove all tappet clearance from #1 exhaust valve, turn engine over until this valve just starts to close and until triangular flywheel mark lines up with pointer in right front face of flywheel housing, mount dial indicator on rocker shaft support with stem contacting #1 exhaust valve adjusting screw, set indicator dial at .036" (1946 and 1947 Engines before Flint No. 572254 with original crankshaft gear only), .044" (1947 Engines beginning Flint No. 572254, All 1948 Engines, and 1946-47 engines with replacement crankshaft gear). Turn crankshaft until indicator hand just stops moving. Timing is correct if indicator reading is ZERO plus or minus .004". Reset tappet clearance at correct running figure (above).

LUBRICATION

Engine Oiling System: Pressure and positive splash system. Pressure to main bearings, camshaft bearings, timing gears, and to overhead valve system (low pressure). Connecting rod bearings lubricated by oil dippers which scoop oil from troughs (low speed) and directly from nozzles (high speed). Oil is divided between high and low pressure systems by Oil Distributor Valve on left side of engine.

CAUTION—Engine lubrication dependent upon adjustment of connecting rod dippers, oil troughs, and nozzles which must be checked each time the oil pan is removed (requires special gauges).

Checking Oiling System—*See "Oiling System" in Chevrolet Shop Notes.*

Crankcase Capacity—5½ qts. (dry), 5 qts. (refill).

Normal Oil Pressure—14 lbs. at 39 MPH.

Oil Pressure Regulator—Located oil pump cover. Opens at 60 lbs. Non-adjustable type. Pressure normally controlled by Oil Distributor Valve on left side of engine which opens at 15 lbs.

Rocker Arm Oil Lead & Overflow Pipe Servicing: *See "Oiling System" in Chevrolet Shop Notes.*

Oil Pump: Located in crankcase. Driven independently through short shaft by gear on camshaft.

Oil Pump Installation—Assemble ground side of idler gear toward cover (use Chevrolet cover gasket only—controls pump clearance). Oil pump assembly mounted in crankcase by tapered setscrew. See that screw seated firmly in tapered hole in pump housing before tightening locknut.

Oil Distributor: *See "Oiling System" in Chevrolet Shop Notes.*

Checking Oiling System: Check entire system (Dipper Height, Oil Pan Trough Height, Oil Nozzle Height & Aim) each time oil pan removed.

See "Oiling System" in Chevrolet Shop Notes.

CAUTION—Special checking gauges required for each type engine (Oil pan changed beginning 1947, same pan now used on all engines).

Crankcase Ventilation: Air intake through valve rocker cover (air cleaner on some models), outlet through pipe on right side of engine (combination oil filler and crankcase ventilator outlet).

Servicing—On all models with air cleaner mounted on valve rocker cover, wash filter element with solvent and re-oil at 2000 mile intervals or more often if required by operating conditions.

COOLING

Cooling System: Positive circulation with water pump on front of engine. Pressure type (relief valve) radiator cap used on 1948 cars.

Pressure Valve—AC No. 850501 (Radiator Filler Cap). Opens at 4 lbs.

Capacity—15 quarts.

Radiator Core Removal: *See Chevrolet Shop Notes.*

Water Pump: Double-outlet, packless type with sealed ball bearing shaft.

See Water Pump Section for complete data.

Belt Adjustment—*See Generator Belt Adjustment.*

Thermostat: Harrison. In cylinder head outlet.

Std.—No. 3113995 stamped "143". Starts to open at 140-147°F. Fully open at 170°F.

Optl. (For Anti-freeze)—As follows: 3121254—stamped 151 (for Alcohol Anti-freeze), 3121251—stamped 160 (for permanent anti-freeze only), 3121280—stamped 180 (for permanent anti-freeze only).

Temperature Gauge: AC No. (1946) 1511201, (1947) 1511895, (1948) 1512078. Not electric.

CLUTCH

Own Make. Diaphragm spring, single plate, dry disc type. NOTE—9" clutch used on all cars.

See Clutch Section for complete data.

Facings—Moulded Asbestos, 2 required as follows: 6⅛" I. D., 9⅛" O. D., .132-.138" thick.

NOTE—Borg & Beck Driven Member used on some cars.

Adjustment:—Pedal free travel ¾-1". To adjust, loosen checknut and turn adjusting nut on connecting link at clutch throwout fork. NOTE—Use finger pressure only when checking pedal free travel.

Removal:—Remove transmission (see Transmission Removal below). Remove throw-out bearing, remove fork by prying fork off ball, remove fork mounting (use ¾" wrench). Install Clutch Pilot Tool K-411 (to support clutch), loosen all six cover bolts evenly, remove assembly from below. CAUTION—Do not allow pressure plate to hang on retracting springs (support by hand). When installing clutch align 'X' mark on cover with 'X' mark on flywheel.

TRANSMISSION

Own Make. Three-speed, all helical gear type. Constant-mesh, synchro-mesh (Second & High), sliding gear (Low & Reverse).

See Transmission Section for complete data.

Transmission Control (Passenger Cars): Remote control, vacuum power type with gearshift lever mounted on steering column.

See Transmission Section for complete data.

Removal (except Cabriolet):—Remove front floor mat and floor cover over transmission. Remove outer half of reactionary lever metal boot (work under car) by taking out two bolts fastening halves together. Loosen 3 vacuum cylinder bracket-to-transmission capscrews and reactionary lever assembly-to-transmission operating shaft clamp bolt. Drive assembly from end of shaft with care. Disconnect selector rod from selector lever after removing cotter pin from transmission end of selector rod. Remove 3 vacuum cylinder bracket-to-transmission capscrews and move assembly (bracket, vacuum cylinder and reactionary levers) away from transmission. Disconnect pull rod and brake cables from brake cross shaft and remove cross-shaft. Disconnect speedometer cable. Remove 4 universal joint ball collar-to-retainer capscrews and slide ball back on propeller shaft housing. Remove 4 capscrews which secure front trunnion bearings to the front yoke. Remove 2 front yoke trunnion bearings and split the joint. Push front end of propeller shaft down for clearance. Remove 4 rear transmission mounting-to-frame cross member bolts. Remove two upper transmission-to-clutch housing capscrews and insert guide pins. Remove clutch underpan and two lower transmission-to-clutch housing capscrews. Slide transmission back and lift out through opening in floor.

Removal (Cabriolet):—Transmission removal on this model differs from regular passenger car removal (above) due to use of special 'VK' frame. Removal procedure for Cabriolet as follows: Remove front floor mat and floor cover over transmission. Remove outer half of reactionary lever metal boot by taking out two bolts fastening halves together. Disconnect selector rod from selector lever after removing cotter pin from transmission end of selector rod. Disconnect gearshift control rod by removing cotter pin, washer and anti-rattle spring from transmission end of rod. Disconnect vacuum cylinder piston rod and valve link from reactionary levers. **To prevent upsetting vacuum valve adjustment, replace clevis pin through piston rod yoke and valve link.** Remove vacuum cylinder from mounting bracket. Disconnect pull rod and brake cables from brake cross-shaft and remove cross-shaft. Disconnect speedometer cable. Remove 4 universal joint ball collar-to-retainer capscrews and slide ball back on propeller shaft housing. Remove 4 capscrews which secure front trunnion bearings to front yoke. Remove 2 front yoke trunnion bearings and split the joint. Push front end of propeller shaft down for clearance. Remove 4 rear transmission mounting-to-frame cross member bolts. Remove two upper transmission-to-clutch housing capscrews and insert guide pins. Remove clutch underpan and two lower transmission-to-clutch housing capscrews. Slide transmission back until clutch shaft just free of driven member, raise rear end sufficient to remove transmission rear mounting (free mounting from transmission and move it forward enabling removal of mounting through opening in frame). Pull transmission back and turn it toward the left for clearance and lift out through opening in floor.

UNIVERSALS

Passenger Cars: Own Make. No. 606779. Cross type with surface treated trunnions and bearings. One used (in torque ball behind transmission).
See Universal Section for complete data.

REAR AXLE

Own Make. Semi-floating, hypoid gear type with Torque Tube drive. NOTE—Passenger car axles have new "Revacycle" differential pionion and side gears. *See Chevrolet Shop Notes for markings and identification of these gears.* CAUTION—"Revacycle" and previous type "Involute" gears must not be used together (noise & premature gear failure will result). Interchangeable in complete sets only.
See Rear Axle Section for complete data.
Ratio—4.11-1 Std., 3.73-1 Optl. on Pass. Cars.
NOTE—Axle ratios may be identified by prefix letters of serial number stamped on front face of carrier mounting flange on right side as follows:
►4.11-1 Axle Identification Mark
Detroit Production—('46) DA, ('47) EA, ('48) FA.
Tonawanda—('46) DB, ('47) EB, ('48) FB.
►3.73-1 Axle Identification Mark
Detroit Production—('46) DC, ('47) EC, ('48) FC.
Tonawanda—('46) DD, ('47) ED), ('48) FD.
Backlash—.005-.007". Screw adjustment.

Removal:—Raise rear of car, remove rear wheels and brake drums, install clamps on wheel brake cylinders, disconnect hand brake cables from idler lever and remove cables from cable clamps on frame, disconnect brake line at axle housing and shock absorber links from anchor plate. Remove spring 'U' bolts, disconnect spring shackles and drop springs. Pull axle assembly back to free front end of torque tube, withdraw assembly from beneath car.

Axle Shaft Removal:—Wheel bolted directly on flange on outer end of axle shaft. Shaft retained by 'C' washer on inner end of differential case. To remove axle shaft, remove wheel, take out two 'zipon' nuts retaining brake drum (on second wheel stud at either side of drain hole in drum), remove drum, install clamp on wheel brake cylinder. Remove axle housing cover, differential pinion shaft lock screw, pinion shaft and axle shaft spacer. Push axle shaft in, remove "C" washer on inner end, pull shaft out.

Axle Shaft Endplay—Free fit to .014" maximum.
Axle Shaft Installation & Endplay Adjustment: *See "Rear Axle Notes" in Chevrolet Shop Notes.*

SHOCK ABSORBERS

Passenger Cars—Delco Models 2200-A, B (Front), 2100-A, B (rear). Double acting, Hydraulic, Parallel Cylinder type. NOTE—Front shock absorbers are part of front suspension (upper control arms).
See Shock Absorber Section for complete data.

FRONT SUSPENSION

Passenger Cars—Front Suspension: Independent, linked parallelogram type with coil springs.
See Front Suspension Section for complete data.
NOTE—Make checks with car weight on wheels and special gauge installed at front to provide proper frame height.
Kingpin Inclination—4¾° ± ½°.
Caster—0° ± ½°. Adjustable.
Camber—Negative ¼° ± ½°. Adjustable.
Toe In—0-⅛". To adjust, loosen clamp bolts at each end of left tie rod and turn rod. When tightening clamp bolts, tie rod ends must be in alignment with ball studs (to prevent binding).
Steering Geometry (toe-out on turns)—Outer wheel turned 20°. Inner wheel turned 24° ± 2°.

STEERING GEAR

Passenger Cars—Saginaw Model. Special Chevrolet Passenger Car) Worm-and-Roller type. Chevrolet Part No. 267164 (marked by casting No. 265759).
See Steering Gear Section for complete data.

BRAKES

Service Brakes: Own Make, Hydraulic type. Hand lever applies rear wheel service brakes.
See Brake Section for complete data.
Wheel Cylinders—Diameter: 1¼" (front), 1 3/16" (rear). Sizes stamped under adjusting cup lock spring on wheel cylinder housing.
Drums—Cast iron rim, steel web. Diameter 11".
Lining—Moulded type. Width 1¾". Thickness 3/16". Length per wheel 22⅝".
Clearance—Adjusting Cover (on wheel cylinder) backed off 4 Notches from slight drag position.
Braking Power—47½% rear wheels, 52½% front.
Hand Brake:—See Service brakes above.

MISC. MECHANICAL

CONVERTIBLE TOP CONTROL: Hydro-Lectric type (top mechanism operated by two hydraulic cylinders actuated by oil under pressure supplied by motor driven pump).
See Miscellaneous Section for complete data.

FRONT END SHEET METAL REMOVAL: *See Chevrolet Shop Notes.*

MODEL IDENTIFICATION

FIRST 1946 SERIES

Serial Prefix	Wheelbase	Type
CK	115"	Half-Ton
OR	134½"	1½ Ton
OS	160"	1½ Ton
OW	160"	School Bus
OY	195"	School Bus
OE	134½"	2 Ton
OF	160"	2 Ton
OG	195"	School Bus
OH	109"	Cab-over-Engine
OJ	132" & 158"	Cab-over-Engine

LATER 1946 & FIRST 1947 SERIES

Serial Prefix	Wheelbase	Type
DP	115"	Half-Ton
DR	125¼"	¾ Ton
DS	134½"	1 Ton
PJ	134½"	1½ Ton
PK	160"	1½ Ton
PL	160"①	School Bus
PP	109"	Cab-over-Engine
PR	132½"	Cab-over-Engine
PS	158"	Cab-over-Engine
PV, PVS	134½"	2 Ton
PW, PWS	160"	2 Ton
PX	195"	School Bus

①—Also 195" Wheelbase (1946 only).

LATER 1947 & 1948 SERIES

Series	Serial Prefix	Wheelbase	Type
3100	EP① FP②	116"	Half-Ton
3600	ER FR	125¼"	¾-Ton
3742		125¼"	Dubl-Duti
3800	ES FS	137"	1-Ton
3942		137"	Dubl-Duti
4100	QJ RJ	137"	1½-Ton
4400	QK RK	161"	1½-Ton
4502	QL RL	161"	School Bus
5100	QP RP	110"	C.O.E. 2-Ton
5400	QR RR	134"	C.O.E. 2-Ton
5700	QS RS	158"	C.O.E. 2-Ton
5100S	QPS RPS	110"	C.O.E. 1½-Ton
5400S	QRS RRS	134"	C.O.E. 1½-Ton
5700S	QSS RSS	158"	C.O.E. 1½-Ton
6100	QV RV	137"	2-Ton
6400	QW RW	161"	2-Ton
6702	QX RX	199"	School Bus
6100S	QVS RVS	137"	1½-Ton
6400S	QWS RWS	161"	1½-Ton

①—Late 1947 Series. ②—1948 Series.

SERIAL NUMBER: First No. 1001 with series prefix for each series as indicated in table above. Stamped on plate located as follows:

1946 & Early 1947 Series—(Regular Trucks) on right hand side of cowl under engine hood, (Cab-over-Engine) on rear of cowl inside cab.

Later 1947 & 1948 Series—On cab left front hinge pillar.

ENGINE NUMBER: Stamped on right side of crankcase to rear of distributor with prefix to indicate year and engine type and plant as follows:

1946 & First 1947 Series

Engine Type	Flint	Tonawanda
All Trucks (216" Eng.)	DBA	DBM
All Trucks (235" Eng.)	DEA	DEM
Cab-over-Engine Mdls.	DDA	DDM

Later 1947 & 1948 Series

Engine Type	Flint	Tonawanda
Half-Ton Truck	FBA	FBM
¾ & 1 Ton (216" Eng.)	AFCA	AFCM
1½ Ton (216" Engine)	FCA	FCM
1½ & 2 Ton (235" Eng.)	FEA	FEM
Cab-over-Engine Mdls.	FDA	FDM

TUNE-UP

COMPRESSION PRESSURE: 110 lbs. minimum (cylinders equal within 5-10 lbs.) at cranking speed.

VACUUM READING: Steady 17-21" at idling speed.

FIRING ORDER: 1-5-3-6-2-4. See diagram.

SPARK PLUG GAPS: .040".

Plug Type—AC No. 104. 10 mm. type.

►*No. M-8 plugs can be used for sustained low speeds.*

Spark Plug Installation Caution—Tighten plugs to 10-12 ft. lbs. or install as follows: Tighten plugs finger tight, then tighten with wrench (11/16" deep socket) additional ⅛-¼ turn (old gasket), ½-¾ turn (new gasket).

►*CAUTION—Do not overtighten these 10 mm. plugs.*

IGNITION: *See Coil, Condenser, and Distributor.*

Breaker Gap—.018" in service. Limits .015-.022". Set new points at .020-.024" (to allow for seating).

Cam Angle or Dwell—39° closed, 21° open.

Breaker Arm Spring Tension—17-21 ozs.

Automatic & Vacuum Advance—*See Distributor.*

IGNITION TIMING: 5° BTDC.

Timing Procedure—*See Ignition Timing.*

Timing Mark—Steel ball insert in flywheel lined up with pointer in inspection hole in right front face of housing with Octane Selector set at "0". Then adjust Octane Selector as follows:

Octane Selector Setting—Set for slight ping when accelerating engine with wide open throttle.

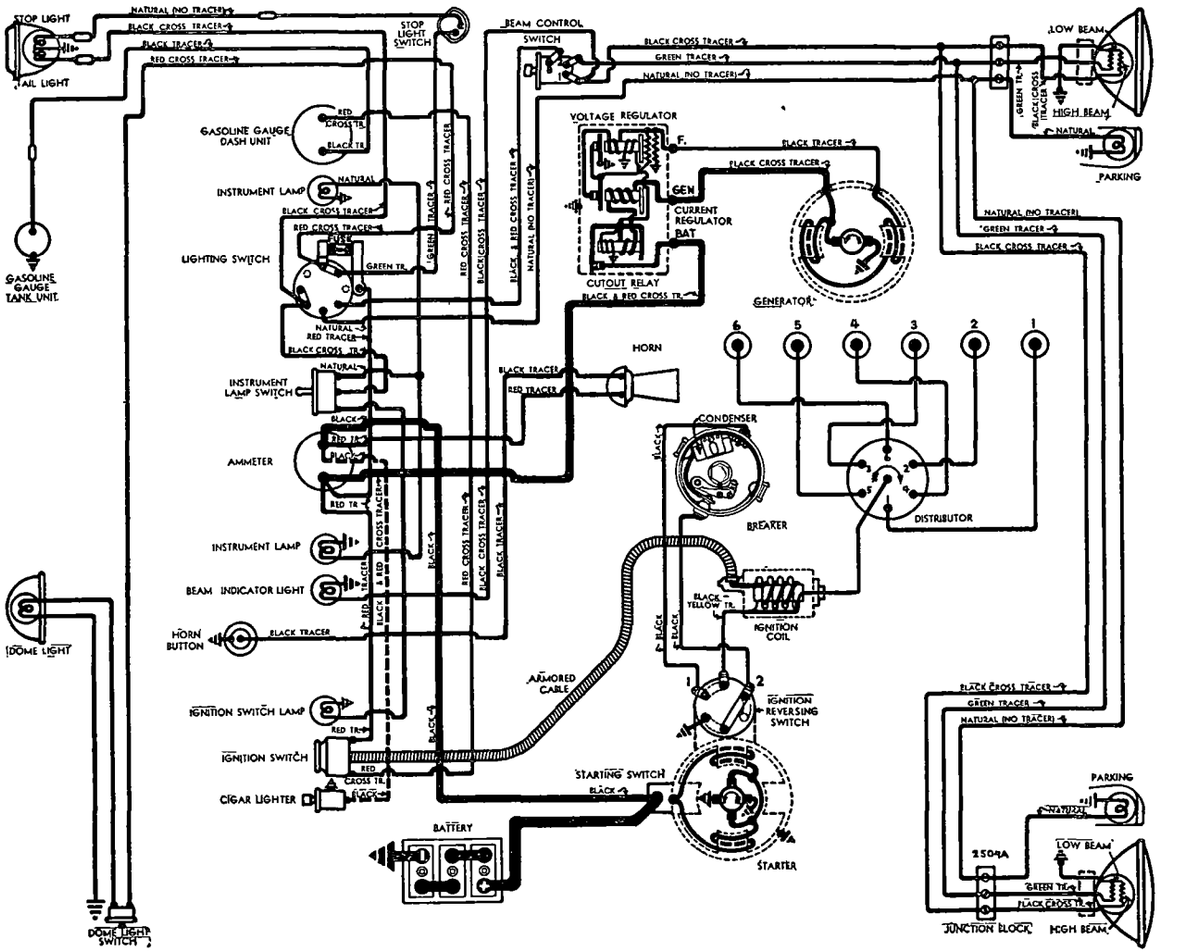

1946 & FIRST 1947 SERIES TRUCKS

►SEE 1948 PASS. CAR DIAGRAM F R IGNITI N WIRIN WITHOUT REVERSIN SWITCH

CARBURETION: *See Carburetor & Carb. Equipment.*

Idle Setting—Adjust idle adjusting screw for smooth idling with warm engine (screw 1¼-2¼ turns open except on C-O-E & Dubl-Duti models), ½-1½ turns open on C-O-E & Dubl-Duti with updraft carburetor. Turn screws out for richer mixture.

Idle Speed—450-500 RPM. with engine warm.

Float Level (exc. C-O-E)—½" from top of float at free end to machined surface (gasket seat) on bowl cover with valve seated (invert to check).

Float Level (C-O-E & Dubl-Duti)—Top of float 1/32-1/16" below top edge of bowl with valve seated.

Accelerating Pump (except C-O-E)—Not adjustable.

Accelerating Pump (C-O-E & Dubl-Duti)—Inner Hole—Summer, Outer Hole—Winter.

Fuel Pump Pressure—4 lbs. maximum.

MANIFOLD HEAT CONTROL: Thermostatic type. Check for free operation when tuning engine. Spring should be wound up just enough to slip end over manifold pin (approximately ½ turn).

►*CAUTION*—Excessive spring tension may cause valve to stick with resulting detonation and poor performance.

►**VALVE TAPPET CLEARANCE:** *CAUTION—Engine temperature must be "normalized" before adjusting. See "Tappet Clearance Adjustment" in Chevrolet Shop Notes.*

Normal Operation—.006-.008" Intake, .013-.015" Exhaust, with engine "normalized."

NOTE—Use higher figure for severe truck service.

Heavy Duty (Full Throttle) Operation—.010" Intake, .020" Exhaust, with engine "normalized."

Valve Timing Check: *See Valve Timing.*

►*CAUTION—1948 Engines have new Valve Timing (applies also to 1946-47 Engines with new Replacement Timing Gear).*

STARTING: *See Battery, Starter, Generator, Regulator.*

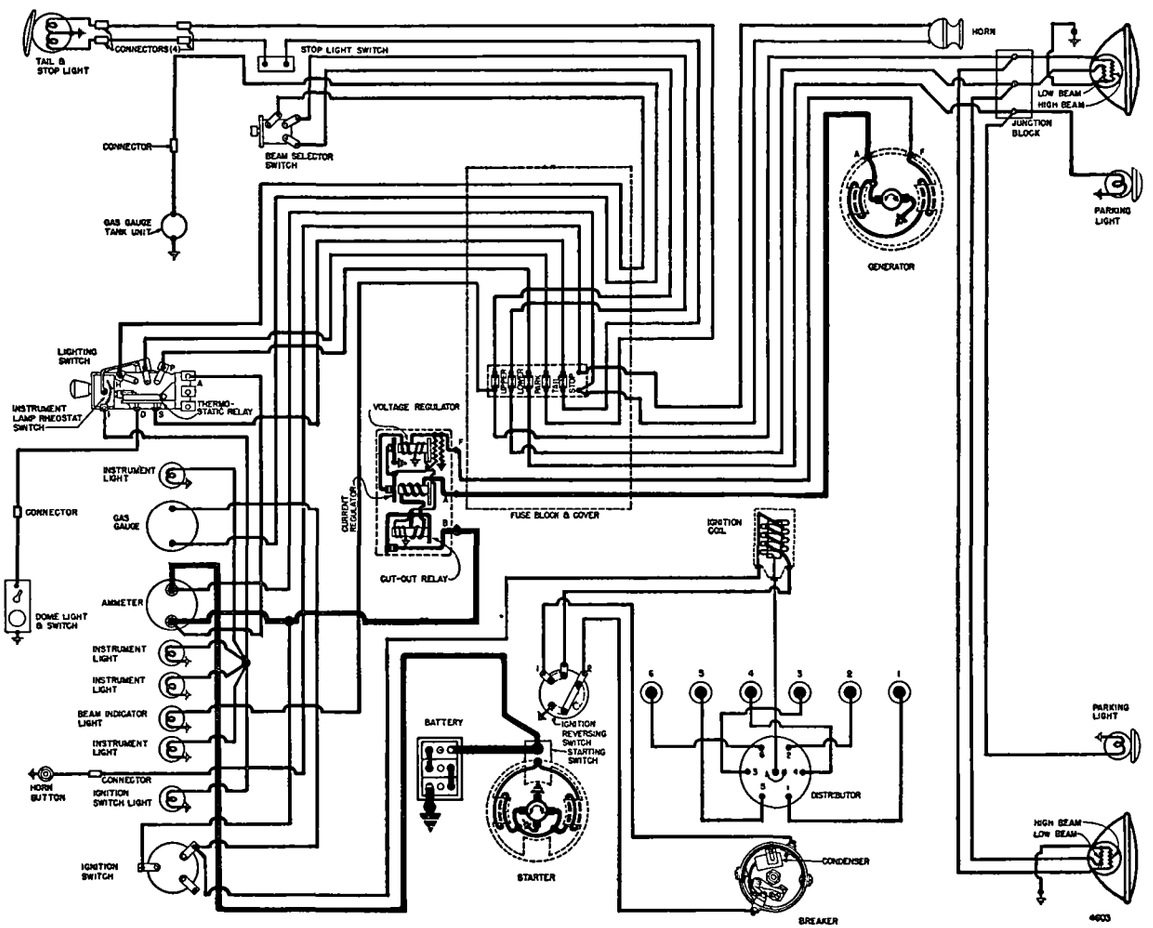

LATE 1947 & 1948 SERIES TRUCKS

►SEE 1948 PASS. CAR DIAGRAM FOR IGNITION WIRING WITHOUT REVERSING SWITCH

IGNITION

1946-47-48 (WITH REVERSING SWITCH)

IGNITION SWITCH: Delco-Remy. As listed below. Armored cable used only on first 1946-47 type.

(1946 & First 1947 Trucks)—No. 1116301 (except C-O-E), No. 1116303 (Cab-over-Engine Trucks).

(1947-48 Trucks)—No. 1116452. NOTE—This switch has special "Off-Unlocked" position (to right).

Ignition Lock—Briggs & Stratton Lock Cylinder. **(1946)**—No. 45792 (Coded), 45791 (Uncoded). **(1947-48)**—No. 600114 (Coded), 600088 (Uncoded). **Key Series**—No. 8000 to 9499. **Groove**—No. 15.

Ignition Reversing Switch: Delco-Remy No. 1907122. Mounted on starter and operated by starting pedal linkage (reverses ignition circuit each time starter operated—see wiring diagram for connections). *See Electrical Equipment Section for complete data.*

►**Removing Reversing Switch from Ignition Circuit**—If switch removal necessary, *see "Ignition Reversing Switch" in Chevrolet Shop Notes for re-working data.*

COIL: Delco-Remy (1946) No. 1115141, (1947-48) No. 1115380. On right side of engine above distributor. **Ignition Current**—2.5 amperes idling, 4.5 stopped.

CONDENSER: Delco-Remy Part No. 1882239.

►*CAUTION—This condenser used only on cars with REVERSING SWITCH. Must not be used without switch.*

Capacity—.28-.34 microfarad.

DISTRIBUTOR: Delco-Remy No. 1110090. Single breaker, 6 lobe cam full automatic advance type with vacuum spark control and Octane Selector

NOTE—Distributor has insulated breaker plate and ground terminal for use with Reversing Switch.

►**Distributor Change for use Without Reversing Switch**—*See "Ignition Notes" in Chevrolet Shop Notes.*

Breaker Point Set—Delco-Remy No. 1882391.

Breaker Gap—.018" in service. Limits .015-.022". Set new points at .020-.024" (to allow for seating).

Cam Angle—39° closed, 21° open.

Breaker Arm Spring Tension—17-21 ozs.

Rotation—Clockwise viewed from above.

Distr. Degrees	Automatic Advance RPM.	Eng. Degrees	RPM.
Start	350	3	700
6.5	600	13	1200
12.25	1000	20.5	2000
19	1700	38	3400

Octane Selector—Adjustment on distributor provides 10° advance or retard from center '0' position. See Ignition Timing for adjustment instructions.

Vacuum Spark Control: Delco-Remy No. 1116043. On Octane Selector, linked to advance arm. Provides additional advance at speeds above idling except when engine accelerated or operated with wide open throttle when spark retarded by return spring in unit. **Plunger Travel**—17/64".

Vacuum Advance

Distr. Degrees	Eng. Degrees	Vacuum (" of HG)
Start	0°	7-8.5"
10°	20°	16-19"

Removal:—Distributor mounted on right side of crankcase. To remove, loosen advance arm clamp bolt (does not disturb vacuum connections).

C NTINUED N NEXT PAGE

CONTINUED FROM PRECEDING PAGE

IGNITION

LATE 1948 (WITHOUT REVERSING SWITCH)

IGNITION SWITCH: Same as listed for early trucks.

COIL: Delco-Remy No. 1115380. Above distributor.
Ignition Current—2.5 amperes idling, 4.5 stopped.

CONDENSER: Delco-Remy Part No. 1869704.

►***CAUTION—This condenser must be used for ignition systems without reversing switch.***
Capacity—.18-.25 microfarad.

DISTRIBUTOR: Delco-Remy No. 1112353. Single breaker, 6 lobe cam, full automatic advance type with vacuum spark control and Octane Selector.

►NOTE—This distributor has larger breaker plate grounded directly to housing and special breaker point set.

Breaker Point Set—Delco-Remy No. 1855720.
Breaker Gap—.018" in service. Limits .015-.022". Set new points at .020-.024" (to allow for seating).
Cam Angle—39° closed, 21° open.
Breaker Arm Spring Tension—17-21 ozs.
Rotation—Clockwise viewed from above.

Automatic & Vacuum Spark Advance—See first type No. 1100090 Distributor above.

IGNITION TIMING

Std. Setting	Flywheel Degrees	Piston Position
All Engines	5° BTDC	.0091" BTDC

NOTE—See Octane Selector Setting (below) for final setting dependent on operating conditions.
Timing (Neon Light)—Recommended method. Connect neon light to #1 spark plug, direct light on flywheel through inspection hole in right front face of housing. Set Octane Selector pointer at '0'. Idle engine, loosen advance arm clamp bolt, rotate distributor until ignition mark (steel ball insert in flywheel) lines up with pointer. Tighten clamp bolt
Timing (Without Neon Light)—With #1 piston on compression, turn engine over until piston is 5° or .0091" before top dead center with ignition mark (steel ball insert in flywheel) at pointer in inspection hole in right front face of housing. Adjust distributor as directed above.
Octane Selector Setting—Set for slight ping when accelerating engine with wide open throttle. To adjust, loosen hold-down screw, move distributor and scale counter-clockwise to advance spark (if no ping), clockwise to retard spark (if too severe).

CARBURETOR

ALL TRUCKS (EXCEPT DUBL-DUTI & CAB-OVER-ENGINE MODELS)

Carter (Chevrolet) Type 574S (Std.), 616S (Econ. Models). 1¼", single barrel, downdraft types with manual choke control. NOTE—Carburetors marked by Casting No. 421 (574S), 432 (616S) on flange.
See Carburetor Section for complete data.

Settings (Idle Setting, Float Level, and Accelerating Pump): ***See Tune-Up data.***

Metering Rod & Jets—***See Carter Jet Table in Carburetor Section for complete data.***

CARBURETOR

¾ & 1 TON DUBL-DUTI & CAB- VER-ENGINE TRUCKS

Carter (B&B) Model 517S. 1¼" single barrel, updraft type with manual choke control.
See Carburetor Section for complete data.

Settings (Idle Setting, Float Level, and Accelerating Pump): ***See Tune-Up data.***
Metering Jets—***See Carter (BB) Updraft Jet Table in Carburetor Section for data.***

CARB. EQUIPMENT

Air Cleaner: AC No. 1529264 Oil-wetted type Std. (except on 2 Ton & C-O-E), No. 1542078 Oil-bath type Optl. (on above models, Std. on 1947-48 2 Ton), No. 1529192 Oil-bath type (1946 C-O-E & 2 Ton), No. 1543889 Oil-bath type (1947-48 C-O-E).

Servicing (Oil-wetted Type)—Remove and wash filter element in gasoline, re-oil by dipping in engine oil at 2000 mile intervals or more often if required by operating conditions.

Servicing (Oil-bath Type)—Remove and wash filter element in gasoline, clean oil reservoir and fill to level of indicator line (approx. 1 pint) with SAE No. 50 engine oil (summer temperatures) at 2000 mile intervals or more often if required.

Fuel Pump: AC Type AF, No. 1523089. Diaphragm type.
Replacement Pump—AC No. 429.
Pressure—4 lbs. maximum.
See Carburetion Equipment Section for complete data.

Gasoline Gauge: AC electric type. AC Nos.:
Dash Unit—(1946 with Flat Faced Cowl) No. 1515207, (1946 Other Models) No. 1516451, (1947-48) 1516973.
Tank Unit—(1946-48 Half-Ton), No. 1515466, (1946-47 Half-Ton & 1946 ¾ Ton with Cab) No. 1516287, (1946 ¾ Ton Panel) No. 1515467, (1947-48 ¾ Ton) No. 1516280, (1947 1, 1½, 2 Ton & 1946-48 C-O-E) No. 1515467, (1947-48 1, 1½, 2 Ton) No. 1516983, (1947-48 School Bus) No. 1516334.
See Carburetion Equipment Section for complete data.

BATTERY

Trucks (Std.)—Delco Type 15X-3 or 15AA-4. 6 volt, 15 Plate, 100 Ampere Hour Capacity (20 hour rate).
Starting Capacity—120 amperes for 20 minutes.
Zero Capacity—300 amperes for 3.6 minutes.
Five-second Voltage—4.2 volts.
Grounded Terminal—Negative (—) terminal.
Location—Under front floor on right side.

Trucks (Special Equip.)—Delco Type 17K-3. 6 volt, 17 Plate, 115 Ampere Hour Capacity (20 hour rate).
Starting Capacity—137 amperes for 20 minutes.
Zero Capacity—300 amperes for 4.3 minutes.
Five-second Voltage—4.4 volts.
Grounded Terminal & Location—See Std. Battery.

School Bus—Delco Type 19Q-3 or 19Q-4. 6 volt, 19 Plate, 125 Ampere Hour Capacity (20 hr. rate).
Starting Capacity—145 amperes for 20 minutes.
Zero Capacity—300 amperes for 5.0 minutes.
Five-second Voltage—4.5 volts.
Grounded Terminal & Location—See Std. Battery.

STARTER

Delco-Remy—Various models used as follows:
1107061 (with Rev. Switch)—First LHD. models.
1107063 (with Rev. Switch)—First RHD. models.
1107055 (without Rev. Switch)—Later 1948 LHD. models (except ¾ & 1 Ton Dubl-Duti).
1107076 (without Rev. Switch)—Later 1948 RHD. models & All ¾ & 1 Ton Dubl-Duti).
Armature No.—Delco-Remy No. 1867897.
Drive—Overrunning clutch with manual pinion shift (LHD starters), solenoid pinion shift (RHD).
Rotation—Counter-clockwise at commutator end.
Brush Spring Tension—24-28 ozs. each.
Cranking Engine—65 RPM., 150 amperes, 5.5 volts.

Performance Data

Torque	R.P.M.	Volts	Amperes
0 ft. lbs.	5000	5.0	65
12 "	Lock	3.37	525

Removal:—Starter flange mounted on right front face of flywheel housing. To remove, disconnect starting pedal linkage and Reversing Switch wires. Take out flange mounting screws, remove starter and switch.

Starting Switch (1107055 & 1107061 Starters): Delco-Remy No. 820052. On starter. Pedal operated.
(1107063 & 1107076 Starters)—Delco-Remy solenoid switch on starter, controlled by pushbutton switch No. 1996031 or No. 1385.
See Electrical Equipment Section for complete data.

GENERATOR

Delco-Remy Model 1102667 (Std.), 1102677 (Spec. Equip.). Two brush (shunt) types with voltage and current regulation. Ventilated by fan on drive pulley.
Armature No.—1879002 (1102667), 1881389 (1102677).
Charging Rate Adjustment—None. See Regulator.
Maximum Charging Rate (Std. Gen.)—36 amperes, 7.4 volts, 2400 RPM.

Performance Data—Cold

	Amperes①	Volts	R.P.M.
1102667	30	8.0	1750
1102677	26	8.0	1450

①—Not maximum output—See Current Regulator.
Rotation—Counter-clockwise at commutator end.
Brush Spring Tension—25 ozs. each.
Field Current—1.75-1.9 amperes at 6.0 volts.

Removal:—Generator pivot mounted at left front of engine. To remove, take out pivot and clamp bolts.

Belt Adjustment: Loosen clamp bolt, swing generator out for ¾" belt deflection (light pressure) midway between generator and fan pulleys.

REGULATOR

Delco-Remy Model 1118201 (1102667 Gen.), 1118233 (1102677 Gen.). Vibrating type Voltage and Current Regulators in case with Cutout Relay.
See Electrical Equipment Section for complete data.
CAUTION—Check generator for grounded field coils and leads before changing regulator settings.

Cutout Relay

Cuts In—6.2-6.7 volts hot.
Cuts Out—0-4.0 ampere discharge current.
Contact Gap—.020" (same for both sets).
Air Gap—.020" (with contacts just closed).

Voltage Regulator

Setting—7.2-7.4 volts Hot (1118201), 7.0-7.2 volts Hot (1118233) at operating temperature.
Checking & Adjustment—***See Electrical Equipment Section.***
Air Gap—.070" between center of core and armature with contacts just closing (press down on armature to open contacts, release pressure, check gap at point where contacts just close).

Current Regulator

Setting—34-36 amperes (1118201), 24-26 amperes (1118233) Hot or at operating temperatures.
Checking & Adjustment—***See Electrical Equipment Section.***
Air Gap—.080" (check same as Voltage Regulator).

LIGHTING

Headlamps: Guide "Sealed Beam" type. Upper and lower beams controlled by Beam Selector Switch on toeboard.

See Electrical Equipment Section for complete data.

Adjustment—Aim upper beams straight ahead (hot spot center 4½" below lamp center height at 25 ft.

Beam Indicator—Red dot on speedometer dial. Lighted whenever upper beams in use.

Switches

Lighting—Delco-Remy. (1946-47 with Fuse) No. 1994017, (1947-48) No. 1995031. NOTE—1947-48 switch has instrument light rheostat controlled by switch knob.

Beam Selector—Delco-Remy No. 1997008.

Instrument (1946-47)—Delco-Remy No. 1404.

Stop Light—Delco-Remy No. 1997901 (mechanical type operated by brake pedal arm).

Stop Light (Panel & Suburban)—Delco-Remy No. 594504 or 594505.

MISC. ELECTRICAL

FUSES (1946-47): Lighting. 30 ampere single fuse on back of lighting switch.

FUSES (1947-48): Lighting. Fuse box on engine side of dash with five 20-ampere fuses protecting individual light circuits as follows: **Top Fuse** Upper Beams, **2nd. Fuse** Lower Beams, **3rd. Fuse** Parking, **4th. Fuse** Tail Light, **5th. Fuse** Stop Light. NOTE—These fuses used with circuit breaker.

LIGHTING CIRCUIT BREAKER (1947-48): 30-ampere thermostatic type. On back of lighting switch. Protects lighting circuits (in conjunction with fuses above).

HORNS (Std.): Delco-Remy 1999801. Vibrator type.

Horn Current—7-9 amperes at 6.0 volts.

Air Gap—.027-.033".

(Spec. Equip.)—Delco-Remy No. 1999509 (Low Note), No. 1999510 (High Note). Vibrator type "sea shell" twin horns operated by relay.

Type	Current (at 6 volts)	Air Gap
1999509 (lo note)	.....19-21 amperes.....	.044-.049"
1999510 (hi note)	.....18-20 amperes.....	.034-.039"

Horn Relay: Delco-Remy No. 1116775 (twin horns).

Contact Gap—.025". **Air Gap**—.015" (closed).

Contacts Close—2.75-4.0 volts.

ENGINE

216 CUBIC INCH ENGINE (STD. ON ½, ¾, 1, 1½ TON TRUCKS)

ENGINE SPECIFICATIONS: Own 216". Six cylinder, Valve-in-Head type.

Bore—3½" (3.4995-3.5015"). **Stroke**—3¾".

Displacement—216.5 cu. ins. **Rated H.P.**—29.4.

Developed Horsepower—90 at 3300 RPM.

Compression Ratio—6.5-1 Std. Cast Iron Head.

Compression & Vacuum Reading—*See Tune-Up data.*

►*See Chevrolet 1946-47-48 Pass. Car article for all engine data (Pistons, Rings, Pins, Connecting Rods, Crankshaft & Bearings, Camshaft, and Valves).*

ENGINE

235 CUBIC INCH ENGINE TRUCKS (INCL. CAB-OVER-ENGINE)

TRUCK TYPE 235 CUBIC INCH ENGINE: This engine is same design as smaller 216" engine and all service operations and clearances are the same except as noted in 216" engine section data.

Non-interchangeable Parts:—Parts are interchangeable between the Regular Engine and the Special 235 Cubic Inch Engine except as follows: Cylinder Block and Crankcase, Cylinder Block Assembly (Short Motor), Push Rods (approximately ¾" longer on large engine and identified by shoulder just below cup at top end), Valve Lifters, Camshaft, Piston and Pin Assembly, Piston Rings (Compression and Oil Control), Crankshaft, Oil Pan Pipe Assembly, Oil Distributor to Valve Rocker Shaft Pipe Assembly, Oil Pump Screen Cover Support Assembly.

NOTE—Same oil pan used on all engines (1947 on).

ENGINE SPECIFICATIONS: Own 235". Six cylinder, Valve-in-Head type.

Bore—3 9/16" (3.5620-3.5640"). Stroke—3 15/16".

Displacement—235.5 cubic inches. Rated HP—30.4.

Developed Horsepower—93 HP (Conventional Tr'k), 90 HP (Cab-Over-Engine Truck) at 3100 RPM.

NOTE—Cab-Over-Engine use Updraft carburetor.

Compression Ratio—6.62-1 std. cast-iron head.

NOTE—Same head as used on regular engine (gives 6.50-1 ratio when used on regular engine).

Compression & Vacuum Reading—*See Tune-Up data.*

►*See Chevrolet 1946-47-48 Pass. Car article for all engine data (Pistons, Rings, Pins, Connecting Rods, Crankshaft & Bearings, Camshaft, and Valves).*

VALVE TIMING

►**VALVE TAPPET CLEARANCE:** *CAUTION—Engine temperature must be "normalized" before adjusting. See "Tappet Clearance Adjustment" in Chevrolet Shop Notes.*

Normal Operation—.006-.008" Intake, .013-.015" Exhaust, with engine "normalized."

NOTE—Use higher figure for severe truck service.

Heavy Duty (Full Throttle) Operation—.010" Intake, .020" Exhaust, with engine "normalized."

VALVE TIMING: See Camshaft Setting on 1946-47-48 Chevrolet Passenger Car pages.

►*VALVE TIMING CHANGE—New Valve Timing used on Late 1947 Engines (Beginning Flint No. 572254) & All 1948 Engines.*

1946-47 VALVE TIMING

►Before 1947 Flint Engine No. 572254

►(with Original Crankshaft Gear)

Intake Valves—Open 3° BTDC. Close 35° ALDC.

Exhaust Valves—Open 46° BLDC. Close 5° ATDC.

1947-48 VALVE TIMING

►Beginning 1947 Flint Engine No. 572254

►*CAUTION—This new Valve Timing applies also to 1946-1947 Engines with new Replacement Crankshaft Gear.*

Intake Valves—Open 1° ATDC. Close 39° ALDC.

Exhaust Valves—Open 42° BLDC. Close 9° ATDC.

Valve Timing Check (All Engines)—Remove all tappet clearance from #1 exhaust valve, turn crankshaft until this valve just starts to close and until triangular mark on flywheel lines up with pointer in right front face of housing, mount dial indicator on rocker shaft support with stem contacting #1 exhaust valve adjusting screw, set indicator dial at .036" (1946 and 1947 Engines before Flint No. 572254 **with original crankshaft gear only**), .044" (1947 Engines beginning Flint No. 572254, All 1948 Engines, and 1946-47 engines **with replacement crankshaft gear**). Turn crankshaft until indicator hand just stops moving. Timing is correct if indicator reading is ZERO plus or minus .004". Reset tappet clearance at correct running figure (above).

LUBRICATION

Engine Oiling System: Pressure and positive splash system. Pressure to main bearings, camshaft bearings, timing gears, and to overhead valve system (low pressure). Connecting rod bearings lubricated by oil dippers which scoop oil from troughs (low speed) and directly from nozzles (high speed). Oil is divided between high and low pressure systems by Oil Distributor Valve on left side of engine.

►*CAUTION*—Engine lubrication dependent upon adjustment of connecting rod dippers, oil troughs, and nozzles which must be **checked each time the oil pan is removed** (requires special gauges).

Checking Oiling System—*See "Oiling System" in Chevrolet Shop Notes.*

Crankcase Capacity—5½ qts. (dry), 5 qts. (refill).

1948 Oil Filler Note—All truck engines (except Half-Ton & C-O-E) are filled through opening on valve rocker cover (filler cap combined with crankcase ventilator air cleaner on 235" engine). Pass. Cars, Half-Ton, & C-O-E models have filler pipe on right side of engine (same as previous models).

Normal Oil Pressure—14 lbs. at 2000 RPM.

Oil Pressure Regulator—Located oil pump cover. Opens at 60 lbs. Non-adjustable type. Pressure normally controlled by Oil Distributor Valve on left side of engine which opens at 15 lbs.

Rocker Arm Oil Lead & Overflow Pipe Servicing: *See "Oiling System" in Chevrolet Shop Notes.*

Oil Pump: Located in crankcase. Driven independently through short shaft by gear on camshaft.

Oil Pump Installation—Assemble ground side of idler gear toward cover (use Chevrolet cover gasket only—controls pump clearance). Oil pump assembly mounted in crankcase by tapered setscrew. See that screw seated firmly in tapered hole in pump housing before tightening locknut.

Oil Distributor: *See "Oiling System" in Chevrolet Shop Notes.*

Checking Oiling System: Check entire system (Dipper Height, Oil Pan Trough Height, Oil Nozzle Height & Aim) each time oil pan removed.

See "Oiling System" in Chevrolet Shop Notes.

CAUTION—Special checking gauges required for each type engine (Oil pan changed beginning 1947, same pan now used on all engines).

Crankcase Ventilation: Air intake through valve rocker cover (air cleaner on some models), outlet through pipe on right side of engine (combination oil filler and ventilator except on 1948 trucks with filler on valve rocker cover).

Servicing—On all models with air cleaner mounted on valve rocker cover, wash filter element with solvent and re-oil at 2000 mile intervals or more often if required by operating conditions.

COOLING

Cooling System: Positive circulation with water pump on front of engine. Pressure type (relief valve) radiator cap used on 1947-48 C-O-E Trucks.

Pressure Valve—AC No. 850501 (Radiator Filler Cap). Opens at 4 lbs.

Capacity (with Std. Radiator)—(1946-47 ½, ¾, 1, 1½ Ton) 14 qts., (1946-47 2 Ton & School Bus) 16 qts., (1946-47 C-O-E) 16½ qts. (1947-48 except 2 Ton) 15 qts., (1947-48 2 Ton models) 17½ qts.

Capacity (Optl. Heavy Duty Radiator)—(1946-47) 16 qts. (1947-48) 17½ qts.

C NTINUED N NEXT PAGE

C NTINUED FROM PRECEDIN PAGE

Radiator Core Removal: *See Chevrolet Shop Notes.*

Water Pump: Doubleoutlet packless type with sealed ball-bearing shaft.
See Water Pump Section for complete data.
Belt Adjustment—*See Generator Belt Adjustment.*

Thermostat: Harrison. In cylinder head outlet.
Std.—No. 3113995 stamped "143". Starts to open at 140-147°F. Fully open at 170°F.
Optl. (For Anti-freeze)—As follows:

Temperature Gauge: AC. (Not Electric). AC Nos.: **(1946-47)**—No. 1510163 (Trucks with Flat Face Cowl except C-O-E), 1511264 (trucks except C-O-E), 1510995 (C-O-E Trucks).
(1947-48)—No. 1511898 (except C-O-E), 1512011 (C-O-E Trucks).

CLUTCH

Own Make—Diaphragm spring, single plate, dry disc type. NOTE—Half-Ton Trucks have 9" clutch, all other models 10¾" type.
See Clutch Section for complete data.
Facings—Moulded asbestos, 2 required as follows:

	I.D.	O.D.	Thickness
9" Type	6⅛"	9⅛"	.132-.138"
10¾" Type	7"	10¾"	.137-.143"

Adjustment:—Pedal free travel ¾-1". To adjust, loosen checknut and turn adjusting nut on connecting link at clutch throwout fork. NOTE—Use finger pressure only when checking pedal free travel.

Removal:—Remove transmission (see Transmission Removal below). Remove throw-out bearing, remove fork by prying fork off ball, remove fork mounting (use ¾" wrench). Install Clutch Pilot Tool K-411 (to support clutch), loosen all six cover bolts evenly, remove assembly from below. CAUTION—Do not allow pressure plate to hang on retracting springs (support by hand). When installing clutch align 'X' mark on cover with 'X' mark on flywheel.

TRANSMISSION

1946-47 3-SPEED TRUCK TYPE

Own Make. Three-speed, all helical gear type. Constant-mesh, synchro-mesh (Second & High), sliding gear (Low & Reverse) with floor-mtd. gearshift.
NOTE—4-speed Transmission Optl. equipment.
See Transmission Section for complete data.

►**Low Speed Disengagement Complaints (with Replacement Cover Plate Assembly)**—*See Chevrolet Shop Notes for identification of incorrectly assembled cover plates.*

Removal (½ Ton): Remove floor boards. Disconnect speedometer cable. Remove hand brake lever from transmission. Remove 4 universal joint ball collar-to-retainer capscrews, slide ball back on propeller shaft housing. Remove 4 capscrews from trunnion bearings on front yoke, remove these bearings and split the universal joint. Push front end of propeller shaft down for clearance (NOTE—On 4 spd. transmission, frame cross member must be removed to drop shaft). Remove 2 upper transmission-to-clutch housing capscrews and insert guide pins, remove clutch underpan and take out 2 lower mounting capscrews and slide transmission out and remove. NOTE—On 4 spd. type transmission 2 brake master cylinder bracket capscrews must be removed.

Removal (¾ Ton): Remove floor boards. Disconnect speedometer cable. Remove hand brake lever from transmission. Split center universal joint by removing two trunnion bearing 'U' clamps (tape or wire trunnions together to prevent losing bearings). Remove 4 universal ball retainer-to-transmission bolts and slide retainer back on tube. Remove center bearing support bracket-to-frame cross member bolt nuts. Pull front propeller shaft assembly to rear free of front universal. Remove transmission in same manner as on ½ Ton model (above).

TRANSMISSION

1948 3-SPEED TRUCK TYPE

Own Make. Three-speed, all helical gear type. Constant-mesh, synchro-mesh (Second & High), sliding gear (Low & Reverse). NOTE—Similar to Pass. Car transmission with new shifter mechanism on side cover for remote control.
See Transmission Section for complete data.

Transmission Control (½ & ¾ Ton): Remote control type with gearshift lever on steering column.
NOTE—This control not same as Pass. Car type.
See Transmission Section for complete data.

Removal (Half-Ton): Remove accelerator pedal, floor mat, and transmission cover on floor. Disconnect speedometer cable from rear bearing retainer, remove hand brake lever from transmission case. Drain transmission. Remove battery. Remove four capscrews holding universal joint collar on rear bearing retainer, remove bolts holding transmission support on frame cross-member. Support propeller shaft with jack, slide universal joint ball and collar back on shaft, split front universal by removing capscrews retaining front trunnion bearings on front yoke. Raise propeller shaft as far as possible with jack to provide clearance. Remove two top transmission mounting screws, install special J-1116 guide pins in these holes. Take off clutch housing underpan. Remove two lower transmission mounting screws, slide transmission straight back on guide pins until main drive gear shaft is free from clutch driven member, lift transmission up and remove through floor opening.

Removal (¾ Ton): Remove accelerator pedal, floor mat, and transmission cover on floor. Disconnect speedometer cable from rear bearing retainer, remove hand brake lever from transmission case. Drain transmission. Split intermediate universal by removing trunnion bearing "U" bolts, lower rear propeller shaft to floor. Remove four capscrews holding universal joint collar on rear bearing retainer, slide ball collar and retainer back on housing. Remove two bolts and nuts mounting intermediate universal support bracket on frame cross-member, pull front propeller shaft assembly to rear and free of front universal joint. Remove transmission in same manner as on Half-Ton (above).

TRANSMISSION

1946-47 4-SPEED TRUCK TYPE

Own Make. Four-speed, sliding spur gear type with floor-mounted gearshift lever.
See Transmission Section for complete data.

►**Lubricant Leakage (at Main Drive Gear Shaft) causing Clutch slipping, grabbing, or vibration**—*See Transmission article for new type Main Drive Gear to correct this trouble.*

Removal (C-O-E 109" WB.): Split front universal, remove transmission as given for ¾ Ton (above).

Removal (All Others):—Remove floor boards. Disconnect speedometer cable. Remove hand brake lever from transmission. Split front universal joint by removing two trunnion bearing 'U' clamps (tape or wire trunnions together to prevent losing bearings). Remove center bearing support bracket-to-frame cross member bolts. Unscrew oil seal retainer from rear yoke of center universal. Pull front propeller shaft assembly to front to free from rear shaft. Remove transmission as given for 3-Spd. (above).
NOTE—New type unit (with neoprene insulating band and synthetic rubber-and-felt dust seals) used on 1947 models. *See Chevrolet Shop Notes for data on Replacement Parts Kit including these new parts.*

TRANSMISSION

1948 4-SPEED TRUCK TYPE

Own Make. New design 4-speed, synchro-mesh, helical gear type. Constant-mesh, synchro-mesh (2nd, 3rd, 4th), sliding spur gear (Low & Reverse). Gearshift lever mounted on floor.
See Transmission Section for complete data.

Transmission Control (Cab-over-Engine): *See Chevrolet Shop Notes for Removal & Installation instructions.*
NOTE—Floor-mtd. gearshift used on Other Trucks.

Removal (½ & ¾ Ton): See 3-speed Transmission data.

Removal (Other Trucks): Free steering gear grommet from floor, remove accelerator pedal, floor mat, and transmission cover on floor. Disconnect speedometer cable from rear bearing retainer, remove hand brake lever from transmission case. Drain transmission. Split front universal joint by removing trunnion bearing "U" bolts (tape or wire trunnions together to prevent losing bearings), slide shaft down to one side to clear transmission. Remove two top transmission mounting capscrews, install special J-1116 guide pins in these holes. Take off clutch housing underpan. Remove 2 lower transmission mounting capscrews, slide transmission straight back on guide pins until main drive gear shaft is free from clutch driven-member, remove transmission.

UNIVERSALS

Half-Ton: Own Make. No. 591642 (3-Spd. Trans.), 605118 (4-Spd. Trans.). Same type as Pass. Car (above). One used (in torque ball back of transmission).
See Universal Section for complete data.

¾ Ton Truck: Front Universal—Own Make. Chevrolet No. 591642 (3 Spd. Transmission), 605118 (4 Spd. Transmis'n). Same type as used on ½ Ton (above).
Intermediate & Rear Universal—Spicer Model No. 1351-5107X (Intermediate—slip joint), 1358-5104X (rear—permanent joint). Needle bearing type.
See Universals Section for complete data.

1, 1½, 2 Ton Trucks (Regular & C-O-E): Spicer Needle bearing type. Slip-joint used at intermediate position, permanent type at transmission and rear axle

Spicer Model Nos.	Front	Intermediate	Rear
C-O-E 110" WB	1351-5107X	①	1358-5105X
Bus 199" WB	1358-5104X	②	1358-5104X
All Others	1358-5104X	1351-5107X	1358-5104X

①—No intermediate joint used (1 propeller shaft).
②—Two intermediate universals as follows: First—1358-5104X, Second 1351-5107X (3 section shaft).
See Universal Section for complete data.

Propeller Shaft Intermediate Bearing & Support Assembly. *See "Propeller Shaft" in Chevrolet Shop Notes.*
NOTE—1948 Support Bearing is new type sealed single-row ball bearing with "grease traps" packed with waterproof grease to prevent entrance of dirt and water.

REAR AXLE

SEMI-FLOATING TRUCK TYPE (HALF-TON)

Own Make. Semi-floating, hypoid gear type with Torque Tube Drive. NOTE—This axle same design as passenger car type.
See Rear Axle Section for complete data.
Ratio—4.11-1 Std.

►**Axle Identification Note**—Can be identified by prefix letter of serial number stamped on front face of carrier flange on right side as follows:
Detroit Production—('46) DE, ('47) EE, ('48) FE.
Tonawanda—('46) DF, ('47) EF, ('48) FF.
Backlash—.005-.007". Screw adjustment.

Removal:—Raise rear of car, remove rear wheels and brake drums, install clamps on wheel brake cylinders, disconnect hand brake cables from idler lever and remove cables from cable clamps on frame, disconnect brake line at axle housing and shock absorber links from anchor plate. Remove spring 'U' bolts, disconnect spring shackles and drop springs. Pull axle assembly back to free front end of torque tube, withdraw assembly from beneath car.

Axle Shaft Removal:—Wheel bolted directly on flange on outer end of axle shaft. Shaft retained by 'C' washer on inner end of differential case. To remove axle shaft, remove wheel, take out two 'zipon' nuts retaining brake drum (on second wheel stud at either side of drain hole in drum), remove drum, install clamp on wheel brake cylinder. Remove axle housing cover, differential pinion shaft lock screw, pinion shaft and axle shaft spacer. Push axle shaft in, remove "C" washer on inner end, pull shaft out.

Axle Shaft Installation & Endplay Adjustment: *See "Rear Axle Notes" in Chevrolet Shop Notes.*

REAR AXLE

FULL-FLOATING TRUCK TYPE (ALL EXCEPT HALF-TON)

Own Make. Full-floating, hypoid gear (straddle mounted pinion) with Hotchkiss Drive.
See Rear Axle Section for complete data.

►**¾ & 1 Ton Note**—"Revacycle" differential side gears and pinions used.

►**1½ & 2 Ton Axle Production Change**—Axle shafts changed from "flanged" to "splined" type in late 1947. Special removal procedure required for each type (see below).
Ratio—See Axle Identification Table (below).

►**Axle Identification Note**—Axles can be identified by prefix letters of serial number stamped on top of carrier housing between reinforcing ribs as follows:

1946 Axle Markings

	Ratio	Marking①
¾ Ton	4.57-1	DG or DH
1 Ton (Single Tires)	5.14-1	PA or PB
1 Ton (Dual Tires)	5.14-1	PC or PD
1½ Ton	5.43-1	PE or PF
1½ Ton	6.17-1	PL or PM
2 Ton & C-O-E	6.17-1	PG or PH

1947 Axle Markings

¾ Ton	4.57-1	EG or EH
1 Ton (Single Tires)	5.14-1	QA or QB
1 Ton (Dual Tires)	5.14-1	QC or QD
1½ Ton	5.43-1	"Q"②
1½ Ton	6.17-1	"Q"②
2 Ton & C-O-E	6.17-1	QG or QH

1948 Axle Markings

	Ratio	Marking①
¾ Ton (exc. Dubl-Duti)	4.57-1	FG or FH
1 Ton (Single Tires)	5.14-1	RAB or RB
1 Ton (Dual Tires)	5.14-1	RC or RD
1½ Ton	6.17-1	RE or RF
1½ Ton	5.43-1	RL or RM
2 Ton & C-O-E	6.17-1	RG or RH

①—First—Detroit, second—Tonawanda.
②—Std. axle ratio changed from 5.43-1 to 6.17-1 in August, 1947 (axle markings changed—see 1948).
Backlash—.005-.008". Screw adjustment.

Removal:—Remove differential cover and axle shafts (see below). Disconnect rear universal by removing two U-bolts from rear yoke (wire trunnions to retain bearings). Slide shaft forward and lower to floor. Remove differential carrier mounting bolts.

Axle Shaft Removal (¾ & 1 Ton): Remove 8 capscrews and lockwashers in axle shaft flange, install two ½" x 13 screws in special threaded holes in flange (between regular mounting screw holes), turn these screws up evenly to loosen the shaft, withdraw shaft from housing, remove and discard gasket. NOTE—Use new gasket when re-installing shaft.
CAUTION—Thoroughly clean all lubricant from axle shaft flange and end of wheel hub before installing axle shaft. Grease at this point will cause loosening of axle shaft flange capscrews.

Axle Shaft Removal (1946-47 1½ & 2 Ton—Bolted Shaft Flange): Bend the lock plate lugs away from capscrew heads, take out 8 capscrews in axle shaft flange, install two ½" x 13 capscrews in tapped holes in flange (between regular screw holes), turn screws up evenly to loosen shaft, withdraw shaft and aluminum gasket. NOTE—Use new aluminum gasket and lock plate when installing shaft.

Axle Shaft Removal (1947-48 1½ & 2 Ton—Splined Shaft Flange): Flange is tight fit in hub and requires special puller. Remove 5 capscrews & lockwashers in hub cap, remove hub cap and gasket. Assemble special adapter J-1436-8 on Rear Axle Shaft Bearing & Oil Seal Remover J-1436 (remove jaws), thread adapter into hole in axle shaft flange, pull axle shaft. NOTE—When re-installing shaft, tap flange splines into engagement with wheel hub splines (if necessary, rotate wheel slightly to align splines on shaft with both wheel hub and differential side gear splines), use new hub cap gasket.
Axle Shaft Note—Shafts unequal length (right shaft longer) and may be identified by part number stamped on shaft or lengths as follows:

¾ & 1 Ton Truck

	Part No.	Length
Left Shaft	3680977	31 3/16"
Right Shaft	3680978	37 1/16"

1½ Ton Truck (Bolted Shaft)①

Left Shaft	3652293	33"
Right Shaft	3652294	39 3/8"

①—Also Series OW, OY, PL School Bus.

1½ Ton Truck (Splined Shaft)

Left Shaft	3685191	34 3/32"
Right Shaft	3685192	40 15/32"

2 Ton & C-O-E (Bolted Shaft)②

Left Shaft	3682461	35½"
Right Shaft	3682462	39 11/16"

②—Also Series OJ, PX School Bus.

2 Ton & C-O-E (Splined Shaft)

Left Shaft	3685193	36 7/16"
Right Shaft	3685194	40 5/8"

Wheel Bearing Adjustment:—Remove wheels and axle shafts (see above). Bend back lip of lock in locknut notch, remove locknut and adjusting nut lock. Tighten adjusting nut tight using special wrench J-2222 (¾ & 1 Ton), J-870 (1½ & 2 Ton) while turning hub by hand, then back nut off 45°, check for free turning, install adjusting nut lock (with lock tangs aligned with slots in adjusting nut), bend tang down into notch in adjusting nut, install locknut and tighten securely, bend tang of lock down into notch of locknut.

REAR AXLE

TWO-SPEED TRUCK TYPE

1946 Type: Own Make. Full-floating, Two-speed, Double reduction type with Spiral Bevel Gears (First reduction), Helical Gears (second reduction) and manual shift control. NOTE—"Revacycle" type differential side gears and pinions are used in this axle. *See Rear Axle article for identification markings and features of these gears.*

►**Incorrect Speedometer Readings (Too High in Low Gear, Too Low in High Gear) Correction**—May be caused by incorrect assembly of speedometer adapter shifter lever. *See "Rear Axle Notes" in Chevrolet Shop Notes.*
NOTE—This axle may be identified by serial number prefix "PJ" or "PK" (serial number stamped on flat top of carrier housing on right side).
See Rear Axle Section for complete data.
Ratio—6.03-1 (High), 8.00-1 (Low).

1947-48 Type: Own Make. Full-floating, two-speed Double reduction type with Hypoid Gears (First reduction), Helical Gears (Second reduction) and new vacuum shift control.
Identification Note—Serial number prefix (on flat top of carrier on right side) is "RN" (Detroit), "RP" (Tonawanda).
See Rear Axle Section for complete data.
Ratio—6.13-1 (High), 8.10-1 (Low).
See Rear Axle data in Rear Axle Section for complete data.

Two-Speed Shift Control: (1946) Manual type with control lever mounted on cab floor ahead of seat, (1947-48) Vacuum Power Type with control valve on instrument panel. *See Rear Axle articles for adjustment instructions.*

►**Sticking or Binding of Vacuum Shift Control Valve Correction**—*See "Rear Axle Notes" in Chevrolet Shop Notes.*

Removal: Carrier Assembly can be removed (without disturbing axle housing) as follows: Remove axle shaft flange mounting bolts, pull both axle shafts out of housing approximately 8" (to clear differential). Drain axle lubricant and remove inspection plate. Loosen hose clamps and slip hoses off vacuum cylinder hose connections. Disconnect rear universal joint by removing trunnion bearing "U" bolts from rear flange, slide propeller shaft assembly forward, tape universal bearing trunnions in place to prevent loss of needle bearing, swing propeller shaft out of the way (tie up to frame side rail). Remove capscrews mounting carrier on axle housing (support carrier by means of long punch inserted through one upper mounting screw hole in housing before removing last mounting screw). Place support jack under carrier assembly, roll assembly straight forward until differential clears housing, remove carrier assembly from beneath truck.

Axle Shaft Removal & Wheel Bearing Adjustment: Same as for regular rear axle (see above).

C NTINUED ON NEXT PA E

CONTINUED FROM PRECEDING PAGE

SHOCK ABSORBERS

Delco. Single or double acting, hydraulic types (Std. or Optl.) as follows:

Single Acting Types

Front—1430-CA, DA (½ & ¾ Ton).
Rear—1430-MA, LA (½ Ton), 1431-Y, X (¾ Ton).

Double Acting Types

Front—(1946 exc. C-O-E) 1731-D, C. (1947-48 exc. C-O-E) 1730-B, A. (1946-48 C-O-E) 1730-D, C.
Rear—1731-U, T (½ Ton), 1722-D, C (¾ Ton), 1722-F, E (1 & 1½ Ton), 2000-W, V (1½ Ton & School Bus).
NOTE—Model numbers indicate Left and Right Shock Absorbers thus: 1430-CA,DA is 1430-CA (Left), 1430-DA (Right).
See Shock Absorber Section for complete data.

FRONT SUSPENSION

Trucks—Front Suspension: Conventional "I" beam section front axle with Reverse Elliott ends and semi-elliptic springs.
Kingpin Inclination—7°10'±1° crosswise (All).

Caster—1¾° (½ & ¾ Ton exc. Dubl-Duti), 2¾° (1 Ton exc. Dubl-Duti, 1½ & 2 Ton exc. C-O-E), 3° (C-O-E), 3¼° (¾ Ton Dubl-Duti), 2¼° (1 Ton Dubl-Duti). All specifications plus or minus ½°. Use wedge shims for minor corrections (up to 2°), bending tools for greater corrections.

Camber—1°±½° (All). Bend axle for corrections (when king pin inclination is likewise off).

Toe-In—1/16-3/16" (½ & ¾ Ton), 1/16-1/4" (All Others including ¾ Ton Dubl-Duti). Adjust by turning tie rod. CAUTION—Tie rod ends must be aligned with studs.

Steering Geometry—Outer wheel turned 20°, inner wheel 23°±2° (All Models).

STEERING GEAR

Saginaw Model. Ball bearing (re-circulating ball) Worm-and-Nut type. Chevrolet Part Nos. as follows: ('46-47 ½ & ¾ Ton) No. 267793, ('48 ½ & ¾ Ton) 270927, ('46-47 1, 1½, 2 Ton) 267795, ('47-48 ½, ¾, 1, 1½ Ton with 4-speed Trans.) 270221, ('47-48 2 Ton & School Bus) 270224, ('46 C-O-E) 267135, ('47-48 C-O-E) 270635.
See Steering Gear Section for complete data.

►**1946 1½ & 2 Ton Steering Arm Production Change**—Three different types of steering arms and tie rods used. For replacement, **same type** steering arms and tie rods must be used to maintain correct toe-in and steering geometry. ***See "Steering Notes" in Chevrolet Shop Notes.***

BRAKES

TRUCKS

Service Brakes: Own Make. Hydraulic type. Hand lever applies rear wheel service brakes.
See Brake Section for complete data.

Wheel Cylinders—Size stamped on housing under adjusting cup lock spring as follows:

	Front Wheels	Rear Wheels
Half-Ton	1¼"	1 3/16"
¾ Ton	1¼"	1 3/8"
1 Ton	1⅜"	1 3/8"
All Others	1¼"	1 1/2"

Drums—Cast iron rim with steel web. Drum Diameters as follows:

	Front—Drum Diam.—Rear
Half-Ton	11"—11"
¾ Ton	11"—12"
1 Ton	12"—14"
Other Trucks	14"—16"

Lining—Moulded type (see ¾ & 1 Ton Note below). **Width:** 1¾" (11" brakes), 2" (12", 14"), 3" (16"). **Thickness:** .187-.194" (11"), .265-.272" (others).

►**¾ & 1 Ton Bonded Brake Lining**—Brake lining on these models "bonded" type (cemented to shoes with thermoplastic bonding) and cannot be replaced in the field. Install exchange shoes on these models.

Clearance (½ & ¾ Ton)—Adjusting cover on wheel cylinder backed off 4 Notches from slight drag position (All shoes—front and rear).

Clearance (Other Trucks)—Adjusting cover on wheel cylinder backed off 4 notches from a slight drag position (Front Wheels), adjusting pinion shaft backed off ⅔ turn from a slight drag position (Rear Wheels).

Hand Brake (Pedal Type used on 1947-48 ½ & ¾ Ton): Pedal applies rear wheel service brakes. Brake release lever located under lower edge of instrument panel.

Adjustment (1947-48 ½ & ¾ Ton—Pedal Type)—This foot operated type adjusted in same manner as other trucks (following). Also check release rod handle (under instrument panel) for ½" minimum clearance at support bracket. Adjustment provided at lower end of rod. CAUTION—This clearance necessary for correct locking action of pedal lock bar.

Hand Brake (Lever type used on Other 1946-47-48 Trucks): Hand lever applies rear wheel service brakes.

►***CAUTION—Service brakes must be properly adjusted before making parking brake adjustment.***

Adjustment (1946-47 Trucks)—Place hand lever in fully released position. Pull wheel cable end fitting (at front of rear frame cross-member) forward until a definite stop is felt, hold cable in this position, turn nut on forward rod down until it contacts (turn by hand only, do not use wrench), lock cable by turning rear nut up securely. Check equalization and make any necessary re-adjustment by loosening wheel cable to tight wheel slightly.

'47-48 Trucks. Put hand lever in fully released position. Disconnect each hand brake cable at cross-shaft levers on frame by removing clevis pin. Loosen locknut and adjust clevis on end of cable until clevis pin can just be inserted when cable is pulled forward out of the cable conduit to the point where a positive stop is felt. Tighten locknut and install clevis pin. Check for drag and equalization. Correct by readjusting cables.

Hydrovac Brake System: Std. on 2 Ton & C-O-E Trucks, Optl. on 1½ Ton models. Consists of special power unit (vacuum power used to augment regular hydraulic brake actuation) in hydraulic line between master cylinder and wheel cylinders.
See Brake Section for complete data.

HOOD ASSEMBLY

1941-48 MODELS

HOOD LOCK: Chrysler 1941, Dodge 1941-48. Conventional center hinge hood. Each side locked by button under each end of instrument panel. To raise hood side, pull button out on side to be raised which unlatches hood, lift up on edge of hood.

NOTE—'41 Dodge hood side panels are removable.

Control Cable Adjustment—Cable for each hood side must be adjusted separately as follows: Pull out on control button on instrument panel on side to be adjusted, press down on hood to lock it in place. Open opposite side for access to control cable on locked side. Loosen screw on clamp at forward end of cable on front fender panel, adjust clamp for less than ⅛" free play in cable (excessive free play allows wire stop to contact cable sheathing before latch is released), tighten screw. Repeat operation for opposite hood side.

Chrysler 1942-48, De Soto 1941-48, Plymouth 1941-48: These cars equipped with an alligator type hood with control button under left side of instrument panel. A safety catch is located under nose of hood. To raise hood, pull out on control button (hood will raise slightly), push up on saftey catch under front end of hood, raise hood. NOTE—On Chrysler, hood prop on right side can be released by pushing center of prop back to lower hood. On '41 Plymouth, removable hood side panels are used.

Control Cable Adjustment—Raise hood, loosen set screw in clamp on front end of cable, adjust clamp position for ⅛" minimum free play between clamp and latch arm in locked position, tighten set screw. Check safety catch for proper locking action.

1941 MODELS

HOOD ALIGNMENT: Chrysler C28, C30, C33; Dodge D19. Hood fit to side panels adjustable by loosening screws at front and rear pivot plates, adjust hood for proper clearance at side panels, tighten pivot plate screws. No adjustment required at spring latches. Check Hood Lock for proper locking action (see Control Cable Adjustment above).

De Soto S8, Plymouth P11, P12:—Hood alignment may be adjusted as follows: (1) Hood lock latch stud at front end. To adjust, loosen locknut on top of stud, turn stud in or out for proper hood fit, tighten lock nut. (2) Hood hinge position. Open hood just beyond normal open position, unhook hood hinge spring and remove spring. Loosen lower hood hinge bracket screw (on inner side on cowl extension) and upper screw (on outer side at upper rear corner of hinge). Do not disturb front upper cap screw (this must be tight to hold hinge in position). Align hood hinge by closing hood. Open hood carefully without disturbing hood hinge position and tighten screws. (3) Hood fore-and-aft position. Open hood, loosen three hood-to-hinge screws (on under side of hood ledge at rear), shift hood position backward or forward until correct fit obtained, tighten screws. Check Hood Lock for proper locking action (see Control Cable Adjustment instructions above).

1942-48 MODELS

HOOD ALIGNMENT: Dodge '42-48. Hood adjustable by loosening screws at front and rear pivot plates and shifting hood until proper fit obtained, then tighten pivot plate screws.

De Soto & Plymouth '42-48: Hood alignment can be adjusted in the following manner: (1) For shifting hood fore-and-aft at cowl or nose of hood sideways, remove upper half of hood lock (with safety catch), loosen three hood-to-hinge capscrews (on under side of each hood flange at rear), close hood and shift as necessary until properly aligned, raise hood carefully without disturbing alignment and tighten screws. Hood flanges may be forced in or out for alignment with fender flanges by means of hood strainer (slotted holes provided in hinge bracket). Adjust hood lock as described below.. (2) Hood can be adjusted at hinges for fit at cowl as follows: remove upper half of hood lock (as above), remove hinge spring on each side of cowl, loosen rear hinge-to-cowl screw in each hinge (permits horizontal movement), and back off front hinge-to-cowl screw (permits vertical movement). "Rock" hood as required until proper fit obtained between rear of hood and cowl. Then tighten these screws, install hinge springs and adjust hood lock. (3) Hood lock can be fitted for proper locking action as follows: Loosen capscrews attaching hood lock upper and lower halves to hood and radiator grille, lower hood which will permit upper and lower halves to come into alignment (bolt holes are slotted, enlarge holes if necessary until correct engagement obtained), tighten capscrews. Hood lock latch stud can be adjusted by loosening lock nut on upper end of stud and turning stud in or out so that hood will be under slight tension when closed to prevent rattles, tighten lock nut. Check hood lock control cable adjustment (see above).

1942-48 MODELS

HOOD ALIGNMENT: Chrysler 1942-48. Alignment adjustments are provided at the following points:

1)—4 capscrews under edge of hood at each hinge.

2)—4 capscrews in each hinge plate.

3)—2 capscrews under hood cross-member at center.

4)—Slotted bracket at center of hood cross-member.

5)—Fender bracket opposite each horn.

Adjustments should be made as follows:

Panel Width—If wide at rear, adjust at No. 3. If wide at front, loosen fender-to-grille support bolts, jack fenders apart.

Cowl Wrap—If high in center, bring down at No. 4. If high at one side, bring down at No. 2. If high on one side and low on opposite side, bend hinge back lever with monkey wrench (use length of pipe over handle for leverage) on high side.

Cowl Gap—If hood rubs at rear corner, adjust at No. 1 and push hinge back (rear screw must be tightened with hood closed (from beneath car).

Fender Gap—If bottom rear corner rubs, flex sheet metal for clearance. If open at rear, bend hinge lever out (bend in if tight at rear). If open at catwalk, use 2 x 4 under hood cross-member, pry hood out. If tight at catwalk, block hood open about 10", pry hood inward with 2 x 4 against inside of fender. If open at front, adjust at No. 5 (bend bracket in, or if tight, bend bracket out).

Flush to Fender—If higher than fender at catwalk, raise rear of fender after loosening fender panel-to-fender shield bolts. If lower than fender at catwalk, bend hood up with 2 x 4 under hood cross-member (if gap is changed, pry hood in as described above). If higher than fender at front, raise fender by inserting flat washers at grille support. If lower than fenders at front, remove bumpers under front end of hood, insert flat washers over tongue.

FRONT END SHEET METAL

1939 MODELS

FRONT END ASSEMBLY (UNIT) REMOVAL: For work on front of engine, remove radiator and fender assembly as a unit as follows: remove hood and side panel assembly, front bumper assembly, and radiator lower splash pan. Disconnect headlamp wiring at junction block on left fender lower shield. Remove front wheels and drain cooling system. Disconnect radiator support studs and radiator hoses. Disconnect fenders at running board and body. Lift radiator shell, core and fenders off in an assembly.

1940 MODELS

FRONT END ASSEMBLY (UNIT) REMOVAL: For work on front of engine, remove radiator shell, radiator core, hood lower side panels and both fenders as a unit as follows: Remove hood, drain radiator, disconnect headlight wires at junction block on left fender upper shield, remove engine water inlet and outlet hoses, free fenders from body and running board and lift assembly off.

1941 MODELS

FRONT END ASSEMBLY (UNIT) REMOVAL: Radiator shell, radiator core, and both front fenders (including hood side panels on Dodge and Plymouth) can be removed as an assembly as follows: Raise hood and drain radiator. Remove hood on Chrysler and Dodge only. Disconnect battery cables at battery. Remove battery on Plymouth only. Disconnect horn wires at relay and remove horn and mounting plate assembly on Plymouth only. Disconnect headlight wires at junction block on left fender. Disconnect hood latch release cables (at each side on Chrysler and Dodge, at lock plate on radiator shell on De Soto and Plymouth). Remove hood lock and plate assembly on Plymouth only (mark plate and radiator shell and reassemble to these marks when installing assembly). Remove front bumper assembly on all models except De Soto. Remove engine inlet and outlet water hoses. Remove fender-to-body stud nuts and studs, and nuts from fender braces and running boards. With a man at each side lifting on fender skirt, radiator shell, radiator core, hood lower side panels and both front fenders can be removed as an assembly. When installing assembly, attaching bolts should be installed loosely, hood aligned (see Hood Alignment above), and then tighten to secure assembly on car.

1942-48 MODELS

FRONT END ASSEMBLY (UNIT) REMOVAL: Front end assembly (radiator shell and core, and both front fenders) can be removed as a unit as follows: Drain cooling system (drain cocks at center of radiator lower tank at front, and on engine on left side below distributor). Remove hood. Disconnect battery cables at battery, hood latch cable (one on each side on Dodge models), headlight shutter control rod on 1942 De Soto models, disconnect wires at junction blocks on left fender, and radiator hoses. Remove front bumper assembly. Take off radiator support nuts and washers. Remove fender-to-body stud nuts. Remove lower bolt and nut on inspection shield at each fender (bend skirt of shields as necessary to prevent interference when lifting assembly off). Attach hoist ahead of radiator core and lift assembly off car.

CONTINUED ON NEXT PAGE

CONTINUED FROM PRECEDING PAGE

CYLINDER HEAD

CYLINDER HEAD INSTALLATION: Use Torque Indicating Wrench to tighten cylinder head bolt nuts and capscrews, tighten in correct sequence as shown in diagram for each car. Procedure for tightening Cast Iron and Aluminum Heads is as follows:

Cast Iron Heads—With engine cold, tighten screws or nuts to correct tension as shown in table below. Run engine until thoroughly warm, then check and retighten nuts (additional tightening necessary to bring them back to correct tension).

Aluminum Heads—With engine cold, tighten screws or nuts to correct tension as shown in table below. Run engine until thoroughly warm, then allow engine to cool off, check and retighten nuts after engine has become cool—do not tighten aluminum heads hot.

Tightening Torque—See Tightening (Torque Wrench) Specifications below.

CHRYSLER 6 - DE SOTO - DODGE - PLYMOUTH

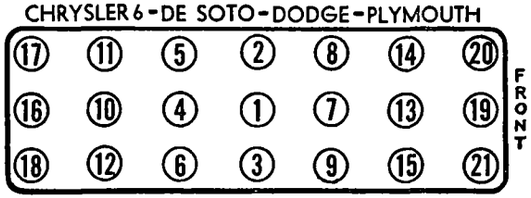

CHRYSLER 8

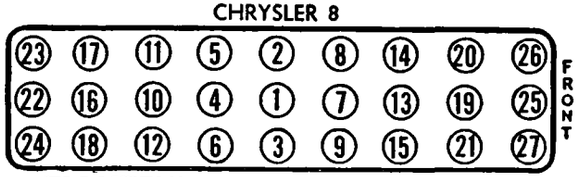

TIGHTENING (TORQUE WRENCH) SPECIFICATIONS

1941-48 MODELS

	Ft. Lbs.	In. Lbs.
Spark Plugs (14 MM. Type)	30-32	360-384
Cyl. Head Nuts 7/16"	52-57	624-684
Cyl. Head Nuts 1/2"	85-90	1020-1080
Cyl. Head Capscrews (Plain hd.)	65-70	780-840
Cyl. Head " (Cupped hd.)	67-72	804-864
Main Bearing Cap Nuts	75-80	900-960
Main Bearing Capscrews	80-85	960-1020
Connecting Rods Nuts 3/8"	45-50	540-600
Connecting Rods Nuts 7/16"	50-75	600-900
Flywheel Nuts	55-60	660-720
Manifold Stud Nuts	15-20	180-240
Starting Crank Jaw	108 min.	1296
Trans. to Clutch Housing Studs	45-50	540-600
Differential hous'g to axle hous'g.	25-30	300-360
Axle Shaft Nuts	142 min.	1704
Wheel Hub Bolts	58½-66½	702-898
Brake Backing Plate to Axle	30-35	360-420
Steering Gear to Frame Screws	45-50	540-600
Pitman Arm Nut	112-125	1344-1370
Lower Control Arm Bushings	165 min.	1980
Upper Control Arm Bushings	120-140	1440-1560
Axle Ring Gear Bolt Nuts	35-40	420-480
Hand Brake Anchor Sup. Screws	50-55	600-660
Bumper Bolts	60-70	720-840

1940 & PREVIOUS MODELS

	Ft. Lbs.	In. Lbs.
Cylinder Head Nuts	52½-57½	630-690
" " Plain Capscrews	65-70	780-840
" " Cupped Hd. "	67½-72½	810-870
Main Bearing Nuts & Capscrews	75-80	900-960
Connecting Rod Nuts	52½-57½	630-690
Camshaft Sprocket Screws	15-20	180-240
Clutch to Flywheel Capscrews	15-20	180-240
Spark Plugs (14 MM. Type)	26-32	312-384
Lower Control Pin & Bar Bush'gs	180	2160
Rear Spring Clip Nuts	75-80	900-960

ENGINE REMOVAL

1937-38 MODELS

ENGINE ASSEMBLY REMOVAL: Drain radiator, remove hood and side panels (if used), disconnect tie rods at radiator (if used). Remove fan blades and radiator core (disconnect radiator hoses, remove water pump—C14, 15 only, fan pulley—except C14, 15, 17, remove core-to-shell bolts and lift core out, on Chrysler Airflow C17, radiator shell and grille assembly and fan shield must also be removed). Remove bolts at each side of front engine support. Disconnect starter cable, generator and distributor wires, fuel pump lines, throttle controls, oil gauge line at engine, heat indicator tube and bulb at cylinder head. Remove front floor boards and disconnect hand brake cable, overdrive control cable (if used), propeller shaft (see removal instructions below for cars equipped with two shafts and center bearing), clutch release fork, intermediate clutch linkage shaft at engine (on 1938 cars). Remove transmission (see car model article for directions). Disconnect exhaust pipe and remove rear engine mounting bolts. Lift engine assembly out

Installation:—Reverse procedure listed above.

IMPORTANT—In order to secure proper engine alignment when installing engine assembly, loosen exhaust pipe support brackets and run engine a few seconds with engine mounting bolts loose. Then tighten mounting bolts and exhaust pipe brackets.

1939 MODELS

ENGINE ASSEMBLY REMOVAL: Remove Front End Assembly (see above). Remove front floor boards and propeller shaft (see removal instructions below for cars equipped with two shafts and center bearing). Disconnect: hand brake cable, starter cable, battery ground cable, speedometer cable and gear-shifter rod and cable at transmission (on cars with overdrive remove solenoid coil and control cable), feed line at fuel pump, oil gauge line at engine, coil wires, heat indicator tube and bulb at head, exhaust pipe at manifold, throttle controls and clutch linkage. Attach hoist to engine (remove air cleaner and horns if necessary). Remove front and rear engine support bolts. Loosen engine side splash aprons and lift engine assembly out of car. NOTE—On Plymouth P7, remove transmission cover.

Installation:—Reverse procedure listed above. IMPORTANT—In order to secure proper engine alignment when installing engine assembly, loosen exhaust pipe support brackets and run engine a few seconds with engine mounting bolts loose. Then tighten mounting bolts and exhaust pipe brackets.

1940 MODELS

ENGINE ASSEMBLY REMOVAL: Remove Front End Assembly as a unit (see above). Remove front floor boards and propeller shaft (for cars equipped with two shafts, see removal directions under propeller shaft center bearing following). Disconnect: hand brake cable, starter cable, battery ground cable, speedometer cable and gear shifter rod and cable at transmission (on cars with overdrive, remove solenoid coil and disconnect wires and overdrive control cable), fuel pump flexible line at pump, exhaust pipe at manifold, throttle and choke controls, heat indicator tube and bulb at head, oil gauge line at flexible tube, starter cable at starter, coil wires and clutch pedal linkage. Remove front and rear engine support bolts, loosen engine side splash pans, attach hoist and lift engine out.

1940 MODELS

REAR ENGINE SUPPORTS (8 CYL.): Insulators on rear support may be replaced without removing floor boards as follows: Support engine at rear, remove rear engine support bolts and remove cross member bolts at frame. Then remove insulators.

1941-48 MODELS (EXCEPT 1942-48 PLYMOUTH)

ENGINE ASSEMBLY REMOVAL: Engine, clutch, and transmission assembly can be removed from car as an assembly as follows: Remove the hood. Remove Front End Assembly on '41 cars, Radiator Core only on '42-48 cars. Remove propeller shaft (cars with 2 shafts see Propeller Shaft Center Bearing Removal following). On cars with Power Shift remove the vacuum control unit. Disconnect the following: Fuel pump flexible line at pump, exhaust pipe at manifold, throttle controls, choke control (on Plymouth only), heat indicator tube and bulb at head, oil gauge line at flexible tube, generator wires, speedometer cable, hand brake, gear shift and selector rods at transmission, clutch pedal linkage and torque tube, windshield wiper vacuum hose (on cars with vacuum type wiper). Remove crankcase ventilator breather pipe and front and rear engine support bolts. Connect hoist to engine (remove air cleaner and horns) lift the assembly out of chassis. When re-installing assembly reverse procedure listed above, check Hood Alignment and Hood Lock operation (see instructions above).

1942-48 PLYMOUTH

ENGINE ASSEMBLY REMOVAL: Engine and clutch assembly can be removed from car as follows: Remove hood, battery, radiator core (see Radiator Core Removal), fan blades, floor boards and transmission (see car model article for Transmission Removal). Disconnect the following from the engine: fuel line at pump, exhaust pipe at manifold, throttle controls, choke control (on Plymouth), heat indicator tube and bulb from head, oil gauge line at flexible tube, generator wires, ignition coil wires, clutch pedal linkage and torque tube, windshield wiper vacuum hose (on cars with vacuum type wiper). Remove crankcase ventilator outlet pipe and front and rear engine support bolts. Attach hoist to engine (remove air cleaner if necessary), raise engine just enough to allow removal of front engine support, lift engine out of car. When reinstalling assembly reverse procedure listed above and align hood (see Hood Alignment).

ORIGINAL BORE & PISTONS

1939-48 MODELS

ORIGINAL PISTON & CYLINDER BORE SIZES: Original production (new engine) piston and bore sizes indicated by letter located as follows:

Piston Size—Letter stamped on piston head (num-

ber following letter on Dodge pistons is weight).
Bore Size—Letter stamped on pad on distributor side of engine at top of block. Do not confuse this letter with "Special Standard" size letter indicating oversize bore.

"Special Standard" Size Bore—Letter "A" or "AB" following engine number indicates engine has .020" larger standard cylinder bore.

'Special Standard' Pistons and Bores (.020" oversize)—Original production (new engine) piston and bore sizes which are .020" oversize (see Engine Bore Size data above) are graded in same steps as for standard sizes but these pistons and bores are marked "P", "Q", "R", "S", "T".

ALUMINUM ALLOY, U-SLOT PISTONS
CHRYSLER 6 & DE SOTO (1939-41)

Piston & Engine Mark①	Piston Diameter	Cylinder Diameter
A	3.37425-3.37475"	3.37475-3.37525"
B	3.37475-3.37525"	3.37525-3.37575"
C	3.37525-3.37575"	3.37575-3.37625"
D	3.37575-3.37625"	3.37625-3.37675"
E	3.37625-3.37675"	3.37675-3.37725"

CHRYSLER 6 & DE SOTO (1942-48)

A	3.43625-3.43675"	3.43725-3.43775"
B	3.43675-3.43725"	3.43775-3.43825"
C	3.43725-3.43775"	3.43825-3.43875"
D	3.43775-3.43825"	3.43875-3.43925"
E	3.43825-3.43875"	3.43925-3.43975"

CHRYSLER 8 (1939-41)

A	3.24925-3.24975"	3.24975-3.25025"
B	3.24975-3.25025"	3.25025-3.25075"
C	3.25025-3.25075"	3.25075-3.25125"
D	3.25075-3.25125"	3.25125-3.25175"
E	3.25125-3.25175"	3.25175-3.25225"

CHRYSLER 8 & DODGE (1942-48)

A	3.24875-3.24925"	3.24975-3.25025"
B	3.24925-3.24975"	3.25025-3.25075"
C	3.24975-3.25025"	3.25075-3.25125"
D	3.25025-3.25075"	3.25125-3.25175"
E	3.25075-3.25125"	3.25175-3.25225"

PLYMOUTH (1939-41)

A	3.12415-3.12465"	3.12475-3.12525"
B	3.12465-3.12515"	3.12525-3.12575"
C	3.12515-3.12565"	3.12575-3.12625"
D	3.12565-3.12615"	3.12625-3.12675"
E	3.12615-3.12665"	3.12675-3.12725"

PLYMOUTH (1942-48)

A	3.2488-3.2493"	3.2500-3.2505"
B	3.2493-3.2498"	3.2505-3.3510"
C	3.2498-3.2503"	3.2510-3.2515"
D	3.2503-3.2508"	3.2515-3.2520"
E	3.2508-3.2513"	3.2520-3.2525"

ALUMINUM ALLOY, STEEL-BANDED PISTONS
PLYMOUTH (1941)

Piston & Engine Mark①	Piston Diameter	Cylinder Diameter
A	3.12325-3.12375"	3.12475-3.12525"
B	3.12375-3.12425"	3.12525-3.12575"
C	3.12425-3.12475"	3.12575-3.12625"
D	3.12475-3.12525"	3.12625-3.12675"
E	3.12525-3.12575"	3.12675-3.12725"

ALUMINUM ALLOY, STEEL-STRUT PIST NS
DODGE (1939-42)

A	3.2495"	3.24975-3.25025"
B	3.2500"	3.25025-3.25075"
C	3.2505"	3.25075-3.25125"
D	3.2510"	3.25125-3.25175"
E	3.2515"	3.25175-3.25225"

Dodge Steel Strut Piston Weight—All 6 pistons in one block must be alike (same number on head).
①—Pistons marked AA are .0005" smaller than A pistons, EE pistons are .0005" larger than E pistons. Pistons marked P, Q, R, S, T are .020" oversize (see Note above).

PISTONS

1937-48 MODELS

REPLACEMENT PISTONS: Finished (Aluminum Alloy) Pistons—Furnished in standard size and .005", .020", .030", .040", .060" oversize.

Semi-Finished (Aluminum Alloy) Pistons—These pistons furnished in two sizes: (1) for cylinder bores from standard to .023" oversize. (2) For bores .025-.050" oversize. Pistons are finished (head and ring grooves) except for skirt. **Pistons must be finished on cam grinding equipment.** Do not finish pistons circular. Skirt is elliptical (.010-.012" Plymouth, .010-.014" All Others—smaller diameter across pin bosses than across thrust faces) and tapered (.0005-.0015" smaller diameter at top of skirt than at bottom). IMPORTANT—Second group pistons (.025-.050") must not be used for oversizes under .025" due to different size of piston head and ring grooves.

►*IMPORTANT—Use same type pistons when replacing only a partial set. All pistons in engine must be of the same type.*

PISTON RINGS

1936-48 MODELS

REPLACEMENT PISTON RINGS: Three types of replacement rings furnished by car manufacturer, Original Equipment Rings (furnished singly), Mopar Oil Master & Mopar Oil Saver (sets).

Original Equipment Rings—These rings are same design as installed by car manufacturer. Rings are available in following sizes: Standard (for standard to .004" oversize cylinders), .005" oversize (for .005-.014" bores), .020" (for .015-.024"), .030" (for .025-.034"), .040" (for .035-.044"), .050" (for .045-.054"), and .060" oversize (for .055-.064" cylinders).

Mopar Oil Saver Ring Sets—These ring sets are designed to be installed in cylinder walls with .005" taper or less where cylinder walls are not to be reconditioned. This set consists of same rings as used in Oil Master set except that #3 & #4 rings are alike (slotted oil ring with slotted expander).

Mopar Oil Master Ring Sets—These rings are designed to be installed in cylinders with walls tapered .005" to .030" when cylinder walls are not to be reconditioned. #4 oil ring is special 4-piece type (upper & lower rail with stepped segment between rails and slotted expander).

Oil Ring Set Sizes—Oil Saver and Oil Master Sets are available in following sizes. Standard (for standard to .009" oversize cylinders), .010" oversize (for .010-.019" bores), .020" (for .020-.029"), .030" (for .030-.039"), .040" (for .040-.049"), and .050" oversize (for .050-.060" oversize cylinder bores).

ORIGINAL BEARING SIZES

1936-48 MODELS

ENGINE NUMBER LETTERS ('SPECIAL STANDARD BORE & BEARING SIZES):—Letters used with engine number (**not in circular pads**) denote following 'special standard' sizes: **'A'**—.020" larger standard cylinder bore. **'B'**—.010" smaller standard main and connecting rod bearings. **'AB'**—Cylinder bore, main and connecting bearings 'special standard'.

1947-48 PLYMOUTH

►**.001" THICKER WALL MAIN & CONNECTING ROD BEARINGS:** When these bearings installed on production engines, machined surface of crankshaft center counterbalance marked as follows:
Connecting Rods—Shaft marked R1, R2, R3, R4, R5, or R6 depending on which connecting rod is fitted with a .001" thicker wall bearing.
Main Bearings—Shaft marked M1, M2, M3, or M4 depending on which journal fitted with a .001" thicker wall bearing.
►*CAUTION: These bearings used only in positions indicated by marks (not necessarily in complete sets).*

CONNECTING ROD & BEARINGS

►*CAUTION—See ORIGINAL BEARING SIZES for markings indicating production engines equipped with bearings other than standard size.*

1940-48 MODELS

CONNECTING ROD BEARINGS: Removal & Installation. Bearing shells can be removed after taking off bearing caps. When installing bearing shells, oil hole in rod and bearing must be aligned and ear on bearing halves fitted in notch in rod and cap.

Fitting Bearings—To check bearing clearance, place an oiled piece of feeler stock, .0015" thick place an oiled piece of feeler stock, .002" thick (.0015" thick on Dodge & Plymouth), ½" wide, 1" long between bearing and crankshaft. Tighten bearing cap bolt nuts. Bearings clearance is correct when slight drag felt when turning crankshaft by hand. If no drag felt, and crankshaft journal out-of-round and taper not over .001", install proper undersize bearing listed below.

Undersize Bearings—Finished bearing shells furnished .001", .002", .010", .012" undersize. Install .001" or .002" undersize bearings on standard crankshafts which show slight wear, .010" for 'Special Standard' .010" crankshafts (see Engine Lettering 'Special Standard' Bore & Bearing Sizes Note above), .012" bearings for 'Special Standard' .010" crankshafts which show slight wear. Bearing size correct when proper clearance obtained (see Fitting above).

CRANKSHAFT & MAIN BEARINGS

►*CAUTION—See ORIGINAL BEARING SIZES for markings indicating production engines equipped with bearings other than standard size.*

1936-48 MODELS

REPLACEMENT MAIN BEARING CAPS: Furnished for service where original cap damaged or broken. These replacement caps same as original caps except for stud holes being 1/64" larger and bearing cap length which is 1/16" shorter.
Fitting—Replacement caps must be fitted to engine by filing or shimming to obtain proper bearing clearance. This is only necessary when replacement cap originally fitted to engine (caps should not be shimmed or filed to compensate for wear.

CONTINUED ON NEXT PAGE

CONTINUED FROM PRECEDING PAGE

1936-39 MODELS

MAIN BEARINGS: Removal—Car manufacturer recommends that Engine Assembly be removed on Chrysler and De Soto 1937-38-39 models for removing and installing main bearings. See separate Engine Assembly Removal paragraphs (above).

Front Main Bearing Cap Removal for Six Cylinder Engines (Chrysler & De Soto 1937-38, Dodge 1936 to 1938, Plymouth 1936 to 1938):—Remove oil pan, oil suction pipe and fan drive pulley (using Puller Tool No. CM-57). Take off timing chain cover. Remove flat head screw from timing case cover plate to oil pan front gasket oil seal plate (located on front face of cover plate just below and to the left of chain). Remove oil pan front gasket oil seal plate which will permit access to front main bearing cap.

Front Main Bearing Cap Removal for Six Cylinder Engines (All 1939):—See 1940 data following.

Adjustment:—Replace bearings. Do not shim or file bearing caps (see Replacement Main Bearing Caps above). With caps removed, the bearing upper halves may be rotated out without removing crankshaft by using pin installed in oil hole in shaft.

Fitting Main Bearings and Undersize Bearings: Same as given for 1941 models following.

1940 MODELS

MAIN BEARINGS: Removal (with engine in car)—Remove oil pan (see Oil Pan Removal following), oil suction pipe and screen assembly, crankshaft pulley shield (De Soto, Dodge & Plymouth) which is secured by 2 screws, main bearing cap-to-cylinder head oil lines, and main bearing caps (see Front Main Bearing Cap Removal below). Use puller No. C-305 to remove #1 and #5 caps on Chrysler 8. Upper bearing shells can then be removed without removing crankshaft by using an old bearing shell or Tool No. C-584 (inserted in oil hole in crankshaft). Turn crankshaft to rotate bearing out.

Front Main Bearing Cap Removal:—With oil pan removed, oil pan front gasket oil seal plate (not used on Chrysler 8) can be removed by taking out 2 screws on lower edge of timing chain cover (not necessary to remove cover) permitting access to front main bearing cap.

Fitting Bearings—To check bearing clearance, place an oiled piece of feeler stock, .002" thick, ½" wide, and 1" long between bearing and crankshaft. Tighten bearing cap nuts or cap screws. Bearing clearance is correct when slight drag felt when turning crankshaft by hand. If no drag felt, and crankshaft journal out-of-round and taper not over .001", install proper undersize bearing listed below.

1941-48 MODELS

MAIN BEARINGS: Removal & Installation (with engine in car). Bearing shells can be removed and installed without removing crankshaft as follows: Remove oil pan (see Oil Pan Removal), oil suction pipe and screen assembly, and crankshaft impulse neutralizer shield. Remove two lower screws on chain case cover (screw directly below crankshaft and first screw to right as viewed facing engine for Sixes) to free oil pan front end oil seal plate on Sixes, to free front main bearing cap on Eights. Punch mark bearing caps and crankcase and reinstall caps to these marks when assembling. Loosen all bearing caps (for Eights, use Special Puller Tool C-305 to free front and rear caps—caps are sealed, see Crankshaft Oil Seals). Remove caps in pairs (2 front or 2 rear). Upper bearing halves can be removed by using Special Tool C-584 inserted in oil hole in crankshaft and rotating crankshaft to turn bearing out (an old bearing shell can be used to free bearing in place of tool). After checking bearing clearance (see Fitting Bearings), upper bearing halves can be installed by reversing removal procedure above (tongue in shell must seat in groove in crankcase and cap, and bearing shell with oil hole must be installed on top side of crankshaft). CAUTION—When new bearings installed, always use complete bearing (do not use new bearing half with an old half). Upper and lower bearing halves for all bearings except rear are alike and interchangeable on Chrysler Six and De Soto. Rear bearing upper and lower halves are interchangeable. Upper and lower bearing halves on Chrysler 8, Dodge, and Plymouth are not interchangeable and bearing half with oil hole must be installed on top. Center bearing caps are offset slightly on Plymouth and must be installed properly to avoid damage (install to punch marks as described above). NOTE—When assembling oil suction pipe and screen on Plymouth engines, pipe should be positioned so that lower end points toward right capscrew on rear main bearing cap. With pipe in this position, proper clearance of screen assembly with baffles in oil pan will be obtained.

Fitting Bearings—To check bearing clearance, place an oiled piece of feeler stock, .0015" thick (for Plymouth models), .002" thick (for all others) by ½" wide, and 1" long between bearing and crankshaft. Tighten bearing cap nuts or cap screws. Bearing clearance is correct when slight drag felt when turning crankshaft by hand. If no drag felt, and crankshaft journal out-of-round and taper not over .001", install proper undersize bearing listed below.

Undersize Bearings—Finished bearing shells furnished .001", .002", .010," .012" undersize. Install .001" or .002" undersize bearings on standard crankshafts which show slight wear, .010" for 'Special Standard' .010" crankshafts (see Engine Lettering 'Special Standard' Bore & Bearing Sizes Note above), .012" bearings for 'Special Standard' .010" crankshafts which show slight wear. Bearing size correct when proper clearance obtained (see Fitting Bearings

1938-40 MODELS

CRANKSHAFT OIL SEALS: Servicing—Car manufacturer recommends that new oil seals be installed if chain cover or rear bearing cap removed.

Front Oil Seal:—Leather oil seal mounted in timing chain cover. When installing seal, leather should be soft and pliable, soaked in thin oil for approximately thirty minutes, then rolled with smooth bar. Use Chain Case Cover Oil Seal Centering Tool C-522 installed behind crankshaft starting jaw (tighten jaw finger tight) while tightening chain cover.

Rear Oil Seal:—Located at rear bearing. Consists of three separate seals as follows: 1—Bearing oil seal formed in two halves. Lower half mounted on rear of bearing cap and held by retainer screwed (3 screws with lockwashers) to rear face of cap. Upper half retained in same manner with retainer screwed in place on rear face of crankcase. 2—Bearing cap seal. Groove on each side of cap (immediately to rear of stud holes) fitted with seal. Seal assembled in groove with doubled-over end in toward bearing. 3—Bearing cap gaskets. L-shaped cap gaskets assembled around oil slinger groove (at rear of cap). Install gaskets (one on each side).

1941-48 MODELS

CRANKSHAFT OIL SEALS: Servicing—Car manufacturer recommends that new oil seals be installed if chain cover or rear bearing cap removed.

Front Oil Seal—Oil seal located in timing chain cover. Consists of spring-backed composition seal in a stamped steel housing pressed in chain case cover with composition gasket installed between seal and cover. To install seal proceed as follows: Insert new composition gasket in chain case cover, drive new seal in place with drift or similar tool slightly larger than seal (seal is press fit in cover), seal must have a tight, even fit in seat in cover. Center seal on crankshaft when installing chain case cover as follows: Install chain case cover on engine with cover screws tightened just enough to hold cover in place, install Special Centering Tool C-522 on end of crankshaft and hold it in place by tightening crankshaft starting jaw finger tight, tighten chain case cover screws and as cover gasket is being compressed, tighten crankshaft starting jaw nut so as to maintain slight tension between centering tool and seal. Remove tool after chain case cover screws secured. Tighten starter jaw to 108 ft. lbs. min.

Rear Oil Seal (2-Piece Type—6 Cyl.)—Located at rear main bearing. Consists of oil seal packing assembled on rear face of bearing cap and crankcase (upper half held by retainer assembled on rear face of crankcase, lower half by retainer assembled on rear face of bearing cap). Gaskets used on top face of bearing cap at each side, around oil slinger grooves and along shoulder across cap. Install new packing in retainer on crankcase and cap, place new gaskets on cap and install on engine without disturbing position of gaskets.

NOTE—Some models equipped with additional two-piece oil gasket. This gasket assembled between seal retainer and crankcase (upper half), between retainer and bearing cap (lower half).

Rear Oil Seal (2-Piece Type—8 Cyl.)—Located at rear main bearing. Consists of seal assembled on rear face of bearing cap and crankcase (upper half held by retainer assembled on rear face of crankcase, lower half by retainer asembled on rear face of bearing cap), and by rubber seals assembled in vertical grooves on each side of bearing cap. When installing rubber seals, upset grooves on each side of cap with prick punch to anchor seals in grooves and prevents seals sliding out when cap installed. These rubber seals also used on front bearing cap.

NOTE—Some models equipped with additional two-piece oil gasket. This gasket assembled between seal retainer and crankcase (upper half), between retainer and bearing cap (lower half).

Rear Oil Seal (1-Piece Type)—New one-piece type with lip on forward edge engaging shoulder in crankcase and bearing cap to rear of crankshaft oil slinger. This seal is split at the top.

Installation—Remove oil pan (see Oil Pan Removal following). Back off all main bearing capscrews three turns. Remove rear main bearing cap (use Puller C-305 for 8 cylinder). Pull out old seal with pliers. Coat one end of new seal with tire soap or cup grease (avoid getting any grease between ends of seal). Insert one end of seal over shoulder in crankcase, work up until end approximately at top, then work other end in same manner on other side until ends come together at top. Coat lower lip of

seal so that bearing cap will seat on seal easily. Check rear bearing cap for holes (either sand holes or tapped holes for 2-piece type seal retainer). If holes extend through oil slinger groove shoulder, sand holes should be plugged by welding or tapped holes plugged by installing screws which have been coated with sealing compound. Re-assemble main bearing caps and oil pan.

REPLACEMENT NOTE—If one-piece seal to be installed on engine where two-piece type seal used, removal of transmission, clutch, and fluid drive may be required to remove both halves of old seal.

TIMING CHAIN

1938 MODELS

TIMING CHAIN REMOVAL: With hood and side panels removed, take off radiator shell and radiator as a unit, support engine under front end and remove front engine support. Remove fan drive pulley and balancer (if used) with Puller Tool No. CM-57. Take off chain cover and chain.

CAMSHAFT & BEARINGS

1940-48 MODELS

CAMSHAFT REMOVAL: Remove Front End Assembly as a unit (see removal data on preceding pages). Remove cylinder head, fuel pump, oil pump, valve tappet cover plates, crankshaft pulley, front motor support (with front of engine jacked up), timing chain cover, camshaft sprocket and timing chain. If valves and valve springs are not to be removed, prop valves up by inserting wooden wedges at opposite sides under valve head. Raise tappets and hold in this position (use spring type clothes pins or similar tool to hold tappets up). Withdraw camshaft (rotate shaft to clear any obstructions).

Chrysler 8 Note—In addition to instructions listed above, two oil feeder lines in valve chamber must be removed and #4 piston must be on top dead center in order to remove camshaft.

VALVE SYSTEM

1936-48 MODELS

EXHAUST VALVE SEAT INSERTS: Refacing—Exhaust valve seat inserts must be reground (cannot be recut due to hardness) with high speed grinding stones (Tool C-372) used dry. Roughing stone—to obtain full contact; Finishing stone—to obtain proper finish. Stones must first be dressed for concentricity. Grinding tool centers on expanding pilot inserted in clean valve guide (upper end must be cleaned and chamfered with reamer to provide 60° seat 1/16" wide for this pilot). Lubricate pilot with few drops of oil. All carbon or grease must be removed from valve seat before grinding. Finished seat allowable runout .0005". Check with indicator.

Replacement Inserts—Furnished .010" oversize. Use special tool set MH-N-1 (includes grinding and replacement tools). Inserts removed with special puller to avoid damage to engine block. Special cutters (allowing press fit for new insert) and peening tools (securing insert in place) used with pilot in valve guide (as above) for proper alignment. After installing, finish guide (see Refacing).

OIL PUMP

1938 MODELS

OIL PUMP REMOVAL AND INSTALLATION: Chrysler & DeSoto only). Disconnect oil gauge and fuel pump lines, exhaust pipe, starter pedal (DeSoto only), drain radiator and disconnect hoses. Remove floor boards, loosen engine mountings and tilt engine by placing jack under oil pan. Remove pump body capscrews, remove pump. To install, reverse procedure.

1940-42 MODELS

OIL PUMP REMOVAL: Take off engine splash pan on right side of engine. Remove distributor cap, turn engine over until #1 cylinder in firing position (distributor rotor opposite #1 terminal position in cap). Allow engine to remain in this position while pump is off the engine (if engine position disturbed while pump is off the engine, re-install pump as described below). Remove cap screws in pump body, take the pump off the engine.

Installation—When installing pump where crankshaft has been moved while pump off engine, turn crankshaft until #1 cylinder is at firing position (both valves closed, piston on compression), remove distributor, insert screwdriver in distributor mounting hole, install pump on engine with screwdriver engaging slot in pump shaft, turn screwdriver so that slot in pump shaft is parallel with crankshaft (to mesh pump and camshaft gear, turn pump shaft slightly while installing pump). Pump position is correct when slot in upper end is approximately parallel with crankshaft (slot should slant down toward the front just a bit). Then install distributor with rotor at #1 firing position and reset ignition timing (see car model page for data).

1946-47-48 MODELS

ROTOR TYPE OIL PUMP: Removal—Take off distributor cap, turn engine over until #1 cylinder is at firing position (allow engine to remain in this position while pump off engine). Remove two oil pump Allen-head screws. Take pump off engine.

Pump Servicing—Disassemble pump by taking off cover and drive gear (drive out pin and press gear off shaft). Thoroughly clean parts and dry with compressed air. Check pump parts as follows: 1)—With rotors in pump body, turn shaft so that one lobe on inner rotor pushed into notch in outer rotor, check clearance between opposite lobe of inner rotor and inner face of outer rotor. If clearance greater than .010" replace both rotors. 2)—Height (or thickness) of both rotors should be at least .748". Diameter of outer rotor should be at least 2.245". Replace if measurements are less. 3)—With rotors in pump body, turn body up, place straightedge across face of body between screw holes. Clearance between straightedge and rotors should be .004" max. If greater, replace pump body. 4)—With outer rotor pressed to one side of body, clearance at opposite side should be .008" maximum. If greater, replace pump body. ..5)—Check cover by placing straightedge across inner face and if .001" feeler can be inserted between cover and straightedge, or if face is scratched or marred, replace cover.

Pump Assembly—If new rotor installed on shaft, it must be installed with rotor square to shaft and pressed on until flush with end of shaft. Pin rotor to shaft after drilling 5/32" pin hole. Drive gear should be pressed on shaft to give .003-.010" clearance between underside of gear and pump body with rotor (on opposite end of shaft) seated in pump body. Install pin. If necessary, drill new 5/32" hole at right angles to old hole. With rotors in place, install new cover gasket on body and install cover.

Pump Installation—Oil pump must be installed on engine with #1 piston in firing position with rotor on distributor opposite #1 terminal in cap.

OIL PAN REMOVAL

1940 MODELS

OIL PAN REMOVAL: Drain oil, replace drain plug. Remove clutch housing underpan (on six cylinder cars this prevents damage to oil pan gaskets on housing underpan dust seal. Remove oil level indicator and drop oil pan.

Installation:—With oil pan clean, install new oil pan gaskets. IMPORTANT—On six cylinder engines, oil pan end gaskets (front and rear) must protrude ¼" to ⅛" above oil pan. Side gaskets installed with ends resting on top of protruding end gaskets. With gaskets in this position, they will be properly compressed when oil pan screws are tightened.

1941-48 MODELS

OIL PAN REMOVAL: Drain oil, replace drain plug. Remove clutch housing underpan to avoid damaging oil pan gaskets on underpan dust shield (NOTE—On Eight cylinder cars, raise rear of engine slightly so that pan clears frame cross-member). Remove oil level indicator, drop oil pan on tie rod. Pan can then be removed by reaching in under crankcase and raising oil strainer to clear baffle while sliding pan out to rear.

Installation (6 cylinder Engines)—When installing new gaskets, end gaskets should extend ¼" to ⅛" above level of oil pan (these ends must not be cut off). Side gasket installed with ends resting on top of protruding end gaskets. Gaskets will be compressed into place when pan screws tightened.

RADIATOR

1939 MODELS

RADIATOR CORE REMOVAL: Chrysler C22, De Soto S6, Dodge D11, Plymouth P7, P8. Remove hood and side panels. Drain cooling system. Remove water pump (Chrysler and Dodge only). Disconnect radiator hoses and take fan blades off pulley (De Soto and Plymouth only). Disconnect headlamp wires at junction block on left fender lower shield and push forward through radiator core side flange. Remove three radiator core-to-support capscrews at each side. Lift core out. NOTE—Loosen lower front screws of fender shield if necessary.

Installation—Reverse procedure listed above. Headlamp wires should be tied together at terminals with a long piece of string, pass string through core flange hole (toward the rear), assemble core and pull wires through hole.

Chrysler C23, C24:—Remove complete hood assembly and side panels. Drain cooling system. Remove screws and bolts securing lower splash pan (at front of car) to shell cross member (below grille) and to side shields, front wheels and front bumper from frame. Free front end of fenders by removing 5 capscrews (fender-to-grille shell) and 2 capscrews in fender bracket-to-radiator support. Remove radiator hoses. Take out fan shroud bolts and lift shroud out. Free radiator shell from support by removing

CONTINUED N NEXT PAGE

RADIATOR

CONTINUED FROM PRECEDING PAGE

two capscrews at each side (just above top end of outside grille bars). Pull radiator shell forward off car with fenders moved apart. Remove radiator core support capscrews and lift core out. NOTE—When reassembling, secure bolts and screws which hold shell and fenders in a half tight position, tighten only after hood alignment obtained.

1940 MODELS

RADIATOR CORE REMOVAL: Chrysler C25, De Soto S7, Dodge D14, D17. Drain cooling system. Remove hood, radiator inlet hose (at top tank), outlet house (at pump), fan blade assembly (by removing screws at pump flange and lifting blades off), and radiator core-to-support capscrews (three on each side). With core tilted to rear, lift up and remove.

Chrysler C26, C27:—Remove hood and and carburetor air cleaner. Remove water pump (see 1940 Chrysler C26, C27 pages for instructions). Remove water pump back plate and headlight wires from clips along top of radiator core, radiator outlet hose and elbow at bottom of core, and core-to-support capscrews and nuts. Tilt radiator core toward engine as far as possible and lift core out (car manufacturer recommends that two men lift core out of car so as to prevent core damage).

Plymouth P9, P10:—Remove hood and take off water pump (see 1940 Plymouth P9 & P10 pages for instructions). Disconnect hose at radiator top tank. Unclip headlight wires along top of core and move wires so as to clear core. Remove radiator core-to-support capscrews at each side. Tilt radiator core back and lift out of car.

1941 MODELS

RADIATOR CORE REMOVAL: 6 cylinder Cars—Remove hood and radiator ornament (on Chrysler and Dodge only). Drain cooling system. Remove inlet and outlet hoses. On Chrysler, remove water outlet elbow and thermostat, fan belt, water pump cap screws, and lift water pump out. On Dodge, remove fan blade cap screws in flange on pump shaft and take off fan blades. Free headlight wires from clips so that wires clear radiator. Remove nuts and cap screws from radiator support on each side. On De Soto and Plymouth, remove brackets at upper left and right corners of radiator support Lift radiator core up and out of chassis (on Chrysler and De Soto, tilt upper end of core back).

8 cylinder Cars—Remove hood and radiator ornament, drain cooling system. Remove front end assembly (see Front End Assembly (Unit) Removal above). Remove radiator support-to-core cap screws and nuts. Lift radiator core out.

1942-48 MODELS

RADIATOR CORE REMOVAL: Raise hood (remove hood and radiator ornament on Dodge), drain cooling system, disconnect hoses, free headlight wires from radiator, remove fan shroud (if used), take out nuts and capscrews in support at each side, lift core out tilting top toward rear NOTE—Fan blades on some models should be removed if additional clearance required.

COOLING SYSTEM

1941-48 MODELS

WATER DISTRIBUTOR TUBE: Removable one-piece tube installed between cylinders and valve ports (on six cylinder engines), on right side of engine just above valve spring chamber (on 8 cyl engines) and distributes water from pump to exhaust valve ports through holes in tube

Servicing—A new tube should be installed whenever engine overhauled or when rusted or corroded in order to provide correct water circulation in engine block. To replace tube proceed as follows: Remove front end assembly (see Front End Assembly (Unit) Removal above). On six cylinder engines remove water pump which will expose front end of tube. On eight cylinder engines, remove welch plug to right of water pump to expose front end of tube Remove tube by using rod with hook formed on end and engage it in slot on upper edge of tube just inside block, pull tube out. NOTE—On 8 cylinder engines, see that front end of tube flared in same manner as tube which was removed from engine

CLUTCH NOTES

1937 MODELS

CLUTCH CHANGE TO CORRECT HARD SHIFTING: Shifting trouble caused by driven member not releasing properly can be corrected by installing new type driven disc or by cutting twenty-seven spiral grooves 3/32" wide and 1/32" deep spaced equally around facing. Grooves must not exceed these dimensions or facing will be weakened and wear will be excessive

1946-47 MODELS

CLUTCH OVER-CENTER SPRING: Serviced only if linkage disturbed or spring bracket on frame bent Original setting can be obtained by using Miller Gauge C-705 as follows· Check spring bracket on frame and straighten if necessary, install gauge over linkage pivot pins with lower end engaging coil spring bracket on frame (turn pedal rod turnbuckle until gauge fits properly). Then re-set pedal position and free travel as directed on car page

PROPELLER SHAFT

1936-40 MODELS

PROPELLER SHAFT CENTER BEARING REMOVAL AND INSTALLATION:—Used on all passenger car models with two propeller shafts. To remove, take out rear propeller shaft, disconnect front universal (at rear of transmission), remove center bearing-to-frame mounting screws, slide front propeller shaft (with bearing) out through frame opening in X-member. To install, reverse procedure taking care to replace bearing-to-frame spacer (if used).

1941-47 MODELS

PROPELLER SHAFT CENTER BEARING: Used on all passenger car models with two propeller shafts. Consists of ball-bearing mounted on rear end of front propeller shaft with an oil seal assembled to front and to rear of bearing, and this assembly (bearing and oil seals) enclosed in a housing which is flange mounted on rear side of frame cross-member. An insulator is assembled on front end of housing. To remove assembly, remove nuts and lockwashers from differential and transmission companion flanges to free propeller shafts at front and rear, take out 4 center bearing housing-to-frame cross-member mounting bolts, remove propeller shaft and center bearing as an assembly.

REAR AXLE NOTES

1946-47-48 MODELS

REAR WHEEL BRAKE AXLE SHAFT SEAL: New type leather seal mounted on brake support and bears on axle shaft (former design secured by brake support bolts and contacted hub).

Installation—With brake support removed and old seal driven out of support, new seal can be installed as follows: Soak new seal in thin oil for 30 minutes. Roll leather with smooth bar until pliable. Check seal bearing surface on axle shaft making sure surface is smooth. Install seal on front side of support and stake to support at three points on outer edge. Install sleeve (Tool C-745) in seal (protects seal from damage while installing support). Assemble brake support on housing. CAUTION—Lip of seal must not be folded when installing in support.

BRAKE NOTES

1938-39 MODELS

HAND BRAKE ADJUSTMENT: Fully release hand lever (cable length adjusted by means of clevis at lower end). Remove lock wire on anchor screw (on right lower side), adjust for .015-.020" band to drum clearance for lower portion of band, lock in place. Back off large adjusting bolt nut at top until free. Loosen guide bolt lock nut (on mounting bracket), turn adjusting nut (under locknut) for .015-.020" band to drum clearance, tighten locknut. Tighten large nut at top until tension on either side of guide bolt is just relieved (groove in nut must align with ridge in lockwasher).

NOTE—Clearance between side of anchor & bracket must not exceed .005". To correct, clamp anchor bracket in vise and tap lightly with hammer.

1940-48 MODELS

HAND BRAKE ADJUSTMENT: The hand brake adjustments can be made from beneath car as follows: Fully release hand lever (cable length adjusted by means of clevis at lower end). Adjust anchor screw for .015-.020" band to drum clearance by bending back tab of anchor screw lock and turning screw (on lower right side of brake), then lock screw by bending tab against flat of screw. Loosen guide bolt locknut and adjust guide bolt adjusting nut for .015-.020" band to drum clearance (these two nuts located in front of release springs at left side), then tighten locknut. Turn large adjusting bolt nut (on lower end of bolt below springs) for .015-.020" band to drum clearance for upper half of band. Groove in upper end of this nut must contact ridge on band operating lever spacer above nut.

NOTE—Clearance between side of anchor bracket at center of band and anchor must not exceed .005" (if clearance excessive band may be distorted when brake applied). To correct, compress saddle in vise r place on block and tap lightly with a hammer.

MODEL IDENTIFICATION

SERIAL NUMBER:—First number—6,823,301 (Detroit), 9,704,601 (Canada). Located on right front door hinge post.

ENGINE NUMBER: First number C-7-1001. Stamped on left side of block between #1 and #2 cylinders. *For Engine Number Lettering data (Special Standard Bore & Bearing Sizes), refer to Chrysler Shop Notes.*

TUNE-UP

COMPRESSION:—Ratio—6.0-1 Std. cast-iron head, 6.5-1 (optional aluminum head).
Pressure—(6.0-1 Std. head) 120-130 lbs. at 1000 RPM or approx. 103 lbs. at cranking speed, (6.5-1 Optl. head) 125-135 lbs. at 1000 R.P.M. or approx. 110 lbs. at cranking speed.

VACUUM READING: Steady 16-18" idling at 6 MPH.

FIRING ORDER: 1-5-3-6-2-4. See diagram.

SPARK PLUGS: Champion Type J-8 (6.0-1 Cast Iron Hd.) Type H-10 (6.5-1 Aluminum Hd.). 14 mm. Metric. **Gaps—.025".**
NOTE—Spark plugs used in aluminum head engines have longer thread length. Not interchangeable

IGNITION: See Coil, Condenser, and Distributor.
Breaker Gap—.020". Cam Angle 38° (closed).
Automatic Advance—12° max. (distr.) at 1530 RPM. (IGS-4006-1 Distr.), 1750 RPM. (IGS-4006A-1 Distr.).
Vacuum Advance—8° distr. with 15" vacuum.

IGNITION TIMING: See Ignition Timing.
Std. Setting—At TDC (6.0-1 Head), 5° ATDC (6.5-1 Head) with DC mark "O" or correct degree mark on impulse neutralizer at indicator on front of engine.

CARBURETION: See Carburetor & Carb. Equipment.
Idle Setting—Idle screw ¼-1 turn open. Idle speed 300 RPM. or 6 MPH.
Float Level—5/64" top of float below top of bowl.
Accelerating Pump—Center hole normal, outer hole (max. stroke) extreme winter temperatures.
Fuel Pump Pressure: 3½ lbs. maximum.

VALVES: See Valve Timing.
Tappet Clearance:—.006" Int., .008" Exh. with engine hot. .010" Exh. recommended for sustained high speed.

STARTING: See Battery, Starter, Generator, Regulator.

IGNITION

Ignition Switch:—Mitchellock Model 24-B, Type 6519. Connected to coil by armored cable.
Ignition Lock—Yale & Towne Mod. DP-108, Mitchell No. 6286.

COIL: Auto-Lite Model IG-4638 (Conv. Sedan & Coupe), IG-4631 (all others). Service Winding (coil less switch and cable) IG-3224JS. Mounted on dash.
Ignition Current—2.5 amperes idling, 5.5 stopped.

CONDENSER: Auto-Lite Part No. IG-3927A.
Capacity—.25-.28 microfarad.

DISTRIBUTOR: Auto-Lite Model IGS-4006-1, IGS-4006A-1. Single breaker, 6 lobe cam, full automatic advance type with auxiliary vacuum spark control.
See Electrical Equipment Section for special servicing directions on these distributors.
Breaker Gap—Set at .020".
Cam Angle or Dwell—38° closed, 22° open.
Breaker Arm Spring Tension—16-20 ounces.

Automatic Advance—IGS-4006-1

Distributor Degrees	R.P.M.	Engine Degrees	R.P.M.
Start	350	0	700
3	400	6	800
6	775	12	1550
9	1150	18	2300
12	1530	24	3060

Automatic Advance—IGS-4006A-1

Start	350	0	700
3	400	6	800
6	850	12	1700
9	1300	18	2600
12	1750	24	3500

Vacuum Spark Control—Integral with distributor. Mounted on distributor housing and linked directly to breaker plate. Provides additional advance for speeds above idling except when engine is accelerated or operated with wide open throttle when spark is retarded by return spring within unit.

Vacuum Advance

Distr. Degrees	Eng. Degrees	Vacuum (" of HG)
Start	0°	5.1"
4°	8°	10-11"
8°	16°	15"

Distributor Removal:—Mounted on left side of crankcase. To remove, take out hold-down screw in advance arm, disconnect vacuum line.

IGNITION TIMING

IGNITION TIMING:	Flywheel Deg.	Piston Position
6.0-1 Std. Head	At TDC	.0000" TDC.
6.5-1 Optl. Al. Head	5° ATDC	.0118" ATDC.

See 'Manual Adjustment' (following) for final setting for best performance depending on fuel used.
NOTE—Impulse neutralizer at front of engine marked 'O' at top dead center with 15 one degree graduations before and after this point.

CONTINUED ON NEXT PAGE

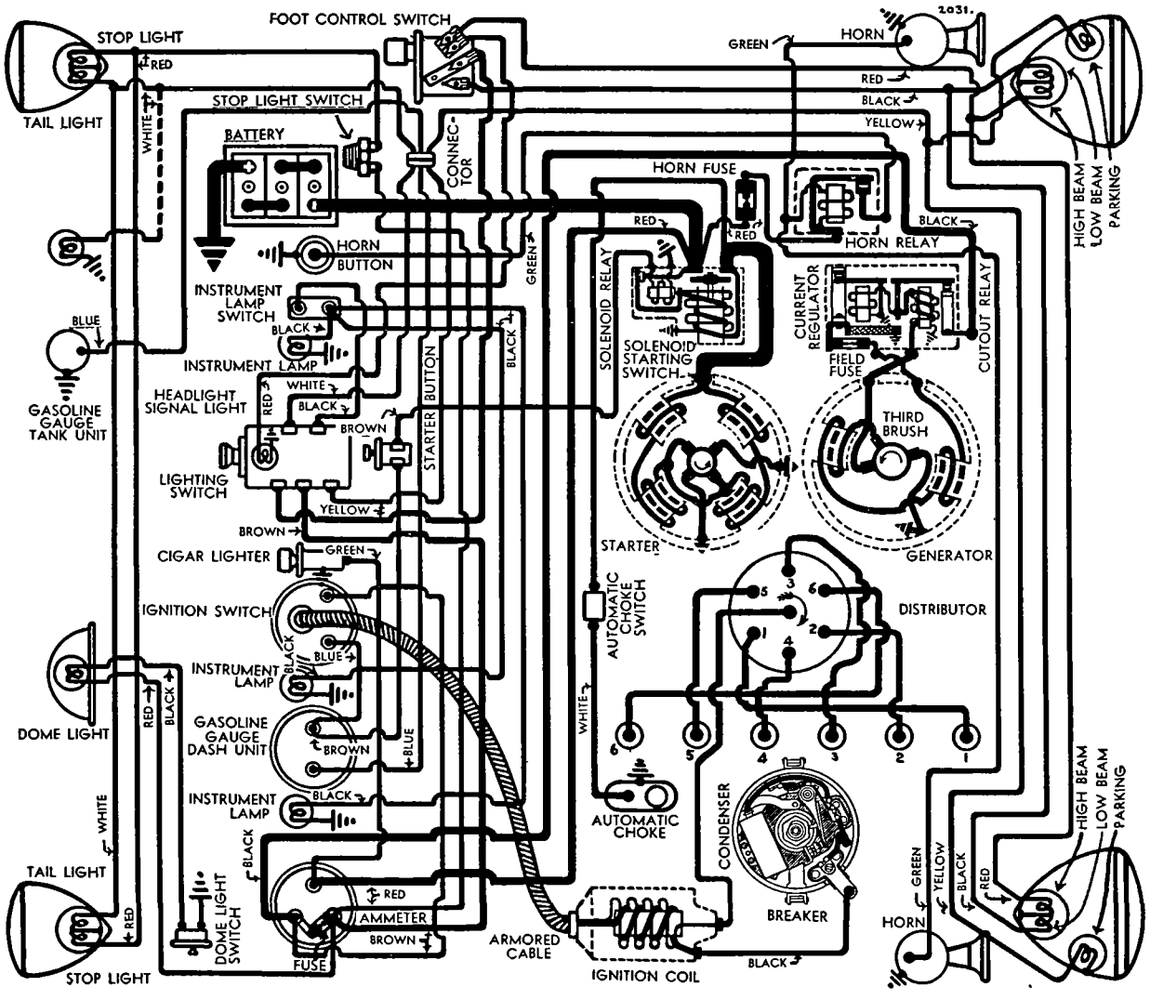

C NTINUED FROM PRECEDING PAGE

Timing (Using Timing Light)—Connect timing light between distributor terminal and battery terminal on generator control unit. With #1 piston on compression, turn engine over until piston reaches firing position (see table), stop when correct line on impulse neutralizer lines up with pointer on chain case cover. Loosen distributor hold-down screw, center pointer on scale, tighten hold-down screw. Loosen advance arm clamp bolt, rotate distributor until timing light just goes out, tighten clamp bolt.
Timing (Using Synchroscope)—Clip lead to #1 spark plug, direct light on impulse neutralizer, fill in correct mark with chalk. Idle engine.

Manual Adjustment:—After ignition set as above, road test car and adjust for slight ping with wide open throttle when accelerating from 10-30 M.P.H. To adjust, loosen hold-down screw, advance (counter-clockwise), retard (clockwise) pointer on scale. Scale graduated in engine degrees. Do not advance pointer more than 5° on scale.

CARBURETOR

CARBURETION:—Carburetor—Carter (Ball & Ball) Model E6G1, 1½" downdraft type.
For complete data, refer to Carburetor Index.
Idle Adjustment—Adjust throttle stopscrew so that idle speed is 300 R.P.M. or 6 M.P.H. Turn idle adjusting screw in until engine begins to hesitate or miss, then out until engine begins to roll, finally turn screw in until engine fires smoothly. Final setting should be ¼-1 turn of screw from inner closed or seated position. Readjust throttle stopscrew for correct idling speed.
Accelerating Pump Setting—Engage pump link in proper hole in throttle lever for seasonal requirements as follows:
Inner Hole (Min. stroke)—Extremely warm weather.
Center Hole—Normal summer temperatures.
Outer Hole (Max. stroke)—Winter temperatures.
NOTE—5% and 10% lean main metering screws (high altitude calibration) may be used at lower altitudes for maximum fuel economy although with considerably reduced speed and power. See Carter (B & B) Jet Specifications in Carburetion Section.
Fast Idle:—Integral with carburetor. No adjustment.
Automatic Choke: Sisson Type AC-751.
For complete data, refer to Carburetion Equip. Index.

CARB. EQUIPMENT

Air Cleaner:—Burgess oil-wetted type standard, AC. #1526838 heavy duty oil-bath type optional.
Fuel Pump:—AC. Type B #1522237. Diaphragm type.
For complete data, refer to Carburetion Equip. Index.
Gasoline Gauge:—Motometer Electric No. NG-7781-D or NG-7879-D (dash unit), NG-7687-T (tank unit).
For complete data, refer to Carburetion Equip. Index.

BATTERY

BATTERY:—Willard, Type WH-2-15, RH-2-15 (Export). 6 volt, 15 plate, 119 ampere hour (20 hour rate).
Starting Capacity—140 amperes for 20 minutes.
Zero Capacity—300 amperes for 4.3 minutes.
Grounded Terminal—Positive (+) terminal.
Location—On left side under drivers seat.

STARTER

Auto-Lite Model MAX-4016. Armature MAW-2030.
Drive—Magnetic shift outboard pinion.
Cranking Engine—Approx. 200 amperes at 5 volts.
Rotation—Counter-clockwise at commutator end.
Brush Spring Tension—42-53 ozs. (new brushes).

Performance Data

Torque	R.P.M.	Volts	Amperes
0 ft. lbs.	5300	5.5	65
.65 "	3300	5.5	100
2.75 "	1630	5.0	200
5.5 "	970	4.5	300
8.7 "	600	4.0	400
12.0 "	300	3.5	500
16.5 "	Lock	3.0	640
25.0 "	Lock	4.0	880

Removal:—Flange mounted on left front face of flywheel housing. To remove, take out flange screws.
Starting Switch:—Solenoid Switch Type SS-4104. Controlled through relay by pushbutton on dash. Operative with ignition turned 'on'.
For complete data, refer to Electrical Equipment Index.

Solenoid Switch

Closes against 105 lb. pull with ⅜" air gap drawing 65 amperes. Holds switch closed with draw of 15 amperes (hold-in coil only).

Solenoid Relay

Contacts Close—3.5-4.5 volts. Open—1.5-2.5 volts.
Contact Gap—.025-.030". Air Gap—.005-.007" (closed)

GENERATOR

Auto-Lite Model GAR-4608A-5. Armature No. GAR-2116F. Third brush control in conjunction with Current Regulator (two-rate charging control). Ventilated by fan on drive pulley.
Charging Rate Adjustment—Use test meters. Connect jumper between fuse cup on regulator and ground. Shift third brush by hand counter-clockwise to increase or clockwise to decrease charging rate until output is 21 amperes at 8.6 volts with generator at room temperature. Third brush held in position by friction. Remove jumper.
Commutator Bar Method—Shift third brush until exactly 4 commutator bars are exposed between brush and nearest main brush.
Maximum Charging Rate—As given above. Do not exceed.

Performance Data

Cold Regulator Contacts Closed			Hot		
Amperes	Volts	R.P.M.	Amperes	Volts	R.P.M.
0	6.4	800	0	6.4	825
4	6.8	950	4	6.8	1000
8	7.25	1100	8	7.25	1200
12	7.7	1275	12	7.7	1440
16	8.1	1525	16	8.1	1825
21	8.6	2400	18.5	8.35	2500

Rotation—Counterclockwise at commutator end.
Brush Spring Tension—24 ozs. min. (old brushes), 36 ozs. max. (new brushes).
Field Current—3.89-3.51 amperes at 6.0 volts.
Motoring Current—5.03-5.57 amperes at 6.0 volts.
Field Fuse—5 ampere in plug on regulator case.
Removal:—Pivot mounted at left front of engine. To remove, take out pivot bolts and clamp bolt.
Belt Adjustment:—Swing generator away from engine until 45-50 lb. reading indicated on scale attached to generator frame.

REGULATOR

Auto-Lite Model TC-4301A. "Two-Charge" Type. On generator. Consists of Cutout Relay & Current Regulator two-rate charging control). See article in Equipment Section for complete data.
For complete data, refer to Electrical Equipment Index.

Cutout Relay

Cuts In—6.5-7.25 volts.
Cuts Out—.5-2.5 ampere discharge current.
Contact Gap—.015-.045".
Air Gap—.010-.030" with contacts closed.

Current Regulator

Contacts Open—8.25-8.75 volts at 70° F.
Contacts Close—1.2-1.4 volts below opening point.
Contact Gap—.005" minimum.
Air Gap—.045" with contacts closed.

LIGHTING

LIGHTING:—Headlamps—Hall. Pre-focused type. Head lamps aimed straight ahead (upper beam, with lenses in place). Lower beam deflected slightly to right. Upper and lower beams controlled by foot selector switch.
Headlamp Beam Indicator—In light switch knob Lighted when headlamp upper beams in use.

Switches

Lighting—Chrysler Part No. 655559. Douglas Switch which is available only through Chrysler Parts Dept
Foot Selector—Clum Model 9657.
Stop Light—R.B.M. No. 910. Hydraulic type mounted on brake master cylinder.

Bulb Specifications

Position	Candlepower	Mazda No.
Headlamps	32-32	2331
Parking, Instrmt., Ign. Sw.	1½	55
Stop and Tail	21-3	1158
Dome	15	87

MISC. ELECTRICAL

FUSES:—Lighting—20 amperes on back of ammeter.
Generator Field—5 ampere in plug on regulator.
Twin Horns—30 ampere in connector near starter.

HORNS:—Std. Motometer. Optl. Klaxon Model K-33-C Type 2151 (low note), 2152 (high note). Vibrator type, blended tone, twin horns operated by horn relay.

Horn Type	Current at 6 volts	Air Gap
2151	11-13	.042-.046"
2152	10-12	.032-.036"

Horn Relay:—Model 266-TK. Requires .25 amperes at 2 volts min. to close contacts. Current draw .8 amps.
Contact Gap—.015-.025".
Air Gap—.012-.017" with contacts closed.

ENGINE

ENGINE SPECIFICATIONS:—6 cylinder 'L' head.
Bore—3⅜". **Stroke**—4½".
Displacement—241.5 cubic inches.
Rated Horsepower—27.34 (AMA).
Developed Horsepower—93 HP. (Std. 6.0-1 Head), 100 HP. (Optl. 6.5-1 head) at 3400 R.P.M.
Compression Ratio—6.0-1 Std. Cast-iron head, 6.5-1 Optl. Aluminum head.
Compression Pressure—6.0-1 Std. Head 120-130 lbs. at 1000 R.P.M. or approx. 103 lbs. at cranking speed. 6.5-1 Optl. Head 125-135 lbs. at 1000 R.P.M. or approx. 110 lbs. at cranking speed.
Vacuum Reading—Gauge should show steady reading of 16-18" with engine idling at 6 M.P.H.
NOTE—Aluminum heads should be tightened cold.

ENGINE

CONTINUED FR M PRECEDING PAGE

PISTONS:—Aluminum alloy, 'T' slot, Cam ground type with anodized finish (special hard oxide formed on bearing surface). **Length—3⅞". Weight**—Held to two gram max. variation.
Removal—Pistons and rods removed from above.
Clearance—Top .022". Skirt .002". See Fitting New Pistons.
Replacement Pistons:—Finished anodized pistons furnished in standard and .003", .005", .010", .015", .020", .023", .025", .030", .040", .050", .060" oversizes. Semi-finished pistons furnished: (1) standard to .023" oversize, (2) .025-.050" oversize, not interchangeable. Pistons should be slotted and then finished on cam grinding equipment.
Fitting New Pistons:—Micrometer gauge recommended. Using feeler gauge (.002") inserted between piston and cylinder wall on side opposite slot, pull required to withdraw feeler must be 3-4 lbs.
Installing Pistons:—Slot should be toward left.

PISTON RINGS:—Two compression, one undercut oil wiper ring (#3), one oil control ring per piston, all above pin. Lower ring grooves drilled radially with twelve ⅛" oil drain holes.

Ring	Width	End Gap	Side Clearance
Comp. all	⅛"	.007-.015"	.002-.003"
Oil (both)	5/32"	.007-.015"	.002-.003"

Replacement Rings:—Furnished in standard and .003", .010", .020", .030", .040" .050", .060" oversizes. NOTE—Install undercut compression and oil wiper ring with step down.

PISTON PIN:—Diameter 55/64". Length 2⅞".
Pin floats in piston and rod. Held by locking rings at each end. Pin hole in rod is bronze bushed.
NOTE—Heat piston in boiling water to remove or install pins.
Pin Fit in Piston—Tight thumb push fit at 120°F.
Pin Fit in Rod Bushing—Tight thumb push fit 70°.
Replacement Pins:—Pins furnished in standard and .003", .005", .008" oversizes. Ream rod bushing and pin holes in piston bosses for correct fit.

CONNECTING ROD:—Weight—Held within limits.
Length—8¾" (center-to-center).
Crankpin Journal Diameter—2⅛".
Lower Bearing—Removable steel-backed, copper-lead lined. Furnished standard and .010" undersize.
Clearance—.0005-.0025". Sideplay .0055-.0115".
Bearing Adjustment:—None (no shims). Replace bearings. Do not file rods or caps. Install new bearings so small bosses engage grooves in rod and cap.
Installing Rods:—Lower bearings are offset. Install rods with widest half of bearing toward rear (#1, 3, 5) or toward front (#2, 4, 6). Oil hole in lower bearing upper half must be toward camshaft on all rods.

CRANKSHAFT:—4 bearing. Integral counterweights.
Journal Diameters—2½" all bearings.
Bearing Type—Removable steel-backed, babbitt-lined. **Clearance**—.001-.002".
Bearing Adjustment:—None (no shims). Replace bearings. Do not file bearing caps.
Replacement Bearings & Bearing Caps: *Refer to Chrysler Shop Notes for complete data.*
End Thrust:—Taken by flange faces on rear (#4) bearing. Endplay .003-.007".

CAMSHAFT:—4 bearing. Non-adjustable chain drive.
Journal Diameters—#1, 2"; #2, 1 31/32"; #3, 1 15/16"; #4, 1⅜"
Bearing Type—Removable steel-backed, babbitt-lined (except #4, machined in crankcase).
Clearance—.001-.003" (#1), .0015-.0035" (all others).
NOTE—New bearings require no line-reaming.
End Thrust:—Taken by thrust plate at rear of sprocket hub. Endplay .003-.005".
Timing Chain:—Morse. Width 1". Pitch ½". Length 24" or 48 links.
Camshaft Setting:—Sprockets are marked. Mesh chain with sprockets turned so that 'O' marks are adjacent and in line with a straightedge across shaft centers.
NOTE—Engine must be supported under front end of oil pan and front engine support removed for work on timing chain and camshaft.

VALVES—	Head Diameter	Stem Diameter	Length
Intake	1 17/32"	.340-.341"	5 5/8"
Exhaust	1 15/32"	.340-.341"	5 5/8"

	Seat Angle	Lift	Stem Clearance
Intake	45°	11/32"	.001-.003"
Exhaust	45°	11/32"	.003-.005"

See Chrysler Special Shop Notes for Exhaust valve seat insert removal and installation instructions.
Valve Guides:—Use special tool to remove and install guides. Insert guides with taper end up (intake) and down (exhaust). Top of guide must be 13/16" below top of block. After installing finish ream new guides to inside diam. of .342-.343" (Int.), .344-.345" (Exh.).
Valve Springs:—Variable pitch type. Install springs with close coil at top. Do not compress springs to over all length of less than 1½".

	Spring Pressure	Length
Valve Closed	46-50 lbs	2 1/32"
Valve Open	104-110 lbs	1 11/16"

Valve Lifters:—Mushroom type. Ream guides to take following oversizes: .001", .008", .030", .060".

VALVE TIMING

Tappet Clearance: .006" Intake, .008" Exhaust, Hot. .010" Exhaust clearance recommended for sustained high speed driving.
Valve Timing:—See Camshaft Setting above.
Intake Valves—Open TDC. Close 50° ALDC.
Exhaust Valves—Open 48° BLDC. Close 2° ATDC.
To Check Valve Timing—Set tappet clearance #6 intake valve at .010". Intake valve should open at top dead center when 'O' mark on impulse neutralizer at front of engine lines up with pointer on chain case cover. Reset tappet clearance at .006".

LUBRICATION

LUBRICATION:—Pressure. Gear type oil pump located at right of crankcase.
NOTE—Ignition timing should be checked whenever oil pump is installed in engine.
Normal Oil Pressure:—30-40 lbs. at 30 M.P.H.
Oil Pressure Relief Valve:—Under plug on left hand side of crankcase. Operates at 40 lbs. Adjustable by changing spring. Standard spring unpainted. Heavy spring (to increase pressure) painted green. Lighter spring (to decrease pressure) painted red.
Crankcase Capacity:—6 qts. (refill).

CLUTCH

Borg & Beck Model 10A6. Single plate, dry disc type.
See Clutch Section for complete data.
Facings—Woven type, 2 required. Inside Diam. 6⅛". Outside Diam. 9⅞". Thickness ⅛".
Adjustment—Clutch pedal should just clear underside of toe board with clutch engaged. To adjust, turn stopscrew located just above clutch pedal shaft. Free movement of pedal should be 1 1/16". To adjust, loosen locknut and turn adjusting nut (clevis) on clutch fork adjusting rod.
Removal—Disconnect clutch pedal linkage, remove fork pivot screw, take out clutch fork. Remove transmission (release bearing and spring are withdrawn with transmission), remove clutch housing pan, prick punch clutch cover and flywheel (install in same position to maintain balance), take out clutch mounting bolts, turning all bolts out evenly to release spring tension and avoid distortion of clutch cover. Remove clutch from below. Use pilot studs when removeing and installing transmission to avoid springing clutch plate.
Automatic Clutch:—See article in Clutch Section.
See Clutch Section for complete data.

FRONT SUSPENSION

Front Suspension:—Independent, linked parallelogram type with coil springs.
See Front Suspension Section for complete data.
NOTE—Specifications below apply with car weight on wheels (check suspension unit height first).
Wheel Setting (Front Suspension Height)—Distance from center line of lower control arm yoke pin to top of frame cross member should be 7¼-7 3/8" with car weight on wheels but no load in car.
Kingpin Inclination—10° plus or minus ½° (including camber angle), 8¾-10¼° (without camber).
Camber—¼°. Limits minus ¼°-plus ½°.
Caster—1½°. Toe In—0-⅛".

STEERING GEAR

Steering Gear: Gemmer Model Worm-and-Roller type.
See Steering Gear Section for complete data.

BRAKES

BRAKES:—Service—Lockheed Hydraulic, double anchor type. Hand lever applies brake at rear of transmission or rear wheel brakes (cars with Overdrive).
See Brake Section for complete data.
Wheel Cylinders—Diameters, Front Wheel (Front end 1¼", Rear 1⅜"), Rear Wheel (Front end 1⅛", Rear 1¼").
NOTE—Wheel cylinders marked 'R'—right side of car, 'L'—left side of car and not interchangeable.
Drum Diameter—11".
Lining—Moulded type. Width 2". Thickness 3/16". Length per wheel 22 5/32".
Clearance—.012" toe, .006" heel, for each shoe.
Hand Brake:—External type on drum at rear of transmission (cars without overdrive). See Service Brake for hand brake adjustment on cars with overdrive.
Adjustment—With lever in released position, remove anchor screw locking wire, turn anchor screw so that clearance between lining and drum is 1/16", lock anchor screw with wire. Adjust brake band guide bolt nut to give 1/16" clearance (as above) for lower portion of band, secure with locknut. Finally, adjust brake adjusting bolt nut to give 1/16" clearance (as above).
Drum Diameter—6".
Lining—Width 2". Thickness 5/32". Length 18 13/32".
NOTE—When relining, cut out lining adjacent to anchor and chamfer ends. Clearance between anchor and sides of anchor saddle .005" maximum.

MODEL IDENTIFICATION

SERIAL NUMBER:—First number—6,710,501 (Detroit), 9,755,816 (Canada). Located on right front door hinge post.

ENGINE NUMBER:—First number—C8-1001. Stamped on left side of block between #1 and 2 cylinders. ***See Chrysler Special Shop Notes for engine number lettering data.***

TUNE-UP

COMPRESSION:—Ratio—6.2-1 Std. cast-iron hd, 7.0-1 (optional aluminum head).
Pressure—(6.2-1 Std. head) 125-135 lbs. at 1000 RPM or approx. 106 lbs. at cranking speed., (7.0-1 Optl. head) 130-140 lbs. at 1000 R.P.M. or approx. 117 lbs. at cranking speed.

VACUUM READING:—Gauge should show steady reading of 16-18" with engine idling at 7-8 M.P.H.

FIRING ORDER: 1-6-2-5-8-3-7-4. See diagram.

SPARK PLUGS: Champion Type J-8 (Cast Iron Head), Type H-10 (Aluminum Head). 14 mm. Metric type.
Gaps—.025".
NOTE—Spark plugs used in aluminum head engines have longer thread length. Not interchangeable with standard plugs.

IGNITION: See Coil, Condenser, and Distributor.
Breaker Gap—.017". **Cam Angle** 27° (closed).
Automatic Advance—13° max. at 1650 RPM (IGT-4006-1 Distr.), 1900 RPM (IGT-4006D-1 Distr.). Distr. degrees and RPM.
Vacuum Advance—6° distr. with 12" vacuum.

IGNITION TIMING: See Ignition Timing.
Std. Setting—At TDC (Std. & Optl. Heads), 4° BTDC (Optl. 7.0-1 Hd with Ethyl Fuel) with "O" dead center mark or correct degree mark on impulse neutralizer at indicator on front of engine.

CARBURETION: See Carburetor & Carb Equipment.
Idle Setting—Idle screw midway between "miss" and "roll" points. Idle speed 7-8 MPH.
Float Level—Fuel level 5/8" below top of bowl.
Accelerating Pump—Center hole (med.stroke) normal Inner hole—Summer, Outer hole—Winter.
Fuel Pump Pressure: 4¼ lbs. maximum.

VALVES: See Valve Timing.
Tappet Clearance:—.006" Int., .008" Exh. with engine hot. .010" Exh. recommended for sustained high speed.

STARTING: See Battery, Starter, Generator, Regulator.

IGNITION

Ignition Switch:—Mitchellock Model 24-B, Type 6519. Connected to coil by armored cable.
Ignition Lock—Yale & Towne Mod. DP-108, Mitchell No. 6286.

COIL: Auto-Lite Model CE-4621 (Conv. Sedan & Coupe) CE-4616 (all others). Service Winding (coil less switch and cable) CE-3224JS. Coil mounted on dash.
Ignition Current—2.5 amperes idling, 5.5 stopped.

CONDENSER: Auto-Lite Part No. IG-3927.
Capacity—.25-.28 microfarad.

DISTRIBUTOR: Auto-Lite Model IGT-4001-1, IGT-4001D-1. Single breaker, 8 lobe cam, full automatic advance type with auxiliary vacuum spark control.
NOTE—Model IGT-4001D-1 used on cars after serial number 6,715,875.

For complete data, refer to Electrical Equipment Index.
Breaker Gap—Set at .017".
Cam Angle or Dwell—27° closed, 18° open.
Breaker Arm Spring Tension—18-20 ounces.

Automatic Advance—IGT-4001-1

Distributor Degrees	R.P.M.	Engine Degrees	R.P.M.
Start	350	0	700
3	400	6	800
7	900	14	1800
11	1400	22	2800
13	1650	26	3300

Automatic Advance—IGT-4001D-1

Start	350	0	700
3	400	6	800
6	850	12	1700
9	1300	18	2600
13	1900	26	3800

Vacuum Spark Control—Integral with distributor. Mounted on distributor housing and linked directly to breaker plate. Provides additional advance for speeds above idling except when engine is accelerated or operated with wide open throttle when spark is retarded by return spring within unit.

Vacuum Advance

Distr. Degrees	Eng. Degrees	Vacuum (" of HG)
Start	0°	5.1"
3°	6°	8.5"
6°	12°	12"

Distributor Removal:—Mounted on left side of crankcase. To remove, take out hold-down screw in advance arm, disconnect vacuum line.

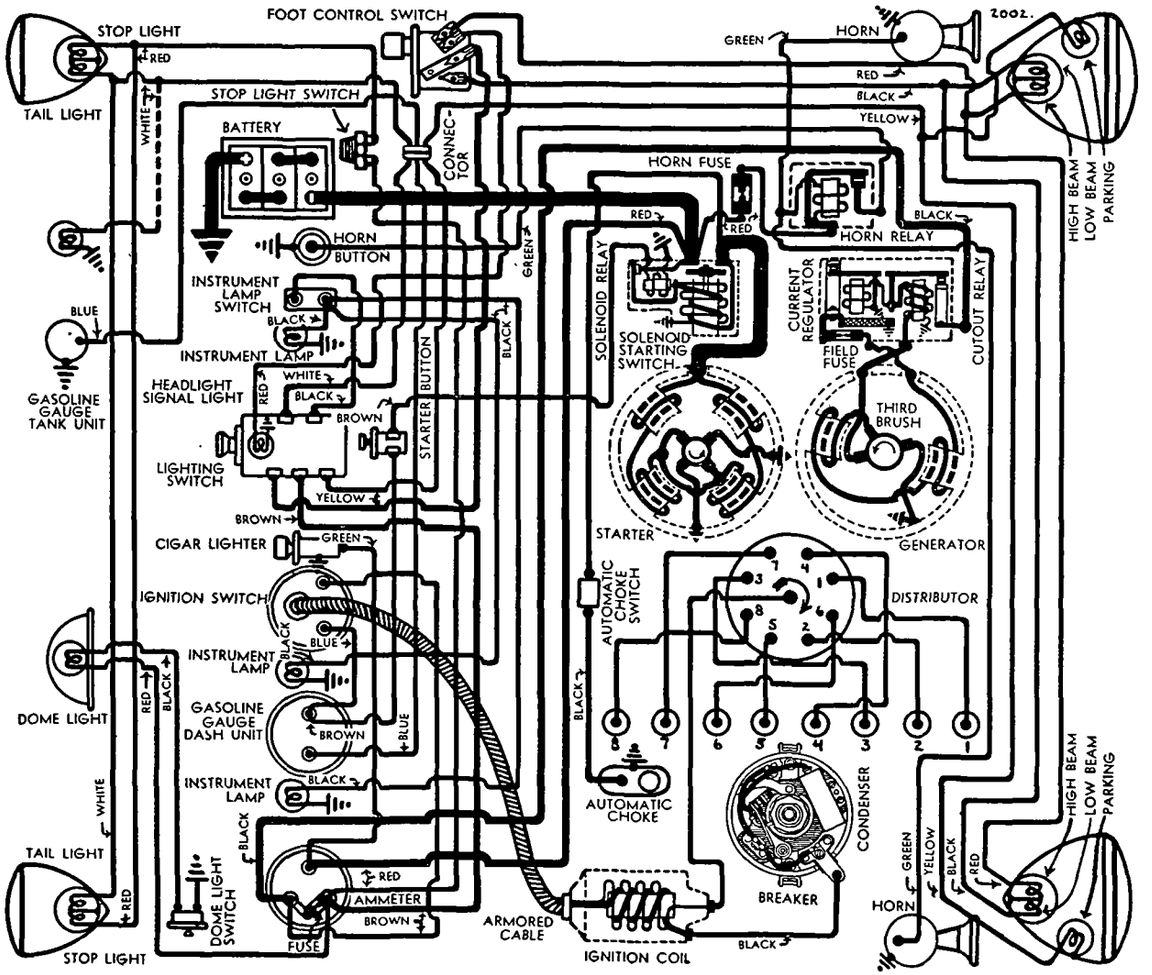

IGNITION TIMING

IGNITION TIMING:

	Flywheel Deg.	Piston Position
6.2-1 Std. Head	At TDC	.0000" TDC.
7.0-1 Opt. hd., std. fuel	At TDC	.0000" TDC.
7.0-1 Opt. hd., Ethyl fuel	4° BTDC	.0062 BTDC.

See 'Manual Adjustment' (following) for final setting for best performance depending on fuel used.

NOTE—Impulse neutralizer at front of engine marked 'O' at top dead center with 15 one degree graduations before and after this point.

Timing (Using Timing Light)—Connect timing light between distributor terminal and battery terminal on generator control unit. With #1 piston on compression, turn engine over until piston reaches firing position (see table), stop when correct line on impulse neutralizer lines up with pointer on chain case cover. Loosen distributor hold-down screw, center pointer on scale, tighten hold-down screw. Loosen advance arm clamp bolt, rotate distributor until timing light goes out, tighten clamp bolt.

Timing (Using Synchroscope)—Clip lead to #1 spark plug, direct light on impulse neutralizer, fill in correct mark with chalk or white paint. See Equipment Section.

Manual Adjustment:—After ignition set as above, road test car and adjust for slight ping with wide open throttle when accelerating from 10-30 M.P.H. To adjust, loosen hold-down screw, advance (counter-clockwise), retard (clockwise) pointer on scale. Scale graduated in engine degrees. Do not advance pointer more than 5° on scale.

CARBURETOR

CARBURETION:—Carburetor—Stromberg Mod. EXV-3, 1½" downdraft type. See Carburetion Section for adjustment, overhaul and Jet Specifications.
For complete data, refer to Carburetor Index.

NOTE—Do not adjust carburetor until engine is warmed up so that engine will idle at hot or slow idling speed with choke valve wide open.

Idle Adjustment—With engine hot, set throttle stop screw to idle engine at 7-8 M.P.H. Turn idle adjusting screw in until engine begins to lag or miss, then turn screw out until engine begins to roll, finally turn screw in slowly until engine fires smoothly. Readjust throttle stopscrew for correct idling speed if necessary.

Accelerating Pump Setting—Pump lever has three holes for pump link engagement. Set as follows:
Inner Hole (Min. stroke)—Summer temperatures.
Center Hole (Med. stroke)—Standard setting.
Outer Hole (Max. stroke)—Winter temperatures.

Fast Idle:—No adjustment required Throttle stop-screw should rest on high point of cam with choke valve closed.

Automatic Choke:—Sisson Type AC-751. See article in Carburetion Section for data and linkage adjustmt.
For complete data, refer to Carburetion Equip. Index.

CARB. EQUIPMENT

Air Cleaner:—AC. #1526374 oil-wetted type standard. #1526837 heavy duty oil bath type optional.

Fuel Pump:—AC. Type D #1521803 diaphragm type. Type I #1523023 combination fuel & vacuum pump (cars with overdrive). See separate articles in Carburetion Section for each type.
For complete data, refer to Carburetion Equip. Index.

Gasoline Gauge:—Motometer Electric. Dash unit No. NG-7790-D. Tank unit No. NG-7687-T. See article in Carburetion Section.
For complete data, refer to Carburetion Equip. Index.

BATTERY

BATTERY:—Willard, Type WH-2-15, RH-2-15 (Export). 6 volt, 15 plate, 119 ampere hour capacity (20 hour rate).
Starting Capacity—140 amperes for 20 minutes.
Zero Capacity—300 amperes for 4.3 minutes.
Grounded Terminal—Positive (+) terminal.
Location—On left side under drivers seat.

STARTER

Auto-Lite Model MAX-4020, Armature MAW-2030.
Drive—Magnetic shift outboard pinion.
Cranking Engine—Approx. 200 amperes at 5 volts.
Rotation—Counter-clockwise at commutator end.
Brush Spring Tension—42-53 ozs. (new brushes).

Performance Data

Torque	R.P.M.	Volts	Amperes
0 ft. lbs.	5300	5.5	65
.65 "	3300	5.5	100
2.75 "	1630	5.0	200
5.5 "	970	4.5	300
8.7 "	600	4.0	400
12.0 "	300	3.5	500
16.5 "	Lock	3.0	640
25.0 "	Lock	4.0	880

Removal:—Flange mounted on left front face of flywheel housing. To remove, take out flange screws.
Starting Switch:—Solenoid Switch Type SS-4106. Controlled through relay by pushbutton on dash. Operative with ignition turned 'on'.
For complete data, refer to Electrical Equipment Index.

Solenoid Switch

Closes against 105 lb. pull with ⅜" air gap drawing 65 amperes. Holds switch closed with draw of 15 amperes (hold-in coil only).

Solenoid Relay

Contacts Close—3.5-4.5 volts. **Open**—1.5-2.5 volts.
Contact Gap—.025-.030". **Air Gap**—.005-.007" (closed)

GENERATOR

Auto-Lite Model GAR-4608A-5. Armature GAR-2116F. Third brush control in conjunction with Current Regulator (two-rate charging control). Ventilated by fan on drive pulley.
Charging Rate Adjustment—Use test meters. Connect jumper between fuse cup on regulator and ground. Shift third brush by hand counter-clockwise to increase or clockwise to decrease charging rate until output is 21 amperes at 8.6 volts with generator at room temperature. Third brush held in position by friction. Remove jumper.
Commutator Bar Method—Shift third brush until exactly 4 commutator bars are exposed between brush and nearest main brush.
Maximum Charging Rate—As given above. Do not exceed.

Performance Data

Cold Regulator Contacts Closed			Hot		
Amperes	Volts	R.P.M.	Amperes	Volts	R.P.M.
0	6.4	800	0	6.4	825
4	6.8	950	4	6.8	1000
8	7.25	1100	8	7.25	1200
12	7.7	1275	12	7.7	1440
16	8.1	1525	16	8.1	1825
21	8.6	2400	18.5	8.35	2500

Rotation—Counter-clockwise at commutator end.
Brush Spring Tension—24 ozs. min. (old brushes), 36 ozs. max. (new brushes).
Field Current—3.89-3.51 amperes at 6.0 volts.
Motoring Current—5.03-5.57 amperes at 6.0 volts.
Field Fuse—5 ampere in plug on regulator case.

Removal:—Pivot mounted at left front of engine. To remove, take out pivot bolts and clamp bolt.

Belt Adjustment:—Swing generator away from engine until 45-50 lb. reading indicated on scale attached to generator frame.

REGULATOR

Auto-Lite Model TC-4301A. "Two-Charge" Type. On generator. Consists of Cutout Relay & Current Regulator (two-rate charging control). See article in Equipment Section for complete data.
For complete data, refer to Electrical Equipment Index.

Cutout Relay

Cuts In—6.5-7.25 volts.
Cuts Out—.5-2.5 ampere discharge current.
Contact Gap—.015-.045".
Air Gap—.010-.030" with contacts closed.

Current Regulator

Contacts Open—8.25-8.75 volts at 70° F.
Contacts Close—1.2-1.4 volts below opening point.
Contact Gap—.005" minimum.
Air Gap—.045" with contacts closed.

LIGHTING

LIGHTING:—Headlamps—Hall. Pre-focused type. Head lamps aimed straight ahead (upper beam, with lenses in place). Lower beam deflected slightly to right. Upper and lower beams controlled by foot selector switch.

Headlamp Beam Indicator—In light switch knob. Lighted when headlamp upper beams in use.

Switches

Lighting—Chrysler Part No. 655559. Douglas Switch which is available only through Chrysler Parts Dept.

Foot Selector—Clum Model 9657.

Stop Light—R.M.B. No. 910. Hydraulic type mounted on brake master cylinder.

Bulb Specifications

Position	Candlepower	Mazda No.
Headlamps	32-32	2331
Parking, Instrmt., Ign. Sw.	1½	55
Stop and Tail	21-3	1158
Dome	15	87

MISC. ELECTRICAL

FUSES:—Lighting—20 amperes on back of ammeter.
Generator Field—5 ampere in plug on regulator.
Twin Horns—30 ampere in connector near starter.

HORNS:—Std. Motometer. Optl. Klaxon Model K-33-C Type 2151 (low note), 2152 (high note). Vibrator type, blended tone, twin horns operated by horn relay.

Horn Type	Current at 6 volts	Air Gap
2151	11-13	.042-.046"
2152	10-12	.032-.036"

Horn Relay:—Model 266-TK. Requires .25 amperes at 2 volts min. to close contacts. Current draw .8 amps.
Contact Gap—.015-.025".
Air Gap—.012-.017" with contacts closed.

CONTINUED ON NEXT PAGE

CONTINUED FROM PRECEDING PA E

ENGINE

ENGINE SPECIFICATIONS:—8 cylinder, 'L' head.
Bore—3¼". **Stroke** 4⅛".
Displacement—273.8 cu. inches. **Rated HP**—33.80.
Developed Horsepower—105 at 3400 RPM (Std. hd.).
Compression Ratio—6.2-1 Std. Cast-iron head, 7.0-1 Optl. aluminum head.
Compression Pressure—6.2-1 Std. Head 125-135 lbs. at 1000 R.P.M. or approx. 106 lbs. at cranking speed. **7.0-1 Optl. Head** 130-140 lbs. at 1000 R.P.M. or approx. 117 lbs. at cranking speed.
Vacuum Reading—16-18" steady idling at 7-8 MPH.
NOTE—Aluminum heads should be tightened cold.

PISTONS:—Aluminum alloy, 'T' slot, Cam ground type with anodized finish (special hard oxide formed on bearing surface. **Length**—3⅞".
Weight—Held to two gram maximum variation.
Removal—Pistons and rods removed from above.
Clearance—Top .022". Skirt .002". See Fitting New Pistons.

Replacement Pistons:—Finished anodized pistons furnished in standard and .003", .005", .010", .015", .020", .023", .025", .030", .040", .050", .060" oversize. Semi-finished pistons furnished in two sizes: (1) standard to .023" oversize; (2) .025-.050" oversize (not interchangeable). Pistons should be slotted and then finished on cam grinding equipment.

Fitting New Pistons:—Micrometer gauge recommended. Using feeler gauge (.002") inserted between piston and cylinder wall on side opposite slot, pull required to withdraw feeler must be 3-4 lbs.

Installing Pistons: Slot to left, away from camshaft.

PISTON RINGS:—Two compression, one undercut oil wiper (#3), one oil control ring per piston, all above pin. Lower ring grooves drilled radially with twelve ⅛" oil drain holes.

Ring	Width	End Gap	Side Clearance
Comp.	⅛"	.007-.015"	.002-.003"
Oil (both)	5/32"	.007-.015"	.002-.003"

Replacement Rings:—Rings furnished standard and .003", .010", .020", .030", .040", .050", .060" oversize.
NOTE—Install undercut compression and oil wiper ring with step down.

PISTON PIN:—Diameter—55/64". **Length**—2¾".
Pin floats in piston and rod. Held by locking rings at each end. Pin hole in rod is bronze bushed.
NOTE—Heat piston in boiling water to remove or install pins.
Pin Fit in Piston—Tight thumb push fit at 120°F.
Pin Fit in Rod Bushing—Tight thumb push fit 70°.

Replacement Pins:—Pins furnished in standard and .003", .005" and .008" oversizes. Ream rod bushing and pin holes in piston bosses for correct fit.

CONNECTING ROD:—Weight—All rods held within limits.
Length—9 3/16" (center-to-center).
Crankpin Journal Diameter—2 3/16".
Lower Bearing—Removable steel-backed, copper-lead lined. Furnished standard and .010" undersize.
Clearance—.001-.003". Sideplay—.006-.011".

Bearing Adjustment:—None (no shims). Replace bearings. Do not file rods or caps. Install new bearings so small bosses engage grooves in rod and cap.

Installing Rods:—Lower bearings are offset. Install rods with widest half of bearing toward rear (#1, 3, 5, 7) or toward front (#2, 4, 6, 8). Oil hole in lower bearing must be toward camshaft on all rods.

CRANKSHAFT:—5 bearing. Integral counterweights.
Journal Diameters—2 45/64" all bearings.
Bearing Type—Removable steel-backed, babbitt-lined. **Clearance**—.001-.002".

Bearing Adjustment:—None (no shims). Replace bearings. Do not file bearing caps.

Replacement Bearings & Bearing Caps: *Refer to Chrysler Shop Notes for complete data.*

End Thrust:—Taken by flange faces on rear (#5) bearing. Endplay .003-.007".

CAMSHAFT:—6 bearing. Non-adjustable chain drive.
Journal Diameters—#1, 2 1/16"; #2, 2 1/32"; #3, 2"; #4, 1 31/32"; #5, 1 15/16"; #6, 1⅜".
Bearing Type—Removable steel-backed, babbitt-lined (except #6 which is machined in crankcase).
Clearance—.0015-.0025" all bearings.

End Thrust:—Taken between the face of the removable cast-iron sleeve which carries the front bearing and the face of the camshaft sprocket. Adjusted by replacing sleeve. Endplay .003-.005".

Timing Chain:—Morse. Width 1¼". Pitch ½". Length 24" or 48 links.

Camshaft Setting:—Sprockets are marked. Mesh chain with sprockets turned so that 'O' marks are adjacent and in line with a straightedge across shaft centers.
NOTE—Engine must be supported under front end of oil pan and front engine support removed for work on timing chain and camshaft.

VALVES:—	Head Diameter	Stem Diameter	Length
Intake	1 15/32"	.340-.341"	5½"
Exhaust	1 13/32"	.340-.341"	5½"

	Seat Angle	Lift	Stem Clearance
Intake	45°	11/32"	.001-.003"
Exhaust	45°	11/32"	.003-.005"

See Chrysler Special Shop Notes for Exhaust valve seat insert removal and installation instructions.

Valve Guides:—Use special tool to remove and install guides. Insert guides with taper end up (intake) and down (exhaust). Top of guide must be 13/16" below top of block. Finish ream guides after installation to inside diameter of .342-.343" Int., .344-.345" Exh.

Valve Springs:—Variable pitch type. Install springs with close coil at top. Do not compress springs to over all length of less than 1½".

	Spring Pressure	Spring Length
Valve Closed	46-50 lbs.	2 1/32"
Valve Open	104-110 lbs.	1 11/16"

Valve Lifters:—Mushroom type. Ream guides to take following oversizes: .001", .008", .030", .060".

VALVE TIMING

Tappet Clearance: .006" Intake, .008" Exhaust Hot. .010" Exh. recommended for sustained high speeds.

Valve Timing:—See Camshaft Setting above.
Intake Valves—Open 2° BTDC. Close 44° ALDC.
Exhaust Valves—Open 46° BLDC. Close 4° ATDC.
To Check Valve Timing—Install timing gauge in timing plug hole over #8 piston. Set tappet clearance #8 intake valve at .011" (cold). This valve should open with piston 2° or .0015" BTDC. when 2° line BTDC. on impulse neutralizer at front of engine lines up with pointer on chain case cover. Reset tappet clearance at .006" with engine hot.

LUBRICATION

LUBRICATION:—Pressure. Gear type oil pump on right side of crankcase.
NOTE—Ignition timing should be checked whenever oil pump is installed in engine.
Normal Oil Pressure:—30-45 lbs. at 30 M.P.H.

Oil Pressure Relief Valve:—Located under cap at left side of crankcase. Operates at 40-45 lbs. To adjust, remove cap, withdraw locking wire, turn slotted plug clockwise to increase pressure, counter-clockwise to decrease, replace locking wire and cap.

Crankcase Capacity:—6 qts. (refill).

CLUTCH

Borg & Beck Model 10A6. Single plate, dry disc type. *See Clutch Section for complete data.*
Facings—Woven type, 2 required. Inside Diam. 6⅛". Outside Diam. 9⅞". Thickness ⅛".
Adjustment—Clutch pedal should just clear underside of toe board with clutch engaged. To adjust, turn stopscrew located just above clutch pedal shaft. Free movement of pedal should be 1/16". To adjust, lossen locknut and turn adjusting nut (clevis) on clutch fork adjusting rod.
Removal—Disconnect clutch pedal linkage, remove fork pivot screw, take out clutch fork. Remove transmission (release bearing and spring are withdrawn with transmission), remove clutch housing pan, prick punch clutch cover and flywheel (install in same position to maintain balance), take out clutch mounting bolts, turning all bolts out evenly to release spring tension and avoid distortion of clutch cover. Remove clutch from below. Use pilot studs when removing and installing transmission to avoid springing clutch plate.

Automatic Clutch:—See article in Clutch Section. *See Clutch Section for complete data.*

FRONT SUSPENSION

Front Suspension:—Independent, linked parallelogram type with coil springs.
See Front Suspension Section for complete data.
NOTE—Specifications below apply with car weight on wheels (check suspension unit height first).
Wheel Setting (Front Suspension Height)—Distance from center line of lower control arm yoke pin to top of frame cross member should be 7¼-7⅜" with car weight on wheels but no load in car. Heights must be equal on both sides within ⅛".
Kingpin Inclination—4¾-6° (incl. camber angle).
Camber—Minus ¼°. Limits minus ¼ to plus ½°.
Caster—1½°. Toe In—0-⅛".

STEERING GEAR

Steering Gear: Gemmer Model Worm-and-Roller *See Steering Gear Section for complete data.*

BRAKES

BRAKES:—Service—Lockheed hydraulic, double anchor type. Hand lever applies brake at rear of transmission or rear wheel brakes (cars with Overdrive) *See Brake Section for complete data.*
Wheel Cylinders—Diameters, Front Wheel (Front end 1¼", Rear 1⅜"), Rear Wheel (Front end 1⅛", Rear 1¼").
NOTE—Wheel cylinders marked 'R'—right side of car, 'L'—left side of car and not interchangeable.
Drum Diameter—11".
Lining—Moulded type. Width 2". Thickness 3/16". Length per wheel 22 5/32".
Clearance—.012" toe, .006" heel, for each shoe.

Hand Brakes:—External type on drum at rear of transmission. See Service Brake for Hand Brake on cars with overdrive.
Adjustment & Hand Brake Specifications—Same as for Chrysler Six C7. *Refer to preceding article for data.*

MODEL IDENTIFICATION

SERIAL NUMBER:—On right front door hinge pillar post. First number each model as follows:

	Detroit	Canada
Model C-9	6,606,201	9,821,216
Model C-10	7,014,901	9,850,436
Model C-11	7,803,851	none

ENGINE NUMBER:—First number—C9, C10, or C11-1001. Stamped on boss back of water pump.
See Chrysler Special Shop Notes for engine number lettering data.

TUNE-UP

COMPRESSION:—Ratio—6.2-1 Cast-iron hd. (Std. C9), 6.5-1 Aluminum head (Optl. C9, Std. C10, 11), 7.45-1 Aluminum head (Optl. C10, 11).
Pressure—6.2-1 Cast-iron head 120-130 lbs. at 1000 R.P.M. or approx. 106 lbs. at cranking speed. 6.5-1 **Al. head** 145-155 lbs. at 1000 R.P.M. or approx. 117 lbs. at cranking speed. 7.45-1 **Al. head** 160-170 lbs. at 1000 R.P.M. or approx. 124 lbs. at cranking speed.

VACUUM READING:—Gauge should show steady reading of 16-18" with engine idling at 7-8 M.P.H.

FIRING ORDER: 1-6-2-5-8-3-7-4.

SPARK PLUGS: Champion Type J-8 (C9 with Cast Iron Head), Type H-10 (All Aluminum Heads). 14 mm. **Gaps**—.025".

IGNITION: See Coil, Condenser, and Distributor.
Breaker Gap—.017". **Cam Angle** 27° (closed).
Automatic Advance—11° max. at 1600 RPM (IGT-4001C-1 Distr.), 1850 RPM (IGT-4001E-1 Distr.). Distr. degrees and RPM.
Vacuum Advance—5° distr. with 14" vacuum (IGT-4001C-1 Distr.), 6° distr. with 12" vacuum (IGT-4001E-1 Distr.).

IGNITION TIMING: See Ignition Timing.
Std. Setting—At TDC (6.2-1 Hd.), 5° ATDC (6.5-1 Head), 9° ATDC (7.45-1 Head) with "0" dead center mark or correct degree mark on impulse neutralizer in line with indicator on front of engine.
NOTE—If Ethyl fuel used with 6.5-1 Head on Model C9, set ignition at 2° BTDC.

CARBURETION: See Carburetor & Carb. Equipment.
Idle Setting—One screw (C9), two screws (C10, C11) midway between "miss" and "roll" points. Idle speed 7-8 MPH.
Float Level—Fuel level 5/8" below top edge of bowl.
Accelerating Pump—Inner hole (min. stroke)—Summer, Outer hole (max. stroke)—Winter.
NOTE—Center hole standard setting for C9.

Fuel Pump Pressure: 4½ lbs. maximum.

VALVES: See Valve Timing.
Tappet Clearance:—.006" Int., .008" Exh. with engine hot. .010" Exh., recommended for sustained high speed.

NOTE—Right front wheel and cover plate under fender should be removed for work on valves.

STARTING: See Battery, Starter, Generator, Regulator.

IGNITION

IGNITION SWITCH: Mitchellock. Model 24-B, Type 6744. Connected to coil by armored cable.
Ignition Lock—Yale & Towne Mod. DP-108 Mitchell No. 6286.

COIL: Auto-Lite Model CE-4618. Servic Coil (less Switch & Cable) CE-3224JS. Mounted on hood ledge.
Igniti n Current—2.5 amperes idling, 5.5 stopped.

CONDENSER: Auto-Lite Part No. IG-3927.
Capacity—.25-.28 microfarad.

DISTRIBUTOR: Auto-Lite Model IGT-4001C-1, IGT-4001E-1. Single breaker, 8 lobe cam, full automatic advance type with auxiliary vacuum spark control.
See Electrical Equipment Section for special servicing directions on these distributors.
For complete data, refer to Electrical Equipment Index.

Breaker Gap—Set at .017".

Cam Angle or Dwell—27° closed, 18° open (distrib.).

Breaker Arm Spring Tension—18-20 ounces.

Automatic Advance—IGT-4001C-1

Distributor Degrees	R.P.M.	Engine Degrees	R.P.M.
Start	350	0	700
3	400	6	800
6	850	12	1700
9	1300	18	2600
11	1600	22	3200

Automatic Advance—IGT-4001E-1

Distributor Degrees	R.P.M.	Engine Degrees	R.P.M.
Start	350	0	700
3	400	6	800
6	950	12	1900
9	1500	18	3000
11	1850	22	3700

Vacuum Spark Control—Provides additional advance for intermediate speed range above idling except when engine is accelerated or operated with wide open throttle.

Vacuum Spark Advance—IGT-4001C-1

Distr. Degrees	Eng. Degrees	Vacuum (" of HG)
Start	0°	5.2"
5°	10°	14"

Vacuum Spark Advance—IGT-4001E-1

Start	0°	5.1"
6°	12°	12"

CONTINUED ON NEXT PAGE

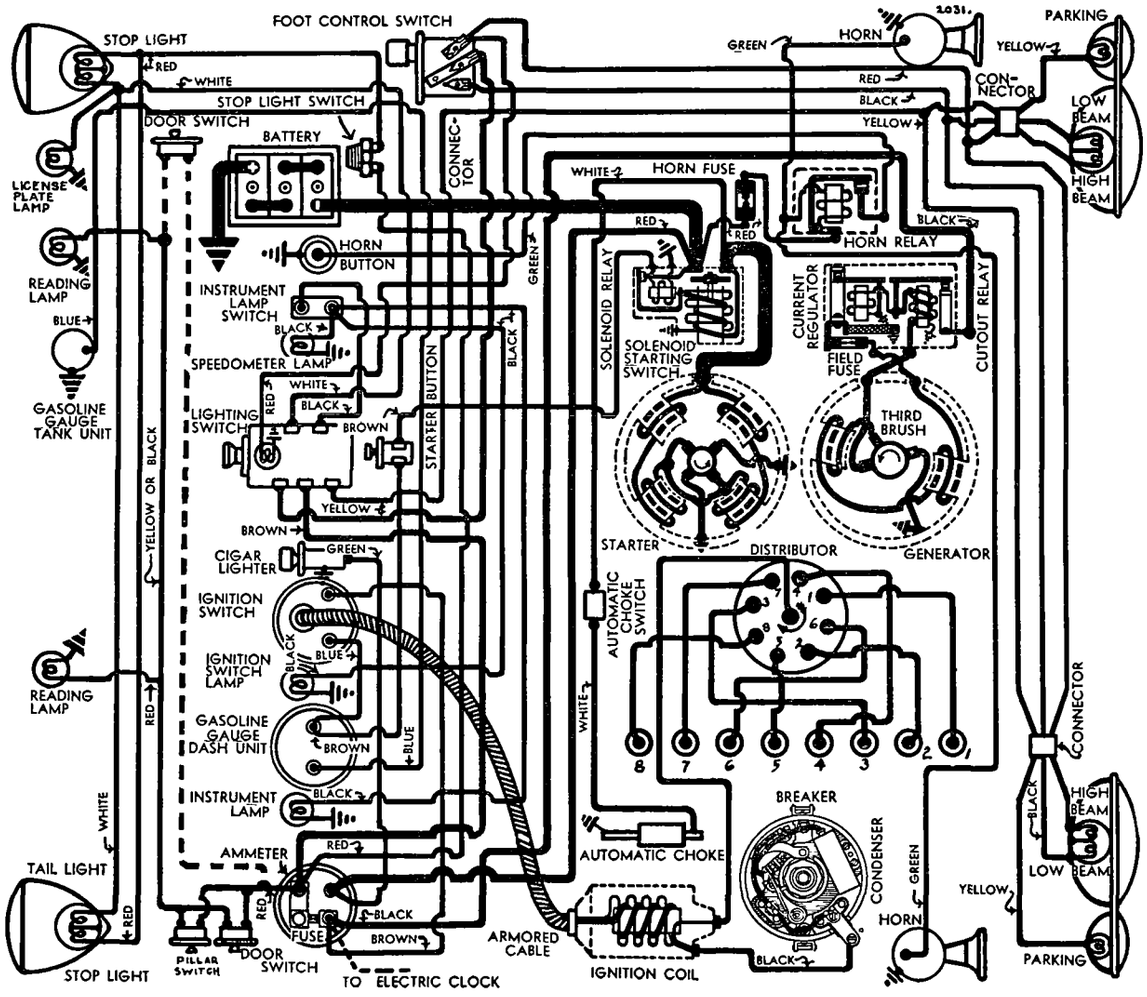

CONTINUED FROM PRECEDING PAGE

Distributor Removal:—Mounted on left side of crankcase. To remove, take out hold-down screw in advance arm, lift out. Distributor accessible by taking off cover plate under left front fender.

IGNITION TIMING

IGNITION TIMING:—Settings for all engines as follows

	Flywheel Degs.	Piston Position
6.2-1 Std C9 hd.	At TDC.	.0000" TDC.
6.5-1 Optl. C9 hd. std. fuel	5° ATDC	.0118" ATDC.
6.5-1 Optl. C9 hd. Ethyl	" 2° BTDC	.0019" BTDC.
6.5-1 Std. C10, 11 hd.	5° ATDC	.0118" ATDC.
7.45-1 Optl. " Ethyl fuel	9° ATDC	.0381" ATDC.

See 'Manual Adjustment' (following) for final setting for best performance depending on fuel used.

NOTE—Impulse neutralizer at front of engine marked with 15 one degree graduations before and after 'O' mark at top dead center.

Timing (Using Timing Light)—Connect timing light between distributor terminal and batery terminal on generator control unit. With #1 piston on compression, turn engine over until piston reaches firing position (see table above), stop when correct mark on impulse neutralizer at front of engine is directly in line with pointer on chain case cover. Loosen advance arm hold-down screw, center pointer on scale (opposite 'O' mark), tighten hold-down screw, loosen advance arm clamp bolt, rotate distributor until test lamp goes out indicating that contacts are just opening, tighten clamp bolt.

Timing (Using Synchroscope)—Clip lead to #1 spark plug, direct light on impulse neutralizer, fill in correct mark with chalk or white paint. See Equipment Section.

Manual Adjustment:—After ignition set as above, road test car and adjust for slight ping with wide open throttle when accelerating from 10-30 M.P.H. To adjust, loosen hold-down screw, advance (counter-clockwise), retard (clockwise) pointer on scale. Scale graduated in engine degrees. Do not advance pointer more than 5° on scale.

CARBURETOR

CARBURETION:—Carburetor—C9—Stromberg Model EXV-3, 1½" downdraft type. **C10, 11**—Stromberg Model EE-22, 1¼" dual downdraft type.

For complete data, refer to Carburetor Index.

Idle Adjustment—One idle adjusting screw on C9 carburetor, two on C10, 11 carburetor. Adjust C10, 11 screws simultaneously. With engine hot set throttle stopscrew to idle engine at 7-8 M.P.H. Turn one (C9) or both (C10, 11) idle adjusting screws in until engine begins to lag or miss, then turn screws out until engine begins to roll, finally turn screws in slowly until engine fires smoothly. Readjust throttle stopscrew for correct idling speed.

Accelerating Pump Setting—Pump lever has three (C9), two (C10, 11) holes for pump link engagement.
Inner Hole (Min. stroke)—Summer temperatures.
Center Hole (C9 only)—Standard setting.
Outer Hole (Max. stroke)—Winter temperatures.

Fast Idle:—No adjustment required. Throttle stopscrew rests on high point of cam with choke closed.

Automatic Choke: Sisson AC-751 (C9), AC-600 (C10, 11).

For complete data, refer to Carburetion Equip. Index.

CARB. EQUIPMENT

Air Cleaner:—AC. #1525933 (C9), #1526747 (C10, 11) oil-wetted type standard, #1526588 (C9), #1526589 oil-bath heavy duty type optional.

Fuel Pump:—AC. Type D #1521790 diaphragm type (C9 only). Type I #1523023 (C9 with overdrive), #1521549 (C10, 11 std.) comb. fuel & vacuum pump.

For complete data, refer to Carburetion Equip. Index.

Gasoline Gauge:—Motometer Electric. Dash unit—NG-7808-D. Tank Unit—NG-6876-T.

For complete data, refer to Carburetion Equip. Index.

BATTERY

BATTERY:—Willard, Type WH-4-17, RH-4-17 (Export). 6 volt, 17 plate, 136 amp. hr. capacity (20 hr. rate).
Starting Capacity—160 amperes for 20 minutes.
Zero Capacity—300 amperes for 5.4 minutes.
Grounded Terminal—Positive (+) terminal.
Location—Under left hand front seat.

STARTER

Auto-Lite Model MAX-4003. Armature MAW-2030.
Drive—Magnetic shift outboard pinion.
Cranking Engine—Approx. 200 amperes at 5.0 volts.
Rotation—Counter-clockwise at commutator end.
Brush Spring Tension—31-42 ozs. (new brushes).

Performance Data

Torque	R.P.M.	Volts	Amperes
0 ft. lbs.	5300	5.5	65
2.75 "	1630	5.0	200
5.5 "	970	4.5	300
8.7 "	600	4.0	400
12.0 "	300	3.5	500
16.5 "	Lock	3.0	640
25.0 "	Lock	4.0	880

Removal:—Flange mounted on left front face on flywheel housing. Accessible by removing left front wheel and housing cover under fender. To remove, take out two flange mounting screws.

Starting Switch:—Solenoid Switch Type SS-4101. Controlled through relay by pushbutton on dash. Operative with ignition turned 'on'.

For complete data, refer to Electrical Equipment Index.

GENERATOR

Auto-Lite Model GAR-4608B-5. Armature GAR-2116-F. Third brush control in conjunction with Current Regulator (two-rate charging control).
Charging Rate Adjustment—Use test meters. Connect jumper between fuse cup on regulator and ground. Shift third brush by hand counter-clockwise to increase or clockwise to decrease charging rate until output is 21 amperes at 8.6 volts with generator at room temperature. Third brush held in position by friction. Remove jumper.
Commutator Bar Method—Shift third brush until exactly 4 commutator bars are exposed between brush and nearest main brush.

Cold Performance Data			Hot		
Amperes	Volts	R.P.M.	Amperes	Volts	R.P.M.
0	6.4	800	0	6.4	825
4	6.8	950	4	6.8	1000
8	7.25	1100	8	7.25	1200
12	7.7	1275	12	7.7	1440
16	8.1	1525	16	8.1	1825
21	8.6	2400	18.5	8.35	2500

Rotation—Counter-clockwise at commutator end.
Brush Spring Tension—24 ozs. min. (old brushes), 36 ozs. max. (new brushes).
Field Current—3.51-3.89 amperes at 6.0 volts.
Motoring Current—5.03-5.57 amperes at 6.0 volts.
Field Fuse—5 amperes in plug on regulator case.

Removal:—Pivot mounted at front of engine. Accessible by removing left front wheel and housing cover under fender. To remove, take out pivot bolts and clamp bolt.

Belt Adjustment:—Loosen mounting bolts, pull generator out or away from engine until tension as measured on spring scale is 45-50 lbs.

REGULATOR

Auto-Lite Model TC-4301A. "Two-Charge" Type. On generator. Consists of Cutout Relay & Current Regulator (two rate charging control).

For complete data, refer to Electrical Equipment Index.

Cutout Relay

Cuts In—6.5-7.25 volts.
Cuts Out—.5-2.5 amperes discharge current.
Contact Gap—.015-.045".
Air Gap—.010-.030" with contacts closed.

Current Regulator

Contacts Open—8.25-8.75 volts at 70° F.
Contacts Close—1.2-1.4 volts below opening point.
Contact Gap—.005" minimum.
Air Gap—.045" with contacts closed.

LIGHTING

LIGHTING:—Headlamps—Hall, Pre-focused type. Head lamps aimed straight ahead (upper beam, with lenses in place). Lower beam deflected slightly to right. Upper and lower beams controlled by foot selector switch.
Headlamp Beam Indicator—In light switch knob. Lighted when headlamp upper beams in use.

Switches

Lighting—Chrysler Part No. 655559. Douglas Switch
Foot Selector—Clum Model 9661.
Stop Light—R.B.M. No. 910. Hydraulic type mounted on brake master cylinder.

Bulb Specifications

Position	Candlepower	Mazda No
Headlamps	32-32	2331
Parking, Ign.Sw.	1½	55
Stop and Tail	21-3	1158
Instrument	3	63
Reading	15	87

MISC. ELECTRICAL

FUSES:—Lighting—20 ampere on back of ammeter.
Generator Field—5 ampere in plug on regulator.
Twin Horns—30 ampere in connector near starter.

HORNS:—Klaxon Model K-33-D Type 1955 (low note), 1956 (high note). Vibrator type, blended tone, twin horns operated by horn relay.

Horn Type	Current at 6 volts	Air Gap
1955 (low note)	12-14	.045-.050"
1956 (high note)	11-13	.036-.040"

Horn Relay:—Model 266-TK. Requires .25 amperes at 2 volts min. to close contacts. Current draw .8 amps.
Contact Gap—.015-.025".
Air Gap—.012-.017" with contacts closed.

ENGINE

ENGINE SPECIFICATIONS:—8 cylinder, 'L' head.
Bore—3¼". **Stroke**—4⅞".
Displacement—323.5 cubic ins. **Rated H.P.**—33.80.
Developed Horsepower—For each model as follows:

Model	Comp. Ratio	HP. and R.P.M.
C9 Std.	6.2-1	105 at 3400
C9 Optl.	6.5-1	110 at 3400
C10, 11 Std.	6.5-1	130 at 3400
C10, 11 Optl.	7.45-1	138 at 3400

Compression & Vacuum Reading—*See Tune-up data.*

ENGINE

CONTINUED FROM PRECEDING PAGE

PISTONS:—Aluminum alloy, 'T' slot, Cam ground type with anodized finish (special hard oxide formed on bearing surface). **Length**—3⅞".
Weight—Held to two grams maximum variation.
Removal—Pistons and rods removed from above.
Clearance—Top .022". Skirt .002". See Fitting New Pistons.

Replacement Pistons:—Finished anodized pistons furnished in standard and .003", .005", .010", .015", .020", .023", .025", .030", .040", .050", .060" oversizes. Semi-finished pistons furnished in two sizes: (1) Standard to .023" oversize, (2) .025"-.050" oversize, not interchangeable. Pistons should be slotted and finished on cam grinding equipment.

Fitting New Pistons:—Micrometer gauge recommended. Using feeler gauge (.002") inserted between piston and cylinder wall on side opposite slot, pull required to withdraw feeler must be 3-4 lbs.

Installing Pistons:—Slot should be toward left

PISTON RINGS:—Two compression, one undercut oil wiper (#3), one oil control ring per piston, all above pin. Lower ring groove drilled radially with twelve ⅛" oil drain holes.

Ring	Width	End Gap	Side Clearance
Comp. all	⅛"	.007-.015"	.002-.003"
Oil cont. all	.5/32"	.007-.015"	.002-.003"

NOTE—Install undercut compression and oil wiper ring with step down.

Replacement Rings:—*See Chrysler Shop Notes.*

PISTON PIN:—**Diameter**—55/64". **Length**—2¾".
Pin floats in piston and rod. Held by locking rings at each end. Pin hole in rod is bronze bushed.
NOTE—Heat piston in boiling water to remove or install pins.
Pin Fit in Piston—Tight thumb push fit with piston heated to 120° F.
Pin Fit in Rod Bushing—Tight thumb push fit with pin and rod at 70° F.

Replacement Pins: Std., .003", .005", .008" oversize.

CONNECTING RODS:—**Weight**—Held within limits.
Length—9". (center-to-center).
Crankpin Journal Diameter—2 3/16".
Lower Bearing—Removable steel-backed, copper-lead lined. Furnished standard and .010" undersize.
Clearance—.001-.003". Sideplay .006-.011".

Bearing Adjustment:—None (no shims). Replace bearings. Do not file rods or caps. Install new bearings so small bosses engage grooves in rod and cap.

Installing Rods:—Lower bearings are offset. Install rods with widest half of bearing toward rear (#1, 3, 5, 7), or toward front (#2, 4, 6, 8). Oil hole in lower bearing must be toward camshaft on all rods.

CRANKSHAFT:—5 bearing. Integral counterweights.
Journal Diameters—2 45/64" all bearings.
Bearing Type—Removable steel-backed, babbitt-lined. **Clearance**—.001-.002".

Bearing Adjustment:—None (no shims). Replace bearings. Do not file bearing caps.

Replacement Bearings & Bearing Caps: *Refer to Chrysler Shop Notes for complete data.*

End Thrust:—Taken by flange faces on rear (#5) bearing. Endplay .003-.007".

CAMSHAFT:—6 bearing. Non-adjustable chain drive.
Journal Diameters—#1, 2 1/16"; #2, 2 1/32"; #3, 2"; #4, 1 31/32"; #5, 1 15/16"; #6, 1⅞".
Bearing Type—Removable steel-backed, babbitt-lined (except #6 which is machined in crankcase).
Clearance—.0015-.0025" all bearings.

End Thrust:—Taken between the face of the removable cast-iron sleeve which carries the front bearing and the face of the camshaft sprocket. Adjusted by replacing sleeve. Endplay .003-.005".

Timing Chain:—Morse. Width 1¼". Pitch ½". Length 24" or 48 links.

Camshaft Setting:—Sprockets are marked. Mesh chain with sprockets turned so that 'O' marks are adjacent and in line with a straightedge across shaft centers.
NOTE—Engine must be supported under front end of oil pan and front engine support removed for work on timing chain and camshaft.

VALVES:—

	Head Diameter	Stem Diameter	Length
Intake	1 15/32"	.340-.341"	5½"
Exhaust	1 13/32"	.340-.341"	5½"

	Seat Angle	Lift	Stem Clearance
Intake	45°	11/32"	.001-.003"
Exhaust	45°	11/32"	.003-.005"

See Chrysler Special Shop Notes for Exhaust valve seat insert removal and installation instructions.

Valve Guides:—Use special tool to remove and install guides. Insert guides with taper end up (intake) or down (exhaust). Top of guide must be 13/16" below top of block. Finish ream guides after installing to inside diameter of .342-.343" Int., .344-.345" Exh.

Valve Springs:—Variable pitch type. Install springs with close coil at top. Do not compress springs to over all length of less than 1½".

	Spring Pressure	Spring Length
Valve Closed	46-50 lbs.	2 1/32"
Valve Open	104-110 lbs.	1 11/16"

Valve Lifters:—Mushroom type. Ream guides to take following oversizes: .001", .008", .030", .060"

VALVE TIMING

Tappet Clearance: .006" Intake, .008" Exhaust Hot. .010" exhaust clearance recommended for sustained high speed driving.
NOTE—Right front wheel and cover plate under fender should be removed for work on valves.

Valve Timing:—See Camshaft Setting above.
Intake Valves—Open 2° BTDC. Close 44° ALDC.
Exhaust Valves—Open 46° BLDC. Close 4° ATDC.
To Check Valve Timing—Install timing gauge in timing plug hole over #1 piston. Set tappet clearance #1 intake valve at .011" (cold). This valve should open with piston 2° or .0019" before top dead center when 2° line BTDC on impulse neutralizer at front of engine lines up with pointer on chain case cover. Reset tappet clearance at .006" hot.

LUBRICATION

LUBRICATION:—Pressure. Gear type oil pump on right side of crankcase.
NOTE—Ignition timing should be checked whenever oil pump is installed in engine.

Normal Oil Pressure:—30-40 lbs. at 30 M.P.H.

Oil Pressure Relief Valve:—Located under cap at left side of crankcase. Operates at 40-45 lbs. To adjust, remove cap, withdraw locking wire, turn slotted plug clockwise to increase pressure, counter-clockwise to decrease, replace locking wire and cap.

Crankcase Capacity:—6 qts. (refill).

CLUTCH

Borg & Beck Model 11A6. Single plate, dry disc type.
See Clutch Section for complete data.
Facings—Woven type, 2 required. Inside Diam. 6⅛". Outside Diam. 11". Thickness ⅛".
Adjustment—Clutch pedal should just clear underside of toeboard with clutch engaged. To adjust, turn pedal stopscrew located above clutch pedal shaft. Free movement of clutch pedal must be 1 1/16". To adjust, turn clutch shaft collar adjusting screw at right hand end of clutch pedal shaft.
Removal—Disconnect clutch linkage, remove transmission (rotating clutch release fork shaft so that release bearing and spring are withdrawn with transmission), remove clutch housing pan, prick punch clutch cover and flywheel (install in same position to maintain balance), take out clutch mounting bolts, turning all bolts out evenly. Remove clutch from below.

Automatic Clutch:—See article in Clutch Section.
See Clutch Section for complete data.

FRONT SUSPENSION

Front Suspension:—Conventional tubular section front axle with Reverse-Elliott ends and semi-elliptic springs.
Kingpin Inclination—4½-5½° crosswise.
Caster—2° plus or minus 1°. Adjust by inserting wedge shims between spring and axle pad on axle. Shims or angle plates furnished ½, 1, 2°.
Camber—½° plus or minus ¼°. No adjustment. Manufacturer recommends that no attempt be made to correct camber by bending tubular axle.
Toe In—0-5/16" measured at hub height on center of tire tread. Adjust in usual manner by changing length of tie rod.

STEERING GEAR

Steering Gear: Gemmer Model Worm-and-Roller
See Steering Gear Section for complete data.

BRAKES

BRAKES:—**Service**—Lockheed hydraulic, double anchor type. Bendix Vacuum Power unit optional on Model C9 and standard on Models C10, C11.
See Brake Section for complete data.
Wheel Cylinder—Diameters—Front Wheel (Front end 1¼", Rear end 1⅜"), Rear wheel (Front end 1", Rear end 1⅛").
Drum Diameter—13".
Lining—Moulded type. Width 2". Thickness ¼". Length 24 27/32" per wheel.
Clearance—.012" toe, .006" heel for each shoe.

Hand Brake:—External at rear of transmission.
Adjustment—With lever in released position remove anchor screw locking wire, turn anchor screw so that clearance between lining and drum is 1/32", lock anchor screw with wire. Back off adjusting bolt nut until free. Adjust bracket bolt nuts for each end of brake band to 1/32" clearance (as above), secure with locknuts. Finally tighten adjusting bolt nut until tension on bracket bolt nuts is just relieved at either end.
Drum Diameter—7".
Lining—Woven type. Width 2½". Thickness 3/16". Length 21 5/8".
NOTE—Clearance at anchor and saddle .005" max.

Power Brake Unit:—Bendix Internal Valve type.
See Brake Section for complete data.

NOTE:—Engine hood hinged at cowl and lifts from forward end. Turn radiator ornament counter-clockwise, raise hood about 1", push safety catch at front under lower edge of hood releasing catch and raise hood. Side panels removed by freeing latches on inside lower edge of panels.

MODEL IDENTIFICATION

SERIAL NUMBER:—First number 6,865,101 (Detroit), 9,706,386 (Canada). On right front door hinge post.

ENGINE NUMBER:—First number C-16-1001. Stamped on left side of block between #1 and #2 cylinders. *See Chrysler Special Shop Notes for engine number lettering data.*

TUNE-UP

COMPRESSION:—Ratio and pressure as follows:

Rati	Pressure at 1000 R.P.M.	At 100 R.P.M.
6.5-1 Std. Head	150-160 lbs.	Approx. 110 lbs.
7.0-1 Optl. Head	160-170 lbs.	Approx. 117 lbs.

VACUUM READING:—Gauge should show steady reading of 18-21" with engine idling at 6 M.P.H.

FIRING ORDER: 1-5-3-6-2-4. See diagram.

SPARK PLUGS: Champion Type J-8 (Cast Iron Heads), Type H-10 (Aluminum Heads). 14 mm. Metric type. Gaps—.025".

IGNITION: See Coil, Condenser, and Distributor.
Breaker Gap: .020". **Cam Angle** 38° (closed).
Automatic Advance—12° max. at 1750 RPM (distr.).
Vacuum Advance—10° distr. with 12" vacuum.

IGNITION TIMING: See Ignition Timing.
Std. Setting—2° ATDC (6.5-1 Head), At TDC. (Optl. 7.0-1 Head) with "0" dead center mark or correct degree mark on crankshaft pulley at indicator on front of engine.

CARBURETION: See Carburetor & Carb. Equipment.
Idle Setting—Idle screw ¼-1 turn (E6I1 Carb.), ½-1¼ turn (Other Carbs.) open. Idle speed 300 RPM or 6 MPH.
Float Level—5/64" top of float below top edge of bowl.
Accelerating Pump—Center hole normal setting. Inner hole (Summer), Outer hole (Winter) for extreme temperatures.
Fuel Pump Pressure: 3½ lbs. maximum.

VALVES: See Valve Timing.
Tappet Clearance: .006" Int., .010" Exh., Hot.

STARTING: See Battery, Starter, Generator, Regulator.

IGNITION

Ignition Switch:—Mitchellock Model 24-B, Type 7055. Connected to coil by armored cable.
Ignition Lock—Yale & Towne, Mitchell No. 7075.

COIL: Auto-Lite Models IG-4642, CL-4602. Service winding (coil less switch and cable) IG-3224JS or CL-3224S. Mounted on dash.
Ignition Current—2.5 amperes idling, 5.5 stopped.

CONDENSER: Auto-Lite Part No. IG-3927-A.
Capacity—.25-.28 microfarad.

DISTRIBUTOR: Auto-Lite Model IGS-4010-1. Single breaker, 6 lobe cam, full automatic advance type with auxiliary vacuum spark control.
See Electrical Equipment Section for special servicing directions on these distributors.
Breaker Gap—Set at .020".
Cam Angle or Dwell—38° (closed), 22° (open).
Breaker Arm Spring Tension—18-20 ounces.

Automatic Advance

Distributor Degrees	Distributor R.P.M.	Engine Degrees	Engine R.P.M.
Start	350	0	700
3	400	6	800
7	1000	14	2000
9	1300	18	2600
12	1750	24	3500

Vacuum Spark Control—Integral with distributor. Mounted on distributor housing and linked directly to breaker plate. Provides additional advance for speeds above idling except when engine is accelerated or operated with wide open throttle when spark is retarded by return spring within unit.

Vacuum Advance

Distr. Degrees	Eng. Degrees	Vacuum (" of HG)
Start	0°	4.75"
5°	10°	8.35"
10°	20°	12"

Distributor Removal:—Mounted on left side of crankcase. To remove, take out hold-down screw in advance arm, disconnect vacuum line.

IGNITION TIMING

IGNITION TIMING:—	Flywheel Deg.	Piston Position
6.5-1 Std. hd.	2° ATDC	.002" ATDC.
7.0-1 Optl. Al. hd.	TDC.	.000" TDC.

See 'Manual Adjustment' (following) for final setting for best performance depending on fuel used.

NOTE—Crankshaft pulley at frt. of engine marked 'O' at top dead center with 15 one degree graduations before and after this point.

Timing (Using Timing Light)—Connect timing light between distributor terminal and battery terminal on generator control unit. With #1 piston on compression, turn engine over until piston reaches firing position (see table), stop when correct line on

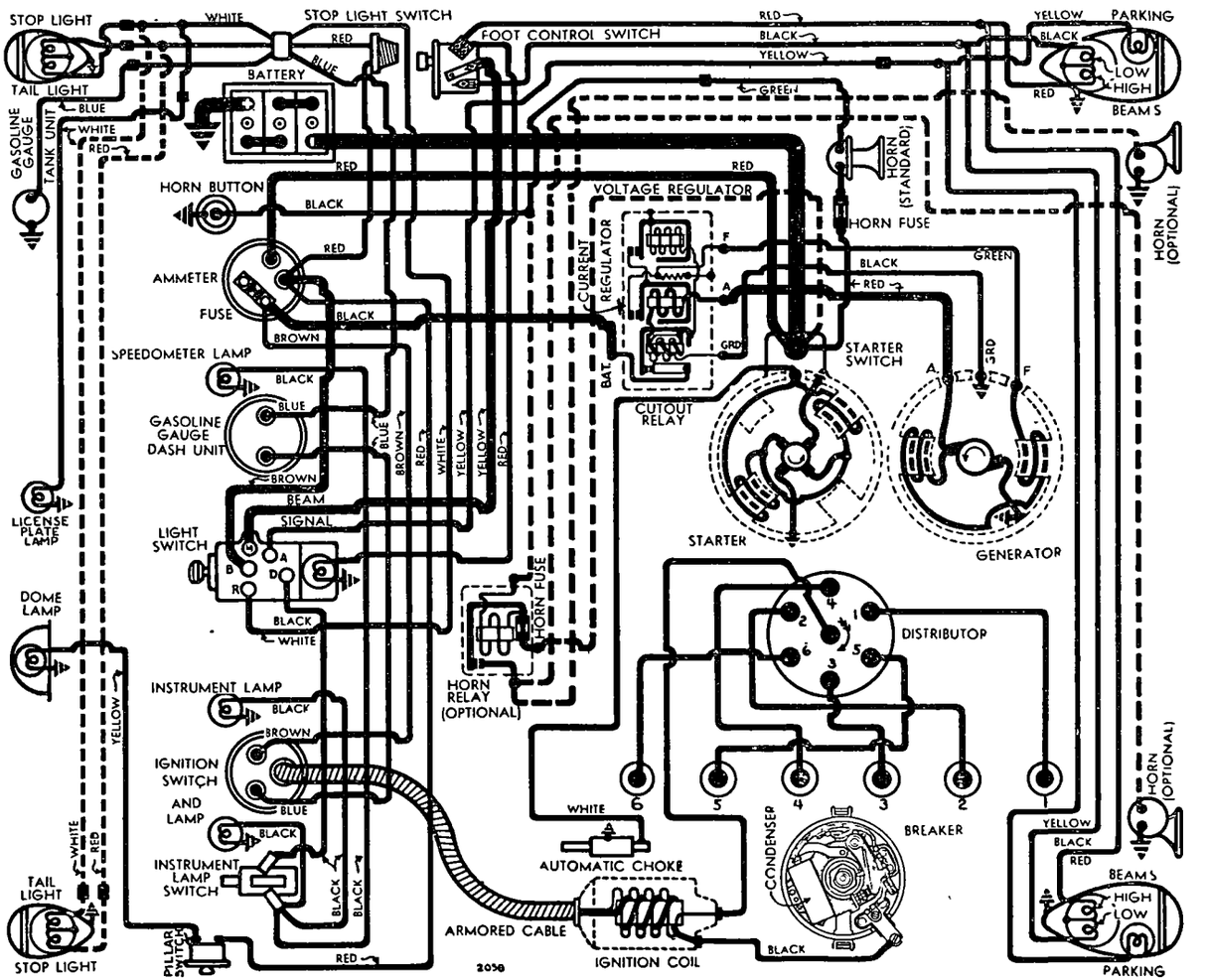

impulse neutralizer lines up with pointer on chain case cover. Loosen distributor hold-down screw, center pointer on scale, tighten hold-down screw. Loosen advance arm clamp bolt, rotate distributor until timing light just goes out, tighten clamp bolt.

Timing (Using Synchroscope)—Clip lead to #1 spark plug, direct light on impulse neutralizer, fill in correct mark with chalk or white paint.

Manual Adjustment:—After ignition set as above, road test car and adjust for slight ping with wide open throttle when accelerating from 10-30 M.P.H. To adjust, loosen hold-down screw, advance (counter-clockwise), retard (clockwise) pointer on scale. Scale graduated in engine degrees. Do not advance pointer more than 5° on scale.

CARBURETOR

CARBURETION:—Carburetor—Carter (Ball & Ball) Models E6I1, E6K1, E6K2, E6K3, E6K4, 1½" down-draft types.

For complete data, refer to Carburetor Index.

NOTE—See article in Carburetion Sec. for recommended changes on first three models.

Idle Adjustment—With engine warm and choke valve wide open (fast idle inoperative), adjust throttle stopscrew so that idle speed is 300 R.P.M. or 6 M.P.H. Turn idle adjusting screw in until engine begins to hesitate or miss, then out until engine begins to roll, finally turn screw in slowly until engine fires smoothly. Final setting should be ½-1¼ turns of screw from inner closed or seated position. Readjust throttle stopscrew for correct idling speed.

Accelerating Pump Setting—Engage pump link in proper hole in throttle lever for seasonal requirements as follows:

Inner Hole (Min. stroke)—Extremely warm weather.
Center Hole—Normal summer temperatures.
Outer Hole (Max. stroke)—Winter temperatures.

Throttle Cracking: Throttle opened approx. one-third when starter pedal depressed. This setting should be checked and adjusted when checking automatic choke.

Fast Idle:—Integral with carburetor. No adjustment.

Automatic Choke: Sisson Type AC-751B.

For complete data, refer to Carburetion Equip. Index.

CARB. EQUIPMENT

Air Cleaner:—Burgess oil-wetted type standard. AC. #1526838 heavy duty oil-bath type optional.

Fuel Pump:—AC. Type B #1522995. Diaphragm type. AC. Type AL #1523137 comb. fuel & vacuum pump used on cars with overdrive.

For complete data, refer to Carburetion Equip. Index.

Gasoline Gauge:—Motometer (Auto-Lite) Electric. No. NG-8330-D (dash unit), NG-8257-T (tank unit).

For complete data, refer to Carburetion Equip. Index.

BATTERY

BATTERY:—Willard, Type WHT-2-105, RHT-2-105 (Exp.). 6 volt, 15 plate, 105 AH. capacity (20 hr. rate).

Starting Capacity—133 amperes for 20 minutes.

Zero Capacity—300 amperes for 3.9 minutes.

Grounded Terminal—Positive (+) terminal.

Location—Left side under drivers seat.

STARTER

Auto-Lite Model MAW-4010 (Std), MAW-4011 (Exp.). Armature No. MAW-2030.

Drive—Positive shift outboard pinion.

Cranking Engine—Approx. 175 amps. at 5 volts.

Rotation—Counter-clockwise at commutator end.

Brush Spring Tension—42-53 ozs. (new brushes).

Performance Data

Torque	R.P.M.	Volts	Amperes
0 ft. lbs.	4900	5.5	65
.60 "	3300	5.5	100
2.75 "	1480	5.0	200
5.45 "	820	4.5	300
8.50 "	400	4.0	400
11.55 "	110	3.5	500
11.5 "	Lock	3.0	505
18 "	Lock	4.0	670

Removal:—Flange mounted on left front face of flywheel housing. To remove, take out flange screws.

Starting Switch:—(MAW-4010)—SW-2813. Mounted on starter field frame and operated by pinion shaft (starting pedal). See article in Electrical Equipment Section for pedal adjustment.

(MAW-4011)—Solenoid Switch Type SS-4104. Controlled through relay by pushbutton on dash. Operative with ignition turned 'on'.

For complete data, refer to Electrical Equipment Index.

GENERATOR

STANDARD

Auto-Lite Model GBW-4803-A, C (Exp. Bolivia). Armature No. GBW-2006F. 2 brush, straight shunt type with external voltage and current regulation.

Maximum Charging Rate—22 amperes, 8.0 volts, 1780 R.P.M. and above with load or discharged battery (Current Regulator setting). Actual charging rate controlled by Voltage Regulator and is dependent on battery condition.

Charging Rate Adjustment—None. See Regulator.

Performance Data

Cold Amps.	Cold Volts	Cold R.P.M.	Hot Amps.	Hot Volts	Hot R.P.M.
0	6.4	775	0	6.4	870
4	6.7	940	4	6.7	1065
10	7.1	1200	10	7.1	1385
16	7.6	1480	16	7.6	1780
20	7.85	1675	20	7.85	2125
22	8.0	1780	22	8.0	2400

Rotation—Counter-clockwise at commutator end.

Brush Spring Tension—53 ozs. max. (new brushes).

Field Current—1.66-1.84 amperes at 6.0 volts.

Motoring Current—3.04-3.36 amperes at 6.0 volts.

Removal:—Pivot mounted at left front of engine. To remove, take out pivot bolts and clamp bolt.

Belt Adjustment:—Loosen clamp bolt and pivot bolts, swing generator out until scale (attached to field frame) reads 40-50 lbs., tighten bolts.

GENERATOR

SPECIAL EQUIPMENT

SPECIAL GENERATORS:—Model GCB-4802-A (City Police), GCB-4802-B (State Police). Used with Model VRB-4004C Regulator. *See 1939 De Soto Model S6 article for Generator and Regulator data.*

REGULATOR

Auto-Lite Model VRB-4005-A. Voltage & Current Type. Consists of Cutout Relay, Vibrating Voltage Regulator and Vibrating Current Regulator in case

For complete data, refer to Electrical Equipment Index.

NOTE—Regulator case cover is sealed. Serviced on exchange basis if seals not broken. Cover must be removed to make adjustments.

Cutout Relay

Cuts In—6.4-7.0 volts cold.

Cuts Out—.5 ampere Min., 3.0 amperes Max. Cold.

Contact Gap—.015" minimum.

Air Gap—.034" Min., .038" Max. with contacts open. Measure at hinge end of core.

Voltage Regulator

Setting—7.5-7.8 volts at 70°F. (Before Serial No. 8R-000001), 7.3-7.6 volts at 70°F. (After 8R-000001).

See Electrical Equipment Section for complete settings and changes.

To Check—Connect ammeter in charging line at 'B' terminal on regulator (use short heavy leads). Connect voltmeter between regulator 'B' and 'GD' terminals. Operate generator, charging fully charged battery, at speed equivalent to 30 M.P.H. car speed. Voltage should be within limits of 7.4-7.8 volts (Before #8R-000001), 7.3-7.6 volts (Cold—70°), 7.1-7.4 volts (hot—140°) after 8R-000001. See Setting above.

To Adjust—Change regulator armature spring tension by bending lower spring hanger. See Electrical Equipment Section for complete instructions.

Contact Gap—.010" Min., .020" Max. with armature against stop pin.

Air Gap—.0595-.0625" with contacts just opening.

Current Regulator

Setting—21-23 amperes (marked '22' on cover).

To Check—Connect ammeter and voltmeter as directed for Voltage Regulator test. Operate generator at 30 M.P.H., add load (use bank of headlamp bulbs or turn on car lights and discharge battery) so that generator will charge at peak rate bringing current regulator into action. Charging current should not exceed 22 amperes. If more than slight excess noted, Current Regulator is defective.

Adjustment, Contact Gap, Air Gap—Same as given for Voltage Regulator above.

LIGHTING

LIGHTING:—Headlamps—Corcoran-Brown, pre-focused type. Aim headlamps straight ahead (lenses in place, upper beams lighted and car unloaded) with center of hot spot 3" (5 pass.), 2" (7 pass.) below center horizontal line of headlamps at 25 ft.

Headlamp Beam Indicator—In light switch knob. Lighted when headlamp upper beams in use.

Switches

Lighting—Chrysler Part No. 667044.
Instrument Light—Chrysler Part No. 667043.
Foot Selector—Chrysler Part No. 659512.
Stop Light—Chrysler Part No. 661721.

Bulb Specifications

Position	Candlepower	Mazda No.
Headlamps	32-32	2331
Tail and Stop light	3-21	1158
Beam Indicator, Ign. Sw.	1	51
Parking, Instrument	1½	55
Dome	15	87
Rear License	3	63

MISC. ELECTRICAL

FUSES:—Lighting—20 amperes on back of ammeter.
Horn—20 amp. (single) in connector near starter. 30 amp. (dual) in horn relay.

HORNS:—Single—Auto-Lite Model HB-4002.
Dual—Auto-Lite Model HC-5103B horn set operated by horn relay.

Horn Relay:—Auto-Lite Model HR-4002. A 30 ampere fuse mounted on base.
Contacts Close—3.0-4.0 volts. **Open** 1.5-2.5 volts.
Contact Gap—.026". **Air Gap**—.012-.017" (closed).

CONTINUED ON NEXT PAGE

CONTINUED FROM PRECEDING PAGE

ENGINE

ENGINE SPECIFICATIONS:—6 cylinder, 'L' head.
Bore—3⅜". **Stroke**—4¼".
Displacement—228.1 cubic ins. Rated H.P.—27.34.
Developed Horsepower—93 HP. (std. 6.5-1 head), 100 HP. (optl. 7.0-1 head) at 3600 R.P.M.
Compression Ratio—Al. hds. (6.5-1 std., 7.0-1 optl.).
Compression & Vacuum Reading—*See Tune-up data.*

PISTONS:—Aluminum alloy, U-slot, cam ground type with anodized finish. **Length**—3⅞".
Weight—17.46 ounces (plus or minus 2 grams).
Removal—Pistons and rods removed from above.
Clearance—Top .022". Skirt .002".
Replacement Pistons:—*See Chrysler Shop Notes.*
Fitting New Pistons:—Check pistons at right angles to pin bosses at bottom of skirt) and cylinder bore with micrometer gauge. With feeler (.002") inserted between cylinder wall and piston (side opposite slot), pull to withdraw feeler 5 to 7 lbs.
Installing Pistons:—Slot away from valves.

PISTON RINGS:—Two undercut compression, two oil control rings per piston, all above pin. Lower ring grooves have ⅛" drain holes, 10 (#3), 5 (for #4).

Ring	Width	End Gap	Side Clearance
Compression	⅛"	.007-.015"	.0015-.003"
Oil Control	5/32"	.007-.015"	.0015-.003"

Replacement Rings:—*See Chrysler Shop Notes.*

PISTON PIN:—**Diameter**—55/64". **Length**—2⅞".
Floating type. Pin hole in rod bronze bushed.
Pin Fit in Piston—Thumb push fit at 130° F.
Pin Fit in Rod Bushing—Thumb push fit at 70° F.
Replacement Pins: Std., .003", .005", .008" oversize.

CONNECTING ROD:—**Weight** 31.91 ozs. **Length** 8".
Crankpin Journal Diameter—2⅛".
Lower Bearing—Removable steel-backed, babbitt-lined. Furnished standard & .0015", .010" undersize.
Clearance—.0005-.0025". **Sideplay**—.0055-.0115".
Bearing Adjustment:—None. Install new bearings with bosses engaging grooves in rod and cap.
Installing Rods:—Oil hole in lower bearing upper half must be toward camshaft, all rods.

CRANKSHAFT:—4 bearing. Integral counterweights.
Journal Diameters—2½" all bearings.
Bearing Type—Removable steel-backed, babbitt-lined. Furnished standard & .0015", .010" undersize.
Clearance—.001-.002".
Bearing Adjustment:—*See Chrysler Shop Notes for Engine Removal (recommended), Front Main Bearing Cap Removal and Bearing Adjustment directions.*
Replacement Bearings & Bearing Caps: *Refer to Chrysler Shop Notes for complete data.*
End Thrust:—Taken by flange faces on rear (#4) bearing. **Endplay**—.003-.007".

CAMSHAFT:—4 bearing. Non-adjustable chain drive.
Journal Diameters—#1, 2"; #2, 1 31/32"; #3 1 15/16"; #4, 1¼".
Bearing Type—Removable steel-backed, babbitt-lined (except #4 machined in crankcase).
Clearance—.0015-.003".
End Thrust:—Taken by thrust plate at rear of camshaft sprocket. **Endplay**—.002-.006".
Timing Chain:—Morse. Width 1". Pitch .500". Length 24" or 48 links.
Camshaft Setting:—Mesh chain with sprockets turned so that '0' marks are adjacent and in line with a straightedge across the shaft centers.

VALVES—	Head Diameter	Stem Diameter	Length
Intake	1 21/32"	.340-.341"	4 25/32"
Exhaust	1 17/32"	.340-.341"	4 25/32"

	Seat Angle	Lift	Stem Clearance
All valves	45°	11/32"	.001-.003"

See Chrysler Special Shop Notes for Exhaust valve seat insert removal and installation instructions.
Valve Guides:—Must be ⅞" below top of block. Ream guides after installing .342-.343" (all).
Valve Springs:—1⅜" limit of compression.

	Spring Pressure	Spring Length
Valve Closed	40-45 lbs.	1¾"
Valve Open	101-109 lbs.	1 13/32"

Valve Lifters:—Mushroom type. Ream guides to take following oversizes: .001", .008", .030", .060".

VALVE TIMING

Tappet Clearance: .006" Int., .010" Exh., Hot.
Valve Timing: See Camshaft Setting above.
Intake Valves—Open TDC. Close 50° ALDC.
Exhaust Valves—Open 48° BLDC. Close 2° ATDC.
To Check Timing:—Set tappet clearance #1 intake valve at .014". Intake valve should open at top dead center when '0' mark on crankshaft pulley at front of engine lines up with pointer on chain case cover. Reset tappet clearance at .008" (hot).

LUBRICATION

LUBRICATION:—Gear type oil pump on right of engine.
NOTE—Check ignition timing whenever oil pump installed on engine. Tilt engine (with jack under pan) for pump removal.
Normal Oil Pressure:—30-45 lbs. at 30 M.P.H.
Oil Pressure Relief Valve:—Under plug on left side of engine. Operates at 40 lbs. Adjustable. Heavy (green) spring to increase pressure, lighter (red) spring to decrease pressure.
Crankcase Capacity:—5 quarts (refill).

CLUTCH

CLUTCH:—**Borg & Beck Mod. 10A7.** Mod. #899 stamped on cover. Single plate, dry disc type.
See Clutch Section for complete data.
Facings—Woven, 2 required. I.D. 6". O.D. 10". Thickness ⅛". *See Chrysler Special Shop Notes.*
Adjustment—Adjust stopscrew (just above clutch pedal shaft) so that pedal arm just clears floor board. Free movement of pedal should be 1 1/16" (adjust by turning release fork rod adjusting nut).
Removal:—Remove floor board, remove transmission (see Transmission Removal below), remove housing underpan, mark cover and flywheel, remove cover bolts evenly, remove assembly from below.

TRANSMISSION

TRANSMISSION:—**Own**—All helical gear type with synchronizing shift on second and high gears.
See Transmission Section for complete data.
Removal:—Disconnect front and rear U-joints, disconnect hand brake, remove nuts from studs at clutch housing, disconnect release fork pull-back spring and rod, pull release fork out of clutch housing, remove transmission cover assembly, remove unit with two pilot studs in upper stud holes.

OVERDRIVE

Overdrive Transmission: Warner Model AS25-T86
See Transmission Section for complete data.
Removal—Same as for standard transmission above after overdrive control has been disconnected.

UNIVERSALS

UNIVERSAL JOINTS:—**Detroit-Universal.** Series 4200. Ball and trunion type with roller bearings. 2 used.
NOTE—Three U-joints used on 7 pass. sedan.
See Universals Section for complete data.
Propeller Shaft Center Bearing:—Used on 7 Pass. models. *See Chrysler Shop Notes for data.*

REAR AXLE

REAR AXLE:—**Own**—Semi-floating, hypoid gear type with Hotchkiss drive.
See Rear Axle Section for complete data.
Ratio—4.1-1 (std.). 4.3-1 (with overdrive and 7 pass.
Backlash—.006-.010". Shim adjustment.
Removal:—Remove axle shaft nut, hub and drum assembly (use hub puller, do not hammer out or bearing damage may result), disconnect brake line at wheel cylinder, remove backing plate (with oil seal). Use shaft puller to remove axle shaft and bearing. With axle shafts removed, differential carrier may be removed by disconnecting rear U-joint at flange and removing housing capscrews.
Wheel Bearing Adjustment—Controlled by shims between brake backing plates and flanged ends of housing. Remove brake backing plates (see above) and add or remove shims (equally on both sides) to give proper clearance. **Endplay**—.003-.008".
NOTE—Shims supplied .010", .0125", .030" thick.

SHOCK ABSORBERS

SHOCK ABSORBERS:—**Monroe**—Direct acting type.
See Shock Absorber Section for complete data.

FRONT SUSPENSION

Front Suspension:—Independent, linked parallelogram type with coil springs.
See Front Suspension Section for complete data.
Kingpin Inclination—4¾-6°.
Camber—¼°. Limits minus ¼° to plus ½°.
Caster—1½°. Adjustable.
Toe In—0-⅛". 1/16" preferred. Set long tie rod to 31 7/32" (between ball centers). Adjust short rod for proper toe-in.
Steering Geometry—Outer wheel turned 20°. Inner wheel turned 22°40', 22°50' (7 pass.).

STEERING GEAR

Steering Gear: Gemmer Model 300. Worm-and-Roller
See Steering Gear Section for complete data.

BRAKES

BRAKES:—**Service**—Lockheed hydraulic, double anchor type. Hand brake at rear of transmission.
See Brake Section for complete data.
Wheel Cylinders—Stepped or two-stage bore type:
Front Wheel—Front cyl. 1¼". Rear 1⅜".
Rear Wheel—Front cyl. 1⅛", Rear 1¼".
Drum Diameter—10".
Lining—Moulded. Width 2". Thickness .200". Length (rear wh.-rear shoe) 7 25/64", (all others) 9 29/32".
Clearance—.012 toe, .006" heel for each shoe.
Braking Power—55% front wheels, 45% rear.
Hand Brake:—On drum at rear of transmission.
Adjustment—Fully release hand brake lever. Remove anchor screw locking wire (left side), adjust anchor screw for .025" clearance between band and drum, set anchor screw with lock wire. Free large adjusting bolt nut (upper end of band), loosen locknut, adjust guide bolt nut to .025" clearance between band and drum, set with locknut. Tighten adjusting bolt nut until tension on either side of guide bolt is just relieved (groove in nut must align with ridge in lockwasher).
Drum Diameter—6".
Lining—Width 2". Thickness 5/32". Length 16 15/16"
NOTE—Clearance at anchor and saddle .005" max.

NOTE:—C-15 Oil Pan Removal. With steering wheel in extreme left position and #1 piston half way down on stroke, pan may be removed or installed.

C14, C15 Engine Hood & Side Panel Removal. See Chrysler Model C-16 article for data.

MODEL IDENTIFICATION

SERIAL NUMBER: On right front door hinge pillar post. First numbers as follows:

	Detroit	Canada
C14 Imperial	6,719,601	9,756,331
C-15 Custom Imperial	7,804,001	

ENGINE NUMBER: First number 1001 with individual model prefix (C14–, C15–). Stamped on the left side of cylinder block between #1 and #2 cylinders. *See Chrysler Special Shop Notes for Engine Numbering letter data.*

TUNE-UP

COMPRESSION:—Ratio and pressure as follows:

Ratio	1000 RPM—Pressure—100 RPM
C14 Std. 6.7-1	150-160 lbs. Approx. 118 lbs.
C15 Std. 6.5-1	145-155 lbs. Approx. 117 lbs
All Optl. 7.45-1	165-175 lbs. Approx. 125 lbs.

VACUUM READING:—Steady 18-21" idling at 6 M.P.H.

FIRING ORDER: 1-6-2-5-8-3-7-4. See diagram.

SPARK PLUGS: Champion Type H-10. 14 mm. Metric type.
Gaps—.025".

IGNITION: See Coil, Condenser, and Distributor.
Breaker Gap—Set at .018".
Cam Angle—27° (closed) with .017" gap.
Automatic Advance—For each distributor:
IGT-4001D-1—13° max. at 1900 RPM (distr.).
IGT-4001F-1—11° max. at 1850 RPM (distr.).
IGT-4001G-1—10° max. at 1450 RPM. (distr.).
IGT-4001J-1—11° max. at 1600 RPM. (distr.).
Vacuum Advance—For each distributor:
IGT-4001D-1, F-1—6° distr. with 12" vacuum.
IGT-4001G-1—6° distr. with 14" vacuum.
IGT-4001J-1—7° distr. with 12" vacuum.

IGNITION TIMING: See Ignition Timing.
Std. Setting—3° ATDC (C14 Std. 6.7-1 Head), 5° ATDC (C15 Std. 6.5-1 Head), or 9° ATDC (All Optl. 7.45-1 Head) with correct degree mark on impulse neutralizer at indicator on front of engine.

CARBURETION: See Carburetor & Carb. Equipment.
Idle Setting—Both idle screws midway between "miss" and "roll" points (Stromberg Carbs.), ¾-1¼ turn open (Carter Carb.). Idle speed 7 MPH.
Float Level (Stromberg Carb.)—Fuel level ⅝" below top edge of float bowl.
Float Level (Carter Carb.)—13/64" top of float to gasket seat on bowl cover with needle valve seated.
Accelerating Pump—Inner hole (min. stroke)—Summer, Outer hole (max. stroke)—Winter.
Fuel Pump Pressure: 4½ lbs. maximum.

VALVES: See Valve Timing.
Tappet Clearance—.006" Int., .010" Exh., Hot.

STARTING: See Battery, Starter, Generator, Regulator.

IGNITION

Ignition Switch:—Mitchellock Model 24-B, Type 7055 (C-14), 7057 (C-15). Coil connection armored.

Ignition Lock—Yale & Towne, Mitchell No. 7075.

COIL: Auto-Lite Model CE-4624 (C14), CE-4626 (C15), Service Coil (less switch & cable) CE-3224JS for both models. Coil mounted on hood ledge.

Ignition Current—2.5 amperes idling, 5.5 stopped.

CONDENSER: Auto-Lite Part No. IG-3927.

Capacity—.25-.28 microfarad.

DISTRIBUTOR: Auto-Lite Model IGT-4001D-1, G-1, J-1 (C14 LHD), IGT-4001D-1 or G-1 (for C14 RHD cars), IGT-4001F-1 (C15 Custom Imperial). Single breaker, 8 lobe cam, full automatic advance type with auxiliary vacuum spark control.

C-14 Note—Distributors used as follows: **D-1**—Up to Engine No. 1337 (U.S.), Serial No. 9,756,338 (Canada). **G-1**—Engine Nos. 1337 to 1825 (U.S.), Serial Nos. 9,756,338 to 9,756,383 (Canada). **J-1**—After Engine No. 1825 (U.S.), Serial No. 9,756,383 (Canada).
Breaker Gap—Set at .018".
Cam Angle or Dwell—27° closed, 18° open (.017" gap).
Breaker Arm Spring Tension—18-20 ounces.

CONTINUED ON NEXT PAGE

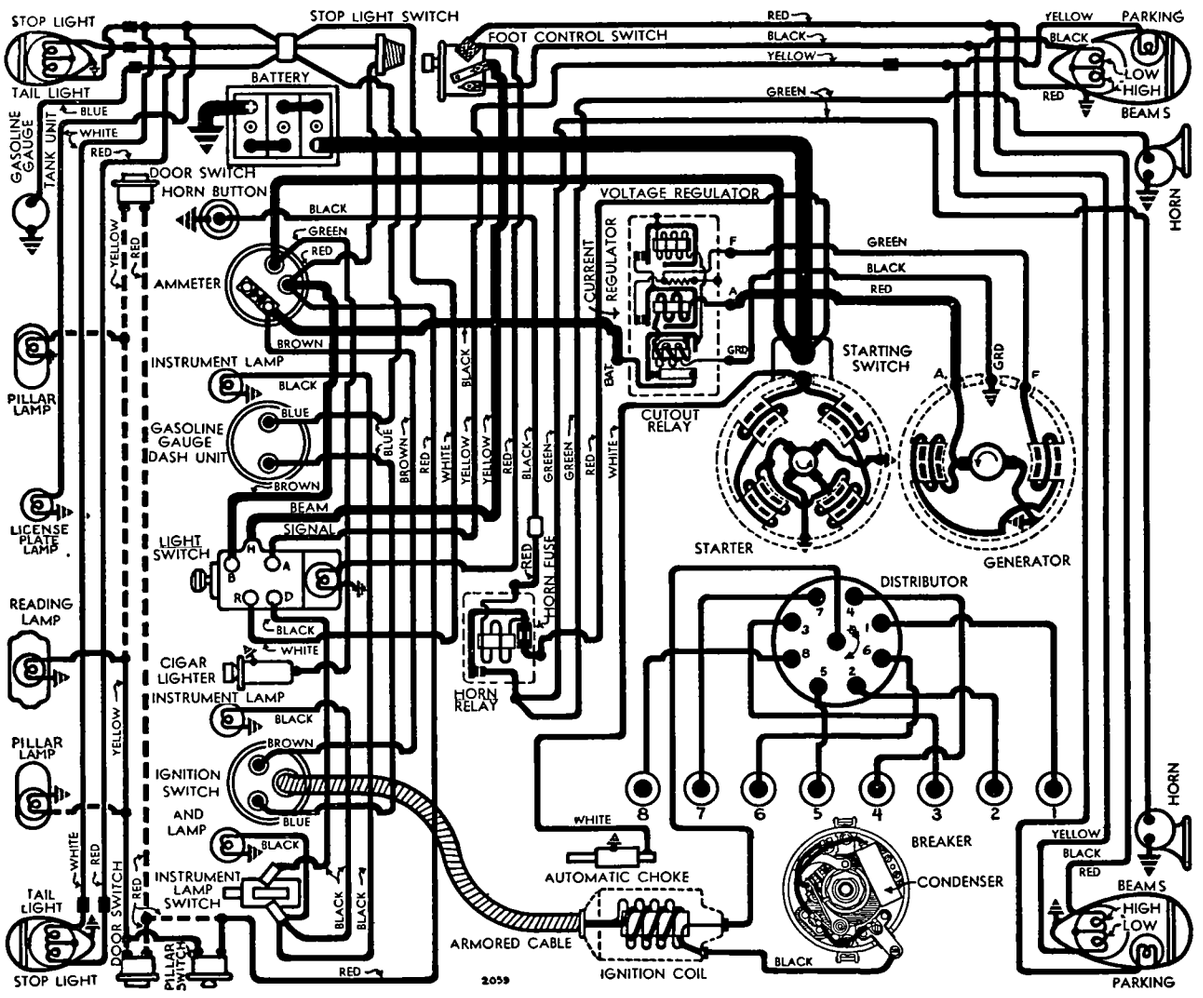

See Electrical Equipment Section for Regulator wiring with 2 resistors (after Regulator Serial No. 8R-000001).

CONTINUED FROM PRECEDING PAGE

Automatic Advance—IGT-4001-D-1

Distributor Degrees	R.P.M.	Engine Degrees	R.P.M.
Start	350	0	700
3	400	6	800
6	850	12	1700
9	1300	18	2600
11	1600	22	3200
13	1900	26	3800

Automatic Advance—IGT-4001-F-1

Start	350	0	700
3	400	6	800
4	600	8	1200
6	960	12	1920
9	1500	18	3000
11	1850	22	3700

Automatic Advance—IGT-4001-G-1

Start	350	0	700
3	400	6	800
6	850	12	1700
9	1300	18	2600
10	1450	20	2900

Automatic Advance—IGT-4001-J-1

Start	350	0	700
3	400	6	800
6	850	12	1700
9	1310	18	2620
11	1600	22	3200

Vacuum Spark Control—Integral with distributor. Mounted on distributor housing and linked directly to breaker plate. Provides additional advance for speeds above idling except when engine is accelerated or operated with wide open throttle when spark is retarded by return spring within unit.

Vacuum Spark Advance—IGT-4001-D-1, F-1

Distr. Degrees	Eng. Degrees	Vacuum (" of HG)
Start	0°	5.1"
3°	6°	8.5"
6°	12°	12"

Vacuum Spark Advance—IGT-4001-G-1

Start	0°	5.1"
3°	6°	9.5"
6°	12°	14"

Vacuum Spark Advance—IGT-4001-J-1

Distr. Degrees	Eng. Degrees	Vacuum (" of HG)
Start	0°	5"
3½°	7°	8.5"
7°	14°	12"

Distributor Removal:—Mounted on left side of crankcase. To remove, take out hold-down screw in advance arm, disconnect vacuum line.

IGNITION TIMING

IGNITION TIMING:—	Flywheel Deg.	Piston Position
C-14, Std. 6.7-1 hd.	3° ATDC	.004" ATDC
C-15, Std. 6.5-1 hd.	5° ATDC	.012" ATDC
C-15, Optl. 7.45-1 hd.	9° ATDC	.038" ATDC

See 'Manual Adjustment' (following) for final setting for best performance depending on fuel used.

NOTE—Impulse neutralizer at front of engine marked with 15 one degree graduations before and after '0' mark at top dead center.

Timing (Using Timing Light)—Connect timing light between distributor terminal and battery terminal on generator control unit. With #1 piston on compression, turn engine over until piston reaches firing position (see above table), stop when correct mark on impulse neutralizer at front of engine is directly in line with pointer on chain case cover. Loosen advance arm hold-down screw, center pointer on scale (opposite 'O' mark), tighten hold-down screw, loosen advance arm clamp bolt, rotate distributor until test lamp goes out indicating that contacts are just opening, tighten clamp bolt.

Timing (Using Synchroscope)—Clip lead to #1 spark plug, direct light on impulse neutralizer, fill in correct mark with chalk or white paint. See article in Electrical Equipment Section.

Manual Adjustment:—After ignition set as above, road test car and adjust for slight ping with wide open throttle when accelerating from 10-30 M.P.H. To adjust, loosen hold-down screw, advance (counter-clockwise), retard (clockwise) pointer on scale. Scale graduated in engine degrees. Do not advance pointer more than 5° on scale.

CARBURETOR

CARBURETION:—Carburetor—Stromberg Model AAOV-1, aircraft type (C-15 all, C-14 first cars), Carter Model 373-S (C-14 later cars). Duplex or double barrel downdraft type.
For complete data, refer to Carburetor Index.

Idle Adjustment (All models)—With engine warm (Automatic choke & Fast Idle inoperative), set throttle stopscrew so that idle speed is 7 M.P.H. Turn one idling adjusting screw (for one barrel) in until engine begins to hesitate or miss, then turn out until engine begins to roll, finally turn screw in slowly until engine fires smoothly. Repeat with second idling adjusting screw (for other barrel). Adjust throttle lever stopscrew if necessary.

Accelerating Pump Setting—Throttle lever has two holes for pump link engagement. Set as follows: Inner Hole (Min. stroke)—Summer temperatures. Outer Hole (Max. stroke)—Winter temperatures.

NOTE—Carter model requires partial dismantling of carburetor to change setting (see article in Carburetor Section for complete directions).

Fast Idle:—Carter or Stromberg adjustable types.
For complete data, refer to Carburetion Equip. Index.

Automatic Choke:—Sisson Type AC-600.
For complete data, refer to Carburetion Equip. Index.

CARB. EQUIPMENT

Air Cleaner:—AC. #1528199 standard oil-wetted type, #1528198 optional oil bath type.

Fuel Pump:—AC. Type D #1521803 diaphragm type. Type I #1523023 combination fuel & vacuum pump (optl. C-14). Type AN #1523188 vacuum pump only (C-15 with overdrive) used with D pump (above) mounted separately on right side of engine at rear.
For complete data, refer to Carburetion Equip. Index.

Gasoline Gauge:—Motometer (Auto-Lite) Electric. No. NG-8347-D (dash unit—all), NG-8257-T (tank unit—C14), NG 8300-T (tank unit—C15).
For complete data, refer to Carburetion Equip. Index.

BATTERY

M DEL C14

BATTERY: Willard, Type WH-2-15 (Std.), RH-2-15 (Exp.). 6 volt, 15 plate, 119 ampere hour capacity (20 hour rate).
Starting Capacity—140 amperes for 20 minutes.
Zero Capacity—300 amperes for 4.3 minutes.
Grounded Terminal—Positive (+) terminal.
Location—Left side under drivers seat.

BATTERY

MODEL C15

BATTERY:—Willard, Type WH-4-17, RH-4-17 (Export) 6 volt, 17 plate, 136 ampere hour (20 hour rate).
Starting Capacity—160 amperes for 20 minutes.
Zero Capacity—300 amperes for 5.4 minutes.
Grounded Terminal—Positive (+) terminal.
Location—Under left hand front seat.

STARTER

C14—Auto-Lite Model MAX-4015, MAX-4016 (Exp.).
C15—Auto-Lite Model MAX-4003 or MAX-4003A.
Armature Number—MAW-2030 (for all models).
Drive—Positive shift outboard pinion.
Cranking Engine—Approx. 200 amperes at 5 volts.
Rotation—Counter-clockwise at commutator end.
Brush Spring Tension—42-53 ozs. (new brushes).

Performance Data

Torque	R.P.M.	Volts	Amperes
0 ft. lbs.	5300	5.5	65
.65 "	3300	5.5	100
2.75 "	1630	5.0	200
5.5 "	970	4.5	300
8.7 "	600	4.0	400
12.0 "	300	3.5	500
16.5 "	Lock	3.0	640
25.0 "	Lock	4.0	880

Removal:—Flange mounted on left front face of flywheel housing. To remove, take out flange screws.

Starting Switch C14:—(MAX-4015) Auto-Lite No. SW-2813. Manual pinion shift operated by pedal. **(MAX-4016)**—Auto-Lite Solenoid SS-4104. Controlled thru relay by starter button on instrument panel.
For complete data, refer to Electrical Equipment Index.

Starting Switch C15:—Auto-Lite Solenoid SS-4101 (for MAX-4003), SS-4201 (for MAX-4003A). Controlled through relay by starter button on instrument panel.
For complete data, refer to Electrical Equipment Index.

GENERATOR

	Generator	Regulator
C-14 & C15	GCO-4801-C	VRB-4004-B
C-14 Export	GCE-4804-A	VRB-4004-A
C-14 Bolivia	GCO-4801-D	VRB-4004-A

Armature Number—GCO-2006F (for GCO gen'tors).
Type—Two brush, straight shunt type with external current-voltage regulation.
Maximum Charging Rate—28 amps., 8.0 volts, 1850 R.P.M. and above with load or discharged battery (Current Regulator setting). Actual charging rate controlled by Voltage Regulator and is dependent upon battery condition.
Charging Rate Adjustment—No adjustment on Generator. See Regulator section below for Voltage and Current Regulator settings.

Performance Data
GCO-4801-C & D

Cold			Hot		
Amps.	Volts	R.P.M.	Amps.	Volts	R.P.M.
0	6.4	825	0	6.4	900
4	6.6	940	4	6.6	1025
8	6.85	1050	8	6.85	1160
12	7.1	1175	12	7.1	1310
16	7.3	1300	16	7.3	1475
20	7.55	1450	20	7.55	1660
24	7.8	1610	24	7.8	1880
28	8.0	1850	28	8.0	2200

NOTE—Cur. regulator limits output to 28 amps. max.

GCE-4804-A

Cold			Hot		
Amps.	Volts	R.P.M.	Amps.	Volts	R.P.M.
0	6.4	740	0	6.4	785
4	6.6	830	4	6.6	880
8	6.8	920	8	6.8	975
12	7.05	1015	12	7.05	1070
16	7.25	1100	16	7.25	1165
20	7.5	1190	20	7.5	1275
24	7.7	1280	24	7.7	1385
30	8.0	1400	30	8.0	1580

NOTE—Cur. regulator limits output to 30 amps. max.

Rotation—Counter-clockwise at commutator end.

Brush Spring Tension—53 ozs. max. (GCO Gen.), 64-68 ozs. max. (GCE Gen.) with new brushes.

Field Current—1.47-1.63 amperes (GCO Gen.), 1.66-1.84 amperes (GCE Gen.) at 6.0 volts.

Motoring Current—3.94-4.36 amperes (GCO Gen.), 5.03-5.57 amperes (GCE Gen.) at 6.0 volts.

Removal:—Pivot mounted at left front of engine. To remove, take out pivot bolts and clamp bolt.

Belt Adjustment:—Loosen clamp bolts & pivot bolts, swing generator out until scale (attached to field frame) reads 40-50 lbs.

GENERATOR

SPECIAL EQUIPMENT

SPECIAL GENERATORS:—Model GCB-4802-A (City Police), GCB-4802-B (State Police). Used with Model VRB-4004C Regulator. *See 1939 De Soto Model S6 article for Generator and Regulator data.*

REGULATOR

Auto-Lite Models VRB-4004-A (GCE generator & GCO Exp. Bolivia), VRB-4004-B (all others), Voltage -Current Type. Consists of Cutout Relay, Vibrating Voltage Regulator and Vibrating Current Regulator in case on dash.

For complete data, refer to Electrical Equipment Index.

NOTE—Regulator case cover is sealed. Serviced on exchange basis if seals not broken. Cover must be removed to make adjustments.

Cutout Relay

Cuts In—6.4-7.0 volts Cold.
Cuts Out—.5 ampere Min., 3.0 amperes Max. Cold.
Contact Gap—.015" minimum.
Air Gap—.034" Min., .038" Max. with contacts open. Measure at hinge end of core.

Voltage Regulator

Setting—7.5-7.8 volts at 70°F (Before Serial #8R-000001), 7.3-7.6 volts at 70°F (After #8R-000001). **See Electrical Equipment Section for complete settings and changes.**

To Check—Connect ammeter in charging line at 'B' terminal on regulator (use short heavy leads). Connect voltmeter between regulator 'B' and 'GD' terminals. Operate generator, charging fully charged battery at speed equivalent to 30 M.P.H. car speed. Voltage should be within limits of 7.4-7.8 volts (Before #8R-000001), 7.3-7.6 volts (cold 70°), 7.1-7.4 volts (hot—140°) after 8R-000001. See Setting above.

To Adjust—Change regulator armature spring tension by bending lower spring hanger. See Electrical Equipment Section for complete instructions.

Contact Gap—.010" minimum, .020" maximum with armature against stop pin.

Air Gap—.0595-.0625" with contacts just opening.

Current Regulator

Setting—29-31 amperes (VRB-4004A), 27-29 amperes (VRB-4004B).

To Check—Connect ammeter and voltmeter as directed for Voltage Regulator test. Operate generator at 30 M.P.H., add load (use bank of headlamp bulbs or turn on car lights and discharge battery) so that generator will charge at peak rate bringing current regulator into action. Charging current should not exceed 30 amperes (4004A), 28 (4004B). If more than slight excess noted, regulator is defective.

To Adjust—Change regulator armature spring tension by bending lower spring hanger. See Electrical Equipment Section for complete instructions.

Contact Gap & Air Gap—Same as Voltage Regulator.

LIGHTING

LIGHTING:—Headlamps—Corcoran-Brown, pre-focused type. Aim headlamps straight ahead (lenses in place, car unloaded, upper beams lighted) with center of hot spot 3" (C-14), 2" (C-15) below center horizontal line of headlamps at 25 feet. Upper and lower beams (lower beam deflected slightly to right) controlled by foot selector switch with lighting switch in full out position.

Headlamp Beam Indicator—In light switch knob. Lighted whenever headlamp upper beams in use.

Switches

Lighting—Chrysler Part No. 667044.
Instrument Light—Chrysler Part No. 667043.
Foot Selector—Chrysler Part No. 659512.
Stop Light—Chrysler Part No. 661721.

Bulb Specifications

Position	Candlepower	Mazda No.
Headlamps	32-32	2331
Tail and Stop	3-21	1158
Beam Indic., Ign. Switch	1	51
Parking, Instrument	1½	55
Dome	15	87
Rear License	3	63

MISC. ELECTRICAL

FUSES:—Lighting—20 amperes, on back of ammeter.
Horn—20 amp. (single) in connecter near starter or 30 amp. (dual horns) in horn relay.

HORNS:—Auto-Lite Mod. HC-5103. Twin horns, blended tone with horn relay.

Horn Relay:—Auto-Lite Model HR-4002. Points close 3.0-4.0 volts, open 1.5-2.0 volts.
Contact Gap—.026". Air Gap—.012-.017".

ENGINE

ENGINE SPECIFICATIONS: 8 cylinder 'L' head type.
Bore—3¼". **Stroke**—4⅛" (C14), 4⅞" (C15).
Displacement 273.8 cu.ins. (C14), 323.5 cu.ins. (C15).
Rated Horsepower—33.80 AMA.
Developed Horsepower—110 at 3600 RPM. (C14), 130 at 3400 RPM. (C15, C17).
Compression Ratio & Pressure: As follows:

Ratio	1000 RPM—Pressure—100 RPM
C14 Std. 6.7-1	150-160 lbs.....Approx. 118 lbs.
C15 Std. 6.5-1	145-155 lbs.....Approx. 117 lbs.
All Optl. 7.45-1	165-175 lbs.....Approx. 125 lbs.

Vacuum Reading—Gauge should show steady reading of 18-21" with engine idling at 6 M.P.H.

PISTONS:—Aluminum alloy, U-slot, cam ground type with anodized finish. **Length**—3⅞".
Weight—16.33 ounces (plus or minus 2 grams).
Removal—Pistons and rods removed from above.
Clearance—Top .022". Skirt .002".

Replacement Pistons:—*See Chrysler Shop Notes.*

Fitting New Pistons:—Check pistons (at right angles to pin bosses at bottom of skirt) and cylinder bore with micrometer gauge. With feeler (.002") inserted between cylinder wall and piston (side opposite slot), pull required to withdraw feeler must be 5-7 pounds.

Installing Pistons:—Slot away from valves.

PISTON RINGS:—Two undercut compression, two oil control rings per piston, all above pin. Lower ring grooves drilled with ten ⅛" oil drain holes (#3), five (#4 groove).

Ring	Width	End Gap	Side Clearance
Compression ....⅛"		.007-.015"	.0015-.003"
Oil Control ....5/32"		.007-.015"	.0015-.003"

Replacement Rings:—Furnished standard and .003", .005", .010", .015", .020", .025", .030", .040", .050", .060" oversize.

PISTON PIN:—Diameter—55/64. **Length**—2¾".
Floating type. Pin hole in rod bronze bushed.
Pin Fit in Piston—Thumb push fit at 130° F.
Pin Fit in Rod Bushing—Thumb push fit at 70° F.

Replacement Pins:—Furnished standard and .003", .005", .008" oversize. Ream bushing and pin hole to size.

CONNECTING ROD: Length—9 3/16" (C14), 9" (C15).
Weight—36.8 ozs. (C14), 36.1 ozs. (C15).
Crankpin Journal Diameter—2 3/16".
Lower Bearing—Removable steel-backed, babbitt-lined. Furnished standard and .0015", .010" undersize.
Clearance—.001-.003". **Sideplay**—.006-.011".

Bearing Adjustment:—None. Install new bearings with bosses engaging grooves in rods and caps.

Installing Rods:—Lower bearings are offset. Install rods with widest half of bearing toward rear (#1, 3, 5, 7) or toward front (#2, 4, 6, 8). Oil hole in lower bearing must be toward camshaft on all rods.

CRANKSHAFT:—5 bearing. Integral counterweights.
Journal Diameters—2 45/64" all bearings.
Bearing Type—Removable steel-backed, babbitt-lined. Furnished standard and .0015", .010" undersize. **Clearance**—.001-.002".

CONTINUED ON NEXT PAGE

ENGINE

C NTINUED FROM PRECEDIN PA E

Bearing Adjustment:—*See Chrysler Shop Notes for Engine Removal (recommended) & Adjustment data.*

Replacement Bearings & Bearing Caps: *Refer to Chrysler Shop Notes for complete data.*

End Thrust:—Taken by flange faces on rear (#5) bearing. **Endplay**—.003-.007".

CAMSHAFT:—6 bearing. Non-adjustable chain drive.

Journal Diameters—#1, 2 1/16"; #2, 2 1/32"; #3, 2"; #4, 1 31/32"; #5, 1 15/16"; #6, 1⅜".

Bearing Type—Removable steel-backed, babbitt-lined (except #6 machined in crankcase).

Clearance—.0015-.0035".

End Thrust:—Taken between face of removable cast-iron sleeve (carries front bearing) and face of camshaft sprocket. Replace if worn. **Endplay**—.001-.008".

Timing Chain:—Morse. Width 1¼". Pitch .500". Length 24" or 48 links.

Camshaft Setting:—Mesh chain with sprockets turned so that '0' marks are adjacent and in line with a straightedge across the shaft centers.

VALVES:—	Head Diameter	Stem Diameter	Length
Intake	1 15/32"	.340-.341"	5 5/16"
Exhaust	1 13/32"	.340-.341"	5 5/16"

	Seat Angle	Lift	Stem Clearance
All valves	45°	11/32"	.001-.003"

See Chrysler Special Shop Notes for Exhaust valve seat insert removal and installation instructions.

Valve Guides:—Must be 13/16" below top of block. Ream guides after installing .342-.343" (all).

Valve Springs:—1½" limit of compression.

	Spring Pressure	Spring Length
Valve Closed	46-50 lbs.	2 1/32"
Valve Open	104-110 lbs.	1 11/16"

Valve Lifters:—Mushroom type. Ream guides to take following oversizes: .001", .008", .030", .060".

VALVE TIMING

Tappet Clearance—.006" Int., .010" Exh. (hot). Remove right front wheel and housing to adjust.

Valve Timing: See Camshaft Setting above.

Intake Valves—Open 2° BTDC. Close 44° ALDC.

Exhaust Valves—Open 46° BLDC. Close 4° ATDC.

To Check Timing:—Set tappet clearance #1 intake valve at .011". This valve should open with #1 piston 2° or .0015" BTDC. when 2° line BTDC. on impulse neutralizer at front of engine lines up with pointer on chain case cover. Reset tappet clearance at .006" with engine hot.

NOTE—2° piston position is .002" for C15.

LUBRICATION

LUBRICATION:—Gear type oil pump on rt. of engine. NOTE—To remove oil pump, take out floor boards, loosen engine mountings and tilt engine (jack under oil pan). Check ignition timing whenever oil pump installed on engine.

Normal Oil Pressure:—30-45 lbs. at 30 M.P.H.

Oil Pressure Relief Valve:—Under cap on left side of crankcase. Adjust by turning slotted plug (with cap and locking wire removed) clockwise to increase counter-clockwise to decrease.

Crankcase Capacity:—6 quarts (refill)

CLUTCH

Borg & Beck Models 10A6 (C14), 11A6 (C15). Single plate dry disc type. NOTE—Clutch cover stamped #874 (10A6), #871 (11A6).

See Clutch Section for complete data.

Facings—Woven type. Inside Diameter 6⅛". Outside Diameter 9⅞" (10A6), 11" (11A6). Thickness ⅛".

See Chrysler Special Shop Notes for Hard Shifting correction.

Adjustment—Adjust stopscrew (just above clutch pedal shaft) so that pedal arm just clears floor board. Free movement of pedal should be 1 1/16" (adjust by turning release fork rod adjusting rod).

Removal:—Remove floor board, remove transmission (see Transmission Removal below), remove housing underpan, mark cover and flywheel, remove cover bolts evenly, remove assembly from below.

TRANSMISSION

TRANSMISSION:—**Own**—All helical gear type with synchronizing shift on second and high gears.

See Transmission Section for complete data.

Removal:—Disconnect front and rear U-joints, disconnect hand brake, remove nuts from studs at clutch housing, disconnect release fork pull-back spring and rod, pull release fork out of clutch housing, remove trans. cover assembly, remove unit with two pilot studs in upper stud holes.

NOTE—Run-out of clutch housing .003" maximum.

OVERDRIVE

Overdrive Transmission: Warner Model AS25-T86 Optl. on C14, C15. Overdrive unit used with this transmission is same as Warner Model AS15-T85 Overdrive unit which is Std. on C17.

See Transmission Section for complete data.

Removal—Same as for standard transmission above after overdrive control has been disconnected.

UNIVERSALS

UNIVERSAL JOINTS:—**Detroit Universal.** Series 5150. for C14, Series 5350 for C15. Cross type with roller bearings.

See Universals Section for complete data.

REAR AXLE

REAR AXLE (C-14, C-15):—**Own**—Semi-floating, hypoid gear type with Hotchkiss drive.

See Rear Axle Section for complete data.

Ratio (C-14)—4.1-1 (sedans), 3.91-1 (coupes), 4.3-1 (with overdrive).

Ratio (C-15)—4.55-1.

Backlash—.006-.010". Shim adjustment.

Removal:—Remove axle shaft nut, hub and drum assembly (use hub puller, do not hammer out or bearing damage may result), disconnect brake line at wheel cylinder, remove backing plates with oil seal). Use shaft puller to remove axle shaft and bearing. With axle shafts removed, differential carrier may be removed by disconnecting rear U-joint at flange and removing housing capscrews.

Wheel Bearing Adjustment—Controlled by shims between brake backing plates and flanged ends of housing. Remove brake backing plates (see above) and add or remove shims (equally on both sides) to give proper clearance. **Endplay**—.003-.008". NOTE—Shims supplied .010", .0125", .030" thick.

SHOCK ABSORBERS

SHOCK ABSORBERS:—**Monroe**—Direct acting type.

See Shock Absorber Section for complete data.

FRONT SUSPENSION

Front Suspension (C-14, C-15):—Independent, linked parallelogram type with coil springs.

See Front Suspension Section for complete data.

Specifications below apply with no passenger load.

Kingpin Inclination—4¾-6°.

Camber—¼°. Limits minus ¼° to plus ½°.

Caster—1½° (C-14). 2° (C-15). Adjustable.

Toe In—0-⅛". 1/16" preferred. **C-14**—Adjust short tie rod (long rod 30 15/16" non-adjustable). **C-15**—Adjust tie rods equally in usual manner.

Steering Geometry—Outer wheel turned 20°. Inner wheel turned 22°0' (C-14), 22°15' (C-15).

STEERING GEAR

Steering Gear: Gemmer Model 330 (C14), Model 370 (C15). Worm-and-Roller types.

See Steering Gear Section for complete data.

BRAKES

BRAKES (C-14, C-15):—**Service**—Lockheed hydraulic, double anchor type. Hand lever applies brake at rear of transmission.

See Brake Section for complete data.

Wheel Cylinders—Stepped or two-stage bore type: Front Wheel—Front cyl. 1¼", Rear 1⅜". Rear Wheel—Front cyl. 1⅛", Rear 1¼".

Drum Diameter—11" (C-14), 13" (C-15).

Lining—Moulded. Width 2". Thickness .200" (C-14), .262" (C-15). Length 22 5/32" (C-14), 24 27/32" (C-15).

Clearance—.012" toe, .006" heel, for each shoe.

Braking Power—55% front wheels, 45% rear.

Hand Brake:—On drum at rear of transmission.

Adjustment—Fully release hand brake lever. Remove anchor screw locking wire (left side), adjust anchor screw for .025" clearance between band and drum, set anchor screw with lock wire. Free large adjusting bolt nut (upper end of band), loosen locknut, adjust guide bolt nut to .025" clearance between band and drum, set with locknut. Tighten adjusting bolt nut until tension on either side of guide bolt is just relieved (groove in nut must align with ridge in lockwasher).

Drum Diamter—6" (C-14), 7" (C-15).

Lining—Width 2". Thickness 5/32" (C-14), 3/16" (C-15). Length 16 15/16" (C-14), 21½" (C-15).

NOTE—Clearance at anchor and saddle .005" max.

MODEL IDENTIFICATION

SERIAL NUMBER:—First number 7,019,401. Located on right front door hinge post.

ENGINE NUMBER: First number C17-1001. Stamped on left side of block between #1 and #2 cylinders. *For Engine Number Lettering Data (Special Standard Bore and Bearing Sizes), refer to Chrysler Shop Notes.*

TUNE-UP

COMPRESSION:—Ratio and Pressure as follows:

Ratio	Press. at 1000 R.P.M.	At 100 R.P.M.
6.50-1 std head	145-155 lbs.	Approx. 117 lbs.
7.45-1 optl. head	160-170 lbs.	Approx. 124 lbs.

VACUUM READING:—Gauge should show steady reading of 18-21" with engine idling at 6 M.P.H.

FIRING ORDER: 1-6-2-5-8-3-7-4. See diagram.

SPARK PLUGS: Champion Type H-10. 14 mm. Metric. Gaps—.025".

IGNITION: See Coil, Condenser, and Distributor.
Breaker Gap—.017". **Cam Angle**—27° Closed.
Automatic Advance—11° max. at 1850 RPM (distr.).
Vacuum Advance—6° distr. with 12" vacuum.

IGNITION TIMING: See Ignition Timing.
Std. Setting—5° ATDC (Std. 6.5-1 head), 9° ATDC (Optl. 7.45-1 head) with correct degree mark on impulse neutralizer at indicator on front of engine.

CARBURETION: See Carburetor & Carb. Equipment.
Idle Setting—Both idle screws midway between "miss" and "roll" points. Idle speed 7-8 MPH.
Float Level—Fuel level 5/8" below top edge of bowl.
Accelerating Pump—Inner hole (short stroke)—Summer, Outer hole (max. stroke)—Winter.
Fuel Pump Pressure: 4½ lbs. maximum.

VALVES: See Valve Timing.
Tappet Clearance—.006" Int., .010" Exh. (hot). Remove right front wheel & housing to adjust.

STARTING: See Battery, Starter, Generator, Reguluator.

IGNITION

Ignition Switch:—Mitchellock Model 24-B, Type 6744. Connected to coil by armored cable.
Ignition Lock—Yale & Towne Mod. DP-108 Mitchell No. 6286.

COIL: Auto-Lite No. CE-4618. Service Winding (coil less switch and cable) CE-3224JS. Mounted on hood ledge.
Ignition Current—2.5 amperes idling, 5.5 stopped.

CONDENSER: Auto-Lite Part No. IG-3927.
Capacity—.25-.28 microfarad.

DISTRIBUTOR: Auto-Lite Model IGT-4001-E-1. Single breaker, 8 lobe cam, full automatic advance type with vacuum spark control and manual adjustm't.
See Electrical Equipment Section for special servicing directions n these distributors.
For complete data, refer to Electrical Equipment Index.
Breaker Gap—Set at .017".
Cam Angle or Dwell—27° closed, 18° open (distrib.).
Breaker Arm Spring Tension—18-20 ounces.

Automatic Advance

Distributor Degrees	Distributor R.P.M.	Engine Degrees	Engine R.P.M.
Start	350	0	700
3	400	6	800
6	950	12	1900
9	1500	18	3000
11	1850	22	3700

Vacuum Spark Control—Provides additional advance for intermediate speed range above idling except when engine is accelerated or operated with wide open throttle.

Vacuum Spark Advance

Distr. Degrees	Eng. Degrees	Vacuum (" of HG)
Start	0°	5.1"
3°	6°	8.5"
6°	12°	12"

Distributor Removal:—Mounted on left side of crankcase. To remove, take out hold-down screw in advance arm, lift out. Distributor accessible by taking off cover plate under left front fender.

IGNITION TIMING

IGNITION TIMING:—Settings for all engs. as follows:

	Flywheel Degrees	Piston Position
6.50-1 std. head	5° ATDC	.0118" ATDC
7.45-1 optl. head	9° ATDC	.0381" ATDC

See 'Manual Adjustment' (following) for final setting for best performance depending on fuel used.

NOTE—Impulse neutralizer at front of engine marked with 15 one-degree graduations before and after "0" mark at top dead center.

Timing (Using Timing Light)—Connect timing light between distributor terminal and battery terminal

CONTINUED ON NEXT PAGE

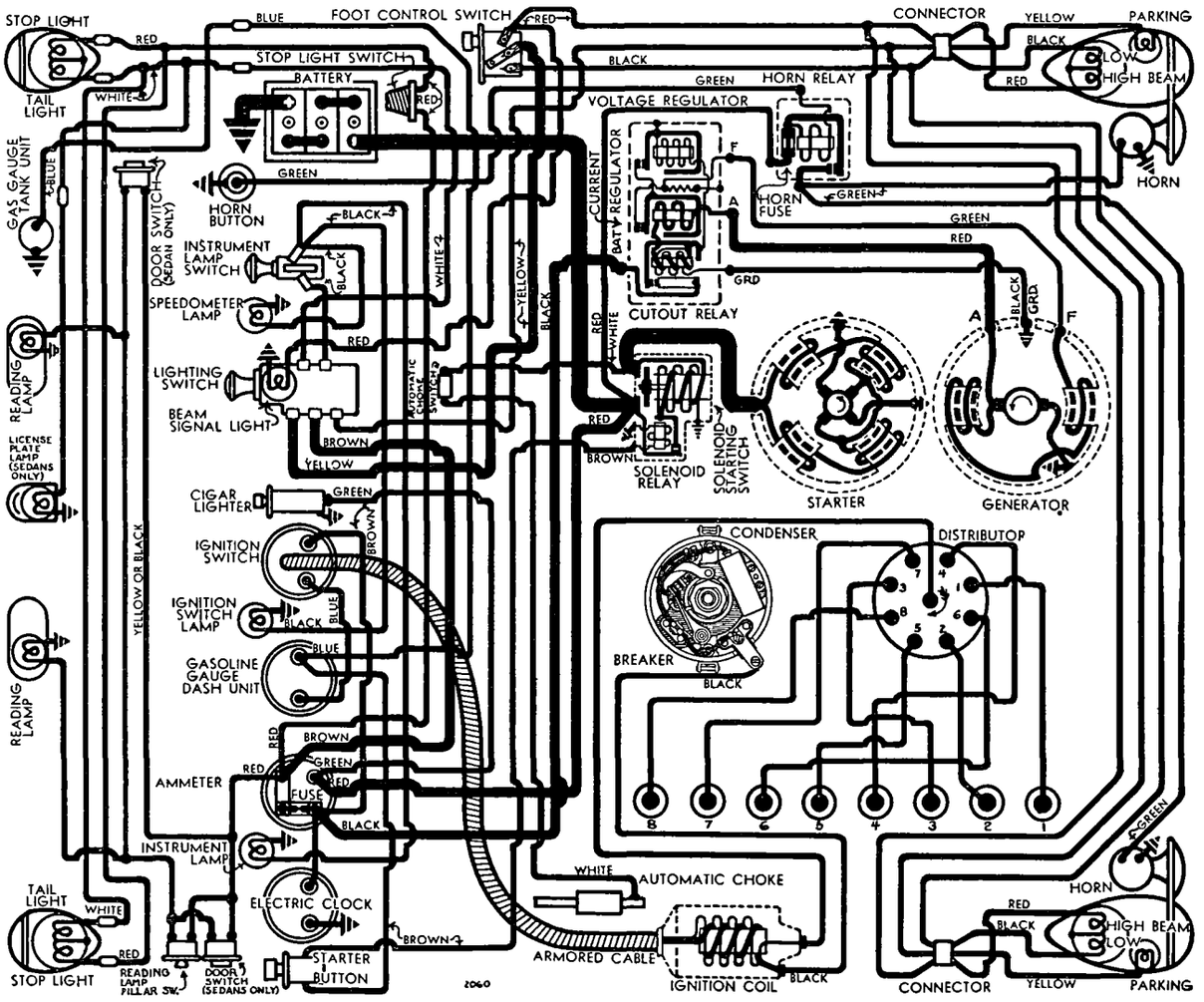

See Electrical Equipment Section for Regulator wiring with 2 Resistors (After Regulator Serial No. 8R-000001).

CONTINUED FROM PRECEDING PAGE

on generator control unit. With #1 piston on compression, turn engine over until piston reaches firing position (see table above), stop when correct mark on impulse neutralizer at front of engine is directly in line with pointer on chain case cover. Loosen advance arm hold-down screw, center pointer on scale (opposite '0' mark), tighten hold-down screw, loosen advance arm clamp bolt, rotate distributor until test lamp goes out indicating that contacts are just opening, tighten clamp bolt, check spark plug connections.

Timing (Using Synchroscope)—Clip lead to #1 spark plug, direct light on impulse neutralizer, fill in correct mark with chalk or white paint.

Manual Adjustment:—After ignition set as above, road test car and adjust for slight ping with wide open throttle when accelerating from 10-30 M.P.H. To adjust, loosen hold-down screw, advance (counter-clockwise), retard (clockwise) pointer on scale. Scale graduated in engine degrees. Do not advance pointer more than 5° on scale.

CARBURETOR

CARBURETION:—Carburetor—Stromberg Mod. EE-22, 1¼" dual downdraft type.

For complete data, refer to Carburetor Index.

Settings (Idle Setting, Float Level, and Accelerating Pump Setting): *See Tune-Up.*

Fast Idle:—No adjustment required. Throttle should rest on high point of cam with choke valve closed.

Automatic Choke:—Sisson Type AC-600. See article in Carburetion Equipment Section for adjustments.

For complete data, refer to Carburetion Equip. Index.

CARB. EQUIPMENT

Air Cleaner:—AC. #1526747 oil-wetted type standard #1526589 oil bath type optional.

Fuel Pump:—AC. Type I #1521549 combination fuel-and-vacuum pump.

For complete data, refer to Carburetion Equip. Index.

Gasoline Gauge:—Motometer Electric. Dash unit—NG-7808-D. Tank Unit—NG-6876-T.

For complete data, refer to Carburetion Equip. Index.

BATTERY

Willard Type WH-4-17, RH-4-17 (Export). 6 volt, 17 plate, 136 ampere hour capacity (20 hour rate).
Starting Capacity—160 amperes for 20 minutes.
Zero Capacity—300 amperes for 5.4 minutes.
Grounded Terminal—Positive (+) terminal.
Location—Under front seat on left hand side.

STARTER

Auto-Lite Model MAX-4003 or MAX-4003-A.
Armature Number—MAW-2030 for both models.
Drive—Magnetic shift outboard pinion.
Cranking Engine—Approx. 200 amperes at 5.0 volts.
Rotation—Counter-clockwise at commutator end.
Brush Spring Tension—31-42 ozs. (new brushes).

Performance Data

Torque	R.P.M.	Volts	Amperes
0 ft. lbs.	5300	5.5	65
2.75 "	1630	5.0	200
5.5 "	970	4.5	300
8.7 "	600	4.0	400
12.0 "	300	3.5	500
16.5 "	Lock	3.0	640
25.0 "	Lock	4.0	880

Removal:—Flange mounted on left front face of flywheel housing. Accessible by removing left front wheel and housing cover under fender. To remove, take out two flange mounting screws.

Starting Switch:—Solenoid Switch Type SS-4101 (MAX-4003), SS-4201 (MAX-4003-A). Controlled through relay by pushbutton on dash. Operative with ignition turned on.

For complete data, refer to Electrical Equipment Index.

GENERATOR

Auto-Lite Model GCO-4801-B (up to Engine No. 1051), GCO-4801-C (after engine no. 1051). Armature No. GCO-2006-F. Two brush, straight shunt type with external voltage and current regulation.
Maximum Charging Rate—28 amps., 8.0 volts, 1850 R.P.M. and above with load or discharged battery
Charging Rate Adjustment—No adjustment on Generator. See Regulator section below for Voltage and Current Regulator settings.

Cold Performance Data			Hot Performance Data		
Amps.	Volts	R.P.M.	Amps.	Volts	R.P.M.
0	6.4	825	0	6.4	900
4	6.6	940	4	6.6	1025
8	6.85	1050	8	6.85	1160
12	7.1	1175	12	7.1	1310
16	7.3	1300	16	7.3	1475
20	7.55	1450	20	7.55	1660
24	7.8	1610	24	7.8	1880
28	8.0	1850	28	8.0	2200

NOTE—Cur. regulator limits output to 28 amps. max.
Rotation—Counter-clockwise at commutator end.
Brush Spring Tension—23-27 ozs. (new brushes).
Field Current—1.47-1.63 amperes at 6.0 volts.
Motoring Current—3.85-4.25 amperes at 6.0 volts.

Removal:—Pivot mounted at left front of engine. To remove, take out pivot bolts and clamp bolt.

Belt Adjustment:—Loosen clamp bolt and pivot bolts, swing generator out until scale (attached to field frame) reads 40-50 lbs.

REGULATOR

Auto-Lite Model No. VRB-4004-B. Voltage-Current Type. Consists of Cutout Relay, Vibrating Voltage Regulator and Vibrating Current Regulator in case

For complete data, refer to Electrical Equipment Index.

NOTE—Regulator case cover is sealed. Serviced on exchange basis if seals not broken. Cover must be removed to make adjustments.

Cutout Relay

Cuts In—6.4-7.0 volts cold.
Cuts Out—.5 ampere Min., 3.0 amperes Max. Cold.
Contact Gap—.015" minimum.
Air Gap—.034" Min., .038" Max. with contacts open. Measure at hinge end of core.

Voltage Regulator

Setting—7.5-7.8 volts at 70°F. (Before Serial No. 8R-000001), 7.3-7.6 volts at 70°F. (After 8R-000001). **See Electrical Equipment Section for complete settings and changes.**

To Check—Connect ammeter in charging line at 'B' terminal on regulator (use short heavy leads). Connect voltmeter between regulator 'B' and 'GD' terminals. Operate generator, charging fully charged battery at speed equivalent to 30 M.P.H. car speed. Voltage should be within limits of 7.4-7.8 volts (Before #8R-000001), 7.3-7.6 volts (Cold—70°), 7.1-7.4 volts (hot—140°) after 8R-000001. See Setting above.

To Adjust—Change regulator armature spring tension by bending lower spring hanger. See Electrical Equipment Section for complete instructions.

Contact Gap—.010" Min., .020" Max. with armature against stop pin.

Air Gap—.0595-.0625" with contacts just opening.

Current Regulator

Setting—27-29 amperes (marked '28' on cover).

To Check—Connect ammeter and voltmeter as directed for Voltage Regulator test. Operate generator at 30 M.P.H., add load (use bank of headlamp bulbs or turn on car lights and discharge battery) so that generator will charge at peak rate bringing current regulator into action. Charging current should not exceed 28 amperes. If more than slight excess noted, Current Regulator is defective.

To Adjust—Change regulator armature spring tension by bending lower spring hanger. See Electrical Equipment Section for complete instructions.

Contact Gap & Air Gap—Same as for Voltage Regulator.

LIGHTING

LIGHTING:—Headlamps—Corcoran-Brown, pre-focused type. Upper and lower beams (lower beam deflected slightly to right) controlled by foot selector switch with lighting switch in full out position.

Headlamp Adjustment—Aim headlamps straight ahead (lenses in place, upper beams lighted and car unloaded) with center of hot spot 2" below center horizontal line of headlamps at 25 feet. With lamp door removed, headlamps may be aimed by means of screw at top (for up and down movement) and one screw (with square shank) at each side for side movement.

Headlamp Beam Indicator—In light switch knob. Lighted whenever headlamp upper beams in use.

Switches

Lighting—Chrysler Part No. 655559.
Instrument Lights—Chrysler Part No. 652151.
Foot Selector—Chrysler Part No. 659512.
Stop Light—Chrysler Part No. 661721.

Bulb Specifications

Position	Candlepower	Mazda No.
Headlamps	32-32	2331
Stop-Tail	21-3	1158
Beam Indicator, Ign. Sw.	1	51
Parking, Instrument	1½	55
Dome	15	87
Rear License	3	63

MISC. ELECTRICAL

FUSES:—Lighting—20 ampere on back of ammeter.

HORNS:—Twin horns, blended tone with horr relay.

ENGINE

ENGINE SPECIFICATIONS:—8 cylinder, 'L' head.
Bore—3¼". **Stroke**—4⅞".
Piston Displacement—323.5 cubic inches.
Rated Horsepower—33.80 (AMA).
Developed Horsepower—130 at 3400 R.P.M.
Compression Ratio & Pressure—As follows:

Ratio	Pressure at 1000 R.P.M.	At 100 R.P.M.
6.50-1 std. head	145-155 lbs.	Approx. 117 lbs.
7.45-1 optl. head	160-170 lbs.	Approx. 124 lbs.

Vacuum Reading—18-21" steady at 6 M.P.H.

PISTONS:—Aluminum alloy, U-slot, cam ground type with anodized finish. **Length**—3⅞".

ENGINE

CONTINUED FROM PRECEDING PAGE

Weight—16.33 ounces (plus or minus 2 grams).
Removal—Pistons and rods removed from above.
Clearance—Top .022". Skirt .002".

Replacement Pistons:—*See Chrysler Special Shop Notes.*

Fitting New Pistons:—Check pistons (at right angles to pin bosses at bottom of skirt) and cylinder bore with micrometer gauge. With feeler (.002") inserted between cylinder wall and piston (side opposite slot), pull to withdraw feeler 5-7 lbs.

Installing Pistons:—Slot away from valves.

PISTON RINGS:—Two undercut compression, two oil control rings per piston, all above pin. Lower ring grooves drilled with ten ⅛" oil drain holes (#3), five (#4 groove).

Ring	Width	End Gap	Side Clearance
Compression	⅛"	.007-.015"	.0015-.003"
Oil Control	5/32"	.007-.015"	.0015-.003"

Replacement Rings:—Furnished standard and .003", .005", .010", .015", .020", .025", .030", .040", .050", .060" oversize.

PISTON PIN:—Diameter—55/64". **Length**—2¾".
Floating type. Pin hole in rod bronze bushed.
Pin Fit in Piston—Thumb push fit at 130° F.
Pin Fit in Rod Bushing—Thumb push fit at 70° F.

Replacement Pins:—Furnished standard and .003", .005", .008" oversize. Ream bushing and pin hole.

CONNECTING ROD:—Weight 36.1 ozs. **Length** 9".
Crankpin Journal Diameter—2 3/16".
Lower Bearing—Removable steel-backed, babbitt-lined. Furnished standard and .0015", .010 undersize.
Clearance—.001-.003". **Sideplay**—.006-.011".

Bearing Adjustment:—None. Install new bearings with bosses engaging grooves in rods and caps.

Installing Rods:—Lower bearings are offset. Install rods with widest half of bearing toward rear (#1, 3, 5, 7) or toward front (#2, 4, 6, 8). Oil hole in lower bearing must be toward camshaft on all rods.

CRANKSHAFT:—5 bearing. Integral counterweights.
Journal Diameters—2 45/64" all bearings.
Bearing Type—Removable steel-backed, babbitt-lined. **Clearance**—.001-.002".

Bearing Adjustment:—*See Chrysler Shop Notes for Engine Removal (recommended) & Adjustment data.*

Replacement Bearings & Bearing Caps: *Refer to Chrysler Shop Notes for complete data.*

End Thrust:—Taken by flange faces on rear (#5) bearing. **Endplay**—.003-.007".

CAMSHAFT:—6 bearing. Non-adjustable chain drive.
Journal Diameters—#1, 2 1/16"; #2, 2 1/32"; #3, 2"; #4, 1 31/32"; #5, 1 15/16"; #6, 1⅜".
Bearing Type—Removable steel-backed, babbitt-lined (except #6 machined in crankcase).
Clearance—.0015-.0035".

End Thrust:—Taken between face of removable cast-iron sleeve (carries front bearing) and face of camshaft sprocket. Replace if worn. **Endplay**—.001-.008"

Timing Chain—Morse. Width 1¼". Pitch .500". Length 24" or 48 links.

Camshaft Setting:—Mesh chain with sprockets turned so that '0' marks are adjacent and in line with a straightedge across the shaft centers.

VALVES:—	Head Diameter	Stem Diameter	Length
Intake	1 15/32"	.340-.341"	5 5/16"
Exhaust	1 13/32"	.340-.341"	5 5/16"

	Seat Angle	Lift	Stem Clearance
All valves	45°	11/32"	.001-.003"

See Chrysler Special Shop Notes for Exhaust valve seat insert removal and installation instructions.

Valve Guides:—Must be 13/16" below top of block. Ream guides after installing .342-.343" (all).

Valve Springs:—1½" limit of compression.

	Spring Pressure	Spring Length
Valve Closed	46-50 lbs.	2 1/32"
Valve Open	104-110 lbs.	1 11/16"

Valve Lifters:—Mushroom type. Ream guides to take following oversizes: .001", .008", .030", .060".

VALVE TIMING

Tappet Clearance: .006" Int., .010" Exh., Hot. Remove right front wheel and housing for access.

Valve Timing: See Camshaft Setting above.
Intake Valves—Open 2° BTDC. Close 44° ALDC.
Exhaust Valves—Open 46° BLDC. Close 4° ATDC.

To Check Timing:—Set tappet clearance #1 intake valve at .011". This valve should open with #1 piston 2° or .002" BTDC. when 2° line BTDC. on impulse neutralizer at front of engine lines up with pointer on chain case cover. Reset tappet cl. .006" (hot).

LUBRICATION

LUBRICATION:—Gear type oil pump on right of engine.
NOTE—Check ignition timing whenever oil pump being re-installed on engine.

Normal Oil Pressure:—30-45 lbs. at 30 M.P.H.

Oil Pressure Relief Valve:—Under cap on left side of crankcase. Adjust by turning slotted plug (with cap and locking wire removed) clockwise to increase pressure, counter-clockwise to decrease.

Crankcase Capacity:—6 quarts (refill).

CLUTCH

CLUTCH:—Borg & Beck Model 11A6. Model #871 stamped on cover. Single plate, dry disc type.
See Clutch Section for complete data.
Facings—Woven, 2 required. I.D. 6⅛", O.D. 11". Thickness ⅛". *See Chrysler Special Shop Notes.*
Adjustment—Adjust pedal stopscrew so that pedal arm just clears floor board. Free movement of pedal should be 1 11/16". Adjust by turning pedal shaft collar adjusting nut at right of brake pedal stop-screw.

Removal:—Remove floor board, transmission, see Transmission Removal below), remove housing underpan, mark cover and flywheel, remove cover bolts evenly, remove assembly from below.

TRANSMISSION

TRANSMISSION:—Own—All helical gear type with synchronizing shift on second and high gears
See Transmission Section for complete data.

Removal:—Disconnect front and rear U-joints, disconnect hand brake, remove nuts from studs at clutch housing, disconnect release fork pull-back spring and release rod, remove transmission cover assembly, remove unit with two pilot studs in upper stud holes.

OVERDRIVE

Overdrive Transmission: Warner Model AS15-T85.
See Transmission Section for complete data.
Removal—Same as for standard transmission above after overdrive control has been disconnected.

UNIVERSALS

UNIVERSAL JOINTS:—Detroit Universal—Series 5350. Cross type with roller bearings.
See Universals Section for complete data.

REAR AXLE

REAR AXLE (C-17):—Own—Semi-floating, spiral bevel gear type with Hotchkiss drive.
See Rear Axle Section for complete data.
Ratio 4.3-1. Backlash .006-.010". Shim adjustment.

Removal:—Remove axle shaft nut, hub and assembly (use hub puller, do not hammer out or bearing damage may result), disconnect brake line at wheel cylinder, remove backing plate (with oil seal). Use shaft puller to remove axle shaft and bearing. With axle shafts removed, differential carrier may be removed by disconnecting rear U-joint at flange and removing housing capscrews.
Wheel Bearing Adjustment—Controlled by shims between inner bearing outer race and flanged end of housing. Remove axle shafts and bearings. Add or remove shims (equally on both sides).
Endplay—.0025-.005".

SHOCK ABSORBERS

SHOCK ABSORBERS: Delco—Double acting types.
See Shock Absorber Section for complete data.

FRONT SUSPENSION

Front Suspension (C-17):—Conventional tubular section front axle with Reverse-Elliott ends and semi-elliptic springs.
Kingpin Inclination—4½-5½° crosswise.
Caster—2° plus or minus 1°. Adjust by inserting wedge shims between spring and axle pad on axle.
Camber—½° plus or minus ¼°. No adjustment. Manufacturer recommends that no attempt be made to correct camber by bending tubular axle.
Toe In—0-⅛". 1/16" preferred. Adjust by changing length of tie rod.
Steering Geometry—Outer wheel turned 20°. Inner wheel turned 22°10'.

STEERING GEAR

Steering Gear: Gemmer Model 370 Worm-&-Roller
See Steering Gear Section for complete data.

BRAKES

BRAKES (C-17):—Service—Lockheed hydraulic, double anchor type with Bendix Vacuum Power unit. Hand lever applies brake at rear of transmission.
See Brake Section for complete data.
Wheel Cylinders—Stepped or two-stage bore type:
Front wheel: Front cyl. 1¼", Rear 1⅜".
Rear wheel: Front cyl. 1", Rear 1⅛".
Drum Diameter—13".
Lining—Moulded type. Width 2". Thickness ¼". Length 24 27/32" per wheel.
Clearance—.012" toe, .006" heel for each shoe.
Braking Power—60% front wheels, 40% rear.

Hand Brake:—External at rear of transmission.
Adjustment—With lever in released position remove anchor screw locking wire, turn anchor screw so that clearance between lining and drum is .025", lock anchor screw with wire. Back off adjusting bolt nut until free. Adjust bracket bolt nuts for each end of brake band to .025" clearance (as above), secure with locknuts. Finally tighten adjusting bolt nut until tension on bracket bolt nuts is just relieved at either end.
Drum Diameter—7".
Lining—Woven type. Width 2½". Thickness 3/16". Length 21⅝".

Power Brake Unit:—Bendix Internal Valve type.
See Brake Section for complete data.

MODEL IDENTIFICATION

SERIAL NUMBER:—First number 7,532,801 (Detroit), 9,709,266 (Canada). On right front door hinge post.

ENGINE NUMBER:—First number C-18-1001. Stamped on left side of block between #1 and #2 cylinders. *See Chrysler Shop Notes for engine number lettering ('Special Standard' bore and bearing sizes).*

TUNE-UP

COMPRESSION:—Ratio and pressure as follows:

Ratio	Pressure at 1000 R.P.M.	At 100 R.P.M.
6.2-1 Std. hd.	140-150 lbs.	Approx. 115 lbs.
7.0-1 Optl. hd.	155-165 lbs.	Approx. 120 lbs.

VACUUM READING:—Gauge should show steady reading of 18-21" with engine idling at 6 M.P.H.

FIRING ORDER: 1-5-3-6-2-4. See diagram.

SPARK PLUGS: Champion Type J-8 or Auto-Lite A-7 (Cast Iron Head), Champion H-10 or Auto-Lite AL-7 (Aluminum Head). 14 mm. Metric type. Gaps—.025"

IGNITION: See Coil, Condenser, and Distributor.
Breaker Gap—.020". **Cam Angle** 38° (closed).
Automatic Advance—12° max. at 1750 RPM (distr.).
Vacuum Advance—7° distr. with 12" vacuum.

IGNITION TIMING: See Ignition Timing.
Std. Setting—At TDC (Std. 6.2-1 Head), 3° ATDC (Optl. 7.0-1 Head) with "O" dead center mark or correct degree mark on impulse neutralizer at indicator on front of engine.

CARBURETION: See Carburetor & Carb Equipment.
Idle Setting—Idle screw ½-1¼ turn open. Idle speed 300 RPM or 6MPH.
Float Level—5/64" top of float below top edge of bowl.
Accelerating Pump—Center hole normal, Inner hole (Summer) & Outer hole (Winter) for extreme temperatures.
Fuel Pump Pressure: 3½ lbs. max. (Type B & AL), 4¼ lbs. maximum (Type AS & AT).

MANIFOLD HEAT CONTROL:—Thermostatic coil type. See that shaft and valve rotate freely. When installing coil, wind up free end ½ turn counter-clockwise and hook end over stop pin.

VALVES: See Valve Timing.
Tappet Clearance:—.008" Intake, .010" Exhaust (hot). NOTE—.002" additional Exhaust tappet clearance recommended for sustained high speed driving.

STARTING: See Battery, Starter, Generator, Regulator.

IGNITION

Ignition Switch:—Mitchellock Model 24-B, Type 7055. Connected to coil by armored cable.
Ignition Lock—Yale & Towne, Mitchell No. 7075.

COIL: Auto-Lite Model CL-4602 or CL-4607. Service Coil (less Switch & Cable) CL-3224S. Mounted on dash.
Ignition Current—2.5 amperes idling, 5.5 stopped.

CONDENSER: Auto-Lite Part No. IG-3927-A.
Capacity—.25-.28 microfarad.

DISTRIBUTOR: Auto-Lite Model IGS-4010C-1. Single breaker, 6 lobe cam, full automatic advance type with auxiliary vacuum spark control.

Se Electrical Equipment Section for Distributor servicing data.
For complete data, refer to Electrical Equipment Index.
Breaker Gap—Set at .020".
Cam Angle or Dwell—38° (closed), 22° (open).
Breaker Arm Spring Tension—18-20 ounces.
Rotation—Clockwise viewed from top.

Automatic Advance

Distributor Degrees	Distributor R.P.M.	Engine Degrees	Engine R.P.M.
Start	350	0	700
3	400	6	800
6	850	12	1700
9	1300	18	2600
12	1750	24	3500

Vacuum Spark Control—Integral with distributor. Mounted on distributor housing and linked directly to breaker plate. Provides additional advance for speeds above idling except when engine is accelerated or operated with wide open throttle when spark is retarded by return spring within unit.

Vacuum Advance

Distributor Deg.	Engine Deg.	Vacuum (" of HG.)
Start	0	5"
1	2	6"
3	6	8"
5	10	10"
7	14	12"

Manual Adjustment—Provided to compensate for fuel and altitude conditions. See Manual Adjustment Setting.

Distributor Removal:—Mounted on left side of crankcase. To remove, take out hold-down screw in advance arm, disconnect vacuum line.

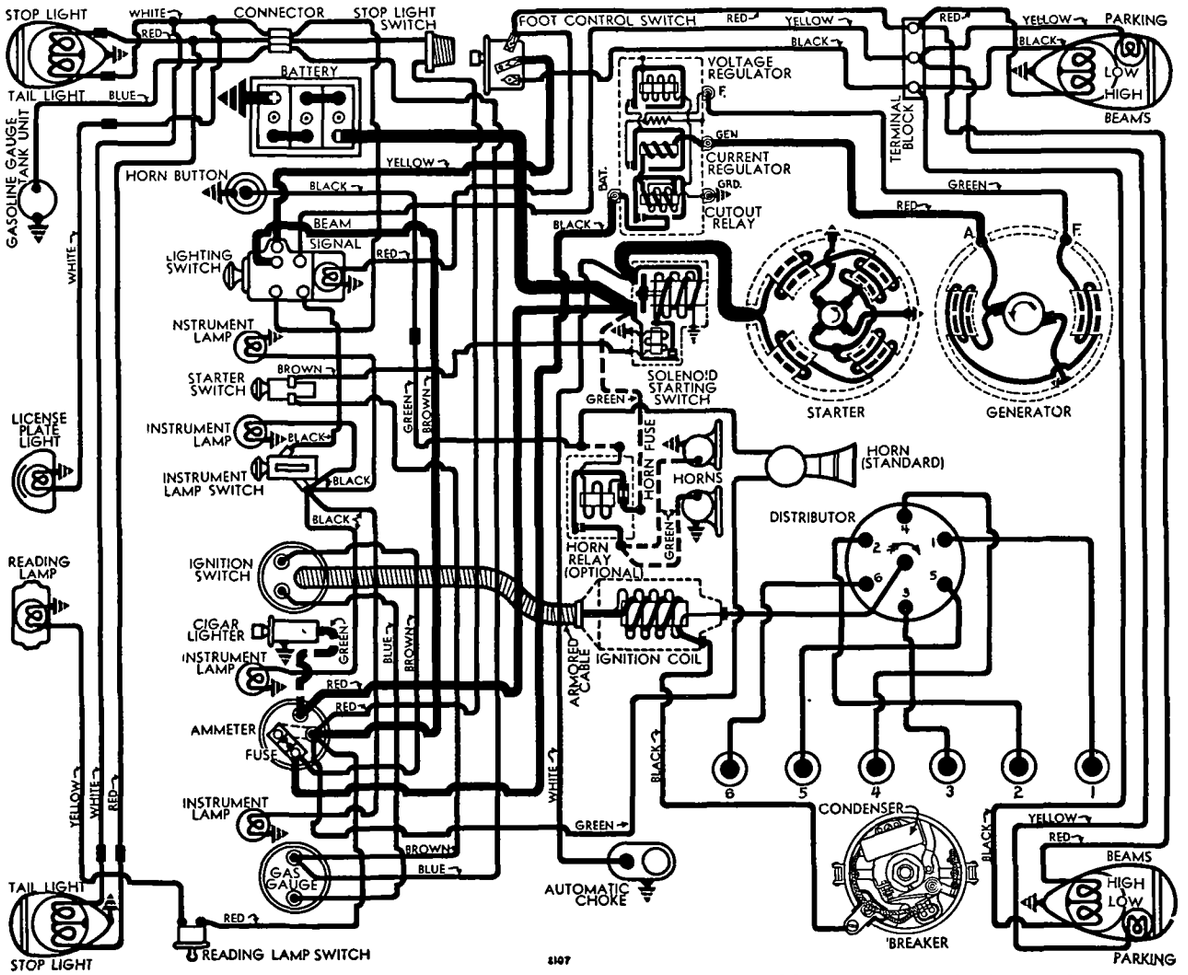

See Electrical Equipment Section for Regulator wiring with 2 Resistors (After Regulator Serial N . 8R-000001).

IGNITION TIMING

IGNITION TIMING:—Initial setting (for gasoline of approximately 70 octane rating). See Manual Adjustment Setting (following).

	Flywheel Degrees	Piston Position
6.2-1 Std. hd.	0° TDC.	.0000" TDC.
7.0-1 Optl. Al. hd.	3° ATDC.	.0040" ATDC.

NOTE—Impulse neutralizer at front of engine marked '0' at top dead center with 15 one degree graduations before and after this point.

Timing (Using Timing Light)—Connect timing light between distributor and battery terminal on generator regulator. With #6 piston on compression, turn engine over until piston reaches firing position (see table), stop when correct line on impulse neutralizer lines up with pointer on chain case cover. Loosen distributor hold-down screw, center pointer on scale, tighten hold-down screw. Loosen advance arm clamp bolt, rotate distributor until timing light just goes out, tighten clamp bolt.

Timing (Using Synchroscope)—Tool No. C-374. Clip lead to #1 spark plug, direct light on impulse neutralizer, fill in correct mark with white chalk.

Manual Adjustment Setting:—After ignition set as above, road test car and adjust to give slight ping with wide open throttle at speeds of 10-30 MPH. To adjust, loosen hold-down screw and advance (counter-clockwise) retard (clockwise) pointer on scale. Scale graduated in engine degrees. Do not advance pointer more than 5° on scale.

CARBURETOR

CARBURETION:—**Carburetor**—Carter (Ball & Ball) Model E6M1. 1½" downdraft type.
For complete data, refer to Carburetor Index.

Idle Adjustment—With engine warm and choke valve wide open (fast idle inoperative), adjust throttle stopscrew so that idle speed is approximately 300 R.P.M. or 6 M.P.H. Turn idle adjusting screw in until engine begins to hesitate or miss, then out until engine begins to roll, finally turn screw in slowly until engine fires smoothly. Final setting should be ½-1¼ turns of screw from inner closed or seated position. Readjust throttle stopscrew for correct idling speed. NOTE—Car manufacturer recommends use of vacuum gauge. Idle screw should be set to give highest reading on gauge.

Accelerating Pump Setting—Pump lever has three holes for pump link engagement. Set as follows:
Inner Hole (Short stroke)—Extremely warm weather or altitudes above 3000 feet.
Center Hole—Normal summer temperatures.
Outer Hole (Long stroke)—Winter temperatures.

NOTE—Lean main metering jets (high altitude calibration) may be used at lower altitudes for maximum fuel economy although with considerable reduced speed and power. See Carter (B & B) Jet Specifications in Carburetor Section.

Fast Idle:—Integral with carburetor. No adjustment.

Automatic Choke—Sission Type AC-758B. See article in Carburetion Equipment Section for data.
For complete data, refer to Carburetion Equip. Index.

CARB. EQUIPMENT

Air Cleaner:—AC. #1528700 oil-wetted type standard. #1528197 il-bath type optional used in conjunction with oil vent cleaner #1525313.

Fuel Pump:—AC. Type B #1522995 or AT #1523647 diaphragm type standard. Type AL #1523137 r AS #1523648 combination fuel-and-vacuum pumps optional. Types AT and AS are 'inverted' design.
NOTE—Types AT and AS are 'inverted' design.
For complete data, refer to Carburetion Equip. Index.

Gasoline Gauge:—Auto-Lite (Motometer) Electric. No. NG8733D (dash unit), NG8697T (tank unit).
For complete data, refer to Carburetion Equip. Index.

BATTERY

BATTERY:—Willard, Type WH 2-15, RH 2-15 (Export). 6 volt, 15 plate, 119 AH. capacity (20 hr. rate).
Starting Capacity—140 amperes for 20 minutes.
Zero Capacity—300 amperes for 4.3 minutes. Five second voltage—4.23 volts.
Grounded Terminal—Positive (+) terminal. Grounded to transmission.
Dimensions—Lgth. 10 5/16". W. 7 1/16". Hgt. 9 5/16".
Location—Left side under drivers seat.

STARTER

Auto-Lite Model MAX-4020A. Armature MAW-2030.
Drive—Solenoid operated pinion shift type. Drive through overrunning clutch.
Cranking Engine—Approx. 160 amperes, 5 volts.
Rotation—Counter-clockwise at commutator end.
Brush Spring Tension—42-53 ozs. (new brushes).

Performance Data

Torque	R.P.M.	Volts	Amperes
0 ft. lbs	5300	5.5	65
.65 " "	3300	5.5	100
2.75 " "	1630	5.0	200
5.5 " "	970	4.5	300
8.7 " "	600	4.0	400
12.0 " "	300	3.5	500
16.5 " "	Lock	3.	640
25.0 " "	Lock	4.	880

Removal:—Flange mounted on left front face of flywheel housing. Disconnect wire connections (tape battery lead) and oil filter lines. Remove two fastening bolts and withdraw unit.

Starting Switch:—Solenoid Switch Type SS-4206. Controlled through relay by pushbutton on instrument panel. Operative with ignition 'on'.
For complete data, refer to Electrical Equipment Index.

Solenoid Switch

Closes against 170 lb. pull with ⅜" air gap drawing 65 amperes. Holds switch closed with draw of 15 amperes (hold-in coil only).

Solenoid Relay

Contacts Close—3.5-4.5 volts. **Open**—1.5-2.5 volts.
Contact Gap—.025-.030". **Air Gap**—.005-.007" (closed).

GENERATOR

STANDARD

Auto-Lite Model GDA-4801A, B (Export). Armature No. GDA-2006F. Two brush, straight shunt type with external voltage and current regulation. Ventilated by fan on drive pulley.

Charging Rate Adjustment—No adjustment at generator. See Regulator section for Voltage and Current settings.

Maximum Charging Rate—28 amperes, 8.00 volts, 2025 R.P.M. and above with load or discharged battery. (Current Regulator setting). Actual charging rate controlled by Voltage Regulator and is dependent n battery condition.

Performance Data

Cold Amperes	Volts	R.P.M.	Hot Amperes	Volts	R.P.M.
0	6.4	930	0	6.4	1010
4	6.6	1060	4	6.6	1180
8	6.85	1210	8	6.85	1350
12	7.1	1350	12	7.1	1530
16	7.3	1500	16	7.3	1730
20	7.5	1660	20	7.5	1950
24	7.75	1830	24	7.75	2220
28	8.0	2025	28	8.0	2520

NOTE—Current reg. limits output to 28 amps.

Rotation—Counter-clockwise at commutator end.
Brush Spring Tension—53 ozs. max. (new brushes).
Field Current—1.66-1.84 amperes at 6.0 volts.
Motor Current—3.50-4.15 amperes at 6.0 volts.

Removal:—Pivot mounted at left front of engine. To remove, take out pivot bolts and clamp bolts.

Belt Adjustment:—Loosen clamp bolt and pivot bolts, swing generator out until scale (attached to field frame)reads 40-50 lbs., tighten bolts.

GENERATOR

SPECIAL EQUIPMENT

SPECIAL GENERATOR:—**Model GCB-4802A (City Police).** Used with Model VRB-4009A Regulator. *See 1939 DeSoto Model S6 article for complete data.*

REGULATOR

Auto-Lite Model VRB-4004-B. Voltage & Current Type. Consists of Cutout Relay, vibrating Voltage Regulator and Current Regulator in case on dash.
For complete data, refer to Electrical Equipment Index.

NOTE—Regulator case cover is sealed. Serviced n exchange basis if seals not broken. Cover must be removed to make adjustments.

Cutout Relay

Cuts In—6.4-7.0 volts Cold.
Cuts Out—.5 ampere min., 3.0 amperes max. Cold.
Contact Gap—.015" minimum.
Air Gap—.034" min., .038" max. with contacts open. Measure at hinge end of core.

Voltage Regulator

Setting—7.3-7.6 volts at 70°F. (Regulator Serial No. 8R-000001 Up). See Electrical Equipment Section for settings and changes on units before this serial no.
To Check (Without breaking seals)—Connect ammeter in charging line at 'B' terminal on regulator (use short heavy leads). Connect voltmeter between regulator 'B' and 'GD' terminals. Operate generator, charging fully charged battery at speed equivalent to 30 M.P.H. car speed. Voltage should be within limits of 7.3-7.6 volts (cold—70°), 7.1-7.4 volts (hot—140°F.). See Regulator Setting above.
To Adjust (with cover removed)—Change regulator armature spring tension by bending lower spring hanger.
Contact Gap—.010" min., .020" max. with armature against stop pin.
Air Gap—.0595-.0625" with contacts just opening.

C NTINUED ON NEXT PAGE

C NTINUED FR M PRECEDING PAGE

Current Regulator

Setting—27-29 amperes (marked '28' on cover).

To Check (without breaking seals)—Connect ammeter and voltmeter as directed for Voltage Regulator test. Operate generator at 30 M.P.H., add load (use bank of headlamp bulbs or turn on car lights and discharge battery) so that generator will charge at peak rate bringing current regulator into action. Charging current should not exceed 28 amperes. If more than slight excess noted, Current Regulator is defective.

To Adjust (with cover removed)—Change regulator armature spring tension by bending lower hanger.

Contact Gap & Air Gap—See Voltage Regulator.

LIGHTING

LIGHTING:—Headlamps—Corcoran-Brown, prefocused type. Upper and lower beams controlled by foot control switch with lighting switch in full out position.

Headlamp Adjustment—Aim headlamps straight ahead (upper beam lighted, lenses in place, car unloaded) with center of hot spot 3" below center horizontal line of headlamps at 25 feet.

Headlamp Beam Indicator—In light switch knob. Lighted when headlamp upper beam in use.

Switches

Lighting—Chrysler Part No. 684038.
Instrument Panel—Chrysler Part No. 685888.
Foot Selector—Chrysler Part No. 659512.
Stop Light—Chrysler Part No. 677112.

Bulb Specifications

Position	Candlepower	Mazda No.
Headlamps	32-32	2331
Tail and Stop	3-21	1158
Parking, Beam Indicator	1½	55
Instrument	1½	55
Dome	15	87
Rear License	3	63

MISC. ELECTRICAL

FUSES:—Lighting (used on early cars)—20 amperes on back of ammeter. Later cars equipped with Circuit Breaker (see below).

Single Horn—Early cars as shown on diagram. On later cars horn feed taken from BAT terminal on regulator with 20 ampere fuse in connector on dash.

Dual Horns—30 amperes on horn relay.

NOTE—New long type (SFE-30) fuse used. Replaces 3AG type.

CIRCUIT BREAKER:—Used on later cars. Thermostatic, vibrating type. Mounted on back of ammeter and protects lighting circuits. Limits current to 30 amperes. Not adjustable.

HORNS:—Klaxon Model K-26-J Type 2351 Std., Model K-33-S Type 2079 (Low Note), 2080 (High Note) blended tone twin horns operated by horn relay Optl. Auto-Lite Horn Set HC-5105 Deluxe Equipment.

Horn Model	Current at 6 volts	Air Gap
2079 (low note)	11-13 amperes	.042-.046"
2080 (high note)	10-12 amperes	.032-.036"

Horn Relay:—Auto-Lite Model HR-4101. Has 30 ampere fuse mounted on base.

Contacts Close—2.5-3.5 volts.

Contact Gap—.026". **Air Gap**—.012-.017" (closed).

ENGINE

ENGINE SPECIFICATIONS:—6 cylinder, 'L' head.

Bore—3⅜". **Stroke**—4½".

Displacement—241.5 cubic inches.

Rated Horsepower—27.34 (A.M.A.).

Developed Horsepower—95 HP. (Std. 6.2-1 head), 102 HP. (Optl. 7.0-1 head) at 3600 R.P.M.

Compression Ratio and Pressure—As follows:

Ratio	Pressure at 1000 RPM.	At100 RPM.
6.2-1 Std. C.I. hd.	140-150 lbs.	Approx. 115 lbs.
7.0-1 Optl. Al. hd.	155-165 lbs.	Approx. 120 lbs.

Vacuum Reading—Gauge should show steady reading of 18-21" with engine idling at 6 M.P.H.

PISTONS:—Aluminum alloy, U-slot, cam ground type with anodized finish. **Length**—3⅞".

Weight—17.45 ozs. (plus or minus 2 grams).

Removal—Pistons and rods removed from above.

Clearance—Top .022". See Fitting New Pistons.

Replacement Pistons:—*See Chrysler Shop Notes.*

Fitting New Pistons:—Check piston size with micrometer across large diameter at bottom of skirt. Insert .002" feeler between cylinder wall and piston (pin removed) on side opposite slot. With piston and block at 70°F. pull to withdraw feeler must be 5-7 lbs.

Installing Pistons:—Slot away from camshaft.

PISTON RINGS:—2 undercut compression, 2 slotted oil rings per piston, all above pin.

Ring	Width	End Gap	Side Clearance
Compression	⅛"	.007-.015"	.002-.0035"
Oil	5/32"	.007-.015"	.0015-.003"

Replacement Rings:—Furnished std. and .003", .005", .010", .015", .020", .025", .030", .040", .050", .060" oversize.

PISTON PIN:—Diameter—55/64". **Length**—2⅞". Floating type. Pin hole in rod bronze bushed.

Pin Fit in Piston—Thumb push fit with piston heated to 130°F.

Pin Fit in Rod Bushing—Thumb push fit at 70°F.

Replacement Pins:—Furnished std., and .003", .005", .008" oversize. Ream bushing and pin hole to size.

CONNECTING ROD:—Weight 31.70 ozs. **Length** 7⅞".

Crankpin Journal Diameter—2⅛".

Lower Bearing—Removable steel-backed, babbitt-lined. Furnished std. and .002", .010", .012" undersize.

Clearance—.0005-.0025". **Sideplay**—.0055-.0115".

Bearing Adjustment:—None. Install new bearings with bosses engaging grooves in rod and cap.

Installing Rods:—Oil spit hole toward camshaft.

CRANKSHAFT:—4 bearing, 9 counterweights (center bolted). Impulse neutralizer mounted on front end.

Journal Diameters—2½" all bearings.

Bearing Type—Steel-backed, babbitt-lined type.

Clearance—.001-.002".

Bearing Adjustment:—*See Chrysler Shop Notes for Engine Removal (recommended), Front Main Bearing Cap Removal, Adjustment data, & Crankshaft Oil Seals.*

Replacement Bearings & Bearing Caps: *Refer to Chrysler Shop Notes for complete data.*

End Thrust:—Taken by flange faces on rear (#4) main bearing. **Endplay**—.003-.007".

CAMSHAFT:—4 bearing. Non-adjustable chain drive.

Journal Diameters—#1, 2"; #2, 1 31/32"; #3, 1 15/16"; #4, 1¼".

Bearing Type—Removable steel-backed, babbitt-lined bushings (except #4 machined in block).

Clearance—.001-.003" (#1), .0015-.0035" (all others).

NOTE—Replacement bushings finish reamed.

End Thrust:—Taken by thrust plate behind camshaft sprocket hub. **Endplay**—.002-.006".

Timing Chain:—Morse #1866 (restricted bend). Width 1". Pitch .500". Length 24" or 48 links.
See Chrysler Special Shop Notes for front end removal for work on timing chain.

Camshaft Setting:—Mesh chain with sprockets turned so that '0' marks are adjacent and in line with a straightedge across shaft centers.

VALVES:—

	Head Diameter	Stem Diameter	Length
Intake	1 21/32"	.340-.341"	4 25/32"
Exhaust	1 17/32"	.340-.341"	4 25/32"

	Seat Angle	Lift	Stem Clearance
All valves	45°	11/32"	.001-.003"

See Chrysler Special Shop Notes for Exhaust Valve seat insert removal and installation.

Valve Guides:—Install with taper end up to ⅞" below top of block, then ream to .342-.343".

Valve Springs:—Free length approx. 2". Limit of compression 1⅜".

	Spring Pressure	Spring Length
Valve Closed	40-45 lbs.	1¾"
Valve Open	101-109 lbs.	1 13/32"

Valve Lifters:—Mushroom type. Ream guides from above for following oversizes: .001", .008", .030", .060".

VALVE TIMING

Tappet Clearance: .008" Intake, .010" Exhaust (hot). .012" Exh. setting recommended for sustained high speed driving. Valves excessible by removing right front wheel and fender panel.
NOTE—Self-locking tappet screws used.

Valve Timing:—See Camshaft Setting above.

Intake Valves—Open 8° BTDC. Close 42° ALDC.

Exhaust Valves—Open 48° BLDC. Close 2° ATDC.

To Check Timing—Set tappet clearance #1 intake valve at .014". This valve should open with piston 8° (.0281") before top dead center with 8° BTDC. mark on impulse neutralizer at front of engine lined up with pointer on chain case cover. Reset tappet clearance at .008" (hot).

LUBRICATION

LUBRICATION:—Gear type oil pump, right of engine.
See Chrysler Special Shop Notes for oil pump removal and installation instructions.

Normal Oil Pressure:—30-45 lbs. at 30 M.P.H.

Oil Pressure Relief Valve:—Under plug on left side of engine. Operates at 40 lbs. Adjustable. Change to heavy (green) spring to increase pressure, light (red) spring to decrease.

Crankcase Capacity:—5 quarts (refill).

COOLING

COOLING SYSTEM:—Water Pump. Centrifugal, belt-driven, packless type.
See Water Pump Section for complete data.
Removal—With water drained and fan belt removed, remove fan blades and pulley (attached by 4 capscrews), disconnect pump hoses, remove nuts from pump mounting studs and lift assembly out.

Thermostat:—Fulton. In water outlet on head.
NOTE—Install thermostat with bellows down.
Setting—Start to open 150-155°F. Fully open 176°F.

Water Capacity:—20 quarts.

Drain Valves:—At lower left corner of radiator and on left side of block in front of distributor.

CLUTCH

CLUTCH:—Borg & Beck Model 10A7, 11A6 (Taxi). Model #913, 917 (Taxi) stamped on cover. Single plate, dry disc type with new spiral groove type facings and clutch pressure plate oil baffle.
See Clutch Section for complete data.
Facings—Molded-woven (spiral grooved), 2 required. Thickness ⅛". Inside diameter 6", 6½" (Taxi). Outside diameter 10", 11" (Taxi).
Adjustment—Adjust stopscrew (to rear of pedal) so that pedal arm just clears floor board. Pedal free movement must be 1". Adjusting nut on fork rod next to release fork.

Removal:—Remove floor board, release fork pull-back spring, free clevis pin on release fork rod. Remove transmission (see Transmission Removal below), remove housing underpan, mark cover and flywheel, remove cover bolts, take out assembly from below.

TRANSMISSION

TRANSMISSION:—Own make. All helical gear type with synchro-mesh for second and high speeds.
See Transmission Section for complete data.

Removal:—Remove floor boards, propeller shaft (see Propeller Shaft Center Bearing below for 7 pass. models), disconnect hand brake cable (remove brake band on cars with overdrive). Remove two front cover screws, take off nuts on mounting studs (remove two upper mounting studs by installing 2 nuts on outer end of stud and turning studs out), install two pilot studs and withdraw transmission.

OVERDRIVE

Overdrive Transmission: Warner Model AS1-T86A Optl.
See Transmission Section for complete data.
Removal—Same as for standard transmission above after overdrive control has been disconnected.

UNIVERSALS

UNIVERSAL JOINTS:—Detroit-Universal. Series 4200. Ball and trunnion type with roller bearings. 2 used.
NOTE—Three universals used on 7-pass. sedan.
See Universals Section for complete data.

Propeller Shaft Center Bearing:—Used on 7 passenger sedans. *See Chrysler Shop Notes for data.*

REAR AXLE

REAR AXLE:—Own make. Semi-floating, hypoid gear type with Hotchkiss drive.
See Rear Axle Section for complete data.
Ratio—Standard 4.1-1 (Sedans), 3.9-1 (Coupes), 4.3-1 (7 pass. sedan—all cars with overdrive).
Backlash—.006-.010". Screw adjustment.

Removal:—Remove wheel, hub, and drum assembly (using screw type hub puller). Place block under brake pedal, disconnect brake line, remove backing plate and oil seal, pull axle shaft and bearing (Tool C-158). With shafts removed, carrier may be removed by disconnecting rear universal at flange, and removing housing capscrews.
Wheel Bearing Adjustment—Controlled by shims at flanged ends of axle housing. With wheel and hub removed measure endplay with dial indicator. To adjust remove backing plate (see above) and add or remove shims (equally at both sides) to proper clearance. **Endplay**—.003-.008".
NOTE—Shims supplied .010", .015", .030" thick.

SHOCK ABSORBERS

SHOCK ABSORBERS:—Monroe—Front #676739, Rear #682604. Direct acting, hydraulic type.
NOTE—Delco Direct acting used for export.
See Shock Absorber Section for complete data.

FRONT SUSPENSION

Front Suspension:—Independent, linked parallelogram type with coil springs.
See Front Suspension Section for complete data.
Specifications below apply with no passenger load.
Kingpin Inclination—4¾-6°.
Camber—Plus ¼°. Limits minus ¼° to plus ½°.
Caster—1½°. Adjustable.
Toe In—1/16" (0-⅛"). Set long tie rod to 31⅝" (between ball centers). Adjust short rod.
Steering Geometry—Outer wheel 20°. Inner wheel 22°40', 22°50' (7 passenger sedans).

STEERING GEAR

Steering Gear: Gemmer Model 305. Worm-and-Roller type with "Push-Pull" adjustments.
See Steering Gear Section for complete data.

BRAKES

BRAKES:—Service—Lockheed hydraulic, double anchor type. Hand brake at rear of transmission.
See Brake Section for complete data.
Wheel Cylinders—Stepped or two-stage bore type: Front Wheel—Front cylinder 1¼". Rear 1⅜".
Rear Wheel—Front cylinder 1⅛", Rear 1¼".
Drum—Centrifuse. Diameter—11".
Lining—Moulded. Width 2". Thickness 13/64". Length (front shoe) 11 15/32", (rear shoe) 7 31/32".
Clearance—.012" toe, .006" heel for each shoe.
Braking Power—55% front, 45% rear.

Hand Brake:—External at rear of transmission.
Adjustment—*See Chrysler Special Shop Notes.*
Drum—Cast-iron. Diameter—6".
Lining—Width 2". Thick. 5/32". Length 17 1/16".

MODEL IDENTIFICATION

SERIAL NUMBER:—First number 6,734,001 (C-19), 7,805,501 (C-20). On right front door hinge post.

ENGINE NUMBER:—First number C-19—1001 (C-19), C-20—1001 (C-20). Stamped on left side of block between #2 and #3 cylinders.
See Chrysler Special Shop Notes for engine number lettering data.

TUNE-UP

COMPRESSION:—Ratio and pressure as follows:

Ratio	Pressure at 1000 R.P.M.	At 100 R.P.M.
6.2-1 std. (C-19)	140-150 lbs.	App. 115 lbs.
6.5-1 std. (C20), optl. (C19)	150-160 lbs.	App. 117 lbs.
7.45-1 opt. (C-19, C-20)	160-170 lbs.	App. 124 lbs.

VACUUM READING:—Gauge should show steady reading of 18-21" with engine idling at 6 M.P.H.

FIRING ORDER: 1-6-2-5-8-3-7-4. See diagram.

SPARK PLUGS: Champion Type J-8 or Auto-Lite A-7 (Cast Iron Head), Champion H-10 or Auto-Lite AL-9 (Aluminum Head). 14 mm. Metric.
Gaps—.025"

IGNITION: See Coil, Condenser, and Distributor.
Breaker Gap—.018". **Cam Angle** 27° (Closed).
Automatic Advance—11° max. at 1850 RPM (IGT-4001F-1 Distr.), 12° max. at 2000 RPM (IGT-4001K-1 Distr.). Distr. degrees and RPM.
Vacuum Advance—6° distr. with 12" vacuum (IGT-4001F-1 Distr.), 8° distr. with 16" vacuum (IGT-4001K-1 Distr.).

IGNITION TIMING: See Ignition Timing.
Std. Setting—At TDC (6.5-1 Head—C19 Optl., C20 Std.), 3° BTDC (6.2-1 Head—C19 Std.), 3° ATDC (7.45-1 Head—C19 Optl.). At TDC (7.45-1 Head—C20 Optl.) with dead center "O" mark or correct degree mark on impulse neutralizer at indicator on front of engine.

CARBURETION: See Carburetor & Carb. Equipment.
Idle Setting—Both idle screws midway between "miss" and "roll" points. Idle speed 6 MPH.
Float Level—Fuel level 5/8" below top of bowl.
Accelerating Pump—Inner hole (min. stroke)—Summer, Outer hole (max. stroke)—Winter.
Fuel Pump Pressure: 4½ lbs. maximum.

MANIFOLD HEAT CONTROL:—Thermostatic coil type. Coil is assembled on end of manifold heat valve shaft beside silencer and counterweight assembly. **Setting**—With center end of thermostatic coil engaged in heat valve shaft, wind up coil 1 turn counter-clockwise and hook outer end on stop pin. CAUTION—Do not wind up coil more than one turn. See that valve and shaft turn freely.

VALVES: See Valve Timing.
Tappet Clearance:—.006" Int., .010" Exh. (hot).
NOTE—.002" additional Exh. clearance recommended for sustained high speed driving.

STARTING: See Battery, Starter, Generator, Regulator.

IGNITION

Ignition Switch:—Mitchellock Model 24-B. Type 7055 (C-19), 7057 (C-20). Switch connected to coil by armored cable.
Ignition Lock—Yale & Towne, Mitchell No. 7075.

COIL: Auto-Lite Model CE-4624, CE-4631 (C19), CE-4626 (C20). Service Coil (less Switch & Cable) CE-3224JS.
Ignition Current—2.5 amperes idling, 5.5 stopped.

CONDENSER: Auto-Lite Part No. IG-3927.
Capacity—.25-.28 microfarad.

DISTRIBUTOR: Auto-Lite Model IGT-4001K-1 (C19), IGT-4001F-1 (C20). Single breaker, 8 lobe cam, full automatic advance type with auxiliary vacuum spark control.
See Electrical Equipment Section for Distributor servicing data.
For complete data, refer to Electrical Equipment Index.
Breaker Gap—Set at .018".
Cam Angle or Dwell—27° (closed), 18° (open) with .017" point setting.
Breaker Arm Spring Tension—18-20 ounces.
Rotation—Clockwise viewed from above.

Automatic Advance—IGT-4001F-1

Distributor Degrees	Distributor R.P.M.	Engine Degrees	Engine R.P.M.
Start	350	0	700
3	400	6	800
4	600	8	1200
6	960	12	1920
9	1500	18	3000
11	1850	22	3700

Automatic Advance—IGT-4001K-1

Start	350	0	700
3	400	6	800
5	760	10	1420
8	1300	16	2600
10	1650	20	3300
12	2000	24	4000

Vacuum Spark Control—Integral with distributor. Mounted on distributor housing and linked directly to breaker plate. Provides additional advance for

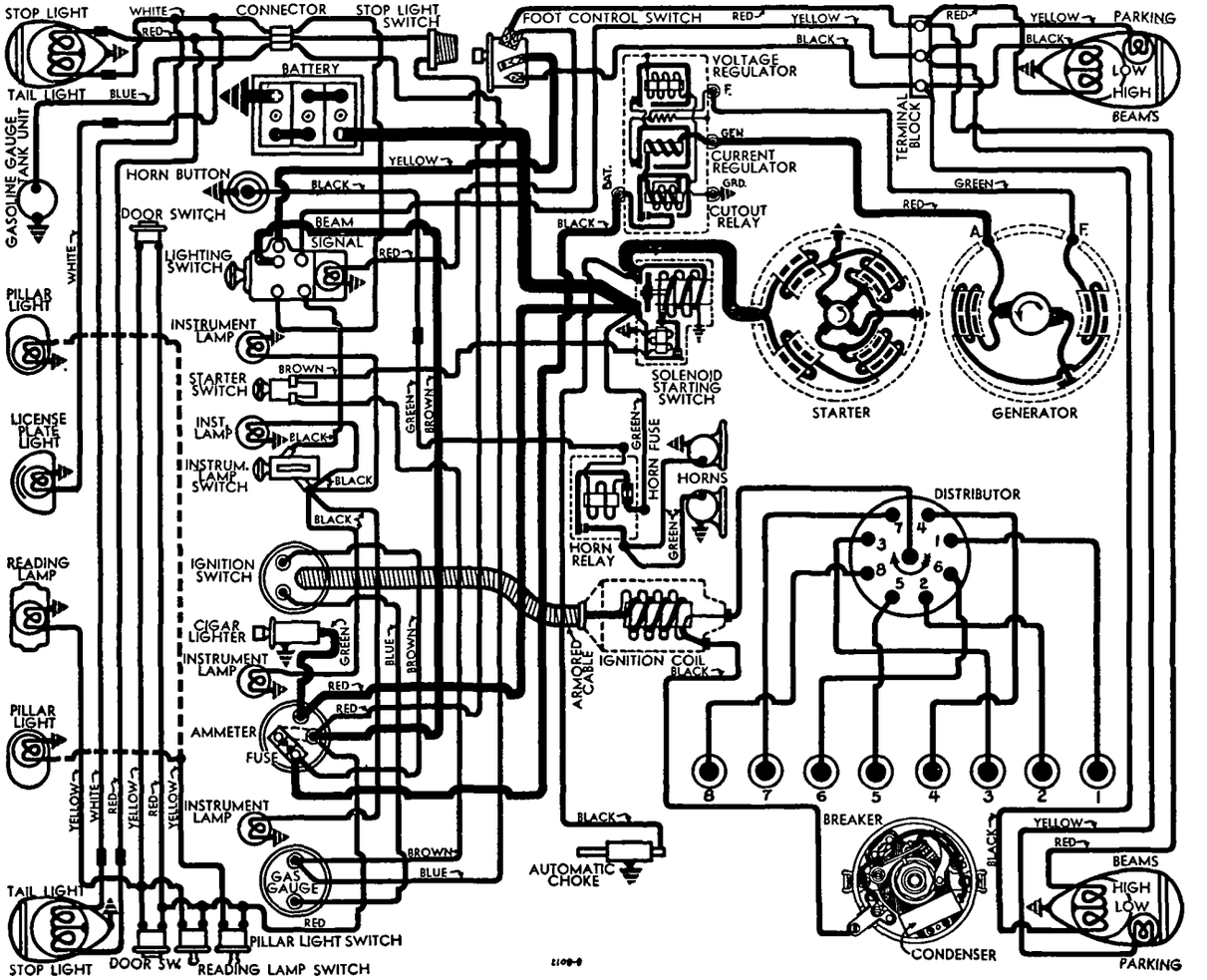

See Electrical Equipment Section for Regulator wiring with 2 Resisters (After Regulator Serial No. 8R-000001).

speeds above idling except when engine is accelerated or operated with wide open throttle when spark is retarded by return spring within unit.

Vacuum Spark Advance—IGT-4001F-1

Distr. Degrees	Eng. Degrees	Vacuum (" of HG.)
Start	0°	5.1"
.6°	1.2°	6"
4°	8°	9-10"
6°	12°	12"

Vacuum Spark Advance—IGT-4001K-1

Start	0°	5"
.7°	1.4°	6"
4°	8°	10-11°
6°	12°	13-14"
8°	16°	16"

Manual Adjustment—Provided to compensate for fuel and altitude conditions. See Manual Adjustment Setting.

Distributor Removal:—Mounted on left side of engine. To remove, take out hold-down screw in advance arm, and disconnect vacuum line.

IGNITION TIMING

IGNITION TIMING:—Intial setting (for gasoline of approximately 70 octane rating). See Manual Adjustment Setting (following).

	Flywheel Deg.	Piston Position
C-19, std. 6.2-1 CI. hd.	3° BTDC	.0038" BTDC.
C-19, optl. 6.5-1 AL. hd.	0° TDC.	.0000" TDC.
**C-19, optl. 7.45-1 AL. hd.	3° ATDC	.0038" ATDC.
C-20, std. 6.5-1 AL. hd.	0° TDC.	.0000" TDC.
**C-20, optl. 7.45-1 AL. hd.	0° TDC	.0000" TDC.

**Ethyl gasoline setting.

NOTE—Impulse neutralizer at front of engine marked with 15 one degree graduations before and after '0' mark at top dead center..

Timing (Using Timing Light)—Connect timing light between distributor terminal and battery terminal on generator regulator. With #8 piston on compression, turn engine over until piston reaches firing position (see table above), stop when correct mark on impulse neutralizer at front of engine lines up with pointer on chain case cover. Loosen advance arm hold-down screw and center pointer on scale (opposite '0' mark), tighten hold-down screw, loosen advance arm clamp bolt, rotate distributor until test lamp goes out indicating that points are just opening, tighten clamp bolt.

Timing (Using Sychroscope)—Tool No. C-374. Clip lead to #1 spark plug, direct light on impulse neutralizer, fill in correct mark with white chalk.

Manual Adjustment Setting:—After ignition set as above, road test car to give slight ping with wide open throttle at speeds of 10-30 M.P.H. To adjust, loosen hold-down screw and advance (counter-clockwise) or retard (clockwise) pointer on scale. Scale graduated in engine degrees. Do not advance pointer more than 5° on scale.

CARBURETOR

CARBURETION:—Carburetor—Stromberg Model AAV-2 aircraft type, duplex downdraft carburetor.
For complete data, refer to Carburetor Index.

Idle Adjustment—With engine warm and choke valve wide open (fast idle inoperative) set throttle stopscrew so that idle speed is 6 M.P.H. Turn one idle adjusting screw (for one barrel) in until engine begins to hesitate or miss, then turn screw out until engine begins to roll, finally turn screw in slowly until engine fires smoothly. Repeat with second idle adjusting screw (for other barrel). Adjust throttle stopscrew for correct idling speed. NOTE—Car manufacturer recommends use of vacuum gauge. Adjust idle screws for highest gauge reading.

Accelerating Pump Setting—Throttle lever has two holes for pump link engagement. Set as follows:
Inner Hole (short stroke)—Extremely warm temperatures or above 3000 ft. elevation.
Outer Hole (long stroke)—Cold temperatures.

Fast Idle:—Rotary cam, adjustable type.
For complete data, refer to Carburetion Equip. Index.

Fast Idle Setting—Adjust choke connector link length so that choke valve opening is 1/8" with fast idle screw (throttle stopscrew) against first step of fast idle cam.

Automatic Choke:—Sisson Type AC-600. See article in Carburetion Equipment Section for data.
For complete data, refer to Carburetion Equip. Index.

CARB. EQUIPMENT

Air Cleaner:—AC. #1528334 oil-wetted type standard. #1528706 oil-bath type optional used in conjunction with oil vent cleaner #1525313.

Fuel Pump:—AC. Type D #1521803 diaphragm pump std. C-19 & C-20. Type I #1523023 combination fuel-and-vacuum pump optional C-19 only. Type AN #1523188 vacuum pump used on C-20 with D pump (above)—mounted separately on right of engine.
For complete data, refer to Carburetion Equip. Index.

Gasoline Gauge:—Auto-Lite (Motometer) Electric. No. NG8733D (dash unit), NG8697T (tank unit C19), NG8698T (tank unit C20).
For complete data, refer to Carburetion Equip. Index.

BATTERY
MODEL C19

BATTERY (C-19):—Willard, Type WHT-2-120, RHT-2-120 (Export). 6 volt, 17 plate, 120 AH. capacity (20 hr. rate).

Starting Capacity—152 amperes for 20 minutes.
Zero Capacity—300 amperes for 4.9 minutes. Five second voltage—4.46 volts.
Grounded Terminal—Positive (+) to transmission.
Dimensions—Lgth. 10 5/16".W.7 1/16".Hgt. 8 13/16".
Location—Left side under driver's seat.

BATTERY
MODEL C20

BATTERY (C-20):—Willard, Type WH-4-17, RH-4-17 (Exp.). 6 volt, 17 plate, 136 A.H. Cap. (20 hr. rate).

Starting Capacity—160 amperes for 20 minutes.
Zero Capacity—300 amperes for 5.4 minutes. Five second voltage—4.41 volts.
Dimensions—Lgth 11 11/16".W. 7 1/16". Hgt. 9 5/16".
Grounded Terminal & Location—As above.

STARTER

Auto-Lite Model MAX-4037 (C19), MAX-4038 (C20).
Armature No. MAW-2030.
Drive—Solenoid operated pinion shift type. Drive through overrunning clutch.
Cranking Engine—Approx. 160-170 amps., 5 volts.
Rotation—Counter-clockwise at commutator end.
Brush Spring Tension—42-53 ozs. (new brushes).

Performance Data

Torque	R.P.M.	Volts	Amperes
0 ft. lbs.	5300	5.5	65
.65 " "	3300	5.5	100
2.75 " "	1630	5.0	200
5.5 " "	970	4.5	300
8.7 " "	600	4.0	400
12.0 " "	300	3.5	500
16.5 " "	Lock	3.	640
25.0 " "	Lock	4.	880

Removal:—Flange mounted on left front face of flywheel housing. Disconnect wire connections (tape battery lead) and oil filter lines. Remove two fastening bolts and withdraw unit.

Starting Switch:—Solenoid Switch Type SS-4206 (C-19), SS-4208 (C-20). Controlled through relay by pushbutton on instrument panel. Operative with ignition 'on'.
For complete data, refer to Electrical Equipment Index.

GENERATOR
STANDARD

Auto-Lite Model GCO-4801-C, GCO-4801-D Exp. Two brush, straight shunt type with external voltage and current regulation. Air cooled.

Maximum Charging Rate—28 amps., 8.0 volts, 1850 R.P.M. and above with load or discharged battery (Current Regulator setting). Actual charging rate controlled by Voltage Regulator.

Charging Rate Adjustment—No adjustment on Generator. See Regulator section below for Voltage and Current Regulator settings.

Cold Performance Data			Hot Performance Data		
Amps.	Volts	R.P.M.	Amps.	Volts	R.P.M.
0	6.4	825	0	6.4	900
4	6.6	940	4	6.6	1025
8	6.85	1050	8	6.85	1160
12	7.1	1175	12	7.1	1310
16	7.3	1300	16	7.3	1475
20	7.55	1450	20	7.55	1660
24	7.8	1610	24	7.8	1880
28	8.0	1850	28	8.0	2200

NOTE—Cur. regulator limits output to 28 amps. max.

Rotation—Counter-clockwise at commutator end.
Brush Spring Tension—23-27 ozs. (new brushes).
Field Current—1.47-1.63 amperes at 6.0 volts.
Motoring Current—3.85-4.25 amperes at 6.0 volts.

Removal:—Pivot mounted at left front of engine. To remove, take out pivot bolts and clamp bolt.

Belt Adjustment:—Loosen clamp bolt and pivot bolts, swing generator out until scale (attached to field frame) reads 40-50 lbs.

GENERATOR
SPECIAL EQUIPMENT

SPECIAL GENERATOR:—Model GCB-4802A (City Police). Used with Model VRB-4009A Regulator. *See 1939 DeSoto Model S6 article for complete data.*

CONTINUED N NEXT PAGE

C NTINUED FR M PRECEDING PAGE

REGULATOR

Auto-Lite Model VRB-4004-B. Voltage & Current Type. Consists of Cutout Relay, Vibrating Voltage and Current Regulator in case on dash.
For complete data, refer to Electrical Equipment Index.
NOTE—Regulator case cover is sealed. Serviced on exchange basis if seals not broken.

Cutout Relay

Cuts In—6.4-7.0 volts Cold.
Cuts Out—.5 ampere Min., 3.0 amperes Max. Cold.
Contact Gap—.015" minimum.
Air Gap—.034" Min., .038" Max. with contacts open. Measure at hinge end of core.

Voltage Regulator

Setting—7.3-7.6 volts at 70°F. (Regulator Serial No. 8R-000001 Up). **See Electrical Equipment Section for settings and changes on units before this serial no.**
To Check—Connect ammeter in charging line at 'B' terminal on regulator (use short heavy leads). Connect voltmeter between regulator 'B' and 'GD' terminals. Operate generator, charging fully charged battery at speed equivalent to 30 M.P.H. car speed. Voltage should be within limits of 7.3-7.6 volts (cold 70°F.), 7.1-7.4 volts (hot—140°F.). **See Regulator Setting above.**
To Adjust—Change regulator armature spring tension by bending lower spring hanger. See Electrical Equipment Section for complete instructions.
Contact Gap—.010-.020" (armature against stop pin).
Air Gap—.0595-.0625" with contacts just opening.

Current Regulator

Setting—27-29 amperes (Marked '28' on cover).
To Check—Connect ammeter and voltmeter as directed for Voltage Regulator test. Operate generator at 30 M.P.H., add load (use bank of headlamp bulbs or turn on car lights and discharge battery) so that generator will charge at peak rate bringing current regulator into action. Charging current should not exceed 28 amperes. If more than slight excess noted, Current Regulator is defective.
Adjustment, Contact Gap, Air Gap—Same as for Voltage Regulator (above).

LIGHTING

LIGHTING:—Headlamps—Corcoran-Brown, prefocused type. Upper and lower beams controlled by foot switch (lighting switch in full out position).
Headlamp Adjustment—Aim headlamps straight ahead (upper beam lighted, lenses in place, car unloaded) with center of hot spot 2" below center horizontal line of headlamps at 25 feet.
Headlamp Beam Indicator—In light switch knob. Lighted when headlamp upper beam in use.

Switches

Lighting—Chrysler No. 684038.
Foot Selector—Chrysler No. 659512.
Instrument—Chrysler No. 685888.
Stop Light—Chrysler No. 677112.

Bulb Specifications

Position	Candlepower	Mazda No.
Headlamps	32-32	2331
Tail and Stop	3-21	1158
Parking, Beam Indicator	1½	55
Instrument	1½	55
Dome	15	87
Rear License	3	63

MISC. ELECTRICAL

FUSES:—Lighting (used on early cars)—20 amperes on back of ammeter. Later cars equipped with Circuit Breaker (see below).

Dual Horns—30 ampere (Long Type SFE-30) on horn relay. Do not use old type 3AG.

CIRCUIT BREAKER:—Used on later cars. Thermostatic, non-adjustable, vibrating type. Mounted on back of ammeter and protects lighting circuits. Limits current to 30 amperes.

HORNS:—Klaxon Model K-33-S. Type 2079 (low note), 2080 (high note). Blended tone twin horns operated by horn relay.

Horn Type	Current at 6 volts	Air Gap
2079 Low Note	11-13 amperes	.042-.046"
2080 High Note	10-12 amperes	.032-.036"

Horn Relay:—Auto-Lite Model HR-4101.
Contacts Close—2.5-3.5 volts.
Contact Gap—.026". **Air Gap**—.012-.017" **(closed).**

ENGINE

ENGINE SPECIFICATIONS: 8 Cylinder, "L" head type.
Bore—3¼". **Stroke**—4½" (C19), 4⅞" (C20).
Displacement—298.6 cu. ins. (C19), 323.5 cu. ins. (C20).
Rated HP—33.80.
Developed Horsepower—For each head as follows:

Model	Compression Ratio	Horsepower
C19 Std.	6.2-1 Cast Iron	110 at 3400 RPM
C19 Optl.	6.5-1 Aluminum	115 at 3400 RPM
C19 Optl.	7.4-1 Aluminum	122 at 3400 RPM
C20 Std.	6.5-1 Aluminum	130 at 3400 RPM
C20 Optl.	7.45-1 Aluminum	138 at 3400 RPM

Compression Ratio—As listed above.
Compression Pressure—For each head as follows:

	1000 RPM Pressure	100 RPM
C19 6.2 Head	140-150 lbs.	Approx. 115 lbs.
C19, C20 6.5 Head	150-160 lbs.	Approx. 117 lbs.
C19, C20 7.4 Head	160-170 lbs.	Approx. 124 lbs.

Vacuum Reading—18-21" steady at 6 M.P.H.

PISTONS:—Aluminum alloy, U-slot, cam ground type with anodized finish. **Length**—3⅞".
Weight—16.33 ozs. (plus or minus 2 grams).
Removal—Pistons and rods removed from above.
Clearance—Top .021". See Fitting New Pistons.

Replacement Pistons:—***See Chrysler Special Shop Notes.***

Fitting New Pistons:—Check piston size with micrometer at right angles to pin bosses at bottom of skirt. Insert .002" feeler between cylinder wall and piston on side opposite slot. With piston and block at 70°F. pull to withdraw feeler 5-7 lbs.

Installing Pistons:—Slot away from camshaft.

PISTON RINGS:—2 undercut compression, 2 slotted oil rings per piston, above pin.

Ring	Width	End Gap	Side Clearance
Comp. (#1)	⅛"	.007-.015"	.002-.0035"
Comp. (#2)	⅛"	.007-.015"	.0015-.003"
Oil	5/32"	.007-.015"	.0015-.003"

Replacement Rings:—Furnished .003", .005", .010", .015", .020", .025", .030", .040", .050", .060" oversize.

PISTON PIN:—Diameter—55/64". **Length**—2¾".
Floating type. Pin hole in rod bronze bushed.
Pin Fit in Piston—Thumb push fit with piston heated to 130°F.
Pin Fit in Rod Bushing—Thumb push fit at 70°F.
Replacement Pins:—Furnished std. and .003", .005", .008" oversize. Ream bushing and pin hole to size.

CONNECTING ROD: Weight—35.38 ozs. (C19), 34.37 ozs. (C20). **Length**—9 3/16" (C19), 9" (C20).
Crankpin Journal Diameter—2 3/16".
Lower Bearing—Removable steel-backed, babbitt-lined. Furnished .002", .010", .012" undersize. **Clearance**—.0005-.0025". **Sideplay**—.005-.0115".
Bearing Adjustment:—None. Install new bearings with bosses engaging grooves in rods and caps.
Installing Rods:—Install rods with widest half of bearing toward rear (#1, 3, 5, 7), toward front (#2, 4, 6, 8). Oil spit hole toward camshaft.

CRANKSHAFT:—5 bearing, 8 counterweights, with impulse neutralizer mounted on forward end.
Journal Diameters—2 45/64" all bearings.
Bearing Type—Steel-backed, babbitt-lined type.
Clearance—.001-.002".
Bearing Adjustment:—***See Chrysler Shop Notes for Engine Removal (recommended), Adjustment directions, and Crankshaft Oil Seals.***
Replacement Bearings & Bearing Caps: ***Refer to Chrysler Shop Notes for complete data.***
End Thrust:—Taken by flange faces on rear (#5) bearing. **Endplay**—.003-.007".

CAMSHAFT:—6 bearing. Non-adjustable chain drive.
Journal Diameters—#1, 2 1/16"; #2, 2 1/32"; #3, 2"; #4, 1 31/32"; #5, 1 15/16"; #6, 1⅜".
Bearing Type—Removable steel-backed, babbitt-lined bushings (except #6 machined in crankcase).
Clearance—.001-.003" (#1), .0015-.0035" (all others). NOTE—Replacement bushings finish reamed.
End Thrust:—Taken between face of removable cast-iron sleeve (carries front bearing) and face of camshaft sprocket. Replace if worn. **Endplay**—.001-.008".
Timing Chain:—Morse #1866 (restricted bend). Width 1¼". Pitch .500". Length 47 links or 23½". NOTE—Whitney #CLG-205 optional (same specifications).
See Chrysler Special Shop Notes for front end removal for work on timing chain.
Camshaft Setting:—Mesh chain with sprockets turned so that '0' marks are adjacent and in line with a straightedge across the shaft centers.

VALVES:—

	Head Diameter	Stem Diameter	Length
Intake	1 15/32"	.340-.341"	5½"
Exhaust	1 13/32"	.340-.341"	5½"

	Seat Angle	Lift	Stem Clearance
All valves	45°	11/32"	.001-.003"

See Chrysler Special Shop Notes for Exhaust Valve seat insert removal and installation.
Valve Guides:—Install with taper end up 13/16" below top of block, then ream to .342-.343".
Valve Springs:—Constant pitch type. Free length approx. 2 19/64". Limit of compression 1 29/64".

	Spring Pressure	Spring Length
Valve Closed	52-58 lbs.	2 1/32"
Valve Open	122-130 lbs.	1 11/16"

Valve Lifters:—Mushroom type. Ream guides from above for following oversizes: .001", .008", .030", .060".

VALVE TIMING

Tappet Clearance: .006" Intake, .010" Exhaust (hot)..012" Exh. setting recommended for sustained high speed driving. Valves accessible by removing right front wheel and fender panel.
NOTE—Self-locking tappet screws used.

Valve Timing:—See Camshaft Setting above.
Intake Valves—Open 2° BTDC. Close 44° ALDC.
Exhaust Valves—Open 46° BLDC. Close 4° ATDC.
To Check Valve Timing—Set tappet clearance #1 intake valve at .011". This valve should open with #1 piston 2° (.002") BTDC. when 2° BTDC. line on impulse neutralizer at front of engine lines up with pointer on chain case cover. Reset tappet clearance .006" (hot).

LUBRICATION

LUBRICATION:—Gear type oil pump, right of engine.
See Chrysler Special Shop Notes for oil pump removal and installation instructions.

Normal Oil Pressure:—30-45 lbs. at 30 M.P.H.

Oil Pressure Relief Valve:—Under cap on left side of engine. Adjust by turning slotted plug (with cap and lock wire removed) clockwise to increase pressure, counter-clockwise to decrease pressure.

Crankcase Capacity:—6 quarts (refill).

COOLING

COOLING SYSTEM:—Water Pump—Centrifugal, belt-driven, packless type.
See Water Pump Section for complete data.
Removal—With water drained and fan belt removed, remove fan blades and pulley (attached by 4 capscrews), disconnect pump hoses, remove nuts from pump mounting studs and lift assembly out.

Thermostat:—Fulton. In water outlet on cyl. head.
NOTE—Install thermostat with bellows down.
Setting—Start to open 150-155°F. Fully open 176°F.
Temperature Gauge—Motometer (Auto-Lite) Vapor tension type. Part No. H-9063.
See Miscellaneous Section for complete data.

Water Capacity:—20 quarts.

Drain Valves:—At lower left corner of radiator and on left side of block in front of distributor.

CLUTCH

Borg & Beck Model 11A6. Single plate, dry disc type with new spiral grooved type facings and pressure plate oil baffle.
NOTE—Clutch has assembly number stamped on cover: #916 (C19), #915 (C20).
See Clutch Section for complete data.
Facings—Molded-woven (spiral grooved type). 2 required. I.D. 6½". O.D. 11". Thickness ⅛".
Adjustment—Adjust pedal stopscrew so that pedal just clears floor board. Free movement of pedal should be 1". To adjust, turn adjusting nut on upper end of throw-out shaft connecting rod (C19), on connecting rod at clutch release fork (C20).

Removal:—Remove floor board, release fork pull-back spring, free clevis pin on release fork rod. Remove transmission (see Transmission Removal below), remove housing underpan, mark cover and flywheel, remove cover bolts, lower assembly out.

TRANSMISSION
M DEL C19

TRANSMISSION:—Own make—All helical gear type with synchro-mesh for second and high speeds. Warner Mod. AS2-T85A overdrive transmission optl.
See Transmission Section for complete data.

Removal:—Remove floor boards, propeller shaft, disconnect hand brake cable (remove brake band and drum on cars with overdrive). Place jack under engine, remove engine rear supports. Remove two front cover screws, nuts on mounting studs, install two pilot studs and withdraw transmission.

TRANSMISSION
MODEL C20

TRANSMISSION:—Warner Model AS18-T85. Helical gear type with synchro-mesh on second and high speeds, overdrive transmission.
See Transmission Section for complete data.

Removal:—Remove floor boards, disconnect hand brake cable, remove propeller shaft. Disconnect clutch release fork pull rod (at clevis pin) and spring (release bearing assembly attached to transmission and withdraw with it). Place jack under rear of engine, remove rear engine supports. Remove two front cover screws, take off nuts on mounting studs, install two pilot studs in upper holes and withdraw transmission. NOTE—When installing, release fork fingers must align with groove in release bearing sleeve.

OVERDRIVE

Overdrive Transmission: Warner Model AS2-T85A Optl. on Model C19. Overdrive unit used with this transmission is same as used with Warner Model AS18-T85 Transmission which is Std. on Model C20.
See Transmission Section for complete data.
Removal—Same as for standard transmission above after overdrive control has been disconnected.

UNIVERSALS

Detroit Universal. Series 4400 Ball-and-Trunion type (C19), Series 5350 Cross Type (C20). Two used. Universals are roller bearing types.
See Universals Section for complete data.

REAR AXLE

REAR AXLE:—Own. Semi-floating, hypoid gear type with Hotchkiss drive.
See Rear Axle Section for complete data.
Ratio—3.91-1 (C19 Std.), 4.3-1 (C19 with Overdrive), 4.55-1 (C20 Std.).
Backlash—.006-.010". Screw adjustment.

Removal:—Remove wheel, hub, and drum assembly (use screw type hub puller). Place block under brake pedal, disconnect brake line, remove backing plate and oil seal, pull axle shaft and bearing (Tool C-158). With shafts removed, carrier may be removed by disconnecting rear universal at flange and removing housing capscrews.
Wheel Bearing Adjustment—Controlled by shims at flanged ends of axle housing. With wheel and hub removed measure endplay with dial indicator. To adjust, remove backing plate (see above) and add or remove shims (equally at both sides) to proper clearance. **Endplay**—.003-.008".

SHOCK ABSORBERS

SHOCK ABSORBERS:—Monroe—Front #683091. Rear #682604. Direct acting hydraulic type.
See Shock Absorber Section for complete data.

FRONT SUSPENSION

Front Suspension:—Independent, linked parallelogram type with coil springs.
See Front Suspension Section for complete data.
Specifications below apply with no passenger load.
Kingpin Inclination—4¾-6°.
Camber—¼° preferred. Minus ¼° to plus ½°.
Toe-In—1/16" (0-⅛"). On C19, set long tie rod to 30 25/32" between ball centers, adjust short rod for correct toe-in. On C20, adjust both tie rods equally.
Caster—Limits ½-2½°.(C19), 1-3° (C20).
Steering Geometry—Outer wheel turned 20°. Inner wheel turned 22°0' (C19), 22°15' (C20).

STEERING GEAR

Steering Gear: Gemmer Model 335 (C19), 375 (C20), Worm-and-Roller type with "Push-Pull" adjustments.
See Steering Gear Section for complete data.

BRAKES
MODEL C19

BRAKES:—Service—Lockheed hydraulic, double anchor type. Hand brake at rear of transmission.
See Brake Section for complete data.
Wheel Cylinders—Stepped or two-stage bore type: Front wheel—Front cylinder 1¼". Rear 1⅜". Rear Wheel—Front cylinder 1⅛". Rear 1¼".
Drum—Centrifuse. Diameter—12".
Lining—Moulded. Width 2". Thickness 13/64". Length per shoe 12 9/16".
Clearance—.012" toe, .006" heel, for each shoe.
Braking Power—55% front, 45% rear.

Hand Brake:—External at rear of transmission.
Adjustment:—*See Chrysler Shop Notes.*
Drum—Cast-iron. Diameter—6".
Lining—Width 2". Thick. 5/32". Length 17 1/16".

BRAKES
MODEL C20

BRAKES:—Service—Lockheed hydraulic, double anchor type with Bendix Vacuum Power unit. Hand lever applies brake at rear of transmission.
See Brake Section for complete data.
Wheel Cylinders—Stepped or two-stage bore type.
Drum—14". Centrifuse.
Lining—Molded. Width 2½". Thickness ¼". Length per shoe 14 21/32".
Clearance—Toe .012", Heel .006", for each shoe.
Braking Power—55% Front wheels, 45% Rear.

Hand Brake:—External at rear of transmission.
Adjustment—*See Chrysler Shop Notes.*
Drum—7". Cast-iron.
Lining—Width 2½". Thick. 3/16". Length 21½".

Power Brake Unit:—Bendix Internal Valve type.
See Brake Section for complete data.

FRONT END ASSEMBLY (UNIT) REMOVAL:—Should be removed as a unit for work on front f engine. *See Chrysler Shop Notes for directions.*

MODEL IDENTIFICATION

SERIAL NUMBER:—On right front door hinge post.

	Detroit	Canada
Royal	7,574,001 & up	9,712,121 & up
Royal Windsor	6,948,301 & up	9,712,121 & up

ENGINE NUMBER:—First number C-22-1001. Stamped on left side of block between #1 and #2 cylinders. *See Chrysler Special Shop Notes for engine number lettering data.*

TUNE-UP

COMPRESSION:—Ratio and pressure as follows:

Ratio	Pressure at 1000 RPM.	At 100 RPM.
6.5-1 cast-iron hd.	140-150 lbs.	Approx. 115 lbs.
7.0-1 aluminum hd.	150-160 lbs.	Approx. 120 lbs.

NOTE—7.0-1 al. head standard on 7 pass. sedan.

VACUUM READING:—Steady 18-21" idling at 6 M.P.H.

FIRING ORDER: 1-5-3-6-2-4. See diagram.

SPARK PLUGS: Auto-Lite Type A-7 (Cast Iron Head), Type AL-6 (Aluminum Head). 14 mm. Metric type. Gaps—.025".

IGNITION: See Coil, Condenser, and Distributor.
Breaker Gap—.020". **Cam Angle** 38° (closed).
Automatic Advance—12° max. at 1750 RPM (distr.).
Vacuum Advance—7° distr. with 12" vacuum (IGS-4102-1), 11° distr. with 17" vacuum (IGS-4102D-1).

IGNITION TIMING: See Ignition Timing.
Std. Setting—At TDC. with "DC" dead center mark on impulse neutralizer at indicator on front of engine.

CARBURETION: See Carburetor & Carb. Equipment.
Idle Setting—Idle screw ½-1¼ turns open. Idle speed 300 Engine RPM or 6 MPH.
Float Level—5/64" top of float below top edge of bowl.
Accelerating Pump—Center hole normal. Inner hole (Summer), outer hole (Winter) for extreme temperatures.
Fuel Pump Pressure: 3½ lbs. max. (Type B & AL), 4¼ lbs. max. (Type AT).

MANIFOLD HEAT CONTROL:—Thermostatic coil type. See that shaft and valve rotate freely. When installing coil, wind up free end ½ turn counter-clockwise and hook end over stop pin.
CAUTION—Do not wind coil up more than ½ turn.

VALVES: See Valve Timing.
Tappet Clearance:—.008" Intake, .010" Exhaust (hot). Remove right front wheel and housing panel for adjustment. NOTE—Tappet screws are self-locking (no locknuts). .002" additional exhaust tappet clearance recommended for sustained high speed driving.

STARTING: See Battery, Starter, Generator, Regulator.

IGNITION

Ignition Switch:—Mitchellock Model 24-R. Model 8054 Connected to coil by armored cable.
Ignition Lock—Yale & Towne.

COIL Auto-Lite Model IG-4657. Service Coil (less Switch & Cable) IG-3224JS. Mounted on dash.
Ignition Current—2.5 amperes idling, 5.5 stopped.

CONDENSER: Auto-Lite Part No. IG-3927A.
Capacity—.25-.28 microfarad.

DISTRIBUTOR: Auto-Lite IGS-4102-1, IGS-4102D-1. Single breaker, 6 lobe cam, full automatic advance type with auxiliary vacuum spark control.

Note—IGS-4102-1 distributor used up to Engine No. 6247 (U.S.), 1540 (Canada). D-1 after these numbers.
Breaker Plate Identification—Maximum vacuum advance limited by slot and marked (#7—IGS-4102-1, #11—IGS-4102D-1) stamped on plate.
Breaker Gap—Set at .020".
Cam Angle or Dwell—38° (closed), 22° (open).
Breaker Arm Spring Tension—18-20 ounces.
Rotation—Clockwise viewed from the top.

Automatic Advance

Distributor Degrees	Distributor R.P.M.	Engine Degrees	Engine R.P.M.
Start	350	0	700
3	400	6	800
5	700	10	1400
7	1000	14	2000
9	1300	18	2600
11	1600	22	3200
12	1750	24	3500

Vacuum Spark Control—Integral type (on distributor, linked directly to breaker plate). Provides additional advance at speeds above idling except when engine accelerated or operated with wide oper throttle (spark retarded by return spring in unit)

Vacuum Advance—IGS-4102-1

Distr. Degrees	Eng. Degrees	Vacuum (" of HG.)
Start	0°	5"
3°	6°	8"
5°	10°	10"
7°	14°	12"

Vacuum Advance—IGS-4102D-1

Start	0°	5"
3°	6°	8-9"
7°	14°	12-13"
11°	22°	17"

Manual Adjustment—Provides 10° advance or retard from center '0' position. See Ignition Timing
Distributor Removal:—Mounted on left side of crankcase. To remove, disconnect vacuum line, take out hold-down screw in lock plate.

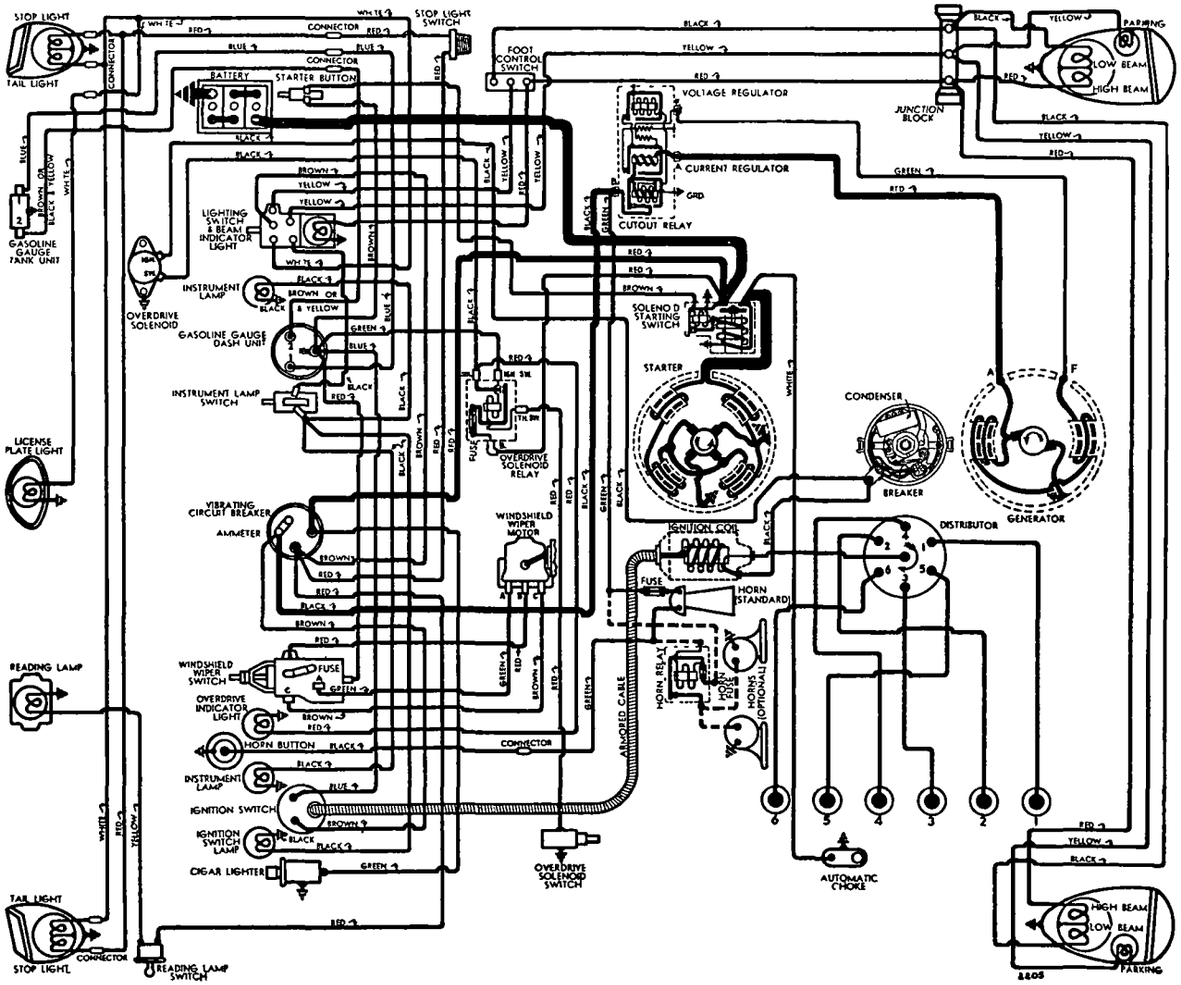

IGNITION TIMING

IGNITION TIMING:—Initial setting (correct for fuel of 70 octane rating at low altitudes for cast-iron head, premium fuel for aluminum head) shown below. See Manual Adjustment (following) for recommended correction (not to exceed 4° either way) dependent on fuel regularly used and operating conditions. NOTE—Use Ethyl fuel with 7.0-1 hd.

	Flywheel Degrees	Piston Position
All Engines	0° TDC.	.0000" TDC.

NOTE—Impulse neutralizer marked 'DC' at TDC point with 15 - 1° graduations on either side.

Timing (Using Timing Light)—Connect timing light between distributor and battery terminal on generator regulator. With #6 piston on compression, turn engine over until piston reaches firing position (see Initial Setting above), stop when correct mark on impulse neutralizer lines up with pointer on chain case cover. Loosen lock plate hold-down screw, center pointer on scale, tighten screw. Loosen lock plate clamp bolt, rotate distributor until timing light just goes out, tighten clamp bolt. Check manual adjustment setting as directed below.

Timing (Using Synchroscope)—Tool C-374. Clip lead to #1 spark plug, direct light on impulse neutralizer (correct mark filled in with paint or chalk), idle engine and adjust distributor as directed above.

Manual Adjustment—Standard ignition setting should be varied not more than 4° (piston 4° or .007" before or after top dead center for standard cast-iron head) so that slight ping noticeable between 10 and 30 M.P.H. when accelerating with wide open throttle for best performance. To adjust, loosen hold-down screw, rotate distributor counter-clockwise to advance spark (if no ping noted), clockwise to retard spark (if ping too severe) not more than 4°. Scale graduated in engine degrees.

CARBURETOR

CARBURETION:—**Carburetor.** Carter (Ball & Ball) Model E6N1 (first cars), E6N2 (later cars), 1½" downdraft type.
For complete data, refer to Carburetor Index.

Idle Adjustment—With engine warm (fast idle and automatic choke inoperative), adjust throttle stop-screw so that idle speed is approximately 300 R.P.M. or 6 M.P.H. Turn idle adjusting screw in until engine begins to hesitate or miss, then turn screw out until engine begins to roll, finally turn screw in slowly until engine fires smoothly. Final setting should be ½-1¼ turns of screw from inner closed or seated position. Readjust throttle stopscrew for correct idle speed. NOTE—Car manufacturer recommends use of vacuum gauge. Idle screw should be set to give highest reading on gauge.

Accelerating Pump Setting—Pump lever has three holes for pump link engagement. Set as follows:
Inner Hole (Short stroke)—Extreme hot temp.
Center Hole—Normal summer temperatures.
Outer Hole (Long stroke)—Winter temperatures.
NOTE—If lean metering jets (High Alt. calibration) used at lower altitudes for increased economy, reduced speed and power will result (not recommended by manufacturer). See Carter (B&B) Jet Table in Carburetor Section for complete jet data.

Fast Idle:—Integral type. No adjustment.
Automatic Choke:—Sisson Type AC-758B.
For complete data, refer to Carburetion Equip. Index.

CARB. EQUIPMENT

Air Cleaner:—AC. #1529041 oil-wetted type standard. #1529042 oil-bath type optional.
NOTE—#1525313 crankcase vent cleaner used.
Fuel Pump:—AC Type AT #1523912, Type B #1523914 (RHD) diaphragm type standard. Type AL #1523915 comb. fuel-and-vacuum pump optl. (RHD).
For complete data, refer to Carburetion Equip. Index.
Gasoline Gauge:—Auto-Lite electric type gauge. No. NG-9064D (dash unit), NG-8989T (tank unit).
For complete data, refer to Carburetion Equip. Index.

BATTERY

BATTERY:—**Willard Type SW-2-119.** 6 volt, 15 plate, 119 Ampere Hour capacity (20 hour rate).
Starting Capacity—140 amperes for 20 minutes.
Zero Capacity—300 amperes for 4.3 minutes. Five second voltage—4.3 volts.
Grounded Terminal—Positive (+) grounded to transmission case.
Dimensions—Lgth. 10 5/16". W. 7 1/16". Hgt. 9 5/16".
Location—Left side under front seat.

STARTER

Auto-Lite Model MAX-4020A. Armature MAW-2030.
Drive—Overrunning clutch (solenoid pinion shift).
Cranking Engine—Approx. 160 amperes, 5 volts.
Rotation—Counter-clockwise at commutator end.
Brush Spring Tension—42-53 ozs. (new brushes).

Performance Data

Torque	R.P.M.	Volts	Amperes
0 ft. lbs.	5300	5.5	65
.65 " "	3300	5.5	100
2.75 " "	1630	5.0	200
5.5 " "	970	4.5	300
8.7 " "	600	4.0	400
12.0 " "	300	3.5	500
16.5 " "	Lock	3.0	640
25.0 " "	Lock	4.0	880

Removal:—Flange mounted on left front face of flywheel housing. Disconnect wire connections (tape battery lead) and oil filter lines. Remove two fastening bolts and withdraw unit.

Starting Switch:—Solenoid Switch Type SS-4206. Controlled through relay by pushbutton on instrument panel. Operative with ignition 'on'.
For complete data, refer to Electrical Equipment Index.

Solenoid Switch
Closes against 170 lb. pull with ⅜" air gap drawing 65 amperes. Holds switch closed with draw of 15 amperes (hold-in coil only).

Solenoid Relay
Contacts Close—3.5-4.5 volts. **Open**—1.5-2.5 volts.
Contact Gap—.025-.030". **Air Gap**—.005-.007" (closed).

GENERATOR

STANDARD

Auto-Lite Model GDA-4801A. Armature No. GDF-2006F. Two brush, shunt wound type with vibrating voltage and current regulation. Air cooled.
Charging Rate Adjustment—Adjusted by changing Voltage & Current Regulator settings (no adjustment at generator). See Regulator data below.
Maximum Charging Rate—28 amperes, 8.0 volts, 2025 R.P.M., 20 M.P.H. with load or discharged battery (Current Regulator setting). Actual charging rate controlled by Voltage Regulator and dependent on battery condition.

Cold Performance Data		Hot	
Amperes	Volts	R.P.M.	Amperes	Volts	R.P.M.
0	6.4	930	0	6.4	1010
4	6.6	1060	4	6.6	1180
8	6.85	1210	8	6.85	1350
12	7.1	1350	12	7.1	1530
16	7.3	1500	16	7.3	1730
20	7.5	1660	20	7.5	1950
24	7.75	1830	24	7.75	2220
28	8.0	2025	28	8.0	2520

NOTE—28 amperes is current regulator setting.
Rotation—Counter-clockwise at commutator end.
Brush Spring Tension—53 ozs. max. (new brushes).
Field Current—1.66-1.84 amperes at 6.0 volts.
Motoring Current—3.50-4.15 amperes at 6.0 volts.
Removal:—Pivot mounted at left front of engine. To remove, take out pivot and clamp bolts.
Belt Adjustment:—Loosen clamp and pivot bolts, swing generator out until scale (attached to field frame) reads 40-50 lbs., tighten bolts.

GENERATOR

SPECIAL EQUIPMENT

SPECIAL GENERATOR:—**Model GCB-4802A (City Police).** Used with Model VRB-4009A Regulator. *See 1939 DeSoto Model S6 article for complete data.*

REGULATOR

Auto-Lite Model VRB-4004B. Voltage & Current Type. Consists of Cutout Relay, vibrating Voltage Regulator and Current Regulator in case n dash.
For complete data, refer to Electrical Equipment Index.
NOTE—Regulator case cover is sealed. Serviced on exchange basis if seals not broken.

Cutout Relay
Cuts In—6.4-7.0 volts Cold.
Cuts Out—.5 ampere min., 3.0 amperes max. Cold.
Contact Gap—.015" minimum.
Air Gap—.034" min., .038" max. with contacts pen. Measure at hinge end of core.

Voltage Regulator
Setting—7.3-7.6 volts at 70°F.
To Check (without breaking seals)—Connect ammeter in charging line at regulator 'B' terminal, voltmeter between 'B' and 'GD' terminals. Operate generator at speed equivalent to 30 MPH., charging battery, until voltage is steady. Voltage reading should be 7.3-7.7 volts (Cold—70°F), 7.1-7.4 volts (Hot—140°F).
To Adjust (with cover removed)—Change regulator armature spring tension by bending lower spring hanger slightly. See Electrical Equipment Section
Contact Gap—.010-.020" (armature against stop pin).
Air Gap—.0595-.0625" with contacts just opening.

Current Regulator
Setting—27-29 amperes (marked '28' on cover).
To Check (without breaking seals)—Connect test meters as for Voltage check (above). Operate generator at 30 MPH., charging battery, add load (use bank of headlamp bulbs, r turn on car lights and

C NTINUED ON NEXT PAGE

C NTINUED FR M PRECEDING PA E

discharge battery) so that generator charges at peak rate and Current Regulator operates. Charging current should not exceed 28 amperes. If more than slight excess noted, regulator is defective.

Adjustment, Contact Gap, Air Gap—Same as for Voltage Regulator (above).

LIGHTING

LIGHTING:—Headlamps—Corcoran-Brown pre-focused type. Upper and lower beams controlled by beam control switch on toeboard (lower beam deflected slightly to right—2331 bulb).

Headlamp Adjustment—Place unloaded car 25' from wall with upper beams lighted and lenses in place. Aim headlamps straight ahead with center of hot spot 3" below center horizontal line of headlamps. Adjusting screws at top of lamp under lens ring. Center screw controls up and down movement. Screw to right controls horizontal movement.

Beam Indicator—In light switch knob. Lighted whenever headlamp upper beam in use.

Switches

Lighting—Chrysler No. 694069 or 852031.
Beam Selector—Chrysler No. 853323 or 659512.
Instrument—Chrysler No. 695949.
Stop Light—Chrysler No. 677112.

Bulb Specifications

Position	Candlepower	Mazda No.
Headlamps	32-32	2331
Stop and Tail	21-3	1158
Parking, Instrument	1½	55
Beam Indicator	1½	55
Overdrive Indicator	1	51
Dome (reading)	15	87
Pillar (7 passenger)	6	81
Rear License	3	63

MISC. ELECTRICAL

FUSES:—Single Horn—20 ampere. In horn feed lead.
Dual Horns—30 ampere. On horn relay.
Windshield Wiper—14 amp. On switch or lead.
Transmission Overdrive Control—20 amp. On relay.

CIRCUIT BREAKER:—Chrysler No. 694571 (A-L. #9062-A). Thermostatic type. Mounted on ammeter and protects lighting circuits. Limits current to 35 amperes at 5 minutes. Not adjustable.

HORNS:—Single—Auto-Lite Model HH-4001 Air Note.
Dual—Auto-Lite HH or HL-4001 (low pitch), HH or HL-4002 (high pitch). Horns operated by horn relay.

Horn Relay:—Auto-Lite Model HR-4101. 30 ampere fuse mounted on base. Contacts Close—2.5-3.5 volts
Contact Gap—.026". **Air Gap**—.012-.017" (closed).

ENGINE

ENGINE SPECIFICATIONS:—6 cylinder, 'L' head.
Bore—3⅜". **Stroke**—4½".
Displacement—241.5 cu. ins. **Rated HP.**—27.34.
Developed Horsepower—100 (Std. 6.5-1 hd.), 107 HP. (Optl. 7.0-1 hd.—Std. 7 pass) at 3600 RPM.

Compression Ratio and Pressure—As follows:

Ratio	Pressure at 1000 RPM.	At 100 RPM.
6.5-1 cast-iron hd.	140-150 lbs.	Approx. 115 lbs.
7.0-1 aluminum hd.	150-160 lbs.	Approx. 120 lbs.

Vacuum Reading—Steady 18-21" idling at 6 MPH.
See Chrysler Shop Notes for engine removal instructions.

PISTONS:—Aluminum alloy, U-slot, Cam-ground, with Anodic finish. **Length**—3⅞". **Weight**—17.45 ozs.
Removal—Pistons and rods removed from above.
Clearance—Top .022". Skirt .0005-.0010".

Original Bore & Piston Sizes, Replacement Pistons:—***See Chrysler Shop Notes for sizes and markings.***

Fitting New Pistons:—Check piston size with micrometer across large diameter at bottom of skirt. Insert .002" feeler between cylinder wall and piston (pin removed) on side opposite slot. With piston and block at 70° F. pull to withdraw feeler 5-7 lbs.

Installing Pistons:—Slot away from camshaft.

PISTON RINGS:—4 rings, all above pin—#1 Compression (upper inner edge beveled), #2 Comp. (lower outer edge stepped), #3 & 4 (slotted oil rings).

Ring	Width	End Gap	Side Clearance
Comp. (Top)	⅛"	.007-.015"	.002-.004"
Comp. (#2)	⅛"	.007-.015"	.0015-.0035"
Oil Control	5/32"	.007-.015"	.0015-.003"

Replacement Rings:—Std. & .003", .005", .010", .015", .020", .025", .030", 040", .050", .060" oversize.

PISTON PIN:—**Diameter**—55/64". **Length**—2⅞".
Floating type. Pin hole in rod bronze bushed.
Pin Fit in Piston—Thumb push fit (piston@130°).
Pin Fit in Rod Bushing—Thumb push fit at 70° F.

Replacement Pins:—Std. & .003", .005", .008" oversize.

CONNECTING ROD:—**Weight 31.70 ozs. Length 7⅞".**
Crankpin Journal Diameter—2⅛".
Lower Bearing—Removable, steel-backed, babbitt-lined. Furnished std. & .002", .010", .012" undersize.
Clearance—.0005-.0025". **Sideplay**—.0055-.0115".

Bearing Adjustment:—None (no shims). Install bearings with boss engaging groove in rod and cap.

Installing Rods:—Oil spit hole toward camshaft.

CRANKSHAFT:—4 bearing type with 9 counterweights.
Journal Diameters—2½" all bearings.
Bearing Type—Removable, precision type steel-backed, babbitt-lined. **Clearance**—.001-.002".

Bearing Adjustment:—***See Chrysler Shop Notes for Engine Removal (recommended), front main bearing cap removal, adjustment data, & crankshaft oil seals.***

Replacement Bearings & Bearing Caps: ***Refer to Chrysler Shop Notes for complete data.***

End Thrust:—Taken by flange faces on rear (#4) main bearing. **Endplay**—.003-.007".

CAMSHAFT:—4 bearing. Non-adjustable chain drive.
Journal Diameters—#1, 2"; #2, 1 31/32"; #3, 1 15/16"; #4, 1¼".
Bearing Type—Removable steel-backed, babbitt-lined bushings (except #4 machined in block).
Clearance—.001-.003" (#1), .0015-.0035" (all others).

End Thrust:—Taken by thrust plate behind camshaft sprocket hub. **Endplay**—.002-.006".

Timing Chain:—Morse Type 1866-N, No. 2661. Width 1". Pitch .500". Length 24" or 48 links.

Camshaft Setting:—Mesh chain with sprockets turned to that '0' marks are adjacent and in line with a straightedge across the shaft centers.

VALVES:—

	Head Diameter	Stem Diameter	Length
Intake	1 21/32"	.340-.341"	4 25/32"
Exhaust	1 17/32"	.340-.341"	4 25/32"

	Seat Angle	Lift	Stem Clearance
All Valves	45°	11/32"	.001-.003"

See Chrysler Shop Notes for Exh. Valve Seat Insert data.

Valve Guides:—Remove from above. Press new guides in (tapered end up) so upper end ⅞" below top of block, then finish ream to .342-.343".

Valve Springs:—Free length approx. 2". Limit of compression 1⅜".

	Spring Pressure	Length
Valve Closed	40-45 lbs.	1¾"
Valve Open	101-109 lbs.	1 13/32"

Valve Lifters:—Mushroom type. Stem diam. ⅝". Ream holes from above (pilot in valve stem guide) for lifters furnished .001", .008", .030", .060" oversize.

VALVE TIMING

Tappet Clearance:—.008" Int., .010" Exh. (hot). .002" additional exhaust clearance recommended for sustained high speed driving. NOTE—Tappet screws self-locking type (no locknuts). Remove right front wheel and housing panel for access to valves.

Valve Timing:—See Camshaft Setting above.
Intake Valves—Open 8° BTDC. Close 42° ALDC.
Exhaust Valves—Open 48° BLDC. Close 2° ATDC.
Valve Timing Check—Set tappet clearance #6 intake valve at .014". This valve should open with piston 8° (.0281") before top dead center with 8° BTDC. mark on impulse neutralizer aligned with pointer on chain cover. Reset tappet cl. at .008" hot.

LUBRICATION

LUBRICATION:—Gear type pump, right of engine.
Normal Oil Pressure:—30-45 lbs. at 30 M.P.H.
Oil Pressure Regulator:—Under cap below starter. Opens at 40-45 lbs. To increase pressure use heavy (green) spring, to decrease use light (red) spring.
Crankcase Capacity:—5 quarts (refill).

COOLING

COOLING SYSTEM:—**Capacity**—17 quarts.
Radiator Core Removal—***See Chrysler Shop Notes.***

Water Pump:—Packless type, belt-driven.
See Water Pump Section for complete data.
Removal—Drain water, remove hood side panels, fan blade assembly, pulley, radiator outlet hose at pump, by-pass (with small hose), pump mounting stud nuts, fan belt adjusting strap at generator.

Thermostat:—Fulton. In water outlet on cyl. head. **Setting**—Start to open 157-162° F. Fully open 183°F.

Temperature Gauge:—Motometer (Auto-Lite) Vapor tension type. Part No. H-9063.
See Miscellaneous Section for complete data.

CLUTCH

CLUTCH:—Borg & Beck Model 10A7, 11A6 (Taxi). #930 (10A7), #931 (11A6) stamped on cover. Single plate, dry disc type with spiral groove facings, pressure plate oil baffle and new Over-center return spring
See Clutch Section for complete data.

Facings—Woven & compressed, 2 required. Inside Diam. 7" (10A7), 6½" (11A6). Outside Diam. 10" (10A7), 11" (11A6). Thickness .125" (all).

Adjustment:—Pedal should just clear toeboard (adjust stopscrew on lower end) and have 1" free movement (adjusting nut on link rod at clutch fork).

Removal:—Remove floorboard, unhook clutch fork pull-back spring and take out clevis pin in connecting link. Remove transmission (see below) and housing underpan, mark cover and flywheel, remove clutch cover screws evenly, lower assembly out.

TRANSMISSION

TRANSMISSION:—Warner. All helical gear, constant-mesh, synchro-mesh (second & high), sliding gear low and reverse).
See Transmission Section for complete data.
Transmission Control:—Remote control type.
See Transmission Section for complete data.
Removal:—Remove floor boards, battery ground cable, disconnect front and rear U-joints (see Chrysler Shop Notes for Propeller Shaft Center Bearing Removal on 7 pass.), hand brake cable at clevis, speedometer cable, and gearshifter rod and cable at lever on case. Remove mounting stud nuts, cover assembly and 2 upper mounting studs (insert pilot studs).

OVERDRIVE

Overdrive Transmission: Warner Model AS3-T86A with electrical "kick-down" control Optl.
See Transmission Section for complete data.
Overdrive Solenoid—Auto-Lite SSB-4001.
Overdrive Solenoid Indicator—Jewel light on instrument panel above speedometer. Lights whenever car shifted from overdrive to direct drive through accelerator pedal switch.
Throttle Switch Setting—3/32" gap between switch plunger & contact screw (throttle just wide open).
Control Relay—Auto-Lite HR-4201. NOTE—Use only 20 ampere fuse on relay.
Overdrive Transmission Removal—Same as above, plus the following: Remove hand brake assembly (U-joint flange, brake drum, band, and support). Disconnect solenoid wires (remove coil) and overdrive cable at case. To remove, turn assembly over on left side while withdrawing until shaft free at release bearing, then push up at forward end (shaft just above bearing), then forward (shaft between clutch fingers). Lower assembly at rear, pull out.

UNIVERSALS

UNIVERSAL JOINTS:—Detroit-Universal Series 4200. Ball and trunnion type with roller bearings.
See Universals Section for complete data.
Propeller Shaft Center Bearing:—On 7 pass. sedans.
See Chrysler Shop Notes for service data.

REAR AXLE

REAR AXLE:—Own Make. Semi-floating, hypoid gear type with Hotchkiss drive.
See Rear Axle Section for complete data.
Ratio—3.9-1 (Coupe), 4.1-1 (5 pass. sedan), 4.3-1 (7 pass.—others with OD.), 4.56-1 (7 pass. with OD.).
Backlash—.006-.010". Screw adjustment.
Removal:—Disconnect drive shaft at rear universal. Remove axle shafts (see below) and capscrews on carrier flange. Pull carrier assembly out.
Axle Shaft Removal—Remove wheel, hub, and drum assembly (use screw type hub puller—Tool C-319), block brake pedal, disconnect brake line at wheel cylinder, take off backing plate with oil seal, pull shaft and bearing (Tool C-158).
Wheel Bearing Adjustment:—Shims between backing plate and axle housing. With wheel and hub removed check endplay with dial indicator. To adjust, remove backing plate (see above), add or remove shims equally (both wheels). **Endplay**—.003-.008".

SHOCK ABSORBERS

SHOCK ABSORBERS:—Delco. Direct acting type.
Domestic—Front 1110-C. Rear 1111-T. Exp.—1114-C & 1115-T, or 1134-E & 1130-W.
See Shock Absorber Section for complete data.

FRONT SUSPENSION

Front Suspension:—Independent, linked parallelogram type with coil springs.
See Front Suspension Section for complete data.
Kingpin Inclination—4¾-6°.
Camber—Plus ¼°. Limits minus ¼° to plus ¾°.
Caster—Limits ½-2½°.
Toe In—1/16" (0-⅛"). Set long tie rod to 31⅝" (between ball centers). Adjust short tie rod.
Steering Geometry—Inner wheel 22°40'. Outer 20°.

STEERING GEAR

Steering Gear: Gemmer Model 305. Worm-and-Roller type with "Push-Pull" adjustments.
See Steering Gear Section for complete data.

BRAKES

BRAKES:—Service. Lockheed hydraulic, double anchor type. Hand lever applies independent shaft brake.
See Brake Section for complete data.
Wheel Cylinders—Stepped or two-stage bore type.
Drums—Cast-iron. Diameter 11".
Lining—Molded. Width 2". Thickness 13/64".
Length (front shoe) 11 15/32"; rear shoe (7 31/32").
Clearance—.012" toe, .006" heel, for each shoe.
Hand Brake:—On drum at rear of transmission.
Adjustment—*See Chrysler Shop Notes for data.*
Drum—Cast-iron. Diameter 6".
Lining—Width 2". Thick. 5/32". Length 17 1/16".

MISC. MECHANICAL

WINDSHIELD WIPER:—Auto-Lite EW-5001, EW-5101. Electric type. 14 ampere fuse in switch lead (first cars), on windshield wiper switch (later cars).
For complete data, and recommended changes on early cars, refer to Auto-Lite 'EW' Windshield Wiper article in Miscellaneous Section.

FRONT END ASSEMBLY (UNIT) REMOVAL:—Should be removed as a unit for work on front of engine. *See Chrysler Shop Notes for directions.*

MODEL IDENTIFICATION

SERIAL NUMBER:—On right front door hinge post. First number 6,742,201 (C-23), 6,672,701 (Saratoga), 6,609,901 (New Yorker), 7,806,201 (Crown Imperial).

ENGINE NUMBER. First number 1001 with prefix indicating model (C23- or C24-). Stamped on left side of cylinder block between #2 and #3 cylinders. *See Chrysler Shop Notes for Engine Number Lettering ('Special Standard' bore and bearing sizes).*

TUNE-UP

COMPRESSION:—Ratio and pressure as follows:

Ratio	Pressure at 1000 RPM.	At 100 RPM.
6.8-1 cast-iron hd.	150-160 lbs.	Approx. 118 lbs.
7.45-1 aluminum hd.	160-170 lbs.	Approx. 124 lbs.

NOTE—6.8-1 Head on Model C24 is Aluminum.

VACUUM READING: Steady 18-21" idling at 7 MPH.

FIRING ORDER: 1-6-2-5-8-3-7-4. See diagram.

SPARK PLUGS: Auto-Lite Type A-7 (Cast Iron Head), Type AL-6 (Aluminum Head). 14 mm. Metric type. **Gaps**—.025"

IGNITION: See Coil, Condenser, and Distributor. **Breaker Gap**—.018". **Cam Angle** 27° (.017" gap). **Automatic Advance**—12° max. at 1750 RPM (distr.). **Vacuum Advance (IGT-4101-1)** 8° distr., 14" vacuum, **(IGT-4101A-1)** 8° distr. with 17" vacuum. **(IGT-4101B-1)** 6° distr. with 17" vacuum.

IGNITION TIMING: See Ignition Timing. **Std. Setting**—At TDC. (C23 Std. 6.8-1 Head), 3° BTDC. (C24 Std. 6.8 Head), At TDC. (C23, C24 with Optl. 7.45-1 Head—using Ethyl), with dead center "DC" mark or correct degree mark on impulse neutralizer in line with indicator on front of engine.

CARBURETION: See Carburetor & Carb. Equipment. **Idle Setting**—Both idle screws midway between "miss" and "roll" points. Idle speed 7 MPH. **Float Level**—Fuel level 5/8" below top of bowl. **Accelerating Pump**—Inner Hole—Summer, Outer hole—Winter.

Fuel Pump Pressure: 3¾ lbs. max. (Type AW), 4¼ lbs. max. (Type D).

MANIFOLD HEAT CONTROL:—Thermostatic coil type. See that shaft and valve rotate freely. When installing coil, wind up free end 1 turn counter-clockwise and hook end over stop pin.

CAUTION—Do not wind up coil more than 1 turn.

VALVES: See Valve Timing. **Tappet Clearance:**—.008" Intake, .010" Exhaust (hot). .002" additional exhaust clearance recommended for sustained high speed driving. NOTE—Tappet screws are self-locking (no locknuts). Remove right front wheel and housing panel for adjustment.

STARTING: See Battery, Starter, Generator, Regulator.

IGNITION

IGNITION SWITCH: Mitchellock Model 24-R. Type 8055 (C23), 8113 (C24). Connected to coil by armored cable. **Ignition Lock**—Yale & Towne.

COIL: Auto-Lite Model CE-4634. Service Coil (less Switch & Cable) CE-3224JS. Mounted on dash. **Ignition Current**—2.5 amperes idling, 5.5 stopped.

CONDENSER: Auto-Lite Part No. IG-3927. **Capacity**—.25-.28 microfarad.

DISTRIBUTOR: Auto-Lite Model IGT-4101-1 (C23,C24 First Cars), IGT-4101A-1 (C23 after Eng. No. 2926), IGT-4101B-1 (C24 Later Cars). Single breaker, 8 lobe cam, semi-automatic advance type with new manual spark control (on instrument panel), auxiliary vacuum spark control and manual adjustment (at distributor).

Breaker Plate Identification—Maximum vacuum advance limited by slot and marked by number (#8—IGT-4101-1 & 4101A-1, #6—IGT-4101B-1) stamped on plate.

Breaker Gap—Set at .018".

Cam Angle or Dwell—27° closed, 18° open (.017" gap).

Breaker Arm Spring Tension—18-20 ounces.

Rotation—Clockwise viewed from above.

Manual Spark Control—Consists of control knob on instrument panel linked to advance arm. Provides 6° advance or retard from Initial Setting. Adjustment instructions included under Ignition Timing

Automatic Advance

Distributor Degrees	Distributor R.P.M.	Engine Degrees	Engine R.P.M.
Start	350	0	700
3	400	6	800
5	700	10	1400
7	1000	14	2000
9	1300	18	2600
11	1600	22	3200
12	1750	24	3500

Vacuum Spark Control—Integral type (on distributor, linked directly to breaker plate). Provides additional advance at speeds above idling except when engine accelerated or operated with wide open throttle (spark retarded by return spring in unit).

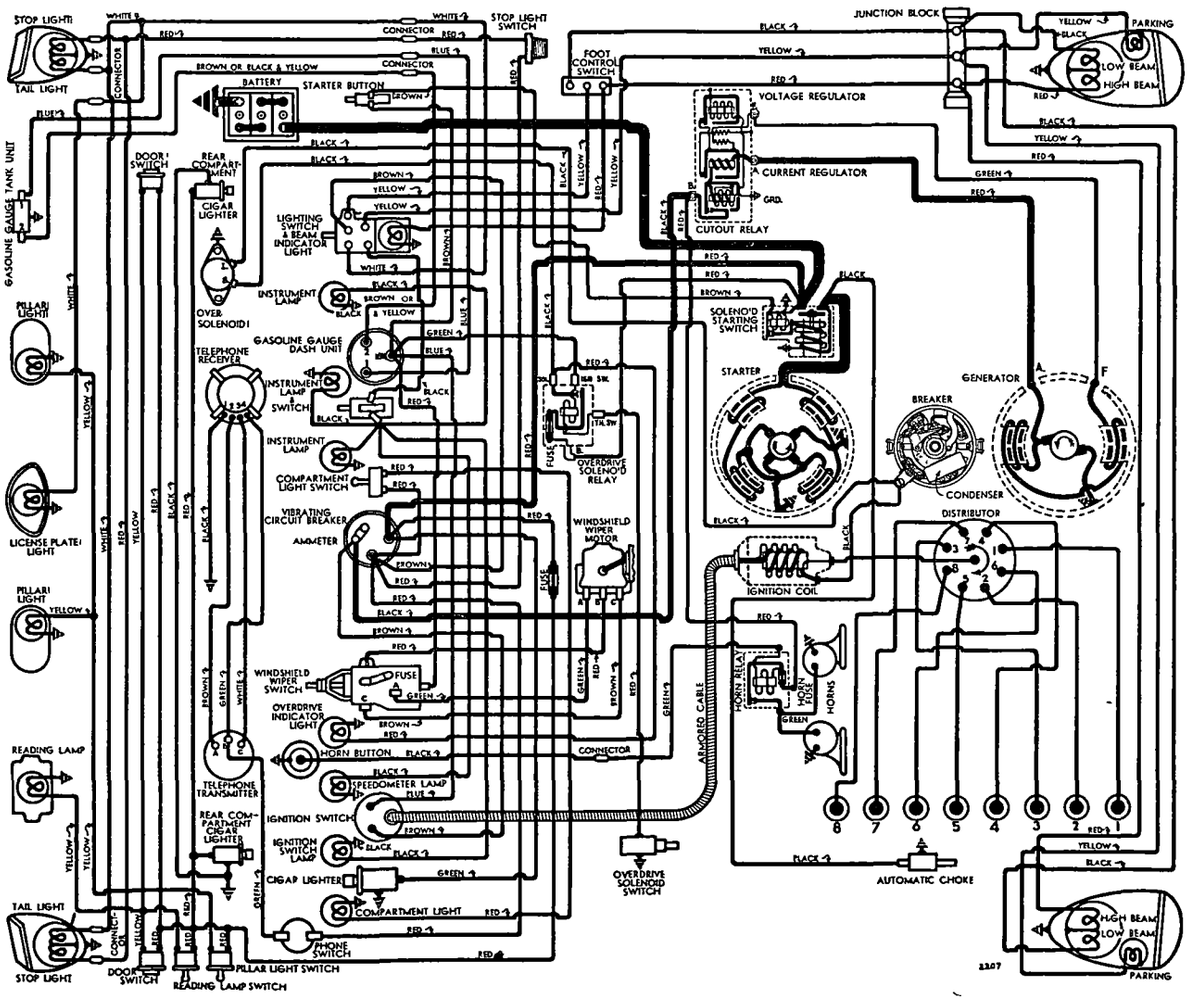

Vacuum Advance—IGT-4101-1

Distr. Degrees	Eng. Degrees	Vacuum (" of HG)
Start	0°	5"
.9°	1.8°	6"
2°	4°	7-8"
4°	8°	9-10"
6°	12°	11-12"
8°	16°	14"

Vacuum Advance—IGT-4101A-1

Start	0°	5"
.7°	1.4°	6"
2°	4°	8"
4°	8°	11"
6°	12°	14"
8°	16°	17"

Vacuum Advance—IGT-4101B-1

Start	0°	5"
.5°	1°	6"
2°	4°	9"
4°	8°	13"
6°	12°	17"

Manual Adjustment—Provides 10° advance or retard from center '0' position on scale (at Distributor). See Ignition Timing for adjustment.

Distributor Removal:—Mounted on left side of crankcase. To remove, disconnect vacuum line and take out advance arm clamp bolt.

IGNITION TIMING

IGNITION TIMING:—Initial setting (correct for fuel of 70 octane rating at low altitudes for cast-iron head) shown below. See Manual Adjustment (following) for recommended corrections dependent on fuel regularly used and operating conditions.

NOTE—Different settings required for Cast Iron & Aluminum 6.8-1 Heads. Ethyl fuel required for 7.45-1

	Flywheel Degrees	Piston Pos.
C23 Std. (6.8-1)	At TDC	.0000" TDC.
C24 Std. (6.8-1)	3° BTDC	.0038" BTDC.
C23, 24 Optl. (7.45-1)	At TDC	.0000" TDC.

NOTE—Impulse neutralizer marked 'DC' at TDC with 15 - 1° graduations on either side.

Timing (Using Timing Light)—Connect timing light between distributor and battery terminal on generator regulator. With #8 piston on compression, turn engine over until piston reaches firing position (see Initial Setting above), stop when correct mark n impulse neutralizer lines up with pointer on chain case cover. Loosen advance arm control wire lockscrew, center control knob on instrument panel (turn to full retard—left position, then turn to advance—right position counting number of turns, finally turn knob back ½ number of turns), loosen advance arm hold-down screw, center pointer on scale, tighten hold-down screw and control wire lockscrew. Loosen advance arm clamp bolt (press rotor back to remove backlash), rotate distributor until timing light just goes out, tighten clamp bolt. Check Manual Adjustment setting (below).

Timing (Using Synchroscope)—Tool C-374. Clip lead to #1 spark plug, direct light on impulse neutralizer, idle engine, adjust distributor as directed above.

Manual Adjustment—Ignition should be set so that slight ping noticeable between 10 and 30 MPH. when accelerating with wide open throttle for best performance. Advance ignition (if premium fuel used or car operated at high altitudes), retard (if spark knock excessive due to low grade fuel or perating conditions). To adjust, loosen hold-down screw, rotate distributor counter-clockwise (if no ping noted), clockwise to retard spark (if too severe).

CARBURETOR

CARBURETION:—Carburetor. Stromberg Model AAV-2, No. A-18792, aircraft, duplex downdraft type.

For complete data, refer to Carburetor Index.

Idle Adjustment—With engine warm, set throttle stopscrew so that idle speed is 7 M.P.H. Turn one idle adjusting screw (for one barrel) in until engine begins to hesitate or miss, then turn screw out until engine begins to roll, finally turn screw in slowly until engine fires smoothly. Repeat with second idle adjusting screw (for other barrel). Adjust throttle stopscrew for correct idling speed. NOTE—Car manufacturer recommends use of vacuum gauge.

Accelerating Pump Setting—Throttle lever has two holes for pump link engagement. Set as follows: Inner Hole (short stroke)—Extreme hot temp. Outer Hole (long stroke)—Cold temperatures.

Fast Idle:—Rotary cam, adjustable type.

For complete data, refer to Carburetion Equip. Index.

Fast Idle Setting—Adjust choke connector link length so that choke valve opening is ⅛" with fast idle screw (throttle stopscrew) on first step of cam.

Automatic Choke:—Sisson Type AC-600.

For complete data, refer to Carburetion Equip. Index.

CARB. EQUIPMENT

Air Cleaner:—AC. #1528334 oil-wetted type standard. #1529043 oil bath Optl. Oil venter cleaner #1525313.

Fuel Pump:—AC Type AW #1523869 (LHD), Type D #1521803 (RHD), diaphragm type std. #1523817 comb. fuel-and-vacuum pump (RHD with hinged windshield) or Type AN #1523188 separate vacuum pump (used with D pump above) optional.

For complete data, refer to Carburetion Equip. Index.

Gasoline Gauge:—Auto-Lite Electric type. Dash Unit —No. NG-9064D. Tank Unit—No. NG-9015T.

For complete data, refer to Carburetion Equip. Index.

BATTERY

BATTERY:—Willard Type MW-2-135. 6 volt, 17 plate, 135 ampere hour capacity (20 hour rate).

Starting Capacity—171 amperes for 20 minutes.

Zero Capacity—300 amperes for 5.9 minutes. Five second voltage—4.5 volts.

Grounded Terminal—Positive (+) to transmission.

Dimensions—Lgth. 10 5/16". W. 6 13/16". Hgt. 9".

Location—On left side under front seat.

STARTER

Auto-Lite Model MAX-4020A or MAX-4037. Armature No. MAW-2030.

Drive—Overrunning clutch (solenoid pinion shift).

Cranking Engine—Approx. 160-170 amps., 5 volts.

Rotation—Counter-clockwise at commutator end.

Brush Spring Tension—42-53 ozs. (new brushes).

Performance Data

Torque	R.P.M.	Volts	Amperes
0 ft. lbs.	5300	5.5	65
.65 " "	3300	5.5	100
2.75 " "	1630	5.0	200
5.5 " "	970	4.5	300
8.7 " "	600	4.0	400
12.0 " "	300	3.5	500
16.5 " "	Lock	3.	640
25.0 " "	Lock	4.	880

Removal:—Flange mounted on left front face of flywheel housing. Disconnect wire connections (tape battery lead) and oil filter lines. Remove two fastening bolts and withdraw unit.

Starting Switch:—Solenoid Pinion Shift type SS-4206. Controlled through relay by pushbutton on instrument panel. *See article in Electrical Equip. Section.*

GENERATOR

STANDARD

Auto-Lite Model GDA-4801A. Armature No. GDF-2006F. Two brush, shunt wound type with vibrating voltage and current regulation. Air cooled.

Early Car Note—GCO-4801C generator used up to engine no. 1663. *See 1938 Chrysler Model C19, C20 article for data on this generator model.*

Charging Rate Adjustment—Adjusted by changing Voltage & Current Regulator settings (no adjustment at generator). See Regulator data below.

Maximum Charging Rate—28 amperes, 8.0 volts, 2025 R.P.M., 20 M.P.H., with load or discharged battery (Current Regulator setting). Actual charging rate controlled by Voltage Regulator and dependent on battery condition.

Cold Performance Data			Hot Performance Data		
Amperes	Volts	R.P.M.	Amperes	Volts	R.P.M.
0	6.4	930	0	6.4	1010
4	6.6	1060	4	6.6	1180
8	6.85	1210	8	6.85	1350
12	7.1	1350	12	7.1	1530
16	7.3	1500	16	7.3	1730
20	7.5	1660	20	7.5	1950
24	7.75	1830	24	7.75	2220
28	8.0	2025	28	8.0	2520

NOTE—28 amperes is current regulator setting.

Rotation—Counter-clockwise at commutator end.

Brush Spring Tension—53 ozs. max. (new brushes).

Field Current—1.66-1.84 amperes at 6.0 volts.

Motor Current—3.50-4.15 amperes at 6.0 volts.

Removal:—Pivot mounted at left front of engine. To remove, take out pivot bolts and clamp bolts.

Belt Adjustment:—Loosen clamp bolt and pivot bolts, swing generator out until scale (attached to field frame) reads 40-50 lbs., tighten bolts.

GENERATOR

SPECIAL EQUIPMENT

SPECIAL GENERATOR:—Model GCB-4802A (City Police). Used with Model VRB-4009A Regulator. *See 1939 DeSoto Model S6 article for complete data.*

REGULATOR

Auto-Lite Model VRB-4004B. Voltage & Current Type. Consists of Cutout Relay, vibrating Voltage Regulator and Current Regulator in case on dash.

For complete data, refer to Electrical Equipment Index.

NOTE—Regulator case cover is sealed. Serviced on exchange basis if seals not broken.

Cutout Relay.

Cuts In—6.4-7.0 volts Cold.

Cuts Out—.5 ampere min., 3.0 amperes max. Cold.

Contact Gap—.015" minimum.

Air Gap—.034" min., .038" max. with contacts open. Measure at hinge end of core.

Voltage Regulator

Setting—7.3-7.6 volts Cold.

To Check (without breaking seals)—Connect ammeter in charging line at regulator 'B' terminal, voltmeter between 'B' and 'GD' terminals. Operate generator at speed equivalent to 30 MPH., charging battery, until voltage is steady. Voltage reading should be 7.3-7.7 volts (Cold—70°F.), 7.1-7.4 volts (Hot—140°F.).

To Adjust (with cover removed)—Change regulator armature spring tension by bending lower spring hanger slightly. See Electrical Equipment Section

Contact Gap—.010-.020" (armature against stop pin).

Air Gap—.0595- 0625" with contacts just opening.

C NTINUED ON NEXT PAGE

C NTINUED FROM PRECEDIN PA E

Current Regulator

Setting—27-29 amperes (marked '28' on cover).

To Check (without breaking seals)—Connect test meters as for Voltage check (above). Operate generator at 30 MPH., charging battery, add load (use bank of headlamp bulbs, or turn on car lights and discharge battery) so that generator charges at peak rate and Current Regulator operates. Charging current should not exceed 28 amperes. If more than slight excess noted, regulator is defective.

Adjustment, Contact Gap, Air Gap—Same as for Voltage Regulator (above).

LIGHTING

LIGHTING:—Headlamps—Corcoran-Brown pre-focused type. Upper and lower beams controlled by beam control switch on toeboard (lower beam deflected slightly to right—2331 bulb).

Headlamp Adjustment—Place unloaded car 25' from wall with upper beams lighted and lenses in place. Aim headlamps straight ahead with center of hot spot 2" below horizontal lamp center-line.

Beam Indicator—Red dot in lighting switch knob. Lighted with upper beams in use.

Switches

Lighting—Chrysler No. 694069 or 852031.
Beam Selector—Chrysler No. 853323 or 659512.
Instrument—Chrysler No. 695949.
Stop Light—Chrysler No. 677112.

Bulb Specifications

Position	Candlepower	Mazda No.
Headlamps	32-32	2331
Stop and Tail	21-3	1158
Parking, Instrument	1½	55
Beam Indicator, Ign. Switch	1½	55
Overdrive Indicator	1	51
Reading, Front Compart.	15	87
Pillar (panel)	6	81
Rear License	3	63

MISC. ELECTRICAL

CIRCUIT BREAKER:—Chrysler No. 694571 (A-L #9062-A). Thermostatic type. Mounted on ammeter and protects lighting circuits. Limits current to 35 amperes at 5 minutes. Not adjustable.

FUSES:—Dual Horns—30 ampere. On horn relay.
Transmission Overdrive Control—20 amp. On relay.
Windshield Wiper—14 amp. On switch or lead.

HORNS:—Auto-Lite. HC-5107 horn set. HH or HL-4001 (low pitch), HH or HL-4002 (high pitch). Dual horns, blended tone, operated by horn relay.

Horn Relay:—Auto-Lite Model HR-4101. 30 ampere fuse on base. **Contacts Close**—2.5-3.5 volts. **Contact Gap**—.026". **Air Gap**—.012-.017" (closed).

ENGINE

ENGINE SPECIFICATIONS: 8 cylinder, 'L' head type. **Bore**—3¼". **Stroke**—4⅞".

Displacement—323.5 cubic ins. **Rated HP**—33.80. **Developed Horsepower**—130 HP. (C23—6.8-1 Hd.), 132 HP. (C24—6.8-1 Hd.), 138 HP. (All—7.45-1 AL. Hd.) at 3400 R.P.M.

Compression Ratio and Pressure—As follows:

Ratio	Pressure at 1000 RPM.	At 100 RPM.
6.8-1 hd. (see Note)	150-160 lbs.	Approx. 118 lbs.
7.45-1 aluminum hd.	160-170 lbs.	Approx. 124 lbs.

NOTE—Cast-iron head (C23), Aluminum (C24).

Vacuum Reading—Steady 18-21" idling at 7 MPH. *See Chrysler Shop Notes for Engine Removal data.*

PISTONS:—Aluminum alloy, U-slot, cam ground type with anodic finish. Length—3⅞".

Weight—16.33 ounces (plus or minus 2 grams).

Removal—Pistons and rods removed from above.

Clearance—Top .021". Skirt .0005-.0010". See Fitting

Original Bore & Piston Sizes, Replacement Pistons:—*See Chrysler Shop Notes for sizes and markings.*

Fitting New Pistons:—Check piston size with micrometer at bottom of skirt with gauge at right angles to pin bosses. Insert .002" feeler between cylinder wall and piston (with pin removed) opposite piston slot. Pull to withdraw feeler should be 5 to 7 lbs.

Installing Pistons:—U-slot away from camshaft.

PISTON RINGS:—Four rings, all above pin. #1 Compression ring (upper inner edge beveled), #2 Compression (lower outer edge stepped), #3 and #4 oil rings (slotted type).

Ring	Width	End Gap	Side Clearance
Comp. (Top)	⅛"	.007-.015"	.002-.004"
Comp. (#2)	⅛"	.007-.015"	.0015-.0035"
Oil Control	5/32"	.007-.015"	.0015-.003"

Replacement Rings: *Refer to Chrysler Shop Notes.*

PISTON PIN:—Diameter—55/64". **Length**—2¾". Floating type. Pin hole in rod bronze bushed.

Pin Fit in Piston—Thumb push fit (piston at 130°).

Pin Fit in Rod Bushing—Thumb push fit at 70° F.

Replacement Pins: Std. & .003", .005", .008" oversize.

CONNECTING ROD:—Weight—34.37 oz. **Length**—9". **Crankpin Journal Diameter**—2 3/16".

Lower Bearing—Removable, precision type, steel-backed, babbitt-lined. Furnished in standard and 002", .010", and .012" undersizes.

Clearance—.001-.003". **Sideplay**—.006-.011".

Bearing Adjustment:—None (no shims). Replace bearings. Do not file rods or caps. Install new bearings with boss engaging groove in rod and cap.

Installing Rods:—Lower bearings are offset. Install rods with widest portion of bearing toward the rear on #1, #3, #5, and #7, toward the front on #2, #4, #6, #8. Oil hole in upper half toward camshaft.

CRANKSHAFT:—Five bearing type with eight integral counterweights. Impulse neutralizer on front end. *See Chrysler Shop Notes for Replacement Main Bearing Caps and Crankshaft Front and Rear Oil Seals.*

Journal Diameters—2 45/64" all bearings.

Bearing Type—Interchangeable precision type, steel-backed, babbitt-lined. **Clearance**—.001-.002".

Bearing Adjustment: *Refer to Chrysler Shop Notes (and recommended Engine Removal for work on crankshaft).*

Replacement Bearings: *Refer to Chrysler Shop Notes.*

End Thrust:—Taken by flange faces on rear (#5) main bearing. **Endplay**—.003-.007".

CAMSHAFT: 6 bearing. Non-adjustable chain drive.

Journal Diameters—#1, 2 1/16"; #2, 2 1/32"; #3, 2"; #4, 1 31/32"; #5, 1 15/16"; #6, 1⅜".

Bearing Type—Removable steel-backed, babbitt-lined bushings (except #6 machined in crankcase). Clearance—.001-.003" (#1), .0015-.0035" (all others).

NOTE—Replacement bearings are finish reamed.

End Thrust:—Taken by thrust plate assembled behind camshaft sprocket hub. **Endplay**—.002-.006".

Timing Chain:—Whitney #668983 Center link guide type. Width 1¼". Pitch ½". Length 23½", 47 links.

Camshaft Setting:—Sprockets are marked. Mesh chain with sprockets turned so that marks are adjacent and in line with straightedge across the shaft centers.

VALVES:—

	Head Diameter	Stem Diameter	Length
Intake	1 17/32"	.340-.341"	5⅞"
Exhaust	1 11/32"	.340-.341"	5⅞"

	Seat Angle	Lift	Stem Clearance
All Valves	45°	⅜"	.001-.003"

For Exh. Valve Seat Insert data see Chrysler Shop Notes.

Valve Guides:—Remove from above. Press new guides in place so upper end 13/16" below top of cylinder block. Install exhaust guide with counterbored end up, intake guide with tapered end up. Ream guides to inside diameter of .342-.343" (intake and exhaust) and counterbore exhaust guides at top to diameter of .365-.375" and depth of ⅜" after installing.

Valve Springs:—Free length approximately 2 19/64". Limit of compression 1 29/64".

	Spring Pressure	Spring Length
Valve Closed	52-58 lbs.	2 1/32"
Valve Open	129-137 lbs.	1 21/32"

NOTE—Spring #685616 used on first C23 cars same as above except: Pressure (valve open) 122-130 lbs. at 1 11/16". Spring #699190 (C23 later cars, all C24

Valve Lifters: Mushroom type. Stem diam. ⅝". Ream holes from above (pilot in valve stem guide) for lifters furnished .001", .008", .030", .060" oversize.

VALVE TIMING

Tappet Clearance:—.008" Intake, .010" Exhaust (with engine hot). .002" additional exhaust tappet clearance recommended by car manufacturer for cars driven at sustained high speeds. NOTE—Tappet screws are self-locking type (no lock nuts used). Remove right front wheel and housing panel for access to valves.

Valve Timing:—See Camshaft Setting above.

Intake Valves—Open 6° BTDC. Close 50° ALDC.

Exhaust Valves—Open 44° BLDC. Close 12° ATDC.

Valve Timing Check—Set tappet clearance for #8 intake valve at .011" (remove right front wheel and wheel housing for access to valves). This valve should open with piston 6° (.0170") before top dead center with 6° BTDC. mark (sixth graduation to left of '0' mark) on impulse neutralizer opposite pointer on chain case cover at front of engine. Reset tappet clearance at .008" (engine hot).

LUBRICATION

LUBRICATION:—Pressure system with gear type oil pump mounted on right side of crankcase.

Normal Oil Pressure: 30-45 lbs. at 30 MPH, 15 idling.

Oil Pressure Regulator:—Located under plug on left hand side of crankcase. Adjustable type. To adjust, remove cap, withdraw locking wire, turn slotted plug clockwise to increase pressure, or counter-clockwise to decrease pressure.

Crankcase Capacity:—6 quarts (refill).

COOLING

COOLING SYSTEM:—Capacity—24 quarts.

Radiator Core Removal—*See Chrysler Shop Notes.*

Water Pump:—Packless type with factory-lubricated and sealed ball-bearing shaft.

See Water Pump Section for complete data.

Removal—Drain cooling system, remove hood side panels and fan shroud-to-radiator core bolts. Rotate fan shroud around radiator inlet hose (to free shroud) and lift out. Take out fan blade-to-pulley screws and remove blades. Remove pulley and free fan belt by pushing pulley and belt off pump shaft. Take out by-pass elbow-to-pump body capscrews. Free large water pump inlet hose and remove pump body capscrews and nut (on lower edge of pump body) pushing pump off stud and block.

Thermostat:—Fulton. In cylinder head water outlet elbow. Install thermostat with bellows down.

Setting—Start to open 157-162°F. Fully open 183°F.

Temperature Gauge:—Motometer (Auto-Lite) Vapor tension type. Part No. H-9063.
See Miscellaneous Section for complete data.
Drain Valves: At lower left rear corner of radiator and on lower left side of block near distributor.

CLUTCH

C23—Borg & Beck 11A6. #929 stamped on cover.
C24—Borg & Beck 10A6. #933 stamped on cover.
Type—Both are single plate, dry disc types with spiral grooved facings, pressure plate oil baffle and new Over-center return spring (hooked to pedal).
See Clutch Section for complete data.
Facings—Woven and compressed (spiral grooved type), 2 used. Inside Diam. 6½" (10A6), 6" (11A6). Outside Diam. 11" (11A6), 10" (10A6). ⅛" Thick.
Adjustment:—Clutch pedal should just clear under side of toeboard. To adjust, loosen locknut and turn stopscrew located at rear of pedal above shaft. Free movement of pedal should be 1". To adjust, turn clutch release fork adjusting nut on connector link
Removal:—Remove floorboard. Take out clutch release fork pull-back spring, and cotter pin and clevis pin in clutch release fork rod. Pull clutch release fork out. Remove transmission (see Transmission Removal following for instructions) and clutch housing underpan. Mark cover and flywheel with punch mark (assemble to these marks when re-installing assembly). Remove clutch cover screws and washers (release spring tension evenly by turning each screw a few turns at a time). Assembly can then be lowered out through pan opening.
C24 Note—Cross-member under clutch housing pan must be removed (was rivited on early cars).

FLUID DRIVE

MODEL C24

FLUID DRIVE (USED ON MODEL C-24 ONLY):—Consists of fluid coupling assembled to rear of engine in place of conventional flywheel.
See Miscellaneous Section for complete data.
Removal:—Remove clutch (See Removal Instructions for C24 above). Turn fluid drive unit to place one filler plug at bottom, remove plug with Allen type wrench and allow unit to drain. Remove engine oil pan and rear main bearing cap. Remove crankshaft-to-fluid drive bolt nuts (secures fluid drive unit to crankshaft flange), pull drive unit to rear until free from crankshaft flange. Then entire assembly (with clutch driving plate attached) may be lowered out through pan opening.

TRANSMISSION

Model C23—Warner Model. All helical gear type, with constant-mesh, synchro-mesh (second and high), sliding gears (low and reverse).
See Transmission Section for complete data.
Model C24—Warner Model AS5-T85A. Same as C23 above plus electric 'kick-down' Overdrive.
See Transmission Section for complete data.
Transmission Control: Steering column shift.
See Transmission Section for complete data.
Removal (C23): Remove floorbd., disconnect battery ground cable at transmission. Disconnect front and rear universal joints. Remove hand brake cable clevis pin at rear of transmission. Take off speedometer cable. Disconnect gearshifter rod and cable at lever on transmission case. Remove transmission cover capscrews and lift cover assembly out. Block up rear of engine until load on transmission supports just relieved (CAUTION—Car must be level so that engine alignment maintained. If front of car raised, engine will set toward rear due to rocking on front rubber support, this in turn may prevent transmission from being withdrawn). Then loosen transmission side supports at frame, place jack under transmission to support weight, and remove support bracket frame bolts. Remove transmission-to-clutch housing stud nuts and two upper studs (install two nuts on end of stud and turn stud out), install two pilot studs. Take off transmission supports from frame and transmission case. Pull transmission out.
Removal (C24): Same as for C23 (above) plus the following after removing rear propeller shaft, take off four front companion flange nuts, four frame-to-center bearing mounting screws, slide bearing and front shaft back through frame X-member opening (If spacer used between frame and bearing mounting, replace spacer when re-installing). Remove universal joint flange and brake drum from shaft, and clevis pin from brake cable. Take off brake assembly from overdrive case. Disconnect overdrive control cable, solenoid wire, remove coil. To remove, turn assembly over on left side while withdrawing until shaft free of release bearing, then push up on forward end until shaft above bearing, then push assembly forward with shaft extending between two clutch fingers. Assembly can then be lowered at rear and withdrawn.

OVERDRIVE

Overdrive Transmission:—Warner Model AS5-T85A overdrive transmission with electrical kick-down control Optl. on Model C23, Std. on Model C24.
See Transmission Section for complete data.
Removal: Overdrive transmission removed as directed above for standard C24 transmission except that on Model C23 only one propeller shaft used. Remove this shaft in usual manner by disconnecting front and rear universal joints.
Overdrive Solenoid—Auto-Lite SSB-4001.
Overdrive Solenoid Indicator—Jewel light on instrument panel above speedometer. Lights whenever car shifted from overdrive to direct drive through accelerator pedal switch.
Throttle Switch Setting—3/32" gap between switch plunger & contact screw (throttle just wide open).
Control Relay—Auto-lite HR-4201. Use 20 amp. fuse.

UNIVERSALS

UNIVERSAL JOINTS:—**Detroit-Universal Series 4400 (C-23), Series 5350 (C-24).** Ball and trunnion type with roller bearings (C-23). Cross type with roller bearings (C-24). Three joints used on C-24.
See Universals Section for complete data.
Propeller Shaft Center Bearing (C-24):—*See Chrysler Shop Notes for removal and installation data.*

REAR AXLE

REAR AXLE:—**Own.** Semi-floating, hypoid gear type with Hotchkiss drive.
See Rear Axle Section for complete data.
Ratio (C-23)—3.91-1 (standard). 4.1-1 (special). 4.3-1 (cars with overdrive).
Ratio (C-24)—4.9-1.
Backlash—.006-.010". Screw adjustment.
Removal:—Disconnect drive shaft at rear universal. Remove axle shafts (see below) and capscrews on carrier flange. Lift carrier assembly out.
Axle Shaft Removal—Remove wheel, hub, and drum assembly (use screw type hub puller—Tool C-319), block brake pedal, disconnect brake line at wheel cylinder, take off backing plate with oil seal, pull shaft and bearing (Tool C-158).
Wheel Bearing Adjustment:—Shims between backing plate and axle housing. With wheel and hub removed, check endplay with dial indicator. To adjust, remove backing plate (see above), add or remove shims equally (at both wheels). **Endplay**—.003-.008".

SHOCK ABSORBERS

SHOCK ABSORBERS:—**Delco or Monroe.** Direct acting, hydraulic types. Delco types are adjustable except on Model C-23 (Domestic).

Model	Make	Front	Rear
C-23 (Domestic)	Delco	1110-C	1111-T
" (Domestic)	Monroe	696240	696242
" (Export)	Delco	1114-C	1115-T
" (Export)	Delco	1134-E	1130-W
C-24 (Dom. & Exp.)	Delco	1134-E	1130-W
" (Domestic)	Monroe	696241	696242

See Shock Absorber Section for complete data.

FRONT SUSPENSION

Front Suspension:—Independent, linked parallelogram type with coil springs.
See Front Suspension Section for complete data.
Specifications below apply with no passenger load.
Kingpin Inclination—5¾-7° (C-23), 4¾-6° (C-24).
Camber—0° preferred (C-23), ¼° preferred (C-24). Limits minus ¼° to plus ½°.
Caster—Minus ½° to plus 1½° (C-23). 1-3° (C-24).
Toe In (C-23)—1/16" preferred, limits 0-⅛". Set long tie rod to 30 25/32" (between ball centers) and adjust short rod only for toe-in adjustment.
Toe In (C-24)—1/16" preferred, limits 0-⅛". Adjust both tie rods equally.
Steering Geometry (Toe-out on Turns)—Inner wheel turned 22°0' (C-23), 22°15' (C-24). Outer wheel 20°.

STEERING GEAR

Steering Gear: Gemmer Model 335 (C23), Model 375 (C24) Worm-and-Roller type with "push-pull" adjustments.
See Steering Gear Section for complete data.

BRAKES

BRAKES:—**Service.** Lockheed hydraulic, double anchor type. Bendix vacuum power unit used on Model C-24. Hand lever applies independent shaft brake.
See Brake Section for complete data.
Wheel Cylinders—Stepped or two-stage bore type.
Front Wheel—Front cylinder 1¼". Rear 1⅜".
Rear Wheel—Front cylinder 1⅛". Rear 1¼".
Drums—Centrifuse. Diameter 12" (C23), 14" (C24).
Lining (C-23)—Molded. Width 2". Thickness 13/64". Length per shoe 12 9/16".
Lining (C-24)—Molded. Width 2¼". Thickness ¼". Length per shoe 14 21/32".
Clearance—.012" toe, .006" heel, for each shoe.
Braking Power—55% front, 45% rear.
Hand Brake:—On drum at rear of transmission.
Adjustment—*See Chrysler Shop Notes.*
Drum—Cast-iron. Diameter—6".
Lining—Width 2". Thickness 5/32". Length 17 1/16".
Power Brake Unit:—Bendix Internal Valve type.
See Brake Section for complete data.

MISC. MECHANICAL

WINDSHIELD WIPER:—**Auto-Lite EW-5001, 5101.** Electric type. 14 ampere fuse in feed lead (first cars), on switch (later cars). *For complete data, and Recommended Changes on First Cars, refer to Auto-Lite 'EW' Windshield Wiper article in Miscellaneous Section.*

FRONT END ASSEMBLY (UNIT) REMOVAL:—Should be removed as a unit for work on front of engine.
See Chrysler Shop Notes for directions.

MODEL IDENTIFICATION

SERIAL NUMBER:—On right front door hinge post. First number: Detroit—7,625,001 (Royal), 6,955,201 (Windsor). Canada—9,714,601 (Royal).

ENGINE NUMBER:—First number C25-1001. Stamped on left side of block between #1 and #2 cylinders.
See Chrysler Shop Notes for engine number lettering ('Special Standard' bore and bearing sizes).

TUNE-UP

COMPRESSION:—Ratio and pressure as follows:

Ratio	Pressure at 1000 RPM	At 100 RPM
6.5-1 cast-iron hd.	140-150 lbs.	Approx. 115 lbs.
*7.0-1 aluminum hd.	150-160 lbs.	Approx. 120 lbs.

*—This head standard equip. on 7 passenger sedan.

VACUUM READING:—Steady 18-21" idling at 6 MPH.

FIRING ORDER: 1-5-3-6-2-4. See diagram.

SPARK PLUGS: Auto-Lite Type A-7B (Cast Iron Head), AL-7A (Aluminum Head). 14 mm. Metric type. **Gaps**—.025".

IGNITION: See Coil, Condenser, and Distributor.
Breaker Gap—.020". **Cam Angle** 38° (closed).
Automatic Advance—12° max. at 1750 RPM (distr.).
Vacuum Advance—11° distr. with 17" vacuum (IGS-4108A-1), 7° distr. with 15" vacuum (IGS-4108-1).

IGNITION TIMING: See Ignition Timing.
Std. Setting—At TDC. (6.5-1 Head), 2° ATDC. (7.0-1 Head) with dead center "DC" mark or correct degree mark on impulse neutralizer at indicator on front of engine.

CARBURETION: See Carburetor & Carb. Equipment.
Idle Setting—Idle screw ½-1½ turns open. Idle speed 6 MPH.
Float Level—5/64" top of float below top edge of bowl.
Accelerating Pump—Center hole normal. Inner hole (Summer), Outer hole (Winter) for extreme temp.
Fuel Pump Pressure: 4¼ lbs. maximum.

MANIFOLD HEAT CONTROL:—Thermostatic coil type. See that shaft and valve rotate freely. When installing coil, wind free end approximately 1 turn counter-clockwise and hook end over stop stud.

VALVES: See Valve Timing.
Tappet Clearance:—.008" Int., .010" Exh. (hot & idling). .002" add'tl exh. clearance desirable for sustained high speeds. NOTE—Tappet screws self-locking (no locknuts). Remove right front wheel, lower housing panel and fuel pump shield for access to valves.

STARTING: See Battery, Starter, Generator, Regulator.

IGNITION

Ignition Switch:—Mitchellock Model 24-R, No. 8197. **Ignition Lock**—Yale & Towne or Briggs & Stratton. B&S No. 80651. Key Series 1BP to 1000BP. Groove #24.

COIL: Auto-Lite Model IG-4661. Service winding (less switch and cable) IG-3224JS. Mounted on dash. *Ignition Current*—2.25 amperes idling, 5.5 stopped.

CONDENSER: Auto-Lite Part No. IG-3927A.
Capacity—.25-.28 microfarad.

DISTRIBUTOR: Auto-Lite Model IGS-4108A-1, IGS-4108-1. Single breaker, 6 lobe cam, full automatic advance type with auxiliary vacuum spark control and manual (Octane Selector) adjustment at distributor.
NOTE—IGS-4108A-1 used up to Eng. No. C25-7046 (U.S.), C-25-1376 (Can.). IGS-4108-1 after this No.
Breaker Plate Identification—Maximum vacuum advance limited by slot and marked with number #11 (IGS-4108A-1), #7 (IGS-4108-1) stamped on plate.
Breaker Gap—Set at .020". Limits .018-.022".
Cam Angle or Dwell—38° closed, 22° open (distr.).
Breaker Arm Spring Tension—17-20 ounces.
Rotation—Clockwise viewed from the top.

Automatic Advance

Distributor Degrees	R.P.M.	Engine Degrees	R.P.M.
Start	350	0	700
3	400	6	800
6	850	12	1700
9	1300	18	2600
12	1750	24	

Vacuum Spark Control—Integral type (on distributor, linked directly to breaker plate). Provides additional advance at speeds above idling except when engine accelerated or operated with wide open throttle (spark retarded by return spring in unit).

Vacuum Advance—IGS-4108A-1

Distr. Degrees	Eng. Degrees	Vacuum (" of HG)
Start	0°	5"
2°	4°	7¼"
5°	10°	10½"
8°	16°	13¾"
11°	22°	17"

Vacuum Advance—IGS-4108-1

Start	0°	5"
1°	2°	6½"
3°	6°	9¼"
5°	10°	12⅛"
7°	14°	15"

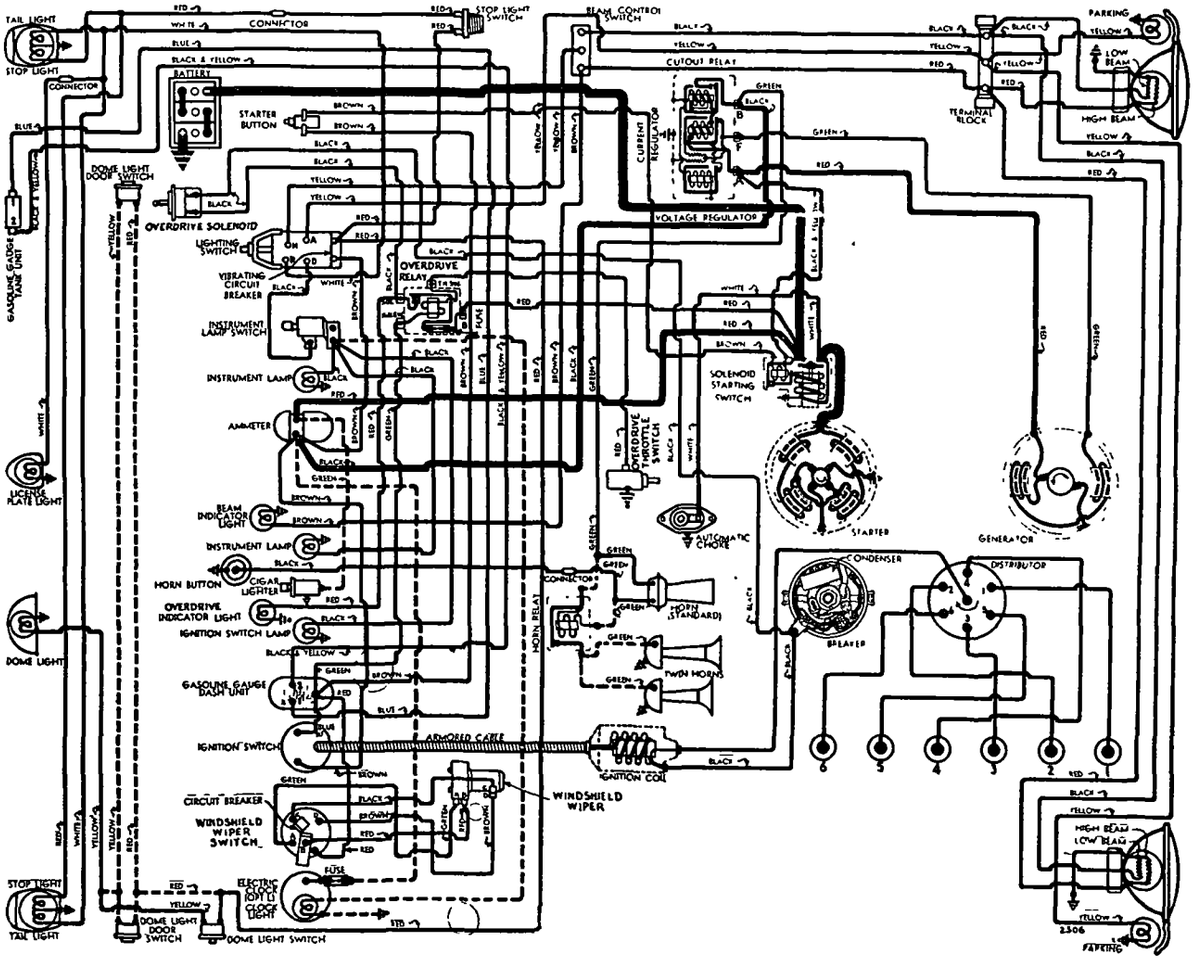

Manual Adjustment—At distributor. Provides 10° advance or retard from center '0' position. See Ignition Timing for adjustment.

Distributor Removal:—Mounted on left side of crankcase. To remove, disconnect vacuum line, take out hold-down screw in lock plate.

IGNITION TIMING

IGNITION TIMING:—Initial setting (correct for fuel of 70 octane rating at low altitudes for both cast-iron and aluminum heads) shown below. See Manual adjustment (following) for correction (not to exceed 4° either way) dependent on fuel regularly used and operating conditions.

	Flywheel Degrees	Piston Position
6.5-1 cast-iron hd.	0° at TDC	.0000" at TDC
7.0-1 aluminum hd.	2° ATDC	.002" ATDC

NOTE—Impulse neutralizer marked 'DC' at TDC point with 15 (1°) graduations on either side.

Timing (Using Timing Light)—Connect timing light between distributor and battery terminal on the generator regulator. With #6 piston on compression, turn engine over until piston reaches firing position (see Initial Setting above), stop when correct mark on impulse neutralizer lines up with pointer on chain case cover. Loosen lock-plate hold-down screw, center pointer on scale, tighten screw. Loosen lock-plate clamp bolt, rotate distributor until timing light just goes out, tighten clamp bolt. Check Manual Adjustment as directed below.

Timing (Using Synchroscope)—Tool C-374. Clip lead to #1 spark plug, direct light on impulse neutralizer (fill in correct mark on impulse neutralizer with chalk or paint), idle engine and adjust distributor as directed above.

Manual Adjustment—Initial ignition setting (listed above) should be varied not more than 4° (Cast-iron head from 4° or .007" BTDC to 4° or .007" ATDC. Aluminum head from 2° or .002" BTDC to 6° or .016" ATDC) so that slight ping noticeable between 10 and 30 MPH when accelerating with wide open throttle for best performance. To adjust, loosen lock-plate hold-down screw, rotate distributor counter-clockwise to advance spark (if no ping noted), clockwise to retard spark (if ping too severe) not more than 4°. Scale graduated in engine degrees.

CARBURETOR

CARBURETION:—**Carburetor**—Carter (Ball & Ball) Model E6S1 (early cars), E6S2 (later cars). 1½" single barrel, downdraft type.

For complete data, refer to Carburetor Index.

E6S1 Note—Can be changed to E6S2 specifications by changing parts (carburetors marked E6S1* on bowl cover factory equipped to E6S2 specifications).

See article in Carburetor Section for part changes.

Idle Adjustment—With engine warm and running at slow idle speed (choke valve wide open, fast idle inoperative), set throttle stopscrew for 6 MPH idle speed. Adjust idle adjusting screw until engine fires smoothly (½-1½ turns open—turn screw in for leaner mixture). Readjust idle speed. **NOTE—Car manufacturer recommends use of vacuum gauge. Set idle screw for highest reading on gauge.**

Accelerating Pump Setting—Pump lever has three holes for pump link engagement. Set as follows:
Inner Hole (min. stroke)—Extreme hot temperatures or altitudes above 3000 feet.
Center Hole (med. stroke)—Normal setting.
Outer Hole (max. stroke)—Winter temperatures.

NOTE—If lean metering jets (High Alt. calibration) used at lower altitudes for increased economy, reduced speed and power will result (not recommended by manufacturer). See Carter (B&B) Jet Table in Carburetor Section for complete jet data.

Float Level—5/64" from top of float (not soldered seam) to top edge of float bowl.

Fast Idle:—Not adjustable (built-in type).

Automatic Choke:—Sisson Type AC-758B.

For complete data, refer to Carburetion Equip. Index.

CARB. EQUIPMENT

Air Cleaner:—AC #1529041 oil-wetted type standard.

Fuel Pump:—AC Type AT #1523912 diaphragm type. Type AS #1523913 combination fuel-and-vacuum pump used on cars with swinging windshield.

For complete data, refer to Carburetion Equip. Index.

Gasoline Gauge:—Auto-Lite electric. No. NG-9356D (dash unit), No. NG-9329T (tank unit).

For complete data, refer to Carburetion Equip. Index.

BATTERY

BATTERY:—**Willard Type SW-2-119.** 6 volt, 15 plate, 119 ampere hour capacity (20 hour rate).
Starting Capacity—140 amperes for 20 minutes.

Zero Capacity—300 amperes for 4.3 minutes. Five second voltage—4.3 volts.

Grounded Terminal—Positive (+) grounded to the transmission case.

Dimensions—Lgth 10 5/16". Width 7". Hght 9 5/16".
Location—Left side under front seat.

STARTER

Auto-Lite Model MAX-4020A. Armature MAW-2030.

Drive—Solenoid operated pinion shift type. Drive through overrunning clutch.

Cranking Engine—Approx. 160 amperes, 5 volts.

Rotation—Counter-clockwise at commutator end.

Brush Spring Tension—42-53 ozs. (new brushes).

Performance Data

Torque	R.P.M.	Volts	Amperes
0 ft. lbs.	5300	5.5	65
.65 " "	3300	5.5	100
2.75 " "	1630	5.0	200
5.5 " "	970	4.5	300
8.7 " "	600	4.0	400
12.0 " "	300	3.5	500
16.5 " "	Lock	3.0	640
25.0 " "	Lock	4.0	880

Removal:—Flange mounted on left front face of flywheel housing. Disconnect wire connections (tape battery lead) and oil filter lines. Remove two fastening bolts and withdraw unit.

Starting Switch:—Solenoid Switch Type SS-4206.

For complete data, refer to Electrical Equipment Index.

GENERATOR

Auto-Lite Models GDZ-4801A (Std.), GDZ-4801B or GEB-4801A (Police). Armature No. GDZ-2006F (GDZ-4801A, B), GEB-2006F (GEB-4801A). Two brush type with current voltage control. Air-cooled.

Charging Rate Adjustment—No adjustment at generator. Charging rate controlled by Voltage Regulator and maximum output by Current Regulator.

Maximum Charging Rate—35 amperes (GDZ Gen.), 32 amperes (GEB Gen.), 8.0 volts, 2200 Gen. RPM (GDZ), 1400 RPM (GEB), at approx. 24 MPH (GDZ) and above with load or discharged battery (Current Regulator setting). Actual charging rate controlled by voltage regulator and dependent on battery condition.

Performance Data—GDZ-4801A, B

Cold Amperes	Cold Volts	Cold R.P.M.	Hot Amperes	Hot Volts	Hot R.P.M.
0	6.4	925	0	6.4	1000
4	6.6	1035	4	6.6	1120
8	6.75	1140	8	6.75	1235
12	6.95	1250	12	6.95	1350
16	7.15	1370	16	7.15	1460
20	7.3	1480	20	7.3	1590
24	7.5	1590	24	7.5	1730
28	7.7	1710	28	7.7	1900
32	7.9	1820	32	7.9	2090
*35	8.0	1900	35	8.0	2250

Performance Data—GEB-4801A

0	6.4	560	0	6.4	600
4	6.6	630	4	6.6	675
8	6.8	700	8	6.8	750
12	7.0	775	12	7.0	840
16	7.2	845	16	7.2	930
20	7.4	920	20	7.4	1030
24	7.6	1000	24	7.6	1140
28	7.8	1075	28	7.8	1260
*32	8.0	1150	32	8.0	1400

*—Current regulator setting.

Rotation—Counter-clockwise at commutator end.

Brush Spring Tension—53 ozs. max. (GDZ Gen), 64-68 ozs. (GEB Gen.), with new brushes.

Field Current—1.60-1.78 amperes at 6.0 volts (all).
Motoring Current—4.16-4.60 amperes (GDZ Gen.), 4.0-4.5 amperes (GEB Gen.) at 6.0 volts.

Removal:—Pivot mounted at left side of engine at front. To remove, take out pivot and clamp bolts.

Belt Adjustment:—Loosen clamp and pivot bolts, swing generator out until scale (attached to field frame) reads 40-50 lbs., tighten bolts.

REGULATOR

Auto-Lite Model VRP-4001A (GDZ Gen.), VRP-4001B (GEB Gen.). Current-voltage type. In case n dash. NOTE—For negative battery ground, VRP-4005A (GDZ Gen.), VRP-4005B (GEB Gen.) are used.

For complete data, refer to Electrical Equipment Index.

NOTE—Regulator case cover is sealed. Serviced on exchange basis if seals not broken.

Cutout Relay

Cuts In—6.4-6.6 volts at approximately 1000 generator RPM (VRP-4001A,5A), 600 RPM (VRP-4001B,5B).
Cuts Out—4.2-4.8 volts (approx. 4-6 amps. disch.).
Contact Gap—.015" minimum.
Air Gap—.031" min., .034" max. with contacts open.

CONTINUED N NEXT PAGE

C NTINUED FR M PRECEDIN PA E

Voltage Regulator

Setting—7.2-7.5 volts at 70° F.

To Check (without breaking seals)—Connect ammeter in charging line at regulator 'B' terminal, voltmeter between 'B' terminal and ground. Operate generator at speed equivalent to 30 MPH charging battery until voltage is steady. Voltage reading should be 7.2-7.5 volts at 70° F. See Electrical Equipment Section for voltages at other temperatures.

To Adjust (with cover removed)—Change regulator armature spring tension by bending lower spring hanger slightly. See Electrical Equipment Section.

Contact Gap—.012" Min. (armature against stop pin).

Air Gap—.048-.052" with contacts just opening.

Current Regulator

Setting (VRP-4001A,5A)—34-36 amperes (marked '35' on cover). (VRP-4001B, 5B) 31-33 (marked '32').

To Check (without breaking seals)—Connect test meters as for Voltage check (above). Operate generator at speed equivalent to 30 MPH charging battery, turn on car lights and accessories so that generator charges at peak rate and Current Regulator operates. Charging current should not exceed maximum setting noted above. If more than slight excess noted, regulator is defective.

Adjustment & Contact Gap—Same as for Voltage Regulator (above).

Air Gap—.034-.038" (before No. 5U-000001), .048-.052" (after above No.) with contacts just opening.

LIGHTING

LIGHTING:—**Headlamps**—Corcoran-Brown 'Sealed Beam' type. *See article in Electrical Equipment Section.*

Headlamp Adjustment—Aim upper beam for each lamp straight ahead with center of hot spot 3" below lamp center height.

Beam Indicator—Red light in upper left corner of speedometer dial. Lighted with upper beams on.

Switches

Lighting—Chrysler No. 854794, 857380 Optl.

Beam Selector—Chrysler No. 859974.

Instrument—Chrysler No. 853371.

Stop Light—Chrysler No. 677112 hydraulic type.

Bulb Specifications

Position	Candlepower	Mazda No.
Headlamps	Sealed Beam	
Parking, Instrument	1½	55
Beam Indicator, Ign. Sw.	1	51
Stop and Tail	21-3	1158
Rear License	3	63
Dome or Reading	15	87
Overdrive Indicator	1	51

MISC. ELECTRICAL

LIGHTING CIRCUIT BREAKER:—Vibrating, thermostatic type. Mounted on lighting switch.

FUSES:—**Clock**—2 ampere. In connector behind clock.

Transmission Overdrive Control—20 amp. On relay.

Horns & Windshield Wiper—No fuse used.

Radio—14 amp. In feed wire behind instr. panel.

HORNS:—**Single**—Delco-Remy No. 1999911 standard.

Dual—Auto-Lite HO-5001 horn set, HL-4001 (low pitch), HL-4002 (high pitch) operated by horn relay.

Current Draw—Approx. 7 amps. single, 35-40 dual.

Horn Relay:—Auto-Lite Model HRC-4001 (no fuse).

Contacts Close—1.5-3.0 volts. **Open**—.5 volt.

Contact Gap—.026". **Air Gap**—.016-.020" (closed).

ENGINE

ENGINE SPECIFICATIONS:—6 cylinder, 'L' head type. **Bore**—3⅜". **Stroke**—4½".

Displacement—241.5 cu. ins. **Rated HP**—27.34.

Developed Horsepower—108 (Std. 6.5-1 hd.), 112 HP (Optl. 7.0-1 hd.—Std. 7 pass.) at 3600 RPM.

Compression Ratio and Pressure—As follows:

Ratio	Pressure at 1000 RPM	At 100 RPM
6.5-1 cast-iron hd.	140-150 lbs.	Approx. 115 lbs.
7.0-1 aluminum hd.	150-160 lbs.	Approx. 120 lbs.

Vacuum Reading—Steady 18-21" idling at 6 MPH. *See Chrysler Shop Notes for Engine Removal data.*

PISTONS:—Aluminum alloy, U-slot, cam ground, tin coated. **Length** 3⅞". **Weight** 17.5 ozs. (stripped).

Removal—Pistons and rods removed from above.

Clearance—Top .0115". Skirt .0000-.0010".

Original Bore & Piston Sizes, Replacement Pistons:—*See Chrysler Shop Notes for sizes and markings.*

Fitting New Pistons:—Check piston size with micrometer across large diameter at bottom of skirt. Insert .002" feeler between cylinder wall and piston (pin removed) on side opposite slot. With piston and block at 70° F, pull to withdraw feeler 5-7 lbs.

Installing Pistons—Slot away from camshaft.

PISTON RINGS:—4 rings, all above pin—#1 Compression (upper inner edge beveled), #2 Comp. (lower outer edge stepped), #3 & 4 (slotted oil rings).

Ring	Width	End Gap	Side Clearance
Comp. (Top)	⅛"	.007-.015"	.002-.004"
Comp. (#2)	⅛"	.007-.015"	.0015-.0035"
Oil Control	5/32"	.007-.015"	.001-.0025"

Replacement Rings:—Std. & .003", .005", .010", .015", .020", .023", .025", .030", .040", .050", .060" oversize.

PISTON PIN:—**Diameter**—55/64". **Length**—2⅞". Floating type. Pin hole in rod bronze bushed.

Pin Fit in Piston—Thumb push fit (piston at 130°).

Pin Fit in Rod Bushing—Thumb push fit at 70°F.

Replacement Pins:—Std. & .003", .005", .008" oversize.

CONNECTING ROD:—**Weight**—33.9 ozs. (with bearings and bolts). **Length**—7⅞".

Crankpin Journal Diameter—2⅛".

Lower Bearing—Removable, precision type, steel-backed babbitt.

Clearance—.0005-.0025". **Sideplay**—.0055-.0115".

Bearing Adjustment:—None (no shims). Install bearings with boss engaging groove in rod and cap.

Replacement Bearings: *Refer to Chrysler Shop Notes.*

Installing Rods:—Oil spit hole toward camshaft.

CRANKSHAFT:—4 bearings, 9 integral counterweights. **Journal Diameters**—2½" all bearings.

Bearing Type—Removable, precision type steel-backed, babbitt-lined. **Clearance**—.001-.002".

Bearing Adjustment:—*See Chrysler Shop Notes for Bearing Removal and Adjustment, Front Main Bearing Cap Removal, and Crankshaft Front & Rear Oil Seals.*

Replacement Bearings & Bearing Caps: *Refer to Chrysler Shop Notes for complete data.*

End Thrust:—Taken by flange faces on rear (#4) main bearing. **Endplay**—.003-.007".

CAMSHAFT:—4 bearing. Non-adjustable chain drive. *See Chrysler Shop Notes for camshaft removal.*

Journal Diameters—#1, 2"; #2, 1 31/32"; #3, 1 15/16"; #4, 1¼".

Bearing Type—Removable steel-backed, babbitt-lined bushings (except #4 machined in block).

Clearance—.001-.003" (#1), .0015-.0035" (all others).

End Thrust:—Taken by thrust plate behind camshaft sprocket hub. **Endplay**—.002-.006".

Timing Chain:—Morse Type 1883-N, No. 2661. Width 1". Pitch .500" (½"). Length 24" or 48 links.

Camshaft Setting:—Sprockets marked. Mesh chain with sprockets turned so that '0' marks are adjacent and in line with a straightedge across shaft centers.

VALVES:	Head Diameter	Stem Diameter	Length
Intake	1 21/32"	.340-.341"	4 25/32"
Exhaust	1 17/32"	.340-.341"	4 25/32"

	Seat Angle	Lift	Stem Clearance
All Valves	45°	⅜"	.0015-.0035"

See Chrysler Shop Notes for Exh. valve seat insert data.

Valve Guides:—Remove from above. Press new guides in (stepped end down) with upper end ⅞" below top of block (Tool CM-83), finish ream to .3425-.3435".

Valve Springs:—Install with closely coiled ends to top.

Free length 2".	Spring Pressure	Length
Valve Closed	40-45 lbs.	1¾"
Valve Open	107-115 lbs.	1⅜"

Valve Lifters:—Mushroom type (remove from below). Stem diam. ⅝". Ream holes from above (pilot in valve stem guide). Oversizes .001", .008", .030", .060".

Lifter Clearance in Block—.000-.001".

VALVE TIMING

Tappet Clearance:—.008" Int., .010" Exh. (hot & idling). .002" additional exh. clearance desirable for sustained high speeds. NOTE—Tappet screws self-locking (no locknuts). Remove right front wheel, lower housing panel and pump shield for access.

Valve Timing:—See Camshaft Setting above.

Intake Valves—Open 12° BTDC. Close 44° ALDC.

Exhaust Valves—Open 50° BLDC. Close 6° ATDC.

Valve Timing Check—With .014" (cold) tappet clearance #6 intake valve should open with #6 piston 12° or .063" BTDC with 12th graduation before DC mark on impulse neutralizer aligned with pointer on chain cover. Reset tappet cl. at .008" hot.

LUBRICATION

LUBRICATION:—Pressure (pump on right of engine). *See Chrysler Shop Notes for oil pump removal.*

Normal Oil Pressure:—30-45 lbs. @ 30 MPH, 15 idling.

Oil Pressure Relief Valve:—Under plug below starter. Opens at 40-45 lbs. To increase pressure use heavy (green), to decrease light (red), spring.

Crankcase Capacity:—5 quarts (refill).

COOLING

COOLING SYSTEM:—**Capacity**—18 quarts. *See Chrysler Shop Notes for radiator core removal.*

Water Pump:—Packless type with belt drive. *See Water Pump Section for complete data.*

Removal—Drain water. Remove fan blade assembly, pulley, radiator outlet hose at pump, by-pass elbow (with small hose), pump mounting stud nuts, fan belt adjusting strap at generator, adjusting strap stud and lower pump stud from block.

Thermostat—Bishop & Babcock or Fulton. In outlet on head. Starts to open 157-162°. Fully open 183°

Temperature Gauge—Motometer (Auto-Lite) Vapor tension type. A-L Part No. H-9355.

See Miscellaneous Section for complete data.

CLUTCH

CLUTCH:—Borg & Beck Model 10A7, 11A6 (Taxi) with 'Borglite' driven member. #940 (10A7), #941 (11A6) stamped on cover. Single plate, dry disc type with spiral grooved facings, pressure plate oil baffle & pedal over-center return spring.
See Clutch Section for complete data.

Facings—Spiral wound moulded woven, 2 used. Inside Diam. 7" (10A7), 6½" (11A6), Outside Diam. 10" (10A7), 11" (11A6). Thickness ⅛" (all).

Adjustment:—Pedal should just clear toeboard (adjust stopscrew on lower end) and have 1" free movement (adjusting nut on link rod at clutch fork).

Removal:—Remove release fork pull-back spring, Transmission (see following) and housing underpan. Disconnect release fork from pivot and pull out as far as possible. Mark cover and flywheel, remove cover screws evenly, lower assembly out.

TRANSMISSION

TRANSMISSION:—Own Make. All helical gear, constant-mesh, synchro-mesh (second & high), sliding gear (Low and Reverse).
See Transmission Section for complete data.

Transmission Control:—Steering column shift Std.
See Transmission Section for complete data.

Removal:—Remove propeller shaft (loosen comp. flange nut if transmission to be disassembled—see Chrysler Shop Notes for Propeller Shaft Center Bearing Removal on 7 pass.). Disconnect speedometer cable, battery ground cable, hand brake cable, and gear shift rod and cable at transmission. Remove mounting stud nuts and lockwashers. Pull unit back, lower and remove from under car.

OVERDRIVE

Overdrive: Warner Model R7B type with electrical "kick-down" control Optl. on Windsor model.
See Transmission Section for complete data.

Overdrive Solenoid—Auto-Lite SSB-4001.

Throttle Switch Setting—3/32" gap between switch plunger & contact screw (throttle just wide open).

Control Relay—Auto-Lite HR-4201. Use only 20 ampere fuse on relay (on left side of engine dash).

Overdrive Indicator Light—In upper right corner of speedometer dial. Lights when 'kick-down' direct drive operating.

Overdrive Transmission Removal—Same as above, plus the following: Remove hand brake assembly (U-joint flange, brake drum, band and support). Disconnect solenoid wires (remove coil) and overdrive cable at case. Remove 2 upper mounting studs (insert pilot studs) and withdraw assembly.

UNIVERSALS

UNIVERSAL JOINTS:—Detroit-Universal Series 7200.
See Universals Section for complete data.

Propeller Shaft Center Bearing:—Used on 7 passenger sedans. *See Chrysler Shop Notes for servicing.*

REAR AXLE

REAR AXLE:—Own Make. Semi-floating, Hypoid gear type with Hotchkiss drive.
See Rear Axle Section for complete data.

Ratio—3.9-1 (Std.), 4.3-1 (Windsor with OverDr.—Std. 7 pass.), 4.56-1 (7 pass. with Overdrive).

Backlash—.006-.010". Screw adjustment.

Removal:—Disconnect drive shaft at rear universal. Remove axle shafts (see below) and capscrews on carrier flange. Pull carrier assembly out.

Axle Shaft Removal—Remove wheel, hub, and drum assembly (use screw type hub puller—Tool C-319), block brake pedal, disconnect brake line at wheel cylinder, take off backing plate with oil seal, pull shaft and bearing (Tool C-158). NOTE—Use Tool C-358 to pull oil washer, C-201, 2 to install.

Wheel Bearing Adjustment:—Shims between backing plate and axle housing. With wheel and hub removed, check endplay with dial indicator. To adjust, remove backing plate (see above), add or remove shims (.010", .0125", .015" .030" thick) equally at both wheels. **Endplay**—.003-.008".

SHOCK ABSORBERS

SHOCK ABSORBERS:—Domestic—Delco or Monroe Direct acting. **Export**—Delco Direct acting or Delco Adjustable direct acting (Spec. Equip. Dom. also).
See Shock Absorber Section for complete data.

FRONT SUSPENSION

Front Suspension:—Independent, linked parallelogram type with coil springs.
See Front Suspension Section for complete data.
Kingpin Inclination—4¾° to 6°.
Camber—Pos. ¼°. Limits 0° to Pos. ¾°.
Caster—Neg. 1° to Pos. 1°. Not adjustable.
Toe In—1/16" (0-⅛"). Turn both rods equally.
Steering Geometry—Inner wheel 22°. Outer 20°.

STEERING GEAR

Steering Gear: Gemmer Model 305. Worm-and-Roller type with "Push-Pull" adjustments.
See Steering Gear Section for complete data.

BRAKES

BRAKES:—Service. Lockheed hydraulic, double anchor type. Hand lever applies independent shaft brake.
See Brake Section for complete data.
Wheel Cylinders—Stepped or two-stage bore type.
Drums—Centrifuse type. Diameter—11".
Lining—Molded. Width 2". Thickness 13/64". Length (front shoe) 11 15/32", (rear shoe) 7 31/32".
Clearance—.012" toe, .006" heel, for each shoe.

Hand Brake:—On drum at rear of transmission.
Adjustment—*See Chrysler Shop Notes for data.*
Drum—Cast-iron type. Diameter—6".
Lining—Width 2". Thick. 5/32". Length 17 1/16".

MISC. MECHANICAL

WINDSHIELD WIPER:—Auto-lite Model EWB-4001, Electric type with circuit-breaker on back of switch.
See Miscellaneous Section for complete data.
Circuit Breaker—Vibrating, thermostatic type. Starts to operate with current of 12 amperes.

Power Operated Convertible Top: Vacuum Power type.
See Miscellaneous Section for complete data.

FRONT END ASSEMBLY (UNIT) REMOVAL:—Should be removed as a unit for work on front of engine. *See Chrysler Shop Notes for directions.*

MODEL IDENTIFICATION

SERIAL NUMBER:—6750101 Up (Traveler), 6673501 (Saratoga), 6613401 (New Yorker), 7806551 (Crown Imperial). On right front door hinge pillar post.

ENGINE NUMBER:—C26-1001 Up (C26), C27-1001 (C27). Left side of block between #2 and #3 cylinders. *See Chrysler Shop Notes for Engine Number Lettering ('Special Standard' bore and bearing sizes).*

TUNE-UP

COMPRESSION:—Ratio—6.8-1 CI (Std. C26), 6.8-1 AL (Std. C27). 7.45-1 aluminum (Optl. C26 & C27).

Ratio	Pressure at 1000 RPM	At 100 RPM
6.8-1 CI or AL hd.	150-160 lbs.	Approx. 118 lbs.
7.45-1 aluminum hd.	160-170 lbs.	Approx. 124 lbs.

VACUUM READING:—Steady 18-21" idling at 6 MPH.

FIRING ORDER: 1-6-2-5-8-3-7-4. See diagram.

SPARK PLUGS: Auto-Lite Type A7B (Cast Iron Head), AL-7A (Aluminum Head). 14 mm. Metric type. **Gaps**—.025".

IGNITION: See Coil, Condenser, and Distributor. **Breaker Gap**—.018". **Cam Angle** 27° (.017" gap). **Automatic Advance**—12° max. at 1750 RPM (distr.). **Vacuum Advance**—8° distr. (IGT-4101A-2), 6° distr. (IGT-4101B-2) with 17" vacuum.

IGNITION TIMING: See Ignition Timing. **Std. Setting**—At TDC (C26 6.8-1 Head), 3° BTDC. (C27 6.8-1 Head), At TDC (C26,27 7.45-1 Optl. Head with Ethyl Fuel) with dead center "DC" mark or correct degree mark on impulse neutralizer at indicator on front of engine.

CARBURETION: See Carburetor & Carb. Equipment. **Idle Setting**—Both idle screws midway between "miss" and "roll" points. Idle speed 6 MPH. **Float Level**—Fuel level 5/8" below top edge of bowl. **Accelerating Pump**—Inner hole—Summer, Outer hole—Winter.

Fuel Pump Pressure: 3¾ lbs. maximum.

MANIFOLD HEAT CONTROL:—Thermostatic coil type. See that shaft and valve rotate freely. When installing coil, wind up free end 1 turn counter-clockwise and hook end over stop stud.

VALVES: See Valve Timing. **Tappet Clearance:**—.008" Int., .010" Exh. (hot & idling). .002" add'tl exh. clearance desireable for high speeds. NOTE—Tappet screws self-locking (no locknuts). Remove right front wheel, lower housing panel and fuel pump shield for access to valves.

STARTING: See Battery, Starter, Generator, Regulator.

IGNITION

Ignition Switch:—Mitchellock Model 24-R. Type 8197. **Ignition Lock**—Yale & Towne or Briggs & Stratton. B&S No 80651. Key Series 1BP to 1000BP. Groove #24.

COIL: Auto-Lite Model CE-4640. Service coil (less switch and cable CE-3224JS). Mounted on dash. **Ignition Current**—2.25 amperes idling, 5.5 stopped.

CONDENSER: Auto-Lite Part No. IG-3927. **Capacity**—.25-.28 microfarad.

DISTRIBUTOR: Auto-Lite Model IGT-4101A-2 (C26), IGT-4101B-2 (C27). Single breaker, 8 lobe cam, full automatic advance type with auxiliary vacuum spark control and manual (Octane Selector) adjustment.

Breaker Plate Identification—Maximum vacuum advance limited by slot and marked by number (#8—IGT-4101A-2, #6—IGT-4101B-2) on plate.
Breaker Gap—Set at .018".
Cam Angle—27° closed, 18° open (.017" gap).
Breaker Arm Spring Tension—17-20 ounces.
Rotation—Clockwise viewed from above.

Automatic Advance

Distributor Degrees	Distributor R.P.M.	Engine Degrees	Engine R.P.M.
Start	350	0	700
3	400	6	800
6	850	12	1700
9	1300	18	2600
12	1750	24	3500

Vacuum Spark Control—Integral type (on distributor, linked directly to breaker plate). Provides additional advance at speeds above idling except when engine accelerated or operated with wide open throttle (spark retarded by return spring in unit).

Vacuum Advance—IGT-4101A-2

Distr. Degrees	Eng. Degrees	Vacuum (" of HG)
Start	0°	5"
2°	4°	8"
4°	8°	11"
6°	12°	14"
8°	16°	17"

Vacuum Advance—IGT-4101B-2

Start	0°	5"
1°	2°	7"
3°	6°	11"
5°	10°	15"
6°	12°	17"

Manual Adjustment—Provides 10° advance or retard from center '0' position on scale (at distributor). See Ignition Timing for adjustment.

Distributor Removal:—Mounted on left side of crankcase. To remove, disconnect vacuum line, take out hold-down screw in lockplate.

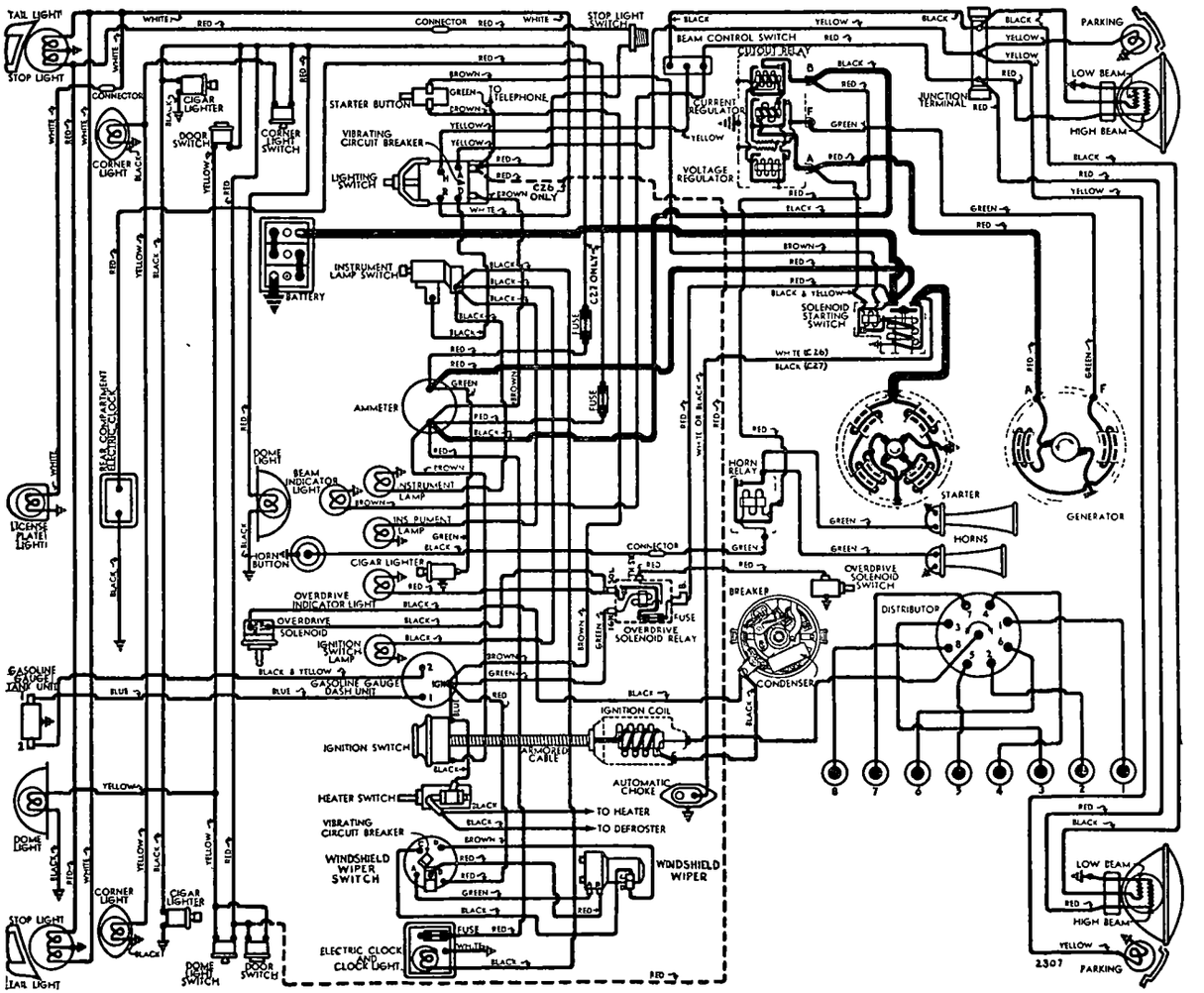

IGNITION TIMING

IGNITION TIMING:—Initial setting (correct for fuel of 70 octane rating at low altitudes for 6.8-1, Ethyl fuel 7.45-1 head) shown below. See Manual Adjustment (following) for recommended corrections (not to exceed 4° either way) dependent on fuel regularly used and operating conditions.

	Flywheel Degrees	Piston Position
C26—6.8-1 CI hd.	0° at TDC	.0000" TDC.
C27—6.8-1 AL hd.	3° BTDC	.0038" BTDC.
**All—7.45-1 AL hd.	0° at TDC	.0000" TDC.

**—Ethyl gasoline setting.

NOTE—Impulse neutralizer marked DC at TDC with 15 (1°) graduations on either side.

Timing (Using Timing Light)—Connect timing light between distributor and battery terminal on generator regulator. With #8 piston on compression, turn engine over until piston reaches firing position (see Initial Setting above), stop when correct mark on impulse neutralizer lines up with pointer on chain cover. Loosen lock-plate hold-down screw, center pointer on scale, tighten screw. Loosen lock plate clamp bolt, rotate distributor until timing light just goes out, tighten clamp bolt. Check Manual Adjustment setting (following).

Timing (Using Synchroscope)—Tool C-374. Clip lead to #1 spark plug, direct light on impulse neutralizer (correct mark filled in with paint or chalk), idle engine and adjust distributor as directed above).

Manual Adjustment—Initial ignition setting listed above should be varied not more than 4° (.007") retard or advance so that slight ping noticeable between 10 and 30 MPH when accelerating with wide open throttle for best performance. To adjust, loosen lock plate hold-down screw, rotate distributor counter-clockwise (if no ping noted), clockwise to retard (if ping too severe) not more than 4°. Scale graduated in engine degrees.

CARBURETOR

CARBURETION:—**Carburetor**—Stromberg Model AAV-2. No. A-18792. Aircraft, duplex, 1¼" downdraft type.

For complete data, refer to Carburetor Index.

Idle Adjustment—With engine warm and running at slow idle speed (choke valve wide open, fast idle inoperative), set throttle stopscrew for 6 MPH idle speed. Adjust idle adjusting screw for each barrel equally until engine fires smoothly (turn screws in for leaner mixture). Readjust idle speed. NOTE—Car manufacturer recommends use of vacuum gauge. Set idle adjusting screw for highest reading on gauge.

Accelerating Pump Setting—Throttle lever has two holes for pump link engagement. Set as follows:
Inner Hole (short stroke)—Extreme hot weather.
Outer Hole (long stroke)—Winter temperatures.

Float Level—Fuel level 5/8" below top edge of bowl.

Fast Idle:—Rotary cam, adjustable type.

For complete data, refer to Carburetion Equip. Index.

Fast Idle Setting—Adjust choke connector link length so that choke valve opening is 1/8" with fast idle screw (throttle stopscrew) against first step of fast idle cam.

Automatic Choke:—Sisson Type AC-600.

For complete data, refer to Carburetion Equip. Index.

Throttle Guard (Cars with Fluid Drive):—Vacuum operated throttle kicker to prevent engine stalling when accelerator pedal released quickly.

For complete data, refer to Carburetion Equip. Index.

CARB. EQUIPMENT

Air Cleaner:—AC #1528334 oil-wetted type standard.

Fuel Pump:—AC Type AW #1523869 diaphragm type.

For complete data, refer to Carburetion Equip. Index.

Gasoline Gauge:—Auto-Lite electric. No. NG-9356D (dash unit), No. NG-9330T (tank unit).

For complete data, refer to Carburetion Equip. Index.

BATTERY

BATTERY:—**Willard Type MW-2-135.** 6 volt, 17 plate, 135 ampere hour capacity (20 hour rate).

Starting Capacity—171 amperes for 20 minutes.

Zero Capacity—300 amperes for 5.9 minutes. Five second voltage—4.5 volts.

Grounded Terminal—Positive (+) grounded to the transmission case.

Dimensions—Lgth. 10 5/16". Wid. 6 13/16". Hgt. 9".

Location—On left side under front seat.

STARTER

Auto-Lite Model MAX-4037 (C26), MAX-4020-A (C27, C26 Fluid Drive). Armature MAW-2030 (all).

Drive—Overrunning clutch (solenoid pinion shift).

Cranking Engine—Approx. 160-170 amps. 5 volts.

Rotation—Counter-clockwise at commutator end.

Brush Spring Tension—42-53 ozs. (new brushes).

Performance Data

Torque	R.P.M.	Volts	Amperes
0 ft. lbs.	5300	5.5	65
.65 " "	3300	5.5	100
2.75 " "	1630	5.0	200
5.5 " "	970	4.5	300
8.7 " "	600	4.0	400
12.0 " "	300	3.5	500
16.5 " "	Lock	3.	640
25.0 " "	Lock	4.	880

Removal:—Flange mounted on left front face of flywheel housing. Disconnect wire connections (tape battery lead) and oil filter lines. Remove two fastening bolts and withdraw unit.

Starting Switch:—Solenoid Pinion Shift type SS-4206.

For complete data, refer to Electrical Equipment Index.

GENERATOR

Auto-Lite Model GDZ-4801A (Std.), GDZ-4801B or GEB-4801A (Police). Armature No. GDZ-2006F (GDZ-4801A, B), GEB-2006F (GEB-4801A). Two brush type with current voltage control. Air-cooled.

Charging Rate Adjustment—No adjustment at generator. Charging rate controlled by Voltage Regulator and maximum output by Current Regulator.

See Regulator data following.

Maximum Charging Rate—35 amperes (GDZ Gen.), 32 amperes (GEB Gen.), 8.0 volts, 2200 Gen. RPM (GDZ), 1400 RPM (GEB), at approx. 24 MPH (GDZ) and above with load or discharged battery (Current Regulator setting). Actual charging rate controlled by regulator (dependent on battery condition).

Performance Data—GDZ-4801A, B

Cold			Hot		
Amperes	Volts	R.P.M.	Amperes	Volts	R.P.M.
0	6.4	925	0	6.4	1000
4	6.6	1035	4	6.6	1120
8	6.75	1140	8	6.75	1235
12	6.95	1250	12	6.95	1350
16	7.15	1370	16	7.15	1460
20	7.3	1480	20	7.3	1590
24	7.5	1590	24	7.5	1730
28	7.7	1710	28	7.7	1900
32	7.9	1820	32	7.9	2090
*35	8.0	1900	35	8.0	2250

Performance Data—GEB-4801A

0	6.4	560	0	6.4	600
4	6.6	630	4	6.6	675
8	6.8	700	8	6.8	750
12	7.0	775	12	7.0	840
16	7.2	845	16	7.2	930
20	7.4	920	20	7.4	1030
24	7.6	1000	24	7.6	1140
28	7.8	1075	28	7.8	1260
*32	8.0	1150	32	8.0	1400

*—Current regulator setting.

Rotation—Counter-clockwise at commutator end.

Brush Spring Tension—53 ozs. max. (GDZ Gen), 64-68 ozs. (GEB Gen.), with new brushes.

Field Current—1.60-1.78 amperes at 6.0 volts (all).

Motoring Current—4.16-4.60 amperes (GDZ Gen.), 4.0-4.5 amperes (GEB Gen.) at 6.0 volts.

Removal:—Pivot mounted at left side of engine at front. To remove, take out pivot and clamp bolts.

Belt Adjustment:—Loosen clamp and pivot bolts, swing generator out until scale (attached to field frame) reads 40-50 lbs., tighten bolts.

REGULATOR

Auto-Lite Model VRP-4001A (GDZ Gen.), VRP-4001B (GEB Gen.). Current-voltage type. In case on dash. NOTE—For negative battery ground, VRP-4005A (GDZ Gen.), VRP-4005B (GEB Gen.) are used.

For complete data, refer to Electrical Equipment Index.

NOTE—Regulator case cover is sealed. Serviced on exchange basis if seals not broken.

Cutout Relay

Cuts In—6.4-6.6 volts at approximately 1000 generator RPM (VRP-4001A,5A), 600 RPM (VRP-4001B,5B).

Cuts Out—4.2-4.8 volts (approx. 4-6 amps. disch.).

Contact Gap—.015" minimum.

Air Gap—.031" min., .034" max. with contacts open. Measure at hinge end of core.

Voltage Regulator

Setting—7.2-7.5 volts at 70° F.

To Check (without breaking seals)—Connect ammeter in charging line at regulator 'B' terminal, voltmeter between 'B' terminal and ground. Operate generator at speed equivalent to 30 MPH charging battery until voltage is steady. Voltage reading should be 7.2-7.5 volts at 70° F. See Electrical Equipment Section for voltages at other temperatures.

To Adjust (with cover removed)—Change regulator armature spring tension by bending lower spring hanger slightly. See Electrical Equipment Section.

Contact Gap—.012" Min. (armature against stop pin).

Air Gap—.048-.052" with contacts just opening.

Current Regulator

Setting (VRP-4001A,5A)—34-36 amperes (marked '35' on cover). **(VRP-4001B, 5B)** 31-33 (marked '32').

To Check (without breaking seals)—Connect test meters as for Voltage check (above). Operate generator at speed equivalent to 30 MPH charging battery, turn on car lights and accessories so that generator charges at peak rate and Current Regulator operates. Charging current should not exceed maximum setting noted above. If mor than slight excess noted, regulator is defective.

Adjustment & Contact Gap—Same as for Voltage Regulator (above).

Air Gap—.034-.038" (before No. 5U-000001), .048-.052" (after above No.) with contacts just opening.

C NTINUED ON NEXT PA E

C NTINUED FR M PRECEDING PAGE

LIGHTING

LIGHTING:—Headlamps—Corcoran-Brown 'Sealed Beam' type. *See article in Electrical Equipment Section.*
Headlamp Adjustment—Aim upper beam for each lamp straight ahead with center of hot spot 3" below lamp center height.
Beam Indicator—Red light in upper left corner of speedometer dial. Lighted when upper beam on.

Switches

Same as Model C25 (see preceding page).

Bulb Specifications

Position	Candlepower	Mazda No.
Headlamps		Sealed Beam
Parking Instrument	1½	55
Beam Indicator, Ign. Sw.	1	51
Overdrive Indicator	1	51
Stop and Tail	21-3	1158
Rear License	3	63
Dome or Reading	15	87

MISC. ELECTRICAL

LIGHTING CIRCUIT BREAKER:—Vibrating, thermostatic type. Mounted on lighting switch.
FUSES:—**Clock**—2 ampere. In connector behind clock.
Rear Clock (C27 only)—2 ampere. In connector near back of ammeter.
Body Wiring (C27 only)—30 ampere. In connector back of ammeter.
Transmission Overdrive Control—20 amp. On relay.
Radio—14 amp. In feed wire behind instr. panel.
Horns & Windshield Wiper—No fuse used.
HORNS:—Auto-Lite HC-5105, HO-5001 Horn Set. HL-4001 (low pitch), HL-4002 (high pitch), dual horns.
Current Draw—Approx. 35-40 amperes.
Horn Relay:—Auto-Lite Model HRC-4001 (no fuse).
Contacts Close—1.5-3.0 volts. **Open**—.5 volt.
Contact Gap—.026". **Air Gap**—.016-.020" (closed).

ENGINE

ENGINE SPECIFICATIONS:—8 cylinder, 'L' head type.
Bore—3¼". **Stroke**—4⅛".
Displacement—323.5 cu. ins. **Rated HP**—33.80.
Developed Horsepower—130 HP (C26—6.8-1 Cast-iron hd.), 137 HP (C27—6.8-1 Aluminum hd.), 143 HP (C26 & C27 with optl. 7.45-1 hd.) at 3400 RPM.
Compression Ratio and Pressure—As follows:

Ratio	Pressure at 1000 RPM	At 100 RPM
6.8-1 hd. (see Note)	150-160 lbs.	Approx. 118 lbs.
7.45-1 aluminum hd.	160-170 lbs.	Approx. 124 lbs.

NOTE—Cast-iron head (C26), Aluminum (C27).
Vacuum Reading—Steady 18-21" idling at 6 MPH.
See Chrysler Shop Notes for engine removal instruct'ns.

PISTONS:—Aluminum alloy, U-slot, cam ground, tin coated type. **Length**—3⅞".
Weight—16.33 ozs. (stripped).
Removal—Pistons and rods removed from above.
Clearance—Top .011". Skirt .0000-.0010". See Fitting New Pistons (following).
Original Bore & Piston Sizes, Replacement Pistons:—*See Chrysler Shop Notes for sizes and markings.*
Fitting New Pistons:—Check piston size with micrometer at bottom of skirt with gauge at right angles to pin bosses. Insert .002" feeler between cylinder wall and piston (with pin removed) opposite piston slot. Pull to withdraw feeler should be 5 to 7 lbs. Cylinders should be reconditioned when taper exceeds .0015" or out-of-round .002". Reconditioned cylinder bores should be within limits of .0005".
Installing Pistons:—Slot away from camshaft.

PISTON RINGS:—4 rings, all above pin—#1 Compression (upper inner edge beveled), #2 Comp. (lower outer edge stepped), #3 & 4 (slotted oil rings).
NOTE—Compression rings are coated type.

Ring	Width	End Gap	Side Clearance
Comp. (top)	⅛"	.007-.015"	.002-.0035"
Comp. (#2)	⅛"	.007-.015"	.0015-.003"
Oil Control	5/32"	.007-.015"	.001-.0025"

Replacement Rings: *Refer to Chrysler Shop Notes.*

PISTON PIN:—Diameter—55/64". **Length**—2¾".
Floating type. Pin hole in rod bronze bushed.
Pin Fit in Piston—Thumb push fit (piston at 130°).
Pin Fit in Rod Bushing—Thumb push fit at 70°F.
Replacement Pins:—Std. & .003", .005", .008" oversize.

CONNECTING ROD:—Weight—34.3 ozs. (with bearings and bolts). **Length**—9".
Crankpin Journal Diameter—2 3/16".
Lower Bearing—Removable, precision type, steel-backed, babbitt-lined type.
Clearance—.001-.003". **Sideplay**—.006-.011".
Bearing Adjustment:—None (no shims). Replace bearings. Do not file rods or caps. Install new bearings with boss engaging groove in rod and cap.
Replacement Bearings: *Refer to Chrysler Shop Notes.*
Installing Rods:—Lower bearings are offset. Install rods with widest portion of bearing toward the rear **#1, 3, 5, 7; front #2, 4, 6, 8.** Oil hole to camshaft.

CRANKSHAFT:—5 bearing type with 8 integral counterweights. Impulse neutralizer mounted on front
Journal Diameters—2 45/64" all bearings.
Bearing Type—Removable, precision type, steel-backed, babbitt-lined.
Clearance—.001-.002".
Bearing Adjustment:—*See Chrysler Shop Notes for Bearing Removal and Adjustment, Front Main Bearing Cap Removal, and Crankshaft Front & Rear Oil Seals.*
Replacement Bearings & Bearing Caps: *Refer to Chrysler Shop Notes for complete data.*
End Thrust:—Taken by flange faces on rear (#5) main bearing. **Endplay**—.003-.007".

CAMSHAFT:—6 bearing. Non-adjustable chain drive.
See Chrysler Shop Notes for camshaft removal.
Journal Diameters—#1, 2 1/16"; #2, 2 1/32"; #3, 2"; #4, 1 31/32"; #5, 1 15/16"; #6, 1⅜".
Bearing Type—Removable steel-backed, babbitt-lined bushings (except #6 machined in crankcase).
Clearance—.001-.003" (#1), .0015-.0035" (all others).
NOTE—Replacement bushings finish reamed.
End Thrust:—Taken by thrust plate assembled behind camshaft sprocket hub. **Endplay**—.002-.006".
Timing Chain:—Whitney #668983 center link guide type. Width 1¼". Pitch ½". Length 47 links or 23½".
Camshaft Setting:—Sprockets marked. Mesh chain with sprockets turned so that '0' marks are adjacent and in line with a straightedge across shaft centers.

VALVES:—

	Head Diameter	Stem Diameter	Length
Intake	1 17/32"	.340-.341"	5⅞"
Exhaust	1 11/32"	.340-.341"	5⅞"

	Seat Angle	Lift	Stem Clearance
All Valves	45°	⅜"	.0015-.0035"

See Chrysler Shop Notes for Exh. valve seat insert data.
Valve Guides:—Remove from above. Press new guides in place with upper end 13/16" (Intake), 1" (Exhaust below top of cylinder block (use Tool CM-83). Install with taper end up (Intake), and down (for Exhaust), ream to inside diameter of .3425-.3435". Counterbore exhaust guide at top to diameter of .365-.375" and ⅜" deep after installed in block.
Valve Springs:—Install with closely coiled ends at top. Free length 2 25/64".

	Spring Pressure	Length
Valve Closed	52-58 lbs.	2 1/32"
Valve Open	129-137 lbs.	1 21/32"

Valve Lifters: Mushroom type. Stem diam. ⅝". Ream holes from above (pilot in valve stem guide) for lifters furnished .001", .008", .030", .060" oversize.
Clearance in block—.000-.001".

VALVE TIMING

Tappet Clearance: .008" Intake, .010" Exhaust, Hot. (.012" Exhaust clearance desirable for high speeds). NOTE—Tappet screws are self-locking type (no locknuts used). Remove right front wheel, lower housing panel, fuel pump shield, for access to valves.
Valve Timing:—See Camshaft Setting above.
Intake Valves—Open 6° BTDC. Close 50° ALDC.
Exhaust Valves—Open 44° BLDC. Close 12° ATDC.
With .011" Intake, .014" Exh. tappet clearance Cold.
Valve Timing Check—With .011" (cold) tappet clearance #8 intake valve should open with #8 piston 6° or .0170" BTDC with 6th graduation before DC mark on impulse neutralizer aligned with pointer on chain case cover. Reset tappet clearance.

LUBRICATION

LUBRICATION:—Pressure system with gear type oil pump mounted on right side of crankcase.
See Chrysler Shop Notes for oil pump removal and installation.
Normal Oil Pressure: 30-45 lbs. at 30 MPH, 15 idling.
Oil Pressure Relief Valve:—Located under plug on lower left side of crankcase. Adjustable. To adjust, remove cap, withdraw locking wire, turn slotted plug clockwise to increase pressure, or counter-clockwise to decrease. Valve opens at 40-45 lbs.
Crankcase Capacity:—6 quarts (refill).

COOLING

COOLING SYSTEM:—Capacity—24 quarts.
See Chrysler Shop Notes for radiator core removal.
Water Pump: Packless. Sealed ball-bearing shaft.
See Water Pump Section for complete data.
Removal—Drain cooling system, loosen fan shroud-to-radiator core cap screws, remove fan belt, cylinder head water outlet elbow (with radiator inlet hose and water pump by-pass hose and elbow). Disconnect pump inlet hose and take out pump-to-back plate screws. Remove nut from stud in front lower right hand side of pump (pull pump forward and use stud pliers between pump and back plate to remove stud). Lift out pump, fan, and shroud.
Thermostat:—Bishop & Babcock or Fulton. In cylinder head outlet elbow. Install with bellows down.
Setting—Start to open 150-155°F. Fully open 176°F.
Temperature Gauge:—Motometer (Auto-Lite) Vapor tension type. A-L Part No. H-9355.
See Miscellaneous Section for complete data.
Drain Valves: Center of radiator lower tank at front, on lower edge of water jacket on left side of engine.

CLUTCH

MODEL C26 (STD. EQUIP.)

CLUTCH (C26 WITHOUT FLUID DRIVE):—Borg & Beck Model 11A6 with 'Borglite' driven member. #941 stamped on cover. Single plate, dry disc type with spiral grooved facings, pressure plate oil baffle and pedal over-center return spring.
See Clutch Section for complete data.
Facings—Spiral wound moulded woven, 2 used. Inside Diam. 6½". Outside Diam. 11". Thickness ⅛".
Adjustment:—Clutch pedal should just clear underside of toeboard. To adjust, loosen locknut and turn

stopscrew located to rear of pedal arm above shaft. Free movement of pedal should be 1". To adjust, turn release fork adjusting nut on connector link.

Removal:—Remove clutch release fork pull-back spring. Remove transmission (see Transmission Removal following) and clutch underpan. Disconnect release fork from pivot and pull out as far as possible. Punch mark cover and flywheel (assemble to these marks when re-installing clutch assembly to maintain balance). Remove clutch cover screws (release tension evenly). Lower clutch assembly out.

CLUTCH

MODEL C26 (OPTL), C27 (STD.)

CLUTCH (C26 WITH FLUID DRIVE AND C27):—Borg & Beck Model 10A6 with 'Borglite' driven member. #939 stamped on cover. Single plate, dry disc type with spiral grooved facings, pressure plate oil baffle and pedal over-center return spring. Clutch assembly mounted on clutch driving plate at rear of fluid drive. No spring dampener on clutch driven member.
See Clutch Section for complete data.

Adjustment:—Same as for C26 above.

Removal:—Remove floor board, clutch release fork pull-back spring and cotter pin and clevis from end of release fork rod. Pull release fork out of housing. Remove transmission (see Transmission Removal following) and clutch housing underpan (jack up rear of engine enough to allow pan to clear frame cross member). Punch mark clutch cover and clutch driving plate (assemble to these marks when re-installing clutch assembly to maintain balance). Remove clutch cover-to-driving plate screws (release tension evenly). Lower clutch assembly out.

FLUID DRIVE

FLUID DRIVE (STD. ON C27, OPTL. ON C26):—Consists of fluid coupling assembled to rear of engine.
See Miscellaneous Section for complete data.

Removal:—Remove clutch (see removal instructions above for C26 with Fluid Drive and C27). If fluid drive to be disassembled, turn unit over until one filler plug is at bottom center, remove plug with 1⅛" socket wrench and allow unit to drain. Remove fluid drive-to-crankshaft stud nuts freeing assembly. Pull assembly to rear, lower assembly out.

TRANSMISSION

TRANSMISSION:—Own Make. All helical gear type, constant-mesh, synchro-mesh (second and high), sliding gear (low and reverse). Warner Model R7B overdrive with electric 'kick-down' Std. on C27.
See Transmission Section for complete data.

Transmission Control: Steering column shift.
See Transmission Section for complete data.

Removal (C26):—Remove propeller shaft by disconnecting front and rear universal joints. Loosen companion flange nut if transmission to be disassembled. Disconnect speedometer cable, battery ground cable, hand brake cable, and gear shift rod and cable at transmission. Remove transmission-to-clutch housing mounting stud nuts and washers. Pull transmission back, down and out of car. NOTE—Use pilot studs inserted in place of two upper mounting studs when installing transmission.

Removal (C27):—Remove floor boards. Disconnect battery ground cable at transmission. Remove rear propeller shaft, four front companion flange nuts, four frame-to-center bearing mounting screws, slide bearing and front shaft back through frame X-member opening (if spacer used between frame and bearing mounting, replace spacer when re-installing). Remove universal joint flange and brake drum from shaft, and clevis pin from brake cable. Take off brake assembly from overdrive case. Disconnect solenoid wires and remove coil. Disconnect speedometer and gear shifter rod and cable at transmission. Remove transmission-to-clutch housing mounting stud nuts, two upper mounting studs (install two nuts on end of stud and turn stud out), replace with pilot studs. Withdraw assembly.

OVERDRIVE

Overdrive: Warner Model R7B type Overdrive unit with electrical "kick-down" control. Std. on Model C27, Optl. on C26 New Yorker and Saratoga only
See Transmission Section for complete data.
Overdrive Solenoid—Auto-Lite SSB-4001.
Throttle Switch Setting—3/32" gap between switch plunger & contact screw (throttle just wide open).
Control Relay—Auto-Lite HR-4201. Use only 20 ampere fuse on relay (on left side of engine dash).
Overdrive Indicator Light—In upper right corner speedometer. Lights when in 'kick-down' Direct.
Overdrive Transmission Removal—Same as for C27 Transmission Removal (preceding) except that front propeller shaft & center bearing not used on C26.

UNIVERSALS

UNIVERSAL JOINTS:—Detroit-Universal Series 7300. Cross type, roller bearings. 2 on C26, 3 on C27.
See Universals Section for complete data.

Propeller Shaft Center Bearing (C27):—***See Chrysler Shop Notes for removal and installation data.***

REAR AXLE

MODEL C26

REAR AXLE (C26):—Own Make. Semi-floating, hypoid gear type with Hotchkiss drive.
See Rear Axle Section for complete data.
Ratio—3.91-1 (standard). 4.1-1 (special). 4.3-1 or 4.89-1 (with overdrive and fluid drive).
Backlash—.006-.010". Screw adjustment.

Removal:—Drain differential, remove both axle shafts (see below) and universal flange bolts at rear universal and lower propeller shaft. Take out carrier-to-axle housing capscrews (nuts used on C27) and lift out differential gear carrier assembly.
Axle Shaft Removal—Remove wheel, hub, and drum assembly (use screw type hub puller—Tool C-319 for C26, C-476 for C27). Block brake pedal, disconnect brake line at wheel cylinder, take off oil seal and backing plate and pull axle shaft and bearing with Tool C-158. NOTE—Use Tool C-358 to pull axle shaft oil seal washer, drift C-201 or 2 to install.

Wheel Bearing Adjustment:—Adjusting shims located between flanged ends of axle housing and brake backing plate. Remove wheel and hub assembly (see above). Check endplay with dial indicator (make sure that brake bolts are tight and tap end of axle shaft so that bearing cups are seated). To adjust, remove oil seal and backing plate, add or remove shims equally at both ends of axle housing until endplay is correct. **Endplay**—.003-.008". NOTE **Shims furnished .010", .0125", .015" and .030" thick.**

REAR AXLE

MODEL C27

REAR AXLE (C-27):—Own Make. New type, semi-floating, hypoid gear type with Hotchkiss drive. New barrel type differential with adjustable type drive gear thrust pad.
See Rear Axle Section for complete data.
Ratio—4.55-1.
All other data same as for C26 Rear Axle above.

SHOCK ABSORBERS

SHOCK ABSORBERS:—Delco or Monroe. Direct acting, hydraulic types. Delco Models 1130 and 1134 are adjustable type.

Car Model	Make	Front	Rear
C26 (Standard)	Delco	1000-C	1001-T
C26 (Standard)	Monroe	854568	854570
C26 (Spec. Equip.)	Delco	1134-E	1130-W
C26 (Export)	Delco	1002-C	1003-T
C27 (Standard)	Delco	1134-E	1130-W

See Shock Absorber Section for complete data.

FRONT SUSPENSION

Front Suspension:—Independent, linked parallelogram type with coil springs.
See Front Suspension Section for complete data.
Specifications below apply with car weight on wheels and no passenger load.
Kingpin Inclination—4¾° to 6°.
Camber—Positive ¼° (desired). Limits 0° to Positive ¾°. Adjustable.
Caster—Negative 1° to Positive 1°. Not adjustable.
Toe In—1/16" (desired). Limits 0" to ⅛". Adjust by loosening clamp bolts on ends of both tie rods and turning rods equally, tighten clamp bolts. NOTE—Clamp bolt on left end of long tie rod should be turned below tie rod to give clearance on turns.
Steering Geometry (toe-out on turns)—Inner wheel turned 21°30'. Outer wheel turned 20°.

STEERING GEAR

Steering Gear: Gemmer Model 335. Worm-and-Roller type with "Push-Pull" adjustments.
See Steering Gear Section for complete data.

BRAKES

BRAKES:—Service—(Front Wheels): New Lockheed hydraulic, Two-Cylinder type (front shoe anchored at bottom and actuated by top cylinder, rear shoe anchored at top and actuated by bottom cylinder). **(Rear Wheels):** Lockheed hydraulic, double anchor type. Hand lever applies independent shaft brake.
See Brake Section for complete data.
Wheel Cylinders—New straight cut bore type with new piston assembly (no spring) used on both front and rear brakes. Cylinder bore diameter 1⅛".
Drums—Centrifuse type. Diameter—12".
Lining—Molded. Width 2". Thickness 13/64". Length—Rear wheel rear shoe 9⅝", all other shoes 12 9/16".
Clearance—Toe (wheel cylinder end) .007" for all shoes. Heel (anchor bolt end) .006" for all shoes except rear wheel rear shoes—.007" rear wheel rear shoes only.
Braking Power—61% front wheels, 39% rear wheels.

Hand Brake:—On drum at rear of transmission.
Adjustment—***See Chrysler Shop Notes.***
Drum—Cast-iron. Diameter—7".
Lining—Width 2½". Thickness 5/32". Length 20⅛".

Power Brake Unit (C27):—Bendix Internal Valve type.
See Brake Section for complete data.

MISC. MECHANICAL

WINDSHIELD WIPER:—Auto-lite Model EWB-4001, Electric type with circuit-breaker on back of switch.
See Miscellaneous Section for complete data.
Circuit Breaker—Vibrating, thermostatic type. Starts to operate with current of 12 amperes.

Power Operated Convertible Top: Vacuum Power type.
See Miscellaneous Section for complete data.

HOOD LOCK, FRONT END ASSEMBLY & OIL PAN REMOVAL:—*Refer to Chrysler Shop Notes for data.*

MODEL IDENTIFICATION

SERIAL NUMBER: On right front door hinge pillar post.

First Nos. as follows:

	Detroit	Canada
1941 C28 Royal	7,657,501	9,717,741
1941 C28 Windsor	7,901,601	
1942 C34S Royal	70,001,001	9,385,101
1942 C34W Windsor	70,501,001	

ENGINE NUMBER: Stamped on left side of cylinder block between #1 and #2 cylinders. First Number C28-1001 (1941), C34-1001 (1942).

Refer to Chrysler Shop Notes for Engine Number Lettering data ('Special Standard' bore and bearing sizes).

TUNE-UP

COMPRESSION: Ratio & Pressure—as follows:

	Ratio	Pressure (Cranking Spd.)
C28 Std.	6.5-1	115-125 lbs.
C28 Std.	6.8-1	115-125 lbs.
C28 Optl.	7.2-1	
C34 Std.	6.6-1	125-135 lbs.

VACUUM READING: Steady 18-21" idling at 6 MPH.

FIRING ORDER: 1-5-3-6-2-4. See diagram.

SPARK PLUGS: Auto-Lite Type A-7 (Cast Iron Head), Type AL-7 (Aluminum Head). 14 mm. Metric type. **Gaps**—.025".

IGNITION: See Coil, Condenser, and Distributor.
Breaker Gap—.020". **Cam Angle** 38° (closed).
Automatic & Vacuum Advance—*See Distributor.*

IGNITION TIMING: See Ignition Timing.
Std. Setting—At TDC. (All 1941 models), 2° ATDC. (1942 Models with Aluminum Pistons), 3½-4½° ATDC. (1942 Models with Cast Iron Pistons) with dead center "DC" mark or correct degree mark on impulse neutralizer at indicator on front of engine.

CARBURETION: See Carburetor & Carb. Equipment.
Idle Setting—Idle screw ½-1½ turns open. Idle speed 6 MPH. (Std. Transmission), 450 RPM or 4 MPH. max. (1941 cars with Vacamatic Trans.), 5 MPH. max. (1942 cars with Vacamatic Trans.).
Float Level—5/64" (E6S2, 3; E6W1; E6T1, 2; E6U1, 2; EE1 Carb.), 1/16" (EA1, EF1, EG1 Carb.) top of float below top edge of float bowl.
Accelerating Pump—Center hole Normal, Inner hole (Summer), Outer hole (Winter) for temperature extremes.

Fuel Pump Pressure: 4 lbs. maximum.

MANIFOLD HEAT CONTROL:—Thermostatic coil type. See that valve and shaft rotate freely. When installing coil, place inner end in slot in valve shaft, **wind free end up one turn only counter-clockwise** and hook free end over stop.

VALVES: See Valve Timing.
Tappet Clearance:—.008" Intake, .010" Exh. (hot and idling), .002" additional exh. clearance desirable for sustained high speeds. NOTE—Tappet screws self-locking. Remove right front engine inspection shield between fender and frame for access to valves.

STARTING: See Battery, Starter, Generator, Regulator.

IGNITION

Ignition Switch:—Mitchellock Model 24-R, No. 8112 (Std.), Model 30-R, No. 8793 (with vacamatic trans.).

►NOTE—Model 30-R switch has extra terminal for transmission control (for Vacamatic Transmission).

Ignition Lock—Yale & Towne or Briggs & Stratton. B&S No. 80592. Key Series 1BP to 1000BP. Groove 24.

COIL: Auto-Lite Model IG-4669 (Std.), IG-4671 (1941 & 1942 Cars with '41 type Vacamatic Transmission). IG-4676 (1942 C34S Canada).
Service Coil (less switch & cable) IG-3224JS.
Ignition Current—2¼ amperes idling, 5 stopped.

CONDENSER: Auto-Lite Part No. IG-3927A.
Capacity—.25-.28 microfarad.

DISTRIBUTOR: Auto-Lite Model IGS-4113-1 or 4202-1 (1941 Std.), IGS-4117 or 4117-1 (1941 with Tachometer Drive), IGS-4202B-1 (1942 with Al. Pistons), IGS-4202C-1 (1942 with Cast Iron Pistons). Single breaker, 6 lobe cam, full automatic advance type with vacuum spark control and manual adjustment.
Breaker Plate Identification—Number stamped on plate as follows: #7 (IGS-4113-1, 4117, 4117-1 4202-1), #9 (IGS-4202B-1, 4202C-1).

Breaker Gap—Set at .020". Limits .018-.022".
Cam Angle or Dwell—38° closed, 22° open (distr. °).
Breaker Arm Spring Tension—17-20 ounces.
Rotation—Clockwise viewed from above.

Automatic Advance—IGS-4113-1, 4117, 4117-1, 4202-1

Distributor Degrees	Distributor R.P.M.	Engine Degrees	Engine R.P.M.
Start	350	0	700
3	400	6	800
6	850	12	1700
9	1300	18	2600
12	1750	24	3500

Automatic Advance—IGS-4202B-1

Start	350	0	700
3	400	6	800
6	780	12	1560
9	1160	18	2320
12	1530	24	3060

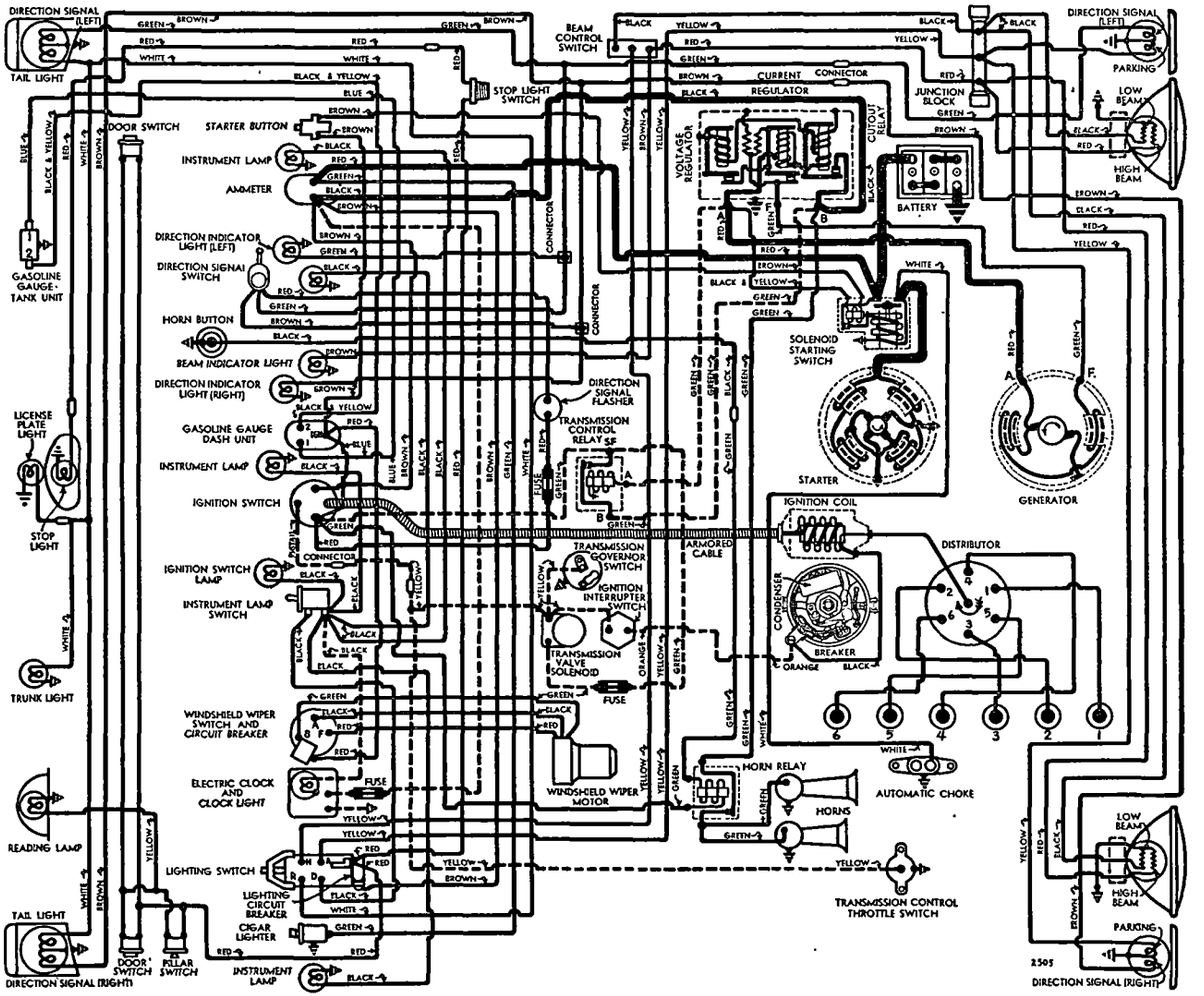

See "1942 Chrysler Vacamatic Type" Transmission article in Transmission Section for Late 1942 Transmission Wiring

Automatic Advance—IGS-4202C-1

Distributor Degrees	R.P.M.	Engine Degrees	R.P.M.
Start	350	0	700
3	400	6	800
6	770	12	1540
9	1150	18	2300
11	1400	22	2800

Vacuum Spark Control—Integral type (on distributor, linked directly to breaker plate). Provides additional advance at speeds above idling except when engine operated with wide open throttle.

Vacuum Advance
IGS-4113-1, 4117, 4117-1, 4202-1

Distr. Degrees	Eng. Degrees	Vacuum (" of HG)
Start	0°	5"
1°	2°	6½"
3°	6°	9¼"
5°	10°	12⅛"
7°	14°	15"

Vacuum Advance—IGS-4202B-1

Start	0°	5"
2°	4°	7¼"
4°	8°	9⅜"
6°	12°	11⅝"
9°	18°	15"

Vacuum Advance—IGS 4202C-1

Start	0°	5"
2°	4°	7½"
5°	10°	11⅛"
7°	14°	13½"
9°	18°	16"

Manual Adjustment—Provides for minor changes in ignition timing at distributor. See Ignition Timing.

Distributor Removal:—Mounted on left side of crankcase. To remove, disconnect vacuum line, take out hold-down screw in lock plate. **Installation**—Install distributor with #1 piston in firing position.

IGNITION TIMING

IGNITION TIMING:—Initial setting (correct for fuel of approx. 70 octane rating at low altitudes for all engines) shown below. See Manual Adjustment (following) for Final Setting.

	Flywheel Degrees	Piston Position
1941 All Engines	0° TDC	.000" TDC.
1942 Early①	2° ATDC	.002" ATDC.
1942 Late②	3½-4½° ATDC	.005-.007" ATDC.

①—Aluminum Pistons. ②—Cast Iron Pistons.

NOTE—Impulse neutralizer marked 'DC' at TDC. with 15 (1°) graduations on either side.

Timing (Using Timing Light)—Connect timing light between distributor primary terminal and battery terminal on generator regulator. Set #1 or #6 piston in firing position (see setting above) with correct mark on impulse neutralizer aligned with pointer on chain case cover. Loosen lock-plate hold-down screw, center pointer on scale, tighten screw. Loosen lock-plate clamp bolt, rotate distributor until timing light just goes out, tighten clamp bolt. Check Manual Adjustment (following) for final setting.

Timing (Using Synchroscope)—Tool C-374. Clip lead to #1 spark plug, direct light on impulse neutralizer idle engine, adjust distributor as directed above.

Manual Adjustment—Set to give slight ping from 10-30 MPH accelerating with wide open throttle. To adjust, loosen lock-plate hold-down screw, move plate (not more than 4° or .007" before or after initial setting) counter-clockwise (if no ping), clockwise (if ping too severe), tighten screw.

CARBURETOR

CARBURETION:—**Carburetor**—Carter (Ball & Ball) 1½" single barrel, downdraft types. NOTE—Carburetors on cars with Fluid Drive have Slow-Closing Throttle device, Carburetors on cars with Vacamatic Transmission have kick-down shift switch.

Car Model	Carburetor Model
1941 (Std. Trans.)	E6S1, E6S2, E6W1
1941 (Fluid Drive)	EA1
1941 (Vacamatic Trans.)	E6T1, E6T2, E6U1, E6U2
1942 (Std. Trans.)	EE1
1942 (Fluid Drive)	EF1
1942 (Vacamatic Trans.)	EG1

For complete data, refer to Carburetor Index.

Idle Adjustment—With engine warm and running at slow idle speed (choke valve wide open, fast idle inoperative), set throttle stopscrew for idle speed of 6 MPH min. (Std.), 450 RPM or 4 MPH max. (1941 Vacamatic Trans. Cars), 5 MPH max. (1942 Cars with Vacamatic transmission). Adjust idle adjusting screw for smooth idle (½-1½ turns open, turn screw in for leaner mixture). Recheck idle speed.

Accelerating Pump Setting—Pump lever has three holes for pump link engagement. Set as follows: Inner Hole (minimum stroke)—Extreme hot temperatures or altitudes above 3000 feet.
Center Hole (med. stroke)—Normal summer setting.
Outer Hole (max. stroke)—Winter temperatures.

Float Level—5/64" (E6S2, S3; E6W1; E6T1, T2; E6U1, U2; EE1 Carb.), 1/16" (EA1, EF1, EG1 Carb.) from top of float (not float seam) to top edge of bowl with valve seated.

Metering Jet—*Refer to Carburetor Index for Carter (B&B) Downdraft Carburetor Jet Specification Table.* NOTE—If lean metering jet (High Altitude calibration) used at lower altitudes for increased economy, speed and power are reduced (not recommended).

Slow Closing Throttle (EA1, EF1, EG1, E6T1, E6T2, E6U1, E6U2): Dashpot type (Cars with Fluid Drive), Solenoid type (Cars with Vacamatic Trans.). Solenoid type is not adjustable.

For complete data, refer to Carburetion Equip. Index.

Adjustment (Dashpot Type)—Turn adjusting screw (above dashpot plunger) in as far as possible, then back screw out 5 full turns for 7/32" stroke.

Fast Idle:—Built-in type. Not adjustable.

Automatic Choke:—Sisson Type AC-758B.

For complete data, refer to Carburetion Equip. Index.

CARB. EQUIPMENT

Air Cleaner: AC No. 1529938 (1941), 1542284 (1942) oil bath. Replacement Filter Element #1542305 ('42).

Fuel Pump:—AC 'AT' #1523647—Exch. No. 505 diaphragm type pump. Pressure—4 lbs.

For complete data, refer to Carburetion Equip. Index.

Gasoline Gauge: Auto-Lite Electric type. No. NG-9704D (Dash Unit—1941), NG-9330D (Dash Unit—1942), No. NG-9329T (Tank Unit—1941-42).

For complete data, refer to Carburetion Equip. Index.

BATTERY

BATTERY:—**Willard Type WHT-2-17R.** 6 volt, 17 plate, 120 ampere hour capacity (20 hour rate).
Starting Capacity—152 amperes for 20 minutes.
Zero Capacity—300 amperes for 5.0 minutes. Five second voltage 4.4 volts.
Grounded Terminal—Positive (+) to engine.
Dimensions—Length 10¼". Width 7". Height 9⅜".
Location—Under hood in left fender shield.

STARTER

Auto-Lite Model MAX-4045, 4045A (1941), MAX-4050 (1942). Armature No. MAW-2030.
Drive—Overrunning clutch (solenoid pinion shift).
Rotation—Counter-clockwise at commutator end.
Brush Spring Tension—42-53 ozs. (new brushes).
Cranking Engine—125 RPM, 175 amperes, 5.4 volts.

Performance Data

Torque	R.P.M.	Volts	Amperes
0 ft. lbs.	5300	5.5	65
2.75 "	1630	5.0	200
5.5 "	970	4.5	300
8.7 "	600	4.0	400
12.0 "	300	3.5	500
16.5 "	Lock	3.	640
25.0 "	Lock	4.	880

Removal:—Flange mounted on left front face of flywheel housing. Disconnect wires (tape battery lead), remove oil filter tubes, filter and 2 starter bolts.

Starting Switch: Auto-Lite Solenoid Switch No. SS-4703 (1941), SS-4705 (1942).

For complete data, refer to Electrical Equipment Index.

GENERATOR

Auto-Lite Model GDZ-4801A (Std. 1941), GDZ-4801B (Std. 1942). GEB-4801A or GEG-4818A (City Police), GEG-4818B or GEG-4823B (State Police). Two brush types with current-voltage regulation.
Armature Nos. GDZ-2006F (GDZ-4801A), GEB-2006F (GEB-4801A), GEG-2006F (GEG-4818B).
Charging Rate Adjustment—No adjustment at generator. Charging rate controlled by Voltage Regulator and maximum output by Current Regulator.
Maximum Charging Rate—As given in tables below reached at approx. 25 MPH (GDZ Gen.) and above with load or discharged battery (Current Regulator setting). Actual charging rate controlled by Voltage Regulator and dependent on battery condition.

Performance Data—GDZ-4801A, B

Cold Amperes	Cold Volts	Cold R.P.M.	Hot Amperes	Hot Volts	Hot R.P.M.
0	6.4	925	0	6.4	1000
5	6.65	1060	5	6.65	1150
10	6.85	1200	10	6.85	1290
15	7.05	1340	15	7.05	1430
20	7.3	1480	20	7.3	1590
25	7.55	1620	25	7.55	1750
30	7.8	1760	30	7.8	1980
35①	8.0	1900	35	8.0	2250

Performance Data—GEB-4801A

0	6.4	560	0	6.4	600
4	6.6	630	4	6.6	675
8	6.8	700	8	6.8	750
12	7.0	775	12	7.0	840
16	7.2	845	16	7.2	930
20	7.4	920	20	7.4	1030
24	7.6	1000	24	7.6	1140
28	7.8	1075	28	7.8	1260
32①	8.0	1150	32	8.0	1400

Performance Data—GEG-4818A, B; 4823B

0	6.4	780	0	6.4	820
5	6.6	870	5	6.6	900
10	6.8	960	10	6.8	990
15	7.0	1040	15	7.0	1080
20	7.2	1130	20	7.2	1170
25	7.4	1220	25	7.4	1270
30	7.6	1310	30	7.6	1380
35	7.8	1410	35	7.8	1510
40①	8.0	1520	40	8.0	1680

①—Current regulator setting. See Regulator data.

CONTINUED ON NEXT PAGE

CONTINUED FROM PRECEDIN PAGE

Rotation—Counter-clockwise at commutator end.
Brush Spring Tension—53 ounces max. (GDZ Gen.), 64-68 ozs. (GEB & GEG Gen.) with new brushes.
Field Current—1.60-1.78 amperes at 6.0 volts (all).
Motoring Current—4.16-4.60 amps. (GDZ Gen.), 4.0-4.5 amps. (GEB), 4.7-5.2 amps. (GEG) at 6.0 volts.
Removal:—Pivot mounted at left side of engine at front. To remove, take out pivot and clamp bolts.
Belt Adjustment:—Loosen pivot and clamp bolts, pull out on generator until belt is snug or 40-50 lbs. tension secured on scale attached to field frame.

REGULATOR

REGULATOR:—Auto-Lite VRP-4001A (GDZ Gen.), VRP-4001B (GEB Gen.), VRP-4001F (GEG Gen.).
Current-Voltage types. In case on dash.
NOTE—For negative battery ground, VRP-4005A (GDZ Gen.), VRP-4005B (GEB), VRP-4005E (GEG)
For complete data, refer to Electrical Equipment Index.
NOTE—Regulator case cover is sealed. Serviced on exchange basis if seals not broken (to remove cover).

Cutout Relay

Cuts In—6.4-6.6 volts at approx. 1000 gen. RPM (VRP-4001A,5A), 600 RPM (1B,5B), 820 RPM (1F,5E).
Cuts Out—4.2-4.8 volts (approx. 4-6 amps. disch.).
Contact Gap—.015" minimum.
Air Gap—.031-.034" with contacts open (check at hinge end of core).

Voltage Regulator

Setting—7.2-7.5 volts at 70°F. See Electrical Equipment Section for settings at other temperatures.
To Check (without breaking seals)—Connect ammeter in charging line at regulator 'B' terminal (use short heavy leads), voltmeter between 'B' terminal and ground. Operate generator at speed equivalent to 30 MPH., charging fully charged battery, until voltage is steady. Voltage reading should agree with setting given above.
To Adjust (with cover removed)—Change regulator armature spring tension by bending lower spring hanger slightly. See Electrical Equipment Section.
Contact Gap—.012" min. (armature against stop pin).
Air Gap—.048-.052" with contacts just opening.

Current Regulator

Setting (VRP-4001A, 5A)—34-36 amperes (marked '35' on cover). **(VRP-4001B, 5B)** 31-33 (marked '32' on cover). **(VRP-4001F, 5E)** 39-41 (marked '40').
To Check (without breaking seals)—Connect test meters as for voltage check (above). Operate generator at speed equivalent to 30 MPH. charging battery, turn on car lights and accessories or connect load (bank of headlamp bulbs, etc.) between ammeter and battery so that generator charges at peak rate and Current Regulator operates. Current reading should agree with setting given above. If more than slight excess noted, regulator is defective.
To Adjust (with cover removed)—Same as for Voltage Regulator (above).
Contact Gap & Air Gap—Same as Voltage Regulator.

LIGHTING

LIGHTING:—Headlamps—Corcoran-Brown 'Sealed Beam' type. *For data, refer to Elec. Equipment Index.*
Headlamp Adjustment—Aim upper beam straight ahead (hot spot center 3" below lamp center height).
Beam Indicator—Small red light on instrument panel above speedometer. Lighted with upper beams on.
Direction Signal—*Refer to Electrical Equip. Index.*

Switches

Lighting—Chrysler No. 934519 ('41), 934599 ('42).
Beam Selector—Chrysler No. 859974.
Instrument—Chrysler 853371 ('41), 947193 ('42).
Dome Lamp Pillar—Chrysler No. 317180.
Dome Lamp Door—Chrysler No. 882943.
Stop Light—Chrysler No. 677112.
Direction Signal—Chrysler No. 865763 or 939577 (1941), 938926 (1942).

Bulb Specifications

Position	Candlepower	Mazda No.
Headlamps		Sealed Beam
Front Dir. Signal & Parking	21-3	1158
Instrument	6	81
Glove Compt., Ash Tray	1½	55
Beam & Dir. Indic., Ign. Sw.	1	51
Rear Dir. Signal & Tail	21-3	1158
Stop Light	21	1129
Rear License	3	63
Reading or Dome	15	87

NOTE—Instrument Lamps for '41 were 1½ cp. No. 55.

MISC. ELECTRICAL

LIGHTING CIRCUIT BREAKER:—Vibrating, thermostatic type. Mounted on lighting switch.
FUSES:—Clock—2 ampere. In connector behind clock.
Vacamatic Transmission Control—30 ampere. Under relay on left side of dash.
Direction Signal—30 ampere ('41), 9 ampere ('42). In wire fuse connector behind instrument panel.
HORNS: Single—Delco-Remy No. 1999921, 1999924, 1999911 (low note), or 1999918 (high note).
Dual—Auto-Lite Horn Set No. HO-5003 or HT-5003.
Current Draw—Approximately 7 amperes (single horn), 35-40 amperes (dual horns).
Horn Relay: Auto-Lite Model HRC-4001 (1941-42), HRL-4001 (1942). NOTE—HRL-4001 is special type with winding connected through ignition switch so horns operative only with Ignition On.
Contacts Close—1.5-3.0 volts. **Open**—.5 volt.
Contact Gap—.026". **Air Gap**—.016-.020" (closed).

ENGINE

ENGINE SPECIFICATIONS (1941): 6 cylinder, "L" head type. **Bore**—3⅜". **Stroke**—4½".
Displacement—241.5 cu. ins. **Rated HP**—27.34.
Developed Horsepower—112 (Std. 6.8-1 or 6.5-1 hd.), 115 (Optl. 7.2-1 hd.—Std. 7 pass.), at 3600 RPM.
Compression Ratio and Pressure—As follows:

Ratio	Pressure at 1000 RPM	At 125 RPM
6.8 or 6.5-1 iron	140-150 lbs.	115-125 lbs.
7.2-1 aluminum hd.	150-160 lbs.	120-130 lbs.

Vacuum Reading—Steady 18-20" idling (below 1000').
See Chrysler Shop Notes for engine removal directions.

ENGINE SPECIFICATIONS (1942): 6 cylinder, "L" head type. **Bore**—3 7/16". **Stroke**—4½".
Displacement—250.6 cubic inches. **Rated HP**—28.36.
Developed Horsepower—128 at 3800 RPM.
Compression Ratio—6.6-1 cast-iron head.
Compression Pressure—160-170 lbs. at 1000 RPM or 125-135 lbs. at cranking speed. Variation 10 lbs. max.
Vacuum Reading—18-21" steady idling at 6 MPH.
Refer to Chrysler Shop Notes for Engine Removal data.
PISTONS: Aluminum alloy, U-slot, Cam ground, tin-plated type (1941 & first 1942 cars); Cast Iron, ribbed, Cam ground type (later 1942 cars).
Length—3⅞" (Aluminum), 3½" (Cast Iron).
Weight—17.5 ozs. stripped (1941 Aluminum type).
Removal—Pistons and rods removed from above.
Clearance (1941)—Top .023". Skirt .0000-.0010".
Clearance (1942 C. I.)—Top .016". Skirt .0008-.0018".
Original Bore & Piston Sizes, Replacement Pistons:—*Refer to Chrysler Shop Notes for sizes and markings.*
Fitting New Pistons:—Check piston size with micrometer at bottom of skirt 90° from pin bosses. With piston and wall dry, insert feeler between cylinder wall and piston (piston inverted, pin removed) 90° from pin bosses. Feeler pull should be 10-15 lbs. on .0015" feeler (cast-iron), 5-7 lbs. on .002" (aluminum).
Installing Pistons:—Slot away from valves (alum.).
PISTON RINGS (1941): 4 rings above pin. #1 compression (upper inner edge stepped), #2 Comp. (lower outer edge stepped), #3 & 4 (slotted oil rings).

Ring	Width	End Gap	Side Clearance
Comp. (Top)	⅛"	.007-.015"	.002-.004"
Comp. (#2)	⅛"	.007-.015"	.0015-.0035"
Oil Control	5/32"	.007-.015"	.001-.0025"

PISTON RINGS (1942): 4 rings above pin. #1 and #2 compression rings (upper inner edge stepped), #3 and #4 oil rings (slotted).

Ring	Width	End Gap	Side Clearance
Compr. #1	3/32"	.007-.015"	.0025-.004"
Compr. #2	3/32"	.007-.015"	.002-.0035"
Oil Control	5/32"	.007-.015"	.001-.0025"

Replacement Rings:—*Refer to Chrysler Shop Notes.*
PISTON PIN:—Diameter—55/64". **Length**—2⅞". Floating type. Pin hole in rod bronze bushed.
Pin Fit in Piston—Loose thumb push fit at 70°F, pin should fall out if piston jarred (Cast Iron), thumb push fit at 130°F. (Aluminum Pistons).
Pin Fit in Rod Bushing—Thumb push fit at 70°F.
Replacement Pins:—Std. and .003", .008" oversize.
CONNECTING ROD:—Length—7⅞".
Weight—34.24 ozs. with bearings & bolts (1941).
Lower Bearing Diameter—2⅛". *See Engine Lettering Note in Chrysler Shop Notes for 'Special Standard' sizes.*
Lower Bearing—Removable, precision type, thin babbitt. **Clearance** .001-.0015". **Sideplay** .0055-.0115".
Bearing Adjustment: None (no shims). Replace bearings. *See Chrysler Shop Notes for instructions.*
Replacement Bearings—*See Chrysler Shop Notes.*
Installing Rods:—Oil metering hole to camshaft.
CRANKSHAFT:—4 bearings, 9 integral counterweights.
Bearing Diameter—2½". *See Engine Lettering Note in Chrysler Shop Notes for 'Special Standard' sizes.*
Bearing Type—Removable, precision type, thin babbitt on steel. **Clearance**—.001-.0015".
Bearing Adjustment:—*Refer to Chrysler Shop Notes for Bearing Removal and Adjustment instructions.*
Replacement Bearings & Bearing Caps: *Refer to Chrysler Shop Notes for complete data.*
End Thrust:—Taken by flange faces on rear (#4) main bearing. **Endplay**—.003-.007" (.003" desired).
CAMSHAFT:—4 bearing. Non-adjustable chain drive. *Refer to Chrysler Shop Notes for Camshaft Removal.*
Bearing Type—Removable steel-backed, babbitt-lined bushings (except #4 machined in block).
Bearing Diameters—#1, 2"; #2, 1 31/32"; #3, 1 15/16"; #4, 1¼".
Clearance—.001-.003" (#1), .0015-.0035" (all others).
End Thrust:—Taken by thrust plate behind camshaft sprocket hub. **Endplay**—.002-.006".
Timing Chain:—Morse Type 1883N, No. 2661. Width 1". Pitch .500" (½"). Length 24" or 48 links.
Camshaft Setting:—Sprockets marked. Mesh chain with sprockets turned so that '0' marks are adjacent and in line with straightedge across shaft centers.
VALVES: Specifications for each model as follows:

C28 (1941)

Valve	Head Diameter	Stem Diameter	Length
Intake	1 21/32"	.340-.341"	4 25/32"
Exhaust	1 17/32"	.340-.341"	4 25/32"

	Seat Angle	Lift	Stem Clearance
All Valves	45°	⅜"	.0015-.0035"

ENGINE

CONTINUED FROM PRECEDING PA E

C34 (1942)

Valve	Head Diameter	Stem Diameter	Length
Intake	1 23/32"	.340-.341"	4 25/32"
Exhaust	1 17/32"	.3395-.3405"	4 25/32"

	Seat Angle	Lift	Stem Clearance
Intake	45°	3/8"	.0015-.0035"
Exhaust	45°	3/8"	.002-.004"

See Chrysler Shop Notes for Exhaust Valve Seat inserts.

Valve Guides:—Remove from above. Press new guides in (stepped end down) with upper end 7/8" below top of block, ream to .3425-.3435".

Valve Springs:—Install with closely coiled end to top.

Free length 2".	Spring Pressure	Length
Valve Closed	40-45 lbs.	1 3/4"
Valve Open	107-115 lbs.	1 3/8"

Valve Lifters:—Mushroom type (remove from below). Stem diam. 5/8". Ream holes from above (pilot in valve guide). Oversizes .001", .008", and .030". **Lifter Clearance in Block**—.000-.001".

VALVE TIMING

Tappet Clearance:—.008" Intake, .010" Exh. (hot and idling), .002" additional exh. clearance desirable for sustained high speeds. NOTE—Tappet screws self-locking. Remove right front engine inspection shield between fender and frame for access to valves.

Valve Timing:—See Camshaft Setting above. **Intake Valves**—Open 12° BTDC. Close 44° ALDC. **Exhaust Valves**—Open 50° BLDC. Close 6° ATDC. **Valve Timing Check**—With .014" (cold) tappet clearance #6 intake valve should open with #6 piston within range of 5° to 17° or .011" to .122" BTDC with 5th to 17th graduation before DC mark on impulse neutralizer aligned with pointer on chain case cover. Reset tappet clearance to .008" hot.

LUBRICATION

LUBRICATION:—Pressure (pump on right of engine). *Refer to Chrysler Shop Notes for Oil Pump Removal.*

Normal Oil Pressure:—30-45 lbs. above 30 MPH.

Oil Pressure Relief Valve:—Under plug below starter. Opens at 40-45 lbs. Spring painted red, green, or unmarked. If spring replaced, use same color spring.

Crankcase Capacity:—5 quarts (refill).

COOLING

COOLING SYSTEM:—**Capacity**—18 quarts. *Refer to Chrysler Shop Notes for Radiator Core Removal and Water Distribution Tube servicing.*

Water Pump:—Packless type with grease fitting. *See Water Pump Section for complete data.*

Thermostat:—Bishop & Babcock or Fulton. On cyl. hd. **Setting**—Starts to open 157-162°F. Fully open 183°F.

Temperature Gauge: Auto-Lite (Motometer) Vapor Tension type. Auto-Lite No. H-9703 ('41), 9929 ('42). *See Miscellaneous Section for complete data.*

CLUTCH

CLUTCH:—**Borg & Beck 10A7 (Std.), 9A7 (with Fluid Drive), 11A6 (Taxi) with 'Borglite' driven member.** Assy. No. 940 or 930 (10A7), 953 (9A7), 941 or 931 (11A6) stamped on cover. Single plate, dry disc types. *See Clutch Section for complete data.*

Facings—Molded-Woven, 2 used. Inside Diam. 7" (10A7), 6" (9A7), 6 1/2" (11A6). Outside Diameter 10" (10A7), 9 1/4" (9A7), 11" (11A6). Thickness .125" (1/8").

Adjustment:—Pedal should just clear toeboard (adjust stopscrew n lower end of pedal) & have 1" free travel (adjusting nut on connector link at fork).

Removal:—Remove release fork pull-back spring, Transmission (see Transmission) and housing underpan. Pull out clutch release bearing and sleeve. Mark cover and flywheel (or driving plate on Fluid Drive). Take out cover screws, remove assembly.

FLUID DRIVE

FLUID DRIVE (OPTL.):—Fluid coupling at rear of engine. *See Miscellaneous Section for complete data.*

TRANSMISSION

STANDARD

TRANSMISSION (STD.):—**Own Make.** All helical gear, constant-mesh, synchro-mesh (second and high), sliding gear (low and reverse) with remote shift. *See Transmission Section for complete data.*

Transmission Control:—Steering column shift. Manual type Std. Power Shift (vacuum type) Optl. *See Transmission Section for complete data.*

Removal:—Jack up front end of car, disconnect front universal (loosen companion flange nut if disassembling transmission—see Chrysler Shop Notes for Propeller Shaft Center Bearing Removal on 7 pass.). Disconnect speedometer cable, hand brake cable, gear-shift rods, vacuum and air hose (if Power Shift used). Remove trans.-to-clutch housing capscrews and nuts. Pull unit to rear, down and out of car.

TRANSMISSION

OPTIONAL EQUIPMENT

►**1941-Early 1942 Chrysler Vacamatic Underdrive:** With Diaphragm type power unit. *See Transmission Section for complete data.* **Control Relay**—Auto-Lite Model HRE-4001.

►*CAUTION—To correct "Ignition Cutting Out" and "Transmission Not Shifting" on 1941-Early 1942 cars, see Interrupter Switch Insulator and Transmission Remains in First or Third (No Upshift) Special Service Notes in 1941-Early 1942 Chrysler Vacamatic Underdrive Transmission article in Transmission Section.*

►**Late 1942 Chrysler Vacamatic Underdrive:** With Piston type power cylinder. *See Transmission Section for complete data.* **Control Relay**—Auto-Lite Model HRM-4001. **Governor Switch**—Auto-Lite Model TG-4002R. **Solenoid Vacuum Valve**—Auto-Lite SSJ-4001, 4001B. **Vacuum Piston Assy.**—Auto-Lite VP-4001. **Air Cleaners**—Auto-Lite No. SP-2472 (vacuum valve cleaner), SP-2481.

Removal:—Same as Std. transmission (above), plus the following: Remove floor board, wires from vacuum unit solenoid, interrupter and governor switches, hose from vacuum unit air cleaner to vacuum unit. Take out vacuum unit (disconnect pullout cable and return spring and remove pivot pin).

UNIVERSALS

UNIVERSAL JOINTS:—**Detroit-Universal Series 7200.** *See Universals Section for complete data.*

Propeller Shaft Center Bearing:—Used on 7 passenger sedans. *Refer to Chrysler Shop Notes for servicing.*

REAR AXLE

REAR AXLE:—**Own Make.** Semi-floating, Hypoid gear & Hotchkiss drive. *Refer to Rear Axle Section for data.* **Ratio**—Standard: 3.9-1 (5 pass.), 4.3-1 (7 pass.) Vacamatic Trans.: 3.54-1 (5 pass.), 3.91-1 (7 pass). **Backlash**—.006-.010". Screw adjustment.

Removal:—Hoist rear end of car, remove rear wheels. Disconnect brake hose at frame bracket, lower ends of shock absorbers and rear universal. Disconnect Transverse Sway Bar at axle bracket. Support axle, remove rear spring hold-down clips, withdraw axle Assembly. NOTE—To remove carrier without disturbing housing, disconnect rear universal, remove axle shafts, take out carrier mounting screws.

Axle Shaft Removal & Wheel Bearing Adjustment:—*See 1942 Chrysler Eight Model C36 article for data.*

SHOCK ABSORBERS

SHOCK ABSORBERS: Domestic—Monroe Direct acting type (Std.), Delco (Cars with 18" wheels). **Export**—Delco Direct Acting, or Direct Acting Adjustable types. *See Shock Absorber Section for data.*

Transverse Sway Strut (7 Pass.). Rear Swar bar with Monroe 956790 direct acting hydraulic shock absorber built in. *See Shock Absorber Section for data.*

FRONT SUSPENSION

Front Suspension:—Independent, linked parallelogram type with coil springs and direct acting shocks. *See Front Suspension Section for complete data.*

Kingpin Inclination—4 3/4° to 6°.
Camber—Positive 1/4°. Limits 0° to Pos. 3/4°.
Caster—Negative 1° to Positive 1°. Not adjustable.
Toe-In—0-1/8" (1941), 0-1/16" (1942). Adjusted by turning both tie rods equally.
Steering Geometry—Outer wheel turned 20°, Inner Wheel 22° ± 1° (5 pass.), 21 1/2° ± 1° (7 pass.).

STEERING GEAR

Steering Gear: Chrysler (Gemmer design) Model 305 (5 Pass. Cars), 335 "3-tooth" type (7 Pass. Cars). *See Steering Gear Section for complete data.*

BRAKES

BRAKES:—**Service.** Lockheed hydraulic, double anchor type. Hand lever applies independent shaft brake. *See Brake Section for complete data.*

7 Passenger Service Brakes:—Same design and size as used on Chrysler 8 Model C36. *See 1942 Chrysler Eight C36 article for all data on 1942 7 Pass. Service Brakes.* **Drums**—Centrifuse. Diameter 11". **Lining**—Molded asbestos. 2" wide. 13/64" thick. Length (front shoe) 11 15/32", (rear shoe) 7 31/32". **Clearance**—.012" Toe (top), .006" Heel, for each shoe. **Braking Power**—60% front wheels, 40% rear.

Hand Brake:—On drum at rear of transmission. **Adjustment**—*See Chrysler Shop Notes for data.* **Drum**—Cast-iron. Diameter 6", 7" (Vacam. Trans.). **Lining**—Moulded and compressed asbestos. Width 2" (Std. trans.), 2 1/2" (Vac. trans.). Thickness 5/32". Length 17 1/16" (1941 with Std. Trans.), 16 11/16" (1942 with Std. Trans.), 20 1/8" (1941 with Vacamatic Trans.), 20" (1942 with Vacamatic Trans.).

MISC. MECHANICAL

WINDSHIELD WIPER: Auto-Lite Model EWD-5001, 5003 (1941), EWH-5001, 5003 (1942). Electric type with circuit breaker. 5003 types used on Conv. Coupe. *See Miscellaneous Section for complete data.*

Circuit Breaker—Vibrating, thermostatic type. Starts to operate with current of 12 amperes.

CONVERTIBLE TOP CONTROL:—Electric type. *See Miscellaneous Section for complete data.*

Top Control Motor—Auto-Lite Model EWG-4002 (1941), EWG-4003 (1942).
Top Control Relay—Auto-Lite Model HRF-4001.

HOOD LOCK, FRONT END ASSEMBLY & OIL PAN REMOVAL:—*Refer to Chrysler Shop Notes for data.*

MODEL IDENTIFICATION

MODEL DESIGNATIONS:—For all models as follows:

	Saratoga	New Yorker	Crown Imperial
1941	C30K	C30N	C33
1942	C36K	C36N	C37

SERIAL NUMBER:—Stamped on plate on right front door hinge pillar post. First number for each model:

	Saratoga	New Yorker	Crown Imperial
1941	6,756,501	6,624,101	7,807,501
1942	6,762,501	6,674,201	7,808,401

ENGINE NUMBER:—On left side of block between #2 & #3 cylinders. First number 1001 with prefix C30 (C30K&N), C33 (C33), C36 (C36K&N), C37 (C37). ***Refer to Chrysler Shop Notes for Engine Number Lettering data ('Special Standard' Bore and Bearing sizes).***

TUNE-UP

COMPRESSION: Ratio—6.8-1 Head material Cast Iron (Std. C30 '41 & all 1942 models), Aluminum (Std. C33 '41, Optl. C30 '41).
Pressure—160-170 lbs. at 1000 RPM. or 125-135 lbs. at cranking speed of 125 RPM.

VACUUM READING:—18-21" steady idling at 6 MPH.

FIRING ORDER: 1-6-2-5-8-3-7-4. See diagram.

SPARK PLUGS: Auto-Lite Type A-7 (Cast Iron Head), AL-7 (Aluminum Head). 14 mm. Metric type.
Gaps—.025".

IGNITION: See Coil, Condenser, and Distributor.
Breaker Gap—.018. **Cam Angle** 27° (.017" gap).
Automatic Advance—12° max. at 1750 RPM (distr.).
Vacuum Advance—6° distr. with 17" vacuum (IGT-4103A-1, IGT-4104 Distr.), 8° distr. with 17" vacuum (IGT-4103-1, IGT-4201-1), 10° distr. with 16" vacuum (IGT-4201B-1).

IGNITION TIMING: See Ignition Timing.
Std. Setting—At TDC (1941 Cast Iron Head), 3° BTDC. (1941 Aluminum Head), 2° ATDC. (1942 Cast Iron Head) with dead center "DC" mark or correct degree mark on impulse neutralizer at indicator on front of engine.

CARBURETION: See Carburetor & Carb. Equipment.
Idle Setting—Both idle screws midway between "miss" and "roll" points. Idle speed 6 MPH. (except '42 cars with Vacamatic Trans.—4½ MPH).
Float Level—Fuel level ⅝" below top of bowl.
Accelerating Pump—Inner hole—Summer, Outer hole—Winter.

Fuel Pump Pressure: 4 lbs. maximum.

MANIFOLD HEAT CONTROL:—Thermostatic coil type. See that valve and shaft rotate freely. When installing coil, place inner end in slot in valve shaft, wind free end up one turn only counter-clockwise

VALVES: See Valve Timing.
Tappet Clearance:—.008" Intake, .010" Exh. (hot and idling), .002" additional exh. clearance desirable for sustained high speeds. NOTE—Tappet screws self-locking. Remove right front engine inspection shield between fender and frame for access to valves.

STARTING: See Battery, Starter, Generator, Regulator.

IGNITION

Ignition Switch:—Mitchellock Model 24-R, No. 8052 or Model 30-R, No. 8793 (with Vacamatic Trans.).
NOTE—Model 30-R switch has extra terminal for transmission control (for Vacamatic transmission).

Ignition Lock—Yale & Towne or Briggs & Stratton. B&S No. 80592. Key Series 1BP to 1000BP. Groove 24.

COIL: Auto-Lite Model CE-4650 (Std. 1941), CE-4656 (Spec. 1941, Early 1942), CE-4660 (1942). Service Coil (less Switch & Cable) CE-3224JS. Mounted on dash.
Ignition Current—2¼ amperes idling, 5 stopped.

CONDENSER: Auto-Lite Part No. IG-3927.
Capacity—.25-.28 microfarad.

DISTRIBUTOR: Auto-Lite Model IGT-4103-1 (C30), IGT-4103A-1 (C33 Std.), IGT-4104 (C33 Tachometer Drive), IGT-4201B-1 (C36, C37), IGT-4201-1 (C36, C37 with Cast Iron Pistons). Single breaker, 8 lobe cam, full automatic advance type with auxiliary vacuum spark control and manual adjustment.
Breaker Plate Identification—Number stamped on plate as follows: #8 (IGT-4103-1, 4201-1), #6 (IGT-4103A-1, 4104), #10 (IGT-4201B-1).

Breaker Gap—Set at .018". Limits .016-.020".
Cam Angle or Dwell—27° clsd., 18° open (.017" gap).
Breaker Arm Spring Tension—17-20 ozs.
Rotation—Clockwise viewed from above.

Automatic Advance

Distributor Degrees	Distributor R.P.M.	Engine Degrees	Engine R.P.M.
Start	350	0	700
3	400	6	800
6	850	12	1700
9	1300	18	2600
12	1750	24	3500

Vacuum Spark Control—Integral type (on distributor, linked directly to breaker plate). Provides additional advance at speeds above idling except when engine accelerated or operated with wide open throttle (spark retarded by return spring in unit).

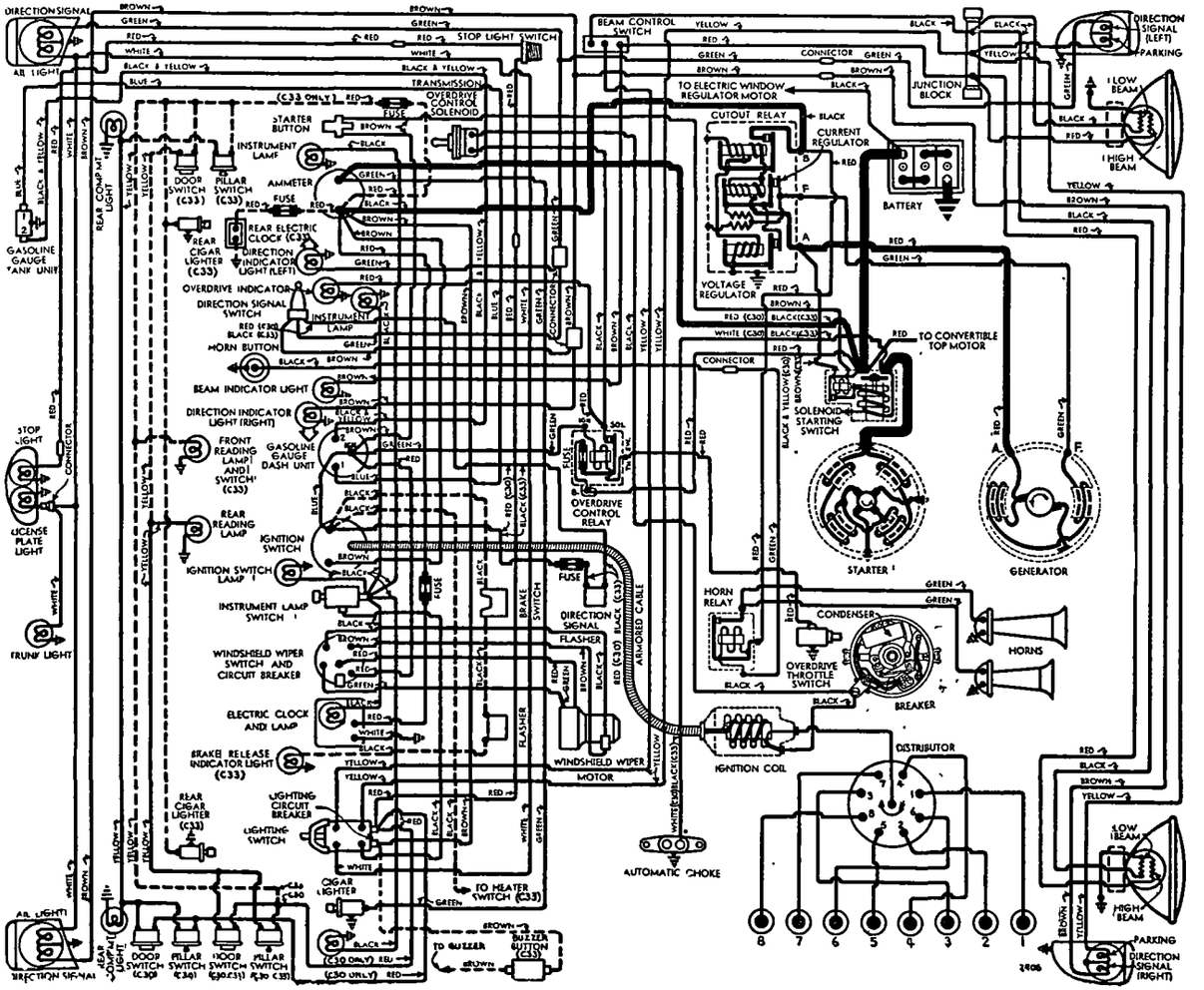

1941 MODELS C30 & C33

Vacuum Advance—IGT-4103A-1, 4104

Distr. Degrees	Eng. Degrees	Vacuum (" of HG)
Start	0°	5"
1°	2°	7"
3°	6°	11"
5°	10°	15"
6°	12°	17"

Vacuum Advance—IGT-4201B-1

Start	0°	5"
2°	4°	7¼"
5°	10°	10½"
8°	16°	13¾"
10°	20°	16"

Vacuum Advance—IGT-4103-1, 4201-1

Start	0°	5"
2°	4°	8"
4°	8°	11"
6°	12°	14"
8°	16°	17"

Manual Adjustment—Provides for minor changes in ignition timing at distributor. See Ignition Timing.

Distributor Removal:—Mounted on left side of crankcase. To remove, disconnect vacuum line, take out hold-down screw in lock plate. **Installation**—Install distributor with #1 piston in firing position (see table below) and rotor opposite #1 segment in cap.

IGNITION TIMING

IGNITION TIMING:—Initial setting (correct for fuel of approx. 70 octane rating at low altitudes) shown below. See Manual Adjustment (following).

Model	Flywheel Degrees	Piston Position
1941 Cast Iron Head	0° TDC	.000" TDC.
1941 Aluminum Head	3° BTDC	.004" BTDC.
1942 All Engines	2° ATDC	.002" ATDC.

NOTE—Impulse neutralizer marked 'DC' at TDC. with 15 (1°) graduations on either side.

Timing (Using Timing Light)—Connect timing light between distributor primary terminal and battery terminal on generator regulator. Set #1 or #8 piston in firing position (see setting above) with correct mark on impulse neutralizer aligned with pointer on chain case cover. Loosen lock-plate hold-down screw, center pointer on scale, tighten screw. Loosen lock-plate clamp bolt, rotate distributor until timing light just goes out, tighten clamp bolt. Check Manual Adjustment (following) for final setting.

Timing (Using Synchroscope)—Tool C-374. Clip lead to #1 spark plug, direct light on impulse neutralizer (mark correct graduation with paint), idle engine, adjust distributor as directed above until mark aligned with pointer on chain case cover.

Manual Adjustment—Set to give slight ping from 10-30 MPH accelerating with wide open throttle. To adjust, loosen lock-plate hold-down screw, move plate (not more than 4° or .007" before or after initial setting) counter-clockwise (if no ping), clockwise (if ping too severe), tighten screw.

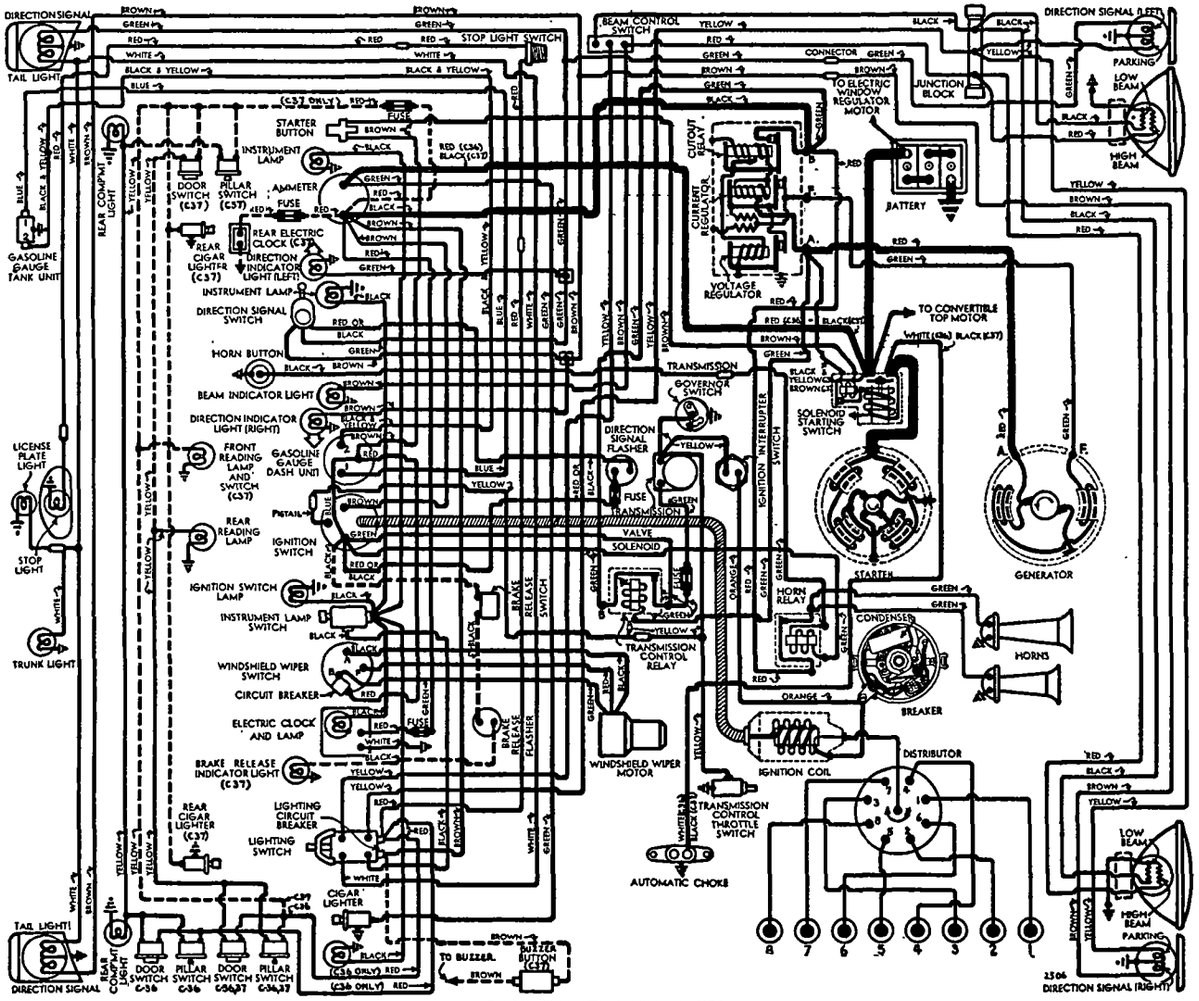

1942 MODELS C36 & C37

See "1942 Chrysler Vacamatic Type" Transmission article in Transmission Section for Late 1942 Transmission Wiring

CARBURETOR

CARBURETION:—**Carburetor.** Stromberg Model AAV-2, 1¼" duplex downdraft with Sisson Automatic Choke. *For complete data, refer to Carburetor Index.*

Idle Setting—With engine warm and fast idle inoperative, set throttle stopscrew for 6 MPH idle speed. Adjust both idle screws (one for each barrel—adjust exactly alike) for smooth performance (turn screws in for leaner mixture), recheck idle speed. NOTE—On cars with Vacamatic Transmission (1942 Type), set idle speed at 4½ MPH. If vacuum gauge used, set for highest reading on gauge.

Accelerating Pump Setting—Throttle lever has two holes for pump link engagement. Set as follows: Inner Hole (short stroke)—Extreme hot weather. Outer Hole (long stroke)—Winter temperatures.

Float Level—Fuel level ⅝" below top edge of bowl (even with bottom of sight hole on side of bowl) with engine idling (4 lbs. pressure).

Metering Jet—*Refer to Carburetor Index for Stromberg Downdraft Carburetor Jet Specification Table.*

Fast Idle:—Rotary cam, adjustable type. *For complete data, refer to Carburetion Equip. Index.*

Setting—Adjust connector rod so choke valve ⅛" open with fast idle screw against first step on cam.

Automatic Choke:—Sisson Type AC-600. *For complete data, refer to Carburetion Equip. Index.*

Throttle Guard:—Vacuum operated throttle kicker. *For complete data, refer to Carburetion Equip. Index.*

Setting—.010" clearance between cross-shaft lever adjusting screw and throttle control plunger with engine idling at correct hot or slow idle speed.

CARB. EQUIPMENT

Air Cleaner:—AC #1529941 heavy duty oil-bath type. Use Replacement Filter Element Assembly #1529999.

Fuel Pump:—AC 'AW' #1537445—Exch. No. 514. Diaphragm type fuel pump. Pressure—4 lbs. *For complete data, refer to Carburetion Equip. Index.*

Gasoline Gauge: Auto-Lite Electric type. No. NG-9704D (Dash Unit—1941), NG-9930D (Dash Unit—1942), No. NG-9330T (Tank Unit—1941-42). *For complete data, refer to Carburetion Equip. Index.*

BATTERY

1941 M DELS C30, C33

BATTERY:—**Willard Type WHT-2-19R.** 6 volt, 19 plate, 135 Ampere Hour capacity (20 hour rate).

Starting Capacity—171 amperes for 20 minutes.

CONTINUED N NEXT PAGE

C NTINUED FR M PRECEDIN PAGE

Zero Capacity—300 amperes for 5.8 minutes. Five second voltage 4.5 volts.
Grounded Terminal—Positive (+) to engine.
Dimensions—Length 10 5/16". Width 7". Height 9⅜".
Location—Under hood in left fender shield.

BATTERY

1942 MODELS C36, C37

BATTERY:—Auto-Lite Type CF-2-19R. 6 volt, 19 plate, 135 ampere hour capacity (20 hour rate).
Starting Capacity—170 amperes for 20 minutes.
Zero Capacity—300 amperes for 5.4 minutes. Five second voltage 4.45 volts.
Dimensions—Length 10¼". Width 7". H'ght 8 15/16".
Grounded Terminal—Positive (+) to engine.
Location—Left side in engine compartment.

STARTER

Auto-Lite Model MAX-4045, MAX-4045A (1941), MAX-4050 (1942). Armature No. MAW-2030.
Drive—Solenoid pinion shift & overrunning clutch.
Rotation—Counter-clockwise at commutator end.
Brush Spring Tension—42-53 ozs. (new brushes).
Cranking Engine—125 RPM, 175 amperes, 5.4 volts.

Performance Data

Torque		R.P.M.	Volts	Amperes
0	ft.lbs.	5300	5.5	65
2.75	"	1630	5.0	200
5.5	"	970	4.5	300
8.7	"	600	4.0	400
12.0	"	300	3.5	500
16.5	"	Lock	3.	640
25.0	"	Lock	4.	880

Removal:—Flange mounted on left front face of flywheel housing. Disconnect wires (tape battery lead), remove oil filter tubes, filter and 2 starter bolts.
Starting Switch: Auto-Lite Solenoid Switch Model SS-4703 (1941), SS-4705 (1942).
For complete data, refer to Electrical Equipment Index.

GENERATOR

STANDARD

Auto-Lite Model GDZ-4801A (C30 Early Cars, C36), Model GEG-4818C (C30 Late Cars, C33; C36 Town Sedan, C37). Two brush (shunt) type with voltage and current regulation.
Armature Nos.—GDZ-2006F (for GDZ-4801A generator), GEG-2006F (for GEG-4818C).
Charging Rate Adjustment—No adjustment at generator. Charging rate controlled by Voltage Regulator and maximum output by Current Regulator.
Maximum Charging Rate—35 amperes (C36 GDZ Gen.), 8.0 volts, 2200 Gen. RPM or approx. 26 MPH, 40 amperes (C37, 36 GEG Gen.), 8.0 volts, 1700 Gen. RPM or approx. 23 MPH and above with load or discharged battery (Current Regulator setting). Actual charging rate controlled by Voltage Regulator and dependent on battery condition.

Performance Data—GDZ-4801A

Cold			Hot		
Amperes	Volts	R.P.M.	Amperes	Volts	R.P.M.
0	6.4	925	0	6.4	1000
5	6.65	1060	5	6.65	1150
10	6.85	1200	10	6.85	1290
15	7.05	1340	15	7.05	1430
20	7.3	1480	20	7.3	1590
25	7.55	1620	25	7.55	1750
30	7.8	1760	30	7.8	1980
35①	8.0	1900	35	8.0	2250

Performance Data—GEG-4818C

Cold			Hot		
Amps.	Volts	R.P.M.	Amps.	Volts	R.P.M.
0	6.4	780	0	6.4	820
5	6.6	870	5	6.6	900
10	6.8	960	10	6.8	990
15	7.0	1040	15	7.0	1080
20	7.2	1130	20	7.2	1170
25	7.4	1220	25	7.4	1270
30	7.6	1310	30	7.6	1380
35	7.8	1410	35	7.8	1510
40①	8.0	1520	40	8.0	1680

①—Current regulator setting. See Regulator data.
Rotation—Counter-clockwise at commutator end.
Brush Spring Tension—53 ounces max. (GDZ Gen.), 64-68 ozs. (GEG generator) with new brushes.
Field Current—1.60-1.78 amperes at 6.0 volts (all).
Motoring Current—4.16-4.60 amperes (GDZ Gen.), 4.7-5.2 amperes (GEG generator) at 6.0 volts.
Removal:—Pivot mounted at left side of engine at front. To remove, take out pivot and clamp bolts.
Belt Adjustment:—Loosen pivot and clamp bolts, pull out on generator until belt is snug or 40-50 lbs. tension secured on scale attached to field frame.

GENERATOR

SPECIAL EQUIPMENT

Auto-Lite Models GEB-4801A (City Police), GEG-4818A or 4818C (City Police), GEG-4818B or 4823B (State Police). ***For complete data on these generators (and regulators used with them), refer to 1941-42 Chrysler Six article (preceding).***

REGULATOR

REGULATOR:—Auto-Lite VRP-4001A (GDZ generator), VRP-4001F (GEG Gen.). Current-Voltage types. In case on dash. NOTE—For negative battery ground use VRP-4005A (GDZ Gen.), VRP-4005E (GEG Gen.). ***For complete data, refer to Electrical Equipment Index.***
NOTE—Regulator case cover is sealed. Serviced on exchange basis if seals not broken (to remove cover).

Cutout Relay

Cuts In—6.4-6.6 volts at approx. 1000 gen. RPM. (VRP-4001A, 5A), 820 RPM (VRP-4001F, 5E).
Cuts Out—4.2-4.8 volts (approx. 4-6 amps. disch.).
Contact Gap—.015" minimum.
Air Gap—.031-.034" at hinge end (contacts open).

Voltage Regulator

Setting—7.2-7.5 volts at 70°F. See Electrical Equipment Section for settings at other temperatures.
To Check (without breaking seals)—Connect ammeter in charging line at regulator 'B' terminal (use short heavy leads), voltmeter between 'B' terminal and ground. Operate generator at speed equivalent to 30 MPH., charging fully charged battery, until voltage is steady. Voltage reading should agree with setting given above.
To Adjust (with cover removed)—Change regulator armature spring tension by bending lower spring hanger slightly. See Electrical Equipment Section.
Contact Gap—.012" min. (armature against stop pin).
Air Gap—.048-.052" with contacts just opening.

Current Regulator

Setting (VRP-4001A, 5A)—34-36 amperes (marked '35' on cover). **(VRP-4001F, 5E)** 39-41 (marked '40').
To Check (without breaking seals)—Connect test meters as for voltage check (above). Operate generator at speed equivalent to 30 MPH. charging battery, turn on car lights and accessories or connect load (bank of headlamp bulbs, etc.) between ammeter and battery so that generator charges at peak rate and Current Regulator operates. Current reading should agree with setting given above. If more than slight excess noted, regulator is defective.
To Adjust (with cover removed)—Same as for Voltage Regulator (above).
Contact Gap & Air Gap—Same as Voltage Regulator.

LIGHTING

LIGHTING:—Headlamps—Corcoran-Brown 'Sealed Beam' type. ***For data, refer to Elec. Equipment Index.***
Headlamp Adjustment—Aim upper beam straight ahead (hot spot center 3" below lamp center height).
Beam Indicator—Small red light on instrument panel above speedometer. Lighted with upper beams on.
Direction Signal—***Refer to Electrical Equip. Index.***

Switches

Lighting—Chrysler No. 934519 ('41), 934599 ('42).
Beam Selector—Chrysler No. 859974.
Instrument—Chrysler 853371 ('41), 947193 ('42).
Dome Lamp Pillar—Chrysler No. 317180.
Dome Lamp Door—Chrysler No. 882943.
Stop Light—Chrysler No. 677112.
Direction Signal—Chrysler No. 865763 or 939577 (1941), 938926 (1942).

Bulb Specifications

Position	Candlepower	Mazda No.
Headlamps		Sealed Beam
Front Dir. Signal & Parking	21-3	1158
Instrument	6	81
Glove Box, Ash Tray, Trunk	1½	55
Beam & Dir. Indic., Ign. Sw.	1	51
Hand Brake Indicator	21	1129
Rear Dir. Signal & Tail	21-3	1158
Stop Light	21	1129
Rear License	3	63
Reading or Dome	15	87
Corner	6	81

NOTE—1941 Instrument Lamps 1½ cp. Mazda No. 55.

MISC. ELECTRICAL

LIGHTING CIRCUIT BREAKER:—Thermostatic type. Mounted on back of lighting switch.
FUSES:—Clock—2 ampere. In connector in clock lead
Vacamatic Transmission Control—30 ampere. On relay case on left hand side of engine dash.
Direction Signal—9 ampere. Near ammeter.
Rear Clock—2 ampere. In lead near ammeter.
Body Wiring (C33, C37 only)—30 ampere. In lead near ammeter.
HORNS:—Dual. Auto-Lite HO or HT-5003 with relay.
Horn Relay: Auto-Lite Model HRC-4001 (1941-42), HRL-4001 (1942). This HRL-4001 relay has winding connected through ignition switch so that horns operative only with ignition "on".
Contacts Close—1.5-3.0 volts. **Open**—.5 volt.
Contact Gap—.026". **Air Gap**—.016-.020" (closed).

ENGINE

ENGINE SPECIFICATIONS:—8 cylinder, 'L' head type.
Bore—3¼". **Stroke**—4⅞".
Displacement—323.5 cubic inches. **Rated HP**—33.8.
Developed Horsepower—137 at 3400 RPM (C30), 140 at 3400 RPM (C33), 140 at 3600 RPM (C37) with std. heads.
Compression Ratio—6.8-1 cast-iron hd. (C30,36,37). 6.8-1 aluminum head (C33, optional on C30).

ENGINE

CONTINUED FROM PRECEDING PAGE

Compression Pressure—160-170 lbs. at 1000 RPM or 125-135 lbs. at cranking speed (125 RPM). Maximum variation between cylinders 10 lbs.

Vacuum Reading—18-21" steady idling at 6 MPH.

Refer to Chrysler Shop Notes for Engine Removal data.

PISTONS:—Aluminum alloy, U-slot, cam ground, tin coated type (all C30, 33; early C36, 37). Cast-iron ribbed, lightweight, cam ground type (late C36, 37). NOTE—1942 type pistons use a narrower compression ring than 1941. See Piston Ring Specifications **Weight**—16.3 ozs. stripped ('41 aluminum type).

Length—3⅞" (aluminum pistons).

Removal—Pistons and rods removed from above.

Clearance (1941)—Clearance at top land (difference in diameter) .022". Skirt .0000-.0010". See Fitting New Pistons below (use aluminum piston data).

Clearance (1942)—Clearance at top land (difference in diameter) .0305" (for aluminum pistons). Skirt .0005-.0015" (for aluminum pistons), .0008-.0018" (cast-iron pistons). See Fitting New Pistons (below).

Original Bore & Piston Sizes, Replacement Pistons:—***Refer to Chrysler Shop Notes for sizes and markings.***

Fitting New Pistons:—Check piston size with micrometer calipers across large diameter (90° from pin bosses) at bottom of skirt. With piston and cylinder wall dry, insert feeler between cylinder wall and piston (piston inverted, pin removed) 90° from pin bosses. Pull to withdraw feeler should be 5-7 lbs. on .002" feeler (aluminum pistons), 10-15 lbs. on .0015" feeler (cast-iron pistons). Piston and cylinder block should be at room temperature (70-75°F).

NOTE—Cylinder maximum allowable taper .0015", out-of-round .002". Use hone to 'clean-up' cylinders, bore and hone for badly scored bores. Reconditioned bores should be within limits of .0005" taper and .0005" out-of-round.

Installing Pistons:—Slot away from valves (alumin.).

PISTON RINGS:—Two compression, two slotted oil rings per piston, all above pin. NOTE—Compression rings have upper inner edge stepped (both rings '41, top ring '42), lower outer edge stepped (#2 ring '42) and all are surface coated.

1941 Piston Ring Specifications

Ring	Width	End Gap	Side Clearance
Comp. (top)	⅛"	.007-.015"	.002-.0040"
Comp. (#2)	⅛"	.007-.015"	.0015-.0025"
Oil Control	5/32"	.007-.015"	.001-.0035"

1942 Piston Ring Specifications

Ring	Width	End Gap	Side Clearance
Comp. (top)	3/32"	.007-.015"	.0025-.0040"
Comp. (#2)	3/32"	.007-.015"	.0020-.0035"
Oil Control	5/32"	.007-.015"	.0010-.0025"

Replacement Rings:—***Refer to Chrysler Shop Notes.***

PISTON PIN:—**Diameter**—55/64". **Length**—2¾". Floating type. Pin hole in rod bronze bushed.

Pin Fit in Piston—Loose thumb push fit at 70°F, pin should fall out if piston jarred (Cast Iron), thumb push fit at 130°F (Aluminum Pistons).

Pin Fit in Rod Bushing—Thumb push fit at 70°F.

Replacement Pins:—Std. and .003", .008" oversize.

CONNECTING ROD:—**Weight**—37.3 ounces (with bearings and bolts). **Length**—9".

Lower Bearing Diameter 2 3/16". ***See Engine Lettering Note in Chrysler Shop Notes for 'Special Std.' size.***

Lower Bearing—Removable precision type, thin babbitt on steel.

Clearance—.001-.0015". **Sideplay**—.006-.011".

Bearing Adjustment:—None (no shims). Replace bearings. Do not file rods or caps. Install new bearings with boss engaging groove in rod and cap.

Replacement Bearings: ***Refer to Chrysler Shop Notes.***

Installing Rods:—Lower bearings are offset. Install rods with widest portion of bearing toward the rear on #1, #3, #5, and #7; toward the front on #2, #4, #6, and #8. All rods should be installed with oil metering hole in lower end toward camshaft.

CRANKSHAFT:—5 bearing type with 8 integral counterweights. Impulse neutralizer mounted on front.

Bearing Diameters 2 45/64". ***See Engine Lettering Note in Chrysler Shop Notes for 'Special Standard' size.***

Bearing Type—Removable, precision type, thin babbitt on steel. **Clearance**—.001-.0015".

Bearing Adjustment:—***Refer to Chrysler Shop Notes for bearing removal, front and rear main bearing cap removal, bearing fitting, and crankshaft oil seals.***

Replacement Bearings & Bearing Caps: ***Refer to Chrysler Shop Notes for complete data.***

End Thrust:—Taken by flange faces on rear (#5) main bearing. **Endplay**—.003-.007".

CAMSHAFT:—6 bearing. Non-adjustable chain drive. ***Refer to Chrysler Shop Notes for Camshaft Removal.***

Bearing Diameters—#1, 2 1/16"; #2, 2 1/32"; #3, 2"; #4, 1 31/32"; #5, 1 15/16"; #6, 1⅜".

Bearing Type—Removable, steel-backed, babbitt-lined bushings (except #6 machined in crankcase). **Clearance**—.001-.003" (#1), .0015-.0035" (all others). NOTE—Replacement bearings are finished (reaming, scraping or burnishing not required).

End Thrust:—Taken by thrust plate assembled behind camshaft sprocket hub. **Endplay** .002-.006".

Timing Chain:—Whitney silent type CLG205-47, No. 668983. Width 1¼". Pitch ½". Length 47 links, 23½".

Camshaft Setting:—Sprockets marked. Mesh chain with sprockets turned so that '0' marks are adjacent and in line with a straightedge across shaft centers.

VALVES:	Head Diameter	Stem Diameter	Length
Intake	1 17/32"	.340-.341"	5⅞"
Exhaust	1 11/32"	.3395-.3405"	5⅞"

	Seat Angle	Lift	Stem Clearance
Intake	45°	⅜"	.0015-.0035"
Exhaust	45°	⅜"	.002-.004"

Refer to Chrysler Shop Notes for Exhaust Valve Seat Insert servicing and replacement data.

Valve Guides:—Remove from above. Press new guides in place with upper end 1" (Intake and Exhaust) below top face of cylinder block (use Tool CM-83) with taper end up (Intake), down (Exhaust) and ream to .3425-.3435" inside diam. Counterbore exhaust guide at top to diameter of .365-.375" and ⅜" deep after guide installed in block.

Valve Springs:—Install with closely coiled ends at top. Free length 2 25/64".

	Spring Pressure	Spring Length
Valve Closed	52-58 lbs.	2 1/32"
Valve Open	129-137 lbs.	1 21/32"

NOTE—Use special valve spring tester tool MTR-67 for checking pressure before installing springs.

Valve Lifters:—Mushroom type (remove from below with oil pan, camshaft and valves out of engine). Stem diameter ⅝". Ream guide holes from above with valves out of engine (install reamer pilot of Tool C-265 in valve guide to insure alignment of lifter). Lifters furnished for service in standard and .001", .008", .030", .060" oversize.

Lifter Clearance in Block—.000-.001".

VALVE TIMING

Tappet Clearance:—.008" Intake, .010" Exhaust (with engine running and at normal operating temperature). For cars to be driven at continuous high speeds an additional .002" exh. clearance desirable.

NOTE—Tappet screws are self-locking type (no locknuts used). Remove right front engine inspection shield between fender and frame for access to valves.

Valve Timing:—See Camshaft Setting above.

Intake Valves—Open 6° BTDC. Close 50° ALDC.

Exhaust Valves—Open 44° BLDC. Close 12° ATDC.

Valve Timing Check—With .014" (cold) tappet clearance #8 intake valve should open with #8 piston within range of 11° BTDC to 1° ATDC or .057" BTDC to DC with 11th graduation before to 1 graduation after DC mark in line with pointer on chain case cover. Reset tappet clearance to .008", engine hot. NOTE—Car manufacturer recommends use of Timing Indicator Tool C-435 (measures piston travel) inserted in timing hole in cylinder head over #8 piston.

LUBRICATION

LUBRICATION:—Pressure system with gear type oil pump mounted on right side of crankcase.

Refer to Chrysler Shop Notes for Oil Pump removal and installation instructions.

Normal Oil Pressure:—30-45 lbs. at 30 MPH and above with proper viscocity oil and engine at normal operating temperature.

Oil Pressure Relief Valve:—Under cap on lower left side of crankcase. Adjustable. To adjust, remove cap, withdraw lock wire, turn slotted plug clockwise to increase pressure, counter-clockwise to decrease pressure. Relief valve opens at 40-45 lbs.

Crankcase Capacity:—6 quarts (refill).

COOLING

COOLING SYSTEM:—**Capacity** 24 qts. (C30, 33), 26 (C36, 37).

Refer to Chrysler Shop Notes for Radiator Core Removal and Water Distribution Tube Servicing.

Pressure Valve—In radiator filler cap. Opens at 1½-2½ lbs. (C30, 33), at 3 lbs. (C36, 37).

Water Pump:—Packless type with sealed ball-bearing shaft. Grease fitting for seal lubrication.

See Water Pump Section for complete data.

Removal—Drain cooling system, remove fan belt, loosen fan shroud-to-radiator core screws on left side, remove by-pass hose and elbow, disconnect pump inlet hose, remove pump-to-back plate screws, remove generator strap, lift out pump and fan

CONTINUED ON NEXT PAGE

C NTINUED FR M PRECEDIN PA E

Thermostat:—Bishop & Babcock or Fulton. In cylinder head outlet elbow. Install with bellows down.

Setting—Starts to open 157-162°F. Fully open 183°F.

Temperature Gauge:—Auto-Lite (Motometer) Vapor tension, Auto-Lite #H-9703 (C30, 33), H-9929 (C36, 37).

See Miscellaneous Section for complete data.

CLUTCH

CLUTCH:—Borg & Beck Model 10A6. Clutch cover assembly #939 (C30, 33), 961 (C36, 37), stamped on cover. Single plate, dry disc with spiral grooved facings, pressure plate oil baffle and pedal overcenter return spring. Clutch assembly mounted on clutch driving plate at rear of fluid drive unit. *See Clutch Section for complete data.*

Facings—Spiral-woven, 2 required. Inside diameter 6". Outside Diameter 10". Thickness .125".

Adjustment:—Pedal should just clear underside of toeboard. To adjust, loosen locknut and turn stopscrew at lower end of pedal arm above shaft. Pedal free travel should be 1". To adjust, turn clutch release fork adjusting nut on connector link at clutch release fork. 1942 NOTE—Do not disturb turnbuckle on pedal link (this controls pedal overcenter spring tension).

Removal:—Remove transmission (see Transmission Removal instructions following). Remove clutch release bearing. Jack up rear of engine (to allow clutch housing pan to clear frame cross-member), remove clutch housing pan and dust shield. Mark clutch cover and clutch driving plate (assemble to these marks when reinstalling clutch assembly to maintain balance). Remove clutch cover-to-driving plate screws (release spring tension evenly by turning each screw out a few turns at a time). Clutch assembly and driven member can then be lowered out through pan opening.

FLUID DRIVE

FLUID DRIVE:—Consists of fluid coupling assembled to rear of engine in place of conventional flywheel. *See Miscellaneous Section for complete data.*

Removal:—Remove clutch (see Clutch Removal directions above). Using special box wrench (Tool C-589) loosen fluid drive-to-crankshaft stud nuts, pull fluid drive unit back free from crankshaft flange, remove nuts. Withdraw fluid drive and clutch driving plate from clutch housing.

TRANSMISSION

STANDARD

TRANSMISION (STD. C30, 36):—Own Make. All helical gear type, constant-mesh, synchro-mesh (second and high), sliding gear (low and reverse) with remote shift.

See Transmission Section for complete data.

Transmission Control:—Steering column shift. Manually operated shift Standard, Power Shift (vacuum operated) Optional equipment.

See Transmission Section for complete data.

Removal:—Jack up front end of car (use floor jacks under lower control arms). Disconnect front universal joint (loosen companion flange nut if transmission to be disassembled). Disconnect speedometer cable, hand brake cable at brake band, gearshift and gearshift selector control rods at transmission. If Power Shift used, disconnect vacuum and air hose and remove gearshift selector rod. Take out transmission-to-clutch housing cap screws and nuts. Pull transmission to rear, lower assembly out of car. NOTE—Use pilot studs when installing transmission to avoid springing clutch disc.

TRANSMISSION

1941 VACAMATIC OVERDRIVE TYPE

1941 TYPE VACAMATIC (OVERDRIVE TYPE) TRANSMISSION (STD. C33, OPTL. C30):—New 4 speed type transmission consisting of a 2-speed manually controlled unit with an Automatic Overdrive unit (Warner Model AS1-R7B) which provides 2 additional speeds used in conjunction with a fluid coupling IMPORTANT—This is not same design as used on 1942 cars (see 1942 type below).

See Transmission Section for complete data.

Transmission Control:—Remote control, steering column mounted mechanical shift.

See Transmission Section for complete data.

Control Solenoid—Auto-Lite SSB-4001.

Solenoid Plunger—Auto-Lite SSB-1016.

Control Relay—Auto-Lite HR-4201.

Removal:—Drain lubricant from transmission and overdrive cases. Remove propeller shaft by disconnecting front and rear universal joints (on cars with propeller shaft center bearing, free center bearing mounting from frame cross member). Loosen companion flange nut if disassembling transmission. Remove hand brake clevis pin from lower end of cable. Disconnect solenoid coil wires and remove coil. Disconnect speedometer cable and gear shifter rods from transmission, overdrive control cable clevis at overdrive case. Remove transmission-to-clutch housing cap screws and nuts, two upper studs (install two nuts on end of stud and turn stud out) and replace with pilot studs. Withdraw transmission and overdrive as an assembly.

TRANSMISSION

1942 VACAMATIC UNDERDRIVE TYPE

1942 TYPE VACAMATIC (UNDERDRIVE TYPE) TRANSMISSION (STD. C37, OPTL. C36):—New 4 speed underdrive type transmission used in conjunction with Fluid Coupling. IMPORTANT—1942 type transmission is underdrive type (same design as used on 1941-42 Chrysler Six & DeSoto) and not similar to 1941 Vacamatic Overdrive type (see 1941 Type above).

See Transmission Section for complete data.

Transmission Control:—Remote control, steering column mounted mechanical shift.

See Transmission Section for complete data.

Control Relay—Auto-Lite HRE-4001 (First type—early 1942), HRM-4001 (second type—late 1942).

Governor Switch—Auto-Lite TG-4002R.

Vacuum Piston Assembly—Auto-Lite VP-4001.

Solenoid Vacuum Valve—Auto-Lite SSJ-4001, 4001B.

Air Cleaner—Auto-Lite SP-2472 (vacuum valve cleaner), SP-2481.

Removal:—Same as Std. Transmission (above) plus the following: Remove floor board, wires from vacuum unit solenoid, interrupter and governor switches, hoses from vacuum unit air cleaner to vacuum unit. Take out vacuum unit (disconnect pullout cable and return spring, remove pivot pin).

UNIVERSALS

UNIVERSAL JOINTS:—Detroit-Universal Series 7300. Cross type with roller bearings. Two used on short wheelbase cars, three with a Center Bearing on long wheelbase cars.

See Universals Section for complete data.

Propeller Shaft Center Bearing:—Used on long wheelbase cars. *Refer to Chrysler Shop Notes for data.*

REAR AXLE

MODELS C30 & C36

REAR AXLE (C30, C36):—Own Make. Semi-floating, hypoid gear type with Hotchkiss drive.

See Rear Axle Section for complete data.

Ratio—Standard: 4.56-1 (C30), 3.91-1 (C36). With Vacamatic Trans.: 3.91-1 (C30), 3.36-1 (C36).

Backlash—.006-.010". Screw adjustment.

Removal:—Drain differential by removing two lower carrier-to-axle housing capscrews (C30, 36), drain plug at bottom of axle housing (for C33, 37). Remove both axle shafts (see Axle Shaft Removal following). Remove rear universal joint flange bolts and lower propeller shaft. Take out carrier-to-axle housing cap screws (bolts and nuts used on C33, 37) and lift out differential gear carrier assembly.

Axle Shaft Removal—Remove wheel, axle shaft cotter pin and nut. Remove hub and drum assembly (use screw type puller—Tool C319 for C30, 36, Tool C476 for C33, 37—do not loosen hub by striking end of axle shaft or roller bearings at each side of axle will be damaged). Block brake pedal at toe board. Disconnect brake line at wheel cylinder. Remove brake backing plate-to-axle housing bolt nuts and take off oil seal and backing plate. If both axle shafts removed, keep wheel bearing shims separated so they may be reassembled to proper side of axle when replacing to maintain bearing adjustment (if new parts used, axle shaft end play should be checked when parts replaced). Pull axle shaft and bearing using Tool C-158. NOTE—Use Tool C-358 to remove axle drive shaft bearing, Tool C-293 to remove axle drive shaft oil seal, special drift (Tool C-201 or C-202) to install oil seal.

Wheel Bearing Adjustment:—Adjusting shims located between flanged ends of axle housing and brake backing plate. Remove wheel and hub assembly (see Axle Shaft Removal above). Check endplay with dial indicator (make sure that brake bolts are tight and tap end of axle shaft so that bearing cups are seated). To adjust, remove oil seal and backing plate, add or remove shims (furnished .010", .0125", .015" and .030" thick) equally at both ends of axle housing (to maintain central position of axle shaft thrust block) until proper endplay obtained.

Endplay—.003-.008".

REAR AXLE

MODELS C33 & C37

REAR AXLE (C33, C37):—Own Make. Semi-floating, Hypoid gear & Hotchkiss drive. Barrel type differential with adjustable drive gear thrust pad used.

See Rear Axle Section for complete data.

Ratio—4.55-1 (C33), 3.58-1 (C37).

All other data same as for C30, C36 Rear Axle above.

SHOCK ABSORBERS

SHOCK ABSORBERS:—Direct acting, hydraulic types.

Car Model	Make	Front	Rear
C30 Domestic	Monroe	854568	854570
C30 Domestic①	Delco	1000-C	1001-T
C33 Domestic①	Delco	1134-E	1130-W
C36 Domestic②	Monroe	955025	955026
C37 Dom. & Exp.	Delco	1142-D	1140-W

①—Export cars carry either of these types.

②—C36 Export equipped with C37 type shocks.

NOTE—Delco 1130,34,40,42 types are adjustable.

See Shock Absorber Section for complete data.

Transverse Sway Bar & Shock Absorber (C36 & C37):—Monroe #956790 direct acting, hydraulic shock absorber built in one end of rear sway bar.

See Shock Absorber Section for complete data.

FRONT SUSPENSION

Front Suspension:—Independent, linked parallelogram type with coil springs.

See Front Suspension Section for complete data.

NOTE—Specifications listed below apply with car weight on wheels and no passenger or trunk load.

Kingpin Inclination—4¾° to 6°.

Camber—Positive ¼°. Limits 0° to Pos. ¾°.

Caster—Negative 1° to Positive 1°. Not adjustable.

Toe In—0-1/16". Turn both tie rods equally.

Steering Geometry (toe-out on turns)—Inner wheel turned 21°30′ with outer wheel turned 20°.

STEERING GEAR

Steering Gear: Chrysler (Gemmer design) Model 335. Worm-and-Roller "3-tooth" type with push-pull adjustments.

See Steering Gear Section for complete data.

BRAKES

BRAKES:—Service—(Front Wheels)—Lockheed hydraulic, Two-Cylinder type (front shoe anchored at bottom and actuated by top cylinder, rear shoe anchored at top and actuated by bottom cylinder).

(Rear Wheels)—Lockheed hydraulic, double anchor type. Hand lever applies independent shaft brake.

See Brake Section for complete data.

Wheel Cylinders—Straight cut bore type. Piston assembly (with spring) used. Bore diameter 1⅛".

Drums—Centrifuse. Diameter 12".

Lining—Molded asbestos. Width 2". Thickness 13/64". Length—Rear wheel rear shoe 9⅝". Front wheel front and rear shoes and Rear wheel rear shoe 12 9/16".

Clearance—Toe (wheel cylinder end) .007" for all shoes. Heel (anchor bolt end) .006" for all shoes except rear wheel rear shoes which is .007".

Braking Power—61% front wheels, 39% rear wheels.

Hand Brake:—On drum at rear of transmission.

Adjustment—*Refer to Chrysler Shop Notes for data.*

Drum—Cast-iron. Diameter 7".

Lining—Moulded and compressed asbestos. Width 2½". Thickness 5/32". Length 20".

Power Brake Unit (C33, 37):—Bendix Internal Valve type Vacuum Cylinder.

See Brake Section for complete data.

MISC. MECHANICAL

WINDSHIELD WIPER: Auto-Lite Model EWD-5001, 5003 (1941), EWH-5001, 5003 (1942). Electric type with circuit breaker mounted on control switch.

NOTE—Types EWD-5003 & EWH-5003 used on Convertible Coupe models.

See Miscellaneous Section for complete data.

Circuit Breaker—Vibrating, thermostatic type. Starts to operate with current of 12 amperes.

CONVERTIBLE TOP CONTROL: Electric type. Used on Convertible Coupe models.

See Miscellaneous Section for complete data.

Top Control Motor—Auto-Lite EWG-4002 (1941), EWG-4003 (1942).

Control Relay—Auto-Lite Model HRF-4001.

WINDOW REGULATORS: Hydro-electric type (hydraulic actuation with motor driven hydraulic pump).

See Miscellaneous Section for complete data.

Window Regulator Motor—Auto-Lite MBO-4002.

Motor Switch—Auto-Lite SSG-4001, 4002, (C30, C33), SS-4007, 4019 (C33), SSG-4001 (C37).

HOOD LOCK, FRONT END SHEET METAL, & OIL PAN REMOVAL: *See Chrysler Shop Notes.*

MODEL IDENTIFICATION

STARTING SERIAL NUMBERS

	Royal	Windsor Twn. & Country
1946	70,011,001	70,515,001 to 71,000,001
1947	70,023,023	70,564,429 to 71,000,128
1948	70,029,674	70,633,017 to 71,002,880

Location—On left front door hinge post.

ENGINE NUMBER: Stamped on boss on left side of cylinder block between #1 & #2 cylinders.

TUNE-UP

COMPRESSION: Pressure—125-135 lbs. (100 lbs. min.) at cranking speed of 150 RPM. or 155-165 lbs. at 1000 RPM. (for Std. 6.6-1 Cast Iron Head).

VACUUM READING: Steady 18-21" idling at 6 MPH.

FIRING ORDER: 1-5-3-6-2-4.

SPARK PLUGS: Auto-Lite Type A5. 14 mm. Metric. **Gaps**—.025"

IGNITION: See Coil, Condenser, and Distributor.
Breaker Gap—.020" **Cam Angle**—38° (closed).
Breaker Arm Spring Tension—17-20 ozs.
Automatic & Vacuum Advance—*See Distributor.*

IGNITION TIMING: See Ignition Timing.
Std. Setting—2° After top dead center.
Timing Mark—Vibration Dampener marked "DC" at top dead center position with 15-1° graduations before and after this point. Set timing with 2° graduation after DC mark at pointer on chain case then set manual (octane selector) adjustment:
Manual (Octane Selector) Adjustment—Set for slight ping in 10-30 MPH. range when accelerating with wide open throttle. Do not vary initial timing more than 4° advance or retard.

CARBURETION: See Carburetor & Carb. Equipment.
Idle Setting—Set idle adjusting screw for smooth idling with warm engine (idle screw ¾-1¼ turns open), turn screw out for richer mixture. Idle speed 6 MPH. (450-475 Eng. RPM. with Hydraulic Trans.).
Float Level—Top of float (not soldered seam) 5/64" (for EX1 carburetor on cars with Std. Trans.), 1/16" (for EV1 carburetor on cars with Hydraulic Transmission), plus or minus 1/64" below top edge of bowl.
Accelerating Pump—Center Hole (med. stroke) Normal. Inner Hole—Summer, Outer Hole—Winter, for extreme temperatures.
Fuel Pump Pressure—3½-5½ lbs.

MANIFOLD HEAT CONTROL: Automatic thermostatic type. See that valve operates freely. When installing coil, wind free end up **approx. ¾ turn,** not over one turn or under ½ turn, hook end on stop stud.

VALVES: See Valve Timing.
Tappet Clearance—.008" Intake, .010" Exhaust, Hot.
NOTE—Tappet adjusting screws are self-locking type (no locknuts).

STARTING: See Battery, Starter, Generator, and Regulator.

IGNITION

IGNITION SWITCH: Briggs & Stratton or Mitchellock. NOTE—No armored cable used.
Briggs & Stratton—B & S Switch No. 85985.
Mitchellock Type 42-R—No. E-10182 (Yale & Towne lock), No. E-10663 (Hurd lock).
Lock Cylinder—Yale & Towne, Hurd, or Briggs & Stratton. B & S No. 85915 (Key Series CA1-CA800)

COIL: Auto-Lite No. IG-4806 or IG-4809. Mounted directly above distributor on ignition cable bracket. distributor on ignition cable bracket.
Ignition Current—2.25 amperes idling, 5 stopped.

CONDENSER: Auto-Lite Part No. IG-3927A.
Capacity—.25-.28 microfarad.

DISTRIBUTOR: Auto-Lite No. IGS-4208A-1. Full automatic advance type with auxiliary vacuum spark control and manual (octane selector) adjustment.
Breaker Plate Identification—Maximum vacuum advance limited by slot in plate. Plate marked #9.
Breaker Gap—Set at .020".
Cam Angle or Dwell—38° closed, 22° open (distr. °).
Breaker Arm Spring Tension—17-20 ounces.
Rotation—Clockwise viewed from above.

Automatic Advance

Distributor Degrees	Distributor R.P.M.	Engine Degrees	Engine R.P.M.
Start	350	0	700
3	400	6	800
6	780	12	1560
9	1160	18	2320
12	1530	24	3060

Vacuum Spark Control: Auto-Lite Unit. On distributor, linked directly to breaker plate). Provides additional advance at speeds above idling except when engine accelerated or operated with wide open throttle (spark retarded by return spring in unit).

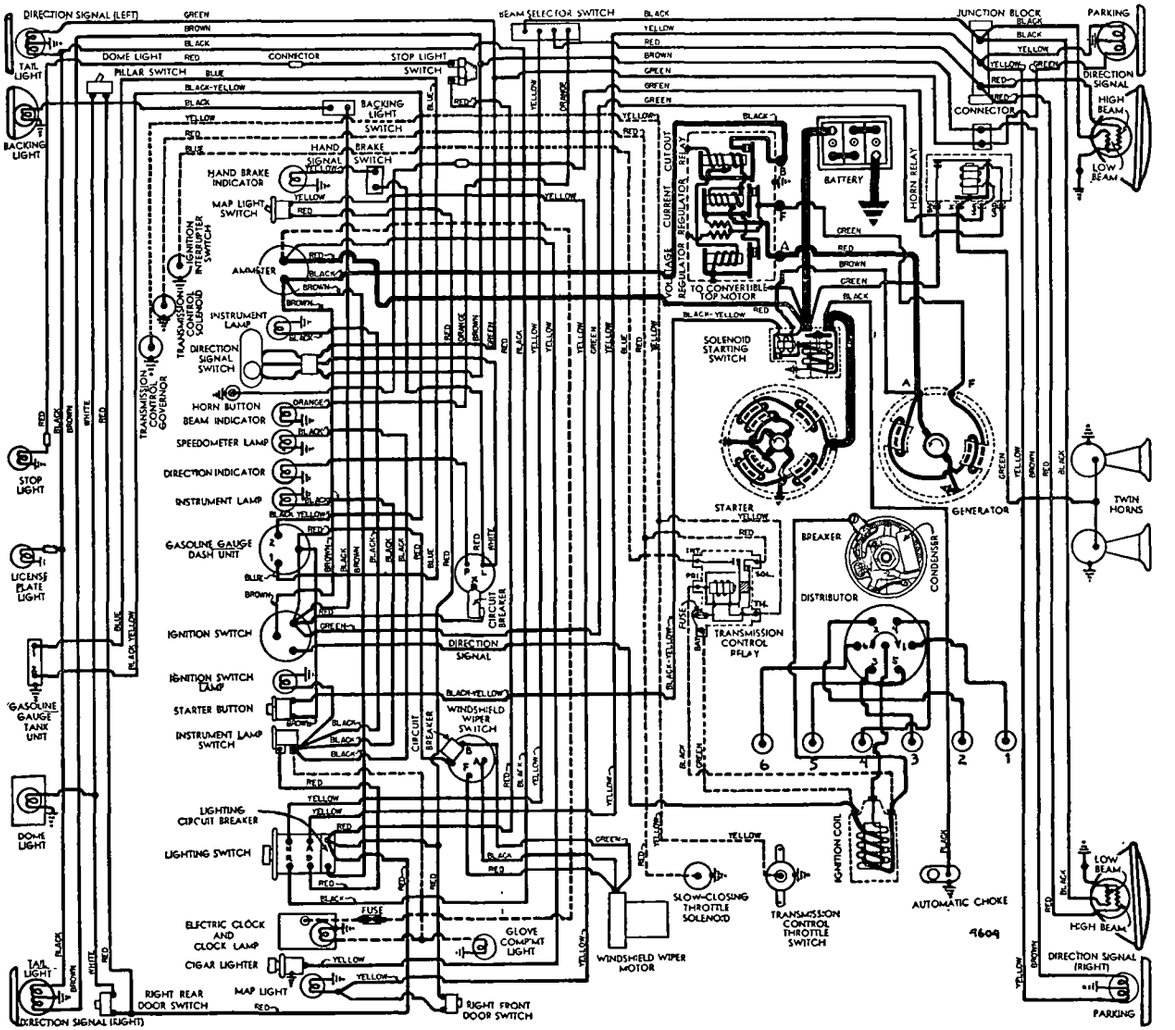

Vacuum Advance

Distr. Degrees	Eng. Degrees	Vacuum (" of HG)
Start	0°	5"
2°	4°	7¼"
4°	8°	9⅜"
6°	12°	11⅝"
9°	18°	15"

Manual Adjustment—Provides for minor changes in ignition timing at distributor. See Ignition Timing

Distributor Removal:—Mounted on left side of crankcase. To remove, disconnect vacuum line, take out hold-down screw in lock plate. **Installation Note**—Install distributor with #1 piston in firing position

IGNITION TIMING

Std. Setting—Initial setting (for regular non-premium fuel) as shown below. See Manual Adjustment (following) for Final Setting.

	Flywheel Degrees	Piston Position
All Engines	2° ATDC	.002" ATDC

NOTE—Impulse neutralizer marked 'DC' at TDC point with 15 (1°) graduations on either side.

Timing (Using Timing Light)—Connect timing light between distributor primary terminal and battery terminal on generator regulator. Set #1 or #6 piston in firing position (see setting above) with correct mark on impulse neutralizer aligned with pointer on chain case cover. Loosen lock-plate hold-down screw, center pointer on scale, tighten screw. Loosen lock-plate clamp bolt, rotate distributor until timing light just goes out, tighten clamp bolt. Check Manual Adjustment (following).

Timing (Using Synchroscope)—Tool C-374. Clip lead to #1 spark plug, direct light on impulse neutralizer (mark correct graduation with paint), idle engine and adjust distributor as directed above.

Manual Adjustment—Set to give slight ping from 10-30 MPH accelerating with wide open throttle from 10 MPH. To adjust, loosen lock-plate hold-down screw, move plate (not more than 4° or .007" before or after initial setting) counter-clockwise (if no ping noted), clockwise to retard spark (if ping too severe), tighten screw.

CARBURETOR

Carter (B&B) EX1.....No Fluid Drive
Carter (B&B) EV1.....Fluid Dr. & Hydraulic Trans.

1½" single barrel, downdraft type with Sisson automatic choke control. NOTE—EV1 has Slow-closing Throttle and Step-down Switch for hydraulically operated transmission.

See Carburetor Section for complete data.

Idle Adjustment—With engine warm and running at slow idle speed (choke valve wide open, fast idle inoperative), set throttle stopscrew for idle speed of 6 MPH min. (Std.), 450-475 Eng. RPM (for Cars with Hydraulic Transmission). Adjust idle adjusting screw for smooth idle (¾-1¼ turns open, turn screw in for leaner mixture). Recheck idle speed.

NOTE—If vacuum gauge used, adjust for highest obtainable vacuum (see Vacuum Gauge data above).

Accelerating Pump Setting—Pump lever has three holes for pump link engagement. Set as follows: Inner Hole (minimum stroke)—Extreme hot temperatures or altitudes above 3000 feet.

Center Hole (med. stroke)—Normal summer setting.

Outer Hole (max. stroke)—Winter temperatures.

Float Level—5/64" (EX1 carburetor), 1/16" (for EV1), from top of float (not seam) to top edge of bowl with valve seated. Check with tool C-449 (exc. EV1).

Metering Jet—***See Carter (B&B) Jet Table in Carburetor Section for complete data.***

NOTE—If lean metering jet (High Altitude calibration) used at lower altitudes for increased economy, speed and power are reduced (not recommended).

Slow-closing Throttle (EV1): Electro-magnetic dashpot type. No adjustment required.

See Carburetion Equipment Section for complete data.

Fast Idle: Throttle stopscrew stop dog linked to choke valve so that stop dog rotated and throttle opened to fast idle position when choke valve closed for starting. No adjustment required.

Automatic Choke:—Sisson Type AC-758B.

See Carburetion Equipment Section for complete data.

Setting—With throttle ⅛ open, adjust by inserting gauge pin through hole in automatic choke lever shaft and slot in base mounting flange (to position shaft) and adjusting carburetor choke valve lever so that choke valve is closed tightly.

CARB. EQUIPMENT

Air Cleaner: AC No. 1542284 Heavy Duty Oil-bath type. Filter Element AC No. 1544091.

Servicing—Clean filter element in kerosene, clean out oil reservoir and fill to indicated level with SAE No. 50 oil (20W oil below 32°F., approx. 1 pint required). Service cleaner whenever sump is half filled with oil and dust sludge. NOTE—Crankcase ventilator air cleaner in oil filler cap should be cleaned in kerosene and re-oiled by dipping in SAE No. 50 engine oil at 1000 mile intervals.

Fuel Pump: AC No. 1539042 or Carter Type M594S or M639S. Diaphragm type fuel pumps.

Replacement Pump—AC No. 577 (for 1539042).

Pressure—3½-5½ lbs.

See Carburetion Equipment Section for complete data.

Fuel Tank Filter: New Oilite metal filter in tank.

Servicing—If more than 2 pints water in tank, fuel will not pass filter. Remove filler cap and drain plug, draining tank. Disconnect fuel line at some point between pump and tank, blow out line and filter with air, increasing pressure as filter is cleaned. Flush tank with clean gasoline.

Gasoline Gauge: Auto-Lite Electric type.

Dash Unit—Auto-Lite NG-10896D (block lettering), No. NG-11238D (with script lettering).

Tank Unit—Auto-Lite No. NG-10862-T.

See Carburetion Equipment Section for complete data.

BATTERY

Willard Type WHT-2-17R. 6 Volt, 17 Plate, 120 Ampere Hour Capacity (20 hour rate).
Starting Capacity—152 amperes for 20 minutes.
Zero Capacity—300 amperes for 5.0 minutes. Five second voltage 4.4 volts.
Grounded Terminal—Positive (+) to engine.
Dimensions—Length 10¼". Width 7". Height 9⅜".
Location—Under hood in left fender shield.

STARTER

Auto-Lite Model MAX-4050. Armature MAW-2030.
Drive—Solenoid pinion shift & overrunning clutch.
Rotation—Counter-clockwise at commutator end.
Brush Spring Tension—42-53 ozs. (new brushes).
Cranking Engine—150 RPM, 175 amperes, 5.4 volts.

Performance Data

Torque	R.P.M.	Volts	Amperes
0 ft. lbs.	5300	5.5	65
2.75 "	1630	5.0	200
5.5 "	970	4.5	300
8.7 "	600	4.0	400
12.0 "	300	3.5	500
16.5 "	Lock	3.0	640
25.0 "	Lock	4.0	880

Removal: Disconnect wires (tape battery lead), remove mounting bolts, withdraw starter (not necessary to disturb oil filter or oil lines).

Starting Switch: Auto-Lite Solenoid Type SS-4705 with pushbutton on instrument panel.

See Electrical Equipment Section for complete data.

GENERATOR

Std.—Auto-Lite GDZ-4801A. Armature GDZ-2006F.
Spec. Equip.—Auto-Lite GEG-4823A or GEG-4823B
Armature No. GEG-2006F (both).
Two brush (shunt) type with voltage and current regulation. Ventilated by fan on drive pulley.
SEE CHRYSLER 8 C39 PAGE FOR ALL DATA.

REGULATOR

Std.—VRP-4401A, VRP-4501A, or VRP-4503A. (VRP-4001A used on Canadian cars).
Spec. Equip.—VRP-4001F (for GEG-4823A), VRP-4401B (for GEG-4823B). VRP-4005E used for negative ground.
SEE CHRYSLER 8 C39 PAGE FOR ALL DATA.

LIGHTING

Headlamps: Corcoran-Brown "Sealed Beam" type. Beam selector switch on toeboard controls upper and lower beams.

See Electrical Equipment Section for complete data.

Headlamp Adjustment—Aim upper beam straight ahead (hot spot center 3" below lamp center height).

Beam Indicator—Lighted when Country (upper) beams in use. Located above center of speedometer face on early cars, in upper left corner of speedometer face on later cars.

Direction Signal: Two types used (see Indicators).

See Electrical Equipment Section for complete data.

Direction Signal Indicators—In upper edge of speedometer face. Early type has LEFT and RIGHT arrow. Later type use one jewel light in upper right corner only (left jewel light on these cars is High Beam Indicator).

Direction Signal Flasher—Chrysler No. 1161586.

Direction Signal Circuit Breaker—Chrysler No. 1161568.

Switches

Lighting—Chrysler No. 1163581.
Beam Selector—Chrysler No. 859974.
Instrument—Chrysler No. 1235694.
Map Light—Chrysler No. 1154278.
Stop Light—Chrysler No. 920355.
Hand Brakes—Chrysler No. 867077.
Dome Lamp Pillar—Chrysler No. 317180.
Door Switches—Chrysler No. 882943.
Direction Signal—Chrysler No. 1163984.

C NTINUED N NEXT PA E

C NTINUED FR M PRECEDING PAGE

Bulb Specifications

Position	Candlepower	Mazda No.
Headlamps	45-35 watts	Sealed Beam
Front Dir. Sig. & Parking	21-3	1158
Instrument	3	63
Clock, Glove Compt.	1½	55
Beam & Dir. Sig. Ind., Ign. Sw.	1	51
Rear Dir. Sig. & Tail	21-3	1158
Stop Light, Map Light	21	1129
Rear License	3	63
Dome①	15	87

①—Town & Country and Convertibles (Quarter Lights) 6 cp. No. 81. 7-Pass. (Pillar Lights) 3 cp. No. 63.

MISC. ELECTRICAL

CIRCUIT BREAKERS: Lighting—On back of lighting switch. Vibrating type, protects lighting circuits. **Direction Signal**—On flasher behind instrument panel. Vibrating type. Protects direction signal circuit. **Windshield Wiper**—Vibrating, thermostatic type. Starts to operate with current of 12 amperes.

FUSES: Transmission Solenoid (Hydraulic Trans.)—30 ampere. Under transmission relay on left fender. **Clock**—2 ampere. In clock lead wire. **Radio**—14 ampere. In fuse connector at radio.

HORNS: Auto-Lite Model HT-4007 (Low Pitch), HT-4008 (High Pitch). Dual horns operated by relay.

Horn Relay: Auto-Lite Model HRL-4101. Connected through ignition switch, operates only with ignition "on". **Contacts Close**—1.5-3.0 volts (seal to core with 4.0 volts maximum). **Contacts Open**—.5 volt min. (open from seal). **Contact Gap**—.026". **Air Gap**—.016-.020" (armature air gap with contacts closed but not sealed), .015-.018" (gap between armature leg and yoke with armature sealed to core).

ENGINE

ENGINE SPECIFICATIONS: Six cylinder, "L" head. **Bore** 3 7/16". **Stroke**—4½". **Displacement**—250.6 cu. ins. **Rated H.P.**—28.36. **Developed Horsepower**—114 at 3600 RPM. **Compression Ratio**—6.6-1 Std. cast-iron head. **Compression & Vacuum Reading**—*See Tune-up data.*

ORIGINAL BORE & PISTONS: *See Chrysler Shop Notes.*

ORIGINAL BEARING SIZES: *See Chrysler Shop Notes.*

OIL PAN REMOVAL: *See Chrysler Shop Notes.*

ENGINE REMOVAL: *See Chrysler Shop Notes.*

TIGHTENING TORQUES: *See Chrysler Shop Notes.*

CYLINDER HEAD: Tightening Torque & Cylinder Head Diagram—*See Chrysler Shop Notes.*

PISTONS: Aluminum alloy, U-slot, cam ground type. NOTE—Skirt cam ground (.010-.014" smaller diameter across pin bosses) and tapered (.0005-.0015" smaller diameter at top of skirt than at bottom). **Length**—3⅞". **Weight**—18.5 ozs. (stripped). **Clearance**—.0008" on thrust face ¾" from bottom of skirt. Ring land diameter .0305" larger than skirt. **Removal**—Pistons and rods removed from above.

Fitting New Pistons:—Check piston size with micrometer across large diameter at bottom of skirt. Insert .002" x ½" feeler between cylinder wall and piston (inverted, pin removed) on side opposite slot. Feeler pull 5-7 lbs. (with piston and block at 70° F).

Replacement Pistons: *See "Pistons" in Chrysler Shop Notes.*

NOTE—Cylinder recondition limits .0005" taper and .0005" out-of-round. Badly scored bores or with taper over .030" or out-of-round over .004" require reboring and honing to limits listed above.

Installing Pistons:—Slot away from camshaft.

PISTON RINGS: Two compression, two slotted oil control, coated rings per piston, all above pin. Oil ring grooves drilled for oil drainage (lower groove slotted).

Ring	Width	End Gap	Side Clearance
Compr. (#1)	3/32"	.007-.015"	.0025-.004"
Compr. (#2)	3/32"	.007-.015"	.002-.0035"
Oil Contr. (#3, 4)	5/32"	.007-.015"	.001-.0025"

Installing Rings—#1 Compr. with step on inner edge up. #2 Compr. with step on inner edge up or if step on outer edge install with step down.

Replacement Rings: *See "Piston Rings" in Chrysler Shop Notes.*

PISTON PIN: Diameter 55/64". Length 2⅞". Floating type with locking ring at each end. **Pin Fit in Piston**—Thumb push fit with piston heated to 160°F. **Pin Fit in Rod Bushing**—Tight thumb push fit at normal room temperature.

Replacement Pins: Standard size and .0006", .003", .008" oversize.

CONNECTING ROD: Length 7⅞". Weight 32.4 ozs. with bolts less bearings. NOTE—Piston pin hole (upper bearing) bronze bushed. **Lower Bearing Diameter**—2⅛". *See "Original Bearing Size" in Chrysler Shop Notes.* **Lower Bearing**—Removable, precision type, thin babbitt on steel. No shims. **Clearance**—.0005-.0015". **Sideplay**—.006-.011".

Bearing Adjustment: None (no shims). Replace bearings. Do not file rods or caps. *See "Connecting Rods & Bearings" in Chrysler Shop Notes.*

Replacement Bearings: *See "Connecting Rods & Bearings" in Chrysler Shop Notes.*

Installing Rods: Oil metering hole toward camshaft.

CRANKSHAFT: 4 bearings, 9 integral counterweights with vibration dampener on front end.

Crankshaft Front & Rear Oil Seals: *See "Crankshaft and Main Bearings" in Chrysler Shop Notes.* **Bearing Diameter**—2½". *See "Original Bearing Size" in Chrysler Shop Notes.* **Bearing Type**—Removable, precision type, thin babbitt on steel. No shims. **Clearance**—.001-.0015".

Bearing Adjustment: None (no shims). Replace bearings. Do not file bearing caps. *See "Crankshaft and Main Bearings" in Chrysler Shop Notes.*

Replacement Bearings: *See "Crankshaft and Main Bearings" in Chrysler Shop Notes.*

End Thrust:—Taken by flange faces on rear (#4) main bearing. **Endplay**—.003-.007".

CAMSHAFT: 4 bearing. Non-adjustable chain drive. **Bearing Diameters**—#1, 2"; #2, 1 31/32"; #3, 1 15/16"; #4, 1¼". **Bearing Type**—Removable steel-backed, babbitt-lined bushings (except #4 machined in block). **Clearance**—.001-.003" (#1), .0015-.0035" (all others).

End Thrust:—Taken by thrust plate behind camshaft sprocket hub. **Endplay**—.002-.006".

Camshaft Removal: *See "Camshaft & Bearings" in Chrysler Shop Notes.*

Timing Chain: Width 1". Pitch .500" (½"). Length 24" or 48 links.

Camshaft Setting:—Sprockets marked. Mesh chain with sprockets turned so that '0' marks are adjacent and in line with a straightedge across shaft centers.

VALVES:	Head Diameter	Stem Diameter	Length
Intake	1 23/32"	.3405-.3415"	4 25/32"
Exhaust	1 17/32"	.3395-.3405"	4 25/32"

	Seat Angle	Lift	Stem Clearance
Intake	45°	⅜"	.001-.003"
Exhaust	45°	⅜"	.002-.004"

Exhaust Valve Seat Insert Servicing—*See "Valve System" in Chrysler Shop Notes.*

Valve Guides:—Remove from above. Press new guides in (stepped end down) with upper end ⅞" below top of block (Tool CM-83), finish ream to .3425-.3435".

Valve Springs:—Install with closely coiled end to top.

	Spring Pressure	Length
Free length 2".		
Valve Closed	40- 45 lbs.	1¾"
Valve Open	107-115 lbs.	1⅜"

Valve Lifters:—Mushroom type (remove from below). Stem diam. ⅝". Ream holes from above (pilot in valve guide). Oversizes .001", .008", .030" & .060". **Lifter Clearance in Block**—.000-.001".

VALVE TIMING

Tappet Clearance:—.008" Intake, .010" Exh. (hot and idling), .002" additional exh. clearance desirable for sustained high speeds. NOTE—Tappet screws self-locking (no locknuts). Remove right front wheel and lower wheel housing panel for access to valves.

Valve Timing:—See Camshaft Setting above. **Intake Valves**—Open 12° BTDC. Close 44° ALDC. **Exhaust Valves**—Open 50° BLDC. Close 6° ATDC. **Valve Timing Check**—With .014" (cold) tappet clearance #6 intake valve should open with #6 piston within range of 5° to 17° or .011" to .122" BTDC with 5th to 17th graduation before DC mark on impulse neutralizer aligned with pointer on chain case cover. Reset tappet clearance to running clearance .008" Hot.

LUBRICATION

Engine Oiling System: Pressure through new Full-flow oil filter to main and connecting rod bearings, camshaft bearings, and timing chain. New "Rotor" type oil pump used. **Crankcase Capacity**—5 quarts (refill). **Normal Oil Pressure**—55-65 lbs. above 30 MPH. with warm oil. CAUTION—Pressure of 35-45 lbs. at driving speeds indicates oil filter may be clogged and should be replaced. **Oil Pressure Relief Valve**—Under plug ahead of starter. Has new bleed duct which connects with new idle oil line to provide additional oil at idling speeds. Adjustable by replacing spring. 3 types: 1) Plain—unpainted. 2) Light—painted Red. 3) Heavy—painted Green. CAUTION—Install replacement spring of same color as original spring.

Oil Pump: New "Rotor" type on right side of crankcase. **Servicing**—*See "Oil Pump" in Chrysler Shop Notes.*

Oil Filter: New "Full-flow" type. All oil under full pressure passes through filter before entering oil passage. Safety valve in filter opens if element is clogged allowing oil to pass directly to engine. **Servicing**—Install new filter element and cover gasket at 5000 mile intervals (or earlier if required). Change oil at same time. **Checking:** If oil pressure drops to 35-45 lbs. with warm oil, filter element may be clogged and should be replaced, to bring oil pressure to normal 55-65 lbs. above 30 MPH.

Oil Pressure Gauge: Auto-Lite G-10893 (block lettering), No. G-11235 (script lettering). Not electric.

COOLING

Cooling System: Positive circulation with pump on front of engine, by-pass type thermostat, and water distribution tube in cylinder block behind pump.
Capacity—17 quarts.

Radiator Core Removal: *See "Radiator" in Chrysler Shop Notes.*

Water Distribution Tube Servicing: *See "Cooling System" in Chrysler Shop Notes.*

Water Pump: Packless type with grease fitting.
See Water Pump Section for complete data.
Removal—Drain cooling system, remove fan belt, disconnect hoses at pump, remove pump mounting studs, lift fan and pump off.
Belt Adjustment—*See Generator Belt Adjustment.*

Thermostat: By-pass type in cyl. head water outlet.
Setting—Starts to open 157-162°F. Fully open 183°F.

Temperature Gauge: Auto-Lite H-10895 (block lettering), No. H-11237 (script lettering). Not electric.

CLUTCH

Borg & Beck Models 10A7 (Std.), 9A7 (With Fluid Drive), 11A6 (Taxicab). Single plate, dry disc.
Identification Note—Cover stamped 953 (9A7), 930 (10A7), 931 (11A6).
See Clutch Section for complete data.
Facings—Woven type, 2 required.

	Inside Diam.	Outside Diam.	Thickness
9A7	6"	9¼"	.125" (⅛")
10A7	7"	10"	.125" (⅛")
11A6	6½"	11"	.125" (⅛")

Pedal Adjustment: Should just clear toeboard (adjust stopscrew on lower end of pedal) & have 1" free travel (adjusting nut on connector link at fork).
Clutch Over-Center Spring—*See "Clutch Notes" in Chrysler Shop Notes for setting procedure.*

Removal:—Remove release fork pull-back spring, Transmission (see Transmission) and housing underpan. Pull out clutch release bearing and sleeve. Mark cover and flywheel (or driving plate on Fluid Drive). Take out cover screws, remove assembly.

FLUID DRIVE

Chrysler—Fluid coupling at rear of engine. Optl.
See Miscellaneous Section for complete data.

Oil Level: Keep to level of filler hole. Check at first 1000 miles and every 10,000 miles. Manufacturer recommends MOPAR Fluid Drive Fluid.

Removal: Remove transmission and clutch (see TRANSMISSION and CLUTCH), take off driver flange stud nuts (Tool C-589), lower fluid drive assembly out.

TRANSMISSION

STANDARD

Own Make. All helical gear, constant-mesh, synchro-mesh (Second & High), sliding gear (Low & Reverse). *See Transmission Section for complete data.*

Transmission Control: Manual steering col. shift.
See Transmission Section for complete data.

Removal:—Jack up front end of car, disconnect front universal (loosen companion flange nut if disassembling transmission—see Chrysler Shop Notes for Propeller Shaft Center Bearing Removal on 7 pass.). Disconnect speedometer cable, hand brake cable, gear-shift rods, vacuum and air hose (if Power Shift used). Remove trans.-to clutch housing capscrews and nuts. Pull unit to rear, down and out of car. NOTE—Use pilot studs when installing assembly.

TRANSMISSION

OPTIONAL EQUIPMENT

Hydraulically Operated Type (with Fluid Drive). New design semi-automatic, four-speed transmission with hydraulic actuation and electrical control.
See Transmission Section for complete data.
Transmission Oil—3 pints, 10-W engine oil.

Transmission Control: See Transmission article for adjustment instructions.
See Transmission Section for complete data.
Kickdown Solenoid—Auto-Lite No. SSS-4002.
Kickdown Relay—Auto-Lite No. HRM-4102.
Governor—Auto-Lite No. TG-4202R, 3R, or 4R.
Kickdown Switch—Part of carburetor assembly.
Ignition Interrupter Switch—On right side of transmission above Governor.
Fuse—30 ampere. On Kickdown Relay.

Removal: Remove access cover on right rear side of floorboard under front floor mat, disconnect speedometer cable, and governor, solenoid, and interrupt switch wires at transmission. Remove governor and solenoid. Disconnect hand brake cable at brake band, remove cable and cable anchor bracket. Remove brake support band, adjusting bolt bracket and lever as an assembly. Disconnect front universal (push yoke back), and gearshift rods at transmission. Drain transmission, replace drain plug. Disconnect transmission mounting bolts and lower assembly out of car.
INSTALLATION CAUTION—Rear face of clutch housing and lower pan must be in correct alignment. Misalignment can cause hard shifting when transmission installed.

UNIVERSALS

Detroit Universal Series 7200. Cross type with roller bearings.
See Universals Section for complete data.

Propeller Shaft Center Bearing: Used on 7 Passenger.
See "Propeller Shaft" in Chrysler Shop Notes.

REAR AXLE

Own Make. Semi-floating, hypoid gear type with Hotchkiss Drive.
See Rear Axle Section for complete data.

Axle Ratio	Std. Trans.	Hydr. Trans.
All exc. T&C & 7 Pass.	3.9-1①	3.54-1②
T&C & 7 Pass.	4.3-1③	3.91-1④

①—Special Ratios: 4.1-1, 4.3-1 (Exp.), 4.56-1 (Exp.), 4.78-1 (Exp.).
②—Special Ratios: 3.9-1 (Exp.).
③—Special Ratios: 4.1-1, 4.56-1 & 4.89-1 (Exp.).
④—Special Ratios: 4.1-1 (Exp.).
Backlash—.006-.010". Screw adjustment.

Removal:—Disconnect rear universal, remove axle shafts (see below) and carrier assembly cap screws.
Axle Shaft Removal—Remove wheel, hub, and drum assembly (use screw type hub puller—Tool C-675), block brake pedal, disconnect brake line at wheel cylinder, remove axle shaft key, install sleeve (Tool C-745) in oil seal, remove brake support (oil seal mounted in support), pull shaft and bearing (use C-499 puller). NOTE——Use puller C-293-C to remove bearing from shaft, puller C-748 or C-358 to remove inner oil seal, drift C-201 to install seal.

Axle Shaft Outer Oil Seal: New leather type mounted on brake support (backing plate).
Oil Seal Servicing—*See "Rear Axle" in Chrysler Shop Notes.*

Wheel Bearing Adjustment: Shims between backing plate and axle housing. With wheel and hub removed, check endplay with dial indicator. To adjust, remove backing plate (see above), add or remove shims (furnished .010", .0125", .015", .030" thick) equally at both wheels. **Endplay**—.003-.008".

SHOCK ABSORBERS

Delco—Model 1030-C (Front), 1030-T (Rear).
Monroe—Model K-11148 (Front), K-11149 (Rear).
Direct acting, hydraulic types.
See Shock Absorber Section for complete data.

Hydraulic Transverse Sway Absorber: Rear sway bar with built-in shock absorber used on Conv. Coupe, Town & Country, and 7 Passenger models.
See Shock Absorber Section for complete data.

FRONT SUSPENSION

Front Suspension: Independent, linked parallelogram type with coil springs and direct acting shock absorbers.
See Front Suspension Section for complete data.
Kingpin Inclination—4¾° to 6°.
Camber—Positive ¼°. Limits 0° to Pos. ¾°.
Caster—Negative 1° to Positive 1°. Not adjustable.
Toe In—0-1/16". Turn both tie rods equally.
Steering Geometry—Inner wheel 22½°. Outer 20°.

STEERING GEAR

Own Make. Similar to Gemmer models as follows:
All (except later Town & Country & 7 Pass.)—305.
7 Passenger and Town & Country (After Serial No. 71,000,965)—Model 335.
NOTE—See Gemmer 305 & 335 article for data.
See Steering Gear Section for complete data.

BRAKES

Service: Chrysler "Safe-guard" Lockheed Hydraulic
Front Wheels—Two-cylinder type (front shoe anchored at bottom and actuated by upper cylinder, rear shoe anchored at top and actuated by lower cylinder).
Rear Wheels—Double anchor type with single double-acting wheel cylinder.
See Brake Section for complete data.
Wheel Cylinders—1⅛" bore. Single acting (front), double acting (rear wheels).
Drums—Centrifuse. Diameter 11" (12" on Town & Country and 7 Passenger models).
Lining—Molded Asbestos. 2" wide. 13/64" thick. Length per shoe: **11" type**—8⅞" (rear wheel rear shoe), 11½" (all others). **12" type**—9⅝" (rear wheel rear shoe), 12 9/16" (all others).
Clearance—.006" at each end of all shoes.
Braking Power—60% front wheels, 40% rear.

Hand Brake: On drum at rear of transmission.
Adjustment—*See "Hand Brake Notes" in Chrysler Shop Notes.*
Drum—Cast-iron. 6" (7" on cars with Hydraulic trans. and all Town & Country and 7 Pass.).
Lining—Width 2" (2½" on 7" type). Thickness 5/32". Length 16 11/16" (20" on 7" type).
Clearance—.015-.020" around band.

MISC. MECHANICAL

WINDSHIELD WIPER: Auto-Lite Model EWH-5001, EWH-5003 (Conv. Coupe). Electric type with circuit breaker mounted on control switch.
See Miscellaneous Section for complete data.
Circuit Breaker—Vibrating, thermostatic type.

CONVERTIBLE TOP CONTROL: Electric type.
See Miscellaneous Section for complete data.

HOOD LOCK, FRONT END SHEET METAL & OIL PAN REMOVAL: *See Chrysler Shop Notes.*

MODEL IDENTIFICATION

STARTING SERIAL NUMBERS

	Saratoga	New Yorker	Town & Country	Crown Imperial
1946	6,765,001	7,025,001	7,400,001	7,810,001
1947	6,766,546	7,037,249	7,402,037	7,810,167
1948	6,768,486	7,062,598.	7,405,174	7,810,908

Location—On left front door hinge post.

ENGINE NUMBER: Stamped on boss on left side of crankcase between #2 and #3 cylinders.

TUNE-UP

COMPRESSION: Pressure—125-135 lbs. at cranking speed of 150 RPM. for Std. 6.7-1 Cast Iron head.

VACUUM READING: Steady 18-21" idling at 6 MPH.

FIRING ORDER: 1-6-2-5-8-3-7-4.

SPARK PLUGS: Auto-Lite Type A5. 14 mm. Metric. **Gaps**—.025"

IGNITION: See Coil, Condenser, and Distributor.

Breaker Gap—.018" **Cam Angle**—27° (closed).

Breaker Arm Spring Tension—17-20 ozs.

Automatic & Vacuum Advance—*See Distributor.*

IGNITION TIMING: See Ignition Timing.

Std. Setting—2° After top dead center.

Timing Mark—Vibration Dampener marked "DC" at top dead center position with 15-1° graduations before and after this point. Set timing with 2° graduation **after** DC mark at pointer on chain case cover, then set manual (octane selector) adjustment:

Manual (Octane Selector) Adjustment—Set for slight ping in 10-30 MPH. range when accelerating with wide open throttle. Do not vary initial timing more than 4° advance or retard.

CARBURETION: See Carburetor & Carb. Equipment.

Idle Setting—Set idle adjusting screw for smooth idling with warm engine (idle screw ¾-1¼ turns open on Carter B&B), turn screw out for richer mixture. Idle speed 7-8 MPH. or 500 RPM (450-475 RPM. on cars with Hydraulic Transmission).

Float Level (Stromberg)—Fuel level ⅝" below top of bowl (even with bottom of inspection hole plug on left side of bowl with engine idling.

Float Level (Carter B&B)—Top of float (not soldered seam) 1/16" ± 1/64" below top edge of bowl. **Accelerating Pump**—Center Hole (med. stroke) Normal. Inner Hole—Summer. Outer Hole—Winter. Center hole not used on Stromberg Carburetors.

Fuel Pump Pressure—3½-5½ lbs.

MANIFOLD HEAT CONTROL: Automatic thermostatic type. See that valve operates freely. When installing coil, wind free end up **approx. 1¼ turns,** not over 1½ turns or under 1 turn, hook end over *stop stud.*

VALVES: See Valve Timing.

Tappet Clearance—.008" Intake, .010" Exhaust, Hot

NOTE—Tappet adjusting screws are self-locking (no locknuts).

STARTING: See Battery, Starter, Generator, and Regulator.

IGNITION

IGNITION SWITCH: Briggs & Stratton or Mitchellock. NOTE—No armored cable used.

Briggs & Stratton—B & S Switch No. 85985.

Mitchellock Type 42-R—No. E-10182 (Yale & Towne lock), No. E-10663 (Hurd lock).

Lock Cylinder—Yale & Towne, Hurd, or Briggs & Stratton. B & S No. 85915 (Key Series CA1-CA800) or No. 80592 on Early cars (Key Series 1BP-1000BP).

COIL: Auto-Lite CE-4030 or CE-4034. Mounted directly above distributor on ignition cable bracket.

Ignition Current—2.25 amperes idling, 5 stopped.

CONDENSER: Auto-Lite Part No. IG-3927.

Capacity—.25-.28 microfarad.

DISTRIBUTOR: Auto-Lite No. IGT-4201-1. Full automatic advance type with auxiliary vacuum spark control and manual (Octane Selector) adjustment.

Breaker Plate Identification—Maximum vacuum advance limited by slot in plate. Plate marked #8.

Breaker Gap—Set at .018." Limits .015-.019".

Cam Angle—27° closed, 18° open (.017" gap).

Breaker Arm Spring Tension—17-20 ounces.

Rotation—Clockwise viewed from the top.

Automatic Advance

Distributor Degrees	Distributor R.P.M.	Engine Degrees	Engine R.P.M.
Start	350	0	700
3	400	6	800
6	850	12	1700
9	1300	18	2600
12	1750	24	3500

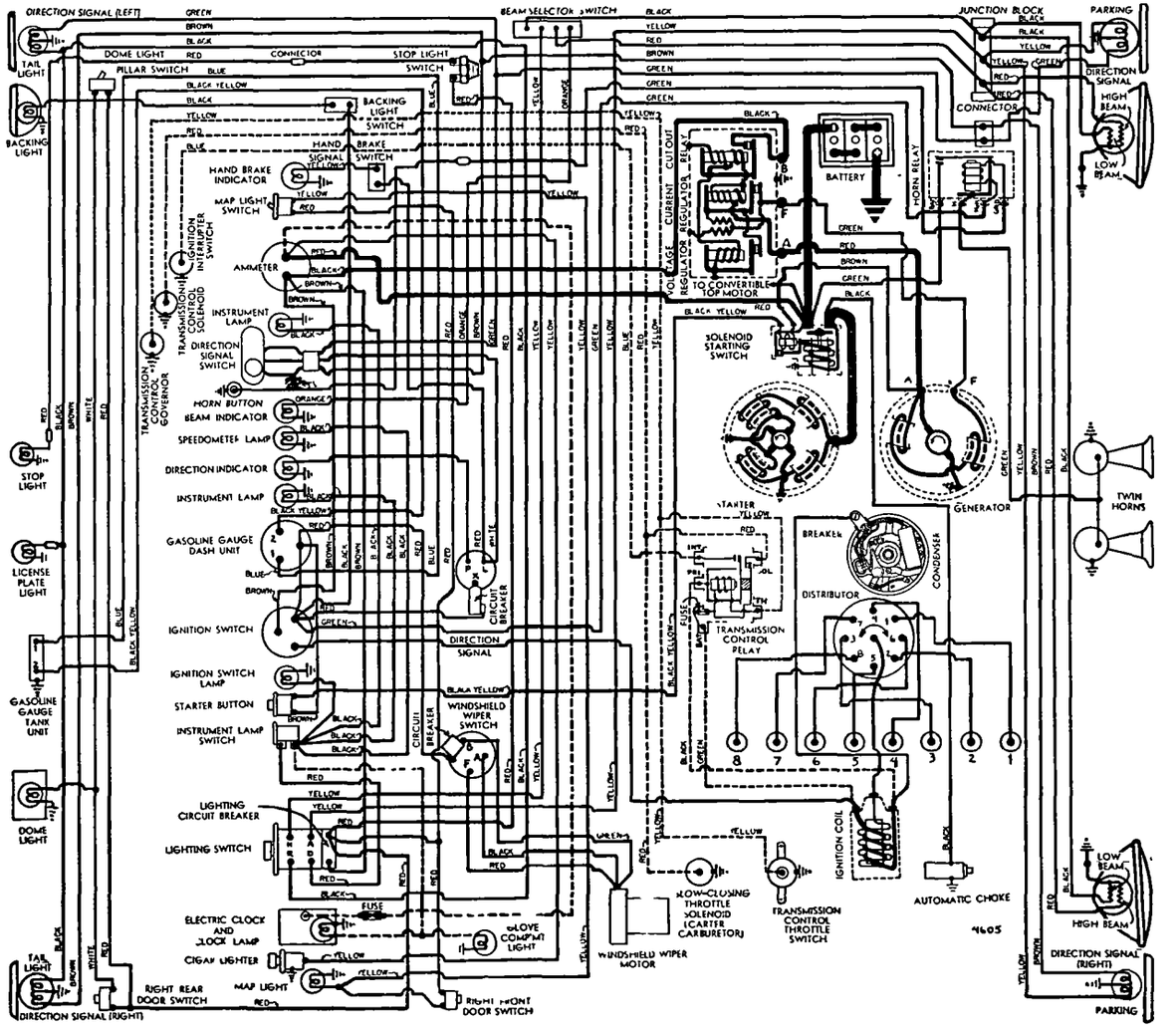

CHRYSLER 8 M DEL C39

Vacuum Spark Control: Auto-Lite Unit. On distributor, linked directly to breaker plate). Provides additional advance at speeds above idling except when engine accelerated or operated with wide open throttle (spark retarded by return spring in unit).

Vacuum Advance

Distr. Degrees	Eng. Degrees	Vacuum (" of HG)
Start	0°	5"
2°	4°	8"
4°	8°	11"
6°	12°	14"
8°	16°	17"

Manual Adjustment—Provides for minor changes in ignition timing at distributor. See Ignition Timing

Distributor Removal:—Mounted on left side of crankcase. To remove, disconnect vacuum line, take out hold-down screw in lock plate. **Installation Note**—Install distributor with #1 piston in firing position and rotor opposite #1 segment in cap.

IGNITION TIMING

Std. Setting—Initial setting (for regular non-premium fuel) as shown below. See Manual Adjustment (following) for Final Setting.

	Flywheel Degrees	Piston Position
All Engines	2° ATDC	.002" ATDC

NOTE—Impulse neutralizer marked at TDC with 15 (1°) graduations on either side.

Timing (Using Timing Light)—Connect timing light between distributor primary terminal and battery terminal on generator regulator. Set #1 or #8 piston in firing position (see setting above) with correct mark on impulse neutralizer aligned with pointer on chain case cover. Loosen lock-plate hold-down screw, center pointer on scale, tighten screw. Loosen lock-plate clamp bolt, rotate distributor until timing light just goes out, tighten clamp bolt. Check Manual Adjustment (following).

Timing (Using Synchroscope)—Tool C-374. Clip lead to #1 spark plug, direct light on impulse neutralizer (mark correct graduation with paint), idle engine and adjust distributor (as above)

Manual Adjustment—Set to give slight ping from 10-30 MPH accelerating with wide open throttle from 10 MPH. To adjust, loosen lock-plate hold-down screw, move plate (not more than 4° or .007" before or after initial setting) counter-clockwise (if no ping), clockwise to retard spark (if too severe).

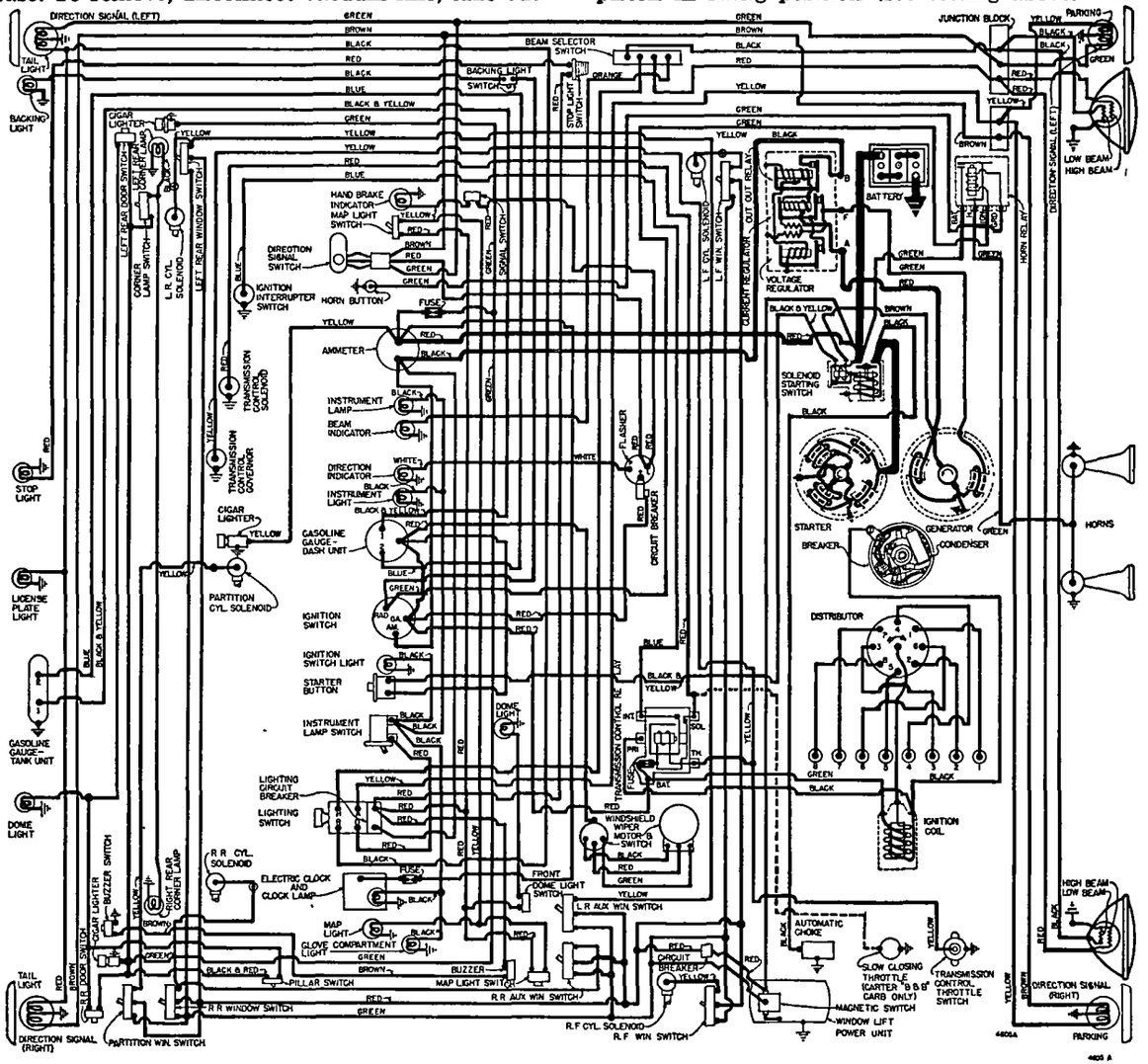

CHRYSLER CR WN IMPERIAL, MODEL C40

CARBURETOR

STROMBERG

Stromberg Model AAVS-2. Two types used as follows:

1)—Square Air Horn. Stromberg No. 380165 marked with Code No. 4-111. Chrysler No. 1072857.

2)—Round Air Horn. Stromberg No. 380169 marked with Code No. 4-112. Chrysler No. 1122911.

Type—1¼" dual (double barrel) downdraft type with new single idle adjusting screw. NOTE—Cars with Fluid Drive have Throttle Guard and Transmission Kick-down Switch (part of carburetor).

See Carburetor Section for complete data.

Idle Adjustment—New single idle adjusting screw now used. With engine warm and running at slow idle speed (choke vale wide open, fast idle inoperative), set throttle stopscrew for idle speed of 7-8 MPH. or 500 RPM (450-475 RPM on cars with Hydraulic Transmission). Adjust the new single idle adjusting screw for smooth idle (turning screw in gives leaner mixture). Recheck idle speed.. If vacuum gauge used, set for highest steady reading on gauge.

Accelerating Pump Setting—Throttle lever has two holes for pump link engagement. Set as follows: Inner Hole (short stroke)—Extreme hot weather. Outer Hole (long stroke)—Winter temperatures.

Float Level—Fuel level 5/8" below top edge of bowl (even with bottom of sight hole on side of bowl) with engine idling (4 lbs. pressure).

Metering Jet—***See Stromberg Jet Table in Carburetor Section for complete jet data.***

Fast Idle (Stromberg): Rotary cam, adjustable type. ***See Carburetion Equipment Section for complete data.***

Setting—Adjust connector rod so choke valve 1/8" open with fast idle screw against first step on cam.

Automatic Choke:—Sisson Type AC-600. ***See Carburetion Equipment Section for complete data.***

Setting—Remove air cleaner and choke cover. Line up hole in armature and magnet core with shank end of 1/8" drill, holding armature tight against magnet (Tool AC-620 available for use in place of drill). Loosen automatic choke lever clampscrew. Hold throttle open approx. 1/3 open, move choke lever to close choke valve tight, tighten clampscrew.

Throttle Guard (on cars with Stromberg Carburetors): Vacuum operated throttle kicker prevents stalling. ***See Carburetion Equipment Section for complete data.***

Setting—.010" clearance between throttle valve lever adjusting screw and throttle control plunger with engine idling at correct hot or slow idling speed.

CONTINUED ON NEXT PA E

CONTINUED FROM PRECEDING PAGE

CARBURETOR

CARTER (B&B)

Carter (B&B) Model E7A1. 1½" single barrel, downdraft type with Slow-closing Throttle and Kickdown Switch for Hydraulic Transmission.
See Carburetor Section for complete data.
Idle Adjustment—Adjustment same as for Stromberg carburetor. Idle adjustment screw setting ¾-1¼ turns open.
Accelerating Pump Setting—Pump lever has three holes for pump link engagement. Set as follows:
Inner Hole (minimum stroke)—Extreme hot temperatures or altitudes above 3000 feet.
Center Hole (med. stroke)—Normal setting.
Outer Hole (max. stroke)—Winter temperatures.
Float Level—Top of float (not soldered seam) 1/16" ± 1/64" below top edge of bowl with valve seated.
Metering Jet—*See Carburetor Section for Carter (B&B) Downdraft Carburetor Jet Specification Table.*

Fast Idle (Carter B&B): Throttle stopscrew stop dog linked to choke valve so that stop dog rotated and throttle opened to fast idle position when choke valve closed for starting. No adjustment required.

Automatic Choke: Sisson Type AC-600. See data under Stromberg Carburetor (above).

Slow-Closing Throttle (on Carter B&B Carburetors): Electro-magnetic dashpot type. No adjustment.
See Carburetion Equipment Section for complete data.

CARB. EQUIPMENT

Air Cleaner: AC No. 1543852 Heavy Duty oil-bath type. Filter Element AC No. 13.
Servicing—Clean filter element in kerosene, clean out oil reservoir and fill to indicated level with SAE No. 50 oil (20W oil below 32°F., approx. 1 pint required). Service cleaner whenever sump half-filled with oil and dust sludge. NOTE—Crankcase ventilator air cleaner in oil filler cap should be cleaned in kerosene and re-oiled by dipping in SAE No. 50 engine oil at 1000 mile intervals.

Fuel Pump: AC No. 1539215. Diaphragm type.
Replacement Pump—AC No. 514 or 590.
Pressure—3½-5½ lbs.
See Carburetion Equipment Section for complete data.

Fuel Tank Filter: New Ollite metal filter in tank.
Servicing—If more than 2 pints water in tank, fuel will not pass filter. Remove filler cap and drain plug, draining tank. Disconnect fuel line at some point between pump and tank, blow out line and filter with air, increasing pressure as filter is cleaned. Flush tank with clean gasoline.

Gasoline Gauge: Auto-Lite electric type.
Dash Unit—Auto-Lite NG-10896D (block lettering), No. NG-11238D (with script lettering).
Tank Unit—Auto-Lite No. NG-9330-T.
See Carburetion Equipment Section for complete data.

BATTERY

Auto-Lite Type CF-2-19R. 6 volt, 19 plate, 135 Ampere Hour Capacity (20 hour rate).
Starting Capacity—170 amperes for 20 minutes.
Zero Capacity—300 amperes for 5.4 minutes. Five second voltage 4.45 volts.
Grounded Terminal—Positive (+) to engine.
Dimensions—Length 10¼". Width 7". Ht. 8 15/16".
Location—Under hood in left fender shield.

STARTER

Auto-Lite Model MAX-4050. Armature MAW-2030.
Drive—Overrunning clutch (solenoid pinion shift).
Rotation—Counter-clockwise at commutator end.
Brush Spring Tension—42-53 ozs. (new brushes).
Cranking Engine—150 RPM., 175 amperes, 5.4 volts.

Performance Data

Torque		R.P.M.	Volts	Amperes
0	ft. lbs.	5300	5.5	65
0.65	"	3300	5.5	100
2.75	"	1630	5.0	200
5.5	"	970	4.5	300
8.7	"	600	4.0	400
12.0	"	300	3.5	500
16.5	"	Lock	3.0	640
25.0	"	Lock	4.0	880

Removal: Disconnect wires (tape battery lead), remove mounting bolts, withdraw starter (not necessary to disturb oil filter or oil lines).

Starting Switch: Auto-Lite Solenoid Type SS-4705 with pushbutton on instrument panel.
See Electrical Equipment Section for complete data.

GENERATOR

C-39—Auto-Lite GDZ-4801A. Armature GDZ-2006F.

C-38 & C-39 Spec. Equip.—Auto-Lite GEG-4823-A or GEG-4823B. Armature No. GEG-2006F (both).

C-40—Auto-Lite GEG-4823-1. Armature GEG-2006F. Two brush (shunt) type with voltage and current regulation. Ventilated by fan on drive pulley.

Charging Rate Adjustment—No adjustment at generator. Charging rate controlled by Voltage Regulator and maximum output by Current Regulator.

Maximum Charging Rate—35 amperes (C39 GDZ Gen.), 8.0 volts, 2200 Gen. RPM or approx. 26 MPH, 40 amperes (C40 GEG Gen.), 8.0 volts, 1700 Gen. RPM or approx. 24 MPH and above with load or discharged battery (Current Regulator setting).

Performance Data—GDZ-4801A

Cold			Hot		
Amperes	Volts	R.P.M.	Amperes	Volts	R.P.M.
0	6.4	925	0	6.4	1000
5	6.65	1060	5	6.65	1150
10	6.85	1200	10	6.85	1290
15	7.05	1340	15	7.05	1430
20	7.3	1480	20	7.3	1590
25	7.55	1620	25	7.55	1750
30	7.8	1760	30	7.8	1980
35①	8.0	1900	35	8.0	2250

Performance Data—GEG-4823

0	6.4	780	0	6.4	820
5	6.6	870	5	6.6	900
10	6.8	960	10	6.8	990
15	7.0	1040	15	7.0	1080
20	7.2	1130	20	7.2	1170
25	7.4	1220	25	7.4	1270
30	7.6	1310	30	7.6	1380
35	7.8	1410	35	7.8	1510
40①	8.0	1520	40	8.0	1680

①—**Current regulator setting. See Regulator data.**

Rotation—Counter-clockwise at commutator end.
Brush Spring Tension—53 ounces max. (GDZ Gen.), 64-68 ozs. (GEG Gen.) with new brushes.
Field Current—1.60-1.78 amperes at 6.0 volts (all).
Motoring Current—4.16-4.60 amps. (for GDZ Gen.), 4.7-5.2 amperes (GEG Gen.) at 6.0 volts.

Removal:—Pivot mounted at left side of engine at front. To remove, take out pivot and clamp bolts.

Belt Adjustment:—Loosen pivot and clamp bolts, pull out on generator until belt is snug or 40-50 lbs. tension secured on scale attached to field frame.

REGULATOR

C-39—VRP-4401A, VRP-4501A, VRP-4503A (for GDZ Generator), VRP-4001F (for GEG-4823A Gen.), VRP-4401B (for GEG-4823B Gen.). VRP-4005E for negative ground.
C-40—Auto-Lite VRP-4001F (for GEG Generator). Vibrating type Voltage and Current Regulators in case with Cutout Relay.
NOTE—VRP-4001A settings same as for VRP-4401A.
See Electrical Equipment Section for complete data.
NOTE—Regulator case cover sealed. Serviced on exchange basis if seals not broken (to remove cover).

Cutout Relay

Cuts In—6.4-7.0 volts (set to 6.4-6.6 volts).
Cuts Out—4.1-4.8 volts (approx. 4-6 amps. disch.).
Contact Gap—.015" minimum.
Air Gap—.031-.034" with contacts open (check at hinge end of core).

Voltage Regulator

Setting—7.2-7.5 volts at 70° F. See Electrical Equipment Section for settings at other temperatures.
To Check (without breaking seals)—Connect ammeter in charging line at regulator 'B' terminal (use short heavy leads), voltmeter between 'B' terminal and ground. Operate generator at speed equivalent to 30 MPH., charging fully charged battery, until voltage is steady. Voltage reading should agree with setting given above.
To Adjust (with cover removed)—Change regulator armature spring tension by bending lower spring hanger slightly. See Electrical Equipment Section.
Contact Gap—.012" min. (armature against stop pin).
Air Gap—.048-.052" with contacts just opening.

Current Regulator

Setting (VRP-4001A, 4401A)—34-36 amperes ("35").
Setting (VRP-4001F, 4005E, 4401B)—39-41 amperes, marked "40".
Setting (VRP-4501A, 4503A)—35 amperes (42 amperes at 70°F. after 15 minutes run, 33-37 amperes at 70° after additional 15 minutes run). CAUTION—These current regulators are temperature-compensated and setting decreases with temperature rise in service as above.
To Check (without breaking seals)—Connect test meters as for voltage check (above). Operate generator at speed equivalent to 30 MPH. charging battery, turn on car lights and accessories or connect load (bank of headlamp bulbs etc.) between ammeter and battery so that generator charges at peak rate and Current Regulator operates. Current reading should agree with setting given above. If more than slight excess noted, regulator is defective.
To Adjust (with cover removed)—Same as for Voltage Regulator (above).
Contact Gap & Air Gap—Same as Voltage Regulator.

LIGHTING

Headlamps: Corcoran-Brown "Sealed Beam" type. Beam selector switch on toeboard controls upper and lower beams.
See Electrical Equipment Section for complete data.
Headlamp Adjustment—Aim upper beam straight ahead (hot spot center 3" below lamp center height).
Beam Indicator—Lighted when Country (upper) beams in use. Located above center of speedometer face on early cars, in upper left corner of speedometer face on later cars.

Direction Signal: Two types used (see Indicators).
See Electrical Equipment Section for complete data.
Direction Signal Indicators—In upper edge of speedometer face. Early type has LEFT and RIGHT arrow. Later type use one jewel light in upper right corner only. (Left jewel light on these cars is High Beam Indicator).
Direction Signal Flasher—Chrysler No. 1161586.
Direction Signal Circuit Breaker—Chrysler No. 1161568.

Switches

Lighting—Chrysler No. 1163581.
Beam Selector—Chrysler No. 859974.
Instrument—Chrysler No. 1235694.
Map Light—Chrysler 1154278 (C39), 1232660 (C40).
Stop Light—Chrysler No. 920355.
Hand Brakes—Chrysler No. 867077.
Dome Lamp Pillar—Chrysler No. 317180.
Door Switches—Chrysler No. 882943.
Direction Signal—Chrysler No. 1163984.

Bulb Specifications

Position	Candlepower	Mazda No.
Headlamps	45-35 watts	Sealed Beam
Front Dir. Sig. & Parking	21-3	1158
Instrument (C39)	3	63
Instrument (C40)	6	81
Beam & Dir. Sig. Ind., Ign. Sw.	1	51
Rear Dir. Sig. & Tail	21-3	1158
Stop Light, Map Light	21	1129
Rear License	3	63
Dome①	15	87

①—C39 Town & Country 6 cp. No. 81, C39 Convertible (Quarter Lights) 6 cp. No. 81, C39 7 Pass. (Corner Lights) & C40 Corner Lights 3 cp. No. 63.

MISC. ELECTRICAL

CIRCUIT BREAKERS: Lighting—On back of lighting switch. Vibrating type, protects lighting circuits.
Direction Signal—On flasher behind instrument panel. Vibrating type. Protects dir. signal circuit.
Windshield Wiper—Vibrating, thermostatic type. Starts to operate with current of 12 amperes.
Window Lift (C40)—Mounted on dash alongside Window Lift Motor.
Convertible Top—Mounted near control switch. Thermostatic type. Opens at 80 amperes in 1 minute or less.

FUSES: Transmission Solenoid (Hydraulic Trans.)—30 ampere. Under transmission relay on left fender.
Clock—3 ampere. In clock lead.
Body Wiring (C40)—30 amp. Near ammeter.
Radio—14 ampere. In fuse connector at radio.

HORNS: Auto-Lite Model HT-4007 (Low Pitch), HT-4008 (High Pitch). Dual horns operated by relay.

Horn Relay: Auto-Lite Model HRL-4101. Connected through ignition switch, operates only with ignition "on".

Contacts Close—1.5-3.0 volts (seal to core with 4.0 volts maximum).
Contacts Open—.5 volt min. (open from seal).
Contact Gap—.026". **Air Gap**—.016-.020" (armature air gap with contacts closed but not sealed), .015-.018" (gap between armature leg and yoke with armature sealed to core).

ENGINE

ENGINE SPECIFICATIONS: 8 cylinder, "L" head type.
Bore—3¼". **Stroke**—4⅞".
Displacement—323.5 cu. ins. **Rated H. P.**—33.80.
Developed Horsepower—135 at 3400 RPM.
Compression Ratio—6.7-1 Std. cast-iron head.
Compression & Vacuum Reading—*See Tune-up data.*

ORIGINAL BORE & PISTONS: *See Chrysler Shop Notes.*

ORIGINAL BEARING SIZES: *See Chrysler Shop Notes.*

OIL PAN REMOVAL: *See Chrysler Shop Notes.*

ENGINE REMOVAL: *See Chrysler Shop Notes.*

TIGHTENING TORQUES: *See Chrysler Shop Notes.*

CYLINDER HEAD: Tightening Torque & Cylinder Head Diagram—*See Chrysler Shop Notes.*

PISTONS: Aluminum alloy, U-slot, cam ground type. NOTE—Skirt cam ground (.010-.014" smaller diameter across pin bosses) and tapered (.0005-.0015" smaller diameter at top of skirt than at bottom).
Length—3⅞". **Weight**—16.5 ozs. (stripped).
Removal—Pistons and rods removed from above.
Clearance—.0008" on thrust face ¾" from bottom of skirt. Ring land diameter .0305" larger than skirt.

Fitting New Pistons: Measure piston size with micrometer across thrust faces (right angles to pin bosses) ¾" from bottom of skirt. Fit piston in bore using .002" x ½" feeler, insert piston upside down in bore with feeler 90° from pin bosses on side opposite slot. Clearance correct when 5-7 lbs. pull required to withdraw feeler with bore and piston at 70°F.
NOTE—Cylinder recondition limits .0005" taper and .0005" out-of-round. Badly scored bores or with taper over .030" or out-of-round over .004" require reboring and honing to limits listed above.

Replacement Pistons: *See "Pistons" in Chrysler Shop Notes.*

Installing Pistons: "U" slot away from valves.

PISTON RINGS: Two compression, two slotted oil control, coated rings per piston, all above pin. Oil ring grooves drilled for oil drainage (lower groove slotted).

Rings	Width	End Gap	Side Clearance
Compr. (#1)	3/32"	.007-.015"	.0025-.004"
Compr. (#2)	3/32"	.007-.015"	.002-.0035"
Oil Contr. (#3, 4)	5/32"	.007-.015"	.001-.0025"

Installing Rings—#1 Compr. with step on inner edge up. #2 Compr. with step on inner edge up or if step on outer edge install with step down.

Replacement Rings: *See "Piston Rings" in Chrysler Shop Notes.*

PISTON PIN: Diameter 55/64". Length 2¾". Floating type with locking ring at each end.
Pin Fit in Piston—Thumb push fit with piston heated to 160°F.
Pin Fit in Rod Bushing—Tight thumb push fit at normal room temperature.

Replacement Pins: Standard size and .0006", .003", .008" oversize.

CONNECTING ROD: Length—9".
NOTE—Pin hole in rod bronze-bushed.
Lower Bearing Diameter—2 3/16". *See "Original Bearing Size" in Chrysler Shop Notes.*
Lower Bearing—Removable, precision type, thin babbitt on steel. No shims.
Clearance—.0005-.0015". **Sideplay**—.006-.011".

Bearing Adjustment: None (no shims). Replace bearings. Do not file rods or caps. *See "Connecting Rods & Bearings" in Chrysler Shop Notes.*

Replacement Bearings: *See "Connecting Rods & Bearings" in Chrysler Shop Notes.*

Installing Rods: Offset type. Wide side of bearing to rear for #1, 3, 5, 7; to front for #2, 4, 6, 8. Oil spray hole in rod toward camshaft on all rods.

CRANKSHAFT: 5 bearings, 8 integral counterweights with vibration dampener on front end.

Crankshaft Front & Rear Oil Seals: *See "Crankshaft and Main Bearings" in Chrysler Shop Notes.*
Bearing Diameter—2 45/64". *See "Original Bearing Size" in Chrysler Shop Notes.*
Bearings—Removable, precision type, thin babbitt on steel. No shims.
Clearance—.001-.0015".

Bearing Adjustment: None (no shims). Replace bearings. Do not file bearing caps. *See "Crankshaft and Main Bearings" in Chrysler Shop Notes.*

End Thrust: Taken by flange faces on rear (#5) main bearing. **Endplay**—.003-.007".

CAMSHAFT: 6 bearing. Non-adjustable chain drive.
Bearing Diameters—#1, 2 1/16"; #2, 2 1/32"; #3, 2"; #4, 1 31/32"; #5, 1 15/16"; #6, 1⅜".
Bearings—Removable, steel-backed, babbitt-lined bushings (except #6—machined in crankcase).
Clearance—.001-.003" (#1), .0015-.0035" (all others).
NOTE—Replacement bearings are finished (reaming, scraping, or burnishing not required).

End Thrust: Taken by thrust plate behind camshaft sprocket hub. **Endplay**—.002-.006".

Camshaft Removal: *See "Camshaft & Bearings" in Chrysler Shop Notes.*

Timing Chain: Width 1¼". Pitch .500" (½"). Length 23½" or 47 links.

Camshaft Setting: Sprockets marked. Mesh chain with sprockets turned so that "O" marks are adjacent and in line with a straightedge across shaft centers.

VALVES:	Head Diameter	Stem Diameter	Length
Intake	1 17/32"	.340-.341"	5⅞
Exhaust	1 11/32"	.3395-.3405"	5⅞"

	Seat Angle	Lift	Stem Clearance
Intake	45°	⅜"	.0015-.0035"
Exhaust	45°	⅜"	.002-.004"

Exhaust Valve Seat Insert Servicing—*See "Valve System" in Chrysler Shop Notes.*

Valve Guides: Remove from above. Press new guides in with stepped end down and upper end 1" (Intake), 1 3/32" (Exhaust), below top of block. Ream guides to inside diameter of .3425-.3435" (Tool DD-849). Exhaust guides counterbored on upper end.

Valve Springs: Install springs with close-coil end to top. Spring Free Length 2".

C NTINUED ON NEXT PAGE

ENGINE

C NTINUED FROM PRECEDING PAGE

	Spring Pressure	Spring Length
Valve Closed	40-45 lbs.	1¾"
Valve Open	107-115 lbs.	1⅜"

Valve Lifters: Mushroom type (remove from below with camshaft out of engine). Stem diameter ⅝". Service by reaming lifter holes (work from above piloting reamer Tool C-265 in valve guide) and installing oversize lifters. Clearance—.000-.001".

Replacement Lifters—.001", .008", .030", .060" oversize.

VALVE TIMING

Tappet Clearance: .008" Intake, .010" Exhaust, Hot. Additional .002" Exhaust clearance recommended for sustained high speed driving. Self-locking tappet screws used. NOTE—Remove right front wheel and lower wheel housing panel for access to valves.

Valve Timing: See Camshaft Setting above.

Intake Valves—Open 12° BTDC. Close 44° ALDC.

Exhaust Valves—Open 50° BLDC. Close 6° ATDC.

Valve Timing Check—With .014" tappet clearance (Cold), #8 intake valve should open with #8 piston 5° to 17° or .012" to .135" BTDC. with 5th to 17th graduation before DC mark on impulse neutralizer aligned with pointer on chain case cover. Reset tappet clearance to .008" Hot running clearance.

LUBRICATION

Engine Oiling System: Pressure through new Full-flow oil filter to main and connecting rod bearings, camshaft bearings, and timing chain. New "Rotor" type oil pump on right side of engine.

Crankcase Capacity—6 quarts (refill).

Normal Oil Pressure—55-65 lbs. above 30 MPH. with warm oil. CAUTION—Pressure of 35-45 lbs. at driving speeds indicates oil filter may be clogged and should be replaced.

Oil Pressure Relief Valve—Under cap on lower left side of crankcase. Has new bleed duct which connects with new idle oil passage to provide additional oil at idling speeds. Valve has screw adjustment but factory setting seldom requires changing. Opens at 40-45 lbs.

Oil Pump: New "Rotor" type on right side of crankcase.
Servicing—*See "Oil Pump" in Chrysler Shop Notes.*

Oil Filter: New "Full-flow" type. All oil under full pressure passes through filter before entering oil passage. Safety valve in filter opens if element is clogged allowing oil to pass directly to engine.
Servicing—Install new filter element and cover gasket at 5000 mile intervals (or earlier if required). Change oil at same time. **Checking:** If oil pressure drops to 35-45 lbs. with warm oil, filter element may be clogged and should be replaced, to bring oil pressure to normal 55-65 lbs. above 30 MPH.

Oil Pressure Gauge: Auto-Lite G-10893 (block lettering), No. G-11235 (script lettering). Not electric.

COOLING

Cooling System: Pressure type with pressure valve (relief valve) in filler cap, and positive circulation with pump on front of engine, by-pass type thermostat, and water distribution tube in block.
Capacity—26 quarts.
Pressure Valve—In filler cap. Opens at 3 lbs.

Radiator Core Removal: *See "Radiator" in Chrysler Shop Notes.*

Water Distribution Tube Servicing: *See "Cooling System" in Chrysler Shop Notes.*

Water Pump: Packless type with shaft mounted on 2 ball bearings with lubricant fitting for bearing lubrication and grease nipple for seal lubrication. *See Water Pump Section for complete data.*
Removal—Drain cooling system. Remove fan blade assembly, fan belt, by-pass hose and elbow, inlet hose, pump mounting capscrews. Take pump off. Spacer behind pump need not be taken off engine.
Belt Adjustment—*See Generator Belt Adjustment.*

Thermostat: In cylinder head water outlet.
Setting—Starts to open 157-162°F. Fully open 183°F.
INSTALLATION NOTE—Install thermostat with 2 ports facing front, 2 ports to rear. Some thermostats equipped with heavy shield welded on bottom (for bellows protection at high speeds), this type thermostat cannot be installed on earlier cars.

Temperature Gauge: Auto-Lite H-10895 (block lettering), No. H-11237 (script lettering). Not electric.

CLUTCH

Borg & Beck Model 10A6 with "Borglite" driven member. Single plate, dry disc type. NOTE—Cover Assembly No. 961 stamped on cover.
See Clutch Section for complete data.
Facings—Woven type, 2 used. Inside Diameter 6". Outside Diameter 10". Thickness .125" (⅛").

Pedal Adjustment: Set pedal to just clear toeboard by loosening locknut and turning stopscrew at lower end of pedal arm above shaft. Set pedal for 1" free travel by turning clutch release fork adjusting nut on connector link at clutch release fork.
CAUTION—Do not disturb turnbuckle on pedal link (controls pedal over-center spring tension).
Clutch Over-Center Spring—*See "Clutch Notes" in Chrysler Shop Notes for setting procedure.*

Removal: Remove Transmission (see TRANSMISSION). Remove clutch housing underpan and clutch release bearing and sleeve. Mark clutch and fluid drive clutch driving plate for re-assembly. Remove all clutch cover mounting screws evenly, lower cover and driven member out through opening in housing.

FLUID DRIVE

Chrysler—Fluid coupling at rear of engine.
See Miscellaneous Section for complete data.

Oil Level: Keep to level of filler hole. Check at first 1000 miles and every 10,000 miles. Manufacturer recommends MOPAR Fluid Drive Fluid.

Removal: Remove transmission and clutch (see TRANSMISSION and CLUTCH), take off driver flange stud nuts (Tool C-589), lower fluid drive assembly out.

TRANSMISSION

STANDARD MODEL C39

Own Make. All helical gear, constant-mesh, synchro-mesh (Second & High), sliding gear (Low & Reverse). *See Transmission Section for complete data.*

Transmission Control: Manual steering col. shift.
See Transmission Section for complete data.

Removal: Jack up front end of car. Disconnect front universal (loosen companion flange nut if transmission to be dismantled). Disconnect speedometer cable, hand brake cable at brake band, gearshift control rod and selector rod at transmission. Remove transmission mounting screws and nuts at clutch housing, pull transmission straight back to free clutch shaft, lower transmission and remove from under car.
NOTE—When installing transmission, use pilot studs installed in upper mounting screw holes to maintain alignment and prevent spring clutch driven member.

TRANSMISSION

STANDARD C40, OPTIONAL C39

Hydraulically Operated Type (with Fluid Drive). New design semi-automatic, four-speed transmission with hydraulic actuation and electrical control.
See Transmission Section for complete data.

Transmission Control: *See Transmission article for adjustment directions.*
See Transmission Section for complete data.

Kickdown Solenoid—Auto-Lite No. SSS-4002.

Kickdown Relay—Auto-Lite No. HRM-4102.

Governor—Auto-Lite No. TG-4202R, 3R, or 4R.

Kickdown Switch—Part of carburetor assembly.

Ignition Interrupter Switch—On right side of transmission above Governor.

Fuse—30 ampere. On Kickdown Relay.

Transmission Oil—3 pints, 10-W engine oil.

Removal: Remove access cover on right rear side of floorboard under front floor mat, disconnect speedometer cable, and governor, solenoid, and interrupter switch wires at transmission. Remove governor and solenoid. Disconnect hand brake cable at brake band, remove cable and cable anchor bracket. Remove brake support, band, adjusting bolt bracket and lever as an assembly. Disconnect front universal (push yoke back), and gearshift rods at transmission. Drain transmission, **replace drain plug.** Disconnect transmission mounting bolts and lower assembly out of car.
INSTALLATION CAUTION—Rear face of clutch housing and lower pan must be in correct alignment. Misalignment can cause hard shifting when transmission installed.

UNIVERSALS

Detroit Universal Series 7300. Cross type with roller bearings. Two used (3 with center bearing on 7 Pass.).
See Universals Section for complete data.

Propeller Shaft Center Bearing: Used on 7 Passenger.
See "Propeller Shaft" in Chrysler Shop Notes.

REAR AXLE

MODEL C39

Own Make. Semi-floating, hypoid gear type with Hotchkiss drive.
See Rear Axle Section for complete data.

Ratio (Std. Trans.)—3.9-1 Std.; 4.3-1, 4.56-1, 4.89-1 Special Equip.
Ratio (Hydr. Trans.)—3.36-1 Std.; 3.9-1 (Spec. Exp.), 4.1-1 (Spec. Exp.).
Backlash—.006-.010". Screw adjustment.

Removal: Disconnect rear universal, remove axle shafts (see below), take out carrier capscrews, lift off carrier assembly.

Axle Shaft Removal—Remove wheel, hub, and drum assembly (use screw type hub puller—Tool C-675), block brake pedal, disconnect brake line at wheel cylinder, remove axle shaft key, install sleeve (Tool C-757) in oil seal, remove brake support (oil seal mounted in support), pull shaft and bearing (use C-499 puller). NOTE—Use puller C-293-C to remove bearing from shaft, puller C-748 or C-358 to remove inner oil seal, drift C-241 to install seal.

Axle Shaft Outer Oil Seal: New leather type mounted on brake support (backing plate).

Oil Seal Servicing—*See "Rear Axle" in Chrysler Shop Notes.*

Wheel Bearing Adjustment: Shims between backing plate and axle housing. With wheel and hub removed, check endplay with dial indicator. To adjust, remove backing plate (see above), add or remove shims (furnished .010", .0125", .015", .030" thick) equally at both wheels. **Endplay**—.003-.008".

REAR AXLE

MODEL C40

Own Make. Semi-floating, hypoid gear type with Hotchkiss drive. Barrel type differential with adjustable ring gear thrust pad used.

See Rear Axle Section for complete data.

Ratio—3.58-1.

Ring Gear Thrust Pad Setting—Loosen locknut on left side of carrier housing, tighten thrust pad screw finger tight, back screw off ⅛ turn, tighten locknut.

ALL OTHER DATA SAME AS FOR C39 REAR AXLE

SHOCK ABSORBERS

C39 (Delco)—Model 1030-C (Front), 1030-T (Rear).
C39 (Monroe)—K-11148 (Front), K-11149 (Rear).
C40—Delco Model 942-D (Front), 940-W (Rear).
Direct acting, hydraulic types.

See Shock Absorber Section for complete data.

Hydraulic Transverse Sway Absorber: Rear sway bar with built-in shock absorber used on all models.

See Shock Absorber Section for complete data.

FRONT SUSPENSION

Front Suspension: Independent, linked parallelogram type with coil springs and direct acting shock absorbers.

See Front Suspension Section for complete data.

Kingpin Inclination—4¾° to 6°.
Camber—Positive ¼°. Limits 0° to Pos. ¾°.
Caster—Negative 1° to Positive 1°. Not adjustable.
Toe In—0-1/16". Turn both tie rods equally.
NOTE—Turn clamp bolt beneath tie rod on left end of long rod for clearance on extreme turns.
Steering Geometry—Inner wheel 22½°. Outer 20°.

STEERING GEAR

Own Make. (Gemmer design) Model 335 "3-tooth" type worm-and-roller with "push-pull" adjustment.

NOTE—See Gemmer 335 steering gear article.

See Steering Gear Section for complete data.

BRAKES

Service: Chrysler "Safe-guard" Lockheed Hydraulic type as follows:

Front Wheels—Two-cylinder type (front shoe anchored at bottom and actuated by upper cylinder, rear shoe anchored at top and actuated by lower cylinder).

Rear Wheels—Double anchor type with single double-acting wheel cylinder.

See Brake Section for complete data.

Wheel Cylinders—1¼" bore (front wheel front shoe—top cylinder), 1⅛" bore (all others). Single acting (front), double acting (rear wheels).

Drums—Centrifuse. Diameter 12".

Lining—Moulded asbestos. Width 2". Thickness 13/64". Length 9⅝" (rear wheel rear shoe), 12 9/16" (all other shoes).

Clearance—.006" at each end of all shoes.

Braking Power—60% front wheels, 40% rear.

Power Brake Unit (C40): New diaphragm type with internal valve.

See Brake Section for complete data.

Hand Brake: On drum at rear of transmission.

Adjustment—*See "Hand Brake Notes" in Chrysler Shop Notes.*

Drum—Cast-iron. Diameter 7".

Lining—Molded asbestos. Width 2½". Thickness 5/32". Length 20".

MISC. MECHANICAL

WINDSHIELD WIPER: Auto-Lite Model EWH-5001, EWH-5003 (Conv. Coupe). Electric type with circuit breaker mounted on control switch.

See Miscellaneous Section for complete data.

CONVERTIBLE TOP CONTROL: Electric type.

See Miscellaneous Section for complete data.

WINDOW REGULATORS (C40): Hydro-electric type.

See Miscellaneous Section for complete data.

SPECIAL SERVICE NOTES: Engine Installation—Complete engine and drive unit (including steering gear) mounted on separate sub-assembly which is bolted to main body side members at engine cowl.

Supercharged Model—This model has special Carburetor, Distributor (requires synchronization), Valve Timing and Ignition Setting.

Rotation—Crankshaft rotation counter-clockwise or opposite direction from conventional (occasioned by reversal of engine).

MODEL IDENTIFICATION

SERIAL NUMBER: First number 1101 (1936). Stamped on Service Motor Plate on right side of cowl under engine hood.

ENGINE NUMBER: First number FB-100 (1936). Stamped on left side of engine block at front end.

TUNE-UP

COMPRESSION: Ratio—6.5-1 (1936), 6.32-1 (1937) Std. Aluminum Heads.
Pressure—110 lbs. at cranking speed of 130 R.P.M.

VACUUM READING:—18-20" steady reading with engine idling at 6 M.P.H.

FIRING ORDER: 4L-2L-2R-1R-3R-4R-1L-3L (Std.), 1L-3L-3R-2L-2R-1R-4L-4R (Schgd. 812) with cylinder banks right 'R' and left 'L' as viewed from drivers seat and #1 cylinder at front or flywheel end.

SPARK PLUGS: Champion Type J9B. 14 mm. Metric **Gaps**—.025" (Std. 810, 812), .028" (Schgd. 812).

IGNITION: See Coil, Condenser, and Distributor.
Breaker Gap (810, 812)—.017". **(Schgd. 812) .020".**
Cam Angle (810, 812)—27.5°. **(Schgd. 812) 36°.**
Breaker Arm Spring Tension—17-20 ounces.
Synchronization (Schgd. 812)—Movable contacts open 45° (distr.) after fixed set.
Automatic Advance—*See Distributor.*

IGNITION TIMING: See Ignition Timing.
Std. Setting—5° BTDC (Std. 810, 812), 2° BTDC (Schgd. 812) with point on flywheel 2 teeth (Std. 810, 812), 1 (Schgd. 812) before dead center mark "4L" at pointer in inspection hole on right side of housing. NOTE—On Schgd. 812, contacts open alternately at 45-45° (distr.) intervals.

CARBURETION: See Carburetor & Carb. Equipment.
Idle Setting—Both idle screws midway between "miss" and "roll" points. Idle speed 500 RPM or 6 MPH.
Float Level—Fuel level 15/32" (EE-15), 5/8" (AA-25) below top edge of bowl.
Accelerating Pump—Not adjustable.
Fuel Pump Pressure: 4¼ lbs. maximum.

VALVES: See Valve Timing.
Tappet Clearance—.008" all valves (Std. 810, 812), .008-.010" all valves (Schgd. 812) with Engine cold. NOTE—Carburetor and intake manifold must be removed to get at valves (manifold serves as cover for valve chamber). Tappet adjusting screw located on upper end of rocker arms.

STARTING: See Battery, Starter, Generator, Regulator.

IGNITION

Ignition Switch:—Mitchellock Model 16-S No. 6679. Connected to coil by armored cable. Switch has two "on" positions, Right Startix On, Left Startix Off.
Ignition Lock—Yale & Towne No. 9366. Mitchell No. 6622.

COIL: Auto-Lite Model CE-4620. Service Coil (less Switch & Cable) CE-3224JS.
Ignition Current—3 amperes idling, 4½-5½ stopped.

CONDENSER: Auto-Lite Part No. IG-2671 (Std. 810, 812—IGP distr.), IGB-1025C (Schgd. 812—IGH distr.).
Capacity—.20-.25 microfarad.

DISTRIBUTOR (STD. 810, 812): Auto-Lite Model IGP-4006. Single breaker, 8 lobe cam, full automatic advance type. No synchronization required.
Breaker Gap—Set at .017".
Cam Angle or Dwell—27.5° closed, 17.5° open.
Breaker Arm Spring Tension—18-20 ounces.

Automatic Advance—IGP-4006

Distributor Degrees	R.P.M.	Engine Degrees	R.P.M.
Start	300	0	600
2.5	600	5	1200
5	900	10	1800
7.5	1200	15	2400
10	1500	20	3000

Removal:—Distributor mounted between cylinder banks at forward end of engine. To remove, take out hold-down screw in advance arm.

DISTRIBUTOR (SCHGD. 812): Auto-Lite Model IGH-4028. Double breaker, 4 lobe cam, full automatic advance type. Must be synchronized.
Firing Interval—Contacts open alternately at regular 45° intervals corresponding to 90° firing intervals of the engine. See Ignition Timing for synchronization instructions.
Breaker Gap—Set at .020" (both sets equal).
Cam Angle or Dwell—36° closed, 9° open for both sets operating together when correctly synchronized.
Breaker Arm Spring Tension—16-20 ounces.

Automatic Advance—IGH-4028

Distributor Degrees	R.P.M.	Engine Degrees	R.P.M.
Start	300	0	600
9	1800	18	3600

Removal:—Same as for IGP-4006 above.

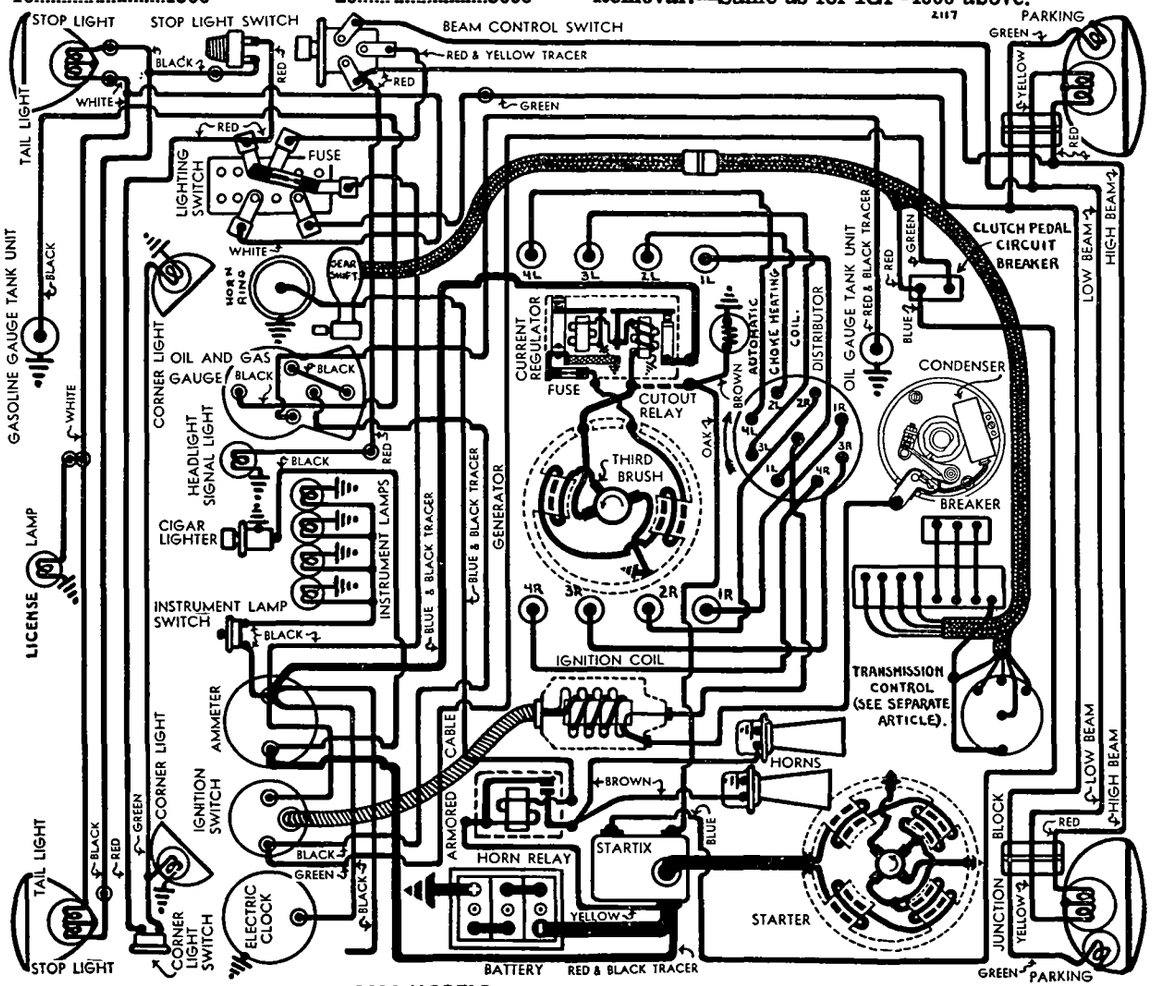

1936 MODELS

IGNITION TIMING

	Flywheel Degrees	Piston Position
Std. 810, 812	5° BTDC	.0089" BTDC
Schgd. 812 (FC Eng)	2° BTDC	.0014" BTDC

To Set Timing (Neon Timing Light)—This method recommended by manufacturer. Mark second tooth (Std. 812), first tooth (Schgd. 812) on flywheel before timing mark '4L' (dead center mark) with white paint. Clip one timing light to #4L spark plug (rear cylinder, left bank), direct light on flywheel through inspection hole in right side of flywheel housing. Idle engine, loosen distributor advance arm clamp bolt, rotate distributor until marked tooth appears in line with pointer on housing, tighten clamp bolt. Then synchronize movable contacts (Schgd. 812 only).

To Set Timing (Without Timing Light)—Crank engine by engaging gears and rolling car on floor or by jacking up one wheel and turning wheel by hand. With #4L piston on compression, turn engine over until a point on the flywheel 2 teeth (Std. 812), 1 tooth (Schgd. 812) before the dead center mark '4L' lines up with the pointer in the inspection hole in the right side of the flywheel housing. Loosen advance arm clamp bolt, rotate distributor until contacts begin to open (On Schgd. 812, this should be stationary set mounted directly on breaker plate), tighten clamp bolt. Then synchronize movable contacts (Schgd. 812 only).

Synchronization (IGH-4028):—Manufacturer recommends use of synchronizing test equipment to set movable contacts. Set distributor for regular 45-45-45 (distributor) degree firing intervals. See Electrical Equipment Section for data on 'IGH' synchronization. Distributor can be synchronized on engine by turning engine over 1 full revolution plus 90° from firing position of piston #4L (first timing point) to firing position for piston #4R with point on flywheel 1 tooth before mark '4R' at pointer in inspection hole. Then loosen lockscrews on movable sub-plate carrying second set of contacts, move plate until contacts begin to open, tighten screws.

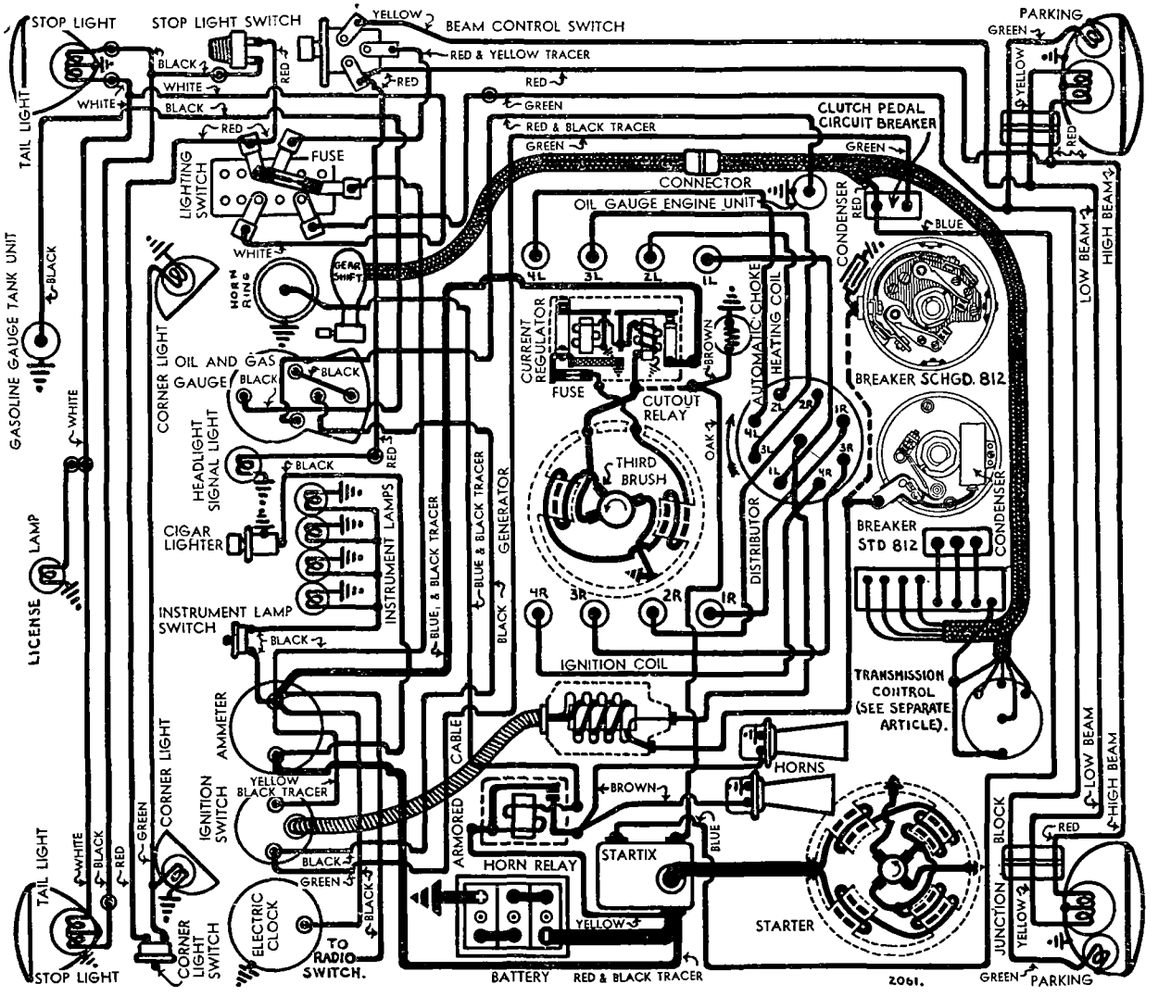

1937 M DELS

See Auto-Lite Regulator Article in Electrical Equipment Section for VRB Regulator wiring.

CARBURETOR

CARBURETION:—Carburetor—Stromberg Model EE-15 (Std. 810, 812), Model AA-25 (Schgd. 812). Duplex, dual (double barrel), downdraft types.
For complete data, refer to Carburetor Index.

Settings (Idle Setting, Float Level, & Accelerating Pump): *See Tune-Up.*

Fast Idle:—Integral with carburetor.
For complete data, refer to Carburetion Equip. Index.

Automatic Choke:—Mounted on carburetor and linked directly to choke valve shaft. Operated by electric heating coil.
For complete data, refer to Carburetion Equip. Index.

CARB. EQUIPMENT

Air Cleaner: AC No. 1525598 (1936), 1528345 (1937).

Fuel Pump:—AC. Mod. D, #1523340. Diaphragm type.
For complete data, refer to Carburetion Equip. Index.

Gasoline Gauge:—Stewart-Warner. Combination gasoline and oil gauge. Electric type.
For complete data, refer to Carburetion Equip. Index.

BATTERY

BATTERY:—U.S.L. Type FN-19F. 6 volt, 19 plate, 108 ampere hour capacity (20 hour rate).
Starting Capacity—135 amperes for 20 minutes.
Zero Capacity—300 amperes for 3.9 minutes.
Grounded Terminal—Positive (+) terminal.
Location—On left side under drivers seat.

STARTER

Auto-Lite Model MAX-4021. Armature MAW-2006.
Drive—Barrel type Outboard Bendix No. A-1729.
Rotation—Counter-clockwise at commutator end.
Brush Spring Tension—42-53 ozs. (new brushes).
Cranking Engine—130 R.P.M., 180 amps., 5.1 volts.

Performance Data

Torque	R.P.M.	Volts	Amperes
0 ft. lbs.	5300 Min.	5.5	65 Max.
.65 "	3300	5.5	100
2.75 "	1630	5.0	200
5.5 "	970	4.5	300
8.7 "	600	4.0	400
12.0 "	300	3.5	500
16.5 "	Lock	3.0	640
25.0 "	Lock	4.0	880

Removal:—Starter flange mounted on right rear face of flywheel housing (flywheel at front of engine). To remove, take out 3 flange mounting screws.

Starting Switch:—Startix Type D. Automatic starting controlled by ignition switch. Operative only with clutch disengaged (lead taken through clutch pedal circuit breaker or 'master shift switch').
For complete data, refer to Electrical Equipment Index.

GENERATOR

1936-37 MODELS

Auto-Lite Model GAR-4630-5. Armature GAR-2077 (first), Model GBR-4603-4 Armature GAR-2116 (later). Third brush control in conjunction with Current Regulator (two-rate charging control). NOTE—Model GBR-4603-4 fitted with resistance-jumper control switch on side of regulator case which should be opened (regulator operative) for

CONTINUED ON NEXT PAGE

CONTINUED FROM PRECEDING PAGE

summer driving and closed (regulator resistance short-circuited) for winter driving.

Charging Rate Adjustment—Use test meters to check output. Short out regulator by closing control switch (above) or by connecting jumper between fuse cup on regulator case and ground. Shift third brush by hand counter-clockwise to increase or clockwise to decrease charging rate. Brush held in position by friction. Remove jumper wire.

Maximum Charging Rate—22 amperes (GAR-4630-5) 26 amperes (GBR-4603-4) cold, reached at 2400 R.P.M., 1500 engine R.P.M. (tachometer).

Performance Data—GAR-4630-5

Cold — Regulator Contacts Closed — Hot					
Amperes	Volts	R.P.M.	Amperes	Volts	R.P.M.
0	6.4	720	0	6.4	760
4	6.8	860	4	6.8	925
8	7.25	1000	8	7.25	1125
12	7.7	1160	12	7.7	1350
16	8.1	1360	16	8.1	1680
20	8.5	1660	19.2	8.4	2600
22.4	8.8	2400			

Performance Data—GBR-4603-4

0	6.4	720	0	6.4	780
4	6.65	820	4	6.7	900
8	6.9	920	8	6.95	1060
12	7.1	1050	12	7.2	1250
16	7.4	1200	16	7.5	1440
20	7.6	1400	20	7.8	1840
26	8.0	2400	23	8.0	2800

Rotation—Counter-clockwise at commutator end.

Bush Spring Tension—24 ozs. min., 36 ozs. max.

Field Current—3.51-3.89 (GAR-4630-5), 4.13-4.62 (GBR-4603-4) amperes at 6.0 volts.

Field Fuse—5 ampere in cup on regulator.

Motoring Current—5.03-5.57 (GAR-4630-5), 5.84-6.46 (GBR-4603-4) amperes at 6.0 volts. Allow ½ ampere additional if relay and regulator in circuit.

GENERATOR

1937 MODELS

Auto-Lite Model GCO-4804-A. Two brush, shunt type with external voltage and current regulation.

Maximum Charging Rate—28 amps., 8.0 volts, 1850 R.P.M. and above with load or discharged battery (Current Regulator setting). Actual charging rate controlled by Voltage Regulator.

Charging Rate Adjustment—None. See Regulator.

Performance Data

Cold			Hot		
Amps.	Volts	R.P.M.	Amps.	Volts	R.P.M.
0	6.4	825	0	6.4	900
4	6.6	940	4	6.6	1025
8	6.85	1050	8	6.85	1160
12	7.1	1175	12	7.1	1310
16	7.3	1300	16	7.3	1475
20	7.55	1450	20	7.55	1660
24	7.8	1610	24	7.8	1880
28	8.0	1850	28	8.0	2200

NOTE—Cur. regulator limits output to 28 amps. max.

Rotation—Counter-clockwise at commutator end.

Brush Spring Tension—53 ozs. (new brushes).

Field Current—1.47-1.63 amperes at 6.0 volts.

Motoring Current—3.94-4.36 amperes at 6.0 volts.

Removal:—Generator pivot mounted between cylinder banks at rear of engine with belt drive from pulley on camshaft. To remove, take out pivot bolts and clamp bolt.

Belt Adjustment:—Adjusted in usual manner by loosening pivot bolts and clamp bolt and lifting up on generator.

REGULATOR

1936-37 MODELS

Auto-Lite Model TC-4302A (GAR-4630-5 Gen.), TC-4306A (GBR-4603-4). 'Two-charge' Type. Cutout Relay and Current Regulator (two-rate charging control) in case on generator frame.

For complete data, refer to Electrical Equipment Index.

Cutout Relay

Cuts In—6.5-7.25 volts.

Cuts Out—.5-2.5 ampere discharge at 6.3 volts.

Contact Gap—.015-.045".

Air Gap—.010-.030" with contacts closed.

Current Regulator

Contacts Open—8.25-8.75 volts at 70° F.

Contacts Close—1.2-1.4 volts below opening point.

Contact Gap—.005" minimum.

Air Gap—.045" with contacts closed.

REGULATOR

1937 MODELS

Auto-Lite Model VRB-4002D, VRB-4008C (GCO-4804A Gen.). Consists of Cutout Relay, vibrating Voltage and Current Regulator in case on dash.

For complete data, refer to Electrical Equipment Index.

NOTE—Regulator case cover is sealed. Serviced on exchange basis if seals not broken (to remove cover).

Cutout Relay

Cuts In—6.4-7.0 volts Cold.

Cuts Out—.5 ampere Min., 3.0 amperes Max. Cold.

Contact Gap—.015" Minimum.

Air Gap—.034-.038" at hinge end, contacts open.

Voltage Regulator

Setting—7.5-7.8 volts at 70°F. (Before #8R-000001), 7.3-7.6 volts at 70°F (After #8R-000001). **See Electrical Equipment Section for complete settings and changes.**

Checking (without breaking seal) & Adjustment—*See Electrical Equipment Section.*

Contact Gap—.010" Min., .020" Max. with armature against stop pin.

Air Gap—.0595-.0625" with contacts just opening.

Current Regulator

Setting—27-29 amperes (Marked '28' on cover).

Checking (without breaking seal) & Adjustment—*See Electrical Equipment Section.*

Contact Gap & Air Gap—Same as Voltage Reg.

LIGHTING

LIGHTING:—Headlamps—Corcoran-Brown, pre-focused type with special retracting mechanism operated by individual cranks on instrument panel.

Headlamp Adjustment—Raise each headlamp to full height, turn on bright or upper beams. Lamp beam should be centered on 8" diameter circular targets drawn on wall 25' distant with centers 31" above floor and 27½" right and left of car center line. To aim beams vertically, loosen locknut and turn slotted adjusting screw on rear of headlamp housing under fender. To aim beams horizontally, loosen mounting screws on sides of headlamp body, shift headlamp (screw holes are slotted).

NOTE—When headlamps lowered into fender, door must line up with fender contour. To adjust, turn stopscrew on crank lever which contacts door edge (at bottom and in back with headlamp up—cover plate at bottom of lamp housing under fender may be removed to get at lamp mechanism).

Headlamp Indicator—In speedometer dial. Lighted when bright or upper headlamp beams are lighted.

Switches

Lighting—Soreng-Manegold Model A5640A.

MISC. ELECTRICAL

FUSES:—Lighting—20 amp. on back of lighting switch. **Generator Field**—5 ampere in fuse cup on regulator.

HORNS:—Auto-Lite Horn Set No. HC-5005. Vibrator type, twin horns operated by horn relay.

ENGINE

ENGINE SPECIFICATIONS: Lycoming Model FB. (Std. 810 & 812), Model FC (Schgd. 812). Eight cylinder, 90° V type.

NOTE—Engine is reversed in chassis with flywheel and clutch at forward end and timing chain at rear. Crankshaft rotation is clockwise at timing chain end (rear) so that rotation as viewed from front of car is counter-clockwise.

Bore—3½". **Stroke**—3¾".

Displacement—288.6 cu. ins. **Rated H.P.**—39.2.

Developed Horsepower—125 HP. at 3500 RPM (Std. 810 & 812), 175 HP. at 4200 (Schgd. 812).

Compression Ratio—6.5-1 (1936), 6.32-1 (1937). Cylinder Heads are Aluminum.

Compression & Vacuum Reading—*See Tune-Up.*

NOTE—Capscrews used to hold down the aluminum cylinder head are of unequal length and must be installed in correct position. 6 long screws (2 1/32") used in top or inner row on head, fourteen medium screws (1 21/32") in two rows across middle of head, four short screws (1 5/16") in lower or outer row on head.

PISTONS:—Ray Day, aluminum alloy, strut type with domed head. **Length**—3 15/16".

Weight—1.65 lbs. with rings and pin.

Clearance—.002-.0025" skirt. See Fitting Pistons.

Removal—Pistons and rods removed from above.

Replacement Pistons:—.005", .010", .015" oversize.

Fitting New Pistons:—Check piston skirt and cylinder bore with micrometers or use .002" feeler ½" wide between piston and wall on side opposite slot. Tension to withdraw feeler must be 6-11 lbs.

Installing Pistons:—Slot should be toward camshaft for pistons in both banks.

PISTON RINGS:—Two compression, two oil control rings, all above pin. Oil ring grooves drilled with eight 1/16" oil drain holes (#3), eight ⅛" holes and oil holes to pin bosses (#4).

Ring	Width	End Gap	Side Clearance
Comp. (#1)	3/32"	.0075-.0155"	.002"
Comp. (#2)	3/32"	.0075-.0155"	.0015-.002"
Oil (#3)	⅛"	.0075-.0155"	.0015-.003"
Oil (#4)	3/16"	.0075-.0155"	.0015-.003"

PISTON PIN:—Diameter—⅞". **Length**—2 19/32". Pin floats in piston and rod. Held by locking ring at each end. Pin hole in connecting rod bronze-bushed.

Pin Fit in Piston—Tight palm push fit at 70° F.

Pin Fit in Rod Bushing—.0003-.0005" clearance.

CONNECTING ROD:—Weight—30¾ ozs. **Length**—7⅝".

Crankpin Journal Diameter—2".

Lower Bearing—Spun babbitt type. No shims.

Clearance—.001-.0015". Sideplay .006-.010" total.

Bearing Adjustment:—None (no shims). Rods serviced on exchange basis. Bearing caps can be filed.

Installing Rods:—Rods for right bank toward front, left bank toward rear (side-by-side mounting) with large chamfer on counter-bore toward crankshaft cheek and oil jet hole toward top of block.

CRANKSHAFT:—3 bearing. Integral counterweights.

Journal Diameters—2½" all bearings.

Bearing Type—Bronze-backed, babbitt-lined.

Clearance—.0015-.00375".

Bearing Adjustment:—None (no shims). Replace bearings. Bearing caps can be filed to reduce clear-

ENGINE

C NTINUED FROM PRECEDIN PAGE

ance. Check clearance by assembling .0015" shim ½" wide between shaft and cap. Shaft should turn freely with shim in place and bearing cap tight.

End Thrust:—Taken by center main bearing. Endplay .004-.009". Adjusted by replacing bearing.

CAMSHAFT:—5 bearing. Non-adjustable chain drive.

Bearing Type—Removable bushings.

Clearance—.002-.003".

Adjustment—Replace bushings.

End Thrust:—Taken by flange on front bushing. Endplay .003-.007". Serviced by replacing bushing.

Camshaft Removal:—Remove from front (flywheel) end. Take out 5/16" setscrew behind water pump drive pulley which holds oil pump and distributor drive assembly, lift drive assembly out of crankcase.

Timing Chain:—Whitney. Width 1¼". Pitch .500". Length 29" or 58 links.

NOTE—Chains with master link can be split at this link. On chains without master link, remove and install chain 'endless' with sprocket off engine.

Camshaft Setting:—Sprockets are marked. Turn crankshaft until piston #4L on top dead center with timing mark '4L' at indicator. Turn camshaft until intake valve in this cylinder about to open. Mesh chain so that there are exactly 15 chain teeth or links between marks.

VALVES:—Valves actuated by rocker arm which contacts cam through roller mounted on arm. Rocker arms carried on twin rocker shafts.

	Head Diameter	Stem Diameter	Length
Intake	1 23/32"	.3405-.3425"	5 17/64"
Exhaust	1 33/64"	.3405-.3425"	5 9/32"

	Seat Angle	Lift	Stem Clearance
Intake	30°	11/32"	.001-.0025"
Exhaust	45°	11/32"	.0015-.003"

NOTE—Measure stem clearance at bottom of guide.

Valve Rockers:—Mounted vertically on tubular shaft at lower end and contact valve stem directly at upper end. Rocker arm shaft hole is bronze-bushed.

Clearance on Shaft—.0005-.0025".

Rocker Arm Roller—Clearances on rocker arm pin .002-.003". Sideplay .005-.008".

Rocker Arm Assembly—Tubular shafts held by setscrew at forward end. Rocker arms pressure-oiled through the hollow shaft. See that drilled holes in forward ends line up with setscrews in bosses and that setscrews fully engage lock holes to insure oil holes lining up. To remove shafts, remove ½" pipe plugs at forward end (flywheel off engine), take out setscrews, pull shafts out. Install rocker arm assemblies as follows:

1936 Type before Engine No. FB-1310—Install rocker arm assembly for each cylinder (between crankcase ribs) from front to rear in this order: Right Bank—Rocker Arm, Spacer, Rocker Arm, Spring. Left Bank—Rocker Arm, Spring, Rocker Arm (Front Cylinder), Spring, Rocker Arm, Spacer, Rocker Arm (All other Cylinders).

1936 After Eng No. FB-1310 & 1937 Type—Assemble arms as follows: Right Bank (Front to rear)—rocker arm, spring, rocker arm, large spacer, small spacer (for each cylinder—between crankcase ribs); Left bank (front to rear)—small spacer, large spacer, rocker arm, spring, rocker arm (except for front cylinder where no spacers used).

Valve Springs:—	Pressure	Length
Valve Closed	59½ lbs.	2 3/16"
Valve Open	122 lbs.	1 27/32"

VALVE TIMING

Tappet Clearance: .008" all valves (Std. 810 & 812), .008-.010" all valves (Schgd. 812), Engine Cold.

Valve Timing:—See Camshaft Setting above.

Standard 810 & 812

Intake Valves—Open 7½° BTDC. Close 37½° ALDC.
Exhaust Valves—Open 50° BLDC. Close 5° ATDC.

Supercharged 812

Intake Valves—Open 9° BTDC. Close 44° ALDC.
Exhaust Valves—Open 50° BLDC. Close 10° ATDC.

To Check Timing—Set tappet clearance #4L intake valve (rear cyl., left bank) at .016". This valve should open with piston 7½° or .0200" (Std. 810 & 812), 9° or .0287" (Schgd. 812) before top dead center and point on flywheel 3 teeth (Std. 810 & 812), 3½ (Schgd. 812) before dead center mark '#4L' lines up with indicator in inspection hole in right side of housing. Reset tappet clearance.

LUBRICATION

LUBRICATION:—Pressure system with gear type oil pump mounted in crankcase. Oil pump or distributor may be removed without disturbing drive.
Normal Oil Pressure—30-40 lbs. with warm oil.
Oil Pressure Regulator—Located on oil pump cover. Operates at 40 lbs. Adjustable by turning screw.
Crankcase Capacity—7 quarts.

CLUTCH

CLUTCH:—Long, Model 10CF-CI. Semi-centrifugal, single plate, dry disc type.
See Clutch Section for complete data.

Facings—Molded type, 2 required. Inside Diam. 6", Outside Diam. 10". Thickness .137".

Adjustment:—Pedal free movement should be 1¼". To adjust, remove clevis pin in clutch throw-out lever at forward end of connecting rod, loosen locknut at rear end of rod, turn rod in or out of rear clevis. Check operation of Transmission Control clutch pedal circuit breaker (Master Shift Switch) whenever the clutch pedal is adjusted (see article in Transmission Section for complete data).

NOTE—Linkage changed after Serial No. 810-1544 to insure softer action by bolting extension on clutch throw-out shaft lever. Clutch pedal must have 7" travel (pedal 7" above floor when engaged). Adjust by changing position of stop clamp on pedal shaft under floor.

Removal—Remove kingpins, remove drive shaft at inner universal by knocking out taper pin in shaft, remove both inner universals attached to side of transmission case, then remove driving unit. Remove clutch bell housing, take out capscrews mounting clutch on flywheel (turning all screws out evenly), lift clutch out.

DRIVING UNIT

DRIVING UNIT:—Transmission and differential assembly mounted in single case bolted to forward (flywheel) end of engine.
See Transmission Section for complete data.

Removal:—Remove louvre assembly, radiator, and sheet metal cover over drive unit. Raise front end of car with jacks under support arms so that wheels just clear floor. Remove front wheels, top and bottom kingpins, rubber bumper on frame siderail above drive shaft, disconnect tie rod at spindle arms. Drive groove pins out of outer end of inner universal assemblies, remove outer universal and shaft (pull out to clear at splined joint), place these assemblies on floor so as to not strain front brake tubes. Remove capscrews in inner universal housing flange, remove inner universal assemblies. Take out bolts in engine mounting bracket on front cross-member, support engine at forward end, take out mounting bolts on driving unit flange on clutch bell housing.

DIFFERENTIAL ASSEMBLY:—Own Make. Spiral bevel gear type (in Driving Unit). Drives to front wheels through individual shafts with universal joints at inner and outer ends.
See Transmission Section for complete data.
Backlash—.004-.008". Screw adjustment.
Removal—See Driving Unit Section above.

TRANSMISSION

TRANSMISSION:—Own Make. 4 speed (over-drive on fourth). Constant mesh, helical gears, synchromesh (except low and reverse), sliding spur gears low and reverse). No direct drive.
See Transmission Section for complete data.
Removal—See Driving Unit section above.

TRANSMISSION REMOTE CONTROL GEAR SHIFT:—Bendix electro-pneumatic type gear shift standard equipment. Complete description, adjustment directions, wiring diagram and Trouble Shooting given in separate article.
See Transmission Section for complete data.

UNIVERSALS

UNIVERSAL JOINTS:—Bendix, Constant-velocity Ball type, 4 used (one at each end of each shaft).

SHOCK ABSORBERS

SHOCK ABSORBERS:—Delco Model 1741-U, T (front), 1748-C, D (rear). Double acting hydraulic type.
See Shock Absorber Section for complete data.

FRONT SUSPENSION

Front Suspension:—Own design, independent type. Each front wheel mounted on rear end of suspension arm which is pivoted on frame at forward end. Transverse front spring linked to suspension arm by special suspension bolt at outer ends.
Kingpin Inclination—6° crosswise.
Caster—2½°. Suspension arm built with 1° caster. To adjust, turn nut at upper end of suspension bolt (tighten nut to increase caster).
Camber—1°. No adjustment provided.
Toe In—0-⅛" **toe out** (wheels must point out at front). To check, see that intermediate steering arm centered (forward ends equal distances from frame), loosen tie rod clamps, turn rods equally.

STEERING GEAR

Gemmer Model 330. Worm-and-Roller type.
See Steering Gear Section for complete data.

BRAKES

Service—Lockheed Hydraulic, single anchor type. Hand lever applies rear wheel service brakes.
See Brake Section for complete data.
Wheel Cylinders—Stepped bore type. Install with large end of cylinder forward. Not interchangeable.
Drum Diameter—11".
Lining—Molded & Woven type. Width 2¼". Thickness 3/16". Length 19" per wheel (front), 11" (rear).
Clearance—.010" toe, .005" heel on each shoe.
Hand Brake:—See Service Brakes above.

TIGHTENING (TORQUE WRENCH) SPECIFICATIONS

1947-48 MODELS	In. Lbs.
Spark Plugs	225-250
Cyl. Block Hold-down Stud Nuts	125-165
Main Bearing Cap Stud Nuts	150-180
Connecting Rod Cap Stud Nuts	200-280
Camshaft Bearing Capscrew (#1 only)	90-100
Camshaft Bearing Capscrew (exc. #1)	75-100
Flywheel Mounting Capscrew	225-285
Flywheel Housing Capscrews	225-285
Clutch Mounting Capscrews	150-180
Oil Pump Housing Capscrews	50-80
Oil Pump Mounting Capscrews	125-165
Intake & Exhaust Manifold Capscrews	225-285
Carburetor Mounting Stud Nuts	125-165
Generator Bracket Bolts (5/16")	125-165
Generator Bracket Bolts (3/8")	200-250
Generator Mounting Band Bolts	200-225
Water Pump Mounting Bolts	125-165
Fan Shaft Nut	225-285
Spring Shackle Bolts	180-200

ENGINE REMOVAL

1939-42 MODELS

ENGINE REMOVAL FOR SERVICING: The engine should be removed from chassis for all major service work as follows: Disconnect battery ground cable, distributor cables, choke and throttle connections, oil gauge tube line at engine. Close shut-off valve at gasoline tank on Coupe models. On all models, disconnect gas line at carburetor. Remove exhaust pipe (connecting manifold and muffler), accelerator bracket, generator, starting motor (accessible by removing plate in driver's compartment). Disconnect clutch cable bracket on transmission case, clutch cable clevis at clutch yoke, speedometer cable at transmission. Block up front end of car and remove front axle assembly and front wheels. Drain oil, remove the oil pan and oil suction tube. Block up engine and transmission, remove hold-down bolts in front motor support and free rear support. Take out capscrews mounting transmission on flywheel housing, pull engine forward. Disconnect torque tube at adaptor on rear of transmission case, remove transmission. Lower engine to floor, raise front end of car, remove engine from below.

Engine Installation—Install engine in same manner. Check ignition timing if distributor disturbed.

1947-48 MODELS

ENGINE REMOVAL (FOR SERVICING): Engine should be removed from chassis as follows:

Remove hood, drain radiator. Disconnect battery cable at battery, disconnect and remove starting switch-to-starter cable. Disconnect all ignition leads at distributor, fuel line at fuel pump, throttle and choke cables at carburetor, oil pressure gauge line at right rear corner of engine, windshield wiper hose at manifold, generator wire at Cutout Relay, hose connections at engine block outlet and water pump, exhaust pipe at manifold connection, engine ground strap at flywheel housing, clutch release cable at release lever under flywheel housing, temperature indicator cable and bulb at engine outlet connection. Remove radiator brace rod connected to top of radiator, take out two base bolts under radiator and carefully lift radiator out of engine compartment. Remove hood latch cable. Slack off fan drive belt, remove fan assembly and belt. Place support jack under engine, split front & rear flywheel housing by taking out 5 bolts, remove nut and lock washer on right front engine mounting stud (goes through frame), remove left front engine mounting bolt. Attach lifting sling to engine (loop sling under oil pan), support engine weight with sling and hoist, move engine straight forward approximately 4" (to clear clutch shaft), lift engine out tilting the front end up slightly for clearance.

1947-48 MODELS

CYLINDER BLOCK REMOVAL (FOR VALVE SERVICING): With the engine out of the car (see Engine Removal), remove water pump, fuel pump, carburetor, manifolds, and spark plugs. Remove camshaft cover, take out mounting bolts in all camshaft bearings and lift off camshaft and bearings (oil metering tube in upper end of towershaft at front of camshaft will come out with camshaft). Unscrew and remove towershaft adjuster, lift out towershaft upper bevel gear. Remove 11 elastic stopnuts holding cylinder block on crankcase, **lift cylinder block straight up** until it clears pistons and towershaft.

Cylinder Block Installation—Before Eng. No. 31599 (With 3-ring Pistons): See that face of cylinder block and crankcase clean and that gasket is in good condition. Turn crankshaft until two pistons are at top dead center. Use "split" type ring compressor to compress rings on these two pistons, slide block half-way down over these pistons, then turn crankshaft until other two pistons are in contact with block, compress rings on these pistons, lower block into position on crankcase (use locating dowel), use plain washer under mounting stud nuts, tighten all nuts evenly (see Tightening Torques).

Cylinder Block Installation—After Eng. No. 31599 (With 4-ring Pistons): Disconnect piston and connecting rod assemblies from crankshaft and insert these in cylinder block before installing block on crankcase. See that face of cylinder block and crankcase are clean, use new gasket and elastic stop nuts. Install cylinder block on crankcase (use locating dowel) making certain that connecting rods turned so that rod markings are on distributor (left) side of engine. Use plain washer under cylinder block mounting stud nuts, tighten all nuts evenly (see Tightening Torque data). Install connecting rod bearing caps, install oil pan.

PISTON & CONNECTING ROD REMOVAL

1939-42 MODELS

PISTON & CONNECTING ROD REMOVAL: With engine removed from chassis (above), take out 7 Phillips screws in each shroud, remove shrouds from cylinders. Remove cylinder heads and oil pan. Take out connecting rod bearing cap screws, push piston & rod assembly out through cylinder barrel.

CRANKSHAFT & MAIN BEARINGS

1939-42 MODELS

CRANKSHAFT REMOVAL: For Main Bearing and Crankshaft Oil Seal Servicing. With engine removed from chassis (above), dismantle engine and remove camshaft (see Camshaft Removal below). Take out 4 capscrews mounting flywheel on crankshaft flange, pull flywheel. Pull crankshaft out through front end of crankcase by hand.

Main Bearing Renewal—Drive old bearings out (rear bearing in crankcase, front bearing in gear housing cover), drive new bearing bushings in place. Bearings are precision type and need not be reamed.

Oil Seal Renewal—Drive old oil seals out of crankcase (rear), gear housing cover (front) with drift pin. Use mandril or hardwood block to drive new seals in place. CAUTION—When installing crankshaft use care not to damage leather oil seals.

1947-48 MODELS

CRANKSHAFT SERVICING: Crankshaft Removal—With engine out of car (see Engine Removal), remove oil pan, remove oil pump (see Oil Pump Servicing), remove gear on lower end of distributor shaft, remove all crankshaft bearing caps, lift crankshaft out (not necessary to remove clutch—crankshaft, flywheel, and clutch removes as unit).

Crankshaft Installation—Reverse removal instructions (above), tighten bearing cap nuts evenly (see Tightening Torque Wrench data), use new lockwashers, palnuts and gaskets. Replace oil seals

1947-48 MODELS

OIL SEALS: Front & Rear Main Bearing Seals—Carefully clean out seal groove, press new seal in groove with fingers and "roll" it in place with round tool (roll seal from both ends toward center to insure full seating in bottom of groove). Hold seal in place with wooden block and cut ends off flush with face of crankcase and bearing cap.

NOTE—Front seal is installed in groove in crankcase and oil pan and bears on hub of crankshaft pulley.

1947-48 MODELS

OIL PAN INSTALLATION: Re-inforcement strips must be installed under the pan flange at each front corner of the pan.

CAMSHAFT & BEARINGS

1939-42 MODELS

CAMSHAFT REMOVAL: With engine removed from chassis (above), remove intake and exhaust manifolds, cylinder shrouds (retained by Phillips screws), cylinder heads and oil pan. Remove connecting rod and piston assemblies, gear housing cover (with oil pump), and valve cover. Block up valves by placing 5/16"x¾" capscrew between crankcase and spring washer on each valve, pull camshaft and timing gear assembly out through front of crankcase.

1939-42 MODELS

CAMSHAFT BUSHING RENEWAL: Take out 8 capscrews in gear housing cover and Phillips screws in oil pan which enter gear cover, remove gear cover. Drive or press camshaft bushing out of timing gear cover and install new bushing in same manner. NOTE—Rear camshaft bushing is integral with crankcase and cannot be serviced.

1947-48 MODELS

CAMSHAFT DRIVE (TOWERSHAFT) ASSEMBLY: On first cars, Towershaft is positioned by nut and thrust washer on shaft above lower bushing in crankcase. On later cars (Eng. No. 3708 Up), towershaft is positioned by the "towershaft adjuster" (hollow hexagonal headed capscrew) installed in upper end of towershaft above upper bevel gear. CAUTION—Each type towershaft serviced differently as detailed below.

Towershaft Assembly Servicing (Before Eng. No. 3708). This type is locked in crankcase by nut on shaft.

Disassembly—To remove towershaft and lower bevel gear (integral with shaft) with engine out of car and cylinder block removed, remove special nut and thrust washer on shaft in crankcase, pull towershaft out of the bushing from below.

Towershaft Assembly—Insert bushing in crankcase from below, insert towershaft (see Engine Assembly Note below for gear marks and meshing data), install thrust washer and special nut, tighten nut until endplay or clearance between back face of lower gear and face of bushing is .004". Towershaft clearance in bushings should be .0005-.002". Backlash in gears should be .001-.003" (lower bevel gears—see Towershaft Gear Backlash Adjustment below), .003-.005" (upper bevel gears—see Camshaft Endplay Adjustment below).

CAUTION—Install bushing in upper end of towershaft housing on cylinder block before installing upper towershaft gear (see Camshaft Drive Gear Meshing Data below).

Towershaft Assembly Servicing (After Eng. No. 3708). Disassembly—Towershaft and lower bevel gear (integral with shaft) can be withdrawn from below after towershaft adjuster has been unscrewed from upper end of shaft and upper bevel gear lifted out.

NOTE—Crankshaft must be removed to allow towershaft to be taken out (see Crankshaft Removal).

Towershaft Assembly—Insert bushing in crankcase from below, insert towershaft, install crankshaft and mesh bevel gears (see Camshaft Drive Gear Meshing Data below), check and adjust lower bevel gear backlash. After cylinder block installed on crankcase, see that upper bushing in place in upper end of towershaft housing, install towershaft upper bevel gear, install towershaft adjuster, tighten adjuster until clearance between shoulder on upper gear and face of upper bushing is .004" (measure with feeler gauge while prying upward on adjuster). Towershaft clearance in bushings should be .0005-.002" (lower bushing), .0005-.0015" (upper gear hub in upper bushing). Backlash in gears should be .003-.005" (lower bevel gears—see Towershaft Gear Backlash Adjustment below), .003-.005" (upper bevel gears—see Camshaft Endplay Adjustment).

Towershaft Lower Gear Backlash Adjustment: To check backlash, push crankshaft forward until thrust flange is against rear main bearing. Mount dial indicator so as to measure movement of towershaft lower bevel gear, rock towershaft back and forth. Backlash .003-.005" and adjusted as follows:

Backlash Adjustment (Before Engine No. 29880). With crankshaft pulley removed, add or remove shims from between pulley hub and shoulder on bevel gear until backlash correct. Shims furnished as follows: W-300159-1 (.003"), W-300159-2 (.005"), W-300159-3 (.015"). NOTE—See that gasket installed between pulley hub and adjusting shims.

Backlash Adjustment (After Engine No. 29880). When installing towershaft assembly, screw the crankshaft adjuster (slotted stud in forward end of crankshaft) in until lower bevel gears are snug. Start the engine. If gears are noisy, stop engine, unscrew crankshaft adjuster slightly, repeat test. When gears run quietly, tighten nut on adjuster securely (hold adjuster with screwdriver to prevent change in adjustment).

Towershaft Upper Gear Backlash Adjustment: See Camshaft Endplay Adjustment (below).

1947-48 MODELS

CAMSHAFT ENDPLAY ADJUSTMENT: To check endplay with camshaft installed on engine, push camshaft forward as far as possible, measure clearance between rear face of camshaft gear hub and front bearing with a feeler gauge. Endplay should be .003-.005". Adjust as follows:

Adjustment (Before Serial No. CC-24199): Remove camshaft assembly from engine, remove camshaft gear (remove nut and lockwasher, press gear off shaft, using care not to damage oil hole in shaft), install thrust washer of correct thickness behind gear, re-install camshaft assembly.

Adjustment (After Serial No. CC-24199): Not necessary to remove camshaft or camshaft gear (horseshoe type thrustwasher). To adjust endplay, loosen front camshaft bearing capscrews, slip bearing strap up on capscrews for access to thrust washer, lift thrustwasher out and replace with washer of correct thickness.

CAUTION—Make certain that closed end of thrustwasher is upward (under bearing strap tab) and that bearing strap tab is forward so as to retain thrustwasher when bearing capscrews tightened.

1947-48 MODELS

CAMSHAFT DRIVE GEAR MESHING MARKS: With engine completely disassembled, install and mesh all gears of the valve system as follows:

Crankshaft Gear—Install gear on crankshaft splines with marked spline on shaft in line with punchmark on gear hub. NOTE—On first cars where gear hub not marked, marked spline on shaft should be on same side and in line with marked tooth on gear.

Tower Shaft Lower Gear—Gear is integral with shaft. The two punch-marked teeth on tower gear should straddle punch-marked tooth on crankshaft gear.

Tower Shaft Upper Gear—Install gear on shaft with punch marks in line. Mesh punch-marked tooth on gear between two punch-marked teeth of camshaft gear.

Camshaft Gear—Gear is keyed on shaft.

1947-48 MODELS

CAMSHAFT OIL METERING HOUSING ASSEMBLY: Install oil metering housing (90° fitting between upper end of towershaft and camshaft) in forward end of camshaft with camshaft off engine, then engage lower end of housing in upper end of towershaft as camshaft is placed in position on cylinder block. Housing clearance should be .0002-.0023" in camshaft and .0005-.0025" in towershaft gear adjuster. Backlash between camshaft and towershaft gears should be .003-.005".

TAPPET CLEARANCE ADJUSTMENT

1947-48 MODELS

TAPPET CLEARANCE ADJUSTMENT PROCEDURE: Adjustments must be made differently on first cars (no shims) and later cars (with adjusting shims)

First Cars without Adjusting Shims—Must be checked with camshaft and cam follower assemblies installed on engine. Turn camshaft until heel of cam is directly over cam follower, press valve in so that it rests firmly on seat, check clearance with feeler gauge. If clearance insufficient, grind valve stem tip, if clearance too great, replace valve.

CAUTION—Valve stem tip must be ground square with valve stem.

Later Cars with Adjusting Shims—Check clearance in same manner as first cars (above), select adjusting shim pack of correct thickness for correct tappet clearance, insert shims through slot in head of cam follower (above spacer washer), lock shims in place by bending up ends. Shims furnished in following sizes:

Cam Follower Shims

Thickness	Part No.	Thickness	Part No.
.010"	W-206284-1	.016"	W-206284-4
.012"	W-206284-2	.018"	W-206284-5
.014"	W-206284-3	.020"	W-206284-6

Tappet Clearance

Intake—.004-.005" **Exhaust**—.005-.007".

VALVE SYSTEM

1947-48 MODELS

VALVE SERVICING: With engine removed from chassis, remove cylinder block (see Cylinder Block Removal above), lift out valve lifters (cam followers) and number these to insure re-installation in same positions (CAUTION—Do not lose tappet clearance adjusting shims and spacer washers on later cars). Use special bar type valve lifter to compress valve springs, remove split locks, spring retainer, and spring from each valve, remove valve from inside cylinder. Reface valves in usual manner (see data below for refacing valve seats), reinstall assemblies, check tappet clearance.

Valve Seat Resurfacing—Special tools must be used to avoid marring cylinder walls (valve seats must be serviced from within cylinder). Use special Blue Point Stone Carrier, VG-10-2B, turned down to 1" diameter, and 5/16" pilot with following stones: SE-400-R Valve Seat Stone (Roughing), SE-400-F (finishing). Stones must be turned to 1 3/16" diameter for Intake Valves, 1 1/16" for Exhaust.

COOLING SYSTEM

1947-48 MODELS

WATER PUMP (GENERATOR BRACKET) ALIGNMENT: This procedure required for first type Water Pump No. C-205175, only (used with Generator GAS-4190).

NOTE—Later type Water Pump, C-207187, used with Generator GDZ-4806B, does not require alignment.

Water Pump Alignment—Whenever the generator bracket mounting bolts have been disturbed, bracket must be aligned with special fixture, No. 206923, as directed below to prevent water pump misalignment and rapid wear of water pump bushing.

Alignment (with Fixture 206923). Attach water pump to crankcase, tightening mounting bolts only finger tight. With generator mounting bracket bolts and clamp bolts loose, install special fixture No. 206923 on bracket in place of generator (slide water pump shaft into recessed hole in end of fixture). Tighten generator bracket mounting bolts securely (through slot in fixture), then tighten water pump attaching bolts. Remove fixture. Assemble water pump drive coupling and install generator.

CAUTION—Do not loosen generator bracket mounting bolts after bracket has been aligned.

ENGINE NOTE:—Engine is two-cylinder, horizontally opposed type with connecting rods on individual crankpins so that both pistons move in and out together. Cylinders fire alternately at 360° intervals (one complete revolution between firing points).

ENGINE REMOVAL NOTE:—Engine removal from chassis required for all service work. ***See Crosley Special Shop Notes for removal directions.***

MODEL IDENTIFICATION

SERIAL NUMBER:—Stamped on front face of cowl below battery shelf (in engine compartment). First number 390-10000 (Model A), 390-30000 (CB41), 390-30700 (CB42).

ENGINE NUMBER:—Stamped on top center of engine block at rear of carburetor. First number C-10000 (Model A), C-21000 (CB41), C-25000 (CB42).

TUNE-UP

COMPRESSION:—Ratio—5.5-1 (Mod. A), 5.6-1 (Others). **Pressure**—90 lbs. (Model A), 80 lbs. (Others) at cranking speed.

VACUUM READING:—No means of connecting gauge.

FIRING ORDER:—1-2. Cylinders fire alternately at intervals of 360° (one complete revolution of the crankshaft).

SPARK PLUGS:—Auto-Lite A-5. 14 MM. Metric. Gaps—.025".

IGNITION: See Coil, Condenser, and Distributor. **Breaker Gap**—.020". **Cam Angle** 46° (closed). **Automatic Advance**—14° at 2300 RPM (distr.).

IGNITION TIMING: See Ignition Timing. **Std. Setting**—Half-round notch in rim of flywheel in line with rib on top center of crankcase (Model A), ½-⅝" ahead of the rib (CB41, CB42).

CARBURETION: See Carburetor & Carb. Equipment. **Idle Setting**—Idle screw ¾-1¼ turn open. Idle speed 7 MPH. **High Speed (Main Adjustment) Setting**—Screw 1½-1¾ turns open. Set for maximum engine speed with throtle opening of 30-35 MPH. **Float Level**—Fuel level 23/32" below top of bowl.

Fuel Pump Pressure: 3½ lbs. maximum (CB41, CB42).

MANIFOLD HEAT CONTROL:—No adjustment.

VALVES: See Valve Timing. **Tappet Clearance (Model A):**—.006-.0065" Intake, .007-.0075" Exhaust (Cold). No adjustment. **Tappet Clearance (CB41, CB42):**—.007" maximum Intake, .009" maximum Exhaust (Cold). No adjustm't.

STARTING: See Battery, Starter, and Generator.

IGNITION

Ignition Switch:—Douglas No. 2980.

COIL: Auto-Lite Model IG-4065. Service Coil IG-4070. Mounted on shelf between battery and fuel tank. **Ignition Current**—2 amperes idling, 5 stopped.

CONDENSER: Auto-Lite Part No. IGB-1025. **Capacity**—.20-.25 microfarad.

DISTRIBUTOR: Auto-Lite Model IGW-4142-A. Single breaker, two lobe cam, full automatic advance type. **Breaker Gap**—.020". **Rotation**—Clockwise viewed from the top. **Cam Angle or Dwell**—46° closed, 134° open. **Breaker Arm Spring Tension**—17-20 ozs.

Automatic Advance

Distributor Degrees	R.P.M.	Engine Degrees	R.P.M.
Start	300	0	600
3	480	6	960
6	650	12	1300
10	1475	20	2950
14	2300	28	3600

Removal:—Distributor mounted on top of engine on left side. To remove, take out hold-down screw in advance arm, lift distributor out.

IGNITION TIMING

IGNITION TIMING:—Standard setting below correct for fuel of 70 Octane Rating (Model A), 76 Octane Rating (Others). See Final Adjustment (below) for correction dependent on fuel regularly used.

To Set Timing—Turn engine over until piston reaches firing position when half-round notch in rim of flywheel is in line with small rib on top center of crankcase (Model A), or with half-round notch ½-⅝" ahead of the small rib (Others) on top center of crankcase. Loosen advance arm clamp screw, rotate distributor until contacts just begin to open, tighten clamp screw. See that distributor cap terminal which is in line with rotor is connected to spark plug in cylinder entering power stroke (flywheel mark will be at indicator at firing point for each cylinder on alternate revolutions of the crankshaft).

Final Adjustment—If Ethyl fuel, or fuel of better than 76 Octane Rating used, loosen advance arm clampscrew and rotate distributor so as to advance timing until slight 'ping' secured when engine pulling under load.

CARBURETOR

CARBURETION:—Carburetor—Tillotson Model DY-1A. 1", plain tube, single barrel downdraft type with low and high speed adjustments.

For complete data, refer to Carburetor Index.

ADJUSTMENT NOTE—If carburetor out of adjustment so that engine can not be warmed up, make preliminary adjustment as given below, then run engine until warm before making adjustments.

Preliminary Adjustment—Turn main (high speed) adjusting screw in or clockwise lightly until it is seated, then back adjusting screw out exactly two full turns. Turn idle (low speed) adjusting screw in or clockwise lightly until seated, then back adjust-

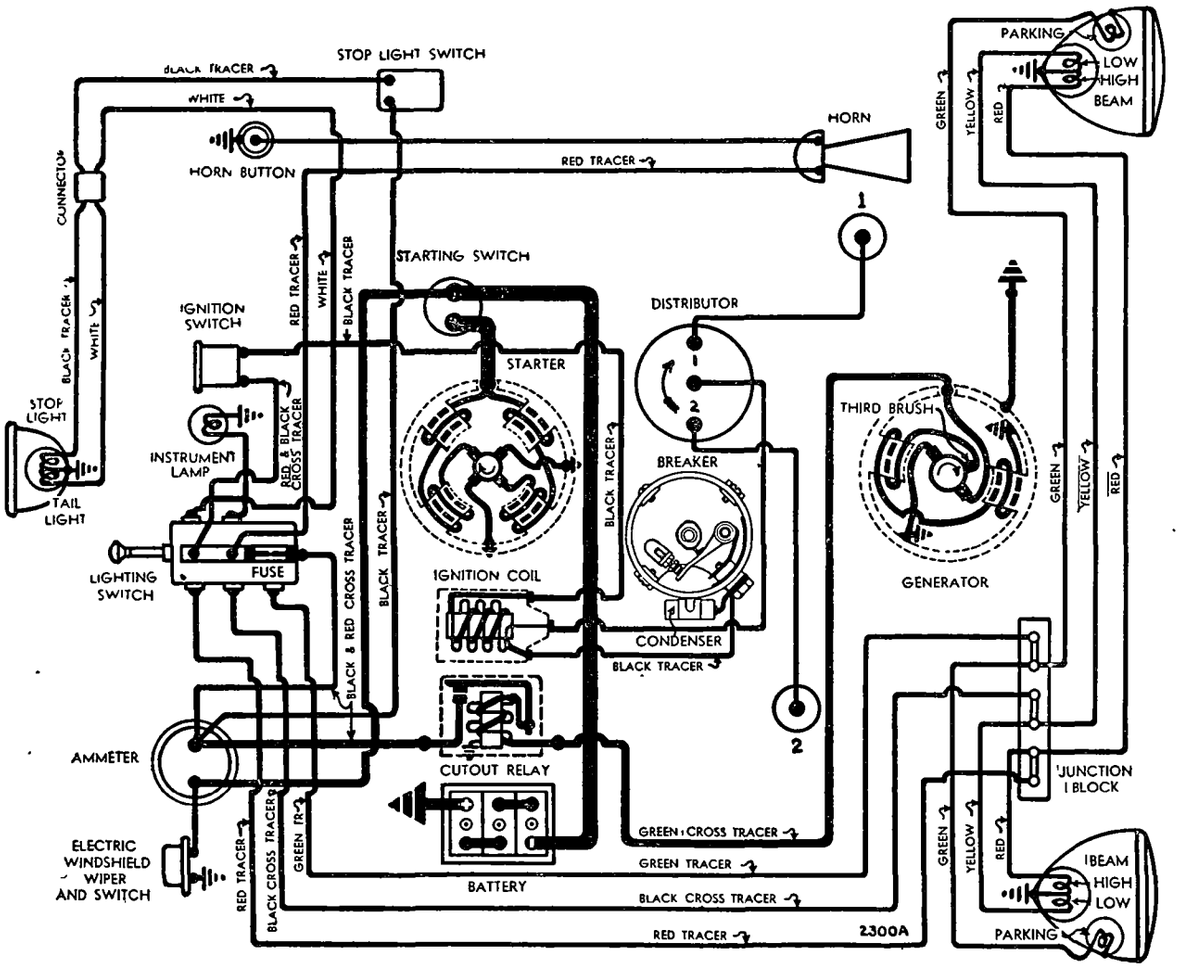

ing screw out exactly one full turn. Start engine and run until thoroughly warm, then adjust as follows:

High Speed (Main) Adjustment—Open throttle so that engine runs at speed of 30-35 M.P.H. Turn main adjusting screw in or clockwise slowly (¼ turn at a time) until engine slows down due to lack of fuel, then turn adjusting screw out very slowly (⅛ turn at a time) until maximum speed is secured. Correct setting is approximately 1½-1¾ turns of the screw from the inner seated position.

Low Speed (Idle) Adjustment—Close throttle, set throttle lever stopscrew so that engine idles faster than normal. Turn idle adjusting screw in or clockwise slowly until engine begins to miss, then turn screw out until engine fires smoothly. Open throttle momentarily to clear manifold, recheck idle adjustment. Correct setting is approximately ¾-1¼ turns of the screw from the inner seated position. Adjust throttle lever stopscrew for high gear idling speed of 7 M.P.H.

CARB. EQUIPMENT

Air Cleaner:—Oil-wetted type.
Fuel Pump (Model A):—None used (gravity feed).
Fuel Pump (CB41, CB42):—AC Type R, No. 1537402. Diaphragm type. Driven from front end of camshaft.
For complete data, refer to Carburetion Equip. Index.
Pressure—3½ lbs. maximum.

BATTERY

BATTERY:—Auto-Lite Model AB-13. 6 volt, 13 plate, 80 ampere hour capacity (20 hour rate).
Starting Capacity—96 amperes for 20 minutes.
Zero Capacity—300 amperes for 2.0 minutes.
Grounded Terminal—Positive (+) terminal grounded to right hand side of cowl. **Engine Ground**—Strap between engine and frame cross-member at front engine mounting on right hand side.
Location—On shelf on front of cowl in engine compartment on right hand side.
Dimensions—Length 9". Width 7". Height 8⅝".

STARTER

Auto-Lite Model MZ-4077 or MZ-4101.
Armature—MZ-2085 (MZ-4077), MZ-2165 (MZ-4101).
Drive (MZ-4077)—Compression Type Bendix number RCBX11-10. **(MZ-4101)**—Overrunning clutch, positive pinion shift, operated by starter pedal.
Rotation—Clockwise at commutator end.
Brush Spring Tension—42-53 ozs. (new brushes).

Performance Data

Torque	R.P.M.	Volts	Amperes
0 ft. lbs.	4300	5.5	70
.65 "	2500	5.5	100
2.55 "	1325	5.0	200
4.95 "	750	4.5	300
7.65 "	220	4.0	400
7.80 "	Lock	3.0	420
11.80 "	Lock	4.0	560

Removal:—Starter cradle mounted on top of flywheel housing. To remove, take out starting motor top plate (in driver's compartment), disconnect cable, take out two bolts in starter clamp band, lift starter out.
Starting Switch:—Auto-Lite SW-4001 (for MZ-4077), SW-3911 (for MZ-4101 starter). Mounted on toeboard.

GENERATOR

Auto-Lite Model GBM-4619-5. Armature GBM-2066. Third brush control type. No ventilation.
Charging Rate Adjustment—Remove commutator cover band, shift third brush by hand clockwise to increase, or counter-clockwise to decrease, charging rate. Brush held in position by friction.
Maximum Charging Rate—12 amperes, 8.0 volts.

Performance Data

Cold			Hot		
Amperes	Volts.	R.P.M.	Amperes	Volts	R.P.M.
0	6.4	850	0	6.4	900
2	6.6	960	2	6.65	1040
4	6.75	1030	4	6.9	1180
6	7.05	1160	6	7.2	1330
8	7.25	1265	8	7.4	1500
10	7.45	1380	10	7.7	1720
12	7.7	1510	12	7.9	2080
14	7.9	1740	12.45	8.0	2400
15	8.0	2300			

Rotation—Clockwise at commutator end.
Brush Spring Tension—50-60 ozs.
Field Current—3.8-4.2 amperes at 6.0 volts.
Motoring Current—5.3-5.9 amperes at 6.0 volts.
Removal:—Generator flange mounted on timing gear cover and driven directly from front end of crankshaft. To remove, disconnect lead, take out four flange mounting capscrews, remove generator from below.

CUTOUT RELAY

Auto-Lite Model CB-4025. Mounted on shelf on front of cowl between battery and fuel tank.
For complete data, refer to Electrical Equipment Index.
Cuts In—6.5-7.25 volts.
Cuts Out—.5-2.5 ampere discharge current (after charging at 15 amperes).
Contact Gap—.015-.045".
Air Gap—.010-.030" with contacts closed.

LIGHTING

LIGHTING:—Headlamps—Moto-lamp type with upper and lower beams controlled by lighting switch.
Headlamp Adjustment—Aim each headlamp so that hot spot centered on vertical line directly ahead of each lamp center and upper edge of hot spot on horizontal line at lamp center height.

Switches

Lighting—Douglas No. 5731.

Bulb Specfications

Position	Candlepower	Mazda No.
Headlights	32-21	2320C
Parking, Instrument	1.5	55
Stop & Tail	21-3	1158

MISC. ELECTRICAL

FUSES:—Lighting—10 amperes (Model A), 20 amperes (CB41, CB42). On lighting switch.
HORN:—Sparton. Disc type vibrator horn.
Current—5 amperes.

ENGINE

ENGINE SPECIFICATIONS (MODEL A):—Waukesha. Two cylinder, 'L' head, horizontal opposed, air-cooled type with shrouded cylinders and air circulating fan built in flywheel.
Bore—3". **Stroke**—2¾".
Displacement—38.87 cubic inches. **Rated HP**—7.2.
Developed Horsepower—12 at 4000 RPM.
Compression Ratio—5.5-1.
Compression Pressure—90 lbs. at cranking speed.
Vacuum Reading—No means of connecting gauge.
ENGINE SPECIFICATIONS (CB41, 42):—Waukesha. 2 cylinder, 'L' head, horizontal opposed, air-cooled type with shrouded cylinders and air circulating fan built in flywheel.
Bore—3". **Stroke**—2½". **Rated Horsepower**—7.2.
Displacement—35.3 cubic inches.
Developed Horsepower—12 at 4000 RPM.
Compression Ratio—5.6-1.
Compression Pressure—80 lbs. at cranking speed.
Vacuum Reading—No means of connecting gauge.
PISTONS:—Electric furnace cast iron. Matched for equal weight within ⅛ oz.
Weight—Model A 18.5 ozs. Model CB41 17.5 ozs. Model CB42 20 ozs. All with pin installed.
Length—2⅝"(Model A), 2.807"(CB41), 2.802"(CB42).
Removal—Pistons & rods removed from above with engine out of chassis. ***See Crosley Special Shop Notes for engine removal instructions.***
Clearance—.004" Max. See Fitting New Pistons.
Fitting New Pistons:—Use feeler gauges installed between piston and cylinder wall at right angles to pin hole. Piston should pass through bore on .004" feeler and lock on .0055" feeler.
Replacement Pistons:—Pistons furnished finished or semi-finished in the following sizes: Finished pistons Std. and .010", .020" oversize. Semi-finished pistons .030" and .050" oversize.
PISTON RINGS:—Two tapered compression rings, one oil control ring per piston, all above pin.

Ring	Width	End Gap	Side Clearance
Comp. (Top)	⅛"	.010" Max.	.003-.0045"
Comp. (#2)	⅛"	.010" Max.	.0015-.003"
Oil ('39-40)	3/16"	.010" Max.	.001-.0025"
Oil ('41 & up)	5/32"	.010" Max.	.0015-.003"

NOTE—Install oil ring with scraper edge down.
Replacement Rings:—Std., .010", .020" oversizes.
PISTON PIN:—Diameter ⅝" (Model A), ¾" (CB41, 42). Floating type. Retained by locking rings.
Pin Fit in Piston—.0002" clearance or thumb push fit at normal temperature.
Pin Fit in Rod Bushing—.0003" clearance (Model A), .0004" clearance (CB41, 42). Ream new bushings until this clearance secured.
Replacement Pins:—Std. and .005", .010" oversize.
CONNECTING ROD:—Length 4⅝" (A), 4¾" (CB41, 42).
Weight—12.5 ozs.(Model A), 18 ozs.(Model CB41, 42).
Crankpin Journal Diam.—1½" (A), 1⅞" (CB41, 42).
Lower Bearing—Removable steel-backed, babbitt lined type.
Clearance—.0025". **Sideplay**—.008".
Adjustment:—None (no shims). Replace bearings. Do not file bearing caps.
Replacement Bearings:—Furnished Std. and .003" undersize. Install bearings with locating lugs fitted in notches in rod and cap. NOTE—Bearings can be renewed through pan opening without removing engine from chassis.
CRANKSHAFT:—Two bearing, counterweighted type. ***See Crosley Special Shop Notes for Engine Removal directions for main bearing and crankshaft oil seal servicing.***
Journal Diameters—Front 1⅝" (Model A), 1 13/16" (Models CB41, CB42). Rear 2¼" (all).
Bearing Type—Steel-backed, babbitt-lined bushings (not split). Front bearing mounted in timing gear housing cover.
Clearance—.001-.003" (frt.), .0015-.003" (rear).
Adjustment:—None. Replace bearings. ***See Crosley Special Shop Notes for Crankshaft Removal directions.***

CONTINUED ON NEXT PAGE

ENGINE

C NTINUED FROM PRECEDING PAGE

End Thrust:—Taken by rear bearing. Adjustable by replacing fiber thrust washer. **Endplay**—.003-.005".

CAMSHAFT:—Proferal (alloy iron). Two bearing, gear driven.
Bearing Type—Removable bushing in rear cover (front), machined in crankcase (rear).
Clearance—.001-.003".
Endplay—.006-.009". Controlled by timing gear.
See Crosley Special Shop Notes for Camshaft Removal and front bushing servicing data.

Timing Gears:—Allowable runout .001". To renew gears, remove camshaft (see Crosley Shop Notes for data), use puller to remove old gears.

Camshaft Setting:—Mesh gears so that 'C' mark on camshaft gear and punchmark on crankshaft gear line up (install gears with these marks forward).

VALVES:—	Head Diameter	Stem Diameter
Intake	1⅜"	5/16"
Exhaust	1 5/32"	5/16"

	Seat Angle	Lift: A	CB41, 42	Stem Clear.
Intake	45°	.270"	.300"	.001-.003"
Exhaust	45°	.270"	.300"	.002-.004"

Valve Springs:—Free length 1 27/32".

	Pressure	Length
Valve Closed	20 lbs.	1½"
Valve Open	41 lbs.	1 15/64"

Valve Guides:—Guides can be removed and renewed with engine out of car and dismantled (See Shop Notes for engine removal directions). Ream new guides with 5/16" reamer for correct stem clearance (above).

Valve Lifters:—Mushroom type. Remove from below with camshaft out of engine (see Shop Notes for Camshaft removal directions).
Lifter Clearance—.0005-.0015".

VALVE TIMING

Tappet Clearance (Model A):—.006-.0065 Intake, .007-.0075" Exhaust, cold. Not adjustable.

Tappet Clearance (CB41, CB42):—.007" max. Intake, .009" max. Exhaust, cold. Not adjustable.
NOTE—After grinding valves, check tappet clearance with feeler gauge. Grind off end of valve stem if clearance less than figures given above.

Valve Timing:—See Camshaft Setting above.
Intake Valves—Open 20° BTDC. Close 60° ALDC.
Exhaust Valves—Open 60° BLDC. Close 20° ATDC.
To Check Valve Timing—Intake valve should open when point on flywheel 5.5 teeth before TDC mark (half round notch on rim of flywheel) lines up with small ribcast on top center of crankcase. Exhaust closing point is 5.5 teeth past TDC point.

LUBRICATION

LUBRICATION:—Pressure to crankshaft, connecting rod and camshaft bearings.

Oil Pump:—Rotary vane type mounted on timing gear cover and driven directly from camshaft.
Removal—Take out 4 screws mounting pump on timing gear cover, remove pump. Serviced by replacement. Use new gasket when installing pump.

Normal Oil Pressure:—35-45 lbs. with warm oil.

Oil Pressure Regulator:—On timing gear case cover. Adjustable by varying valve spring tension (increase tension to increase oil pressure).

Crankcase Capacity:—2 qts. (Model A), 3 qts. (CB41, 42).

COOLING

COOLING:—Air-cooled by suction fan built in flywheel which draws air past cylinder barrel and head fins through ducts formed by shroud bolted over cylinders.
Cooling Fan Capacity—700 cu. ft. of air per minute at 3600 R.P.M.

CLUTCH

CLUTCH:—**Rockford.** Single plate dry disc type.
See Clutch Section for complete data.
Facings—Not furnished separately (each facing consists of 4 segments).

Adjustment:—Clutch pedal free travel should be 1.5". To adjust, loosen locknut and turn clevis on connector cable at lower end of throw-out yoke.

Removal:—Remove transmission (see Transmission Removal below) and rear axle as an assembly (do not disconnect drive shaft at rear of transmission case as for transmission removal only). Disconnect clevis at bottom of clutch yoke, remove throw-out bearing from top of yoke, take out six capscrews mounting clutch lever brackets on flywheel, remove clutch assembly.

TRANSMISSION

TRANSMISSION:—**Warner Model AS1-T92.** Sliding spur gear type (all speeds).
See Transmission Section for complete data.
'41-'42 NOTE—Transmission has Adapter (Crosley # 200957) bolted on rear of transmission for universal joint (universal joint not used prior to 1941). Adaptor is also Rear Engine Mounting.

Removal: Remove rear axle (see Rear Axle Removal following). Take out four transmission-to-flywheel housing capscrews, pull transmission straight back and remove.

UNIVERSALS

MODEL A (1939-40)—No universal used on this model.
MODELS CB41 ('41), CB42 ('42)—**Spicer #102.** One used in ball housing at rear of transmission adaptor.
See Universals Section for complete data.

REAR AXLE

REAR AXLE:—**Spicer (Salisbury) Model 11.** Semi-floating spiral bevel gear type with Torque Tube drive.
See Rear Axle Section for complete data.
Ratio—5.14-1 or 5.57-1.
Backlash—.004-.008". Shim adjustment.

Removal (1939-40):—Disconnect shock absorbers, brake cables and conduits at backing plate. Hoist rear end of car to remove weight from springs, disconnect springs at axle. Free exhaust pipe and muffler from torque tube, block up rear end of transmission (supported by torque tube). Take out capscrews in torque tube flange on rear of transmission case, pull torque tube and rear axle assembly to rear and remove **being careful not to lose spring and two washers on front end of propeller shaft at rear of speedometer gear.**

Removal ('41-'42):—Disconnect shock absorber links, and brake cables and conduits at backing plates. Hoist rear of car to remove weight from springs, disconnect springs at rear axle. Take out capscrews in universal joint ball housing on transmission adaptor, pull rear axle and torque tube assembly to rear to disengage propeller shaft at universal joint **being careful not to lose washer and spring on shaft at rear of speedometer gear.** Remove axle assembly **from beneath car.**

Axle Shaft Removal—Remove hub cap, wheel, axle nut, pull hub (use puller No. 202318). Disconnect brake cable and conduit on backing plate, take out four capscrews and remove backing plate being careful not to lose bearing adjusting shims (between backing plate and axle housing flange). Pull axle and bearing out.

Wheel Bearing Adjustment:—Check endplay with dial indicator. Adjust by removing backing plate (see Axle Shaft Removal above) and adding or removing shims between backing plate and axle housing.
Endplay—.002-.007" between shaft and thrust block (total for both shafts).

TORQUE TUBE AND PROPELLER SHAFT (1939-40):—**Spicer No. 98-1107X.** Shaft is supported by bearing at center of torque tube and has splined joint at each end to engage transmission mainshaft (front), rear axle pinion shaft (rear). Torque tube has flanged ends which bolt directly to transmission case and rear axle housing.
Propeller Shaft Removal—Remove rear axle and torque tube as a unit (see Rear Axle Removal above), withdraw propeller shaft through forward end of torque tube.
CAUTION—When installing assembly in car make certain that spring and washers assembled on forward end of propeller shaft (necessary to prevent endplay in shaft).

TORQUE TUBE AND PROPELLER SHAFT (1941-42):—**Spicer No. 98-1182X.** Shaft is supported by bearing at center of torque tube and has splined end to engage rear axle pinion shaft (rear end), universal joint (front end). Front end of torque tube has been modified to include a ball housing for the universal joint and adaptor is used between the torque tube and the transmission case (rear engine mounting is located on adaptor).

SHOCK ABSORBERS

SHOCK ABSORBERS:—**Delco Model 1201G, H (front), 1201J, K (rear).** Single acting, hydraulic type.
See Shock Absorber Section for complete data.

FRONT SUSPENSION

Front Suspension:—Conventional 'I' beam section front axle with reverse Elliott ends and semi-elliptic springs.
Kingpin Inclination—6°30' crosswise.
Camber—2°. No adjustment provided.
Caster—6½-11°. No adjustment provided.
Toe In—3/64-1/16". Adjust in usual manner by loosening tie rod clamp bolts and turning rod.

STEERING GEAR

Steering Gear: Ross Model S-12. Cam-and-Lever type.
See Steering Gear Section for complete data.

BRAKES

BRAKES:—**Service**—Hawley. Four wheel, mechanical type with 'floating' lining. Hand lever applies all four service brakes.
See Brake Section for complete data.
Drum Diameter—6".
Lining—Width 1". Thickness 5/32". Length 18⅜" per wheel. NOTE—Lining furnished in correct length to fit loosely around shoe assembly with 1/16-⅛" gap at ends (not riveted on shoes).
Clearance—Just clear of drag.
Hand Brake:—See Service Brakes above.

MODEL IDENTIFICATION

SERIAL NUMBER: Stamped on plate on front face of dash panel in engine compartment.
1947 Numbers—CC-47-10000 to CC-32434.
1948 Numbers—CC-32434 Up.
Car Body Model Designation—Body type letter as follows: A—Sedan, C—Convertible Sedan, D—Station Wagon, G—Sports Utility, E—Panel Delivery, B—Pick-up, F—Cab & Chassis.

ENGINE NUMBERS: Stamped on pad on left side of crankcase below #1 cylinder.
1947 Numbers—CCE-7-5587 to CE-7-21999 (January 1947 to Sept. 24, 1947), No. 22000 to No. 28803 except as noted for 1948 (Sept. 24, 1947 to Jan. 1948).
1948 Numbers—No. 28,804 Up (and also the following earlier Nos.: 27270, 27611, 27677, 27689 to 97, 27699, 27704, 27711, 27725, 27763 to 65, 27924, 28153, 28317, 28711, 28712, 28720 to 24, 28726 to 29, 28731, 28732, 28734 to 38, 28740 to 43, 28745 to 47, 28749, 28752, 28754, 28757, 28758, 28760 to 63, 28765, 28767, 28770, 28771, 28773 to 78, 28781 to 83, 28788 to 94, 28796 to 99, 28800 to 28803.

TUNE-UP

COMPRESSION: Pressure—135 lbs. (110 lbs. min. hot) at cranking speed of 260 RPM. All cylinders must be equal within 10 lbs.

VACUUM READING: Steady 18-20" idling at 7 MPH.

FIRING ORDER: 1-3-4-2.

SPARK PLUG GAPS: .025".
Plug Type—Auto-Lite Type A5. 14 mm. Metric.

IGNITION: *See Coil, Condenser, and Distributor.*
Breaker Gap—.020". Limits .020-.024".
Cam Angle or Dwell—41° closed, 49° open.
Breaker Arm Spring Tension—17-20 ozs.
Automatic Advance—*See Distributor.*

IGNITION TIMING: 12° BTDC.
Timing Procedure—*See Ignition Timing.*
Timing Mark—First flywheel mark (second mark is TDC) in inspection hole in right front face of flywheel housing.

CARBURETION: *See Carburetor & Carb. Equipment.*
Main (High Speed) Adjustment—Initial setting 2 full turns open of adjusting screw. With engine warm and running with 1/3 throttle opening, turn screw in until engine loses speed, then out until maximum speed secured (1½-2¼ turns open).
Idle Adjustment—After making Main Adjustment (above), close throttle and set stopscrew for slightly faster than normal idle speed, turn idle adjusting screw in until engine misses, then turn screw out until engine fires smoothly. Final setting ¾-1¼ turns open.
Idle Speed—7 MPH.
Float Level—Fuel level 23/32" below top edge of bowl or even with bottom of inspection plug hole on side of bowl. CAUTION—Remove idle adjusting screw, spring, and idle tube before removing air horn and float bowl cover assembly.
Accelerating Pump—None.
Fuel Pump Pressure—1½-3¼ lbs.

VALVE TAPPET CLEARANCE: .004-.005" Intake, .006-.007" Exhaust, Cold.
Tappet Clearance Adjustment Procedure—*See "Valve System" in Crosley Shop Notes.*
Valve Timing Check—*See Valve Timing.*

STARTING: *See Battery, Starter, Generator, Regulator.*

IGNITION

IGNITION SWITCH: Crosley No. 200102.

COIL: Auto-Lite Model IG-4065 or IG-6001. On dash.
Service Coil—IG-4070 with IG-1944 Service Bracket.
Ignition Current—2 amperes idling, 5 stopped.

CONDENSER: Auto-Lite No. IGB-1025E (for IGW-4181), No. IGB-1025 (for IGW-4181A distributor).
Capacity—.20-.25 microfarad.

DISTRIBUTOR: Auto-Lite Model IGW-4181 & IGW-4181A. Single breaker, four lobe cam, full automatic advance type (no vacuum control).
Rotation—Counter-clockwise viewed from above.
Distributor Settings—*See Tune-Up data.*

Distributor **Automatic Advance** Engine

Degrees	R.P.M.	Degrees	R.P.M.
Start	350	0	700
3	515	6	1030
6	675	12	1350
9	840	18	1680
12	1000	24	2000

Removal: Distributor mounted on crankcase at left front of engine. To remove distributor, drain engine oil, remove oil pan, remove distributor drive gear by removing palnut and regular nut on lower end of distributor shaft. (CAUTION—Do not lose Woodruff key in shaft). Then remove hold-down screw in advance arm, lift distributor out.

Distributor Installation Note—When installing distributor, first turn crankshaft to #1 cylinder firing position (#1 piston on compression, ignition timing mark on flywheel in center of inspection hole in right front face of housing), turn distributor shaft until rotor is at #1 segment in distributor cap (see diagram) with contacts just opening, install distributor on engine and tighten hold-down screw in advance arm. With oil pan removed, install drive gear on lower end of distributor shaft (CAUTION make certain that Woodruff key in place), being careful not to disturb relative position of distributor shaft and crankshaft when meshing gears, install regular nut and palnut on distributor shaft. Check Ignition Timing.

IGNITION TIMING

Std. Setting.....12° BTDC.
To Set Timing—With #1 piston on compression, turn engine over until piston reaches firing position

CONTINUED ON NEXT PA E

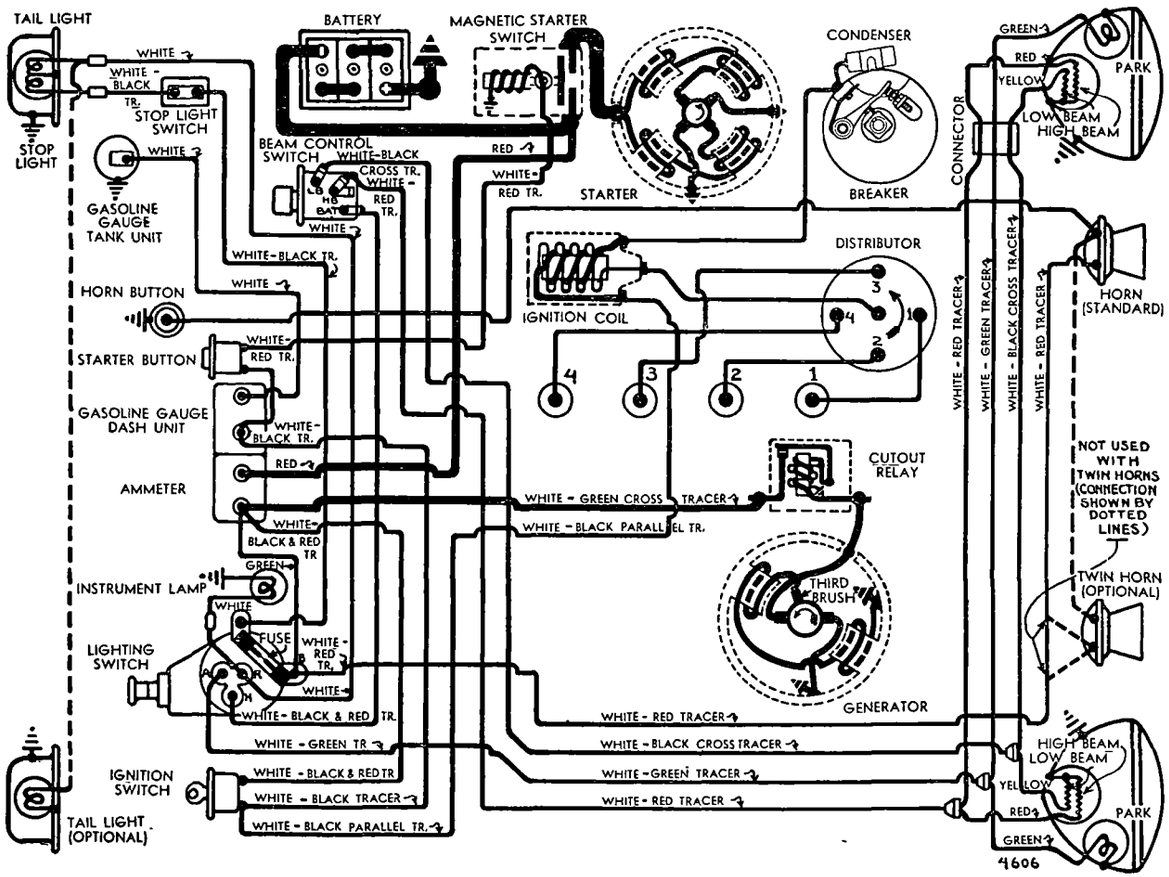

CARS WITH THIRD-BRUSH GENERATOR & CUTOUT RELAY

C NTINUED FROM PRECEDING PAGE

inspection hole in right front face of housing. Looswhen first timing mark on flywheel is in center of en advance arm clamp bolt, rotate distributor housing until contacts begin to open, tighten clamp bolt. Check rotor and make certain it is at #1 segment in distributor cap, check spark plug connections
To Check Timing (with Neon Timing Light)—Attach neon timing light to #1 spark plug, direct light on flywheel through inspection hole in right front face of housing. Start engine and allow it to idle (speed must not exceed 700 RPM to avoid automatic advance action). Loosen distributor clamp bolt in advance arm, rotate distributor until timing mark (located 12° before TDC mark) appears to be in center of inspection hole, tighten clamp bolt.

CARBURETOR

Tillotson Model DY-9B (superseding DY-9A). 7/8", Single barrel, plain tube, downdraft type with manual choke control.
See Carburetor Section for complete data.
NOTE—This carburetor has Main (High Speed) adjustment as well as conventional Idling (Low Speed) adjustment.
Adjustment & Float Level—***See Tune-up for data.***
Metering Jets—***See Tillotson DY-9A, B Carburetor article in Carburetor Section for complete data.***

CARB. EQUIPMENT

Air Cleaner: Oil-wetted type Std. Heavy duty oil-bath type available as an accessory.
Servicing (Oil-wetted type)—Remove cleaner, wash, dry, and re-oil filter element at 2000 mile intervals or more often if required by operating conditions.
Servicing (Oil-bath type)—Remove and disassemble cleaner, wash out with gasoline (including filter), refill reservoir with light engine oil to indicated level (approx. ¼ pint) every 5000 miles or more often if required (inspect every 1000 miles).
Fuel Pump: AC No. 1538923 (Crosley No. 300042).
See Carburetion Equipment Section for data.
Pressure—1½-3¼ lbs.
Gasoline Gauge: Stewart (Stewart-Warner) Electric
See Carburetion Equipment Section for data.

BATTERY

Auto-Lite Type AB-13 or 1M-80. 6 volt, 13 Plate, 80 Ampere Hour capacity (20 hour rate).
Starting Capacity—96 amperes for 20 minutes.
Zero Capacity—300 amperes for 2.0 minutes. Five second voltage 3.8 volts.
Grounded Terminal—Positive (+) terminal.
Location—On left hand side in engine compartment.
Dimensions—Length 8 15/16". Width 7". Height 8⅝"

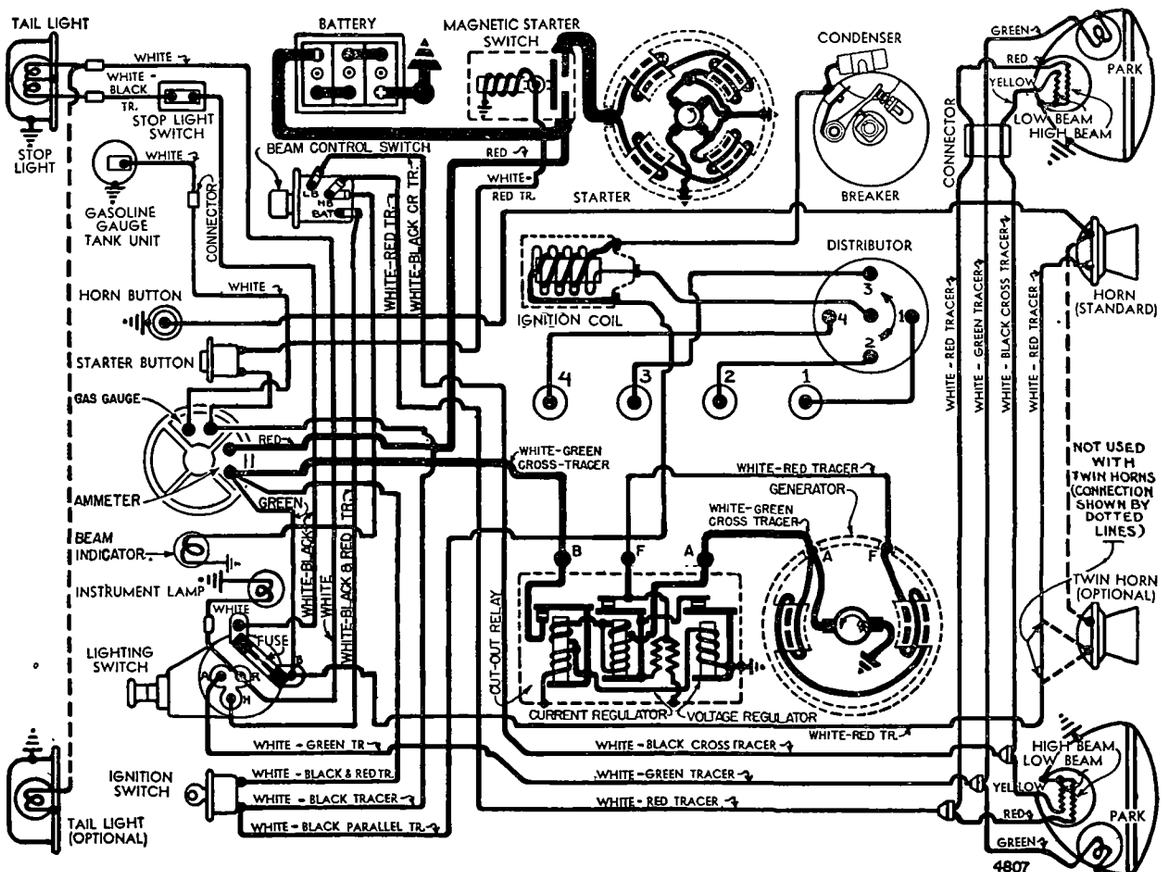

CARS WITH TW -BRUSH ENERAT R & REGULAT R

STARTER

Auto-Lite MAK-4027 (First Cars), MZ-4147 with No. B-206550 Adapter (Later Cars).
Armature—Auto-Lite No. MAK-2074 (MAK-4207).
Drive—Bendix Drive No. A2920.
Rotation—Counter-clockwise at commutator end.
Brush Spring Tension—38-61 ozs. (MAK-4027), 42-53 ozs. (MZ-4147) with new brushes.

Performance Data—MAK-4027

Torque	R.P.M.	Volts	Amperes
0 ft. lbs.	5000	5.5	70
.3 "	3240	5.5	100
1.35 "	1880	5.0	200
3.1 "	1000	4.5	300
4.8 "	220	4.0	400
7.0 "	Lock	4.0	520

Performance Data—MZ-4147

Torque	R.P.M.	Volts	Amperes
0 ft. lbs.	4300	5.5	70
.65 "	2500	5.5	100
2.55 "	1325	5.0	200
4.95 "	750	4.5	300
7.65 "	220	4.0	400
7.8 "	Lock	3.0	420
4.4 "	Lock	2.0	280

Removal (MAK-4027): Starter flange mounted directly on left front face of flywheel housing. To remove, disconnect cable, take out flange mounting bolts.
Removal (MZ-4147): Starter flange mounted on adapter bolted on left front face of flywheel housing. To remove, disconnect cable, take out capscrews mounting starter on adapter (do not disturb adapter).
Starting Switch: Auto-Lite Model SS-4007 Magnetic Switch and Pushbutton Model XA-456 or XA-456E. Switch is mounted on dash and controlled by pushbutton on instrument panel.
See Electrical Equipment Section for complete data.

GENERATOR

THIRD-BRUSH TYPE

Auto-Lite Model GAS-4190. Armature GAS-2336. Third brush control type with Cutout Relay mounted on generator mounting bracket.
Charging Rate Adjustment—Shift third brush by hand counter-clockwise to increase, or clockwise to decrease, charging rate. Brush is held in position by friction. NOTE—Std. third brush position is with space of 2 commutator bars (minimum), to 2 commutator bars plus 1 mica strip (maximum) between third brush and nearest (insulated) main brush.
Maximum Charging Rate—12 amperes at 8.0 volts.

Cold Performance Data		Hot Performance Data	
Amperes Volts	R.P.M.	Amperes Volts	R.P.M.
0 6.4	880	0 6.4	975
2 6.6	985	2 6.8	1135
4 6.9	1100	4 7.0	1310
6 7.2	1230	6 7.35	1540
8 7.3	1420	8 7.7	1860
10 7.6	1650	10.2 8.0	2800
12 7.8	2000		
14 8.0	2800		

Rotation—Counter-clockwise at commutator end.
Brush Spring Tension—15-20 ounces.
Field Current—4.09-4.52 amperes at 6.0 volts.
Motoring Current—5.3-5.9 amperes at 6.0 volts.

Removal: Generator is cradle mounted on right side of engine with fan belt drive (water pump driven by armature shaft extension). To remove generator, disconnect water pump drive coupling and generator lead, slack off drive belt tension and remove belt, remove two bolts at lower end of mounting clamp band, slide generator out. NOTE—Generator has locating dowel pin on field frame which engages dowel pin hole in mounting band. Dowel must be disengaged when removing generator **and dowel must be engaged in dowel pin hole in band when installing generator.**

►***CAUTION—Do not disturb the generator mounting bracket bolts. Bracket must be properly aligned (using fixture) to prevent water pump misalignment and rapid wear whenever bracket bolts loosened.***
Generator Bracket Alignment—***See Crosley Shop Notes.***

Belt Adjustment: Loosen nuts on two bolts mounting fan shaft bracket on front of engine, move fan upward (right hand bolt hole slotted) until belt deflection is ½" (thumb pressure) midway between generator and fan pulleys, tighten nuts and recheck NOTE—Two holes provided in bracket for left hand fan mounting bolt. Additional range of adjustment can be secured by shifting bolt to upper hole.

GENERATOR
TWO-BRUSH TYPE

Auto-Lite Model GDZ-4806-A or 4806B. Two brush type with voltage and current regulation.
Maximum Charging Rate—35 amperes at 8.0 volts.
Charging Rate Adjustment—None. See Regulator.

Cold Performance Data			Hot		
Amperes	Volts	R.P.M.	Amperes	Volts	R.P.M.
0	6.4	925	0	6.4	1000
5	6.65	1060	5	6.65	1150
10	6.85	1200	10	6.85	1290
15	7.05	1340	15	7.05	1430
20	7.3	1480	20	7.3	1590
25	7.55	1620	25	7.55	1750
30	7.8	1760	30	7.8	1980
35①	8.0	1900	35	8.0	2250

①—Current Regulator setting. See Regulator data.

Rotation—Counter-clockwise at commutator end.
Brush Spring Tension—35-53 ozs. (new brushes).
Field Current—1.60-1.78 amperes at 6.0 volts.
Motoring Current—4.2-4.6 amperes at 6.0 volts.

Removal: Generator cradle mounted on right side of engine with fan belt drive (water pump driven by armature shaft extension). To remove generator, disconnect leads, slack off belt adjustment and remove fan belt, remove front bolt in water pump coupling. Remove two 5/16" elastic stop nuts on generator mounting band, lift generator out.

Belt Adjustment: Same as for 3-brush generators. See instructions above.

CUTOUT RELAY
USED WITH THIRD-BRUSH GENERATOR

Auto-Lite Model CB-4025. Mounted on generator mounting clamp band directly above generator.
See Electrical Equipment Section for complete data.

Cuts In—6.5-7.25 volts.
Cuts Out—.5-2.5 ampere discharge current (after charging at 15 amperes).
Contact Gap—.015-.045" (armature against stop).
Air Gap—.010-.030" (contacts closed).

REGULATOR
USED WITH TWO-BRUSH GENERATOR

Auto-Lite Model VRP-4004F. Voltage-current type. ***See Electrical Equipment Section for complete data.***
NOTE—Regulator cover sealed. Warranty void if seals broken.

Cutout Relay

Cuts In—6.4-7.0 volts (set to 6.4-6.6 volts).
Cuts Out—4.1-4.8 volts (approx. 4-6 amps. disch.).
Contact Gap—.015" minimum.
Air Gap—.031-.034" with contacts open (check at hinge end of core).

Voltage Regulator

Setting—7.2-7.5 volts at 70°F. See Electrical Equipment Section for settings at other temperatures.
Checking (without breaking seals) & Adjustment—***See Electrical Equipment Section for complete data.***
Contact Gap—.012" min. (armature against stop pin).
Air Gap—.048-.052" with contacts just opening.

Current Regulator

Setting—34-36 amperes (marked '35' on cover).
Checking (without breaking seals) & Adjustment—***See Electrical Equipment Section for complete data.***
Contact Gap—.012" min. (armature against stop pin).
Air Gap—.048-.052" with contacts just opening.

LIGHTING

Headlamps: Double filament, pre-focused type. Upper and lower beams controlled by Beam Selector Switch on toeboard.
Adjustment—Aim upper beams straight ahead with top of "hot spot" 3" below lamp center height at 25 feet.

Switches

Lighting—Crosley No. 205936.
Beam Selector—Crosley No. 205956.

Lamp Bulb Specifications

Position	Candlepower	Mazda No.
Headlamps	32-21	2320
Parking	1.5	55
Instrument, Beam Ind.	1.5	55
Stop & Tail (L. H.)	21-3	1158
Tail (R. H.)	3	67

MISC. ELECTRICAL

FUSE: Lighting—20 ampere. On lighting switch.

HORN: Crosley No. 205288. Single horn standard. Dual horns consists of two single horns.

ENGINE

ENGINE SPECIFICATIONS: Four cylinder, Overhead Valve type with Overhead Camshaft. Cylinder block (with integral Head) is built-up type bolted on aluminum crankcase with pressed steel oil pan.
Bore—2.5". **Stroke**—2.25".
Displacement—44 cu. ins. **Rated H. P.**—10.
Developed Horsepower—26.5 at 5400 RPM.
Compression Ratio—7.5-1.
Compression & Vacuum Reading—***See Tune-Up data.***

ENGINE SERVICE NOTE: Cylinder Heads are integral with cylinder barrels and cylinder block must be removed from crankcase for work on Valves, Pistons, Rings, etc.

ENGINE REMOVAL and Cylinder Block Removal: ***See Crosley Shop Notes.***

TIGHTENING (TORQUE WRENCH) SPECIFICATIONS: ***See Crosley Shop Notes.***

PISTONS: Aluminum alloy, heat treated, cam ground, three-ring type (Before Eng. No. 31599), four-ring type (Eng. No. 31599 Up). Length—1.906".
Weight (3-ring type)—4.92 ozs. (equal within ⅛ oz.)
Clearance—.002-.0035" (skirt). See Fitting New Pistons.
Removal—Pistons and rods removed through lower end of cylinder when cylinder block removed from crankcase (cylinder head integral with block).
See Crosley Shop Notes for Cylinder Block Removal.

Fitting New Pistons: Use .002" feeler gauge, ½" wide, to check clearance. Place feeler gauge 90° from piston pin holes in piston on maximum thrust side. Pull required to withdraw feeler should be 4-6 lbs.

Replacement Pistons: Furnished Std. Size and .005", .010", .020", .030" Oversize.

PISTON RINGS (Before Eng. No. 31599): Two compression, one oil control ring, all above pin. Drain holes provided in oil ring groove.

Ring	Width	End Gap	Side Clearance
Compr. (#1, 2)	1/16"	.007-.017"	.0025-.004"
Oil Cont. (#3)	3/32"	.007-.015"	.0015-.003"

Installing Rings—Compression rings have inner bevel which must be upward (mark "TOP" on side of rings upward).

PISTON RINGS (Eng. No. 31599 Up): Two compression, one oil control ring above pin, additional oil control ring below pin (4-ring type piston). Drain holes provided in both oil ring grooves.

Ring	Width	End Gap	Side Clear.
Compr. (#1,2)	.0620-.0625"	.007-.017"	.0025-.005"
Oil (#3, 4)	.1545-.1550"	.007-.015"	.0015-.003"

Installing Rings—Side marked "TOP" on compression rings must be upward.

Replacement Rings: Furnished Std. Size and .010", .020", .030" Oversize.

PISTON PIN: Floating type with aluminum plug insert in each end of pin. Pin hole in rod has lead-bronze bushing.
Pin Fit in Piston—.0001-.0006" clearance (3-ring type piston), .0004" Loose to .0003" Tight (4-ring type piston) at room temperature or 70°F.
CAUTION—Heat piston to 160°F. when inserting pin to avoid distorting piston skirt.
Pin Fit in Rod Bushing—.0000-.0005" clearance or tight thumb push fit at room temperature (70°F). NOTE—Bushing is split leaded-bronze type and of size for press fit in connecting rod hole (.6875-.6880"). Hone bushing for correct pin fit after installation (pressing bushing into place will close up gap and leave pin hole undersize).
Piston Pin Plugs—Must be snug fit in ends of pin.

Replacement Piston Pins: .001", .002", .003" Oversize.

CONNECTING ROD: Length—4.125". **Weight**—9.62 ozs. (all rods equal within ⅛ oz.).
NOTE—Bearing cap bolts are forged integrally with the connecting rod.
Crankpin Journal Diameter—1.374-1.375".

CONTINUED ON NEXT PA E

ENGINE

CONTINUED FR M PRECEDING PA E

Lower Bearing Type—Replaceable, precision type steel-backed, babbitt-lined. No shims.

NOTE—Connecting rod bearings are interchangeable with the three intermediate lower main bearing halves (not interchangeable with crankshaft upper bearings).

Clearance—.0015-.003" **Sideplay**—.0175".

Bearing Adjustment: None (no shims). Replace bearings (precision type, no fitting required). Do not file bearing caps. NOTE—Palnuts used on connecting rod bolts. Always use new Palnuts.

Replacement Bearings: Furnished Std. Size and .001", .010", .020" Undersize.

Installing Rods: Numerical marking on rod and bearing cap together and on same side of engine as similar marking on bottom of crankcase (left hand or distributor side).

CRANKSHAFT: Five main bearing type with individually counterweighted crankpins.

Journal Diameters—1.374-1.375" (except rear bearing), 1.499-1.500" (rear bearing only).

Bearing Type—Replaceable, precision type, steel-backed, babbitt-lined. Rear bearing is flanged (for end thrust).

NOTE—The three intermediate main bearings are interchangeable and these lower bearing halves are interchangeable with connecting rod bearings. **Upper and lower bearing halves are not interchangeable** (upper halves may be identified by oil holes which must register with oil channels in crankcase).

Clearance—.0015-.003".

Bearing Adjustment: None (no shims). Replace bearings. Do not file bearing caps. Engine must be removed from chassis and crankshaft removed for main bearing work.

See Crosley Shop Notes for Engine Removal and Crankshaft Removal Instructions.

NOTE—When installing bearings, make certain that oil holes in bearing upper halves register with oil channels in crankcase (see Bearing Note above). Bearings are numbered (1 to 5) on left side of engine and cannot be interchanged.

Crankshaft Oil Seals—Replace rear main bearing oil seal whenever rear main bearing is disturbed.

Oil Seal Replacement—***See "Crankshaft & Main Bearings" in Crosley Shop Notes.***

Replacement Bearings: Furnished Std. Size and .001", .010", .020" Undersize.

End Thrust: Taken by flanges on #5 (rear bearing). Replace rear main bearing when endplay exceeds .008". **Endplay**—.003-.008".

CAMSHAFT: Five bearing type mounted on top of engine and driven through bevel gears by vertical tower shaft at front of engine.

Bearing Type—Consist of five split aluminum bearings bolted individually on pads on top of engine. On first engines, integral studs provided on upper halves of all bearings except rear (#5) for camshaft cover retaining nuts. On later engines, top of all bearing upper halves are machined flat and a separate bearing strap is assembled on top of bearing under bearing capscrews. These bearing straps have stud for camshaft cover retaining nuts (except rear #5 bearing strap which is plain type).

Bearing Interchangeability—All lower bearing halves except front (#1) interchangeable on all engines. Intermediate (#2,3,4) upper halves of first type (with integral studs) interchangeable. All except front upper bearing halves of later type (with separate bearing straps) are interchangeable. Bearing straps used with this type are interchangeable on intermediate bearings (#2,3,4). Rear bearing strap is plain type.

Clearance—.0015-.0027".

Endplay—Taken by thrust washer between camshaft gear and front camshaft bearing. With correct endplay, backlash between camshaft gear and upper towershaft gear will be .003-.005".

Endplay Adjustment—***See "Camshaft & Bearings" in Crosley Shop Notes.***

Camshaft Drive (Towershaft) Assembly: ***See "Camshaft & Bearings" in Crosley Shop Notes.***

Camshaft Setting: For correct valve timing, **with camshaft out of engine,** proceed as follows:

1) Turn engine over slowly until the following three conditions occur simultaneously: a) Top dead center mark on flywheel is in center of inspection hole in right front face of housing, b) Distributor rotor points toward #1 cylinder segment in distributor cap, c) Punch-marked tooth of upper tower gear (see below) points toward rear of engine and is in line with center-line of camshaft bearings.

2) With engine positioned as above, assemble the camshaft, pushing the oil metering housing into upper tower shaft gear and **meshing punch-marked tooth of upper tower shaft gear between two punch-marked teeth of camshaft gear.** Complete camshaft assembly by installing bearing caps.

3) Check camshaft endplay (see data above).

4) Turn engine over slowly by hand for at least two revolutions.

VALVES: Engine must be dismantled (removed from chassis, cylinder block taken off) for valve work.

Valve Servicing—***See "Valve System" in Crosley Shop Notes.***

Valve Springs: Intake & exhaust valve springs interchangeable.

	Spring Pressure	Length
Valve Closed	28 lbs.	1¾"
Valve Open	48 lbs.	1 7/32"

Valve Guides: Guides are pressed in cylinder head from above. To remove guides, invert cylinder block on arbor press, use a shoulder drift pin (max. O. D. 13/32") to press guide out. Press new guides in place (coat stem with Permatex #3 or equivalent) from above until shoulder on guide seats solidly on bushing in cylinder head. Ream guides for correct valve stem clearance. NOTE—Reface valve seats using the new guide hole to pilot the facing tool, grind valves before installing.

Valve Lifter (Cam Follower): Consists of an inverted cup operating in guide hole in cylinder block directly above each valve assembly (cam follower spacer and tappet clearance adjusting shims located within cam follower above valve stem).

Cam Follower Clearance—.0005-.0015".

VALVE TIMING

Tappet Clearance: .004-.005" Intake; .006-.007" Exhaust Cold. Clearance adjusted on first cars by grinding off end of valve stem, adjusting shims located within cam follower on later cars.

Tappet Clearance Adjustment Procedure—***See "Valve System" in Crosley Shop Notes.***

Valve Timing: See Camshaft Setting (above).

Intake Valves—Open 5° BTDC. Close 50° ALDC.

Exhaust Valves—Open 50° BLDC. Close 5° ATDC.

Valve Timing Check—See Camshaft setting for assembly of valve gear.

LUBRICATION

Engine Oiling System: Pressure to main bearings, connecting rod bearings, camshaft bearings, and timing gear bearings (oil flow to camshaft bearings is through hollow towershaft and hollow camshaft). Oil pump in crankcase at forward end of engine.

Crankcase Capacity—2 qts. (refill), 2.8 qts. (when filter drained or filter element replaced).

Normal Oil Pressure—40-50 lbs. at 30 MPH (hot oil). 7 lbs. minimum with engine idling.

Oil Pressure Regulator—Located under plug on right front corner of engine. Not adjustable.

Oil Pump: Disassembly—Take out center capscrew on lower cover, remove cover, gasket, and screen. Take out four capscrews in pump cover, remove cover and gasket, lift out idler gear and shaft. To remove pump shaft and gear, file off end of pin in pump drive gear, drive pin out and remove gear.

Reassembly—Use new gaskets. Make certain that plain washer and lockwasher used on each cover screw and that lower cover (with oil inlet pipe) is tight. See Tightening Torque Wrench data for housing and mounting screw torques.

Oil Filter: Replace filter element at 8000-10000 mile intervals. NOTE——Add .8 qt. of oil in crankcase when oil filter drained or element replaced.

Crankcase Ventilation: Oil-wetted type filter element in oil filler cap (air intake). Outlet pipe located at rear of valve chamber.

Servicing—Wash filter element in kerosene and re-oil at 2000 mile intrevals or more often if required by operating conditions.

COOLING

Cooling System: Not pressurized (Pressure type Radiator Filler Cap available as accessory equipment).

Capacity—4 quarts (5 quarts with Heater).

Water Pump (No. C-205175—Before Eng. No. 27637). Packless type. Mounted on right side of engine.

NOTE—This pump used with Generator GAS-4190. ***See Water Pump Section for complete data.***

CAUTION—To prevent excessive pump bushing wear, generator mounting bracket must be aligned whenever alignment disturbed.

Water Pump (Generator Mounting Bracket) Alignment—***See "Cooling System" in Crosley Shop Notes.***

Removal—Disconnect drive coupling at water pump, drain cooling system by taking out plug in pump housing, disconnect two water hoses, take out two mounting bolts in flange at rear of pump, lift pump out.

Belt Adjustment—***See Generator Belt Adjustment.***

Water Pump (No. C-207187—After Eng. No. 27637). Packless type. Mounted on right side of engine.

NOTE—This pump used with Generator GDZ-4806B. ***See Water Pump Section for complete data.***

Removal—Disconnect drive coupling at water pump,

drain cooling system by taking out drain plug at bottom of radiator, disconnect two water hoses, take out two mounting bolts in flange in front of pump, lift pump out.

Belt Adjustment—*See Generator Belt Adjustment.*

Thermostat: In engine outlet connection (blocker type). Opens at 170°F.

Temperature Gauge: Vapor pressure type (not electric.

CLUTCH

Rockford Model R-4608. Single plate, dry disc.

See Clutch Section for complete data.

Facings—Molded type. I. D. 4". O. D. 6" Thickness 7/64" (flywheel side), 9/64" (pressure plate side).

Pedal Adjustment: Pedal free travel should be 1". To adjust, turn clevis end in or out on cable.

Removal: Remove transmission (see Transmission Removal below). Working from below through the housing opening, remove two bolts in each of three release lever brackets, remove pressure plate and driven member through opening.

TRANSMISSION

Warner Model AS1-T92. Three-speed, sliding spur gear type with conventional shift lever mounted on transmission case cover.

See Transmission Section for complete data.

Removal: Raise rear of car until weight removed from rear springs, disconnect rear springs from axle. Disconnect brake cable and conduit at each rear wheel backing plate, disconnect speedometer cable, clutch release cable clamp from bottom of transmission case. Support rear end of engine on blocks remove rear engine mount (under transmission case at rear end). Remove transmission control housing and shift lever assembly. Take out capscrews mounting torque tube on rear face of transmission adapter, pull rear wheels, rear axle, and propeller shaft assembly to rear and clear of the transmission case (CAUTION—Do not lose spring and washer located between propeller shaft and speedometer gear). Remove four capscrews mounting transmission on flywheel housing, pull transmission straight back to clear clutch shaft and remove from car.

UNIVERSALS

Spicer Model 102 (First Cars), New England Products (Later Cars). One used. Plain bushing type. In ball housing at rear of transmission adapter.

See Universals Section for complete data.

REAR AXLE

Spicer Salisbury Model 11. Semi-floating, spiral bevel gear type with Torque Tube drive.

See Rear Axle Section for complete data.

Ratio—5.17-1 Std.

Backlash—.003-.008". Shim adjustment.

Removal: Disconnect brake cable clevis at brake cam lever and unfasten brake cable conduit at clamp on backing plate at each rear wheel. Raise rear of car until all weight removed from rear springs, disconnect rear springs from axle. Take out capscrews mounting torque tube on rear face of transmission adapter, pull rear wheels, rear axle, and torque tube assembly to rear until free from transmission. CAUTION—Do not lose spring and washer located between universal joint and speedometer gear in transmission.

Axle Shaft Removal: Remove rear wheel hub cap, rear wheel, and wheel hub (use Puller No. 202318). Disconnect brake cable from brake cam lever and free cable conduit from clamp on backing plate. Take out four capscrews mounting backing plate on axle housing, remove backing plate being careful not to lose bearing adjusting shims on housing flange. Pull axle shaft out of housing.

Wheel Bearing Adjustment: Check endplay at each wheel with dial indicator. Adjust by adding or removing shims located between backing plate and flange on axle housing (see Axle Shaft Removal for dismantling instructions).

Endplay—.002-.007" total for both wheels (between inner ends of shafts and thrust block in differential).

TORQUE TUBE & PROPELLER SHAFT ASSEMBLY:

Spicer No. 98-1182X. Torque tube assembly has flanged end at rear (bolted to rear axle housing flange) and thrust ball at forward end (cap assembly bolted on adapter on rear end of transmission). Propeller shaft is splined on pinion shaft (rear end) and in universal joint (forward end) and is positioned by spring located between universal joint and speedometer gear in transmission case. NOTE—A propeller shaft center bearing is located within the torque tube and is provided with a grease fitting on the tube at this point.

Propeller Shaft Removal: Remove Rear Axle and Torque Tube Assembly (see Rear Axle Removal above), withdraw propeller shaft through forward end of tube.

CAUTION—When installing assembly in car, make certain that spring and washer installed on transmission shaft ahead of universal joint. This spring takes up endplay in propeller shaft.

SHOCK ABSORBERS

Houde (Houdaille) Type—Before Serial No. 21135. Double acting, adjustable, hydraulic type.

See Shock Absorber Section for complete data.

Adjustment (Houde)—Handle on end of shaft (in center of lever) adjustable between end stops and should be turned clockwise for more control, or counter-clockwise for less control and softer ride. Do not change adjustment more than 1/32-1/16" from original factory setting.

NOTE—Original factory setting indicated by scribed line on end of shaft (pointer on adjusting handle aligned with this mark).

Refilling—Check fluid and fill to level of filler plug hole with Houdaille L-1404 fluid at 5000 miles intervals. CAUTION—Only L-1404 fluid should be used in this type shock absorber (may be identified by round-top filler plug).

Delco Model 1438-T,U (Front), 1438-V,W (rear)—After Serial No. 21135. Single acting, hydraulic type.

See Shock Absorber Section for complete data.

Adjustment—None (except by changing valves).

Refilling—Check fluid and fill to level of filler plug hole on cover plate (see Note) at 10000 mile intervals. NOTE—If cover plate does not have filler plug, this coverplate can be replaced by cover having filler hole and plug (for filling on car) or shock absorber can be removed and refilled on the bench.

FRONT SUSPENSION

Front Suspension: Conventional axle with semi-elliptic springs.

Kingpin Inclination—6½° crosswise.

Camber—2°. No adjustment (axle may be bent for minor adjustments).

Caster—7½°. Adjust by inserting wedge shims between spring and spring pad on axle.

Toe In—3/64-1/16". Adjust in usual manner by changing length of tie rod.

STEERING GEAR

Ross Model S-12. Cam-and-Lever type.

See Steering Gear Section for complete data.

BRAKES

Service: Hawley. Four-Wheel, mechanical, two-shoe type. Hand lever applies all four service brakes.

See Brake Section for complete data.

Drums—Cast Iron. Diameter 6".

Clearance—.010" at both ends of each shoe (adjusting screw backed off approximately ¼ turn from point where wheels start to drag).

Lining—Molded type. Width 63/64". Thickness 5/32". Length per wheel 16".

NOTE—Bonded Lining used on some cars.

Hand Brake: See Service Brakes (above).

NOTE—Hand brake handle (on floor ahead of seat) is linked directly to hand brake lever on cross-shaft.

MODEL IDENTIFICATION

SERIAL NUMBER:—On right front door hinge pillar post. First number for each model as follows:

Model	Detroit	Canada
Custom S1	6,043,001	9,664,641
Deluxe S1	5,500,001	9,664,641
S2	5,089,001	9,603,551

ENGINE NUMBER: First No. 1001 with model prefix (S1-, S2-). Stamped on boss on left side of cylinder block between #1 and #2 cylinders (S1), above water pump (S2).
See Chrysler Special Shop Notes for Engine Number lettering (Special Standard Bore & Bearing Sizes).

TUNE-UP

COMPRESSION:—Ratio—6.0-1 Std. cast-iron head (S1), 6.5-1 Aluminum head (Optl. S1, Std. S2), 7.0-1 Alum. head (Optl. S2).

Pressure—(S1 Std. 6.0-1 head) 120-130 lbs. at 1000 R.P.M. or approx. 103 lbs. at cranking speed. (Optl. S1, Std. S2 6.5-1 Al. head) 125-135 lbs. at 1000 R.P.M. or approx. 110 lbs. at cranking speed. (S2—Optl. 7.0-1 Al. head) 130-140 lbs. at 1000 R.P.M. or approx. 117 lbs. at cranking speed.

VACUUM READING:—Gauge should show steady reading of 16-18" with engine idling at 6 M.P.H.

FIRING ORDER: 1-5-3-6-2-4. See diagram.

SPARK PLUGS: Champion Type J8 (Cast Iron Heads), Type H10 (Aluminum Heads). 14 mm. Metric type.
Gaps—.025".
NOTE—S1 only—spark plugs used in aluminum heads have longer thread. Not interchangeable with standard plugs.

IGNITION: See Coil, Condenser, and Distributor.
Breaker Gap—.020". Cam Angle 38° (closed).
Automatic Advance—12° max. at 1530 RPM (IGS-4006-1, 4008-1), 1750 RPM (IGS-4006A-1, 4008A-1). Distributor degrees and RPM.
Vacuum Advance—8° distr. with 15" vacuum.

IGNITION TIMING: See Ignition Timing.
Std. Setting—At TDC. (S1 6.0-1 Head), 5° ATDC. (S1, S2 6.5-1 Head), 7° ATDC. (7.0-1 Head) with dead center "0" mark or correct degree mark on impulse neutralizer at indicator at front of engine.

CARBURETION: See Carburetor & Carb. Equipment.
Idle Setting—Idle screw ¼-1 turn open. Idle speed 300 RPM or 6 MPH.
Float Level—5/64" top of float below top of bowl.
Accelerating Pump—Center hole Normal. Inner hole (Summer), Outer hole (Winter) for temperature extremes.

Fuel Pump Pressure: 3½ lbs. maximum.

VALVES: See Valve Timing.
Tappet Clearance:—.006" Int., .008" Exh., with engine hot. .010" Exh., recommended for sustained high speed.

STARTING: See Battery, Starter, Generator, Regulator.

IGNITION

Ignition Switch:—Mitchellock Model 24-B. Type 6518 (S1), 6746 (S1-Conv. sedan and coupe), 6688 (S2). Connected to coil by armored cable.
Ignition Lock—Yale & Towne Mod. DP-108, Mitchell No. 6286.

COIL: Auto-Lite Model IG-4630 (S1), IG-4637 (S1 Conv. sedan and coupe) IG-4636 (S2), IG-4639 (S2-RHD). Service Winding (coil less switch and cable IG-3224JS.
Ignition Current—2.5 amperes idling, 5.5 stopped.

CONDENSER: Auto-Lite Part No. IG-3927A.
Capacity—.25-.28 microfarad.

DISTRIBUTOR: Auto-Lite IGS-4006-1 or 4006A-1, IGS-4008-1 or IGS-4008-A-1 with Tachometer Drive. Single breaker, 6 lobe cam, full automatic advance type with auxiliary vacuum spark control.

See Electrical Equipment Section for special servicing directions on these distributors.
For complete data, refer to Electrical Equipment Index.
Breaker Gap—Set at .020". Limits .018-.020".
Cam Angle or Dwell—38° closed, 22° open.
Breaker Arm Spring Tension—16-20 ounces.

Automatic Advance—IGS-4006-1, 8-1

Distributor Degrees	Distributor R.P.M.	Engine Degrees	Engine R.P.M.
Start	350	0	700
3	400	6	800
6	780	12	1560
9	1160	18	2320
12	1530	24	3060

Automatic Advance—IGS-4006-A-1, 8-A-1

Start	350	0	700
3	400	6	800
6	850	12	1700
9	1300	18	2600
12	1750	24	3500

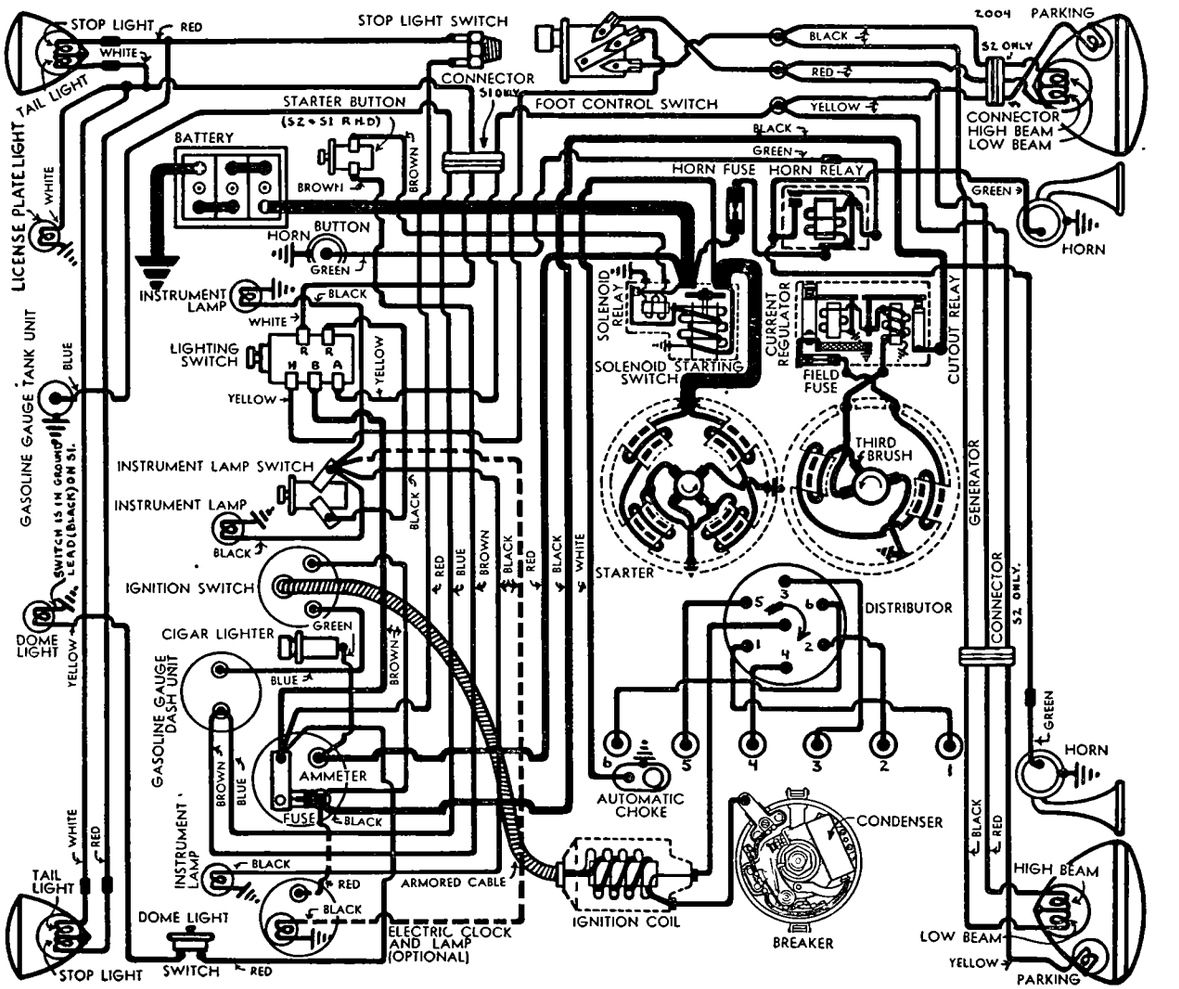

Vacuum Spark Control—Integral with distributor. Mounted on distributor housing and linked directly to breaker plate. Provides additional advance for all speeds above idling except when engine is accelerated or operated with wide open throttle when spark is retarded by return spring within unit.

Vacuum Advance

Distr. Degrees	Eng. Degrees	Vacuum (" of HG)
Start	0°	5.1"
4°	8°	10-11"
8°	16°	15"

Distributor Removal:—Mounted on left side of crankcase. To remove, take out hold-down screw in advance arm, disconnect vacuum line. On S2 distributor accessible by removing left front wheel and cover plate under fender.

IGNITION TIMING

IGNITION TIMING:—Settings for all engines as follows

	Flywheel Degrees	Piston Pos.
6.0-1 Std. hd. (S1)	At TDC.	.0000" TDC.
6.5-1 Optl. hd. (S1)	5° ATDC.	.0108" ATDC.
6.5-1 Std. hd. (S2)	5° ATDC.	.0108" ATDC.
7.0-1 Optl. hd. Ethyl fuel	7° ATDC.	.0211" ATDC.

See 'Manual Adjustment' (following) for final setting for best performance depending on fuel used.
NOTE—Impulse neutralizer at front of engine marked 'O' at top dead center with 15 one degree graduations before and after this point.

Timing (Using Timing Light)—Connect timing light between distributor terminal and battery terminal on generator control unit. With #1 piston on compression, turn engine over until piston reaches firing position (see table), stop when correct line on impulse neutralizer lines up with pointer on chain case cover. Loosen distributor hold-down screw, center pointer on scale, tighten hold-down screw. Loosen advance arm clamp bolt, rotate distributor until timing light just goes out, tighten clamp bolt.

Timing (Using Synchroscope)—Clip lead to #1 spark plug, direct light on impulse neutralizer, fill in correct mark with chalk or white paint. See Equipment Section.

Manual Adjustment:—After ignition set as above, road test car and adjust for slight ping with wide open throttle when accelerating from 10 to 30 M.P.H. To adjust, loosen hold-down screw, advance (counter-clockwise), retard (clockwise) pointer on scale. Scale graduated in engine degrees. Do not advance more than 5° on scale.

CARBURETOR

CARBURETION:—Carburetor—Carter (B & B) Model E6G1, 1½" downdraft type. See Carburetion Section for complete adjustment, overhaul, and Jet Specifications.
For complete data, refer to Carburetor Index.

NOTE—Do not make carburetor adjustments until engine is well warmed up so that choke valve is wide open and fast idle inoperative.

Idle Adjustment—Adjust throttle stopscrew so that engine speed is 300 R.P.M. or 6 M.P.H. Turn idle adjusting screw in until engine begins to miss, then out until engine begins to roll, finally turn screw in slowly until engine fires smoothly. Setting should be ¼-1 turn of the screw from closed or seated position. Readjust throttle stopscrew for correct idling speed.

Accelerating Pump Setting—Engage pump link in proper hole in throttle lever for seasonal requirements as follows:
Inner Hole (Min. stroke)—Extremely warm weather
Center Hole—Normal summer temperatures.
Outer Hole (Max. stroke)—Winter temperatures.
NOTE—5% and 10% lean main metering screws (high altitude calibration) may be used in lower altitudes for maximum fuel economy although with considerably reduced speed and power. See Carter (B & B) Jet Specifications in Carburetion Section.

Throttle Cracking: Throttle opened approx. one-third when starter pedal depressed. This setting should be checked and adjusted when checking automatic choke.

Fast Idle:—Integral with carburetor. No adjustment.

Automatic Choke: Sisson Type AC-751.
For complete data, refer to Carburetion Equip. Index.

CARB. EQUIPMENT

Air Cleaner:—Burgess oil-wetted type standard, AC. #1526712 oil-bath type optional.

Fuel Pump:—AC. Type B, #1522237 (first cars), #1522995 (later cars). Diaphragm type. See article in Carburetion Section.
For complete data, refer to Carburetion Equip. Index.

Gasoline Gauge:—Motometer (Auto-Lite) Electric. Dash Unit—NG-7875-D (S1 Deluxe), NG-7796-D S1 Cust., S2). Tank Unit—NG-7687-T (S-1), NG-6875-T (S2).
For complete data, refer to Carburetion Equip. Index.

BATTERY

BATTERY:—Willard Type WH-2-15, RH-2-15 (Export). 6 volt, 15 plate, 119 ampere hour capacity (20 hour rate).

Starting Capacity—140 amperes for 20 minutes.
Zero Capacity—300 amperes for 4.3 minutes.
Grounded Terminal—Positive (+) terminal.
Location—On left side under driver's seat.

STARTER

Auto-Lite Model MAX-4015 (S1), MAX-4016 (S2 & S1 Export). Armature No. MAW-2030.
Drive—Manual shift (S1), magnetic shift S1 Exp, S2). with outboard pinion.
Cranking Engine—Approx. 200 amperes at 5.0 volts.
Rotation—Counter-clockwise at commutator end.
Brush Spring Tension—42-53 ozs. (new brushes).

Performance Data

Torque	R.P.M.	Volts	Amperes
0 ft. lbs.	5300	5.5	65
.65 "	3300	5.5	100
2.75 "	1630	5.0	200
5.5 "	970	4.5	300
8.7 "	600	4.0	400
12.0 "	300	3.5	500
16.5 "	Lock	3.0	640
25.0 "	Lock	4.0	880

Removal:—Flange mounted on left front face of flywheel housing. To remove, take out capscrews. On S2 remove left front wheel and cover plate under fender.

Starting Switch:—S1—Type SW-2813 (MAX-4015). See Equipment Section for pedal adjustment. S-1 (Exp), S2—Solenoid Switch Type SS-4104. Controlled through relay by push-button on dash. Operative with ignition turned 'on.'
For complete data, refer to Electrical Equipment Index.

GENERATOR

Auto-Lite Model GAR-4608A-5. Armature GAR-2116F. Third brush control in conjunction with Current Regulator (two-rate charging control). Ventilated by fan on drive pulley.

Charging Rate Adjustment—Use test meters. Connect jumper between fuse cup on regulator and ground. Shift third brush by hand counter-clockwise to increase or clockwise to decrease charging rate until output is 21 amperes at 8.6 volts with generator at room temperature. Third brush held in position by friction. Remove jumper.

Commutator Bar Method—Shift third brush until exactly 4 commutator bars are exposed between brush and nearest main brush.

Maximum Charging Rate—As given above. Do not exceed.

Performance Data

Cold — Regulator Contacts Closed — Hot					
Amperes	Volts	R.P.M.	Amperes	Volts	R.P.M.
0	6.4	800	0	6.4	825
4	6.8	950	4	6.8	1000
8	7.25	1100	8	7.25	1200
12	7.7	1275	12	7.7	1440
16	8.1	1525	16	8.1	1825
21	8.6	2400	18.5	8.35	2500

Rotation—Counter-clockwise at commutator end.
Brush Spring Tension—24 ozs. min. (old brushes), 36 ozs. max. (new brushes).
Field Current—3.51-3.89 amperes at 6.0 volts.
Motoring Current—5.03-5.57 amperes at 6.0 volts.
Field Fuse—5 ampere in plug on regulator case.

Removal:—Pivot mounted at left front of engine. To remove, take out pivot bolts and clamp bolt. On S2 remove left front wheel and cover plate under fender.

Belt Adjustment:—Swing generator away from engine until 45-50 lb. reading on scale attached to generator frame.

REGULATOR

Auto-Lite Model TC-4301A. "Two-Charge" Type. On generator. Consists of Cutout Relay & Current Regulator (two-rate charging control). See article in Equipment Section for complete data.
For complete data, refer to Electrical Equipment Index.

Cutout Relay

Cuts In—6.5-7.25 volts.
Cuts Out—.5-2.5 ampere discharge current.
Contact Gap—.015-.045".
Air Gap—.010-.030" with contacts closed.

Current Regulator

Contacts Open—8.25-8.75 volts at 70° F.
Contacts Close—1.2-1.4 volts below opening point.
Contact Gap—.005" minimum.
Air Gap—.045" with contacts closed.

LIGHTING

LIGHTING:—**Headlamps**—Corcoran Brown, Prefocused type. Headlamps aimed straight ahead (upper beam with lenses in place). Lower beam deflected slightly to right. Upper and lower beams controlled by foot seelctor switch.

C NTINUED ON NEXT PAGE

CONTINUED FROM PRECEDIN PAGE

Switches

Lighting—DeSoto Part No. 655795. Douglas Switch which is available only through DeSoto Parts Dept.

Foot Selector—Clum Model 9654 (S1), 9661 (S2).

Stop Light—R.B.M. No. 910. Hydraulic type mounted on brake master cylinder.

Bulb Specifications

Position	Candlepower	Mazda No.
Headlamps	32-32	2331
Parking	3	63
Stop and Tail	21-3	1158
Instrument, Ign. Sw.	1½	55
Dome	15	87

MISC. ELECTRICAL

FUSES:—Lighting—20 ampere on back of ammeter.
Generator Field—5 ampere in plug on regulator.
Twin Horns—30 ampere in connector near starter.

HORNS:—Std. Motometer (S1). Klaxon Model K-33-C Type 2151 (low note), 2152 (high note) (S1 Optl.). Klaxon Model K-33-F Type 2107 (low note), 2108 (high note) (S2 Std.). Vibrator type, blended tone, twin horns operated by horn relay.

Horn Type	Current at 6 Volts	Air Gap
2107 (low note)	11-13	.040-.044"
2108 (high note)	9-11	.032-.036"
2151 (low note)	11-13	.042-.046"
2152 (high note)	10-12	.032-.036"

Horn Relay:—Model 266-TK. Requires .25 amperes at 2 volts min. to close contacts. Current draw .8 amp.
Contact Gap—.015-.025".
Air Gap—.012-.017" with contacts closed.

ENGINE

ENGINE SPECIFICATIONS:—6 cylinder, 'L' head.
Bore—3⅜". **Stroke**—4½".
Displacement—241.5 cubic inches.
Rated Horsepower—27.34(AMA).
Developed Horsepower—93 HP. (6.0-1 Head), 100 HP. (6.5-1 Head), 105 HP. (7.0-1 Head) at 3400 RPM.
Compression Ratio—6.0-1 Cast Iron Head (Std. S1), 6.5-1 Aluminum Head (Std. S2, Optl. S-1), 7.0-1 Aluminum Head (Optl. S2).
Compression Pressure—6.0-1 Std. Head 120-130 lbs. at 1000 R.P.M. or approx. 103 lbs. at cranking speed.
6.5-1 Optl. Head 125-135 lbs. at 1000 R.P.M. or approx. 110 lbs. at cranking speed.
7.0-1 Optl. head 130-140 lbs. at 1000 R.P.M. or approx. 117 lbs. at cranking speed.
Vacuum Reading—Gauge should show steady reading of 16-18" with engine idling at 6 M.P.H.
NOTE—Aluminum heads should be tightened cold. Special head studs, head gaskets and spark plugs used on aluminum head engines.

PISTONS:—Aluminum alloy, 'T' slot, Cam ground type with anodized finish (special hard oxide formed on bearing surface). **Length**—3⅞".
Weight—Held to two gram max. variation.
Removal—Pistons and rods removed from above.
Clearance—Top .022". Skirt .002". See Fitting New Pistons.
Replacement Pistons:—Finished anodized pistons furnished in standard and .003", .005", .010", .015", .020", .023", .025", .030", .040", .050", .060" oversizes. Semi-finished pistons furnished: (1) standard to .023" oversize, (2) .025-.050" oversize, not interchangeable. Pistons should be slotted and then finished on cam-grinding equipment.
Fitting New Pistons:—Micrometer gauge recommended. Using ½" feeler gauge (.002") inserted between piston and cylinder wall on side opposite slot, pull required to withdraw feeler must be 3-4 lbs.
Installing Pistons:—Slot should be toward left or away from camshaft.

PISTON RINGS:—Two compression, one undercut oil wiper ring (#3), one oil control ring per piston, all above pin. Lower ring grooves drilled radially with twelve ⅛" oil drain holes.

Ring	Width	End Gap	Side Clearance
Comp. all	⅛"	.007-.015"	.002-.003"
Oil (both)	5/32"	.007-.015"	.002-.003"

Replacement Rings:—Furnished in standard and .003", .010", .020", .030", .040", .050", .060" oversizes. NOTE—Install undercut compression and oil wiper ring with step down.

PISTON PIN:—Diameter 55/64". Length 2⅞". Pin floats in piston and rod. Held by locking rings at each end. Pin hole in rod is bronze bushed.
NOTE—Heat piston in boiling water to remove or install pins.
Pin Fit in Piston—Tight thumb push fit with piston heated to 130° F.
Pin Fit in Rod Bushing—Tight thumb push fit with pin and rod at 70° F.
Replacement Pins:—Pins furnished in standard and .003", .005", .008" oversizes. Ream rod bushing and pin holes in piston bosses for correct fit.

CONNECTING ROD:—Weight—All rods held within limits.
Length—8¾" (center-to-center).
Crankpin Journal Diameter—2⅛".
Lower Bearing—Removable steel-backed, copper-lead lined. Furnished standard and .010" undersize.
Clearance—.0005-.0025". Sideplay .0055-.0115".
Bearing Adjustment:—None (no shims). Replace bearings. Do not file rods or caps. Install new bearings with small bosses engaging grooves in rod and cap.
Installing Rods:—Lower bearings are offset. Install rods with widest half of bearing toward rear (#1, 3, 5) or toward front (#2, 4, 6). Oil hole in lower bearing upper half must be toward camshaft on all rods.

CRANKSHAFT:—4 bearing. Integral counterweights.
Journal Diameters—2½" all bearings.
Bearing Type—Removable steel-backed, babbitt-lined. Furnished standard and .010" undersize.
Clearance—.001-.002".
Bearing Adjustment:—None (no shims). Replace bearings. Do not file bearing caps.
Replacement Bearings & Bearing Caps: *Refer to Chrysler Shop Notes for complete data.*
End Thrust:—Taken by flange faces on rear (#4) bearing. Endplay .003-.007".

CAMSHAFT:—4 bearing. Non-adjustable chain drive.
Journal Diameters—#1, 2"; #2, 1 31/32"; #3 1 15/16"; #4, 1⅜".
Bearing Type—Removable steel-backed, babbitt-lined (except #4 machined in crankcase).
Clearance—.001-.003" (#1), .0015-.0035" (all others). NOTE—New bearings require no line-reaming.
End Thrust:—Taken by thrust plate at rear of sprocket hub. Endplay .003-.005".
Timing Chain:—Morse. Width 1". Pitch ½". Length 24" or 48 links.
Camshaft Setting:—Sprockets are marked. Mesh chain with sprockets turned so that 'O' marks are adjacent and in line with a straightedge across shaft centers.
NOTE—Engine must be supported under front end of oil pan and front engine support removed for work on timing chain and camshaft.

VALVES:—

	Head Diameter	Stem Diameter	Length
Intake	1 17/32"	.340-.341"	5⅝"
Exhaust	1 15/32"	.340-.341"	5⅝"

	Seat Angle	Lift	Stem Clearance
Intake	45°	11/32"	.001-.003"
Exhaust	45°	11/32"	.003-.005"

See Chrysler Special Shop Notes for Exhaust valve seat insert removal and installation instructions.

Valve Guides:—Use special tool to remove and install guides. Insert guides with taper end up (intake) and down (exhaust). Top of guide must be 13/16" below top of block. After installing finish ream new guides to inside diameter of .342-.343" (Int.) .344-.345" (Ex.)
Valve Springs:—Variable pitch type. Install springs with close coil at top. Do not compress springs to over all length of less than 1½".

	Spring Pressure	Length
Valve Closed	46-50 lbs.	2 1/32"
Valve Open	104-110 lbs.	1 11/16"

Valve Lifters:—Mushroom type. Ream guides to take following oversizes: .001", .008", .030", .060".

VALVE TIMING

Tappet Clearance: .006" Intake, .008" Exhaust, Engine Hot. .010" Exhaust clearance recommended for sustained high speed driving.
Valve Timing:—See Camshaft Setting above.
Intake Valves—Open TDC. Close 50° ALDC.
Exhaust Valves—Open 48° BLDC. Close 2° ATDC.
To Check Valve Timing—Set tappet clearance #1 intake valve at .010". Intake valve should open at top dead center when 'O' mark on impulse neutralizer at front of engine lines up with jointer on chain case cover. Reset tappet clearance at .006" h t.

LUBRICATION

LUBRICATION:—Pressure. Gear type oil pump located at right of crankcase.
NOTE—Ignition timing should be checked whenever oil pump is installed in engine.
Normal Oil Pressure:—30-40 lbs. at 30 M.P.H.
Oil Pressure Relief Valve:—Under plug on left hand side of crankcase. Operates at 40 lbs. Adjustable by changing spring. Standard spring unpainted. Heavy spring (to increase pressure) painted green. Lighter spring (to decrease pressure) painted red.
Crankcase Capacity:—6 qts. (refill).

CLUTCH

CLUTCH:—Borg & Beck Model 10A6. Single plate, dry disc type.
See Clutch Section for complete data.

Facings—Woven type, 2 required. Inside Diam. 6⅛". Outside Diam. 9⅞". Thickness ⅛".

Adjustment—Clutch pedal should just clear under side of toeboard. To adjust, turn stopscrew located above clutch pedal shaft. Free movement of clutch pedal should be 1 1/16". Adjust by loosening locknut and turning adjusting nut on clutch fork connecting rod (S1), by turning clutch shaft collar adjusting screw at right hand end of clutch pedal shaft (S2).

Removal (S1): Disconnect clutch linkage, remove fork pivot screw, take out clutch fork. Remove transmission (release bearing and spring are withdrawn with transmission), remove clutch housing pan, prick punch clutch cover and flywheel (install in same position to maintain balance), take out clutch mounting bolts, turning all bolts out evenly to release spring tension and avoid distortion of clutch cover. Remove clutch from below. Use pilot studs when removing and installing transmission to avoid springing clutch plate.

Removal (S2): Disconnect linkage, remove transmission (rotating clutch release fork shaft so that release bearing and spring are withdrawn with transmission), remove clutch housing pan, prick punch clutch cover and flywheel (install in same position to maintain balance), take out clutch mounting bolts, turning all bolts out evenly to release spring tension and avoid distortion of clutch cover. Remove clutch from below. Use pilot studs when removing and installing transmission to avoid springing clutch plate.

Automatic Clutch:—See article in Clutch Section.
See Clutch Section for complete data.

FRONT SUSPENSION
MODEL S1

Front Suspension (S1): Independent, linked parallelogram type with coil springs.
See Front Suspension Section for complete data.

NOTE—Specifications below apply with car weight on wheels (check suspension unit height first).

Wheel Setting (Front Suspension Height)—Distance from center line of lower control arm yoke pin to top of frame cross member should be 7¼-7⅜" with car weight on wheels but no load in car.

Kingpin Inclination—10° plus or minus ½° (including camber angle), 8¾-10¼° (without camber).

Camber—¼°. Limits minus ¼°-plus ½°.

Caster—1½°. **Toe In**—0-⅛".

FRONT SUSPENSION
MODEL S2

Front Suspension (S2): Conventional tubular section front axle with Reverse-Elliott ends and semi-elliptic springs.

Kingpin Inclination—9½° plus or minus ½°. Crosswise.

Caster—2°. Limits 1-3°. Adjust by wedge shims inserted between springs and spring pad on axle. Shims or angle plates furnished ½, 1, 2°.

Camber—½°. Limits ¼-¾°. No adjustment. Manufacturer recommends that no attempt be made to correct camber by bending tubular axle centers.

Toe In—0-⅛" measured at hub height. Adjust as usual by changing length of tie rod.

STEERING GEAR

Steering Gear: Gemmer Model. Worm-and-Roller type.
See Steering Gear Section for complete data.

BRAKES
MODEL S1

BRAKES:—Service—Lockheed Hydraulic, double anchor type. Hand lever applies brake at rear of transmission or rear wheel service brakes (on cars with overdrive transmission).
See Brake Section for complete data.

Wheel Cylinders—Diameters, Front Wheel (Front end 1¼", Rear 1⅜"), Rear Wheel (Front end 1⅛", Rear 1¼").

NOTE—Wheel cylinders marked 'R'—right side of car. 'L'—left side of car and not interchangeable.

Drum Diameter—10" (Del.), 11" (Cst.).

Lining—Moulded type. Width 2". Thickness 13/64" (Del.), 3/16" (Cst.). Length per wheel 19 13/16" (Del.), 22 5/32" (Cst.).

Clearance—.012" toe, .006" heel, for each shoe.

Hand Brake:—External type on drum at rear of transmission (cars without overdrive). See Service Brake for hand brake adjustment on cars with overdrive.

Adjustment—With lever in released position, remove anchor screw locking wire, turn anchor screw so that clearance between lining and drum is 1/16", lock anchor screw with wire. Adjust brake band guide bolt nut to give 1/16" clearance (as above) for lower portion of band, secure with locknut. Finally, adjust brake adjusting bolt nut to give 1/16" clearance (as above).

Drum Diameter—7 13/16".

Lining—Width 2". Thickness ¼". Length 24 3/16".

NOTE—When relining, cut out lining adjacent to anchor and chamfer ends. Clearance between anchor and sides of anchor saddle .005" maximum.

BRAKES
MODEL S2

BRAKES:—Service—Lockheed Hydraulic, double anchor type. Hand lever applies independent shaft brake.
See Brake Section for complete data.

Wheel Cylinders—Diameters, Front Wheel (Front end 1¼", Rear end 1 3/8"). Rear Wheel (Front end 1", Rear end 1⅛").

NOTE—Wheel cylinders marked 'R' right side of car, 'L' left side of car. Not interchangeable.

Drum Diameter—11".

Lining—Moulded type. Width 2". Thickness 3/16". Length 22 5/32" per wheel.

Clearance—.012" toe, .006" heel, for each shoe.

Hand Brake:—External type on drum at rear of transmission.

Adjustment—With lever in released position remove anchor screw locking wire, turn anchor screw so that clearance between lining and drum is 1/32", lock anchor screw with wire. Back off adjusting bolt nut until free. Adjust bracket bolt nuts for each end of brake band to 1/32" clearance (as above), secure with locknuts. Finally, tighten adjusting bolt nut until tension on bracket bolt nuts is just relieved at either end.

Drum Diameter—7".

Lining—Width 2½". Thickness 3/32". Length 21⅝".

NOTE—Clearance at anchor and saddle .005" max.

NOTE:—Engine hood hinged at cowl and lifts from forward end. Turn radiator ornament counter-clockwise, raise hood about 1", push back safety catch at front under lower edge of hood releasing catch and raise hood. Side panels removed by freeing latches on inside lower edges of panels.

MODEL IDENTIFICATION

SERIAL NUMBER: Stamped on right front door hinge pillar post. First numbers as follows:

	Detroit	Canada
S3 (1937)	5,517,301	9,665,556
S5 (1938)	5,598,301	9,666,936

ENGINE NUMBER: First number 1001 with prefix indicating model (S3-, S5-). Stamped on left side of cylinder block between #1 and #2 cylinders.

See Chrysler Shop Notes for engine number lettering ('Special Standard' bore and bearing sizes).

TUNE-UP

COMPRESSION:—Ratio and pressure as follows:

Ratio	Pressure at 1000 R.P.M.	At 100 R.P.M.
6.5-1 Std. hd.	140-150 lbs.	Approx. 115 lbs.
7.0-1 Optl hd.	150-160 lbs.	Approx. 117 lbs.

VACUUM READING:—Steady 18-21" idling at 6 M.P.H.

FIRING ORDER: 1-5-3-6-2-4. See diagram.

SPARK PLUGS: Champion Type J-8 or Auto-Lite A-7 (Cast Iron Heads), Champion H-10 (Aluminum Heads). 14 mm. Metric type.
Gaps—.025".

IGNITION: See Coil, Condenser, and Distributor.
Breaker Gap—.020". **Cam Angle** 38° (closed).
Automatic Advance—12° max. at 1750 RPM (distr.).
Vacuum Advance—10° distr. (IGS-4010-1), 7° distr. (IGS-4010C-1) with 12" vacuum.

IGNITION TIMING: See Ignition Timing.
Std. Setting—2° ATDC (S3 Std. 6.5-1 Head), At TDC (S3 Optl. 7.0-1 Head), At TDC (S5 Std. 6.5-1 Head), 3° ATDC (S5 Optl. 7.0-1 Head) with dead center "0" or "DC" mark or correct degree mark on impulse neutralizer at indicator on front of engine.

CARBURETION: See Carburetor & Carb. Equipment.
Idle Setting—Idle screw ½-1¼ turn open. Idle speed 300 RPM or 6 MPH.
Float Level—5/64" top of float below top edge of float bowl.
Accelerating Pump—Center hole Normal. Inner hole (Summer), Outer hole (Winter) for temperature extremes.
Fuel Pump Pressure: 3½ lbs. maximum (Type B, AL), 4¼ lbs. maximum (Type AS, AT).

MANIFOLD HEAT CONTROL:—Thermostatic type. See that shaft and valve rotate freely. When installing coil, wind free end ½ turn counter-clockwise and hook end over stop pin.
CAUTION—Do not wind up coil more than ½ turn.

VALVES: See Valve Timing.
Tappet Clearance (1937)—.010" Int., .010" Exh., Hot.
Tappet Clearance (1938)—.008" Intake, .010" Exhaust, Engine Hot. NOTE—.002" additional Exhaust clearance recommended for sustained high speeds.

STARTING: See Battery, Starter, Generator, Regulator.

IGNITION

IGNITION SWITCH: Mitchellock. Model 24-B, Type 7055 (1937), Model 24-R, Type 7061 (1938). Connected to the coil by armored cable.

Ignition Lock—Yale & Towne. Mitchell No. 7075 (1937), 6286 (1938).

COIL: Auto-Lite Model IG-4642 or CL-4602 (1937), CL-4601 (1938). Service Coil (less Switch & Cable) IG-3224JS or CL-3224JS. Mounted on dash.
Ignition Current—2.5 amperes idling, 5.5 stopped.

CONDENSER: Auto-Lite Part No. IG-3927A.
Capacity—.25-.28 microfarad.

DISTRIBUTOR: Auto-Lite Model IGS-4010-1, 4010C-1.
Single breaker, 6 lobe cam, full automatic advance type with auxiliary vacuum spark control and Manual Adjustment. ***See Electrical Equipment Section for distributor servicing data.***
NOTE—IGS-4010C-1 distributor used after Engine No. S5-1982 (U.S.), Serial No. 9,667,736 (Canada).

Breaker Gap—Set at .020".
Cam Angle or Dwell—38° (closed), 22° (open).
Breaker Arm Spring Tension—18-20 ounces.
Rotation—Clockwise viewed from top.

Automatic Advance

Distributor Degrees	Distributor R.P.M.	Engine Degrees	Engine R.P.M.
Start	350	0	700
3	400	6	800
7	1000	14	2000
9	1300	18	2600
12	1750	24	3500

Vacuum Spark Control—Integral with distributor. Mounted on distributor housing and linked directly to breaker plate. Provides additional advance for speeds above idling except when engine is accelerated or operated with wide open throttle when spark is retarded by return spring within unit.

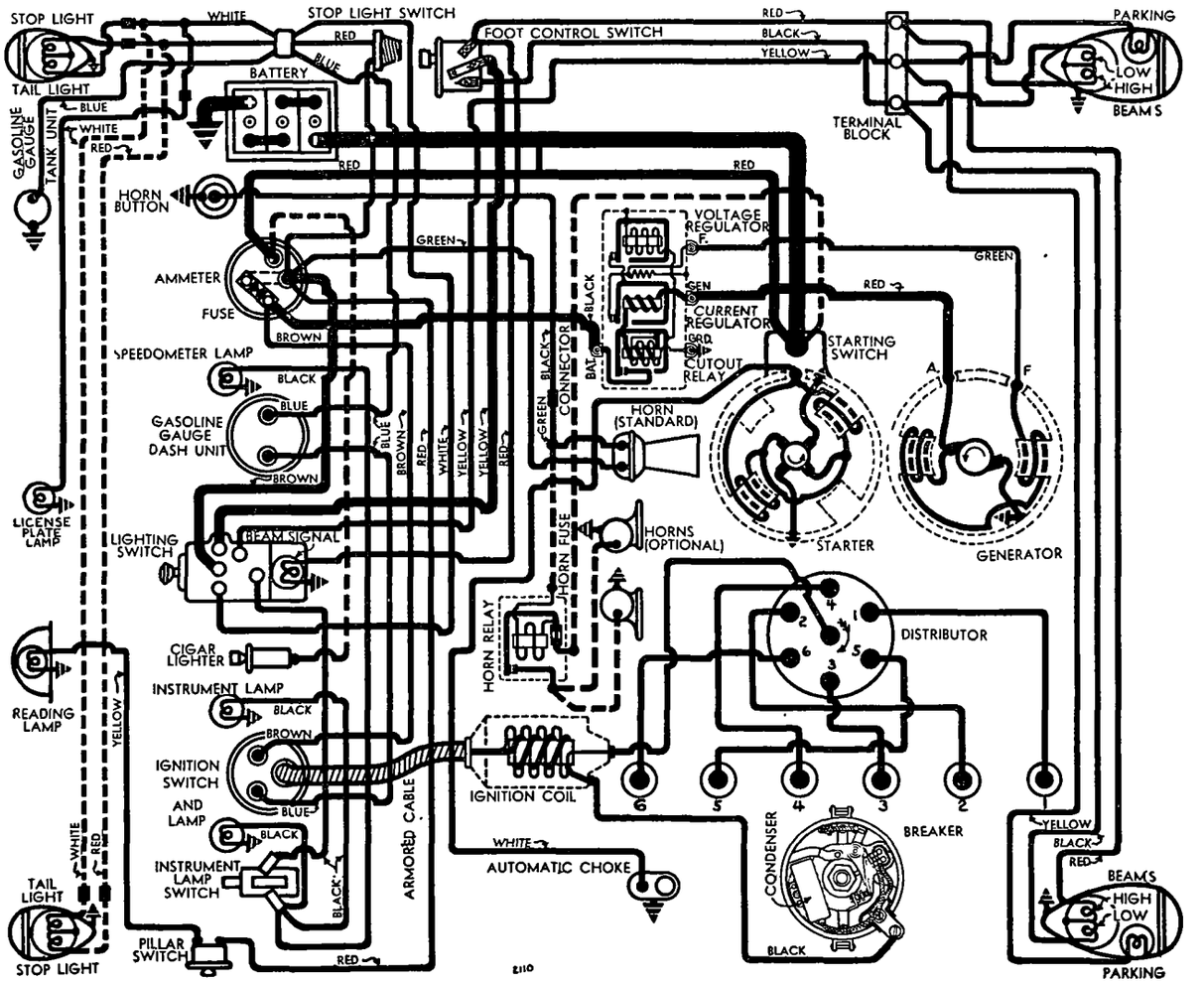

See Electrical Equipment Section for Regulator wiring with 2 Resistors (After Regulator Serial N . 8R-000001).

Vacuum Advance—IGS-4010-1

Dist. Degrees	Eng. Degrees	Vacuum (" of HG)
Start	0°	4¾"
2°	4°	6¼"
5°	10°	8⅜"
8°	16°	10½"
10°	20°	12"

Vacuum Advance—IGS-4010C-1

Start	0°	5"
1°	2°	6"
3°	6°	8"
5°	10°	10"
7°	14°	12"

Manual Adjustment—Provided to compensate for fuel and altitude conditions. See Manual Adjustment Setting.

Distributor Removal:—Mounted on left side of engine. To remove, take out hold-down screw in advance arm and disconnect vacuum line.

IGNITION TIMING

IGNITION TIMING:—Initial setting (for gasoline of approximately 70 octane rating). See Manual Adjustment Setting (following).

	Flywheel Degrees	Piston Position
S3 Std. (6.5-1)	2° ATDC	.002" ATDC.
S3 Optl. (7.0-1)	At TDC	.000" TDC.
S5 Std. (6.5-1)	At TDC	.000" TDC.
S5 Optl. (7.0-1)	3° ATDC	.004" ATDC.

NOTE—Impulse neutralizer marked 'DC' at TDC point with 15-1° graduations on either side.

Timing (Using Timing Light)—Connect timing light between distributor terminal and battery terminal on generator regulator. With #1 piston on compression, turn engine over until piston reaches firing position (see table above), stop when correct mark on impulse neutralizer at front of engine lines up with pointer on chain case cover. Loosen advance arm hold-down screw and center pointer on scale (opposite 'O' mark), tighten hold-down screw, loosen advance arm clamp bolt, rotate distributor until test lamp goes out indicating that points are just opening, tighten clamp bolt.

Timing (Using Synchroscope)—Tool No. C-374. Clip lead to #1 spark plug, direct light on impulse neutralizer (correct mark filled in with paint or chalk), idle engine, adjust distributor as directed above.

Manual Adjustment Setting:—After ignition set as above, road test car to give slight ping with wide open throttle at speeds of 10-30 M.P.H. To adjust, loosen hold-down screw and advance (counter-clockwise) or retard (clockwise) pointer on scale. Scale graduated in engine degrees. Do not advance pointer more than 5° on scale.

CARBURETOR

CARBURETION:—Carburetor—Carter (Ball & Ball) Models E6I1, E6K1, E6K2, E6K3, E6K4, (1937), E6M1 (1938 Std.), E6L1 (1938 Taxicab). 1½" single barrel, downdraft types.

NOTE—See Carburetor article in Carburetion Section for recommended changes on first 1937 carburetors. For complete data, refer to Carburetor Index.

Idle Adjustment—With engine warm and choke valve wide open (fast idle inoperative), adjust throttle stopscrew so that idle speed is approximately 300 R.P.M. or 6 M.P.H. Turn idle adjusting screw in until engine begins to hesitate or miss, then out until engine begins to roll, finally turn screw in slowly until engine fires smoothly. Final setting should be ½-1¼ turns of screw from inner closed or seated position. Readjust throttle stopscrew for correct idling speed. NOTE—Car manufacturer recommends use of vacuum gauge. Idle screw should be set to give highest reading on gauge.

Accelerating Pump Setting—Pump lever has three holes for link engagement. Set as follows:

Inner Hole (Short stroke)—Extremely warm weather or altitudes above 3000 feet.

Center Hole—Normal summer temperatures.

Outer Hole (Long stroke)—Winter temperatures.

NOTE—Lean main metering jets (high altitude calibration) may be used at lower altitudes for maximum fuel economy although with considerable reduced speed and power. See Carter (B & B) Jet Specifications in Carburetor Section.

Throttle Cracker:—Consists of an inter-connecting linkage between the starter pedal and the accelerator rod by which the throttle is opened slightly when the starter pedal is depressed. Adjusting screw located on forward side of throttle cracker lever (directly above starter switch).

Fast Idle:—Integral with carburetor. No adjustment.

Automatic Choke:—Sission Type AC-758B. See article in Carbureton Equipment Section for complete data and linkage adjustment.

For complete data, refer to Carburetion Equip. Index.

CARB. EQUIPMENT

Air Cleaner: Burgess (1937), AC No. 1528700 (1938) oil-wetted type Std., AC No. 1526838 (1937), No. 1528197 (1938) oil-bath type Optl.

NOTE—Oil Vent Cleaner AC No. 1525313 used with oil-bath type cleaner on 1938 cars.

Fuel Pump:—AC. Type B #1522995 or AT #1523647 diaphragm type standard. Type AL #1523137 or AS #1523648 combination fuel-and-vacuum pumps optional. Types AT and AS are 'inverted' design.

For complete data, refer to Carburetion Equip. Index.

Gasoline Gauge:—Auto-Lite (Motometer) Electric.
Dash Unit—NG-8305D (1937), NG-8770D (1938).
Tank Unit—NG-8257T (1937), NG-8697T (1938).

For complete data, refer to Carburetion Equip. Index.

BATTERY

BATTERY:—Willard, Type WHT-2-105, RHT-2-105 (Special Export). 6 volt, 15 plate, 105 AH. capacity (20 hr. rate).

Starting Capacity—133 amperes for 20 minutes.

Zero Capacity—300 amperes for 3.9 minutes. Five second voltage—4.27 volts.

Grounded Terminal—Positive (+) to transmission.

Dimension—Length 10 5/16". Width 7 1/16". Height 8 13/16".

Location—Left side under driver's seat.

STARTER

Auto-Lite Model MAW-4010 (Std.), MAW-4011 or 4011A (Export). Armature No. MAW-2030.

Drive—Manual (Domestic), solenoid (Export) operated pinion shaft, through overrunning clutch.

Cranking Engine—Approx. 160 amperes, 5 volts.

Rotation—Counter-clockwise at commutator end.

Brush Spring Tension—42-53 ozs. (new brushes).

Performance Data

Torque	R.P.M.	Volts	Amperes
0 ft. lb.	4900	5.5	65
.60 " "	3300	5.5	100
2.75 " "	1480	5.0	200
5.45 " "	820	4.5	300
8.50 " "	400	4.0	400
11.55 " "	110	3.5	500
11.55 " "	Lock	3.	505
18. " "	Lock	4.	670

Removal:—Flange mounted on left front face of flywheel housing. Disconnect wire connections (tape battery lead), oil filter lines and two clips on starter linkage. Remove two fastening bolts and withdraw unit.

Starting Switch:—**(MAW-4010)**—SW-2813. Mounted on starter field frame and operated by pinion shift (starter pedal). See article in Electrical Equipment Section for pedal adjustment.

(MAW-4011, A)—Auto-Lite Type SS-4104 (MAW-4011), SS-4203 (MAW-4011A). Solenoid switch controlled by pushbutton on instrument panel.

For complete data, refer to Electrical Equipment Index.

Solenoid Switch

Closes against 170 lb. pull with ⅜" air gap drawing 65 amperes. Holds switch closed with draw of 15 amperes (hold-in coil only).

Solenoid Relay

Contacts Close—3.5-4.5 volts. **Open**—1.5-2.5 volts.
Contact Gap—.025-.030". **Air Gap**—.005-.007" (closed).

GENERATOR

MODEL S3

Auto-Lite Model GBW-4803-A, B (Exp.), C (Exp. Bolivia). Armature No. GBW-2006F. Two brush, straight shunt type with external voltage and current regulation. Ventilated by fan on drive pulley.

Maximum Charging Rate—22 amps., 8.0 volts, 1780 R.P.M. and above with load or discharged battery (Current Regulator setting). Actual charging rate controlled by Voltage Regulator and is dependent on battery condition.

Charging Rate Adjustment—No adjustment on Generator. See Regulator section below for Voltage and Current Regulator settings.

Cold Performance Data			Hot Performance Data		
Amps.	Volts	R.P.M.	Amps.	Volts	R.P.M.
0	6.4	775	0	6.4	870
4	6.7	940	4	6.7	1065
10	7.1	1200	10	7.1	1385
16	7.6	1480	16	7.6	1780
20	7.85	1675	20	7.85	2125
22	8.0	1780	22	8.0	2400

NOTE—Current regulator limits maximum output to 22 amperes.

Rotation—Counter-clockwise at commutator end.

Brush Spring Tension—53 ozs. max. (new brushes).

Field Current—1.66-1.84 amperes at 6.0 volts.

Motoring Current—3.04-3.36 amperes at 6.0 volts.

Removal:—Pivot mounted at left front of engine. To remove, take out pivot bolts and clamp bolts.

Belt Adjustment:—Loosen clamp bolt and pivot bolts, swing generator out until scale (attached to field frame) reads 40-50 lbs., tighten bolts.

GENERATOR

MODEL S5

Auto-Lite Model GDA-4801A, B (Export). Armature No. GDA-2006F. Two brush, straight shunt type with external voltage and current regulation. Ventilated by fan on drive pulley.

Charging Rate Adjustment—No adjustment at generator. See Regulator section for Voltage and Current settings.

Maximum Charging Rate—28 amperes, 8.0 volts, 2025 R.P.M. and above with load or discharged battery (Current Regulator setting). Actual charging rate controlled by Voltage Regulator and is dependent on battery condition.

C NTINUED N NEXT PA E

C NTINUED FR M PRECEDIN PAGE

Performance Data

Cold Amperes	Volts	R.P.M.	Hot Amperes	Volts	R.P.M.
0	6.4	930	0	6.4	1010
4	6.6	1060	4	6.6	1180
8	6.85	1210	8	6.85	1350
12	7.1	1350	12	7.1	1530
16	7.3	1500	16	7.3	1730
20	7.5	1660	20	7.5	1950
24	7.75	1830	24	7.75	2220
28	8.0	2025	28	8.0	2520

NOTE—Current reg. limits output to 28 amps.
Rotation—Counter-clockwise at commutator end.
Brush Spring Tension—53 ozs. max. (new brushes).
Field Current—1.66-1.84 amperes at 6.0 volts.
Motoring Current—3.50-4.15 amperes at 6.0 volts.
Removal:—Pivot mounted at left front of engine. To remove, take out pivot bolts and clamp bolt.
Belt Adjustment:—Loosen clamp bolt and pivot bolts, swing generator out until scale (attached to field frame) reads 40-50 lbs., tighten bolts.

GENERATOR

SPECIAL EQUIPMENT

SPECIAL GENERATOR:—Model GCB-4802A (City Police). Used with Model VRB-4009A Regulator. *See 1939 DeSoto Model S6 article for complete data.*

REGULATOR

Auto-Lite Model VRB-4005A (1937 "GBW" Gen.), VRB-4004B (1938 "GDA" Gen.). Voltage-Current Type. Consists of Cutout Relay, vibrating type Voltage Regulator, and Current Regulator in case on dash.
For complete data, refer to Electrical Equipment Index.
NOTE—Regulator case cover is sealed. Serviced on exchange basis if seals not broken. Cover must be removed to make adjustments.

Cutout Relay

Cuts In—6.4-7.0 volts Cold.
Cuts Out—.5 ampere min., 3.0 amperes max. Cold.
Contact Gap—.015" minimum.
Air Gap—.034" min., .038" max. with contacts open. Measure at hinge end of core.

Voltage Regulator

Setting—7.5-7.8 volts at 70°F (Before Serial No. 8R-000001), 7.3-7.6 volts at 70°F (After 8R-000001). See Electrical Equipment Section for complete settings and Regulator changes.
To Check—Connect ammeter in charging line at 'B' terminal on regulator (use short heavy leads). Connect voltmeter between regulator 'B' and 'GD' terminals. Operate generator, charging fully charged battery, at speed equivalent to 30 M.P.H. car speed. Voltage should be within limits of 7.4-7.8 volts (Before #8R-000001), 7.3-7.6 volts (cold 70°), 7.1-7.4 volts (hot 140°) for units after #8R-000001.
To Adjust (with cover removed)—Change regulator armature spring tension by bending lower spring hanger.
Contact Gap—.010" min., .020" max. with armature against stop pin.
Air Gap—.0595-.0625" with contacts just opening.

Current Regulator

Setting—21-23 amperes—marked "22" (VRB-4005A), 27-29 amperes—marked "28" (VRB-4004B).
To Check (without breaking seals)—Connect ammeter and voltmeter as directed for Voltage Regulator test. Operate generator at 30 M.P.H., add load (use bank of headlamp bulbs or turn on car lights and discharge battery) so that generator will charge at peak rate bringing current regulator into action. Charging current should not exceed 28 amperes. If more than slight excess noted, Current Regulator is defective.
To Adjust (with cover removed)—Change regulator armature spring tension by bending lower hanger.
Contact Gap & Air Gap—See Voltage Regulator.

LIGHTING

LIGHTING:—**Headlamps**—Corcoran-Brown, prefocused type. Upper and lower beams controlled by foot control switch with lighting switch in full out position.
Headlamp Adjustment—Aim headlamps straight ahead (upper beam lighted, lenses in place, car unloaded) with center of hot spot 3" below center horizontal line of headlamps at 25 feet.
Headlamp Beam Indicator—In light switch knob. Lighted when headlamp upper beam in use.

Switches—1937

Lighting—De Soto Part No. 667044.
Instrument Light—De Soto Part No. 667043.
Foot Selector—De Soto Part No. 659512.
Stop Light—De Soto Part No. 661721.

Switches—1938

Lighting—De Soto Part No. 684038.
Instrument Panel—De Soto Part No. 678457.
Foot Selector—De Soto Part No. 659512.
Stop Light—De Soto Part No. 677112.

Bulb Specifications

Position	Candlepower	Mazda No.
Headlamps	32-32	2331
Tail and Stop	3-21	1158
Parking	1½	55
Instrument	1	51
Dome	15	87
Rear License	3	63

MISC. ELECTRICAL

FUSES:—**Lighting (used on early cars)**—20 amperes on back of ammeter. Later cars equipped with Circuit Breaker (see below).
Single Horn—Early cars as shown on diagram. On later cars horn feed taken from BAT terminal on regulator with 20 ampere fuse in connector on dash.
Dual Horns—30 amperes on horn relay. NOTE—New long type (SFE-30) fuse used. Replaces 3AG type.
CIRCUIT BREAKER:—**Used on later cars.** Thermostatic, non-adjustable, vibrating type. Mounted on back of ammeter and protects lighting circuits. Limits current to 30 amperes.
HORNS (1937): Single—Auto-Lite Model HB-4002 or HB-4002B Standard.
Dual—Auto-Lite horn set HC-5103 (up to car serial no. 5,552,569), HC-5103B (above). Dual horns operated by HR-4002 horn relay.
Horn Relay:—Auto-Lite Model HR-4002. A 30 ampere fuse mounted on base.
Contacts Close—3.0-4.0 volts. **Open** 1.5-2.5 volts.
Contact Gap—.026". **Air Gap**—.012-.017" (closed).
HORNS (1938): Klaxon K26-J Type 2351 Single horn Std., Auto-Lite Horn Set Model HC-5105 Twin horns Optl. Twin horns operated by horn relay.
Horn Relay:—Auto-Lite Model HR-4101. Has 30 ampere fuse mounted on base.
Contacts Close—2.5-3.5 volts.
Contact Gap—.026". **Air Gap**—.012-.017" (closed).

ENGINE

ENGINE SPECIFICATIONS:—6 cylinder, 'L' head.
Bore—3⅜". **Stroke**—4¼".
Displacement—228.1 cubic inches.
Rated Horsepower—27.34 (A.M.A.).
Developed Horsepower—93 HP. (Std. 6.5-1 head), 100 HP. (Optl. 7.0-1 head) at 3600 R.P.M.
Compression Ratio and Pressure—As follows:

Ratio	Pressure at 1000 RPM.	At 100 RPM.
6.5-1 Std. C.I. hd.	140-150 lbs.	Approx. 115 lbs.
7.0-1 Optl. Al. hd.	150-160 lbs.	Approx. 117 lbs.

Vacuum Reading—Gauge should show steady reading of 18-21" with engine idling at 6 M.P.H.
PISTONS:—Aluminum alloy, U-slot, cam ground type with anodized finish. **Length**—3⅞".
Weight—17.45 ozs. (plus or minus 2 grams).
Removal—Pistons and rods removed from above.
Clearance—Top .022". See Fitting New Pistons.
Replacement Pistons:—*See Chrysler Shop Notes.*
Fitting New Pistons:—Check piston size with micrometer across large diameter at bottom of skirt. Insert .002" feeler between cylinder wall and piston (with pin removed) on side opposite slot. With piston and block at 70°F. pull to withdraw feeler 5-7 lbs.
Installing Pistons:—Slot away from camshaft.
PISTON RINGS:—2 undercut compression, 2 slotted oil rings per piston, above pin. Lower ring grooves drilled with ten ⅛" oil drain holes (#3), five (#4).

Ring	Width	End Gap	Side Clearance
Compression	⅛"	.007-.015"	.002-.0035"
Oil	5/32"	.007-.015"	.0015-.003"

Replacement Rings:—Furnished std., .003", .005", .010", .015", .020", .025", .030", .040", .050", .060" oversize.
PISTON PIN:—**Diameter**—55/64". **Length**—2⅞". Floating type. Pin hole in rod bronze bushed.
Pin Fit in Piston—Thumb push fit (piston at 130°).
Pit Fit in Rod Bushing—Thumb push fit at 70°F.
Replacement Pins:—Furnished std. & .003", .005", .008" oversize. Ream bushing and pin hole to size.
CONNECTING ROD: Length—8".
Weight—31.91 ozs. (1937), 32.80 ozs. (1938).
Crankpin Journal Diameter—2⅛".
Lower Bearing—Removable steel-backed, babbitt-lined. Furnished std. & .002", .010", .012" undersize.
Clearance—.0005-.0025". **Sideplay**—.0055-.0115".
Bearing Adjustment:—None. Install new bearings with bosses engaging grooves in rod and cap.
Installing Rods:—Oil spit hole toward camshaft.
CRANKSHAFT:—4 bearing, 7 counterweights with impulse neutralizer mounted on forward end.
Journal Diameters—2½" all bearings.
Bearing Type—Removable steel-backed, babbitt.
Clearance—.001-.002".
Bearing Adjustment:—*See Chrysler Shop Notes for Engine Removal (recommended), Front Main Bearing Cap Removal, Adjustment data, & Crankshaft Oil Seals.*
Replacement Bearings & Bearing Caps: *Refer to Chrysler Shop Notes for complete data.*
End Thrust:—Taken by flange faces on rear (#4) main bearing. **Endplay**—.003-.007".
CAMSHAFT:—4 bearing. Non-adjustable chain drive.
Journal Diameters—#1, 2"; #2, 1 31/32"; #3, 1 15/16"; #4, 1¼".
Bearing Type—Removable steel-backed, babbitt-lined bushings (except #4 machined in block).
Clearance—.001-.003" (#1), .0015-.0035" (all others).
End Thrust:—Taken by thrust plate behind camshaft sprocket hub. **Endplay**—.002-.006".

ENGINE

CONTINUED FROM PRECEDING PAGE

Timing Chain:—Morse #1866 (restricted bend). Width 1". Pitch .500". Length 24" or 48 links.
See Chrysler Special Shop Notes for front end removal for work on timing chain.

Camshaft Setting:—Mesh chain with sprockets turned so that 'O' marks are adjacent and in line with a straightedge across the shaft centers.

VALVES:—	Head Diameter	Stem Diameter	Length
Intake	1 21/32"	.340-.341"	4 25/32"
Exhaust	1 17/32"	.340-.341"	4 25/32"
	Seat Angle	**Lift**	**Stem Clearance**
All valves	45°	11/32"	.001-.003"

See Chrysler Special Shop Notes for Exhaust valve seat insert removal and installation.

Valve Guides:—Install with taper end up to ⅞" below top of block, then ream to .342-.343".

Valve Springs:—Free length approx. 2". Limit of compression 1⅜".

	Spring Pressure	Spring Length
Valve Closed	40- 45 lbs.	1 3/4"
Valve Open	101-109 lbs.	1 13/32"

Valve Lifters:—Mushroom type. Ream guides from above for following oversizes: .001", .008", .030", .060".

VALVE TIMING

Tappet Clearance: .010" Intake & Exhaust Hot (1937), .008" Intake, .010" Exhaust with engine Hot (1938). .012" Exh. setting recommended for sustained high speed driving. Valves accessible by removing right front wheel and fender panel.

Valve Timing (1937): See Camshaft Setting above.
Intake Valves—Open TDC. Close 50° ALDC.
Exhaust Valves—Open 48° BLDC. Close 2° ATDC.
To Check Timing—Set tappet clearance #1 intake valve at .014". Intake valve should open at top dead center when '0' mark on crankshaft pulley at front of engine lines up with pointer on chain case cover. Reset tappet clearance at .010" (hot).

Valve Timing (1938): See Camshaft Setting above.
Intake Valves—Open 8° BTDC. Close 42° ALDC.
Exhaust Valves—Open 48° BLDC. Close 2° ATDC.
To Check Timing—Set tappet clearance #1 intake valve at .014". This valve should open with piston 8° (.0260") before top dead center with 8° BTDC. mark on impulse neutralizer at front of engine lined up with pointer on chain case cover. Reset tappet clearance at .008" (hot).

TRANSMISSION

LUBRICATION:—Gear type oil pump right of engine.
See Chrysler Special Shop Notes for oil pump removal and installation instructions.

Normal Oil Pressure:—30-45 lbs. at 30 M.P.H.

Oil Pressure Relief Valve:—Under plug on left side of engine. Operates at 40 lbs. Adjustable. Change to heavy (green) spring to increase pressure, light (red) spring to decrease pressure.

Crankcase Capacity:—5 quarts (refill).

COOLING

COOLING SYSTEM:—Water Pump—Centrifugal, belt-driven, packless type.
See Water Pump Section for complete data.
Removal—With water drained and fan belt removed, remove fan blades and pulley (attached by 4 capscrews), disconnect pump hoses, remove nuts on pump mounting studs and lift assembly out.

Thermostat:—Fulton. In water outlet on cyl. head.
NOTE—Install thermostat with bellows down.
Setting—Start to open 150-155°F. Fully open 176°F.

Water Capacity:—20 quarts.

Drain Valves:—At lower left corner of radiator and on left side of block in front of distributor.

CLUTCH

CLUTCH:—Borg & Beck Model 10A7, 11A6 (Taxi). Single plate, dry disc type. 1938 clutch has new spiral grooved type facings and pressure plate oil baffle.
NOTE—Clutch marked for identification by number stamped on cover: 899 (1937), 913 (1938), 917 (1938 Taxicab).
See Clutch Section for complete data.
Facings—Molded-woven (spiral grooved), 2 required. Thickness ⅛". Inside diameter 6", 6½" (Taxi). Outside diameter 10", 11" (Taxi).
Adjustment—Adjust stopscrew (to rear of pedal) so that pedal arm just clears floor board. Pedal free movement should be 1 1/16". Adjust by turning adjusting nut on connecting rod at release fork.
Removal:—Remove floor board, release fork pull-back spring, free clevis pin on release fork rod. Remove transmission (see Transmission Removal below), remove housing underpan, mark cover and flywheel, remove cover bolts, lower assembly out.
NOTE—Remove release fork by pulling fork out of housing.

TRANSMISSION

TRANSMISSION:—Own make. All helical gear type with synchro-mesh for second and high speeds.
See Transmission Section for complete data.
Removal:—Remove floor boards, propeller shaft (see Propeller Shaft Center Bearing below for 7 pass. models), disconnect hand brake cable (remove brake band on cars with Gas Saver). Remove two front cover screws, take off nuts on mounting studs (remove two upper mounting studs by installing 2 nuts on outer end of stud and turning studs out), install two pilot studs and withdraw transmission.

OVERDRIVE

Overdrive Transmission: Warner Model AS25-T86 (1937), AS1-T86A (1938) Optl. NOTE—This overdrive called "Gas Saver" Transmission.
See Transmission Section for complete data.
Removal—Same as for standard transmission (above) after overdrive control disconnected.

UNIVERSALS

UNIVERSAL JOINTS:—Detroit-Universal. Series 4200. Ball and trunnion type with roller bearings, 2 used.
NOTE—Three universals used on 7-pass. sedan.
See Universals Section for complete data.

Propeller Shaft Center Bearing:—Used on 7 pass. sedans. *See Chrysler Special Shop Notes for removal and installation instructions.*

REAR AXLE

REAR AXLE:—Own make. Semi-floating, hypoid gear type with Hotchkiss drive.
See Rear Axle Section for complete data.
Ratio—4.1-1 (std.). 4.3-1 (7 pass. & Gas. Saver tr.).
Backlash—.006-.010". Screw adjustment.
Removal:—Remove wheel, hub, and drum assembly (using screw type hub puller). Place block under brake pedal, disconnect brake line, remove backing plate and oil seal, pull axle shaft and bearing (Tool C-158). With shafts removed, carrier may be removed by disconnecting rear universal at flange, and removing housing capscrews.
Wheel Bearing Adjustment—Controlled by shims at flanged ends of axle housing. With wheel and hub removed measure endplay with dial indicator. To adjust remove backing plate (see above) and add or remove shims (equally at both sides) to proper clearance. **Endplay**—.003-.008".

SHOCK ABSORBERS

Delco Model 1162-G (Front 1937), 1162-D (Front 1938), 1163-U (Rear 1937-38). Direct acting, hydraulic type.
See Shock Absorber Section for complete data.

FRONT SUSPENSION

Front Suspension:—Independent, linked parallelogram type with coil springs.
See Front Suspension Section for complete data.
Specifications below apply with no passenger load.
Kingpin Inclination—4¾-6°.
Camber—Plus ¼°. Limits minus ¼° to plus ½°.
Caster—1½°. Limits ½-2½°.
Toe-In—1/16" (0-⅛"). Set long tie rod at exactly 31 7/32" (1937), 31⅝" (1938) between ball centers, then adjust short tie rod for correct toe-in.
Steering Geometry—Outer wheel 20°. Inner wheel 22°40', 22°50' (7 passenger sedans).

STEERING GEAR

Steering Gear: Gemmer Model 300 (1937), 305 (1938). Worm-and-Roller type. Model 305 has "push-pull" adjustments.
See Steering Gear Section for complete data.

BRAKES

MODEL S3

BRAKES:—Service—Lockheed hydraulic, double anchor type. Hand brake at rear of transmission.
See Brake Section for complete data.
Wheel Cylinders—Stepped or two-stage bore type:
Front Wheel—Front cyl. 1¼", Rear 1⅜".
Rear Wheel—Front cyl. 1⅛", Rear 1¼".
Drum Diameter—10".
Lining—Moulded. Width 2". Thickness .200". Length (Rear wh.-rear shoe) 7 25/64", (all others) 9 29/32".
Clearance—.012" toe, .060" heel for each shoe.
Braking Power—55% front wheels, 45% rear.

Hand Brake:—On drum at rear of transmission.
Adjustment—Fully release hand brake lever. Remove anchor screw locking wire (left side), adjust anchor screw for .025" clearance bet. band & drum, set anchor screw with lock wire. Free large adjusting bolt nut (upper end of band), loosen locknut, adjust guide bolt nut to .025" cl. bet. band & drum, set with locknut. Tighten adjusting bolt nut until tension on either side of guide bolt is just relieved (groove in nut must align with ridge in lockwash'r).
Drum Diameter—6".
Lining—Width 2". Thickness 5/32". Lgth. 16 15/16".
NOTE—Clearance at anchor and saddle .005" max.

BRAKES

MODEL S5

BRAKES:—Service—Lockheed hydraulic, double anchor type. Hand brake at rear of transmission.
See Brake Section for complete data.
Wheel Cylinders—Stepped or two-stage bore type.
Front Wheel—Front cylinder 1¼". Rear 1⅜".
Rear Wheel—Front cylinder 1⅛". Rear 1¼".
Drum—Cast-iron. Diameter—11".
Lining—Moulded. Width 2". Thickness 13/64"
Length (front shoe) 11 15/32", (rear shoe) 7 31/32".
Clearance—.012" toe, .008" heel for each shoe.
Braking Power—55% front, 45% rear.

Hand Brake:—External at rear of transmission.
Adjustment—*See Chrysler Shop Notes.*
Drum—Cast-iron. Diameter—6".
Lining—Width 2". Thick. 5/32". Length 17 1/16".

FRONT END ASSEMBLY (UNIT) REMOVAL:—Should be removed as a unit for work on front of engine. *See Chrysler Shop Notes for directions.*

MODEL IDENTIFICATION

SERIAL NUMBER: Stamped on right front door hinge pillar post. First numbers as follows:

	Detroit	Canada
S6 (1939)	5,634,001	9,668,606
S7 Custom (1940)	5,688,001	9,393,281
S7 Deluxe (1940)	6,064,301	
S7 Taxicab (1940)	5,096,701	

ENGINE NUMBER: First number 1001 with prefix indicating model (S6-, S7-). Stamped on left side of engine block between #1 and #2 cylinders. *See Chrysler Shop Notes for engine number lettering ('Special Standard' bore and bearing sizes).*

TUNE-UP

COMPRESSION:—Ratio and pressure as follows:

Ratio	Pressure at 1000 RPM	At 100 RPM
6.5-1 cast-iron hd.	145-155 lbs.	Approx. 115 lbs.
*7.0-1 aluminum hd.	150-160 lbs.	Approx. 120 lbs.

NOTE—7.0-1 Head Std. on 7 Pass. Sedans.

VACUUM READING: Steady 18-21" idling at 6 MPH.

FIRING ORDER: 1-5-3-6-2-4. See diagram.

SPARK PLUGS: Auto-Lite Type A-7 or A-7B (Cast Iron Head), AL-6 (1939 Aluminum Head), AL-7A (1940 Aluminum Head). 14 mm. Metric type. **Gaps**—.025".

IGNITION: See Coil, Condenser, and Distributor. **Breaker Gap**—.020". **Cam Angle** 38° (closed). **Automatic Advance**—12° max. at 1750 RPM (distr.). **Vacuum Advance**—7° distr. with 12" vacuum (IGS-4102-1), 15" vacuum (IGS-4102C-1, 4108-1), or 10° distr. with 12" vacuum (IGS-4102-B-2).

IGNITION TIMING: See Ignition Timing. **Std. Setting**—2° BTDC. (6.5-1 Cast Iron Head), 2° ATDC. (7.0-1 Aluminum Head) with 2° mark (before or after dead center mark "DC") on impulse neutralizer at indicator on front of engine.

CARBURETION: See Carburetor & Carb. Equipment. **Idle Setting**—Idle screw ½-1¼ turn open. Idle speed 6 MPH. **Float Level**—5/64" from top of float (not float seam) to top edge of float bowl. **Accelerating Pump**—Center hole Normal. Inner hole (Summer), Outer hole (Winter) for temperature extremes. **Fuel Pump Pressure:** 3½ lbs. maximum (Type B, AL), 4¼ lbs. maximum (Type AS, AT).

MANIFOLD HEAT CONTROL:—Thermostatic coil type. See that shaft and valve rotate freely. When installing coil, wind up free end ½ turn counterclockwise and hook end over stop stud. CAUTION—Do not wind coil up more than ½ turn.

VALVES: See Valve Timing. **Tappet Clearance:**—.008" Int., .010" Exh. (hot & idling). .002" add'tl exh. clearance desirable for sustained high speeds. NOTE—Tappet screws self-locking (no locknuts). Remove right front wheel, lower housing panel and fuel pump shield for access to valves.

STARTING: See Battery, Starter, Generator, Regulator.

IGNITION

IGNITION SWITCH: Mitchellock. Model 24-R, Type 8054 (1939), 8197 (1940). Connected to coil by armored cable. **Ignition Lock**—Yale & Towne or Briggs & Stratton. B&S No. 80651. Key Series 1BP to 1000BP. Groove #24.

COIL: Auto-Lite Model IG-4657 (1939), IG-4661 (1940). Service Coil (less Switch & Cable) IG-3224JS. Coil is mounted on the dash. **Ignition Current**—2.25 amperes idling, 5.5 stopped.

CONDENSER: Auto-Lite Part No. IG-3927A. **Capacity**—.25-.28 microfarad.

DISTRIBUTOR: Auto-Lite Model IGS-4102-1 or 4102C-1 (Std. 1939), IGS-4102B-2 (Canada 1939), IGS-4108-1 (Std. 1940). Single breaker, 6 lobe cam, full automatic advance type with auxiliary vacuum spark control and manual (Octane Selector) adjustment. NOTE—IGS-4102-1 used up to Eng. No. 6132 (1939). **Breaker Plate Identification**—Maximum vacuum advance limited by slot and marked with number as follows: #7 (IGS-4102-1, 4102C-1, 4108-1), #10 (IGS-4102B-2).

Breaker Gap—Set at .020". Limits .018-.022".

Cam Angle or Dwell—38° closed, 22° open (distr.).

Breaker Arm Spring Tension—17-20 ounces.

Rotation—Clockwise viewed from the top.

Automatic Advance

Distributor Degrees	Distributor R.P.M.	Engine Degrees	Engine R.P.M.
Start	350	0	700
3	400	6	800
6	850	12	1700
9	1300	18	2600
12	1750	24	3500

Vacuum Spark Control—Integral type (on distributor, linked directly to breaker plate). Provides additional advance at speeds above idling except when engine accelerated or operated with wide open throttle (spark retarded by return spring in unit).

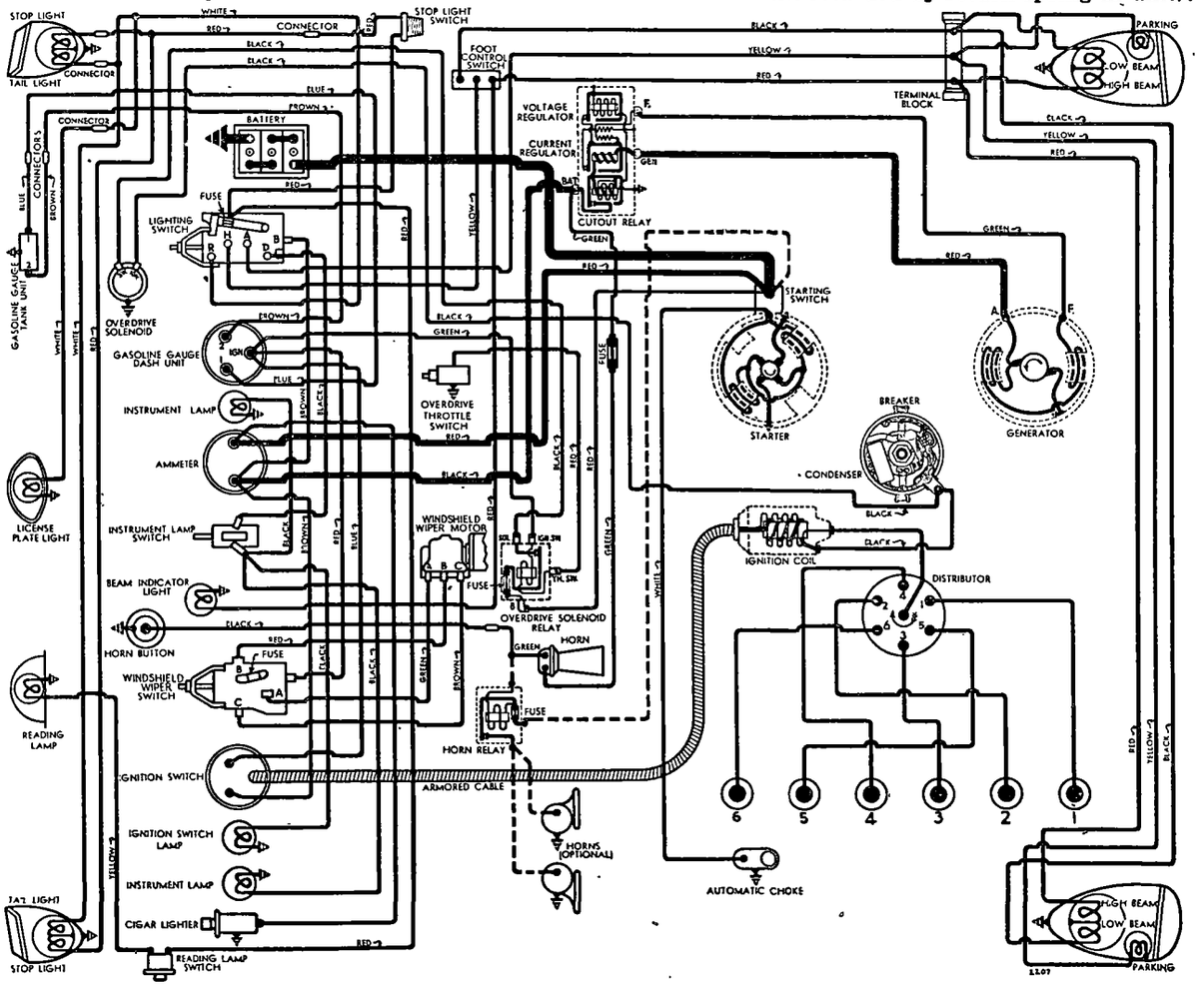

1939 M DEL S6

Vacuum Advance—IGS-4102-1

Distr. Degrees	Eng. Degrees	Vacuum (" of HG)
Start	0°	5"
3°	6°	8"
5°	10°	10"
7°	14°	12"

Vacuum Advance—IGS-4102C-1, 4108-1

Start	0°	5"
3°	6°	9-10"
5°	10°	12-13"
7°	14°	15"

Vacuum Advance—IGS-4102B-2

Start	0°	4¾"
2°	4°	6¼"
5°	10°	8⅜"
8°	16°	10½"
10°	20°	12"

Manual Adjustment—At distributor. Provides 10° advance or retard from center '0' position. See Ignition Timing for adjustment.

Distributor Removal:—Mounted on left side of crankcase. To remove, disconnect vacuum line, take out hold-down screw in lock plate.

IGNITION TIMING

IGNITION TIMING:—Initial setting (correct for fuel of 70 octane rating at low altitudes for both cast-iron and aluminum heads) shown below. See Manual adjustment (following) for correction (not to exceed 4° either way) dependent on fuel regularly used and operating conditions.

	Flywheel Degrees	Piston Position
6.5-1 cast-iron hd.	2° BTDC	.002" BTDC.
7.0-1 aluminum hd.	2° ATDC	.002" ATDC.

NOTE—Impulse neutralizer marked 'DC' at TDC point with 15 (1°) graduations on either side.

Timing (Using Timing Light)—Connect timing light between distributor and battery terminal on the generator regulator. With #6 piston on compression, turn engine over until piston reaches firing position (see Initial Setting above), stop when correct mark on impulse neutralizer lines up with pointer on chain case cover. Loosen lock-plate hold-down screw, center pointer on scale, tighten screw. Loosen lock-plate clamp bolt, rotate distributor until timing light just goes out, tighten clamp bolt.

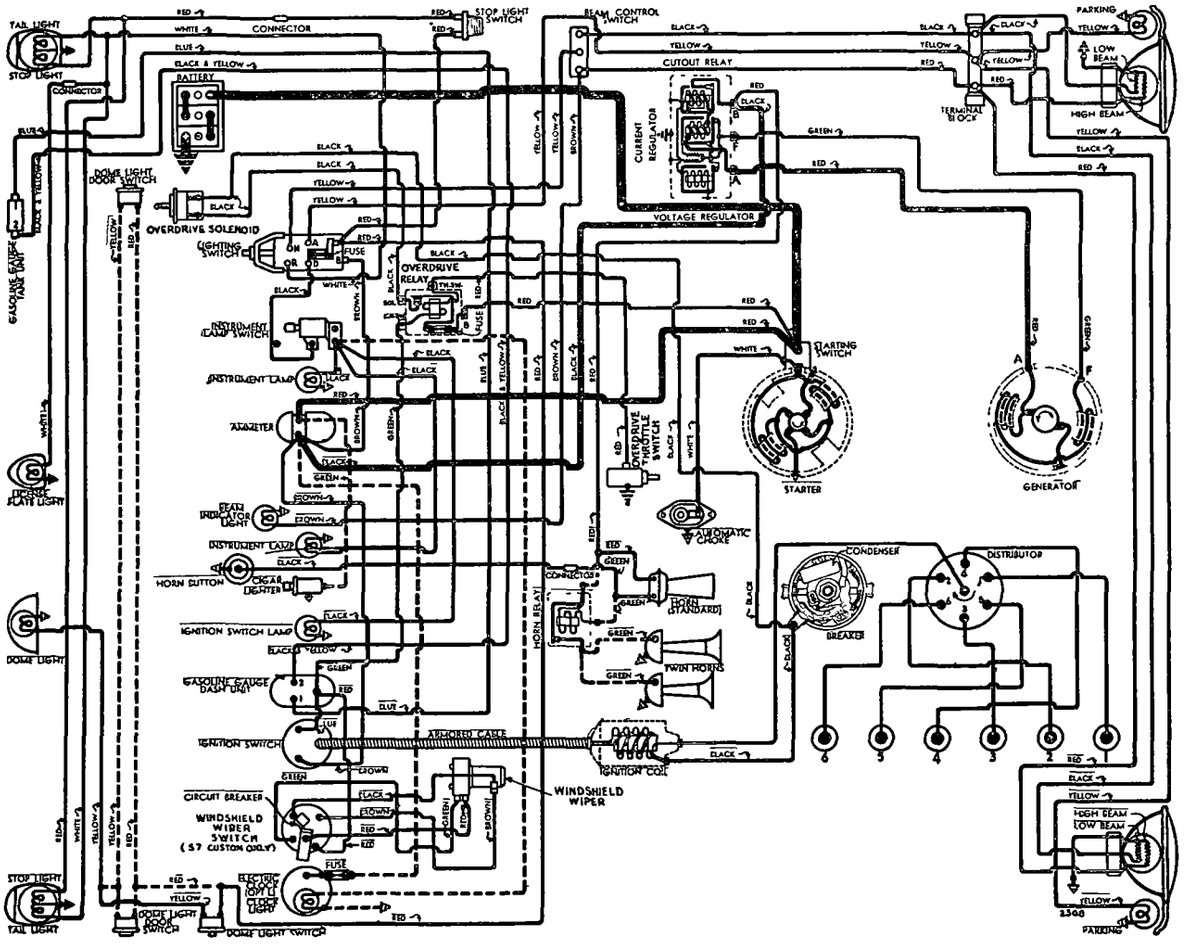

1940 M DEL S7

Check Manual Adjustment as directed below.

Timing (Using Synchroscope)—Tool C-374. Clip lead to #1 spark plug, direct light on impulse neutralizer (fill in correct mark on impulse neutralizer with chalk or paint), idle engine and adjust distributor as directed above.

Manual Adjustment—Standard ignition setting should be varied not more than 4° (cast-iron head —6° or .015" BTDC to 2° or .002" ATDC. Aluminum head—2° or .002" BTDC to 6° or .015" ATDC) so that slight ping noticeable between 10 and 30 M.P.H. when accelerating with wide open throttle for best performance. To adjust, loosen hold-down screw, rotate distributor counter-clockwise to advance spark (if no ping noted), clockwise to retard spark (if ping too severe) not more than 4°. Scale graduated in engine degrees.

CARBURETOR

Carter (Ball & Ball) Model E6N1 (Early 1939), E6N2 (Late 1939, Early 1940), E6N3 (Late 1940). 1½" single barrel, downdraft type.

For complete data, refer to Carburetor Index.

NOTE—Carburetor jets changed (new metering jet used on E6N3). *See Carter (B&B) carburetor article and Jet Table in Carburetor Section for complete data.*

Idle Adjustment—With engine warm and running at slow idle speed (choke valve wide open, fast idle inoperative), set throttle stopscrew for 6 MPH idle speed. Adjust idle adjusting screw until engine fires smoothly (½-1¼ turns open—turn screw in for leaner mixture). Readjust idle speed. NOTE—Car manufacturer recommends use of vacuum gauge. Idle screw should be set to give highest reading on gauge.

Accelerating Pump Setting—Pump lever has three holes for pump link engagement. Set as follows: Inner Hole (min. stroke)—Extreme hot temperatures or altitudes above 3000 feet.
Center Hole (med. stroke)—Normal setting.
Outer Hole (max. stroke)—Winter temperatures.
NOTE—If lean metering jets (High Alt. calibration) used at lower altitudes for increased economy, reduced speed and power will result (not recommended by manufacturer). See Carter (B&B) Jet Table in Carburetor Section for complete jet data.

Float Level—5/64" from top of float (not soldered seam) to top edge of float bowl.

Throttle Cracker:—Interconnector between starting pedal and accelerator rod which opens throttle slightly when pedal depressed for starting. Adjust by loosening throttle pickup clamp bolt (above starter switch), shift clamp on rod.

Fast Idle:—Not adjustable (built-in type).

Automatic Choke:—Sisson Type AC-758B.

For complete data, refer to Carburetion Equip. Index.

CARB. EQUIPMENT

Air Cleaner:—AC. #1529041 oil-wetted type standard. #1529042 oil-bath type optional.
NOTE—#1525313 crankcase vent cleaner also used.

Fuel Pump:—AC Type AT #1523912 diaphragm type. Type AL #1523915 (1939 RHD Cars), Type AS #1523913 (1940 Cars with swinging windshield) combination fuel-and-vacuum pumps. NOTE—Type B #1523914 fuel pump also used on 1939 cars.

For complete data, refer to Carburetion Equip. Index.

Gasoline Gauge: Auto-Lite Electric. Dash Unit—NG-9040D (1939), 9349D (1940). Tank Unit—NG-8989T (1939), NG-9329T (1940).

For complete data, refer to Carburetion Equip. Index.

CONTINUED N NEXT PAGE

CONTINUED FR M PRECEDING PAGE

BATTERY

BATTERY:—Willard Type SW-2-105. 6 volt, 15 plate, 105 ampere hour capacity (20 hour rate).
Starting Capacity—133 amperes for 20 minutes.
Zero Capacity—300 amperes for 3.9 minutes. Five second voltage—4.3 volts.
Grounded Terminal—Positive (+) grounded to transmission.
Dimensions—Length 10¼". Width 7". Height 9".
Location—On left side under front seat.

STARTER

Auto-Lite Model MAW-4016. Armature MAW-2030.
Drive—Overrunning clutch, manual pinion shift.
Rotation—Counter-clockwise at commutator end.
Cranking Engine—150-175 amperes, 5.1 volts.
Brush Spring Tension—42-53 ozs. (new brushes).

Performance Data

Torque	R.P.M.	Volts	Amperes
0 ft. lbs.	4900	5.5	65
.60 " "	3300	5.5	100
2.75 " "	1480	5.0	200
5.45 " "	820	4.5	300
8.50 " "	400	4.0	400
11.55 " "	110	3.5	500
11.5 " "	Lock	3.0	505
18.0 " "	Lock	4.0	670

Removal:—Flange mounted on left front face of flywheel housing, Remove cables, 2 clips on starter linkage, oil filter lines, 2 mounting bolts. Lift off.
Starting Switch:—Model SW-2813. On starter. Manually operated by starter (pinion shift) pedal.

GENERATOR

MODEL S6

Auto-Lite Model GDA-4801A (Std.), Armature GDA-2006F. Model GCB-4802A (City Police '37, '38, '39), GCB-4802B (State Police '37). Armature GCB-2006F. Two brush type with current-voltage control.
Charging Rate Adjustment—See Regulator data.
Maximum Charging Rate—As given in tables below with load or discharged battery (Current Regulator setting). Actual charging rate controlled by Voltage Regulator and dependent on battery condition.

Performance Data—GDA-4801A

Cold			Hot		
Amperes	Volts	R.P.M.	Amperes	Volts	R.P.M.
0	6.4	930	0	6.4	1010
4	6.6	1060	4	6.6	1180
8	6.85	1210	8	6.85	1350
12	7.1	1350	12	7.1	1530
16	7.3	1500	16	7.3	1730
20	7.5	1660	20	7.5	1950
24	7.75	1830	24	7.75	2220
*28	8.0	2025	28	8.0	2520

Performance Data—GCB-4802A, B

0	6.4	460	0	6.4	500
4	6.7	540	4	6.7	580
8	6.9	620	8	6.9	670
12	7.2	720	12	7.2	765
16	7.4	800	16	7.4	865
20	7.7	890	20	7.7	990
*25	8.0	900	25	8.0	1120

*—Current Regulator setting. See Regulator data.
Rotation—Counter-clockwise at commutator end.
Brush Spring Tension—53 oz. (GDA), 64-68 oz. (GCB).
Field Current—1.66-1.84 amperes at 6.0 volts (GDA), 1.5-1.7 amperes at 6.0 volts (GCB).
Motoring Current—3.50-4.15 amps. at 6.0 volts (GDA), 2.8-3.2 amperes at 6.0 volts (GCB).

GENERATOR

MODEL S7

Auto-Lite Model GDZ-4801A (Std.), GDZ-4801B or GEB-4801A (Police). Armature No. GDZ-2006F (GDZ-4801A, B), GEB-2006F (GEB-4801A). Two brush type with current voltage control. Air-cooled.
Charging Rate Adjustment—No adjustment at generator. Charging rate controlled by Voltage Regulator and maximum output by Current Regulator. *See Regulator data following.*
Maximum Charging Rate—35 amperes (GDZ Gen.), 32 amperes (GEB Gen.), 8.0 volts, 2200 Gen. RPM (GDZ), 1400 RPM (GEB), at approx. 24 MPH (GDZ) and above with load or discharged battery (Current Regulator setting). Actual charging rate controlled by voltage regulator and dependent on battery condition.

Performance Data—GDZ-4801A, B

Cold			Hot		
Amperes	Volts	R.P.M.	Amperes	Volts	R.P.M.
0	6.4	925	0	6.4	1000
4	6.6	1035	4	6.6	1120
8	6.75	1140	8	6.75	1235
12	6.95	1250	12	6.95	1350
16	7.15	1370	16	7.15	1460
20	7.3	1480	20	7.3	1590
24	7.5	1590	24	7.5	1730
28	7.7	1710	28	7.7	1900
32	7.9	1820	32	7.9	2090
*35	8.0	1900	35	8.0	2250

Performance Data—GEB-4801A

0	6.4	560	0	6.4	600
4	6.6	630	4	6.6	675
8	6.8	700	8	6.8	750
12	7.0	775	12	7.0	840
16	7.2	845	16	7.2	930
20	7.4	920	20	7.4	1030
24	7.6	1000	24	7.6	1140
28	7.8	1075	28	7.8	1260
*32	8.0	1150	32	8.0	1400

*—Current regulator setting.
Rotation—Counter-clockwise at commutator end.
Brush Spring Tension—53 ozs. max. (GDZ Gen), 64-68 ozs. (GEB Gen.), with new brushes.
Field Current—1.60-1.78 amperes at 6.0 volts (all).
Motoring Current—4.16-4.60 amperes (GDZ Gen.), 4.0-4.5 amperes (GEB Gen.) at 6.0 volts.
Removal:—Pivot mounted at left side of engine at front. To remove, take out pivot and clamp bolts.
Belt Adjustment:—Loosen clamp and pivot bolts, swing generator out until scale (attached to field frame) reads 40-50 lbs., tighten bolts.

REGULATOR

MODEL S6

Auto-Lite Model VRB-4004B (GDA Gen.), VRB-4004C (GCB Gen. '37 Police), VRB-4009A (GCB Gen. '38-'39 Police). Current-Voltage type. In case on dash. *See article in Electrical Equipment Section.*
NOTE—Regulator case cover is sealed. Serviced on exchange basis if seals not broken.

Cutout Relay

Cuts In—6.4-7.0 volts Cold.
Cuts Out—.5 ampere min., 3.0 amperes max. Cold.
Contact Gap—.015" minimum.
Air Gap—.034" min., .038" max. with contacts open. Measure at hinge end of core.

Voltage Regulator

Setting—7.3-7.6 volts at 70° F. (Regulator Serial No. 8R-000001 Up). *See Electrical Equipment Section for settings and changes on units before this serial number.*
To Check (without breaking seals)—Connect ammeter in charging line at regulator 'B' terminal, voltmeter between 'B' and 'GD' terminals. Operate generator at speed equivalent to 30 MPH., charging battery, until voltage is steady. Voltage reading should be 7.3-7.7 volts (Cold—70°F), 7.1-7.4 volts (Hot—140°F).
To Adjust (with cover removed)—Change regulator armature spring tension by bending lower spring hanger slightly. See Electrical Equipment Section
Contact Gap—.010-.020" (armature against stop pin).
Air Gap—.0595-.0625" with contacts just opening.

Current Regulator

Setting (VRB-4004B)—27-29 amperes (marked '28' on cover. **(VRB-4004C,9A)** 24-26 amps. (marked '25').
To Check (without breaking seals)—Connect test meters as for Voltage check (above). Operate generator at 30 MPH., charging battery, add load (use bank of headlamp bulbs, or turn on car lights and discharge battery) so that generator charges at peak rate and Current Regulator operates. Charging current should not exceed maximum setting noted above. If more than slight excess noted, regulator is defective.
Adjustment, Contact Gap, Air Gap—Same as for Voltage Regulator (above).

REGULATOR

MODEL S7

Auto-Lite Model VRP-4001A (GDZ Gen.), VRP-4001B (GEB Gen.). Current-voltage type. In case on dash. NOTE—For negative battery ground, VRP-4005A (GDZ Gen.), VRP-4005B (GEB Gen.) are used. ***For complete data, refer to Electrical Equipment Index.***
NOTE—Regulator case cover is sealed. Serviced on exchange basis if seals not broken.

Cutout Relay

Cuts In—6.4-6.6 volts at approximately 1000 generator RPM (VRP-4001A,5A), 600 RPM (VRP-4001B,5B).
Cuts Out—4.2-4.8 volts (approx. 4-6 amps. disch.).
Contact Gap—.015" minimum.
Air Gap—.031" min., .034" max. with contacts open. Measure at hinge end of core.

Voltage Regulator

Setting—7.2-7.5 volts at 70° F.
To Check (without breaking seals)—Connect ammeter in charging line at regulator 'B' terminal, voltmeter between 'B' terminal and ground. Operate generator at speed equivalent to 30 MPH charging battery until voltage is steady. Voltage reading should be 7.2-7.5 volts at 70° F. See Electrical Equipment Section for voltages at other temperatures.
To Adjust (with cover removed)—Change regulator armature spring tension by bending lower spring hanger slightly. See Electrical Equipment Section.
Contact Gap—.012" Min. (armature against stop pin).
Air Gap—.048-.052" with contacts just opening.

Current Regulator

Setting (VRP-4001A,5A)—34-36 amperes (marked '35' on cover). **(VRP-4001B, 5B)** 31-33 (marked '32').
To Check (without breaking seals)—Connect test meters as for Voltage check (above). Operate generator at speed equivalent to 30 MPH charging battery, turn on car lights and accessories so that generator charges at peak rate and Current Regulator operates. Charging current should not exceed maximum setting noted above. If more than slight excess noted, regulator is defective.
Adjustment & Contact Gap—Same as for Voltage Regulator (above).
Air Gap—.034-.038" (before No. 5U-000001), .048-.052" (after above No.) with contacts just opening.

LIGHTING

Headlamps. Hall. Pre-focused type (1939), "Sealed Beam" type (1940). Upper and lower beams controlled by Beam Selector Switch on toeboard.
For complete data, refer to Electrical Equipment Index.
Headlamp Adjustment—Aim upper beam for each lamp straight ahead with center of hot spot 3" below lamp center height.
Beam Indicator—Red light on panel above instrument cluster. Lighted with upper beam on.

Switches—1939

Lighting—Chrysler No. 853295 or 852535.
Beam Selector—Chrysler No. 853323 or 659512.
Instrument—Chrysler No. 695943.
Stop Light—Chrysler No. 677112.

Switches—1940

Lighting—Chrysler No. 854756, 854757 Optl.
Beam Selector—Chrysler No. 859974.
Instrument—Chrysler No. 853371.
Stop Light—Chrysler No. 677112.

Bulb Specifications

Position	Candlepower	Mazda No.
Headlamps		Sealed Beam
Parking, Instrument	1½	55
Beam Indicator, Ign. Sw.	1	51
Stop and Tail	21-3	1158
Rear License	3	63
Dome or Reading	15	87

NOTE—Headlamps on 1939 cars were 32-32 cp., Mazda No. 2331.

MISC. ELECTRICAL

FUSES: Lighting—20 ampere (1939), 30 ampere (1940), located on back of lighting switch.
Horns (1939)—20 ampere in horn lead (Single Horn), 30 ampere on horn relay (Dual Horns).
Horns (1940)—No fuse used.
Windshield Wiper (1939)—14 ampere. On switch or in lead.
Windshield Wiper (1940)—No fuse (circuit breaker).
Clock—2 ampere. In connector behind clock.
Transmission Overdrive Control—20 amp. On relay.

HORNS (1939): Single—Klaxon Model K-16 Type 2016.
Dual—Auto-Lite HH or HL-4001 (low pitch), HH or HL-4002 (high pitch). Dual horns operated by relay.
Horn Relay: Auto-Lite Model HR-4101. 30 ampere fuse on base. **Contacts Close**—2.5-3.5 volts.
Contact Gap—.026". **Air Gap**—.012-.017" (closed).

HORNS (1940): Single—Delco-Remy No. 1999911 Std.
Dual—Auto-Lite HO-5001 horn set. HL-4001 (low pitch), HL-4002 (high pitch) operated by horn relay.
Current Draw—Approx. 7 amps. single, 35-40 dual.
Horn Relay:—Auto-Lite Model HRC-4001 (no fuse).
Contacts Close—1.5-3.0 volts. **Open**—.5 volt.
Contact Gap—.026". **Air Gap**—.016-.020" (closed).

ENGINE

ENGINE SPECIFICATIONS:—6 cylinder, 'L' head type.
Bore—3⅜". **Stroke**—4¼".
Displacement—228.1 cu. ins. **Rated HP**—27.34.
Developed Horsepower—93 HP (1939 6.5-1 Head), 100 HP. (1940 6.5-1 Head), 100 HP. (1939 7.0-1 Head), 105 HP. (1940 7.0-1 Head) at 3600 RPM.

Compression Ratio and Pressure—As follows:

Ratio	Pressure at 1000 RPM	At 100 RPM
6.5-1 cast-iron hd.	145-155 lbs.	Approx. 115 lbs.
7.0-1 aluminum hd.	150-160 lbs.	Approx. 120 lbs.

Vacuum Reading—Steady 18-21" idling at 6 MPH.
See Chrysler Shop Notes for Engine Removal data.

PISTONS: Aluminum alloy, U-slot, cam ground type with Anodic finish (1939), tin-plated (1940).
Length—3⅞". **Weight**—17.5 ozs. stripped.
Removal—Pistons and rods removed from above.
Clearance (1939)—Top .021", Skirt .0005-.0010".
Clearance (1940)—Top .0115", Skirt .0000-.0010".

Original Bore & Piston Sizes, Replacement Pistons:—*See Chrysler Shop Notes for sizes and markings.*

Fitting New Pistons:—Check piston size with micrometer across large diameter at bottom of skirt. Insert .002" feeler between cylinder wall and piston (pin removed) on side opposite slot. With piston and block at 70° F, pull to withdraw feeler 5-7 lbs.
Installing Pistons—Slot away from camshaft.

PISTON RINGS:—4 rings, all above pin—#1 Compression (upper inner edge beveled), #2 Comp. (lower outer edge stepped), #3 & 4 (slotted oil rings).

Ring	Width	End Gap	Side Clearance
Comp. (Top)	⅛"	.007-.015"	.002-.004"
Comp. (#2)	⅛"	.007-.015"	.0015-.0035"
Oil Control	5/32"	.007-.015"	.001-.0025"

NOTE—Side Clearance for oil control rings on 1939 cars—.0015-.003".
Replacement Rings:—Std. & .003", .005", .010", .015", .020", .023", .025", .030", .040", .050", .060" oversize.

PISTON PIN:—**Diameter**—55/64". **Length**—2⅞". Floating type. Pin hole in rod bronze bushed.
Pin Fit in Piston—Thumb push fit (piston at 130°).
Pin Fit in Rod Bushing—Thumb push fit at 70°F.
Replacement Pins:—Std. & .003", .005", .008" oversize.

CONNECTING ROD: Length—8".
Weight—32.80 ozs. (1939), 35.2 ozs. (1940) with bearings and bolts.
Crankpin Journal Diameter—2⅛".
Lower Bearing—Removable, precision type, steel-backed babbitt.
Clearance—.0005-.0025". **Sideplay**—.0055-.0115".

Replacement Bearings: *Refer to Chrysler Shop Notes.*
Bearing Adjustment:—None (no shims). Install bearings with boss engaging groove in rod and cap.
Installing Rods:—Oil spit hole toward camshaft.

CRANKSHAFT:—4 bearing type with 7 counterweights.
Journal Diameters—2½" all bearings.
Bearing Type—Removable, precision type steel-backed, babbitt-lined. **Clearance**—.001-.002".

Bearing Adjustment:—*See Chrysler Shop Notes for Bearing Removal and Adjustment, Front Main Bearing Cap Removal, and Crankshaft Front & Rear Oil Seals.*
Replacement Bearings & Bearing Caps: *Refer to Chrysler Shop Notes for complete data.*

End Thrust:—Taken by flange faces on rear (#4) main bearing. **Endplay**—.003-.007".

CAMSHAFT:—4 bearing. Non-adjustable chain drive.
See Chrysler Shop Notes for camshaft removal.
Journal Diameters—#1, 2"; #2, 1 31/32"; #3, 1 15/16"; #4, 1¼".
Bearing Type—Removable steel-backed, babbitt-lined bushings (except #4 machined in block).
Clearance—.001-.003" (#1), .0015-.0035" (all others).

End Thrust:—Taken by thrust plate behind camshaft sprocket hub. **Endplay**—.002-.006".

Timing Chain: Morse. Type 1866N, No. 2661 (1939), Type 1883N, No. 2661 (1940). Width 1", Pitch .500 (½"), Length 24" or 48 links.

Camshaft Setting:—Sprockets marked. Mesh chain with sprockets turned so that '0' marks are adjacent and in line with a straightedge across shaft centers.

VALVES:	Head Diameter	Stem Diameter	Length
Intake	1 21/32"	.340-.341"	4 25/32"
Exhaust	1 17/32"	.340-.341"	4 25/32"

	Seat Angle	Lift	Stem Clearance
All Valves (1939)	45°	11/32"	.001-.003"
All Valves (1940)	45°	3/8"	.0015-.0035"

See Chrysler Shop Notes for Exh. valve seat insert data.

Valve Guides:—Remove from above. Press new guides in (stepped end down) with upper end ⅞" below top of block (Tool CM-83), finish ream to .3425-.3435".

Valve Springs:—Install with closely coiled ends to top.

Free length 2".	Spring Pressure	Length
Valve Closed	40-45 lbs.	1¾"
Valve Open	107-115 lbs.	1⅜"

Valve Lifters:—Mushroom type (remove from below). Stem diam. ⅝". Ream holes from above (pilot in valve stem guide). Oversizes .001", .008", .030", .060".
Lifter Clearance in Block—.000-.001".

VALVE TIMING

Tappet Clearance:—.008" Int., .010" Exh. (hot & idling). .002" additional exh. clearance desirable for sustained high speeds. NOTE—Tappet screws self-locking (no locknuts). Remove right front wheel, lower housing panel and pump shield for access.

Valve Timing (1939): See Camshaft Setting above.
Intake Valves—Open 8° BTDC. Close 42° ALDC.
Exhaust Valves—Open 48° BLDC. Close 2° ATDC.
These figures correct with .014. tappet clearance.
Valve Timing Check—Set tappet clearance #6 intake valve at .014". This valve should open with piston 8° (.0260") before top dead center with 8° BTDC. mark on impulse neutralizer aligned with pointer on chain cover. Reset tappet cl. at .008" hot

Valve Timing (1940): See Camshaft Setting above
Intake Valves—Open 12° BTDC. Close 44° ALDC.
Exhaust Valves—Open 50° BLDC. Close 6° ATDC.
Valve Timing Check—With .014" (cold) tappet clearance #6 intake valve should open with #6 piston 12° or .059" BTDC with 12th graduation before DC mark on impulse neutralizer aligned with pointer on chain cover. Reset tappet cl. at .008" hot.

LUBRICATION

LUBRICATION:—Pressure (pump on right of engine).
See Chrysler Shop Notes for oil pump removal.
Normal Oil Pressure:—30-45 lbs. @ 30 MPH, 15 idling.
Oil Pressure Relief Valve:—Under plug below starter. Opens at 40-45 lbs. To increase pressure use heavy (green), to decrease light (red), spring.
Crankcase Capacity:—5 quarts (refill).

COOLING

Capacity—19 qts. (1939), 17 qts. (1940).
See Chrysler Shop Notes for radiator core removal.
Water Pump:—Packless type with belt drive.
See Water Pump Section for complete data.
Removal—Drain water. Remove fan blade assembly, pulley, radiator outlet hose at pump, by-pass elbow (with small hose), pump mounting stud nuts, fan belt adjusting strap at generator, adjusting strap stud and lower pump stud from block.
Thermostat—Bishop & Babcock or Fulton. On head.
Setting—Starts to open 157-162°F. Fully open 183°F.
Temperature Gauge: Motometer (Auto-Lite) Vapor Tension type, No. 9039 (1939), 9348 (1940).
See Miscellaneous Section for complete data.

CONTINUED ON NEXT PAGE

CONTINUED FROM PRECEDING PAGE

CLUTCH

CLUTCH:—Borg & Beck Model 10A7, 11A6 (Taxi) with Borglite Driven Member. Single plate, dry disc with spiral grooved facings, pressure plate oil baffle & pedal over-center return spring.
NOTE—Cover stamped with identification number as follows: 928 (1939 10A7), 938 (1940 10A7), 931 (1939-40 11A6).
See Clutch Section for complete data.

Facings—Spiral wound moulded woven, 2 used. Inside Diam. 7" (10A7), 6½" (11A6), Outside Diam. 10" (10A7), 11" (11A6). Thickness ⅛" (all).

Adjustment:—Pedal should just clear toeboard (adjust stopscrew on lower end) and have 1" free movement (adjusting nut on link rod at clutch fork).

Removal:—Remove release fork pull-back spring, Transmission (see following) and housing underpan. Disconnect release fork from pivot and pull out as far as possible. Mark cover and flywheel, remove cover screws evenly, lower assembly out.

TRANSMISSION

Warner Model (1939), Own Make (1940). All helical gear, constant-mesh, synchro-mesh (Second and High), sliding gear (Low and Reverse).
See Transmission Section for complete data.

Transmission Control:—Steering column shift Std.
See Transmission Section for complete data.

Removal:—Remove propeller shaft (loosen comp. flange nut if transmission to be disassembled—see Chrysler Shop Notes for Propeller Shaft Center Bearing Removal on 7 pass.). Disconnect speedometer cable, battery ground cable, hand brake cable, and gear shift rod and cable at transmission. Remove mounting stud nuts, cover assembly, and two upper mounting studs (insert pilot studs in these holes), pull transmission straight back and remove from beneath car.

OVERDRIVE

Overdrive: Warner Model AS3-T86A Overdrive Transmission Optl. (1939), Type R7B Overdrive Unit Optl. (1940). Overdrive has electrical "kick-down" control.
See Transmission Section for complete data.

Overdrive Transmission Removal—Same as above, plus the following: Remove hand brake assembly (U-joint flange, brake drum, band and support). Disconnect solenoid wires (remove coil) and overdrive cable at case. Remove 2 upper mounting studs (insert pilot studs in these holes), withdraw assembly. On 1939 model, turn transmission over on left side while it is being withdrawn until shaft clears release bearing, then push up at forward end (shaft just above bearing) and forward, with shaft between clutch fingers, until rear end can be lowered.
Overdrive Control (1940): Overdrive control units are as follows:
Overdrive Solenoid—Auto-Lite SSB-4001.
Throttle Switch Setting—3/32" gap between switch plunger & contact screw (throttle just wide open).
Control Relay—Auto-Lite HR-4201. Use only 20 ampere fuse on relay (on left side of engine dash).

UNIVERSALS

Detroit Universal Series 4200 (1939-40), Series 7200 (1940). Universals are Ball-and-Trunnion Type (4200), Cross Type (7200) with roller bearings. Two used.
See Universals Section for complete data.
Propeller Shaft Center Bearing:—Used on 7 passenger sedans. *See Chrysler Shop Notes for servicing.*

REAR AXLE

REAR AXLE:—Own Make. Semi-floating, Hypoid gear type with Hotchkiss drive.
See Rear Axle Section for complete data.
Ratio—4.1-1 (Std. 5 pass.). 4.3-1 (5 pass. with overdrive—Std. 7 pass.). 4.56-1 (7 pass. with Overdrive).
Backlash—.006-.010". Screw adjustment.

Removal:—Disconnect drive shaft at rear universal. Remove axle shafts (see below) and capscrews on carrier flange. Pull carrier assembly out.
Axle Shaft Removal—Remove wheel, hub, and drum assembly (use screw type hub puller—Tool C-319), block brake pedal, disconnect brake line at wheel cylinder, take off backing plate with oil seal, pull shaft and bearing (Tool C-158). NOTE—Use Tool C-358 to pull oil washer, C-201, 2 to install.

Wheel Bearing Adjustment:—Shims between backing plate and axle housing. With wheel and hub removed, check endplay with dial indicator. To adjust, remove backing plate, add or remove shims equally at both wheels. **Endplay—.003-.008".**

SHOCK ABSORBERS

SHOCK ABSORBERS:—Domestic—Delco Direct Acting. **Export**—Delco Direct Acting or Delco Adjustable Direct acting (Special Equip. Dom. also).
See Shock Absorber Section for complete data.

FRONT SUSPENSION

Front Suspension:—Independent, linked parallelogram type with coil springs.
See Front Suspension Section for complete data.
Kingpin Inclination—4¾° to 6°.
Camber—Pos. ¼°. Limits 0° to Pos. ¾°.
Caster—1½°. Limits ½-2½° (1939), Neg. 1° to Pos. 1° (1940). Not adjustable.
Toe-In—1/16" (0-⅛"). On 1939 cars, set long tie rod at exactly 31⅝" between ball centers, then adjust short rod for correct toe-in. On 1940 cars, adjust both tie rods equally.
Steering Geometry—Inner wheel 22°40' (1939), 22° (1940), Outer wheel exactly 20°.

STEERING GEAR

Steering Gear: Gemmer Model 305 Worm-and-Roller type with "push-pull" adjustments.
See Steering Gear Section for complete data.

BRAKES

BRAKES:—Service. Lockheed hydraulic, double anchor type. Hand lever applies independent shaft brake.
See Brake Section for complete data.
Wheel Cylinders—Stepped or two-stage bore type.
Drums—Centrifuse type. Diameter—11".
Lining—Molded. Width 2". Thickness 13/64". Length (front shoe) 11 15/32", (rear shoe) 7 31/32".
Clearance—.012" toe, .006" heel, for each shoe.

Hand Brake:—On drum at rear of transmission.
Adjustment—*See Chrysler Shop Notes for data.*
Drum—Cast-iron type. Diameter—6".
Lining—Width 2". Thick. 5/32". Length 17 1/16".

MISC. MECHANICAL

WINDSHIELD WIPER: Auto-Lite EW-5001, EW-5101 (1939), EWB-4001 (1940 except Custom Models). Electric type. Protected by fuse in feed lead (Early 1939), fuse on switch (Late 1939), circuit breaker on switch (1940).
See Miscellaneous Section for complete data.
Fuse (1939)—14 ampere. On switch or in lead.
Circuit Breaker (1940)—Vibrating, thermostatic type. Starts to operate with current of 12 amperes.

1940 Power Operated Conv. Top: Vacuum Power type.
See Miscellaneous Section for complete data.

HOOD LOCK, FRONT END ASSEMBLY & OIL PAN REMOVAL:—*Refer to Chrysler Shop Notes for data.*

MODEL IDENTIFICATION

SERIAL NUMBER: Stamped on right front door hinge pillar post. First numbers as follows:

	Detroit	Canada
1941 S8C Custom	5,720,401	9,373,196
1941 S8S Deluxe	6,096,001	
1941 S8 Taxicab	5,099,101	
1942 S10C Custom	5,771,001	9,949,051
1942 S10S Deluxe	6,142,001	
1942 S10 Taxicab	5,101,701	

ENGINE NUMBER: First number 1001 (each year) with prefix indicating model (S8-, S10-). Stamped on left side of engine block between #1 and #2 cylinders. *Refer to Chrysler Shop Notes for Engine Number Lettering data ('Special Standard' bore and bearing sizes).*

TUNE-UP

COMPRESSION: Pressure—115-125 lbs. (S8 1941), 125-135 lbs. (S10 1942) at cranking speed (125 RPM).

VACUUM READING:—18-21" steady idling at 6 MPH.

FIRING ORDER: 1-5-3-6-2-4. See diagram.

SPARK PLUGS: Auto-Lite Type A-7 (Cast Iron Heads), AL-7 (Aluminum Heads). 14 mm. Metric type.

Gaps—.025"

NOTE—Spark plug tightening tension 26-32 ft. lbs.

IGNITION: See Coil, Condenser, and Distributor.

Breaker Gap—.020" **Cam Angle** 38° (closed).

Automatic Advance—12° max. at 1750 RPM (IGS-4113-1, 4117, 4117-1, 4202-1), 11° max. at 1400 RPM (IGS-4202A-1, 4202C-1). Distr. degrees & RPM.

Vacuum Advance—7° distr. with 15" Vacuum (IGS-4113-1, 4117, 4117-1, 4202-1), 6° distr. with 14" vacuum (IGS-4202A-1), 9° distr. with 16" vacuum (IGS-4202C-1).

IGNITION TIMING: See Ignition Timing.

Std. Setting—At TDC (1941 All Engines), At TDC (1942 Engines with Aluminum Pistons), 3½-4½° ADTC. (1942 Engines with Cast Iron Pistons) with dead center "DC" mark or correct degree mark on impulse neutralizer at indicator on front of engine.

CARBURETION: See Carburetor & Carb. Equipment.

Idle Setting—Idle screw ½-1½ turns open. Idle speed 6 MPH. (All Cars with Std. Trans.), 450 RPM or 4 MPH max. (1941 Cars with Simplimatic Trans.), 5 MPH max. (1942 Cars with Simplimatic Trans.). CAUTION—On 1941 cars, if engine will not idle smoothly at slow speed, crankcase ventilator and tube may be plugged. See LUBRICATION following for Crankcase Ventilator data.

Float Level—5/64" (E6N3; E6S2,S3; E6V1; E6U1,U2; EE1), 1/16" (EB1, EF1, EG1) top of float below top edge of float bowl.

Accelerating Pump—Center hole Normal, Inner hole (Summer), Outer hole (Winter) for temperature extremes.

Fuel Pump Pressure: 4 lbs. maximum.

MANIFOLD HEAT CONTROL:—Thermostatic coil type. See that valve and shaft rotate freely. When installing coil, place inner end in slot in valve shaft, wind free end up one turn only counter-clockwise and hook free end over stop.

VALVES: See Valve Timing.

Tappet Clearance:—.008" **Intake, .010" Exh.** (hot and idling), .002" additional exh. clearance desirable for sustained high speeds. NOTE—Tappet screws self-locking. Remove right front engine inspection shield between fender and frame for access to valves.

STARTING: See Battery, Starter, Generator, Regulator.

IGNITION

Ignition Switch:—Mitchellock Model 24-R, No. 8112 (Std.), Model 30-R, No. 8793 (with Simplimatic Trans.). NOTE—Model 30-R switch has extra terminal for transmission control (for Simplimatic transmissions).

Ignition Lock—Yale & Towne or Briggs & Stratton. B&S No. 80592. Key Series 1BP to 1000 BP. Groove 24.

COIL: Auto-Lite Model IG-4669 (Std. Trans.), IG-4671 (with Simplimatic Trans.). Service winding (less switch and cable) IG-3224JS. Mounted on dash.

Ignition Current—2.25 amperes idling, 5 stopped.

CONDENSER: Auto-Lite Part No. IG-3927A.

Capacity—.25-.28 microfarad.

DISTRIBUTOR: Auto-Lite Model IGS-4113-1 or 4202-1 (1941 Std.), IGS-4117 or 4117-1 (1941 with Tachometer Drive), IGS-4202A-1 (1942 with Aluminum Pistons), IGS-4202C-1 (1942 with Cast Iron Pistons). Single breaker, 6 lobe cam, full automatic advance type with auxiliary vacuum spark control and manual adjustment.

Breaker Plate Identification—Number stamped on plate as follows: #7 (IGS-4113-1, 4117, 4117-1, 4202-1), #6 (IGS-4202A-1), #9 (IGS-4202C-1).

Breaker Gap—.020". Limits .018-.022".

Cam Angle or Dwell—38° closed, 22° open.

Breaker Arm Spring Tension—17-20 ozs.

Rotation—Clockwise viewed from above.

CONTINUED ON NEXT PAGE

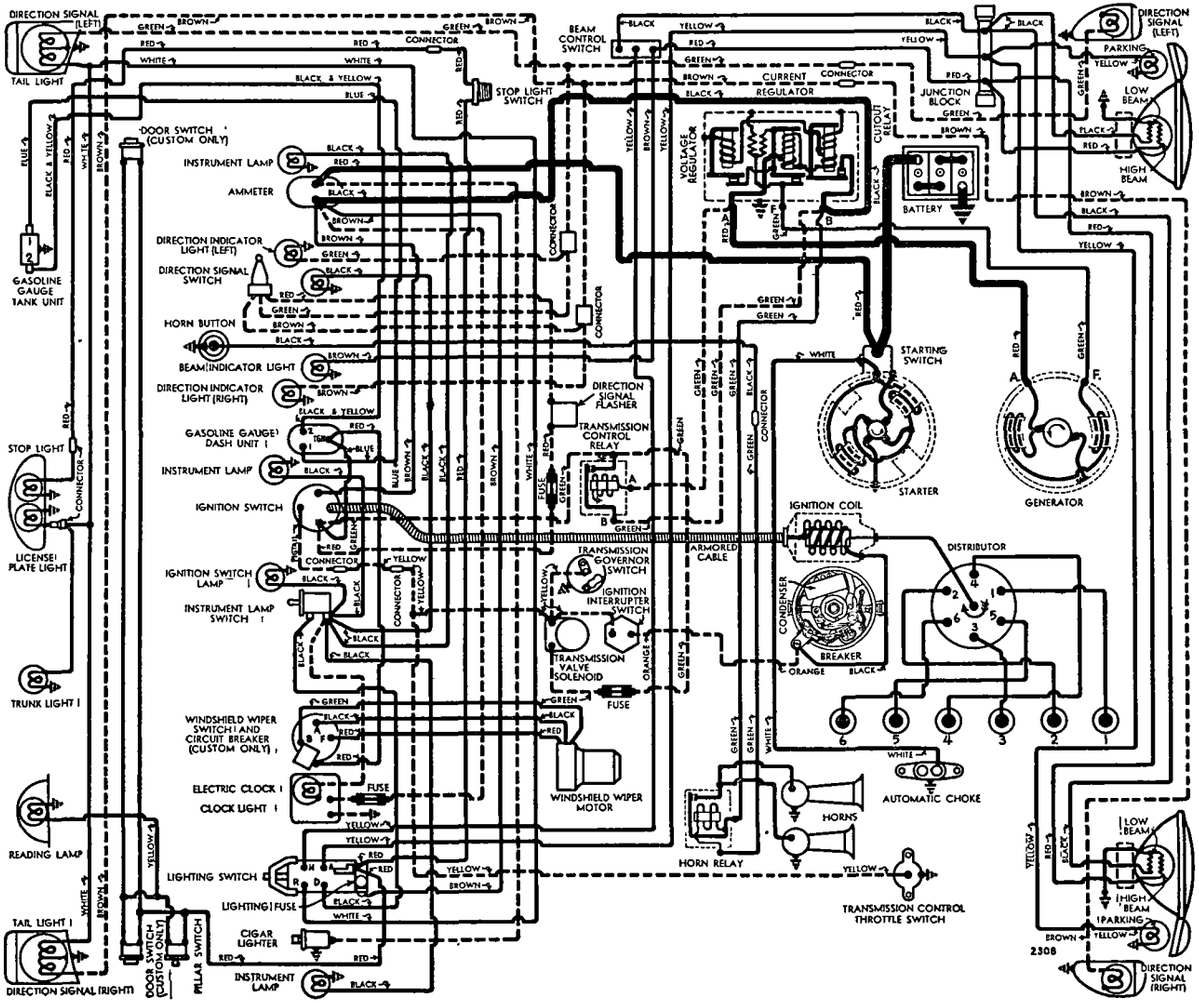

1941 M DEL S8

C NTINUED FROM PRECEDING PAGE

IGS-4113-1, 4117, 4117-1, 4202-1

Distributor Degrees	Automatic Advance R.P.M.	Engine Degrees	Engine R.P.M.
Start	350	0	700
3	400	6	800
6	850	12	1700
9	1300	18	2600
12	1750	24	3500

IGS-4202A-1, 4202C-1

Start	350	0	700
3	400	6	800
6	770	12	1540
9	1150	18	2300
11	1400	22	2800

Vacuum Spark Control—Integral type (on distributor, linked directly to breaker plate). Provides additional advance at speeds above idling except when engine accelerated or operated with wide open throttle (spark retarded by return spring in unit).

Vacuum Advance

IGS-4113-1, 4117, 4117-1, 4202-1

Distr. Degrees	Eng. Degrees	Vacuum (" of HG)
Start	0°	5"
3°	6°	9¼"
5°	10°	12⅛"
7°	14°	15"

Vacuum Advance—IGS-4202A-1

Start	0°	5⅛"
3°	6°	9⅝"
5°	10°	12½"
6°	12°	14"

Vacuum Advance—IGS 4202C-1

Start	0°	5"
5°	10°	11⅛"
7°	14°	13½"
9°	18°	16"

Manual Adjustment—Provides for minor changes in ignition timing at distributor. See Ignition Timing.

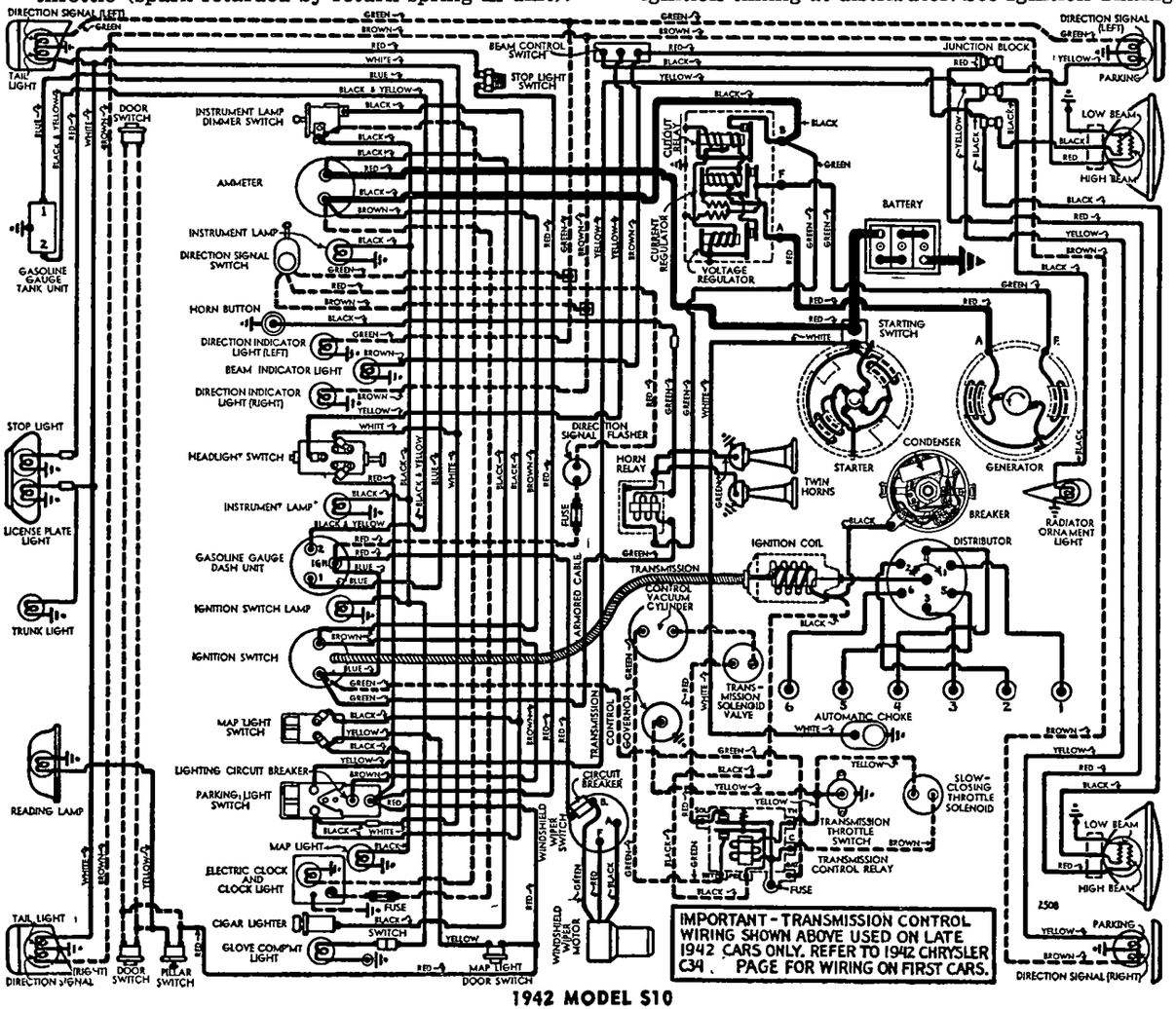

1942 MODEL S10

Distributor Removal:—Mounted on left side of crankcase. To remove, disconnect vacuum line, take out hold-down screw in lock plate. **Installation**—Install distributor with #1 piston in firing position (see table below) and rotor opposite #1 segment in cap.

IGNITION TIMING

IGNITION TIMING:—Initial setting (correct for fuel of approx. 70 octane rating at low altitudes for all engines) shown below. See Manual Adjustment

1941 All Engines	0° at TDC	.000" at TDC
1942 Early①	0° at TDC	.000" at TDC
1942 Late②	3½-4½° ATDC	.005-.008" ATDC

①—Aluminum Pistons. ②—Cast Iron Pistons.

NOTE—Impulse neutralizer marked 'DC' at TDC. with 15 (1°) graduations on either side.

Timing (Using Timing Light)—Connect timing light between distributor primary terminal and battery terminal on generator regulator. Set #1 or #6 piston in firing position (see setting above) with correct mark on impulse neutralizer aligned with pointer on chain case cover. Loosen lock-plate hold-down screw, center pointer on scale, tighten screw. Loosen lock-plate clamp bolt, rotate distributor until timing light just goes out, tighten clamp bolt. Check Manual Adjustment (following) for final setting.

Timing (Using Synchroscope)—Tool C-374. Clip lead to #1 spark plug, direct light on impulse neutralizer (mark correct graduation with paint), idle engine, adjust distributor as directed above until mark aligned with pointer on chain case cover.

Manual Adjustment—Set to give slight ping from 10-30 MPH accelerating with wide open throttle. To adjust, loosen lock-plate hold-down screw, move plate (not more than 4° or .007" before or after initial setting) counter-clockwise (if no ping) clockwise (if ping too severe), tighten screw.

CARBURETOR

CARBURETION:—Carburetor—Carter (Ball & Ball) 1½" single barrel downdraft types. NOTE—Carburetors on cars with Fluid Drive have Slow-Closing Throttle device, Carburetors on cars with Simplimatic Transmission have transmission control kick-down switch.

Car Model	Carburetor Model
1941 (Std. Transmission)	E6N3, E6S2, E6S3
1941 (Fluid Drive)	EB1
1941 (Simplimatic Trans.)	E6V1, E6U1, E6U2
1942 (Std. Transmission)	EE1
1942 (Fluid Drive)	EF1
1942 (Simplimatic Trans.)	EG1

For complete data, refer to Carburetor Index.

Settings (Idle Setting, Float Level, and Accelerating Pump): *See Tune-Up.*

Metering Jet—*Refer to Carburetor Index for Carter (B&B) Downdraft Carburetor Jet Specification Table.*

Throttle Cracker:—Not adjustable.

Slow Closing Throttle (E6V1, E6U1, E6U2, EB1, EF1, EG1): Dashpot type (Cars with Fluid Drive), Solenoid type (Cars with Simplimatic Trans.). Solenoid type is not adjustable.

Adjustment (Dashpot Type)—Turn adjusting screw (above dashpot plunger) in as far as possible, then back screw out 5 full turns for 7/32" stroke.

Fast Idle:—Built-in type. Not adjustable.

Automatic Choke:—Sisson Type AC-758B.

For complete data, refer to Carburetion Equip. Index.

CARB. EQUIPMENT

Air Cleaner: AC No. 1529938 (1941), 1542284 (1942) heavy duty oil-bath type. NOTE—Use replacement Filter Element Assembly No. 1542305 (1942).

Fuel Pump:—AC 'AT' #1523647—Exch. No. 505 diaphragm type pump. **Pressure**—4 lbs.
For complete data, refer to Carburetion Equip. Index.

Gasoline Gauge: Auto-Lite Electric type. #NG-9685D or NG-9837D (Dash Unit—1941), NG-9925D (Dash Unit—1942), #NG-9329T (Tank Unit 1941-42).
For complete data, refer to Carburetion Equip. Index.

BATTERY

BATTERY:—Willard Type WHT-2-15R. 6 volt, 15 plate, 105 ampere hour capacity (20 hour rate).
Starting Capacity—133 amperes for 20 minutes.
Zero Capacity—300 amperes for 3.9 minutes. Five second voltage 4.3 volts.
Grounded Terminal—Positive (+) to engine.
Dimensions—Length 10¼". Width 7". Height 9⅜"
Location—Under hood in left fender shield.

STARTER

Auto-Lite Model MAW-4019, MAW-4019A (1941); MAW-4026 (Std. 1942), MAX-4050 (1942 Fluid Drive Cars). Armature No. MAW-2030 (All Models).
Drive—Overrunning clutch (manual pinion shift).
Rotation—Counter-clockwise at commutator end.
Brush Spring Tension—42-53 ozs. (new brushes).
Cranking Engine—125 RPM, 175 amperes, 5.4 volts.

Performance Data
MAW-4019, 4019A, 4026

Torque	R.P.M.	Volts	Amperes
0 ft. lbs	4900	5.5	65
.60 "	3300	5.5	100
2.75 "	1480	5.0	200
5.45 "	820	4.5	300
8.50 "	400	4.0	400
11.55 "	110	3.5	500
11.5 "	Lock	3.	505
18. "	Lock	4.	670

Performance Data—MAX-4050

0 ft. lbs	5300	5.5	65
.65 " "	3300	5.5	100
2.75 " "	1630	5.0	200
5.5 " "	970	4.5	300
8.7 " "	600	4.0	400
12.0 " "	300	3.5	500
16.5 " "	Lock	3.	640
25.0 " "	Lock	4.	880

Removal:—Flange mounted on left front face of flywheel housing. Disconnect wires (tape battery lead). Remove oil filter tubes, filter and 2 starter bolts.

Starting Switch: **(MAW-4019, 4019A, 4026)** Auto-Lite Type SW-2813. Manually operated by starting pedal. **(MAX-4050)** Auto-Lite Type SS-4705. Solenoid type controlled by pushbutton on instrument panel.
For complete data, refer to Electrical Equipment Index.

GENERATOR

Auto-Lite Model GDZ-4801A (Std. '41), GDZ-4801B (Std. 1942), GEB-4801A or GEG-4818A (City Police), GEG-4818B or GEG-4823B (State Police). Two brush, shunt types with current and voltage regulation. Ventilated.
Armature—GDZ-2006F (GDZ Gen.), GEB-2006F (GEB Gen.), GEG-2006F (GEG Gen.).
Charging Rate Adjustment—No adjustment at generator. Charging rate controlled by Voltage Regulator and maximum output by Current Regulator.
Maximum Charging Rate—35 amperes, 8.0 volts, 2200 gen. RPM or approx. 25 MPH, and above with load or discharged battery (Current Regulator setting). Actual charging rate controlled by Voltage Regulator and dependent on battery condition.

Performance Data—GDZ-4801A,B

Cold			Hot		
Amperes	Volts	R.P.M.	Amperes	Volts	R.P.M.
0	6.4	925	0	6.4	1000
5	6.65	1060	5	6.65	1150
10	6.85	1200	10	6.85	1290
15	7.05	1340	15	7.05	1430
20	7.3	1480	20	7.3	1590
25	7.55	1620	25	7.55	1750
30	7.8	1760	30	7.8	1980
35①	8.0	1900	35	8.0	2250

Performance Data—GEB-4801A

0	6.4	560	0	6.4	600
4	6.6	630	4	6.6	675
8	6.8	700	8	6.8	750
12	7.0	775	12	7.0	840
16	7.2	845	16	7.2	930
20	7.4	920	20	7.4	1030
24	7.6	1000	24	7.6	1140
28	7.8	1075	28	7.8	1260
32①	8.0	1150	32	8.0	1400

Performance Data—GEG-4818A,B; 4823B

0	6.4	780	0	6.4	820
5	6.6	870	5	6.6	900
10	6.8	960	10	6.8	990
15	7.0	1040	15	7.0	1080
20	7.2	1130	20	7.2	1170
25	7.4	1220	25	7.4	1270
30	7.6	1310	30	7.6	1380
35	7.8	1410	35	7.8	1510
40①	8.0	1520	40	8.0	1680

①—Current regulator setting. See Regulator data.
Rotation—Counter-clockwise at commutator end.
Brush Spring Tension—53 ounces max. (GDZ Gen.), 64-68 ozs. (GEB & GEG Gen.) with new brushes.
Field Current—1.60-1.78 amperes at 6.0 volts (all).
Motoring Current—4.16-4.60 amps. (GDZ Gen.), 4.0-4.5 amps. (GEB), 4.7-5.2 amps. (GEG) at 6.0 volts.
Removal:—Pivot mounted at left side of engine at front. To remove, take out pivot and clamp bolts.
Belt Adjustment:—Loosen pivot and clamp bolts, pull out on generator until belt is snug or 40-50 lbs. tension secured on scale attached to field frame.

REGULATOR

REGULATOR:—Auto-Lite VRP-4001A (GDZ Gen.), VRP-4001B (GEB Gen.), VRP-4001F (GEG Gen.).
Current-Voltage types. In case on dash.
NOTE—For negative battery ground, VRP-4005A (GDZ Gen.), VRP-4005B (GEB), VRP-4005E (GEG)
For complete data, refer to Electrical Equipment Index.
NOTE—Regulator case cover is sealed. Serviced on exchange basis if seals not broken (to remove cover).

Cutout Relay
Cuts In—6.4-6.6 volts at approx. 1000 Gen. RPM. (VRP-4001A,5A), 600 RPM. (VRP-4001B,5B), 820 RPM. (VRP-4001F,5E).
Cuts Out—4.2-4.8 volts (approx. 4-6 amps. disch.).
Contact Gap—.015" minimum.
Air Gap—.031-.034" with contacts open (check at hinge end of core).

Voltage Regulator
Setting—7.2-7.5 volts at 70°F. See Electrical Equipment Section for settings at other temperatures.
Checking (without breaking seal) & Adjustment—*See Electrical Equipment Section.*
Contact Gap—.012" min. (armature against stop pin).
Air Gap—.048-.052" with contacts just opening.

Current Regulator
Setting (VRP-4001A,5A)—34-36 amperes, marked "35" on cover, **(VRP-4001B,5B)** 31-33 amperes marked "32", **(VRP-4001F,5E)** 39-41 amperes, marked "40".
Checking (without breaking seal) & Adjustment—*See Electrical Equipment Section.*
Contact Gap & Air Gap—Same as Voltage Regulator.

LIGHTING

LIGHTING:—Headlamps—Hall 'Sealed Beam' type.
For complete data, refer to Electrical Equipment Index.
Headlamp Adjustment—Aim upper beam straight ahead (hot spot center 3" below lamp center height).
Beam Indicator—Small red light on instrument panel above speedometer. Lighted with upper beams on.
Direction Signal—***Refer to Electrical Equip. Index.***

Switches—1941
Lighting—DeSoto No. 910506.
Beam Selector—DeSoto 859974.
Instrument—DeSoto No. 853371.
Direction Signal—DeSoto No. 865763, 910566 (RHD).

Switches—1942
Lighting—DeSoto No. 976108.
Beam Selector—DeSoto No. 859974.
Instrument—DeSoto No. 976098.
Map Light—DeSoto No. 974926.
Dome Lamp Pillar—DeSoto No. 317180.
Door Switches—DeSoto No. 882943.
Stop Light—DeSoto No. 677112.
Direction Signal—DeSoto No. 938926.

HEAD LAMP SHUTTERS

►**HEADLAMP SHUTTERS (1942 S10):** Headlamps recessed in front fenders and are shielded by sliding panels which fit flush with fenders when shutter control handle in closed position.

Operation—Shutters (sliding panels) are controlled by a handle under instrument panel to right of steering column. Button in shutter handle controls latch which locks handle in open or closed position. Plunger type lighting switch mounted on under side of shutter handle housing. Contact on end of shutter handle rod depresses plunger and turns on headlamps with shutter handle in full open position. To open shutters and turn on headlamps, push in on control button on shutter handle (to release locking latch), pull handle out to open position. To close shutters, push in on control button and push handle in. NOTE—No separate light switch control used.

Adjustments—Shutters are operated by control linkage (part of assembly consists of an axle which is mounted crosswise on car and each shutter is attached to this axle). Adjustments are provided for fitting and synchronizing shutters as follows: (1) Eccentric pin located on axle mounting plate provides for positioning panels for fore-and-aft or up-and-down fit with fender opening. To adjust, loosen nuts and turn pin (end of pin is slotted). (2) Axle collar on axle mounting plate permits sidewise positioning of panels with fender opening. To adjust, loosen collar and slotted axle coupling, move panel sideways until proper fit obtained. (3) Flange on axle shaft provided with two bolts which pass

CONTINUED ON NEXT PAGE

CONTINUED FR M PRECEDING PAGE

through slotted holes in flange. These two bolts can be loosened (after disconnecting clevis rod which attaches to lever extending to axle flange) and shutters synchronized by closing both shutters with just enough tension to compress rubber bumpers. With shutters in this position, tighten bolts. Then adjust clevis rod length so that slight tension obtained in control linkage when clevis pin is inserted with shutters closed. (4) Adjustable clamp just ahead of shutter handle mounting bracket on back of instrument handle provides adjustment for the correct positioning of shutters in open position. To adjust, loosen clamp, push in on control button on shutter handle and pull handle out until shutters compress rubber bumpers at each headlamp, then with shutters in this position move bracket so that latch in control rod (with button released latch protrudes through slot in shutter handle housing) will be held by bracket in this open position. NOTE—Headlamps are 'Sealed Beam' type and can be removed or installed after removing trim plate which is attached by four screws. *Refer to Electrical Equip. Index for Sealed Beam Headlamp article for complete data on removal and adjustment*

MISC. ELECTRICAL

LIGHTING CIRCUIT BREAKER (1942): Vibrating, thermostatic type. Mounted on lighting switch. NOTE—Fuse used to protect lighting circuits on 1941 cars.

FUSES: Lighting (1941)—30 ampere. On back of lighting switch (circuit breaker used on 1942 cars).
Clock—2 ampere. In connector behind clock.
Simplimatic Transmission Control—30 ampere. Under relay on left side of dash.
Direction Signal—30 ampere (1941), 9 ampere (1942). In wire fuse connector behind instr. panel.

HORNS:—**Dual.** Auto-Lite HO or HT-5003 with relay.
Current Draw—35-40 amperes.

Horn Relay: Auto-Lite Model HRC-4001 (1941-42), HRL-4001 (Late 1942). NOTE—HRL-4001 is special type relay with winding connected through ignition switch so that horns operative only with ignition "on".

Contacts Close—1.5-3.0 volts. **Open**—.5 volt.
Contact Gap—.026". **Air Gap**—.016-.020" (closed).

ENGINE

ENGINE SPECIFICATIONS (1941): Six cylinder, "L" head type. **Bore**—3⅜". **Stroke**—4¼".
Displacement—228.1 cu. ins. **Rated HP**—27.34.
Developed Horsepower—105 HP (Std. 6.8-1 head), 108 HP (Optl. 7.2-1 hd.—Std. 7 pass.) at 3600 RPM.
Compression Ratio and Pressure—As follows:

Ratio	Pressure at 1000 RPM	At 125 RPM
6.8 or 6.5 iron	145-155 lbs.	115-125 lbs.
7.2-1 aluminum head	150-160 lbs.	120-130 lbs.

Vacuum Reading—Steady 18-20" idling (below 1000'). *See Chrysler Shop Notes for engine removal directions.*

ENGINE SPECIFICATIONS (1942): Six cylinder, "L" head type. **Bore**—3 7/16". **Stroke**—4¼".
Displacement—236.6 cubic inches. **Rated HP**—28.36.
Developed Horsepower—115 at 3800 RPM.
Compression Ratio—6.6-1 cast-iron head standard.
Compression Pressure—160-170 lbs. at 1000 RPM or 125-135 lbs. at cranking speed. Variation 10 lbs. max.
Vacuum Reading—18-21" steady idling at 6 MPH. *Refer to Chrysler Shop Notes for Engine Removal data.*

PISTONS: Aluminum alloy, U-slot, Cam-ground, tinplated type (1941 & first 1942 Cars), Cast Iron, ribbed, Cam-ground type (Late 1942 Cars).
Length—3⅞" (Aluminum), 3½" (Cast Iron).
Weight—17.5 ozs. stripped (1941 Aluminum type).
Removal—Pistons and rods removed from above.
Clearance (1941)—Top .023". Skirt .0000-.0010".
Clearance (1942 C.I.)—Top .016". Skirt .0008-.0018".
Original Bore & Piston Sizes, Replacement Pistons:—*Refer to Chrysler Shop Notes for sizes and markings.*
Fitting New Pistons:—Check piston size with micrometer at bottom of skirt 90° from pin bosses. With piston and wall dry, insert feeler between cylinder wall and piston (piston inverted, pin removed) 90° from pin bosses. Pull should be 10-15 lbs. on .0015" feeler (cast iron), 5-7 lbs. on .002" (aluminum).
Installing Pistons:—Slot away from valves (alum.).

PISTON RINGS (1941): 4 rings above pin, #1 Compression (upper inner edge stepped), #2 Comp. (lower outer edge stepped), #3 & 4 (slotted oil rings).

Ring	Width	End Gap	Side Clearance
Comp. (Top)	⅛"	.007-.015"	.002-.004"
Comp. (#2)	⅛"	.007-.015"	.0015-.0035"
Oil Control	5/32"	.007-.015"	.001-.0025"

PISTON RINGS (1942): 4 rings above pin, #1 & 2 Compression (upper inner edge stepped), #3 &4 Oil Rings (slotted type).

Ring	Width	End Gap	Side Clearance
Compr. #1	3/32"	.007-.015"	.0025-.004"
Compr. #2	3/32"	.007-.015"	.002-.0035"
Oil Control	5/32"	.007-.015"	.001-.0025"

Replacement Rings:—*Refer to Chrysler Shop Notes.*

PISTON PIN:—**Diameter**—55/64". **Length**—2⅞". Floating type. Pin hole in rod bronze bushed.
Pin Fit in Piston—Loose thumb push fit at 70°F, pin should fall out if piston jarred (Cast Iron), thumb push fit at 130°F. (Aluminum Pistons).
Pin Fit in Rod Bushing—Thumb push fit at 70°F.
Replacement Pins:—Standard & .003", .008" oversize.

CONNECTING ROD:—**Length**—8".
Weight—35.2 ozs. with bearings & bolts (1941).
Lower Bearing Diameter—2⅛". *See Engine Lettering Note in Chrysler Shop Notes for 'Special Standard' sizes.*
Lower Bearing—Removable, precision type, thin babbitt. **Clearance** .001-.0015". **Sideplay** .0055-.0115".
Bearing Adjustment: None (no shims). Replace bearings. *See Chrysler Shop Notes for instructions.*
Replacement Bearings: *See Chrysler Shop Notes.*
Installing Rods:—Oil metering hole to camshaft.

CRANKSHAFT:—4 bearings, 7 integral counterweights. *For Crankshaft Oil Seal data refer to Chrysler Shop Notes.*
Bearing Diameter—2½". *See Engine Lettering Note in Chrysler Shop Notes for 'Special Standard' sizes.*
Bearing Type—Removable, precision type, thin babbitt on steel. **Clearance**—.001-.0015".
Bearing Adjustment:—*Refer to Chrysler Shop Notes for Bearing Removal and Adjustment data.*
Replacement Bearings & Bearing Caps: *Refer to Chrysler Shop Notes for complete data.*
End Thrust:—Taken by flange faces on rear (#4) main bearing. **Endplay**—.003-.007" (.003" desired).

CAMSHAFT:—4 bearing. Non-adjustable chain drive. *Refer to Chrysler Shop Notes for Camshaft Removal.*
Bearing Type—Removable steel-backed, babbitt-lined bushings (except #4 machined in block).
Bearing Diameters—#1, 2"; #2, 1 31/32"; #3, 1 15/16"; #4, 1¼".
Clearance—.001-.003" (#1), .0015-.0035" (all others).
End Thrust:—Taken by thrust plate behind camshaft sprocket hub. **Endplay**—.002-.006".
Timing Chain:—Morse Type 1883N, No. 2661. Width 1". Pitch .500" (½"). Length 24" or 48 links.
Camshaft Setting:—Sprockets marked. Mesh chain with sprockets turned so that '0' marks are adjacent and in line with straightedge across shaft centers.

VALVES: Specifications for each model as follows:

Model S8 (1941)

Valve	Head Diameter	Stem Diameter	Length
Intake	1 21/32"	.340-.341"	4 25/32"
Exhaust	1 17/32"	.340-.341"	4 25/32"

	Seat Angle	Lift	Stem Clearance
All Valves	45°	⅜"	.0015-.0035"

Model S10 (1942)

Valve	Head Diameter	Stem Diameter	Length
Intake	1 23/32"	.340-.341"	4 25/32"
Exhaust	1 17/32"	.3395-.3405"	4 25/32"

	Seat Angle	Lift	Inspection Clearance
Intake	45°	⅜"	.0015-.0035"
Exhaust	45°	⅜"	.002-.004"

See Chrysler Shop Notes for Exhaust Valve Seat inserts.

Valve Guides:—Remove from above. Press new guides in (stepped end down) with upper end ⅞" below top of block, ream to .3425-.3435".

Valve Springs:—Install with closely coiled end to top.

	Spring Pressure	Length
Free length 2".		
Valve Closed	40-45 lbs.	1¾"
Valve Open	107-115 lbs.	1⅜"

Valve Lifters:—Mushroom type (remove from below). Stem diam. ⅝". Ream holes from above (pilot in valve guide). Oversizes .001", .008", and .030".
Lifter Clearance in Block—.000-.001".

VALVE TIMING

Tappet Clearance:—.008" Intake, .010" Exh. (hot and idling), .002" additional exh. clearance desirable for sustained high speeds. NOTE—Tappet screws self-locking. Remove right front engine inspection shield between fender and frame for access to valves.

Valve Timing:—See Camshaft Setting above.
Intake Valves—Open 12° BTDC. Close 44° ALDC.
Exhaust Valves—Open 50° BLDC. Close 6° ATDC.
Valve Timing Check—With .014" (cold) tappet clearance #6 intake valve should open with #6 piston 12° or .059" BTDC with 12th graduation before DC mark on impulse neutralizer aligned with pointer on chain cover. Reset tappet clearance .008" hot. NOTE—Permissable range on Intake Opening Point 5° to 17° BTDC. or .011" to .122" BTDC.

LUBRICATION

LUBRICATION:—Pressure (pump on right of engine). *Refer to Chrysler Shop Notes for Oil Pump Removal.*
Normal Oil Pressure:—30-45 lbs. above 30 MPH.
Oil Pressure Relief Valve:—Under plug below starter. Opens at 40-45 lbs. Spring painted red, green, or unmarked. If spring replaced, use same color spring.
Crankcase Capacity:—5 quarts (refill).
Crankcase Ventilator (1941 S8): Positive type ventilator consists of ventilator housing and valve on side of block with tube connection to intake manifold. Air intake through filter in oil filler cap.
CAUTION—If ventilator housing or tube plugged, excess air will bleed into intake manifold causing engine to idle fast and unevenly and will not permit slow idling.
Servicing—Ventilator housing and tube should be cleaned every 20,000 miles (or 5,000 miles in severe service). Remove housing and tube, cleaning out all

sludge and carbon. Use cloth swab on end of wire to thoroughly clean tube. CAUTION—Do not overtighten nut on ventilator housing.

COOLING

COOLING SYSTEM:—Capacity—18 quarts.
Refer to Chrysler Shop Notes for Radiator Core Removal and Water Distribution Tube servicing.

Water Pump:—Packless type with grease fitting.
See Water Pump Section for complete data.

Thermostat:—Bishop & Babcock or Fulton. On cyl. hd. **Setting**—Starts to open 157-162°F. Fully open 183°F.

Temperature Gauge: Auto-Lite (Motometer) Vapor Tension type. Auto-Lite No. H-9684 or H-9836 (1941), H-9924 (1942).
See Miscellaneous Section for complete data.

CLUTCH

CLUTCH:—Borg & Beck 10A7 (Std.), 9A7 (with Fluid Drive), 11A6 (Taxi) with 'Borglite' driven member. Assembly No. 957 or 938 (10A7), 952 (9A7), 931 (11A6) stamped on cover. Single plate, dry disc types.
See Clutch Section for complete data.
Facings—Molded-Woven, 2 used. Inside Diam. 7" (10A7), 6" (9A7), 6½" (11A6). Outside Diameter 10" (10A7), 9¼" (9A7), 11" (11A6). Thickness .125" (⅛").

Adjustment:—Pedal should just clear toeboard (adjust stopscrew on lower end of pedal) & have 1" free travel (adjusting nut on connector link at fork).

Removal:—Remove release fork pull-back spring, Transmission (see Transmission) and housing underpan. Pull out clutch release bearing and sleeve. Mark cover and flywheel (or driving plate on Fluid Drive). Take out cover screws, remove assembly.

FLUID DRIVE

OPTIONAL EQUIPMENT

FLUID DRIVE: Fluid coupling at rear of engine.
See Miscellaneous Section for complete data.

TRANSMISSION

STANDARD

TRANSMISSION (STD.):—Own Make. All helical gear, constant-mesh, synchro-mesh (second and high), sliding gear (low and reverse) with remote shift.
See Transmission Section for complete data.

Transmission Control:—Steering column shift. Manual type Std. Power Shift (vacuum type) Optl.
See Transmission Section for complete data.

Removal:—Jack up front end of car, disconnect front universal (loosen companion flange nut if disassembling transmission—see Chrysler Shop Notes for Propeller Shaft Center Bearing Removal on 7 pass.). Disconnect speedometer cable, hand brake cable, gear-shift rods, vacuum and air hose (if Power Shift used). Remove trans.-to-clutch housing capscrews and nuts. Pull unit to rear, down and out of car.

TRANSMISSION

SIMPLIMATIC UNDERDRIVE TYPE

►**1941-Early 1942 De Soto Simplimatic Underdrive:** With Diaphragm type power unit.
See Transmission Section for complete data.
Control Relay—Auto-Lite Model HRE-4001.

►*CAUTION—To correct "Ignition Cutting Out" and "Transmission Not Shifting" on 1941-Early 1942 cars, see Interrupter Switch Insulator and Transmission Remains in First or Third (No Upshift) Special Service Notes in 1941-Early 1942 De Soto Simplimatic Underdrive Transmission article in Transmission Section.*

►**Late 1942 De Soto Simplimatic Underdrive:** With Piston type power cylinder.
See Transmission Section for complete data.
Control Relay—Auto-Lite Model HRM-4001.
Governor Switch—Auto-Lite Model TG-4002R.
Solenoid Vacuum Valve—Auto-Lite SSJ-4001, 4001B.
Vacuum Piston Assembly—Auto-Lite VP-4001.
Air Cleaners—Auto-Lite No. SP-2472 (vacuum valve cleaner); SP-2481.

Removal:—Same as Std. transmission (above), plus the following: Remove floor board, wires from vacuum unit solenoid, interrupter and governor switches, hose from vacuum unit air cleaner to vacuum unit. Take out vacuum unit (disconnect pullout cable and return spring and remove pivot pin).

UNIVERSALS

UNIVERSAL JOINTS:—Mechanics Type 2CR (5 pass.), Detroit-Universal Series 7200 (7 pass. & Canada).
See Universals Section for complete data.

Propeller Shaft Center Bearing:—Used on 7 passenger sedans. *Refer to Chrysler Shop Notes for servicing.*

REAR AXLE

REAR AXLE:—Own Make. Semi-floating, Hypoid gear with Hotchkiss drive.
See Rear Axle Section for complete data.
Ratio (With Std. Trans.)—4.1-1 (5 Pass. 1941), 3.9-1 (5 Pass. 1942), 4.3-1 (7 Pass. 1941-42).
Ratio (With Simplimatic Trans.)—3.54-1 (5 Pass. 1941), 3.54-1 or 3.73-1 (5 Pass. 1942), 3.91-1 (7 Pass. 1941-42).
Backlash—.006-.010". Screw adjustment.

Removal:—Hoist rear end of car, remove rear wheels. Disconnect brake hose at frame bracket, lower ends of shock absorbers and rear universal. Disconnect Transverse Sway Bar at axle bracket. Support axle, remove rear spring hold-down clips, withdraw axle Assembly. NOTE—To remove carrier without disturbing housing, disconnect rear universal, remove axle shafts, take out carrier mounting screws.
Axle Shaft Removal—Remove wheel, hub, and drum assembly (use screw type hub puller—Tool C-319), block brake pedal, disconnect brake line at wheel cylinder, take off backing plate with oil seal, pull shaft and bearing (Tool C-158). NOTE—Use Tool C-358 to pull oil seal, drift C201 or 202 to install.
Wheel Bearing Adjustment—Controlled by shims between brake backing plates and flanged ends of housing. Remove brake backing plates (see above) and add or remove shims (equally on both sides) to give proper clearance. **Endplay**—.003-.008".
NOTE—Shims supplied .010", .0125", .030" thick.

SHOCK ABSORBERS

Domestic (1941)—Delco Direct Acting, Hydraulic
Domestic (1942)—Monroe No. 955029 (Front), 955030 (Rear), Direct Acting, Hydraulic type.
Export—Delco Direct Acting, adjustable types. Front: 1142-D (all), Rear: 1140-W, Y (18" wheels).
See Shock Absorber Section for complete data.

Transverse Sway Strut (7 Pass.). Rear Swar bar with Monroe 956790 direct acting hydraulic shock absorber built-in bar.
See Shock Absorber Section for complete data.

FRONT SUSPENSION

Front Suspension:—Independent, linked parallelogram type with coil springs and direct acting shocks.
See Front Suspension Section for complete data.
Kingpin Inclination—4¾° to 6°.
Camber—Positive ¼°. Limits 0° to Pos. ¾°.
Caster—Negative 1° to Positive 1°. Not adjustable.
Toe-In—0-⅛" (1941), 0-1/16" (1942). Adjust by turning both tie rods equally.
Steering Geometry—Outer wheel turned 20°, Inner wheel 22°0' (1941), 22° 1' (5 Pass. 1942), 21½° 1' (7 Pass. 1942).

STEERING GEAR

Steering Gear: Chrysler (Gemmer design) Model 305 (5 Pass. models), Model 335 "3-tooth" (7 Pass. Models) Worm-and-Roller type with push-pull adjustments.
See Steering Gear Section for complete data.

BRAKES

BRAKES:—Service. Lockheed hydraulic, double anchor type. Hand lever applies independent shaft brake.
See Brake Section for complete data.

7 Passenger Service Brakes:—Same design and size as used on Chrysler 8 Model C36. *See 1942 Chrysler Eight Model C36 article for all data on 1942 7 Pass. Service Brakes.*
Drums—Cast-iron. Diameter 11".
Lining—Molded asbestos. 2" wide. 13/64" thick. Length (front shoe) 11 15/32", (rear shoe) 7 31/32".
Clearance—.012" Toe (top), .006" Heel, for each shoe.

Hand Brake:—On drum at rear of transmission.
Adjustment:—*Refer to Chrysler Shop Notes for data.*
Drum—Cast-iron. Diameter 6", 7" (Simpl. Trans.).
Lining—Moulded and compressed asbestos. Width 2" (All 1941 cars, 1942 cars with Std. Trans.), 2½" (1942 cars with Simplimatic Trans.). Thickness 5/32". Length 17 1/16" (1941 cars with Std. Trans.), 16 11/16" (1942 cars with Std. Trans.), 20⅛" 1941 cars with Simplimatic Trans.), 20" (1942 cars with Simplimatic Trans.).

MISC. MECHANICAL

WINDSHIELD WIPER: Auto-Lite Model EWD-5001, 5003 (1941); EWH-5001, 5003 (1942). Electric type with circuit breaker mounted on switch.
NOTE—EWD-5003, EWH-5003 used on Conv. Coupe.
See Miscellaneous Section for complete data.
Circuit Breaker—Vibrating, thermostatic type. Starts to operate with current of 12 amperes.

CONVERTIBLE TOP CONTROL:—Electric type.
See Miscellaneous Section for complete data.
Top Control Motor—Auto-Lite Model EWG-4002 (1941), EWG-4003 (1942).
Top Control Relay—Auto-Lite Model HRF-4001.

WINDOW REGULATORS: Hydro-electric type (hydraulic actuation with motor driven hydraulic pump).
See Miscellaneous Section for complete data.
Window Regulator Motor—Auto-Lite MBO-4002.
Motor Switch—Auto-Lite Model SSG-4002.

HOOD LOCK, FRONT END SHEET METAL & OIL PAN REMOVAL: *See Chrysler Shop Notes.*

MODEL IDENTIFICATION

SERIAL NUMBER: On left front door hinge post.

1946 Detroit Numbers—S11S Deluxe 6,154,001 Up, Custom S11C 5,784,001 Up, S11 Taxicab 5,102,501 Up.

1947 Detroit Numbers—S11S Deluxe 6,172,863 Up, Custom S11C 5,825,875 Up, S11 Taxicab 5,105,414 Up.

1948 Detroit Numbers—S11S Deluxe 6,190,370 Up, Custom S11C 5,885,816 Up, S11 Taxicab 5,110,108 Up.

ENGINE NUMBER: Stamped on boss on left side of block between #1 and #2 cylinders.

TUNE-UP

COMPRESSION: Pressure—125-135 lbs. (100 lbs. min.) at cranking speed of 150 RPM. or 155-165 lbs. at 1000 RPM. (for Std. 6.6-1 Cast Iron Head).

VACUUM READING: Steady 18-21" idling at 6 MPH.

FIRING ORDER: 1-5-3-6-2-4

SPARK PLUGS: Auto-Lite Type A5. 14 mm. Metric. Gaps—.025"

IGNITION: See Coil, Condenser, and Distributor.

Breaker Gap—.020" **Cam Angle**—38° (closed).

Breaker Arm Spring Tension—17-20 ozs.

Automatic & Vacuum Advance—*See Distributor.*

IGNITION TIMING: See Ignition Timing.

Std. Setting—At Top Dead Center.

Timing Mark—Vibration Dampener marked "DC" at top dead center position with 15-1° graduations before and after this point. Set timing with DC mark at pointer on chain case cover, then set manual (octane selector) adjustment as follows:

Manual (Octane Selector) Adjustment—Set for slight ping in 10-30 MPH. range when accelerating with wide open throttle. Do not vary initial timing more than 4° advance or retard.

CARBURETION: See Carburetor & Carb. Equipment.

Idle Setting—Set idle adjusting screw for smooth idling with warm engine (Carter—¾-1¼ turns open), turn screw out for richer mixture. Idle speed 6 MPH. (450-475 Eng. RPM. with Hydraulic Trans.).

Float Level (Carter B&B)—Top of float (not seam) 5/64" (for EX1 carb. on cars with Std. Trans.), 1/16" (for EV1 carburetor on cars with Hydraulic Transmission), plus or minus 1/64" below top edge of bowl.

Float Level (Stromberg)—Fuel level ⅝" below top of bowl (even with bottom of inspection hole).

Accelerating Pump—Center Hole (med. stroke) Normal. Inner Hole—Summer, Outer Hole—Winter, for extreme temperatures.

Fuel Pump Pressure—3½-5½ lbs.

MANIFOLD HEAT CONTROL: Automatic thermostatic type. See that valve operates freely. When installing coil, wind free end up **approx. ¾ turn**, not over one turn or under ½ turn, hook end on stop stud.

VALVES: See Valve Timing.

Tappet Clearance—.008" Intake, .010" Exhaust, Hot. NOTE—Tappet adjusting screws are self-locking

STARTING: See Battery, Starter, Generator, and Regulator.

IGNITION

IGNITION SWITCH: Briggs & Stratton or Mitchellock. NOTE—No armored cable used.
Briggs & Stratton—B & S Switch No. 85985.
Mitchellock Type 42-R—No. E-10182 (Yale & Towne lock), No. E-10663 (Hurd lock).
Lock Cylinder—Yale & Towne, Hurd, or Briggs & Stratton. B & S No. 85915 (Key Series CA1-CA800)

COIL: Auto-Lite No. IG-4806 or IG-4809. Mounted directly above distributor on ignition cable bracket.
Ignition Current—2.25 amperes idling, 5 stopped.

CONDENSER: Auto-Lite Part No. IG-3927A.
Capacity—.25-.28 microfarad.

DISTRIBUTOR: Auto-Lite No. IGS-4208-1. Full automatic advance type with auxiliary vacuum spark control and manual (octane selector) adjustment.
Breaker Plate Identification—Maximum vacuum advance limited by slot in plate. Plate marked #6.
Breaker Gap—.020".
Cam Angle or Dwell—38° closed, 22° open.
Breaker Arm Spring Tension—17-20 ozs.
Rotation—Clockwise viewed from above.

Distr. Degrees	Automatic Advance R.P.M.	Eng. Degrees	Eng. R.P.M.
Start	350	0	700
3	400	6	800
6	770	12	1540
9	1150	18	2300
11	1400	22	2800

Manual Adjustment—Provides for minor changes in ignition timing at distributor. See Ignition Timing

Vacuum Spark Control: Auto-Lite Unit. On distributor, linked directly to breaker plate). Provides additional advance at speeds above idling except when engine accelerated or operated with wide open throttle (spark retarded by return spring in unit).

Distr. Degrees	Vacuum Advance Eng. Degrees	Vacuum (" of HG)
Start	0°	5⅛"
1°	2°	6⅝"
3°	6°	9⅝"
5°	10°	12½"
6°	12°	14"

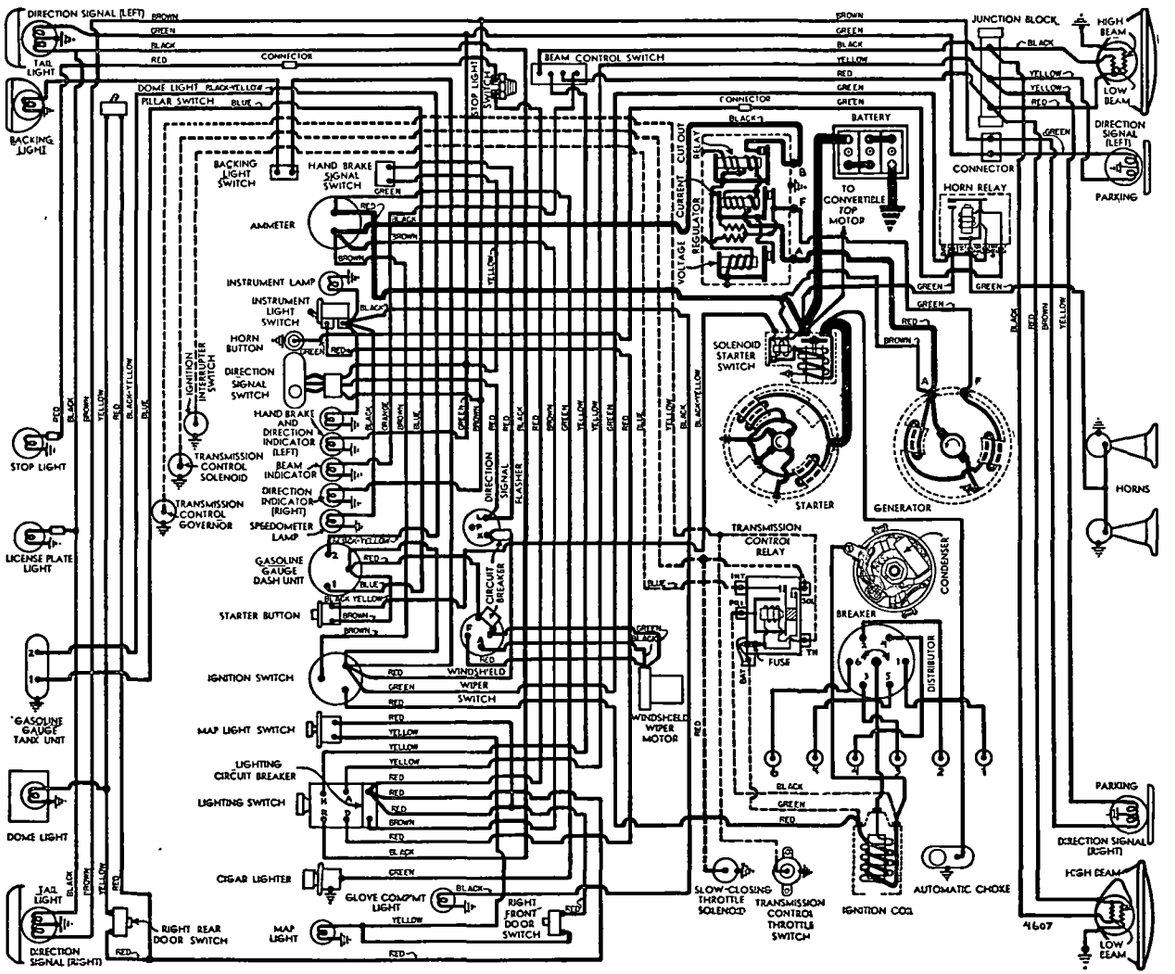

Distributor Removal:—Mounted on left side of crankcase. To remove, disconnect vacuum line, take out hold-down screw in lock plate. **Installation Note**—Install distributor with #1 piston in firing position (at TDC) and rotor opposite #1 segment in cap.

IGNITION TIMING

Std. Setting—Initial setting (for regular non-premium fuel) as shown below. See Manual Adjustment (following) for Final Setting.

	Flywheel Degrees	Piston Position
All Engines	0° at TDC	.000" TDC

NOTE—Impulse neutralizer marked 'DC' at TDC point with 15 (1°) graduations on either side.

Timing (Using Timing Light)—Connect timing light between distributor primary terminal and battery terminal on generator regulator. Set #1 or #6 piston in firing position (see setting above) with correct mark on impulse neutralizer aligned with pointer on chain case cover. Loosen lock-plate hold-down screw, center pointer on scale, tighten screw. Loosen lock-plate clamp bolt, rotate distributor until timing light just goes out, tighten clamp bolt. Check Manual Adjustment (following).

Timing (Using Synchroscope)—Tool C-374. Clip lead to #1 spark plug, direct light on impulse neutralizer (mark correct graduation with paint), idle engine and adjust distributor (as directed above).

Manual Adjustment—Set to give slight ping from 10-30 MPH accelerating with wide open throttle from 10 MPH. To adjust, loosen lock-plate hold-down screw, move plate (not more than 4° or .007" before or after initial setting) counter-clockwise (if no ping), clockwise to retard spark (if too severe).

CARBURETOR

CARTER (B&B)

Carter (B&B) EX1.....**No Fluid Drive**
Carter (B&B) EV1. **Fluid Dr. & Tiptoe Shift Trans.**
1½" single barrel, downdraft type with Sisson automatic choke control. NOTE—EV1 has Slow-closing Throttle and Step-down Switch for Tiptoe Shift.
See Carburetor Section for complete data.

Settings (Idle Setting, Float Level, and Accelerating Pump): *See Tune-Up data.*
Metering Jet—*See Carter (B&B) Jet Table in Carburetor Section for complete data.*

CARBURETOR

STROMBERG

Stromberg Model BXVD-3. Stromberg No. 380218. Code No. 3-82. 1½" single barrel, downdraft type.
See Carburetor Section for complete data.

Settings (Idle Setting, Float Level, and Accelerating Pump): *See Tune-Up data.*
Metering Jet—*See Stromberg Jet Table in Carburetor Section for complete data.*

CARB. EQUIPMENT

Fast Idle: Throttle opened to fast idle position when choke valve closed. No adjustment.

Slow Closing Throttle (Fluid Drive Cars): Stromberg Adjustable Dashpot type or Carter (B&B) electromagnetic Dashpot type.
See Carburetion Equipment Section for complete data.
Setting (Carter B&B)—Not adjustable.
Setting (Stromberg)—With all slack removed from linkage, set adjusting screw on dash pot lever under float bowl so that piston travel is 5/16-11/32" (measured on dash pot rod on bowl cover). Turn screw out to lengthen stroke, in to shorten.

Automatic Choke:—Sisson Type AC-758B.
See Carburetion Equipment Section for complete data.
Setting—With throttle ⅓ open, adjust by inserting gauge pin through hole in automatic choke lever shaft and slot in base mounting flange (to position shaft) and adjusting carburetor choke valve lever so that choke valve is closed tightly.

Air Cleaner: AC No. 1542284 Heavy-duty oil-bath type. Filter Element AC No. 1544091.
Servicing—Clean filter element in kerosene, clean out oil reservoir and fill to indicated level with SAE No. 50 oil (20W oil below 32°F., approx. 1 pint required). Service cleaner whenever sump is half filled with oil and dust sludge. NOTE—Crankcase ventilator air cleaner in oil filler cap should be cleaned in kerosene and re-oiled by dipping in SAE No. 50 engine oil at 1000 mile intervals.

Fuel Pump: AC No. 1539042 or Carter Type M594S or M639S. Diaphragm type fuel pumps.
Replacement Pump—AC No. 577 (for 1539042).
Pressure—3½-5½ lbs.
See Carburetion Equipment Section for complete data.

Fuel Tank Filter: New Oilite metal filter in tank.
Servicing—If more than 2 pints water in tank, fuel will not pass filter. Remove filler cap and drain plug, draining tank. Disconnect fuel line at some point between pump and tank, blow out line and filter with air, increasing pressure as filter is cleaned. Flush tank with clean gasoline.

Gasoline Gauge: Auto-Lite electric. No. NG-10891D (dash unit), No. NG-10862T (tank unit).
See Carburetion Equipment Section for complete data.

BATTERY

Willard Type SW-2-110. 6 Volt, 17 Plate, 110 Ampere Hour Capacity (20 hour rate).
Grounded Terminal—Positive (+) to engine.
Dimensions—Lgth. 10 3/16". W. 6 15/16". H. 9 5/16".
Location—Under hood in left fender shield.

STARTER

Auto-Lite Model MAW-4025. Armature MAW-2030.
Drive—Solenoid pinion shift & overrunning clutch.
Rotation—Counter-clockwise at commutator end.
Brush Spring Tension—42-53 ozs. (new brushes).
Cranking Engine—150 RPM, 175 amperes, 5.4 volts.

Performance Data

Torque	R.P.M.	Volts	Amperes
0 ft. lbs	4900	5.5	65
2.75 "	1480	5.0	200
5.45 "	820	4.5	300
8.50 "	400	4.0	400
11.55 "	110	3.5	500
11.5 "	Lock	3.	505
18. "	Lock	4.	670

Removal: Disconnect wires (tape battery lead), remove mounting bolts, withdraw starter (not necessary to disturb oil filter or oil lines).

Starting Switch: Auto-Lite Solenoid Type SS-4705 with pushbutton on instrument panel.
See Electrical Equipment Section for complete data.

GENERATOR

STANDARD

Auto-Lite Model GDZ-4801A. Armature GDZ-2006F. Two brush (shunt) type with voltage and current regulation. Ventilated by fan on drive pulley.
Charging Rate Adjustment—None. See Regulator.
Maximum Charging Rate—As given in tables below reached at approx. 25 MPH. car speed and above with load or discharged battery (Current Regulator setting). Actual charging rate controlled by Voltage Regulator and dependent on battery condition.

Performance Data—GDZ-4801A

Cold			Hot		
Amperes	Volts	R.P.M.	Amperes	Volts	R.P.M.
0	6.4	925	0	6.4	1000
5	6.65	1060	5	6.65	1150
10	6.85	1200	10	6.85	1290
15	7.05	1340	15	7.05	1430
20	7.3	1480	20	7.3	1590
25	7.55	1620	25	7.55	1750
30	7.8	1760	30	7.8	1980
35①	8.0	1900	35	8.0	2250

①—Current regulator setting. See Regulator data.
Rotation—Counter-clockwise at commutator end.
Brush Spring Tension—35-53 ozs. (new brushes).
Field Current—1.60-1.78 amperes at 6.0 volts.
Motoring Current—4.16-4.60 amperes at 6.0 volts.

Removal: Disconnect wires, take out adjusting strap bolt and mounting bracket bolts.

Belt Adjustment: Loosen adjusting strap bolt, pull generator out until belt just snug, tighten bolt.

GENERATOR

SPECIAL EQUIPMENT

Auto-Lite GEG-4823A or GEG-4823B. Armature No. GEG-2006F (both). Two brush (shunt) type with voltage and current regulation. Ventilated.
SEE CHRYSLER 8 C39 PAGE FOR ALL DATA.

REGULATOR

Std.—VRP-4401A, VRP-4501A, or VRP-4503A (VRP-4001A used on Canadian Cars).

Spec. Equip. (for GEG-4823A, B Gen.)—VRP-4001F or VRP-4401B. VRP-4005E used for negative ground.
Vibrating type voltage and current regulators.
See Electrical Equipment Section for complete data.
NOTE—Regulator case cover sealed. Serviced on exchange basis if seals not broken (to remove cover).

Cutout Relay

Cuts In—6.4-7.0 volts (set to 6.4-6.6 volts).
Cuts Out—4.1-4.8 volts (approx. 4-6 amps. disch.).
Contact Gap—.015" Min. **Air Gap**—.031-.034" with contacts open (check at hinge end of core).

Voltage Regulator

Setting—7.2-7.5 volts at 70° F. See Electrical Equipment Section for settings at other temperatures.
Checking (without breaking seals) & Adjustment—*See Electrical Equipment Section.*
Contact Gap—.012" min. (armature against stop pin).
Air Gap—.048-.052" with contacts just opening.

Current Regulator

Setting (VRP-4001A, 4401A)—34-36 amperes ("35").
Setting (VRP-4001F, 4005E, 4401B)—39-41 amperes, marked "40".
Setting (VRP-4501A, 4503A)—35 amperes (42 amperes at 70°F. after 15 minutes run, 33-37 amperes at 70° after additional 15 minutes run). CAUTION—These current regulators are temperature-compensated and setting decreases with temperature rise in service as above.
Checking (without breaking seals) & Adjustment—*See Electrical Equipment Section.*
Contact Gap—.012" min. (armature against stop pin).
Air Gap—.048-.052" with contacts just opening.

C NTINUED ON NEXT PAGE

C NTINUED FR M PRECEDIN PAGE

LIGHTING

Headlamps: Corcoran-Brown "Sealed Beam" type. *See Electrical Equipment Section for complete data.*
Headlamp Adjustment—Aim upper beam straight ahead (hot spot center 3" below lamp center height).
Beam Indicator—Red light on upper edge of panel above speedometer. Lighted with upper beams on.

Direction Signal: Optl. *See Electrical Equipment Section.*
Direction Signal Indicators—In upper corners of speedometer face. Left for left turn, Right for right
Direction Signal Flasher—De Soto No. 1161586.

Switches

Lighting—De Soto No. 1149863.
Instrument—De Soto 976098 (early), 1154278 (late).
Beam Selector—DeSoto No. 859974.
Map Light—DeSoto No. 1149306.
Stop Light—DeSoto No. 920355.
Dome Lamp Pillar—DeSoto No. 317180.
Door Switches—DeSoto No. 882943.

Bulb Specifications

Position	Candlepower	Mazda No.
Headlamps	45-35 watts	Sealed Beam
Park & Tail (no Dir. Signal)	3	63
Front Dir. Sig. & Parking	21-3	1158
Rear Dir. Sig. & Tail	21-3	1158
Stop Light	21	1129
Rear License	3	63
Indicators, Ign. Sw., Glove	1	51
Instrument, Map Light	3	63
Dome①	15	87

①—Convertible (Quarter Lights) 6 cp. No. 81, 7 Pass. & Limo. (Pillar Lights) 3 cp. No. 63.

MISC. ELECTRICAL

CIRCUIT BREAKERS: Lighting—On back of lighting switch. Vibrating type, protects lighting circuits.
Direction Signal—On flasher behind instrument panel. Vibrating type. Protects direction signal
Windshield Wiper—Vibrating, thermostatic type. Starts to operate with current of 12 amperes.

FUSES: Transmission Solenoid (Hydraulic Trans.)—30 ampere. Under transmission relay on left fender.
Clock—2 ampere. In clock lead wire.

Horns: Auto-Lite Model HT-4007 (Low Pitch), HT-4008 (High Pitch). Dual horns operated by relay.

Horn Relay: Auto-Lite Model HRL-4101. Connected through ignition switch, operates only when "on".
Contacts Close—1.5-3.0 volts (seal to core with 4.0 volts maximum).
Contacts Open—.5 volt min. (open from seal).
Contact Gap—.026". **Air Gap**—.016-.020" (armature air gap with contacts closed but not sealed), .015-.018" (gap between armature leg and yoke with armature sealed to core).

ENGINE

ENGINE SPECIFICATIONS: Six cylinder, "L" head.
Bore—3 7/16". **Stroke**—4¼".
Displacement—236.6 cu. ins. **Rated H.P.**—28.36.
Developed Horsepower—109 at 3600 RPM.
Compression Ratio—6.6-1 std. cast-iron head.
Compression & Vacuum Reading—*See Tune-up data.*

ORIGINAL BORE & PISTONS: *See Chrysler Shop Notes*

OIL PAN REMOVAL: *See Chrysler Shop Notes.*

ORIGINAL BEARING SIZES: *See Chrysler Shop Notes.*

ENGINE REMOVAL: *See Chrysler Shop Notes.*

TIGHTENING TORQUE: *See Chrysler Shop Notes.*

CYLINDER HEAD: Tightening Torque & Cylinder Head Diagram—*See Chrysler Shop Notes.*

PISTONS: Aluminum alloy, U-slot, cam ground type.
NOTE—Skirt cam ground (.010-.014" smaller diameter across pin bosses) and tapered (.0005-.0015" smaller diameter at top of skirt than at bottom).
Length—3⅞". **Weight**—18.5 ozs. (stripped).
Clearance—.0008" on thrust face ¾" from bottom of skirt. Ring land diameter .0305" larger than skirt.
Removal—Pistons and rods removed from above.

Fitting New Pistons:—Check piston size with micrometer across large diameter at bottom of skirt. Insert .002" x ½" feeler between cylinder wall and piston (inverted, pin removed) on side opposite slot. Feeler pull 5-7 lbs. (with piston and block at 70° F.).

Replacement Pistons: *See "Pistons" in Chrysler Shop Notes.*
NOTE—Cylinder recondition limits .0005" taper and .0005" out-of-round. Badly scored bores or with taper over .030" or out-of-round over .005" require reboring and honing to limits listed above.

Installing Pistons:—Slot away from camshaft.

PISTON RINGS: Two compression, two slotted oil control, coated rings per piston ,all above pin. Oil ring grooves drilled for oil drainage (lower groove slotted).

Ring	Width	End Gap	Side Clearance
Compr. (#1)	3/32"	.007-.015"	.0025-.004"
Compr. (#2)	3/32"	.007-.015"	.002-.0035"
Oil Contr. (#3,4)	.5/32"	.007-.015"	.001-.0025"

Installing Rings—#1 Compr. with step on inner edge up. #2 Compr. with step on inner edge up or if step on outer edge, install with step down.

Replacement Piston Rings: *See Chrysler Shop Notes.*

PISTON PIN: Diameter 55/64". **Length** 2⅞". Floating type. Pin hole in rod bronze bushed.
Pin Fit in Piston—Thumb push fit (piston at 160°).
Pin Fit in Rod Bushing—Thumb push fit at 70° F.

Replacement Pins: Std., .0006", .003", .008" oversize.

CONNECTING ROD: Length 8". **Weight** 34.1 ozs. with bolts less bearings.
Lower Bearing Diameter—2⅛". *See "Original Bearing Size" in Chrysler Shop Notes.*
Lower Bearing—Removable, precision type, thin babbitt on steel.
Clearance—.0005-.0015". **Sideplay**—.005-.012".

Bearing Adjustment:— None (no shims). Replace bearings. *See "Connecting Rods & Bearings" in Chrysler Shop Notes.*

Replacement Bearings: *See "Connecting Rods & Bearings" in Chrysler Shop Notes.*

Installing Rods:—Oil metering hole toward camshaft.

CRANKSHAFT: 4 bearing, 7 integral counterweights with vibration dampener on front end.

Crankshaft Front & Rear Oil Seals: *See "Crankshaft and Main Bearings" in Chrysler Shop Notes.*
Bearing Diameter—2½". *See "Original Bearing Size" in Chrysler Shop Notes.*
Bearing Type—Removable, precision type, thin babbitt on steel. No shims.
Clearance—.0005-.0015".

Bearing Adjustment: None (no shims). Replace bearings. Do not file bearing caps. *See "Crankshaft and Main Bearings" in Chrysler Shop Notes.*

Replacement Bearings: *See "Crankshaft and Main Bearings" in Chrysler Shop Notes.*

End Thrust:—Taken by flange faces on rear (#4) main bearing. **End Play**—.003-.007".

CAMSHAFT: 4 bearing. Non-adjustable chain drive.
Bearing Diameters—#1, 2"; #2, 1 31/32"; #3, 1 15/16"; #4, 1¼".
Bearing Type—Removable, steel-backed, babbitt-lined bushings (except #4 machined in block).
Clearance—.001-.003" (#1), .0015-.0035" (all others).

End Thrust:—Taken by thrust plate behind camshaft sprocket hub. **Endplay**—.002-.006".

Camshaft Removal: *See "Camshaft & Bearings" in Chrysler Shop Notes.*

Timing Chain: Width 1". Pitch .500" (½"). Length 24" or 48 links.

Camshaft Setting:—Sprockets marked. Mesh chain with sprockets turned so that '0' marks are adjacent and in line with a straightedge across shaft centers.

VALVES:	Head Diameter	Stem Diameter	Length
Intake	1 23/32"	.3405-.3415"	4 25/32"
Exhaust	1 17/32"	.3385-.3395"	4 25/32"

	Seat Angle	Lift	Stem Clearance
Intake	45°	⅜"	.001-.003"
Exhaust	45°	⅜"	.003-.005"

Exhaust Valve Seat Insert Servicing—*See "Valve System" in Chrysler Shop Notes.*

Valve Guides:—Remove from above. Press new guides in (stepped end down) with upper end ⅞" below top of block (tool CM-83), finish ream to .3425-.3435".

Valve Springs:—Install with closely coiled end to top.

Free length 2".	Spring Pressure	Length
Valve Closed	40- 45 lbs.	1¾"
Valve Open	107-115 lbs.	1⅜"

Valve Lifters:—Mushroom type (remove from below). Stem diam. ⅝". Ream holes from above (pilot in valve guide). Oversizes .001", .008", .030" & .060".
Lifter Clearance in Block—.000-.001".

VALVE TIMING

Tappet Clearance:—.008" Intake, .010" Exh. (hot and idling), .002" additional exh. clearance desirable for sustained high speeds. NOTE—Tappet screws self-locking (no locknuts). Remove right front wheel and lower wheel housing panel for access to valves.

Valve Timing:—See Camshaft Setting above.
Intake Valves—Open 12° BTDC. Close 44° ALDC.
Exhaust Valves—Open 50° BLDC. Close 6° ATDC.
Valve Timing Check—With .014" (cold) tappet clearance #6 intake valve should open with #6 piston within range of 5° to 17° or .011" to .122" BTDC with 5th to 17th graduation before DC mark on impulse neutralizer aligned with pointer on chain case cover. Reset tappet clearance to .008" Hot.

LUBRICATION

Engine Oiling System: Pressure to main and connecting rod bearings, camshaft bearings, and timing chain. New "Rotor" type oil pump mounted externally on right side of crankcase.
Crankcase Capacity—5 quarts (refill).
Normal Oil Pressure—45-55 lbs. above 30 MPH.
Oil Pressure Relief Valve Under plug below starter. Opens at 40-45 lbs. Spring painted red, green, or unmarked. If spring replaced, use same color spring.

Oil Pump: New "Rotor" type on right side of engine.
Servicing—*See "Oil Pump" in Chrysler Shop Notes.*

Oil Filter: On left side of engine above starter.
Servicing—Replace element at 8000 mile intervals.

Oil Pressure Gauge: Auto-Lite No. G-10888 (not elec.).

COOLING

Cooling System: Positive circulation with pump on front of engine, by-pass thermostat, and water distribution tube in cylinder block behind pump.
Capacity—17 quarts.

Radiator Core Removal: *See "Radiator" in Chrysler Shop Notes.*

Water Distribution Tube Servicing: *See "Cooling System" in Chrysler Shop Notes.*

Water Pump: Packless type with grease fitting.
See Water Pump Section for complete data.
Removal—Drain cooling system, remove fan belt, disconnect hoses at pump, remove pump mounting studs, lift fan and pump off.
Belt Adjustment—*See Generator Belt Adjustment.*

Thermostat: In cylinder head water outlet.
INSTALLATION NOTE—Install thermostat with 2 ports facing front, and 2 ports facing rear.
Setting—Starts to open 157-162°F. Fully open 183°F.

Temperature Gauge: Auto-Lite No. H-10890 (not elec.).

CLUTCH

Borg & Beck Model 10A7 (Std.), 9A7 (with Fluid Drive), 11A6 (Taxi). Single plate, dry disc type with "Borglite" driven member.

NOTE—Cover assembly marked 952 (9A7), 957 (10A7), 931 (11A6).
See Clutch Section for complete data.

Facings—Woven type, 2 required.

	Inside Diam.	Outside Diam.	Thickness
9A7	6"	9¼"	.125" (⅛")
10A7	7"	10"	.125" (⅛")
11A6	6½"	11"	.125" (⅛")

Pedal Adjustment: Should just clear toeboard (adjust stopscrew on lower end of pedal) & have 1" free travel (adjusting nut on connector link at fork).
Clutch Over-Center Spring—*See "Clutch Notes" in Chrysler Shop Notes for setting procedure.*

Removal:—Remove release fork pull-back spring, Transmission (see Transmission) and housing underpan. Pull out clutch release bearing and sleeve. Mark cover and flywheel (or driving plate on Fluid Drive). Take out cover screws, remove assembly.

FLUID DRIVE

DeSoto—Fluid coupling at rear of engine. Optl.
See Miscellaneous Section for complete data.

Oil Level: Keep to level of filler hole. Check at first 1000 miles and every 10,000 miles. Manufacturer recommends MOPAR Fluid Drive Fluid.

Removal: Remove transmission and clutch (see TRANSMISSION and CLUTCH), take off driver flange stud nuts (Tool C-589), lower fluid drive assembly out.

TRANSMISSION
STANDARD

Own Make. All helical gear, constant-mesh, synchro-mesh (Second & High), sliding gear (Low & Reverse). *See Transmission Section for complete data.*

Transmission Control: Manual steering col. shift.
See Transmission Section for complete data.

Removal:—Jack up front end of car, disconnect front universal (loosen companion flange nut if disassembling transmission—see Chrysler Shop Notes for Propeller Shaft Center Bearing Removal on 7 pass.). Disconnect speedometer cable, hand brake cable, gear-shift rods, vacuum and air hose (if Power Shift used). Remove trans.-to-clutch housing capscrews and nuts. Pull unit to rear, down and out of car.
NOTE—Use pilot studs when installing assembly.

TRANSMISSION
OPTIONAL EQUIPMENT

Tip-Toe Shift Type (with Fluid Drive). New design semi-automatic, four-speed transmission with hydraulic actuation and electrical control.
See Transmission Section for complete data.

Transmission Control: See Transmission article for adjustment instructions.
See Transmission Section for complete data.
Kickdown Solenoid—Auto-Lite No. SSS-4002.
Kickdown Relay—Auto-Lite No. HRM-4102.
Governor—Auto-Lite No. TG-4202R, 3R, or 4R.
Kickdown Switch—Part of carburetor assembly.
Ignition Interrupter Switch—On right side of transmission above Governor.
Fuse—30 ampere. On Kickdown Relay.
Transmission Oil—3 pints, 10-W engine oil.

Removal: Remove access cover on right rear side of floorboard under front floor mat, disconnect speedometer cable, and governor, solenoid, and interrupter switch wires at transmission. Remove governor and solenoid. Disconnect hand brake cable at brake band, remove cable and cable anchor bracket. Remove brake support, band, adjusting bolt bracket and lever as an assembly. Disconnect front universal (push yoke back), and gearshift rods at transmission. Drain transmission, **replace drain plug.** Disconnect transmission mounting bolts and lower assembly out of car.
INSTALLATION CAUTION—Rear face of clutch housing and lower pan must be in correct alignment. Misalignment can cause hard shifting when transmission installed.

UNIVERSALS

Detroit Universal Series 7200. Cross type with roller bearings. *See Universals Section for complete data.*

Propeller Shaft Center Bearing: Used on 7 passenger
See "Propeller Shaft" in Chrysler Shop Notes.

REAR AXLE

Own Make. Semi-floating, hypoid gear type with Hotchkiss drive.
See Rear Axle Section for complete data.

Axle Ratios	Std. Trans.	Tip-Toe Trans.
All exc. Sub. & 7 Pass.	3.9-1①	3.73-1②
Pass. Cars	4.3-1③	3.91-1
Sub. Sedan	4.3-1③	4.1-1④

①—Special Ratios 3.54-1, 3.73-1, 3.91-1, 4.1-1, 4.3-1, 4.56-1 & 4.78-1 (Export).
②—Special Ratios 3.54-1 and 3.9-1.
③—Special Ratios 4.1-1, 4.89-1 (Export).
④—3.91-1 on cars before Serial No. 5824769 except Serial Nos. 5821234 to 5821693.
Backlash—.006-.010". Screw adjustment.

Removal:—Disconnect rear universal, remove axle shafts (see below) and carrier assembly cap screws.
Axle Shaft Removal—Remove wheel, hub, and drum assembly (use screw type hub puller—Tool C-675), block brake pedal, disconnect brake line at wheel cylinder, remove axle shaft key, install sleeve (Tool C-745) in oil seal, remove brake support (oil seal mounted in support), pull shaft and bearing (use C-499 puller). NOTE—Use puller C-293-E to remove bearing from shaft, puller C-748 or C-358 to remove inner oil seal, drift C-201 to install seal.

Axle Shaft Outer Seal: New leather type mounted on brake support (backing plate).
Oil Seal Servicing—*See "Rear Axle" in Chrysler Shop Notes.*

Wheel Bearing Adjustment: Shims between backing plate and axle housing. With wheel and hub removed, check endplay with dial indicator. To adjust, remove backing plate (see above), add or remove shims (furnished .010", .0125", .015", .030" thick) equally at both wheels. **Endplay**—.003-.008".

SHOCK ABSORBERS

Delco—Model 1030-C (Front), 1030-T (Rear).
Monroe—Model K-11148 (Front), K-11149 (Rear).
Export—Delco Model 942D (front), 940W (rear). Direct acting, hydraulic types.
See Shock Absorber Section for complete data.

Hydraulic Transverse Sway Absorber: Rear sway bar with built-in shock absorber used on 7 Pass. Sedan
See Shock Absorber Section for complete data.

FRONT SUSPENSION

Front Suspension:—Independent linked parallelogram type with coil springs.
See Front Suspension Section for complete data.
Kingpin Inclination—4¾° to 6°.
Camber—Positive ¼°. Limits 0° to Pos. ¾°.
Caster—Negative 1° to Positive 1°. Not adjustable.
Toe In—0-1/16". Turn both tie rods equally.
Steering Geometry—Inner wheel 22½°, Outer 20°.

STEERING GEAR

Own Make. (Gemmer design) Model 305 (All except 7 Pass. & Suburban Sedan), Model 335 (7 Pass. & Suburban Sedan).
NOTE—See Gemmer 305 & 335 article for data.
See Steering Gear Section for complete data.

BRAKES

Service: DeSoto "Safe-guard" Lockheed Hydraulic
Front Wheels—Two-cylinder type (front shoe anchored at bottom and actuated by upper cylinder, rear shoe anchored at top and actuated by lower cylinder).
Rear Wheels—Double anchor type with single double-acting wheel cylinder.
See Brake Section for complete data.
Wheel Cylinders—1⅛" bore. Single acting (front), double acting (rear wheels).
Drums—Cast-iron. Diameter 11" (12" on 7 pass.).
Lining—Molded Asbestos. 2" Wide. 13/64" thick. Length per shoe: 11" type—8⅞" (rear wheel rear shoe), 11½" (all others). 12" type—9⅝" (rear wheel rear shoe), 12 9/16" (all others).
Clearance—.006" at each end of all shoes.
Braking Power—60% front wheels, 40% rear.

Hand Brake:—On drum at rear of transmission.
Adjustment *See "Hand Brake" in Chrysler Shop Notes.*
Drum—Cast-iron. 6" (7" Tip-Toe Shift & 7 Pass.).
Lining—Width 2" (2½" on 7" type). Thickness 5/32". Length 16 11/16" (20" on 7" type).
Clearance—.015-.020" around band.

MISC. MECHANICAL

WINDSHIELD WIPER: Auto-Lite Model EWH-5001, EWH-5003 (Conv. Coupe). Electric type with circuit breaker mounted on control switch.
See Miscellaneous Section for complete data.
Circuit Breaker—Vibrating, thermostatic type. Starts to operate with current of 12 amperes.

CONVERTIBLE TOP CONTROL: Electric type.
See Miscellaneous Section for complete data.

MODEL IDENTIFICATION

SERIAL NUMBER:—First number—4,015,051 (Detroit), 9,405,681 (Canada). On right front door hinge pillar post.

ENGINE NUMBER:—First Number—D2-1001. Stamped on boss on left side of cylinder block between #1 and #2 cylinders. *See Chrysler Shop Notes for engine number lettering data (denoting special bore and bearing sizes).*

TUNE-UP

COMPRESSION:—**Ratio**—6.5-1 Std. cast-iron head. No optl. ratios.
Pressure—135-145 lbs. at 1000 R.P.M. or approx. 110 lbs. at cranking speed.

VACUUM READING:—Gauge should show steady reading of 16-18" with engine idling at 7-8 M.P.H.

FIRING ORDER: 1-5-3-6-2-4. See diagram.

SPARK PLUGS: Champion Type J-8. 14 mm. Metric type.
Gaps—.025"

IGNITION: See Coil, Condenser, and Distributor.
Breaker Gap—.020" **Cam Angle** 38° (closed).
Automatic Advance—12° max. at 1530 RPM (IGS-4002-1), 1750 RPM (IGS-4002A-1), Distr. ° & RPM.
Vacuum Advance—8° distr. with 12" vacuum (IGS-4002-1), 15" vacuum (IGS-4002A-1).

IGNITION TIMING: See Ignition Timing.
Std. Setting—4° ATDC. with 4° mark after dead center "0" mark on fan pulley at indicator on front of engine.

CARBURETION: See Carburetor & Carb. Equipment.
Idle Setting—Idle screw midway between "miss' and "roll" points. Idle speed 7-8 MPH.
Float Level—Fuel level 5/8" below top of bowl.
Accelerating Pump—Center hole Normal. Inner hole (Summer), Outer hole (Winter) for temperature extremes.
Fuel Pump Pressure: 4¼ lbs. maximum.

VALVES: See Valve Timing.
Tappet Clearance:—.006" Int., .008" Exh., with engine hot. 010" Exh., recommended for sustained high speed.

STARTING: See Battery, Starter, Generator, Regulator.

IGNITION

Ignition Switch:—Mitchellock Model 24-R, Type 6508. Connected to coil by armored cable.
Ignition Lock—Yale & Towne Mod. DP-108, Mitchell No. 6286.

COIL: Auto-Lite Model IG-4628. Service coil (less Switch & Cable) IG-3224JS.
Ignition Current—2½ amperes idling, 5½ stopped.

CONDENSER: Auto-Lite Part No. IG-3927A.
Capacity—.25-.28 microfarad.

DISTRIBUTOR: Auto-Lite Model IGS-4002-1, 4002A-1. Single breaker, 6 lobe cam, full automatic advance type with auxiliary vacuum spark control.
NOTE—IGS-4002-1 distributor used up to Engine No. D2-110250, IGS-4002A-1 after this number.
See Electrical Equipment Section for special servicing directions on these distributors.
For complete data, refer to Electrical Equipment Index.
Breaker Gap—Set at .020". Limits .018-.020".
Cam Angle or Dwell—38° closed, 22° open.
Breaker Arm Spring Tension—16-20 ounces.

Automatic Advance—IGS-4002-1

Distributor Degrees	R.P.M.	Engine Degrees	R.P.M.
Start	350	0	700
3	400	6	800
6	780	12	1560
9	1160	18	2320
12	1530	24	3060

Automatic Advance—IGS-4002A-1

Degrees	R.P.M.	Degrees	R.P.M.
Start	350	0	700
3	400	6	800
6	850	12	1700
9	1300	18	2600
12	1750	24	3500

Vacuum Spark Control—Integral with distributor. Mounted on distributor housing and linked directly to breaker plate. Provides additional advance for all speeds above idling except when engine is accelerated or operated with wide open throttle when spark is retarded by return spring within unit.

Vacuum Advance—IGS-4002-1

Distr. Degrees	Eng. Degrees	Vacuum (" of HG)
Start	0°	5"
2°	4°	6¾"
4°	8°	8½"
6°	12°	10¼"
8°	16°	12"

Vacuum Advance—IGS-4002A-1

Start	0°	5¼"
2°	4°	7⅝"
4°	8°	10"
6°	12°	12½"
8°	16°	15"

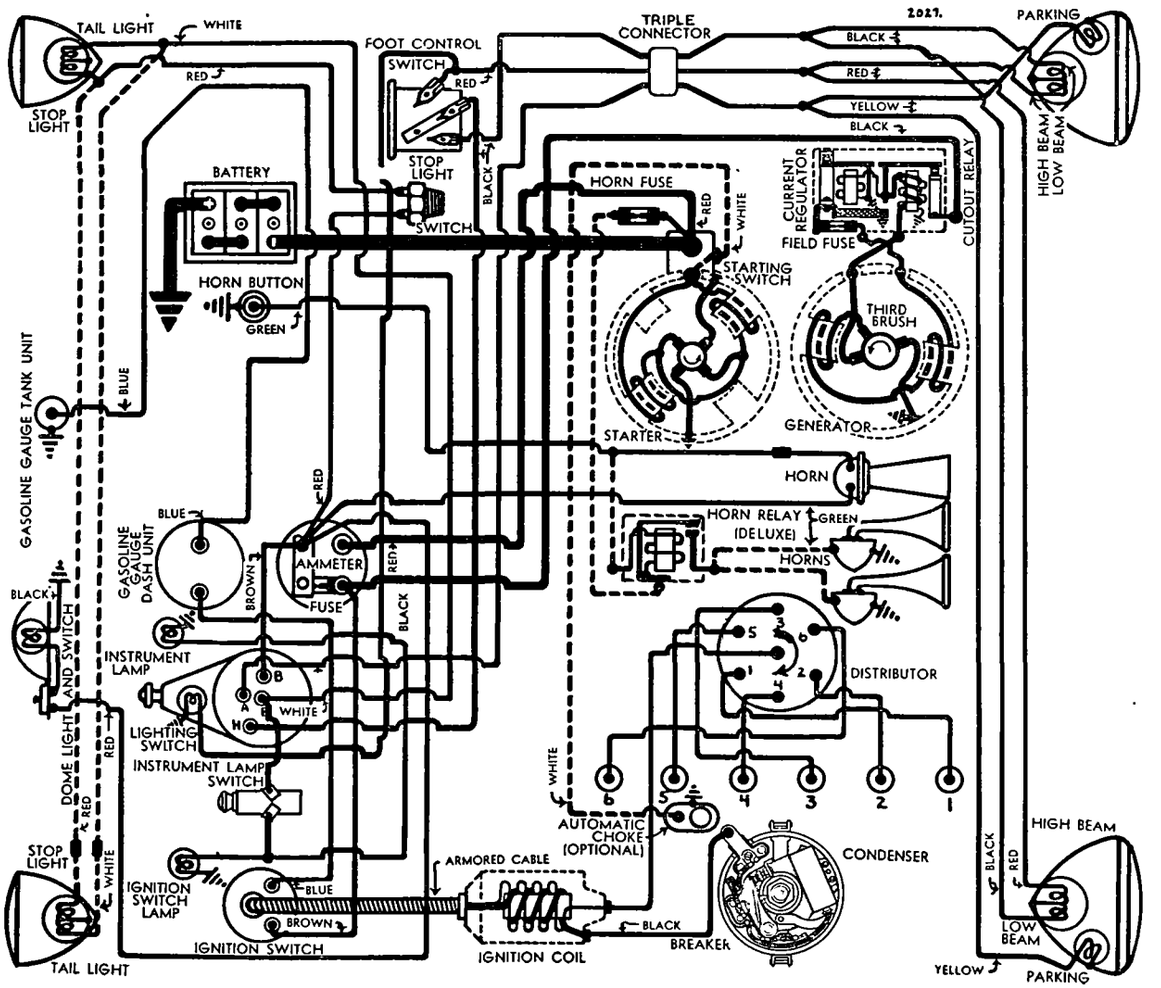

Distributor Removal:—Mounted on left side f crankcase. To remove, disconnect vacuum line, take ut hold-down screw in advance arm.

IGNITION TIMING

IGNITION TIMING:—

	Flywheel Degrees	Piston Pos.
All engines	4° ATDC	.0068" ATDC

See 'Manual Adjustment' (following) for final setting for best performance depending on fuel used.

Timing (Using Timing Light)—Connect timing light between distributor terminal and battery terminal on generator control unit. Turn engine over until #1 piston is 4° or .0068" past top dead center, stop when fourth graduation to left of center 'O' mark on fan pulley at front of engine lines up with pointer on chain case cover. Loosen hold-down screw in advance arm, center pointer on scale, tighten hold-down screw. Loosen advance arm clamp bolt, rotate distributor until lamp goes out, tighten clamp bolt.

Timing (Using Synchroscope)—Clip lead to #1 spark plug, direct light at fan pulley, fill in 4° mark to left of center 'O' mark with chalk or white paint.

Manual Adjustment:—After ignition set as above, road test car and adjust for slight ping with wide open throttle when accelerating from 10 to 30 M.P.H. To adjust, loosen hold-down screw, advance (counter-clockwise), retard (clockwise) pointer on scale. Scale graduated in engine degrees. Do not advance more than 5° on scale.

CARBURETOR

CARBURETION:—Carburetor—Stromberg Model EXV-2, 1¼" downdraft type. See Carburetion Section for adjustment, overhaul, and Jet Specifications.

For complete data, refer to Carburetor Index.

NOTE—Do not adjust carburetor until engine is warmed up so that engine will idle at hot or slow idling speed with choke valve wide open.

Idle Adjustment—Adjust throttle stopscrew so that idle speed is 7-8 M.P.H. Turn idle adjusting screw in until engine begins to hesitate or miss, then out until engine begins to roll, finally turn screw in until engine fires smoothly. Readjust throttle stopscrew for correct idling speed.

Accelerating Pump Setting—Engage pump link in proper hole in throttle lever as follows:

Inner Hole—(Min. stroke)—Extremely warm weather.

Center Hole—Normal summer temperatures.

Outer Hole—(Max. stroke)—Winter temperatures.

NOTE—5% and 10% lean main metering jets (high altitude calibration) may be used at lower altitudes for maximum fuel economy although with considerably reduced speed and power. See Stromberg Jet Specifications in Carburetion Section.

Throttle Cracking: Throttle opened approx. one-third when starter pedal depressed. This setting should be checked and adjusted when checking automatic choke.

Fast Idle:—No adjustment required. Throttle stopscrew should rest on high point of cam.

Automatic Choke: Sisson Type AC-751B.

For complete data, refer to Carburetion Equip. Index.

CARB. EQUIPMENT

Air Cleaner:—AC. #1525919 oil-wetted type standard, #1526712 heavy duty oil-bath type optional.

Fuel Pump:—AC. Type D #1522237 (early cars), #1522995 (later cars) diaphragm types.

For complete data, refer to Carburetion Equip. Index.

Gasoline Gauge:—Motometer Electric. No. NG-7687-T (tank unit), NG-7720-D (dash unit).

For complete data, refer to Carburetion Equip. Index.

BATTERY

BATTERY:—Willard, Type WT-1-15, WT-1-90 (Export). 6 volt, 15 plate, 90 ampere hour capacity (20 hour rate).

Starting Capacity—117 amperes for 20 minutes.

Zero Capacity—300 amperes for 3.1 minutes.

Grounded Terminal—Positive (+) terminal.

Location—On left side under driver's seat.

R-2-15 (Special Export):—6 volt, 15 plate, 105 ampere hour capacity (20 hour rate).

Starting Capacity—127 amperes for 20 minutes.

Zero Capacity—300 amperes for 3.3 minutes.

STARTER

Auto-Lite Model MAW-4010, MAW-4011 (RHD). Armature No. MAW-2030.

Drive—Positive shift outboard pinion.

Cranking Engine—Approx. 175 amperes at 5 volts.

Rotation—Counter-clockwise at commutator end.

Brush Spring Tension—42-53 ozs. (new brushes).

Performance Data

Torque	R.P.M.	Volts	Amperes
0 ft. lbs.	4900	5.5	65
.60 "	3300	5.5	100
2.75 "	1480	5.0	200
5.45 "	820	4.5	300
8.50 "	400	4.0	400
11.55 "	110	3.5	500
11.5 "	Lock	3.0	505
18.0 "	Lock	4.0	670

Removal:—Flange mounted on left front face of flywheel housing. To remove, take out two flange mounting screws.

Starting Switch (MAW-4010):—SW-2813. Mounted on starter field frame and operated by pinion shaft (starting pedal). See Equipment Section for pedal adjustment.

(MAW-4011)—Solenoid Switch Type SS-4104. Controlled through relay by pushbutton on dash. Operative with ignition turned 'on'.

For complete data, refer to Electrical Equipment Index.

Solenoid Switch

Closes against 105 lb. pull with ⅜" air gap drawing 65 amprees. Holds switch closed with draw of 15 amperes (hold-in coil only).

Solenoid Relay

Contacts Close—3.5-4.5 volts. Open—1.5-2.5 volts.
ContactGap—.025-.030". AirGap—.005-.007" (closed).

GENERATOR

STANDARD

Auto-Lite Model GAR-4608A-5 or 4608E-5. Armature GAR-2116F. Third brush control with Current Regulator (two-rate charging control). Ventilated by fan on drive pulley.

Charging Rate Adjustment—Use test meters. Connect jumper between fuse cup on regulator and ground. Shift third brush by hand counter-clockwise to increase or clockwise to decrease charging rate until output is 21 amperes at 8.6 volts with generator at room temperature. Third brush held in position by friction. Remove jumper.

Commutator Bar Method—Shift third brush until exactly 4 commutator bars are exposed between brush and nearest main brush.

Maximum Charging Rate—As given above. Do not exceed.

Performance Data

Cold — Regulator Contacts Closed			Hot — Regulator Contacts Closed		
Amperes	Volts	R.P.M.	Amperes	Volts	R.P.M.
0	6.4	800	0	6.4	825
4	6.8	950	4	6.8	1000
8	7.25	1100	8	7.25	1200
12	7.7	1275	12	7.7	1440
16	8.1	1525	16	8.1	1825
21	8.6	2400	18.5	8.35	2500

Rotation—Counter-clockwise at commutator end.

Brush Spring Tension—24 ozs. min. (old brushes), 36 ozs. max. (new brushes).

Field Current—3.51-3.89 amperes at 6.0 volts.

Motoring Current—5.03-5.57 amperes at 6.0 volts.

Field Fuse—5 ampere in plug on regulator case.

Removal:—Pivot mounted at left front of engine. To remove, take out pivot bolts and clamp bolt.

Belt Adjustment:—Swing generator away from engine until 45-50 lb. reading on scale attached to generator frame.

GENERATOR

SPECIAL EQUIPMENT

SPECIAL GENERATORS:—Other Makes—***Refer to Electrical Equipment Index for 'Special Generator' article for complete data on special generators and regulators which may be found on these cars.***

REGULATOR

Auto-Lite Model TC-4301A. "Two-Charge" Type. On generator. Consists of Cutout Relay & Current Regulator (two-rate charging control). See article in Equipment Section for complete data.

For complete data, refer to Electrical Equipment Index.

Cutout Relay

Cuts In—6.5-7.25 volts.

Cuts Out—.5-2.5 ampere discharge current.

Contact Gap—.015-.045".

Air Gap—.010-.030" with contacts closed.

CONTINUED ON NEXT PA E

C NTINUED FROM PRECEDIN PAGE

Current Regulator

Contacts Open—8.25-8.75 volts at 70° F.

Contacts Close—1.2-1.4 volts below opening point.

Contact Gap—.005" minimum.

Air Gap—.045" with contacts closed.

LIGHTING

LIGHTING:—Headlamps—Corcoran Brown, Pro-focused type. Headlamps aimed straight ahead (upper beam with lenses in place). Lower beam deflected slightly to right. Upper and lower beams controlled by foot selector switch.

Headlamp Beam Indicator—In light switch knob. Lighted when headlamp upper beams in use.

Switches

Lighting—Dodge Part No. 652143. Douglas Switch which is available only through Dodge Parts Dept.

Foot Selector—Clum Model 9654.

Stop Lamp—R.B.M. Model 910. Hydraulic type mounted on brake master cylinder.

Bulb Specifications

Position	Candlepower	Mazda No.
Headlamps	32-32	2331
Parking, Instr., Indicator	1½	55
Stop and Tail	21-3	1158
Dome	15	87

MISC. ELECTRICAL

FUSES:—Lighting—20 ampere on back of ammeter.

Generator Field—5 ampere in plug on regulator case.

Twin Horns—30 ampere in connector near starter.

HORNS:—Auto-Lite Model HA-4018 Std. Klaxon Model K-33-C Type 2151 (low note), 2152 (high note) Optl. (with horn relay).

Horn Type	Current at 6 volts	Air Gap
2151 (low note)	11-13	.042-.046"
2152 (high note)	10-12	.032-.036"

Horn Relay:—Model 266-TK. Requires .25 amperes at 2 volts min. to close contacts. Current draw .8 amperes.

Contact Gap—.015-.025".

Air Gap—.012-.017" with contacts closed.

ENGINE

ENGINE SPECIFICATIONS:—6 cylinder, 'L' head.

Bore—3¼". **Stroke**—4⅜".

Displacement—217.8 cubic inches.

Rated Horsepower—25.35 (AMA).

Developed Horsepower—87 HP at 3600 R.P.M.

Compression Ratio—6.5-1 Std. cast-iron head. No optl. ratios.

Compression Pressure—135-145 lbs. at 1000 R.P.M. or approx. 110 lbs. at cranking speed.

Vacuum Reading—Gauge should show steady reading of 16-18" with engine idling at 7-8 M.P.H.

PISTONS:—Aluminum alloy, Invar strut, slotted skirt

Length—3 11/16".

Weight—Held to two gram max. variation.

Removal—Pistons and rods removed from above.

Clearance—Top .022". Bottom .0015-.002". See Fitting New Pistons.

Replacement Pistons:—Finished anodized pistons furnished in standard and .003", .005", .010", .015", .020", .023", .025", .030", .040", .050", .060" oversizes. Semi-finished pistons furnished: (1) standard to .023" oversize, (2) .025-.050" oversize, not interchangeable. Pistons should be slotted and then finished to correct fit.

Fitting New Pistons:—Micrometer gauge recommended. Using feeler gauge (.002") inserted between piston and cylinder wall on side opposite slot, pull required to withdraw feeler must be 7-10 lbs.

Installing Pistons:—Slot should be toward left or away from camshaft.

PISTON RINGS:—Two undercut compression rings, two oil control rings per piston, all above pin. Lower ring grooves drilled with oil drain holes.

Ring	Width	End Gap	Side Clearance
Comp. all	⅛"	.007-.015"	.001-.003"
Oil (both)	5/32"	.007-.015"	.003-.005"

Replacement Rings:—Furnished in standard and .003", .010", .020", .030", .040", .050", .060" oversizes.

NOTE—Install compression rings with step down.

PISTON PIN:—Diameter—55/64". **Length**—2¾". Pin floats in piston and rod. Held by retaining rings. Pin hole in rod is bronze bushed.

NOTE—Heat piston in boiling water to remove or install pins.

Pin Fit in Piston—Tight thumb push fit with piston heated to 160° F.

Pin Fit in Rod Bushing—Tight thumb push fit with piston and rod at 70° F.

Replacement Pins:—Pins furnished in standard and .003", .005", .008" oversizes. Ream rod bushing and pin holes in piston bosses for correct fit.

CONNECTING ROD:—Weight All rods held to ¼ oz. maximum variation. **Length**—7 15/16".

Crankpin Journal Diameter—2 1/16".

Lower Bearing—Steel-backed, copper-lead lined, interchangeable. Furnished standard and .010" undersize.

Clearance—.001-.003". Sideplay .0055-.0115".

Bearing Adjustment:—None (no shims). Replace bearings. Do not file rods or caps. Install new bearings with bosses engaging grooves in rod and cap.

Installing Rods:—Lower bearings are offset. Install rods with widest half of bearing toward rear (#1, 3, 5) and toward front (#2, 4, 6). Oil hole in lower bearing upper half must be toward camshaft.

CRANKSHAFT:—4 bearing. Integral counterweights.

Journal Diameters—2½" for all bearings.

Bearing Type—Removable steel-backed, babbitt-lined (#1 and 4), copper-lead or cadmium-nickel (#2 and 3). Furnished standard and .010" undersize.

Clearance—(#1 and 4) .001-.002". (#2 and 3) .0015-.0025".

Bearing Adjustment:—None (no shims). Replace bearings. *For Front Main Bearing Cap Removal and Bearing Adjustment data, refer to Chrysler Shop Notes.*

Replacement Bearings & Bearing Caps: *Refer to Chrysler Shop Notes for complete data.*

End Thrust:—Taken by flange faces on rear (#4) bearing. Endplay .003-.007".

CAMSHAFT:—4 bearing. Non-adjustable chain drive.

Journal Diameters—#1, 2"; #2, 1 13/32"; #3, 1 15/16"; #4, 1¼".

Bearing Type—Removable steel-backed, babbitt-lined (except #4 machined in crankcase).

Clearance—.001-.003" (#1), .0015-.0035" (all others).

NOTE—New bearings require no line-reaming.

End Thrust:—Taken by thrust plate at rear of sprocket hub. Endplay .002-.006".

Timing Chain:—Morse. Width 1". Pitch .500". Length 24" or 48 links.

Camshaft Setting:—Sprockets are marked. Mesh chain with sprockets turned so that 'O' marks are adjacent and in line with a straightedge across shaft centers. Install chain endless.

NOTE—Engine must be supported under front end of oil pan and front engine support removed for work on timing chain and camshaft.

VALVES:—	Head diam.	Stem diam.	Length
All valves	1 15/32"	.340-.341"	4 25/32"

	Seat Angle	Lift	Stem Clearance
Intake	45°	5/16"	.001-.003"
Exhaust	45°	5/16"	.003-.005"

See Chrysler Special Shop Notes for Exhaust valve seat insert removal and installation instructions.

Valve Guides:—Use special tool to remove and install guides. Insert guides with taper end up (intake) and down (exhaust). Top of guide must be ⅞" below top of block. Finish ream new guides to inside diameter of .342-.343" (Int.), .344-.345" (Exh.).

Valve Springs:—Variable pitch type. Install springs with close coil at top. Do not compress springs to over all length of less than 1⅜".

	Spring Pressure	Spring Length
Valve Closed	34-38 lbs.	1¾"
Valve Open	77-83 lbs.	1 7/16"

Valve Lifters:—Mushroom type. Ream guides to take following oversizes: .001", .008", .030", .060".

VALVE TIMING

Tappet Clearance—.006" Int., .008 Exh. (hot). .010" Exh. recommended for sustained high speed.

Valve Timing:—See Camshaft Setting above.

Intake Valves—Open 6° ATDC. Close 46° ALDC.

Exhaust Valves—Open 42° BLDC. Close 8° ATDC.

To Check Valve Timing—Install regular timing gauge in timing plug hole over #6 piston, set tappet clearance #6 valves at .011" (intake), .012" (exhaust). Intake valve should open with piston .015" past top dead center, and exhaust valve close with piston .027" past top dead center. Reset tappet clearance at .006" Int., .008" Exh., hot.

LUBRICATION

LUBRICATION:—Pressure. Gear type oil pump located at right of crankcase.

NOTE—Ignition timing should be checked whenever oil pump is installed in engine.

Normal Oil Pressure—30-40 lbs. at 30 M.P.H.

Oil Pressure Relief Valve:—Under plug on left hand side of crankcase. Operates at 40 lbs. Adjustable by changing spring. Stand. spring unpainted. Heavy spring (to increase pressure) painted green. Lighter spring (to decrease pressure) painted red.

Crankcase Capacity—5 qts. (refill).

CLUTCH

CLUTCH:—Borg & Beck Model 10A6. Single plate, dry disc type. ***See Clutch Section for complete data.***

Facings—Woven (pressure plate side), molded (flywheel side), Inside Diam. 6⅛". Outside Diam. 9⅞". Thickness ⅛".

Adjustment—Clutch pedal should just clear underside of toe board with clutch engaged. To adjust, turn stopscrew located just above clutch pedal shaft. Free movement of pedal should be 1 1/16". To adjust, loosen locknut and turn adjusting nut (clevis) on clutch fork adjusting rod.

NOTE—Mark clutch cover and flywheel before disassembling and reassemble in same position.

Removal—Disconnect clutch pedal linkage, remove fork pivot screw, take out clutch fork. Remove transmission (release bearing and spring are withdrawn with transmission), remove clutch housing pan, prick punch clutch cover and flywheel (install in same position to maintain balance), take out clutch mounting bolts, turning all bolts out evenly to release spring tension and avoid distortion of clutch cover. Remove clutch from below. Use pilot studs when removing and installing transmission to avoid springing clutch plate.

Automatic Clutch:—See article in Clutch Section.

See Clutch Section for complete data.

TRANSMISSION

Own Make. All helical gear type with constant-mesh, synchro-mesh helical gears for Second and High.

See Transmission Section for complete data.

Removal: Remove floor boards. Disconnect battery ground cable, speedometer cable, and drive shaft at universal joints. Remove gearshift lever and housing assembly. Remove hand brake lever and brake drum assembly. Disconnect clutch release fork and linkage and spring (to allow fork to clear clutch release bearing as transmission removed). Remove mounting bolts (insert two pilot studs in top mounting holes to support transmission as it is withdrawn), pull transmission straight back to clear clutch shaft and remove from car.

UNIVERSALS

Detroit Series 4200. Roller bearing, Ball-and-Trunnion type. Two used.

See Universals Section for complete data.

REAR AXLE

Own Make. Spiral Bevel or Hypoid Gear, semi-floating type with Hotchkiss drive.

See Rear Axle Section for complete data.

Ratio—4.125-1 (Sedans), 3.88-1 (Coupes), 4.33-1 (7 Pass. Sedans).

Backlash—.006-.008". Screw adjustment.

Removal: Remove wheel, hub and drum assembly (use screw type hub puller). Disconnect brake line, remove backing plate and oil seal assembly, pull axle shaft and bearing (use puller), disconnect drive shaft at rear universal joint. Take out mounting screws and withdraw differential carrier assembly.

NOTE—Bleed brake line after rear axle re-installed and brake line connected.

Wheel Bearing Adjustment—Endplay controlled by shims between backing plate and flanged end of axle housing. Adjust by adding or removing shims equally at both sides. Shims accessible by removing wheel hub, drum, backing plate and oil seal (see Removal data above). Check endplay with dial indicator.

Endplay—.003-.008".

FRONT SUSPENSION

Front Suspension:—Conventional tubular section axle (Reverse-Elliott ends), semi-elliptic springs.

Kingpin Inclination—9½° crosswise (limits 9-10°), **Caster**—2° (1-3°). Adjust by inserting wedge plates between springs and axle pads. Wedges available in ½, 1, 2° angles.

Camber—½° (¼-¾°). No adjustment. Replace tubular axle if camber is out more than ½°.

Toe In—0-⅛". Adjust in usual manner by loosening tie rod end clamps and rotating tie rod.

STEERING GEAR

Steering Gear: Gemmer Worm-and-Roller type.

See Steering Gear Section for complete data.

BRAKES

BRAKES:—**Service**—Lockheed hydraulic, double anchor type. Hand lever applies brake at rear of transmission or rear wheel service brakes (on 7 pass.

See Brake Section for complete data.

Wheel Cylinders—Diameters, Front Wheel (Front end 1¼", Rear end 1⅜"). Rear Wheel (Front end 1⅛", Rear end 1¼").

NOTE—Wheel cylinders marked 'R' right side f car, 'L' left side of car. Not interchangeable.

Drum Diameter—10".

Lining—Moulded type. Width 2". Thickness 13/64". Length per wheel 19 13/16".

Clearance—.012" toe, .006" heel, for each shoe.

Hand Brake:—External type on drum at rear f transmission. See Service Brake (above) for cars with Rear wheel hand brake.

Adjustment—With lever in released position, remove anchor screw locking wire, turn anchor screw so that clearance between lining and drum is 1/16", lock anchor screw with wire. Adjust brake band guide bolt nut to give 1/16" clearance (as above) for lower portion of band, secure with locknut. Finally, adjust brake adjusting bolt nut to give 1/16" clearance (as above), making sure that groove in bolt nut is lined up with ridge lockwasher.

Drum Diameter—8".

Lining—Width 2". Thickness 5/32". Length 18 13/32".

NOTE—When relining, cut out lining adjacent to anchor and chamfer ends. Clearance between anchor and sides of anchor saddle .005" maximum.

MODEL IDENTIFICATION

SERIAL NUMBER:—On right front door hinge pillar post. First number as follows:

	Detroit	Evansville	Canada
1937 D5	4,530,451		9,409,056
1938 D8	30,001,001	40,001,001	9,413,746

ENGINE NUMBER: First number D5-1001 (1937), D8-1001 (1938). Stamped on left side of engine block between #1 and #2 cylinders.

See Chrysler Shop Notes for Engine number lettering ("Special Standard" bore and bearing sizes).

TUNE-UP

COMPRESSION:—**Ratio**—6.5-1 cast-iron head.
Pressure—135-145 lbs. at 1000 R.P.M. or approximately 110 lbs. at cranking speed.

VACUUM READING:—Steady 18-21" idling at 6 M.P.H.

FIRING ORDER: 1-5-3-6-2-4. See diagram.

SPARK PLUGS: Champion J-8 or Auto-Lite A-7. 14 mm. Metric.
Gaps—.025"

IGNITION: See Coil, Condenser, and Distributor.
Breaker Gap—.020" **Cam Angle** 38° (closed).
Automatic Advance—12° max. at 1750 RPM (distr.).
Vacuum Advance—8° distr. with 15" vacuum (IGS-4002A-1), 10° distr. with 12" vacuum (IGS-4014-1).

IGNITION TIMING: See Ignition Timing.
Std. Setting—4° ATDC. with 4° mark after dead center "0" mark on fan pulley at indicator on front of engine.

CARBURETION: See Carburetor & Carb. Equipment.
Idle Setting—Idle screw midway between "miss" and "roll" points. Idle speed 7-8 MPH.
Float Level—Fuel level 5/8 below top of bowl.
Accelerating Pump—Center hole Normal. Inner hole (Summer), Outer hole (Winter) for temperature extremes.
Fuel Pump Pressure: 3½ lbs. max. (Type B, AL), 4¼ lbs. max. (Type AS, AT).

MANIFOLD HEAT CONTROL:—Thermostatic coil type. See that shaft and valve rotate freely. When installing coil, wind free end up 1/3 turn counter-clockwise and hook end over stop pin.
CAUTION—Do not wind coil up more than 1/3 turn.

VALVES: See Valve Timing.
Tappet Clearance:—.006" Intake, .008" Exh., (hot).
NOTE—.002" additional Exhaust clearance recommended for sustained high speed driving.

STARTING: See Battery, Starter, Generator, Regulator.

IGNITION

IGNITION SWITCH: Mitchellock. Model 24-R, Type 7061 (1937), 7640 (1938). Connected to coil by armored cable.
Ignition Lock—Yale & Towne. Mitchell No. 6286.

COIL: Auto-Lite Model IG-4641 or CL-4601 (1937), CL-4605 (1938). Service Coil (less Switch & Cable) IG-3224JS or CL-3224JS.
Ignition Current—2.5 amperes idling, 5.5 stopped.

CONDENSER: Auto-Lite Part No. IG3927A.
Capacity .25-.28 microfarad.

DISTRIBUTOR: Auto-Lite Model IGS-4002A-1 (U.S.), IGS-4014-1 (Canada). Single breaker, 6 lobe cam, full automatic advance type with auxiliary vacuum spark control.
See Electrical Equipment Section for Distributor servicing data.

For complete data, refer to Electrical Equipment Index.

Breaker Gap—Set at .020".
Cam Angle or Dwell—38° (closed), 22° (open).
Breaker Arm Spring Tension—18-20 ounces.
Rotation—Clockwise viewed from top.

Automatic Advance

Distributor Degrees	R.P.M.	Engine Degrees	R.P.M.
Start	350	0	700
3	400	6	800
6	850	12	1700
9	1300	18	2600
12	1750	24	3500

Vacuum Spark Control—Integral with distributor. Mounted on distributor housing and linked directly to breaker plate. Provides additional advance for all speeds above idling except when engine is accelerated or operated with wide open throttle when spark is retarded by return spring within unit.

Vacuum Advance—IGS-4002A-1

Distr. Degrees	Eng. Degrees	Vacuum (" of HG.)
Start	0°	5¼"
4°	8°	10"
8°	16°	15"

Vacuum Advance—IGS-4014-1

Start	0°	4¾"
5°	10°	8⅜"
10°	20°	12"

Manual Adjustment—Provided to compensate for fuel and altitude conditions. See Manual Adjustment Setting.

Distributor Removal:—Mounted on left side of engine. To remove, disconnect vacuum line and take out hold-down screw in advance arm.

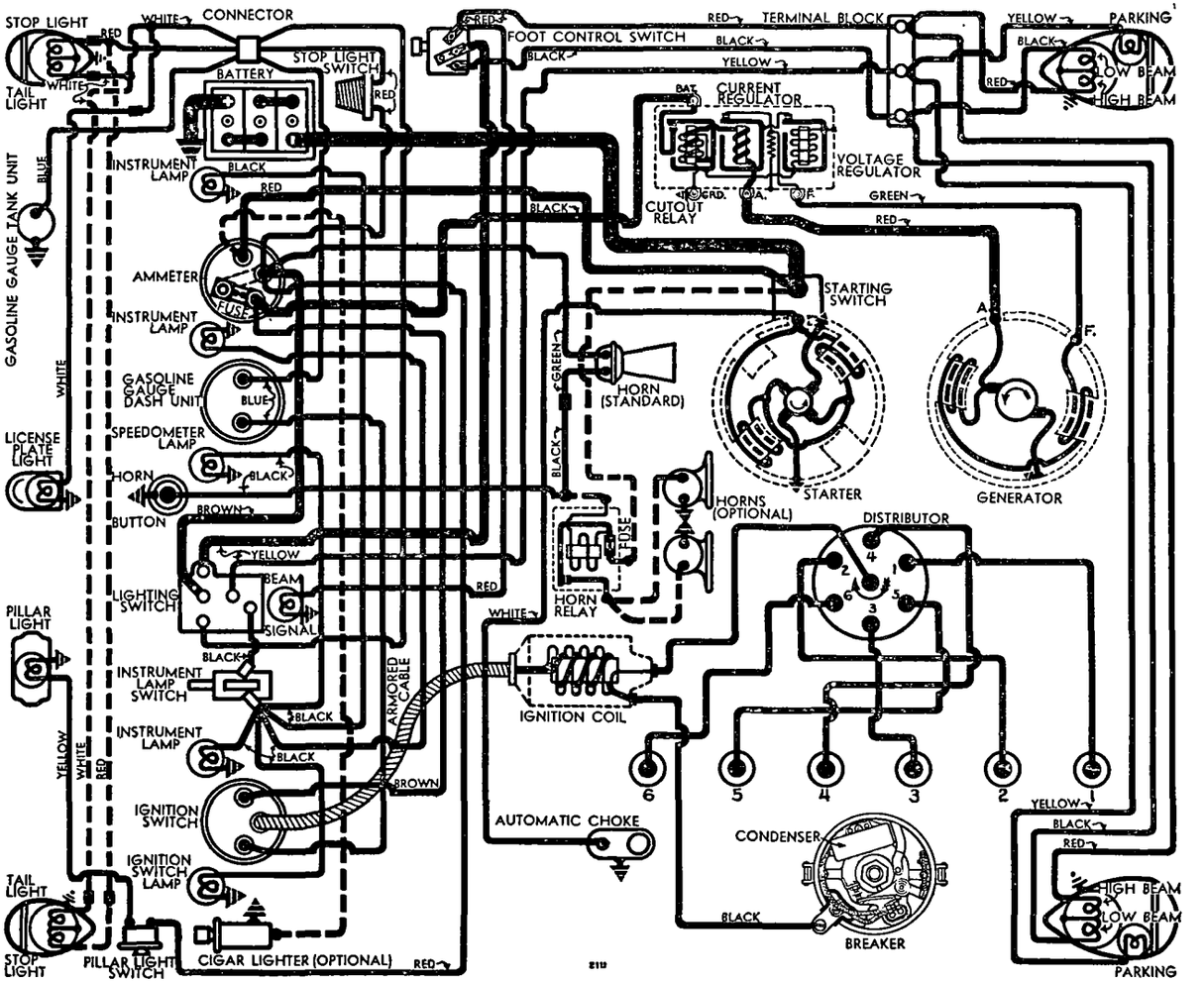

See Electrical Equipment Section for Regulator wiring with 2 Resistors (After Regulator Serial No. 8R-000001).

IGNITION TIMING

IGNITION TIMING:—Initial setting (for gasoline of approximately 70 octane rating). See Manual Adjustment Setting (following).

Flywheel Degrees	Piston Position
All engines 6.5-1 hd....4° ATDC	.0068" ATDC.

Timing (Using Timing Light)—Connect timing light between distributor terminal and battery terminal on generator control unit. With #1 piston on compression, turn engine over until piston is 4° (or .0068") past top dead center, stop when fourth graduation to left of center '0' mark on fan pulley at front of engine lines up with pointer on chain case cover. Loosen hold-down screw in advance arm, center pointer on scale, tighten hold-down screw. Loosen advance arm clamp bolt, rotate distributor until lamp goes out, tighten clamp bolt.

Timing (Using Synchroscope)—Tool No. C-374. Clip lead to #1 spark plug, direct light on impulse neutralizer, fill in 4° ATDC. mark with white paint.

Manual Adjustment Setting:—After ignition set as above, road test car to give slight ping with wide open throttle at speeds of 10-30 M.P.H. To adjust, loosen hold-down screw and advance (counter-clockwise) or retard (clockwise) pointer on scale. Scale graduated in engine degrees. Do not advance pointer more than 5° on scale.

CARBURETOR

CARBURETION:—Carburetor—Stromberg Model EXV-2. 1¼" downdraft type.

For complete data, refer to Carburetor Index.

Idle Adjustment—With engine warm, choke valve wide open (fast idle inoperative), adjust throttle stopscrew so that idle speed is 7-8 MPH. Turn idle adjusting screw in until engine begins to hesitate or miss, then out until engine begins to roll, finally turn screw in slowly until engine fires smoothly. Readjust throttle stopscrew for correct idling speed.

Accelerating Pump Setting—Throttle lever has 3 holes for pump link engagement. Set as follows:
Inner Hole (short stroke)—Hot temperatures.
Center Hole—Normal summer temperatures.
Outer Hole (long stroke)—Winter temperatures.

Fast Idle:—No adjustment required. Throttle stopscrew on high point of cam (choke valve closed).

Throttle Cracker:—Consists of an inter-connecting linkage between the starter pedal and the accelerator rod by which the throttle valve is opened slightly when starter pedal is depressed. Adjusting screw is located on forward side of throttle cracker lever (directly above starter switch).

Automatic Choke:—Sisson Type AC-758B. See article in Carburetion Equipment Section for data.

For complete data, refer to Carburetion Equip. Index.

CARB. EQUIPMENT

Air Cleaner:—AC. #1528200 oil-wetted type standard, #1528197 oil-bath type optional used in conjunction with oil vent cleaner #1525313.

Fuel Pump:—AC. Type B #1522995 or AT #1523647 diaphragm type standard. Type AL #1523137 or AS #1523648 combination fuel-and-vacuum pumps optional. Types AT & AS are 'inverted' design.

For complete data, refer to Carburetion Equip. Index.

Gasoline Gauge:—Auto-Lite (Motometer) Electric.
Dash Unit—NG-8295D (1937), NG-8729D (1938).
Tank Unit—NG-8257T (1937), NG-8697T (1938).

For complete data, refer to Carburetion Equip. Index.

BATTERY

BATTERY:—Willard, Type WT-1-95. 6 volt, 15 plate, 95 ampere hour capacity (20 hour rate).
Starting Capacity—117 amperes for 20 minutes.
Zero Capacity—300 amperes for 3.1 minutes. Five second voltage—4.17 volts.
Grounded Terminal—Positive (+) terminal. Grounded to transmission.
Dimensions—Length 10 5/16". Width 7 1/16". Height 8 13/16".
Location—Left side under driver's seat.

(Special Export) Willard, Type RHT-2-105. 6 volt, 15 plate, 105 AH. capacity (20 hr. rate).
Starting Capacity—133 amperes for 20 minutes.
Zero Capacity—300 amperes for 3.9 minutes. Five second voltage—4.27 volts.
All other data as given above for WT-1-95.

STARTER

Auto-Lite Model MAW-4010 (Std.), MAW-4011A (Exp.). Armature MAW-2030 (All Models).
Drive—Manual (Domestic), solenoid (Export) operated pinion shift. Drive through overrunning clutch.
Cranking Engine—Approx. 160 amperes at 5 volts.
Rotation—Counter-clockwise at commutator end.
Brush Spring Tension—42-53 ozs. (new brushes).

Performance Data

Torque	R.P.M.	Volts	Amperes
0 ft. lbs.	4900	5.5	65
.60 " "	3300	5.5	100
2.75 " "	1480	5.0	200
5.45 " "	820	4.5	300
8.50 " "	400	4.0	400
11.55 " "	110	3.5	500
11.55 " "	Lock	3.	505
18. " "	Lock	4.	670

Removal:—Flange mounted on left front face of flywheel housing. Disconnect wire connections (tape battery lead), oil filter lines and two clips on starter linkage. Remove two fastening bolts and withdraw unit.

Starting Switch:—(MAW-4010)—SW-2813. Mounted on starter field frame and operated by pinion shift (starter pedal). See article in Electrical Equipment Section for pedal adjustment.
(MAW-4011A)—Solenoid Switch, Auto-Lite SS-4104 (1937), SS-4203 (1938). Controlled through relay by pushbutton on instrument panel.

For complete data, refer to Electrical Equipment Index.

Solenoid Switch

Closes against 170 lb. pull with ⅜" air gap drawing 65 amperes. Holds switch closed with draw of 15 amperes (hold-in coil only).

Solenoid Relay

Contacts Close—3.5-4.5 volts. **Open**—1.5-2.5 volts.
Contact Gap—.025-.030". **Air Gap**—.005-.007" (closed).

GENERATOR

STANDARD (1937)

Auto-Lite Model GBW-4803A, C (Export). Armature No. GBW-2006F. Two brush, straight shunt type with external voltage and current regulation. Ventilated by fan on drive pulley.
Maximum Charging Rate—22 amperes, 8.0 volts, 1780 R.P.M. and above with load or discharged battery (Current Regulator setting). Actual charging rate controlled by Voltage Regulator and is dependent on battery condition.
Charging Rate Adjustment—No adjustment on generator. See Regulator section below for Voltage and Current Regulator settings.

Performance Data

Cold Amperes	Cold Volts	Cold R.P.M.	Hot Amperes	Hot Volts	Hot R.P.M.
0	6.4	775	0	6.4	870
4	6.7	940	4	6.7	1065
10	7.1	1200	10	7.1	1385
16	7.6	1480	16	7.6	1780
20	7.85	1675	20	7.85	2125
22	8.0	1780	22	8.0	2400

NOTE—Current regulator limits output to 22 amps.
Rotation—Counter-clockwise at commutator end.
Brush Spring Tension—53 ozs. max. (new brushes).
Field Current—1.66-1.84 amperes at 6.0 volts.
Motoring Current—3.04-3.36 amperes at 6.0 volts.
Removal:—Pivot mounted at left front of engine. To remove, take out pivot bolts and clamp bolt.
Belt Adjustment:—Loosen clamp bolt and pivot bolts, swing generator out until scale (attached to field frame) reads 40-50 lbs., tighten bolts.

GENERATOR

STANDARD (1938)

Auto-Lite Model GDA-4801A, B (Export). Armature No. GDA-2006F. Two brush, straight shunt type with external voltage and current regulation. Ventilated by fan on drive pulley.
Charging Rate Adjustment—No adjustment at generator. See Regulator section for settings.
Maximum Charging Rate—28 amperes, 8.0 volts, 2025 R.P.M. and above with load or discharged battery (Current Regulator setting). Actual charging rate controlled by Voltage Regulator.

Performance Data

Cold Amperes	Cold Volts	Cold R.P.M.	Hot Amperes	Hot Volts	Hot R.P.M.
0	6.4	930	0	6.4	1010
4	6.6	1060	4	6.6	1180
8	6.85	1210	8	6.85	1350
12	7.1	1350	12	7.1	1530
16	7.3	1500	16	7.3	1730
20	7.5	1660	20	7.5	1950
24	7.75	1830	24	7.75	2220
28	8.0	2025	28	8.0	2520

NOTE—Current reg. limits output to 28 amps.
Rotation—Counter-clockwise at commutator end.
Brush Spring Tension—53 ozs. max. (new brushes).
Field Current—1.66-1.84 amperes at 6.0 volts.
Motoring Current—3.50-4.15 amperes at 6.0 volts.
Removal:—Pivot mounted at left front of engine. To remove, take out pivot bolts and clamp bolt.
Belt Adjustment:—Loosen clamp bolt and pivot bolts, swing generator out until scale (attached to field frame) reads 40-50 lbs., tighten bolts.

GENERATOR

SPECIAL EQUIPMENT

SPECIAL GENERATOR:—Model GCB-4802A (City Police). Used with Model VRB-4009A Regulator. *See 1939 DeSoto Model S6 article for complete data.*

Special Generators (Other Makes)—*Refer to Electrical Equipment Index for 'Special Generators' article for complete data on special generators and regulators which may be found on these cars.*

REGULATOR

Auto-Lite Model VRB-4005A (GBW Generators), VRB-4004B (GDA Generators). Voltage-Current Type. Consists of Cutout Relay, vibrating Voltage Regulator and Current Regulator in case on dash.

For complete data, refer to Electrical Equipment Index.

C NTINUED N NEXT PAGE

C NTINUED FR M PRECEDING PAGE

NOTE—Regulator case cover is sealed. Serviced on exchange basis if seals not broken.

Cutout Relay

Cuts In—6.4-7.0 volts Cold.

Cuts Out—.5 ampere min., 3.0 amperes max. Cold.

Contact Gap—.015" minimum.

Air Gap—.034" min., .038" max. with contacts open. Measure at hinge end of core.

Voltage Regulator

Setting—7.5-7.8 volts at 70°F (Before Serial No. 8R-000001), 7.3-7.6 volts at 70°F (After 8R-000001). **See Electrical Equipment Section for complete settings and Regulator changes.**

To Check—Connect ammeter in charging line at 'B' terminal on regulator (use short heavy leads). Connect voltmeter between 'B' and 'GD' terminals. Operate generator, charging fully charged battery, at speed equivalent to 30 M.P.H. car speed. Voltage should be within limits of 7.4-7.8 volts (Before #8R-000001), 7.3-7.6 volts (cold 70°), 7.1-7.4 volts (hot 140°) for units after #8R-000001.

To Adjust (with cover removed)—Change regulator armature spring tension by bending lower spring hanger.

Contact Gap—.010-.020" (armature against stop pin).

Air Gap—.0595-.0625" with contacts just opening.

Current Regulator

Setting—**(VRB-4005A)** 21-23 amperes marked "22" on cover. **(VRB-4004B)** 27-29 amperes, marked "28".

To Check (without breaking seals)—Connect ammeter and voltmeter as directed for Voltage Regulator test. Operate generator at 30 M.P.H., add load (use bank of headlamp bulbs or turn on car lights and discharge battery) so that generator will charge at peak rate bringing current regulator into action. Charging current should not exceed 28 amperes. If more than slight excess noted, Regulator defective.

Adjustment, Contact Gap, Air Gap—Same as for Voltage Regulator (above).

LIGHTING

LIGHTING:—Headlamps—Corcoran-Brown, prefocused type. Upper and lower beams controlled by beam control switch on toeboard.

Headlamp Adjustment—Aim headlamps straight ahead (upper beam lighted, lenses in place, car unloaded) with center of hot spot 3" (1937), 4" (1938) below center horizontal line of headlamps at 25 feet. Lower beam is deflected slightly to right.

Headlamp Beam Indicator—In light switch knob. Lighted when headlamp upper beam in use.

Switches—1937

Lighting—Dodge Part No. 675344.
Instrument Light—Dodge Part No. 675345.
Foot Selector—Dodge Part No. 659512.
Stop Light—Dodge Part No. 661721.

Switches—1938

Lighting—Dodge Part No. 684038.
Instrument Panel—Dodge Part No. 685889.
Foot Dimmer—Dodge Part No. 659512.
Stop Light—Dodge Part No. 677112.

Bulb Specifications

Position	Candlepower	Mazda No.
Headlamps	32-32	2331
Tail and Stop	3-21	1158
Parking, Beam Indicator	1½	55
Instrument	1½	55
Dome	15	87
Rear License	3	63

NOTE—Instrument and Indicator Lamps for 1937 were 1 cp., Mazda No. 51.

MISC. ELECTRICAL

FUSES:—Lighting (used on early cars)—20 amperes on back of ammeter. Later cars equipped with Circuit Breaker (see below).

Single Horn—Early cars as shown on diagram. On later cars horn feed taken from BAT terminal on regulator (1938), starting switch (1937) with fuse in wire connector.

Dual Horns—30 ampere on horn relay. NOTE—New long type (SFE-30) fuse used. Replaces 3AG type.

CIRCUIT BREAKER:—Used on later cars. Thermostatic, non-adjustable, vibrating type. Mounted on back of ammeter and protects lighting circuits. Limits current to 30 amperes.

HORNS (1937): Auto-Lite HA-4020. Single horn standard. Model HC-5103, HC-5103B dual horns with HR-4002 horn relay optional.

Horn Relay:—Auto-Lite Model HR-4002. A 30 ampere fuse mounted on base.
Contacts Close—3.0-4.0 volts. **Open** 1.5-2.5 volts.
Contact Gap—.026". **Air Gap**—.012-.017" (closed).

HORNS (1938): Klaxon K-16, Type 2016 Single Horn Std., Auto-Lite Horn Set Model HC-5105 Twin Horns Optl. Twin horns operated by horn relay.

Horn Relay:—Auto-Lite HR-4101. Has 30 ampere fuse mounted on base.
Contacts Close—2.5-3.5 volts.
Contact Gap—.026". **Air Gap**—.012-.017" (closed).

ENGINE

ENGINE SPECIFICATIONS:—6 cylinder, 'L' head.
Bore—3¼". **Stroke**—4⅜".
Displacement—217.8 cubic inches.
Rated Horsepower—25.35 (A.M.A.)
Developed Horsepower—87 HP. at 3600 R.P.M.
Compression Ratio—6.5-1 cast-iron hd. No optl.
Compression Pressure—135-145 lbs. at 1000 R.P.M. or approximately 110 lbs. at cranking speed.
Vacuum Reading—Gauge should show steady reading of 18-21" with engine idling at 6 M.P.H.

PISTONS: Aluminum alloy, split skirt, Invar Strut (1937), Steel Strut (1938). **Length** 3 11/16".
Weight—17.92 ozs. (1937), 17.45 ozs. (1938).
Removal—Pistons and rods removed from above.
Clearance—Top .022". See Fitting New Pistons.

Replacement Pistons:—***See Chrysler Shop Notes.***

Fitting New Pistons:—Check piston size with micrometer gauge on skirt across piston pin support ribs. Insert .002" feeler between cylinder wall and piston on side opposite slot. With piston and block at 70°F. pull to withdraw feeler must be 7-14 lbs.

Installing Pistons:—Slot away from camshaft.

PISTON RINGS:—2 undercut compression, 2 slotted oil rings per piston, all above pin.
NOTE—Install top ring with step on inner edge to bottom (1937), top (1938), #2 compression ring with *step to bottom* (1937-38).

Ring	Width	End Gap	Side Clearance
Comp. (#1)	⅛"	.007-.015"	.002-.0035"
Comp. (#2)	⅛"	.007-.015"	.0015-.003"
Oil Control	5/32"	.007-.015"	.0015-.003"

NOTE—Side clearance for #1 compression ring was .0015-.003" (1937).

Replacement Rings:—Furnished std. and .003", .005", .010", .015",. 020", .023", .025", .030", .040", .050", .060" oversize.

PISTON PIN:—Diameter—55/64". **Length**—2¾".
Floating type. Pin hole in rod bronze bushed.
Pin Fit in Piston—Thumb push fit with piston heated to 160°F.
Pin Fit in Rod Bushing—Thumb push fit at 70°F.
Replacement Pins:—Furnished std. & .003", .005", .008" oversize. Ream bushing and pin hole to size.

CONNECTING ROD: Length—7 15/16".
Weight—30.6 ozs. (1937), 30.01 ozs. (1938).
Crankpin Journal Diameter—2 1/16".
Lower Bearing—Removable steel-backed, babbitt-lined. Bearings furnished Std. & .0015", .010" Undersize (1937), Std. & .002", .010", .012" Undersize (1938).
Clearance—.0005-.0025". **Sideplay**—.0055-.0115".

Bearing Adjustment:—None. Install new bearings with bosses engaging grooves in rod and cap.

Installing Rods:—Install rods with wide portion of bearing to rear on #1, 3, 5, to front on #2, 4, 6. Oil spit hole to camshaft (all rods).

CRANKSHAFT:—4 bearing type. Impulse neutralizer mounted on forward end.
Journal Diameters—2½" all bearings.
Bearing Type—Steel-backed, babbitt-lined type.
Clearance—.001-.002".

Bearing Adjustment:—***See Chrysler Shop Notes for Bearing Removal and Adjustment, Front Main Bearing Cap Removal, and Crankshaft Front & Rear Oil Seals.***

Replacement Bearings & Bearing Caps: ***Refer to Chrysler Shop Notes for complete data.***

End Thrust:—Taken by flange faces on rear (#4) bearing. **Endplay**—.003-.007".

CAMSHAFT:—4 bearing. Non-adjustable chain drive.
Journal Diameters—#1, 2".; #2, 1 31/32"; #3, 1 15/16"; #4, 1¼".
Bearing Type—Removable steel-backed, babbitt-lined bushings (except #4 machined in block).
Clearance—.001-.003" ,#1), .0015-.0035" (all others).
NOTE—Replacement bushings finish reamed.

End Thrust:—Taken by thrust plate behind camshaft sprocket hub. **Endplay**—.002-.006".

Timing Chain:—Morse#1866(restricted bend). Width 1". Pitch .500". Length 24" or 48 links.
See Chrysler Special Shop Notes for front end removal for work on timing chain.

Camshaft Setting:—Mesh chain with sprockets turned so that 'O' marks are adjacent and in line with a straightedge cross the shaft centers.

VALVES:

	Head Diameter	Stem Diameter	Length
All valves	1 15/32"	.340-.341"	4 25/32"

	Seat Angle	Lift	Stem Clearance
Intake	45°	5/16"	.001-.003"
Exhaust	45°	5/16"	.003-.005"

See Chrysler Special Shop Notes for Exhaust Valve Seat insert removal and installation.

Valve Guides:—Install with round end up to ⅞" below top of block. Finish ream guides after installing to .342-.343" Int., .344-.345" Exh.

ENGINE

C NTINUED FROM PRECEDIN PAGE

Valve Springs:—Free length approx. 2 3/32". Limit of compression 1 9/32".

	Spring Pressure	Spring Length
Valve Closed	34-38 lbs.	1¾"
Valve Open	77-83 lbs.	1 7/16"

Valve Lifters:—Mushroom type. Ream guides from above for following oversizes: .001", .008", .030", .060".

VALVE TIMING

Tappet Clearance: .006" Int., .008" Exh. Hot. .010" Exh. setting recommended for sustained high speed driving. Valves accessible by removing right front wheel and wheel housing panel.

Valve Timing:—See Camshaft Setting above.
Intake Valves—Open 6° ATDC. Close 46° ALDC.
Exhaust Valves—Open 42° BLDC. Close 8° ATDC.
To Check Timing—Set tappet clearance #6 intake valve at .011". This valve should open with piston 6° (.0153") past top dead center when 6° ATDC. mark on impulse neutralizer at front of engine lines up with pointer on chain case cover. Reset tappet clearance at .006" (hot).

LUBRICATION

LUBRICATION:—Gear type oil pump on right of engine.
Normal Oil Pressure:—30-45 lbs. at 30 M.P.H.
Oil Pressure Relief Valve:—Under plug on left side of engine. Operates at 40 lbs. Adjustable. Change to heavy (green) spring to increase pressure, light (red) spring to decrease.

Crankcase Capacity:—5 quarts (refill).

COOLING

COOLING SYSTEM:—Water Pump. Centrifugal, belt-driven, packless type.
See Water Pump Section for complete data.
Removal—With water drained and fan belt removed, remove fan blades and pulley (attached by 4 capscrews), disconnect pump hoses, remove nuts from pump mounting studs and lift out.

Thermostat:—Fulton. In water outlet on head.
NOTE—Install thermostat with bellows down.
Setting—(1937) Starts to open 155-160° F., Fully open at 185° F. (1938) Starts to open 150-155° F., Fully open at 176° F.

Water Capacity: 16 qts. (1937), 15 qts. (1938).

Drain Valves:—At lower left corner of radiator and on left side of block in front of distributor.

CLUTCH

CLUTCH:—Borg & Beck Model 10A7, 11A6 (Taxi). Single plate, dry disc type. NOTE—1938 Clutch has new spiral grooved type facings and pressure plate oil baffle.
NOTE—Clutch marked for identification by number stamped on cover: #899 (10A7 1937), 913 (10A7 1938), 917 (11A6 1938).
See Clutch Section for complete data.
Facings—Molded-woven (spiral grooved), 2 required. Thickness ⅛". Inside diameter 6", 6½" (Taxi). Outside diameter 10", 11" (Taxi).
Adjustment—Adjust stopscrew (to rear of pedal) so that pedal arm just clears floor board. Pedal free movement must be 1 1/16". Adjusting nut provided on fork rod next to release fork.
Removal:—Remove floor board, release fork pull-back spring, free clevis pin on release fork rod. Remove transmission (see Transmission Removal below), remove housing underpan, mark cover and flywheel, remove cover bolts evenly, take out assembly NOTE—On 1937 model, pull release fork out of housing before removing clutch.

TRANSMISSION

TRANSMISSION:—Own Make. All helical gear type with synchro-mesh on second and high speeds.
See Transmission Section for complete data.
Removal:—Remove floor boards, battery cable, disconnect front and rear universals (see Propeller Shaft Center Bearing below for 7 pass. sedan), free hand brake cable at clevis. Take off nuts on mounting studs, disconnect clutch release fork pull-back spring, free clevis pin on release fork rod, remove cover (gear-shifter assembly), insert 2 pilot studs in top holes and withdraw transmission.

UNIVERSALS

UNIVERSAL JOINTS:—Detroit-Universal. Series 4200. Ball and trunnion type with roller bearings. 2 used.
NOTE—Three universals used on 7 pass. sedan.
See Universals Section for complete data.
Propeller Shaft Center Bearing:—Used on 7 passenger models. *See Chrysler Shop Notes.*

REAR AXLE

REAR AXLE:—Own make. Semi-floating, hypoid gear type with Hotchkiss drive.
See Rear Axle Section for complete data.
Ratio—Standard 4.1-1 (Sedans), 3.9-1 (Coupes), 4.3-1 (7 pass. sedan & cars with 6.00 X 18 tires).
Backlash—.006-.010". Screw adjustment.
Removal:—Remove wheel, hub, and drum assembly (using screw type hub puller). Place block under brake pedal, disconnect brake line, remove backing plate and oil seal, pull axle shaft and bearing (Tool C-158). With shafts removed, carrier may be removed by disconnecting rear universal at flange, and removing housing capscrews.
Wheel Bearing Adjustment—Controlled by shims at flanged ends of axle housing. With wheel and hub removed measure endplay with dial indicator. To adjust remove backing plate (see above) and add or remove shims (equally at both sides) to proper clearance. **Endplay**—.003-.008".

SHOCK ABSORBERS

SHOCK ABSORBERS: Own Make (1937), Delco (1938). Direct Acting, hydraulic type. Delco Models 1162-U (Front), 1163-U (Rear).
See Shock Absorber Section for complete data.

FRONT SUSPENSION

Front Suspension:—Conventional tubular section axle, Reverse-Elliott ends, semi-elliptic springs.
Kingpin Inclination—4½-5½° crosswise.
Caster—2° (1-3°). Adjust by inserting wedge plates between springs and axle center. Thick portion to rear increases caster, to front decreases caster.

Camber—½° (¼-¾°). Not adjustable.

Toe In—1/16" (0-⅛"). Turn tie rod to adjust.

Steering Geometry—Outer wheel 20°. Inner wheel 22°50' (exc. 7 Pass.), 22°20' (7 Pass.).

STEERING GEAR

Steering Gear: Gemmer Worm & Roller Model 300.
See Steering Gear Section for complete data.

BRAKES

BRAKES:—Service—Lockheed hydraulic, double anchor type. Hand brake at rear of transmission.
See Brake Section for complete data.

Wheel Cylinders—Stepped or two-stage bore type:
Front Wheel—Front cylinder 1¼", Rear 1⅜".
Rear Wheel—Front cylinder 1⅛", Rear 1¼".
Drum—Cast-iron. Diameter—11".
Lining—Moulded. Width 2". Thickness 13/64".
Length (front shoe) 11 15/32", (rear shoe) 7 31/32".
Clearance—.012" toe, .006" heel for each shoe.
Braking Power—55% front, 45% rear.

Hand Brake:—External at rear of transmission.
Adjustment—*See Chrysler Special Shop Notes.*
Drum—Cast-iron. Diameter—6".
Lining—Width 2". Thick. 5/32". Length 17 1/16".

FRONT END ASSEMBLY (UNIT) REMOVAL:—Should be removed as a unit for work on front of engine. *See Chrysler Shop Notes for directions.*

MODEL IDENTIFICATION

SERIAL NUMBER:—On right front door hinge post.

	Detroit	Canada
Deluxe	30,100,001 & up	9,416,686 & up
Special	4,267,701 & up	

ENGINE NUMBER:—First number D-11-1001. Stamped on left side of block between #1 and #2 cylinders. *See Chrysler Shop Notes for Engine Number Lettering ('Special Standard' bore and bearing sizes).*

TUNE-UP

COMPRESSION:—**Ratio**—6.5-1 cast-iron head. No optl.
Pressure—135-145 lbs. at 1000 R.P.M. or approximately 110 lbs. at cranking speed.

VACUUM READING:—Steady 18-21" idling at 6 M.P.H.

FIRING ORDER: 1-5-3-6-2-4. See diagram.

SPARK PLUGS: Auto-Lite Type A-7. 14 mm. Metric type.
Gaps—.025"

IGNITION: See Coil, Condenser, and Distributor.
Breaker Gap—.020" **Cam Angle** 38° (closed).
Automatic Advance—12° max. at 1750 RPM (distr.).
Vacuum Advance—8° distr. with 12" vacuum (IGS-4101A-1), 16" vacuum (IGS-4101C-1); 10° distr. with 12" vacuum (IGS-4102B-2).

IGNITION TIMING: See Ignition Timing.
Std. Setting—At TDC. with dead center mark "DC" on impulse neutralizer at indicator on front of engine.

CARBURETION: See Carburetor & Carb. Equipment.
Idle Setting—Idle screw midway between "miss" and "roll" point. Idle speed 7-8 MPH.
Float Level—Fuel level 5/8" below top of bowl.
Accelerating Pump—Center hole Normal. Inner hole (Summer), Outer hole (Winter) for temperature extremes.
Fuel Pump Pressure: 3½ lbs. max. (Type B, AL), 4¼ lbs. maximum (Type AT).

MANIFOLD HEAT CONTROL:—Thermostatic coil type. See that shaft and valve rotate freely When installing coil, wind free end up 1/3 turn counter-clockwise and hook end over stop pin.
CAUTION—Do not wind coil up more than 1/3 turn.

VALVES: See Valve Timing.
Tappet Clearance:—.006" Int., .008" Exh. hot. Remove right front wheel and housing panel for adjustment. NOTE—Tappet screws are self-locking (no locknuts). .002" additional exhaust tappet clearance recommended for sustained high speed driving.

STARTING: See Battery, Starter, Generator, and Regulator (when used).

IGNITION

Ignition Switch:—Mitchellock Model 24-R, Type 8054. Connected to coil by armored cable.
Ignition Lock—Briggs & Stratton. B & S No. 80651. Key Series—1BP to 1000BP. Groove—#24.

COIL: Auto-Lite Model IG-4657. Service coil (less switch and cable) IG-3224JS. Mounted on dash.
Ignition Current—2.5 amperes idling, 5.5 stopped.

CONDENSER: Auto-Lite Part No. IG-3927A.
Capacity—.25-.28 microfarad.

DISTRIBUTOR: Auto-Lite Model IGS-4101A-1 (First Cars), IGS-4101C-1 (Later Cars), IGS-4102B-2 (Canada). Single breaker, 6 lobe cam, full automatic advance type with auxiliary vacuum spark control and manual adjustment.
NOTE—IGS-4101A-1 distributor used up to Engine No. D11-13277 (U.S.), IGS-4101C-1 after this no.
Breaker Plate Identification—Maximum vacuum advance limited by slot and marked with number (#8—IGS-4101A-1, #8—IGS-4101C-1, #10—IGS-4102B-2) stamped on plate.

Breaker Gap—Set at .020".
Cam Angle or Dwell—38° (closed). 22° (open).
Rotation—Clockwise viewed from the top.

Automatic Advance

Distributor Degrees	Distributor R.P.M.	Engine Degrees	Engine R.P.M.
Start	350	0	700
3	400	6	800
5	700	10	1400
7	1000	14	2000
9	1300	18	2600
11	1600	22	3200
12	1750	24	3500

Vacuum Spark Control—Integral type (on distributor, linked directly to breaker plate). Provides additional advance at speeds above idling except when engine accelerated or operated with wide open throttle when spark is retarded by return spring

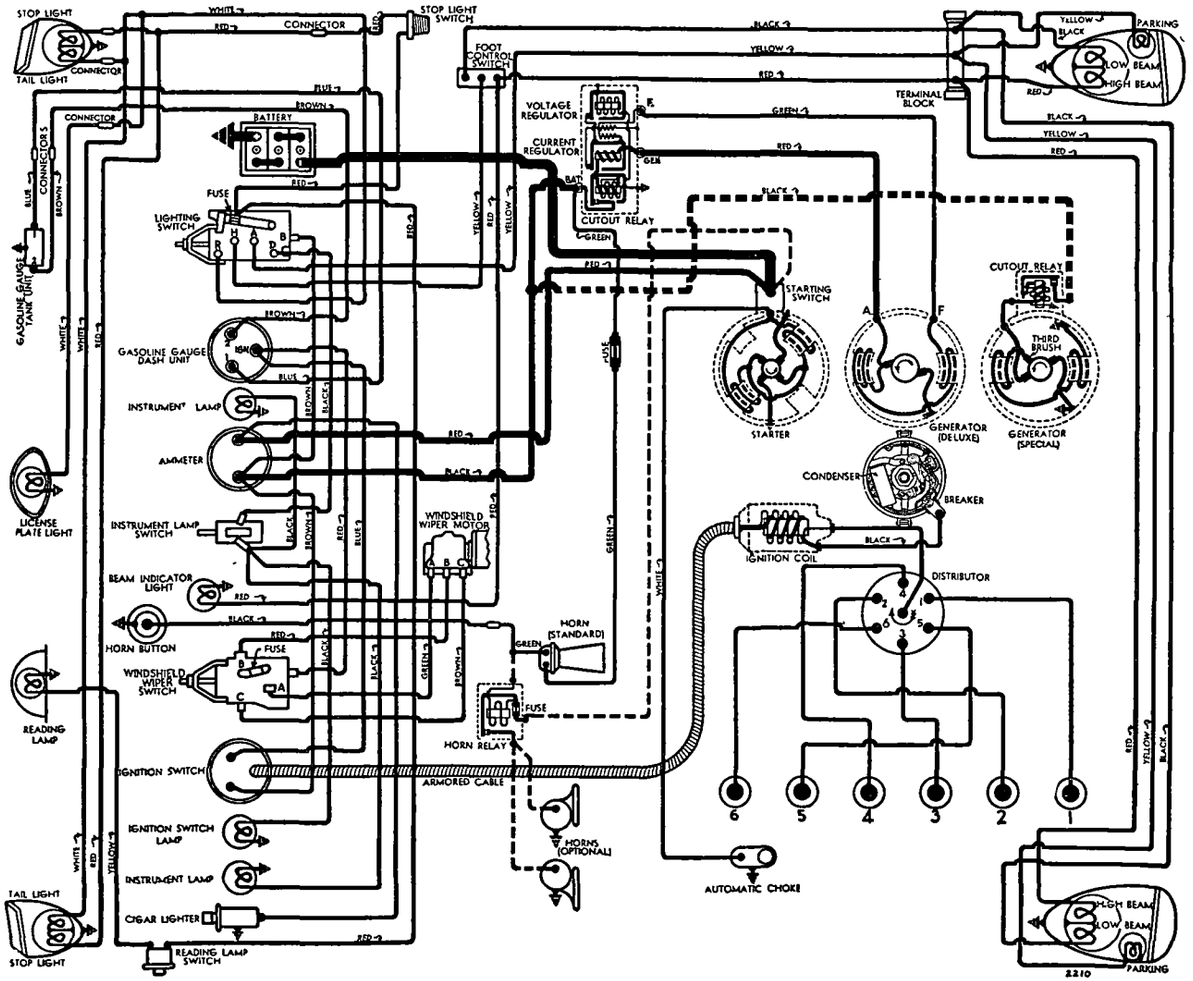

Vacuum Advance—IGS-4101A-1

Distr. Degrees	Eng. Degrees	Vacuum (" of HG)
Start	0°	5"
8°	16°	12"

Vacuum Advance—IGS-4101C-1

Start	0°	5"
8°	16°	16"

Vacuum Advance—IGS-4102B-2

Start	0°	4.75"
10°	20°	12"

Manual Adjustment—Provides 10° advance or retard from center '0' position. See Ignition Timing

Distributor Removal:—Mounted on left side of crankcase. To remove, disconnect vacuum line, take out hold-down screw in lock plate.

IGNITION TIMING

IGNITION TIMING:—Initial setting (correct for fuel of 70 octane rating at low altitudes) shown below. See Manual Adjustment (following) for recommended corrections (not to exceed 4° either way) dependent on fuel regularly used and operating conditions.

	Flywheel Degrees	Piston Position
6.5-1 cast-iron hd.	0° at TDC	.0000" TDC.

NOTE—Impulse neutralizer marked 'DC' at TDC. point with 15 (1°) graduations on either side.

Timing (Using Timing Light)—Connect timing light between distributor and battery terminal on generator regulator. With #6 piston on compression, turn engine over until piston reaches firing position (see Initial Setting), stop when correct mark on crankshaft pulley lines up with pointer on chain case cover. Loosen lock plate hold-down screw, center pointer on scale, tighten screw. Loosen lock plate clamp bolt, rotate distributor until timing light just goes out. Check manual adjustment setting (below).

Timing (Using Synchroscope)—Tool No. C-374. Clip lead to #1 spark plug, direct light on crankshaft pulley (correct mark filled in with paint or chalk), idle engine and adjust distributor as directed above.

Manual Adjustment—Standard ignition setting should be varied not more than 4° (piston 4° or .0068" before or after top dead center) so that slight ping noticeable between 10 and 30 M.P.H. when accelerating with wide open throttle for best performance. To adjust, loosen hold-down screw, rotate distributor counter-clockwise to advance spark (if no ping noted), counter-clockwise to retard spark (if ping too severe) not more than 4°. Scale graduated in engine degrees.

CARBURETOR

CARBURETION:—**Carburetor.** Stromberg Model BXV-3. New single barrel, 1½" special downdraft type.
For complete data, refer to Carburetor Index.

Idle Adjustment—With engine warm, choke valve wide open (fast idle inoperative), adjust throttle stopscrew so that idle speed is 7-8 MPH. Turn idle adjusting screw in until engine begins to hesitate or miss, then out until engine begins to roll, finally turn screw in slowly until engine fires smoothly. Readjust throttle stopscrew for correct idling speed.
Accelerating Pump Setting—Throttle lever has 3 holes for pump link engagement. Set as follows:
Inner Hole (short stroke)—Extremely warm temperatures or above 3000 ft. elevation.
Center Hole—Normal summer temperatures.
Outer Hole (long stroke)—Winter temperatures.

NOTE—If lean metering jets (High Alt. calibration) used at lower altitudes for increased economy, reduced speed and power will result (not recommended by manufacturer). See Stromberg Jet Table in Carburetor Section for complete jet data.

Throttle Cracker:—Interconnector between starting pedal and accelerator rod which opens throttle slightly when pedal depressed for starting. Adjust by loosening throttle pickup clamp bolt (above starter switch), shift clamp on rod.

Fast Idle:—No adjustment. Throttle stopscrew should rest on high point of cam (choke valve closed).

Automatic Choke:—Sisson Type AC-758B.
For complete data, refer to Carburetion Equip. Index.

CARB. EQUIPMENT

Air Cleaner:—AC. #1528200 oil-wetted type standard. #1529042 oil bath type optional.
NOTE—AC. #1525313 crankcase vent cleaner used.

Fuel Pump:—AC Type AT #1523912, Type B #1523914 (RHD) Std. Type AL #1523915 (RHD with swinging windshield) fuel-and-vacuum pump optl.
For complete data, refer to Carburetion Equip. Index.

Gasoline Gauge:—Auto-Lite Electric. No. NG-9023-D (dash unit), NG-8989-T (tank unit).
For complete data, refer to Carburetion Equip. Index.

BATTERY

BATTERY:—**Auto-Lite type PN-15A. 6 volt, 15 plate, 95** ampere hour capacity (20 hour rate).
Starting Capacity—117 amperes for 20 minutes.
Zero Capacity—300 amperes for 3.1 minutes.
Grounded Terminal—Positive (+) grounded to transmission.
Dimensions—Length 8⅞". Width 7". Height 8".
Location—On left side under front seat.

STARTER

Auto-Lite Model MAW-4016. Armature MAW-2030.
Drive—Overrunning clutch, manual pinion shift.
Rotation—Counter-clockwise at commutator end.
Cranking Engine—150-175 amperes, 5.1 volts.
Brush Spring Tension—42-53 ozs. (new brushes).

Performance Data

Torque	R.P.M.	Volts	Amperes
0 ft. lbs.	4900	5.5	65
.60 " "	3300	5.5	100
2.75 " "	1480	5.0	200
5.45 " "	820	4.5	300
8.50 " "	400	4.0	400
11.55 " "	110	3.5	500
11.5 " "	Lock	3.0	505
18.0 " "	Lock	4.0	670

Removal:—Flange mounted on left front face of flywheel housing. Remove cables, 2 clips on starter linkage, oil filter lines, 2 mounting bolts. Lift off.

Starting Switch:—Model SW-2813. On starter. Manually operated by starter (pinion shift) pedal.
For complete data, refer to Electrical Equipment Index.

GENERATOR

SPECIAL (FIRST CARS)

Auto-Lite Model GBM-4606C-1, Armature No. GBM-2065F. Third brush control type.
NOTE—For cars equipped with GDF-4801A generator (3rd brush type) with VRD-4002B voltage regulator, *refer to 1939 Plymouth Model P8 article.*

Charging Rate Adjustment—Remove commutator cover band, shift third brush by hand counter-clockwise to increase, or clockwise to decrease charging rate (brush held in position by friction).
Commutator Bar Method—Standard third brush setting (for maximum output as shown in table below) 4 commutator bars between third brush and insulated (nearest) main brush.
Maximum Charging Rate—18 amperes (cold), 15.2 (hot), 8.3 volts, 2500 R.P.M. Use test ammeter connected in charging line at battery terminal of Cut-out Relay to check generator output.

Cold		Performance Data	Hot	
Amps.	Volts	R.P.M.	Amperes	Volts	R.P.M.
0	6.4	800	0	6.4	850
4	6.8	950	4	6.9	1050
8	7.25	1125	8	7.4	1250
12	7.7	1375	12	7.9	1680
16	8.1	1800	15.2	8.3	2500
18	8.3	2400			

Rotation—Counter-clockwise at commutator end.
Brush Spring Tension—50-60 ozs. (new brushes).
Field Current—3.80-4.20 amperes at 6.0 volts.
Motoring Current—5.7-6.3 amperes at 6.0 volts.

Removal:—Pivot mounted at left front of engine. To remove, take out two pivot bolts and one clamp bolt.

Belt Adjustment:—Swing generator out until 40-50 lb. reading secured on scale attached to generator.

GENERATOR

DELUXE & SPECIAL (LATER CARS)

Auto-Lite Model GDA-4801-A. Armature GDA-2006F. Two brush, shunt wound type with vibrating voltage and current regulation. Ventilated.
Charging Rate Adjustment—None. See Regulator.
Maximum Charging Rate—28 amperes, 8.0 volts, 2025 R.P.M., 20 M.P.H. with load or discharged battery (Current Regulator setting). Actual charging rate controlled by Voltage Regulator.

Cold		Performance Data	Hot	
Amperes	Volts	R.P.M.	Amperes	Volts	R.P.M.
0	6.4	930	0	6.4	1010
4	6.6	1060	4	6.6	1180
8	6.85	1210	8	6.85	1350
12	7.1	1350	12	7.1	1530
16	7.3	1500	16	7.3	1730
20	7.5	1660	20	7.5	1950
24	7.75	1830	24	7.75	2220
28	8.0	2025	28	8.0	2520

NOTE—28 amperes is current regulator setting.

Rotation—Counter-clockwise at commutator end.
Brush Spring Tension—53 ozs. max. (new brushes).
Field Current—1.66-1.84 amperes at 6.0 volts.
Motoring Current—3.50-4.15 amperes at 6.0 volts.

Removal and Belt Adjustment:—As given above.

GENERATOR

SPECIAL EQUIPMENT

SPECIAL GENERATOR:—**Model GCB-4802A (City Police).** Used with Model VRB-4009A Regulator. *See 1939 DeSoto Model S6 article for complete data.*
Special Generators (Other Makes)—*Refer to Electrical Equipment Index for 'Special Generators' article for complete data on special generators and regulators which may be found on these cars.*

C NTINUED ON NEXT PAGE

C NTINUED FR M PRECEDIN PA E

CUTOUT RELAY

Auto-Lite Model CB-4014 (GBM-4606C-1 Generator). Mounted on generator.

Cuts In—6.5-7.25 volts.

Cuts Out—.5-2.5 amperes discharge current.

Contact Gap—.015-.045". Air Gap—.010-.030" (closed).

REGULATOR

Auto-Lite Model VRB-4004B. (GDA-4801-A Generator). Voltage-Current Type. Vibrating type voltage and current regulators in case on dash.

For complete data, refer to Electrical Equipment Index.

NOTE—Regulator case cover is sealed. Serviced on exchange basis if seals not broken.

Cutout Relay

Cuts In—6.4-7.0 volts Cold.
Cuts Out—.5 ampere min., 3.0 amperes max. Cold.
Contact Gap—.015" minimum.
Air Gap—.034" min., .038" max. with contacts open.

Voltage Regulator

Setting—7.3-7.6 volts at 70°F.

To Check (without breaking seals)—Connect ammeter in charging line at regulator 'B' terminal, voltmeter between 'B' and 'GD' terminals. Operate generator at speed equivalent to 30 MPH., charging battery, until voltage steady. Should be 7.3-7.7 volts Cold (70°F.), 7.1-7.4 volts Hot (140°F.).

To Adjust (with cover removed)—Change regulator armature spring tension by bending lower spring hanger slightly. See Electrical Equipment Section

Contact Gap—.010-.020" (armature against stop pin).

Air Gap—.0595-.0625" with contacts just opening.

Current Regulator

Setting—27-29 amperes (marked '28' on cover).

To Check (without breaking seals)—Connect test meters as for Voltage check (above). Operate generator at 30 MPH., charging battery, add load (use bank of headlamp bulbs, or turn on car lights and discharge battery) so that generator charges at peak rate and Current Regulator operates. Charging current should not exceed 28 amperes.

Adjustment, Contact Gap, Air Gap—Same as for Voltage Regulator (above).

LIGHTING

LIGHTING:—Headlamps—Corcoran-Brown pre-focused type. Upper and lower beams controlled by beam control switch on toeboard (lower beam deflected slightly to right—2331 bulb).

Headlamp Adjustment—Place unloaded car 25' from wall with upper beams lighted and lenses in place. Aim headlamps straight ahead with center of hot spot 4" below center horizontal line of headlamps. Adjusting screws at top of lamp under lens ring. Center screw controls up and down movement. Screw to right controls horizontal movement.
Beam Indicator—Red light on instrument panel above speedometer. Lighted with upper beam on.

Switches

Lighting—Chrysler No. 853295 or 852535.
Beam Selector—Chrysler No. 853323 or 659512.
Instrument—Chrysler No. 695943.
Stop Light—Chrysler No. 677112 or 853228.

Bulb Specifications

Position	Candlepower	Mazda No.
Headlamps	32-32	2331
Stop and Tail	21-3	1158
Parking, Instrument	1½	55
Beam Indic., Ign. Switch	1	51
Dome	15	87
Rear License	3	63

MISC. ELECTRICAL

FUSES:—Lighting—20 ampere. On light switch.
Single Horn—20 amp. In horn feed lead.
Dual Horns—30 ampere. On horn relay.
Windshield Wiper—14 ampere. On switch or in lead.

HORNS:—Single. Klaxon Model K-16 Type 2016. Std.
Dual—Auto-Lite HH or HL-4001 (low pitch), HH or HL-4002 (high pitch). Horns operated by relay.

Horn Relay:—Auto-Lite Model HR-4101. 30 ampere fuse on base. **Contacts Close**—2.5-3.5 volts.
Contacts Close—2.5-3.5 volts.
Contact Gap—.026". **Air Gap**—.012-.017" (closed).

ENGINE

ENGINE SPECIFICATIONS:—6 cylinder, 'L' head.
Bore—3¼". **Stroke**—4⅜".
Displacement—217.8 cu. ins. **Rated HP.**—25.35.
Developed Horsepower—87 HP. at 3600 R.P.M.
Compresion Ratio—6.5-1 cast-iron head. No optl.
Compression Pressure—135-145 lbs. at 1000 R.P.M. or approximately 110 lbs. at cranking speed.
Vacuum Reading—Steady 18-21" idling at 6 M.P.H.
See Chrysler Shop Notes for Engine Removal data.

PISTONS:—Aluminum alloy, cam ground, split skirt, steel strut type. **Length**—3 11/16". **Weight**—17.45 oz.
Removal—Pistons and rods removed from above.
Clearance—Top .022". Skirt .0005" desired.

Original Bore & Piston Sizes, Replacement Pistons:—***See Chrysler Shop Notes for sizes and markings.***

Fitting New Pistons:—Check piston size with micrometer gauge on skirt across piston pin support ribs. Insert .002" feeler between cylinder wall and piston on side opposite slot. With piston and block at 70° F. pull to withdraw feeler should be 10-16 lbs.

Installing Pistons:—Slot away from camshaft.

PISTON RINGS:—4 rings, all above pin—#1 Compression (upper inner edge stepped), #2 Comp. (lower outer edge stepped), #3 & 4 (slotted oil rings).

Ring	Width	End Gap	Side Clearance
Comp. (Top)	⅛"	.007-.015"	.002-.004"
Comp. (#2)	⅛"	.007-.015"	.0015-.0035"
Oil Control	5/32"	.007-.015"	.0015-.003"

Replacement Rings:—Std. & .003", .005", .010", .015", .020", .023", .025", .030", .040", .050", .060" oversize.

PISTON PIN:—**Diameter**—55/64". **Length**—2¾". Floating type. Pin hole in rod bronze bushed.
Pin Fit in Piston—Thumb push fit with piston heated to 160° F.
Pin Fit in Rod Bushing—Thumb push fit at 70° F

Replacement Pins:—Furnished std. & .003", .005", .008" oversize. Ream bushing and pin hole to size.

CONNECTING ROD:—**Weight** 30.01 oz. **Length** 7 15/16".
Crankpin Journal Diameter—2 1/16".
Lower Bearing—Removable, steel-backed, babbitt-lined. Furnished std. & .002", .010", .012" undersize.
Clearance—.0005-.0025". **Sideplay**—.0055-.0115".
Bearing Adjustment:—None (no shims). Install bearings with boss engaging groove in rod and cap.
Installing Rods:—Wide portion of bearing to rear (#1, 3, 5), to front (#2, 4, 6). Oil hole to camshaft.

CRANKSHAFT:—4 bearing type with 7 counterweights
Journal Diameters—2½" all bearings.
Bearing Type—Removable, precision type steel-backed, babbitt-lined. **Clearance**—.001-.002".

Bearing Adjustment: None (no shims). Replace bearings. ***For Front Main Bearing Cap Removal, Bearing Adjustment, and Crankshaft Oil Seals, refer to Chrysler Shop Notes.***

Replacement Bearings & Bearing Caps: ***See Chrysler Shop Notes for data.***
End Thrust:—Taken by flange faces on rear (#4) bearing. **Endplay**—.003-.007".

CAMSHAFT:—4 bearing. Non-adjustable chain drive.
Journal Diameters—#1, 2"; #2, 1 31/32"; #3, 1 15/16"; #4, 1¼".
Bearing Type—Removable steel-backed, babbitt-lined bushings (except #4 machined in block).
Clearance—.001-.003" (#1), .0015-.0035" (all others).

End Thrust:—Taken by thrust plate behind camshaft sprocket hub. **Endplay**—.002-.006".

Timing Chain:—Morse Type 1866-N, No. 2661. Width 1". Pitch .500". Length 24" or 48 links.

Camshaft Setting:—Mesh chain with sprockets turned so that '0' marks are adjacent and in line with a straightedge across the shaft centers.

VALVES:—	Head Diameter	Stem Diameter	Length
All valves	1 15/32"	.340-.341"	4 25/32"

	Seat Angle	Lift	Stem Clearance
Intake	45°	5/16"	.001-.003"
Exhaust	45°	5/16"	.003-.005"

See Chrysler Shop Notes for Exh. Valve Seat Insert data.

Valve Guides:—Remove from above. Press new guides in (tapered end up) so top ⅞" below top of block, then finish ream to .342-.343" Int., .344-.345" Exh.

Valve Springs:—Free length approx. 2 3/32". Limit of compression 1 9/32".	Spring Pressure	Length
Valve Closed	34-38 lbs.	1¾"
Valve Open	77-83 lbs.	1 7/16"

Valve Lifters:—Mushroom type. Stem diam. ⅝". Ream holes from above (pilot in valve stem guide) for lifters furnished .001", .008", .030", .060" oversize.

VALVE TIMING

Tappet Clearance:—.006" Intake, .008" Exh. (Hot). .002" additional exhaust clearance recommended for sustained high speed driving. NOTE—Tappet screws self-locking type (no locknuts). Remove right wheel and housing panel for access to valves.

Valve Timing:—See Camshaft Setting above.
Intake Valves—Open 6° ATDC. Close 46° ALDC.
Exhaust Valves—Open 42° BLDC. Close 8° ATDC.
Correct with tappet clearance of .011" Int., .012" Exh.
Valve Timing Check—Set tappet clearance #6 intake valve at .011". This valve should open with piston 6° (.0153") past top dead center when 6° ATDC. mark on impulse neutralizer at front of engine lines up with pointer. Reset tappet cl. .006" hot.

LUBRICATION

LUBRICATION:—Gear type pump, right of engine.
Normal Oil Pressure:—30-45 lbs. at 30 M.P.H.
Oil Pressure Regulator:—Under cap below starter. Opens at 40-45 lbs. To increase pressure use heavy (green) spring, to decrease use light (red) spring.
Crankcase Capacity:—5 quarts (refill).

COOLING

COOLING SYSTEM:—Capacity—15 quarts.
Radiator Core Removal—*See Chrysler Shop Notes.*

Water Pump:—Packless type, belt-driven.
See Water Pump Section for complete data.
Removal—Drain water; remove hood side panels, fan blade assembly, pulley, radiator outlet hose at pump, by-pass (with small hose), pump mounting stud nuts, fan belt adjusting strap at generator.

Thermostat:—Fulton. In water outlet on cyl. head.
Setting—Start to open 157-162° F. Fully open 183°.

Temperature Gauge:—Motometer (Auto Lite) Vapor Tension type. Part No. H-9022.
See Miscellaneous Section for complete data.

CLUTCH

CLUTCH:—Borg & Beck Model 10A7, 11A6 (Taxi).
#928 (10A7), #931 (11A6) stamped on cover. Single plate, dry disc type with spiral grooved facings, pressure plate oil baffle and new Over-center return spring (hooked to pedal).
See Clutch Section for complete data.
Facings—Woven & compressed, 2 required. Inside Diam. 7" (10A7), 6½" (11A6). Outside Diam. 10" (10A7), 11" (11A6). Thickness .125" (all).

Adjustment:—Pedal should just clear toeboard (adjust stopscrew on lower end) and have 1" free movement (adjusting nut on link rod at clutch fork).

Removal:—Remove floorboard, unhook clutch fork pull-back spring and take out clevis pin in connector link. Remove transmission (see below) and housing underpan, mark cover and flywheel, remove clutch cover bolts evenly, lower assembly out.

TRANSMISSION

TRANSMISSION:—Own make (Warner design). All helical gear, constant-mesh, synchro-mesh (second & high), sliding gear (low & reverse). Synchronizers made by Warner.
See Transmission Section for complete data.

Transmission Control:—Remote control type.
See Transmission Section for complete data.

Removal:—Remove floor boards, battery ground cable, disconnect front and rear U-joints (see Chrysler Shop Notes for Propeller Shaft Center Bearing Removal on 7 pass.), hand brake cable at clevis, speedometer cable, and gearshifter rod and cable at lever on case. Remove mounting stud nuts, cover assembly, and 2 upper mounting studs (insert pilot studs). Withdraw transmission assembly.

UNIVERSALS

UNIVERSAL JOINTS:—Detroit-Universal Series 4200. Ball and trunnion type with roller bearings.
See Universals Section for complete data.

Propeller Shaft Center Bearing:—On 7 pass. sedans.
See Chrysler Shop Notes for Propeller Shaft Center Bearing Removal and Installation instructions.

REAR AXLE

REAR AXLE:—Own Make. Semi-floating, hypoid gear type with Hotchkiss drive.
See Rear Axle Section for complete data.
Ratio—3.9-1 (Coupes), 4.1-1 (5 pass.), 4.3-1 (7 pass. and cars with 6.00x18 & 5.25x20 tires).
Backlash—.006-.010". Screw adjustment.

Removal:—Disconnect drive shaft at rear universal, remove axle shafts (see below), remove capscrews on carrier flange, pull carrier assembly out.
Axle Shaft Removal—Remove wheel, hub and drum assembly (use screw type hub puller—Tool C-319), block brake pedal, disconnect brake line at wheel cylinder, take off backing plate with oil seal, pull shaft and bearing (Tool C-158).

Wheel Bearing Adjustment:—Shims between backing plate and axle housing. With wheel and hub removed check endplay with dial indicator. To adjust, remove backing plate (see above), add or remove shims equally (at both sides). **Endplay**—.003-.008".

SHOCK ABSORBERS

SHOCK ABSORBERS:—Delco. Direct acting type.
Domestic—Front 1110-C. Rear 1111-T, W (20" wh.).
Exp.—Front 1114-C. Rear 1115-T, W (20" wh.). Adj.
Exp.—Front 1134-E. Rear 1130-W, Y (20" wh.). Adj.
See Shock Absorber Section for complete data.

FRONT SUSPENSION

Front Suspension:—Independent, linked parallelogram type with coil springs.
See Front Suspension Section for complete data.
Kingpin Inclination—5¼-6½° (4¾-6°—7 pass.).
Caster—Minus ½° to plus 1½° (minus ¼° to plus ¾° —¼° preferred—7 passenger).
Camber—0° preferred. Limits minus ¼° to plus ½°. Plus ½° to plus 2½° (7 passenger).
Toe In—1/16" (0-⅛"). Set long tie rod to 31 11/16" (between ball centers). Adjust short rod only.
Steering Geometry (Toe-out on Turns)—Outer wheel turned 20°. Inner wheel 22°30'.

STEERING GEAR

Steering Gear: Gemmer Model 300 (exc. 7 Pass.), Model 305 (7 Pass. Models). Worm-and-Roller type. Model 305 has "push-pull" adjustments.
See Steering Gear Section for complete data.

BRAKES

BRAKES:—Service. Lockheed hydraulic, double anchor type. Hand lever applies independent shaft brake.
See Brake Section for complete data.
Wheel Cylinders—Stepped or two-stage bore type.
Drums—Cast-iron. Diameter—11".
Lining—Molded. Width 2". Thickness 13/64". Length (front shoe) 11 15/32"; (rear shoe) 7 31/32".
Clearance—.012" toe, .006" heel for each shoe.

Hand Brake:—On drum at rear of transmission.
Adjustment—***See Chrysler Shop Notes for data.***
Drum—Cast-iron. Diameter—6".
Lining—Width 2". Thick. 5/32". Length 17 1/16".

MISC. MECHANICAL

WINDSHIELD WIPER:—Auto-Lite EW-5001, EW-5101. Electric type. 14 ampere fuse in feed lead (first cars), on windshield wiper switch (later cars).
For complete data, and recommended changes on early cars, refer to Auto-Lite 'EW' Windshield Wiper article in Miscellaneous Section.

HOOD LOCK, FRONT END ASSEMBLY & OIL PAN REMOVAL:—*See Chrysler Shop Notes.*

MODEL IDENTIFICATION

SERIAL NUMBER:—On right front door hinge post.

	Detroit	Canada
1940 D14 Deluxe	30,216,001	9,420,231
1940 D17 Special	4,349,001	9,494,721
1941 D19 Cust. & Del.	30,342,401	9,422,901

ENGINE NUMBER: First No. D14-1001 (1940), D19-1001 (1941). Stamped on left side of engine block between #1 and #2 cylinders.

See Chrysler Shop Notes for engine number lettering data ("Special Standard" Bore and Bearing sizes).

TUNE-UP

COMPRESSION:—Ratio and pressure as follows:

Ratio	Pressure at 1000 RPM	At 100 RPM
6.5-1 cast-iron hd.	140-150 lbs.	Approx. 113 lbs.
7.0-1 aluminum hd.	150-160 lbs.	Approx. 120 lbs.

VACUUM READING: Steady 18-20" idling at 6 MPH.

FIRING ORDER: 1-5-3-6-2-4. See diagram.

SPARK PLUGS: Auto-Lite Type A-7B (Cast Iron Heads), Type AL-7A (Aluminum Heads). 14 mm. **Gaps**—.025"

IGNITION: See Coil, Condenser, and Distributor.
Breaker Gap—.020" **Cam Angle** 38° (closed).
Automatic Advance—12° max. at 1750 RPM (distr.).
Vacuum Advance—8° distr. with 16" vacuum (IGS-4107-1, 4112-1, 4203-1), 7° distr. with 15" vacuum (IGS-4108-1, 4113-1, 4202-1), 11° distr. with 17" vacuum (IGS-4108A-1).

IGNITION TIMING: See Ignition Timing.
Std. Setting—At TDC. (All Engines) with dead center mark "DC" on impulse neutralizer at indicator on front of engine.

CARBURETION: See Carburetor & Carb. Equipment.
Idle Setting—Idle screw midway between "miss" and "roll" points. Idle speed 6 MPH.
Float Level—Fuel level ⅝" below top of bowl.
Accelerating Pump—Center hole Normal. Inner hole (Summer), Outer hole (Winter) for temperature extremes.
Fuel Pump Pressure: 4 lbs. maximum.

MANIFOLD HEAT CONTROL:—Thermostatic coil type. See that shaft and valve rotate freely. When installing coil, wind up free end ½ turn counterclockwise and hook end over stop stud.
CAUTION—Do not wind coil up more than ½ turn.

VALVES: See Valve Timing.
Tappet Clearance ('40)—.006" Int., .008" Exh. Hot.
Tappet Clearance ('41)—.008" Int., .010" Exh. Hot.
.002" add'tl exh. clearance desirable for sustained high speeds. NOTE—Tappet screws self-locking (no locknuts). Remove right front wheel, lower housing panel (& pump shield on '40) for access to valves.

STARTING: See Battery, Starter, Generator, Regulator.

IGNITION

Ignition Switch:—Mitchellock Model 24-R, No. 8197.
Ignition Lock—Yale & Towne or Briggs & Stratton. B&S No. 80651. Key Series 1BP to 1000BP. Groove #24.

COIL: Auto-Lite Model IG-4661 (1940), IG-4668 (1941). Service Coil (less Switch & Cable) IG-3224JS. Coil is mounted on the dash.
Ignition Current—2.25 amperes idling, 5.5 stopped.

CONDENSER: Auto-Lite Part No. IG-3927A.
Capacity—.25-.28 microfarad.

DISTRIBUTOR: Auto-Lite Model IGS-4107-1 (D14, D17 U.S.), IGS-4108A-1 or 4108-1 (D14, D17 Canada), IGS-4112-1 or 4203-1 (D19 U.S.), IGS-4113-1 or 4202-1 (D19 Canada). Single breaker, 6 lobe cam, full automatic advance type with auxiliary vacuum spark control and manual adjustment.
NOTE—IGS-4108A-1 used before Engine No. D14-C-1313, IGS-4108-1 after this number.
Breaker Plate Identification—Maximum vacuum advance limited by slot and marked with number as follows: #8 (IGS-4107-1, 4112-1, 4203-1), #7 (IGS-4108-1, 4113-1, 4202-1), #11 (IGS-4108A-1).
Breaker Gap—Set at .020". Limits .018-.022".
Cam Angle or Dwell—38° closed, 22° open (distr.).
Breaker Arm Spring Tension—17-20 ounces.
Rotation—Clockwise viewed from the top.

Automatic Advance

Distributor Degrees	Distributor R.P.M.	Engine Degrees	Engine R.P.M.
Start	350	0	700
3	400	6	800
6	850	12	1700
9	1300	18	2600
12	1750	24	3500

Vacuum Spark Control—Integral type (on distributor, linked directly to breaker plate). Provides additional advance at speeds above idling except when engine accelerated or operated with wide open throttle (spark retarded by return spring in unit).

Vacuum Advance
IGS-4107-1, 4112-1, 4203-1

Distr. Degrees	Eng. Degrees	Vacuum (" of HG)
Start	0°	5"
2°	4°	7¾"
4°	8°	10½"
6°	12°	13¼"
8°	16°	16"

Vacuum Advance
IGS-4108-1, 4113-1, 4202-1

Start	0°	5"
1°	2°	6½"
3°	6°	9¼"
5°	10°	12⅛"
7°	14°	15"

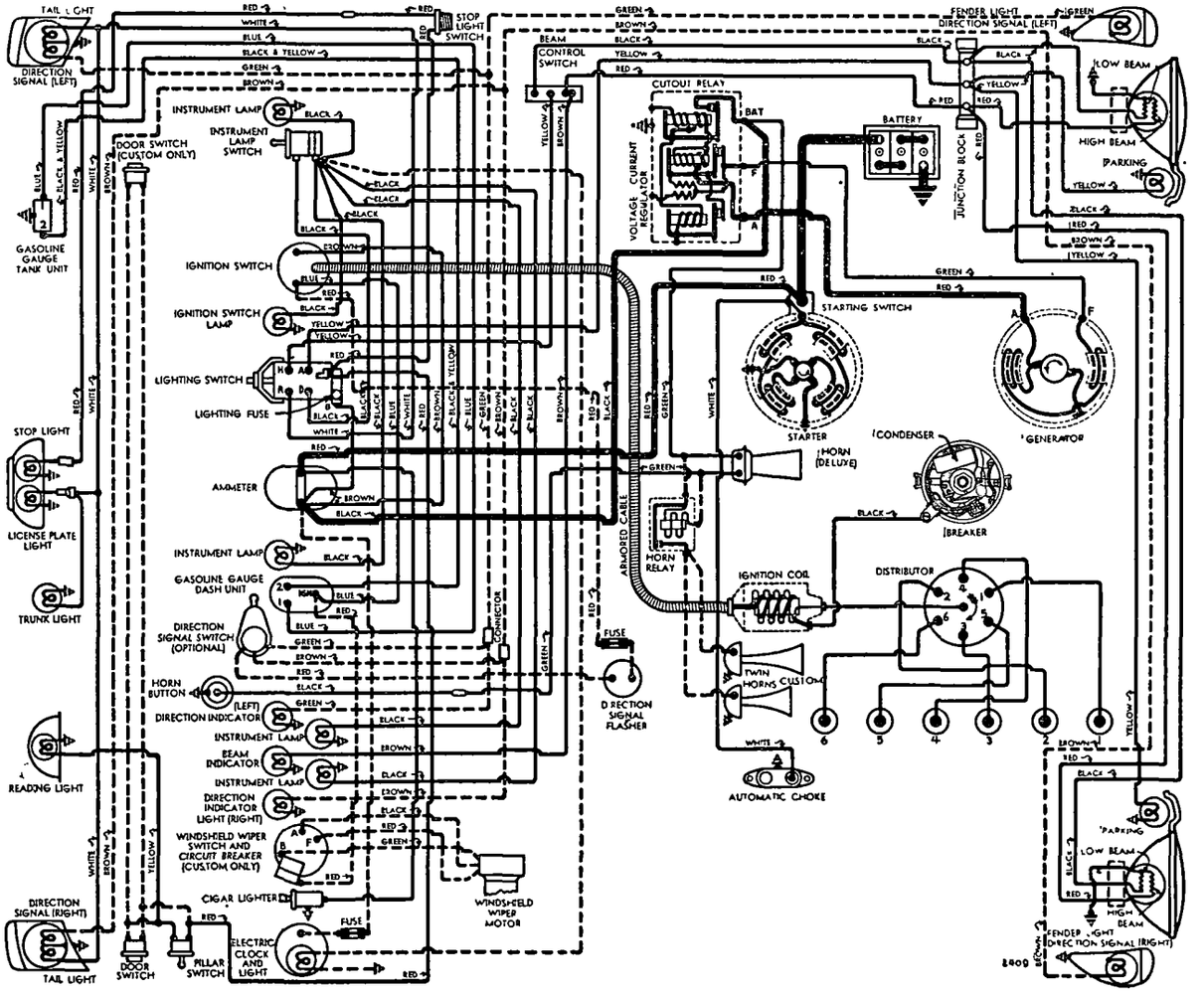

Vacuum Advance—IGS-4108A-1

Start	0°	5"
2°	4°	7¼"
5°	10°	10½"
8°	16°	13¾"
11°	22°	17"

Manual Adjustment—At distributor. Provides 10° advance or retard from center '0' position. See Ignition Timing for adjustment.

Distributor Removal:—Mounted on left side of crankcase. To remove, disconnect vacuum line, take out hold-down screw in lock plate.

IGNITION TIMING

IGNITION TIMING:—Initial setting (correct for fuel of 70 octane rating at low altitudes for both cast-iron and aluminum heads) shown below. See Manual adjustment (following) for correction (not to exceed 4° either way) dependent on fuel regularly used and operating conditions.

	Flywheel Degrees	Piston Position
6.5 & 7.0-1 heads	0° at TDC	.0000" at TDC.

NOTE—Impulse neutralizer (D14), crankshaft pulley (D17) marked 'DC' at top dead center with 15 (1°) graduations on either side.

Timing (Using Timing Light)—Connect timing light between distributor and battery terminal on the generator regulator. With #6 piston on compression, turn engine over until piston reaches firing position (see Initial Setting above), stop when correct mark on impulse neutralizer lines up with pointer on chain case cover. Loosen lock-plate hold-down screw, center pointer on scale, tighten screw. Loosen lock-plate clamp bolt, rotate distributor until timing light just goes out, tighten clamp bolt. Check Manual Adjustment as directed below.

Timing (Using Synchroscope)—Tool C-374. Clip lead to #1 spark plug, direct light on impulse neutralizer (fill in correct mark on impulse neutralizer with chalk or paint), idle engine and adjust distributor as directed above.

Manual Adjustment—Standard ignition setting should be varied not more than 4° (piston 4° or .0068" before or after top dead center) so that slight ping noticeable between 10 and 30 M.P.H. when accelerating with wide open throttle for best performance. To adjust, loosen hold-down screw, rotate distributor counter-clockwise to advance spark (if no ping noted), counter-clockwise to retard spark (if ping too severe) not more than 4°. Scale graduated in engine degrees.

CARBURETOR

CARBURETION:—**Carburetor**—Stromberg Model BXV-3 (Std. 1940-41), BXVD-3 (Fluid Drive Cars 1941). 1½" single barrel, downdraft types.

NOTE—Model BXVD-3 has special dashpot type slow closing throttle device.

For complete data, and recommended changes on first BXVD-3 carburetors for improved economy, refer to Stromberg BXVD-3 Carburetor article in Carburetor Section.

Idle Adjustment—With engine warm and running at slow idle speed (choke valve wide open, fast idle inoperative), set throttle stopscrew for 6 MPH idle speed. Adjust idle adjusting screw until engine fires smoothly (turn screw in for leaner mixture). Re-adjust idle speed. NOTE—Car manufacturer recommends use of vacuum gauge. Idle screw should be set to give highest reading on gauge.

Accelerating Pump Setting—Pump lever has three holes for pump link engagement. Set as follows: Inner Hole (min. stroke)—Extreme hot temperatures or altitudes above 3000 feet.
Center Hole (med. stroke)—Normal setting.
Outer Hole (max. stroke)—Winter temperatures.
NOTE—If lean metering jets (High Alt. calibration) used at lower altitudes for increased economy, reduced speed and power will result (not recommended by manufacturer). See Stromberg Jet Table in Carburetor Section for complete jet data.

Float Level—Fuel level ⅝" below top edge of bowl.

Throttle Cracker:—Interconnector between starting pedal and accelerator rod which opens throttle approximately one-third when pedal depressed for starting. Adjust by loosening throttle pickup clamp bolt (above starter switch), shift clamp on rod.
NOTE—1941 type not adjustable.

Fast Idle:—Not adjustable. Throttle stopscrew should rest on high point of cam (choke valve closed).

Slow-Closing Throttle (BXVD-3 only): Refer to Carburetor article for data.

Adjustment—With all slack removed from linkage, set adjusting screw on dashport lever so that piston travel is 5/16-11/32" (turn screw in to shorten stroke).

Automatic Choke:—Sisson Type AC-758B.

For complete data, refer to Carburetion Equip. Index.

CARB. EQUIPMENT

Air Cleaner: (1940) AC No. 1528200 oil-wetted type. (1941) AC No. 1529937 heavy duty oil-bath type.

Fuel Pump:—AC Type AT #1523647 diaphragm type. Replacement Exchange Pump No. 505.
Pressure—4 lbs. maximum.

For complete data, refer to Carburetion Equip. Index.

Gasoline Gauge:—Auto-Lite electric. No. NG-9342D Dash Unit 1940), NG-9674D (Dash Unit 1941), No. NG-9329T (Tank Unit 1940-41).

For complete data, refer to Carburetion Equip. Index.

BATTERY

Auto-Lite Type PN-15A (1940), PD-1-15R (1941). 6 volt, 15 plate, 95 ampere hour capacity (20 hr. rate).
Starting Capacity—117 amperes for 20 minutes.
Zero Capacity—300 amperes for 3.1 minutes.
Grounded Terminal—Positive (+) grounded to the transmission case.
Dimensions—Length 8⅞". Width 7". Height 8⅝".
Location—Left side under front seat (1940), under engine hood in left fender shield (1941).

STARTER

Auto-Lite Model MZ-4062 or 4062A (D14, D17 U.S.), MAW-4016 (D14, D17 Canada), MZ-4089 or 4089A (D19 U.S.), MAW-4019 or 4019A (D19 Canada).
Armature—Auto-Lite MZ-2108 ("MZ" Starters), MAW-2030 ("MAW" Starters).
Drive—Overrunning clutch, manual pinion shift.
Rotation—Counter-clockwise at commutator end.
Cranking Engine—150-175 amperes, 5.1 volts.
Brush Spring Tension—42-53 ozs. (new brushes).

Performance Data
MZ-4062,A; MZ-4089,A

Torque	R.P.M.	Volts	Amperes
0 ft. lbs.	4300	5.5	70
.65 " "	2500	5.5	100
2.55 " "	1325	5.0	200
4.95 " "	750	4.5	300
7.65 " "	220	4.0	400
7.8 " "	Lock	3.0	420
11.8 " "	Lock	4.0	560

Performance Data
MAW-4016, MAW-4019,A

Torque	R.P.M.	Volts	Amperes
0 ft. lbs.	4900	5.5	65
.60 "	3300	5.5	100
2.75 "	1480	5.0	200
5.45 "	820	4.5	300
8.50 "	400	4.0	400
11.55 "	110	3.5	500
11.5 "	Lock	3.0	505
18.0 "	Lock	4.0	670

Removal:—Flange mounted on left front face of flywheel housing, Remove cables, 2 clips on starter linkage, oil filter lines, 2 mounting bolts. Lift off.

Starting Switch:—Model SW-2813. On starter. Manually operated by starter (pinion shift) pedal.

GENERATOR

STANDARD

Auto-Lite Model GDZ-4801A (Std. 1940), GDZ-4801B (Std. 1941), GEB-4801A (City Police), GEG-4818A (City Police & 1941 Taxicab), GEG-4818B (State Police). Two brush, shunt type with external vibrating type current and voltage regulation. Ventilated.
Armature—Auto-Lite GDZ-2006F ("GDZ" Generators), GEB-2006F ("GEB" Generator), GEG-2006F ("GEG" Generators).
Charging Rate Adjustment—No adjustment at generator. Charging rate controlled by Voltage Regulator and maximum output by Current Regulator.
Maximum Charging Rate—35 amperes (GDZ Gen.), 32 amperes (GEB Gen.), 8.0 volts, 2200 Gen. RPM (GDZ), 1400 RPM (GEB), at approx. 24 MPH (GDZ) and above with load or discharged battery (Current Regulator setting). Actual charging rate controlled by voltage regulator.

Performance Data—GDZ-4801A, B

Cold Amperes	Cold Volts	Cold R.P.M.	Hot Amperes	Hot Volts	Hot R.P.M.
0	6.4	925	0	6.4	1000
4	6.6	1035	4	6.6	1120
8	6.75	1140	8	6.75	1235
12	6.95	1250	12	6.95	1350
16	7.15	1370	16	7.15	1460
20	7.3	1480	20	7.3	1590
24	7.5	1590	24	7.5	1730
28	7.7	1710	28	7.7	1900
32	7.9	1820	32	7.9	2090
*35	8.0	1900	35	8.0	2250

Performance Data—GEB-4801A

0	6.4	560	0	6.4	600
4	6.6	630	4	6.6	675
8	6.8	700	8	6.8	750
12	7.0	775	12	7.0	840
16	7.2	845	16	7.2	930
20	7.4	920	20	7.4	1030
24	7.6	1000	24	7.6	1140
28	7.8	1075	28	7.8	1260
*32	8.0	1150	32	8.0	1400

Performance Data—GEG-4818A, B

0	6.4	780	0	6.4	820
5	6.6	870	5	6.6	900
10	6.8	960	10	6.8	990
15	7.0	1040	15	7.0	1080
20	7.2	1130	20	7.2	1170
25	7.4	1220	25	7.4	1270
30	7.6	1310	30	7.6	1380
35	7.8	1410	35	7.8	1510
40①	8.0	1520	40	8.0	1680

①—Current regulator setting. See Regulator data

C NTINUED ON NEXT PAGE

C NTINUED FR M PRECEDIN PA E

Rotation—Counter-clockwise at commutator end.
Brush Spring Tension—53 ozs. max. (GDZ Gen), 64-68 ozs. (GEB & GEG Gen.) with new brushes.
Field Current—1.60-1.78 amperes at 6.0 volts (all).
Motoring Current—4.16-4.60 amperes (GDZ Gen.), 4.0-4.5 amperes (GEB Gen.), 4.7-5.2 amperes (GEG Gen.) at 6.0 volts.
Removal:—Pivot mounted at left side of engine at front. To remove, take out pivot and clamp bolts.
Belt Adjustment:—Loosen clamp and pivot bolts, swing generator out until scale (attached to field frame) reads 40-50 lbs., tighten bolts.

GENERATOR

SPECIAL EQUIPMENT

SPECIAL GENERATOR (D19): Auto-Lite Model GBM-4610A-5. Third brush control type. Used with Model CB-4014 Cutout Relay.
Refer to 1939 Plymouth Model P7 article for complete data on this Generator and Cutout Relay.

SPECIAL GENERATORS:—Other Makes—***Refer to Electrical Equipment Index for 'Special Generators' article for complete data on special generators and regulators which may be found on these cars.***

REGULATOR

Auto-Lite Model VRP-4001A (GDZ Generators), VRP-4001B (GEB Generators), VRP-4001F (GEG Generators). Voltage-Current Types. In case on dash.
NOTE—For Negative Battery Ground, regulators are VRP-4005A (GDZ Gen.), VRP-4005B (GEB Gen.), VRP-4005E (GEG Gen.).
For complete data, refer to Electrical Equipment Index.
NOTE—Regulator case cover is sealed. Serviced on exchange basis if seals not broken.

Cutout Relay

Cuts In—6.4-6.6 volts at approximately 1000 generator RPM (VRP-4001A,5A), 600 RPM (VRP-4001B,5B). 820 RPM. (VRP-4001F, 4004E).
Cuts Out—4.2-4.8 volts (approx. 4-6 amps. disch.).
Contact Gap—.015" minimum.
Air Gap—.031" min., .034" max. with contacts open. Measure at hinge end of core.

Voltage Regulator

Setting—7.2-7.5 volts at 70° F.
To Check (without breaking seals)—Connect ammeter in charging line at regulator 'B' terminal, voltmeter between 'B' terminal and ground. Operate generator at speed equivalent to 30 MPH charging battery until voltage is steady. Voltage reading should be 7.2-7.5 volts at 70° F. See Electrical Equipment Section for voltages at other temperatures.
To Adjust (with cover removed)—Change regulator armature spring tension by bending lower spring hanger slightly. See Electrical Equipment Section.
Contact Gap—.012" Min. (armature against stop pin).
Air Gap—.048-.052" with contacts just opening.

Current Regulator

Setting (VRP-4001A,5A)—34-36 amperes (marked '35' on cover). **VRP-4001B, 5B**—31-33 amps. (marked 32). **(VRP-4001F, 4005E) 39-41 amperes (marked "40").**
To Check (without breaking seals)—Connect test meters as for Voltage check (above). Operate generator at speed equivalent to 30 MPH charging battery, turn on car lights and accessories so that generator charges at peak rate and Current Regulator operates. Charging current should not exceed maximum setting noted above.

Adjustment & Contact Gap—Same as for Voltage Regulator (above).
Air Gap—.034-.038" (before No. 5U-000001), .048-.052" (after above No.) with contacts just opening.

LIGHTING

LIGHTING:—Headlamps—Corcoran-Brown 'Sealed Beam' type. ***See article in Electrical Equipment Section.***
Headlamp Adjustment—Aim upper beam for each lamp straight ahead with center of hot spot 3" below lamp center height.
Beam Indicator—Red light on panel above instrument cluster. Lighted with upper beam on.

Switches

Lighting—Dodge No. 858050 Std., 858052 Optl. (1940), 863823 (1941).
Beam Selector—Dodge No. 859974.
Instrument—Dodge No. 853371 (1940), 903783 (1941).
Direction Signal—Dodge No. 865763 (1941).
Stop Light—Dodge No. 862556.

Bulb Specifications

Position	Candlepower	Mazda No.
Headlamps		Sealed Beam
Parking, Instrument	1½	55
Front Direction Signal	21	1129
Beam & Dir. Ind., Ign. Sw.	1	51
Stop & Tail (1940)	21-3	1158
Tail ('41—No Dir. Signal)	3	63
Stop (1941)	21	1129
Rear Dir. Sig. & Tail	21-3	1158
Rear License	3	63
Dome or Reading	15	87

MISC. ELECTRICAL

FUSES:—Lighting—30 amp. On back of light switch.
Clock—2 ampere. In connector behind clock.
Radio—14 amp. In feed wire behind instr. panel.
Horns & Windshield Wiper—No fuse used.
Direction Signal—30 ampere. In flasher lead.

HORNS (1940): Single—Delco-Remy No. 1999911 Std.
Dual—Auto-Lite HO-5001 horn set. HL-4001 (low pitch), HL-4002 (high pitch) operated by horn relay.
Current Draw—Approx. 7 amps. single, 35-40 dual.
Horn Relay:—Auto-Lite Model HRC-4001 (no fuse).
Contacts Close—1.5-3.0 volts. **Open**—.5 volt.
Contact Gap—.026". **Air Gap**—.016-.020" (closed).

HORNS (1941): Single—Delco-Remy 1999913 (low note), 1999914 (high note) or Auto-Lite HA-4001 Std.
Dual—Auto-Lite HO-5003 horn set. HA-4026 (low pitch), HA-4027 (high pitch) operated by relay.
Current Draw—Approx. 7 amps. single, 35-40 dual.
Horn Relay:—Auto-Lite Model HRC-4001 (no fuse).
Contacts Close—1.5-3.0 volts. **Open**—.5 volt.
Contact Gap—.026". **Air Gap**—.016-.020" (closed).

ENGINE

ENGINE SPECIFICATIONS:—6 cylinder, 'L' head type.
Bore—3¼". **Stroke**—4⅜".
Displacement—217.8 cu. ins. **Rated HP**—25.35.
Developed Horsepower—87 at 3600 RPM (1940), 91 at 3800 RPM (1941).
Compression Ratio—6.5-1 cast-iron head. No optl.
Compression Pressure—140-150 lbs. at 1000 RPM or approximately 113 lbs. at cranking speed.
Vacuum Reading—Steady 18-21" idling at 6 MPH.
See Chrysler Shop Notes for engine removal instructions.

PISTONS:—Aluminum alloy, cam ground, split skirt, steel strut, tin coated type. **Length**—3 11/16".
Weight—15.2 ozs. (1940), 14.4 ozs. (1941) stripped.
Removal—Pistons and rods removed from above.
Clearance—Skirt .00025-.00075". See Fitting Pistons.
Original Bore & Piston Sizes, Replacement Pistons:—***See Chrysler Shop Notes for sizes and markings.***
Fitting New Pistons:—Check piston size with micrometer gauge on skirt across piston pin support ribs. Insert .0015" feeler (1940), .002" feeler (1941) between piston and cylinder wall on side opposite slot (piston inverted). With piston and block at 70°F., pull required to withdraw feeler should be 10-16 lbs.
Installing Pistons:—Slot away from camshaft.

PISTON RINGS:—4 rings, all above pin—#1 Compression (upper inner edge stepped), #2 Comp. (lower outer edge stepped), #3 and 4 (slotted oil rings).

Piston Rings—1940

Ring	Width	End Gap	Side Clearance
Comp. (Top)	⅛"	.007-.015"	.002-.004"
Comp. (#2)	⅛"	.007-.015"	.0015-.0035"
Oil Control	5/32"	.007-.015"	.001-.0025"

Piston Rings—1941

Ring	Width	End Gap	Side Clearance
Compr. (Top)	3/32"	.007-.015"	.0025-.004"
Compr. (#2)	⅛"	.007-.015"	.0015-.0035"
Oil Control	5/32"	.007-.015"	.001-.0025"

Replacement Rings:—Std. & .003", .005", .010", .015", .020", .023", .025", .030", .040", .050", .060" oversize.

PISTON PIN:—**Diameter**—55/64". **Length**—2¾". Floating type. Pin hole in rod bronze bushed.
Pit Fit in Piston—Thumb push fit with piston heated to 160°F.
Pin Fit in Rod Bushing—Thumb push fit at 70°F.
Replacement Pins:—Std. & .003", .005", .008" oversize.

CONNECTING ROD:—**Weight**—30.4 ozs. (with bearings and bolts). **Length**—7 15/16".
Crankpin Journal Diameter—2 1/16".
Lower Bearing—Removable, precision type, steel & bronze-backed, babbitt-lined (1940), thin babbitt on steel (1941).
Clearance—.0005-.0025". **Sideplay**—.0055-.0115".
Bearing Adjustment:—None (no shims). Install bearings with boss engaging groove in rod and cap.
Replacement Bearings: ***Refer to Chrysler Shop Notes.***
Installing Rods:—Wide portion of bearing to rear (#1, 3, 5), to front (#2, 4, 6). Oil hole to camshaft.

CRANKSHAFT:—4 bearing type with 7 counterweights.
Journal Diameters—2½" all bearings.
Bearings—Removable, precision type, babbitt (#4 steel-backed, others bronze and steel-backed 1940), thin babbitt on steel (1941).
Clearance—.001-.002".
Bearing Adjustment:—***See Chrysler Shop Notes for Bearing Removal and Adjustment, Front Main Bearing Cap Removal, and Crankshaft Front & Rear Oil Seals.***
Replacement Bearings & Bearing Caps: ***Refer to Chrysler Shop Notes for complete data.***
End Thrust:—Taken by flange faces on rear (#4) main bearing. **Endplay**—.003-.007".

CAMSHAFT:—4 bearing. Non-adjustable chain drive.
See Chrysler Shop Notes for camshaft removal.
Journal Diameters—#1, 2"; #2, 1 31/32"; #3, 1 15/16"; #4, 1¼".
Bearing Type—Removable steel-backed, babbitt-lined bushings (except #4 machined in block).
Clearance—.001-.003" (#1), .0015-.0035" (all others).
End Thrust:—Taken by thrust plate behind camshaft sprocket hub. **Endplay**—.002-.006".

ENGINE

CONTINUED FROM PRECEDIN PA E

Timing Chain:—Morse Type 1883-N, No. 2661. Width 1". Pitch .500" (½"). Length 24" or 48 links.

Camshaft Setting:—Sprockets marked. Mesh chain with sprockets turned so that '0' marks are adjacent and in line with a straightedge across shaft centers.

VALVES:—	Head Diameter	Stem Diameter	Length
All valves....	1 15/32"	.340-.341"	4 25/32"

	Seat Angle ('40)–Lift–('41)	Stem Clearance
Intake	45°	5/16" 3/8" .001-.003"
Exhaust	45°	5/16" 3/8" .003-.005"

See Chrysler Shop Notes for Exh. valve seat insert data.

Valve Guides:—Remove from above. Press new guides in (stepped end down) with upper end 7/8" below top of block (use Tool CM-83), then finish ream to .342-.343" Intake, .344-.345" Exhaust.

Valve Springs:—Install with closely coiled ends to top. Spring free length 2 3/32" (1940), 2" (1941).

1940 Springs	Spring Pressure	Length
Valve Closed	34-38 lbs.	1¾"
Valve Open	77-83 lbs.	1 7/16"

1941 Springs	Spring Pressure	Length
Valve Closed	40-45 lbs.	1¾"
Valve Open	107-115 lbs.	1⅜"

Valve Lifters:—Mushroom type (remove from below). Stem diam. ⅝". Ream holes from above (pilot in valve stem guide). Oversizes .001", .008", .030", .060". **Clearance in Block**—.000-.001".

VALVE TIMING

Tappet Clearance: (1940) .006" Int., .008" Exh. Hot, **(1941)** .008" Intake, .010" Exhaust, Engine Hot and idling). .002" addt'l exh. clearance desirable for sustained high speeds. NOTE—Tappet screws self-locking (no locknuts). Remove right front wheel, lower housing panel and pump shield for access.

Valve Timing (1940): See Camshaft Setting above.
Intake Valves—Open 6° ATDC. Close 46° ALDC.
Exhaust Valves—Open 42° BLDC. Close 8° ATDC.
Valve Timing Check—With .011" (cold) tappet clearance, #6 intake valve should open with #6 piston 6° or .0153" ATDC with 6th graduation after DC mark on impulse neutralizer in line with pointer. Reset tappet clearance at .006" (hot and idling).

Valve Timing (1941): See Camshaft Setting above.
Intake Valves—Open 9° BTDC. Close 47° ALDC.
Exhaust Valves—Open 47° BLDC. Close 9° ATDC.
Valve Timing Check—With .014" (cold) tappet clearance #6 intake valve should open with #6 piston 9° or .0343" BTDC with 9th graduation before DC mark on impulse neutralizer aligned with pointer on chain case cover. Reset tappet clear. at .008" hot.

LUBRICATION

LUBRICATION:—Pressure (pump on right of engine). *See Chrysler Shop Notes for oil pump removal.*

Normal Oil Pressure:—30-45 lbs. @ 30 MPH, 15 idling.

Oil Pressure Relief Valve:—Under plug below starter. Opens at 40-45 lbs. To increase pressure use heavy (green)spring, to decrease use light (red) spring.

Crankcase Capacity:—5 quarts (refill).

COOLING

COOLING SYSTEM:—Capacity—15 quarts. *See Chrysler Shop Notes for radiator core removal.*

Water Pump:—Packless type with belt drive. *See Water Pump Section for complete data.*
Removal—Drain water. Remove fan blade assembly, pulley, radiator outlet hose at pump, by-pass elbow (with small hose), pump mounting stud nuts, fan belt adjusting strap at generator, and belt adjusting strap stud from block. Pull pump off.

Thermostat—Bishop & Babcock or Fulton. On head **Setting**—Starts to open 157-162°F. Fully open 183°F.

Temperature Gauge: Motometer (Auto-Lite) Vapor Tension type. No. 9341 (1940), 9673 (1941). *See Miscellaneous Section for complete data.*

CLUTCH

Borg & Beck Model 10A7 (Std.), 11A6 (Taxicab), 9A7 (1941 Cars with Fluid Drive) with "Borglite" Driven Member. Single plate, dry disc type with spiral grooved facings, pressure plate oil baffle, and clutch pedal over-center return spring (except Model 9A7).
NOTE—Clutch marked for identification by number stamped on cover as follows: #928 (10A7), #931 (11A6), #952 (9A7). *See Clutch Section for complete data.*

Facings—Spiral wound moulded woven, 2 used. **Inside Diameter 6" (9A7), 7" (10A7), 6½" (11A6);** Outside Diameter 9¼" (9A7), 10" (10A7), 11" (11A6); Thickness .125" (⅛").

Adjustment:—Pedal should just clear toeboard (adjust stopscrew on lower end) and have 1" free movement (adjusting nut on link rod at clutch fork).

Removal:—Remove release fork pull-back spring, Transmission (see following) and housing underpan. Disconnect release fork from pivot and pull out as far as possible. Mark cover and flywheel, remove clutch cover screws evenly, lower assembly out.

FLUID DRIVE

Optional Equipment. Consists of fluid coupling at rear of engine. Used on 1941 models only. *See Miscellaneous Section for complete data.*

TRANSMISSION

TRANSMISSION:—**Own Make.** All helical gear, constant-mesh, synchro-mesh (second & high), sliding gear (low & reverse) with remote shift. *See Transmission Section for complete data.*

Transmission Control:—Steering column shift Std. Power Shift (vacuum operated type) Optl. in 1941. *See Transmission Section for complete data.*

Removal:—Remove propeller shaft (loosen comp. flange nut if transmission to be disassembled—See Chrysler Shop Notes for Propeller Shaft Center Bearing Removal on 7 pass.). Disconnect speedometer cable, battery ground cable, hand brake cable, and gear shift rod and cable at transmission. Remove mounting stud nuts and lockwashers. Pull unit back, lower and remove from car.

UNIVERSALS

UNIVERSAL JOINTS: Detroit-Universal Series 4200 (3 & 5 pass.), Series 7200 (7 pass.). Roller bearings with ball & trunnion (4200), cross type (7200). *See Universals Section for complete data.*

Propeller Shaft Center Bearing:—Used on 7 passenger sedans. *See Chrysler Shop Notes for servicing.*

REAR AXLE

REAR AXLE:—**Own Make.** Semi-floating, hypoid gear type with Hotchkiss drive. *See Rear Axle Section for complete data.*

Ratio—3.9-1 (Coupes 1940), 4.1-1 (Coupes 1941 & 5 Pass. 1940), 4.3-1 (5 Pass. 1941, 7 Pass. 1940-41). Backlash—.006-.010". Screw adjustment.

Removal:—Disconnect drive shaft at rear universal. Remove axle shafts (see below) and capscrews on carrier flange. Pull carrier assembly out.

Axle Shaft Removal—Remove wheel, hub, and drum assembly (use screw type hub puller—Tool C-319), block brake pedal, disconnect brake line at wheel cylinder, take off backing plate with oil seal, pull shaft and bearing (Tool C-158). NOTE—Use Tool C-358 to pull oil washer, C-201, 2 to install.

Wheel Bearing Adjustment:—Shims between backing plate and axle housing. With wheel and hub removed, check endplay with dial indicator. To adjust, remove backing plate, add or remove shims at both wheels equally. **Endplay**—.003-.008".

SHOCK ABSORBERS

SHOCK ABSORBERS:—**Domestic**—Delco Direct Acting. **Export**—Delco Direct Acting or Delco Adjustable Direct Acting (Special Equip. Dom. also). *See Shock Absorber Section for complete data.*

FRONT SUSPENSION

Front Suspension:—Independent, linked parallelogram type with coil springs. *See Front Suspension Section for complete data.*

Kingpin Inclination—4¾° to 6°.
Camber—Pos. ¼°. Limits 0° to Pos. ¾°.
Caster—Neg. 1° to Pos. 1°. Not adjustable.
Toe In—1/16" (0-⅛"). Turn both rods equally.
Steering Geometry—Outer wheel 20°, Inner 22°.

STEERING GEAR

Steering Gear: Chrysler (Gemmer design) Model 300 (1940 exc. 7 Pass.), Model 305 (1940 7 Pass. & 1941 models exc. 7 Pass.), Model 335 (1941 7 Pass.). Worm-and-Roller types. Models 305 and 335 have "push-pull" adjustments. *See Steering Gear Section for complete data.*

BRAKES

BRAKES:—**Service.** Lockheed hydraulic, double anchor type. Hand brake applies independent shaft brake *See Brake Section for complete data.*

Wheel Cylinders—Stepped or two-stage bore type
Drums—Cast-iron. Diameter—11".
Lining—Molded. Width 2". Thickness 13/64". Length (front shoe) 11 15/32", (rear shoe) 7 31/32".
Clearance—.012" toe, .006" heel, for each shoe.

Hand Brake:—On drum at rear of transmission.
Adjustment—*See Chrysler Shop Notes for data.*
Drum—Cast-iron. Diameter—6".
Lining—Width 2". Thick. 5/32". Length 17 1/16".

MISC. MECHANICAL

WINDSHIELD WIPER: Auto-Lite Model EWB-4001 (1940), EWD-5001, EWD-5003 (1941). Electric type. NOTE—EWD-5003 used on Convertible Coupe. *See Miscellaneous Section for complete data.*

Circuit Breaker—Vibrating (thermostatic) type, on switch. Starts to operate at 12 amperes.

CONVERTIBLE TOP CONTROL (1940): Vacuum type. *See Miscellaneous Section for complete data.*

CONVERTIBLE TOP CONTROL (1941): Electric type. *See Miscellaneous Section for complete data.*

Top Control Motor—Auto-Lite Model EWG-4002.
Motor Control Relay—Auto-Lite Model HRF-4001.

HOOD LOCK, FRONT END ASSEMBLY & OIL PAN REMOVAL:—*Refer to Chrysler Shop Notes for data.*

MODEL IDENTIFICATION

SERIAL NUMBER:—On right front door hinge post. First No. 30,577,001 (Detroit), 9,374,396 (Canada).

ENGINE NUMBER:—First number D22-1001. Stamped on left side of block between #1 and #2 cylinders. *Refer to Chrysler Shop Notes for Engine Number Lettering data ('Special Standard' bore and bearing sizes).*

TUNE-UP

COMPRESSION:—Ratio—6.70-1. Cast-iron head. **Pressure**—160-170 lbs. at 1000 RPM. or 125-135 lbs. at cranking speed of 125 RPM.

VACUUM READING:—18-21" steady idling at 6 MPH.

FIRING ORDER:—1-5-3-6-2-4.

SPARK PLUGS: Auto-Lite Type A7. 14 mm. Metric. **Gaps**—.025"
NOTE—Spark plug tightening tension 26-32 ft. lbs.

IGNITION: See Coil, Condenser, and Distributor. **Breaker Gap**—.020". **Cam Angle** 38° (closed). **Automatic Advance**—9° max. at 1300 RPM (IGS-4203A-1), 10° max. at 1150 RPM (IGS-4203B-1), 12° max. at 1750 RPM (IGS-4113-1, 4202-1). Distributor degrees and RPM. **Vacuum Advance**—9° distr. with 14" vacuum (IGS-4203A-1), 8.5° distr. with 16" vacuum (IGS-4203B-1), 7° distr. with 15" vacuum (IGS-4113-1, 4202-1).

IGNITION TIMING: See Ignition Timing. **Std. Setting**—2° ATDC. (Cars with Aluminum Pistons), 3½-4½° ATDC. (Cars with Cast Iron Pistons) with correct degree mark after dead center mark "DC" on impulse neutralizer at indicator on front of engine.

CARBURETION: See Carburetor & Carb. Equipment. **Idle Setting**—Idle screw midway between "miss" and "roll" points. Idle speed 6 MPH. **Float Level**—Fuel level ⅝" below top of bowl. **Accelerating Pump**—Center hole Normal. Inner hole (Summer), Outer hole (Winter) for temperature extremes.
Fuel Pump Pressure: 4 lbs. maximum.

MANIFOLD HEAT CONTROL:—Thermostatic coil type. See that valve and shaft rotate freely. When installing coil, place inner end in slot in valve shaft, wind free end up one turn only counter-clockwise.

VALVES: See Valve Timing. **Tappet Clearance:**—.008" Intake, .010" Exh. (hot and idling), .002" additional exh. clearance desirable for sustained high speeds. NOTE—Tappet screws self-locking. Remove right front engine inspection shield between fender and frame for access to valves.

STARTING: See Battery, Starter, Generator, Regulator.

IGNITION

Ignition Switch:—Mitchellock Model 24-R, No. 8197. **Ignition Lock**—Yale & Towne or Briggs & Stratton. B&S No. 80592. Key Series 1BP to 1000BP. Groove 24.

COIL: Auto-Lite Model IG-4676. Service coil (less Switch & Cable) IG-3224JS. Mounted on dash. **Ignition Current**—2.25 amperes idling, 5.0 stopped.

CONDENSER: Auto-Lite Part No. IG-3927A. **Capacity**—.25-.28 microfarad.

DISTRIBUTOR: Auto-Lite Model IGS-4203A-1 or 4203B-1 (U. S.), IGS-4113-1 or 4202-1 (Canada). Single breaker, 6 lobe cam, full automatic advance type with auxiliary vacuum spark control and manual adjustment.

Breaker Plate Identification—Plate is marked #9 (IGS-4203A-1), #8½ (4203B-1), #7 (4113-1 & 4202-1).

Breaker Gap—.020". Limits .018-.022".

Cam Angle or Dwell—38° closed, 22° open.

Breaker Arm Spring Tension—17-20 ozs.

Rotation—Clockwise viewed from above.

Automatic Advance—IGS-4203A-1

Distributor Degrees	Distributor R.P.M.	Engine Degrees	Engine R.P.M.
Start	350	0	700
3	400	6	800
5	700	10	1400
7	1000	14	2000
9	1300	18	2600

Automatic Advance—IGS-4203B-1

Distributor Degrees	Distributor R.P.M.	Engine Degrees	Engine R.P.M.
Start	350	0	700
3	400	6	800
5	620	10	1240
8	940	16	1880
10	1150	20	2300

Automatic Advance—IGS-4113-1 or 4202-1

Start	350	0	700
3	400	6	800
6	850	12	1700
9	1300	18	2600
12	1750	24	3500

Vacuum Spark Control—Integral type (on distributor, linked directly to breaker plate). Provides additional advance at speeds above idling except when engine accelerated or operated with wide open throttle (spark retarded by return spring in unit).

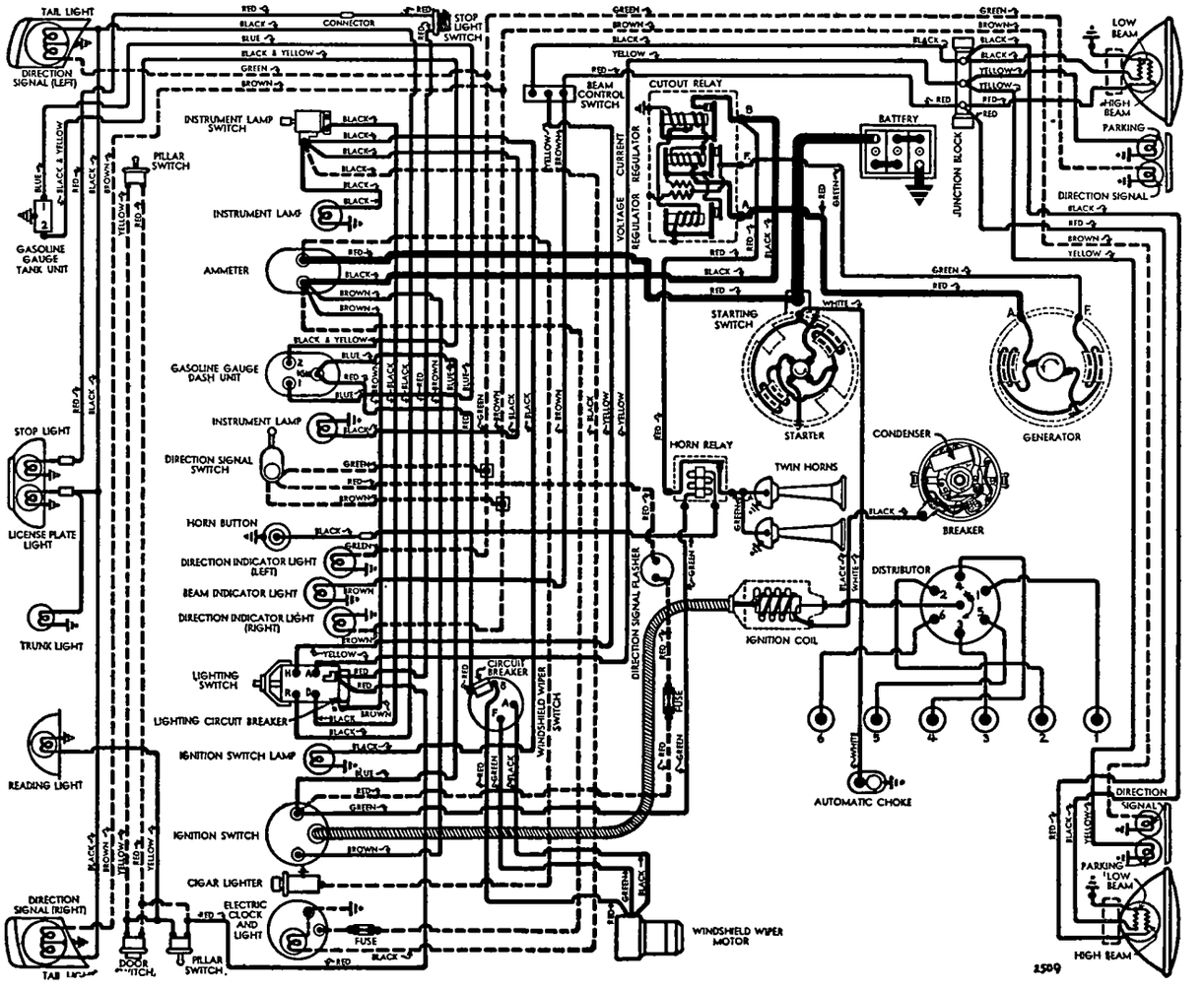

Vacuum Advance—IGS-4203A-1

Distr. Degrees	Eng. Degrees	Vacuum (" of HG)
Start	0°	7"
4°	8°	9"
6°	12°	11"
9°	18°	14"

Vacuum Advance—IGS-4203B-1

Start	0°	5"
2°	4°	7⅝"
4°	8°	10⅛"
6°	12°	12¾"
8.5°	17°	16"

Vacuum Advance—IGS-4113-1 or 4202-1

Start	0°	5"
3°	6°	9¼"
5°	10°	12⅛"
7°	14°	15"

Manual Adjustment—Provides for minor changes in ignition timing at distributor. See Ignition Timing.

Distributor Removal:—Mounted on left side of crankcase. To remove, disconnect vacuum line, take out hold-down screw in lock plate. **Installation**—Install distributor with #1 piston in firing position (see table below) and rotor opposite #1 segment in cap.

IGNITION TIMING

IGNITION TIMING:—Initial setting (correct for fuel of approx. 70 octane rating at low altitudes for all engines) shown below. See Manual Adjustment

	Flywheel Degrees	Piston Position
Aluminum Pistons	2° ATDC	.002" ATDC.
Cast-iron Pistons	3½-4½° ATDC	.005-.007" ATDC.

NOTE—Impulse neutralizer marked 'DC' at TDC. with 15 (1°) graduations on either side.

Timing (Using Timing Light)—Connect timing light between distributor primary terminal and battery terminal on generator regulator. Set #1 or #6 piston in firing position (see setting above) with correct mark on impulse neutralizer aligned with pointer on chain case cover. Loosen lock-plate hold-down screw, center pointer on scale, tighten screw. Loosen lock-plate clamp bolt, rotate distributor until timing light just goes out, tighten clamp bolt. Check Manual Adjustment (following) for final setting.

Timing (Using Synchroscope)—Tool C-374. Clip lead to #1 spark plug, direct light on impulse neutralizer (mark correct graduation with paint), idle engine, adjust distributor as directed above until mark aligned with pointer on chain case cover.

Manual Adjustment—Set to give slight ping from 10-30 MPH accelerating with wide open throttle. To adjust, loosen lock-plate hold-down screw, move plate (not more than 4° or .007" before or after initial setting) counter-clockwise (if no ping), clockwise (if ping too severe), tighten screw.

CARBURETOR

CARBURETION:—Carburetor. Stromberg Model BXV-3, No. 380079 (Code No. 3-65) without Fluid Drive; Model BXVD-3, No. 380080 (Code No. 3-66) with Fluid Drive. 1½" downdraft types. BXVD-3 has dash-pot type slow-closing throttle.
For complete data, refer to Carburetor Index.

Idle Adjustment—With engine warm and running at slow idle speed (choke valve wide open, fast idle inoperative), set throttle stopscrew for idle speed of 6 MPH min. Adjust idle adjusting screw for smooth idle (turn screw in for leaner mixture). Recheck idle speed. NOTE—If vacuum gauge used, adjust for maximum vacuum (see Vacuum Reading above).

Accelerating Pump Setting—Pump lever has three holes for pump link engagement. Set as follows:
Inner Hole (minimum stroke)—Extreme hot temperatures or altitudes above 3000 feet.
Center Hole (med. stroke)—Normal summer setting.
Outer Hole (max. stroke)—Winter temperatures.

Float Level—Fuel level ⅝" below top edge of bowl.

Metering Jet—*Refer to Carburetor Index for Stromberg Downdraft Carburetor Jet Specification Table.*
NOTE—Use of lean (High Alt.) metering jet at low alt. not recommended (reduced speed and power).

Throttle Cracker:—Not adjustable.

Fast Idle:—Not adjustable. Throttle stopscrew should rest on high point of cam with choke valve closed.

Slow Closing Throttle (Dashpot) on BXVD-3 only:—*For complete data, refer to Carburetion Equip. Index.*

Setting—With all slack removed from linkage, set adjusting screw on dash pot lever so that piston travel 5/16-11/32" (turn screw in to shorten stroke).

Automatic Choke:—Sisson Type AC-758B.
For complete data, refer to Carburetion Equip. Index.

CARB. EQUIPMENT

Air Cleaner:—AC #1542284 heavy duty oil-bath type. Use Replacement Filter Element Assembly #1542305.

Fuel Pump:—AC 'AT' #1523647—Exch. No. 505 diaphragm type pump. **Pressure**—4 lbs.
For complete data, refer to Carburetion Equip. Index.

Gasoline Gauge:—Auto-Lite electric. No. NG-9918D (dash unit), No. NG-9329T (tank unit).
For complete data, refer to Carburetion Equip. Index.

BATTERY

BATTERY:—Auto-Lite Type CF-1-15R. 6 volt, 15 plate, 105 ampere hour capacity (20 hour rate).
Starting Capacity—133 amperes for 20 minutes.
Zero Capacity—300 amperes for 3.5 minutes. Five second voltage 4.2 volts.
Grounded Terminal—Positive (+) to engine.
Dimensions—Length 9". Width 7 1/16". Height 9 5/16".
Location—Under hood in left fender shield.

STARTER

STARTER:—Auto-Lite MAW-4026. Arm. No. MAW-2030.
Drive—Overrunning clutch (manual pinion shift).
Rotation—Counter-clockwise at commutator end.
Brush Spring Tension—42-53 ozs. (new brushes).
Cranking Engine—125 RPM, 175 amperes, 5.4 volts.

Performance Data

Torque	R.P.M.	Volts	Amperes
0 ft. lbs.	4900	5.5	65
2.75 "	1480	5.0	200
5.45 "	820	4.5	300
8.50 "	400	4.0	400
11.55 "	110	3.5	500
11.5 "	Lock	3.	505
18. "	Lock	4.	670

Removal:—Flange mounted on left front face of flywheel housing. Disconnect wires (tape battery lead). Remove oil filter tubes, filter and 2 starter bolts.

Starting Switch:—A-L SW-2813. On starter. Manually operated by starter (pinion shift) pedal.

GENERATOR
STANDARD

GENERATOR (STD.):—Auto-Lite GDZ-4801B (Domestic), GDZ-4801A (Canada). Armature No. GDZ-2006F. Two brush with current & voltage regulation.
Charging Rate Adjustment—No adjustment at generator. Charging rate controlled by Voltage Regulator and maximum output by Current Regulator.
Maximum Charging Rate—35 amperes, 8.0 volts, 2200 gen. RPM or approx. 25 MPH, and above with load or discharged battery (Current Regulator setting). Actual charging rate controlled by Voltage Regulator and dependent on battery condition.

Performance Data—GDZ-4801A, B

Cold Amperes	Volts	R.P.M.	Hot Amperes	Volts	R.P.M.
0	6.4	925	0	6.4	1000
5	6.65	1060	5	6.65	1150
10	6.85	1200	10	6.85	1290
15	7.05	1340	15	7.05	1430
20	7.3	1480	20	7.3	1590
25	7.55	1620	25	7.55	1750
30	7.8	1760	30	7.8	1980
35①	8.0	1900	35	8.0	2250

①—Current regulator setting. See Regulator data.

Rotation—Counter-clockwise at commutator end.
Brush Spring Tension—53 ozs. max. (new brushes).
Field Current—1.60-1.78 amperes at 6.0 volts.
Motoring Current—4.16-4.60 amperes at 6.0 volts.

Removal:—Pivot mounted at left side of engine at front. To remove, take out pivot and clamp bolts.

Belt Adjustment:—Loosen pivot and clamp bolts, pull out on generator until belt is snug or 40-50 lbs. tension secured on scale attached to field frame.

GENERATOR
SPECIAL EQUIPMENT

SPECIAL GENERATORS:—Auto-Lite GEB-4801A (City Police), GEG-4818B or GEG-4823B (State Police).
For complete data on these generators, and Regulators with which they are used, refer to 1941 Dodge D19 article (preceding).

REGULATOR

REGULATOR:—Auto-Lite VRP-4001A. Current-Voltage type. In case on left side of engine dash. NOTE—For negative battery ground use VRP-4005A.
For complete data, refer to Electrical Equipment Index.
NOTE—Regulator case cover is sealed. Serviced on exchange basis if seals not broken (to remove cover).

Cutout Relay

Cuts In—6.4-6.6 volts at approx. 1000 gen. RPM.
Cuts Out—4.2-4.8 volts (approx. 4-6 amps. disch.).
Contact Gap—.015" minimum.
Air Gap—.031-.034" with contacts open (check at hinge end of core).

Voltage Regulator

Setting—7.2-7.5 volts at 70°F. See Electrical Equipment Section for settings at other temperatures.
To Check (without breaking seals)—Connect ammeter in charging line at regulator 'B' terminal (use short heavy leads), voltmeter between 'B' terminal and ground. Operate generator at speed equivalent to 30 MPH., charging fully charged bat-

CONTINUED ON NEXT PAGE

C NTINUED FROM PRECEDING PAGE

tery, until voltage is steady. Voltage reading should agree with setting given above.

To Adjust (with cover removed)—Change regulator armature spring tension by bending lower spring hanger slightly. See Electrical Equipment Section.

Contact Gap—.012" min. (armature against stop pin).

Air Gap—.048-.052" with contacts just opening.

Current Regulator

Setting—34-36 amperes (marked '35' on the cover).

To Check (without breaking seals)—Connect test meters as for voltage check (above). Operate generator at speed equivalent to 30 MPH. charging battery, turn on car lights and accessories or connect load (bank of headlamp bulbs, etc.) between ammeter and battery so that generator charges at peak rate and Current Regulator operates. Current reading should agree with setting given above. If more than slight excess noted, regulator is defective.

To Adjust (with cover removed)—Same as for Voltage Regulator (above).

Contact Gap & Air Gap—Same as Voltage Regulator.

LIGHTING

LIGHTING:—Headlamps—Corcoran-Brown 'Sealed Beam' type. *For data, refer to Elec. Equipment Index.*

Headlamp Adjustment—Aim upper beam straight ahead (hot spot center 3" below lamp center height).

Beam Indicator—Small red light on instrument panel above speedometer. Lighted with upper beams on.

Direction Signal—*Refer to Electrical Equip. Index.*

Switches

Lighting—Dodge No. 910507.
Beam Selector—Dodge No. 859974.
Instrument—Dodge No. 957065.
Map Light—Dodge No. 947064.
Dome Lamp Pillar—Dodge No. 317180.
Door Switches—Dodge No. 882943.
Stop Light—Dodge No. 677112.
Direction Signal—Dodge No. 938926.

Bulb Specifications

Position	Candlepower	Mazda No.
Headlamps		Sealed Beam
Parking	3	63
Front Direction Signal	21	1129
Instrument	1½	55
Map Light	3-21	1158
Beam & Dir. Indic., Ign. Sw.	1	51
Tail (without Direct. Signal)	3	63
Rear Dir. Signal & Tail	21-3	1158
Stop	21	1129
Rear License	3	63
Reading or Dome	15	87

MISC. ELECTRICAL

LIGHTING CIRCUIT BREAKER:—Thermostatic type. Mounted on back of lighting switch.

FUSES:—**Clock**—2 ampere. In connector in clock lead.
Radio—14 ampere. In radio lead wire.
Direction Signal—9 ampere. In wire fuse connector behind instrument panel near ammeter.

HORNS:—Dual. Auto-Lite HO or HT-5003 with relay.
Current Draw—35-40 amperes.
NOTE—Horns connected through ignition switch and are operative only with ignition switch 'on'.

Horn Relay: Auto-Lite Model HRC-4001, HRL-4001. Type HRL-4001 has winding connected through ignition switch so that horns operative only with ignition "On".

Contacts Close—1.5-3.0 volts. **Open**—.5 volt.
Contact Gap—.026". **Air Gap**—.016-.020" (closed).

ENGINE

ENGINE SPECIFICATIONS:—6 cylinder, 'L' head type.

Bore—3¼". **Stroke**—4⅝".

Displacement—230.2 cubic inches. **Rated HP**—25.35.

Developed Horsepower—105 at 3600 RPM.

Compression Ratio—6.7-1 cast-iron head.

Compression Pressure—160-170 lbs. at 1000 RPM or 125-135 lbs. at cranking speed. Variation 10 lbs. max.

Vacuum Reading—18-21" steady idling at 6 MPH. *Refer to Chrysler Shop Notes for Engine Removal data.*

PISTONS:—Aluminum alloy, cam ground, split skirt, steel strut, tin coated type. **Length**—3 11/16".

Weight—15 ounces (stripped).

Removal—Pistons and rods removed from above.

Clearance—See Fitting New Pistons.

Original Bore & Pistons Sizes, Replacement Pistons:—*Refer to Chrysler Shop Notes for sizes and markings.*

Fitting New Pistons:—Check piston size with micrometer at bottom of skirt adjacent to slot. Insert .0015" x ½" feeler between cylinder wall and piston (piston inverted, pin removed) opposite slot. Pull to withdraw feeler 10-15 lbs. (piston & block at 70° F.).

Installing Pistons:—Slot away from camshaft.

PISTON RINGS:—4 rings, all above pin. #1 & 2 Compr. (upper inner edge stepped), #3 & 4 Oil (slotted).

Ring	Width	End Gap	Side Clearance
Compr. #1	3/32"	.007-.015"	.0025-.004"
Compr. #2	3/32"	.007-.015"	.0020-.0035"
Oil Control	5/32"	.007-.015"	.0010-.0025"

Replacement Rings:—*Refer to Chrysler Shop Notes.*

PISTON PIN:—Diameter—55/64". **Length**—2¾". Floating type. Pin hole in rod bronze bushed.
Pin Fit in Piston—Thumb push fit (piston at 160°F).
Pin Fit in Rod Bushing—Thumb push fit at 70° F.

Replacement Pins:—Std. & .003", .005", .008" oversize.

CONNECTING ROD:—Length—7 13/16".
Lower Bearing Diameter 2 1/16". *See Engine Lettering 'Special Standard' Note in Chrysler Shop Notes.*
Lower Bearing—Removable, precision type, thin babbitt. **Clearance** .001-.002". **Sideplay** .005-.011".

Bearing Adjustment:—*Refer to Chrysler Shop Notes for Bearing Removal and Fitting data.*

Replacement Bearings: *Refer to Chrysler Shop Notes.*

Installing Rods:—Wide portion of bearing to rear (#1, 3, 5), to front (#2, 4, 6). Oil hole to camshaft.

CRANKSHAFT:—4 bearings, 7 integral counterweights
Bearing Diameter—2½". *See Engine Lettering Note in Chrysler Shop Notes for 'Special Standard' sizes.*
Bearing Type—Removable, precision type, thin babbitt on steel. **Clearance**—.001-.0015".

Bearing Adjustment:—*Refer to Chrysler Shop Notes for Bearing Removal, Adjustment, & Crankshaft Oil Seals.*

Replacement Bearings & Bearing Caps: *See Chrysler Shop Notes for data.*

End Thrust:—Taken by flange faces on rear (#4) main bearing. **Endplay**—.003-.007" (.003" desired).

CAMSHAFT:—4 bearing. Non-adjustable chain drive. *Refer to Chrysler Shop Notes for Camshaft Removal.*
Bearing Type—Removable steel-backed, babbitt-lined bushings (except #4 machined in block).
Bearing Diameters—#1, 2"; #2, 1 31/32"; #3, 1 15/16"; #4, 1¼". **Clearance**—.0015-.0035".

End Thrust:—Taken by thrust plate behind camshaft sprocket hub. **Endplay**—.002-.006".

Timing Chain:—Morse Type 1883N, No. 2661. Width 1". Pitch .500" (½"). Length 24" or 48 links.

Camshaft Setting:—Sprockets marked. Mesh chain with sprockets turned so that '0' marks are adjacent and in line with straightedge across shaft centers.

VALVES:—

	Head Diameter	Stem Diameter	Length
Intake	1 17/32"	.340-.341"	4 25/32"
Exhaust	1 13/32"	.340-.341"	4 25/32"

	Seat Angle	Lift	Stem Clearance
Intake	45°	⅜"	.001-.003"
Exhaust	45°	⅜"	.003-.005"

See Chrysler Shop Notes for Exhaust Valve Seat inserts.

Valve Guides:—Remove from above. Press new guides in (stepped end down) with upper end ⅞" below top of block, ream to .342-.343" Int., .344-.345" Exh.

Valve Springs:—Install with closely coiled end to top.

Free length 2".	Spring Pressure	Length
Valve Closed	40-45 lbs.	1¾"
Valve Open	107-115 lbs.	1⅜"

Valve Lifters:—Mushroom type (remove from below). Stem diam. ⅝". Ream holes from above (pilot in valve guide). Oversizes .001", .008", and .030".
Lifter Clearance in Block—.000-.001".

VALVE TIMING

Tappet Clearance:—.008" Intake, .010" Exh. (hot and idling), .002" additional exh. clearance desirable for sustained high speeds. NOTE—Tappet screws self-locking. Remove right front engine inspection shield between fender and frame for access to valves.

Valve Timing:—See Camshaft Setting above.
Intake Valves—Open 12° BTDC. Close 44° ALDC.
Exhaust Valves—Open 50° BLDC. Close 6° ATDC.
Valve Timing Check—With .014" (cold) tappet clearance #6 intake valve should open with #6 piston 12° or .065" BTDC with 12th graduation before DC mark on impulse neutralizer aligned with pointer on chain cover. Reset tappet clearance .008" hot.

LUBRICATION

LUBRICATION:—Pressure (pump on right of engine). *Refer to Chrysler Shop Notes for Oil Pump Removal.*

Normal Oil Pressure:—30-45 lbs. above 30 MPH.

Oil Pressure Relief Valve:—Under plug below starter. Opens at 40-45 lbs. Spring painted red, green, or unmarked. If spring replaced, use same color spring.

Crankcase Capacity:—5 quarts (refill).

COOLING

COOLING SYSTEM:—**Capacity**—15 quarts.
Refer to Chrysler Shop Notes for Radiator Core Removal and Water Distribution Tube servicing.

Water Pump:—Packless type with grease fitting.
See Water Pump Section for complete data.

Thermostat:—Bishop & Babcock or Fulton. On cyl. hd.
Setting—Starts to open 157-162°F. Fully open 183°F.

Temperature Gauge: Motometer (Auto-Lite) Vapor Tension type. Auto-Lite No. H-9917 (U. S.), 9937 (Canada).
See Miscellaneous Section for complete data.

CLUTCH

CLUTCH:—Borg & Beck 10A7 (Std.), 9A7 (with Fluid Drive), 11A6 (Taxi) with 'Borglite' driven member. Assembly No. 928 or 938 (10A7), 952 (9A7), 931 (11A6) stamped on cover. Single plate, dry disc types.
See Clutch Section for complete data.

Facings—Molded-Woven, 2 used. Inside Diam. 7" (10A7), 6" (9A7), 6½" (11A6). Outside Diameter 10" (10A7), 9¼" (9A7), 11" (11A6). Thickness .125" (⅛").

Adjustment:—Pedal should just clear toeboard (adjust stopscrew on lower end of pedal) & have 1" free travel (adjusting nut on connector link at fork).

Removal:—Remove release fork pull-back spring, Transmission (see Transmission) and housing underpan. Pull out clutch release bearing and sleeve. Mark cover and flywheel (or driving plate on Fluid Drive). Take out cover screws, remove assembly.

FLUID DRIVE

OPTIONAL EQUIPMENT

FLUID DRIVE: Fluid Coupling at rear of engine.
See Miscellaneous Section for complete data.

TRANSMISSION

TRANSMISSION:—Own Make. All helical gear, constant-mesh, synchro-mesh (second and high), sliding gear (low and reverse) with remote shift.
See Transmission Section for complete data.

Transmission Control:—Steering column shift. Manual type Std. Power Shift (vacuum type) Opti.
See Transmission Section for complete data.

Removal:—Jack up front end of car, disconnect front universal (loosen companion flange nut if disassembling transmission—see Chrysler Shop Notes for Propeller Shaft Center Bearing Removal on 7 pass.). Disconnect speedometer cable, hand brake cable, gear-shift rods, vacuum and air hose (if Power Shift used). Remove trans.-to-clutch housing capscrews and nuts. Pull unit to rear, down and out of car.

UNIVERSALS

UNIVERSAL JOINTS:—Detroit-Universal Series 4200 (3 & 5 pass.), Series 7200 (7 pass.). Roller bearings, ball and trunnion type (4200) cross type (7200).
See Universals Section for complete data.

Propeller Shaft Center Bearing:—Used on 7 passenger sedans. *Refer to Chrysler Shop Notes for servicing.*

REAR AXLE

REAR AXLE:—Own Make. Semi-floating, Hypoid gear with Hotchkiss drive.
See Rear Axle Section for complete data.
Ratio—3 Pass. Coupe 3.73-1. Club Coupe 3.9-1. 7 Pass. 4.3-1. Others 4.1-1, 3.9-1 (Fluid Drive).
Backlash—.006-.010". Screw adjustment.

Removal:—Hoist rear end of car, remove rear wheels. Disconnect brake hose at frame bracket, lower ends of shock absorbers, and rear universal. Disconnect Transverse Sway Bar at Axle Bracket (Custom & 7 Pass.). Support axle, remove rear spring hold-down clips, withdraw axle assembly. *NOTE*—Carrier can be removed without disturbing housing by disconnecting rear universal, removing axle shafts, and taking out carrier mounting screws.
Axle Shaft Removal—Remove wheel, hub, and drum assembly (use screw type hub puller—Tool C-319), block brake pedal, disconnect brake line at wheel cylinder, take off backing plate with oil seal, pull shaft and wheel bearing (use Tool C-158).

Wheel Bearing Adjustment:—Shims between backing plate and axle housing. With wheel and hub removed, check endplay with dial indicator. To adjust, remove backing plate (above), add or remove shims at both wheels. **Endplay**—.003-.008".

SHOCK ABSORBERS

SHOCK ABSORBERS:—Domestic—Monroe Direct Acting, hydraulic. No. 955029 (front), 955030 (rear).
Export—Delco Direct Acting, adjustable types.
See Shock Absorber Section for complete data.

Transverse Sway Strut (7 Pass.). Rear sway bar with Monroe 956790 direct acting hydraulic shock absorber built-in bar.
See Shock Absorber Section for complete data.

FRONT SUSPENSION

Front Suspension:—Independent, linked parallelogram type with coil springs and direct acting shocks.
See Front Suspension Section for complete data.
Kingpin Inclination—4¾° to 6°.
Camber—Positive ¼°. Limits 0° to Pos. ¾°.
Caster—Negative 1° to Positive 1°. Not adjustable.
Toe In—0-1/16". Turn both tie rods equally
Steering Geometry—Outer wheel turned 20°, inner wheel 22° ± 1° (5 pass.), 21½° ± ½° (7 pass.).

STEERING GEAR

Steering Gear: Chrysler (Gemmer design) Model 305 (exc. 7 Pass.), Model 335 (7 Pass. models). Worm-and-Roller types with "push-pull" adjustments.
See Steering Gear Section for complete data.

BRAKES

BRAKES:—Service. Lockheed hydraulic, double anchor type. Hand lever applies independent shaft brake.
See Brake Section for complete data.

7 Passenger Service Brakes:—Same design and size as used on Chrysler 8 Model C36. *See 1942 Chrysler Eight C36 article for 7 Passenger Service Brake data.*
Drums—Cast-iron. Diameter 11".
Lining—Molded asbestos. 2" wide. 13/64" thick. Length (front shoe) 11 15/32", (rear shoe) 7 31/32".
Clearance—.012" Toe (top), .006" Heel, for each shoe.

Hand Brake:—On drum at rear of transmission.

Adjustment:—*Refer to Chrysler Shop Notes for data.*
Drum—Cast-iron. Diameter 6".
Lining—Moulded and compressed asbestos. Width 2". Thickness 5/32". Length 7⅞" each (2 pieces).

MISC. MECHANICAL

WINDSHIELD WIPER:—Auto-Lite EWH-5001, 5003 (Conv. Coupe). Electric type with circuit-breaker.
See Miscellaneous Section for complete data.
Circuit Breaker—Vibrating, thermostatic type. Starts to operate with current of 12 amperes.

CONVERTIBLE TOP CONTROL:—Electric type.
See Miscellaneous Section for complete data.
Top Control Motor—Auto-Lite Model EWC-4003.

MODEL IDENTIFICATION

SERIAL NUMBER: On right front door hinge post.
1946 Numbers—30,645,001 Up (Detroit).
1947 Numbers—30,799,738 Up (Detroit), 45,002,146 Up (Los Angeles).
1948 Numbers—31,011,766 Up (Detroit), 45,022,453 Up (Los Angeles).

ENGINE NUMBER: Stamped on boss on left side of engine between #1 and #2 cylinders.

TUNE-UP

COMPRESSION: Pressure—150-160 lbs. at 1000 RPM. or 125-135 lbs. at cranking speed of 150 RPM.

VACUUM READING: Steady 18-21" idling at 6 MPH.

FIRING ORDER: 1-5-3-6-2-4.

SPARK PLUGS: Auto-Lite Type A-5. 14 mm. Metric. **Gaps**—.025".

IGNITION: See Coil, Condenser, and Distributor.
Breaker Gap—.020" **Cam Angle**—38° Closed.
Breaker Arm Spring Tension—17-20 ounces.
Automatic & Vacuum Advance—*See Distributor.*

IGNITION TIMING: See Ignition Timing.
Std. Setting—2° After top dead center.
Timing Mark—Second graduation after "DC" mark on vibration dampener aligned with pointer on chain case cover. Vary as follows:
Octane Selector—Set for slight ping when accelerating with wide open throttle between 10-30 MPH.

CARBURETION: See Carburetor & Carb. Equipment.
Idle Setting—With engine warm, set throttle stop-screw for 6 MPH. idle speed. Adjust idle adjusting screw for smooth idle (½-1½ turns open for Carter).
Float Level (Stromberg)—Fuel level ⅝" below top of bowl (even with bottom of inspection hole).
Float Level (Carter B&B)—Top of float (not soldered seam) 5/64" ± 1/64" below top edge of bowl.
Accelerating Pump—Center hole (medium) Normal.
Inner Hole—Summer, **Outer Hole**—Winter.
Fuel Pump Pressure—3½-5½ lbs.

MANIFOLD HEAT CONTROL: Thermostatic coil type. See that valve operates freely. When installing coil, wind free end up approx. one turn.

VALVES: See Valve Timing.
Tappet Clearance—.008" Intake, .010" Exh., Hot.

STARTING: *See Battery, Starter, Generator, Regulator.*

IGNITION

IGNITION SWITCH: Briggs & Stratton or Mitchellock. NOTE—No armored cable used.
Briggs & Stratton—B & S Switch No. 85985.
Mitchellock Type 42-R—No. E-10182 (Yale & Towne lock), No. E-10663 (Hurd lock).
Lock Cylinder—Yale & Towne, Hurd, or Briggs & Stratton. B & S No. 85915 (Key Series CA1-CA800) or No. 80592 on Early cars (Key Series 1BP-1000BP).

COIL: Auto-Lite IG-4806 or IG-4809. Mounted directly above distributor on ignition cable bracket.
Ignition Current—2¼ amperes idling, 5½ stopped.

CONDENSER: Auto-Lite Part No. IG-3927A.
Capacity—.25-.28 microfarad.

DISTRIBUTOR: Auto-Lite No. IGS-4207A-1 (U. S.) IGS-4208B-1 (Canada). Automatic advance type with Vacuum Spark Control and Octane Selector.

Breaker Plate Identification—Maximum vacuum advance limited by slot in plate. Plate marked #8½ (for IGS-4207A-1 distr.), #7 (for IGS-4208B-1).

Breaker Gap—.020". Limits .018-.022".

Cam Angle—38° closed, 22° open.

Breaker Arm Spring Tension—17-20 ounces.

Rotation—Clockwise viewed from above.

Automatic Advance—IGS-4207A-1

Distributor Degrees	R.P.M.	Engine Degrees	R.P.M.
Start	350	0	700
3	400	6	800
5	620	10	1240
8	940	16	1880
10	1150	20	2300

Automatic Advance—IGS-4208B-1

Start	350	0	700
3	400	6	800
6	850	12	1700
9	1300	18	2600
12	1750	24	3500

Vacuum Spark Control: Auto-Lite Units. On distributor, linked directly to breaker plate). Provides additional advance at speeds above idling except when engine accelerated or operated with wide open throttle (spark retarded by return spring in unit).

Vacuum Advance—IGS-4207A-1

Distr. Degrees	Eng. Degrees	Vacuum (" of HG)
Start	0°	5"
2°	4°	7⅝"
4°	8°	10⅛"
6°	12°	12¾"
8.5°	17°	16"

Vacuum Advance—IGS-4208B-1

Start	0°	5"
1°	2°	6½"
3°	6°	9¼"
5°	10°	12⅛"
7°	14°	15"

Manual Adjustment—Provides for minor changes in ignition timing at distributor. See Ignition Timing

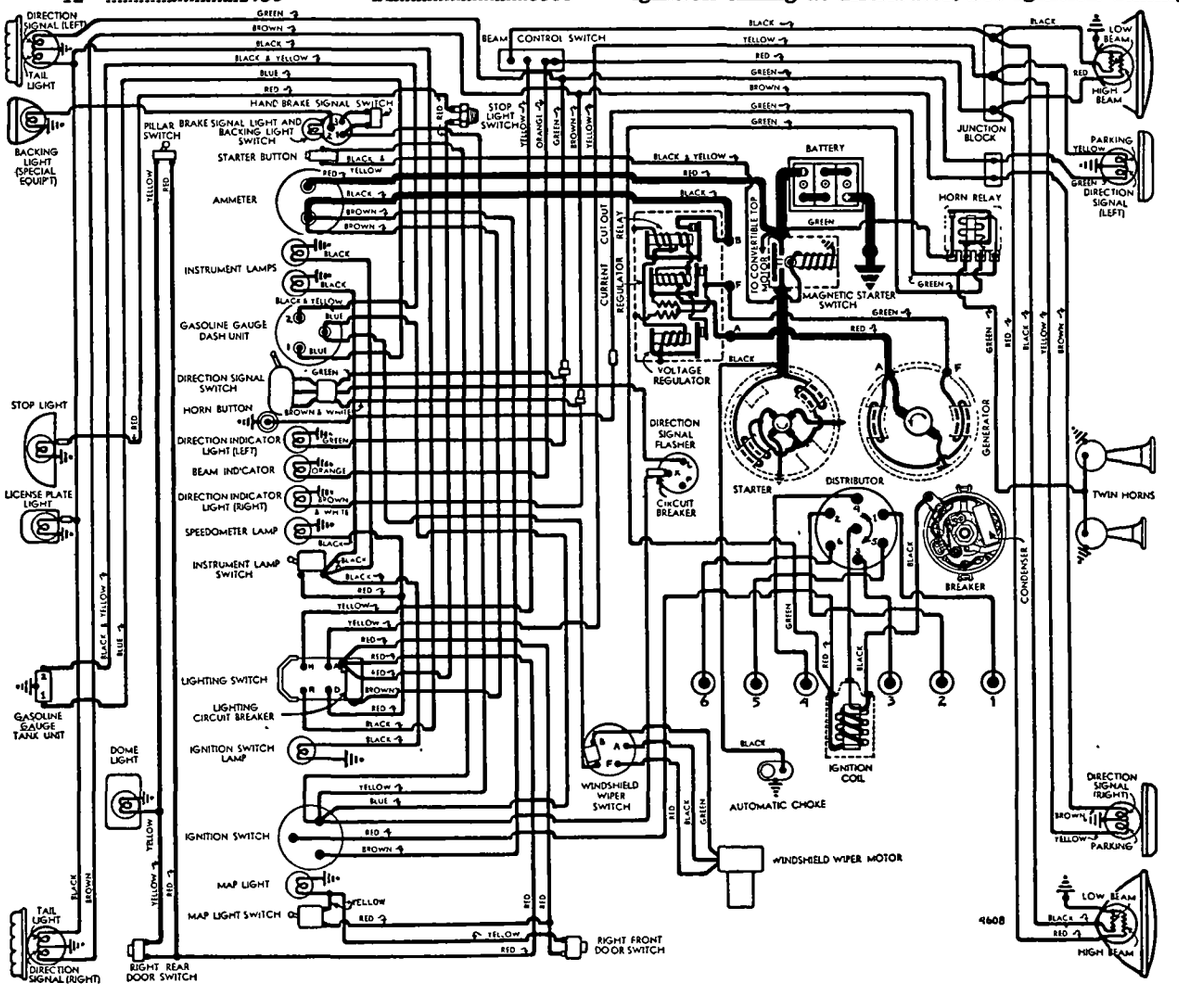

Distributor Removal:—Mounted on left side of crankcase. To remove, disconnect vacuum line, take out hold-down screw in lock plate. **Installation Note**—Install distributor with #1 piston in firing position (at TDC) and rotor opposite #1 segment in cap.

IGNITION TIMING

Std. Setting—Initial setting (for regular non-premium fuel) as shown below. See Manual Adjustment (following) for Final Setting.

	Flywheel Degrees	Piston Position
All Engines	2° ATDC	.002" ATDC

NOTE—Impulse neutralizer marked 'DC' at TDC point with 15 (1°) graduations on either side.

Timing (Using Timing Light)—Connect timing light between distributor primary terminal and battery terminal on generator regulator. Set #1 or #6 piston in firing position (see setting above) with correct mark on impulse neutralizer aligned with pointer on chain case cover. Loosen lock-plate hold-down screw, center pointer on scale, tighten screw. Loosen lock-plate clamp bolt, rotate distributor until timing light just goes out, tighten clamp bolt. Check Manual Adjustment (following).

Timing (Using Synchroscope)—Tool C-374. Clip lead to #1 spark plug, direct light on impulse neutralizer (mark correct graduation with paint), idle engine and adjust distributor (as directed above).

Manual Adjustment—Set to give slight ping from 10-30 MPH accelerating with wide open throttle from 10 MPH. To adjust, loosen lock-plate hold-down screw, move plate (not more than 4° or .007" before or after initial setting) counter-clockwise (if no ping noted), clockwise to retard spark (if ping too severe), tighten screw.

CARBURETOR

STROMBERG

Stromberg Model BXV-3 (Standard), BXVD-3 (with Fluid Drive). Stromberg No. 380158 (BXV-3), No. 380159 (BXVD-3) marked with Code No. 3-76 (BXV-3), 3-77 (BXVD-3). 1½" single barrel downdraft type with Sisson automatic choke.
NOTE—BXVD-3 type has Slow-closing Throttle.
See Carburetor Section for complete data.

Idle Adjustment—With engine warm and running at slow idle speed (choke valve wide open, fast idle inoperative), set throttle stopscrew for idle speed of 6 MPH min. Adjust idle adjusting screw for smooth idle (turn screw in for leaner mixture). Recheck idle speed. NOTE—If vacuum gauge used, adjust for maximum vacuum (see Vacuum Gauge data above).
Accelerating Pump Setting—Pump lever has three holes for pump link engagement. Set as follows: Inner Hole (minimum stroke)—Extreme hot temperatures or altitudes above 3000 feet.
Center Hole (med. stroke)—Normal summer setting.
Outer Hole (max. stroke)—Winter temperatures.
Float Level—Fuel level ⅝" below top edge of bowl.
Metering Jet—***See Stromberg Jet Table in Carburetor Section for complete jet data.***

CARBURETOR

CARTER (B&B)

Carter (B&B) Model D6J1. 1½" single barrel, downdraft (with Slow-closing Throttle for Fluid Drive).
See Carburetor Section for complete data.
Idle Adjustment—Same as for Stromberg. Idle adjusting screw setting ½-1½ turns open.
Accelerating Pump Setting—Same as for Stromberg
Float Level—Top of float (not soldered seam) 5/64" ± 1/64" below top edge of bowl with valve seated.
Metering Jet—***See Carburetor Section for Carter (B&B) Downdraft Carburetor Jet Specification Table.***

CARB. EQUIPMENT

Fast Idle: Throttle opened to fast idle position when choke valve closed. No adjustment for Stromberg or Carter B&B.

Slow Closing Throttle (Fluid Drive Cars): Stromberg or Carter (B&B) Adjustable Dashpot types.
See Carburetion Equipment Section for complete data.
Setting (Stromberg)—With all slack removed from linkage, set adjusting screw on dash pot lever under float bowl so that piston travel is 5/16-11/32" (measured on dash pot rod on bowl cover). Turn screw out to lengthen stroke, in to shorten.
Setting (Carter B&B)—Adjusting screw on top of bowl cover open five (5) full terms from closed position.

Automatic Choke:—Sisson Type AC-758B.
See Carburetion Equipment Section for complete data.
Setting—The choke can be adjusted by inserting a gauge pin through hole in automatic choke lever shaft and slot in base mounting flange (to position shaft) and adjusting carburetor choke valve lever so that choke valve is tightly closed.

Air Cleaner: AC No. 1542284 Heavy duty oil-bath type. Filter element AC No. 1544091.
Servicing—Clean and refill to indicated oil level at 1000 mile or 30 day intervals. Use SAE 50 oil (above 32°F.), SAE 20-W (below 32°F.). Oil filler cap filter should be cleaned in kerosene and re-oiled by dipping in SAE 50 engine oil at the same time.

Fuel Pump: AC No. 1539042 or Carter Type M594S. Diaphragm type fuel pump.
Replacement Pump—AC No. 577 (for 1539042).
Pressure—3½-5½ lbs.
See Carburetion Equipment Section for complete data.

Fuel Tank Filter: New Oilite metal filter in tank.
Servicing—If more than 2 pints water in tank, fuel will not pass filter. Remove filler cap and drain plug, draining tank. Disconnect fuel line at some point between pump and tank, blow out line and filter with air, increasing pressure as filter is cleaned. Flush tank with clean gasoline.

Gasoline Gauge: Auto-Lite electric type.
Dash Unit—Auto-Lite No. NG-10884D or NG-11134D.
Tank Unit—Auto-Lite No. NG-10862T.
See Carburetion Equipment Section for complete data.

BATTERY

Auto-Lite Type CF-1-15R. 6 volt, 15 plate, 105 ampere hour capacity (20 hour rate).
Starting Capacity—133 amperes for 20 minutes.
Zero Capacity—300 amperes for 3.5 minutes. Five second voltage 4.2 volts.
Dimensions—Length 9". Width 7 1/16". Hgt. 9 5/16".
Grounded Terminal—Positive (+) to engine.
Location—Under hood in left fender shield.

STARTER

Auto-Lite Model MAW-4041. Armature MAW-2030.
Drive—Outboard Barrel Type Bendix No. A2089.
Rotation—Counter-clockwise at commutator end.
Brush Spring Tension—42-53 ozs. (new brushes).
Cranking Engine—150 RPM, 175 amperes, 5.4 volts.

Performance Data

Torque		R.P.M.	Volts	Amperes
0	ft. lbs.	4900	5.5	65
.60	"	3300	5.5	100
2.75	"	1480	5.0	200
5.45	"	820	4.5	300
8.50	"	400	4.0	400
11.55	"	110	3.5	500
11.5	"	Lock	3.0	505
18.	"	Lock	4.0	670

Removal: Disconnect wires (tape battery lead), remove mounting bolts, withdraw starter (not necessary to disturb oil filter or oil lines).

Starting Switch: Auto-Lite Model SST-4001. Magnetic type mounted on left front fender shield and controlled by pushbutton on instrument panel.
See Electrical Equipment Section for complete data.

GENERATOR

STANDARD

Auto-Lite Model GDZ-4801A. Armature GDZ-2006F. Two brush (shunt) type with voltage and current regulation. Ventilated by fan on drive pulley.
Charging Rate Adjustment—No adjustment at generator. Charging rate controlled by Voltage Regulator and maximum output by Current Regulator.
Maximum Charging Rate—As given in tables below reached at approx. 25 MPH. car speed and above with load or discharged battery (Current Regulator setting). Actual charging rate controlled by Voltage Regulator and dependent on battery condition.

Cold Performance Data			Hot Performance Data		
Amperes	Volts	R.P.M.	Amperes	Volts	R.P.M.
0	6.4	925	0	6.4	1000
5	6.65	1060	5	6.65	1150
10	6.85	1200	10	6.85	1290
15	7.05	1340	15	7.05	1430
20	7.3	1480	20	7.3	1590
25	7.55	1620	25	7.55	1750
30	7.8	1760	30	7.8	1980
35①	8.0	1900	35	8.0	2250

①—Current Regulator Setting. See Regulator data.
Rotation—Counter-clockwise at commutator end.
Brush Spring Tension—35-53 ozs. (new brushes).
Field Current—1.60-1.78 amperes at 6.0 volts (all).
Motoring Current—4.16-4.60 amperes at 6.0 volts.

Removal:—Pivot mounted at left side of engine at front. To remove, take out pivot and clamp bolts.

Belt Adjustment:—Loosen pivot and clamp bolts, pull out on generator until belt is snug or 40-50 lbs. tension secured on scale attached to field frame.

GENERATOR

SPECIAL EQUIPMENT

Auto-Lite GEG-4823A or GEG-4823B. Armature No. GEG-2006F (both). Two brush (shunt) types with voltage and current regulation. Ventilated.

SEE CHRYSLER 8 C39 PAGE FOR ALL DATA.

REGULATOR

Std.—VRP-4401A, VRP-4501A, or VRP-4503A (VRP-4001A used on Canadian Cars).

Spec. Equip. (for GEG-4823A, B Gen.)—VRP-4001F, VRP-4401B, or VRP-4501C (VRP-4005E for negative ground). Vibrating type voltage and current regulators.
See Electrical Equipment Section for complete data.

CONTINUED ON NEXT PAGE

CONTINUED FROM PRECEDIN PAGE

NOTE—Regulator case cover sealed. Serviced on exchange basis if seals not broken (to remove cover).

Cutout Relay

Cuts In—6.4-7.0 volts (set to 6.4-6.6 volts).
Cuts Out—4.1-4.8 volts (approx. 4-6 amps. disch.).
Contact Gap—.015" min. **Air Gap**—.031-.034" with contacts open (check at hinge end of core).

Voltage Regulator

Setting—7.2-7.5 volts at 70° F. See Electrical Equipment Section for settings at other temperatures
Checking (without breaking seals) & Adjustment—*See Electrical Equipment Section.*
Contact Gap—.012" min. (armature against stop pin).
Air Gap—.048-.052" with contacts just opening.

Current Regulator

Setting (VRP-4001A, 4401A)—34-36 amperes ("35").
Setting (VRP-4001F, 4005E, 4401B)—39-41 amperes, marked "40".
Setting (VRP-4501A, 4503A)—35 amperes (42 amperes at 70°F. after 15 minutes run, 33-37 amperes at 70° after additional 15 minutes run). CAUTION—These current regulators are temperature compensated and setting decreases with temperature rise in service.
Setting (VRP-4501C)—40 amperes (46 amperes at 70°F. after 15 minutes run, 38-42 amperes at 70° after additional 15 minutes run). CAUTION—This current regulator is temperature compensated and setting decreases with temperature rise in service.
Checking (without breaking seals) & Adjustment—*See Electrical Equipment Section.*
Contact Gap—.012" min. (armature against stop pin).
Air Gap—.048-.052" with contacts just opening.

LIGHTING

Headlamps: Corcoran-Brown "Sealed Beam" type. *See Electrical Equipment Section for complete data.*
Headlamp Adjustment—Aim upper beam straight ahead (hot spot center 3" below lamp center height).
Beam Indicator—Red light on upper edge of panel above speedometer. Lighted with upper beams on.

Direction Signal: Optl. *See Electrical Equipment Section.*
Direction Signal Indicator—On either side of Headlamp Beam Indicator (above speedometer).

Switches

Lighting—Dodge No. 990547.
Beam Selector—Dodge No. 859974.
Instrument—Dodge No. 947065.
Map Light—Dodge No. 947064.
Dome Lamp Pillar—Dodge No. 317180.
Door Switches—Dodge No. 882943.
Stop Light—Dodge No. 920355.
Direction Signal—Dodge No. 1163990, 980793 (RHD).

Bulb Specifications

Position	Candlepower	Mazda No.
Headlamps	45-35 watts	Sealed Beam
Parking (no Dir. Signal)	3	63
Front Dir. Sig. & Park	21-3	1158
Instrument	1½	55
Speedometer (after 30653062)	6	81
Map Light	6	81
Beam & Dir. Sig. Ind., Ign. Sw.	1	51
Tail (no Dir. Sig.), License	3	63
Rear Dir. Sig. & Tail	21-3	1158
Stop, Back Up, Hand Brake	21	1129
Dome	15	87

MISC. ELECTRICAL

CIRCUIT BREAKERS: Lighting—On back of lighting switch. Vibrating type, protects lighting circuits.
Direction Signal—Dodge No. 1161568. On flasher behind instrument panel. 8 ampere, vibrating type.
Windshield Wiper—Dodge No. 898572. On switch. Vibrating type. Starts to operate with 12 ampere
Convertible Top—Mounted near control switch. Thermostatic type. Opens at 80 amperes in 1 minute
Hand Brake Signal—Dodge No. 1161568. 8 ampere, vibrating type. Protects Hand Brake Light circuit.

FUSES: Clock—2 ampere. In clock lead.
Radio—14 ampere. In fuse connector at radio.

HORNS: Auto-Lite Model HT-4007 (Low Pitch), HT-4008 (High Pitch). Dual horns operated by relay.

Horn Relay: Auto-Lite HRL-4101. Connected through ignition switch, operates only with ignition on.
Contacts Close 1.5-3.0 volts (seal to core with 4 V).
Contacts Open— .5 volt min. (open from seal).
Contact Gap—.026". **Air Gap**—.016-.020" (armature air gap with contacts closed but not sealed), .015-.018" (gap between armature leg and yoke with armature sealed to core).

ENGINE

ENGINE SPECIFICATIONS: 6 cylinder, "L" hd. type.
Bore—3¼". **Stroke**—4⅝".
Displacement—230.2 cu. ins. **Rated H.P.**—25.35.
Developed Horsepower—102 at 3600 RPM.
Compression Ratio—6.7-1 std. Cast-iron head.
Compression & Vacuum Reading—*See Tune-up data.*

ORIGINAL BORE & PISTONS: *See Chrysler Shop Notes*

ORIGINAL BEARING SIZES: *See Chrysler Shop Notes.*

TIGHTENING TORQUES: *See Chrysler Shop Notes.*

CYLINDER HEAD: Tightening Torque & Cylinder Head Diagram—*See Chrysler Shop Notes.*

PISTONS: Aluminum alloy, U-slot, cam ground type. NOTE—Skirt cam ground (.010-.012" smaller diameter across pin bosses) and tapered (.0005-.0015" smaller diameter at top of skirt than at bottom).
Length—3 11/16". **Weight**—16 ozs. (stripped).
Removal—Pistons and rods removed from above.
Clearance—.0008" on thrust face ¾" from bottom of skirt. Ring land diameter .0305" larger than skirt.

Fitting New Pistons: Measure piston size with micrometer across thrust faces (right angles to pin bosses) ¾" from bottom of skirt. Fit piston in bore using .002" x ½" feeler, insert piston upside down in bore with feeler 90° from pin bosses on side opposite slot. Clearance correct when 5-7 lbs. pull required to withdraw feeler (bore & piston at 70°F). NOTE—Cylinder recondition limits .0005" taper and .0005" out-of-round. Badly scored bores or with taper over .030" or out-of-round over .004" require reboring and honing to limits listed above.

Replacement Pistons: *See Chrysler Shop Notes.*

Installing Pistons: "U" slot away from valves.

PISTON RINGS: Two compression, two slotted oil control, coated rings per piston, all above pin. Oil ring grooves drilled for oil drainage (lower groove slotted).

Ring	Width	End Gap	Side Clearance
Compr. (#1)	3/32"	.007-.015"	.0025-.004"
Compr. (#2)	3/32"	.007-.015"	.002-.0035"
Oil Contr. (#3,4)	5/32"	.007-.015"	.001-.0025"

Installing Rings—#1 Compr. with step on inner edge up. #2 Compr. with step on inner edge up or if step on outer edge install with step down.

Replacement Piston Rings: *See Chrysler Shop Notes.*

PISTON PIN: Diameter 55/64". Length 2¾". Floating type. Pin hole in rod bronze bushed.
Pin Fit in Piston—Thumb push fit (piston at 160°F.).
Pin Fit in Rod Bushing—Tight thumb push fit at normal room temperature.

Replacement Pins: Std., .0006", .003", .008" oversize.

CONNECTING ROD: Weight 1.77 lbs. (with bolts less bearings). **Length** 7 13/16".
NOTE—Pin hole in rod bronze bushed.
Lower Bearing Diameter—2 1/16". *See "Original Bearing Size" in Chrysler Shop Notes.*
Lower Bearing—Removable, precision type, thin babbitt on steel.
Clearance—.001-.0015". **Sideplay**—.0055-.0115".

Bearing Adjustment:—None (no shims). Replace bearings. Do not file rods or caps. *See "Connecting Rods & Bearings" in Chrysler Shop Notes.*

Replacement Bearings:—*See Chrysler Shop Notes.*

Installing Rods:—Wide portion of bearing to rear (#1, 3, 5) to front (#2, 4, 6). Oil hole to camshaft.

CRANKSHAFT: 4 bearings, 7 integral counterweights, with vibration dampener on front end.
Bearing Diameter—2½". *See "Original Bearing Size" in Chrysler Shop Notes.*
Bearings—Removable, precision type, thin babbitt on steel. No shims.
Clearance—.001-.0015".

Bearing Adjustment: None (no shims). Replace bearings. Do not file bearing caps. *See "Crankshaft and Main Bearings" in Chrysler Shop Notes.*

Crankshaft Front & Rear Oil Seals: *See "Crankshaft and Main Bearings" in Chrysler Shop Notes.*

End Thrust:—Taken by flange faces on rear (#4) main bearing. **Endplay**—.003-.007".

CAMSHAFT: 4 bearing. Non-adjustable chain drive.
Bearing Diameters—#1, 2"; #2, 1 31/32"; #3, 1 15/16"; #4, 1¼".
Bearing Type—Removable steel-backed, babbitt-lined bushings (except #4 machined in block).
Clearance—.001-.003" (#1), .0015-.0035" (all others).

End Thrust:—Taken by thrust plate behind camshaft sprocket hub. **Endplay**—.002-.006".

Timing Chain: Width 1". Pitch .500" (½"). Length 24" or 48 links.

Camshaft Setting:—Sprockets marked. Mesh chain with sprockets turned so that '0' marks are adjacent and in line with a straightedge across shaft centers.

VALVES:	Head Diameter	Stem Diameter	Length
Intake	1 17/32"	.340-.341"	4 25/32"
Exhaust	1 13/32"	.340-.341"	4 25/32"

	Seat Angle	Lift	Stem Clearance
Intake	45°	⅜"	.001-.003"
Exhaust	45°	⅜"	.003-.005"

See Chrysler Shop Notes for Exhaust Valve Seat Inserts.

Valve Guides:—Remove from above. Press new guides in (stepped end down) with upper end ⅞" below top of block (use Tool CM-83), then finish ream to .342-.343" Intake, .344-.345" Exhaust.

Valve Springs:—Install with closely coiled end to top.

Free length 2".	Spring Pressure	Length
Valve Closed	40- 45 lbs.	1¾"
Valve Open	107-115 lbs.	1⅜"

Valve Lifters:—Mushroom type (remove from below). Stem diam. ⅝". Ream holes from abov (pilot in valve guide). Oversizes .001", .008", .030".
Lifter Clearance in Block—.000-.001".

VALVE TIMING

Tappet Clearance:—.008" Intake, .010" Exh. (hot and idling), .002" additional exh. clearance desirable for sustained high speeds. NOTE—Tappet screws self-locking (no locknuts). Remove right front wheel and lower wheel housing panel for access to valves.

Valve Timing:—See Camshaft Setting above.

Intake Valves—Open 12° BTDC. Close 44° ALDC.

Exhaust Valves—Open 50° BLDC. Close 6° ATDC.

Valve Timing Check—With .014" tappet clearance (Cold), #6 intake valve should open with #6 piston 5° to 17° or .011" to .122" BTDC with 5th to 17th graduation before DC mark on impulse neutralizer aligned with pointer on chain case cover. Reset tappet clearance to running clearance .008" Hot.

LUBRICATION

Engine Oiling System: Pressure to main and connecting rod bearings, camshaft bearings, and timing chain. New "Rotor" type oil pump.
Crankcase Capacity—5 quarts (refill).
Normal Oil Pressure—40-45 lbs. above 30 MPH.
Oil Pressure Relief Valve Under plug below starter. Opens at 40-45 lbs. Spring painted red, green, or unmarked. If spring replaced, use same color spring.

Oil Pump: New "Rotor" type on right side of engine.
Servicing—*See "Oil Pump" in Chrysler Shop Notes.*

Oil Filter: On left side side of engine above starter.
Servicing—Replace element at 8000 mile intervals.

Oil Pressure Gauge: Auto-Lite No. G-10881 (not elec.).

COOLING

Cooling System: Positive circulation with pump on front of engine, by-pass thermostat, and water distribution tube in cylinder block behind pump.
Capacity—15 quarts.

Water Distribution Tube Servicing: *See "Cooling System" in Chrysler Shop Notes.*

Water Pump: Packless type with grease fitting.
See Water Pump Section for complete data.
Removal—Drain cooling system, remove fan belt, disconnect hoses at pump, remove pump mounting studs, lift fan and pump off.
Belt Adjustment—*See Generator Belt Adjustment.*

Thermostat: In cylinder head water outlet.
INSTALLATION NOTE—Install thermostat with 2 ports facing front, and 2 ports facing rear.
Setting—Starts to open 157-162°F. Fully open 183°F.

Temperature Gauge: Auto-Lite H-10883 or H-11133. Not electric.

CLUTCH

Borg & Beck Model 10A7 (Std.), 9A7 (with Fluid Drive), 11A6 (7 Passenger). Single plate, dry disc type with "Borglite" driven member.
NOTE—Cover No. 952 (9A7), 928 (10A7), 931 (11A6).
See Clutch Section for complete data.
Facings—Woven type, 2 required.

	Inside Diameter	Outside Diam.	Thickness
9A7	6"	9¼"	.125" (⅛")
10A7	7"	10"	.125" (⅛")
11A6	6½"	11"	.125" (⅛")

Pedal Adjustment: Should just clear toeboard (adjust stopscrew on lower end of pedal) & have 1" free travel (adjusting nut on connector link at fork).
Clutch Over-Center Spring—*See "Clutch Notes" in Chrysler Shop Notes for setting procedure.*

Removal:—Remove release fork pull-back spring, Transmission (see Transmission) and housing underpan. Pull out clutch release bearing and sleeve. Mark cover and flywheel (or driving plate on Fluid Drive). Take out cover screws, remove assembly.

FLUID DRIVE

OPTIONAL EQUIPMENT

Dodge—Fluid coupling at rear of engine. Optl.
See Miscellaneous Section for complete data.

Oil Level: Keep to level of filler hole. Check at first 1000 miles and every 10,000 miles. Manufacturer recommends MOPAR Fluid Drive Fluid.

Removal: Remove transmission and clutch (see TRANSMISSION and CLUTCH), take off driver flange stud nuts (Tool C-589), lower fluid drive assembly out.

TRANSMISSION

Own Make. All helical gear, constant-mesh, synchro-mesh (Second & High), sliding gear (Low & Reverse). *See Transmission Section for complete data.*

Transmission Control: Manual steering col. shift Std.
See Transmission Section for complete data.

Removal:—Jack up front end of car, disconnect front universal (loosen companion flange nut if disassembling transmission—see Chrysler Shop Notes for Propeller Shaft Center Bearing Removal on 7 pass.). Disconnect speedometer cable, hand brake cable, gear-shift rods, vacuum and air hose (if Power Shift used). Remove trans.-to clutch housing capscrews and nuts. Pull unit to rear, down and out of car. NOTE—Use pilot studs when installing assembly.

UNIVERSALS

All exc. 7 Pass.—Detroit Universal Series 4200.
7 Pass. Models—Detroit Universal Series 7200.
Ball-and-Trunnion Type (4200), cross type (7200).
See Universals Section for complete data.

Propeller Shaft Center Bearing: Used on 7 pass. sedan.
See "Propeller Shaft" in Chrysler Shop Notes.

REAR AXLE

Own Make. Semi-floating, hypoid gear type with Hotchkiss drive. *See Rear Axle Section for data.*

Ratio	Car Used On:
3.73-1	All 3 Passenger Coupe
3.9-1	Fluid Drive (exc. 3 & 7 Pass.)
4.1-1	No Fluid Drive (exc. 3 & 7 Pass.)
4.3-1	All 7 Passenger Sedan
4.56-1	Export (incl. 7 Passenger)
4.78-1	Export (except 7 Passenger)
4.89-1	Export (7 Passenger only)

Backlash—.006-.010". Screw adjustment.

Removal:—Disconnect rear universal, remove axle shafts (see below) and carrier assembly cap screws.
Axle Shaft Removal—Remove wheel, hub, and drum assembly (use screw type hub puller—Tool C-675), block brake pedal, disconnect brake line at wheel cylinder, remove axle shaft key, install sleeve (Tool C-745) in oil seal, remove brake support (oil seal mounted in support), pull shaft and bearing (use C-499 puller). NOTE—Use Puller C-293-E to remove bearing from shaft, puller C-748 or C-358 for inner oil seal, drift C-201 to install.

Wheel Bearing Adjustment:—Shims between backing plate and axle housing. With wheel and hub removed, check endplay with dial indicator. To adjust, remove backing plate (see above), add or remove shims (furnished .010", .0125", .015", .030" thick) equally at both wheels. **Endplay**—.003-.008".

Axle Shaft Outer Seal: New leather type mounted on brake support (backing plate).
Oil Seal Servicing—*See "Rear Axle" in Chrysler Shop Notes.*

SHOCK ABSORBERS

Delco—Model 1030-C (Front), 1031-T (Rear).
Monroe—Model K-11148 (Front), K-11149 (Rear).
Export—Delco Model 942D (front), 940W (rear). Direct acting, hydraulic types.
See Shock Absorber Section for complete data.

Hydraulic Transverse Sway Absorber: Rear sway bar with built-in shock absorber used on 7 Pass. Sedan and Convertible Coupe.
See Shock Absorber Section for complete data.

FRONT SUSPENSION

Front Suspension:—Independent, linked parallelogram type with coil springs.
See Front Suspension Section for complete data.
Kingpin Inclination—4¾° to 6°.
Camber—Positive ¼°. Limits 0° to Pos. ¾°.
Caster—Negative 1° to Positive 1°. Not adjustable.
Toe In—0-1/16". Turn both tie rods equally.
Steering Geometry—Inner wheel 22½°, Outer 20°.

STEERING GEAR

Own Make. (Gemmer design) Model 305 (5 pass.), 335 "3-tooth" type (7 passenger).
NOTE—See Gemmer 305 & 335 articles for data.
See Steering Gear Section for complete data.

BRAKES

Service: Dodge "Safe-guard" Lockheed Hydraulic
Front Wheels—Two-cylinder type (front shoe anchored at bottom and actuated by upper cylinder, rear shoe anchored at top and actuated by lower cylinder).
Rear Wheels—Double anchor type with single double-acting wheel cylinder.
See Brake Section for complete data.
Wheel Cylinders—1⅛" bore. Single acting (front), double acting (rear wheels).
Drums—Cast-iron. Diameter 11" (12" on 7 pass.).
Lining—Molded Asbestos. 2" Wide. 13/64" Thick. Length per shoe: **11" type**—8⅞" (rear wheel rear shoe), 11½" (all others). **12" type**—9⅝" (rear wheel rear shoe), 12 9/16". (all other shoes).
Clearance—.006" at each end of all shoes.
Braking Power—60% front wheels, 40% rear.

Hand Brake:—On drum at rear of transmission.
Adjustment *See "Hand Brake" in Chrysler Shop Notes.*
Drum—Cast-iron. 6" (7" diameter on 7 Passenger).
Lining—Width 2" (2½" on 7" type). Thickness 5/32". Length 16 11/16" (20" on 7" type).
Clearance—.015-.020" around band.

MISC. MECHANICAL

WINDSHIELD WIPER: Auto-Lite Model EWH-5001, EWH-5003 (Conv. Coupe). Electric type with circuit breaker mounted on control switch.
See Miscellaneous Section for complete data.
Circuit Breaker—Dodge No. 898572. On switch. Vibrating type. Starts to operate with 12 amperes.

CONVERTIBLE TOP CONTROL: Electric type.
See Miscellaneous Section for complete data.
Circuit Breaker—Near control switch. Thermostatic type. Opens at 80 amperes in 1 minute or less.

MODEL IDENTIFICATION

SERIAL NUMBER:—On plate on left side of dash.

ENGINE NUMBER: Stamped on left rear engine support.

TUNE-UP

COMPRESSION:—Ratio—5.2-1 std. cast-iron head.
Pressure—110 lbs. at 80 R.P.M. (cranking speed).

VACUUM READING:—Gauge should show steady reading of 18-20" with engine idling.

FIRING ORDER: 1-6-2-5-8-3-7-4. See diagram (spark plugs not connected in this order on distrib. cap).

SPARK PLUGS: Champion Type C7 or 6M. 18 mm. Metric.
Gaps—.025". **Limits** .022-.028".

IGNITION: See Coil, Condenser, and Distributor.
Breaker Gap—.020". **Cam Angle** 48° (closed).
Synchronization—Movable contacts open 45° (distr.) after fixed set (alternate 45-45° opening).
Automatic Advance—21° max. at 2000 RPM (distr.).

IGNITION TIMING: See Ignition Timing.
Std. Setting—12° BTDC. with manual spark control ADVANCED. Flywheel mark "Spark Adv./" (1½" ahead of dead center mark "1&8/CL") at reference line on housing. NOTE—Movable contacts open 45° (distr.) after this point (regular 45-45° firing intervals).

CARBURETION: See Carburetor & Carb. Equipment.
Idle Setting—Both idle screws midway between "miss" and "roll" points. Idle speed 350 Eng. RPM.
Float Level—Fuel level 9/16" (Model J—EE-3 Carb.), ¾" (Model SJ—UU-3 Carb.) below top edge of bowl.
Accelerating Pump (Model J—EE-3 Carb.)—Inner hole (min. stroke)—Summer, Outer hole (max. stroke)—Winter.
Accelerating Pump (Model SJ—UU-3 Carb.)—Adjusting screw ½ turn open (Summer), 3 turns open (Winter).

VALVES: See Valve Timing.
Tappet Clearance:—.025" (cold) all valves.
NOTE—To change or set tappet clearance, use feeler gauge and check actual tappet clearance of each valve (clearance between heel of cam and tappet). Remove camshafts, tappets, tappet adjusting nuts. Use shims of various thicknesses to change length of adjusting nut so that clearance when assembled will be .025" (measure length of adjusting nut with 1" micrometer, add or remove shims as necessary, recheck adjusting nut with micrometer.) Reassemble camshafts, check Valve Timing, and Ignition Timing.

STARTING: See Battery, Starter, and Generator.

IGNITION

IGNITION SWITCH: Delco-Remy. Part of Coil Assembly (coil lock built in coil unit).

COIL: Delco-Remy Model 553-A. Two coil unit in assembly with ignition switch (coil lock).

CONDENSER: Delco-Remy Part No. 823825 (two used). Condensers mounted under breaker plate.

DISTRIBUTOR: Delco-Remy 4094 (All Models). Double breaker, 4 lobe cam, semi-automatic advance type. Contacts open alternately at regular 45° intervals corresponding to 90° firing interval of engine. Contacts must be synchronized (see Timing).
Breaker Gap—Set gap at .020". Limits, .018-.024".
Cam Angle or Dwell—48° (closed), 42° (open) for each set operating independently.
Breaker Arm Spring Tension—17-21 ounces.
Manual Advance—20° (engine—maximum).

Automatic Advance—Model 4094

Distributor Degrees	Distributor R.P.M.	Engine Degrees	Engine R.P.M.
1°	400	2°	800
18.5°	1400	37°	2800
21°	2000	42°	4000

IGNITION TIMING

IGNITION TIMING:— Flywheel Degs. Piston Position
All Engines .....1½" or 12° BTDC.....0645" BTDC.

IMPORTANT—Above settings correct with manual spark control fully ADVANCED.

Timing (Stationary Contacts):—Synchronize contacts before setting timing if synchronizing tool is used. With #8 piston on compression, turn engine over by prying on flywheel ring gear with prybar until piston reaches firing position (manual spark control fully advanced), stop when flywheel mark "Spark Adv./" (1½" before the top dead center mark '1 & 8/CL' for all engines, lines up with reference line on housing, loosen taper lock screw in center of breaker cam, carefully locate cam so that stationary contacts (mounted directly on breaker plate) are beginning to open, tighten lock screw, see that rotor is in position to fire #8 spark plug.

Synchronization—Using Gauge:—Use special synchronizing tool (dummy cam), Duesenberg #6965. Loosen taper lock screw, remove regular firing cam, install synchronizing tool on distributor shaft, turn tool until stationary contact breaker arm rubbing block drops into slot in tool and rests against shoulder, loosen lock screws on movable sub-plate (carrying second set of contacts), turn eccentric adjusting screw until second breaker arm rubbing block is against shoulder of second slot, tighten locking screws, remove tool, replace regular firing cam, check timing.

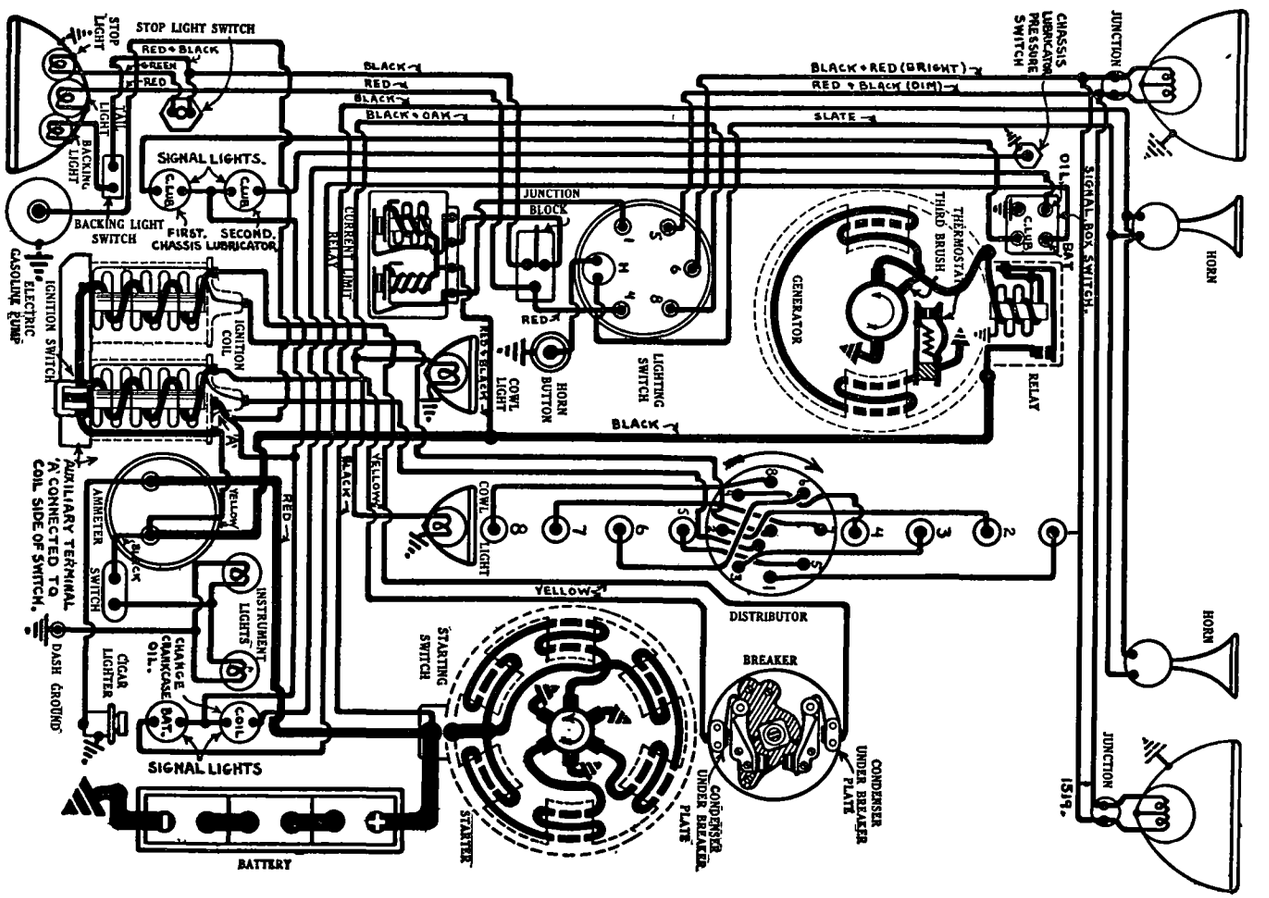

Synchronization—On Engine:—Turn engine over 90° from firing position of piston #8 to firing position for #3 piston (12° or 1½" on flywheel before top dead center). Loosen the lock screws on the movable sub-plate, turn eccentric adjusting screw until second set of contacts (mounted on plate) open, tighten lockscrews, check contact gap.

CARBURETOR

Model J—Stromberg Model EE-3. Dual (double barrel) downdraft type.

Model SJ Schgd.—Stromberg Model UU-3. Dual (double barrel) Updraft type.

For complete data, refer to Carburetor Index.

CARB. EQUIPMENT

Fuel Pump:—Stewart-Warner electric type (early Model J), Mechanical bellows type pump (on left side of crankcase) with Stewart-Warner 644-C electric type booster pump (late Model J), or Autopulse Triplex unit (SJ Supercharged).

Gasoline Gauge:—K-S Telegauge, hydrostatic type.

For complete data, refer to Carburetion Equip. Index.

BATTERY

BATTERY:—Exide, Type 3-LXRV-21-2G (early Model J), Type XR-21-ER (late Model J, all SJ). 6 volt, 21 plate, 164 ampere hour capacity (20 hr. rate).
Starting Capacity—123 amperes for 20 minutes.
Grounded Terminal—Negative (—) terminal.
Location—On right hand side under dust shield.

STARTER

Delco-Remy Model 429. Armature No. 37895.
Starter Drive—Bendix Type R11X-10.
Rotation—Counter-clockwise at commutator end.
Brush Spring Tension—36-40 ounces each.

Performance Data

Torque	R.P.M.	Volts	Amperes
0 ft. lbs.	3000	5.0	70
19 "	Lock	3.0	500

Mounting:—Flange mounted on right hand front face of flywheel housing. To remove, take out flange mounting bolts.

GENERATOR

Delco-Remy Model 428. Armature No. 827753.
Third brush regulation, thermostat control. Thermostat contacts open at 165°F. reducing generator output approximately 40%.

Charging Rate Adjustment:—Take off commutator cover band, loosen small round lock screw on commutator end plate, shift third brush counter-clockwise to increase, or clockwise to decrease charging rate, tighten locking screw.

Maximum Charging Rate:—12 amperes (hot), 7.6 volts, 1450 R.P.M.

Performance Data

	Amperes	Volts	R.P.M.
Cold	19-21	8.3-8.7	1200
Hot	11-13	7.5-7.8	1450

Rotation—Counter-clockwise at commutator end.
Shunt Field Current—3.2-4.1 amperes at 6.0 volts.
Brush Spring Tension—20-28 ounces each.

Mounting:—Cradle mounted on left hand side of engine. To remove, disconnect drive coupling, loosen mounting clamp band.

CUTOUT RELAY

Delco-Remy Model 265-B. Mounted on generator.
For complete data, refer to Electrical Equipment Index.
Cuts in—7.0-7.5 volts, 500 R.P.M. (generator).
Cuts out—0-2.5 amperes discharge.
Relay Contact Gap—.015-.025".
Air Gap—.012-.017" (contacts closed).

LIGHTING

Headlamps—Double filament. Upper and lower beams controlled by lighting switch.

Switches

Lighting—Delco-Remy Model 486-D. Mounted at lower end of steering column (controlled by handle on steering wheel).

Bulb Specifications

Lamp	Candlepower	Mazda No.
Headlights (Std.)	21-21	1110
Stop and Backing	21	1129
Tail, Cowl, Instr., Step	3	63
Dome and Corner	3	64
Signal Lights	1.5	2B-G6-10

MISC. ELECTRICAL

CURRENT LIMIT RELAY: Delco-Remy Model 5759. Consists of a vibrating and a lock-out type circuit breaker mounted in a single case.

Vibrating Unit

Starts to operate with current load of 35-40 amperes, limiting load to 5-20 amperes.
Contact Gap—.012-.030".
Air Gap—.015-.030" (contacts closed).
Spring Tension—5 ozs. minimum at brass button.

Lock-out Unit

Contacts open with current load of 25-30 amperes, limiting current to less than 1 ampere.

ENGINE

ENGINE:—Eight cylinder, In line, Overhead valve type. Two intake and two exhaust valves per cylinder operated by two camshafts on cylinder head (exh. camshaft right, int. camshaft left).
Bore—3¾". **Stroke**—4¾".
Piston Displacement—420 cubic inches.
Rated Horsepower—45.
Developed Horsepower—(J) 265 at 4200 R.P.M.
Compression Ratio—5.2-1 Std. cast-iron head.
Compression Pressure—110 lbs. at 80 R.P.M.

Pistons:—Ray-Day, aluminum alloy, split, full skirt type. Skirt is separated from head by horizontal slot. Piston length 4⅜". **Weight**—20 ounces.

Removal—Pistons and rods removed from below.

Clearance—Top .032". Lands .027". Bottom .0035-.004".

Piston Rings:—Four rings per piston, three compression, one oil control, all above pin. Lower ring groove drilled radially with oil drain holes.

Ring	Width	End Gap	Wall Thickness
Comp. All	⅛"	.014-.016"	.150"
Oil Cont.	3/16"	.014-.016"	.150"

Piston Pin:—Diameter 1 1/16". Length 3 17/64". Pin floats in piston and rod. Held by two locking rings at each end. Pin hole in connecting rod is bushed and diamond-bored to size.

Pin Fit in Piston—Slight driving fit at room temperature (pin holes reamed to 1.06225-1.06175").

Pin Fit in Rod Bushing—Free push fit (bushing diamond bored to inside diameter of 1.0625".

Connecting Rod:—Weight 18 ozs. (without cap bolts or bushing). Length 9 13/16". Rod is a Duralumin forging used with a steel bearing cap.

Lower Bearing—Poured 'Mogul alloy' lined type.

Clearance—.0015-.002".

Adjustment—None (no shims). Bearings should not require adjustment during life of engine. Caps can be reduced with fine emery cloth on a surface plate if necessary.

Crankshaft:—Five bearings. Integral counterweights. Special mercury-cartridge type damper.

Journal Diameters—2¾" all bearings.

Bearing Type—'Mogul alloy' lined type.

Clearance—.0015".

Adjustment—None (no shims). Bearings should not require adjustment during life of engine. Caps can be reduced with fine emery cloth on a surface plate if necessary.

End Thrust—Taken by front main bearing. Thrust washer assembled between bearing and crankshaft sprocket. Endplay .0015-.003".

Camshaft:—Two camshafts on cylinder head. Each camshaft supported by five bearings.

Journal Diameters—1¼" all bearings.

Bearing Type—'Mogul alloy' lined type.

Clearance—.0015".

End Thrust—Taken by front bearing. Endplay, .0015-.003".

Timing Chains—Link Belt. **Upper Chain**—Width 1 11/16", Pitch ⅜", Length 51¾". **Lower Chain**—Width 2", Pitch ⅜", Length 47¼". Both camshafts are driven in tandem by upper chain from transfer sprocket on front of engine. Transfer sprocket driven in tandem with two accessory sprockets by lower chain from crankshaft. Automatic idler take-ups used on both chains.

Camshaft Setting—To change or set valve timing, turn engine over (by prying on flywheel ring gear with pry-bar inserted through inspection plate hole in housing) until #8 piston is slightly before top dead center entering power stroke (distributor rotor will be opposite #8 segment in distributor cap), stop when flywheel mark '/INT. OPENS' lines up with reference line on housing. This mark is exactly ⅝" before top dead center mark '1&8/CL'. Take off upper chain case cover, release idler sprocket by taking off cotter pin and plain washer, pry forward on sprocket bushing and spring until spring is nearly released, use tool #J-7016 to release spring tension, withdraw bushing lift chain off sprocket, remove sprocket, block chain up at lower end to prevent it dropping off transfer sprocket. Then set each camshaft as follows:

C NTINUED ON NEXT PAGE

ENGINE

CONTINUED FR M PRECEDIN PAGE

Intake Camshaft. Take out 6 capscrews, remove intake camshaft sprocket, set tappet clearance #1 intake valve at .025" (see note on tappet clearance), turn intake camshaft in direction of rotation until intake valve begins to open (use straddle clamp to twist valve tappet, valve opens when clearance is taken up and cam grips valve tappet), mesh sprocket in chain, keep driving side of chain taut, slip chain on sprocket one tooth at a time until sprocket can be mounted on camshaft without disturbing position of shaft or transfer sprocket, insert capscrews. Check ignition timing.

Exhaust Camshaft. With #8 piston slightly past top dead center entering power stroke and flywheel mark '/EXH.CLOSES', which is 1¼" past top dead center mark '1&8/CL', at reference line on housing, take off 6 cap screws, remove exhaust camshaft sprocket, set tappet clearance #1 exhaust valve at .025", turn exhaust camshaft in direction of rotation (clockwise) until #1 exhaust valve begins to close (use straddle clamp to twist valve tappet, valve closes when tappet is just released by cam so that tappet can be turned easily), mesh sprocket in chain, keep driving side of chain taut, slip chain on sprocket one tooth at a time until sprocket can be mounted on camshaft without disturbing position of camshaft or transfer sprocket, insert cap screws.

Idler Sprocket Assembly:—Mesh idler sprocket in chain, insert bushing and spring, use special tool to wind up spring 12 notches or two complete turns, assemble washer and cotter pin. Turn engine over with starter to allow chain to assume normal running position, then release spring tension, change setting to 9 notches or 1½ turns. See Equipment Section for complete data on Link Belt automatic idler sprockets.

Valves:—	Head Diam.	Stem Diam.	Stem Lgth
Intake	1½"	11/32"	5.002"
Exhaust	1 7/16"	11/32"	4.992"

Seat Angle—30° (all valves). **Lift** .350".

Stem-to-Guide Clearance—.002".

Valve Springs—Double springs used on all valves.

Inner Springs—	Pressure	Length
Valve Closed	26 lbs.	1 15/16"
Valve Open	36-40 lbs.	1 19/32"

Outer Springs—	Pressure	Length
Valve Closed	35-40 lbs.	2¼"
Valve Open	65-70 lbs.	1 29/32"

VALVE TIMING

Tappet Clearance—.025" (cold) all valves.

NOTE:—To change or set tappet clearance, use feeler gauge and check actual tappet clearance of each valve (clearance between heel of cam and tappet). Remove camshafts, tappets, tappet adjusting nuts. Use shims of various thickness to change length of adjusting nut so that clearance when assembled will be .025" (measure length of adjusting nut with 1" micrometer, add or remove shims as necessary, recheck adjusting nut with micrometer).

Valve Timing—See Camshaft Setting (preceding page).

Intake Valves open 6° BTDC. Close 40° ALDC.
Exhaust Valves open 40° BLDC. Close 14° ATDC.

To Check Valve Timing:—Check tappet clearance #1 intake and exhaust valves (set at .025" cold). #1 intake valve should open with #8 piston slightly before top dead center entering power Stroke when flywheel mark '/INT.OPENS' lines up with reference line on housing. This mark is exactly ⅝" before top dead center mark '1&8/CL'. #1 exhaust valve should close with #8 piston slightly past top dead center when flywheel mark '/EXH.CLOSES' lines up with reference line. This mark is 1¼" past top dead center mark '1&8/CL'.

LUBRICATION

Lubrication:—Pressure type. Gear type oil pump located in oil pan.

Oil Pressure—2-10 lbs. (low idling speeds) increasing approximately 1 lb. per M.P.H. Maximum pressure, 80-100 lbs (high speed operation).

Oil Pressure Relief Valve—Built into oil pump. Controlled by adjustment nut located on lower left hand side of crankcase directly in front of oil float gauge indicator. Turn adjustment nut clockwise to increase, or counter-clockwise to decrease pressure. **Capacity**—12 qts.

CLUTCH

Long Model 31-A. Double plate, dry disc type.
See Clutch Section for complete data.

Clutch Pedal Adjustment—Free movement of clutch pedal must be 1-1½".

Clutch Facings—Special moulded composition, 4 required, 6½" I.D., 11" O.D., .137" thick.

NOTE:—Manufacturer recommends that cover plate assembly and driven member assembly be returned to factory for reconditioning.

Clutch Assembly—The three center driving plate adjusting screws (round-headed screws) must be backed off until the ends are flush with the pressure plate before the cover plate is bolted on the flywheel. Adjust these screws by turning in until they bottom and then backing each screw off exactly 4 notches.

FRONT SUSPENSION

Front Suspension: Consists of conventional "I" beam section front axle with Reverse-Elliott ends and semi-elliptic springs.

Caster—1°. Shim adjustment. **Camber**—1°.

Toe In—⅛-¼". Adjust in usual manner by loosening tie rod end clamps and rotating tie rod.

KingPin Bearing Adjustment—Kingpins are carried on a double-row ball bearing at the top and a ball thrust bearing at the bottom. Adjustment for end-thrust (up-and-down movement) is provided at lower bearing. To adjust, remove locking bar in adjusting nut below kingpin, back off adjusting nut, remove shims until there is no perceptible up- and-down movement of steering knuckle with adjusting nut tightened, or there is is a slight drag on steering knuckle when revolved around kingpin. Replace locking bar.

STEERING GEAR

Steering Gear:—Ross Cam-and-Lever type.
See Steering Gear Section for complete data.

BRAKES

BRAKES:—Service—Lockheed Hydraulic, double anchor type. Hand lever applies brake at rear of transmission. See article in Brake Section.
See Brake Section for complete data.

Drum Diameter—15".

Lining—Moulded. Width 2¼". Thickness ¼". Length per wheel 28¾".

Clearance—.010" between lining and drum.

MERCURY SHOP NOTES

1939 to 1948: Ford V8 "100" information listed below applies to 1939 to 1948 Mercury.

STARTING 1949: *See separate MERCURY SHOP NOTES ahead of MERCURY car pages.*

HOOD ALIGNMENT

1949 FORD PASSENGER CARS

HOOD ALIGNMENT: Fore-and-Aft Adjustment—3 hood hinge bracket-to-hood screws at each hinge. Loosen screws just enough to allow hinge to hold hood in place when raised. Lower hood, shift hood fore or aft until correctly positioned. Raise hood without disturbing alignment, tighten screws. Check hood safety catch action (bend catch if necessary).

Up-and-Down Adjustment—Loosen locknut on top of latch dowel. Turn dowel with screwdriver **down** if hood fits too tight, **up** if hood loose on dowel or too much clearance at lower edge of hood. Tighten locknut.

RADIATOR GRILLE

1949 FORD PASSENGER CARS

RADIATOR GRILLE: Chrome-plated or Stainless steel type grille assemblies used (parts not interchangeable except as unit) consisting of following parts:

1—Top Moulding. 3-piece radiator grille opening.

2—Center Moulding. Radiator grille assembly consisting of right and left center bars, ornament, and vertical reinforcement (on back side).

NOTE—Stainless steel type center moulding is a spot welded and riveted assembly and **cannot be disassembled.** Chrome plated type assembled with screws and tinnerman nuts and **can be disassembled.**

3—Lower Moulding. Mounted on stone deflector with nuts and fasteners. Not attached to grille.

Grille Removal: Take out hidden screws at each end of center moulding after removing parking lights. Remove screws at top and bottom of vertical grille reinforcement behind grille. Take off center moulding. Upper moulding can then be removed. Lower moulding on stone deflector can be removed without disturbing other grille parts.

CYLINDER HEAD

1937-44 "V8" MODELS

REWORKING OF CYLINDER HEADS: Manufacturer recommends that all cylinder heads prior to 1945 (as listed below) be reworked for improved cooling. **These heads must also be reworked for increased valve clearance when used with Replacement (Std. 1945 & Later) Cylinder Blocks.**

1937-44 Cylinder Heads (Require Reworking)

Part No.	Used On
77-6050-A (2 used) ①	85 HP. (1937)
78-6050-B (2 used) ①	85 HP. (1937-38)
81A-6049-A & 6050-A ②	85, 90, 95, 100 HP. (1938-44)
81A-6049-B & 6050-B ②	85, 90, 95, 100 HP. (1938-44)
81T-6049-A & 6050-A ③	85, 90, 95, 100 HP. (1938-44)
99T-6049 & 6050 ②	95, 100 HP. (1939-44)
29T-6049 & 6050 ②	95, 100 HP. (1939-44)

①—21 Stud type. ②—24 Stud type.

Replacement Cylinder Heads (No Reworking Required)

Part No.	Used On:
41T-6050 (2 used)	③90 HP. (1938-42)
59A-6050-A (2 used)	④ 90, 100 HP. (1938-42)
59A-6050-A (2 used)	100 HP. (1942-46)
59A-6050-B (marked 59A-B)	④ 90, 100 HP. (1938-42)
59A-6050-B (marked 59A-B)	100 HP. (1942-48)

③—Pass., Comm'l, 1 Ton 90 HP with steel sleeves.
④—Pass.,Comm'l,1 Ton 90 & 100 HP without sleeves.

Reworking of Cylinder Head for Improved Cooling: The water hole at center of top edge of the head between #4 & #5 valves should be increased to ¾" (from 7/16") and hole at center of head between #2 and #3 cylinder bores should be increased to ⅝".

Reworking of Cylinder Head for Valve Clearance: Use special Fixture, No. 6050-B-1, and Cutter, No. 6050-B-2, to enlarge combustion chamber as follows: Place cylinder head on dowels on one side of the fixture (with fixture clamped in vise) and secure head with bolt through fixture. Insert cutter through guide hole in fixture and cut away head material at edge of combustion chamber to the full depth of the chamber. Rework head at **each** valve in this manner (fixture has two holes so that one intake and one exhaust valve can be re-worked at each set-up of the fixture).

CAUTION—New design head gaskets must be used with these reworked heads.
See Cylinder Head Gasket data (following).

1945-48 "V8" MODELS

CYLINDER HEADS: Heads are new design as listed below. These heads are interchangeable (Right & Left) and have larger water passages and increased valve clearance required for use with the new "41A" and "59A" Cylinder blocks (see Cylinder Block data under "Engine Exchange" below).

CAUTION—New design head gaskets must be used with these new type heads.
See Cylinder Head Gasket data (following).

Part No.	Cylinder Heads	Used on
41T-6050 (2 used)		90 HP.
59A-6050-A (2 used)		90 & 100 HP.
59A-6050-B (2 used—Stmpd. 59A-B)		90 & 100 HP.

NOTE—Heads may be identified by part number prefix "41T" or "59A" cast on top surface.

1937-48 "V8" MODELS

CYLINDER HEAD GASKETS: New design gaskets as listed below) have 5/16" round hole in place of large blunt cone shaped opening in center lower edge of gasket between #2 & #3 cylinder bores. When this gasket used with old design head (with smaller water passages), head must be reworked as directed in "Reworking Cylinder Head for Improved Cooling" above. *Special gaskets must be used on 1945-48 engines (and earlier engines with new type "41T" or "59A" Cylinder Blocks).*

Cylinder Head Gaskets

85 & 90 HP. Models

Part No.	Cyl. Block	For—Year
40-6051-B	78-6010①	1937-38
91A-6051	81A-6010-A,-B②	1938-44
41A-6051	41A-6010-B2⑧	1945 & Repl.

95 & 100 HP. Models

19A-6051	99A-,19A-,29A-6010③	1939-44
59A-6051	59A-6010-C⑧	1945 & Repl.

①—21 Stud type. ②—24 Stud type.

1948-49 6 CYLINDER "H" ENGINE

6 CYLINDER HEAD BOLTS & STUDS: Studs used on engines up to 7HA-61171, bolts used after this number. Both studs and bolts furnished for service but should not be mixed. **Use all studs or bolts.**

1948-49 6 CYLINDER "H" ENGINE

6 CYLINDER HEAD GASKET: Gasket must be installed with **large full flow passages at rear.** Late type gaskets have left front corner cut off for identification. If this type gasket with cutoff corner installed backwards, water leaks at the rear corner between head and block will occur.

ALL MODELS

CYLINDER HEAD INSTALLATION: Use Torque Indicating Wrench and tighten in following order:

FORD SIX

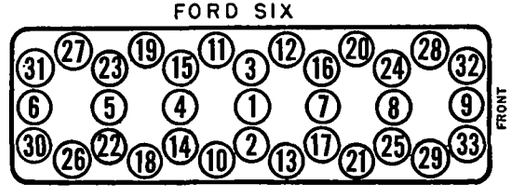

FORD V8

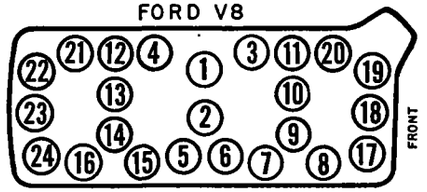

Tightening Torque—See Tightening (Torque Wrench) Specifications below.

TIGHTENING (TORQUE WRENCH) SPECIFICATIONS

1949 PASS. CARS, 1948 TRUCKS

	Ft. Lbs.	In. Lbs.
Cyl. Hd. bolts	65-70	780-840
Cyl Hd. nuts	45-50	540-600
Con. Rod nuts (castellated)	35-40	420-480
Con. Rod nuts (self-locking)	40-45	480-540
Main B'g. nuts (self-locking)	80-90	960-1080
Main B'g. bolts (self-locking)	80-90	960-1080
Main B'g nuts (castellated) V8	80-90	960-1080
Main B'g. nuts (castellated) Six	75-80	900-960
Flywheel Screws (self-locking)	80	960
Flywheel Screws (lock wire)	65-70	780-840
Diff. Carrier Stud Nuts	30-35	360-420
Axle Shaft Retainer Nuts	30-35	360-420

1936-48 MODELS

	Ft. Lbs.	In. Lbs.
Cyl.Hd.Nuts (All C.I. Hds.)	50-60	600-720
Cyl.Hd.Nuts (Al. Hds. exc. 60)	35-40	420-480
Cyl. Hd. Nuts (60 Al. Hd.)	30	360
Con. Rod Nuts (castellated)	35-40	420-480
Con. Rod Nuts (self-locking)	40-45	480-540
Main Bearing Nuts	75-80	900-960
Flywheel Capscrews	65-70	780-840
Spark Plugs:		
⅞-18 Cast Iron Head	34-38	408-456
18 MM. Cast Iron Head	28-32	336-384
18 MM. Aluminum Head	24-28	288-336
14 MM. Cast Iron Head	24-28	288-336
14 MM. Aluminum Head	20-24	240-288

CONTINUED N NEXT PA E

C NTINUED FROM PRECEDIN PAGE

ENGINE REMOVAL

1946-48 V8 & 6 CYL. MODELS

ENGINE REMOVAL: For Engine Servicing (& Oil Pan Removal on Six)—Drain cooling system and crankcase. Remove engine as follows:

1. Disconnect and remove radiator hoses and thermostats, remove radiator (see Radiator Removal).
2. Disconnect cables and remove battery.
3. Remove engine hood by taking out capscrews in hood hinges and bolts in support arm at each side.
4. Disconnect all electrical wires and cables at engine accessories (remove spark plug wires and conduits, disconnect ground cable at rear of engine).
5. Disconnect hand throttle and choke cables at carburetor (free hand throttle cable clamp at dash and loop cable out of the way by hooking it back of generator regulator, free choke cable clamp at dash and hook cable back of battery box), disconnect fuel line at fuel pump.
6. Remove all engine accessories (except water pumps and starter), remove oil filler pipe.
7. On V8, loosen clamp on exhaust cross-pipe, disconnect both exhaust pipes at exhaust manifold connections, remove cross-pipe (left bank pipe). On 6 Cylinder, disconnect exhaust pipe at manifold.
8. Remove two engine front support bolts.
9. Install sling on engine, attach hoist, take up slack in sling and hoist cables.
10. Remove front floor pan, take out capscrews mounting transmission on flywheel housing.
11. Move engine straight forward to disengage clutch shaft, then lift engine out of chassis.

Cab-over-Engine Model Note—On these models, radiator grille and radiator are removed from the forward end, and special engine cradle should be used to slide engine out toward front.

ENGINE EXCHANGE

1937-48 "V8" MODELS

REPLACEMENT CYLINDER BLOCKS: A new type Cylinder Block (with valves .09" farther from center line of engine) is furnished for service replacement on all models. When old type cylinder heads are used with these new blocks, **heads must be reworked for increased valve clearance.** See "Reworking of Cylinder Head for Valve Clearance" above.

NOTE—These new type blocks were used in original production engines beginning with 1945.

85 & 90 HP. Models

Part No. Cyl. Block	Cyl. Assy.	Used to Replace Cyl. Block No.
41A-6010-B2	41A-6011-B2① 41A-6011-C2②	81A-6010-A, -B

95 & 100 HP. Models

59A-6010-C	59A-6011-A③ 59A-6011-B④	99A-, 19A-, 29A-6010

①—Marked 41A-B2. ③—Marked 59A-A.
②—Marked 41A-C2. ④—Marked 59A-B.

CYLINDER SLEEVES

ALL 1940-49 MODELS

CYLINDER SLEEVES: Dry type Steel or Cast Iron cylinder sleeves used in production on some Ford engines. On V8 engines with sleeves, engine may be marked with letters 'HS' stamped on top of block beside inner front corner of left cylinder head.

Cylinder Sleeves

Model	Wall Thickness	Part No.
4 Cyl. Engine	.040"	99A-6055
6 Cyl. "G" Eng.	Semi-finished (.090")	1GA-6055-C
6 Cyl. "G" Engine	Finished	1GA-6055-D
6 Cyl. "H" Engine	Cast Iron	7HA-6055-B
V8 '60' Engine	.040"	52-6055-B
V8 '90' Engine	.040"	91A-6055
V8 '90' Engine	Cast Iron (.122")	11A-6055-B
V8 '100' Engine	.040"	99A-6055
V8 '100' Engine	.060"	09A-6055
V8 '100' Engine	Cast Iron	59A-6055-B
V8 '100' "B" Engine	Cast Iron	59A-6055-C

Service Limits: Steel sleeves should be replaced if worn more than .003" or if ridged at top due to wear. Sleeves which have been buckled (visible waves or burned spots) must also be replaced.

Steel Sleeve Installation: Sleeves should be removed and installed with a puller which applies pressure evenly (do not use arbor press). Use Sleeve Replacer tool, No. 6055-A, to install new sleeves, check sleeves after installation for buckling using a plug gauge or new piston. If piston sticks any point, remove sleeve and install another new sleeve.

Cast Iron Sleeve Installation: These sleeves are thicker than steel type and cylinder must be bored out for sleeve installation. Rebore cylinder to size .0012" smaller than outside diameter of sleeve to provide correct press fit, counterbore top of cylinder to fit flange on upper end of sleeve, press sleeve in place.

NOTE—These sleeves are furnished with finished cylinder bore to fit a standard size piston. No finishing operations are necessary.

Fitting Pistons on Sleeve Equipped Engines:—Special gauge thicknesses used (not same as for engines without sleeves). See Piston Fitting Instructions on each car model page for complete instructions.

PISTONS

1937-40 '60' MODELS

REPLACEMENT PISTONS: Pistons furnished for service are steel alloy, three-ring, dome head type.

Part No.	Piston Size.
52A-6110-A	Standard
52A-6110-C	.005" Oversize
52A-6110-G	.020" Oversize
52A-6110-E	.030" Oversize
52A-6110-H	.040" Oversize
52A-6110-J	.060" Oversize

1936 V8 '90' MODELS

REPLACEMENT PISTONS: Aluminum Flat Head—Used on early production only. Replacement pistons furnished in sizes listed below.

Dome Head Pistons—Used on later production. Refer to 1937 information for replacement data.

▶IMPORTANT—Flat head type pistons and Dome head pistons are not interchangeable. Dome head pistons used only with special cylinder heads.

Aluminum Flat Head Pistons (V8 '90')

Part No.	Piston Sizes
40-6110-A2	Standard
40-6110-B2	.0025" Oversize
40-6110-C2	.005" Oversize
40-6110-D2	.015" Oversize
40-6110-E2	.030" Oversize
40-6110-F2	.045" Oversize
40-6110-G2	.060" Oversize

1937-48 MODELS

REPLACEMENT PISTONS: Both Steel and Aluminum (3-ring and 4-ring types) are furnished for service on these models. Pistons are Dome Head type. Finished pistons furnished as follows:

V8 Pass. Car & Truck—Steel (3 & 4 Ring)

'90' Eng. Part No. 3 Ring	'100' Eng. 4 Ring①	Size
91A-6110-A	29A-6110-A	Standard
	29A-6110-B	.0025" Oversize
	29A-6110-C	.005" Oversize
	29A-6110-D	.015" Oversize
	29A-6110-G	.020" Oversize
	29A-6110-E	.030" Oversize
	29A-6110-H	.040" Oversize

①—With new 29A-6303-A or -B Crankshaft.

V8 Pass. Car & Truck—Aluminum (3 Ring)

'90' Eng. Part No.	'100' Eng.	Size
11A-6110-G	09A-6110-G	.060" Oversize

V8 Truck & Bus—Aluminum (4 Ring)

'90' Eng.	'100' Eng.	Bus Eng.①	Size
01T-6110-A	09T-6110-A	29B-6110-A	Std.
01T-6110-C	09T-6110-C	29B-6110-C	.005" OS
01T-6110-H	09T-6110-H	29B-6110-H	.020" OS
01T-6110-E	09T-6110-E	29B-6110-E	.030" OS
01T-6110-J	09T-6110-J	29B-6110-J	.040" OS
		29B-6110-F	.045" OS
01T-6110-G	09T-6110-G	29B-6110-G	.060" OS

①—With new 29A-6303-A or -B Crankshaft.

4 Cylinder—Steel Pistons (3 Ring)

Part No.	Size
99A-6110-A or 2N-6110-A①	Standard

①—Use to replace 29A-6110 4 Ring type.

6 Cylinder "G" Engine—Pass. Cars & Trucks

Steel — Part No. — Aluminum 3 Ring	3 Ring	4 Ring	Size
		2GT-6110-A	Std.
1GA-6110-J	1GA-6110-D		.0025" OS
1GA-6110-K	1GA-6110-E	2GT-6110-C	.005" OS
		2GT-6110-G	.020" OS
		2GT-6110-E	.030" OS
		2GT-6110-H	.040" OS
		2GT-6110-J	.060" OS

CAUTION—All pistons not fitted alike. See Car Model Pages for "Fitting New Pistons".

PISTON RINGS

1937-48 MODELS

REPLACEMENT PISTON RINGS: Ring Sets. Sets furnished for all engines as listed below. 3 Ring Sets for 3 Ring Pistons, 4 Ring Sets for 4 Ring Pistons. Three types of Rings are available as follows: 1) Expander Type; 2) Steel Section Type—see description following; 3) Snap Type—for 4 Ring Pistons only on 6 Cylinder & V8 '100'.
Single Rings—Furnished for 4 Cylinder only.

SINGLE RINGS
4 Cylinder Engine

Part No.	Type	Size
99A-6150-A	Compression	Standard
99A-6153-A	Oil	Standard

PISTON RING SETS
4 Cylinder Engine

Part No. & Ring Type Expander	Steel Section	Size
1NC-6149-A	1NCS-6149-A	Std.①
2NC-6149-A	2NCS-6149-A	Std.②

①—3-Ring Pistons. ②—4-Ring Pistons.

PISTON RING SETS

6 Cylinder "G" Engine—3 Ring Sets

Part No. & Ring Type			
Expander		Steel Section	Size
1GA-6149-A	or	1GAS-6149-A	Standard
1GA-6149-B			.005" Oversize
1GA-6149-C		1GAS-6149-B	.015" Oversize
1GA-6149-G		1GAS-6149-F	.020" Oversize
1GA-6149-D		1GAS-6149-C	.030" Oversize
1GA-6149-L		1GAS-6149-G	.040" Oversize
1GA-6149-E		1GAS-6149-D	.045" Oversize
1GA-6149-F		1GAS-6149-E	.060" Oversize

6 Cylinder "G" Engine—4 Ring Sets

2GT-6149-J	or	2GTS-6149-A	Standard
		2GTS-6149-B	.015" Oversize
2GT-6149-K		2GTS-6149-C	.020" Oversize
2GT-6149-M		2GTS-6149-D	.030" Oversize
2GT-6149-L		2GTS-6149-E	.040" Oversize
		2GTS-6149-F	.045" Oversize
2GT-6149-N		2GTS-6149-G	.060" Oversize

6 Cylinder "G" Engine—4 Ring Sets

Snap Type	Size
2GT-6149-A	Standard
2GT-6149-B	.020" Oversize
2GT-6149-D	.030" Oversize
2GT-6149-C	.040" Oversize
2GT-6149-E	.060" Oversize

'60' V8—3 Ring Sets

Part No. & Ring Type			
Expander		Steel-Section	Size
82A-6149-A		82AS-6149-A	Standard
82A-6149-C			.005" Oversize
82A-6149-D		82AS-6149-D	.015" Oversize
82A-6149-G		82AS-6149-E	.020" Oversize
82A-6149-E		82AS-6149-B	.030" Oversize
82A-6149-H		82AS-6149-F	.040" Oversize
82A-6149-F		82AS-6149-C	.045" Oversize
82A-6149-J		82AS-6149-G	.060" Oversize

'90' V8—3 Ring Sets (for Aluminum Pistons)

81A-6149-A	or	81AS-6149-A	Standard
81A-6149-B			.005" Oversize
81A-6149-H		81AS-6149-G	.020" Oversize
81A-6149-D		81AS-6149-B	.030" Oversize
81A-6149-J		81AS-6149-H	.040" Oversize
81A-6149-F		81AS-6149-D	.060" Oversize

'90' V8—4 Ring Sets (for Aluminum Pistons)

01T-6149-J	or	01TS-6149-A	Standard
01T-6149-K		01TS-6149-B	.020" Oversize
01T-6149-L		01TS-6149-C	.030" Oversize
01T-6149-M		01TS-6149-D	.040" Oversize
01T-6149-N		01TS-6149-E	.060" Oversize

'90' V8—3 Ring Sets (for Steel Pistons)

81A-6149-G	or	81AS-6149-E	Standard

'100' V8—3 Ring Sets

99A-6149-A	or	99AS-6149-A	Standard
99A-6149-B			.005" Oversize
99A-6149-G		99AS-6149-F	.020" Oversize
99A-6149-D		99AS-6149-B	.030" Oversize
99A-6149-H		99AS-6149-G	.040" Oversize
99A-6149-F		99AS-6149-D	.060" Oversize

'100' V8—4 Ring Sets

Part No. & Ring Type			
Snap Typ		Steel Section	Size
29A-6149-A	or	29AS-6149-A	Standard
29A-6149-B		29AS-6149-B	.020" Oversize
29A-6149-C		29AS-6149-C	.030" Oversize
29A-6149-D		29AS-6149-D	.040" Oversize
29A-6149-E		29AS-6149-E	.060" Oversize

PISTON RING SETS

'100' V8 Bus—4 Ring Sets

Part No. & Ring Type	
Expander Type	Size
29B-6149-A	Standard
29B-6149-B	.020" Oversize
29B-6149-C	.030" Oversize
29B-6149-D	.040" Oversize
29B-6149-E	.060" Oversize

Steel Section Type Piston Rings:—These ring sets are composed of the special rings listed below.

Top Compression Ring—One-piece cast iron ring with cadmium-plated tapered face. Ring should be installed with mark 'TOP' up (stamped on side of ring near slot). No expander spring used.

Lower Compression Ring—Two-piece ring with wide upper cast iron section and narrow lower steel section. Expander spring is used (has initial bearing only on cast iron section) and face of cast iron section is cadmium plated. Install cast iron section with gap toward one side of engine, expander spring and steel section with gap toward opposite side of engine.

Oil Control Ring—Three-piece ring with slotted cast iron center section and narrow steel sections above and below. Expander spring is used (has initial bearing only on cast iron section) and face of cast iron section is cadmium plated. Install cast iron section with gap toward one side of engine, both steel sections and expander spring with gaps toward opposite side of engine.

PISTON PINS

1937-48 MODELS

PISTON PIN FITTING: Pins can be removed and installed without heating pistons. New pins, pistons, and connecting rods are held to close limits so that no fitting is required. Check pin fit as directed below. Oversize pins can be fitted in old pistons (and rod bushings) if clearances excessive and diameter of pin hole does not exceed .7535" (V8 Engines) Ream and burnish pin holes to size providing correct clearance for .001" or .002" Oversize Pin. CAUTION—Do not install oversize pins in new pistons. If connecting rod bushing worn so that clearance excessive with new Standard Size pin (as used with new pistons), install new bushing in connecting rod as directed below.

Pin Fit in Piston: Pin should be light hand push fit with piston and pin at room temperature (70°F).

V8 Piston Pin Clearance

Piston	Clearance (New)	Worn Limit
Steel	.0003-.0009"	.0015"
Aluminum	.0001-.0002"	.0015"

6 Cyl. Piston Pin Clearance

Aluminum	.000-.0005"	.0015"

Pin Fit in Rod Bushing: Pin should pass through bushing slowly of own weight. Clearance (new) should be .0002-.0005" and worn limit is .0015" for all engines. Renew bushing if clearance excessive (with new pistons), or ream and burnish bushing and install oversize pin (with old pistons).

1937-48 MODELS

CONNECTING ROD BUSHING SERVICING: Drive old bushing out of connecting rod (use suitable driver to avoid damage to rod). Press new bushing in place, drill four oil holes (to same size as holes in rod), ream and burnish or hone bushing to inside diameter of .7505" (V8 Engines) which will provide correct fit for new standard size pin.

CAUTION—Check alignment of connecting rod after bushing installed and correct any misalignment caused by this operation.

1938-48 MODELS

REPLACEMENT PISTON PINS: Piston pins furnished for service in Standard Size and in Under- and Oversizes which are color-marked for identification as follows:

4 Cylinder Engine (1941-42)

Part No.	Color	Siz
99A-6135-A	Green	Standard
99A-6135-B	Yellow	.002" Oversize
99A-6135-C	White	.002" Undersize
99A-6135-D	Blue	.001" Oversize

6 Cylinder "G" Engine (1941-47)

1GA-6135-B	Green	Standard
1GA-6135-D	Blue	.001" Oversize
1GA-6135-E	Yellow	.002" Oversize
1GA-6135-F	White	.002" Undersize

'60' V8 Engine (1937-40)

52-6135-A		Standard
52-6135-C	Yellow	.002" Oversize
52-6135-D	White	.002" Undersize
52-6135-E	Blue	.001" Oversize

'90' V8 Truck (1938)

18-6135-A		Standard
18-6135-D	Blue	.001" Oversize
18-6135-B	Yellow	.002" Oversize

'90' V8 Engine ('38-42)—for 11A-6110 Al. Pistons

78-6135-A	Green	Standard
78-6135-B	Yellow	.002" Oversize
78-6135-C	White	.002" Undersize
78-6135-D	Blue	.001" Oversize

'90' V8 Engine (1938-42)—for Steel Pistons

48-6135-A	Green	Standard
48-6135-B	Yellow	.002" Oversize
48-6135-C	White	.002" Undersize
48-6135-D	Blue	.001" Oversize

"100" V8 Engine (1939-48)
For 99A- & 29-A-6110 Steel Pistons

99A-6135-A	Green	Standard
99A-6135-B	Yellow	.002" Oversize
99A-6135-C	White	.002" Undersize
99A-6135-D	Blue	.001" Oversize

"100" V8 Engine (1939-42)①
For Aluminum Pistons

19A-6135-A	Pink	Standard
19A-6135-B	Yellow & Pink	.002" Oversize
19A-6135-C	White & Pink	.002" Undersize
19A-6135-D	Blue & Pink	.001" Oversize

①—With 99A-6303-A or -B Crankshaft.

"100" V8 Engine (1944-48)①
With 09A-, 09T-, 29B-6110 Al. Pistons

49T-6135	Pink	Standard
49T-6135-B	Yellow & Pink	.002" Oversize
49T-6135-C	White & Pink	.002" Undersize
49T-6135-D	Blue & Pink	.001" Oversize

①—With 99A-6303-A or -B Crankshaft.

C NTINUED N NEXT PAGE

CONTINUED FROM PRECEDING PAGE

CONNECTING ROD & BEARINGS

1941-47 FOUR & SIX CYL. MODELS

REPLACEMENT CONNECTING ROD BEARINGS: Conventional bearing shells (clamped in rod and bearing cap) are used. Upper and lower halves are interchangeable and furnished in following sizes:

4 Cyl. Engine (1941-42)

Tin-base Babbitt	Lead Base Babbitt	Size
9N-6211-A1	9N-6211-A2	Standard
9N-6211-C1	9N-6211-C2	.002" Undersize
9N-6211-E1	9N-6211-E2	.010" Undersize
9N-6211-F		.012" Undersize
9N-6211-G1	9N-6211-G2	.020" Undersize

6 Cylinder "G" Engine (1941-47)

1GA-6211-A1	1GA-6211-A2	Standard
1GA-6211-C1	1GA-6211-C2	.002" Undersize
1GA-6211-E1	1GA-6211-E2	.010" Undersize
1GA-6211-F		.012" Undersize
1GA-6211-G1	1GA-6211-G2	.020" Undersize
1GA-6211-H1	1GA-6211-H2	.030" Undersize

NOTE—Part No. designates one piece. Each bearing consists of one pair (two pieces).

1936-48 V8 MODELS

REPLACEMENT CONNECTING ROD BEARINGS: Bearing float between connecting rod and crankpin with inner bearing surface (on crankpin) and outer bearing surface (in rod). Bearings are furnished Oversize (on outer diameter) for Oversize Rods and Undersize (on inner diameter) for Undersize Crankshafts as listed below.

NOTE—Part No. designates one piece. Each bearing consists of one pair (two pieces).

"60" V8 Engine (1937-39)

Part Numbers Nickel Cadmium	Tin Base Babbitt	Con. Rod Oversize	Crankpin Undersize
52-6211-A1	52-6211-A3	Std.	Std.
52-6211-C1	52-6211-C3	Std.	.010"
52-6211-D1		.004"	.003"
	52-6211-E3	.008"	.010"
52-6211-F1		.008"	.003"
52-6211-G1	52-6211-G3	.004"	.010"
	52-6211-H3	.004"	Std."
	52-6211-J3	.008"	Std.
52-6211-L1	52-6211-L3	Std.	.020"
52-6211-M1	52-6211-M3	Std.	.030"
52-6221-N1	52-6211-N3	Std.	.002"
	52-6211-P3	.004"	.002"
52-6211-Q1	52-6211-Q3	.008"	.002"

"60" V8 Engine (1940)

92A-6211-A1	92A-6211-A3	Std.	Std.
92A-6211-C1	92A-6211-C3	Std.	.010"
92A-6211-D1		.004"	.003"
92A-6211-E1	92A-6211-E3	.008"	.010"
92A-6211-F		.008"	.003"
	92A-6211-G3	.004"	.010"
	92A-6211-H3	.004"	Std.
	92A-6211-J3	.008"	Std.
92A-6211-K1		Std.	.0015"
92A-6211-L1	92A-6211-L3	Std.	.020"
92A-6211-M1	92A-6211-M3	Std.	.002"
92A-6211-N1	92A-6211-N3	.004"	.002"
	92A-6211-P3	.008"	.002"

1940 '60'—No end flanges on bearings (used only with 92A-6200 Rod & 022A-6303 Crankshaft).

"90" V8 Engine (1936-38)

IMPORTANT—Basic Part Number 48-6211 not listed in table below (suffix only listed).

Bearing Types Nickel Cadmium	Silver Cadmium	Tin Base Babbitt	Copper Lead Base	Size Con. Rod O.S.	Crank Pin U.S.
-A2	-A3	-A4	-A6	Std.	Std.
-C2	-C3	-C4	-C6	Std.	.010"
-E2		-E4	-E6	.008"	.010"
-F				.008"	.003"
-G2		-G4	-G6	.004"	.010"
-J2		-J4	-J6	.004"	Std.
		-K4	-K6	.008"	Std.
-M2	-M3	-M4	-M6	Std.	.020"
-N2	-N3	-N4	-N6	.004"	.020"
-P2		-P4	-P6	.008"	.020"
-Q2		-Q4	-Q6	Std.	.030"
		-T4	-T6	.004"	.030"
-U2		-U4	-U6	.008"	.030"
-X2	-X3	-X4	-X6	Std.	.002"
-GG2		-GG4	-GG6	.004"	.002"
-HH2		-HH4	-HH6	.008"	.002"

'90' V8 Engine (1939-42)

IMPORTANT—Basic Part Number 81A-6211 not listed in table below (suffix only listed).

Bearing Types Nickel Cadmium	Tin Base Babbitt	Copper Lead Base	Silv-aloy	Size Con. Rod O.S.	Crank-Pin U.S.
-A1	-A3	-A5	-A6	Std.	Std.
-C1	-C3	-C5	-C6	Std.	.010"
-D1				.004"	.003"
-E1	-E3	-E5		.008"	.010"
-F1				.008"	.003"
-G1	-G3	-G5		.004"	.010"
-H1				Std.	.015"
-J1	-J3	-J5		.004"	Std.
-K1	-K3	-K5		.008"	Std.
-M1	-M3	-M5	-M6	Std.	.020"
-N1	-N3	-N5		.004"	.020"
-P1	-P3	-P5		.008"	.020"
-Q1	-Q3	-Q5		Std.	.030"
-T1	-T3	-T5		.004"	.030"
-U1	-U3	-U5		.008"	.030"
-V1	-V3	-V5	-V6	Std.	.002"
-HH1	-HH3	-HH5		.004"	.002"
-JJ1	-JJ3	-JJ5		.008"	.002"

"100" V8 Engine (1939-48)

IMPORTANT—Basic Part Number 99A-6211 not listed in table below (suffix only listed).

-A1	-A3	-A5	-A6	Std.	Std.
-B1				.004"	.003"
-C1	-C3	-C5	-C6	.008"	.010"
-D1				.008"	.003"
-E1	-E3	-E5		.004"	.010"
-F1				Std.	.015"
-G1	-G3	-G5		.004"	Std.
-H1	-H3	-H5		.008"	Std.
-K1	-K3	-K5	-K6	Std.	.010"
-M1	-M3	-M5	-M6	Std.	.020"
-N1	-N3	-N5		.004"	.020"
-P1	-P3	-P5		.008"	.020"
-Q1	-Q3	-Q5		Std.	.030"
-T1	-T3	-T5		.004"	.030"
-U1	-U3	-U5		.008"	.030"
-V1	-V3	-V5	-V6	Std.	.002"
-W1	-W3	-W5		.004"	.002"
-X1	-X3	-X5		.008"	.002"

1937-48 V8 MODELS

CONNECTING ROD BEARING SERVICING: Bearings float between connecting rod and crankpin and have bearing surface on both sides. Running clearance for oil film must be provided at inner face (on crankpin) and outer face (in connecting rod bore) and replacement bearings are furnished both Undersize (on crankpin) and Oversize (in connecting rod) as indicated in Replacement Bearing data (following). Check crankpin diameter, connecting rod bore diameter, and bearing thickness with micrometer and select replacement bearings to give correct clearances as follows:

Connecting Rod—If bore worn more than .0015" over original size (see table), rod should be replaced (or honed for oversize replacement bearing).

Model	Con. Rod Bore Diameter
"60" Engine ('37-39)	1.800"
"60" Engine ('40)	1.900"
"85" & "90" V8 Engines	2.220" (2.2195-2.2220")
"95" & "100" V8 Engines	2.360" (2.3597-2.3603")

CAUTION—Both rods used on each connecting rod bearing **must be same size.** Replace or hone both rods to same size (one bearing used for two rods).

Connecting Rod Bearing—Measure bearing thickness with micrometer gauge by placing a piece of round stock on inner face of bearing and measuring total thickness of bearing and stock (measure stock separately and subtract from micrometer reading for bearing thickness figure). Replace bearings measuring less than .1085" thick (V8 "85", "90", "95", "100" Engines). New bearing thicknesses are

Model	Con. Rod Bearing Thickness
"60" Engines	.09995"
"85", "90", "95", "100" V8 Engines	.1095"

Crankshaft Crankpins—Check crankpins for condition, replace crankshaft or re-machine crankpins if scored or grooved, tapered more than .001", or out-of-round more than .0015". Shafts should be remachined as noted under "Crankshaft & Main Bearing" section below. NOTE—If crankpins worn evenly, and to less than maximum limits given above, crankshaft will be satisfactory for service providing that connecting rod bearings installed which provide bearing clearance of less than .005" (desired bearing clearance .0015-.0035").

CRANKSHAFT & MAIN BEARINGS

1941-42 FOUR CYL. MODELS
1941-47 SIX CYL. MODELS

REPLACEMENT MAIN BEARINGS: Bearings are furnished as shown below. On 4 Cyl. Engine, center bearing takes end thrust (bearing flanged on both ends). On 6 Cyl. Engine, 2 intermediate bearings used; #4 bearing takes end thrust. Upper and lower bearing halves not interchangeable on Six.

4 Cyl. Engine (1941-42)

Part Nos. Front & Rear	Center	Size
9N-6333-A	9N-6331-A	Standard
9N-6333-B		.001" Undersize
9N-6333-C	9N-6331-C	.002" Undersize
9N-6333-D	9N-6331-D	.005" Undersize
9N-6333-E	9N-6331-E	.010" Undersize
9N-6333-F	9N-6331-F	.012" Undersize
9N-6333-G	9N-6331-G	.020" Undersize

6 Cylinder "G" Engine (1941-47)

Front & Intermediate

Upper Half	Lower Half	Size
1GA-6333-A	1GA-6338-A	Standard
1GA-6333-B	1GA-6338-B	.001" Undersize
1GA-6333-C	1GA-6338-C	.002" Undersize
1GA-6333-D	1GA-6338-D	.005" Undersize
1GA-6333-E	1GA-6338-E	.010" Undersize
1GA-6333-F	1GA-6338-F	.012" Undersize
1GA-6333-G	1GA-6338-G	.020" Undersize
1GA-6333-H	1GA-6338-H	.030" Undersize

Rear

1GA-6331-A	1GA-6337-A	Standard
1GA-6331-B	1GA-6337-B	.001" Undersize
1GA-6331-C	1GA-6337-C	.002" Undersize
1GA-6331-D	1GA-6337-D	.005" Undersize
1GA-6331-E	1GA-6337-E	.010" Undersize
1GA-6331-F	1GA-6337-F	.012" Undersize
1GA-6331-G	1GA-6337-G	.020" Undersize
1GA-6331-H	1GA-6337-H	.030" Undersize

1936-48 V8 MODELS

CRANKSHAFT SERVICING: Measure crankshaft main bearing journals and crankpins with a micrometer gauge. Crankshafts should be replaced or re-machined if journals or crankpins scored or grooved, if tapered more than .001", or if out-of-round more than .0015". Re-machine crankshaft by grinding to a standard undersize (see Replacement Connecting Rod and Main Bearing data) and then polishing with #320 grit polishing paper. NOTE—If crankshaft worn evenly and to less than maximum limits given above, crankshaft will be satisfactory for service providing that main bearings installed which will provide bearing clearance of less than .003" (desired bearing clearance .001-.003").

Model	Main Bearing Journal Diameter	Bearing Bore in Cyl. Block
"60" Engine ('37-39)	1.9990"	③2.170-2.171"
"60" Engine ('40)	2.0990"	2.270-2.271"
"85" & "90" V8 ('35-36)	1.9990"	
"85" & "90" V8 ('37-38)	2.3990"	④2.570-2.571"
"85" & "90" V8 ('39 On)	2.4990"	2.670-2.671"
"85" & "90" Repl. Block①	2.4990"	⑤2.670-2.671"
"95" & "100" V8	2.4990"	2.670-2.671"
"95" & "100" Repl. Block②	2.4990"	2.670-2.671"

①—Part No. 41A-6010-B2. ②—Part No. 59A-6010-C.
③—Or 2.270-2.271".
④—2.670-2.671" with 81A-6010-B Cylinder Block and 68-6303-A Crankshaft.
⑤—When used with 1937-38 crankshaft, special bearings must be used (with larger outside diameter) for correct bearing clearance.

1936-48 V8 MODELS

SPECIAL MAIN BEARING NOTE (Some Engines)—Some cylinder blocks have been manufactured with main bearing bore .015" Oversize. These blocks can be identified by mark "ERP" stamped on oil pan gasket flange at left front corner of block.
CAUTION—All bearings installed in these engines must be special "O.D. .015"" Oversize type

1936-48 V8 MODELS

REPLACEMENT MAIN BEARINGS: Bearings furnished in Standard Size and Undersizes shown below (also with "O.D. .015" Oversize"—see Special Main Bearing Note above). Rear Main Bearings which have end flanges to take end thrust are also furnished with thicker or thinner flanges (Oversize in length or Undersize between flanges) for crankshaft endplay adjustment as follows:

"60" V8 Engine (1937-38-39)⑥

Part Number

Front & Center	Rear	Size
52-6333-A	52-6331-A	Standard
52-6333-C	52-6331-C	.010" Undersize
52-6333-D	52-6331-H	.020" Undersize
52-6333-E④	52-6331-D①	Standard
52-6333-L④	52-6331-U②	.005" Undersize
	52-6331-E②	Standard
	52-6331-F①	.005" Undersize
	52-6331-G①	.010" Undersize
	52-6331-H①	.020" Undersize

①—Length (over-all) .015" Oversize.
②—O.D. .015" Oversize. Length between flanges .010" Undersize.
④—O.D. .015" Oversize.
⑤—For engine with main bearing bore in cylinder block of 2.170-2.171".

"60" V8 Engine (1937-38-39)⑥

Part Number

Front & Center	Rear	Size
52-6333-F	52-6331-J	Standard
52-6333-H	52-6331-L	.010" Undersize
52-6333-J	52-6331-Q	.020" Undersize
52-6333-K④	52-6331-M①	Standard
	52-6331-P①	.010" Undersize
	52-6331-T②	Standard

①—Length (over-all) .015" Oversize.
②—O.D. .015" Oversize. Length between flanges .010" Undersize.
④—O.D. .015" Oversize.
⑥—For engines with main bearing bore in cylinder block of 2.270-2.271".

'60' V8 Engine (1940)

1940 '60'—These bearing used only with new 1940 crankshaft 022A-6303 with larger bearing journals.

Part Numbers

Frt. & Center	Rear	Size
92-A-6333-A	92-A-6331-A	Standard
92-A-6333-B	92-A-6331-B	.005" Undersize
92-A-6333-C	92-A-6331-C	.010" Undersize
92-A-6333-E	92-A-6331-H	.020" Undersize
92-A-6333-D④		Standard
————	92-A-6331-D①	Standard
————	92-A-6331-E①	.005" Undersize
————	92-A-6331-F①	.010" Undersize
	92-A-6331-G②	Standard

①—Length (over-all) .015" Oversize.
②—O.D. .015" Oversize. Length between flanges .010" Undersize.
④—O.D. .015" Oversize.

'90' V8 Engine (1936-38)

Part Numbers

Frt. & Center	Rear	Size
68-6333-A	68-6331-A	Standard
68-6333-C	68-6331-C	.010" Undersize
68-6333-E④	68-6331-D①	Standard
68-6333-F		.015" Undersize
68-6333-M	68-6331-U	.020" Undersize
	68-6331-E②	Standard
68-6333-P④	68-6331-W②	.010" Undersize
	68-6331-F①	.005" Undersize
	68-6331-G①	.010" Undersize
	68-6331-Y①	.020" Undersize

①—Length (over-all) .015" Oversize.
②—O.D. .015" Oversize. Length between flanges .010" Undersize.
④—O.D. .015" Oversize.

'90' V8 Engine (1938)—See Note

Note—Used only with No. 81A-6010-B cylinder block and 68-6303A crankshaft.

Part Number

Frt. & Center	Rear	Size
68-6333-G	68-6331-J	Standard
68-6333-H	68-6331-K	.005" Undersize
68-6333-J	68-6331-L	.010" Undersize
68-6333-K		.015" Undersize
68-6333-N	68-6331-V	.020" Undersize
68-6333-L④	68-6331-M①	Standard
	68-6331-N①	.005" Undersize
	68-6331-P①	.010" Undersize
	68-6331-T②	Standard

①—Length (over-all) .015" Oversize.
②—O.D. .015" Oversize. Length between flanges .010" Undersize.
④—O.D. .015" Oversize.

"90" & "100" V8 Engines (1939-48)

Part Numbers

Frt. & Center	Rear	Size
81-A-6333-A	81-A-6331-A	Standard
81-A-6333-C	81-A-6331-C	.010" Undersize
81-A-6333-D		.015" Undersize
————	81-A-6331-D①	Standard
————	81-A-6331-E①	.005" Undersize
————	81-A-6331-F①	.010" Undersize
81-A-6333-E④	81-A-6331-H②	Standard
81-A-6333-F	81-A-6331-J	.020" Undersize
81-A-6333-G④	81-A-6331-K②	.010" Undersize
81-A-6333-L	81-A-6331-L	.002" Undersize
	81-A-6331-M	.012" Undersize
81-A-6333-N	81-A-6331-N	.030" Undersize
	81-A-6331-P①	.020" Undersize
	81-A-6331-Q①	.002" Undersize
	81-A-6331-T①	.030" Undersize

①—Length (over-all) .015" Oversize.
②—O.D. .015" Oversize. Length between flanges .010" Undersize.
④—O.D. .015" Oversize.

CAMSHAFT & BEARINGS

1937-48 V8 "90" & "100" MODELS

CAMSHAFT SERVICING: Camshaft should be replaced if cams worn, scored, or otherwise damaged; or if journals scored, corroded, or worn to diameter of less than 1.7955". See Timing Gear and Oil Pump Drive Gear data for these items.

CAMSHAFT BEARING SERVICING: Camshaft bushings should be replaced if scored or worn to inside diameter greater than 1.7985". Replace bushings as follows:

Bushing Removal & Installation—Use puller, No. 6261-A, to remove bushings so that bushing is drawn out evenly. Install new bushings with same tool making certain that oil holes in bushing line up with oil channels in cylinder block. New bushings are finished type and need not be reamed.

Bearing Clearance—.001-.002" (new), .004" (worn limit).

C NTINUED N NEXT PAGE

C NTINUED FR M PRECEDIN PAGE

TIMING GEARS

1936-40 V8 MODELS

TIMING GEARS: Camshaft gears are "pressed on" type (aluminum or fibre) and camshaft must be removed from the engine for gear replacement.

Camshaft Gear Removal & Installation: Press old gear off shaft in an arbor press. Use special gear replacer fixture, No. 6256-A, when pressing new gear on shaft.
CAUTION—Mark on camshaft gear and mark on end of camshaft must be lined up within 1/64" to insure correct valve timing.

Replacement Gears: Crankshaft gears are Cast Alloy Steel, camshaft gears Fibre or Aluminum. Gears are furnished in the following sizes.

CRANKSHAFT GEAR (1936-40)

Part Number	Used On:
52-6306	"60" Engines
48-6306	V8 "90" & "100" Engines

CAMSHAFT GEAR (1936-40)
"60" Engine—Fibre Type—42 Teeth

Part Number	Size
52-6256-A	Standard
52-6256-B	.006" Oversize
52-6256-C	.010" Oversize

"90" & "100" V8 Engines—44 Teeth

Part Number		
Fibre Gear	Aluminum Gear	Size
48-6256-A	81B-6256-A2	Standard
48-6256-B	81B-6256-B	.006" Oversize
48-6256-C	81B-6256-C	.010" Oversize

1940-48 MODELS

TIMING GEARS: Beginning with 1940 production, a new bolted-on type camshaft gear was used (fibre, aluminum or malleable iron type) and this type gear can be replaced without removing the camshaft from the engine as follows:

Camshaft Gear Removal and Installation:—Gear is bolted on camshaft hub flange by 4 offset capscrews. To remove gear, remove crankshaft pulley (and dampener on 6 Cyl. Engine)—use Puller 6312-A, and timing gear cover. Bend back lock plate tangs, take out four camshaft gear mounting capscrews, remove gear. When replacing gear, make certain that marks on camshaft and crankshaft gears are lined up and see that lockplate tangs are bent up against flats on mounting screws. NOTE—Camshaft gear mounting screw holes offset so gear can only be installed in correct position. Use 6312-B Pulley Replacer to install crankshaft pulley.

Replacement Gears: Crankshaft gears are Cast Alloy Steel and are furnished in one size only. Camshaft gears are Fibre, Aluminum, or Malleable Iron and are furnished in the following sizes:

CRANKSHAFT GEAR (1940-48)

Part Number	Used On:
48-6306	4 Cyl. Engine
1GA-6306-B	6 Cyl. "G" Engine
48-6306	V8 "90" & "100" Engines

CAMSHAFT GEAR (1940-48)
4 Cyl. Engine
"90" & "100" V8 Engines

Part Number		
Fibre Gear	Aluminum Gear	Size
11A-6256-A	91A-6256-A	Standard
11A-6256-B	91A-6256-B	.006" Oversize
11A-6256-C	91A-6256-C	.010" Oversize

6 Cyl. "G" Engine—Camshaft Gear (48 Teeth)

Part Number		
Fibre Gear	Aluminum Gear	Size
1GA-6256-A1	1GA-6256-A2	Standard
1GA-6256-B1	1GA-6256-B2	.006" Oversize
1GA-6256-C1	1GA-6256-C2	.010" Oversize
Malleable Iron Gear.		
1GA-6256-B3		.006" Oversize
1GA-6256-C3		.010" Oversize

VALVE SYSTEM

1936-48 MODELS

VALVE ASSEMBLY SERVICING: The complete valve assembly (valve, spring, and guide) should be removed and installed as a unit. Service these assemblies as follows:

Valve Assembly Removal:—Use special bar type lifter V-78 (All Fords and Mercury) inserting the end of lifter through valve spring coils to engage flanged lower end of guides, pull guide down slightly, withdraw 'C' type guide retainer, lift valve assembly out of engine.

Valve Assembly Dismantling:—Use special bench fixture Part No. V-130 (All Engines). Fixture consists of special press by which valve spring can be compressed to free spring retainer (fixture has stop which prevents excessive valve spring compression).

Valve Grinding and Tappet Clearance Note (for all V8 Models):—To perform these operations with minimum amount of hand cranking, note which valves are fully open (first column in table below), grind or check valves listed on same line of table—then turn shaft 'til next 'valve open' point reached.

Valves Open	Valves to Grind
1. 4X & 1N	3X, 8N, 6N, 7X, 3N, 2X
2. 3X & 8N	1X, 7N, 5X, 2N, 4X, 1N
3. 1X & 7N	8X, 5N, 6X, 4N
OR	
1. 8X & 5N	1X, 7N, 6N, 7X, 3N, 2X
2. 6N & 7X	5X, 2N, 4X, 1N, 8X, 5N
3. 5X & 2N	6X, 4N, 3X, 8N

NOTE—'X' Exhaust Valve. 'N' Intake Valve.

Tappet Clearance Checking (All Engines): Check tappet clearance when re-installing valves. Turn camshaft until lifter is on heel of cam, make certain that valve assembly is seated in block ("C" washer engaging both halves of valve guide), check clearance between mushroom end of valve stem and top surface of lifter with a feeler gauge. If clearance less than minimum (see table below), install a shorter valve or grind off end of valve stem, if clearance greater than maximum, install longer valve, or reface valve or valve seat to lower the valve in the block.

Tappet Clearance

V8 Engine Intake Valves	.010" Min., .012" Max.
V8 Engine Exhaust Valves	.014" Min., .016" Max.
6 Cyl. Engine All Valves	.013" Min., .015" Max.

1936-48 MODELS

VALVES (V8 Engines): Intake and exhaust valves used on V8 engines are interchangeable and when replacing some valves only, new valves should be used for Intake (to keep intake valve clearance at minimum). All valves re-used should have a minimum stem diameter of .3090" (Intake), .3065" (Exhaust). CAUTION—Replace all valves with stem diameter of less than .3065".

6 Cyl. Engines—Intake and exhaust valves are not interchangeable. All valves re-used should have stem diameter in excess of .3065" and must not be pitted, corroded, or burned. CAUTION—Replace all valves with stem diameter of less than .3065".

1936-48 MODELS

VALVE SPRINGS (All Engines): Valve springs are painted with protective coating and care should be taken not to chip this coating or to clean springs with any caustic solution which will remove it. Spring tension should be checked with a spring tester and all springs discarded if tension is not within 30-40 lbs. compressed to 2⅛".
CAUTION—Do not re-use springs on which protective paint coating has been removed or which do not test within limits.

1936-48 MODELS

VALVE GUIDES (All Engines): When replacing some guides only, use the new guides for Intake Valves (to keep intake valve stem clearance at a minimum). Check guide wear by placing a new valve of .311" diameter in the guide half, measure combined valve stem and valve guide thickness on each side at top of guide. Any guide being re-used should have a minimum thickness (with valve stem) of .6665" (Intake), .6660" (Exhaust). Use any new guides, and old guides having least wear, for Intake Valves.
CAUTION—Replace **both halves** of all guides having thickness (with valve stem) less than .6660".

1936-48 MODELS

VALVE LIFTERS (PUSHRODS) All Engines: Lifters are hollow barrel type and can be lifted out of guide holes in block after valve assemblies have been removed. Lifters worn to diameter of less than .9980" should be replaced (new diameter .9995"), and lifters showing wear at either end should be resurfaced (pressed steel type lifters may be resurfaced (pressed steel type lifters may be resurfaced at both ends, cast type at larger bottom end only). Replace lifters which are less than 1.710" in length after resurfacing. Check lifter clearance when re-installed in engine. *Lifter should slip into guide* hole in block of own weight.
CAUTION—Do not use resurfaced lifters with new valves.

1936-48 MODELS

VALVE SEAT INSERTS: Special hard molybdenum-chrome alloy steel valve seat inserts are used for Exhaust or Intake and Exhaust valves on some engines. Reface any valve seats which show that valve has not been seating, or where seat width is greater than ⅛", or if new guides are installed. Replace all inserts that are loose in the cylinder block or cracked.

Seat Insert Removal & Installation: Use care not to damage cylinder block when removing old inserts. Clean up counterbore in cylinder block and machine to size providing .0015-.0030" press fit for new insert. Chill new insert in dry ice for at least 15 minutes, then install insert in block using a driver that will insure the insert being seated evenly in the block. Reface new inserts.

OIL PAN REMOVAL

1941-47 6 CYL. MODELS

OIL PAN REMOVAL: Remove the engine from the chassis (see Engine Removal above). Then remove starter, take out oil pan capscrews and lift pan off. **Oil Pan Installation Note**—Use new packing at front and rear ends of pan. CAUTION—Soak new packing in engine oil for 2 hours before using.

1936-42 V8 MODELS

OIL PAN REMOVAL: To remove oil pan, drain cooling system, disconnect upper and lower radiator hoses, disconnect exhaust pipe and remove cross-pipe, disconnect radius rods at rear end, push rear end of rods down and block in this position. Remove front engine support bolts, attach hoist and raise front end of engine. Remove oil pan screws, remove pan.

NOTE—Pan removal will be facilitated by removing starter motor and engine side pans, disconnecting steering tie rod, and turning crankshaft so that #4 piston is at top dead center.

Oil Pan Installation Note—Use new packing at front end of pan. CAUTION—Soak new packing in engine oil for 2 hours before using.

1946-47-48 MODELS

OIL PAN REMOVAL: Remove oil pan drain plug and drain the oil. Disconnect steering drag link at steering gear pitman arm. Loosen clamp on exhaust cross-pipe, disconnect exhaust pipe at left exhaust manifold and remove cross-pipe. Take out capscrews in ball joint at rear end of front radius rods, lower rear end of rods to provide clearance (rods can be held down by wooden block inserted between radius rod ball and frame). Take out engine splash pan mounting screws, move pans to the side and out of the way. Remove starter by disconnecting brace at commutator end and taking out two through bolts on commutator end plate. Disconnect oil filter return line at oil pan connection, remove oil level indicator stick and tube. Take out oil pan capscrews and remove pan from beneath car.

NOTE—Additional clearance can be secured by attaching hoist to front bumper bars (not axle) and raising front end of car slightly.

Oil Pan Installation Note—Use new gaskets and new packing at front end of pan. Soak new packing in engine oil for 2 hours before using.

OIL PUMP

1937-48 V8 MODELS

OIL PUMP: Removal & Disassembly—To remove pump from engine, remove locking wire and take out mounting screw in pump mounting flange, pull pump down and out (NOTE—Pump body fits in recess in cylinder block and it may be necessary to jar it slightly to loosen it). To dismantle pump, remove strainer screen retainer spring, remove screen, take out screen cover mounting screws, remove screen cover and gasket. Take out four capscrews in pump cover, remove cover, lift out pump driven gear. If pump shaft and driving gear are to be removed, drive out pin in drive gear, place pump in arbor press with support under drive gear, press shaft and driving gear out through lower end of pump housing.

Oil Pump Relief Valve (Pressure Regulator) Note—On pumps with relief valve located on side of pump housing, remove locking wire, take out relief valve nut, spring, and valve plunger.

Servicing—Clean out all oil passages in pump housing with compressed air. Replace all worn parts when clearances exceed following limits:

Pump Shaft & Bushings—Shaft clearance in bushings should be .001-.003" and bushings should be replaced if clearance exceeds .005". Replace shaft if pump gear worn or if bearing surface worn to diameter of less than .497". Replace bushings if worn to inside diameter greater than .502". Remove old bushings with driver, press new bushings in place, line ream bushings to inside diameter of .500".

Pump Driven Gear & Shaft—Clearance between driven gear and stub shaft in pump housing should be .002-.0035". Replace shaft if clearance exceeds .005". To replace shaft, drive old shaft out of housing, press new shaft in place making certain that end of shaft will clear pump cover when it is installed.

Oil Pressure Regulator (Relief Valve)—Check relief valve spring tension and replace spring if tension is less than 78 ozs. or more than 87 ozs. when compressed to length of 1.380".

Pump Assembly—Insert pump shaft in housing, press drive gear on shaft until clearance between gear hub and end of housing (endplay) is .017", drill new 5/32" hole hrough shaft in line with hole in gear, install 5/32" pin and peen both ends of the pin to prevent loosening in service. Complete assembly by reversing disassembly directions above.

CAUTION—Make certain that relief valve nut and pump mounting screw are locked with wire and that lockwashers used under screw heads on pump cover and oil screen cover.

1937-48 V8 MODELS

OIL PUMP DRIVE (Camshaft Gear): Pump drive gear is pressed on rear end of camshaft. Remove old gear with gear puller, No. 6254-A, drive new gear on shaft with a fibre block (support shaft in vise with brass jaws). NOTE—Late design camshafts have flat on oil pump drive gear hub and gears have a similar flat to prevent the gear turning in service. These gears and camshaft must be used together and flats must be lined up when installing gear. Drive gear on shaft until it is firmly seated against the shoulder on the shaft.

Oil Pump Idler Gear: This gear located in rear end of cylinder block between camshaft gear and oil pump drive gear on pump shaft.

Removal & Disassembly—Take out capscrews in cover on rear face of cylinder block, lift off cover and gear assembly, and gasket.

Servicing—Replace all worn parts when clearances exceed following limits:

Idler Gear & Bushing—Clearance on shaft should be .001-.003". Replace bushing if worn to inside diameter greater than .752" or if clearance exceeds .005". To replace bushing, drive old bushing out, press new bushing in gear, ream bushing to provide shaft clearance of .001-.003".

Idler Gear Shaft—Replace shaft if scored or worn to diameter less than .747". To replace shaft, press old shaft out, press new shaft in cover until end of shaft is flush with face of cover.

1937-48 V8 MODELS

OIL PRESSURE REGULATOR (Relief Valve): Relief valves located under plug directly above front camshaft bearing (under valve cover) on all engines. Engines with late type oil pump (41A-6600-A & B) have additional relief valve on side of pump housing. Check relief valve spring tension and replace springs which are not within limits listed below.

CAUTION—Special type relief valve used on engines with oil pump relief valve. Correct type must be used in each engine.

Cylinder Block Relief Valve (Engines without Oil Pump Relief Valve)—Replace valve spring if tension less than 43 ozs. or more than 50 ozs. when compressed to length of 1.380".

Cylinder Block Relief Valve (Engines with Oil Pump Relief Valve)—Replace valve spring if tension less than 78 ozs. or more than 87 ozs. when compressed to length of 1.380".

Oil Pump Relief Valve—Replace valve spring if tension less than 78 ozs. or more than 87 ozs. when compressed to length of 1.380".

1937-48 V8 MODELS

LOW OIL PRESSURE NOTE: Low oil pressure may be caused by fuel pump push rod bushing being worn through, permitting oil to escape from main oil channel. Replace bushing by driving old bushing out of cylinder block and driving new bushing in until top of bushing is flush with face of casting. New bushings need not be reamed.

1941-47 SIX CYL. "G" ENGINE

OIL PUMP: Removal & Disassembly. To remove pump from engine, take off Oil Pump Screen Cover assembly by removing lock wire and capscrew at rear intermediate main bearing cap and lock wire and three capscrews in cover on front main bearing cap. Remove front main bearing cap with oil pump body. To disassemble pump, lift out driven (idler) gear from stub shaft in body, press drive gear and shaft out of driving gear and body, using an arbor press.

Servicing—Clean out all oil passages in pump body with compressed air. Replace all worn parts when clearances exceed following limits:

Pump Shaft and Bushings—Replace shaft if fibre drive gear worn or if bearing surface worn to diameter of less than .560". Replace bushing in pump body if worn to inside diameter greater than .566". Remove old bushing with driver, press new bushing in place until inner edge flush with pump body, line ream bushings to inside diameter of .5625".

Pump Driven (Idler) Gear & Shaft—Clearance between driven (idler) gear and stub shaft in pump body should be .002-.0035". Replace shaft if clearance exceeds .005". To replace shaft, press old shaft out of body, press new shaft in place until outer end flush with body (inner end of shaft must clear cover when it is installed).

Pump Assembly—Insert pump shaft in body, press driving gear on shaft. Install driven (idler) gear on stub shaft in pump body.

1947-48-49 SIX CYL. "H" ENGINE

6 **CYLINDER ROTOR TYPE OIL PUMP: Removal from 1949 Passenger Car.** Remove distributor cap, turn engine over until #1 cylinder at firing position (rotor will point to oil hole in distributor), allow crankshaft to remain in this position while pump off engine. Remove front engine mounts-to-frame bolts. Loosen rear engine mounting. **Raise front of engine 2" and move ½" to left.** Remove distributor. Take out 3 pump mounting capscrews in pump cover, pull pump out.

C NTINUED N NEXT PAGE

CONTINUED FROM PRECEDING PAGE

Pump Disassembly—Remove cover and outer rotor (rotate drive gear to free rotor from pump body). Drive out pin in drive gear and press gear off shaft. Remove shaft and inner rotor. Clean all parts and check to specifications listed below.

Pump Specifications and Clearances—As follows:

Outer Rotor. Outside Diameter 2.249" (wear limit 2.245"). Clearance in Body .005-.010" (wear limit .012").

Pump Body. Inside Diameter 2.258" (wear limit 2.260").

Inner Rotor. Clearance in Outer Rotor .006" (wear limit .010").

Shaft. Outside Diameter .5175" (wear limit .5170"). Shaft Endplay .004-.008" (wear limit .010").

Pump Assembly—If new shaft installed, assemble shaft with inner rotor in pump. Press drive gear on end of shaft to obtain .004" clearance between gear and upper end of pump body. Drill pin hole in shaft. Install pin and peen both ends. Place outer rotor in body, install cover being sure to use new cover gasket.

Pump Installation—Reverse removal instructions listed above making certain distributor correctly positioned for proper ignition timing.

RADIATOR

1946-47-48 MODELS

RADIATOR REMOVAL: Drain cooling system. Disconnect and remove upper and lower radiator hoses. On 6 Cyl. models, take out four capscrews and lockwashers mounting fan blade assembly on pulley, remove fan blades. On V8 models, remove two capscrews mounting fan bracket on generator bracket, slip off drive belt and remove fan and bracket assembly. Take out mounting bolts in radiator support flanges (at bottom on each side) and bolts in support bracket at each side. Lift radiator straight up and out.

CLUTCH NOTES

1949 FORD PASSENGER CARS

V8 PASS. CAR FLYWHEEL RUBBING ON HOUSING COVER WHEN CLUTCH DISENGAGED: Due to distortion of cover on front side of flywheel housing being distorted at flywheel bolt circle. Correct by taking off cover (drops straight down after removing attaching bolts) and flattening. COVER MUST BE FLAT.

OVERDRIVE NOTES

1949 FORD PASSENGER CARS

OVERDRIVE NOISE (EARLY 1949 CARS): Can be caused by Overdrive case interference at Rear Engine Support at two points as follows:

1)—Rear Engine Support Bolt. Head of bolt may be interfering with underside of Overdrive Case. Correct by grinding off head of bolt (do not grind head to less than ⅛" thick). Thin head bolt No. 355519-S2 used on later cars in production.

2)—Overdrive Case. Grooves on underside of case at engine mounting too shallow so that flanges on engine support interferes with Overdrive case at this point. Correct by filing grooves in case and cleaning up ends of grooves if casting flash evident. Later cars used matched assemblies in production.

BRAKE NOTES

1948 TRUCK SERIES F-4, F-5, F-6

HAND BRAKE ADJUSTMENT: For independent shaft brake at transmission. Set hand lever in fully released position and make certain that flat portion of cam is resting on rear of brake band upper end (if cam not flat, remove clevis pin in upper end of cam, adjust clevis rod until cam is flat when rod re-connected). Remove locking wire from brake band anchor adjusting screw (left side), turn screw clockwise until clearance between band and drum is .010" at the anchor screw, install lock wire. Loosen locknut on adjusting screw for lower position of brake band (round screw on brake mounting bracket), turn screw until clearance between lower portion of brake band and drum is .010", tighten locknut. Tighten adjusting nut at lower end of main adjusting bolt (on which band positioning springs are located) until clearance between upper portion of band and drum is .010". This completes the brake adjustment.

ELECTRICAL SYSTEM NOTES

1949 PASS. CARS, 1948 TRUCKS

STARTER MOTOR RUSTING (1949 CARS, 1948 TRUCKS): Correct by enlarging drain hole to ⅜" in endplate on underside. This can be done from underneath with starter on engine. If performed on bench all drill chips must be removed from starter. Drill ⅜" hole ½" deep (DO NOT DRILL DEEPER THAN ½" OR FIELD COIL MAY BE DAMAGED).

STARTER SUPPORT BRACE

1938 MODELS

STARTER SUPPORT BRACE: To correct thump or pound in engine when accelerated between 18 and 28 M.P.H., special starter motor to oil pan brace 82-A-11140-B (60 Engine), 81-A-11140-B (90 Engine) should be installed. Fasten this brace or bracket to starter through-bolt at starter end, remove one oil pan to cylinder block bolt and replace with special bolt 20426-S (60 Engine), 20426-S2 (90 Engine) to hold opposite end.

NOTE:—Engine changes made during 1936 as follows: New type steel-alloy piston (requiring special cylinder head) superseding aluminum alloy pistons. Heavier crankshaft with removable main bearings, new oil pump, new oil pan. Data on all types given below. Engines with each type equipment identified as follows:

Aluminum Alloy Pistons—Block not marked. Head marked '40'.

Steel-Alloy Pistons—Block marked 'SP' or 'SPG' on upper front end of left cylinder block near water coupling. Head marked '46' on top.

Heavier Crankshaft—Engine not marked but new pan with greater bearing clearance used.

MODEL IDENTIFICATION

Model	Year	Body Type
68	1936	Passenger Cars
67	1936	Commercial Chassis
51	1936	Truck (131½" & 157" WB)

SERIAL NUMBER:—Same as engine number. Stamped on top of clutch housing and on left frame side member in front of dash bracket.

ENGINE NUMBER: Same as Serial Number (above).

TUNE-UP

COMPRESSION: Ratio—6.3-1 Aluminum Head (Passenger Cars), 5.32-1 Cast Iron Head (Trucks).

Pressure—140 lbs. at 2700 R.P.M. Max., 113 lbs. at cranking speed (6.3-1 Al. hd.), 110 lbs. at 2500 R.P.M. Max., 95 lbs. at cranking speed (5.32-1 iron hd.).

VACUUM READING:—Gauge should show steady reading of 18-20" with engine idling at 5-7 M.P.H.

FIRING ORDER: 1-5-4-8-6-3-7-2. See diagram for cylinder numbering and spark plug cable connections.

SPARK PLUGS: Champion No. 18. 18 mm. Metric type.

Gaps—.025".

IGNITION: See *Coil, Condenser, and Distributor.*

Breaker Gap—.012-.014" (40-12127 Distr.), .014-016" (68-12127 Distr.).

Cam Angle—35-37½° (closed). Both sets together.

Automatic Advance—8° max. at 1500 RPM (40-12127 Distr.), 950 RPM (68-12127 Distr.). Distributor degrees and RPM.

IGNITION TIMING: See Ignition Timing.

Std. Setting—4° BTDC. No flywheel marks provided (see Ignition Timing for method of setting ignition and also Vacuum Brake Adjustment).

CARBURETION: See Carburetor & Carb. Equipment.

Idle Setting—Both idle screws midway between "miss" and "roll" points. Idle speed 5-7 MPH.

Float Level—Fuel level 15/32" below top of bowl.

Accelerating Pump—First type not adjustable. Inner hole—Summer, Outer hole—Winter (if adjustable).

Fuel Pump Pressure: 3½ lbs. maximum.

VALVES: See Valve Timing.

Tappet Clearance—.0125-.0135". No adjustment.

STARTING: See Battery, Starter, Generator, and Regulator (when used).

IGNITION

IGNITION NOTE: Complete Ignition Unit No. 40-12127-B or 68-12127 (part production). Mounted on front of gear case. Driven through tongue-and-slot coupling from camshaft.

NOTE—These ignition units interchangeable as a unit although specifications are not identical (see data below). Parts are not interchangeable. May be identified by round top coil (40-12127-B), flat type coil (68-12127) and by part No. 68-12116 stamped on inner face of terminal plate on 68-12127 units.

Ignition Switch:—Oakes Hershey type co-incidental ignition switch and steering post lock.

COIL: Ford No. 18-12024-A (40-12127-B Distr.), 68-12024 (68-12127). Mounted on top of distributor as part of ignition unit. NOTE—Coils not interchangeable.

Ignition Current—2.8 amperes idling, 4 stopped.

Ignition Resistance—Part No. 40-12250 mounted on fuse block and connected in coil primary circuit.

CONDENSER: Ford Part No. 18-12300-B (All Distr.). Capacity—.33-.36 microfarad.

DISTRIBUTOR: Ford 40-12127-B. Double breaker, 8 lobe cam, full automatic advance type with Vacuum Brake Control (see Ignition Setting for adjustment). Same design as used previously on Ford V-8 with one set of contacts used to load coil (this set closes first and opens first) and one set for ignition timing.

Breaker Gap—.012-.014" (both sets). Adjusted by loosening lockscrew on stationary contact bracket and turning contact stud (accessible through hole in housing after removing rubber plug).

NOTE—Use .012-.014" two-step feeler labeled 'Breaker V-8' in BV-45 Ford Feeler Gauge Sets as 'Go' and 'No-go' gauges in setting gap.

Cam Angles—Closed 35-37½°. Open 7½-10°—for both sets operating together with correct coil-loading lead.

Breaker Arm Spring Tension—22-27 ounces.

CONTINUED ON NEXT PA E

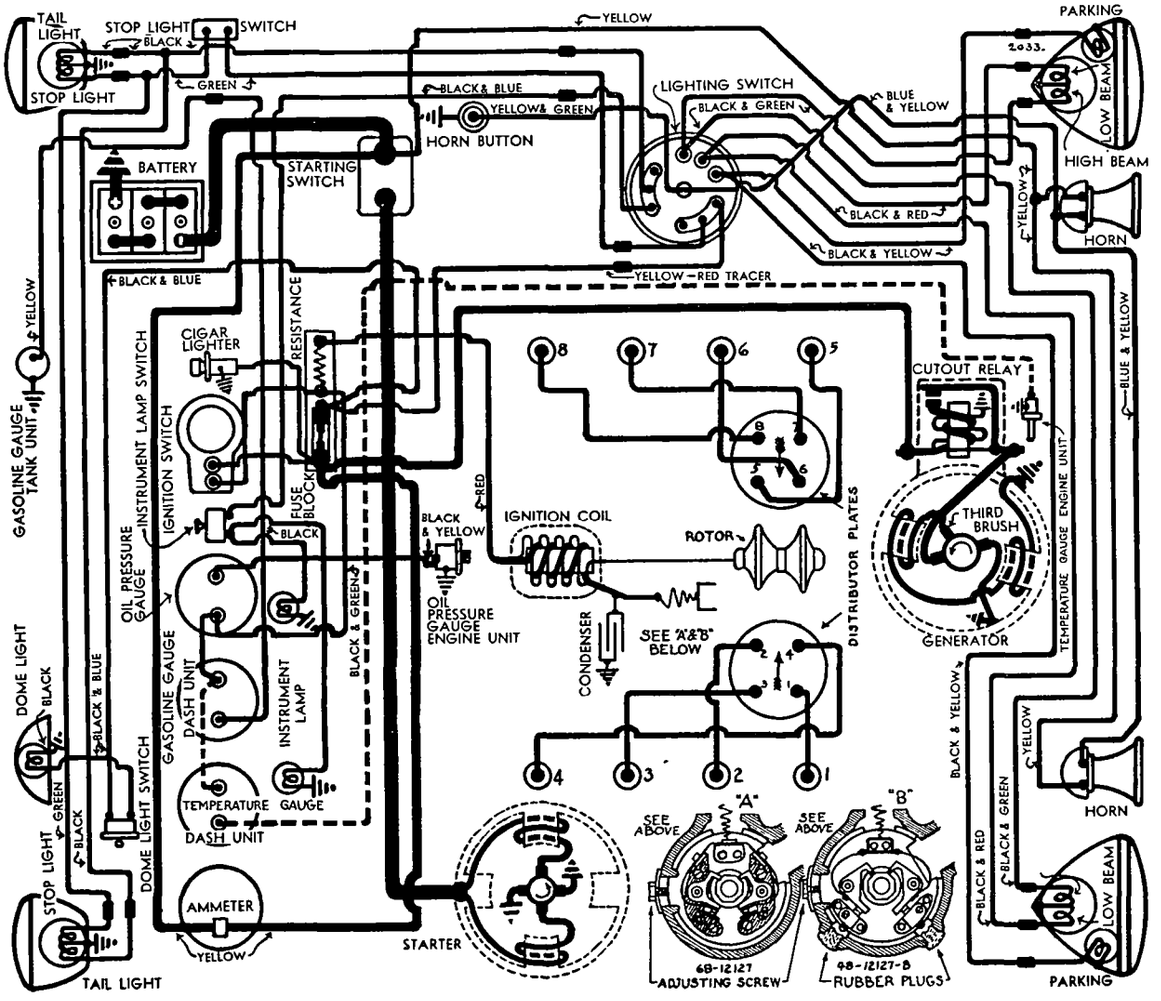

C NTINUED FR M PRECEDING PA E

Automatic Advance
(High Vacuum—Vacuum Brake Inoperative)

Distributor Degrees	R.P.M.	Engine Degrees	R.P.M.
Start	200	0	400
2	325	4	650
3	425	6	850
5	825	10	1650
8	1500	16	3000

Vacuum Brake—Consists of an adjustable spring-loaded plunger in vacuum cylinder on side of distributor housing. Braking action of plunger on edge of advance weight plate governed by manifold vacuum. See Ignition Timing for setting.

NOTE—Distributor shaft and governor weight assemblies with above advance characteristics identified by figure '40-B' stamped on the rear end of shaft beside coupling tongue and on outside rim of advance weight (this mark may be seen by removing vacuum brake piston).

DISTRIBUTOR: Ford 68-12127. Same design as 48-12127B except for breaker plate design (new type breaker arm and contact mounting). See diagram.

Breaker Gap—.014-.016" (both sets). Adjust by loosening lockscrew and turning eccentric adjusting screw on stationary contact mounting plate accessible through terminal plate opening after plates removed).

NOTE—New two-step feeler blade marked '.014-.016"' can be added to BV-45 feeler gauge set for use in setting these contact gaps.

Cam Angles—Closed 35-37½°. Open 7½-10°. Same as previous type distributor due to new breaker arm design.

Breaker Arm Spring Tension—20-24 ounces.

Automatic Advance
(High Vacuum—Vacuum Brake Inoperative)

Distributor Degrees	R.P.M.	Engine Degrees	R.P.M.
Start	200	0	400
2	300	4	600
3	375	6	750
5	600	10	1200
8	950	16	1900

Distributor Removal:—At front of engine. To remove, disconnect vacuum line and take out 3 capscrews in mounting flange.

IGNITION TIMING

IGNITION TIMING:— Flywheel Degrees Piston Pos'n
All Engines ..... 4° BTDC ..... .0058" BTDC
NOTE—See Vacuum Brake Setting section below.

To Set Timing—No flywheel marks provided. Timing designed to be set with piston on top dead center. With #1 piston on top dead center entering power stroke, loosen timing adjusting screw on left side of ignition unit, place screw in retard position at lower end of slot, move screw upward in slot until contacts begin to open. Note graduation of scale on plate under screw head in line with reference mark on housing, move screw up one additional graduation, tighten screw. This will give correct 4° BTDC. setting.

NOTE—Top dead center position of Piston #1 can be determined by inserting gauge rod in cylinder or by measuring distance to tops of pistons #2 and 3 which should be equal.

Vacuum Brake Setting:—Vacuum Brake should be adjusted for best performance with particular fuel or operating conditions. To adjust, loosen locknut, back off adjusting screw until engine 'pings' under load, turn up adjusting screw just enough to eliminate ping, tighten locknut.

CARBURETOR

CARBURETION:—Carburetor—Stromberg Model EE-1, 1" dual, downdraft type. Various type used as follows:

Ford Part No.	Service
67-9510-A	Standard Equipment.
SE-67-9510	Service option on all models.
67-9510-B	Altitudes of 5000-10000 ft.
67-9510-C	Altitudes of 10000-15000 ft.
67-9510-D	Altitudes above 15000 ft.

NOTE—These carburetors same except for jet calibration (see 67-9510-A Note below) and adjusted in same manner.

See article in Carburetor Section for complete data and Jet Calibration data on all models.

67-9510-A Carburetor—This model used in part production is equipped with a .97" venturi and slightly smaller main metering jet which gives better fuel economy. This model may be identified by figure '97' cast on body under connector link. Type SE-67-9510 has 13/16" venturi and smaller main metering jet (see Stromberg Jet Specifications in Carburetion Section). Both types have accelerating pump adjustment.

NOTE—Do not adjust carburetor until engine is warmed up and idling at hot or slow idling speed with choke valve wide open.

Idle Adjustment—Manufacturer recommends use of vacuum gauge and adjustment of idling screws for highest vacuum reading. If vacuum gauge not used, adjust throttle stopscrew for 5-7 M.P.H. idling speed, turn each idle adjusting screw in until engine begins to miss, out until engine begins to roll, finally turn screw in slowly until engine fires smoothly. Readjust throttle stopscrew for idling speed.

Accelerating Pump Setting (67-9510A, SE-67-9510 only)—Two studs provided on throttle lever for pump link connection and marked as follows:
S—3/16" shorter pump stroke for summer operat'n.
W—Normal for winter or improved performance.

Fast Idle:—Integral with carburetor. Operative with choke valve closed. No adjustment required.

CARB. EQUIPMENT

Air Cleaner:—AC. #1525501 oil-wetted type std., Heavy duty oil-bath type optional.

Fuel Pump:—AC. Type R #1521764 Diaphragm type.
For complete data, refer to Carburetion Equip. Index.

Gasoline Gauge (Trucks): King-Seeley "Telegauge" Hydrostatic type.
For complete data, refer to Carburetion Equip. Index.
(1936 Car Models) King-Seeley Electric. Ford Part No. 68-9280-A (dash unit—68 Std., 67), 68-9280-B (dash unit—68 Deluxe), 68-9275 (tank unit—all).
For complete data, refer to Carburetion Equip. Index.

BATTERY

BATTERY:—Ford No. 40-10655-C. 6 volt, 17 plate, 100 ampere hour capacity (20 hour rate).
Starting Capacity—126 amperes for 20 minutes.
Zero Capacity—300 amperes for 3.3 minutes.
Grounded Terminal—Positive (+) terminal.
Location—On left side under front floor.
Dimensions—Width 7.2". Length 10.5". Height 7.1".

STARTER

Ford Model No. 18-11002. Armature No. 18-11005.
Drive—Inboard Bendix L11FX-10. Ford No. B-11350.
Cranking Engine—100 RPM., 190-215 amperes.
Rotation—Counter-clockwise at commutator end.
Brush Spring Tension—2 lbs. each.

Performance Data

Torque	R.P.M.	Volts	Amperes
4 ft. lb.	1070	4.6	200
8 "	660	4.3	340
12 "	300	3.65	465
14 "	Lock	3.5	500

Starting Switch:—Ford No. 48-11450. Operated by pedal on toeboard.

Removal:—Starter mounted on right front face of flywheel housing. To remove, take off pan at right of engine, take out two through-bolts on commutator endplate.

GENERATOR

STANDARD

Ford Model No. 40-10000-B (Cars), 67-10000-A (Comm'l. & Trucks), 51-10000-A (Trucks). Arm. No. 18-10005.
Third brush control type. Ventilated.
NOTE—These generators are the same except for pulley diameter and type as follows:

Generator	Pulley Diameter	Pulley Type
40-10000-B	4.30"	Single Sheave
67-10000-A	5.18"	Single Sheave
51-10000-A	4.08"	Double Sheave

NOTE—Above generators serviced by following models: 81-A-10000-A (40-10000-B, 67-10000-A), 79-10000-B (51-10000-A).
Charging Rate Adjustment—Take off commutator cover band, shift third brush by hand counter-clockwise to increase or clockwise to decrease charging rate. Brush held in position by friction.
Standard Charging Rate Setting—16 amperes (hot), at 1810 R.P.M. or 30 M.P.H. (68 with 4.3" pulley).

Performance Data
Generator Hot

Amperes	Volts	R.P.M.
0	6.2	650
4	6.4	815
8	6.5	1020
12	6.6	1300
16	6.7	1810
18	6.8	3000

Performance Standards—See Note

Amperes	Eng. R.P.M.
Start	500
17	1300
11	3000

NOTE—Generators which do not test up to these "Performance Standards" should be examined and verhauled.

Rotation—Counter-clockwise at commutator end.

Brush Spring Tension—26-28 ounces.

Field Current—4.6 amperes at 6.1 volts maximum at 850-1200 RPM. Field resistance 1.0 ohms at 70°F.

Removal:—Mounted on bracket at front of engine between cylinder banks with fan mounted on forward end. Driven in tandem with two water pumps by Vee belt. To remove, take off nut on bracket mounting stud.

Belt Adjustment:—Loosen nut on bracket flange mounting stud, move generator up until total sideplay on belt at point midway between water pump and crankshaft pulleys is ¾-1", tighten nut.

GENERATOR

SPECIAL EQUIPMENT

GENERATORS (SPEC. EQUIP):—Various types for special service on all models as follows:

Generator	Pulley Diam.	Type Service
67-10000-H	5.18"	High Speed
68-10000-HA	4.38"	High Speed
68-10000-HB	4.38"	Low Speed
78-10000-HA	4.38"	High Speed
78-10000-HB	3.58"	Low Speed

NOTE—These generators serviced by the following models: 81-A-10000-B (67-10000-H; 68-, 78-10000-HA), 82A-10000-B (78-10000-HB), 81A-10000-C (68-10000-HB).

Armature Nos.—68-10005-H (67-10000-H, 68-10000-HA), 18-10005 (68-10000-HB), 78-10005-HA (78-10000-HA, HB).

Maximum Charging Rate—See table below. Reached at 33 M.P.H. (67-10000-H), 30 M.P.H. (68-, 78-10000-HA), 28 M.P.H. (68-, 78-10000-HB).

Charging Rate Adjustment—Same as for standard generator (above). See Regulator data below for models on which regulator is used.

Performance Standards—See Note

67-10000-H, 68-10000-HA, 78-10000-HA

Amperes	Eng. R.P.M.
Start	525
26	1250
16	3000

68-10000-HB

Start	350
18	1000
16	3000

78-10000-HB

Start	350
26	1000
16	3000

NOTE—If generators do not test up to these "Performance Standards" they should be examined and overhauled.

Rotation—Counter-clockwise at commutator end.

Field Current—3.43-4.17 amperes at 6.0 volts (field resistance 1.44-1.75 ohms for all models).

Removal & Belt Adjustment:—Same as for standard generator (above).

SPECIAL GENERATORS:—Other Makes—*Refer to Electrical Equipment Index for 'Special Generator' article for complete data on special Generators and Regulators which may be found on these models.*

CUTOUT RELAY

CUTOUT RELAY:—Ford No. B-10505. Mounted on generator. Generator field lead grounded to relay

Cuts In—5.8-6.3 volts, 10 MPH.

Cuts Out—3 ampere maximum discharge.

Contact Gap—.015-.020".

Air Gap—.010-.015" with contacts closed.

REGULATOR

REGULATOR:—Ford No. 40-10505 or 68-10505 (Special Equipment). Consists of Cutout Relay and Voltage Regulator (two-rate relay) in case on generator. *See article in Electrical Equipment Section for complete data.*

Cutout Relay

All data same as for B-10505 above.

Regulator

Setting—Contacts open when voltage reaches 8.5 volts and remain open until relay contacts open.

Cuts In—7 volts or 10 M.P.H.

Cuts Out—3 ampere discharge current.

Contact Gap—.015-.020".

Air Gap—.010-.015" with contacts closed.

LIGHTING

LIGHTING:—Headlamps—Corcoran-Brown 'Two-Lite,' Upper and lower beams controlled by lighting switch handle on steering wheel.

Headlamp Adjustment—Aim headlamps straight ahead with top of upper beam at lamp center height 25 feet from the car.

Switches

Lighting—R.B.M. Model B-11654-B. Ford Part No. B-11657 (Body and Contact Assembly), 48-11647 (Plate and Wiring Assembly), B-11655-B (Cover). **Stop Light**—Ford No. 48-13480.

Bulb Specifications

Position	Candlepower	Mazda No.
Headlamps	32-32	2330-C
Stop and Tail	21-2	1158
All others	3	63

MISC. ELECTRICAL

FUSES:—Fuse Block Ford Part No. 40-12250. Ignition resistance unit mounted on fuse block.

Lighting—20 ampere capacity on fuse block.

HORNS: Sparton. Vibrator type. Current draw 6-8 amperes each.

ENGINE

ENGINE SPECIFICATIONS PASSENGER CAR AND COMM'L:—Eight cyl., 90° Vee, 'L' head type with both cylinder blocks and crankcase cast enbloc.

Bore—3.062". **Stroke**—3.75".

Piston Displacement—221 cubic inches.

Rated Horsepower—30.

Developed Horsepower—85 at 3800 RPM.

Compression Ratio—6.3-1 Std. aluminum head.

Compression Pressure—140 lbs. at 2700 R.P.M. or 113 lbs. at cranking speed of 100 R.P.M.

Vacuum Reading—Gauge should show steady reading of 18-20" with engine idling at 5-7 M.P.H.

ENGINE SPECIFICATIONS FOR TRUCKS:—Same as for Passenger Car & Commercial except as follows:

Developed Horsepower—80 at 3800 R.P.M.

Compression Ratio—5.32-1 Std. cast-iron head.

Compression Pressure—110 lbs. at 2500 R.P.M. r 90 lbs. at cranking speed of 100 R.P.M.

CYLINDER HEAD: Tightening Torque and Cylinder Head Diagram—*See Ford Shop Notes.*

PISTONS—ALUMINUM ALLOY TYPE:—Split skirt, Cam ground type. Length 2.97". Recondition engines to take finished replacement pistons.

Weight—287-291 grams (stripped), 389.5-396.5 grams with rings and pin.

Removal—Pistons and rods removed from above.

Clearance—.002" Min., .003" Max. See Fitting Pistons.

Replacement Pistons:—*See Ford Special Shop Notes.*

Fitting New Pistons:—Use .002" feeler ½" wide inserted between piston and cylinder wall at right angles to pin on side opposite slot. Pull to withdraw feeler should be 6-10 lbs. NOTE—On engines with inserted hardened sleeves, use .0025" feeler with 6-10 lbs. pull.

Installing Pistons:—Slot to left (viewed from driver's seat) for all pistons.

PISTONS—STEEL ALLOY TYPE:—Heat treated, steel-alloy, Cam ground type with domed head and cut-away skirt. Recondition cylinders to take finished replacement pistons.

NOTE—Original equipment steel-alloy pistons furnished as an assembly with fitted pins and connecting rods. For replacement, separate pistons, pins, and connecting rods must be used. Piston assembly with fitted pins and rods discontinued.

Replacement Pistons:—*See Ford Special Shop Notes.*

Fitting New Pistons:—Use .0025" feeler ½" wide inserted between piston and cylinder wall at right angles to pin. Pull required to withdraw feeler must be 7-12 lbs. NOTE—On engines with inserted hardened sleeves, use .003" feeler with 7-12 lbs. pull.

PISTON RINGS—ALL PISTONS:—Two compression, one oil control ring per piston, all above pin. Oil ring groove drilled with eight ⅛" oil drain holes (slot on each side also used on aluminum pistons).

Ring	Width	End Gap	Side Clearance
Compr. #1	.0915-.092"	.012-.017"	.0025-.003"
Compr. #2	.0915-.092"	.012-.017"	.002-.0025"
Oil Contr.	.1545-.155"	.012-.017"	.0015-.002"

PISTON PIN—ALUMINUM PISTONS:—Diam.—.7501-.7504". Length 2.780". Pin floats in piston & rod and is held by retaining ring in connecting rod. Heat piston to 200° F. (dip in boiling water for one minute) to remove or install pins.

Pin Fit in Piston—.0001" tight to .0001" loose.

Pin Fit in Rod Bushing—.0001" clearance.

See Ford Shop Notes for Pin Fitting directions.

Installing Pins:—Use tapered pilot inserted ahead of pin to expand retainer in rod.

C NTINUED N NEXT PA E

ENGINE

C NTINUED FROM PRECEDIN PAGE

PISTON PIN—STEEL PISTONS:—Original equipment pins retained by plugs expanded in groove in piston bosses. These pins cannot be removed in the field.
Pin Diameter—.7501-.7504". **Length**—2.850".
Pin Fit in Piston—.0005" clearance.
Pin Fit in Rod Bushing—.0001" clearance.
See Ford Shop Notes for Pin Servicing Directions.

CONNECTING ROD—ALL PISTONS:—Length 7".
Weight—469-473 grams.
Crankpin Journal Diameter—1.999".
Lower Bearing—Copper-lead, Cadmium-nickel, or Cadmium-silver type. Bearing surface on outer face (in rod), and inner face (on crankpin). Bearing halves float in rods (side-by-side rod mounting).
Bearing Dimensions—Thickness .1095". Length 1.933". Bearings have flanged ends.
Clearance—.0015-.0035" (total diametrical), .010-.022" (total endplay).

Bearing Adjustment:—None (no shims). Replace bearings. Do not file caps. Use tool, Part No. V-131, to check bearing fit. Bearings should rotate freely with bearing caps tight.

Replacement Bearings:—*See Ford Shop Notes for Bearings for Oversize Rods and undersize crankpins.*

Installing Rods:—Rods and caps marked 'R1', 'L1' etc. Install rods in same numbered cylinder with mark on rod and cap together and pointing down.

CRANKSHAFT—FIRST TYPE:—Three bearing, integral counterweights. Weight 56.5 lbs.
Journal Diameters—1.999" (all bearings).
Bearing Type—Babbitt bearing surface integral with crankcase and bearing caps.
Clearance—.001-.003".

Bearing Adjustment:—None (no shims). Do not file bearing caps. Engine must be taken down and new bearings poured in crankcase and caps.

End Thrust:—Taken by #3 (rear) main bearing. Endplay .002-.006". Adjusted by replacing bearing.

CRANKSHAFT—SECOND TYPE:—Larger journal diameters and heavier than first type.
Journal Diameters—2.399" (all bearings).
Bearing Type—Removable steel-backed, copper-lead lined. Bearings furnished for service std., .003", .010" undersize.
NOTE—Install bearings with tongue or lug in groove and assemble caps so that groove in block and cap are on same side.
Clearance—.001-.003".

Bearing Adjustment:—None (no shims). Replace bearings. Do not file bearing caps.

Replacement Bearings:—*See Ford Shop Notes for Undersizes and special long rear bearings.*

End Thrust:—Same as for first type above.
NOTE—New design oil pan with greater clearance for main bearing studs used with this crankshaft. Interchangeable with old pan. Old pan can be used with new crankshaft by denting pan with ball-pein hammer to increase clearance.

CAMSHAFT:—Three bearing. Hellical gear drive.
Journal Diameters—1.797" (all bearings).
Bearing Type—Steel-backed, babbitt-lined.
Bearing Clearance—.001-.002".

End Thrust:—Taken by gear hub and front bearing and by hub and cover plate. Endplay .005". Adjusted by replacing bearing or cover plate.

Timing Gears:—Crankshaft gear alloy steel. Camshaft gear Bakelized Fabric. Backlash between gears .004" maximum.

Camshaft Setting:—Mesh crankshaft gear tooth marked 'O' with camshaft gear space marked '/'.

VALVES:—	Head. Diam.	Stem.Diam.	Length
All Valves	1.537"	3105-.3115"	4.750-4.751"

	Seat Angle	Lift	Stem Clearance
All Valves	45°	.292"	.0015-.0035"

See Ford Special Shop Notes for Valve Servicing data.
NOTE—High tungsten chrome alloy steel exhaust valve seat inserts are used.

Valve Guides:—Split type. See Valve Assembly Removal.

Valve Lifters:—Alloy-iron type operating in reamed holes in block. Serviced by installing oversize lifters.
Diameter—.999-.9995". **Clearance**—.0005-.001".

Valve Springs:—Free length 2.42". See Valve Assembly removal below.

	Spring Pressure	Spring Length
Valve Closed	37-40 lbs.	2.13"
Valve Open	76-80 lbs.	1.84"

Valve Assembly Removal:—Insert end of V-78 bar type valve lifter between spring coils to engage flanged lower end of guide, pry down on guide until 'C' washer at upper end can be removed, remove assembly from above. Use special fixture V-130 to compress spring and remove spring retainer. Install valves in same manner.

VALVE TIMING

Tappet Clearance: .0125-.0135" for all valves. No adjustment. Grind off valve stem end if clearance insufficient or replace valves if excessive.

Valve Timing: See Camshaft Setting above.
Intake Valves—Open 9°30' BTDC. Close 54°30' ALDC.
Exh. Valves—Open 57°30' BLDC. Close 6°30' ATDC.
To Check Valve Timing—No flywheel marks or other means provided to check valve timing. If dead center point for any piston is established on flywheel, intake opening for valve in this cylinder will be approximately 2.96 teeth before this point with piston .0327" before top dead center.

LUBRICATION

LUBRICATION:—Pressure System. Gear type oil pump located in oil pan at rear of engine.
1936 NOTE—Two types of oil pumps used. Interchangeable except that oil return pipe from rear main bearing must be removed when new type oil pump installed.
Normal Oil Pressure—30 lbs. at 2000 RPM.
Oil Pressure Regulator—Located under plug directly above front camshaft bearing. Operates at 30 lbs. Not adjustable.
Oil Pressure Gauge—King-Seeley Electric
Ford No. 48-9273 (dash unit—Deluxe Pass. & Truck).
Ford No. 48-9278 (engine unit).
See Miscellaneous Section for complete data.
NOTE—Std. Passenger Car & Comm'l. not regularly equipped. Part No. 68-18426 gasoline gauge and oil pressure gauge assembly may be installed replacing regular gasoline gauge. Same engine unit as above.
Crankcase Capacity—5 qts.

CLUTCH

Long Model 9CF-CI (Pass. Cars & Comm'l), 11CF-CI (Trucks). Single plate, dry disc, semi-centrifugal type.
See Clutch Section for complete data.

Facings—Molded asbestos, 2 required.

	Inside Diam.	Outside Diam.	Thick.
Pass. Cars	5.76"	9.0"	.140"
Trucks	6.5"	11.0"	.140"

Pedal Adjustment—Free movement of pedal ¾-1" To adjust, remove clevis pin in end of clutch lever connecting link, turn clevis.

NOTE—Greater pedal clearance required on 9CF and 11CF semi-centrifugal clutches to provide proper release bearing clearance.

Removal:—Disconnect rear spring at frame connection in center, take out clutch housing screws, slide rear end and transmission to rear as a unit exposing clutch, take out capscrews mounting clutch on flywheel.

FRONT SUSPENSION

Front Suspension:—Conventional 'I' beam section front axle with Reverse-Elliott ends and transverse cantilever spring.

Kingpin Inclination—8° crosswise.

Caster—9° Max., 4½° Min. (Pass. Cars), 5° Max., 3° Min. (Trucks). Must be alike within ½°. No adjustment provided.

Camber—1° Max., ¼° Min. No adjustment.

Toe In—1/16" (Pass. cars), 0" (Trucks). On trucks, toe in increases with load and should be set with truck empty. Adjust all models by loosening tie rod clamp bolts and turning rod.

Steering Geometry (Toe out on turns)—Inner wheel turned 23 1/3° (Pass. Cars), 22 2/3° (131½" W.B. Trucks), 22¼° (157" W.B. Trucks), outer wheel turned 20° (all models). Allowable variation ½°.

STEERING GEAR

Steering Gear: Gemmer model. Worm-and-Sector type.
See Steering Gear Section for complete data.

BRAKES

BRAKES:—**Service**—Own make. Mechanical type. Hand lever applies all four service brakes (Pass.), or operates independent rear wheel brake (Trucks).
See Brake Section for complete data.

Drum Diameter—12" (Pass. & Comm'l), 14" (Trucks).

Lining (Pass.)—Semi-moulded. Width 1.75". Thickness .185". Length per shoe 13.25".

(Truck)—Width 2.5". Thickness .25". Length per shoe 17.5".

Hand Brake:—See Service Brakes above.

Lining (Trucks)—Width 1.5". Thickness .187". Length per wheel 41.1".

OIL PAN REMOVAL:—*See Ford Shop Notes.*

MODEL IDENTIFICATION

Model	Year	Body Type
73	1937	Commercial Chassis
74	1937	Passenger Cars
75	1937	Truck (131" WB)
82A	1938	Passenger Cars
82C	1938	Commercial Chassis
82Y	1938	1 Ton Truck (122" WB)

SERIAL & ENGINE NUMBER:—Stamped on top of clutch housing and on left frame side member in front of dash bracket.

TUNE-UP

COMPRESSION: Ratio—6.6-1 Aluminum Head.
Pressure—158 lbs. at 2800 RPM. maximum or 116 lbs. at cranking speed.

VACUUM READING:—18-20" steady reading with engine idling at 5-7 M.P.H.

FIRING ORDER: 1-5-4-8-6-3-7-2. See diagram for cylinder numbering and spark plug cable connections.

SPARK PLUGS: Champion Type H-10. 14 mm. Metric **Gaps**—.025".

IGNITION: See Coil, Condenser, and Distributor.
Breaker Gap—.014-.016". **Cam Angle** 36° (closed—both sets operating together).
Automatic Advance—*See Distributor.*

IGNITION TIMING: See Ignition Timing.
Std. Setting—4° BTDC. No flywheel marks provided (see Ignition Timing for method of setting ignition and also Vacuum Brake Adjustment).

CARBURETION: See Carburetor & Carb. Equipment.
Idle Setting—Both idle screws midway between "miss" and "roll" points. Idle speed 5-7 MPH.
Float Level—Fuel level 15/32" below top of bowl.
Accelerating Pump—Inner hole—Summer, Outer hole—Winter.

Fuel Pump Pressure: 3½ lbs. maximum.

VALVES: See Valve Timing.
Tappet Clearance—.011-.012". No adjustment.

STARTING: See Battery, Starter, Generator, and Regulator (when used).

IGNITION

Ignition Switch:—Oakes Hershey type co-incidental ignition switch and steering post lock.
1938 Type—New type Igniton Lock Assembly No. *301665, Ford No. 81A-3676 (Pass. Cars), 81C-3676* (Comml. & 1 Ton). Ignition Switch No. 301683 (all models).
Lock Cylinder (1938)—Hurd or Briggs & Stratton No. 80000, Ford No. 81A-3686A (with 2 keys). Key Series FJ000-FJ999, FX000-FX999. Groove No. 17.

COIL: Ford No. 78-12036 or 81A-12036. Mounted on top of distributor as part of ignition unit assembly.
Ignition Current—5 amperes (stopped).
Resistor Unit—Part of No. 40-12250 assembly (includes fuse block) mounted on dash and connected in coil primary circuit.

CONDENSER: Ford Part No. 78-12300 (78-12036 Coil), 81A-12300 (81A-12036 Coil).
Capacity—.33-.36 microfarad.

DISTRIBUTOR: Ford No. 78-12127 (less ignition coil, caps and plates). Double breaker, 8 lobe cam, full automatic advance type with Vacuum Brake Control (see Ignition Setting for adjustment). Same design as used previously on Ford V8 engines (one set of contacts used to load coil, one set for ignition timing—no adjustment required).

Breaker Gap—.014-.016" (both sets). Use special two step feeler to set gap, first .014" step 'go', second .016" step 'no go'. Contact adjustment same as for second type 1936 ignition unit (eccentric adjusting screw).

Cam Angle—36° closed. 9° open. For both sets operating together with correct coil-loading lead.

Breaker Arm Spring Tension—20-24 ounces.

Automatic Advance
(High Vacuum or Vacuum Brake Inoperative)

Distributor Degrees	R.P.M.	Engine Degrees	R.P.M.
Start	200	0	400
2	300	4	600
3	375	6	750
5	600	10	1200
8	950	16	1900

Removal:—Ignition unit mounted on front of engine. To remove, disconnect vacuum line, take off caps, take out screws in mounting flange.

IGNITION TIMING

IGNITION TIMING:—

	Flywheel Deg.	Piston Position
All Engines	4° BTDC	.0048" BTDC

NOTE—See Vacuum Brake Setting below for adjustment dependent on type of service and fuel used.

To Set Timing—No flywheel marks provided and timing should be set with piston on top dead center. With #1 piston on top dead center entering power stroke, loosen timing adjusting screw on left hand side of ignition unit housing, place screw in retard position at lower end of slot, move screw slowly up until timing contacts begin to open, note graduation on plate under screw head which is in line with reference mark on housing, move screw up exactly one

CONTINUED N NEXT PAGE

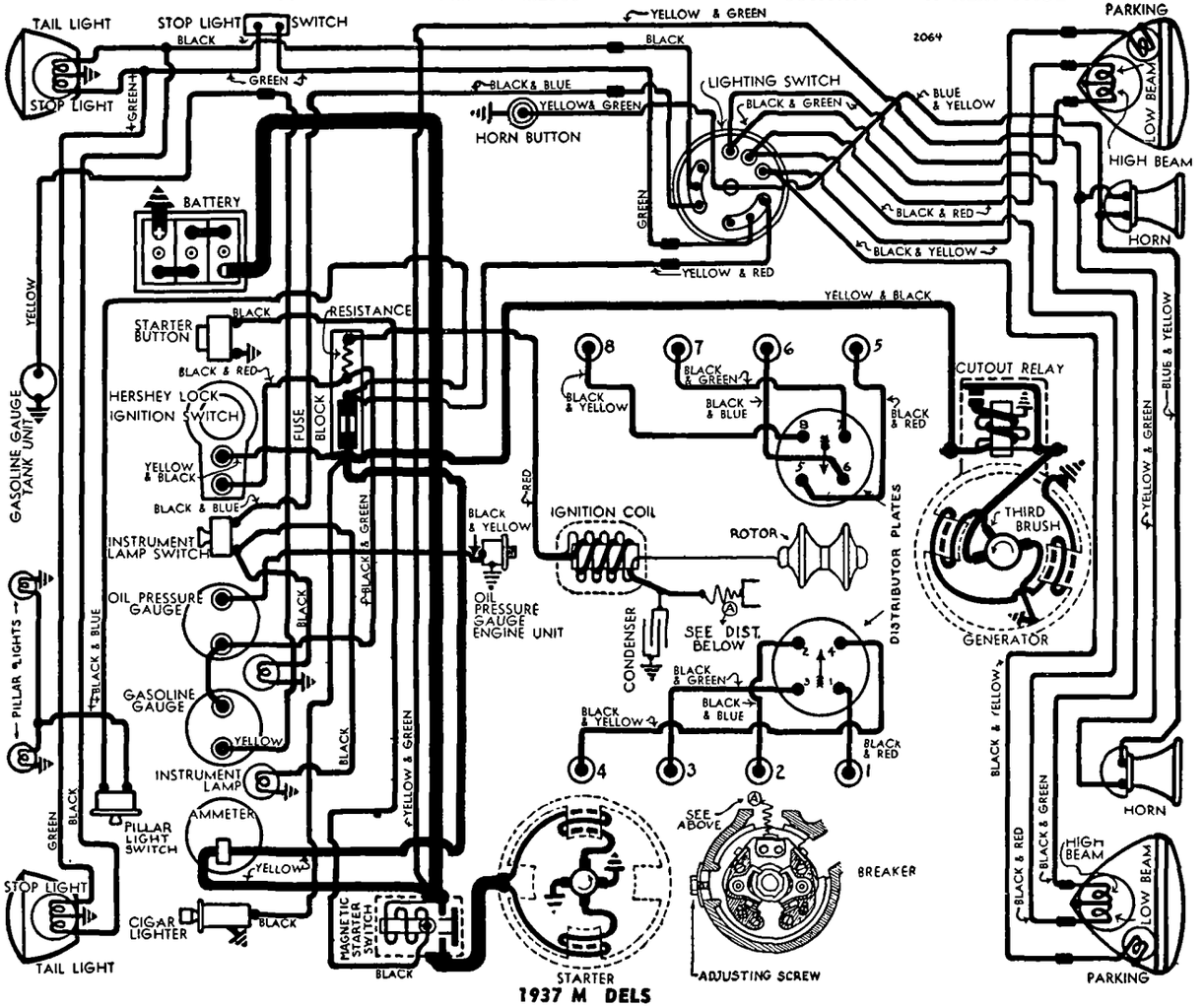

CONTINUED FROM PRECEDING PAGE

additional graduation, tighten screw. This provides correct 4° BTDC. ignition timing.

Vacuum Brake Setting:—To adjust, loosen locknut, back off adjusting screw until engine 'pings' under load, turn screw in just enough to eliminate ping, tighten locknut. When adjusted on Stroboscope, vacuum brake should retard spark to peepsight (set at 2°) at 950 RPM.

CARBURETOR

Stromberg Model EE-7/8. Dual, double barrel, downdraft type. Ford numbers for models used and service for which intended are as follows:

Service	Carburetor
Standard Equipment	52-9510-B
Special Service	52-9510
Altitude (5000-10000')	52-9510-C
Altitude (10000-15000')	52-9510-D
Altitude (Over 15000')	52-9510-E

See article in Carburetor Section for complete data and Jet Calibrations for each model.

Settings (Idle Setting, Float Level, and Accelerating Pump): *See Tune-Up.*

Fast Idle—Integral with carburetor. Operative with choke valve closed. No adjustment required.

CARB. EQUIPMENT

Air Cleaner: AC No. 1528238 oil-wetted type Std., United or Donaldson oil-bath type Optl.

Fuel Pump: AC Type R, No. 1523257, Ford No. 52-9350-B. Diaphram type.
For complete data, refer to Carburetion Equip. Index.

Gasoline Gauge:—King-Seeley Electric. Ford Part No. Dash Unit—Ford No. 78-9280 (1937), 81A-9280-A (1938). Tank Unit—Ford No. 78-9275 (1937-38 Pass. Cars & Comml.), 79-9275A (1937 First 2500 Trucks), 79-9275B (1937-38 After first 2500 Trucks).
For complete data, refer to Carburetion Equip. Index.

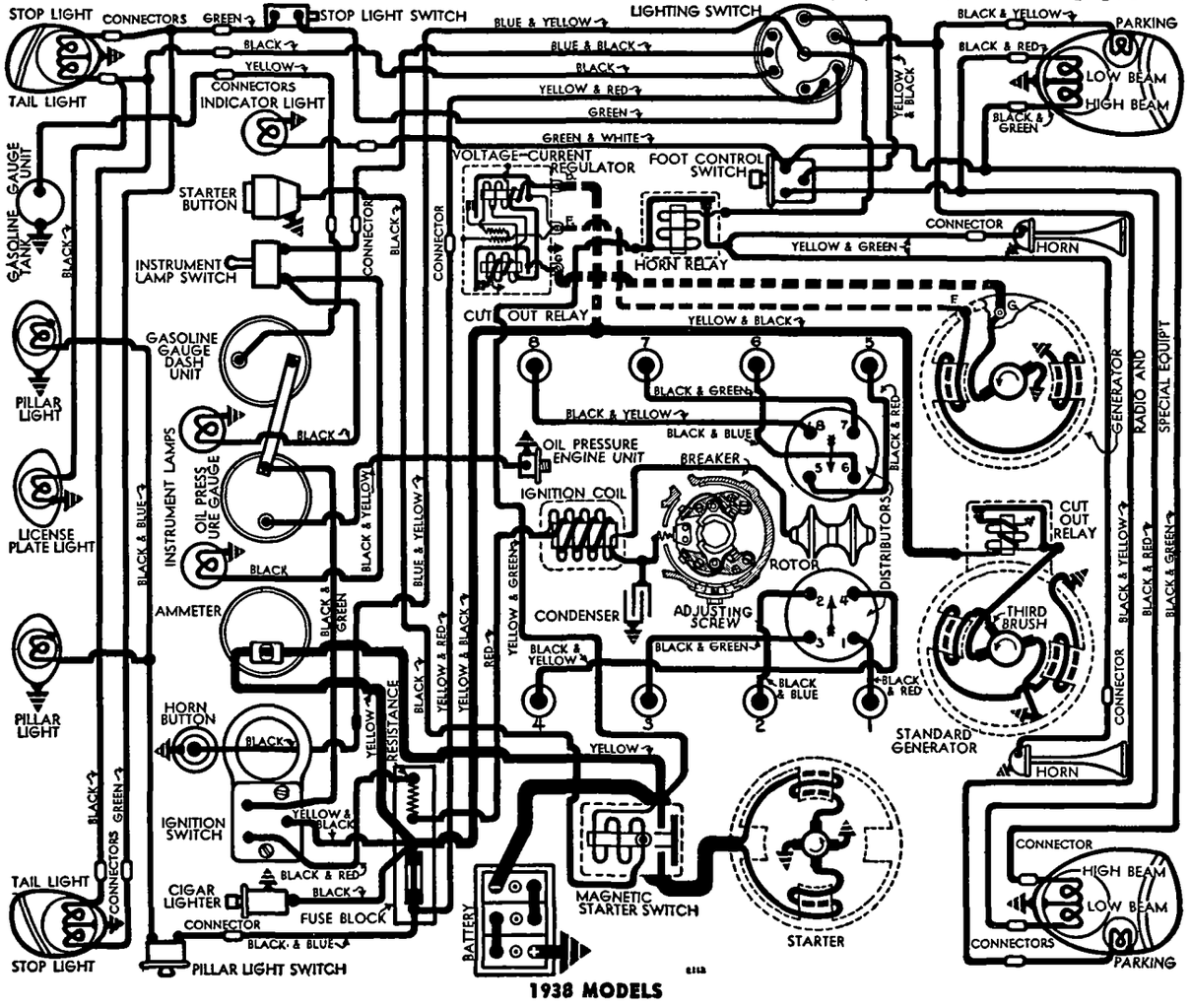

1938 MODELS

BATTERY

Ford No. 78-10665-A (1937), 81A-10655-A (1938). 6 Volt, 17 Plate, 100 ampere hour (20 hr. rate).
Starting Capacity—126 amperes for 20 minutes.
Zero Capacity—300 amperes for 3.3 minutes.
Grounded Terminal—Positive (+) terminal.
Location—Mounted in recess in cowl on right side of engine compartment.

STARTER

Ford No. 52-11002. Armature No. 52-11005.
Starter Brace (to correct Thumps or Pounds) *See Ford Special Shop Notes for data.*
Drive (60 Models). Barrel Type Bendix, Ford Nos. 52-11350,B,C. See Electrical Equipment Section for differences and data on each type.
Rotation—Counter-clockwise at commutator end.
Brush Spring Tension—2 lbs. each.
Cranking Engine—100 RPM., 190-215 amperes.

Performance Data.

Torque.	R.P.M.	Volts.	Amperes.
4 ft. lbs.	1070	4.6	200
8 "	660	4.3	340
12 "	300	3.65	465

Starting Switch:—R.B.M. Model 2220, Ford No. 78-11450 (except Bus), 70-11450 (Bus). Magnetic type mounted on right side of engine dash above starter. Controlled by pushbutton switch on instrument panel, Ford No. 78-11500 (1937), 81A-11500 (1938).

Removal:—Starter mounted on right front face of flywheel housing. To remove, take off pan at right of engine, take out two through bolts on endplate.

GENERATOR

STANDARD

1937 Car & Truck Models

Generator	Armature	Pulley Diam.
①BB-10000-D	18-10005	3.68"
②74-10000-HA	74-10005-HA	3.68"
③74-10000-HB	74-10005-HB	3.68"

1938 Car & Truck Models

82A-10000-A	79-10005	3.5"
③82A-10000-B	82A-10005-A	3.5"
②82A-10000-C	82A-10005-B	3.5"

①—Replacement Generator 82A-10000-A.
②—Replacement Generator 82A-10000-E.
③—Replacement Generator 82A-10000-D.

Type—Third brush control type. Air cooled.
Maximum Charging Rate—See Performance Standards below. Reached at 28-30 M.P.H. depending on pulley used on each model.
Charging Rate Adjustment—Take off commutator cover band, shift third brush by hand, counter-clockwise to increase, or clockwise to decrease charging rate. Brush held in position by friction.

Performance Standards

BB-10000-D		82A-10000-A	
Amperes	Eng. R.P.M.	Amperes	Eng. R.P.M.
Start	500	Start	500
17	1300	17	1300
11	3000	11	3000
82A-10000-B		**82A-10000-C**	
Start	525	Start	350
26	1250	18	1000
16	3000	16	3000
74-10000-HA		**74-10000-HB**	
Start	350	Start	500
18	950	26	1200
16	3000	16	3000

Rotation—Counter-clockwise at commutator end.
Brush Spring Tension—26-28 ounces.
Field Current—4.92-6 amperes at 6.0 volts (BB-10000-D, 82A-10000-A), 3.43-4.17 amperes at 6.0 volts (Others). Field resistance 1.0 ohms at 70° (BB-10000-D, 82A-10000-A), 1.44 ohms at 70° (All others).

Removal: Take off nut on bracket stud.

Belt Adjustment:—Loosen nut on bracket flange mounting stud, move generator up until total side movement on belt midway between generator and water pump pulleys is 1", tighten nut.

GENERATOR

SPECIAL EQUIPMENT

GENERATORS (RADIO & SPECIAL EQUIP.): Two brush type with vibrating voltage and current regulation. Ventilated. Models used as follows:

Generator	Armature	Pulley Diam.
82A-10000-D	78-10005-A, C	3.58"
82A-10000-E①	78-10005-B, D	3.58"

①—Low Speed (Taxi, Door-to-door Dlvry. etc.).
Charging Rate Adjustment—None. See Regulator.
Maximum Charging Rate—Controlled by regulator (dependent on battery condition and load). To check generator capacity, disconnect field lead at generator, connect both generator terminals together, use "BRS" set of rheostat connected across battery terminals to apply load until voltage is exactly 6 volts. Operate generator at 1000 RPM, check output with ammeter in charging line. After making test, restore original field connections.
Do not operate generator in service with terminals connected together (eliminates all regulator action)

Performance Standards

82A-10000-D		82A-10000-E	
Amperes	Eng. RPM	Amperes	Eng. RPM
Start	500	Start	350
28	1250	20	1000
28	2500	20	2500

Rotation—Counter-clockwise at commutator end.
Field Current—1.82-2.22 amperes at 6.0 volts (field resistance 2.7 ohms at 70°F).

Removal & Belt Adjustment: Same as given above.

SPECIAL GENERATORS:—Other Makes—*Refer to Electrical Equipment Index for 'Special Generator' article for complete data on special Generators and Regulators which may be found on these models.*

CUTOUT RELAY

CUTOUT RELAY:—Ford No. B-10505 (Std. on all models). Mounted on generator field frame. Generator field lead grounded to mounting screw.
Cuts In—5.8-6.3 volts.
Cuts Out—3 ampere maximum discharge.
Contact Gap—.015-.020".
Air Gap—.010-.015" with contacts closed.

REGULATOR

Ford Model No. 81A-10505. Used with Special Equipment Generators (above). Consists of vibrating Voltage-and-Current Regulator and Cutout Relay
NOTE—This type superseded by 01A-10505-C.

Cutout Relay

Specifications same as standard model (above).

Voltage-and-Current Regulator

Voltage Setting—7.6 volts max. at 70°F.
Current Setting—30 amperes (82A-10000D Gen.), 23 amperes (82A-10000E Gen.).
Regulator Checking—*See article in Electrical Equipment Section for complete instructions.*

LIGHTING

LIGHTING:—Headlamps—Corcoran-Brown 'Two-Lite', Pre-focused type. Upper and lower beams controlled by lighting switch at lower end of steering column. (1937), beam selector switch on toeboard (1938).
Headlamp Adjustment—With upper beams lighted, aim each headlamp straight ahead with top of beam at lamp center height at 25 feet (Pass. Car).
Beam Indicator (1938)—Red Jewel at upper left corner of instrument panel. Lighted whenever upper beams in use.

Switches—1937

Lighting—R.B.M. Model B-11654-B, Ford No. B-11657 (Switch Body), B-11655-B (lower cover). Complete switch furnished only as assembly with wiring harness as follows: 78-11653 (Pass. Cars), 77-11653A (Comml. Std.), 77-11653B (Comml. Del.), 79-11653A (Truck Std.), 79-11653B (Truck Del.).
Instrument—Ford No. 78-13740 (Pass. Cars), 50-13740 (Comml. & Truck).
Dome Lamp—Ford No. B-13752A (All models).
Stop Lamp—Ford No. 48-13480 (Pass. Car & Comml.), BB-13480A (Truck).

Switches—1938

Lighting—Wiring & Plate Assy. Ford No. 81A-11647 (Pass. Cars), 81C-11647 (Comml.), 81T-11647 (Truck). Switch Body & Contact Assy. Ford No. 81A-11657 (All models).
Beam Selector—Ford No. 81A-11657
Instrument Light—Ford No. 50-13740
Stop Light—Ford No. 48-13480 (Pass. Car & Comml.), 81T-13480 (Truck).

MISC. ELECTRICAL

FUSES:—Fuse Block—R.B.M. Model 40-12250. Ignition resistor unit mounted on assembly.
Fuse Capacity—20 ampere.

HORNS: Sparton. Vibrator type.

Horn Relay: Ford No. 81A-13842.
Contact Closing Voltage—3.5-4.5 volts.
Current Draw—Approximately ¾ ampere.

ENGINE

ENGINE THUMP OR POUND CORRECTION:—*Refer to Ford Shop Notes for data on installation of special Starter Support Brace.*

ENGINE SPECIFICATIONS:—Own Model 60. Eight cylinder, 90° Vee, 'L' head type.
Bore—2.6". **Stroke**—3.2".
Displacement—136 cu. ins. **Rated H.P.**—21.6.
Developed Horsepower—60 at 3500 RPM.
Compression Ratio—6.6-1 Std. aluminum head.
Compression & Vacuum Reading—*See Tune-Up.*
CYLINDER HEAD TIGHTENING: *See Ford Shop Notes.*
PISTONS: Cast alloy steel, cam ground type.
Weight—226-231 grams (stripped), 302.65 grams (with rings and pin).
Removal—Pistons and rods removed from above.
Clearance—See Fitting New Pistons.
Replacement Pistons:—*See Ford Special Shop Notes.*
Fitting New Pistons:—Use .002" feeler inserted between piston and wall at right angles to pin bosses. Pull required to withdraw feeler must be within 7-12 lbs. NOTE—On engines with inserted hardened sleeves, use .0025" feeler with 7-12 lbs. pull.

PISTON RINGS:—Two compression, one oil control ring per piston, all above pin. Oil ring groove drilled with oil drain holes. Replacement rings furnished standard and .005", .010", .020", .025" oversize.

Ring	Width	End Gap	Side Clearance
Compr. #1	.092-.0925"	.012-.017"	.0025-.003"
Compr. #2	.092-.0925"	.012-.017"	.002-.0025"
Oil Cont	.1545-.155"	.012-.017"	.0015-.002"

PISTON PIN:—Diameter—.6876-.6879". **Length**—2.365-2.368". Pin floats in piston and rod. Held by locking ring at each end. Pin hole in rod bronze-bushed.
Pin Fit in Piston—.0004" clearance.
Pin Fit in Rod Bushing—.0001" clearance. Bushing diamond-bored to diameter of .6878-.6881".
See Ford Shop Notes for Pin Fitting directions.

CONNECTING ROD:—Length 6.125". Weight 268-272 grams. **Lower Bearing Diameter**—1.800".
Crankpin Journal Diameter—1.599".
Bearing Type—Steel-backed, special alloy-lined. Bearing floats in both rods (side-by-side mounting) with bearing surface on inner and outer faces.
Bearing Dimensions—Length 1.535". Thick .09995".
Clearance—.0005-.0025" (total diametrical), .010-.022" (total sideplay).
Bearing Adjustment:—None (no shims). Replace bearings. Do not file caps. Bearings must turn freely with caps tight. Use special tool to check bearings.
Replacement Bearings:—*See Ford Shop Notes for Bearings for Oversize Rods and undersize crankpins.*
Installing Rods:—Rods and caps marked 'R1', 'L1' etc. Install rods in same numbered cylinders with marks on rods and caps together, pointing down.

CRANKSHAFT:—Cast-steel. Three bearing type with integral counterweights.
Journal Diameters—1.999" (all bearings).
Bearing Type—Steel-backed, babbitt-lined.
Clearance—.0005-.0025".
Bearing Adjustment:—None (no shims). Replace bearings. Do not file bearing caps.
End Thrust:—Taken by #3 (rear) main bearing. Endplay .002-.005". Adjust by replacing bearing.
Replacement Bearings:—*See Ford Shop Notes for Undersize and special long rear bearings.*

CAMSHAFT:—Three bearing. Helical gear driven.
Journal Diameters—1.498" (all bearings).
Bearings—Steel-backed, babbitt-lined bushings.
Clearance—.002".
End Thrust:—Taken by gear hub and front bearing and by gear hub and cover plate. Endplay .004-.008". Adjusted by replacing bearing or cover plate.
Timing Gears:—Crankshaft gear cast alloy-steel. Camshaft gear Bakelized fabric.
Camshaft Setting:—Mesh crankshaft gear tooth marked '0' with camshaft gear space marked '/'. Camshaft gear hub similarly marked and both marks must be in line.

VALVES:—	Head Diameter	Stem Diameter	Length
All valves	1.281"	.2785-.2795"	4.375"

	Seat Angle	Lift	Stem Clearance
All valves	45°	.251"	.0015-.0035"

NOTE—Valve Seat inserts used for Exhaust Valves.
See Ford Special Shop Notes for Valve Servicing data.
Valve Guides:—Split type. See Valve Assembly Removal.
Valve Lifters:—Alloy iron type operating in reamed holes in block.
Diameter—.8290-.8295". **Clearance**—.0005-.001".
Valve Springs:—See Valve Assembly Removal.

	Spring Pressure	Spring Length
Valve Closed	26-30 lbs.	2.05"
Valve Open	48-52 lbs.	1.80"

Valve Assembly Removal: *See Ford Shop Notes.*

CONTINUED N NEXT PAGE

CONTINUED FR M PRECEDIN PAGE

VALVE TIMING

Tappet Clearance: .011-.012" All Valves. No adjustment. Replace valves if clearance excessive, grind off end of valve stem if clearance insufficient.

Valve Timing:—See Camshaft Setting above.

Intake Valves—Open 9°30' BTDC. Close 54°30' ALDC.

Exh. Valves—Open 57°30' BLDC. Close 6°30' ATDC.

To Check Valve Timing—No flywheel marks provided. If dead center point for any cylinder established on flywheel, intake valve for this cylinder should open approximately 3.22 flywheel teeth befor this point with piston .0270" BTDC.

LUBRICATION

LUBRICATION:—Pressure system. Gear type oil pump mounted on front main bearing cap in crankcase Bakelite drive gear meshes with crankshaft gear.

Normal Oil Pressure—30 lbs. at 2000 RPM.

Oil Pressure Regulator—Opens at 30 lbs. Located above front camshaft bearing between cylinder banks. Overflow from valve oils timing gears. Not adjustable.

Crankcase Capacity—4 qts.

Oil Pressure Gauge:—King-Seeley Electric. Ford No. Dash Unit—No. 78-9273 (1937), 81A-9273-A (1938) Engine Unit—No. 48-9278 (1937-38)

NOTE—Dash unit serviced by 81A-9273-A (1938

See Miscellaneous Section for complete data.

COOLING

COOLING SYSTEM:—**Water Pump**—Centrifugal, packless type, 2 used (1 pump for each cylinder bank).

See Water Pump Section for complete data.

Removal—Slack off belt adjustment, unscrew large mounting nut behind pulley, pull pump out.

Thermostat:—In outlet hose for each bank (2 used).

Water Capacity: 15 qts. (1937-38 Pass. Cars, 1937 Comml.), 16 qts. (1938 Comml.), 24 qts. (Truck).

CLUTCH

PASSENGER CARS

Long Model 8½CB-CS6. Single plate, dry disc type. NOTE—Model 9CF-CS Optl. on 1938 Sedan Delivery.

See Clutch Section for complete data.

Facings—Molded type, 2 required. Inside diameter 6". Outside diameter 8½". Thickness .125".

Adjustment:—Clutch pedal free travel should be ¾-1". To adjust, remove clevis pin at end of clutch pedal adjusting rod, turn clevis on rod.

Removal:—Disconnect rear spring at frame connection in center, rear shock absorber links, rear brake cables, speedometer cable. Support engine, take out rear engine mounting bolts, take out clutch housing mounting screws, slide drive unit (transmission and rear end) to rear to expose clutch. Take out clutch mounting screws in cover flange on flywheel.

CLUTCH

COMMERCIAL & TRUCKS

Long Model 9CF-CS. Semi-centrifugal, single plate, dry disc type.

See Clutch Section for complete data.

Facings—Molded (asbestos composition) type, 2 required. I. D. 5¾". O. D. 9". Thickness .137".

Adjustment & Removal:—Same as for Model 74 (above) except that pedal travel should be 1.5-1.75".

Truck Models with Front Propeller Shaft—On these models it is not necessary to disturb rear axle.

TRANSMISSION

3-SPEED TYPE

Own Make—Std. on All Models except 1937 Truck. Constant-mesh, synchro-mesh, helical gears (Second & High), sliding gear (Low & Reverse). Low and Reverse gears are spur type except on 1938 Pass Cars (82A). NOTE—Four-speed Transmission Optl. on Commercial Models (1937-38), Truck (1938).

See Transmission Section for complete data.

Removal:—Disconnect rear shock absorbers and brake cables, disconnect rear spring at frame connection in center, disconnect speedometer drive cable. Take out universal joint ball housing screws, slide rear end back to disengage drive shaft at splined joint of universal yoke. Support engine, take out rear engine mounting bolts, take out clutch housing screws, pull transmission straight back.

TRANSMISSION

4-SPEED TYPE

Own Make—Std. on 1937 Truck Model 75, Optl. on 1938 Truck & 1937-38 Commercial Models. Sliding spur gear type.

See Transmission Section for complete data.

Removal:—Take out all except top bolt in intermediate universal joint ball housing (frame bolts), remove all screws in front universal joint cover, slide cover back 6" on housing, take out screws in universal joint flange directly back of universal, disengage by pushing flange back on shaft against spring, take out remaining bolt at intermediate universal, pull shaft down at front to clear frame cross-member, pull forward until intermediate universal is free of shaft at spline joint, remove shaft assembly. Support engine, remove rear engine mounting bolts ,take out clutch housing mounting screws, pull transmission straight back and remove.

UNIVERSALS

Spicer. Steel Bushing Type (except Truck Model 75), Needle Bearing Type (75 '37). Single universal mounted in housing at rear of transmission case (all models), intermediate universal mounted on frame cross-member between front and rear propeller shafts (trucks only).

See Universals Section for complete data.

REAR AXLE

PASS. CARS & COMMERCIAL

Own Make. 3/4 Floating, spiral bevel gear type with straddle mounted pinion and torque tube drive.

See Rear Axle Section for complete data.

Ratio—4.44-1 Std., 4.11-1 & 4.55-1 Optl.

Backlash—.010" maximum. Adjusted by changing gasket thickness between axle housing and differential housing.

Removal:—Disconnect rear shock absorber links, rear brake cables, speedometer cable, and rear spring center connection on frame. Take out universal joint ball housing screws, pull axle assembly to rear to disengage drive shaft at splined joint in universal joint rear yoke.

Axle Shaft Removal—Remove wheels and wheel hubs, take out axle housing flange screws in differential housing, remove housing, dismantle differential, pull axle shafts out at inner end (shaft and differential side gear integral).

Wheel Bearing Adjustment—None.

REAR AXLE

TRUCKS

Own Make. Full-floating, spiral bevel gear type with straddle mounted pinion and torque tube drive.

See Rear Axle Section for complete data.

Ratio—6.67-1 Std., 5.14-1, 5.83-1 Optl.

Backlash—.004-.016".

Removal:—Same as for passenger car models (above) except that rear springs are semi-elliptic and drive shaft is disconnected at intermediate universal

Axle Shaft Removal—Remove rear wheel hub cap, take off nuts on eight hub studs which hold axle flange in place, install two special screws in tapped holes in flange, turn screws up evenly to break flange away from hub, back screws off, strike axle shaft flange at center to loosen cones on studs, remove cones, pull axle shaft out (does not disturb wheel bearing adjustment).

Wheel Bearing Adjustment:—Remove axle shaft (see above), unscrew outer bearing nut, remove adjusting nut retainer and grease retainer. Use special bearing adjusting wrench, turn inner adjusting nut up tight and then back off ⅛ turn, install retainer, grease retainer, outer bearing nut, turn outer nut up tight.

SHOCK ABSORBERS

SHOCK ABSORBERS:—Ford (Houde). Hydraulic type.

See Shock Absorber Section for complete data.

FRONT SUSPENSION

SEE 1937-38 FORD V8 "85" CAR PAGES FOR DATA

STEERING GEAR

Steering Gear: Gemmer Model 305. Worm-and-Roller type with "push-pull" adjustments.

See Steering Gear Section for complete data.

BRAKES

Service Brakes—Four wheel type. Own make, mechanical, two shoe, self-energizing type. New design with cable actuation for all wheels. Hand lever applies all four service brakes (131" Truck has separate hand brake band in each rear wheel).

See Brake Section for complete data.

PASS. CARS & COMMERCIAL

Drum Diameter—12". Cast iron alloy type.

Lining—Two types used. May be identified by brass wire (primary shoe), zinc wire (secondary shoe). (1937 models), Molded type—Primary Shoe, Woven type—Secondary Shoe (1938 models). Width 1.75". Thickness .185". Length per shoe 13.25".

Hand Brake:—See Service Brakes above.

ONE-TON TRUCKS

Drum Diameter—Cast Iron. 12" (front), 15.12" (rear wheel).

Lining—Width 1.75" (front), 2.5" (rear). Thickness .185" (front), .25" (rear). Length per shoe 13.25" (front), 18.41" (rear).

Hand Brake: See Service Brakes above.

OTHER TRUCKS

Drum Diameter—14". Cast iron type.

Lining—Brass wire type (all shoes). Width 2.5". Thickness .25". Length 17.5" per shoe.

Hand Brake:—Applies independent self-energizing band in each rear wheel.

Lining—Brass wire type. Width 1.5". Thickness .187". Length 41.12" per wheel.

OIL PAN REMOVAL:—*See Ford Shop Notes.*

MODEL IDENTIFICATION

Model	Year	Body Type
77	1937	Commercial Chassis
78	1937	Passenger Cars
79	1937	Truck (131½" & 157" WB)
81A	1938	Passenger Cars
81C	1938	Commercial Chassis
81Y	1938	1 Ton Truck (122" WB)
81T	1938	1½ Ton Truck (134" WB)
817T	1938	1½ Ton Truck (157" WB)
81U	1938	Dump Truck (134" WB)
81W	1938	C-O-E Truck (134" WB)
811W	1938	C-O-E Truck (101" WB)
811Z	1938	C-O-E Dump Trk (101" WB)
811T	1938	School Bus (191" WB)
817W	1938	C-O-E Truck (157" WB)

SERIAL & ENGINE NUMBER:—Stamped on top of clutch housing and on left frame side member in front of dash bracket.

TUNE-UP

COMPRESSION: Ratio—6.2-1 Cast iron or Aluminum. **Pressure**—140 lbs. at 2300 RPM or 113 lbs. at cranking speed of 100 RPM.

VACUUM READING:—18-20" steady at 5-7 M.P.H.

FIRING ORDER: 1-5-4-8-6-3-7-2. See diagram for cylinder numbering and spark plug cable connections.

SPARK PLUGS: Champion No. 18. 18 mm. Metric (1937), Type H-10. 14 mm. Metric type (1938). **Gaps**—.025"

IGNITION: See Coil, Condenser, and Distributor. Breaker Gap—.014-.016" **Cam Angle** 36° (closed—both sets operating together). **Automatic Advance**—8° max. at 950 RPM (distr.).

IGNITION TIMING: See Ignition Timing. Std. Setting—4° BTDC. No flywheel marks provided. See Ignition Timing for method of setting ignition and also Vacuum Brake Adjustment.

CARBURETION: See Carburetor & Carb. Equipment. Idle Setting—Both idle screws ⅝-¾ turn open (Stromberg Carb.), ⅞ turn open (Chandler-Groves Carb.). Idle speed 5-7 MPH. **Float Level**—Fuel level 15/32" (Stromberg Carb.), 11/16" (Chandler-Groves Carb.) below top of bowl. **Accelerating Pump (Stromberg)**—Inner hole—Summer, Outer hole—Winter. **Accelerating Pump (Chandler-Groves)**—Center hole Normal. Inner hole (Summer), Outer hole (Winter) for extreme hot and cold temperatures. **Fuel Pump Pressure:** 3½ lbs. maximum.

VALVES: See Valve Timing. Tappet Clearances—.010-.012" Intake, .014-.016" Exhaust. No adjustment.

STARTING: See Battery, Starter, Generator, and Regulator (when used).

IGNITION

Ignition Switch: Oakes Hershey type co-incidental ignition switch and steering post lock. **1938 Switch**—Oakes Steering Column & Ignition Lock Assembly No. 301665, Ford No. 81A-3676 (Pass. cars); No. 301685, Ford No. 81C-3676 (Comm'l. & 1 Ton); No. 301675, Ford No. 81T-3676 (Trucks). Ignition Switch No. 301683 (all models). **Lock Cylinder**—Hurd or Briggs & Stratton No. 80000, Ford No. 81A-3686-A (with 2 keys). Key Series FJ000-FJ999, FX000-FX999. Groove No. 17.

COIL: Ford No. 78-12036 or 81A-12036. Mounted on top of distributor as part of ignition unit assembly. **Resistor Unit**—On 40-12250 Fuse Block on dash. Connected in coil primary circuit. **Ignition Current**—4½-6 amperes (stopped). Ignition primary circuit resistance—1-1 1/3 ohms.

CONDENSER: Ford Part No. 78-12300 (78-12036 Coil), 81A-12300 (81A-12036 Coil). **Capacity**—.33-.36 microfarad.

DISTRIBUTOR: Ford No. 78-12127 (less ignition coil, and distributor plates). Double breaker, 8 lobe cam, full automatic advance type with Vacuum Brake Control (See Ignition Timing for adjustment). REPLACEMENT DISTRIBUTOR—Model No. 11A-12127 with different advance. See 1941 Ford V8 Passenger Car article for all data on this model. **Breaker Gap**—.014-.016" (both sets). Use special two step feeler—.014" step 'go,' .016" step 'no g .' **Cam Angle**—36° closed, 9° open. For both sets operating together with correct coil-loading lead. **Breaker Arm Spring Tension**—20-24 ozs. **Rotation**—Clockwise viewed from drive end.

Automatic Advance
(High Vacuum or Vacuum Brake Inoperative)

Distributor Degrees	R.P.M.	Engine Degrees	R.P.M.
Start	200	0	400
2	300	4	600
3	375	6	750
5	600	10	1200
8	950	16	1900

Removal:—Ignition unit mounted on front of engine. To remove, disconnect vacuum line, take off caps, take out screws in mounting flange.

CONTINUED ON NEXT PAGE

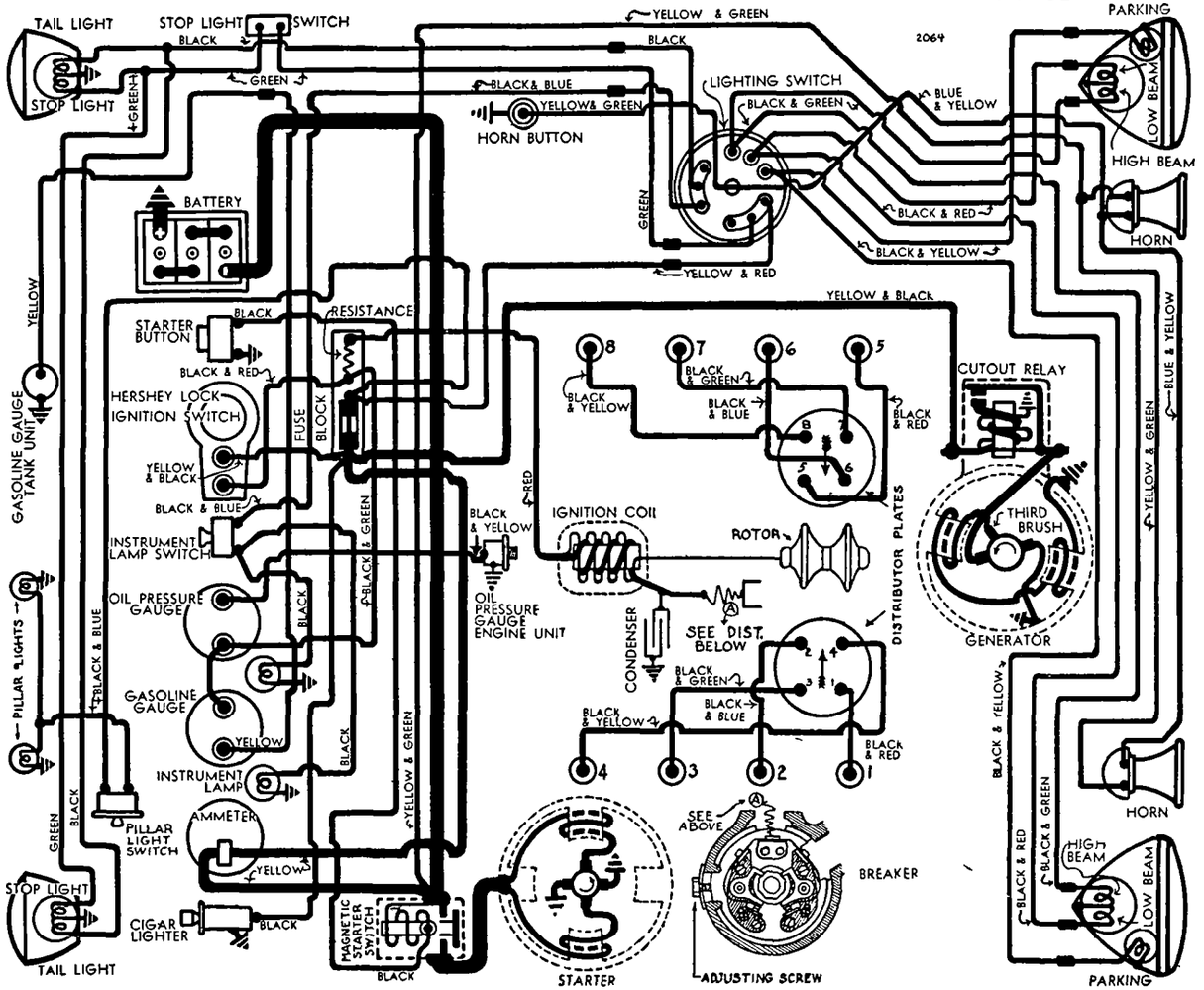

1937 MODELS

C NTINUED FR M PRECEDIN PAGE

IGNITION TIMING

IGNITION TIMING:—For each engine as follows (see Vacuum Brake Setting below for adjustment depending on type of service and fuel used).

	Flywheel Degrees	Piston Position
All '85' Engines	4° BTDC	.0058" BTDC.

To Set Timing—No flywheel marks provided and timing should be set with piston on top dead center. With #1 piston on top dead center entering power stroke, loosen timing adjusting screw on left hand side of ignition unit housing, place screw in retard position at lower end of slot, move screw slowly up until timing contacts begin to open, note graduation on plate under screw head which is in line with reference mark on housing, move screw up exactly one additional graduation, tighten screw. This provides correct 4° BTDC. ignition timing.

NOTE—Dead center position can be determined by inserting gauge rod in cylinder or by measuring to tops of #2 and #3 pistons (should be equal).

Vacuum Brake Setting:—To adjust, loosen locknut, back off adjusting screw until engine 'pings' under load, turn screw in just enough to eliminate ping. If adjusted on Stroboscope, vacuum brake should retard spark to peepsight (set at 2°) at 950 RPM. (78-12127 Distr.), 650 RPM. (11A-12127 Distr.).

CARBURETOR

Stromberg Model No. EE-1, Ford No. 67-9510-A or Holley (Chandler-Groves) Model AA-1, Ford No. 91A-9510A. Dual (double barrel) downdraft type.
NOTE—Model 91A-9510A replaced by 21A-9510A.
For complete data, refer to Carburetor Index.

Idle Adjustment—With engine warm, choke valve wide open, and Fast Idle inoperative, set throttle lever stopscrew for 5-7 MPH. idling speed, turn each idle adjusting screw (one for each barrel, adjust in succession) in until engine begins to miss, out until engine begins to roll, finally turn screw in slowly until engine fires smoothly. Final setting should be approximately ⅝-¾ turn (Stromberg), ⅞ turn (Chandler-Groves) from inner seated position. Readjust stopscrew for correct idling speed.
NOTE—Vacuum gauge recommended for idling adjustment. Set for highest steady gauge reading.

Accelerating Pump Setting (Stromberg)—Two ball studs provided for pump link connection:
'S'—Minimum Stroke, Summer operation.
'W'—Maximum Stroke, Winter operation.

Accelerating Pump Setting (Chandler-Groves)—Three holes provided for pump link connection:
Upper (Short Radius)—Min. stroke, Hot weather.
Center—Medium stroke, normal temperatures.
Lower (Long Radius)—Max. stroke, Cold weather.
NOTE—Link locked in pump rod by snap-lock. Pull link shaft out of pump rod to disengage lock.

Fast Idle (All Models):—Integral with carburetor. Operated by choke lever. No adjustment required.

CARB. EQUIPMENT

Air Cleaner: AC No. 1528237 Std., 1528395 Exp. Oil-wetted type. United or Donaldson heavy duty oil-bath type Optl.

Gasoline Gauge: King-Seeley Electric type. Ford No.
Dash Unit—78-9280 (1937 All Models), 81A-9280A (1938 Std. Pass. Cars, Comml. & Trucks), 81A-9280B (1938 Deluxe Pass. Cars).
Tank Unit—78-9275 (1937-38 Pass. Cars & Comml.), 79-9275A (1937 First 2500 Trucks), 79-9275B (1937-38 Trucks after first 2500), 70-9275 (Bus).
For complete data, refer to Carburetion Equip. Index.

Fuel Pump: AC Type R, No. 1523138 (1937), 1523307 Ford No. 68-9350 (1938). Diaphragm type.
For complete data, refer to Carburetion Equip. Index.

BATTERY

Ford No. 78-10665-A (1937), 81A-10665-A (1938). 6 volt, 17 plate, 100 ampere hour (20 hr. rate).
Starting Capacity—126 amperes for 20 minutes.
Zero Capacity—300 amperes for 3.3 minutes.
Grounded Terminal—Positive (+) terminal grounded to dash. **Engine Ground**—Ground strap between right rear cylinder head stud and dash.
Location—Battery mounted in cowl recess on right hand side under engine hood.

STARTER

Ford No. 18-11002. Armature No. 18-11005.
Starter Brace (to correct thumps or pounds)—*See Ford Special Shop Notes for corrective data.*
Drive—Inboard Bendix L11FX-10, Ford #B-11350.
Rotation—Counter-clockwise at commutator end.
Brush Spring Tension—2 lbs. each.
Cranking Engine—100 RPM., 190-215 amperes.

Performance Data

Torque	R.P.M.	Volts	Amperes
4 ft. lbs.	1070	4.6	200
8 "	660	4.3	340
12 "	300	3.65	465
14 "	Lock	3.5	500

Starting Switch:—R.B.M. Model 2220, Ford No. 78-11450. Magnetic type mounted on right side of engine dash above starter. Controlled by pushbutton switch on instrument panel, Ford No. 78-11500 (1937), 81A-11500 (1938).

Removal:—Starter mounted on right front face f flywheel housing. To remove, take off pan at right of engine, remove through bolts on comm. endplate.

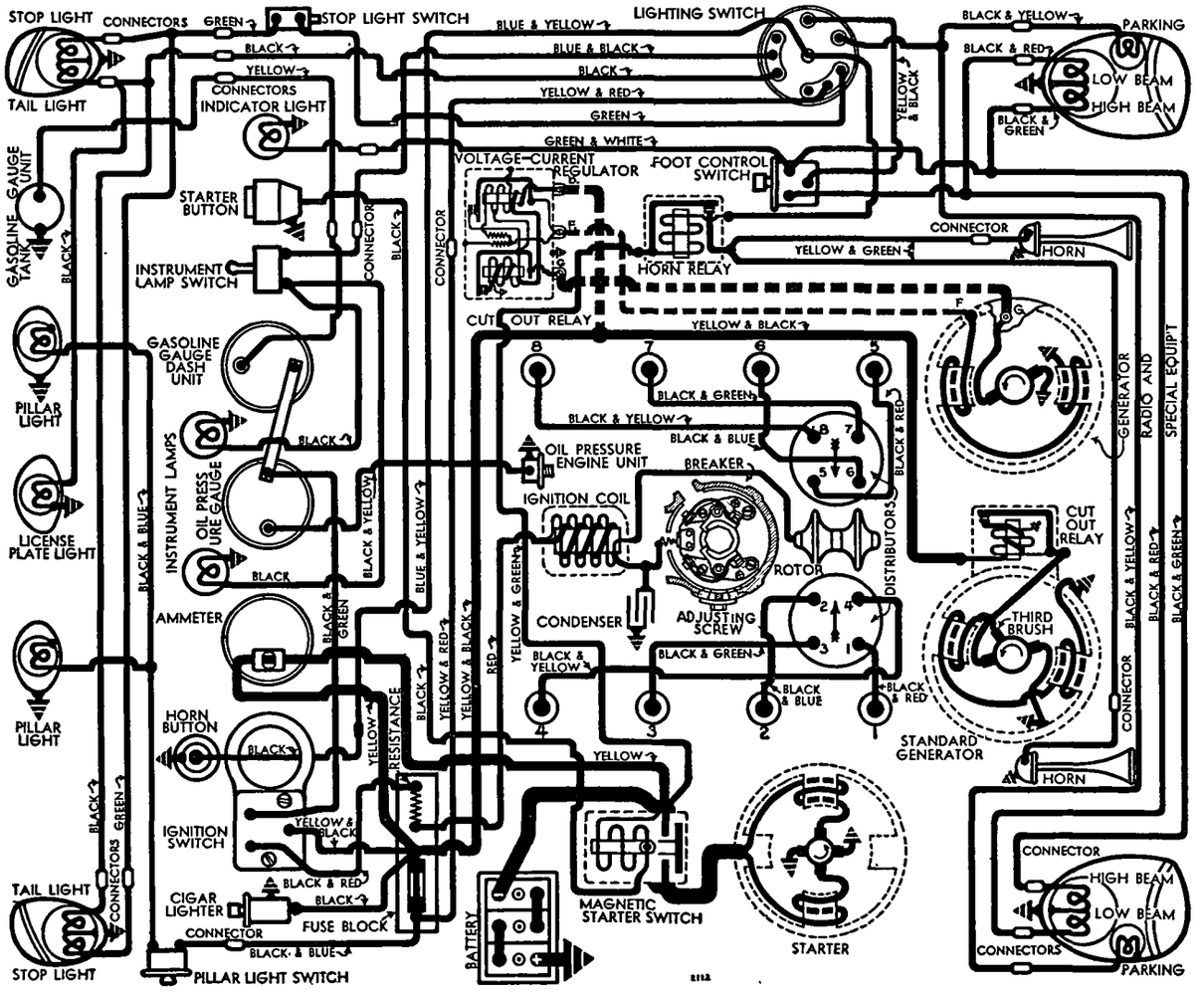

1938 M DELS

GENERATOR

STANDARD

GENERATOR (STD):—Third brush control type. Air-cooled. Various models used as follows:

1937 Car & Truck Models

Generator	Armature	Pulley Diam.
①40-10000-B	18-10005	4.38"
79-10000-B	79-10005-A	Double 4.68"
②78-10000-HA	78-10005-HA	4.38"
④78-10000-HB	78-10005-HA	3.68"
③78-10000-HC	78-10005-HB	4.38"
⑤79-10000-HA	79-10005-HA	Double 4.68"
⑥79-10000-HB	79-10005-HB	Double 4.68"

1938 Car & Truck Models

81-A-10000-A	79-10005	4.2"
81-A-10000-B	79-10005-HA	4.2"
③81-A-10000-C	79-10005-HB	4.2"
79-10000-B	79-10005	Double 4.5"

①—Replacement Generator 81A-10000-A
②—Replacement Generator 81A-10000-B
③—Replacement Generator 81A-10000-E
④—Replacement Generator 82A-10000-B
⑤—Replacement Generator 81T-10000-A
⑥—Replacement Generator 81T-10000-B

Charging Rate Adjustment—Remove commutator cover band, shift third brush by hand counter-clockwise to increase, or clockwise to decrease output (brush held by friction). Standard setting is 1½ commutator segments between 3rd & main brush.
Maximum Charging Rate—See table below.

Performance Stds.—See Note

40-10000-B		81A-10000-A	
Amperes	Eng. RPM	Amperes	Eng. RPM
Start	500	Start	500
17	1300	17	1300
11	2500	11	2500
78-10000-HA		**78-10000-HC**	
81A-10000-B		**81A-10000-C**	
Start	525	Start	350
26	1250	18	1000
16	2500	16	2500
78-10000-HB		**79-10000-B**	
Start	350	Start	500
26	1000	17	1350
16	2500	11	2500
79-10000-HA		**79-10000-HB**	
Start	525	Start	525
26	1300	18	850
16	2500	16	2500

NOTE—If generators do not test up to these "Performance Stds." they should be overhauled.
Rotation—Counter-clockwise at commutator end.
Field Current—4.5-6.0 amperes at 6 volts (1.0-1.22 ohms resistance) for 40-10000-B, 81A-10000-A, 79-10000-B; 3.43-4.17 amperes at 6.0 volts (1.44-1.75 ohms resistance) for all other generators.

Removal:—Generator mounted on bracket at front of engine between cylinder banks with fan mounted on forward end. Driven in tandem with two water pumps by Vee Belt. To remove, take off nut on bracket stud.

Belt Adjustment:—Loosen nut on bracket flange mounting stud, move generator up until total side movement on belt midway between generator and water pump pulleys is 1", tighten nut.

GENERATOR

SPECIAL EQUIPMENT

GENERATOR (RADIO & SPECIAL EQUIP.):—Two brush type with vibrating Voltage and Current Regulation. Air-cooled. Models used as follows:

'85' Car & Truck Models

81A-10000-D	78-10005-A,C	4.2"
81A-10000-E①	78-10005-B,D	4.2"

'85' Truck Models

81T-10000-A	78-10005-A,C	Double 4.5"
81T-10000-B①	78-10005-B,D	Double 4.5"

①—Low Speed (Taxi, Door-to-door Delvry., etc.)
Charging Rate Adjustment—No adjustment provided. See Regulator Section below.
Maximum Charging Rate—Controlled by regulator (dependent on battery condition and load). To check generator capacity, disconnect field lead at generator, connect both generator terminals together (use short insulated wire), use 'BRS' set or rheostat connected across battery terminals to apply load until voltage is exactly 6 volts. Operate generator at 1000 R.P.M., check output with ammeter connected in charging line. After making test, restore original connections, **do not operate generator with terminals connected together** (this eliminates all regulator action).

Performance Data.

81A-10000-D		81-T-10000-A	
Amperes	Eng. R.P.M.	Amperes	Eng. R.P.M.
Start	500	Start	550
28	1250	28	1300
81A-10000-E		**81-T-10000-B**	
Start	350	Start	350
20	1000	20	1050

Rotation—Counter-clockwise at commutator end.
Field Current—1.82-2.22 amperes at 6.0 volts (2.7-3.3 ohms resistance) for all models.
Removal & Belt Adjustment: Same as Std. (above).
SPECIAL GENERATORS:—**Other Makes**—*Refer to Electrical Equipment Index for 'Special Generator' article for complete data on special Generators and Regulators*

CUTOUT RELAY

CUTOUT RELAY:—**No. B-10505 (On all Std. Generators above).** Mounted on generator with field lead grounded to mounting screw.
Cuts In—7 volts, 10 M.P.H.
Cuts Out—3 ampere maximum discharge.
Contact Gap—.015-.020".
Air Gap—.010-.015" with contacts closed.

REGULATOR

REGULATOR:—**Ford No. 81-A-10505. Used on Special** Generators (above). Consists of Vibrating Voltage-and-Current Regulator and Cutout Relay in case on dash. NOTE—This type superseded by 01A-10505-C. *For complete data, refer to Electrical Equipment Index.*
Cutout Relay.
See Standard model above.
Voltage-and-Current Regulator.
Voltage Setting—7.6 volts max. at 70° F.
Current Setting—30 amperes (81-82-A-10000-D; 81-T-10000-A Generators), 23 amperes (81-,82-10000-E; 81-T-10000-B Generators).
Regulator Checking—*See article in Electrical Equipment Section for complete directions.*

LIGHTING

LIGHTING:—**Headlamps.** Corcoran-Brown 'Two-Lite', Pre-focused type. Upper and lower beams controlled by lighting switch (1937), Beam Selector Switch on toeboard (1938).

Headlamp Adjustment—Aim each headlamp straight ahead so that upper beam is centered on vertical line directly ahead of the lamp and upper edge of beam at lamp-center height at 25 feet (Pass. Car).
Beam Indicator—Red Jewel at upper left corner of instrument panel. Lighted with upper beams on.

Switches—1937

Lighting—R.B.M. Ford No. B-11657 (Switch Body), B-11655-B (Lower Cover). Complete Switch furnished only as an assembly with wiring harness as follows: 78-11653 (Pass. Cars), 77-11653A (Comml. Std.), 77-11653B (Comml. Del.), 79-11653A (Truck Std.), 79-11653B (Truck Del.).
Instrument—Ford No. 78-13740 (Pass. Cars), 50-13740 (Comml. & Truck).
Dome Lamp—Ford No. B-13752A (all models).
Stop Lamp—Ford No. 48-13480 (Pass. Cars & Comml.), BB-13480A (Truck).

Switches—1938

Lighting—R.B.M. Ford No. for Wiring & Plate Assembly as follows: 81A-11647 (Pass. Cars), 81C-11647 (Comml.), 81T-11647 (Trucks).
Lighting (C-O-E)—No. 81W-11653 (Switch & Wiring).
Switch Body & Contact Assem.—81-A-11657 (all).
Beam Selector—Ford No. 81-A-13532.
Instrument Light—*Ford No. 50-13740.*
Stop Light—Ford No. 48-13480 (Pass. & Comm.), 81-T-13480 (all trucks).

Bulb Specifications

Position	Candlepower	Mazda No.
Headlamps	32-32	2330
Parking (Cars), Indicator	1	51
Parking (Others), Instrmt.	3	63
Stop & Tail	21-3	1158
Pillar	3	63
Dome Light (Comm.)	15	87

NOTE—Parking lamps for 1937 (except Truck) were 1½ cp., Mazda No. 55.

MISC. ELECTRICAL

FUSES:—**Fuse Block.** R.B.M. Model, Ford No. 40-12250. Mounted on dash (with Ignition Resistor).
Fuse Capacity—20 amperes (on fuse block).
HORNS:—Twin Horns Std. on Passenger car models (Vibrator type 1937, Air Electric type operated by horn relay 1938). Single horn (vibrating type) Std. on Comm. and truck models. Twin horns are blended tone (R.H. Horn High Note, L. H. Horn Low Note).
Horn Relay—Ford Part No. 81A-13842.

ENGINE

ENGINE THUMP OR POUND CORRECTION:—*Refer to Ford Shop Notes for data on installation of special Starter Support Brace.*

ENGINE SPECIFICATIONS:—Own Model 85. Eight cylinder, 90° Vee, 'L' head type.
Bore—3.062". **Stroke**—3.75".
Piston Displacement—221 cubic inches.
Rated Horsepower—30.
Developed Horsepower—85 at 3800 R.P.M.
Compression Ratio—6.2-1 Std. head.
NOTE—Aluminum head superseded by cast-iron head with same compression ratio.
Compression Pressure—140 lbs. at 2400 RPM. (aluminum Head), 145 lbs. at 2400 RPM. (Cast Iron Head) or 113 lbs. at cranking speed of 100 RPM.
Vacuum Reading—18-20" steady reading with engine idling at 5-7 M.P.H.

C NTINUED N NEXT PA E

ENGINE

CONTINUED FROM PRECEDING PAGE

CYLINDER HEAD: Tightening Torque and Cylinder Head Diagram—*See Ford Shop Notes.*

►**Re-working Head for Improved Cooling:** *See Ford Shop Notes for instructions (and new Head Gaskets).*

PISTONS:—Steel alloy (Pass. Cars), Aluminum alloy (Trucks), Domed, cam ground type. Recondition cylinders for finished replacement pistons.
Weight—304-308 grams (stripped), 408-416 grams with rings and pin.
Removal—Pistons and rods removed from above.
Clearance—See Fitting New Pistons.

Replacement Pistons:—*See Ford Special Shop Notes.*
Fitting New Pistons: Use .50" wide feeler stock of correct thickness (see Table below) inserted between piston and cylinder wall at right angles to pin to check clearance. Pull required to withdraw feeler should be 6-10 lbs. (all types).

Engine With Sleeves	Feeler Thickness Steel Piston	Aluminum Piston
New Piston & Sleeve	.003"	.003"
New Piston—Worn Sleeve	.004"	.004"
Worn Piston & Sleeve	.005"	.005"
Engines Without Sleeves		
New Piston & Bore	.0025"	.002"
New Piston—Worn Bore	.004"	.004"
Worn Piston & Bore	.005"	.005"

PISTON RINGS:—Two compression, one oil control ring per piston, all above pin. Oil ring groove drilled with oil drain holes.

Ring	Width	End Gap	Side Clear.
Comp. (Top)	.0915-.092"	.012-.017"	.003"
Comp. (#2)	.0915-.092"	.012-.017"	.0015"
Oil Cont.	.1545-.155"	.012-.017"	.0015"

Replacement Rings: *See Ford Shop Notes.*

PISTON PIN:—Diameter—.7501-.7504". **Length**—2.847-2.850". Pin floats in rod and piston. Held by locking ring at each end. Pin hole in rod is bronze-bushed.
Pin Fit in Piston—.0001-.0002" clearance (aluminum pistons), .0003-.0009" clearance (steel pistons) or light hand push fit with piston at 70°F.
Pin Fit in Rod Bushing—.0002-.0005" clearance (pin should pass through bushing slowly of own weight).
See Ford Shop Notes for Pin Fitting directions.
Replacement Pins: *See Ford Shop Notes.*

CONNECTING ROD:—Length 7". Weight 451-455 grams.
Crankpin Journal Diameter—1.999" (connecting rod diameter on crankpin—2.220").
Bearing Type—Steel-backed, special alloy-lined. Bearing floats in both rods (side-by-side mounting) with bearing surface on inner and outer faces.
Bearing Dimensions—Length 1.933". Thick. .1095".
Clearance—.0015-.0035" (see Bearing Adjustment).
Sideplay—.003-.007" (bearing endplay), .006-.014" (side clearance for both rods).
Bearing Adjustment: None (no shims). Do not file bearing caps. Replace bearings if less than .1085" thick, replace or hone rods for oversize bearings if worn more than .0015" over original size of 2.2195-2.2200". CAUTION—Both rods must be same size.
Replacement Bearings: *See Ford Shop Notes.*
Installing Rods:—Rods and caps marked 'R1', 'L1' etc. Install rods in same numbered cylinders with marks on rods and caps together and pointing down.

CRANKSHAFT:—Cast-steel, three bearing type with integral counterweights. Weight 63.5 lbs.
Journal Diameters—2.399" (all bearings).
Bearing Type—Steel-backed, babbitt-lined.
Clearance—.001-.003".
Bearing Adjustment:—None (no shims). Replace bearings. Do not file bearing caps.
End Thrust:—Taken by #3 (rear) main bearing. Endplay .002-.006". Adjusted by replacing bearing.
Replacement Bearings: *See Ford Shop Notes.*

CAMSHAFT:—Three bearing. Helical gear drive.
Bearing Diameters—1.797" all bearings. Replace camshaft if worn to less than 1.7955" diameter.
Bearings—Steel-backed, babbitt-lined bushings.
Clearance—.002".
End Thrust:—Taken by gear hub and front bearing and by hub and cover plate. Endplay .005". Adjusted by replacing bearing or cover plate.
Timing Gears:—Crankshaft gear cast alloy-steel. Camshaft gear Bakelized fabric.
Backlash—.004" maximum.
Camshaft Setting:—Mesh crankshaft gear tooth marked '0' with camshaft gear space marked '/'. Camshaft gear hub similarly marked and both marks should be in line.

VALVES:—	Head Diam.	Stem Diam.	Length
All valves	1.537"	.3105-.3115"	4.750-4.751"
	Seat Angle	**Lift**	**Stem Clearance**
All valves	45°	.292"	.0015-.0035"

NOTE—Service limit for valve stem diameter is .309" Intake, .3065" Exhaust. Valves interchangeable.
See Ford Special Shop Notes for Valve Servicing data.
NOTE—Valve Seat inserts used for Exhaust Valves.

Valve Guides: Split type retained by 'C' washer and valve spring. NOTE—Replace both halves of all guides measuring less than .6665" (thickness of guide half and valve stem at top of guide with valve of .311" stem diameter in place in guide).
For Valve Guide servicing data, see Ford Shop Notes.

Valve Lifters: Barrel type in reamed holes in block.
Diameter—.9995". Replace if worn to less than .998" in diameter or length less than 1.710" after any necessary resurfacing of ends (cast type can be resurfaced on both ends, pressed steel type on bottom end only).
Clearance—.0005-.0015". Lifter should slip into hole in block of own weight.

Valve Springs:	Spring Pressure	Spring Length
Valve Closed	37-40 lbs.	2.13"
Valve Open	76-80 lbs.	1.84"

NOTE—Replace spring if the pressure is less than 30 lbs. when compressed to 2.125".

VALVE TIMING

Tappet Clearance: .010-.012" Intake, .014-.016" Exhaust. No adjustment.

Valve Timing: See Camshaft Setting above.

Early 1937

Intake Valves—Open 9°30' BTDC. Close 54°30' ALDC
Exh. Valves—Open 57°30' BLDC. Close 6°30' ATDC.

Late 1937 & 1938

Intake Valves—Open at TDC. Close 44° ALDC.
Exhaust Valves—Open 48° BLDC. Close 6° ATDC.
To Check Valve Timing—No flywheel marks or other means provided to check timing. If dead center for any piston is established on flywheel, intake valve opening for this cylinder will be approximately 2.96 teeth before this point with piston .0327" before top dead center (Early 1937), with piston at top dead center (Late 1937 and 1938).

LUBRICATION

LUBRICATION:—Pressure. Gear type oil pump located in crankcase at rear of engine.
Oil Pump and Oil Pressure Regulator: *See "Oil Pump" in Ford Shop Notes for data.*
Normal Oil Pressure—30 lbs. at 2000 RPM.
Crankcase Capacity—5 quarts.
Oil Pressure Gauge: King-Seeley Electric. Ford No. Dash Unit—78-9273 (1937 All Models), 81A-9273A (Std. Pass. Cars, Comml., Truck), 81A-9273B (1938 Deluxe Pass. Cars).
Engine Unit—48-9278 (1937-38 all models).
NOTE—Use dash unit Ford Part No. 81A-9273A for replacement.
See Miscellaneous Section for complete data.

COOLING

COOLING SYSTEM:—Water Pump—Centrifugal, packless type, 2 used (1 pump for each cylinder bank).
See Water Pump Section for complete data.
Removal—Slack off belt adjustment, support engine at forward end, remove front engine mounting bolts, take out mounting screws in pump body.
Thermostat:—In outlet hose for each bank (2 used).
Drain Valves:—One each side at bottom of radiator.
Capacity: 22 qts. (Pass. Cars, Comml., 1 Ton), 25 qts. (1937 Truck), 24 qts. (1938 Truck exc. C-O-E & 1 Ton), 23 qts. (1938 C-O-E Trucks).

CLUTCH

PASS. CARS & COMMERCIAL

Long Model 9CF-CS. Semi-centrifugal, single plate, dry disc type.
See Clutch Section for complete data.
Clutch Facings—Molded asbestos composition, 2 required. I.D. 5.76". O.D. 9.0". Thick. .137".
Clutch Pedal Adjustment—Free movement of pedal must be 1½-1¾". To adjust, remove clevis pin in end of clutch pedal adjusting rod, turn clevis.
Removal:—Disconnect rear spring at frame connection in center, rear shock absorber links, rear brake cables, speedometer cable. Support engine, take out rear engine mounting bolts, take out clutch housing mounting screws, slide drive unit (transmission and rear end) to rear to expose clutch. Take out mounting screws in clutch cover flange on flywheel, remove clutch.

CLUTCH

TRUCKS

Long Model 11CF-CS. Semi-centrifugal, single plate, dry disc type.
See Clutch Section for complete data.
Facings—Molded asbestos composition, 2 required. Inside Diam. 6.5". Outside Diam. 11.0". Thick. .137".
Adjustment:—Pedal free movement should be 1.5-1.75". To adjust, remove clevis pin at end of pedal connector rod, turn clevis on rod.
Removal:—Disconnect front propeller shaft (coupling shaft) and remove transmission (see Transmission Removal below), take out mounting screws in clutch cover flange, remove clutch assembly.

TRANSMISSION

PASS. CARS & COMMERCIAL

Own Make. Constant-mesh, synchro-mesh (Second & High), sliding gear (Low & Reverse), all helical gear type.
See Transmission Section for complete data.
NOTE—Model 67 Three-Speed Spur Gear type Transmission and Model 51 Four-Speed Spur Gear type Transmission Optl. on Commercial Models.

Removal:—Disconnect rear shock absorbers and brake cables, disconnect rear spring at frame connection in center, disconnect speedometer drive cables. Take out universal joint ball housing screws, slide rear end back to disengage drive shaft at splined joint of universal yoke. Support engine, take out rear engine mounting bolts, take out clutch housing screws, pull transmission straight back.

TRANSMISSION

3-SPEED TYPE

Own Make. Model 67 (Std. 81Y), Model 70B, 70C (Optl. on Other Trucks). Constant-mesh, helical gears (Second & High), sliding spur gears (Low & Reverse). Synchro-mesh for Second & High on Model 67 only.

See Transmission Section for complete data.

Removal:—Disconnect and remove front propeller shaft (coupling shaft) as directed below. Support engine at rear end, take out rear engine mounting bolts, take out clutch housing mounting screws, pull transmission straight back and remove.

NOTE—Models 811-W, Z have one universal joint only (no coupling shaft used).

Front Propeller Shaft (Coupling Shaft) Removal:—Remove as follows: Take out all except top bolt in intermediate universal joint ball housing (at frame) remove all screws in front universal joint cover, slide cover back 6" on housing, take out screws in universal joint flange directly in back of universal, disengage by pushing flange back on shaft against spring tension, take out remaining bolt at intermediate universal, pull shaft down at front to clear cross-member, pull shaft forward until free at rear splined joint, remove shaft assembly.

TRANSMISSION

4-SPEED TYPE

Own Make. Model 51 (Std. All Models exc. 81Y). Four-speed, all sliding spur gear type.

See Transmission Section for complete data.

Removal: Same as for 3-Speed Truck type (above).

UNIVERSALS

Spicer. Steel bushing type (Pass. Cars, Comml., 1 Ton), Needle bearing type (Other Trucks). One universal joint mounted in rear of transmission case (all models), intermediate universal mounted on frame cross-member between front and rear propeller shafts (All Trucks with 134", 157", 191" Wheelbase).

See Universals Section for complete data.

REAR AXLE

PASS. CARS & COMMERCIAL

Own Make. 3/4 floating, spiral bevel gear type with straddle-mounted pinion and torque tube drive.

See Rear Axle Section for complete data.

Ratio—3.78-1 Std., 3.54-1 & 4.11-1 Optl.

Backlash—.010" maximum. Adjusted by changing gasket thickness between axle housing and differential housing.

Removal:—Disconnect rear shock absorber links, rear brake cables, speedometer cable, and rear spring center connection on frame. Take out universal joint ball housing screws, pull axle assembly to rear to disengage drive shaft at splined joint in universal joint rear yoke.

Axle Shaft Removal—Remove wheels and wheel hubs, take out axle housing flange screws in differential housing, remove housing, dismantle differential, pull axle shafts out at inner end (shaft and differential side gear integral).

Wheel Bearing Adjustment:—None. Wheel bearings retained in hub by grease retainer and lock ring.

REAR AXLE

TRUCKS

REAR AXLE (STD.):—Own Make. Full floating, spiral gear type with straddle mounted pinion and torque tube drive.

See Rear Axle Section for complete data.

Ratio—Std. 6.67-1 (except 81Y), 4.857-1 (81Y). Optl. 5.14-1, 5.83-1 (except 81Y), 4.11-1 (81Y).

Backlash—.004-.016".

Removal:—Disconnect brake cables, speedometer cable, rear springs (semi-elliptic type). Take out universal joint ball housing bolts (rear joint), pull axle assembly to rear to free splined joint, remove assembly from under truck.

Axle Shaft Removal. Remove wheel hub cap by taking out two screws, take off nuts on 8 hub studs which hold axle flange in place, install two special screws in tapped holes in flange, turn screws up evenly to break flange loose from hub, **back these screws out** and strike axle shaft flange at center to loosen centering cones on studs, remove cones, pull axle shaft out (wheel bearings not disturbed). NOTE—When installing axle shaft, make certain that gasket in place under shaft flange, cones in place on studs, and that the two loosening screws backed off sufficiently so that stud nuts can be securely tightened. Then turn the two loosening screw in just enough to prevent loosening in service.

Wheel Bearing Adjustment. Remove axle shaft (above), use special bearing adjusting wrench BB-17033-B and remove outer or bearing locknut, pull out nut retainer and grease retainer. Inner bearing adjusting nut can then be adjusted or removed. To adjust, turn nut up tight, back off 1/8 turn, install nut retainer, grease retainer and outer bearing nut, turning outer nut up tight.

REAR AXLE GEAR CHANGE (TRUCKS):—Ring and pinion gears have been changed from 'Generated' type to 'Formate' type. These gears not interchangeable singly (use both ring and pinion gear of same type). Formate gears stamped 'SS'.

REAR AXLE

SPECIAL TRUCK EQUIPMENT

REAR AXLE (OPTL.):—Two speed type with planetary reduction gear set built in differential case.

See Rear Axle Section for complete data.

Ratio—5.83-1 (Direct), 8.11-1 (Second speed).

Backlash—.006-.020".

Removal:—Same as for standard axle (above) except that control linkage must also be disconnected.

SHOCK ABSORBERS

SHOCK ABSORBERS:—Ford (Houde). Hydraulic type. NOTE—Used on front end only of Trucks.

See Shock Absorber Section for complete data.

FRONT SUSPENSION

Front Suspension:—Conventional 'I' beam section front axle with Reverse Elliott type ends and transverse cantilever spring (exc. C-O-E Trucks), semi-elliptic springs (C-O-E Trucks). Axles positioned by radius rods at spring ends (all models with transverse spring).

Kingpin Inclination—8° crosswise (except C-O-E Trucks), 7° crosswise (C-O-E Trucks).

Caster—9° Max., 4½° Min. (Pass. Cars, Comml., 1 Ton), 3½° Max., 1° Min. (C-O-E Trucks), 5° Max., 3° Min. (All other Truck models). Must be equal for both wheels within ½ degree. Axle may be bent cold to correct caster provided that proper equipment (including wedges and blocks to prevent crushing axle flange) used.

Camber—1° Max., ¼° Min. (all). Camber should be equal for both front wheels within ¼° (camber for right wheel must never be greater than left wheel). Axle may be bent cold providing proper equipment used (see Caster adjustment).

Toe In—1/16" (Pass. Cars, Comm'l., C-O-E Trucks), 0" (All other Trucks). Toe-in should be set at 10-1 ratio to camber. Toe-in on trucks increases with load and should be set at 0" with truck empty. Adjust in usual manner by loosening clamp bolts and turning tie rod.

Steering Geometry (Toe out on Turns)—With outer wheel turned 20°, inner wheel should be turned 23⅓° (Pass. Cars & Comml.), 23° (1 Ton Truck), 23¾° (101" WB. Trucks), 22⅔° (131" & 134" WB. Trucks), 22¼° (157" WB. Trucks).

STEERING GEAR

Steering Gear: Gemmer Model 305. Worm-and-Roller type with "push-pull" adjustments.

See Steering Gear Section for complete data.

BRAKES

PASS. CARS & COMMERCIAL

BRAKES (PASS. CAR & COMM'L): Service. Own Make Mechanical, two shoe, self-energizing type. New design with cable actuation for all wheels. Hand lever applies all four service brakes.

See Brake Section for complete data.

Drum Diameter—12". Cast iron alloy type.

Lining—Two types used. May be identified by brass wire (primary shoe), zinc wire (secondary shoe). (1937), Molded—Primary Shoe, Woven—Secondary Shoe (1938). Width 1.75". Thickness .185". Length per shoe 13.25".

Hand Brake:—See Service Brakes above.

BRAKES

TRUCKS

BRAKES (81Y 1 TON): Service—Own Make, Mechanical, two-shoe, four wheel type. Hand lever applies all four service brakes.

See Brake Section for complete data.

Drum Diameter—12" (front wheels), 15.12" (rear).

Lining—Width 1.75" (front), 2.5" (rear). Thickness .185" (front), .25" (rear). Length per shoe 13.25" (front), 18.41" (rear).

BRAKES (EXCEPT 81Y): Service—Own Make, Mechanical, two-shoe, four wheel type. Hand brake is independent (see below).

See Brake Section for complete data.

Drum Diameter—14" (1937), 15.12" (1938).

Lining—Woven type—all shoes (1937), Molded—Primary Shoe, Woven—Secondary Shoe (1938).

	Width	Thickness	Length (Per Shoe)
1937	1.5"	.187"	17.5"
1938	2.5"	.25"	18.41"

Hand Brake:—Applies independent self-energizing band in each rear wheel.

Drum Diameter—14".

Lining—Woven type. Width 1.5". Thickness .187". Length per wheel 41.12".

TRUCK NOTE:—All Engine data below applies also to Ford Truck Models with '60' Engine. See Ford Truck article for all other Truck data.

MODEL IDENTIFICATION

Model	Year	Body Type
922A	1939	Passenger Cars
922C	1939	Commercial Chassis
022A	1940	Passenger Cars
022C	1940	Commercial Chassis

SERIAL & ENGINE NUMBER:—Stamped on top of clutch housing and on left frame side member in front of dash bracket.

TUNE-UP

COMPRESSION: Ratio—6.6-1 Std. No Optl. ratios. **Pressure**—158 lbs.at 2800 RPM max. or 116 lbs. at cranking speed of 100 RPM.

VACUUM READING:—Steady 18-20" at 5-7 M.P.H.

FIRING ORDER: 1-5-4-8-6-3-7-2. See diagram for cylinder number and spark plug cable connections.

SPARK PLUGS: Champion Type H-10. 14 mm. Metric. **Gaps**—.025"

IGNITION: See Coil, Condenser, and Distributor. Breaker Gap—.014-.016". **Cam Angle** 36° (closed—both sets operating together). **Automatic Advance**—8° max. at 950 RPM (distr.).

IGNITION TIMING: See Ignition Timing. Std. Setting—4° BTDC. No flywheel marks provided (see Ignition Timing for method of setting Ignition and also Vacuum Brake Adjustment).

CARBURETION: See Carburetor & Carb. Equipment. Idle Setting—Both idle screws 5/8-3/4 turn open (Stromberg Carb.), 7/8 turn open (Chandler-Groves Carb.). Idle speed 5-7 MPH. **Float Level**—Fuel level 15/32" (Stromberg Carb.), 11/16" (Chandler-Groves Carb.) below top of bowl. **Accelerating Pump (Stromberg)**—Inner hole—Summer, Outer hole—Winter. **Accelerating Pump (Chandler-Groves Carb.)** Center hole Normal. Inner hole (Summer), Outer hole (Winter) for extreme hot and cold temperatures. **Fuel Pump Pressure:** 3½ lbs. maximum.

VALVES: See Valve Timing. Tappet Clearance—.011-.012". No adjustment.

STARTING: See Battery, Starter, Generator, and Regulator (when used).

IGNITION

Ignition Switch:—Oakes Steering Column & Ignition Lock Assembly. Part Nos. as follows:

1939 Types—Assy. 301665, Ford No. 81A-3676 (Pass. Cars); No. 301685, Ford No. 81-C-3676 (Comm'l. & 1 Ton); No. 301675, Ford No. 81-T-3676 (Trucks). Ignition Switch No. 301683 (all models).

1940 Types—Assy. No. 302110, Ford No. 01A-3676A (Std. Pass. Car); 302126, Ford No. 01A-3676B (Deluxe Pass. Car); 302120, Ford No. 01C-3676 (Comml., ¾, 1 Ton); Ford No. 81W-3676 (C-O-E Truck); 302122, Ford No. 01T-3676 (Other Trucks). Ignition Switch No. 301683 (All Models).

Lock Cylinder—Hurd or Briggs & Stratton No. 80935, Ford No. 91-A-3686-A (with 2 keys). Key Series—FK000 to FK999. Groove—No. 17.

COIL: Ford No. 78-12036 or 81A-12036 (Coil less Condenser). Mounted on ignition unit (part of ignition assembly).

Resistor Unit—Connected in coil primary circuit. Mounted on Fuse Block Assembly No. 91-A-12250 (passenger cars), 40-12250 (Comm'l. & Trucks). **Ignition Current**—4½-6 amperes (stopped). Ignition primary circuit resistance—1-1 1/3 ohms.

CONDENSER: Ford Part No. 78-12300 (78-12036 Coil), 81A-12300 (81A-12036 Coil). **Capacity**—.33-.36 microfarad.

DISTRIBUTOR: Ford Model 78-12127. (Less Coil, caps and distributor plates). Double breaker, 8 lobe cam, full automatic advance type with Vacuum Brake REPLACEMENT DISTRIBUTOR—Model No. 11A-12127 with different advance. See 1941 Ford V8 article for all data on this model. **Breaker Gap**—.014-.016" (both sets). Use special two step feeler—.014" step 'go', .016" step 'no go'. **Cam Angle**—36° closed, 9° open. For both sets operating together with correct coil-loading lead. **Breaker Arm Spring Tension**—20-24 ozs. **Rotation**—Clockwise viewed from drive end.

Automatic Advance
(High Vacuum or Vacuum Brake Inoperative)

Distributor Degrees	R.P.M.	Engine Degrees	R.P.M.
Start	200	0	400
2	300	4	600
3	375	6	750
5	600	10	1200
8	950	16	1900

Removal:—Ignition unit mounted on front of engin . To remove, disconnect vacuum line, take off caps, take out screws in mounting flange.

IGNITION TIMING

IGNITION TIMING:—For each engine as follows (see Vacuum Brake Setting below for adjustment depending on type of service and fuel used).

	Flywheel Degrees	Piston Position
'60' Engines	4° BTDC	.0048" BTDC.

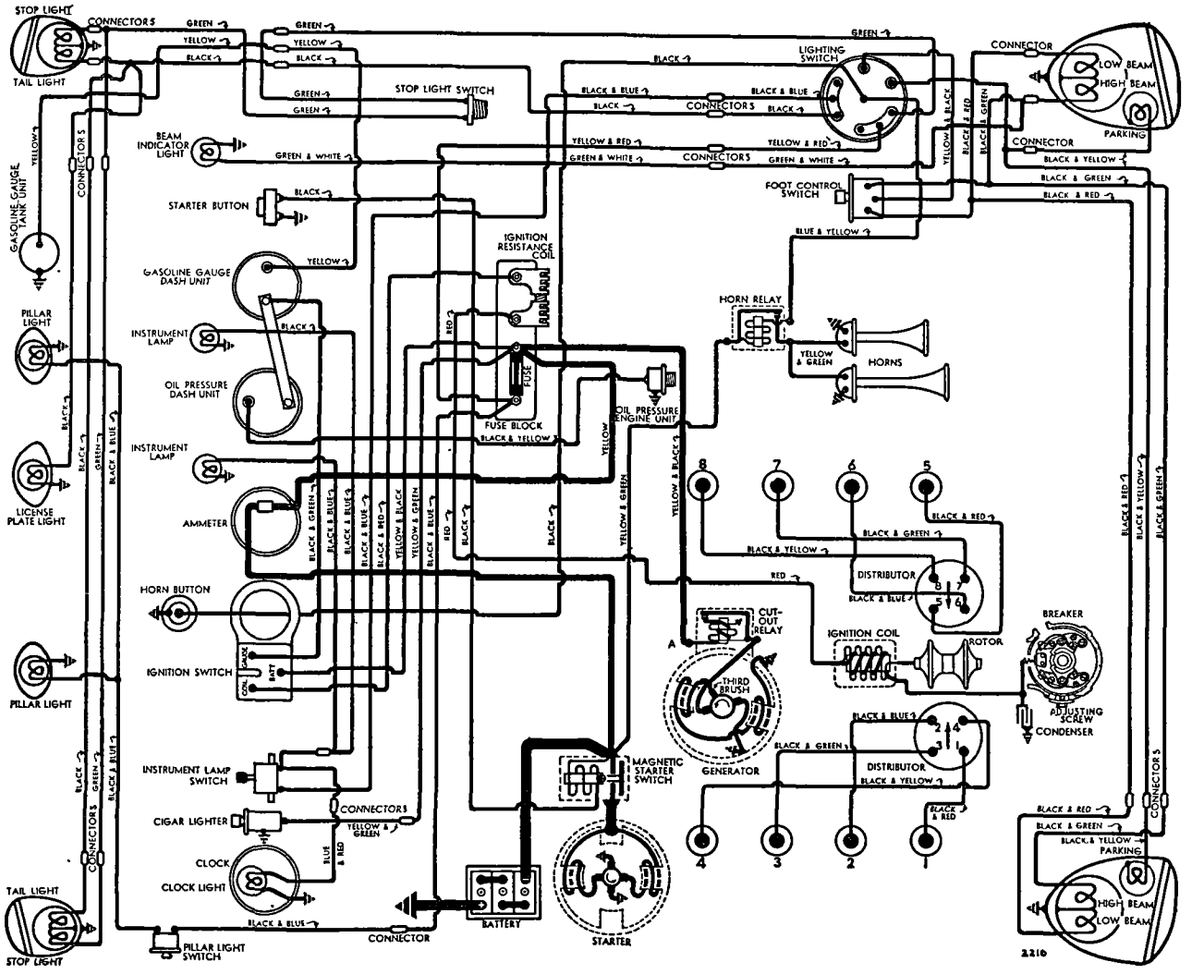

1939 MODELS

Timing Note—Manufacturer recommends use of Laboratory Test Set with Stroboscope attachment or V-126 Timing Fixture for all ignition settings.

Timing (On Engine)—No flywheel marks provided and timing should be set with piston on top dead center. With #1 piston on top dead center entering power stroke, loosen timing adjusting screw on left hand side of ignition unit housing, place screw in retard position at lower end of slot, move screw slowly up until timing contacts begin to open, note graduation on plate under screw head which is in line with reference mark on housing, move screw up exactly one additional graduation, tighten screw. NOTE—Dead center position can be determined by inserting gauge rod in cylinder or by measuring to tops of #2 and #3 pistons (should be equal).

Vacuum Brake Setting:—Should be adjusted to eliminate pinging when engine operated with load. To adjust, loosen locknut, back off adjusting screw until engine pings with load, turn screw in just enough to eliminate ping, tighten locknut. When adjusted on Stroboscope, vacuum brake should retard spark to peepsight (set at 2°) at 950 RPM. (78-12127 Distr.), 650 RPM. (11A-12127 Distr.).

CARBURETOR

Stromberg Model No. EE-7/8, Ford No. 52-9510-B, or Holley (Chandler-Groves) Model AA-7/8, Ford No. 922A-9510-A. Dual (double barrel) downdraft type. ***For complete data, refer to Carburetor Index.***

Idle Adjustment—With engine warm, choke valve wide open, and Fast Idle inoperative, set throttle lever stopscrew for 5-7 M.P.H. (350 R.P.M.) idling speed, turn each idle adjusting screw (one for each barrel, adjust in succession) in until engine begins to miss, out until engine begins to roll, finally turn screw in slowly until engine fires smoothly. Final setting should be approximately ⅝-¾ turn (Stromberg), ⅞ turn (Chandler-Groves) from inner seated position. Readjust stopscrew for correct idling speed. NOTE—Vacuum gauge recommended for idling adjustment. Set for highest steady gauge reading.

Accelerating Pump Setting (Stromberg)—Two ball studs provided for pump link connection:
'S'—Minimum Stroke, Summer operation.
'W'—Maximum Stroke, Winter operation.

Accelerating Pump Setting (Chandler-Groves)—Three holes provided for pump link connection:
Inner (#1)—Min. stroke, Summer temperatures.
Center (#2)—Med. stroke, Winter temperatures.
Outer (#3)—Max. stroke, Extreme Cold weather.

Fast Idle (All Models):—Integral with carburetor. Operated by choke lever. No adjustment required.

CARB. EQUIPMENT

Air Cleaner: AC No. 1528238 (1939), 1529224 (1940) oil-wetted type Std. Heavy duty oil-bath type Optl.

Gasoline Gauge: King-Seeley Electric. Ford Nos. Dash Unit—91A-9280A (1939 Std. Pass. Car, Comml., Trucks), 91A-9280B (1939 Deluxe Pass. Cars), 01A-9280A (1940 Std. Pass. Cars, Comml., Trucks), 01A-9280B (1940 Deluxe Pass. Cars).
Tank Unit—No. 01A-9275A (1939-40 Pass. Cars & Comml.), 01A-9275B (1940 Sedan Delivery), 01Y-9275 (122" Panel Delivery), 01T-9275 (Trucks exc. C-O-E), 81W-9275 (1939 C-O-E Trucks), 01W-9275 (1940 COE). ***For complete data, refer to Carburetion Equip. Index.***

Fuel Pump: AC Type R, No. 1523257, Ford No. 52-9350B. Diaphragm type. ***For complete data, refer to Carburetion Equip. Index.***

BATTERY

BATTERY (1939): Ford No. 81A-10655A. 6 volt, 17 plate, 100 ampere hour capacity (20 hour rate).
Starting Capacity—126 amperes for 20 minutes.
Zero Capacity—300 amperes for 3.3 minutes.
Grounded Terminal—Positive (+) grounded to dash. **Engine Ground**—Strap connector between right rear cylinder head stud and dash.
Dimensions—Length 10.5". Width 7.2". Height 7.1".
Location—On right hand side of cowl under hood.

BATTERY (1940): Ford No. 01A-10655A. 6 volt, 17 plate, 120 ampere hour capacity (20 hour rate).
Starting Capacity—150 amperes for 20 minutes.
Zero Capacity—300 amperes for 4.0 minutes.
Dimensions—Length 10.6". Width 7.3". Height 9.2".
Other Specifications—Same as 1939 (above).

Battery Indicator (1940): King-Seeley Voltmeter type (used in place of Ammeter). Ford No. 01A-10844A (Std.), 01A-10844B (Deluxe & replacement unit for 01A-10844A). ***For complete data, refer to Electrical Equipment Index.***

STARTER

Ford No. 52-11002. Armature No. 52-11005.
Drive—Barrel type Bendix No. A-1806. Ford No. 52-11350-C.
See Electrical Equipment Section for data on Special Ford Barrel type Bendix Drive servicing.
Rotation—Counter-clockwise at commutator end.
Brush Spring Tension—2 lbs. each.
Cranking Engine—100 RPM., 190-215 amperes.

Performance Data

Torque	R.P.M.	Volts	Amperes
4 ft. lbs.	1070	4.6	200
8 "	660	4.3	340
12 "	300	3.65	465
14 "	Lock	3.5	500

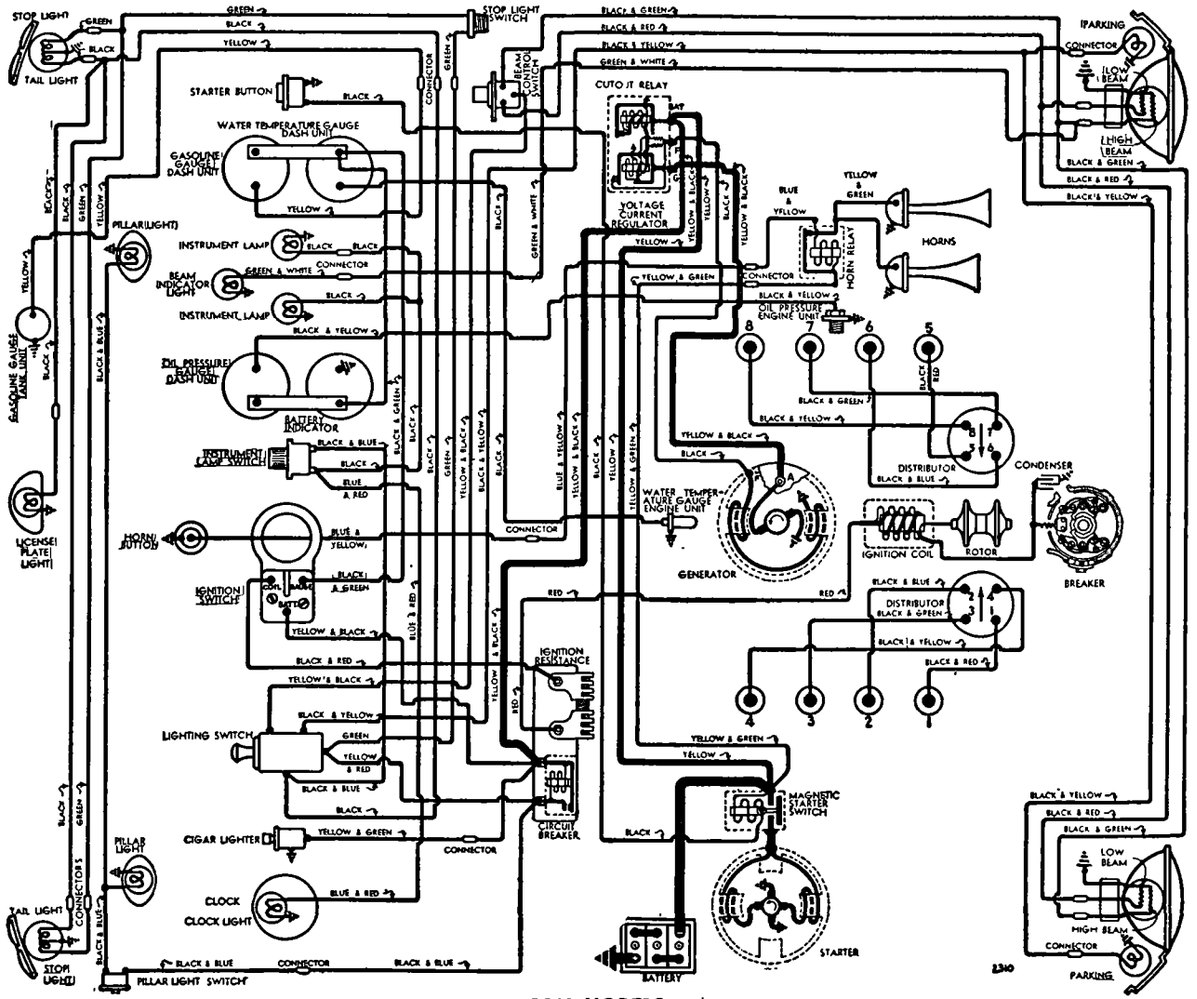

1940 MODELS

CONTINUED ON NEXT PAGE

C NTINUED FR M PRECEDIN PA E

Starting Switch:—R.B.M. Model 2220, Ford No. 78-11450. Magnetic type mounted on right side of engine dash above starter. Controlled by pushbutton No. 91A-11500 (1939 Pass. Cars), 81A-11500 (1939 Others), 01A-11500A (1940 Std.), 01A-11500B (1940 Deluxe).

Removal:—Starter mounted on right front face of flywheel housing. To remove, take off pan at right of engine, take out through bolts on commutator end plate and free starter support brace, remove starter.

GENERATOR
THIRD-BRUSH TYPES

GENERATOR (STD.):—Model used on each car type shown in table below. All models third brush control type. Ventilated by fan on drive pulley.

922A, 922C, 92Y—60 Engine

Generator	Armature	Pulley Diam.
82A-10000-A	79-10005	3.71"

Charging Rate Adjustment—Remove commutator cover band, shift third brush by hand counter-clockwise to increase, or clockwise to decrease output (brush held in position by friction). Maximum rated output (shown in table below) secured with third brush set 1½ commutator bars from nearest (insulated) main brush. Set charging rate as low as possible to keep battery fully charged.
Maximum Charging Rate—See table below.

Performance Std.—82A-10000A

Amperes	R.P.M.
Start	500
17	1300
11	3000

Rotation—Counter-clockwise at commutator end.
Field Current—4.5-6.0 amperes at 6.0 volts (1.0-1.22 ohms resistance).
Brush Spring Tension—Approx. 28 ozs.

Removal:—Loosen nut on mounting bracket stud, remove drive belt, lift generator out.

Belt Adjustment:—Loosen nut on bracket mounting stud, raise generator up until side movement on belt between generator and water pump pulley is 1".

GENERATOR
TW -BRUSH TYPES

GENERATOR (RADIO & SPECIAL EQUIP.):—Two brush (shunt) type with vibrating type voltage and current regulation. Ventilated by fan on drive pulley. Models used for each car as follows:

922-A, 922-C, 92-Y—60 Engine

Generator	Armature	Pulley Diam.
82A-10000-D	78-10005-A,C	3.58"
82A-10000-E①	78-10005-B,D	3.58"

022A, 022C

01A-10000-A,B	01A-10005	3.68"

①—Low Speed (Taxi, Door-to-door Delvry., etc.)

Charging Rate Adjustment—No adjustment at the generator. See Regulator data below.
Maximum Charging Rate—Controlled by regulator and dependent on battery condition and load. To check generator output, disconnect field lead at generator, connect both generator terminals together (use short insulated wire). Use 'BRS' set or rheostat connected across battery terminals and apply load until voltage is exactly 6 volts. Connect ammeter in charging line, run engine at 1000 RPM. check output (see table below). After completing test, restore original connections. **Do not operate generator with terminals connected together. This eliminates all regulator action.**

Performance Data

82A-10000-D		82A-10000-E	
Amperes	R.P.M.	Amperes	R.P.M.
Start	500	Start	350
28	1250	20	1000
81-T-10000-A		**81-T-10000-B**	
Start	550	Start	350
28	1300	20	1050
01A-10000-A		**01A-10000-B**	
Amperes	Eng. R.P.M.	Amperes	Eng. R.P.M.
Start	580	Start	520
32	1100	30	1060
32	2500	30	2500

Rotation—Counter-clockwise at commutator end.
Field Current—2.22 amperes at 6.0 volts (82A-10000-D,E—field resistance 2.7 ohms at 70°F), 2.86 amperes at 6.0 volts (01A-10000A—field resistance 2.1 ohms at 70°F), 2.1 amperes at 6.0 volts (01A-10000B—field resistance 2.88 ohms at 70°F).
Brush Spring Tension—Approx. 28 ounces.

Removal & Belt Adjustment:—Same as Std. (above).

GENERATOR
SPECIAL EQUIPMENT

SPECIAL GENERATORS:—Other Makes—*Refer to Electrical Equipment Index for 'Special Generator' article for complete data on special Generators and Regulators which may be found on these models.*

CUTOUT RELAY

CUTOUT RELAY:—No. B-10505 (Used on all Std. Generators above). Mounted on generator. Generator field lead grounded to relay mounting screw.
Cuts In—5.8-6.3 volts, 400 Eng. RPM. (60 Pass. Cars
Cuts Out—2 amperes maximum discharge current.
Contact Gap—.015-.020".**Air Gap**—.010-.015"(closed).
NOTE—Relay case is sealed. No adjustment possible.

REGULATOR

REGULATOR:—No. 91-A-10505-A. Used on all Special 2 Brush Generators (above). ***See 1939-40 Ford "85" article (following) for all data on this regulator.***
NOTE—This type superseded by 01A-10505-C.

LIGHTING

LIGHTING:—Headlamps. Ford (Corcoran-Brown) Two-Lite, Pre-focused type (1939), Ford Sealed Beam type (1940). Upper and lower beams controlled by Beam Selector Switch on toeboard.

Headlamp Adjustment—With upper beams lighted, aim each headlamp straight ahead so that beam centered on vertical line directly ahead of lamp center. Upper edge of beam should be at lamp center height at 25 feet (1939 Pass. Cars & Comml.), center of beam hot spot should be on horizontal line 3" below lamp center height (1940 models).

Beam Indicator—In upper left hand corner of instrument panel. Lighted when upper beams in use.

Switches—1939

Lighting—R-B-M. Ford No. (Switch & Wiring Assembly) 91A-11653-A (Std. Pass. Cars), 91A-11653-B (Deluxe Passenger Cars), 91C-11653 (Commercial). Switch Body & Contact Assembly 81A-11657 (All).
Beam Selector—R-B-M. Ford No. 81-A-13532.

Switches—1940

Lighting—R-B-M No. 6425. Ford No. 01A-11652.
Beam Selector—R-B-M No. 2480. Ford No. 81A-13552. Switch & Wiring No. 01A-11653A (Pass. Cars), 01C-11653 (Comml. & Truck except C-O-E).
Instrument—Ford No. 01A-13740A (Std.), 01A-13740B (Deluxe), 50-13740 (Trucks).
NOTE—Passenger Car Types replaced by 21A-13740.
Stop Light—Ford No. 91A-13480.

Bulb Specifications

Position	Candlepower	Mazda No.
Headlamps (1939)	32-32	2330
Headlamps (1940)		Sealed Beam
Parking (Comm'l., Trucks)	3	63
Parking (Pass. Cars)	1½	55
Instr. ('39), License	3	63
Instr. ('40), Beam Ind.	1	51
Stop & Tail	21-3	1158

MISC. ELECTRICAL

LIGHTING CIRCUIT PROTECTION:—Ford No. 91-A-12250 (Circuit Breaker) or No. 40-12250 (Fuse Block). Mounted on rear of dash under cowl with Ignition Resistor as an assembly. Vibrating type circuit breaker serviced by No. 01-A-12250 (1940 type).
Fuse Capacity—20 amps. (for 40-12250 Fuse Block).

HORNS: Pass. Cars. Ford No. 91A-13832 (high note), 91A-13833 (low note). Twin horns with relay.
Commercial—Ford No. 78-13833A. Vibrator type. Horn Current 6-8 amperes.
Horn Relay: R-B-M. Ford No. 91A-13842.
Contact Closing Voltage—3.5-4.5 volts.
Current Draw—Approximately ¾ ampere.

ENGINE

ENGINE SPECIFICATIONS:—Own '60'. 8 Cylinder, 90° Vee, L head. Both banks & crankcase cast enbloc.
Bore—2.6". **Stroke**—3.2". **Displacement**—136 cu. ins.
Developed H.P.—60 at 3500 RPM. **Rated H.P.**—21.6.
Compression Ratio—6.6-1 Std. No Optl. ratios.
Compression Pressure—158 lbs. at 2800 R.P.M. max., or 116 lbs. at cranking speed of 100 RPM.
Vacuum Reading—18-20" steady at 5-7 M.P.H.

OIL PAN REMOVAL: *See Ford Shop Notes.*

CYLINDER HEAD: Tightening Torque and Cylinder Head Diagram—*See Ford Shop Notes.*

CYLINDER SLEEVES:—Hardened, dry type cylinder sleeves used on engines marked 'HS' on cylinder block beside inner front corner of left cylinder head.
Servicing:—*See Ford Shop Notes for complete data.*

PISTONS:—Steel alloy, light wgt., cam-ground. Recondition cylinders for finished replacement pistons.
Weight—226-231 grams (without rings or pin).
Removal—Pistons and rods removed from above.
Clearance—See Fitting New Pistons.

Replacement Pistons:—*See Ford Shop Notes for data.*

Fitting New Pistons:—Use .002" feeler (.0025" feeler for engines with sleeves), .50" wide, inserted between piston and cylinder wall at right angles to pin. Pull to withdraw feeler—7-12 lbs.

PISTON RINGS:—Two compression, one oil ring, all above pin. Oil ring groove drilled with drain holes.
NOTE—Expander used with #2 Compr. and oil ring.

Ring	Width	End Gap	Side Clearance
Compr. #1	.092-.0925"	.012-.017"	.0025-.003"
Compr. #2	.092-.0925"	.012-.017"	.002-.0025"
Oil Cont.	.1535-.154"	.012-.017"	.0015-.002"

Replacement Rings:—*See Ford Shop Notes for data.*

ENGINE

C NTINUED FROM PRECEDIN PAGE

PISTON PIN:—**Diameter .6876-.6879". Length 2.368".** Floating type (locking rings in piston at each end). Pin hole in connecting rod bronze-bushed.
Pin Fit in Piston—.0004" clearance.
Pin Fit in Rod Bushing—.0001" clearance. ***See Ford Shop Notes for Pin Fitting Directions & Pin Oversizes.***

Replacement Pins:—Std. & .002" over- & under-size.

CONNECTING ROD:—**Length**—6.125" (all models).
Weight—271 grams (1939), 295 grams (1940).
Crankpin Journal Diameter—1.599" ('39), 1.699" ('40). Diameter on crankpin 1.800" ('39), 1.900" ('40).
Bearing Type—Steel-backed, special-alloy lined. Bearing floats in both rods (side-by-side mounting) with bearing surface on both inner and outer face.
Bearing Dimensions—Length 1.535" ('39), 1.403" ('40), .09995" thick. NOTE—'39 bearings only have end flanges.
Clearance—.0005-.002" (total diametrical).
Sideplay—.010-.022" (total).

Bearing Adjustment:—None (no shims). Do not file.

Replacement Bearings:—***See Ford Shop Notes for special bearings for Oversize Rods & Undersize Crankpins.***

Installing Rods:—Marks on rods and caps must be together and installed in same numbered cylinder with marks pointing down toward oil pan.

CRANKSHAFT:—3 bearing. Integral counterweights. 1940 NOTE—New type crankshaft used with larger main and connecting rod journals.
Journal Diameters—1.999" ('39), 2.099" ('40).
Bearing Type—Steel-backed, special-alloy lined.
Clearance—.001-.003" (or slight drag with .002" feeler assembled in bearing for clearance check).

Bearing Adjustment:—None (no shims). Do not file.

End Thrust:—Taken by rear bearing. Adjust by replacing bearing. **Endplay**—.002-.005".

Replacement Bearings:—***See Ford Shop Notes for Undersizes and special long bearings.***

CAMSHAFT:—Three bearings. Helical gear drive.
Bearing Diameters—1.498" (all bearings).
Bearings—Steel-backed, babbitt-lined bushings.
Clearance—.002".

End Thrust:—Taken by gear hub and cover plate. Adjusted by replacing coverplate. **Endplay**—.005-.015".

Timing Gears:—Cast alloy steel (crankshaft), Bakelized Fabric (Camshaft). **Backlash**—.004" max.

Camshaft Setting:—Mesh '0' marked tooth of crankshaft gear with '/' marked space on camshaft gear (this mark must line up with mark on gear hub).

VALVES:—	Head Diameter	Stem Diameter	Length
All Valves	1.281"	.2795"	4.375"

	Seat Angle	Lift	Stem Clearance
All Valves	45°	.251"	.0015-.0035"

See Ford Shop Notes for Valve Servicing data.
NOTE—Inserts used for exhaust valves only.

Valve Guides:—Split type retained by 'C' washer and valve spring. ***See Ford Shop Notes for servicing data.***

Valve Lifters:—Barrel type in reamed holes in block. **Diameter**—.8295". **Clearance**—.0005-.001".

Valve Springs:—	Pressure	Length
Valve Closed	26-30 lbs.	2.05"
Valve Open	48-52 lbs.	1.80"

VALVE TIMING

Tappet Clearance:—.011-.012". No adjustment.

Valve Timing:—See Camshaft Setting above.
Intake Valves—Open 9½° BTDC. Close 54½° ALDC.
Exhaust Valves—Open 57½° BLDC. Close 6½° ATDC
To Check Valve Timing—No flywheel marks provided. If dead center point established for any cylinder on flywheel, intake valve for this cylinder should open approximately 3.22 flywheel teeth before this point with the piston .027" BTDC.

LUBRICATION

LUBRICATION:—Pressure. Gear type oil pump mounted on front main bearing cap in crankcase.
Normal Oil Pressure:—30 lbs. at 2000 R.P.M.
Oil Pressure Regulator:—Under plug above front camshaft bearing. Opens at 30 lbs. Not adjustable.
Oil Pressure Gauge:—King-Seeley Electric. Ford No. Dash Unit:—91A-9273A ('39), 01A-9273A ('40). Engine Unit: 48-9278 (all models).
See Miscellaneous Section for complete data.
Crankcase Capacity:—4 qts.

COOLING

COOLING SYSTEM:—**Capacity**—15 qts. (922A), 13 qts. (022A, 022C), 16 quarts (922C, 02D, 92Y, 02Y).
Water Pump:—Packless 2 used (1 for each bank).
See Water Pump Section for complete data.
Removal—Slack off belt adjustment, unscrew large mounting nut behind pulley, pull pump out.
Thermostat:—In each cylinder head outlet (2 used).
Setting—Starts to open at 145°F. Fully open 180°.
Temperature Gauge:—**1939**—King-Seeley Liquid type, Ford Part No. 91A-10883-A. **1940**—King-Seeley Electric. Ford Nos. 01A-10883A (dash unit), 99A-10884 (engine unit).
See Miscellaneous Section for complete data.

CLUTCH

CLUTCH: — Long Model 8½CB-CS (922A), Model 9CF-CS (all others). Single plate, dry disc type. 9CF-CS is semi-centrifugal type.
See Clutch Section for complete data.
Facings—Moulded type, 2 required. Inside Diam. 6" (8½CB), 5.76" (9CF). Outside Diam. 8.5" (8½CB), 9" (9CF). Thickness .125" (8½CB), .137" (9CF).
Adjustment:—Pedal free movement should be .75-1" (8½CB), 1.5-1.75" (9CF). To adjust, remove clevis pin at end of connector rod, turn clevis on rod.
Removal:—Slide rear axle and transmission to rear as a unit to expose clutch (see Transmission Removal (below), take out mounting screws in cover.

TRANSMISSION

TRANSMISSION:—**Own Make.** Constant-mesh, synchro-mesh (second & high), sliding gear (low & reverse), all helical gears (pass. car), second & high gears only (on Commercial Transmission).
See Transmission Section for complete data.
Transmision Control (022A):—Remote steering column mounted, mechanical shift.
See Transmission Section for complete data.
Removal:—To remove, disconnect hand brake cable, hydraulic brake line at torque tube connection (bleed lines when re-connected), speedometer cable, shock absorber links. Disconnect rear spring at center frame connection. Take out universal joint ball housing screws, slide rear axle assembly back to disengage drive shaft at splined joint. Support engine at rear, take out rear engine mounting bolts, clutch housing screws, pull trans'm straight back. NOTE—Disconnect gear shifter rods from levers at transmission on 1940 passenger cars.

UNIVERSALS

UNIVERSAL JOINT:—**Spicer 7990-SF ('39), 202-7 ('40).** Steel bushing type. 1 joint to rear of transmission.
See Universals Section for complete data.

REAR AXLE

REAR AXLE:—**Own Make.** ¾ floating, Spiral bevel gear type with Torque Tube drive.
See Rear Axle Section for complete data.
Ratio—4.44-1 Std. 4.55-1 Comm'l (1940).
Backlash—.012" maximum.
Removal:—Disconnect hand brake cables, hydraulic brake line at torque tube connection (bleed lines when re-connected), speedometer cable, shock absorber links. Disconnect rear spring at center frame connection. Take out universal joint ball housing mounting screws, pull axle assembly to rear to disengage drive shaft at splined joint.
Axle Shaft Removal—Axle must be dismantled and shaft removed through differential housing at inner end (side gear integral). ***See Rear Axle Section for Ford Rear Axle article for complete data.***

SHOCK ABSORBERS

SHOCK ABSORBERS:—**Houde (Houdaille).** Front—BBDK (1939), BBDM (1940). Rear—BBDW (1939), BBDX (1940). Double acting, adjustable types.
See Shock Absorber Section for complete data.

FRONT SUSPENSION

Front Suspension:—Conventional 'I' beam section front axle with Reverse Elliott ends and transverse spring. Axle positioned by radius rods.
Kingpin Inclination—8° crosswise (all models).
Caster—9° Max., 4½° Min. (all models). Must be equal within ½°. Axle may be bent cold to correct caster if proper tools (wedges and blocks to prevent crushing axle flange) are used.
Camber—1° Max., ¼° Min. (all models). Must be equal within ¼°, right wheel must not exceed left. Adjust as for caster (see caster data above).
Toe In—1/16". Set at 1-10 ratio to Camber. Adjust by loosening clamp bolts and turning tie rod.
Steering Geometry (Toe out on turns)—Outer wheel turned 20°. Inner 23⅓°. Allowable variation ½°.

STEERING GEAR

Steering Gear: Gemmer Model 305. Worm-and-Roller type with "push-pull" adjustments.
See Steering Gear Section for complete data.

BRAKES

BRAKES:—**Service**—Lockheed Hydraulic, double anchor, non-energizing type. Hand lever applies rear wheel service brakes.
See Brake Section for complete data.
Wheel Cylinders—Stepped or two-stage bore type: Front Wheel—Front cylinder 1.25". Rear 1.00". Rear Wheel—Front cylinder 1.125". Rear 1.00".
Drums—Cast iron. Diameter 12".
Lining—Woven type (forward shoe—all wheels), Moulded type (rear shoe—all wheels). Width 1.75". Thickness .20". Length per shoe 13.18" (forward shoe—all wheels), 10.1" (rear shoe—all wheels).
Clearance—Least possible amount without drag.
Hand Brake:—See Service Brakes above.

TRUCK NOTE:—All Engine data below applies also to Ford Truck Models with '85' Engine. See Ford Truck article (following) for other data.

MODEL IDENTIFICATION

Model	Year	Body Type
91A Std. & Deluxe	1939	Passenger Cars
91C① 99C②	1939	Commercial Chassis
01A Std. & Deluxe	1940	Passenger Cars
01C① 09C②	1940	Commercial Chassis

①—"85" Engine. ②—"95" Engine.

SERIAL & ENGINE NUMBER:—Stamped on top of clutch housing and on left frame side member in front of dash bracket.

TUNE-UP

COMPRESSION:—Ratio—6.2-1 Std. Cast iron or aluminum heads.
Pressure—140 lbs. max. at 2300 RPM. or 113 lbs. at cranking speed of 100 RPM.

VACUUM READING:—Steady 18-20" at 5 M.P.H.

FIRING ORDER: 1-5-4-8-6-3-7-2. See diagram for cylinder numbering and spark plug cable connections.

SPARK PLUGS: Champion Type H-10. 14 mm. Metric. Gaps—.025"

IGNITION: See Coil, Condenser, and Distributor.
Breaker Gap—.014-.016" **Cam Angle** 36° (closed—both sets operating together).
Automatic Advance—8° max. at 950 RPM (distr.).

IGNITION TIMING: See Ignition Timing.
Std. Setting—4° BTDC. No flywheel marks provided (see Ignition Timing for method of setting Ignition and also Vacuum Brake Adjustment).

CARBURETION: See Carburetor & Carb. Equipment.
Idle Setting—Both idle screws ⅝-⅞ turn open. Idle speed 5-7 MPH.
Float Level—Fuel level 11/16" (21/32-23/32") below top edge of float bowl.
Accelerating Pump—Inner hole—Summer, Center hole—Winter. Outer hole—Extrame Winter temperatures.
Fuel Pump Pressure: 3½ lbs. maximum.

VALVES: See Valve Timing.
Tappet Clearance—.010-.012" Intake, .014-.016" Exhaust. No adjustment provided.

STARTING: See Battery, Starter, Generator, Regulator.

IGNITION

Ignition Switch:—Oakes Steering Column & Ignition Lock Assembly. Part Nos. as follows:
1939 Types—Assembly No. 301665, Ford No. 81A-3676 (Pass. Cars); No. 301685, Ford No. 81C-3676 (Comml. & 1 Ton); No. 301675, Ford No. 81T-3676 (Trucks). Ignition Switch No. 301683 (All Models).
1940 Types—Assembly No. 302110, Ford No. 01A-3676A (Std. Pass. Cars); 302126, Ford No. 01A-3676B (Deluxe Pass. Cars); 302120, Ford No. 01C-3676 (Comml., ¾ & 1 Ton); Ford No. 81W-3676 (C-O-E Trucks); 302122, Ford No. 01T-3676 (Other Trucks). Ignition Switch No. 301683 (All Models).
Lock Cylinder—Hurd or Briggs & Stratton No. 80935. Ford No. 91-A-3686-A (with keys). Key Series—FK000 to FK999. Groove—No. 17.

COIL: Ford N . 78-12036 or 81A-12036 (Coil less Condenser). Mounted on ignition unit (part of ignition assembly).
Resistor Unit—Connected in coil primary circuit. Mounted on Fuse Block No. 91-A-12250.

Ignition Current—4½-6 amperes (stopped). Ignition primary circuit resistance—1-1⅓ ohms.

CONDENSER: Ford Part No. 78-12300 (78-12036 Coil), No. 81A-12300 (81A-12036 Coil).
Capacity—.33-.26 microfarad.

DISTRIBUTOR: Ford Model 78-12127 (Less Coil, Caps, and distributor plates). Double breaker, 8 lobe cam, full automatic advance type with Vacuum Brake Control (see Ignition Timing for adjustment). Same design as used on preceding V8 models.
REPLACEMENT DISTRIBUTOR—Model No. 11A-12127 with different advance. See 1941 Ford V8 Passenger Car article for all data on this model.
Breaker Gap—.014-.016" (both sets). Use special two step feeler—.014" step 'go', .016" step 'no go'.
Cam Angle—36° closed, 9° open. For both sets operating together with correct coil-loading lead.
Breaker Arm Spring Tension—20-24 ozs.
Rotation—Clockwise viewed from drive end.

Automatic Advance
(High Vacuum or Vacuum Brake Inoperative)

Distributor Degrees	Distributor R.P.M.	Engine Degrees	Engine R.P.M.
Start	200	0	400
2	300	4	600
3	375	6	750
5	600	10	1200
8	950	16	1900

Removal:—Ignition unit mounted on front of engine. To remove, disconnect vacuum line, take off caps, take out screws in mounting flange.

IGNITION TIMING

IGNITION TIMING:—For each engine as follows (see Vacuum Brake Setting below for adjustment depending on type of service and fuel used).

	Flywheel Degrees	Piston Position
All Engines	4° BTDC.	.0058" BTDC.

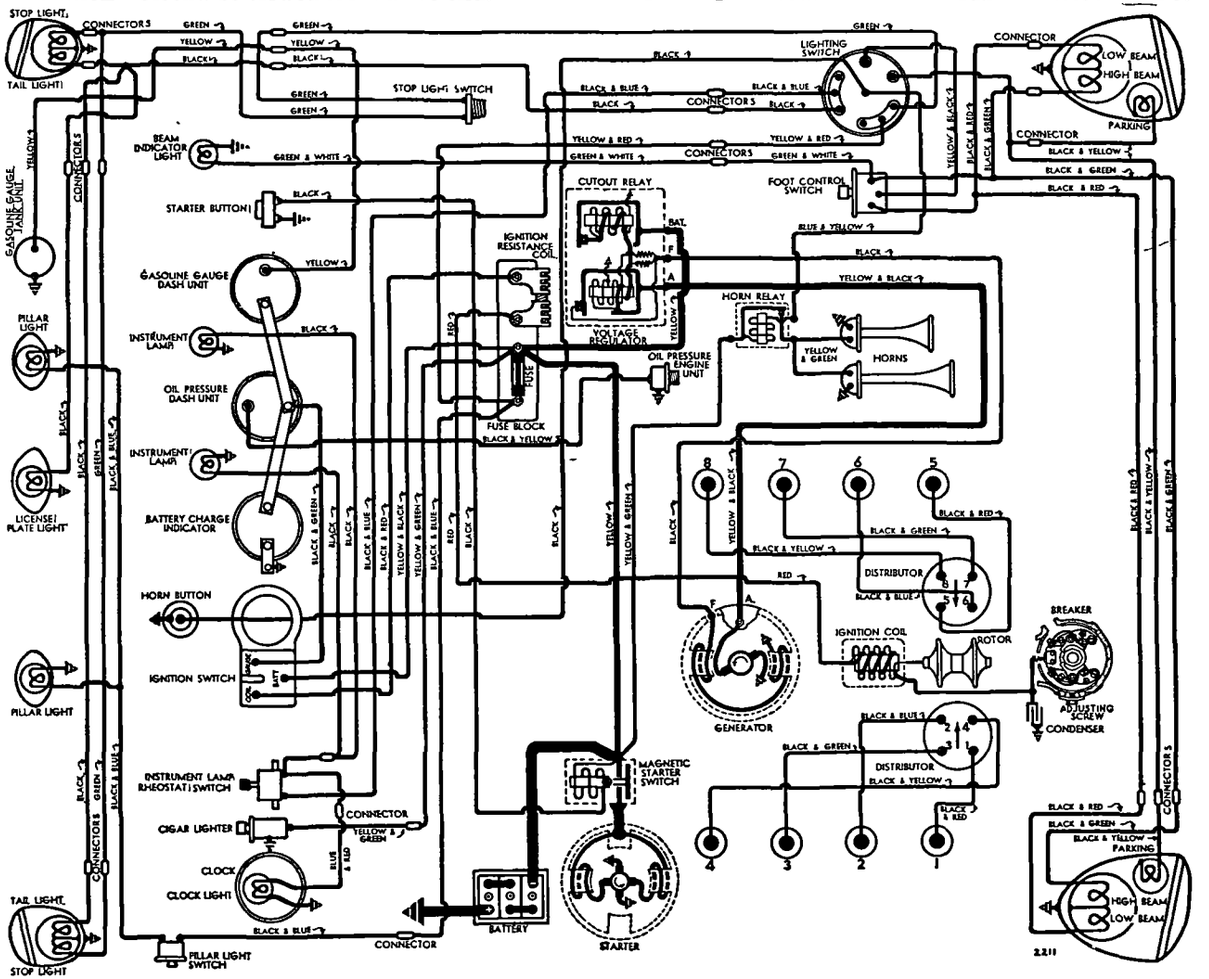

1939 M DELS
See "60" Diagram for Third-Brush Generator

Ignition Timing Note—Manufacturer recommends use of Laboratory Test Set with Stroboscope attachment or V-126 Timing Fixture for all ignition settings.

Timing (On Engine)—No flywheel marks provided and timing should be set with piston on top dead center. With #1 piston on top dead center entering power stroke, loosen timing adjusting screw on left hand side of ignition unit housing, place screw in retard position at lower end of slot, move screw slowly up until timing contacts begin to open, note graduation on plate under screw head which is in line with reference mark on housing, move screw up exactly one additional graduation, tighten screw. This provides correct 4° BTDC. ignition timing.

NOTE—Dead center position can be determined by inserting gauge rod in cylinder or by measuring to tops of #2 and #3 pistons (should be equal).

Vacuum Brake Setting:—Should be adjusted to eliminate pinging when engine operated with load. To adjust, loosen locknut, back off adjusting screw until engine pings with load, turn screw in just enough to eliminate ping, tighten locknut. When adjusted on Stroboscope, vacuum brake should retard spark to peepsight (set at 2°) at 950 RPM. (78-12127 Distr.), 650 RPM. (11A-12127 Distr.).

CARBURETOR

Holley (Chandler-Groves) Model AA-1, Ford No. 91A-9510-A. Dual (double barrel) downdraft type.
NOTE—Model 91A-9510A replaced by 21A-9510-A.
For complete data, refer to Carburetor Index.
Idle Adjustment—See Note below. With engine warm, choke valve wide open and Fast Idle inoperative, set throttle lever stopscrew for 350 R.P.M. (5 M.P.H.) idle speed. Turn each idle adjusting screw (one for each barrel, adjust in order) in until engine begins to miss, then out until engine begins to roll, finally turn screw in slowly until engine fires smoothly. Final setting should be approximately ¾ turn of the screw out from the inner seated position. Readjust throttle stopscrew for correct idle speed.
NOTE—Vacuum Gauge recommended for idling adjustment. Set for highest steady gauge reading.
Accelerating Pump Setting—Three holes provided for pump link connection. Adjust as follows:
#1 (Inner)—Min. Stroke—Summer Temperatures.
#2 (Center)—Med. Stroke—Winter Temperatures.
#3 (Outer)—Max. Stroke—Extreme cold weather.
NOTE—Link locked in pump rod by snap-lock. Pull link shaft out of pump rod to disengage lock.
Fast Idle:—Integral with carburetor. Operated by choke valve lever. No adjustment required.

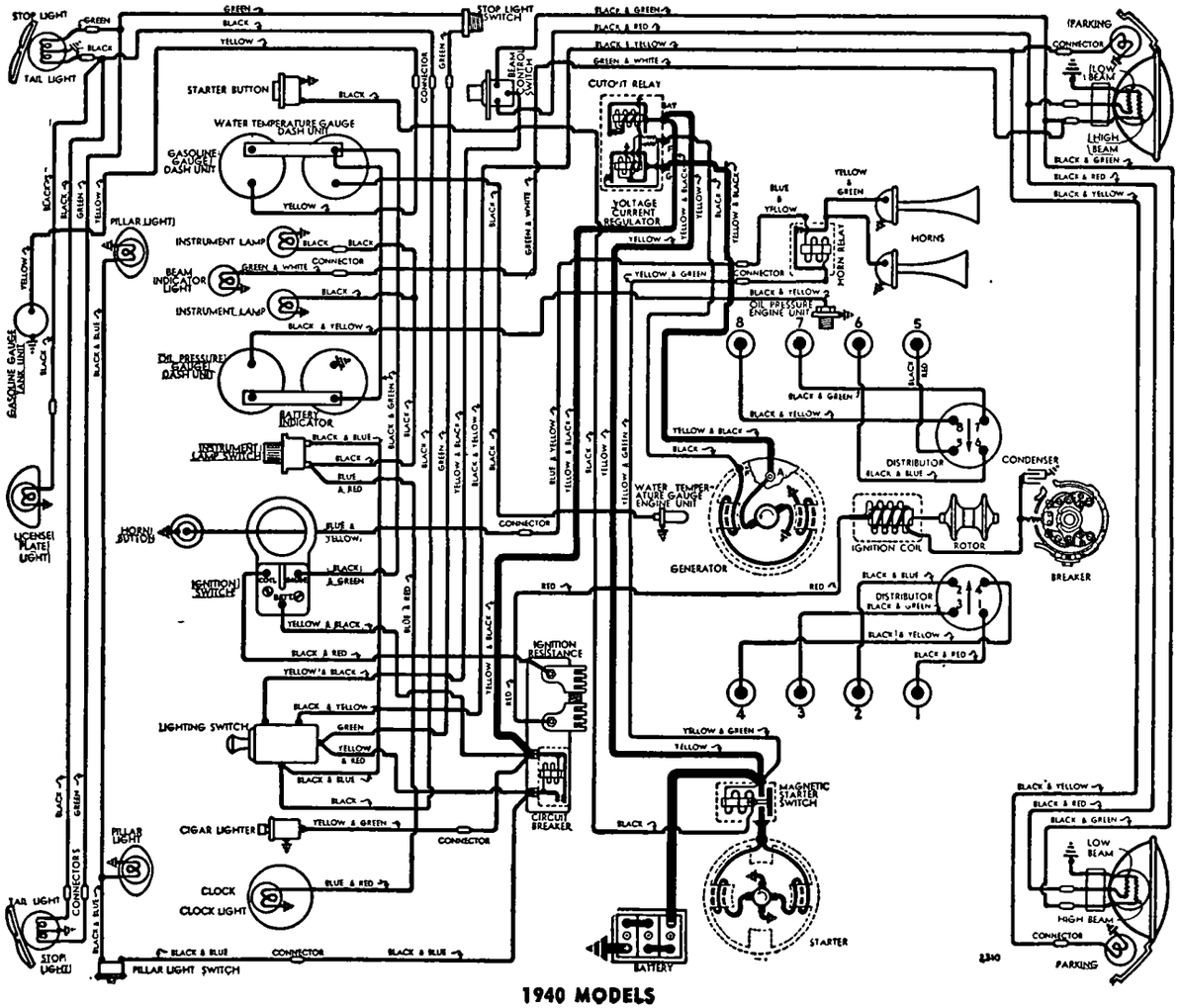

1940 MODELS

CARB. EQUIPMENT

Air Cleaner: AC No. 1528238 (1939), 1529224 (1940) oil-wetted type Std. Heavy duty oil-bath type Optl.
Gasoline Gauge: King-Seeley Electric. Ford Nos. Dash Unit—91A-9280A (1939 Std. Pass. Car, Comml., Trucks), 91A-9280B (1939 Deluxe Pass. Cars), 01A-9280A (1940 Std. Pass. Cars, Comml., Trucks), 01A-9280B (1940 Deluxe Pass. Cars).
Tank Unit—No. 01A-9275A (1939-40 Pass. Cars & Comml.), 01A-9275B (1940 Sedan Delivery), 01Y-9275 (122" Panel Delivery), 01T-9275 (Trucks exc. C-O-E),
For complete data, refer to Carburetion Equip. Index.
Fuel Pump:—AC Type R #1523307. Diaphragm type. Ford No. 68-9350.
For complete data, refer to Carburetion Equip. Index.

BATTERY

BATTERY (1939): Ford No. 81A-10655A. 6 volt, 17 plate, 100 ampere hour capacity (20 hour rate).
Starting Capacity—126 amperes for 20 minutes.
Zero Capacity—300 amperes for 3.3 minutes.
Grounded Terminal—Positive (+) grounded to dash. **Engine Ground**—Strap connector between right rear cylinder head stud and dash.
Dimensions—Length 10.5". Width 7.2". Height 7.1".
Location—On bracket ahead of cowl at right of engine under engine hood.
BATTERY (1940): Ford No. 01A-10655A. 6 volt, 17 plate, 120 ampere hour capacity (20 hour rate).
Starting Capacity—150 amperes for 20 minutes.
Zero Capacity—300 amperes for 4.0 minutes.
Dimensions—Length 10.6". Width 7.3". Height 9.2".
Other Specifications—Same as 1939 (above).
Battery Indicator: King-Seeley Electric. Voltmeter type. Ford No. 91A-10844B (1939 Deluxe Pass. Car), No. 01A-10844A (Std. 1940), 01A-10844B (Deluxe 1940 & replacement for 01A-10844A).
For complete data, refer to Electrical Equipment Index.

STARTER

STARTER:—No. 18-11002. Armature N . 18-11005.
Drive—Inboard Bendix Type L11FX-10. Ford N . B-11350 or Ford B&S Drive No. 91A-11350. Refer to Electrical Equipment Index for Ford B&S Drive servicing instructions.
Rotation—Counter-clockwise at commutator end.
Brush Spring Tension—2 lbs. each.
Cranking Engine—100 RPM., 190-215 amperes.

Performance Data

Torque	R.P.M.	Volts	Amperes
4 ft. lbs.	1070	4.6	200
8 " "	660	4.3	340
12 " "	300	3.65	465
14 " "	Lock	3.5	500

CONTINUED ON NEXT PAGE

C NTINUED FR M PRECEDING PA E

Starting Switch:—R.B.M. Model 2220, Ford No. 78-11450. Magnetic type mounted on right side of engine dash above starter. Controlled by pushbutton switch No. 91A-11500 (1939), 01A-11500A (1940 Std.), No. 01A-11500B (1940 Deluxe).

Removal:—Starter mounted on right front face of flywheel housing. To remove, take off pan at right of engine, take out through bolts on commutator end plate and free starter support brace, remove starter.

GENERATOR

THIRD-BRUSH TYPES

Third Brush Control Type (Std. 1939). Various types used as listed below. Generators are ventilated.

Generator	Armature	Pulley Diam"
81A-10000-A	79-10005	4.2"
81A-10000-B	79-10005-HA	4.2"

Charging Rate Adjustment—Remove commutator cover band, shift third brush by hand, counter-clockwise to increase output, or clockwise to decrease output. Brush is held in position by friction. Maximum rated output (shown in table below) secured with third brush set 1½ commutator bars from nearest (insulated) main brush. Set charging rate as low as possible to keep battery fully charged.

Maximum Charging Rate—As follows:

Performance Data

81A-10000-A		81A-10000-B	
Amperes	Eng. R.P.M.	Amperes	Eng. R.P.M.
Start	500	Start	525
17	1300	26	1250
11	2500	16	2500

Rotation—Counter-clockwise at commutator end.

Brush Spring Tension—Approximately 28 ozs.

Field Current—4.5-6.0 amperes at 6.0 volts (81A-10000-A—field resistance 1.0-1.22 ohms), 3.43-4.17 amperes at 6.0 volts (81A-10000-B—field resistance 1.44-1.75 ohms).

Removal & Belt Adjustment: Same as for Two-Brush Generators (see below).

GENERATOR

TWO-BRUSH TYPES

Two-brush (shunt) type. Various types used as listed below. Generators are ventilated and have external voltage and current regulation.

Generator	Armature	Pulley Diam.
81A-10000-D	78-10005-A,C	4.38"
81A-10000-E	78-10005-B,D	4.38"
91A-10000	78-10005-A	3.68"
①01A-10000-A	01A-10005	3.68"
①01A-10000-B	01A-10005	3.18'

①—Replacement Generator 21A-10000.

Charging Rate Adjustment—No adjustment at generator. See Regulator data below.

Maximum Charging Rate—Controlled by regulator and dependent on battery condition and load. To check generator output, disconnect field lead at generator, connect both generator terminals together (use short insulated wire). Use 'BRS' set or rheostat connected across battery terminals, apply load until voltage is exactly 6 volts. Connect ammeter in charging line, run engine at 1000 R.P.M., check output (see table below). After completing test, restore original connections.

Do not operate generator in service with terminals connected together. This eliminates all regulator action.

Performance Data

91A-10000, 81A-10000-D		81A-10000-E	
Amperes	Eng. R.P.M.	Amperes	Eng. R.P.M.
Start	500	Start	350
28	1250	20	1000
28	2500	20	2500
01A-10000-A		**01A-10000-B**	
Start	580	Start	520
32	1100	30	1060
32	2500	30	2500

Rotation—Counter-clockwise at commutator end.

Field Current—2.2 amperes at 6.0 volts (91A-10000, 81A-10000-D,E—field resistance 2.7 ohms at 70°F), 2.86 amperes at 6.0 volts (01A-10000-A—field resistance 2.1 ohms at 70°F), 2.1 amperes at 6.0 volts (01A-10000-B—field resistance 2.88 ohms at 70°F).

Removal:—Generator mounted on bracket between cylinder banks at front of engine, driven in tandem with two water pumps by Vee belt. To remove, loosen nut on bracket stud.

Belt Adjustment:—Loosen nut on mounting bracket, raise generator up until side movement on belt midway between generator and water pump pulleys is 1", tighten mounting nut.

GENERATOR

SPECIAL EQUIPMENT

SPECIAL GENERATORS:—Other Makes—*Refer to Electrical Equipment Index for 'Special Generator' article for complete data on special Generators and Regulators which may be found on these models.*

CUTOUT RELAY

Ford No. B-10505 (Used with Third Brush Generator). Mounted on generator. Generator field lead grounded to relay mounting screw.

Cuts In—5.8-6.3 volts, 600 R.P.M. (Pass. Cars).

Cuts Out—2 amperes maximum discharge.

Contact Gap—.015-.020" **Air Gap** .010-.015" (closed).

REGULATOR

REGULATOR:—No. 91-A-10505-A. Consists of Cutout Relay and vibrating Voltage-Current Regulator in case on dash.

NOTE—This 2-unit regulator superseded by new 3-unit type No. 01A-10505-C.

For complete data, refer to Electrical Equipment Index.

NOTE—Regulator mounted on rubber cushions and grounded to dash through separate ground lead. Case is sealed (no adjustments are possible).

Cutout Relay

Cuts In—6.5-7.0 volts, 510 Eng. R.P.M.

Cuts Out—2 ampere maximum discharge current.

Voltage-Current Regulator

Setting—7.6 volts Max. at 70° F.

Current Setting—30 amperes.

Regulator Checking & Adjustment—See article in Electrical Equipment Section for complete checking directions. No adjustment possible (case is sealed).

LIGHTING

SEE 1939-40 FORD V8 "60" CAR PAGES FOR DATA

MISC. ELECTRICAL

LIGHTING CIRCUIT PROTECTION:—Ford No. 91-A-12250 (Circuit Breaker) or No. 40-12250 (Fuse Block). Mounted on rear of dash under cowl with Ignition Resistor as an assembly. Vibrating type circuit breaker serviced by No. 01-A-12250 (1940 type).

Fuse Capacity—20 amps. (for 40-12250 Fuse Block).

HORNS:—Ford No. 91-A-13832 (High Note), 91-A-13833 (Low Note). Air electric type dual horns with relay

Horn Current—11-13 amperes (each).

Horn Relay:—R-B-M. Ford No. 91-A-13842.

Contact Closing Voltage—3.5-4.5 volts.

Current Draw—Approximately ¾ ampere.

ENGINE

ENGINE SPECIFICATIONS (91A,C; 01A,C):—8 cyl., 90° Vee, L head. Both banks & crankcase cast Enbloc.

Bore—3.062". **Stroke**—3.75".

Rated Horsepower—30. **Displacement** 221 cu. ins.

Developed Horsepower—90 at 3800 RPM.

Compression Ratio—6.20-1 Cast-iron head.

Compression & Vacuum Reading—*See Tune-Up.*

ENGINE SPECIFICATIONS (99C, 09C):—Own 95. *See 1939-40 Mercury article for all "95" Engine data.*

OIL PAN REMOVAL: *See Ford Shop Notes.*

CYLINDER HEAD: Tightening Torque and Cylinder Head Diagram—*See Ford Shop Notes.*

►**Re-working Head for Improved Cooling:** *See Ford Shop Notes for instructions (and new Head Gaskets).*

CYLINDER SLEEVES:—Hardened, dry type cylinder sleeves used on engines marked 'HS' on cylinder block beside inner front corner of left cylinder head.

Servicing:—*See Ford Shop Notes for complete data.*

PISTONS:—Steel alloy, light wgt., cam ground type. Recondition for finished replacement pistons.

Weight—333-337 grams (without rings or pin).

Removal—Pistons and rods removed from above.

Clearance—See Fitting New Pistons.

Replacement Pistons:—*See Ford Shop Notes for data.*

Fitting New Pistons: Use .50" wide feeler stock of correct thickness (see Table below) inserted between piston and cylinder wall at right angles to pin to check clearance. Pull required to withdraw feeler should be 6-10 lbs. (all types).

Engine With Sleeves	Feeler Thickness Steel Piston	Aluminum Piston
New Piston & Sleeve	.003"	.003"
New Piston—Worn Sleeve	.004"	.004"
Worn Piston & Sleeve	.005"	.005"
Engines Without Sleeves		
New Piston & Bore	.0025"	.002"
New Piston—Worn Bore	.004"	.004"
Worn Piston & Bore	.005"	.005"

PISTON RINGS:—Two compression, one slotted oil ring, all above pin (drain holes in oil ring groove).

NOTE—Expander used with #2 Compr. and oil ring.

Ring	Width	End Gap	Side Clearance
Compr. #1	.0915-.0920"	.012-.017"	.0025-.003"
Compr. #2	.0915-.0920"	.012-.017"	.002-.0025"
Oil Contr.	.1535-.1540"	.012-.017"	.0015-.002"

Replacement Rings:—*See Ford Shop Notes for data.*

PISTON PIN:—Diameter—.7501-.7504". **Length**—2.850" (steel pistons), 2.780" (aluminum pistons). Floating type. Pin hole in rod bronze-bushed.

Pin Fit in Piston—.0001-.0002" clearance (aluminum pistons), .0003-.0009" clearance (steel pistons) or light hand push fit with piston at 70°F.

Pin Fit in Rod Bushing—.0002-.0005" clearance (pin should pass through bushing slowly of own weight). *See Ford Shop Notes for Pin Fitting directions.*

Replacement Pins: *See Ford Shop Notes.*

CONNECTING ROD:—Length 7.000". **Weight** 476 grams.

Crankpin Journal Diameter—1.999" (connecting rod diameter on crankpin—2.220").

Bearing Type—Steel-backed, special-alloy lined. Bearing floats in both rods (side-by-side mounting) with bearing surface on inner and outer faces.

ENGINE

CONTINUED FR M PRECEDING PA E

Bearing Dimensions—Length 1.747". Thickness .1095". These bearings do not have end flanges.
Clearance—.0015-.0035" (see Bearing Adjustment).
Sideplay—.003-.007" (bearing endplay), .006-.014" (side clearance for both rods).

Bearing Adjustment: None (no shims). Do not file bearing caps. Replace bearings if less than .1085" thick, replace or hone rods for oversize bearings if worn more than .0015" over original size of 2.2195-2.2200". CAUTION—Both rods must be same size.

Replacement Bearings: *See Ford Shop Notes.*

Installing Rods:—Marks on rods and caps must be together and installed in same numbered cylinder with marks pointing down toward oil pan.

CRANKSHAFT:—3 bearing. Integral counterweights.
Journal Diameters—2.499" (all bearings).
Bearing Type—Steel-backed, special-alloy lined.
Clearance—.001-.003" (or slight drag with .002" feeler assembled in bearing for clearance check).

Bearing Adjustment:—None (no shims). Do not file.

End Thrust:—Taken by rear main bearing. Adjust by replacing bearing. **Endplay**—.002-.006".

Replacement Bearings:—*See Ford Shop Notes for Undersizes and special long rear main bearings.*

CAMSHAFT:—Three bearing. Helical gear drive.
Bearing Diameters—1.797" all bearings. Replace camshaft if worn to less than 1.7955" diameter.
Clearance—.002".

End Thrust:—Taken by gear hub and cover plate. Adjusted by replacing coverplate. **Endplay**—.005-.015".

Timing Gears:—Cast alloy iron (crankshaft), Bakelized Fabric—pressed on shaft, or Aluminum Alloy—bolted on shaft (camshaft). **Backlash**—.004" max.
See Ford Shop Notes for Timing Gear Replacement.

Camshaft Setting:—Mesh '0' marked tooth of crankshaft gear with '/' marked space on camshaft gear (this mark must be in line with mark on hub).

VALVES:—

	Head Diameter	Stem Diameter	Length
All Valves	1.537"	.3115"	4.750-4.751"

	Seat Angle	Lift	Stem Clearance
All Valves	45°	.292"	.0015-.0035"

NOTE—Service limit for valve stem diameter is .309" Intake, .3065" Exhaust. Valves interchangeable.
See Ford Shop Notes for Valve Servicing data.
NOTE—Seat inserts used for all valves.

Valve Guides:—Split type retained by 'C' washer and valve spring. NOTE—Replace both halves of all guides measuring less than .6665" (thickness of guide half and valve stem at top of guide with valve of .311" stem diameter in place in guide).
For Valve Guide servicing data, see Ford Shop Notes.

Valve Lifters:—Barrel type in reamed holes in block.
Diameter—.9995". Replace if worn to less than .998" in diameter or length less than 1.710" after any necessary resurfacing of ends (cast type can be resurfaced on both ends, pressed steel type on bottom end only).
Clearance—.0005-.0015". Lifter should slip into hole in block of own weight.

Valve Springs:	Pressure	Length
Valve Closed	37-40 lbs.	2.13"
Valve Open	76-80 lbs.	1.84"

NOTE—Replace spring if the pressure is less than 30 lbs. when compressed to 2.125".

VALVE TIMING

Tappet Clearance:—.010-.012" Intake, .014-.016" Exhaust. No adjustment.

Valve Timing:—See Camshaft Setting above.
Intake Valves—Open at TDC. Close 44° ALDC.
Exhaust Valves—Open 48° BLDC. Close 6° ATDC.
To Check Valve Timing—No flywheel marks provided. Intake valve opens with piston at TDC.

LUBRICATION

LUBRICATION:—Pressure. Gear type oil pump mounted in crankcase at rear of engine.

Normal Oil Pressure:—30 lbs. at 2000 R.P.M.

Oil Pump and Oil Pressure Regulator: *See "Oil Pump" in Ford Shop Notes for data.*

Oil Pressure Gauge:—King-Seeley Electric. Ford Nos: Dash Unit: 91A-9273B ('39 Del. Pass.Car), 91A-9273A ('39—all others), 01A-9273B ('40 Deluxe), 01A-9273A ('40—all others). Eng. 48-9278 (all).
See Miscellaneous Section for complete data.

Crankcase Capacity:—5 qts.

COOLING

COOLING:—**Capacity.** 22 qts. (Pass. Car; '39 Comm'l ¾ & 1 Ton; '40 Truck exc. C-O-E). 20 qts. ('40 Comm.). 24 qts. ('39 Truck exc. C-O-E). 23 qts. (C-O-E).

Water Pump: Packless. 2 used (1 for each bank).
See Water Pump Section for complete data.
Removal—Slack off drive belt, support engine at forward end, remove front engine mounting bolts, take out mounting screws in pump body.

Thermostat:—In each cylinder head outlet (2 used).
Setting—Start to open at 145°F. Fully open 180°.

Temperature Gauge:—1939—King-Seeley Liquid type, Ford Part No. 91A-10883B (Del. Pass. car), 91A-10883A (all others). 1940—King-Seeley Electric Ford Nos. Dash Unit: 01A-10883A (Std.), 01A-10883B (Deluxe). Engine Unit: 99A-10884.
See Miscellaneous Section for complete data.

CLUTCH

CLUTCH:—**Long Model 9CF-CS.** Semi-centrifugal, single plate, dry disc type.
See Clutch Section for complete data.
Facings—Molded type, 2 required. Inside Diam. 5.76". Outside Diam. 9". Thickness .137".

Adjustment:—Pedal free movement should be 1.0-1.25". To adjust, remove clevis pin at end of connector rod, adjust clevis on rod.
NOTE—Pedal free movement 1.5-1.75" for '39 cars.

Removal:—Slide rear axle and transmission to rear as a unit to expose clutch (see Transmission Removal below), take out mounting screws in cover.

TRANSMISSION

TRANSMISSION:—**Own Make.** Constant-mesh, synchro-mesh (Second & High), sliding gear (low & reverse), all helical gear type. NOTE—Four speed spur gear type optional on Commercial.
See Transmission Section for complete data.

Transmission Control (01A):—Steering col. shift Std.
See Transmission Section for complete data.

Removal:—Disconnect rear shock absorbers, hand brake cables, hydraulic brake line at torque tube connection (bleed lines when re-connected), speedometer cable. Disconnect rear spring at center frame connection, take out universal joint ball housing screws, slide rear axle assembly back to disengage drive shaft at splined joint. Support engine at rear, take out rear engine mounting bolts and clutch housing screws, pull trans'm straight back.
NOTE—Disconnect gear shifter rods from levers at transmission on 1940 passenger car models.

UNIVERSALS

UNIVERSAL JOINT:—**Spicer 6454-FS ('39), 202-6 (std. '40), 202-8 (01C, 09C with 4 spd. trans.).** Steel bushed type at rear of transmission.
See Universals Section for complete data.

REAR AXLE

REAR AXLE:—**Own Make.** ¾ floating, Spiral Bevel gear type with Torque Tube drive.
See Rear Axle Section for complete data.
Ratio—3.78-1 Std.; 3.54-1, 4.11-1 Optl.
Backlash—.012" max.

Removal:—Disconnect rear shock absorbers, hand brake cables, hydraulic brake line at torque tube connection (bleed lines when re-connected), speedometer cable. Disconnect rear spring at center frame connection, take out universal joint ball housing screws, pull axle assembly to rear to disengage splined joint, remove axle assembly.
Axle Shaft Removal—*Refer to Ford Passenger Car Rear Axle article in Rear Axle Section.*

REAR AXLE

OPTIONAL EQUIPMENT

TWO-SPEED REAR AXLE: Columbia—Two-Speed type.
See Rear Axle Section for complete data.

Removal:—Same as for standard axle (above) except that control linkage must also be disconnected.

SHOCK ABSORBERS

SHOCK ABSORBERS:—**Houde (Houdaille).** Front—BBDK (1939), BBDM (1940). Rear—BBDW (1939), BBDX (1940). Double acting, hydraulic, adjustable
See Shock Absorber Section for complete data.

FRONT SUSPENSION

Front Suspension:—Conventional 'I' beam section front axle with Reverse Elliott ends and transverse front spring. Axle positioned by radius rods.
Kingpin Inclination—8° crosswise.
Caster—9° Max., 4½° Min. Equal within ½°.
Camber—1° Max., ¼° Min. Must be equal within ¼° and the right wheel must not exceed the left.
Toe In—1/16". Set at 1-10 ratio to Camber. Adjust by loosening tie rod clamp bolts and turning tie rod.
Steering Geometry—Inner wheel 23⅓°. Outer 20°.

STEERING GEAR

Steering Gear: Gemmer Model 305. Worm-and-Roller type with "push-pull" adjustments.
See Steering Gear Section for complete data.

BRAKES

BRAKES:—**Service.** Lockheed hydraulic, double anchor type. Hand lever applies rear service brakes.
See Brake Section for complete data.
Drums—Cast iron. Diameter 12".
Wheel Cylinders—Stepped or two-stage bore type: Front Wheel—Front cylinder 1.25". Rear 1.00". Rear Wheel—Front cylinder 1.125". Rear 1.00".
Lining—Woven (forward shoes), Molded (rear shoes). Width 1.75". Thickness .20". Length per shoe 13.18" (forward shoes), 10.1" (rear shoes).
Clearance—Least possible amount without drag.

Hand Brake:—See Service Brakes above.

MISC. MECHANICAL

1940 Power Operated Conv. Top: Vacuum Power type.
See Miscellaneous Section for complete data.

OIL PAN REMOVAL: *Refer to Ford Shop Notes.*

MODEL IDENTIFICATION

3/4 Ton Trucks

1939	1940	Engine	Wheelbase
91D	01D	V8 "85"	122"
92D	02D	V8 "60"	122"
99D	09D	V8 "95"	122"

1 Ton Trucks

91Y	01Y	V8 "85"	122"
92Y	02Y	V8 "60"	122"
99Y	09Y	V8 "95"	122"

C-O-E (Cab-over-Engine) Trucks

911W	011W	V8 "85"	101"
991W	091W	V8 "95"	101"
91W	01W	V8 "85"	134"
99W	09W	V8 "95"	134"
917W	018W	V8 "85"	157"①
997W	098W	V8 "95"	157"①
911Z		V8 "85" (Dump Trk)	101"
991Z		V8 "95" (Dump Trk)	101"

Other Trucks

91T	01T	V8 "85"	134"
99T	09T	V8 "95"	134"
917T		V8 "85"	157"
997T	098T	V8 "95"	157"①
	014T	V8 "85" (Schl. Bus)	194"
	018T	V8 "85" (Schl. Bus)	158"
	094T	V8 "95" (Schl. Bus)	194"
91U	01U	V8 "85" (Dump Trk)	134"
99U	09U	V8 "95" (Dump Trk)	134"

①—Wheelbase for 1940 models 158"

SERIAL & ENGINE NUMBER:—Stamped on top of clutch housing and on left frame side member near generator.

TUNE-UP

COMPRESSION: Ratio and pressure as follows:

Engine	Ratio	Pressure at 100 RPM
60	6.6-1	116 lbs.
85①	6.2-1	113 lbs.
85 Truck	5.9-1	108 lbs.
95①	6.3-1	112 lbs.
95 Truck	5.9-1	106 lbs.

①—Commercial, ¾ and 1 Ton Truck.

VACUUM READING:—Steady 18-20" at 5-7 MPH.

FIRING ORDER: 1-5-4-8-6-3-7-2. See diagram for cylinder numbering and spark plug cable connections.

SPARK PLUGS: Champion Type H-10. 14 mm. Metric. Gaps—.025"

IGNITION: See Coil, Condenser, and Distributor.
Breaker Gap—.014-.016" **Cam Angle**—36° (closed—both sets operating together).
Automatic Advance—8° max. at 950 RPM (distr.).

IGNITION TIMING: See Ignition Timing.
Std. Setting—4° BTDC. No flywheel marks provided. See Ignition Timing for timing procedure and Vacuum Brake adjustment.

CARBURETION: See Carburetor & Carb. Equipment.
Idle Setting—Both idle screws ⅝-¾ turns open (Stromberg Carb.), ⅝-⅞ turn open (Chandler-Groves Carb.). Idle speed 5-7 MPH.
Float Level—Fuel level 15/32" (Stromberg Carb.), 21/32-23/32" (Chandler-Groves Carb.) below top edge of bowl.
Accelerating Pump (Stromberg Carb.)—Inner hole—Summer, Outer hole—Winter.
Accelerating Pump (Chandler-Groves Carb.)—Inner hole Summer, Center hole ordinary Winter temperatures, Outer hole extreme winter temperatures.

Fuel Pump Pressure: 3½ lbs. maximum.

VALVES: See Valve Timing.
Tappet Clearance—.011-.012" All Valves ("60" V8), .010-.012" Intake ("90" & "100"), .014-.016" Exhaust ("90" & "100").

STARTING: See Battery, Starter, Generator, and Regulator (when used).

IGNITION

Ignition Switch:—Oakes Steering Column & Ignition Lock Assembly. Part Nos. as follows:
1939 Types—Assembly No. 301685, Ford No. 81C-3676 (Comml., ¾, 1 Ton); 301675, Ford No. 81T-3676 (Trucks). Ignition Switch No. 301683 (All Models).
1940 Types—Assembly No. 302120, Ford No. 01C-3676 (Comml., ¾, 1 Ton); Ford No. 81W-3676 (C-O-E Trucks); 302122, Ford No. 01T-3676 (Other Trucks). Ignition Switch No. 301683 (All Models).
Lock Cylinder—Hurd or Briggs & Stratton No. 80935, Ford No. 91A-3686A (with keys).
Key Series—FK000 to FK999. **Groove**—No. 17.

COIL: Ford No. 78-12036 or 81A-12036 (Coil less Condenser). Mounted on ignition unit (part of ignition assembly).
Resistor Unit—Connected in coil primary circuit. Mounted on Circuit Breaker Assembly No. 01A-12250.

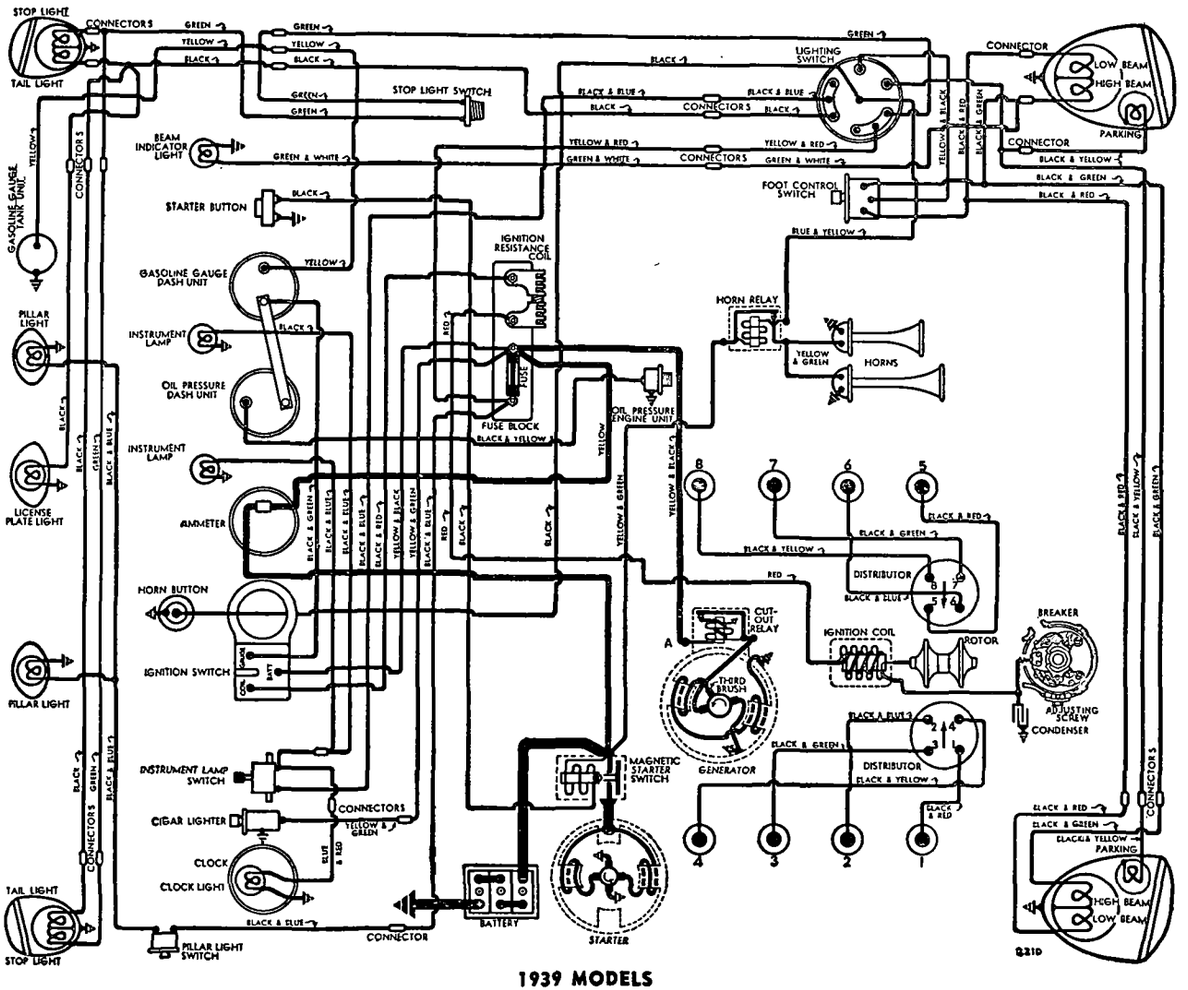

1939 MODELS

Ignition Current—4½-6 amperes (engine stopped). Ignition primary circuit resistance 1-1⅓ ohms.

CONDENSER: Ford Part No. 78-12300 (78-12036 Coil), 81A-12300 (81A-12036 Coil).

Capacity—.33-.36 microfarad.

DISTRIBUTOR: Ford Model 78-12127 (Less Coil, caps, and distributor plates). Double breaker, 8 lobe cam, full automatic advance type with Vacuum Brake Control (See Ignition Timing for adjustment).

REPLACEMENT DISTRIBUTOR—Model No. 11A-12127 with different advance. See 1941 Ford V8 article for all data on this model.

Breaker Gap—.014-.016" (both sets). Use special two step feeler—.014" step 'go', .016 step 'no go'.

Cam Angle—36° closed, 9° open. For both sets operating together with correct coil-loading lead.

Breaker Arm Spring Tension—20-24 ozs.

Rotation—Clockwise viewed from drive end.

Automatic Advance
(High Vacuum or Vacuum Brake Inoperative)

Distributor		Engine	
Degrees	R.P.M.	Degrees	R.P.M.
Start	200	0	400
2	300	4	600
3	375	6	750
5	600	10	1200
8	950	16	1900

Removal:—Ignition unit mounted on front of engine. To remove, disconnect vacuum line, take off caps, take out screws in mounting flange.

IGNITION TIMING

IGNITION TIMING:—For each engine as follows (see Vacuum Brake Setting below for adjustment depending on type of service and fuel used).

	Flywheel Degrees	Piston Position
'60' Engines	4° BTDC	.0048" BTDC.
'85' & '95' Engines	4° BTDC	.0058" BTDC.

Timing Note—Manufacturer recommends use of Laboratory Test Set with Stroboscope attachment

Timing (On Engine)—No flywheel marks provided and timing should be set with piston on top dead center. With #1 piston on top dead center entering power stroke, loosen timing adjusting screw on left hand side of ignition unit housing, place screw in retard position at lower end of slot, move screw slowly up until timing contacts begin to open, note graduation on plate under screw head which is in line with reference mark on housing, move screw up exactly one additional graduation, tighten screw.

Vacuum Brake Setting:—Should be adjusted to eliminate pinging when engine operated with load. To adjust, loosen locknut, back off adjusting screw until engine pings with load, turn screw in just enough to eliminate ping, tighten locknut. When adjusted on Stroboscope, vacuum brake should retard spark to peepsight (set at 2°) at 950 RPM. (78-12127 Distr.), 650 RPM. (11A-12127 Distr.).

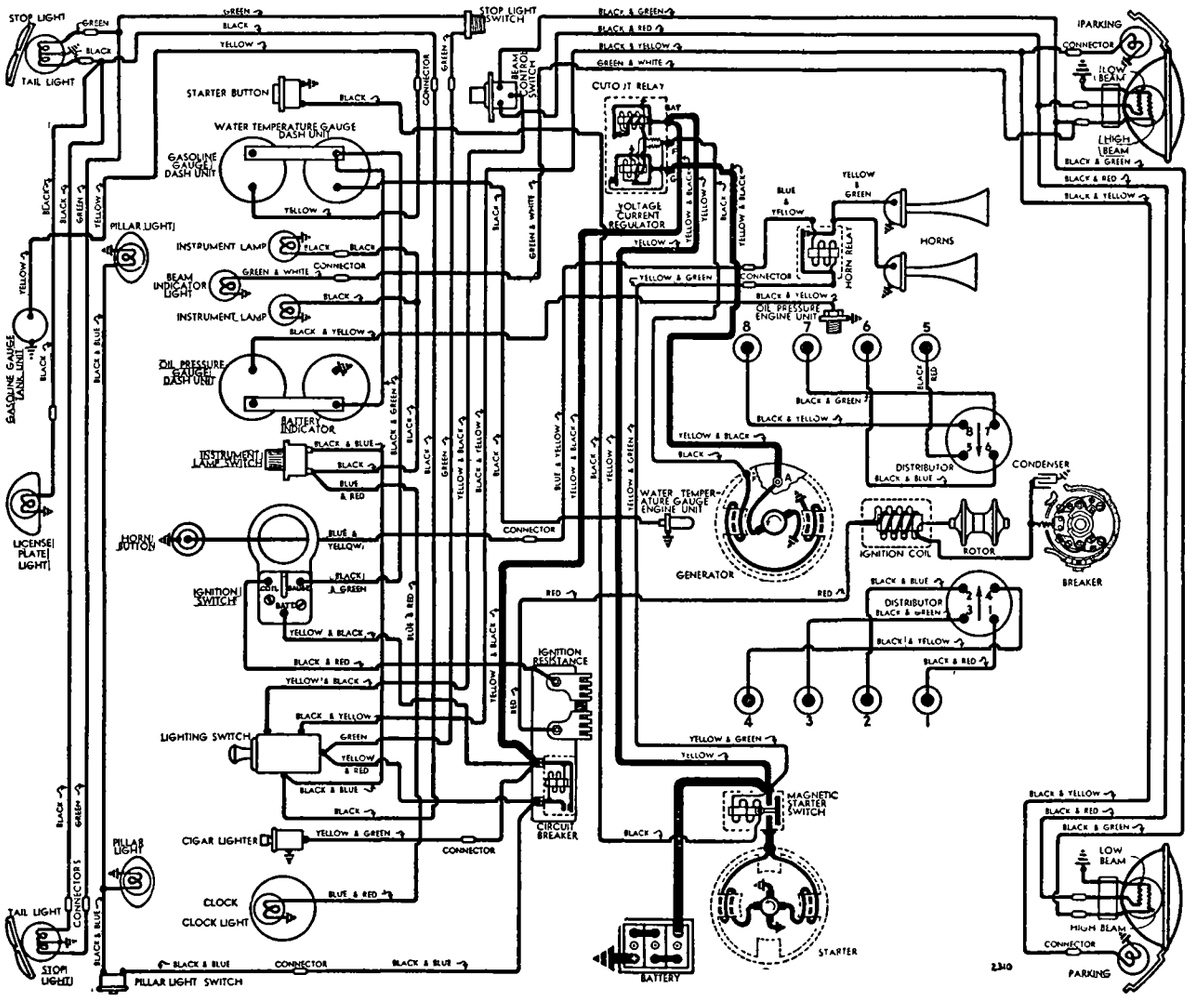

1940 MODELS

CARBURETOR

Carburetor—Holley (Chandler-Groves) Model No. AA-⅞ Ford No. 922A-9510A (60 Engine); AA-1, Ford No. 91A-9510-A (85 & 95 Engine). Dual, downdraft types. NOTE—Stromberg Model EE-⅞, Ford No. 52-9510B also used on 1939 models with "60" Engine. NOTE—Model 91A-9510A replaced by 21A-9510-A.

For complete data, refer to Carburetor Index.

Idle Adjustment—With engine warm, choke valve wide open, and Fast Idle inoperative, set throttle lever stopscrew for 5-7 MPH. idling speed, turn each idle adjusting screw (one for each barrel, adjust in succession) in until engine begins to miss, then out until engine begins to roll, finally turn screw in until engine fires smoothly. Final setting should be approximately ⅝-¾ turn open (Stromberg), ⅝-⅞ turn open (Chandler-Groves). Readjust stopscrew for correct idling speed of 5-7 MPH.

NOTE—Vacuum gauge recommended for idling adjustment. Set for highest steady gauge reading.

Float Level (Stromberg)—Fuel level should be 15/32" below top edge of bowl with engine idling.

Float Level (Chandler-Groves)—1⅜-1 11/32" from bottom of float to face of cover with valve seated (invert to check). Fuel level 21/32-23/32" below top edge of bowl.

Accelerating Pump Setting (Stromberg)—Two ball studs provided for pump link connection as follows:
"S"—Minimum stroke—Summer operation.
"W"—Maximum stroke—Winter operation.

Accelerating Pump Setting (Chandler-Groves)—Three holes provided for pump link connection:
Inner (#1)—Min. stroke, Summer Temperatures.
Center (#2)—Med. stroke, Winter Temperatures.
Outer (#3)—Max. stroke, Extreme Cold Weather.

NOTE—Link locked in pump rod by snap-lock. Pull link shaft out of pump rod to disengage this lock.

C NTINUED ON NEXT PA E

C NTINUED FROM PRECEDING PAGE

Fast Idle:—Integral with carburetor. Operated by choke valve lever. No adjustment required.

CARB. EQUIPMENT

Air Cleaner: AC No. 1528238 (1939 "60" Engine), 1528237 (1939 "85" & "95" Engine), 1529224 (1940 All) oil-wetted type Std. Heavy duty oil-bath type Optl.

Gasoline Gauge: King-Seeley Electric. Ford Nos. Dash Unit—91A-9280A (1939), 01A-9280A (1940). Tank Unit—81W-9275 (1939 C-O-E Trucks), 01W-9275 (1940 C-O-E Trucks), 01Y-9275 (1940 122" Panel Delivery), 01T-9275 (1939-40 Other Trucks).
For complete data, refer to Carburetion Equip. Index.

Fuel Pump:—AC Type R. #1523257, Ford No. 52-9350B (60 Engine); #1523307, Ford No. 68-9350 (85 & 95 Engines). Diaphragm type.
For complete data, refer to Carburetion Equip. Index.

BATTERY

BATTERY (1939): Ford No. 81A-10655-A. 6 volt, 17 plate, 100 ampere hour capacity (20 hour rate).
Starting Capacity—126 amperes for 20 minutes.
Zero Capacity—300 amperes for 3.3 minutes.
Grounded Terminal—Positive (+) grounded to dash. Engine ground—Strap connector between right rear cylinder head stud and dash.
Dimensions—Length 10.5". Width 7.2". Height 7.1".
Location—On right hand side of cowl under hood.

BATTERY (1940): Ford No. 01A-10655-A. 6 volt, 17 plate, 120 ampere hour capacity (20 hour rate).
Starting Capacity—150 amperes for 20 minutes.
Zero Capacity—300 amperes for 4.0 minutes.
Grounded Terminal—Positive(+) to dash.
Engine Ground—Strap connector between right rear cylinder head and dash (connected to battery ground strap bolt on Deluxe cars).
Dimensions—Length 10.6". Width 7.3". Height 9.2".
Location—On right side in engine compartment.

Battery Indicator:—King-Seeley. Voltmeter type. Ford No. 01A-10844A (1940 Std.), 01A-10844B (1940 Deluxe & replacement for 01A-10844A).
For complete data, refer to Electrical Equipment Index.

STARTER

Ford No. 52-11002 (60 Eng.), 18-11002 (85, 95 Eng.).
Armature—52-11005 (52-11002), 18-11005 (18-11002).
Drive—Barrel Type Bendix No. A-1806. Ford No. 52-11350-C (52-11002), Inboard Bendix No. L11FX-10, Ford No. B-11350 or Ford B&S Drive 91A-11350 (18-11002). *Refer to Electrical Equipment Index for Barrel Type Bendix Drive & Ford B&S Drive servicing.*
Rotation—Counter-clockwise at commutator end.
Brush Spring Tension—2 lbs. each.
Cranking Engine—100 RPM., 190-215 amperes.

Torque	R.P.M.	Volts	Amperes
4 ft. lbs.	1070	4.6	200
8 "	660	4.3	340
12 "	300	3.65	465
14 "	Lock	3.5	500

Starting Switch: R-B-M. Ford No. 78-11450 (1939), 01A-11450A (1940) magnetic type mounted on dash and controlled by pushbutton on instrument panel Ford No. 81A-11500 (1939), 01A-11500A (1940).

Removal:—Starter mounted on right front face of flywheel housing. To remove, take off pan at right of engine, free starter-to-oil pan support bracket, take out through-bolts on commutator end plate.

GENERATOR
THIRD-BRUSH TYPES

Third Brush Control Type (Std. 1939). Various types used as listed below. Generators are ventilated by fan on drive pulley.

1939—"60" Engines

Generator	Armature	Pulley Diam.
82A-10000-A	79-10005	3.71"

1939—"85" & "95" Engines

81A-10000-A	79-10005	4.38"
81A-10000-B	79-10005-HA	4.38"
79-10000-B	79-10005	Double 4.68"

Charging Rate Adjustment—Remove commutator cover band, shift third brush by hand, counter-clockwise to increase output, or clockwise to decrease output. Brush is held in position by friction. Maximum rated output (shown in table below) secured with third brush set 1½ commutator bars from nearest (insulated) main brush. Set charging rate as low as possible to keep battery fully charged.
Maximum Charging Rate—As follows:

Performance Data

81A-10000-A		81A-10000-B	
Amperes	Eng. R.P.M.	Amperes	Eng. R.P.M.
Start	500	Start	525
17	1300	26	1250
11	2500	16	2500

82A-10000-A		79-10000-B	
Start	500	Start	500
17	1300	17	1350
11	2500	11	2500

Rotation—Counter-clockwise at commutator end.

Brush Spring Tension—Approximately 28 ozs.

Field Current—6 amperes at 6.0 volts (79-10000B, 81A-10000A, 82A-10000A—field resistance 1.0 ohm at 70° F.), 4.17 amperes at 6.0 volts (81A-10000B—field resistance 1.44 ohms at 70° F.).

Removal & Belt Adjustment: Same as for Two-Brush Generators (see below).

GENERATOR
TWO-BRUSH TYPES

Two Brush (Shunt) Type (Optl. 1939, Std. 1940). Various types used as listed below. Generators are ventilated and have external voltage and current regulation.

1939—"60" Engines

Generator	Armature	Pulley Diam.
82A-10000-D	78-10005-A, C	3.68"
82A-10000-E①	78-10005-B, D	3.68"

1939—"85" & "95" Engines

81A-10000-D	78-10005-A, C	4.38"
81A-10000-E①	78-10005-B, D	4.38"
81T-10000A	78-10005-A, C	Double 4.68"
81T-10000-B①	78-10005-B, D	Double 4.68"

1940—All Engines

01A-10000-A③	01A-10005	3.68"
01A-10000-B③	01A-10005	3.18"
81T-10000-A②	78-10005-A, C	Double 4.68"
81T-10000-B①②	78-10005-B, D	Double 4.68"

①—Low Speed (Taxi, Door-to-Door Delvry., etc.).
②—Std. on 1940 C-O-E Trucks.
③—Replacement Generator 21A-10000.

Charging Rate Adjustment—No adjustment. See Regulator data below.

Maximum Charging Rate—Controlled by regulator and dependent on battery condition and load. To check generator output, disconnect generator field lead at generator, connect both generator terminals together (use short insulated wire). Use 'BRS' set or rheostat connected across battery terminals and apply load until voltage is exactly 6 volts. Connect ammeter in charging line, run engine at approximately 1000 RPM, check output at 3 speeds given in performance table below. Restore original connections after completing test. **Do not operate generator in service with both terminals connected together. This eliminates all regulator action and will damage generator.**

Performance Data

81A-, 82A-10000-D		81A-, 82A-10000-E	
Amperes	Eng. RPM	Amperes	Eng. RPM
Start	500	Start	350
28	1250	20	1000
28	2500	20	2500

01A-10000-A		01A-10000-B	
Start	580	Start	520
32	1100	30	1060
32	2500	30	2500

81T-10000-A		81T-10000-B	
Start	550	Start	350
28	1300	20	1050
28	2500	20	2500

Rotation—Counter-clockwise at commutator end.

Field Current—2.86 amperes at 6 volts (01A-10000 A—field resistance 2.1 ohms at 70°), 2.1 amperes at 6.0 volts (01A-10000B—field resistance 2.88 ohms at 70°F), 2.22 amperes at 6.0 volts (81A-10000-D, E; 82A-10000-D, E; 81T-10000-A, B—field resistance 2.7 ohms at 70°F).

Brush Spring Tension—Approximately 28 ozs.

Removal:—Generator mounted on bracket between cylinder banks at front of engine, driven in tandem with water pumps by Vee belt (on Cab-over-Engine Trucks, fan on generator shaft with double drive belts). To remove, loosen bracket stud nut.

Belt Adjustment:—Loosen nut on bracket mounting stud, raise generator up until side movement on belt midway between generator and water pump pulley is 1" (thumb and finger pressure).

GENERATOR

SPECIAL EQUIPMENT

SPECIAL GENERATORS:—Other Makes—*Refer to Electrical Equipment Index for 'Special Generator' article for complete data on special Generators and Regulators which may be found on these models.*

CUTOUT RELAY

Ford No. B-10505 (Used with Third Brush Generator). Mounted on generator. Generator field lead grounded to relay mounting screw.

Cuts In—5.8-6.3 volts, 400 Eng. RPM (60 Trucks), 660 RPM (85 & 95 Trucks).

Cuts Out—2 amperes maximum discharge.

Contact Gap .015-.020". Air Gap .010-.015" (closed).

NOTE—Relay case sealed. No adjustment possible.

REGULATOR

REGULATOR:—Ford No. 01A-10505-A. Vibrating type Voltage-Current regulator with Cutout Relay in case on dash. NOTE—Regulator mounted on rubber cushions and grounded through separate ground wire attached to case. Regulator case is sealed and no adjustments can be made.

REPLACEMENT REGULATOR NOTE—New type 3-unit Regulator (separate Voltage & Current Regulator units) furnished as service replacement for above 2-unit type. *See 'Ford Regulator—3-unit Type' article in Electrical Equipment Section for complete data on this new type.*

Cutout Relay

Cuts In—5.8-6.3 volts.

Cuts Out—5.5 amperes max. (Cold 60°), 1.7 amperes (Hot 180°)—*see Regulator article in Electrical Equipment Section for specifications at other temperatures.*

Voltage-Current Regulator

Voltage Setting—6.9-7.2 volts at 70°F.

Current Setting—30-33 amperes.

Regulator Checking & Adjustment—*See Ford Regulator article in Electrical Equipment Section for complete testing directions.* No adjustments can be made as regulator case is sealed.

LIGHTING

Headlamps—Ford (Corcoran-Brown) Two-Lite, Prefocused, type (1939), Ford Sealed Beam type (1940), Upper and Lower Beams controlled by Beam Selector Switch on toeboard.

For complete data, refer to Electrical Equipment Index.

Headlamp Adjustment—Aim Upper Beam of each headlamp straight ahead with upper edge of beam on horizontal line at lamp center height (1939), center of hot spot 3" below horizontal line at lamp center height (1940) at distance of 25 feet.

Beam Indicator—Red jewel on instrument panel directly above speedometer. Lighted when upper beams in use.

Switches—1939

Lighting—R-B-M. Ford No. 81W-11653 (C-O-E Trucks), 81T-11647 (Others). Switch Body & Contact Assembly 81A-11657 (All Models).
Beam Selector—Ford No. 81A-13532.
Instrument Light—Ford No. 50-13740.
Stop Light—Ford No. 81T-13480.

Switches—1940

Lighting—R-B-M No. 6425. Ford No. 01A-11652.

NOTE—Switch is mounted on instrument panel.

Beam Selector—R-B-M No. 2480. Ford No. 81A-13552. Switch & Wiring Assy. Ford No. 01W-11653 (C-O-E Trucks), 01C-11653 (Other Trucks).

Instrument Light—Ford No. 50-13740.

Stop Light—Ford No. 91A-13480.

Bulb Specifications

Position	Candlepower	Mazda No.
Headlamps (1939)	32-32	2330
Headlamps (1940)	Sealed Beam	
Parking (Comm'l., Trks.)	3	63
Instrmt. (Comm'l., Trks.)	3	63
Beam Indicator	1	51
Stop & Tail	21-3	1158

MISC. ELECTRICAL

LIGHTING CIRCUIT BREAKER:—R-B-M Model 6700, Ford No. 01A-12250. Combined with Ignition Resistor on block on dash under cowl. Combination thermostatic and wound-coil type. Contacts open with current of 50 amperes. Current continues to flow through winding which is connected across the contacts resulting in rapid vibrating action.

FUSE BLOCK: Ford No. 40-12250. Used instead of Lighting Circuit Breaker on some models. Combined with Ignition Resistor on block on dash under cowl.

Fuse Capacity—20 amperes.

HORNS: Vibrator type single horn Std.

Horn Current—6-8 amperes.

ENGINE

V8 "60" TYPE

ENGINE SPECIFICATIONS:—Own Model. 8 Cylinder 90° V, L head. Both banks & crankcase cast enbloc.

Bore—2.6". Stroke—3.2". Displm't—136 cu. ins.

Rated Horsepower—21.6.

Developed Horsepower—60 at 3500 R.P.M.

Compression Ratio—6.6-1 Std. No Optl. ratios.

Compression Pressure—158 lbs. at 2800 R.P.M. or 116 lbs. at cranking speed of 100 RPM.

Vacuum Reading—18-20" steady at 5-7 M.P.H.

For all other "60" Engine data, refer to 1939-40 Ford V8 "60" Passenger Car & Comm'l article.

ENGINE

V8 "85" TYPE

ENGINE SPECIFICATIONS:—Own Model. 8 Cylinder, 90° V, L head. Both banks & crankcase cast enbloc.

Bore 3.062". Stroke 3.75". Displm't. 221 cu. ins.

Rated Horsepower—30.

Developed Horsepower—90 at 3800 RPM.

Compression Ratio—6.2-1 (Comm'l, ¾, 1 Ton), 5.9-1 (Other Trucks). Heads are Cast Iron.

Compression Pressure—145 lbs. at 2300 RPM. max. or 113 lbs. at cranking speed of 100 RPM. (6.2-1 Head), 135 lbs. at 2300 RPM. max. or 108 lbs. at cranking speed of 100 RPM (5.9-1 Head).

Vacuum Reading—18-20" steady at 5-7 M.P.H.

For all other "85" Engine data, refer to 1939-40 Ford V8 "85" Passenger Car & Comm'l article.

ENGINE

V8 "95" TYPE

ENGINE SPECIFICATIONS: Own 95. 8 cylinder, 90° Vee, "L" Head. Both banks and crankcase cast enbloc.
Bore—3.187". **Stroke**—3.75".
Rated Horsepower—32.5. **Displacement**—239 cu. ins.
Developed Horsepower—95 at 3600 RPM.
Compression Ratio—6.3-1 (Comm'l), 5.9-1 (Trucks). Heads are Cast Iron.

Compression Pressure—145 lbs. at 2400 RPM max. or 112 lbs. at cranking speed of 100 RPM. (6.3-1 Head), 135 lbs. at 2200 RPM. max. or 106 lbs. at cranking speed of 100 RPM. (5.9-1 Head).

Vacuum Reading—Steady 18-20" idling at 5 MPH.

For all other "95" Engine data, refer to 1939-40 Mercury V8 "95" Passenger Car article.

VALVE TIMING

Tappet Clearance:—.011-.012" All Valves ("60" V8), "90" & "100"—.010-.012" Int., .014-.016" Exhaust.
Valve Timing ("60" Engine): See Camshaft setting.
Intake Valves—Open 9½° BTDC. Close 54½° ALDC.
Exhaust Valves—Open 57½° BLDC. Close 6½° ATDC.
Valve Timing ("85" & "95"): See Camshaft Setting.
Intake Valves—Open at TDC. Close 44° ALDC.
Exhaust Valves—Open 48° BLDC. Close 6° ATDC.
To Check Valve Timing—No marks on flywheel or other means provided to check timing. If dead center position for piston #1 is established on flywheel, intake opening for this cylinder should occur with piston .0270" BTDC. with flywheel mark 3.22 teeth before dead center point (60 Engine) or with piston on top dead center and flywheel mark at dead center point (85, 95 Engines).

LUBRICATION

LUBRICATION:—Crankcase Capacity—4 qts. (60 Engine), 5 qts. (85, 95 Engines).
Normal Oil Pressure:—30 lbs. at 2000 R.P.M. (all).
Oil Pressure Gauge:—King-Seeley Electric. **Ford Nos.:**
Dash Unit—91A-9273A (1939), 01A-9273A (1940)
Engine Unit—48-9278 (All Models).
See Miscellaneous Section for complete data.

COOLING

Capacity: 16 qts. ("60" ¾ & 1 Ton), 22 qts. ("85" ¾ & 1 Ton), 23 qts. (C-O-E Trucks), 24 qts. (Other Trucks 1939), 22 qts. (Other Trucks 1940).
Water Pump: Packless. 2 used (1 for each bank).
See Water Pump Section for complete data.
Removal "60"—Slack off belt adjustment, unscrew large mounting nut behind pulley, pull pump out.
Removal "85" & "95"—Slack off drive belt, support engine at front, remove front engine mounting bolts, take out mounting screws in pump body.
Thermostat: In each cylinder head outlet (2 used). Starts to open at 145°F., fully open at 180°F).
Temperature Gauge (1939): King-Seeley (not electrical). Ford No. 91W-10883 (C-O-E Trucks), No. 91A-10883-A (Other Trucks).
See Miscellaneous Section for complete data.
Temperature Gauge (1940): King-Seeley Electric. Dash Unit—Ford No. 01A-10883A (exc. C-O-E). Engine Unit—Ford No. 99A-10884 (exc. C-O-E). NOTE—Gauge on C-O-E Trucks is Ford No. 91W-10883 (not electric) type.
See Miscellaneous Section for complete data.
NOTE—Gaug reads 212 (Hot) with Ignition Off.

C NTINUED ON NEXT PAGE

C NTINUED FROM PRECEDING PA E

CLUTCH

Long Model 9CF-CS (Trucks with "60" Engine), Model 11CF-CI (All Others). Semi-centrifugal, single plate, dry disc type.

See Clutch Section for complete data.

Facings—Molded type, 2 required. Inside Diam. 5.76" (9CF), 6.5" (11CF). Outside Diam. 9" (9CF), 11" (11CF). Thickness .137" (all).

Adjustment:—Pedal free movement should be 1.5-1.75". To adjust, remove clevis pin at end of connector rod, adjust clevis on rod.

Removal:—Remove transmission (see Transmission Removal below). Take out mounting screws in clutch cover flange.

TRANSMISSION
3-SPEED TYPE

TRANSMISSION (3 SPD.):—Own Make. Std. on ¾ & 1 Tonner. Constant-mesh, synchro-mesh (Second & High), helical gears (Second & High), sliding spur gears (Low & Reverse). 4 Spd. Trans. Optl.

See Transmission Section for complete data.

Removal (1939): Remove the front shaft (coupling shaft) as follows: Take out all except top bolt in intermediate universal joint ball housing (frame bolts), remove all screws in front universal joint cover, slide cover back 6" on housing, take out screws in universal joint flange directly in back of universal, disengage coupling by pushing it back n shaft against spring tension, take out remaining bolt at intermediate universal joint, pull shaft down at front end to clear cross-member, pull forward until free at splined joint at rear end, remove shaft assembly. Support engine at rear end, take out rear engine mounting bolts, take out clutch housing mounting screws, pull transmission straight back and remove.

NOTE—Models 911-W, Z have one universal joint only (no coupling shaft used).

Removal (1940): Remove four companion flange bolt nuts at front universal. Take out 2 bolt nuts at coupling shaft center support (all except 101" WB. Cab-Over-Engine). Lower propeller shaft assembly to floor. Support engine at rear end, take out rear engine mounting bolts and clutch housing mounting screws. Pull transmission straight back and remove.

TRANSMISSION
4-SPEED TYPE

TRANSMISSION (4 SPD.):—Own Make. Std. on all models except ¾ & 1 Tonner. Sliding spur gear type.

See Transmission Section for complete data.

Removal:—Same as for 3 Spd. transmission above.

UNIVERSALS

Spicer. Needle bearing types (except 1939 ¾ & 1 Ton—Steel Bushing type). Universal joint installations are as follows:

1939 Models (exc. 911W, 911Z)—Two universals used, one at rear of transmission case, additional universal at frame cross-member between front and rear driveshafts.

1939 Models 911W, 911Z—One universal only. Mounted in ball housing at rear of transmission case.

1940 Models—New type exposed driveshaft (Hotchkiss Drive) with Universal Joints mounted on driveshaft flanges (see Coupling Shaft Bearing below). Universal Joint types are as follows:

1940 Universal Joints

Wheelbase	Front	Center	Rear
101"	1351-17	None	1358-104
122"	1318-103	1311-102	1318-103
134 & 158"	1358-4	1351-107	1358-104
194"	1358-5	1351-107	1358-105

See Universals Section for complete data.

Coupling Shaft Bearing (1940): With change from Torque Tube Drive to Hotchkiss Drive a new type cushion mounted Coupling Shaft Ball Bearing bolted to underside of intermediate frame cross member is now used. Bearing is mounted on end of coupling shaft in a sleeve with a felt retainer sleeve on each end and a bearing baffle over the front end. Bearing is retained by center universal companion flange. Bearing and sleeve assembly mounted in center support which is bolted to underside of frame cross member.

REAR AXLE
STANDARD

REAR AXLE (STD.):—Own Make. Full-floating, Spiral Bevel gear type with straddle-mounted pinion and new Hotchkiss drive.

See Rear Axle Section for complete data.

Ratio—¾ & 1 Tonner: 4.857-1 (Std. 85), 6.67-1 (Std. 60), 4.11-1 (Optl.). Other Trucks: 6.67-1 (Std.), 5.14-1 stamped with SS or 5.83-1 (Optl.).

Backlash—.004-.016".

Removal (1939): Disconnect hand brake cables and brake line (at torque tube connection—bleed lines when re-connected), speedometer cable. Disconnect rear springs (semi-elliptic type), take out universal joint ball housing bolts (rear joint), pull axle assembly to rear to disconnect splined joint, remove assembly.

Axle Shaft Removal—Take out two screws and remove hub cap, remove nuts on 8 hub studs which hold axle shaft flange in place, turn the two special screws (in tapped holes in flange) up evenly to break flange loose from wheel hub, **back these screws out,** strike axle shaft flange at center to loosen centering cones on studs, remove cones, pull axle shaft out (wheel not disturbed).

Wheel Bearing Adjustment—Remove axle shaft (above), use special bearing adjusting wrench and remove bearing locknut (outer nut), nut retainer, and grease retainer. Adjust inner bearing adjusting nut by turning up until tight and then backing off ⅛ turn, install grease retainer, bearing nut retainer, outer bearing locknut, turn locknut up tight.

NOTE—When installing axle shaft, make certain that gasket in place under shaft flange, cones in place on studs and that two loosening screws backed off sufficiently so that stud nuts can be tightened securely. Turn the two loosening screws in just enough to prevent loosening in service.

Removal (1940): Split rear universal by taking out bolts and nuts. Lower propeller shaft. Disconnect hand brake cables at equalizer (¾ & 1 Tonner) and flexible hydraulic brake line at rear axle (bleed lines when re-connected). Disconnect rear springs (semi-elliptic type) and withdraw axle assembly from beneath truck.

Axle Shaft Removal—Take out two screws (except ¾ & 1 Tonner) and remove hub cap, remove nuts on 8 hub studs which hold axle shaft flange in place, turn the two special screws (in tapped holes in flange) up evenly to break flange loose from wheel hub, **back these screws out,** strike axle shaft flange at center to loosen centering cones on studs, remove cones, pull axle shaft out (wheel not disturbed).

Wheel Bearing Adjustment—Remove axle shaft (above), use special bearing adjusting wrench and remove bearing locknut (outer nut), nut retainer, and grease retainer (except ¾ & 1 Tonner). Adjust inner bearing adjusting nut by turning up until tight and then backing off ⅛ turn, install grease retainer, bearing nut retainer, outer bearing locknut, turn locknut up tight.

NOTE—When installing axle shaft, make certain that gasket in place under shaft flange, cones in place on studs and that two loosening screws backed off sufficiently so that stud nuts can be tightened securely. Turn the two loosening screws in just enough to prevent loosening in service.

REAR AXLE
SPECIAL EQUIPMENT

REAR AXLE (OPTL.):—Two-speed type.

See Rear Axle Section for complete data.

Ratio—5.83-1 (Direct), 8.11-1 (2nd speed).

Backlash—.006-.020".

Removal:—Same as for standard axle (above) except that control linkage must also be disconnected.

SHOCK ABSORBERS

SHOCK ABSORBERS:—Houde (Houdaille). Double acting, hydraulic, adjustable. Used on front end only.

See Shock Absorber Section for complete data.

FRONT SUSPENSION
1939 MODELS

Front Suspension (1939): Conventional "I" beam front axle with Reverse Elliott ends and transverse spring positioned by radius rods (except Cab over Engine models), semi-elliptic springs (Cab over Engine models).

Kingpin Inclination—8° crosswise (except Cab-Over-Engine Trucks—7°).

Caster—9° Max., 8¼° Min (¾, 1 Ton). 3½° Max., 1° Min. (Cab-Over-Engine), 5° Max., 3° Min. (others). Must be equal within ½°. NOTE—Axle may be bent cold to correct caster provided that proper tools (wedges and blocks to prevent crushing axle flange) used.

Camber—1° Max., ¼° Min. (all models). Must be equal within ¼° and right wheel must not exceed left wheel. Adjust as for Caster (see Caster Note).

Toe In—1/16" (Cab-Over-Engine), 0" (other trucks—empty). Set at 10-1 ratio to camber. Toe in increases with load on trucks and should be set with truck empty. Adjust by loosening clamp bolts and turning tie rod.

Steering Geometry (Toe out on turns)—Outer wheel turned 20°, Inner wheel 23° (¾ & 1 Ton), 23¾° (101" WB. models), 22⅔° (134" WB. models), 22¼° (157" WB. models). Allowable variation ½°.

FRONT SUSPENSION

1940 MODELS

Front Suspension (1940): Conventional "I" beam front axle with Reverse Elliott ends and new semi-elliptic springs.

Kingpin Inclination—7° crosswise.

Caster—3½° Max., 1° Min. Must be equal within ½°.

NOTE—Caster angle controlled by wedge shims inserted between axle pads and springs. To increase caster, insert taper wedge shims equally at both sides (make certain that spring tie bolts extend through wedge anchoring spring to axle).

Camber—1° Max., ¼° Min. Must be equal within ¼° and right wheel must not exceed left wheel. NOTE—Axle may be bent cold to correct Camber provided that proper tools (wedges and blocks to prevent crushing axle flange) used.

Toe In—1/16". Set at 1-10 ratio to Camber. Toe-in increases with load on trucks and should be set with truck empty. Adjust by loosening clamp bolts and turning tie rod.

Steering Geometry (Toe out on Turns)—Outer wheel turned 20°. Inner wheel 23° (¾ & 1 Tonner), 23¾° (101" WB.), 22⅔° (134" WB.), 22¼° (158" WB.). Allowable variation ½°.

STEERING GEAR

Steering Gear: Gemmer Model 305. Worm-and-Roller type with push-pull adjustments.
See Steering Gear Section for complete data.

BRAKES

BRAKES:—Service. Lockheed, hydraulic, double anchor type. Hand lever applies rear wheel service brakes (¾ & 1 Ton), independent rear wheel or driveshaft brake (All Others).
See Brake Section for complete data.

Drums—Cast-iron. Diameter: ¾ Ton (12" front & rear). 1 Ton (12" front, 14" rear). Other Trucks (14" front, 15" rear).

Wheel Cylinders—Stepped type used on ¾ Ton (front & rear wheels), 1 Ton (front). Sizes as follows:

	Front Wheel Front	Front Wheel Rear	Rear Wheel Front	Rear Wheel Rear
¾ Ton	1.25"	1.00"	1.25"	1.00"
1 Ton	1.25"	1.00"	1.375"	1.375"
All Others	1.375"	1.375"	1.50"	1.50"

Lining—Forward shoes (Woven—all wheels ¾ Ton, front wheel 1 Ton. Molded—All Others). Rear shoes (Molded—All Models).

	Width	Thickness	Length per Shoe Forward	Length per Shoe Rear
¾ Ton (all)	1.75"	20"	13.18"	10.1"
1 Ton (front)	1.75"	20"	13.18"	10.1"
1 Ton (rear)	2.00"	268"	15.53"	10.75"
Others (front)	2.00"	268"	15.53"	10.75"
Others (rear)	3.50"	33"	16.64"	11.52"

Clearance—Least possible amount without drag.

Hand Brake (¾ & 1 Ton):—See Service Brakes above.

Hand Brake (1939 exc. ¾ & 1 Ton): Independent internal expanding brake band in each rear wheel.

Drum Diameter—14".

Lining—Woven type. Width 1.5". Thickness .185". Length per wheel 41.12".

Hand Brake (1940 exc. ¾ & 1 Ton): Independent external contracting brake band on drum at rear of transmission.

Adjustment—Fully release hand brake lever. Flat on cam should rest on ear of band (if not, remove pin in lower end of hand lever). Turn anchor screw (on left side) in to give .010" clearance between drum and band, replace locking wire. Loosen lock nut and turn bracket adjusting screw (on right side) to give .010" clearance for lower half of band, tighten lock nut. Tighten adjusting rod nut (on right side) to give .010" clearance for upper half of band (slotted side of nut up). Adjust brake rod clevis so that pin enters clevis and hand brake lever with flat of cam on ear of band and lever in fully released position.

Drum Diameter—7.81".

Lining—Woven. Width 2.5". Thickness 0.250".

COMMERCIAL & TRUCK NOTE:—All Engine data below applies also to Ford Commercial & Truck Models with V8 '90' engine. See Ford Commercial & Truck article for all other data.

ENGINE HOOD NOTE:—Hood is Alligator type with release knob under instrument panel to left of steering column. To raise hood, pull out on release knob (hood will raise slightly), press in on safety catch under front edge of hood.

OIL PAN REMOVAL:—*See Ford Shop Notes for data.*

MODEL IDENTIFICATION

Model	Year	Body Type
11A	1941	Passenger Cars
21A	1942	Passenger Cars

SERIAL & ENGINE NUMBER:—Stamped on top of clutch housing and on left frame rail (near gen.).

TUNE-UP

COMPRESSION:—**Ratio**—6.2-1 Std. Cast iron or aluminum heads.
Pressure—140 lbs. max. at 2300 RPM. or 113 lbs. at cranking speed of 100 RPM.

VACUUM READING:—Steady 18-20" idling at 5-7 MPH.

FIRING ORDER:—1-5-4-8-6-3-7-2. See diagram.

SPARK PLUGS:—Champion H-10 (Pass. Cars), H-9 Com. (Truck). 14 MM. Metric type.
Gaps—.025".

IGNITION: See Coil, Condenser, and Distributor.
Breaker Gap—.014-.016". **Cam Angle** 36° (closed—both sets operating together).
Automatic Advance—8° max. at 950 RPM (78-12127 Distr.), 11° max. at 600 RPM (11A-12127 & 21A-12127 Distr.). Distributor degrees and RPM.

IGNITION TIMING: See Ignition Timing.
Std. Setting—4° BTDC. No flywheel marks provided. See Ignition Timing for ignition timing procedure and Vacuum Brake adjustment.

CARBURETION: See Carburetor & Carb. Equipment.
Idle Setting—Both idle screws ⅝-¾ turn open. Idle speed 5-7 MPH.
Float Level—Fuel level 11/16" (21/32-23/32") below top edge of float bowl.
Accelerating Pump—Inner (#1) hole—Summer, Center (#2) hole—Winter, Outer (#3) hole for extremely cold temperatures only.
Fuel Pump Pressure: 3½ lbs. maximum.

VALVES: See Valve Timing.
Tappet Clearance—.010-.012" Intake, .014-.016" Exhaust. No adjustment.

STARTING: See Battery, Starter, Generator, Regulator.

IGNITION

Ignition Switch:—Oakes Steering Column and Ignition Lock Assembly.

	Steering Post & Ign. Lock Assem. Oakes No.	Ignition Switch Ford No.	Ignition Switch Oakes No.
1941 Deluxe Cars	302448	11A-3676B	302494
1941 Super Deluxe	302550	11A-3676B	302494
1941 Sedan Delvry	302575	11C-3676B	302461
1942 All Cars	302756	21A-3676A	302494

Lock Cylinder—Hurd or Briggs & Stratton No. 80935, Ford No. 91A-3686A (With Keys).
Key Series—FK000 to FK999. **Groove**—No. 17.

COIL: Ford No. 78-12036 or 81A-12036 (1941), 1GA-12024 (1942). 1941 type coils mounted on top of distributor as part of ignition unit. 1942 coil is new type mounted separately on bracket on left of engine.
Resistor Unit—Connected in coil primary circuit. Mounted on Circuit Breaker Assembly No. 11A-12250 (V8 models only).
Ignition Current—4½-6 amperes (V8) with engine stopped. Ignition primary resistance 1-1⅓ ohms.

CONDENSER: Ford Part No. 78-12300 (78-12036 Coil), 81A-12300 (81A-12036 Coil), IGA-12300B (IGA-12024 Coil).
Capacity—.33-.36 mfd. (78-12300 & 81A-12300), .29-.32 mfd. (1GA-12300B).

DISTRIBUTOR (1941): Ford 78-12127 or 11A-12127 (less coil, caps, and plates). Both types alike except for automatic advance.
Breaker Gap—.014-.016" (both sets). Use special two step feeler—.014" step 'go', .016" step 'no go'.
Cam Angle—36° closed, 9° open. For both sets operating together with correct coil-loading lead.
Breaker Arm Spring Tension—20-24 ozs.
Rotation—Clockwise viewed from drive end.

No. 78-12127

Distributor Degrees	Automatic Advance R.P.M.	Degrees	Engine R..P.M
Start	200	0	400
8	950	16	1900

NOTE—Limits are 7½-8½° (distributor).

No. 11A-12127

Distributor Degrees	Automatic Advance R.P.M.	Degrees	Engine R..P.M
Start	200	0	400
11	600	22	1200

NOTE—Limits are 10½-11½° (distributor).

Removal:—Ignition unit mounted on front of engine. To remove, disconnect vacuum line, take off caps, take out screws in mounting flange.

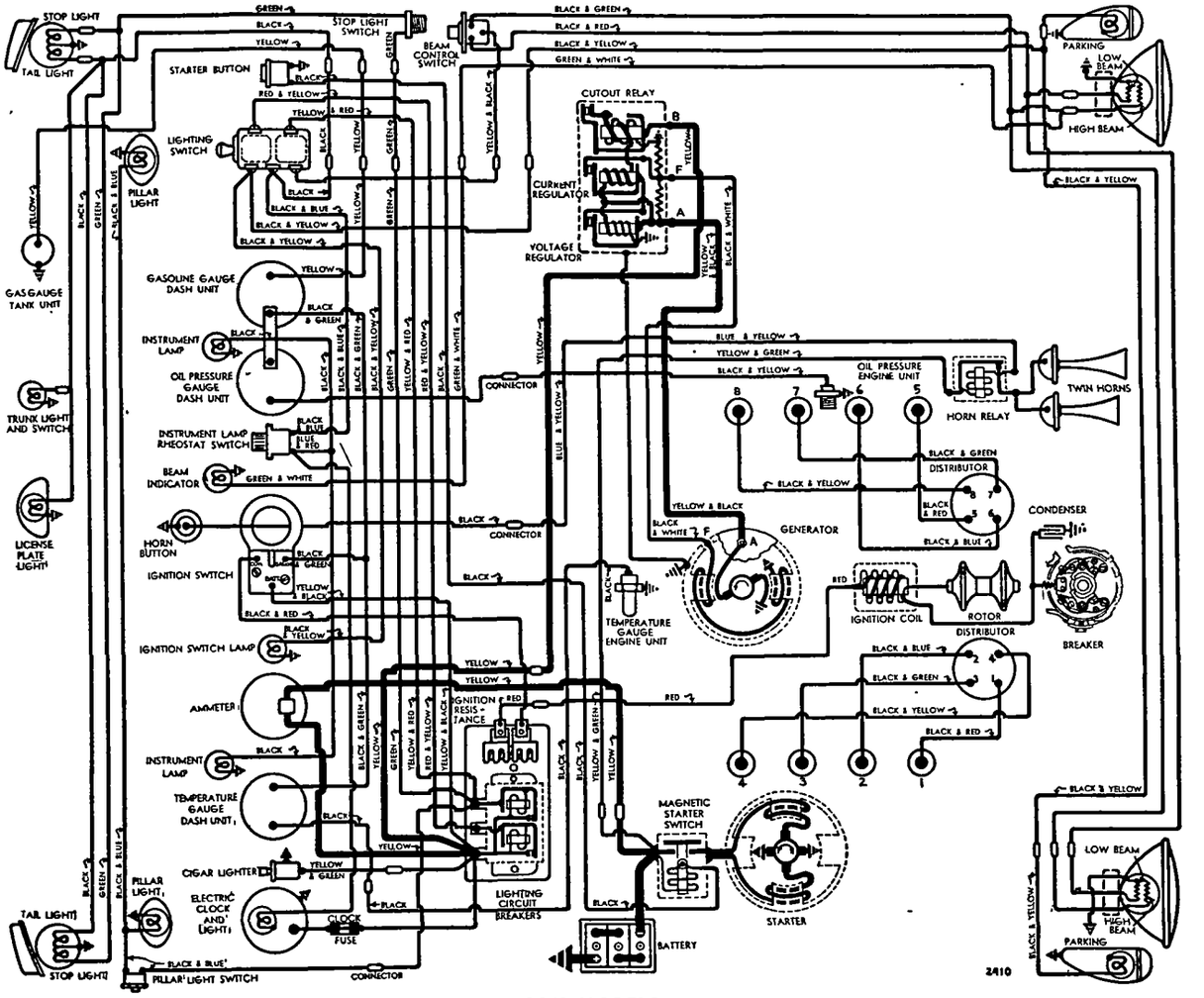

1941 MODELS

DISTRIBUTOR (1942): Ford 21A-12127 (Less Terminal housing). New flat ignition unit (with separate coil) mounted on front of the engine and is driven directly off end of camshaft. Double breaker, 8 lobe cam, full automatic advance type with Vacuum Brake control (breaker design same as used earlier).

Breaker Gap—.014-.016" (both sets). Use special two step feeler—.014" step 'go', .016" step 'no go'.

Cam Angle or Dwell—Approx. 36° closed, 9° open. Set dwell at 80% (limits 78-80% at 2000 RPM.) on Ford Test Set. For both sets operating together with correct coil-loading lead.

Breaker Arm Spring Tension—20-24 ounces.

Rotation—Clockwise viewed from drive end (counter-clockwise viewed from front of car).

Automatic Advance—No. 21A-12127
(Vacuum Brake Disconnected)

Distributor Degrees	R.P.M.	Engine Degrees	R.P.M.
Start	200	0	400
11	600	22	1200

NOTE—Limits are 10½-11½° (distributor degrees).

Removal:—Distributor mounted on front of engine. To remove, disconnect primary lead, remove distributor cap, take out mounting screws in distributor flange, lift unit out.

IGNITION TIMING

IGNITION TIMING:—For each engine as follows (see Vacuum Brake Setting below for adjustment depending on type of service and fuel (V8 only).

	Flywheel Degrees	Piston Position
All V8 Engines	4° BTDC	.0058" BTDC

Timing Note—Manufacturer recommends use of Laboratory Test Set with Stroboscope attachment or V-126 Timing Fixture for all ignition settings.

Timing (On Engine)—No flywheel marks provided and timing should be set with piston on top dead center. With #1 piston on top dead center entering power stroke, loosen timing adjusting screw on left hand side of ignition unit housing, place screw in retard position at lower end of slot, move screw slowly up until timing contacts begin to open, note graduation on plate under screw head which is in line with reference mark on housing, move screw up one additional graduation **on V8 Engines only.**

Vacuum Brake Setting (V8 Engines)—Should be adjusted to eliminate pinging when engine operated with load. To adjust, loosen locknut, back off adjusting screw until engine pings with load, turn screw in just enough to eliminate ping, tighten locknut. When adjusted on Stroboscope, vacuum brake should retard spark to peepsight (set at 2°) at 950 RPM. (78-12127 Distr.), 650 RPM. (11A-12127 & 21A-12127 Distr.) with no vacuum to release brake.

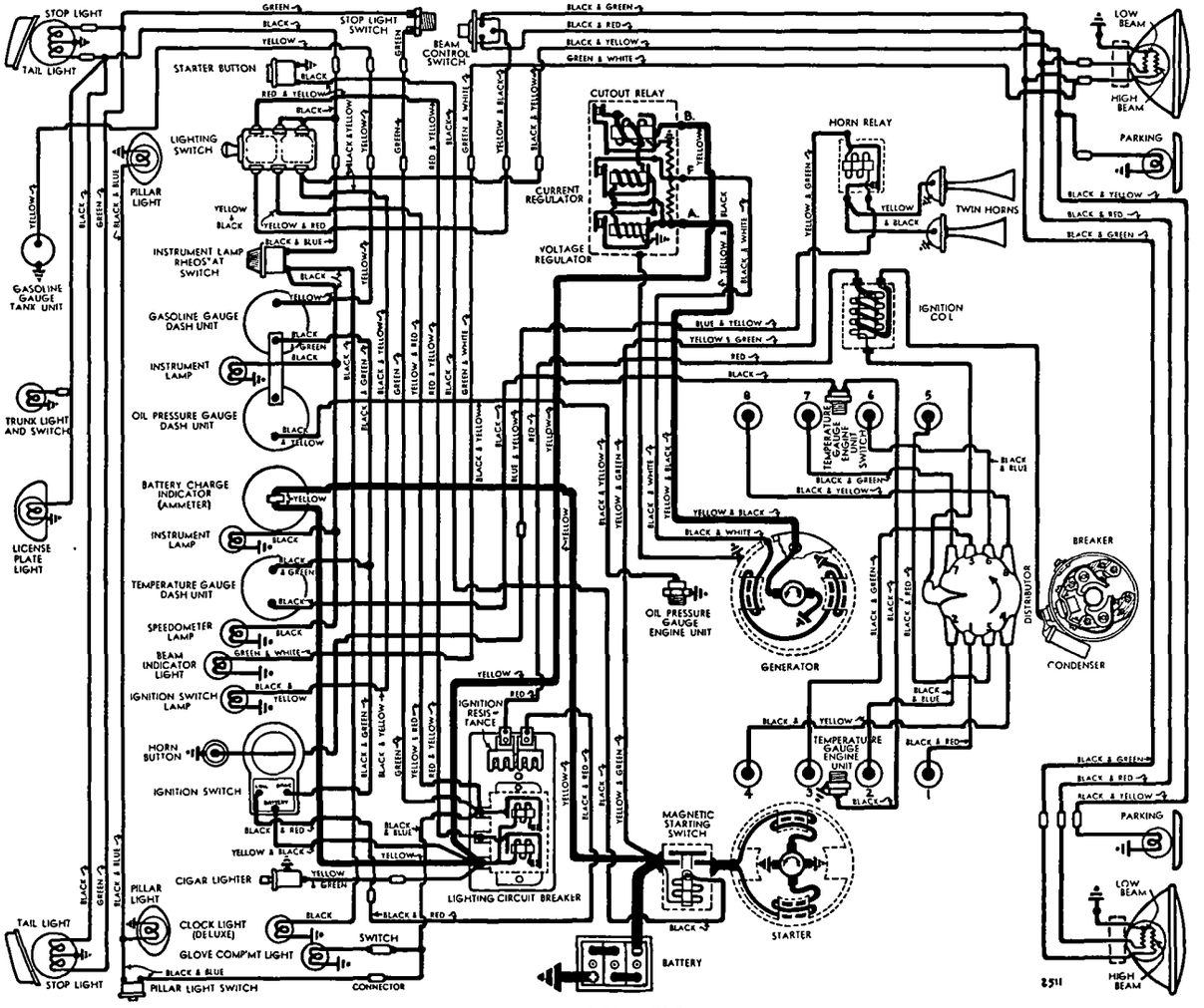

1942 MODELS

CARBURETOR

Holley (Chandler-Groves) Ford No. 91A-9510-A ('41), No. 21A-9510-A (1942). Dual, downdraft types.

NOTE—Model 21A-9510-A used as replacement for 91A-9510-A. This new 21A-9510-A carburetor has bowl vent at rear and must be used on 1942 cars with new type higher fan (bowl vent location prevents fuel level fluctuations in bowl due to fan blast).

For complete data, refer to Carburetor Index.

Idle Adjustment—With engine warm, choke valve wide open, and Fast Idle inoperative, set throttle lever stopscrew for 5-7 MPH. idling speed, turn each idle adjusting screw (one for each barrel, adjust in succession) in until engine begins to miss, then out until engine begins to roll, finally turn screw in until engine fires smoothly. Final setting should be approximately ⅝-¾ turn of screw from inner seated position. Recheck idle speed.

NOTE—Vacuum gauge recommended for idling adjustment. Set for highest steady gauge reading.

Float Level—Fuel level 11/16" plus or minus 1/32" (21/32-23/32" below top edge of float. ***See Carburetor article for float level checking data.***

Accelerating Pump Setting—Three holes provided for pump link connection as follows:
Inner (#1)—Min. stroke, Summer Temperatures.
Center (#2)—Med. stroke, Winter Temperatures.
Outer (#3)—Max. stroke, Extreme Cold Weather.

Fast Idle:—Integral type. No adjustment required.

CARB. EQUIPMENT

Air Cleaner:—Ford No. 91A-9600-A oil-wetted type Std., Heavy Duty oil-bath type Optl.

Gasoline Gauge:—King-Seeley Electric. Ford Nos.
Dash Unit—No. 11A-9280B (1941 Pass. Cars), 11C-9280B 1941 Sedan Delivery), 21A-9280 (1942 Cars).
NOTE—These units have Ivory Pointers. No. 11A-9280A (Red Pointer) also used on 1941 models.
Tank Unit—No. 99A-9275B (1941-42 Pass. Cars), 01A-9275B (1941 Sedan Delivery), 21A-9275A (1942 Sedan Delivery).

For complete data, refer to Carburetion Equip. Index.

Fuel Pump:—AC Type R, Ford No. 11A-9350. AC Replacement Pump No. 541. Diaphragm type.

For complete data, refer to Carburetion Equip. Index.

CONTINUED ON NEXT PAGE

C NTINUED FROM PRECEDIN PAGE

BATTERY

BATTERY:—Ford No. 01A-10655-A. 6 volt, 17 plate, 120 ampere hour capacity (20 hour rate).
Starting Capacity—150 amperes for 20 minutes.
Zero Capacity—300 amperes for 4.0 minutes.
Grounded Terminal—Positive (+) grd. to dash.
Engine Ground—Strap connector between right rear cylinder head and dash.
Dimensions—Length 10.6". Width 7.3". Height 9.2".
Location—On right side in engine compartment.

STARTER

STARTER:—Ford No. 18-11002. Armature No. 18-11005.
Drive—Inboard Bendix Drive Type L11FX-10, Ford No.B-11350or special Ford B&S Drive No.91A-11350. *Refer to Electrical Equipment Index for servicing data on this Ford B&S Drive.*
Rotation—Counter-clockwise at commutator end.
Brush Spring Tension—2 lbs. each.
Cranking Engine—100 RPM., 190-215 amperes.

Performance Data

Torque	R.P.M.	Volts	Amperes
4 ft. lbs	1070	4.6	200
8 "	660	4.3	340
12 "	300	3.65	465
14 "	Lock	3.5	500

Starting Switch:—R-B-M Model 5604, Ford No. 01A-11450-A Magnetic Switch mounted on dash, controlled by pushbutton on instrument panel R-B-M Model 3242, Ford No. 11A-11500 (Pass. Cars); R-B-M Model 3233, Ford No. 01A-11500A (Sedan Dlvry.), 21A-11500B (1942 Deluxe & Super Deluxe), 21A-11500C (1942 Special Pass. Cars).
Removal:—Starter mounted on right front face of flywheel housing. To remove, take off pan at right of engine, free starter-to-oil pan support bracket, take out through-bolts on commutator end plate.

GENERATOR

Ford No. 01A-10000-B (1941), 21A-10000 (1942).
Armature—Ford No. 01A-10005 (all models). Two-brush shunt type with vibrating current and voltage regulation (new 3-Unit regulator).
NOTE—Model 01A-10000-B replaced by 21A-10000.
Charging Rate Adjustment—None (see Regulator).
Maximum Charging Rate—Controlled by regulator and dependent on battery condition and load. To check generator output, disconnect generator field lead at generator, connect both generator terminals together (use short insulated wire). Use 'BRS' set or rheostat connected across battery terminals and apply load until voltage is exactly 6 volts. Connect ammeter in charging line, check output at 2 speeds given in performance table below. Restore original connections after completing test. **Do not operate generator in service with both terminals connected together. This eliminates all regulator action and will damage generator.**

Performance Data

Amperes	Engine RPM.
Start	520
30	1060
30	2500

Rotation—Counter-clockwise at commutator end.
Field Current—2.1 amperes at 6.0 volts (field resistance 2.88 ohms at 70°F.).
Brush Spring Tension—Approximately 28 ozs.
Removal (V8 Eng.):—Generator mounted on bracket between cylinder banks at front of engine, driven in tandem with water pumps by Vee belt. NOTE—On 1942 models, generator mounting bracket modified to include fan mounting (fan driven by separate belt). To remove generator, loosen nut on mounting bracket stud.
Belt Adjustment:—Loosen nut on bracket mounting stud and raise generator until side movement of belt (with thumb and finger pressure) is 1" midway between generator and water pump pulley.

GENERATOR

SPECIAL EQUIPMENT

SPECIAL GENERATORS:—Other Makes—*Refer to Electrical Equipment Index for 'Special Generator' article for complete data on special Generators and Regulators which may be found on these models.*

REGULATOR

REGULATOR:—Ford No. 01A-10505C. Three-Unit Type. Consists of Cutout Relay, vibrating Voltage Regulator and vibrating Current Regulator (separate units) in single case on engine side of dash.
For complete data, refer to Electrical Equipment Index.
NOTE—Regulator case grounded through 'pigtail' to dash or ground wire to generator.

Cutout Relay
Cuts In—5.8-6.3 volts at operating temperature.
Cuts Out—8 amperes discharge current (maximum).

Voltage Regulator
Setting—6.9-7.2 volts at 70-80° F. See Ford Regulator article in Elec. Equip. Section for other temps.
Checking & Adjusting—*Refer to Electrical Equipment Index for article on 'Ford Regulator—3 Unit Type' for complete instructions.*

Current Regulator
Setting—30-33 amperes hot (after 5 minutes run).
Checking & Adjusting—See Voltage Regulator

LIGHTING

LIGHTING:—Headlamps—Ford Sealed Beam type. Controlled by Lighting Switch on instrument panel and Beam Selector Switch on toeboard.
For complete data, refer to Electrical Equipment Index.
Headlamp Adjustment—Aim each headlamp straight ahead with upper beam hot spot centered on horizontal line 3" below lamp center height.
Beam Indicator—At left end of speedometer dial. (1941), lower edge of speedometer dial (1942). Lighted whenever Upper Beams in use.

Switches
Lighting—R-B-M Model 2445, Ford No. 11A-11652 (Pass. Cars), 01A-11652 (Sedan Delivery). Light Switch Knob & Insert (used with above switches) No. 11A-11661-A or C (Pass. Cars except Special 70C, 73C, 77C), 11A-11661-B or D (Spec. 70C, 73C, 77C), 11C-11661B (Sedan Delivery), 21A-11661A ('42 Del. & Super Del.), 21A-11661B (Special).
Beam Selector—R-B-M. Ford No. 11A-13532 (switch only). Switch & Wiring Ford No. 11A-11653 (1941 Pass. Cars), 21A-11653 (1942 Pass. Cars), 01A-11653A (1941 Sedan Delivery).
Instrument—Ford No. 11A-13740-A or C (1941 Deluxe & Super Deluxe), 11A-13740-B or D (1941 Special Pass. Cars), 21A-13740 (1942 Pass. Cars), 01A-13740B (1941 Sedan Delivery).
Stop Light—Ford No. 11A-13480.

Bulb Specifications

Position	Candlepower	Mazda No.
Headlamps		Sealed Beam
Parking, Instr. ('41), Clock	1½	55
Instr. ('42), Ign. Lock	1	51
Beam Indicator	1	51
Dome (Pillar), Luggage Compt.	3	63
Stop & Tail	21-3	1154
Rear License	3	63

MISC. ELECTRICAL

LIGHTING CIRCUIT BREAKER:—No. 11A-12250-A. (V8). Combined with Ignition Resistor on block on dash under cowl. Consists of two separate circuit breaker units (one unit protects headlamp circuits, second unit protects other lighting circuits). Breakers are thermostatic and wound-coil type. Contacts open with current of 50 amperes and vibrate rapidly to control current.
FUSE BLOCK:—Ford No. 11A-12250-B. Special fuse block and ignition resistor used on Special Models 70C (Tudor), 73C (Fordor), 77C (Coupe).)
Fuse—25 ampere capacity. On fuse block.
HORNS:—Air Electric dual horns (Pass. Cars & Sedan Delivery). Horn relay used with dual horns.
Horn Current—24-28 amperes (total—dual horns),
Horn Relay:—R-B-M No. 50357. Ford No. 11A-13842D (except 70C,73C,77C), No. 11A-13842C (70C,73C,77C).
Contact Closing Voltage—3.5-4.5 volts.
Current Draw—Approximately ¾ ampere.

ENGINE

ENGINE SPECIFICATIONS:—Own 90. 8 cylinder, 90° Vee, L head. Both banks & crankcase cast Enbloc.
Bore—3.062". **Stroke**—3.75".
Rated Horsepower—30. **Displacement** 221 cu. ins.
Developed Horsepower—90 at 3800 RPM.
Compression Ratio—6.20-1 Cast-iron head.
Compression & Vacuum Reading—*See Tune-up data.*
CYLINDER HEAD: Tightening Torque and Cylinder Head Diagram—*See Ford Shop Notes.*
►**Re-working Head for Improved Cooling:** *See Ford Shop Notes for instructions (and new Head Gaskets).*
CYLINDER SLEEVES:—Hardened, dry type cylinder sleeves used on some engines. May carry mark 'HS' on block beside inner front corner of left cyl. head.
Servicing:—*See Ford Shop Notes for data.*
PISTONS:—Steel alloy, light weight, cam ground type or Aluminum alloy, T slot type. Recondition engine to take finished replacement pistons (replace sleeves, install Std. pistons. See Sleeve Note).
Weight—333-337 grams (without rings or pin).
Removal—Pistons and rods removed from above.
Clearance—See Fitting New Pistons.
Replacement Pistons:—*See Ford Shop Notes for data.*
Fitting New Pistons:—Use .50" wide feeler stock of correct thickness inserted between piston and cylinder wall at right angles to pin to check clearance. Pull to withdraw feeler should be 6-10 lbs.

Engine With Sleeves	Feeler Thickness Steel Piston	Aluminum Piston
New Piston & Sleeve	.003"	.003"
New Piston—Worn Sleeve	.004"	.004"
Worn Piston & Sleeve	.005"	.005"
Engines Without Sleeves		
New Piston & Bore	.0025"	.002"
New Piston—Worn Bore	.004"	.004"
Worn Piston & Bore	.005"	.005"

ENGINE

CONTINUED FR M PRECEDING PAGE

PISTON RINGS:—Two compression, one slotted oil ring, all above pin (drain holes in oil ring groove).
NOTE—Expander used with #2 Compr. and oil ring.

Ring	Width	End Gap	Side Clearance
Compr. #1	.0915-.0920"	.012-.017"	.0025-.003"
Compr. #2	.0915-.0920"	.012-.017"	.002-.0025"
Oil Contr.	.1535-.1540"	.012-.017"	.0015-.002"

Replacement Rings:—*See Ford Shop Notes for data.*

PISTON PIN:—**Diameter**—.7501-.7504". **Length**—2.850" (steel pistons), 2.780" (aluminum pistons). Floating type. Pin hole in rod bronze-bushed.
Pin Fit in Piston—.0001-.0002" clearance (aluminum pistons), .0003-.0009" clearance (steel pistons) or light hand push fit with piston at 70°F.
Pin Fit in Rod Bushing—.0002-.0005" clearance (pin should pass through bushing slowly of own weight).
See Ford Shop Notes for Pin Fitting directions.
Replacement Pins: *See Ford Shop Notes.*

CONNECTING ROD:—**Length** 7.000". **Weight** 476 grams.
Crankpin Journal Diameter—1.999" (connecting rod diameter on crankpin—2.220").
Bearing Type—Steel-backed, special-alloy lined. Bearing floats in both rods (side-by-side mounting) with bearing surface on inner and outer faces.
Bearing Dimensions—Length 1.747". Thick. .1095".
Clearance—.0015-.0035" (see Bearing Adjustment).
Sideplay—.003-.007" (bearing endplay), .006-.014" (side clearance for both rods).
Bearing Adjustment: None (no shims). Do not file bearing caps. Replace bearings if less than .1085" thick, replace or hone rods for oversize bearings if worn more than .0015" over original size of 2.2195-2.2200". CAUTION—Both rods must be same size.
Replacement Bearings: *See Ford Shop Notes.*
Installing Rods:—Marks on rods and caps must be together and installed in same numbered cylinder with marks pointing down toward oil pan.

CRANKSHAFT:—3 bearing. Integral counterweights.
Journal Diameters—2.499" (all bearings).
Bearing Type—Steel-backed, special-alloy lined.
Clearance—.001-.003".
Bearing Adjustment:—None (no shims). Do not file.
End Thrust:—Taken by rear main bearing. Adjust by replacing bearing. **Endplay**—.002-.006".
Replacement Bearings: *See Ford Shop Notes.*

CAMSHAFT:—Three bearing. Helical gear drive.
Bearing Diameters—1.797" all bearings. Replace camshaft if worn to less than 1.7955" diameter.
Bearings—Steel-backed, babbitt-lined bushings.
Clearance—.002".
End Thrust:—Taken by gear hub and cover plate. Adjusted by replacing coverplate. **Endplay**—.005-.015".
Timing Gears:—Cast alloy iron (crankshaft), Bakelized Fabric or Aluminum bolted-on (Camshaft).
Backlash—.004" maximum. *Refer to Ford Shop Notes for Timing Gear Replacement data.*
Camshaft Setting:—Mesh '0' marked tooth of crankshaft gear with '/' marked space on camshaft gear (this mark must be in line with mark on hub).

VALVES:—

	Head Diameter	Stem Diameter	Length
All Valves	1.537"	.3115"	4.750-4.751"

	Seat Angle	Lift	Stem Clearance
All Valves	45°	.292"	.0015-.0035"

NOTE—Service limit for valve stem diameter is .309" Intake, .3065" Exhaust. Valves interchangeable.
See Ford Shop Notes for Valve Servicing data.
NOTE—Seat inserts used for all valves.
Valve Guides:—Split type retained by 'C' washer and valve spring. NOTE—Replace both halves of all guides measuring less than .6665" (thickness of guide half and valve stem at top of guide with valve of .311" stem diameter in place in guide).
For Valve Guide servicing data, see Ford Shop Notes.
Valve Lifters:—Barrel type in reamed holes in block.
Diameter—.9995". Replace if worn to less than .998" in diameter or length less than 1.710" after any necessary resurfacing of ends (cast type can be resurfaced on both ends, pressed steel on bottom only).
Clearance—.0005-.0015". Lifter should slip into hole in block of own weight.

Valve Springs:	Pressure	Length
Valve Closed	37-40 lbs.	2.13"
Valve Open	76-80 lbs.	1.84"

NOTE—Minimum spring tension 30 lbs. at 2.125".

VALVE TIMING

Tappet Clearance: .010-.012" Intake, .014-.016" Exh.
Valve Timing:—See Camshaft Setting above.
Intake Valves—Open at TDC. Close 44° ALDC.
Exhaust Valves—Open 48° BLDC. Close 6° ATDC.
To Check Valve Timing—No flywheel marks provided. Intake valve opens with piston at TDC.

LUBRICATION

LUBRICATION:—Pressure. Gear type oil pump mounted in crankcase at rear of engine.
Normal Oil Pressure:—30 lbs. at 2000 R.P.M.
Oil Pump and Oil Pressure Regulator: *See "Oil Pump" in Ford Shop Notes for data.*
Oil Pressure Gauge:—King-Seeley Electric. Ford No. **Dash Unit:** '41 Pass. Car 11A-9273B (Ivory Pointer), 11A-9273A (Red Pointer); '41 Sedan Delivery 11C-9273B; 1942 Passenger Cars 21A-9273.
Engine Unit: 48-9278.
See Miscellaneous Section for complete data.
Crankcase Capacity:—5 quarts.

COOLING

Water Capacity—26¼ qts. (11A), 22 qts. (21A).
Water Pump:—Packless type, 2 used (1 for each bank).
See Water Pump Section for complete data.
Thermostat:—In each cylinder head outlet (2 used).
Setting—Start to open at 145°F. Fully open 180°.
Temperature Gauge:—King-Seeley Electric. Ford No. **Dash Unit:** '41 Pass. Car 11A-10883B (Ivory Pointer), 11A-10883A (Red Pointer); '41 Sedan Del. 11C-10883B; '42 Passenger Cars 21A-10883.
Engine Unit: 99A-10884.
NOTE—Accessory Temperature Gauge Switch (for Other Bank) No. 01A-10990. Kit No. 11A-18381.
See Miscellaneous Section for complete data.

CLUTCH

CLUTCH:—**Long Model 9CF-CS.** Semi-centrifugal, single plate, dry disc type. *See Clutch Section for data.*
Facings—Molded type, 2 required. Inside Diam. 5.76". Outside Diam. 9". Thickness .137".
Adjustment:—Pedal free movement should be 1.0-1.25". To adjust, remove clevis pin at end of connector rod, adjust clevis on rod.
Removal:—Slide rear axle and transmission to rear as a unit to expose clutch (see Transmission Removal below), take out mounting screws in cover.

TRANSMISSION

TRANSMISSION:—**Own Make.** Constant-mesh, synchro-mesh (Second & High), sliding gear (low & reverse), all helical gear type.
See Transmission Section for complete data.
Transmission Control:—Mechanical steering col. shift.
See Transmission Section for complete data.
Removal:—Disconnect gear shifter rods at levers on transmission (Pass. Cars), disconnect rear shock absorbers, hand brake cables, hydraulic brake line at torque tube connection (bleed lines when reconnected), and speedometer cable. Disconnect rear spring at center frame connection, take out universal joint ball housing screws, slide rear axle assembly back to disengage drive shaft at splined joint. Support rear of engine, take out rear engine mounting bolts, clutch housing screws & transmission.

UNIVERSALS

UNIVERSAL JOINT:—**Spicer 202-6** Steel bushing type.
See Universals Section for complete data.

REAR AXLE

REAR AXLE:—**Own Make.** ¾ floating, Spiral Bevel gear type with Torque Tube drive.
See Rear Axle Section for complete data.
Ratio—3.78-1 Std. 3.54-1 or 4.11-1 Optl.
Backlash—.012" maximum.
Removal:—Disconnect rear shock absorbers, hand brake cables, hydraulic brake line at torque tube connection (bleed lines when re-connected), speedometer cable. Disconnect rear spring at center frame connection, take out universal joint ball housing screws, pull axle assembly to rear.
Axle Shaft Removal—*Refer to Ford Passenger Car Rear Axle article in Rear Axle Section.*

SHOCK ABSORBERS

SHOCK ABSORBERS:—**Houde (Houdaille).** Double acting, adjustable, hydraulic type.

	Houde Model	Right—Ford No.	Left
Front '41	BBCN	11A-18045A	11A-18046A
Front '42	BBCN	21A-18045	21A-18046
Rear	BBCZ	11A-18080A	11A-18081A

See Shock Absorber Section for complete data.

FRONT SUSPENSION

Front Suspension:—Conventional 'I' beam section front axle with Reverse Elliott ends and transverse front spring. Axle positioned by radius rods.
Kingpin Inclination—8° crosswise.
Caster—9° Max., 4½° Min. Equal within ½°.
Camber—1° Max., ¼° Min. Must be equal within ¼° and the right wheel must not exceed the left.
Toe In—1/16". Set at 1-10 ratio to Camber. Adjust by loosening tie rod clamp bolts and turning tie rod.
Steering Geometry—Inner wheel 23⅓°. Outer 20°.

STEERING GEAR

Steering Gear: Ford Make (Gemmer Model 305). Worm-and-Roller type with push-pull adjustments.
See Steering Gear Section for complete data.

BRAKES

BRAKES:—**Service.** Lockheed hydraulic, double anchor type. Hand lever applies rear wheel service brakes.
See Brake Section for complete data.
Drums—Cast iron. Diameter 12".
Wheel Cylinders—Stepped or two- stage bore type: Front Wheel—Front cylinder 1.25". Rear 1.00". Rear Wheel—Front cylinder 1.125". Rear 1.00".
Lining—Woven (forward shoes), Molded (rear shoes). Width 1.75". Thickness .20". Length per shoe 13.18" (forward shoes), 10.1" (rear shoes).
Clearance—Least possible amount without drag.
Hand Brake:—See Service Brakes above.

MISC. MECHANICAL

Power Operated Convertible Top: Auto-Lite Electric type. *See Miscellaneous Section for complete data.*

COMMERCIAL & TRUCK NOTE:—All Engine data below applies also to Ford Commercial & Truck Models with 6 Cylinder engine. See Ford Commercial & Truck article for all other data.

ENGINE HOOD NOTE:—**Passenger Cars**—Hood is Alligator type with release knob under instrument panel to left of steering column. To raise hood, pull out on release knob (hood will raise slightly), press in on safety catch under front edge of hood.

MODEL IDENTIFICATION

MODEL NOTE:—This new 6 Cylinder Engine offered in following models: Ford Special, Deluxe, Super Deluxe Passenger Car Models; All Commercial & Truck Models except Cab-over-Engine models.

Model	Year	Body Type
1GA	1941	Passenger Cars
2GA	1942	Passenger Cars

SERIAL & ENGINE NUMBER:—Stamped on top of clutch housing and on left frame rail (near gen.).

TUNE-UP

COMPRESSION:—**Ratio**—6.7-1 Std. Cast Iron Head. Head has large water passages and water distribution nozzle so that premium fuel not required.

Pressure—165 lbs. at 2000 RPM. max. or 105-125 lbs. at cranking speed (100 RPM.).

VACUUM READING:—Approx. 18-20" at idling speed.

FIRING ORDER:—1-5-3-6-2-4. See diagram for spark plug cable connections.

SPARK PLUGS:—Champion H-10. 14 MM. Metric.
Gaps—.025".

IGNITION: See Coil, Condenser, and Distributor.
Breaker Gap—.014-.016". **Cam Angle** 40° (closed).
Automatic Advance—11-12° max. at 600 RPM. distr.

IGNITION TIMING: See Ignition Timing.
Std. Setting—2° BTDC. No flywheel marks provided. See Ignition Timing for timing procedure and Vacuum Brake adjustment.

CARBURETION: See Carburetor & Carb. Equipment.
Idle Setting—Idle screw open to point where highest steady vacuum reading secured. Idle speed 350 RPM or 8 MPH.
Float Level—Fuel level 11/16" (21/32-23/32") below top edge of bowl.
Accelerating Pump—Center (#2) hole Normal. Inner (#1) hole (Summer), Outer (#3) hole (Winter) for temperature extremes.

Fuel Pump Pressure: 3½ lbs. maximum.

MANIFOLD HEAT CONTROL: — Automatic thermostatic type. Valve has counterweight and thermostatic coil attached to shaft and should be closed (counterweight arm against stop pin on manifold) with engine cold. See that valve operates freely.

VALVES: See Valve Timing.
Tappet Clearance—.013-.015". All Valves Cold. No adjustment.

STARTING: See Battery, Starter, Generator, Regulator.

IGNITION

Ignition Switch:—Oakes Steering Column and Ignition Lock Assembly.

	Steering Post & Ign. Lock Assem. Oakes No.	Ford No.	Ignition Switch Oakes No.
Pass. Cars '41	302448	11A-3676-B	302494
Pass. Cars '42	302756	21A-3676-A	302494
Sedan Del.	302478	11C-3676-B	302494

Lock Cylinder—Hurd or Briggs & Stratton No. 80935, Ford No. 91A-3686A (With Keys).

Key Series—FK000 to FK999. **Groove**—No. 17.

COIL: Ford No. 1GA-12024. Mounted separately on top left corner of engine block.

Resistor Unit—Connected in coil primary circuit. Mounted on Circuit Breaker Assembly 11A-12250-A (exc. Special), on Fuse Block 11A-12250-B (on all Special Models 70C, 73C, 77C Passenger Cars).

Ignition Current—4½-6 amperes with the engine stopped. Ignition primary resistance 1-1⅓ ohms.

CONDENSER: Ford Part No. 1GA-12300B.
Capacity—.29-.32 microfarad.

DISTRIBUTOR: Ford 1GA-12127 (less Terminal Housing). Single breaker, 6 lobe cam, full automatic advance type with Vacuum Brake Control. Ignition unit mounted on front end of engine and driven directly off end of camshaft. Ignition coil mounted separately.

Breaker Gap—.014-.016".

Cam Angle or Dwell—Approx. 40° closed, 20° open. Set dwell at 67% (limits 62-67% at 2000 RPM.) on Ford Test Set.

Breaker Arm Spring Tension—20-24 ounces.

Rotation—Counter-clockwise viewed from the front of the engine or clockwise viewing drive end of ignition unit.

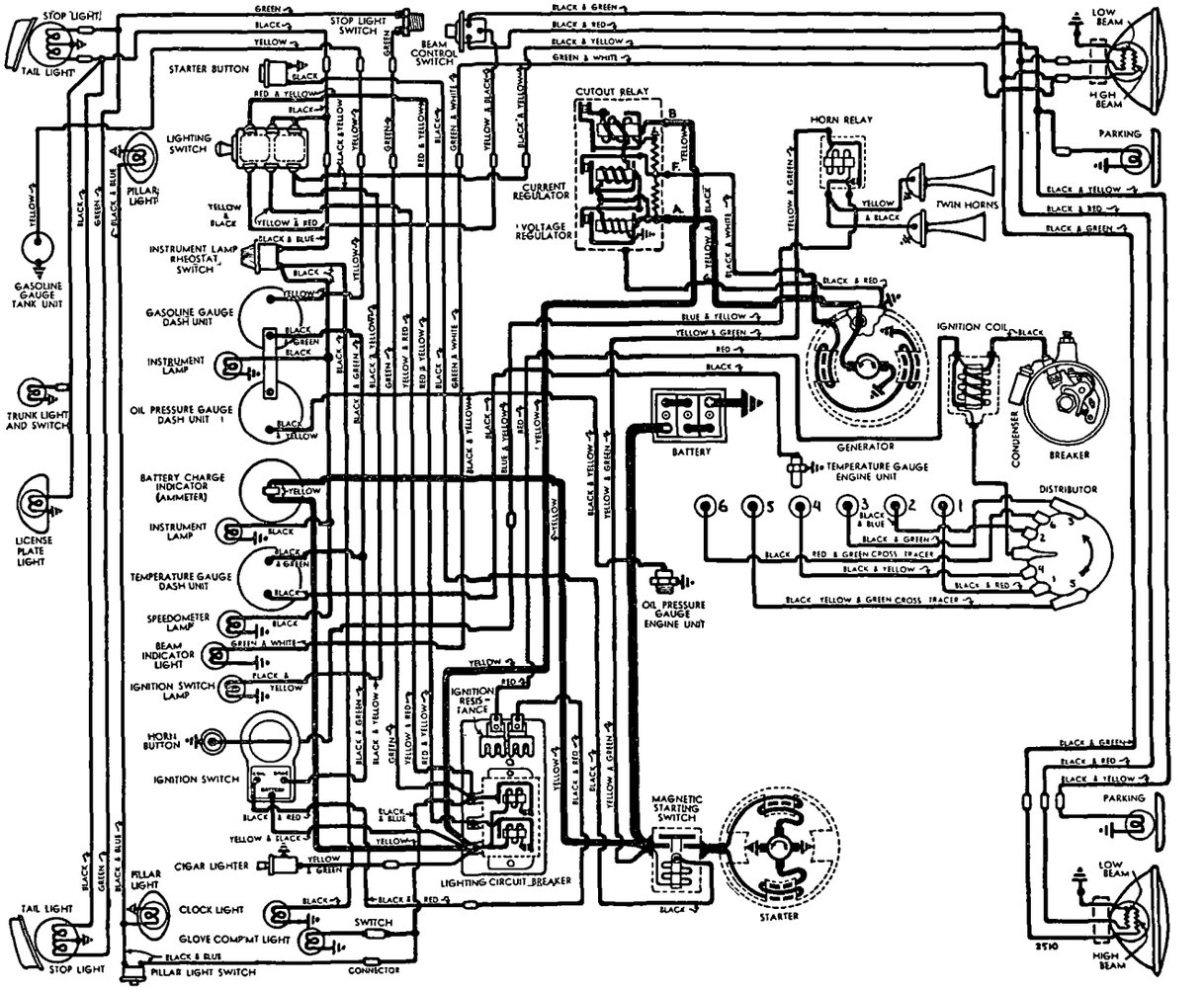

Automatic Advance
(Vacuum Brake Disconnected)

Distributor Degrees	R.P.M.	Engine Degrees	R.P.M.
Start	200	0	400
11-12	600	22-24	1200

Removal:—Distributor mounted on front of engine. To remove, disconnect primary lead, remove distributor cap, take out mounting screws in distributor flange, lift unit out.

IGNITION TIMING

IGNITION TIMING:—See Vacuum Brake Setting for final adjustment dependent on fuel and operating conditions.

	Flywheel Degrees	Piston Position
All Engines	2° BTDC	.0018" BTDC.

Timing—Manufacturer recommends use of Ford Laboratory Test Set (Heyer H1) with Distributor Stroboscope (Heyer HI-DFZ) and Special Adapter (Heyer EGDAF). On Stroboscope set timing index at 1° before top dead center, set peepsight at Zero. Adjust the distributor by loosening screw in slot on left side of distributor and moving screw up (to retard spark), down (to advance spark), so that stroboscopic disc light is in line with peepsight, tighten adjusting screw.

Timing (On the Car)—No flywheel marks provided. With distributor adjusted as described above, this will give correct 2° BTDC. timing when installed on the engine.

Vacuum Brake Setting—Should be adjusted to eliminate pinging when engine operated with load. To adjust, loosen locknut, back off adjusting screw until engine pings with load, then turn screw in just enough to eliminate ping, tighten locknut. When adjusted on stroboscope, vacuum brake should retard spark to peep sight with peep sight set at 2° when distributor is driven at 650 RPM. with no vacuum to release brake.

CARBURETOR

Holley (Chandler-Groves) Ford No. 1GA-9510-A. Single barrel, downdraft type with manual choke. ***For complete data, refer to Carburetor Index.***

Idle Adjustment—Use tachometer or vacuum gauge to adjust carburetor (adjust for highest steady reading of vacuum gauge). With engine warm and choke valve wide open, set throttle lever stop-screw so that engine idles at 350 RPM. Adjust idle adjusting screw so that engine fires smoothly and vacuum gauge indicates highest steady obtainable reading (turn screw in for leaner mixture, out for richer mixture). Recheck idle speed.

Accelerating Pump Setting—Three holes provided in throttle lever for pump rod link connection. Adjust for seasonal requirements as follows:
#1 (Inner) Hole—Summer or Hot weather.
#2 (Center) Hole—Average fuel and weather.
#3 (Outer) Hole—Extremely Cold Weather.

Metering Jets—***See Holley Chandler-Groves (Ford) Jet Specification Table in Carburetor Section.***

Pow r Valve—Vacuum controlled by-pass valve. Opens when vacuum decreases to 8½-9" of HG. **Not adjustable.**

Float Level—Use 9550-A Float Position Gauge to set float (same gauge used on other Ford models). 1.353" end 'Go', 1.322" end 'No Go' measuring from underside of bowl cover to bottom of float (cover and float assembly inverted). Fuel level in bowl should be 11/16" plus or minus 1/32".

Choke—Offset butterfly type with poppet type relief valve. Choke is spring-loaded for automatic control in part-choke position (locked when valve fully closed). Choke and throttle are interconnected for 'throttle-cracking' action when choke closed for cold starting. No adjustment required.

CARB. EQUIPMENT

Air Cleaner:—Ford No. 1GA-9600-C oil wetted type Std. Heavy duty oil-bath type optional.

Fuel Pump:—AC 'R' No. 1537744—Exchange No. 543, Ford No. 1GA-9350 diaphragm type fuel pump.
For complete data, refer to Carburetion Equip. Index.
Pressure—1½-2¾ lbs.

Gasoline Gauge:—King-Seeley Electric. Ford Nos.
Dash Unit—No. 11A-9280B (1GA), 21A-9280 (2GA).
Tank Unit—No. 99A-9275B (Pass. Cars), 01A-9275B (1GA Sedan Delivery), 2GA-9275B (2GA Sedan Delivery).
For complete data, refer to Carburetion Equip. Index.

BATTERY

BATTERY:—**Ford No. 01A-10655-A.** 6 volt, 17 plate, 120 ampere hour capacity (20 hour rate).
Starting Capacity—150 amperes for 20 minutes.
Zero Capacity—300 amperes for 4.0 minutes.
Dimensions—Length 10.6". Width 7.3". Height 9.2".
Location—Left side of engine in engine compt.
Grounded Terminal — Positive (+) terminal grounded to dash. **Engine Ground**—Strap connector between rear of cylinder head and dash.

STARTER

Ford No. 18-11002. Armature Number 18-11005.
Drive—Inboard Bendix No. L11FX-10, Ford No. B-11350, or Ford B & S Drive (operates through rubber—no springs used) No. 91A-11350. ***Refer to Electrical Equipment Index for Ford B&S Starter Drive article for complete data.***
Rotation—Counter-clockwise at commutator end.
Brush Spring Tension—2 lbs. each.
Cranking Engine—100 RPM., 190-215 amperes.

Performance Data

Torque	R.P.M.	Volts	Amperes
4 ft. lbs.	1070	4.6	200
8 "	660	4.3	340
12 "	300	3.65	465
14 "	Lock	3.5	500

Starting Switch:—R.B.M. Ford No. 01A-11450-A. Magnetic switch mounted on dash and controlled by pushbutton on instrument panel Ford No. 11A-11500-B (1GA), 29A-11500-B (2GA Pass. Cars), 21A-11500 (2GA Station Wagon).

Removal:—Starter mounted on right front face of flywheel housing. To remove, disconnect cable, take off starter-to-oil pan support bracket, remove the through-bolts on commutator end plate.

NOTE—Take off crankcase ventilator extension tube.

GENERATOR

GENERATOR:—**Ford No. 1GA-10000-B. Arm. 01A-10005. (1GA), No. 2GA-10000-A, Armature 2GA-10005 (2GA).** Two brush (shunt) type with vibrating type voltage and current regulation. Ventilated by fan on drive pulley. Similar to V8 Models except for pivot mounting at left front of engine. Generator is driven by belt from crankshaft and drives water pump (with fan on 2GA) through a separate belt.

Charging Rate Adjustment—None (see Regulator).

Maximum Charging Rate—Controlled by regulator and dependant on battery condition and load. To check generator output, disconnect generator field lead at generator, connect both generator terminals together (use short insulated wire). Use 'BRS' set or rheostat connected across battery terminals and apply load until voltage is exactly 6 volts. Connect ammeter in charging line, check output at 2 speeds given in performance table below. Restore original connections after completing test. **Do not operate generator in service with both terminals connected together. This eliminate all regulator action and will damage generator.**

Performance Data

Amperes	Engine RPM.
Start	565
30	1160
30	2500

Rotation—Counter-clockwise at commutator end.
Field Current—2.1 amperes at 6.0 volts (field resistance 2.88 ohms at 70°F).
Brush Spring Tension—Approximately 28 ozs.

Removal:—Generator mounted on adjustable bracket at left front of engine. To remove, take out bolt in mounting bracket, slip off drive belt and water pump belt, lift generator out.

Belt Adjustment:—½" deflection midway between generator and crankshaft pulley (generator belt), generator and pump pulley (pump belt). Adjust both belts by loosening two capscrews in mounting bracket beneath generator, move generator up and out (bolt holes slotted at this angle).

REGULATOR

REGULATOR:—**Ford No. 01A-10505C. Three-Unit Type.** Consists of Cutout Relay, vibrating Voltage Regulator and vibrating Current Regulator (separate units) in single case on engine side of dash.
For complete data, refer to Electrical Equipment Index.
NOTE—Regulator case grounded through 'pigtail' to dash or separate ground wire to generator. This ground lead must be re-connected if cover removed.

Cutout Relay
Cuts In—5.8-6.3 volts at operating temperature.
Cuts Out—8 amperes discharge current (maximum).

Voltage Regulator
Setting—6.9-7.2 volts at 70-80° F. See Ford Regulator article in Elec. Equip. Section for other temps.
Checking & Adjusting—***Refer to Electrical Equipment Index for article on 'Ford Regulator—3 Unit Type' for complete instructions.***

Current Regulator
Setting—30-33 amperes Hot (after engine run for 5 minutes).
Checking & Adjusting—See Voltage Regulator.

C NTINUED ON NEXT PAGE

CONTINUED FR M PRECEDING PAGE

LIGHTING

LIGHTING:—Headlamps—Ford Sealed Beam type. Controlled by Lighting Switch on instrument panel and Beam Selector Switch on toeboard.
For complete data, refer to Electrical Equipment Index.

Headlamp Adjustment—Aim each headlamp straight ahead with upper beam hot spot centered on horizontal line 3" below lamp center height.

Beam Indicator—In speedometer dial (at left end on 1GA, at lower edge on 2GA). Lighted whenever Country (high) beam in use.

Switches

Lighting—R-B-M Model 2445, Ford No. 11A-11652. Light Switch Knob and Insert Ford No. 11A-11661-A or C (1GA Deluxe & Super Del.), 11A-11661-B or D (1GA Special), 21A-11661-A (Deluxe & Super Del.), 21A-11661-B (2GA Special).

Beam Selector—R-B-M. Ford No. 11A-13532 (switch only), No. 11A-11653 for 1GA (switch and wiring), No. 21A-11653 for 2GA (switch and wiring).

Instrument—Ford No. 11A-13740-A or C (1GA Deluxe & Spec. Deluxe), 11A-13740-B or D (1GA Special), No. 21A-13740 (2GA).

Stop Light—Ford No. 11A-13480.

Bulb Specifications

Position	Candlepower	Mazda No.
Headlamps		Sealed Beam
Parking, Instrument, Clock	1½	55
Beam Indicator, Ign. Lock	1	51
Stop & Tail	21-3	1154
Stop (Station Wagon)	21	1129
Tail (Station Wagon)	3	63
Dome (Pillar), Luggage Compt.	3	63
Rear License	3	63

MISC. ELECTRICAL

LIGHTING CIRCUIT BREAKER (All Models Except 'SPECIAL'):—Ford No. 11A-12250A. Combined with ignition resistor on block on dash under cowl. Consists of two separate circuit breaker units (one unit protects headlamp circuits), second unit protects other lighting circuits). Breakers are thermostatic and wound-coil type. Contacts open with current of 50 amperes and vibrate rapidly to control current.

LIGHTING FUSE BLOCK (USED ON 'SPECIAL' 70C, 73C, 77C):—Ford No. 11A-12250B. Combined with ignition resistor on block on dash under cowl. Fuse protects lighting circuits.
Lighting Fuse—25 amperes.

FUSES:—Lighting—25 amperes (on 'Special' only).
Electric Clock—2 amperes.

HORNS:—Air Electric dual horns (Pass. Cars except 'Special' Models), single horn ('Special'). Horn relay used on all models.
Horn Current—24-28 amperes (total—dual horns).

Horn Relay:—R-B-M. Ford Nos. 11A-13842C (used with single horn on 'Special' models & Sedan delivery). No. 11A-13842D (on cars with dual horns).
Contact Closing Voltage—3.5-4.5 volts.
Current Draw—Approximately ¾ ampere.

ENGINE

ENGINE REMOVAL (For Oil Pan Removal & General Engine Service): *See Ford Shop Notes.*

ENGINE SPECIFICATIONS: 1GA (1941), 2GA (1942) 90 HP. 6 cylinder, "L" head type.
Bore—3.3". **Stroke**—4.4".
Rated Horsepower—26.1. **Displacement**—226 cu. ins.
Developed Horsepower—90 at 3300 RPM.
Compression Ratio—6.7-1. Head is cast iron with large water passages. Premium fuel not required.
Compression Pressure—165 lbs. max. at 2000 RPM. or 105-125 lbs. at cranking speed (100 RPM.).
Vacuum Reading—Approx. 18-20" at idling speed.

TIGHTENING TORQUES: *See Ford Shop Notes.*

CYLINDER HEAD: Tightening (Torque Wrench) Specifications—*See Ford Shop Notes.*

CYLINDER SLEEVES:—Hardened, dry type cylinder sleeves used on some engines.
Servicing: *Refer to Ford Shop Notes for complete data.*

PISTONS:—Steel alloy, light weight, cam ground type or Aluminum alloy, T slot type (both types are spherical or 'dome' head). Recondition engines to take finished replacement pistons.
NOTE—Original pistons are 3-ring type. Replacement pistons are 4-ring Aluminum type.
Weight—365 grams (Al.), 460 grams (Steel).
Removal—Pistons and rods removed from above.
Clearance—See Fitting New Pistons.
Replacement Pistons:—*See Ford Shop Notes for data.*
Fitting New Pistons: Use .50" wide feeler stock of correct thickness (as listed below) inserted between piston and cylinder wall at right angles to pin to check clearance. Pull required to withdraw feeler should be 5-8 lbs. (all types).
Feeler Thickness—.002" New Piston in New Plain Bore, .004" New Piston in Worn Plain Bore, .005" Worn Piston in Worn Plain Bore.

PISTON RINGS:—Two compression, one slotted type oil control ring, all above pin (drain holes in oil ring groove). NOTE—Expander used with #2 Compression ring and oil control ring.

Ring	Width	End Gap	Side Clearance
Compr. #1	.0915-.0920"	.012-.017"	.0025-.003"
Compr. #2	.0915-.0920"	.012-.017"	.002-.0025"
Oil #3	.1860-.1865"	.012-.017"	.0015-.002"

Replacement Rings:—*See Ford Shop Notes for data.*

PISTON PIN:—Diameter .8501-.8504". **Length** 2.91". Floating type with retainer at each end. Pin hole in rod is bronze-bushed.
Pin Fit in Piston—.0005" max. or light hand push fit with piston at 70°F.
Pin Fit in Rod Bushing—.0002-.0005" (pin should pass through bushing slowly of own weight).
See Ford Shop Notes for Pin Fitting directions.
Replacement Pins: *See Ford Shop Notes.*

CONNECTING ROD:—Length 7.800". **Weight** 727 grams.
Crankpin Journal Diameter—2.235".
Bearing Type—Steel-backed, special alloy lined type removable shells clamped in rod and cap.
Clearance—.0013-.0035". **Sideplay**—.003-.007".
Bearing Adjustment:—None (no shims). Replace bearings worn .005" or more (.005" or more thinner than original insert).
Replacement Bearings:—*Refer to Ford Shop Notes.*

CRANKSHAFT:—Four bearing, cast alloy steel, counter-weighted type (vibration dampener at front).
Journal Diameters—2.499" (all bearings).
Bearing Type—Steel-backed, special alloy lined removable bearing shells.
Clearance—.001-.003" (or slight drag with .002" feeler assembled in bearing for clearance check).
Bearing Adjustment:—None (no shims). Do not file.
End Thrust:—Taken by rear main bearing. Adjust by replacing bearing. **Endplay**—.002-.006".
Replacement Bearings:—*Refer to Ford Shop Notes.*

CAMSHAFT:—Four bearing. Helical gear drive.
Bearing Diameters—1.797" all bearings. Replace the camshaft if worn to less than 1.7955" diameter. Replace bearings if inside diameter more than 1.802".
Bearings—Steel-backed, babbitt-lined bushings.
Clearance—.001-.002".

Timing Gears:—Cast alloy steel (crankshaft), fibre or aluminum, bolted-on type (camshaft).
See Ford Shop Notes for Timing Gear Replacement data.

Camshaft Setting: Mesh marked tooth of crankshaft gear in marked space between teeth on camshaft gear.

VALVES:—

	Head Diameter	Stem Diameter
Intake	1.647"	.3115"
Exhaust	1.510"	.3115"

	Seat Angle	Lift	Stem Clearance
Intake	45°	.292"	.0015-.0035"
Exhaust	45°	.292"	.0015-.0045"

NOTE—Service limit for valve stem diameter .3065".
Refer to Ford Shop Notes for Valve Assembly Removal directions and valve servicing data.
NOTE—Seat inserts used on exhaust valves.

Valve Guides:—Split type retained by 'C' washer and valve spring. NOTE—Replace both halves of all guides measuring less than .6665" (thickness of guide half and valve stem at top of guide with valve of .311" stem diameter in place in guide).
For Valve Guide servicing data, see Ford Shop Notes.

Valve Lifters:—Barrel type in reamed holes in block.
Diameter—.9995". Replace if worn to less than .998" in diameter or length less than 1.710" after any necessary resurfacing of ends (cast type can be resurfaced on both ends, pressed steel type on bottom end only).
Clearance—.0005-.0015". Lifter should slip into hole in block of own weight.

Valve Springs:—	Pressure	Length
Valve Closed	37-40 lbs.	2.13"
Valve Open	76-80 lbs.	1.84"

NOTE—Replace spring if the pressure is less than 30 lbs. when compressed to 2.125".

VALVE TIMING

Tappet Clearance: .013-.015" All Valves Cold No adjustment.

Valve Timing:—See Camshaft Setting above.
Intake Valves—Open 3° BTDC. Close 41° ALDC.
Exhaust Valves—Open 48° BLDC. Close 6° ATDC.
To Check Valve Timing—No marks provided. If top dead center point established on flywheel, intake valve should open approx. 1 tooth before this top dead center position.

LUBRICATION

LUBRICATION:—Pressure type. Oil pump in crankcase.
Normal Oil Pressure:—30 lbs. at 2000 RPM.

Oil Pump:—Helical gear type. Pump mounted on front main bearing cap in crankcase and driven by gear from crankshaft timing gear.
Oil Pump Service—*See Ford Shop Notes.*

Oil Pressure Regulator:—Under plug on right side of crankcase in front of fuel pump. Not adjustable.
NOTE—Replace oil relief valve spring if not within limits of 44-46 ozs. with spring compressed to 1.40".

Oil Screen & Drain Plug:—New type single unit on bottom of oil pan (plug is large type with screen

mounted on inner end so that screen removed and accessible for cleaning whenever plug taken out).

Oil Pressure Gauge:—King-Seeley Electric. Ford No.
Dash Unit—11A-9273B (1GA Pass. Car), 21A-9273 (2GA Pass. Car), 11C-9273B (Sedan Delivery).
Engine Unit—48-9278 (All Models).
See Miscellaneous Section for complete data.

Crankcase Capacity:—5 quarts.

COOLING

COOLING SYSTEM:—**Capacity** 17 qts. (1GA), 15 (2GA).
NOTE—Engine has distributing tube in cylinder block with nozzle for each cylinder which directs cooling water flow in engine.

Water Pump:—Self-sealing (packless), balanced, centrifugal type. Mounted on front of cylinder block and driven by belt from generator pulley. Delivery Capacity 50 gals. per minute against 15 lbs. pressure.
NOTE—1GA pump shaft mounted on bushing, 2GA type on sealed ball-bearing.
See Water Pump Section for complete data.

Thermostat:—New dual-valve type. Located in water outlet elbow on cylinder head. With main valve closed (cold engine), water is by-passed through passage in head directly to water pump to maintain circulation through engine. By-pass passage is shut off when main valve opens to permit circulation through radiator.

Temperature Gauge:—King-Seeley Electric. Ford Nos.
Dash Unit—11A-10883B (1GA Pass. Car), 21A-10883 (2GA Pass. Car), 11C-10883B (Sedan Delivery).
Engine Unit—99A-10884 (All Models).
See Miscellaneous Section for complete data.

CLUTCH

CLUTCH:—**Long Model 10CF-TI.** Single plate, dry disc, semi-centrifugal type.
Facings—Woven type, 2 required. Inside Diam. 6¾". Outside Diam. 10". Thickness .125".
See Clutch Section for complete data.

Adjustment:—Pedal free movement should be 1.0-1.25". To adjust, remove clevis pin at end of connector rod, adjust clevis on rod.

Removal:—Slide rear axle and transmission to rear as a unit to expose clutch (see Transmission Removal below), take out mounting screws in cover.

TRANSMISSION

TRANSMISSION:—**Own Make.** Constant-mesh, synchro-mesh (Second & High), sliding gear (low & reverse), all helical gear type.
See Transmission Section for complete data.

Transmission Control:—Mechanical steering col. shift.
See Transmission Section for complete data.

Removal:—Disconnect gear shifter rods at levers on transmission (Pass. Cars), disconnect rear shock absorbers, hand brake cables, hydraulic brake line at torque tube connection (bleed lines when reconnected), and speedometer cable. Disconnect rear spring at center frame connection, take out universal joint ball housing screws, slide rear axle assembly back to disengage drive shaft at splined joint. Support rear of engine, take out rear engine mounting bolts, transmission mounting screws & transmission.

UNIVERSALS

UNIVERSAL JOINT:—**Spicer Model 202-6.** Steel bushing type. Single joint at rear of transmission case.
See Universals Section for complete data.

REAR AXLE

REAR AXLE:—**Own Make.** ¾ floating, Spiral Bevel gear type with Torque Tube drive.
See Rear Axle Section for complete data.
Ratio—3.78-1 Std.; 3.54-1, 4.11-1 Optl.
Backlash—.012" max.

Removal:—Disconnect rear shock absorbers, hand brake cables, hydraulic brake line at torque tube connection (bleed lines when re-connected), speedometer cable. Disconnect rear spring at center frame connection, take out universal joint ball housing screws, pull axle assembly to rear.
Axle Shaft Removal—*Refer to Ford Passenger Car Rear Axle article in Rear Axle Section.*

SHOCK ABSORBERS

SHOCK ABSORBERS:—**Houde (Houdaille).** Double acting, adjustable, hydraulic type.

Houde Model	Right—Ford No.—Left
Front '41 ..... BBCN	11A-18045A 11A-18046A
Front '42 ..... BBCN	21A-18045 ..... 21A-18046
Rear ..... BBCZ	11A-18080A 11A-18081A

See Shock Absorber Section for complete data.

FRONT SUSPENSION

Front Suspension:—Conventional 'I' beam section front axle with Reverse Elliott ends and transverse front spring. Axle positioned by radius rods.
Kingpin Inclination—8° crosswise.
Caster—9° Max., 4½° Min. Equal within ½°.
Camber—1° Max., ¼° Min. Must be equal within ¼° and the right wheel must not exceed the left. Axle may be bent cold to adjust caster & camber if proper tools (to prevent axle flange damage) used.
Toe In—1/16". Set at 1-10 ratio to Camber. Adjust by loosening tie rod clamp bolts and turning tie rod.
Steering Geometry—Inner wheel 23⅓°. Outer 20°.

STEERING GEAR

Steering Gear: Ford Make (Gemmer Model 305). Worm-and-Roller type with push-pull adjustments.
See Steering Gear Section for complete data.

BRAKES

BRAKES:—**Service.** Lockheed hydraulic, double anchor type. Hand lever applies rear wheel service brakes.
See Brake Section for complete data.
Drums—Cast iron. Diameter 12".
Wheel Cylinders—Stepped or two-stage bore type:
Front Wheel—Front cylinder 1.25". Rear 1.00".
Rear Wheel—Front cylinder 1.125". Rear 1.00".
Lining—Woven (forward shoes), Molded (rear shoes). Width 1.75". Thickness .20". Length per shoe 13.18" (forward shoes), 10.1" (rear shoes).
Clearance—Least possible amount without drag.

Hand Brake:—See Service Brakes above.

MISC. MECHANICAL

Power Operated Convertible Top: Auto-Lite Electric type. *See Miscellaneous Section for complete data.*

ENGINE HOOD NOTE:—Hood is alligator type with release catch on nose of hood. To raise hood, pull out on release catch, lift auxiliary catch (exposed when release catch raised), raise hood.

V8 OIL PAN REMOVAL: *Refer to Ford Shop Notes.*

MODEL IDENTIFICATION

Commercial Models

Model 1941	Model 1942	Engine	Wheelbase
3/4 Tonner			
1NC	2NC	4 Cyl.	①
1GC	2GC	6 Cyl. (90 HP.)	①
11C	21C	V8 (90 HP.)	①
19C	29C	V8 (100 HP.)	②
1ND	2ND	4 Cyl.	122"
1GD	2GD	6 Cyl. (90 HP.)	122"
11D	21D	V8 (90 HP.)	122"
19D	29D	V8 (100 HP.)	122"
1 Tonner			
1NY	2NY	4 Cyl.	122"
1GY	2GY	6 Cyl. (90 HP.)	122"
11Y	21Y	V8 (90 HP.)	122"
19Y	29Y	V8 (100 HP.)	122"
Cab-Over-Engine Models			
111W	211W	V8 (90 HP.)	101"
11W	21W	V8 (90 HP.)	134"
118W	218W	V8 (90 HP.)	158"
191W	291W	V8 (100 HP.)	101"
19W	29W	V8 (100 HP.)	134"
198W	298W	V8 (100 HP.)	158"
Other Models			
1GT,1GU	2GT,2GU	6 Cyl. (90 HP.)	134"
1G8T	2G8T	6 Cyl. (90 HP.)	158"
1G4T	2G4T	6 Cyl. (90 HP.)	194"③
11T,11U	21T,21U	V8 (90 HP.)	134"
118T	218T	V8 (90 HP.)	158"
114T	214T	V8 (90 HP.)	194"③
19T,19U	29T, 29U	V8 (100 HP.)	134"
198T	298T	V8 (100 HP.)	158"
194T	294T	V8 (100 HP.)	194"③

①—1941—112" WB. 1942—114" WB. ③—School Bus
②—1941—118" WB. 1942—114" WB.

SERIAL & ENGINE NUMBER:—Stamped on top of the clutch housing (opening in toeboard with cover plate provided, number visible when floor mat and plate removed and light directed through opening).

TUNE-UP

COMPRESSION:

Engine	Ratio	Head Material	Pressure at 100 RPM
4 Cylinder	6.0-1	Cast-iron	103 lbs.
6 Cylinder	6.7-1	Cast-iron	117 lbs.
V8 "90"①	6.2-1	Cast-iron	113 lbs.
V8 "90"②	5.9-1	cast-iron	108 lbs.
V8 "100" '41①	6.6 -1	Aluminum	116 lbs.
V8 "100" '42①	6.6-1	Cast-iron	116 lbs.
V8 "100" '41②	5.9-1	Cast-iron	106 lbs.
V8 "100" '42②	6.4-1	Cast-iron	120 lbs.

①—Comm'l, ¾ & 1 Ton. ②—Other Trucks.

VACUUM READING:—Steady 18-20" idling at 5-7 MPH.

FIRING ORDER:—1-2-4-3 (4 Cyl.), 1-5-3-6-2-4 (6 Cyl.), 1-5-4-8-6-3-7-2 (V8). See diagram for cylinder Nos.

SPARK PLUGS:—Champion H9 Comm. 14 MM. Metric. Gaps—.025".

IGNITION: See Coil, Condenser, and Distributor. Breaker Gap—.014-.016". Cam Angle 40° (4 Cyl. & 6 Cyl.—Closed), 36° (V8—Closed both sets together)

Automatic Advance (4 Cyl.)—8½-9½° max. at 800 RPM. (distributor).

Automatic Advance (6 Cyl.)—11-12° max. at 600 RPM. (distributor).

Automatic Advance (V8)—8° max. at 950 RPM. (78-12127 Distr.), 11° max. at 600 RPM. (11A-12127 & 21A-12127 Distr.), distributor degrees and RPM.

IGNITION TIMING: See Ignition Timing.

Std. Setting—At TDC. (4 Cyl.), 2° BTDC. (6 Cyl.), 4° BTDC. (V8). No flywheel marks provided. See Ignition Timing for timing procedure and Vacuum Brake adjustment.

CARBURETION: See Carburetor & Carb. Equipment.

Idle Setting (4 Cyl.)—Idle screw opened to point where engine fires smoothly (turning screw in will cause engine to "roll"). Idle speed 5-7 MPH. NOTE—Main metering jet adjustment screw should be set for maximum speed and power with engine operating on 1/3 throttle.

Idle Setting (6 Cyl.)—Idle screw open to point where highest steady vacuum reading secured. Idle speed 350 RPM. or 8 MPH.

Idle Setting (V8)—Both idle screws ⅝-¾ turn open. Idle speed 5-7 MPH.

Float Level (4 Cyl.)—9/32" from gasket seat on cover to nearest point on float (invert to check). NOTE—Set both floats alike.

Float Level (6 Cyl. & V8)—Fuel level 11/16" (21/32-23/32" below top edge of bowl.

Accelerating Pump (6 Cyl.)—Center (#2) hole—Normal. Inner (#1) hole (Summer), Outer (#3) hole (Winter) for temperature extremes.

Accelerating Pump (V8)—Inner (#1) hole—Summer, Center (#2) hole—Winter. Outer (#3) hole for extremely cold temperatures only.

Fuel Pump Pressure: 3½ lbs. maximum.

MANIFOLD HEAT CONTROL (6 CYL.): Automatic type. Valve has counterweight and thermostatic coil attached to shaft and should be closed (counterweight arm against stop pin on manifold) with engine cold.

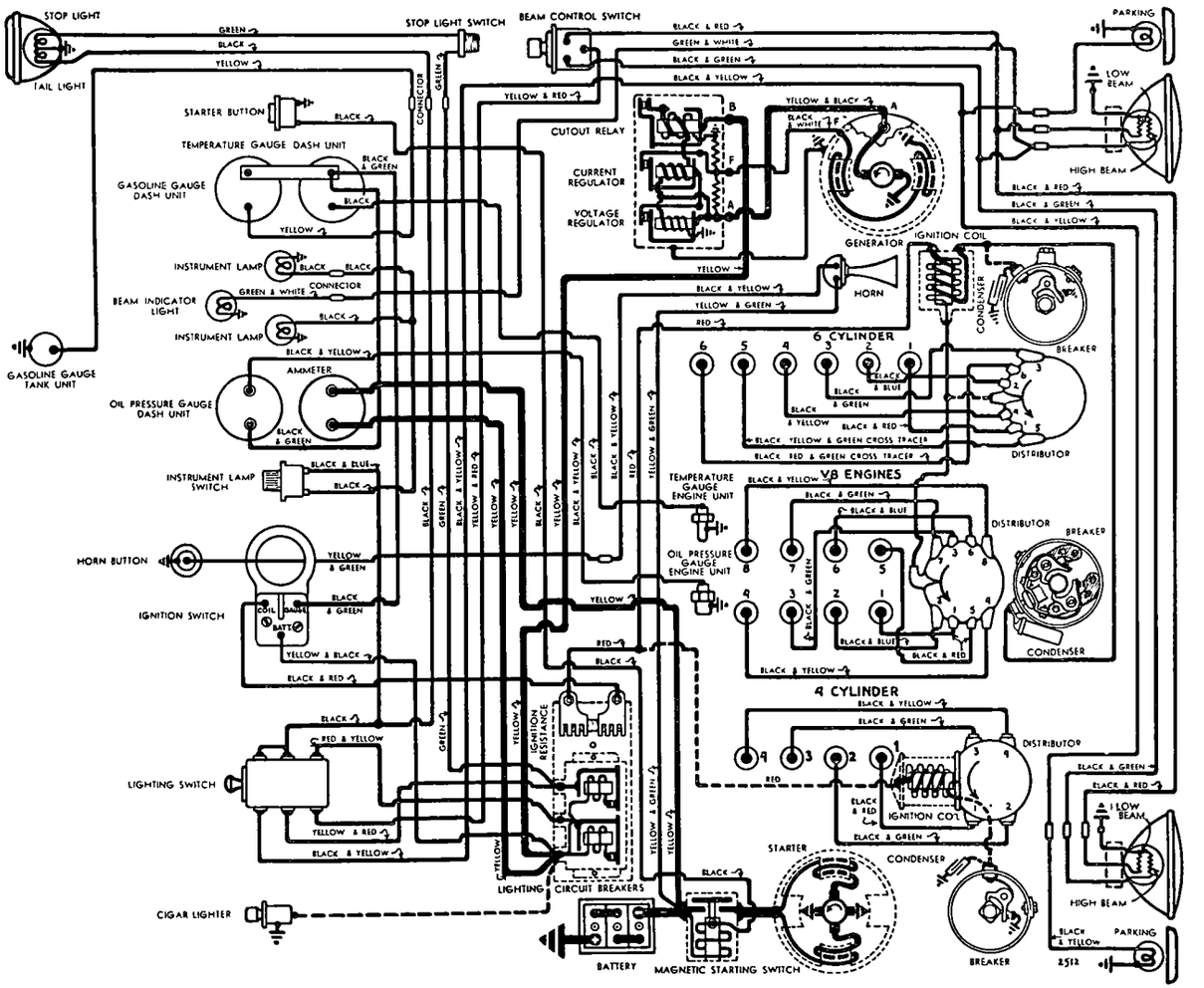

Refer to 1941 V8 Pass. Car diagram for Ignition Wiring of 1941 V8 Trucks

VALVES: See Valve Timing.

Tappet Clearance:—.010-.012" Intake, .014-.016" Exh. (4 Cyl. & V8), .013-.015" Intake and Exhaust (6 Cyl.). No adjustment provided.

STARTING: See Battery, Starter, Generator, Regulator.

IGNITION

Ignition Switch:—Oakes Steering Column and Ignition Lock Assembly.

Steering Post & Ign. Lock Assem.	Oakes No.	Ford No.	Ignition Switch Oakes No.
Comm'l. ①	302120	21C-3676-A	302461
Comm'l. ②	302478	21C-3676-B	302494
¾ & 1 Tonner	302120	21C-3676-A	302461
Cab-over-Eng.	301790	21W-3676	302461
Other Trucks	302122	21T-3676	302461

①—Floor mtd. Gearshift. ②—Strg. Col. Gearshift.

Lock Cylinder—Hurd or Briggs & Stratton. B&S No. 80935, Ford No. 91A-3686-A (with Keys).

Key Series—FK000 to FK999. **Groove**—No. 17.

COIL: Ford No. 9N-12024 (4 Cyl.), 1GA-12024 (6 Cyl.), 78-12036 or 81A-12036 (1941 V8). 1GA-12024 (1942 V8). Coil mounted as part of ignition unit assembly (4 Cyl. & 1941 V8), separately on engine block (6 Cyl. & 1942 V8).

Resistor Unit—Connected in coil primary circuit. Mounted on Circuit Breaker Assembly 11A-12250-A

Ignition Current—4½-6 amperes (All) with engine stopped. Ignition primary resistance 1-1⅓ ohms.

CONDENSER: Ford Part No. 91A-12300 (4 Cyl.), 78-12300 or 81A-12300 (1941 V8), 1GA-12300B (6 Cyl. & 1942 V8).

Capacity—.33-.36 mfd. (78-12300 & 81A-12300), .29-.32 mfd. (91A-12300 & 1GA-12300B).

DISTRIBUTOR (4 CYL.): Ford 9N-12000 (With Coil), 9N-12100 (less Coil). Single breaker, 4 lobe cam, full automatic advance type (no Vacuum Brake Control). Ignition unit (coil mounted on distributor) mounted on front end of engine and driven directly off end of camshaft.

Breaker Gap—.014-.016". Use special two step feeler —.014" step 'go', .016" step 'no go'.

Cam Angle or Dwell—Approx. 40° closed, 50° open. Set dwell at 41% (limits 36-41% at 2000 RPM.) on Ford Test Set.

Breaker Arm Spring Tension—20-24 ounces.

Rotation—Clockwise viewed from drive end (counter-clockwise viewed from front of engine).

Automatic Advance (4 Cylinder)

Distributor Degrees	Distributor R.P.M.	Engine Degrees	Engine R.P.M.
3-4	400	6-8	800
8½-9½	800	17-19	1600

Removal:—Ignition unit mounted on front of engine. To remove, take off cap, take out mounting screws

DISTRIBUTOR (6 CYL. & V8): ***All data same as for Passenger Car equipment. See 1941-42 Ford 6 Cylinder and V8 articles for complete data.***

IGNITION TIMING

IGNITION TIMING:—For each engine as follows. See Vacuum Brake Setting following for adjustment depending n type f servic and fuel (6 Cyl. & V8).

	Flywheel Degrees	Piston Position
4 Cyl. Engine	At TDC.	0000" TDC.
6 Cyl. Engine	2° BTDC.	0018" BTDC.
All V8 Engines	4° BTDC.	0058" BTDC

Timing—Manufacturer recommends use of Ford Laboratory Test Set (Heyer H1) with Distributor Stroboscope (Heyer H1-DFZ) and Special Adapter (Heyer EGDAE for 4 Cyl., EGDAF for 6 Cyl.). On Stroboscope set timing index at top dead center (4 Cyl.), at 1° before top dead center (6 Cyl.), at 2° before top dead center (V8), set peepsight at Zero. Adjust distributor by loosening adjusting screw in slot on left side of housing and moving screw up (to retard spark), down (to advance speark) in slot until Stroboscopic disc light is in line with peepsight, tighten adjusting screw.

Timing (On the Engine)—No flywheel marks provided. With distributor adjusted as described above, this will give correct TDC (4 Cyl.), 2° BTDC. (6 Cyl.), 4° BTDC. (V8) timing on the engine.

Vacuum Brake Setting (6 Cyl. & V8 only)—Should be adjusted to eliminate pinging when engine operated with load. To adjust, loosen locknut, back off adjusting screw until engine pings with load, then turn screw in just enough to eliminate ping, tighten locknut. When adjusted on the stroboscope, vacuum brake should retard spark to peepsight with peepsight set at 2° when distributor is driven at 650 RPM. with no vacuum to release brake.

CARBURETOR

Carburetor (4 Cyl.):—Marvel-Schebler Model TSX, Ford No. ONY-9510. Single barrel, updraft type. ***For complete data, refer to Carburetor Index.***

Idle Adjustment—With engine warm, set throttle stopscrew for 5-7 MPH. idle speed. Turn idle adjusting screw in until engine rolls, then turn screw out until engine fires smoothly. Recheck idle speed.

Power (Main Metering Jet) Adjustment—Open throttle approximately 1/3, turn power adjusting screw in until engine begins to lose power and speed drops off, then turn screw out until speed picks up and power is at maximum. Road test car and turn screw out slightly if engine falters when picking up.

Float Level—9/32" from gasket surface on bowl cover to nearest point on float with valve seated (invert cover to check). Set both floats alike.

Metering Jets—***Refer to Carburetor Index for Marvel-Schebler Carburetor article for complete data.***

Carburetor (6 Cyl. & V8): ***All data same as for Passenger Car equipment. See 1941-42 Ford 6 Cylinder and V8 articles for complete data.***

CARB. EQUIPMENT

Air Cleaner:—Ford No. 91A-9600A (4 Cyl. & V8 except C-O-E), 1GA-9600C (6 Cyl.), 81W-9600A (Cab-Over-Engine). Oil-wetted type std. Oil bath type Optl.

Fuel Pump:—	Type	AC No.	AC Exch. No.	Ford No.
4 Cyl.	R	1537465		1NC-9350
6 Cyl.	R	1537744	543	1GA-9350
V8	R	1537384	541	11A-9350

For complete data, refer to Carburetion Equip. Index.

Pressure—1½-2¾ lbs.

Gasoline Gauge:—King-Seeley Electric type. Ford No. Dash Unit—91A-9280A (Cab-Over-Engine), 11C-9280A (Comm'l & Other Trucks). **Tank Unit**—No. 01W-9275 (Cab-over-Engine), 01Y-9275 (1941 Panels), 21C-9275B (1942 Panels), 01T-9275 (1941 Others), 21C-9275A (1942 Closed Cabs).

For complete data, refer to Carburetion Equip. Index.

BATTERY

BATTERY:—**Ford No. 01A-10655-A.** 6 volt, 17 plate, 120 ampere hour capacity (20 hour rate).

Starting Capacity—150 amperes for 20 minutes.

Zero Capacity—300 amperes for 4.0 minutes.

Grounded Terminal—Positive (+) grd. to dash.

Engine Ground—Strap connector between rear of cylinder head (right head on V8) and dash.

Dimensions—Length 10.6". Width 7.3". Height 9.2".

Location—In engine compartment on left side (6 Cyl.), on right side (4 Cyl. & V8 exc. C-O-E). Under seat on right side on Cab-Over-Engine models.

STARTER

STARTER:—**Ford No. 52-11002 (4 Cyl.), 18-11002 (6 Cyl. V8). Armature 52-11005 (4 Cyl.), 18-11005 (Others).**

Drive—Barrel type Bendix No. A-1806, Ford No. 52-11350C (52-11002). Inboard Bendix No. L11FX-10, Ford No. B-11350 or Ford B&S Drive (rubber type, no spring) No. 91A-11350. ***Refer to Electrical Equip. Index for Ford B&S Starter Drive data.***

Rotation—Counter-clockwise at commutator end.

Brush Spring Tension—2 lbs. each.

Cranking Engine—100 RPM., 190-215 amperes.

Performance Data

Torque	R.P.M.	Volts	Amperes
4 ft. lbs.	1070	4.6	200
8 "	660	4.3	340
12 "	300	3.65	465
14 "	Lock	3.5	500

Starting Switch:—R-B-M. Ford No. 01A-11450-A. Magnetic switch mounted on dash and controlled by instrument panel pushbutton, Ford No. 11C-11500 (1941), 21C-11500 (1942).

Removal:—Starter mounted on right front face of flywheel housing. To remove, take off pan at right of engine, free starter-to-oil pan support bracket, take out through-bolts on commutator end plate.

GENERATOR

GENERATOR:

Truck	Ford Numbers Generator	Armature
All 4 Cyl. ('41-42)	1NC-10000	01A-10005
All 6 Cyl. (1941)	1GA-10000	01A-10005
All 6 Cyl. (1942)	2GA-10000	2GA-10005
All V8 exc. C-O-E ('41)	01A-10000B	01A-10005
C-O-E Trk. (1941)	81T-10000A	78-10005C
C-O-E Trk. (1941)	81T-10000B	78-10005D
All V8 incl. C-O-E ('42)	21A-10000	01A-10005

Two brush type with vibrating type voltage and current regulation. Ventilated by drive pulley fan.

Charging Rate Adjustment—None (see Regulator).

Maximum Charging Rate—Controlled by regulator and dependent on battery condition and load. To check generator output, refer to Ford 6 Cyl. or V8 Passenger Car article for complete directions.

CONTINUED N NEXT PAGE

CONTINUED FR M PRECEDING PAGE

Performance Data

01A-10000-B		INC-10000	
Amperes	Eng. RPM.	Amperes	Eng. RPM.
Start	520	Start	610
30	1060	30	1240
30	2500	30	2500
81T-10000-A		**1GA-10000-B 2GA-10000-A**	
Start	550	Start	565
28	1300	30	1160
28	2500	30	2500
81T-10000-B		**21A-10000**	
Start	350	Start	520
20	1050	30	1060
20	2500	30	2500

Rotation—Counter-clockwise at commutator end.
Field Current—2.1 amperes at 6.0 volts (1NC-, 1GA-, 2GA-, 21A-10000, 01A-10000B—field resistance 2.88 ohms at 70°F), 2.22 amperes at 6.0 volts (81T-10000-A,B—field resistance 2.7 ohms at 70°F).
Brush Spring Tension—Approximately 28 ozs.

Removal (4 Cyl.):—Generator pivot mounted at right of engine. To remove, take out mounting bolts.

Removal (6 Cyl.):—Generator mounted on adjustable bracket at left front of engine. To remove, take out 2 capscrews in mounting bracket.

Removal (V8 Eng.):—Generator mounted on bracket between cylinder banks at front of engine. To remove, loosen nut on bracket stud.

Belt Adjustment (4 Cyl.):—Loosen pivot and clamp bolts, swing generator away from engine until side movement of belt (finger pressure) is 1" midway between generator and fan pulleys.

Belt Adjustment (6 Cyl.):—½" deflection midway between generator and crankshaft pulley (generator belt), generator and pump pulley (pump belt). Adjust both belts by loosening 2 capscrews in mounting bracket beneath generator, move generator up and out (bolt holes slotted at this angle).

Belt Adjustment (V8 Eng.):—1" deflection midway between generator and water pump pulleys. NOTE—Generator mounting bracket modified to include fan mounting (fan driven by separate belt). Both belts adjusted in same manner by loosening mounting bolts and raising mounting brackets.

REGULATOR

REGULATOR:—Ford No. 01A-10505C. Three-Unit Type. Consists of Cutout Relay, vibrating Voltage Regulator and vibrating Current Regulator (separate units) in single case on engine side of dash. *For complete data, refer to Electrical Equipment Index.* NOTE—Regulator case grounded through 'pigtail' to dash or separate ground wire to generator. This ground connection must be in place when regulator operated or tested (disturbed by cover removal).

Cutout Relay

Cuts In—5.8-6.3 volts at operating temperature.
Cuts Out—8 amperes discharge current (maximum).

Voltage Regulator

Setting—6.9-7.2 volts at 70-80° F. See Ford Regulator article in Electrical Equipment Section for other temperatures.
Checking & Adjusting—*Refer to Electrical Equipment Index for article on 'Ford Regulator—3 Unit Type'*

Current Regulator

Setting—30-33 amperes (after 5 min. run).
Checking & Adjusting—See Voltage Regulator above.

LIGHTING

LIGHTING:—Headlamps—Ford Sealed Beam Type. Controlled by Lighting Switch on instrument panel and Beam Selector Switch on toeboard. *For complete data, refer to Electrical Equipment Index.*
Headlamp Adjustment—Aim upper beam straight ahead (hot spot center 3" below lamp center height).
Beam Indicator—On panel centered above speedometer. Lighted whenever upper beams in use.

Switches

Lighting—R-B-M. Ford No. 11A-11652 or 01C-11653 (Commercial), No. 01C-11653 (Trucks exc. C-O-E), No. 01W-11653 (Cab-Over-Engine Trucks). Light Switch Knob & Insert No. 11C-11661-C. NOTE—Light Switch Nos. 11653 includes switch and wiring.
Beam Selector—R-B-M. Ford No. 11A-13532.
Instrument—No. 50-13740 (Closed Cabs, Panels).
Stop Light—Ford No. 11A-13480.

Bulb Specifications

Position	Candlepower	Mazda No.
Headlamps	Sealed Beam	
Parking (Trucks exc. C-O-E)	3	63
Parking (Cab-Over-Engine)	1½	55
Instrument, Beam Indicator	1	51
Stop	21	1129
Tail	3	63
Dome (Panels)	15	87

MISC. ELECTRICAL

LIGHTING CIRCUIT BREAKER:—Ford No. 11A-12250A. Combined with Ignition Resistor on block on dash under cowl. Consists of two separate circuit breaker units (one unit protects headlight circuits, second unit protects other lighting circuits) of the thermostatic and wound-coil type. Contacts open with current of 50 amperes and vibrate rapidly to control current.

HORNS:—Ford No. 78-13833-A. Vibrator type, electric single horn. **Horn Current**—6-8 amperes.

ENGINE

4 CYLINDER TYPE

ENGINE SPECIFICATIONS (4 CYL. ENGINE):—4 Cylinder, 'L' head, Enbloc type.
Bore—3.187". **Stroke**—3.75".
Displacement—119.5 cubic inches.
Rated Horsepower—16.2.
Developed Horsepower—30 at 2800 RPM (for 1941), 40 at 3200 RPM (for 1942).
Compression Ratio—6.0-1 Cast-iron head.
Compression Pressure—129 lbs. at 1200 RPM. or 103 lbs. at cranking speed of 100 RPM.
Vacuum Reading—18-20" steady idling at 5-7 MPH.

CYLINDER SLEEVES:—Hardened, dry type, cylinder sleeves used on some engines.
Servicing:—*See Ford Shop Notes for data.*

PISTONS (4 CYL.):—Steel alloy, light weight, cam ground type. When reconditioning engine, replace cylinder sleeves and install new Std. pistons.
Weight—358-362 grams (without rings or pin).
Removal—Pistons and rods removed from above.
Clearance—See Fitting New Pistons.
Fitting New Pistons:—Use .003" feeler, .50" wide, inserted between piston and cylinder wall at right angles to pin. Pull required to withdraw feeler must be 7-12 lbs. NOTE—On engines with plain cylinders (no sleeves), use .0025" feeler with 7-12 lbs. pull.
Replacement Pistons:—*See Ford Shop Notes for data.*

PISTON RINGS (4 CYL.):—Two compression, one slotted oil control ring, all above pin. Oil ring groove drilled for oil drainage. NOTE—Expanders are used with #2 Compression Ring & Oil Control Ring.

Ring	Width	End Gap	Side Clearance
Compr. #1	.130-.140"	.012-.017"	.0025-.003"
Compr. #2	.130-.140"	.012-.017"	.002-.0025"
Oil Cont.	.1535-.1540"	.012-.017"	.0015-.002"

Replacement Rings:—*See Ford Shop Notes for data.*

PISTON PIN (4 CYL.):—Diameter—.7501-.7504". **Length** 2.97". Pin floating type with locking ring in piston at each end. Pin hole in rod bronze-bushed.
Pin Fit in Piston—.0005" clearance.
Pin Fit in Rod Bushing—.0001" clearance. *Refer to Ford Shop Notes for Piston Pin Fitting directions.*

CONNECTING ROD (4 CYL.):—Length 7.000".
Weight—580 grams.
Crankpin Journal Diameter—2.094".
Bearing Type—Removable steel-backed, special alloy lined type, clamped in rod and bearing cap.
Clearance—.0005-.002". **Sideplay**—.002-.006".

Adjustment:—None (no shims). Replace bearings. Do not file rods or bearing caps.

Replacement Bearings:—*Refer to Ford Shop Notes.*

CRANKSHAFT (4 CYL.):—Three bearing type with integral counterweights.
Journal Diameters—2.2485" (all bearings).
Bearing Type—Removable, steel-backed, special alloy lined. Front & Rear bearings interchangeable.
Clearance—.001-.003" (or slight drag with .002" feeler assembled in bearing for clearance check).

Bearing Adjustment:—None (no shims). Replace bearings. Do not file bearing caps.

End Thrust:—Taken by center bearing. Adjust by replacing bearing. **Endplay**—.002-.006".

Replacement Bearings:—*Refer to Ford Shop Notes.*

CAMSHAFT (4 CYL.):—Three bearing with Helical Gear drive (gear furnished as unit with shaft).
Journal Diameters—1.797" (all bearings).
Bearings—Steel-backed, babbitt-lined bushings.
Clearance—.002".

Timing Gears:—Cast alloy iron (crankshaft), Bakelized Fabric or Aluminum bolted on (camshaft).
Backlash—.004" maximum. *Refer to Ford Shop Notes for Timing Gear Replacement data.*

Camshaft Setting:—Mesh '0' marked tooth of crankshaft gear with '/' marked space on camshaft gear (this mark must be in line with mark on hub).

VALVES (4 CYL.):	Head Diam.	Stem Diam.	Length
Intake	1.537"	.3115"	4.750-4.751"
Exhaust	1.280"	.3115"	4.750-4.751"

	Seat Angle	Lift	Stem Clearance
All Valves	45°	.307"	.0015-.0035"

See Ford Shop Notes for Valve Servicing data.
NOTE—Seat inserts used for all valves.

Valve Guides:—Split type retained by 'C' washer and valve spring. *See Ford Shop Notes for servicing data.*

Valve Lifters:—Barrel type in reamed holes in block.
Diameter—.9995". Replace if worn to less than .998" in diameter or length less than 1.710" after any necessary resurfacing of ends (cast type can be resurfaced on both ends, pressed steel type on bottom end only).
Clearance—.0005-.0015". Lifter should slip into hole in block of own weight.

Valve Springs:—	Pressure	Length
Valve Closed	37-40 lbs.	2.13"
Valve Open	76-80 lbs.	1.82"

ENGINE
6 CYLINDER TYPE

ENGINE SPECIFICATIONS: 1GA (1941), 2GA (1942) 90 HP. 6 cylinder, "L" head type.
Bore—3.3". **Stroke**—4.4".
Rated Horsepower—26.1. **Displacement** 226 cu. ins.
Developed Horsepower—90 at 3300 RPM.
Compression Ratio—6.7-1 Cast Iron Head.
Compression Pressure—165 lbs. max. at 2000 RPM. or 117 lbs. at cranking speed.
Vacuum Reading—Approx. 18-20" at idling speed.

►*For all other 6 Cyl. Engine data, refer to 1941-42 Ford 6 Cylinder Passenger Car article.*

ENGINE
V8 "90" TYPE

ENGINE SPECIFICATIONS: Own 90. 8 Cylinder, 90° Vee, "L" Head type. Both cylinder banks and crankcase cast Enbloc.
Bore—3.062". **Stroke**—3.75".
Rated Horsepower—30. **Displacement** 221 cu. ins.
Developed Horsepower—90 at 3800 RPM.
Compression Ratio—6.2-1 (Comm'l, ¾, 1 Ton), 5.9-1 (Other Trucks). Cast Iron Heads.
Compression Pressure—140 lbs. (6.2-1 Head), 135 lbs. (5.9-1 Head) max. at 2300 RPM. or 113 lbs. (6.2-1), 108 lbs. (5.9-1) at cranking speed of 100 RPM.
Vacuum Reading—Steady 18-20" at 5-7 MPH.

►*For all other V8 "90" Engine data, refer to 1941-42 Ford V8 "90" Passenger Car article.*

ENGINE
V8 "100" TYPE

ENGINE SPECIFICATIONS: Own 100. 8 Cylinder, 90° Vee, "L" Head type. Both cylinder banks and crankcase cast Enbloc.
Bore—3.187". **Stroke**—3.75".
Rated Horsepower—32.5. **Displacement** 239 cu. ins.
Developed Horsepower—100 at 3800 RPM.
Compression Ratio & Pressure—As follows:

Engine	Ratio	Material	Pressure at 100 RPM
V8 "100" '41①	6.6 -1	Aluminum	116 lbs.
V8 "100" '42①	6.6-1	Cast-iron	116 lbs.
V8 "100" '41②	5.9-1	Cast-iron	106 lbs.
V8 "100" '42②	6.4-1	Cast-iron	120 lbs.

①—Commercial, ¾ & 1 Ton. ②—Other Trucks.
Vacuum Reading—Steady 18-20" idling at 5 MPH.

►*For all other V8 "100" Engine data, refer to 1941-42 Mercury V8 "100" Passenger Car article.*

VALVE TIMING

Tappet Clearance: .010-.012" Intake (4 Cyl. & V8), .014-.016" Exhaust (4 Cyl. & V8), .013-.015" All Valves (6 Cyl.). No adjustment provided.

Valve Timing (4 Cyl.): See Camshaft Setting above.
Intake Valves—Opens 6° BTDC. Close 22° ALDC.
Exhaust Valves—Opens 38° BLDC. Closes 6° ATDC.
Checking Timing—No flywheel marks or other means provided to check timing. If top dead center point established on flywheel, intake valve should open slightly less than 2 teeth before this point.

Valve Timing (6 Cyl.): See Camshaft Setting.
Intake Valves—Open 3° BTDC. Close 41° ALDC.
Exhaust Valves—Open 48° BLDC. Close 6° ATDC.
To Check Valve Timing—No flywheel marks provided. If top dead center point established on flywheel, intake valve should open approximately 1 tooth before this top dead center position.

Valve Timing (V8 "90" & "100"): See Camshaft Setting.
Intake Valves—Open At TDC. Close 44° ALDC.
Exhaust Valves—Open 48° BLDC. Close 6° ATDC.
To Check Valve Timing—No flywheel marks provided. Intake valve opens with piston at TDC.

LUBRICATION

LUBRICATION:—Pressure system. Gear type oil pump in crankcase. Pump mounted on right side of front main bearing cap with pump housing integral with bearing cap (4 and 6 Cyl.), mounted separately at rear of crankcase (V8 engines).

Normal Oil Pressure:—25 lbs. at 1400 RPM. (4 Cyl.), 30 lbs. at 2000 RPM. (6 Cyl. & V8 Engines).

Oil Pressure Regulator:—Opens at 25 lbs. (4 Cyl. Eng.), 30 lbs. (others). Not adjustable. Located under plug between cylinder banks at front of engine on 'V8' engine. Located under plug on right side of crankcase in front of fuel pump on Six Cylinder engines. Located under plug at top of timing gear cover (engine front cover) on left side on 4 Cyl. Engines.

Oil Screen & Drain Plug (4 & 6 Cyl.):—Single unit on bottom of oil pan (plug is large type with screen mounted on inner end so that screen removed and accessible for cleaning whenever plug taken out).

Oil Pressure Gauge:—King-Seeley Electric, Ford No. 11C-9273A (Dash Unit), 48-9278 (Eng. Unit).
See Miscellaneous Section for complete data.

Crankcase Capacity:—4 qts. (4 Cyl.), 5 qts. (others).

COOLING

COOLING SYSTEM:—**Capacity.** 14 qts. (All 4 Cylinder), 16¾ qts. ('42 6 Cyl. Comm'l., ¾ & 1 Ton), 17¼ qts. ('42 6 Cyl. Regular Truck), 23 qts. (All V8's exc. '41 C-O-E), 24 qts. ('41 Cab-Over-Engine).
Six Cylinder Note—A water distributing tube installed in cylinder block with a nozzle for each cylinder which directs flow of cooling water in engine.

Water Pump (4 Cyl. Eng.):—Packless type, 1 used. Mounted on front end of cylinder block and driven by fan belt (fan mounted on front end of water pump shaft).
See Water Pump Section for complete data.
Removal—Remove drive belt, take out mounting bolts and remove fan. Take out pump mounting screws and remove pump assembly.

Water Pump (6 Cyl. Eng.):—Packless (self-sealing), balanced, centrifugal type. Mounted on front of cylinder block and driven by a separate belt from the generator pulley.
See Water Pump Section for complete data.
Removal—Remove drive belt, take out mounting bolts and remove fan. Take out pump mounting screws and remove pump assembly.

Water Pump (V8 Engines):—Packless type, 2 used (1 for each bank). Mounted on front of engine block.
See Water Pump Section for complete data.
Removal—Slack off drive belt, support engine at forward end, remove front engine mounting bolts (engine mounting integral with pump housing), take out mounting screws in pump body.

Thermostat (4 Cyl. & V8):—In top radiator hose (4 Cyl. Engine—1 used), in each cylinder head outlet elbow (V8 Engine—2 used).
Setting—Starts to open at 145° F. Fully open 180°F.

Thermostat (6 Cylinder):—New dual-valve type. Located in outlet elbow on cylinder head. With main valve closed (cold engine), water is by-passed through passage in head directly to water pump to maintain circulation through engine. By-pass passage is shut off when main valve opens.

Temperature Gauge:—King-Seeley Electric, Ford No. 11C-10883A (Dash Unit), 99A-10884 (Eng. Unit). V8 NOTE—Accessory Temperature Gauge Switch (for Other Bank) No. 01A-10990. Kit No. 11A-18381.
See Miscellaneous Section for complete data.

CLUTCH

CLUTCH:—**Long Model 9CF-CS (4 Cyl., All Models, V8 '90' Commercial), 10CF-TI (6 Cyl. Comm'l & V8 '100' Comm'l., ¾ & 1 Ton), 11CF-CS (All Others).** Semi-centrifugal, single plate, dry disc type.
See Clutch Section for complete data.

Facings—Molded type, 2 required.

Clutch Model	Inside Diameter	Outside Diameter	Thickness
9CF-CS	5.76"	9"	.137"
10CF-TI	6.75"	10"	.137"
11CF-CS	6.50"	11"	.137"

Adjustment:—Pedal free movement should be 1.5-1.75". To adjust, remove clevis pin at end of connector rod, adjust clevis on rod.

Removal:—Remove transmission (see Transmission Removal below). Take out mounting screws in clutch cover flange.

TRANSMISSION
3-SPEED TYPE

TRANSMISSION (3 SPD.):—**Own Make.** Standard on all Commercial, 3/4 & 1 Ton with 6 Cyl. & V8 Engines (4 Spd. type Std. on 1 Ton with 4 Cyl. Engine). Constant-mesh, synchro-mesh, helical gears (second and high), sliding spur gears (low and reverse).
6 Cylinder Note—Transmission housed in separate case bolted to flywheel housing.
See Transmission Section for complete data.

NOTE—4 Spd. Transmission Optl. on these models.

Removal:—Remove 4 front companion flange bolt nuts at front universal. On truck models with two propeller shafts, take out 2 bolt nuts at coupling shaft center support. Lower propeller shaft assembly to floor. Support engine at rear end, take out rear engine mounting bolts. Remove clutch housing mounting screws (transmission mounting screws on 6 Cyl.). Pull transmission straight back and remove.

NOTE—1941 Commercial models equipped with Torque Tube Drive. *See 1941-42 Ford V8 "90" Passenger Car article for Transmission Removal instructions on these models.*

TRANSMISSION
4-SPEED TYPE

TRANSMISSION (4 SPD.):—**Own Make.** Std. on all Truck models except 3/4 & 1 Ton (with 6 Cylinder and V8 Engines). Sliding spur gear type.
See Transmission Section for complete data.

NOTE—This Transmission Optl. on other models.

Removal:—Same as for 3 Spd. Transmission above.

C NTINUED ON NEXT PAGE

CONTINUED FR M PRECEDING PAGE

UNIVERSALS

UNIVERSAL JOINTS:—Spicer—Needle bearing types. Two used (101" and 114" WB. models), 3 used with slip-joint in center behind coupling shaft bearing (122", 134", 158", 194" wheelbase models).
See Universals Section for complete data.

NOTE—1941 Commercial models equipped with one universal joint (Spicer Steel Bushing Type) in ball housing at rear of transmission.

Spicer Model Nos.

Wheelbase	Front	Center	Rear
101"	1351-22,23	None	1358-104, 115
114"①	1278-102	None	1278-102
114"②	1311-102	None	1318-104
122"	1318-103	1311-102	1318-103
134&158"	1358-4, 31	1351-110, 111	1358-104, 115
194"	1358-5, 32	1351-110, 111	1358-105, 116

①—3 Spd. transmission. ②—4 Spd. transmission.

Coupling Shaft (Center) Bearing (Trucks):—A cushion mounted Coupling Shaft Ball Bearing bolted to underside of intermediate frame cross member is now used. Bearing is mounted on end of coupling shaft in a sleeve with a felt retainer sleeve on each end and a bearing baffle over the front end. Bearing is retained by center universal companion flange. Bearing and sleeve assembly mounted in center support which is bolted to underside of frame cross member.

REAR AXLE
COMMERCIAL TYPES

REAR AXLE (COMMERCIAL):—Own Make. 3/4 floating, Spiral Bevel gear type with straddle-mounted pinion with Torque Tube drive (1941), Hotchkiss drive (1942 models).
See Rear Axle Section for complete data.
Ratio—6 & 8: 3.78-1 Std., 3.54-1 Optl. **4:** 4.55-1.
Backlash—.012" maximum.

Removal:—Split rear universal joint by taking out two 'U' bolts and nuts. Lower propeller shaft. Disconnect hand brake cables and flexible hydraulic brake line at rear axle (bleed brake lines when reconnected). Disconnect rear shock absorbers from axle. Disconnect rear springs (semi-elliptic type) and withdraw axle assembly to the rear.

NOTE—1941 Commercial models equipped with Torque Tube Drive. *See 1941-42 Ford V8 "90" Passenger Car article for Rear Axle Removal instructions on these models.*

Axle Shaft Removal—Axle must be dismantled and shaft removed through differential housing at inner end (side gear integral). *See Rear Axle Section for Ford Rear Axle article for complete data.*

REAR AXLE
TRUCKS

REAR AXLE (TRUCKS):—Own Make. Full-floating, Spiral Bevel gear type with straddle-mounted pinion and Hotchkiss drive.
See Rear Axle Section for complete data.

Ratio	Standard	Optional
¾ & 1 Ton (4 Cyl.)	6.67-1	
¾ & 1 Ton (Others)	4.857-1	4.11-1
All Others	6.67-1	5.14-1, 5.83-1

Backlash—.004-.016".

Removal:—Split rear universal joint by taking out two 'U' bolts and nuts. Lower propeller shaft. Disconnect hand brake cables at equalizer (¾ & 1 Tonner) and flexible hydraulic brake line at rear axle (bleed lines when re-connected). Disconnect rear springs (semi-elliptic type) and withdraw axle assembly from beneath truck.

Axle Shaft Removal—Take out two screws (except ¾ & 1 Tonner) and remove hub cap, remove nuts on 8 hub studs which hold axle shaft flange in place, turn the two special screws (in tapped holes in flange) up evenly to break flange loose from wheel hub, back these screws out, strike axle shaft flange at center to loosen centering cones on studs, remove cones, pull axle shaft out (wheel not disturbed).

Wheel Bearing Adjustment—Remove axle shaft (above), use special bearing adjusting wrench and remove bearing locknut (outer nut), nut retainer, and grease retainer (except ¾ & 1 Tonner). Adjust inner bearing adjusting nut by turning up until tight and then backing off ⅛ turn, install grease retainer, bearing nut retainer, outer bearing locknut, turn locknut up tight.

NOTE—When installing axle shaft, make certain that gasket in place under shaft flange, cones in place on studs and that two loosening screws backed off sufficiently so that stud nuts can be tightened securely. Turn the two loosening screws in just enough to prevent loosening in service.

REAR AXLE
SPECIAL EQUIPMENT

REAR AXLE (OPTL.):—Own Make. Two-speed type.
See Rear Axle Section for complete data.
Ratio—5.83-1 (Direct), 8.11-1 (2nd speed).
Backlash—.006-.020".

Removal:—Same as for standard axle (above) except that control linkage must also be disconnected.

SHOCK ABSORBERS

SHOCK ABSORBERS:—Houde (Houdaille). Double acting, adjustable, hydraulic type. Model numbers: FRONT—BBCN (Comm'l), BBCME or BBCHMS (Trucks). REAR—BBCZ (Comm'l), BBG, BBCLL, or BBCLT (Trucks).
See Shock Absorber Section for complete data.

FRONT SUSPENSION

Front Suspension:—Conventional 'I' beam section front axle with Reverse Elliott ends and new semi-elliptic springs.

Kingpin Inclination—7° crosswise.

Caster—3½° Max., 1° Min. Must be equal within ½°.

NOTE—Caster angle controlled by wedge shims inserted between axle pads and springs. To increase caster, insert taper wedge shims equally at both sides (make certain that spring tie bolt passes through hole in wedge so that wedge held securely in place with spring leaves).

Camber—1° Max., ¼° Min. Must be equal within ¼° and right wheel must not exceed left wheel. NOTE—Axle may be bent cold to correct Camber provided that proper tools (wedges and blocks to prevent crushing axle flange) used.

Toe In—1/16". Set at 1-10 ratio to Camber. Toe-in increases with load on trucks and should be set with truck empty. Adjust by loosening clamp bolts and turning tie rod.

Steering Geometry (toe out on turns)—Outer wheel turned 20°. Inner wheel 23° (Comm'l, 3/4 & 1 Tonner), 23¾° (101" WB.), 23⅔° (134" WB.), 22¼° (158" WB.). Allowable variation ½°.

STEERING GEAR

Steering Gear (Comm'l Models): Ford Make (Gemmer Model 305 design). Worm-and-Roller type with push-pull adjustments.

Steering Gear (Truck Models): Gemmer Model 335. Worm-and-Roller type with push-pull adjustments.
See Steering Gear Section for complete data.

BRAKES

BRAKES:—Service. Lockheed hydraulic, double anchor type. Hand lever applies rear wheel service brakes (Comm'l, 3/4 & 1 Tonner), independent shaft brake behind transmission (all others).
See Brake Section for complete data.

Drums—Cast-iron. Diameter: Comm'l & 3/4 Ton (12" front & rear). 1 Ton (12" front, 14" rear). Other Trucks (14" front, 15" rear).

Wheel Cylinders—Stepped type used on Commercial & 3/4 Ton (front & rear wheels), 1 Ton (front). Sizes as follows:

	Front Wheel Front	Front Wheel Rear	Rear Wheel Front	Rear Wheel Rear
Commercial	1.25"	1.00"	1.125"	1.00"
3/4 Ton	1.25"	1.00"	1.25"	1.00"
1 Ton	1.25"	1.00"	1.375"	1.375"
All Others	1.375"	1.375"	1.50"	1.50"

Lining—Forward shoes (Woven—all wheels Comm'l & 3/4 Ton, front wheel 1 Ton; Molded—All Others). Rear shoes (Molded—All Models).

	Width	Thickness	Length per Shoe Forward	Rear
Comm'l, 3/4 Ton	1.75"	.20"	13.18"	10.1"
1 Ton (front)	1.75"	.20"	13.18"	10.1"
1 Ton (rear)	2.00"	.268"	15.53"	10.75"
Others (front)	2.00"	.268"	15.53"	10.75"
Others (rear)	3.50"	.33"	16.64"	11.52"

Clearance—Least possible amount without drag.

Hand Brake (Comm'l, 3/4 & 1 Ton):—See Service Brakes above.

Hand Brake (Others):—On drum at rear of transmission.

Adjustment—Fully release hand brake lever. Flat on cam should rest on ear of band (if not, remove pin in lower end of hand lever). Turn anchor screw (on left side) in to give .010" clearance between drum and band, replace locking wire. Loosen lock nut and turn bracket adjusting screw (on right side) to give .010" clearance for lower half of band, tighten lock nut. Tighten adjusting rod nut (on right side), to give .010" clearance for upper half of band (slotted side of nut up). Adjust brake rod clevis so that pin enters clevis and hand brake lever with flat of cam on ear of band and lever in fully released position.

Drum Diameter—7.81".

Lining—Woven. Width 2.5". Thickness 0.250".

ENGINE HOOD NOTE: Hood is Alligator type hinged at cowl. To raise hood, pull out on release catch on nose of hood, lift auxiliary catch (exposed when release catch raised), lift hood up at forward end.

OIL PAN REMOVAL & INSTALLATION: *See Ford Shop Notes.*

MODEL IDENTIFICATION

NOTE—All trucks built in 1944-45 were fitted with the V8 "100" Engine (3.187" Bore).

Model	1944 Models	Wheelbase
498T		158"
494T School Bus		194"
Model	**1945 Models**	**Wheelbase**
59C Commercial		114"
59T		134"
598T		158"
594T School Bus		194"

1946-47 Models

Model	Engine	Wheelbase
69C Light Duty	V8 "100"	114"
6GC Light Duty	6 Cyl. "90"	114"
69Y One Ton	V8 "100"	122"
6GY One Ton	6 Cyl. "90"	122"
69T Heavy Duty	V8 "100"	134"
6GT Heavy Duty	6 Cyl. "90"	134"
69U Dump Truck	V8 "100"	134"
6GU Dump Truck	6 Cyl. "90"	134"
69W Cab-over-Engine	V8 "100"	134"
691W Cab-over-Engine	V8 "100"	101"
694T School Bus	V8 "100"	194"
6G4T School Bus	6 Cyl. "90"	194"
698T Heavy Duty	V8 "100"	158"
6G8T Heavy Duty	6 Cyl. "90"	158"
698W Cab-over-Engine	V8 "100"	158"

SERIAL & ENGINE NUMBER: Stamped on top of clutch housing and visible when floor mat and transmission cover plate removed.

TUNE-UP

COMPRESSION: Ratio—6.7-1 (6 Cyl. Engine), 6.4-1 (V8 1944-45), 6.75-1 (V8 1946-47). All heads Cast Iron.

Pressure—120 lbs. (105-125) at cranking speed of 100 RPM.

VACUUM READING: Steady 18-20" idling at 500 RPM.

FIRING ORDER: 1-5-4-8-6-3-7-2 (for 8 cyl. engine), 1-5-3-6-2-4 (for 6 cyl.). See diagram.

SPARK PLUGS: Champion H9 Comm. 14 mm. Metric. Gaps—.025".

IGNITION (6 CYL.): See Coil, Condenser, & Distrib'tr.
Breaker Gap—.014-.016" **Cam Angle** 40° (closed).
Breaker Arm Spring Tension—20-24 ounces.
Automatic Advance—Starts at 200 RPM. Maximum 9° at 600 RPM. (distr. degrees & RPM).

IGNITION (V8): See Coil, Condenser, & Distributor.
Breaker Gap—.014-.016". **Cam Angle** 36° closed for both sets operating together.
Breaker Arm Spring Tension—20-24 ounces.
Automatic Advance—Starts at 200 RPM. Maximum 11° at 600 RPM (distr. degrees & RPM).

IGNITION TIMING: See Ignition Timing.
Std. Setting—1° BTDC (Six Cylinder Engines), 4° BTDC (V8 Engines). No flywheel marks provided. See Ignition Timing for timing procedure and Vacuum Brake adjustment.

CARBURETION: See Carburetor & Carb. Equipment.

Idle Setting—Both idle screws ⅝-¾ turn open and set for smooth idle. Idle speed 500 Eng. RPM or 5-7 MPH. NOTE—Six Cylinder Engine carburetor has only one idle adjusting screw (single barrel type).
Float Level—Fuel level 11/16" (21/32-23/32") below top edge of bowl.

Accelerating Pump—Center (#2) hole Normal. Inner (#1) Hole—Summer, Outer (#3) Hole—Winter for temperature extremes.

Fuel Pump Pressure: 3½ lbs. maximum.

MANIFOLD HEAT CONTROL (6 CYL.): Automatic thermostatic type. Valve should be closed (counterweight arm against stop pin) with engine cold and should operate freely.

MANIFOLD HEAT CONTROL (V8—'46-47): Automatic thermostatic type located in exhaust manifold connection of left hand cylinder block (diverts exhaust gases through by-pass channel in intake manifold from left bank to right bank when valve is closed). See that valve operates freely.

VALVE TAPPET CLEARANCE: 6 Cylinder. .013-.015" Cold, for All Valves. No adjustment.

V8 Engine—.010-.012" Intake, .014-.016" Exhaust, Cold. No adjustment.

Valve Timing Check—*See Valve Timing.*

STARTING: *See Battery, Starter, Generator, Regulator.*

IGNITION

IGNITION SWITCH: Oakes Steering Column & Ignition Lock Assembly. Part Nos. as follows:

	Steering Col. & Ign. Lock		Ignition Switch	
	Oakes No.	Ford No.	Oakes No.	Ford No.
Lgt. Trk.①	302120	01C-3676A	302461	81A-3700
Lgt. Trk.②	302478	01C-3676B	302494	81A-3700
H.D. Trk.	302122	21T-3676	302461	81A-3700
C-O-E (LHD)	301790	21W-3676	302461	81A-3700
C-O-E (RHD)	301882	21WF-3676	302461	81A-3700

①—Floor Mtd. Gearshift. ②Strg. Col. Mtd. Gearshift.

CONTINUED N NEXT PAGE

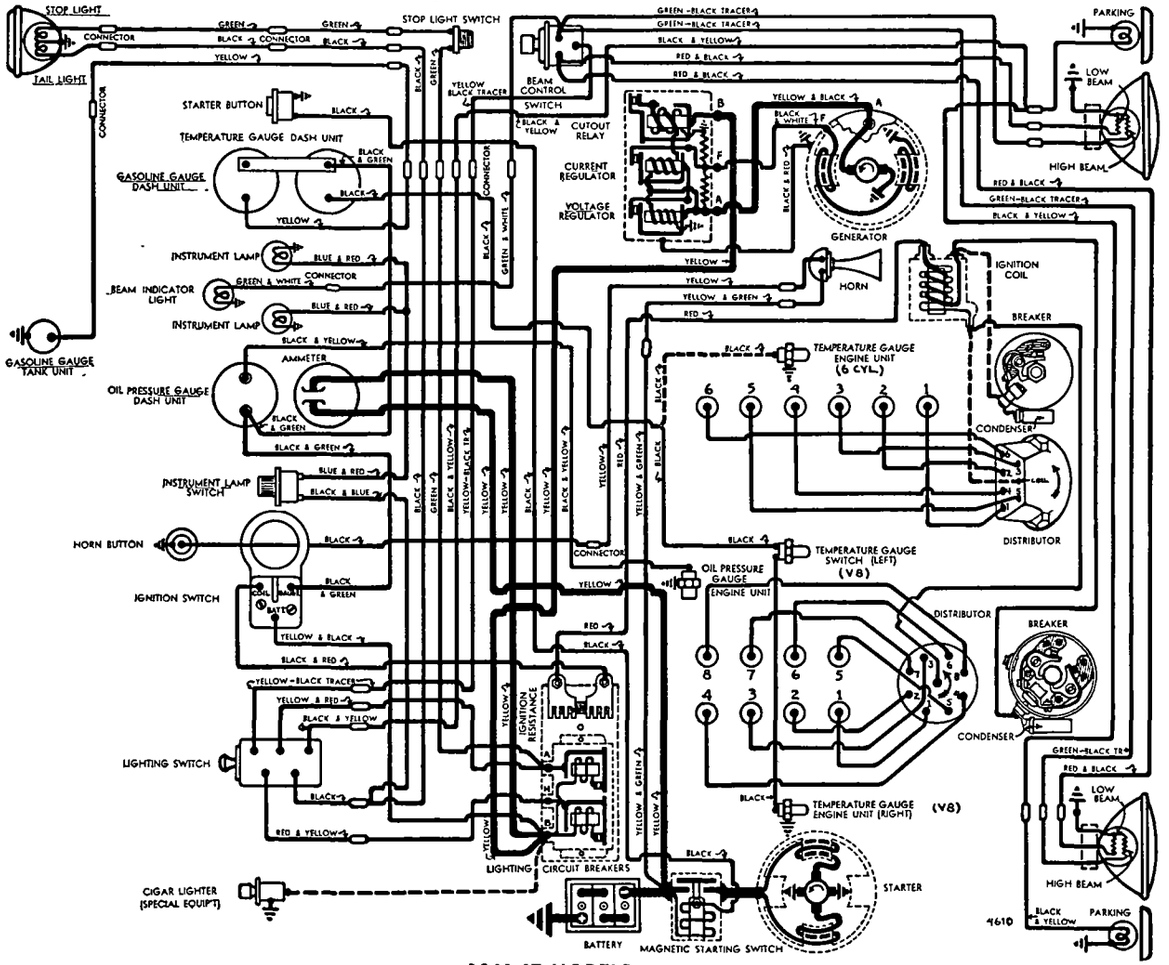

1946-47 MODELS

See 1942 Truck Diagram for wiring on 1944-45 Models

CONTINUED FROM PRECEDIN PA E

Lock Cylinder—Hurd or Briggs & Stratton No. 80935. Ford No. 91A-3686A (with key).

Key Series—FK000 to FK999. **Groove**—No. 17

COIL: Ford No. 1GA-12024. Coil mounted separately on left front corner of cylinder block.

Resistor Unit—Connected in coil primary circuit. Mounted on Circuit Breaker Assy. No. 11A-12250-A.

Ignition Current—4½-6 amperes with engine stopped. Ignition primary resistance 1-1⅓ ohms.

CONDENSER: Ford Part No. 1GA-12300-B.

Capacity—.29-.32 microfarad.

DISTRIBUTOR (6 CYL. ENGINE): Ford No. 5GA-12127 (Less Terminal Housing & Rotor). New "Sealed Dry" type. Single breaker, 6 lobe cam, full automatic advance type with Vacuum Brake adjustmt.

Breaker Gap—.014-.016".

Cam Angle or Dwell—40° closed, 20° open (distr.).

Breaker Arm Spring Tension—20-24 ozs.

Rotation—Clockwise viewing drive end of unit.

Distributor	Automatic Advance	Engine
Degrees	R.P.M.	Degrees R.P.M.
Start	200	0 400
9	600	18 1200

DISTRIBUTOR (V8 ENGINE): Ford No. 21A-12127 (1944-45), No. 59A-12127 (1946-47)—Less Terminal Housing, Cap & Rotor. New flat type, Single Cap, "Sealed Dry" (1946-47) distributor similar to type used on 1942 models. Double breaker, 8 lobe cam, full automatic advance type with Vacuum Brake adjustment.

Breaker Gap—.014-.016" (each set). Use special two-step feeler—.014" step "go," .016" step "no go."

Cam Angle or Dwell—Approx. 36° closed, 9° open for both sets operating together with correct coil loading lead. Set dwell at 80% (limits 78-80% at 2000 RPM) on Ford Test Set.

NOTE—Cam Angle for each set operating singly approximately 22½° closed, 22½° open (50%).

Breaker Arm Spring Tension—20-24 ounces.

Rotation—Clockwise viewed from drive end (counter-clockwise viewed from front of car).

Automatic Advance
(With Vacuum Brake disconnected)

Distributor		Engine	
Degrees	RPM	Degrees	RPM.
Start	200	0	400
11	600	22	1200

NOTE—Limits 10½-11½ distributor degrees.

Vacuum Brake: Consists of a spring-loaded, vacuum controlled, brake piston which bears on edge of retard disc of breaker advance mechanism and acts as a "drag" to retard normal advance when engine is accelerated or operated under load. Piston is normally held out of engagement by manifold vacuum.

Removal: Distributor mounted on front of engine. To remove, disconnect primary lead, remove distributor cap, take out mounting screws in distributor flange, lift unit out.

IGNITION TIMING

Std. Setting—As listed below. See Vacuum Brake Setting for final adjustment dependent on fuel and operating conditions.

Model	Flywheel Degrees
6 Cyl. "90" Engines	1° BTDC
V8 "100" Engines	4° BTDC

Ignition Timing (6 Cyl. Basic Setting)—Distributor can be timed for correct ignition timing when off engine as follows: Place small straight edge or scale against tang on drive end of distributor shaft (scale must be on wide side of shaft), rotate distributor in direction of rotation (clockwise) until leading edge of scale is exactly ⅝" before the nearest edge of the distributor mounting hole on the vacuum piston side of the mounting flange. If contacts do not begin to open at this point, loosen adjusting screw on side of distributor housing, move screw down (to advance spark) or up (to retard spark) in slot until contacts begin to open, tighten adjusting screw. This setting will provide correct 1° BTDC ignition timing when distributor installed on eng.

Ignition Timing (V8 Basic Setting)—Distributor can be set for correct ignition timing when off engine as follows: Place a small straight edge or scale against tang on drive end of distributor shaft (scale must be on wide side of shaft), rotate distributor in direction of rotation (clockwise) until trailing edge of scale is exactly ⅜" past the nearest edge of the small mounting hole (left hand hole—nearest vacuum brake) on the mounting flange. If left-hand (timing) contacts do not begin to open at this point, loosen adjusting screw on side of distributor housing, move screw down (to advance spark), up (to retard spark) in slot until contacts begin to open, tighten adjusting screw. This setting will provide correct 4° BTDC ignition timing when distributor installed on engine. NOTE—Timing is controlled by opening of **left hand breaker contacts** only (right hand contacts "load" coil and open and close earlier than the left hand contacts).

Ignition Timing (On Engine)—No flywheel marks or other means provided to check timing on engine. If basic setting of distributor is correct (above), all necessary adjustments for operating conditions and octane rating of fuel being used can be made by means of the Vacuum Brake adjustment as follows:

Vacuum Brake Setting—Should be adjusted to eliminate pinging when engine operated with load. To adjust, loosen locknut, back off adjusting screw until engine pings with load, then turn screw in just enough to eliminate ping, tighten locknut. When adjusted on the stroboscope, vacuum brake should retard spark to peep sight with peep sight set at 2° when distributor is driven at 650 RPM with no vacuum to release brake.

CARBURETOR

Holley (Chandler-Groves) Ford No. 5GA-9510-A (Six Cyl. Engine), No. 59A-9510-A (V8 Engine). Single Barrel (6 Cyl.), Dual or double barrel (V8), downdraft types with manual choke control.

See Carburetor Section for complete data.

Idle Adjustment—With engine warm and idling at hot idling speed (choke valve open, fast idle inoperative), set throttle stopscrew for idle speed of 500 Engine RPM, turn each idle adjusting screw (one for each barrel, adjust in succession) in until engine begins to miss, then turn screw out until engine begins to roll, finally turn screw in just enough so that engine fires smoothly. Recheck idle speed.

NOTE—There is only one idle adjusting screw on the Six Cylinder Engine (single barrel) carburetor.

Accelerating Pump Setting—Three holes in throttle lever for pump link connection. Adjust as follows:
Inner (#1)—Extremely hot weather.
Center (#2)—Normal setting—moderate weather.
Outer (#3)—Extremely cold weather.

Float Level—Use 9550-A gauge to set the float level (1.353" end "Go," 1.332" end "No Go") measuring from underside of bowl cover to bottom of float with cover and float assembly inverted. Fuel level in bowl should be 11/16" plus or minus 1/32".

Metering Jets—***See Chandler-Groves (Ford) Jet Specification Table in Carburetor Section.***

Fast Idle: Integral with carburetor. Operated by choke valve lever. No adjustment.

CARB. EQUIPMENT

Air Cleaner: Ford No. 1GA-9600-C (Six Cyl.), 91A-9600-A (V8 exc. C-O-E), 81W-9600-A (C-O-E). Heavy duty oil-bath type.
Servicing—Clean and refill (to level mark on case) with same grade engine oil used in crankcase at 3500 mile intervals (when crankcase drained) or more often if required. Wash filter element in cleaning fluid.
NOTE—Clean and re-oil filter element in oil filler cap (crankcase breather) every 1000 miles.

Fuel Pump: AC. Type R, Ford No. 1GA-9350 (Six Cyl.), 11A-9350 (V8). Diaphragm type fuel pump.
See Carburetion Equipment Section for data.
Pressure—3½ lbs. maximum (2-3¼ lbs.).

Gasoline Gauge: King-Seeley Electric. Ford Nos.
Dash Unit—11C-9280A (All Models).
Tank Unit—No. 21C-9275-A (Clsd. Cabs), 21C-9275-B (Panels), 01W-9275 (C-O-E), 594T-9275 (School Bus), 21C-9275-B (C-O-E with side tank).
See Carburetion Equipment Section for data.

BATTERY

Ford No. 01A-10655-C. 6 volt, 15 plate, 100 Ampere Hour Capacity (20 hour rate).
Grounded Terminal—Positive (+) grounded to engine dash. **Engine Ground**—Strap connector between rear of cylinder head and dash.
Location—In engine compartment on left side (6 Cyl.), right side (V8 exc. C-O-E), under right seat (C-O-E).
Dimensions—Length 10.56". Width 7.28". Hgt. 8.25".

STARTER

Ford Model No. 18-11002. Armature No. 18-11005.
Drive—Inboard Bendix No. A1472, Ford No. B-11350.
Rotation—Counter-clockwise at commutator end.
Brush Spring Tension—2 lbs. each.
Cranking Engine—100 RPM, 190-215 amperes.

Performance Data

Torque	R.P.M.	Volts	Amperes
4 ft. lbs.	1070	4.6	200
8 "	660	4.3	340
12 "	300	3.65	465
14 "	Lock	3.5	500

Starting Switch: Ford No. 21A-11450. Magnetic switch mounted on the dash and controlled by instrument panel pushbutton, Ford No. 21C-11500.

Removal: Starter mounted on right front face of flywheel housing. To remove, take off pan at right of engine, free starter-to-oil pan support bracket, take out through-bolts on commutator end plate.

GENERATOR

Ford Model No. 2GA-10000A (Six Cyl. Engine), 21A-10000 (V8 Engine). Two brush (shunt) type with vibrating type voltage and current regulation. Ventilated by fan on drive pulley.

Armature—No. 2GA-10005 (2GA-10000A Gen.), 01A-10005A (21A-10000 Gen.).

Charging Rate Adjustment—No adjustment. See Regulator data below.

Maximum Charging Rate—Controlled by regulator and dependent on battery condition and load. To check generator output, disconnect generator field lead at generator, connect both generator terminals together (use short insulated wire), Use 'BRS' set or rheostat connected across battery terminals and apply load until voltage is exactly 6 volts. Connect ammeter in charging line, run engine, check output at 2 speeds given in performance table below. Restore original connections after completing test.

Do not operate generator in service with both terminals connected together. This eliminates all regulator action and will damage generator.

Performance Data

2GA-10000A		21A-10000	
Ampere	Eng. RPM.	Ampere	Eng. RPM.
Start	565	Start	520
30	1160	30	1060
30	2500	30	2500

Rotation—Counter-clockwise at commutator end.

Field Current—2.1 amperes at 6.0 volts (field resistance 2.88 ohms at 70° F.).

Brush Spring Tension—Approximately 28 ozs.

Removal (6 Cyl.): Generator mounted on adjustable bracket at left front of engine. To remove, take out bolt in mounting bracket, slip off drive belt and water pump belt, lift generator out.

Removal (V8): Generator mounted on bracket in cylinder banks at front of engine, driven in tandem with water pumps by Vee belt. To remove, loosen nut on bracket stud.

Belt Adjustment (6 Cyl.): ½" deflection midway between generator and crankshaft pulley (generator belt), generator and pump pulley (water pump belt). Adjust both belts by loosening two capscrews in mounting bracket beneath generator, move generator up and out (mounting bolt holes slotted at this angle).

Belt Adjustment (V8): ½" deflection midway between generator and pump pulleys. NOTE—Generator mounting bracket modified to include fan mounting (fan driven by a separate belt). Both belts adjusted in same manner by loosening mounting bolt and raising mounting brackets.

REGULATOR

Ford No. 01A-10505-C. Three-Unit Type. Consists of a Cutout Relay, vibrating Voltage Regulator, and vibrating Current Regulator (separate units) in single case on engine side of dash.

See Electrical Equipment Section for complete data.

NOTE—Regulator case is grounded through separate ground wire extending from regulator to generator frame. This ground connection must be in place when regulator being operated or tested.

Cutout Relay

Cuts In—5.8-6.3 volts at operating temperature.
Cuts Out—8 ampere discharge current maximum.

Voltage Regulator

Setting—6.9-7.2 volts at 70-80° F.
Checking & Adjusting—*See "Ford Regulator—3-unit Type" in Electrical Equipment Section for data.*

Current Regulator

Setting—30-33 amperes (after 5 minutes run).
Checking & Adjusting See Voltage Regulator above.

LIGHTING

Headlamps—Ford Sealed Beam type. Controlled by Lighting Switch on instrument panel and Beam Selector Switch on toeboard.
See Electrical Equipment Section for complete data.

Headlamp Adjustment—Aim upper beam straight ahead (hot spot center 3" below lamp center height).
Beam Indicator—On panel directly above speedometer. Lighted whenever upper beams in use.

Switches

Lighting—Ford No. 11A-11652 (Switch & Wiring). Switch Knob & Insert No. 11C-11661A.
Beam Selector—Ford No. 11A-13532 (Switch only), No. 01C-11653 (Switch & Wiring—except C-O-E).
Instrument—Ford No. 50-13740 (1944), 21C-13740 (1945-47).
Stop Light—Ford No. 11A-13480.

Bulb Specifications

Position	Candlepower	Mazda No.
Headlamps		Sealed Beam
Parking	3	63
Instrument, Beam Ind.	1	51
Stop & Tail	21-3	1154

MISC. ELECTRICAL

LIGHTING CIRCUIT BREAKER: Ford No. 11A-12250A. Combined with Ignition Resistor on block on dash under cowl. Consists of two separate circuit breaker units (one unit protects Headlamp circuits, second unit protects other circuits) of the thermostatic and wound-coil type. Contacts open with current of 50 amperes and vibrate to control current.

HORNS: Ford No. 78-13833A. Vibrator type, single horn. **Horn Current**—6-8 amperes.

ENGINE

6 CYLINDER "90" TYPE

ENGINE SPECIFICATIONS: 6GA 90 HP. Six cylinder, "L" head type.
Bore—3.30" **Stroke**—4.40".
Displacement—226 cu.ins. **Rated H.P.**—26.13
Developed Horsepower—90 at 3300 RPM.
Compression Ratio—6.7-1. Cast Iron Head.
Compression Pressure & Vacuum Reading—*See Tune-up data.*

TIGHTENING TORQUES: *See Ford Shop Notes.*

CYLINDER HEAD: Tightening Torque—*See Ford Shop Notes.*

OTHER ENGINE DATA: *Pistons, Piston Rings, Piston Pins, Connecting Rod, Crankshaft & Main Bearings, Camshaft, and Valves), see Ford 6 Cylinder (1946-47) Passenger Car article.*

ENGINE

V8 "100" TYPE

ENGINE SPECIFICATIONS: Eight Cylinder, 90° Vee, "L" Head type. Both cylinder banks and crankcase cast Enbloc.
Bore—3.187". **Stroke**—3.75".
Displacement—239 cu.ins. **Rated H.P.**—32.5.
Developed Horsepower—100 at 3800 RPM.
Compression Ratio—6.4-1 (1944-45), 6.75-1 (1946-47). Cast Iron Heads. *See Cylinder Head notes below.*
Compression Pressure & Vacuum Reading—*See Tune-up data.*

TIGHTENING TORQUES: *See Ford Shop Notes.*

CYLINDER HEAD (1944): Tightening Torque—*See Ford Shop Notes.*

►**Re-working Head for Improved Cooling:** *See Ford Shop Notes for instructions and new Head Gaskets.*

NOTE—If Service Replacement Block No. 59A-6010C used with these heads, heads must be machined out to provide clearance for valves. *See Ford Shop Notes.*

CYLINDER HEAD (1945-47): Tightening Torque—*See Ford Shop Notes.*

►**New Type Cylinder Head & Block on 1945-46-47**—New type units used as follows:

Cylinder Head No. 59A-6050-B—Heads interchangeable Right & Left and can be identified by part number prefix "59A" cast on top. Heads have larger ¾" hole at top center and larger ⅝" hole at center between #2 and #3 bore.

Head Gasket No. 59A-6051—Gasket has 5/16" round hole instead of blunt cone shaped opening at center lower edge between #2 and #3 bore. This gasket must be used with new type head (above) and with old heads which have been reworked for improved cooling.

Cylinder Block No. 59A-6010-C—Has valve ports located .09" farther from center line of block and may be identified by oblong water passages on gasket surface just above valve (were round on earlier type blocks). CAUTION—If previous type heads (81A-, 81T-, 99T-, 29A-) used with this block, head must be machined out for valve clearance.
For Head re-working instructions, See Ford Shop Notes.

OTHER ENGINE DATA: *Pistons, Piston Rings, Piston Pins, Connecting Rod, Crankshaft & Main Bearings, Camshaft, and Valves), see Ford V-8 "100" (1946-47) Passenger Car article.*

VALVE TIMING

Tappet Clearance (6 Cyl.): .013-.015" All Valves Cold. No adjustment.

(V8 "100" Engine)—.010-.012" Intake, .014-.016" Exhaust, Cold. No adjustment.

Valve Timing: See Camshaft Setting above. Timing figures correct with .015" tappet clearance.

Six Cyl. "90" Engine

Intake Valves—Open 3° BTDC. Close 41° ALDC.
Exhaust Valves—Open 48° BLDC. Close 6° ATDC.

V8 "100" Engine

Intake Valves—Open at TDC. Close 44° ALDC.
Exhaust Valves—Open 48° BLDC. Close 6° ATDC.

C NTINUED N NEXT PAGE

C NTINUED FR M PRECEDING PAGE

Valve Timing Check—No flywheel marks or other means provided to check timing. No. 1 intake valve should open approximately 1 tooth on flywheel before top dead center position (6 Cyl. Engine), with piston on top dead center (V8 Engine).

LUBRICATION

Engine Oiling System: Pressure to main bearings, connecting rod lower bearings, camshaft bearings, timing gears, and valve lifters (6 cyl. only). Oil pump mounted in crankcase at rear of engine (V8), or on #1 main bearing cap with oil intake pipe extending to oil screen in sump at rear end of oil pan (6 Cyl. Engines).

Crankcase Capacity—5 quarts.

Normal Oil Pressure—35 lbs. at 2000 RPM. (6 Cyl. Engine), 30 lbs. at 2000 RPM. (1944-45 V8 Engine), 50 lbs. at 2000 RPM. (1946-47 V8 Engine).

NOTE—1946-47 V8 engine has new type greater-capacity oil pump with pressure regulator built-in pump housing.

Oil Pressure Regulator (6 Cyl. Engine)—Located under plug on right side of crankcase at front of engine. Not adjustable.

NOTE—Replace oil relief valve spring if not within limits of 44-46 ounces with spring compressed to 1.40".

Oil Pressure Regulator (V8 Engine)—Located under plug above front camshaft bearing (under manifold) and on oil pump housing (some models). Not adjustable.

NOTE—Check relief valve spring tension whenever engine overhauled. Replace the cylinder block relief valve if tension not within limits of 43-50 ozs. at 1.380" (engines without oil pump relief valve), or 78-87 ozs. at 1.380" (engines with oil pump relief valve). Replace oil pump relief valve spring if tension not within limits of 78-87 ozs. at 1.380".

Oil Drain Plug & Screen (6 Cyl. Engine): Drain plug is large type with screen mounted on inner end so that it is removed with the plug. Clean screen whenever plug taken out.

Oil Drain Plug & Screen (V8 Engine): Drain plug located on bottom of oil pan directly under screen. On 1946-47 engines (except Light Duty), removable plate on bottom of pan provides access to screen.

Oil Pump (6 Cyl. Engine): Gear type. Mounted on front main bearing cap and driven from crankshaft timing gear (pump housing integral with bearing cap).

Oil Pump Servicing—*See Ford Shop Notes.*

Oil Pump (V8 Engine): Gear type. In crankcase at rear of engine. NOTE—New type pump 41A-6600-A (engines without oil pan baffles), 41A-6600-B (engines with oil pan baffles) has oil pressure relief valve in pump body.

Oil Pump Servicing—*See Ford Shop Notes.*

Oil Filter: Replace filter cartridge at 5000 mile intervals (Ford No. 01A-18662-A Unit).

Oil Pressure Gauge: King-Seeley Electric. Fords Nos.

Dash Unit—Ford No. 41C-9273.

Engine Unit—Ford No. 41A-9278 (V8), 48-9278 (six).

See Miscellaneous Section for complete data.

COOLING

Cooling System: Positive circulation with water pump at front of engine (2 pumps on V8). Six Cyl. engine has water distributing tube in block to direct cooling water on exhaust valve seats and ports and has by-pass channel in head and block to permit recirculation of water in block with thermostat closed (thermostat is dual-valve type).
Capacity—17 qts. (6 Cyl.), 23 qts. (V8).
Pressure Valve—In radiator filler cap. Opens at 3½-4½ lbs.
Radiator Core Removal—*See Ford Shop Notes.*

Water Pump (6 Cyl.): Packless, centrifugal type with sealed ball bearing shaft.
See Water Pump Section for complete data.
Removal—Drain cooling system, remove fan blade assembly by taking out four capscrews in shaft hub, disconnect hose connection at pump. Take out three pump mounting capscrews, lift pump out.
Belt Adjustment—*See Generator Belt Adjustment.*

Water Pump (V8): Packless, centrifugal type (two). Mounted on front of engine (pump housing integral with front engine mounting).
See Water Pump Section for complete data.
Removal—Drain cooling system, place support jack under engine (use wood block on jack to avoid damaging pan), remove bolt from engine front support, raise engine so that no weight rests on front support. Loosen generator mounting bolt, remove drive belt. Disconnect and remove water pump hose. Remove four capscrews mounting water pump on engine, lift pump out. CAUTION—One mounting screw located within water pump inlet connection (accessible with hose removed).
Belt Adjustment—See Generator Belt Adjustment.

Thermostat (6 Cyl.): In cylinder head water outlet elbow. By-pass (dual valve) type.
Setting—Starts to open at 150-155°F. Fully open at 175-180°F.

Thermostat (V8): In each cylinder head outlet (one thermostat used for each cylinder bank).
Setting—Starts to open 150-155°F. Fully open at 170°F.

Temperature Gauge: King-Seeley Electric. Ford Nos.
Dash Unit—Ford No. 11C-10883A.
Engine Unit (6 Cyl. Engine)—No. 99A-10884.
Engine Unit (V8 Engine)—No. 01A-10990 (Temperature Gauge Switch—in left hand cylinder head), No. 99A-10884 (Regular Engine Unit—in right hand cylinder head).
See Miscellaneous Section for complete data.

CLUTCH

Long Model 10CF-T1 (Comm'l), 11CF-CS (Others). Semi-centrifugal, single plate, dry disc type.
See Clutch Section for complete data.

Facings	Inside—Diameter	Outside	Thickness
10CF-TI	6.75"	10"	.125"①
11CF-CS	6.50"	11"	.137"

①—Thickness on 1944 and previous models—.137".

Adjustment: Pedal free travel must be 1.5-1.75". To adjust, disconnect clevis at clutch equalizer lever on left side of clutch housing, adjust clevis on rod for 1.5" free travel when re-connected.

Removal: Remove transmission (see Transmission Removal below), hold clutch in released position by installing wedges between each release lever and cover, remove flywheel housing by taking out seven bolts and one capscrew, take out capscrews in clutch cover mounting flange, remove cover assembly and driven member.

TRANSMISSION

3-SPEED TRUCK TYPE

Own Make. Constant-mesh, synchro-mesh, helical gears (Second & High), sliding spur gears (Low & Reverse). Used with conventional floor-mounted gearshift.
See Transmission Section for complete data.

NOTE—Four Speed Transmission is Optional on these models.

Removal: Disconnect propeller shaft at rear universal joint (remove nuts on "U" bolts), remove shaft by sliding it to the rear until it clears splined shaft in transmission. Remove clutch equalizer shaft by taking out clevis pin at clutch shaft and clutch pedal connector rod (CAUTION—do not lose spring and bushing halves in equalizer shaft bracket). Remove front floor plate by taking out retaining screws. Disconnect speedometer cable at engine rear support, remove nuts and washers from two engine rear support bolts. Raise rear end of engine (use block of wood on jack under engine) until rear support clears mounting bolts. Remove capscrews mounting transmission on flywheel housing, pull transmission straight back until main drive gear shaft clears clutch, lift transmission out through floor opening.

TRANSMISSION

4-SPEED TRUCK TYPE

Own Make. Four-speed, sliding spur gear type with conventional floor-mounted gearshift.
See Transmission Section for complete data.

NOTE—This transmission Optl. on Comm'l models.

Removal: Remove seat cushion, floor mat, and transmission cover on floor. Support engine with jack under flywheel housing (use wood block on jack), raise jack until engine weight is off rear mounting. Free coupling shaft support bearing from crossmember by removing nuts on two bolts, disconnect front universal joint by taking out four bolts mounting universal joint flange on hand brake drum and disconnect intermediate universal joint at support bearing by removing nuts on 'U' bolts (tape bearing caps in place to prevent losing needle bearings), remove front shaft. Remove clutch equalizer shaft by taking out pin in clutch shaft and clevis pin at lever and pulling equalizer shaft off the bracket (CAUTION—Do not lose spring and bushing halves). Remove two bolts in engine rear support. Disconnect speedometer shaft at transmission. Remove transmission capscrews from flywheel housing, pull transmission straight back until clutch (main drive gear) shaft clears, then lift transmission out through floor opening.

NOTE—To remove brake assembly, take out 2 capscrews in hand brake lever sector on transmission case and two capscrews in brake adjusting screw bracket, disconnect hand brake link from transmission and anchor adjusting screw from brake band, remove brake band assembly and hand brake lever. Remove nut holding universal joint flange on transmission mainshaft, remove universal joint flange and brake drum.

UNIVERSALS

Spicer. Needle bearing type, two used (114" WB. Light Duty & 101" C-O-E Trucks), three used with slip joint at forward end of rear shaft behind coupling shaft support bearing (Other Trucks).

NOTE—On Light Duty (114" WB) Trucks, propeller shaft is one-piece type and slip joint is provided by the front universal yoke sliding on the splined drive shaft in the transmission.

See Universals Section for complete data.

Spicer Model Nos.

Wheelbase	Front	Center	Rear
114" ①	1278-102X	None	1278-102X
114" ②	1311-102X	None	1318-104X
122"	1318-103X	1311-102X	1318-103X
134" & 158"	1358-54X	1351-5107X	1358-5104X
194"	1358-55X	1351-5107X	1358-5105X
101"	1351-517X	None	1358-5104X

①—3-Speed Transmission. ②—4-Speed Transmis'n.

Coupling Shaft Center Bearing: Consists of cushion mounted ball bearing bolted to underside of frame intermediate cross-member. Bearing is mounted on end of coupling shaft in a sleeve with felt retainer sleeve on each end and bearing baffle on front end. Bearing is retained by center universal companion flange nut.

REAR AXLE

3/4 FLOATING TYPE

Own Make. ¾ Floating, Spiral Bevel Gear type with straddle-mounted pinion and Hotchkiss Drive.

See Rear Axle Section for complete data.

Ratio (6 Cyl.)—3.78-1 Std., 3.54-1, 4.11-1 Optl.

Ratio (V8)—3.54-1 Std., 3.78-1, 4.11-1 Optl.

Backlash—.012" maximum.

Removal: Raise rear end of frame, disconnect propeller shaft by removing two "U" bolts and nuts in rear universal joint, lower propeller shaft. Disconnect hand brake cables and brake lines at rear axle (bleed brakes when line re-connected). Disconnect rear shock absorber links, disconnect rear springs, withdraw axle assembly from underneath.

Axle Shaft Removal—Axle assembly must be dismantled and axle shaft removed at inner end through differential housing. ***See Ford Rear Axle article (in Rear Axle Section) for complete data.***

REAR AXLE

FULL-FLOATING TRUCK TYPE

Own Make. Full-floating, Spiral Bevel Gear type with straddle-mounted pinion and Hotchkiss Drive.

See Rear Axle Section for complete data.

Ratio (One Ton)—4.86-1 Std., 4.11-1 Optl.

Ratio (Other Trucks)—6.67-1 Std., 5.14-1, 5.83-1 Optl.

Backlash—.004-.016".

Removal: Raise rear end of frame, remove axle shafts (see below), wheel and drum assemblies. Disconnect hydraulic brake line at each wheel and hose at bracket (bleed brake lines when re-connected). Remove backing plate assemblies by taking out six bolts in axle housing flange, disconnect rear universal joint by taking off nuts on two "U" bolts and lower propeller shaft. Disconnect rear shock absorber links (School Bus). Remove nuts on rear spring "U" bolts, drive bolts up free of axle housing, lower axle assembly and remove from underneath.

Axle Shaft Removal—Remove hub cap, remove nuts on 8 hub studs which hold axle shaft flange in place, turn the two special screws (in tapped holes in flange) up evenly to break flange loose from wheel hub, **back these screws out,** strike axle shaft flange at center to loosen centering cones on studs, remove cones, pull axle shaft out (wheel not disturbed).

Wheel Bearing Adjustment—Remove axle shaft (above), use special bearing adjusting wrench and remove bearing locknut (outer nut), and lockwasher. Adjust bearings by turning bearing adjusting nut (inner nut) up until tight and then backing nut off ⅛ turn. Install bearing lockwasher making certain that it fits over dowel pin on adjusting nut, install bearing locknut and turn this nut up tight. NOTE—When installing axle shaft, make certain that gasket in place under shaft flange, cones in place on studs and that two loosening screws backed off sufficiently so that stud nuts can be tightened securely. Turn the two loosening screws in just enough to prevent loosening in service.

REAR AXLE

TWO-SPEED TRUCK TYPE

Own Make. Two-speed, Full-floating, Spiral Bevel Gear (final drive), spur gear planetary unit (reduction gearing), with straddle-mounted pinion and Hotchkiss Drive.

See Rear Axle Section for complete data.

Ratio—5.83-1 (Direct Drive), 8.11-1 (2nd speed).

Backlash—.006-.020".

Removal: Same as for standard axle (above) after control linkage has been disconnected.

SHOCK ABSORBERS

Houde (Houdaille). Double acting, hydraulic, adjustable type. Used at Front and Rear end (114" Light Duty Truck and 194" School Bus), Front end only (122" One Ton Truck).

See Shock Absorber Section for complete data.

	Houde Model	Right—Ford No.—Left
114", 122" Front	BBCN-3	51A-18045 — 51A-18046
114" Rear	BBCZ-3	51C-18080 — 51C-18081
194" Front	BBCHMS	
194" Rear	BBCLT	

Adjustment: Standard setting marked by line on face of lever hub (pointer should be aligned with this mark). Adjustment can be varied by turning pointer clockwise (for more control) or counter-clockwise (for less control) not more than 1 or 2 serrations at a time. NOTE—Stops are provided to limit adjustment in either direction.

Refilling: Check at 5000 mile intervals and fill to level of filler plug hole. Use Ford No. M-4633-B fluid only (Houde L-1404) required for these new shock absorbers which may be identified by round top filler plug.

FRONT SUSPENSION

Front Axle—Conventional "I" beam section with Reverse Elliott ends and semi-elliptic springs.

Kingpin Inclination—8° (Light Duty & 1 Ton), 8½° (Other Trucks) crosswise.

Caster—3° (exc. C-O-E), 4°20' (C-O-E) with load. Both wheels should be equal within ½°.

NOTE—Caster angle controlled by wedge shims inserted between axle pads and springs. To increase caster, insert taper wedge shims equally at both sides (mak certain spring tie bolt passes through hole in wedge so wedge held securely in place).

Camber—¾° (both wheels equal within ¼°, right wheel must not exceed left wheel). Axle may be bent cold to correct Camber providing that proper tools (wedges and blocks to prevent crushing axle flange) are used.

Toe In—1/16". Set at 1-10 ratio to Camber. Toe-in increases with load and should be set with truck empty. Adjust by loosening clamp bolts and turning tie rod.

STEERING GEAR

Light Duty & 1 Ton Truck—Ford No. 21C-3503A (Gemmer Model 305 design). Worm-and-Roller type with push-pull adjustments.

See Steering Gear Section for complete data.

Other Trucks—Gemmer 335 (Ford No. 01T-3503 except C-O-E, No. 01W-3503 for C-O-E). Worm-and-Roller type with "push-pull" adjustments.

See Steering Gear Section for complete data.

BRAKES

Service—Lockheed Hydraulic, double anchor type. Hand lever applies rear wheel service brakes (Light Duty & 1 Ton Truck), independent shaft brake at rear of transmission case (Other Trucks).

See Brake Section for complete data.

Drums—Composite (Cast iron and steel).

	Front — Drum Diameter — Rear
Light Duty (114")	12" — 12"
1 Ton (122")	12" — 14"
Other Trucks	14" — 15"

Lining—Molded type (all shoes).

	Width	Thickness	Length per Shoe①
Light Duty (114")	1.75"	.20"	13.5"—10.28"
1 Ton (Front)	1.75"	.20"	13.5"—10.28"
1 Ton (Rear)	2.00"	.27"	15.53"—10.78"
Others (Front)	2.00"	.27"	15.53"—10.78"
Others (Rear)	3.50"	.335"	16.67"—11.57"

①—Forward Shoe—Rear (reverse) Shoe.

Clearance—Least possible amount without drag.

Hand Brake (Light Duty & 1 Ton Truck): Hand lever applies rear wheel service brakes. See Service Brakes (above).

Hand Brake (Other Trucks): Independent external contracting band on drum at rear of transmission. **Adjustment**—Set hand brake in fully released position and make certain that flat portion of cam is resting on rear of brake band upper end (if cam not flat, remove clevis pin in upper end of cam, adjust clevis rod until cam is flat when rod re-connected). Remove locking wire from brake band anchor adjusting screw (left side), turn screw clockwise until clearance between band and drum is .010" at the anchor screw, install lock wire. Loosen locknut on adjusting screw for upper portion of brake band (round screw on brake mounting bracket), turn screw until clearance between upper portion of brake band and drum is .010", tighten the locknut Tighten adjusting nut at lower end of main adjusting bolt (on which band positioning springs are located) until clearance between lower portion of band and drum is .010". This completes the brake adjustment.

Drum Diameter—7.81".

Lining—Woven type. Width 2.5". Thickness .25". Length 24.6".

►**ENGINE PRODUCTION CHANGE:** New "H" Series Engine starting September 1947. New ignition system, valve system, oil pump, and cooling system.

►***"H" SERIES ENGINE INFORMATION—For Tune-Up, Ignition, Ignition Timing, and Engine data, see 1949 FORD SIX car pages.***

OIL PAN REMOVAL: ***See Ford Shop Notes for Engine Removal instructions (recommended for oil pan removal).***

MODEL IDENTIFICATION

SERIAL & ENGINE NUMBER: Stamped on top of clutch housing (visible through opening in floor) and on left frame side member near front engine support.

TUNE-UP

COMPRESSION: Pressure—105-125 lbs. at cranking speed of 100 RPM. (Std. 6.7-1 Cast Iron Head).

VACUUM READING: Approx. 18-20" at idling speed.

FIRING ORDER: 1-5-3-6-2-4.

SPARK PLUGS: Champion H-10 (Pass. Cars), H-9 Comm'l (Trucks). 14 mm. Metric type.
Gaps—.025"

IGNITION: See Coil, Condenser, and Distributor.

Breaker Gap—.014-.016". **Cam Angle** 40° closed.

Breaker Arm Spring Tension—20-24 ozs.

Automatic Advance—*See Distributor.*

IGNITION TIMING: See Ignition Timing.

Std. Setting—1° BTDC.

Timing Marks—None. See Ignition Timing for directions on setting of distributor for correct timing when installed on engine.

Vacuum Brake Setting—Set to just eliminate pinging when engine operated under load (back off adjusting screw until engine pings, then turn screw in just enough to eliminate ping).

CARBURETION: See Carburetor & Carb. Equipment.

Idle Setting—Adjust idle screw for smooth idling and highest steady reading of vacuum gauge (when used). Idle speed 500 Engine RPM. (can be judged by marking fan belt and setting engine for 25 revolutions of the belt in 10 seconds).

Float Level—1.322-1.353" bottom of float to underside of bowl cover with needle valve seated (Gauge 9550-A). Fuel level 11/16" plus or minus 1/32" below top edge of bowl.

Accelerating Pump—Center (#2) hole Normal. Inner (#1) hole—Summer, Outer (#3) hole—Winter for temperature extremes.

Fuel Pump Pressure: 3½ lbs. (2-3¼ lbs.).

MANIFOLD HEAT CONTROL: Automatic thermostatic type. Valve should be closed (counterweight arm against stop pin) with engine cold and should operate freely.

VALVES: See Valve Timing.

Tappet Clearance—.013-.015" Intake & Exhaust, Cold. No adjustment provided.

STARTING: See Battery, Starter, Generator, and Regulator.

IGNITION

IGNITION SWITCH: Oakes Steering Column & Ignition Lock Assembly No. 302848, Ford No. 51A-3676-A (Deluxe Models), Oakes No. 302850, Ford No. 51A-3676-B (Super Deluxe Models). Ignition Switch Assembly Oakes No. 302494, Ford No. 11A-3680 (All). **Ignition Lock**—Hurd or Briggs & Stratton No. 80935, Ford No. 91A-3686A (with key).
Key Series—FK000 to FK999. **Groove**—No. 17.

COIL: Ford No. 1GA-12024. Mounted on engine.

Resistor Unit—Connected in coil primary circuit (part of Lighting Circuit Breaker Assembly).

Ignition Current—4½-6 amperes with engine stopped (primary resistance 1-1⅓ ohms).

CONDENSER: Ford Part No. 1GA-12300-B.
Capacity—.29-.32 microfarad.

DISTRIBUTOR: Ford No. 5GA-12127 (less Terminal Housing & Rotor). New "Sealed-dry" type. Single breaker, 6 lobe cam, full automatic advance type with Vacuum Brake adjustment.

Breaker Gap—.014-.016"
Cam Angle or Dwell—40° closed, 20° open (distr.).
Breaker Arm Spring Tension—20-24 ozs.
Rotation—Clockwise viewing driving end of unit.

Distributor Degrees	Automatic Advance R.P.M.	Engine Degrees	R.P.M.
Start	200	0	400
9	600	18	1200

Vacuum Brake: Consists of a spring-loaded vacuum controlled brake piston which bears on edge of retard disc of breaker advance mechanism and acts as a "drag" to retard normal advance when engine is accelerated or operated under load. Piston is normally held out of engagement by manifold vacuum.

Distributor Removal: Disconnect coil lead, unsnap two clips holding distributor cap in place, take out mounting capscrews. NOTE—Vacuum connection (for Vacuum Brake operation) is through hole in face of mounting flange.

IGNITION TIMING

Std. Setting	Flywheel Degrees
All Engines	1° BTDC

See Vacuum Brake Setting for service corrections.

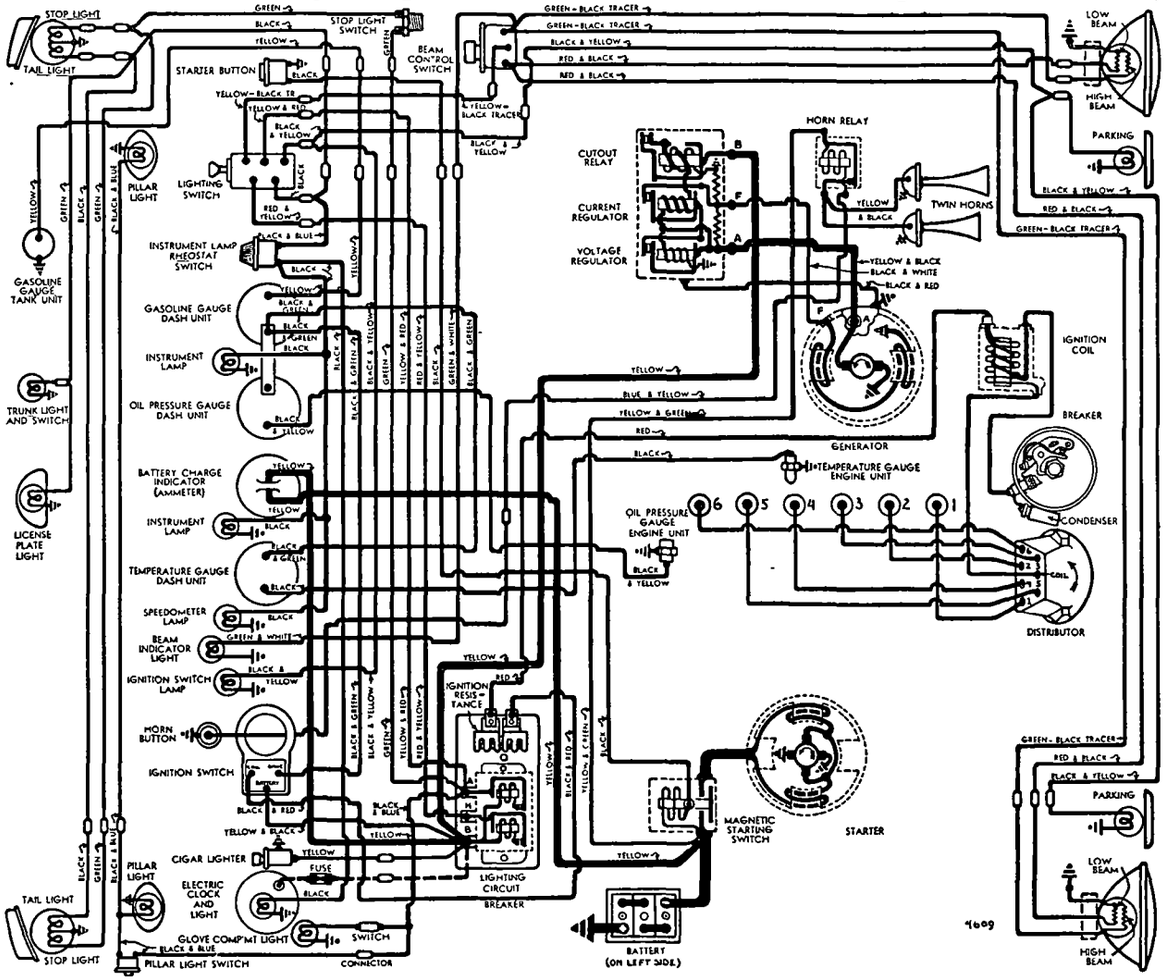

Ignition Timing (Basic Setting)—Distributor can be timed for correct ignition timing when off engine as follows: Place small straightedge or scale against tang on drive end of distributor shaft (scale must be on wide side of shaft), rotate shaft in direction of rotation (clockwise) until leading edge of scale is exactly 5/8" before nearest edge of distributor mounting hole on vacuum piston side of mounting flange. If contacts do not begin to open at this point, loosen adjusting screw on side of distributor, move screw down (to advance spark), or up (to retard spark) in the slot until contacts begin to open, tighten adjusting screw. This will provide correct 1° BTDC ignition timing when distributor installed on engine.

Ignition Timing (On Engine)—No flywheel marks or other means provided to check timing on engine. If basic setting of distributor correct (above), all necessary adjustments for operating conditions and octane rating of fuel being used can be made through the Vacuum Brake adjustment.

Vacuum Brake Adjustment—Road test car. Back ff vacuum brake adjusting screw until engine pings when operating under load, then turn adjusting screw in just enough to eliminate ping, tighten locknut.

CARBURETOR

Holley (Chandler-Groves) Ford No. 5GA-9510-A. Single barrel, downdraft type with manual choke control.

See Carburetor Section for complete data.

Idle Adjustment—With engine warm and choke valve wide open, set throttle stopscrew for idle speed of 500 engine RPM. Turn idle adjusting screw in until engine begins to miss, then turn screw out until engine begins to roll, finally turn screw in just enough so that engine idles smoothly. Recheck idle speed. NOTE—Idle speed can be noted by marking spot on fan belt and setting speed for 25 revolutions of the belt in 10 seconds.

Accelerating Pump Setting—Three holes in throttle lever for pump connection. Set as follows:

#1 (Inner)—Extremely Hot Weather.
#2 (Center)—Normal weather and fuel.
#3 (Outer)—Extremely Cold Weather.

Float Level—Use Ford No. 9550-A Gauge to check float. Invert air horn and float assembly, place gauge on face of bowl cover. Bottom of float should be 1.322-1.353" from face of cover (1.353" portion of gauge "GO", 1.322" portion "NO GO"). Adjust by bending lip on float lever. Fuel level in bowl 11/16" plus or minus 1/32" below top edge.

Metering Jets—***See Chandler-Groves (Ford) Jet Specification Table in Carburetor Section.***

Fast Idle: Consists of a "kicker" lever which opens throttle valve to fast idle position when choke valve closed for cold starting. Should not require adjustment.

CARB. EQUIPMENT

Air Cleaner: Ford No. 1GA-9600-C. Oil-bath type.
Servicing—Clean and refill (to level mark on case) with same grade engine oil used in crankcase at 3500 mile intervals (when draining crankcase), or more often if required.

NOTE—Clean and re-oil filter element in oil filler cap every 1000 miles.

Gasoline Gauge: King-Seeley Electric. Ford Nos.
Dash Unit—No. 51A-9280-A (1946 Deluxe & Sedan Del.), 51A-9280-B ('46 Sup. Del.), 6A-9280 (1947).
Tank Unit—No. 99A-9275-B (Deluxe & Super Deluxe Models), 21A-9275-A (Sedan Delivery).
See Carburetion Equipment Section for data.

Fuel Pump: AC. Type R, Ford No. 1GA-9350. Diaphragm type. **Pressure**—3½ lbs. max. (2-3¼ lbs.).
See Carburetion Equipment Section for data.

BATTERY

Ford Type No. 01A-10655-A. 6 volt, 17 Plate, 120 Ampere Hour Capacity (20 hour rate).

Starting Capacity—150 amperes for 20 minutes.

Zero Capacity—300 amperes for 4.0 minutes.

Grounded Terminal—Positive (+) terminal grounded to dash. **Engine Ground**—Separate ground strap from rear of cylinder head to dash.

Location—On left side in engine compartment.

Dimensions—Length 10.56". Width 7.28". Height 8.25".

STARTER

Ford Model No. 18-11002. Armature No. 18-11005.

Drive—Inboard Bendix No. A1472. Ford No. B-11350.

Rotation—Counter-clockwise at commutator end.

Brush Spring Tension—2 lbs. each.

Cranking Engine—100 RPM., 190-215 amperes.

Performance Data

Torque	R.P.M.	Volts	Amperes
4 ft. lbs.	1070	4.6	200
8 "	660	4.3	340
12 "	300	3.65	465
14 "	Lock	3.5	500

Starting Switch: Ford No. 21A-11450 Magnetic Switch mounted on dash and controlled by pushbutton switch on instrument panel, Ford No. 19A-11500 (Pass. Cars).

Removal: Starter mounted on right front face of flywheel housing. To remove, disconnect cable, take out capscrews in right hand engine side pan and move pan to one side, loosen two through-bolts on commutator end plate and disconnect brace on commutator end of starter.

GENERATOR

Ford Model No. 2GA-10000A. Armature No. 2GA-10005. Two brush (shunt) type with voltage and current regulation. Ventilated by fan on drive pulley.

Charging Rate Adjustment—None (see Regulator).

Maximum Charging Rate—Controlled by regulator and dependent on battery condition and load. To check generator output, disconnect generator field lead at generator, connect both generator terminals together (use short insulated wire). Use 'BRS' set or rheostat connected across battery terminals and apply load until voltage is exactly 6 volts. Connect ammeter in charging line, check output at 2 speeds given in performance table below. Restore original connections after completing test. **Do not operate generator in service with both terminals connected together. This eliminates all regulator action and will damage generator.**

Performance Data

Amperes	Engine RPM
Start	565
32	1160
30	2500

Rotation—Counter-clockwise at commutator end.

Field Current—2.1 amperes at 6.0 volts (field resistance 2.88 ohms at 70°F).

Brush Spring Tension—Approximately 28 ozs.

Removal: Generator mounted on adjustable bracket at left front of engine. To remove, take out bolt in mounting bracket, slip off drive belt and water pump belt, lift generator out.

Belt Adjustment: ½" deflection midway between generator and crankshaft pulley (generator belt), generator and pump pulley (pump belt). Adjust both belts by loosening two capscrews in mounting bracket beneath generator, move generator up and out (bolt holes slotted at this angle).

REGULATOR

Ford Model No. 01A-10505-C. Three-unit type Voltage & Current Regulator. In case with Cutout Relay on dash.

See Electrical Equipment Section for complete data.

NOTE—Regulator case grounded through 'pigtail' to dash or separate ground wire to generator. This ground connection must be in place when regulator being operated or tested (disturbed by cover removal).

Cutout Relay

Cuts In—5.8-6.3 volts at operating temperature.

Cuts Out—8 amperes discharge current (maximum).

Voltage Regulator

Setting—6.9-7.2 volts at 70-80° F. See Ford Regulator article in Elec. Equip. Section for other temps.

Checking & Adjusting—***See Electrical Equipment Index for article on 'Ford Regulator—3 Unit Type' for complete instructions.***

Current Regulator

Setting—30-33 amperes Hot (after engine run for 5 minutes).

Checking & Adjusting—See Voltage Regulator.

LIGHTING

Headlamps: Ford "Sealed Beam" type.

See Electrical Equipment Section for complete data.

Adjustment—Aim upper beam straight ahead (hot spot centers 3" below lamp center height at 25 ft.).

Beam Indicator—Red jewel on lower edge of speedometer dial. Lighted when upper beams in use.

Switches

Lighting—Ford No. 11A-11652 (Switch & Wiring—All Models), 51A-11661A (Knob & Insert—Deluxe Models), 51A-11661B (Knob & Insert—Super Deluxe with Blue-Gray Trim), 51A-11661C (Knob & Insert—Super Deluxe with Brown Trim).

Beam Selector—Ford No. 11A-13532 (Switch only), 5GA-11653 (Switch & Wiring).

Instrument—Ford No. 19A-13740.

Stop Light—Ford No. 11A-13480.

C NTINUED ON NEXT PAGE

C NTINUED FR M PRECEDING PA E

Bulb Specifications
SEE 1946-47-48 FORD V8 PASS. CAR PAGES FOR DATA

MISC. ELECTRICAL

LIGHTING CIRCUIT BREAKER: Ford No. 11A-12250A Combined with the Ignition Resister on block on dash under cowl. Consists of two separate circuit breaker units (one unit protects headlamp circuits, second unit protects other lighting circuits). Breakers are thermostatic and wound-coil type. Contacts open with current of 50 ampere and vibrate rapidly to control current.

HORNS: Ford No. 91A-13832 (High Note), 91A-13833 (Low Note). Air electric type dual horns operated by horn relay.
Horn Current—24-28 amperes (total).

Horn Relay: Ford No. 11A-13842D (Horns on Left Side), 5GA-13842 (Horns on Right Side).
Contact Closing Voltage—3.5-4.5 volts.
Current Draw—Approximately ¾ ampere.

ENGINE

►**ENGINE PRODUCTION CHANGE:** New "H" Series Engine starting September 1947. New ignition system, valve system, oil pump, and cooling system.

►*"H" SERIES ENGINE INFORMATION—For Tune-Up, Ignition, Ignition Timing, and Engine data, see 1949 FORD SIX car pages.*

ENGINE SPECIFICATIONS: 6GA 90 HP. Six cylinder, "L" head type.
Bore—3.30" **Stroke**—4.40"
Displacement—226 cu. ins. **Rated H.P.** 26.13
Developed Horsepower—90 at 3300 RPM.
Compression Ratio—6.7-1. Cast Iron Head.
Compression & Vacuum Reading—*See Tune-up data.*

ENGINE REMOVAL (For Oil Pan Removal & General Engine Service): *See Ford Shop Notes.*

OIL PAN REMOVAL: *See Ford Shop Notes.*

TIGHTENING TORQUES: *See Ford Shop Notes.*

CYLINDER HEAD: Tightening Torque—*See Ford Shop Notes.*

CYLINDER SLEEVES: Hardened, dry type cylinder sleeves used on some engines.
Sleeve Installation—*See Ford Shop Notes.*

PISTONS: New aluminum alloy, four-ring, Cam-ground, Dome Head type. Pistons have additional oil ring below piston pin.
Weight—414 grams (stripped), 576 grams (complete).
Removal—Pistons and rods removed from above.
Clearance—See Fitting New Pistons.

Fitting New Pistons: Use .50" wide feeler stock of correct thickness (as listed below) inserted between piston and cylinder wall at right angles to pin to check clearance. Pull required to withdraw feeler should be 5-8 lbs. (all types).
Feeler Thickness—.002" New Piston in New Plain Bore, .004" New Piston in Worn Plain Bore, .005" Worn Piston in Worn Plain Bore.

Replacement Pistons: *See Ford Shop Notes.*

PISTON RINGS: Two compression, one oil ring above pin, additional oil ring on piston skirt below pin. Upper oil ring groove slotted, lower oil ring groove drilled for oil drainage.

Ring	Width	End Gap	Side Clearance
Compr. (#1)	.092-.0925"	.012-.017"	.0015-.003"
Compr. (#2)	.092-.0925"	.012-.017"	.001-.0025"
Oil (#3, 4)	.186-.1865"	.012-.017"	.001-.0025"

Replacement Rings: *See Ford Shop Notes.*

PISTON PIN: Diameter .8501-.8504". Length 2.91" Pin floats in piston and rod with locking ring at each end.
Pin Fit in Piston—.000-.0005" clearance or light hand push fit with piston at 70°F.
Pin Fit in Rod Bushing—.0002-.0005" clearance (pin should fall through bushing slowly of own weight).
See Ford Shop Notes for Pin Fitting directions.

Replacement Pins: *See Ford Shop Notes.*

CONNECTING ROD: Length 7.800" Weight 732 grams.
Crankpin Journal Diameter—2.235".
Lower Bearing—Removable, steel-backed, special alloy lined type. No shims.
Clearance—.0013-.0035". **Sideplay**—.003-.007".
NOTE—Replace bearing inserts worn .005" or more (.005" or more thinner than original insert).

Bearing Adjustment: None (no shims). Replace bearings. Do not file rods or bearing caps. NOTE—Make certain that small tangs on bearing halves engage grooves in rod and cap.

Replacement Bearings: *See Ford Shop Notes.*

CRANKSHAFT: Four Bearings, Cast alloy steel with integral counterweights and Vibration Dampener on front end.
Journal Diameters—2.499" (all main bearings).
Bearing Type—Removable precision type, steel-backed, special alloy lined type. No shims.
Clearance—.001-.003".

Bearing Adjustment: None (no shims). Replace bearings. Do not file bearing caps.

Replacement Bearings: *See Ford Shop Notes.*

End Thrust: Taken by rear main bearings. Adjust by replacing bearing (use bearing with thicker flange to reduce endplay).
Endplay—.002-.006"

CAMSHAFT: Four bearing with helical gear drive.
Bearing Diameters—1.797" all bearings. Replace the camshaft if worn to less than 1.7955" diameter. Replace bearings if inside diameter more than 1.802".
Bearing Type—Steel-backed, babbitt-lined bushings.
Clearance—.001-.002".

Timing Gears: Crankshaft Gear—cast alloy steel, Camshaft Gear—aluminum alloy, bolted-on type.
Timing Gear Replacement—*See Ford Shop Notes.*

Camshaft Setting: Mesh marked tooth of crankshaft gear in marked space between teeth of camshaft gear.

VALVES:	Head Diameter	Stem Diameter
Intake	1.620"	.3095-.3105"
Exhaust	1.484"	.3095-.3105"

	Seat Angle	Lift	Stem Clearance
Intake	45°	.292"	.0015-.0035"
Exhaust	45°	.292"	.0015-.0045"

NOTE—Service limit for valve stem diameter .3065".
Valve Assembly Removal & Servicing—*See Ford Shop Notes.*
NOTE—Inserted valve seats of molybdenum-chrome steel are used for exhaust valves.

Valve Guides: Split type retained by 'C' washer and valve spring. NOTE—Replace both halves of all guides measuring less than .6665" (thickness of guide half and valve stem at top of guide with valve of .311" stem diameter in place in guide).
For Valve Guide servicing data, see Ford Shop Notes.

Valve Springs:	Pressure	Length
Valve Closed	37-40 lbs.	2.13"
Valve Open	76-80 lbs.	1.85"

NOTE—Replace spring if the pressure is less than 30 lbs. when compressed to 2.125".

Valve Lifters: Barrel type in reamed holes in block.
Diameter—.9995". Replace if worn to less than .998" in diameter or length less than 1.710" after any necessary resurfacing of ends (cast type can be resurfaced on both ends, pressed steel type on bottom end only).
Clearance—.0005-.0015". Lifter should slip into hole in block of own weight.

VALVE TIMING

Tappet Clearance: .013-.015" All Valves Cold. No adjustment.

Valve Timing: See Camshaft Setting above.
Intake Valves—Open 3° BTDC. Close 41° ALDC.
Exhaust Valves—Open 48° BLDC. Close 6° ATDC.
Valve Timing Check—No flywheel marks or other means provided to check timing. If top dead center position located on flywheel, intake valve for this cylinder should open approx. 1 tooth on flywheel before this top dead center point.

LUBRICATION

Engine Oiling System: Pressure to main, connecting rod, and camshaft bearings, and to valve lifters and timing gears. Oil pump mounted on #1 main bearing cap in crankcase (oil intake pipe extends to oil screen in sump at rear end of oil pan).

Oil Pan Removal: *See Ford Shop Notes.*
Crankcase Capacity—5 quarts.
Normal Oil Pressure—35 lbs. at 2000 RPM of engine.
Oil Pressure Regulator—Located under plug on right side of crankcase at front end. Not adjustable. NOTE—Replace oil relief valve spring if not within limits of 44-46 ounces with spring compressed to 1.40".

Oil Pump: Gear type. Mounted on front main bearing and driven from crankshaft timing gear (pump housing integral with main bearing cap).
Oil Pump Servicing—*See Ford Shop Notes.*

Oil Screen & Drain Plug: Screen mounted on inner end of drain plug and removed with plug when crankcase drained. Clean oil screen each time removed.

Oil Filter: Replace filter cartridge at 5000 mile intervals (Ford No. 01A-18662-A Unit).

Oil Pressure Gauge: King-Seeley Electric. Ford Nos.
Dash Unit—No. 51A-9273-A (1946 Deluxe), No. 51A-9273-B (1946 Super Deluxe), No. 6A-9273 (All 1947).
Engine Unit—No. 41A-9278 (80 lb.) All Models.
See Miscellaneous Section for complete data.

COOLING

Cooling System: Positive circulation with water distributing tube in block to direct cooling water on exhaust valve seats and ports. Re-circulation of water in engine with thermostat closed provided by by-pass channel in front end of head and block leading to pump inlet.
Capacity—14.5 quarts (Pass. Cars).
Pressure Valve—In radiator filler cap. Opens at 3½-4½ lbs.

Water Pump: Packless, centrifugal type with sealed ball bearing shaft.
See Water Pump Section for complete data.
Belt Adjustment—*See Generator Belt Adjustment.*

Thermostat: In cylinder head water outlet below. By-pass (dual valve) type. Starts to open at 150-155°F. Fully open at 175-180°F.

Temperature Gauge: King-Seeley Electric. Ford Nos. **Dash Unit**—No. 51A-10883-A (1946 Deluxe), No. 51A-10883-B (1946 Super Deluxe), No. 6A-10883 (All '47). **Engine Unit**—No. 99A-10884 (All models).
See Miscellaneous Section for complete data.

CLUTCH

Long Model 10CF-TI, Ford No. 19A-7563. Single plate, semi-centrifugal, dry disc type.
See Clutch Section for complete data.
Facings—Woven asbestos composition. I. D. 6¾". O.D. 10". Thickness ⅛".

Pedal Adjustment: Pedal free travel 1-1¼". To adjust, disconnect clevis at equalizer (throw-out) shaft end of pedal connector rod, turn clevis on rod.

Removal: Remove Transmission (see Transmission Removal below), install wooden wedges between each release lever and cover to hold the clutch in released position, take out six capscrews mounting cover assembly on flywheel, lift out cover assembly and driven member.

TRANSMISSION

Own Make. Three-speed, all-helical gear type. Constant-mesh, synchro-mesh (Second & High), sliding gear (Low & Reverse).
See Transmission Section for complete data.

Transmission Control: Remote control type with gearshift lever on steering column.
See Transmission Section for complete data.

Removal: Remove Rear Axle (see Rear Axle Removal below), remove capscrews mounting front seat track on floor, move front seat back for necessary room. Take out mounting screws in front floor pan spacer, remove spacer. Disconnect gearshift connecting rods at transmission case, disconnect and remove equalizer (clutch release) shaft. Remove capscrew and washer on end of transmission shaft (in universal joint), remove universal joint. Remove nuts and washers on engine rear support bolts. Support engine by placing jack (use wood block on jack) under rear end and raise engine sufficiently so that rear support clears mounting bolts (NOTE—remove nuts holding lower half of engine rear support assembly and remove the assembly). Take out eight capscrews mounting transmission case on flywheel housing, pull transmission straight back and lift out.

UNIVERSALS

Spicer Model 202-6X, Ford No. B-7090. Steel bushing type. Single joint in torque ball at rear of transmission case.
See Universals Section for complete data.

REAR AXLE

Own Make. ¾ Floating, Spiral Bevel Gear type with Torque Tube Drive.
See Rear Axle Section for complete data.
Ratio—3.78-1 Std., 4.11-1 Optl.
Backlash—.012" maximum.

Removal: Raise rear end of car. Disconnect track bar. Disconnect rear spring (use spring spreader if available) by placing block under each rear spring eye and lowering car so that weight keeps spring extended and then removing spring shackle bolts and bars. Take out pin in hand brake equalizer and disconnect hand brake cable. Disconnect hydraulic brake line at torque tube and rear shock absorber links at each wheel. Disconnect accelerator pedal, remove pedal pads, floor mat, beam control switch (take out two mounting screws), and floor pan. Disconnect speedometer cable at torque tube. Remove nuts on four universal joint ball housing bolts and two bolts holding ball cap halves together, remove ball cap. Pull rear axle back to disconnect torque tube from transmission and remove from beneath car.
NOTE—Bleed brake line after rear axle re-installed and line connected.

SHOCK ABSORBERS

Houde (Houdaille). Double Acting, adjustable, hydraulic types (Front & Rear).
See Shock Absorber Section for complete data.

	Houde Model	Right — Ford No.	Left
Front	BBCN-3	51A-18045	51A-18046
Rear①	BBCZ-3	51A-18080A	51A-18081A
Rear②	BBCZ-3	51A-18080B	51A-18081B

①—Except Sedan Delivery and Station Wagon.
②—Sedan Delivery & Station Wagon only.

Adjustment: Standard setting marked by line on face of lever hub (pointer should be aligned with this mark). Adjustment can be varied by turning pointer clockwise (for more control) or counter-clockwise (for less control) not more than **1 or 2 serrations at a time.** NOTE—Stops are provided to limit adjustment in either direction.

Refilling: Check every 5000 miles, fill to level of filler plug hole. Use Ford No. M-4633-B fluid only (Houde L-1404) required for these new shock absorbers which may be identified by round top filler plug.

FRONT SUSPENSION

Front Axle: Conventional "I" beam section type with Reverse-Elliott ends and transverse spring. Axle positioned by radius rods.
Kingpin Inclination—8° crosswise.
Caster—3°. Axle may be bent cold for minor corrections providing correct tools used to prevent crushing of axle flange.
Camber—¾°. Adjust as for Caster (above).
Toe In—1/16". Adjust in usual manner by changing length of tie rod.

STEERING GEAR

Gemmer design (Model 305), Ford Make. Worm-&-Roller type with push-pull adjustments.
See Steering Gear Section for complete data.

BRAKES

Service: Lockheed Hydraulic, self-centering, double anchor type. Hand lever applies rear wheel brakes.

►**These brakes do not have anchor pin adjustment.**
See Brake Section for complete data.
Drums—Composite cast iron and steel type. Diameter 12".
Clearance—Least possible amount without drag.
Lining—Width 1.75". Thickness .187". Length per shoe 13.12" (forward shoes), 10.08" (rear shoes).

Hand Brakes: See Service Brakes (above).

MISC. MECHANICAL

Power Operated Convertible Top: Two types as follows:
1—**Convertible**—Auto-lite electric type.
2—**Sportsman Convertible**—Hydro-Lectric type.
See Miscellaneous Section for complete data.

Power Window Regulators (Sportsman Convertible): Hydro-Lectric type.
See Miscellaneous Section for complete data.

HOOD LOCK: Hood is Alligator type hinged at cowl. To raise hood (Pass. Cars), pull out release knob under instrument panel, release safety catch under front edge of hood.

OIL PAN REMOVAL: *See Ford Shop Notes.*

MODEL IDENTIFICATION

SERIAL & ENGINE NUMBER: Stamped on top of clutch housing (visible through hole in floor) and on left frame side member near front eng. support.

TUNE-UP

COMPRESSION: Pressure—105-125 lbs. at cranking speed of 100 RPM. (Std. 6.75-1 Cast iron Head).

VACUUM READING: Steady 18-20" idling at 5-7 MPH.

FIRING ORDER: 1-5-4-8-6-3-7-2 (Cyl. Nos. 1-2-3-4 Right Bank, 5-6-7-8 Left Bank, front-to-rear).

SPARK PLUGS: Champion Type H-10, 14 mm. Metric. Gaps—.025".

IGNITION: See Coil, Condenser, and Distributor.

Breaker Gap—.014-.016" (both sets).

Cam Angle—36° (both sets operating together).

Breaker Arm Spring Tension—20-24 ozs.

Automatic Advance—Starts at 200 RPM. Maximum 11° at 600 RPM (Distr. degrees & RPM).

IGNITION TIMING: See Ignition Timing.
Std. Setting—4° BTDC.

Timing Marks—None. See Ignition Timing for directions on setting of distributor for correct timing when installed on engine.

Vacuum Brake Setting—Set to just eliminate pinging when engine operated under load (back off screw until engine pings, then turn screw in until ping is eliminated).

CARBURETION: See Carburetor & Carb. Equipment.
Idle Setting—Both idle screws ⅝-¾ turn open and set for smooth idle and highest steady reading of vacuum gauge (when used). Idle speed 500 RPM or 5-7 MPH.

Float Level—1.322-1.353" bottom of float to underside of bowl cover with needle valve seated (Gauge 9550-A). Fuel level 11/16" plus or minus 1/32" below top edge of bowl.

Accelerating Pump—Center (#2) hole Normal. Inner (#1) hole—Summer, Outer (#3) hole—Winter for temperature extremes.

Fuel Pump Pressure: 3½ lbs. maximum.

MANIFOLD HEAT CONTROL: Automatic thermostatic control type (located in exhaust manifold outlet of left cylinder bank). See that valve operates freely.

VALVES: See Valve Timing.

Tappet Clearance—.010-.012" Intake, .014-.016" Exhaust. No adjustment provided.

STARTING: See Battery, Starter, Generator and Regulator.

IGNITION

IGNITION SWITCH: Oakes Steering Column & Ignition Lock Assembly No. 302848, Ford No. 51A-3676-A (Deluxe Models), Oakes No. 302850, Ford No. 51A-3676-B (Super Deluxe Models). Ignition Switch Assembly Oakes No. 302494, Ford No. 11A-3680 (All Models).

Lock Cylinder—Hurd or Briggs & Stratton #80935 Ford No. 91A-3686-A (with Keys).
Key Series—FK000 to FK999. **Groove**—No. 17.

COIL: Ford No. 1GA-12024. Mounted separately on left front corner of cylinder block.
Ignition Current—4½-6 amperes with engine stopped (primary resistance 1-1⅓ ohm).
Resistor Unit—Connected in coil primary circuit (part of Circuit Breaker Assembly 11A-12250A).

CONDENSER: Ford Part No. 1GA-12300-B.
Capacity—.29-.32 microfarad.

DISTRIBUTOR: Ford No. 59A-12127 (less Terminal Housing, Cap & Rotor). New "Single Cap" sealed-dry "V" outlet type. Double breaker, 8 lobe cam, full automatic advance type with Vacuum Brake adjustment. Breaker "loading" and "timing" contacts operate in same manner as on previous V8 models.
Breaker Gap—.014-.016" (both sets). Use special two step feeler—.014" step 'go', .016" 'no go'.
Cam Angle or Dwell—Approx. 36° closed, 9° open. **Set dwell at 80% (78-80% at 2000 RPM) on Ford Test Set for both sets operating together with correct coil loading lead.**
NOTE—Cam Angle for each set operating singly approximately 22½° closed, 22½° open (50%).
Breaker Arm Spring Tension—20-24 ounces.
Rotation—Clockwise viewed from drive end (counter-clockwise viewed from front of car).

Automatic Advance
(Vacuum Brake Disconnected)

Distributor		Engine	
Degrees	R.P.M.	Degrees	R.P.M.
Start	200	0	400
11	600	22	1200

NOTE—Limits are 10½-11½° (distributor degrees).

Vacuum Brake: Consists of a spring-loaded vacuum controlled brake piston which bears on edge of retard disc of breaker advance mechanism and acts as a "drag" to retard normal advance when engine is accelerated or operated under load. Piston is normally held out of engagement by manifold vacuum.

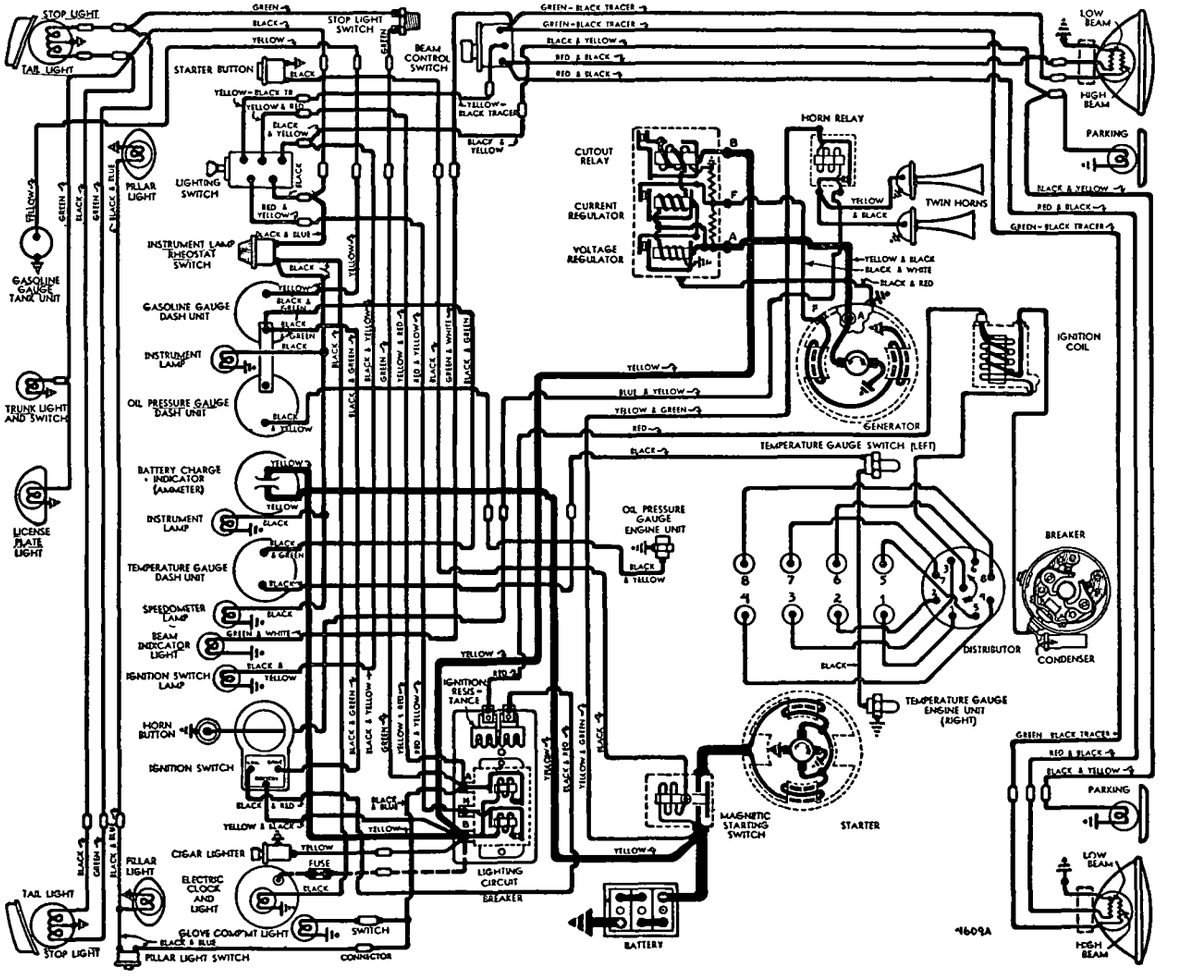

Removal:—Distributor mounted on front of engine. To remove, disconnect primary lead, remove distributor cap, take out mounting screws in distributor flange, lift unit out.

IGNITION TIMING

Std. Setting—See Vacuum Brake Setting for service correction for operating conditions.

	Flywheel Degrees	Piston Position
All V8 Engines	4° BTDC	.0058" BTDC.

Ignition Timing (Basic Setting)—Distributor can be timed for correct ignition timing when off engine as follows: Place a small straight edge or scale against tang on drive end of distributor shaft (scale must be on wide side of shaft), rotate distributor in direction of rotation (clockwise) until trailing edge of scale is exactly 3/8" past the nearest edge of the small mounting hole (left hand hole—nearest vacuum brake) on the mounting flange. If left hand (timing) contacts do not begin to open at this point, loosen adjusting screw on side of distributor housing, move screw down (to advance spark), up (to retard spark), in slot until contacts begin to open, tighten adjusting screw. This setting will provide correct 4° BTDC. ignition timing when distributor installed on engine.

NOTE—Timing is controlled by opening of **left hand breaker contacts** only (right hand contacts "load" coil and open and close earlier than the left hand contacts).

Timing (On the Car)—No flywheel marks provided. With distributor adjusted as described above, this will give correct 4° BTDC. timing when installed on the engine and all necessary adjustments for operating conditions and octane rating of fuel being used can be made by means of the Vacuum Brake adjustment as follows:

Vacuum Brake Setting—Should be adjusted to eliminate pinging when engine operated with load. To adjust, loosen locknut, back off adjusting screw until engine pings with load, then turn screw in just enough to eliminate ping, tighten locknut.

CARBURETOR

Holley (Chandler-Groves) Ford No. 59A-9510-A. Dual (double barrel), downdraft type with manual choke control.
See Carburetor Section for complete data.

Idle Adjustment—With engine warm, choke valve wide open, and Fast Idle inoperative, set throttle lever stopscrew for 500 RPM. idling speed, turn each idle adjusting screw (one for each barrel, adjust in succession) in until engine begins to miss, then out until engine begins to roll, finally turn screw in until engine fires smoothly. Final setting should be approximately 5/8-3/4 turn of screw from inner seated position. Readjust stopscrew for correct idling speed. NOTE—Idling speed can be estimated by marking spot on fan belt and setting speed for 25 revolutions of the belt in 10 seconds.

Accelerating Pump Setting—Three holes provided in the throttle lever for pump rod link connection. Adjust for seasonal requirements as follows:
#1 (Inner) Hole—Summer or Hot weather.
#2 (Center) Hole—Average fuel and weather.
#3 (Outer) Hole—Extremely Cold weather.

Float Level—Use 9550-A gauge to set the float level (1.353" end 'Go', 1.332" end 'No Go') measuring from underside of bowl cover to bottom f float (with cover and float assembly inverted). Fuel level in bowl should be 11/16" plus or minus 1/32".

Metering Jets—*See Chandler-Groves (Ford) Jet Table in Carburetor Section for complete data.*

Fast Idle:—Integral with carburetor. Operated by choke valve lever. No adjustment required.

CARB. EQUIPMENT

Air Cleaner: Ford No. 91A-9600-A. Oil-bath type.
Servicing—Clean and refill (to level mark on case) with same grade engine oil used in crankcase at 3500 mile intervals (when crankcase drained) or more often if required. Clean filter element by washing in cleaning fluid.
NOTE—Clean and re-oil filter element in oil filler cap (crankcase breather) every 1000 miles.

Fuel Pump: AC. Type R. Ford No. 11A-9350. Diaphragm type. Exchange Pump AC No. 541 ('46), 571 ('47).
See Carburetion Equipment Section for data.
Pressure—3½ lbs. max. (2-3¼ lbs.).

Gasoline Gauge: King-Seeley Electric. Ford Nos.
Dash Unit—No. 51A-9280-A (1946 Deluxe & Sedan Del.), 51A-9280-B ('46 Sup. Del.), 6A-9280 (1947).
Tank Unit—No. 99A-9275B (Deluxe & Super Deluxe Models), 21A-9275A (Sedan Delivery).
See Carburetion Equipment Section for data.

BATTERY

Ford Type No. 01A-10655-A. 6 volt, 17 plate, 120 Ampere Hour Capacity (20 hour rate).
Starting Capacity—150 amperes for 20 minutes.
Zero Capacity—300 amperes for 4.0 minutes.
Grounded Terminal—Positive (+) grounded to dash.
Engine Ground—Strap connector between right rear cylinder head and dash.
Dimensions—Length 10.56". Width 7.28". Hgt. 8.25".
Location—On right side in engine compartment.

STARTER

Ford Model No. 18-11002. Armature No. 18-11005.
Drive—Inboard Bendix Drive No. A1472, Ford No. B-11350.
Rotation—Counter-clockwise at commutator end.
Brush Spring Tension—2 lbs. each.
Cranking Engine—100 RPM., 190-215 amperes.

Performance Data

Torque	R.P.M.	Volts	Amperes
4 ft. lbs.	1070	4.6	200
8 "	660	4.3	340
12 "	300	3.65	465
14 "	Lock	3.5	500

Starting Switch: Ford No. 21A-11450 Magnetic Switch mounted on dash and controlled by pushbutton switch on instrument panel, Ford No. 19A-11500 (Pass. Cars).

Removal:—Starter mounted on right front face of flywheel housing. To remove, take off pan at right of engine, free starter-to-oil pan support bracket, take out through-bolts on commutator end plate.

GENERATOR

Ford Model No. 21A-10000. Armature No. 01A-10005A. Two brush (shunt) type with vibrating voltage and current regulation. Ventilated by fan on drive pulley.
Charging Rate Adjustment—None. See Regulator.
Maximum Charging Rate—Controlled by regulator and dependent on battery condition and load. To check generator output, disconnect generator field lead at generator, connect both generator terminals together (use short insulated wire). Use 'BRS' set or rheostat connected across battery terminals and apply load until voltage is exactly 6 volts. Connect ammeter in charging line, run engine, check output at 2 speeds given in performance table below. Restore original connections after completing test. **Do not operate generator in service with both terminals connected together. This eliminates all regulator action and will damage generator.**

Performance Data

Amperes	Engine RPM.
Start	520
30	1060
30	2500

Rotation—Counter-clockwise at commutator end.
Field Current—2.1 amperes at 6.0 volts (field resistance 2.88 ohms at 70°F).
Brush Spring Tension—Approximately 28 ozs.

Removal:—Generator mounted on bracket between cylinder banks at front of engine, driven in tandem with water pumps by Vee belt. To remove, loosen nut on bracket stud.

Belt Adjustment: ½" deflection midway between generator and water pump pulleys. NOTE—Generator mounting bracket also includes the fan mounting (fan driven by a separate belt). Both belts adjusted in same manner by loosening mounting bolt and raising mounting brackets.

REGULATOR

Ford Model No. 01A-10505-C. Three Unit Type. Consists of Cutout Relay, vibrating Voltage Regulator and vibrating Current Regulator (separate units) in single case on engine side of dash.
See Electrical Equipment Section for complete data.
NOTE—Regulator case is grounded through separate ground wire extending from regulator to generator frame. This ground connection must be in place when regulator being operated or tested.

Cutout Relay
Cuts In—5.8-6.3 volts at operating temperature.
Cuts Out—8 ampere discharge current maximum.

Voltage Regulator
Setting—6.9-7.2 volts at 70-80° F.
Checking & Adjusting—*Refer to Electrical Equipment Index for article on 'Ford Regulator—3-unit Type' for complete instructions.*

Current Regulator
Setting—30-33 amperes (after 5 minutes run).
Checking & Adjusting See Voltage Regulator above.

LIGHTING

Headlamps: Ford "Sealed Beam" type.
See Electrical Equipment Section for complete data.
Adjustment—Aim upper beam straight ahead (hot spot center 3" below lamp center height at 25 ft.).
Beam Indicator—On lower edge of speedometer dial. Lighted whenever upper beams in use.

Switches
Lighting—Ford No. 11A-11652 (Switch & Wiring—All Models), 51A-11661A (Knob & Insert—Deluxe Models), 51A-11661B (Knob & Insert—Super Deluxe Models with Blue-Grey Trim), 51A-11661C (Knob & Insert—Super Deluxe Models with Brown Trim).

C NTINUED N NEXT PAGE

CONTINUED FROM PRECEDING PA E

Beam Selector—Ford No. 11A-13532 (Switch only), 21A-11653 (Switch & Wiring).
Instrument—Ford No. 19A-13740.
Stop Light—Ford No. 11A-13480.

Bulb Specifications

Position	Candlepower	Mazda No.
Headlamps	Sealed Beam	
Parking	3	63
Beam Indicator, Ign. Lock	1	51
Instrument, Clock	1½	55
Stop & Tail	21-3	1154
Dome (Pillar), Luggage Compt.	3	63
Rear License	3	63

MISC. ELECTRICAL

LIGHTING CIRCUIT BREAKER: Ford 11A-12250A Combined with Ignition Resistor on block on dash under cowl. Consists of two separate circuit breaker units (one unit protects headlight circuits, second unit protects other lighting circuits) of the thermostatic and wound-coil type. Contacts open with current of 50 amperes and vibrate rapidly to control current.

HORNS: Ford No. 91A-13832 (High Note), 91A-13833 (Low Note). Air electric type dual horns operated by horn relay.

Horn Current—24-28 amperes total.

Horn Relay: Ford No. 11A-13842D.
Contact Closing Voltage—3.5-4.5 volts.
Current Draw—Approximately ¾ ampere.

ENGINE

ENGINE SPECIFICATIONS: Own "100". Eight Cylinder, 90° Vee, "L" Head type. Cylinder banks and crankcase cast Enbloc.

Bore—3.187". **Stroke**—3.75".
Displacement—239 cu. ins. **Rated H.P.**—32.5.
Developed Horsepower—100 at 3800 RPM.
Compression Ratio—6.75-1 Cast Iron Heads.
Compression & Vacuum Readings—*See Tune-up data*

►**1946-47 ENGINE SERVICE NOTES: Cylinder Head.** New type, Part No. 59A-6050-A or -B, is interchangeable right-and-left. May be identified by figures "59A" or "59A-B" on top. Heads have greater valve clearance for new cylinder block (below) and larger water holes for improved cooling (¾" hole at top center and ⅝" hole at center between #2 and #3 cylinders).

►**Cylinder Head Gasket**—New type, Part No. 59A-6051, may be identified by 5/16" round hole instead of blunt coneshaped opening at lower edge between #2 and #3 cylinder bores. ***This gasket must be used with new 1946 type Cylinder Head (above).***

►**Cylinder Block**—New type, Part No. 59A-6010-C with valve ports located .09" farther from center line of block. May be identified by number or by oblong water passages just above valves (round on previous types).

►***CAUTION—If the earlier type Cylinder Heads (81A-81T-, 99T-, 29A-) used with this block, heads must be machined out for valve clearance, and water passages in head should be enlarged for improved cooling. Refer to Ford Shop Notes for complete data.***

OIL PAN REMOVAL: *See Ford Shop Notes.*

ENGINE REMOVAL: *See Ford Shop Notes.*

TIGHTENING TORQUES: *See Ford Shop Notes.*

CYLINDER HEAD: Tightening—*See Ford Shop Notes.*

CYLINDER SLEEVE: Cast iron, dry type cylinder sleeves may be used (engine may have mark "HS" on block beside inner front corner of left cyl. head).
Servicing—*See Ford Shop Notes.*

PISTONS: Steel Alloy, light weight, cam ground type or Aluminum Alloy, T slot type. Recondition engine to take finished replacement pistons (if sleeves used, replace sleeves, use new Std. size pistons).
NOTE—All pistons are four ring type with slotted oil control ring on skirt below pin hole.

Removal—Pistons and rods removed from above.
Clearance—See Fitting New Pistons.

Replacement Pistons: *See Ford Shop Notes.*

Fitting New Pistons: Use .50" wide feeler stock of correct thickness (see table below) inserted between piston and cylinder wall at right angles to pin to check clearance. Pull required to withdraw feeler should be 6-10 lbs. (all types).

Engines with Steel Sleeves	Steel Piston	Aluminum Piston
New Piston & Sleeve	.003"	.003"
New Piston—Worn Sleeve	.004"	.004"
Worn Piston & Sleeve	.005"	.005"
Engines without Sleeves		
New Piston & Bore	.0025"	.002"
New Piston—Worn Bore	.004"	.004"
Worn Piston & Bore	.005"	.005"

PISTON RINGS: Two compression, two slotted oil rings per piston (lower oil ring below pin). Oil ring grooves have oil drain holes.

Ring	Width	End Gap	Side Clearance
Compr. #1	.0915-.0920"	.012-.017"	.0015-.003"
Compr. #2	.0915-.0920"	.012-.017"	.001-.0025"
Oil Contr.	.1545-.1550"	.012-.017"	.001-.0025"

Replacement Rings: *See Ford Shop Notes.*

PISTON PIN: Diameter .7501-.7504". **Length** 2.975" (with steel pistons), 2.850" (with aluminum pistons). Floating type with locking ring in piston at each end. Pin hole in connecting rod bronze bushed.
Pin Fit in Piston—.0001-.0002" (aluminum pistons), .0003-.0009" (steel pistons) or light hand push fit with piston at 70°F.

Pin Fit in Rod Bushing—.0002-.0005" (pin should pass through bushing slowly of own weight).
See Ford Shop Notes for Pin Fitting directions.

Replacement Pins: *See Ford Shop Notes.*

CONNECTING ROD: Length 7.000". **Weight** 492 grams. **Crankpin Journal Diameter**—2.1390" Connecting rod diameter on crankpin 2.360" (2.3597-2.3603").

Bearing Type—Steel-backed, special alloy lined with bearing surface on both inner and outer face. Bearing floats in both rods (side-by-side mounting)
Bearing Dimensions—Length 1.747". Thick .1095".
Clearance—.0015-.0035" (see Bearing Adjustment).

Sideplay—.003-.007" (bearing endplay), .006-.014" (side clearance for both rods).

Bearing Adjustment: None (no shims). Do not file bearing caps. Replace bearings if less than .1085" in thickness, replace or hone rod for oversize bearing if worn more than .0015" over original size (2.3597-2.3603"). CAUTION—Both rods must be same size.

Replacement Bearings: *See Ford Shop Notes.*

Installing Rods: Marks on rods and bearing caps (R1, L1 etc.) must be together and installed in same numbered cylinder with marks pointing down toward pan.

CRANKSHAFT: Three bearing type with integral counterweights. NOTE—New type crankshaft used with new wide land (four ring) pistons.
Journal Diameters—2.4990" (all bearings).

Bearing Type—Steel-backed, special alloy-lined.
Clearance—.001-.003".

Bearing Adjustment: None (no shims). Do not file bearing caps.

Replacement Bearings: *See Ford Shop Notes.*

End Thrust: Taken by rear main bearing. Adjust by replacing bearing. **Endplay**—.002-.006".

CAMSHAFT: Three bearing type. Helical gear drive.
Bearing Diameters—1.797" all bearings. Replace camshaft if worn to less than 1.7955" diameter.

Bearing Type—Steel-backed, babbitt-lined bushings.
Clearance—.001-.002".

End Thrust: Taken by gear hub and thrust surface on inner face of cover plate. Adjusted by replacing coverplate. **Endplay**—.005-.015".

Timing Gears: Cast alloy iron (crankshaft), Aluminum or malleable iron bolted-on type (camshaft). **Backlash**—.004" maximum.

Replacement Gears—*See Ford Shop Notes for Gear Oversizes and installation instructions.*

Camshaft Setting: Mesh marked tooth of crankshaft gear in similarly marked space between teeth on camshaft gear.

VALVES:	Head Diameter	Stem Diameter	Length
All Valves	1.510"	.3105"	4.577"

	Seat Angle	Lift	Stem Clearance
Intake	45°	.292"	.0015-.0035"
Exhaust	45°	.292"	.0025-.0045"

NOTE—Service limit for valve stem diameter is .309" Intake, .3065" Exhaust. Valves interchangeable.
Valve Seat Inserts—Used on all valves.
For Valve Servicing data, see Ford Shop Notes.

Valve Guides: Split type retained by "C" washer and valve spring. NOTE—Replace both halves of all guides measuring less than .6665" (thickness of guide half and valve stem at top of guide with valve of .311" stem diameter in place in guide).
For servicing data, see Ford Shop Notes.

Valve Lifters: Barrel type in reamed holes in block.
Diameter—.9995". Replace if worn to less than .998" in diameter or length less than 1.710" after any necessary resurfacing of ends (cast type can be resurfaced on both ends, pressed steel type on bottom end only).

Clearance—.0005-.0015". Lifter should slip into hole in block of own weight.

Valve Springs: Replace if pressure less than 30 lbs. when compressed to 2.125".

	Spring Pressure	Length.
Valve Closed	37-40 lbs.	2.13"
Valve Open	76-80 lbs.	1.84"

VALVE TIMING

Tappet Clearance: .010-.012" Intake, .014-.016" Exhaust, Cold. No adjustment.

Valve Timing: See Camshaft Setting above.
Intake Valves—Open at TDC. Close 44° ALDC.
Exhaust Valves—Open 48° BLDC. Close 6° ATDC.

Valve Timing Check—No flywheel marks or other means provided to check timing. No. 1 intake valve should open with No. 1 piston on top dead center entering intake stroke.

LUBRICATION

Engine Oiling System: Pressure to main bearings, connecting rod lower bearings, camshaft bearings, and timing gears. Oil pump mounted in crankcase at rear of engine.

Oil Pan Removal: *See Ford Shop Notes.*
Crankcase Capacity—5 quarts.
Normal Oil Pressure—50 lbs. at 2000 RPM.

Oil Pressure Regulator—Located under plug above front camshaft bearing (under manifold) and on oil pump housing (some models). Not adjustable.

NOTE—Check relief valve tension spring whenever engine overhauled. Replace the cylinder block relief valve spring if tension not within limits of 43-50 ozs. at 1.380" (engines without oil pump relief valve), or 78-80 ozs. at 1.380" (engines with oil pump relief valve). Replace oil pump relief valve spring if tension not within limits of 78-87 ozs. at 1.380".

Oil Pump: Gear type. In crankcase at rear of engine. NOTE—This new type pump, No. 41A-6600-A (for engines without oil pan baffles), has oil pressure regulator (relief valve) in pump body.

Oil Pump Servicing—*See Ford Shop Notes.*

Oil Pressure Gauge: King-Seeley Electric. Ford Nos. **Dash Unit**—No. 51A-9273-A (1946 Deluxe), No. 51A-9273-B (1946 Super Deluxe), No. 6A-9273 (All 1947).
Engine Unit—No. 41A-9278 (80 lb.) All Models.
See Miscellaneous Section for complete data.

COOLING

Cooling System: Positive circulation with two water pumps at front of engine (pump for each bank). **Capacity**—22 quarts.

Pressure Valve—In radiator filler cap. Opens at 3½-4½ lbs.

Water Pump: Packless, centrifugal type (2 used). Mounted on front of engine (pump housing integral with front engine mounting).
See Water Pump Section for complete data.

Removal—Drain cooling system, place support jack under engine (use wood block on jack to avoid damaging pan), remove bolt from front engine support, raise engine until no weight rests on front support. Loosen generator mounting bolt, remove drive belt. Disconnect and remove hose at pump. Remove four capscrews mounting pump on engine, lift pump out. CAUTION—One mounting screw located within water pump inlet connection (accessible with hose removed).
Belt Adjustment—*See Generator Belt Adjustment.*

Thermostat: In each cylinder head water outlet (two used). Start to open at 150-155°F. Fully open at 175-180°F.

Temperature Gauge: King-Seeley Electric. Ford Nos. **Dash Unit**—No. 51A-10883-A (1946 Deluxe), No. 51A-10883-B (1946 Super Deluxe), No. 6A-10883 (All '47). **Engine Unit**—No. 01A-10990 (Temperature Gauge Switch—in left hand cylinder head), No. 99A-10884 (regular Engine Unit—in right cylinder head).
See Miscellaneous Section for complete data.

CLUTCH

Long Model 10CF-TI, Ford No. 19A-7563. Single plate, semi-centrifugal, dry disc type.
See Clutch Section for complete data.

Facings—Woven asbestos composition. I.D. 6¾". O.D. 10". Thickness ⅛".

Pedal Adjustment: Pedal free travel 1-1¼". To adjust, disconnect clevis at equalizer (throw-out) shaft end of pedal connector rod, turn clevis on rod.

Removal: Remove Transmission (see Transmission Removal below), install wooden wedges between each release lever and cover to hold the clutch in released position, take out six capscrews mounting cover assembly on flywheel, lift out cover assembly and driven member.

TRANSMISSION

Own Make. Three-speed, all-helical gear type. Constant-mesh, synchro-mesh (Second & High), sliding gear (Low & Reverse).
See Transmission Section for complete data.

Transmission Control: Remote control type with gearshift lever on steering column.
See Transmission Section for complete data.

Removal: Remove Rear Axle (see Rear Axle Removal below), remove capscrews mounting front seat track on floor, move front seat back for necessary room. Take out mounting screws in front floor pan spacer, remove spacer. Disconnect gearshift connecting rods at transmission case, disconnect and remove equalizer (clutch release) shaft. Remove capscrew and washer on end of transmission shaft (in universal joint), remove universal joint. Remove nuts and washers on engine rear support bolts. Support engine by placing jack (use wood block on jack) under rear end and raise engine sufficiently so that rear support clears mounting bolts (NOTE—remove nuts holding lower half of engine rear support assembly and remove the assembly). Take out eight capscrews mounting transmission case on flywheel housing, pull transmission straight back and lift out.

UNIVERSALS

Spicer Model 202-6X, Ford No. B-7090. Steel bushing type. Single joint in torque ball at transmission.
See Universals Section for complete data.

REAR AXLE

Own Make. ¾ Floating, Spiral Bevel Gear type with Torque Tube Drive.
See Rear Axle Section for complete data.
Ratio—3.54-1 Std., 3.78-1 & 4.11-1 Optl.
Backlash—.012" maximum.

Removal: Raise rear end of car. Disconnect track bar. Disconnect rear spring (use spring spreader if available) by placing block under each rear spring eye and lowering car so that weight keeps spring extended and then removing spring shackle bolts and bars. Take out pin in hand brake equalizer and disconnect hand brake cable. Disconnect hydraulic brake line at torque tube and rear shock absorber links at each wheel. Disconnect accelerator pedal, remove pedal pads, floor mat, beam control switch (take out two mounting screws), and floor pan. Disconnect speedometer cable at torque tube. Remove nuts on four universal joint ball housing bolts and two bolts holding ball cap halves together, remove ball cap. Pull rear axle back to disconnect torque tube from transmission.

SHOCK ABSORBERS

Houde (Houdaille). Double Acting, adjustable, hydraulic types (Front & Rear).
See Shock Absorber Section for complete data.

	Houde Model	Right — Ford No. — Left
Front	BBCN-3	51A-18045 — 51A-18046
Rear①	BBCZ-3	51A-18080A — 51A-18081A
Rear②	BBCZ-3	51A-18080B — 51A-18081B

①—Except Sedan Delivery and Station Wagon.
②—Sedan Delivery & Station Wagon only.

Adjustment: Standard setting marked by line on face of lever hub (pointer should be aligned with this mark). Adjustment can be varied by turning pointer clockwise (for more control) or counter-clockwise (for less control) not more than **1 or 2 serrations at a time.** NOTE—Stops are provided to limit adjustment in either direction.

Refilling: Check every 5000 miles, fill to level of filler plug hole. Use Ford No. M-4633-B fluid only (Houde L-1404) required for these new shock absorbers (identified by round top filler plug).

FRONT SUSPENSION

Front Axle: Conventional "I" beam section type with Reverse-Elliott ends and transverse spring. Axle positioned by radius rods.

Kingpin Inclination—8° crosswise.

Caster—3°. Axle may be bent cold for minor corrections providing correct tools used to prevent crushing of axle flange.

Camber—¾°. Adjust as for Caster (above).

Toe In—1/16". Adjust in usual manner by changing length of tie rod.

STEERING GEAR

Gemmer design (Model 305), Ford Make. Worm-&-Roller type with push-pull adjustments.
See Steering Gear Section for complete data.

BRAKES

Service: Lockheed Hydraulic, self-centering, double anchor type. Hand lever applies rear wheel service brakes. NOTE—These brakes do not have anchor pin adjustment.
See Brake Section for complete data.

Drums—Composite iron and steel. Diameter 12".

Clearance—Least possible amount without drag.

Lining—Width 1.75". Thickness .187". Length per shoe 13.12" (forward shoes), 10.08" (rear shoes).

Hand Brakes: See Service Brakes (above).

MISC. MECHANICAL

Power Operated Convertible Top: Two types as follows:
1—Convertible—Auto-lite electric type.
2—Sportsman Convertible—Hydro-Lectric type.
See Miscellaneous Section for complete data.

Power Window Regulators (Sportsman Convertible): Hydro-Lectric type.
See Miscellaneous Section for complete data.

HOOD LOCK: Lock handle is center louvre on right side (left side facing truck) of hood nose. Pull out on handle (operates lock and auxiliary catch) and hold handle out while raising hood.

MODEL IDENTIFICATION

SERIES		MODEL "V8"①	"6 Cyl."②	WHB.
F-1	½ Ton	8RC	8HC	114"
F-2	¾ Ton	8RD	8HD	122"
F-3	¾ Heavy Duty	8RY	8HY	122"
F-4	1 Ton	8RTL	8HTL	134"
F-5	1½ Ton	8RT	8HT	134"
F-5	1½ Ton	8R8T	8H8T	158"
F-5	School Bus	8R8T	8H8T	158"
F-5	School Bus	8R4T	8H4T	194"
F-5	1½ C-O-E	8ROW	8HOW	110"
F-5	1½ C-O-E	8RW	8HW	134"
F-5	1½ C-O-E	8R8W	8H8W	158"
F-6	2 Ton	8RTH	8HTH	134"
F-6	2 Ton	8R8TH	8H8TH	158"
F-6	2 C-O-E	8ROWH	8HOWH	110"
F-6	2 C-O-E	8RWH	8HWH	134"
F-6	2 C-O-E	8R8WH	8H8WH	158"

①—Rouge 239 Truck V8, 100 Horsepower.
②—Rouge 226 Truck Six, 95 Horsepower.

ENGINE NUMBER: On Rating Plate on dispatch compartment (glove box) door and on left side of frame near steering gear mounting bracket. NOTE—Engine Number is also Serial Number.

TUNE-UP

COMPRESSION PRESSURE: 110 lbs. at cranking spd.

VACUUM READING: Steady 18-21" idling at 500 RPM.

FIRING ORDER (V8): 1-5-4-8-6-3-7-2. See diagram.

FIRING ORDER (6 CYL.): 1-5-3-6-2-4. See diagram.

SPARK PLUG GAPS: .025-.028".

Plug Type—Champion H-9 Comm. 14 mm.

IGNITION: *See Coil, Condenser, and Distributor.*

Breaker Gap—(6 Cyl.) .024-.026" (V8) .014-.016"

Cam Angle—(6 Cyl.) 36° closed, (V8) 27° closed.

Breaker Arm Spring Tension—17-20 ounces.

Advance Performance—*See Distributor.*

IGNITION TIMING: 2° BTDC (V8), TDC (6 Cyl.).

Timing Procedure—*See Ignition Timing.*

V8—Crankshaft Pulley Mark—Circular boss aligned with pointer on right side of engine front cover.

6 Cyl.—Dampener Mark—Circular boss or groove (depending on type of dampener used). 2 pointers on front engine cover. ***Use pointer nearest to outer circumference of dampener for proper 6 Cyl. Timing.***

CARBURETION: *See Carburetor & Carb. Equipment.*

Idle Setting—Approx. 1 turn open. 2 screws used on V8—turning screws out gives richer mixture.

Idle Speed—Approximately 500 RPM.

Float Level—1.322-1.353" bottom of float to underside of bowl cover with needle valve seated (use Gauge No. 9550-A).

Accelerating Pump—Center hole average setting. Inner hole for hot weather, Outer for cold weather.

Fuel Pump Pressure—3½-4½ lbs. (V8), 4-5 lbs. (6).

MANIFOLD HEAT CONTROL: Automatic.

V8 Engine—Valve located between right end of exhaust pipe cross over and right exhaust manifold.

6 Cylinder—At center of exhaust manifold just under intake manifold.

VALVE TAPPET CLEARANCE: V8 Engine. .010-.012" Int., .014-.016" Exh. Cold. No adjustment.

6 Cylinder—.013-.015" Cold, All Valves.

►**6 Cyl. High Speed Setting**—.002" additional exhaust valve clearance recommended by manufacturer.

SIX NOTE—Adjustable, self-locking tappet screws used.

Valve Timing Check—*See Valve Timing.*

STARTING: *See Battery, Starter, Generator, Regulator.*

IGNITION

IGNITION SWITCH: Ford No. 6A-11572-A (Mitchell type), No. 6A-11572-B (Briggs & Stratton type).

Ignition Lock—Ford No. 6A-11582-A.

COIL: Ford No. 7RA-12029-A. Metal can type.

Location—Next to distributor.

Ignition Current—Approx. 5.2-5.7 amperes at 6 volts, stopped. Primary resistance 1.05-1.15 ohms at 70°.

CONDENSER: Ford No. 7RA-12300-B.

Capacity—.21-.25 microfarad.

DISTRIBUTOR: Less Distributor Cap and Rotor.

V8 Eng......**7RA-12127-C** **6 Cyl.**.....**7HA-12127**

Type—New "Pressure" distributor with spark advance controlled by vacuum diaphragm moving breaker plate to advance spark against two breaker plate springs. Operating vacuum taken from 1 carburetor connection (2 passages inside carburetor, 1 at venturi, 1 at throttle valve). Full spark advance obtained at 18-35 MPH. with normal road load or for part throttle operation at any speed.

►***NOTE—Distributor is single contact type (no "coil loading" contacts are used). 6 Cylinder distributor angle-mounted on left side (shaft splined in drive gear).***

Breaker Gap—(6 Cyl.) .024-.026" (V8) .014-.016".

Cam Angle—(6 Cyl.) 36° closed, (V8) 27° closed.

Breaker Arm Spring Tension—17-20 ounces.

Rotation—Clockwise viewed from above.

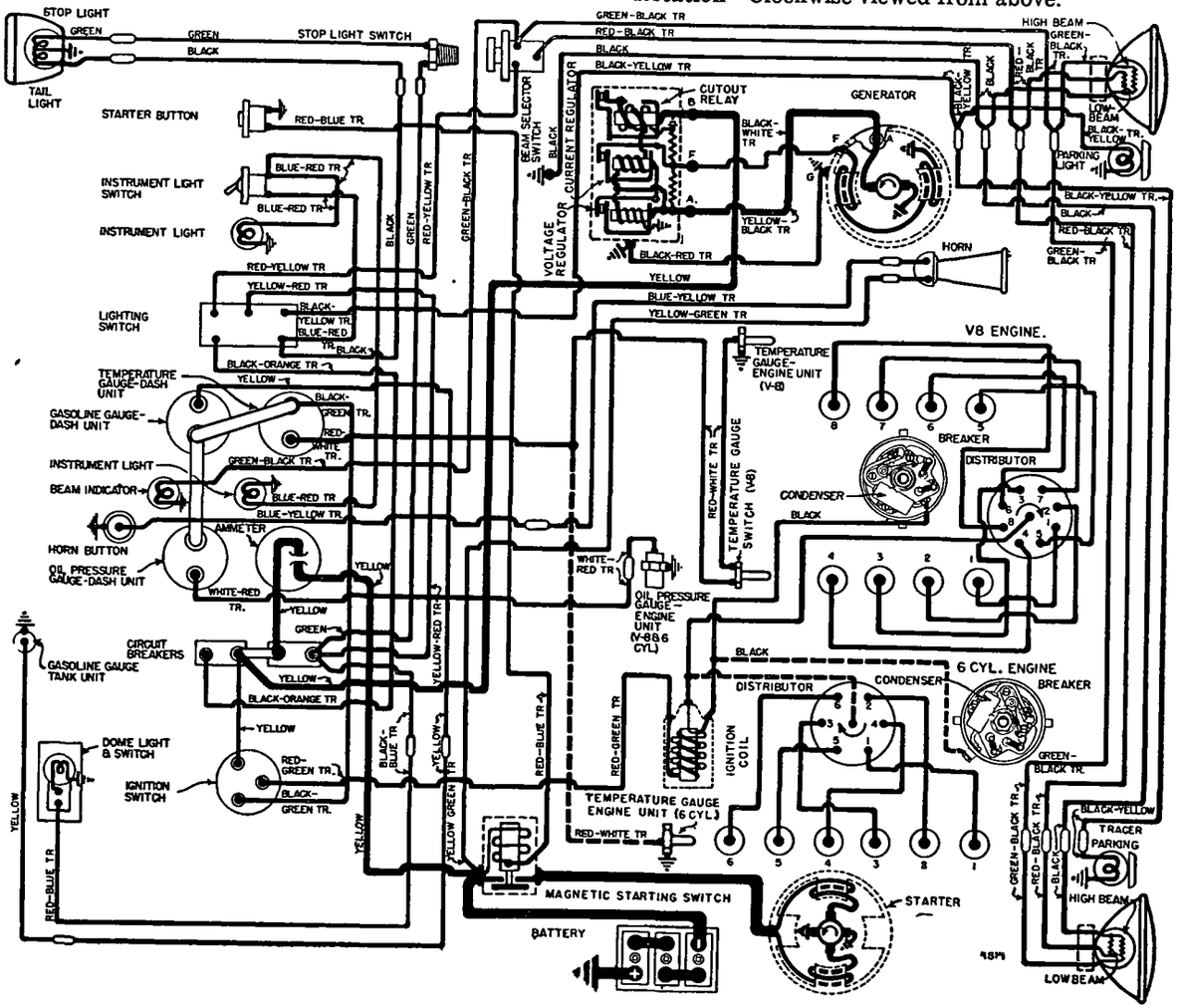

V8—Advance Performance
►(at Wide Open Throttle)

Distributor Degrees	Vacuum	R.P.M.	Engine Degrees	Vacuum	R.P.M.
0°	0"	200	0°	0"	400
1¼-2¼°	0.4"	500	2½-4½°	0.4"	1000
4¼-5¼°	1.7"	1000	8½-10½°	1.7"	2000
6¼-7¼°	2.85"	1500	12½-14½°	2.85"	3000
7½-8½°	3.7"	2000	15-17°	3.7"	4000

6 Cyl.—Advance Performance
►(at Wide Open Throttle)

0°	0"	200	0°	0"	400
1¾-3°	0.4"	500	3½-6°	0.4"	1000
5½-6¾°	1.4"	1000	11-13½°	1.4"	2000
11½-13°	5.5"	1000	23-26°	5.5"	2000
8½-9¾°	2.9"	1500	17-19½°	2.9"	3000
10½-11½°	4.1"	2000	21-23°	4.1"	4000

Distributor Removal: Disconnect vacuum line, take out hold-down screw, lift off. V8 distributor mounted at front of engine on right side. 6 Cylinder distributor mounted on left side of engine at center.

IGNITION TIMING

V8 Engine ..... 2° BTDC.
6 Cylinder ..... TDC.

Timing Marks—*See Tune-Up data.*
Timing—With #1 piston at firing position and timing mark aligned with pointer on front of engine, loosen distributor clamp screw, rotate distributor until contacts begin to open, tighten clamp screw. Check spark plug connections (see diagram), see that rotor opposite #1 terminal in cap.
Timing (with Neon Timing Light)—***CAUTION—Vacuum line must be disconnected to avoid vacuum advance operating.*** Mark timing mark and pointer with white chalk (6 cylinder equipped with two pointers —See Dampener Mark above). Connect timing light to #1 spark plug. Idle engine and adjust distributor (as directed above) until mark and pointer aligned when light flashes.

CARBURETOR

V8 Engine—Holley-Ford No. 7RT-9510-A
6 Cylinder—Holley-Ford No. 7HT-9510-A

Dual or double barrel (V8), single barrel (6 Cyl.) downdraft type with new vacuum passages for distributor operation.
See Carburetor Section for complete data.
NOTE—6 Cyl. Cab-over-Engine Trucks have 7HW-9510 Updraft type carburetor.
Settings (Idle Setting, Float Level, and Accelerating Pump): *See Tune-Up data.*
Metering Jets—*See Holley-Ford Jet Specification Table in Carburetor Section.*
Fast Idle: Integral type. Operated by choke valve lever. No adjustment required.

CARB. EQUIPMENT

Fuel Pump (V8—std.): Ford No. 7RA-9350-C.
6 Cyl. (std.)—Ford No. 7HA-9350-B.
V8 Optl. (fuel-&-vacuum)—Ford No. 7RA-9350-E.
Pressure—3½-4½ lbs. (V8), 4-5 lbs. (6 Cyl.).
See Carburetion Equipment Section for complete data.
Gasoline Gauge: King-Seeley Electric.
Dash Unit—Ford No. 7RC-9280 (all models).
Tank Unit (All Closed Cabs)—Ford No. 7RC-9275.
Tank Unit (F-1, 2, 3 Panels)—Ford No. 21C-9275B.
Tank Unit (F-4, 5, 6 Panels & Bus)—No. 7RT-9275.
See Carburetion Equipment Section for complete data.
Air Cleaner V8, & 6Cyl. C-O-E (oil bath): Ford No. 7RT-9600-C (1 quart capacity).
6 Cyl. exc. C-O-E (oil bath)—Ford No. 7HT-9600-A
Servicing (oil bath type)—Clean and re-fill sump (to level mark) with same grade oil used in crankcase at 1000 mile intervals. Occasionally wash filter in cleaning fluid.

BATTERY

Std.—Ford 81A-10655-A. 6 Volt, 17 Plate, 100 Ampere Hour Capacity (20 hour rate).
Zero Capacity—300 amperes for 3.3 minutes. Five Second Voltage—4.2 volts.
Grounded Terminal—Positive (+) terminal.
Dimensions—L. 10½". W. 7⅛". H. 7¼".
Location—At rear of engine on right side (V8), left side (6 Cyl.). On right running board under separate cover on Cab-Over-Engine trucks.
School Bus (Spec. Equip. Other Models): Ford No. 01A-10655-A. 6 Volt, 17 Plate, 120 Ampere Hour Capacity (20 hour rate).
Grounded Terminal & Location—As given above.

STARTER

V8 Engine.....**Ford Model 7RA-11002**
6 Cylinder (Early).....**Ford Model 7HA-11002-A①**
6 Cylinder (Late).....**Ford Model 7HA-11002-B②**
①—For use with B-11350 drive (10 tooth pinion).
②—For use with 7HA-11350 drive (9 tooth pinion).
Armature No.—Ford No. 18-11005.
►**Starter Motor Rusting Correction**—*See "Electrical System Notes" in Ford Shop Notes.*
Drive—10 Tooth Pinion Type (All V8, Early 6 Cyl.) Ford No. B-11350 (Bendix No. A1472) for use with 112 tooth flywheel ring gear.
Drive—9 Tooth Pinion Type (Late 6 Cyl.) Ford Part No. 7HA-11350 (with 114 tooth flywheel ring gear).
►***6 CYL. STARTER DRIVE CAUTION—Use proper type drive. Both 9 and 10 tooth pinions used as listed above.***
Rotation—Counter-clockwise at commutator end.
Brush Spring Tension—20-22 ounces.
Cranking Engine—100 RPM., 190-215 amperes.

Performance Data

Torque		R.P.M.	Volts	Amperes
4	ft. lbs.	1070	4.6	200
8	"	660	4.3	340
12	"	300	3.65	465
14	"	Lock	3.5	500

Starting Switch: Ford No. 21A-11450 Magnetic Switch mounted on front of dash next to battery (left side on 6 Cyl. Conventional Truck, right side all others) controlled by pushbutton, Ford No. 11C-11500.
Removal: On right front face of flywheel housing cover. To remove, take off right engine splash pan (if used), free starter-to-oil pan bracket, take out 2 starter through bolts.

GENERATOR

Ford Model No. 8BA-10002-A (less pulley & bracket.)
Armature No.—Ford No. 8BA-10005-A.
2 brush type with current and voltage regulation.
Charging Rate Adjustment—None. See Regulator.
Maximum Charging Rate—30 amperes, 7 volts. Controlled by regulator and dependent on load and battery condition.
To Check Generator Output—Connect ammeter in series with charging line at regulator "ARM" terminal, connect short insulated jumper between generator "A" and "F" terminals (to short out regulator). Run engine at approximately 1500 RPM. and note ammeter reading. If generator output equals or exceeds rate output (below) generator performance is satisfactory. Remove jumper.
►***CAUTION—Do not operate generator at higher speeds or in service with jumper connected between generator armature and field terminals. This jumper eliminates all regulator action.***

Performance Data

Amperes	Engine R.P.M.
30	1500

Rotation—Counter-clockwise at commutator end.
Brush Spring Tension—20-24 ozs.
Removal (V8): On support secured to valve chamber cover by stud and nut, driven by belt in tandem with water pumps. To remove, loosen stud nut and disengage generator belt, take out capscrew in mounting strap, lift generator off support.
Removal (6 Cyl.): Separate generator mounting bracket mounted on engine bracket on left side of engine at front. To remove, slack off belt by loosening mounting bracket bolts, take out mounting strap bolt, lift generator off mounting bracket.
Belt Adjustment (V8): Loosen 2 bolts on fan mounting bracket, loosen generator support mounting stud nut, raise generator up until side movement on belt midway between generator and water pump pulleys is ½" (thumb and finger pressure), tighten stud nut. Adjust fan belt in similar manner, tighten 2 fan bracket bolts.
Belt Adjustment (6 Cyl.): ½" deflection midway between generator and pump pulleys. To adjust, loosen 2 mounting bracket bolts under generator and capscrew in bracket slot behind generator.

REGULATOR

Regulator	Generator	Amperes
51A-10505-A or C.....	8BA-10002-A (Std.).....	30-33

Voltage-current 3-Unit types.
See Electrical Equipment Section for complete data.
NOTE—Ground wire between generator and regulator must be in place.

Cutout Relay

Cuts In—6.4-6.9 volts with engine at normal operating temperature.
Cuts Out—8 ampere discharge current (maximum).
Contact Gap—.010" (armature against upper stop).
Air Gap—.017" between armature and core with contacts open.

Voltage Regulator

Voltage Setting—7.0-7.5 volts with engine at normal operating temperature.
Checking & Adjustment—*See Elec. Equip. Section.*
Air Gap—.035" between armature and core with contacts just closed.
►***CAUTION—Make certain gauge contacts armature and not brass rivet on underside of armature.***
Contact Spring Tension—5 ounces minimum with contacts just opening.

Current Regulator

Current Setting—30-33 amperes with engine at normal operating temperature.
Checking & Adjustment—*See Elec. Equip. Section.*
Air Gap—.035" between armature and core with contacts just closed.
Contact Spring Tension—5 ounces minimum with contacts just closed.

LIGHTING

Headlamps: Ford "Sealed Beam" type.
See Electrical Equipment Section for complete data.
Adjustment—Aim upper beams straight ahead (hot spot centers 3" below lamp center height at 25 ft.).
Beam Indicator—Bulb between Fuel and Oil Gauges on panel. Lighted when Upper Beam in use.

C NTINUED ON NEXT PA E

C NTINUED FR M PRECEDING PAGE

Switches

Lighting—Ford No. 7RA-11654.
Beam Selector—Ford No. 7RA-13532.
Instrument—Ford No. 21C-13740.
Stop Light—Ford No. 11A-13480.

Bulb Specifications

Position	Candlepower	Mazda No.
Headlamps	Sealed Beam	4030
Parking	3	63
Instrument	1½	55
Beam Indicator	1	51
Dome (Panel & Del. Delvy.)	15	87
Stop & Tail	21-3	1154
Rear License (Panel)	3	63

MISC. ELECTRICAL

CIRCUIT BREAKERS: Ford No. 51A-12258-A. Consists of two circuit breakers behind instrument panel: **Top Unit** Headlights. **Lower Unit** Auxiliary Lights.
HORNS: Ford No. 7RC-13833. Single horn.
Horn Current—6-8 amperes.

ENGINE

6 CYLINDER 95 HORSEPOWER ROUGE 226

ENGINE SPECIFICATIONS: Own 7HT. Six cylinder, "L" head type.
Bore—3.30". **Stroke**—4.40".
Displacement—226 cu. ins. **Rated HP**—26.13.
Developed Horsepower—95 at 3300 RPM.
Compression Ratio—6.8-1 cast-iron head.
Compression & Vacuum Reading—*See Tune-Up data.*
TIGHTENING TORQUES: *See Ford Shop Notes.*
OTHER ENGINE DATA: *SEE 1949 FORD 6 CYLINDER PASSENGER CAR ARTICLE for Pistons, Piston Rings, Piston Pins, Connecting Rod, Crankshaft & Main Bearings, Camshaft, and Valves.*

ENGINE

V8 100 HORSEPOWER ROUGE 239

ENGINE SPECIFICATIONS: Own 8R. Eight cylinder, "L" head, 90° Vee type with both cylinder banks and crankcase cast Enbloc.
Bore—3.187". **Stroke**—3.75".
Developed Horsepower—100 at 3600 RPM.
Displacement—239 cu. ins. **Rated HP**—32.5.
Compression Ratio—6.8-1 cast-iron heads.
Compression & Vacuum Reading—*See Tune-Up data.*
TIGHTENING TORQUES: *See Ford Shop Notes.*
OTHER ENGINE DATA: *SEE 1949 FORD V8 PASSENGER CAR ARTICLE for Pistons, Piston Rings, Piston Pins, Connecting Rod, Crankshaft & Main Bearings, Camshaft, and Valves.*

VALVE TIMING

VALVE TAPPET CLEARANCE: V8 Engine. .010-.012" Int., .014-.016" Exh. Cold. No adjustment.
6 Cylinder—.013-.015" Cold, All Valves.
►**6 Cyl. High Speed Setting**—.002" additional exhaust valve clearance recommended by manufacturer.
SIX NOTE—Adjustable, self-locking tappet screws used.
Valve Timing: See Camshaft Setting.

SIX CYL. "H" ENGINE

Intake Valves—Open 11° BTDC. Close 41° ALDC.
Exhaust Valves—Open 48° BLDC. Close 10° ATDC.

V8 "R" ENGINE

Intake Valves—Open at TDC. Close 44° ALDC.
Exhaust Valves—Open 48° BLDC. Close 6° ATDC.
Valve Timing Check—Intake valve opens at TDC (V8), 11° BTDC (6 Cyl.). Valve timing mark location on crankshaft pulley (V8), dampener (6 Cyl.).

LUBRICATION

Engine Oiling System: Pressure to main bearings, connecting rod lower bearings, camshaft bearings. Timing gears and distributor drive gear lubricated through drilled hole in front end of camshaft on V8. Timing gears lubricated by spray past camshaft thrust plate on 6 cylinder engine.
►*OIL PAN CLEAN-OUT PLATE—On underside of oil pan, attached by 7 nuts. Remove to clean oil pump intake and screen, and oil pan.*
Crankcase Capacity—5 quarts (6 quarts when changing filter).
Normal Oil Pressure—50 lbs. at 2000 RPM.
Oil Pressure Relief Valve (6 Cyl.): In cylinder block just to rear of oil filter mounting. Not adjustable.
Spring Tension—12.62-12.88 ozs. at 1.14".
Oil Pressure Relief Valve (V8): In oil pump body.
Spring Tension—242-246 ozs. at 1.14".
V8 NOTE—Cylinder block oil relief valve not used.
Oil Pump (6 Cylinder): Rotor type. Mounted externally on right side of engine with drive gear at center of camshaft.
Oil Pump (V8 Engine): Gear type (two types: one equipped with spur gears, second helical gears). In crankcase at rear of engine.
Oil Filter: On 6 cylinder, mounted directly on block (no external oil lines) on left side at rear. On V8, mounted on left cylinder head. Replace cartridge every 5000 miles or more often if required.
Oil Filter Cartridge—Ford No. 01A-18662-A (No. 7HA-6731 for Purolator filter on some 6 Cyl. Engs.).
Oil Pressure Gauge: King-Seeley Electric.
Dash Unit—Ford No. 7RC-9273 (K-S #41360).
Engine Unit—Ford No. 41A-9278 (K-S #9530).
See Miscellaneous Section for complete data.
Crankcase Ventilation: Filter element in oil filler cap (inlet) with outlet pipe in rear valve chamber extending down on right side of 6 cylinder engine, or from top of engine down behind fan and out along left side of V8 engine.
V8 NOTE—Outlet pipe may be equipped with filter element just below upper elbow.
Servicing—Wash screen in cleaning fluid and wet with engine oil when dry every 2500 miles.

COOLING

Cooling System: Pressure type with relief valve in filler cap, by-pass in block, and belt-driven water pump (2 used on V8).
Capacity—18 quarts (6 Cyl.), 23 quarts (V8).
Pressure Valve—In radiator filler cap. Ford Nos. 41A-8100-B (with knurled edge) or 41A-8100-A (flange type grip—use with 51A-8138 radiator cap gasket). Opens at 3½-4½ lbs.
Water Pump (6 Cylinder): Centrifugal, belt-driven, packless type. Shaft mounted on sealed duplex ball bearing. No lubrication required.
See Water Pump Section for complete data.
Belt Adjustment—*See GENERATOR.*
Water Pumps (V8 Engine): Two used. Centrifugal, belt-driven, packless type. Shaft mounted on prepacked ball-bearing at front, and a bushing next to seal. Oil cup provided for bushing lubrication.
See Water Pump Section for complete data.
►*CAUTION—V8 WATER PUMP LUBRICATION: Fill oil cup in pump with SAE #20 engine oil every 1000 miles. When oiling new pump insert piece of wire down alongside wick in oiler to permit air to escape from cavity.*
Belt Adjustment—*See GENERATOR.*
Thermostat: In cylinder head water outlet (2 on V8). Ford No. 7HA-8575-A (6 Cyl.), 8RT-8575-A (V8). Two makes: Standard-Thompson or Fulton-Sylphon.
Setting (6 Cyl.)—Starts to open 157-162°F.
Setting (V8 Eng.)—Starts to open 148-153°F.
Temperature Gauge: King-Seeley Electric.
Dash Unit—Ford No. 7RC-10883 (K-S #41370).
Engine Unit—Ford No. 99A-10884 (K-S #7000).
Temp. Switch (V8 only)—Ford No. 01A-10990 (K-S No. 8355) in left cylinder head.
See Miscellaneous Section for complete data.

CLUTCH

Long Model 10CF-TI (F-1 with 3 spd. Transmission). Long Model 11CF-CI (All Other Models). Semi-centrifugal, single plate, dry disc types.
See Clutch Section for complete data.
Facings (10CF)—Moulded. 10" O.D. .125" thick.
Facings (11CF)—Woven (School Bus), Moulded (Others). Outside Diameter 11". Thickness .137".
Pedal Adjustment: 1-1¼" (F-1 with 3 spd. Trans.), 1½-1¾" (All Others) pedal free travel. Adjusting clevis provided at forward end of connector rod between pedal shaft and equalizer shaft.
Removal: Remove transmission (see TRANSMISSION Removal below). Install wooden wedges between each release lever and cover to hold clutch in released position, take out 6 cover capscrews, lift assembly out. NOTE—Flywheel housing may have to be removed on some models.

TRANSMISSION

3-SPEED TYPE

Own Make. 3-speed, all helical gear type. Constant-mesh, synchro-mesh (Second & High), sliding gear (Low & Reverse).
See Transmission Section for complete data.
NOTE—This transmission standard on F-1 Series. Heavy Duty 3-speed or 4-speed transmissions Optl.
Removal: Remove propeller shaft by disconnecting rear universal and sliding shaft out of transmission. Disconnect clutch linkage and speedometer cable. Remove front floor plate. Remove nuts and washers from two engine rear support bolts. Raise rear end of engine (use block of wood on jack under engine) until rear support clears mounting bolts. Remove transmission mounting capscrews, pull transmission straight back until main drive gear shaft clears clutch, lift transmission out through floor opening.

TRANSMISSION

HEAVY DUTY 3-SPEED TYPE

Own Make. Heavy duty, 3-speed. Helical gear, constant-mesh, synchro-mesh (Second & High). Sliding spur gear (Low & Reverse).
See Transmission Section for complete data.
NOTE—This transmission standard on F-2, F-3 Series, optional on F-1, F-4, F-5.
Removal: Same as for 4-Speed type following.

TRANSMISSION

4-SPEED TYPE

Own Make. 4-speed, sliding spur gear type.
See Transmission Section for complete data.
NOTE—This tranmission standard on F-4, F-5, F-6 Series, optional on F-1, F-2, F-3.
Removal: Remove seat cushion, floor mat, and transmission cover on floor. Support engine with jack under flywheel housing (use wood block on jack), raise jack until engine weight is off rear mounting. Free coupling shaft support bearing from crossmember by removing nuts on two bolts, disconnect

front universal joint by taking out four bolts mounting universal joint flange at hand brake drum and disconnect intermediate universal joint at support bearing by removing nuts on "U" bolts (tape bearing caps in place to prevent losing needle bearings), remove front shaft. Remove clutch equalizer shaft by taking out pin in clutch shaft and clevis pin at lever and pulling equalizer shaft off the bracket (CAUTION—Do not lose spring and bushing halves). Remove two bolts in engine rear support. Disconnect speedometer shaft at transmission. Remove transmission capscrews from flywheel housing, pull transmission straight back until clutch (main drive gear) shaft clears, then lift transmission out through floor opening.

NOTE—To remove brake assembly, take out 2 capscrews in hand brake lever sector on transmission case and two capscrews in brake adjusting screw bracket, disconnect hand brake link from transmission and anchor adjusting screw from brake band, remove brake band assembly and hand brake lever.

UNIVERSALS

Spicer. Needle bearing type, two used (Series F-1, and F-5, F-6 C-O-E 110"), three used with slip joint at forward end of rear shaft behind coupling shaft support bearing (All Others).

SERIES F-1 NOTE—Propeller shaft is one-piece type with slip joint provided by front universal yoke sliding on splined drive shaft in transmission.

See Universals Section for complete data.

Spicer Model Nos.

Series	Front	Center	Rear
F-1①	1278-102X	None	1278-102X
F-1②	1311-102X	None	1318-105X
F-2, F-3	1318-103X	1311-102X	1318-103X
F-4, F-5, F-6	1358-54X	1351-5107X	1358-5104X
F-5, F-6 110"	1351-517X	None	1358-5104X
F-5 194"	1358-514X	1351-5107X	1358-5107X

①—3-Speed Transmission. ②—4-Speed Trans.

Coupling Shaft Center Bearing: Consists of cushion mounted ball bearing bolted to underside of frame intermediate cross-member. Bearing is mounted on end of coupling shaft in a sleeve with felt retainer sleeve on each end and bearing baffle on front end.

REAR AXLE

F-1 SERIES—SEMI-FLOATING HYPOID TYPE

Own Make. Semi-floating, Hypoid Gear type with Hotchkiss drive (**separate carrier not used**). Axle ends flanged (no separate hub). Wheel bearings are sealed-ball pre-lubricated (no lubrication required).

►***NOTE—AXLE NOT SAME AS USED ON FORD CAR.***

See Rear Axle Section for complete data.

Ratio (Standard)—3.73-1 (41-11).

Ratio (Optional)—4.27-1 (47-11).

Backlash—.003-.006". Shim adjustment.

Removal: Raise rear of truck. Disconnect rear universal. Remove axle shafts (see instructions below). Disconnect brake line at "T" on left side of axle housing, and hand brake cable. Remove nuts on rear spring "U" bolts, drive bolts up free of housing, lower axle assembly and remove from underneath

Axle Shaft Removal: Remove wheel. Take off drum. Remove 4 axle retainer nuts (work through opening in axle shaft flange). Use Puller No. 4235 and pull shaft (do not disturb brake backing plate or damage wheel bearing oil seal).

Wheel Bearing Adjustment: None. Pre-lubricated sealed ball-bearings.

REAR AXLE

F-2, 3, 4, 5 SERIES—FULL-FL ATIN TYPE

Own Make. Full-floating, Spiral Bevel Gear type with Hotchkiss drive.

See Rear Axle Section for complete data.

Ratios:	Standard	Optional
F-2, F-3	4.86-1 (34-7)	4.11-1 (37-9)
F-4	5.14-1 (36-7)	5.83-1 (35-6), 6.67-1 (33-5)
F-5	6.67-1 (33-5)	5.83-1 (35-6), 5.14-1 (36-7)

Backlash—.004-.018".

Removal: Raise rear end of frame, remove axle shafts (see below), wheel and drum assemblies. Disconnect hydraulic brake line at each wheel and hose at bracket (bleed brake lines when re-connected). Remove backing plate assemblies. Disconnect rear universal. Remove nuts on rear spring "U" bolts, drive bolts up free of housing, lower axle assembly and remove from underneath truck.

Axle Shaft Removal: Remove hub cap, remove nuts on 8 hub studs holding axle shaft flange in place, turn 2 special screws (in tapped holes in flange) up evenly to break flange loose from hub, **back these screws out**, strike axle shaft flange at center to loosen centering cones on studs, remove cones, pull axle shaft out (wheel not disturbed).

Wheel Bearing Adjustment: Remove axle shaft (see above), use special bearing adjustment wrench and remove bearing locknut (outer nut), and lockwasher. Adjust bearings by turning bearing adjusting nut (inner nut) up until tight and then backing nut off ⅛ turn. Install bearing lockwasher making certain that it fits over dowel pin on adjusting nut, install bearing locknut and turn this nut up tight. NOTE—When installing axle shaft make certain that gasket in place under shaft flange, cones in place on studs and that two loosening screws backed off sufficiently so that stud nuts can be tightened securely. Turn two loosening screws in just enough to prevent loosening in service.

REAR AXLE

TWO-SPEED TYPE—STD. F-6 SERIES, OPTL. F-5 SERIES

Own Make. Vacuum Operated Shift, Two-speed, Full-floating, Spiral Bevel Gear (final drive), spur gear planetary unit (reduction gearing) with Hotchkiss drive.

See Rear Axle Section for complete data.

Ratio—5.83-1 (Direct Drive), 8.11-1 (2nd Speed).

Backlash—.004-.018".

Removal: Same as for standard axle (above) after disconnecting vacuum line at hose connection.

SHOCK ABSORBERS

Houde (Houdaille). Direct acting, hydraulic type.

►***Shocks are sealed (cannot be refilled or repaired).***

F-1, F-2, F-3—Ford No. 7RC-18045-B, Houde No. H-160 (Front). 7RC-18080-B, Houde H-170 (Rear).

F-4, F-5, F-6 NOTE—Houde rotary type shocks optional equipment for front end only (Ford No. 8T-18045 Right, No. 8T-18046 Left). These shocks are adjustable and can be refilled.

See Shock Absorber Section for complete data.

FRONT SUSPENSION

Front Axle—Conventional "I" beam section with Reverse Elliott ends and semi-elliptic springs.

Kingpin Inclination—7° crosswise.

Caster—1° minimum, to 3½° maximum. Both wheels should be equal within ½°.

NOTE—Caster angle controlled by wedge shims inserted between axle pads and springs. To increase caster, insert taper wedge shims equally at both sides (make certain spring tie bolt passes through hole in wedge so wedge held securely in place).

Camber—¼° minimum, to 1° maximum. Right wheel must never exceed Left wheel. Axle may be bent cold to correct Camber providing proper tools used to prevent crushing axle flange.

Toe In—1/16". Set at 1-10 ratio to Camber. Toe In increases with load and should be set with truck empty. To adjust, loosen clamp bolts, turn tie rod.

STEERING GEAR

F-1, F-2, F-3—Ford No. 7RC-3504.

F-4, F-5, F-6—Ford No. 7RT-3504.

F-5 & F-6 C-O-E—Ford No. 7RW-3504-B.

Worm-and-Roller types with "push-pull" adjustment. Gemmer 305 & 335 design. See Gemmer.

See Steering Gear Section for complete data.

BRAKES

F-1 SERIES

Service—F-1: Ford-Bendix Hydraulic, Duo-Servo, Single Anchor type without eccentric adjustment. Hand lever applies rear wheel service brakes.

See Brake Section for complete data.

Wheel Cylinders—Diameter: Front wheel 1.0655" (hone limit 1.0675"). Rear 1.003" (hone limit 1.005").

Drums—11" composite (cast iron and steel).

Lining—Molded or woven. Width 2". Thickness 3/16". Length per shoe: 11 29/32".

Clearance—.010" at each end of secondary shoe with primary shoe forced out against drum (adjusting screw in each wheel backed off 14 notches or "clicks" from point where shoes drag on drum).

Hand Brake: See Service Brakes (above).

BRAKES

F-2, F-3, F-4, F-5, F-6 SERIES

Service—F-2 (All Wheels), F-3 (Front): Ford-Lockheed Hydraulic, **self-centering**, double anchor type. Hand lever applies rear wheel service brakes.

F-3 (Rear Wheels), F-4, 5, 6 (All Wheels)—Ford-Lockheed Hydraulic, double anchor type. Hand lever applies rear wheel service brakes (F-3), independent shaft brake at transmission (F-4, F-5, F-6).

See Brake Section for complete data.

Wheel Cylinders—Diameters: **F-2 All Wheels, F-3 Front** 1.378" (hone limit 1.382") forward shoe, 1.003" (hone limit 1.005") reverse shoe. **F-3 Rear Wheels; F-4, F-5, F-6 Front Wheels** 1.378" (hone limit 1.382"). **F-4, F-5, F-6 Rear Wheels** 1.503" (hone limit 1.507").

Drums—Diameters: 12" F-2 All, F-3 Front. 14" F-3 Rear, F-4, 5, 6 Front. 15" F-4, 5, 6 Rear Wheels.

Lining—Molded type (all shoes).

Wheels				Shoe Lgth.	
Front	Rear	Width	Thick.	Pri.	Sec.
F-2, 3	F-2	1 23/32"	3/16"	13 1/2"	10 3/8"
F-4, 5, 6	F-3	2"	1/4"	15 17/32"	10 3/4"
——	F-4, 5, 6	3½"	5/16"	16 21/32"	11 9/16"

Clearance—Least possible amount without drag.

Hand Brake (F-3): Hand lever applies rear wheel service brakes. See Service Brakes above.

Hand Brake (F-4, F-5, F-6): Independent external contracting band on drum at rear of transmission.

Adjustment—***See Ford Shop Notes.***

Drum Diameter—7.81".

Lining—Woven type. Width 2.5". Thickness .25". Length 24.6".

HOOD LOCK: Pull T-handle under edge of instrument panel on left side, push back on safety catch under front edge of hood, raise hood, prop open with support rod located on plate ahead of radiator.

HOOD ALIGNMENT & RADIATOR GRILLE REMOVAL: *See Ford Shop Notes.*

MODEL IDENTIFICATION

VEHICLE NUMBER: Stamped on plate attached to engine side of dash and on top of right frame side rail just to rear of front suspension upper control arm.

TUNE-UP

COMPRESSION PRESSURE: 110 lbs. at cranking spd.

VACUUM READING: Steady 18-21" idling at 500 RPM.

FIRING ORDER: 1-5-3-6-2-4. See diagram.

SPARK PLUG GAPS: .030". Limits .029-.032".

Plug Type—Champion H-10. 14 mm.

IGNITION: *See Coil, Condenser, and Distributor.*

Breaker Gap—.024-.026".

Cam Angle or Dwell—36° closed, 24° open.

Breaker Arm Spring Tension—17-20 ounces.

Advance Performance—*See Distributor.*

IGNITION TIMING: TDC.

Timing Procedure—*See Ignition Timing.*

Dampener Mark—Circular boss or groove (depending on type of dampener used). 2 pointers on front engine cover. *Use pointer nearest to outer circumference of dampener for proper timing.*

CARBURETION: *See Carburetor & Carb. Equipment.*

Idle Setting—Approx. 1 turn open. One screw—turning screw out gives richer mixture.

Idle Speed—Approximately 500 RPM.

Float Level—1.322-1.353" bottom of float to underside of bowl cover with needle valve seated (use Gauge No. 9550-A).

Accelerating Pump—Center hole average setting. Inner hole for hot weather, Outer for cold weather.

Fuel Pump Pressure—4-5 lbs.

MANIFOLD HEAT CONTROL: Automatic thermostatic type. Valve should be closed (counterweight arm against stop pin) with engine cold and should operate freely).

VALVE TAPPET CLEARANCE: .013-.015" Cold, All Valves.

►**High Speed Setting**—.002" additional exhaust valve clearance recommended by car manufacturer.

►*ADJUSTABLE SELF-LOCKING TAPPET SCREWS*

Valve Timing Check—*See Valve Timing.*

STARTING: *See Battery, Starter, Generator, Regulator.*

IGNITION

IGNITION SWITCH: Ford No. 6A-11572-A (Mitchell type), No. 6A-11572-B (Briggs & Stratton type).

Ignition Lock—Ford No. 8A-11582-A.

COIL: Ford No. 7RA-12029-A. Can type.

Location—On left side of engine above distributor.

Ignition Current—Approx. 5.2-5.7 amperes at 6 volts, stopped. Primary current resistance 1.05-1.15 ohms (75°F.).

CONDENSER: Ford No. 7RA-12300-B.

Capacity—.21-.25 microfarad.

DISTRIBUTOR: Ford No. 7HA-12127 (Less Cap and Rotor). New "Pressure" distributor with spark advance controlled by vacuum diaphragm moving breaker plate to advance spark against two breaker plate springs. Operating vacuum taken from 1 carburetor connection (2 passages inside carburetor, 1 at venturi, 1 at throttle valve). Full spark advance obtained at 18-35 MPH. with normal road load or for part throttle operation at any speed.

►*NOTE—Distributor angle-mounted on left side of engine and shaft splined to oil pump drive gear.*

Breaker Gap—.024-.026".

Cam Angle—36° closed, 24° open.

Breaker Arm Spring Tension—17-20 ounces.

Rotation—Clockwise viewed from above.

Advance Performance
►(at Wide Open Throttle)

Distributor			Engine		
Degrees	Vacuum	R.P.M.	Degrees	Vacuum	R.P.M
0°	0"	200	0°	0"	400
1¾-3°	0.4"	500	3½-6°	0.4"	1000
5½-6¾°	1.4"	1000	11-13½°	1.4"	2000
11½-13°	5.5"	1000	23-26°	5.5"	2000
8½-9¾°	2.9"	1500	17-19½°	2.9"	3000
10½-11½°	4.1"	2000	21-23°	4.1"	4000

Distributor Removal: Mounted on left side of engine at center. To remove, disconnect vacuum line, take out hold-down screw in timing arm, lift off.

IGNITION TIMING

Std. Setting ..... **at TDC.**

Dampener Mark—Circular boss or groove (depending on type of dampener used). 2 pointers on front engine cover. *Use pointer nearest to outer circumference of dampener for proper timing.*

Timing—With #1 piston at firing position and timing mark aligned with pointer on front of engine, loosen clamp screw on timing arm, rotate distributor until contacts begin to open, tighten clamp screw. Check spark plug connections (see diagram), see that rotor opposite #1 terminal in cap).

►**Timing (with Neon Timing Light)**—*CAUTION—Vacuum line must be disconnected to avoid vacuum advance operating.* Mark proper timing pointer (see Dampener Mark above) and dampener mark with white chalk. Connect timing light to #1 spark plug. Idle engine and adjust distributor (as directed above) until mark and pointer aligned when light flashes.

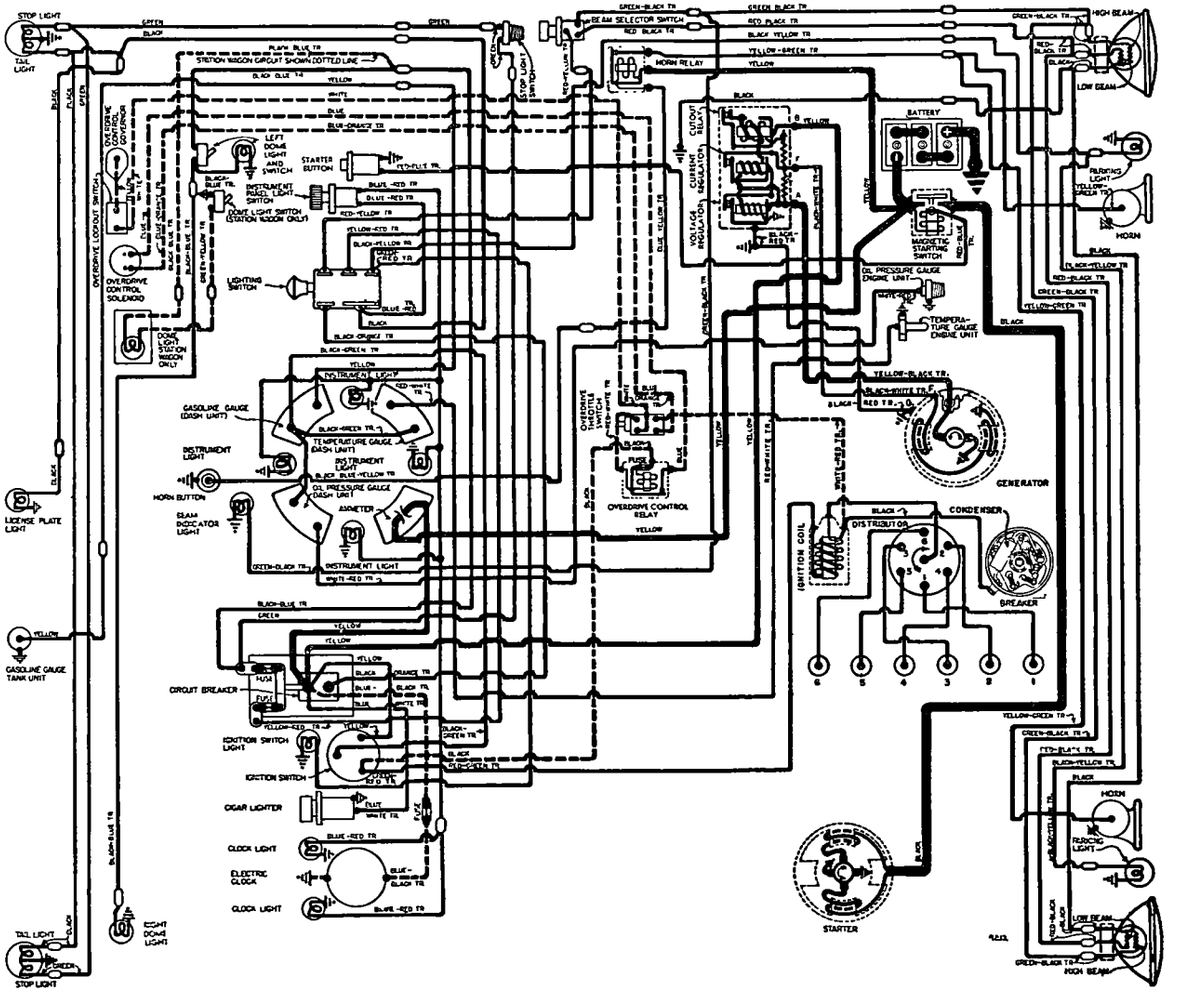

CARBURETOR

Holley-Ford No. 8HA-9510-A. Single barrel downdraft type with new vacuum passages for distributor operation.

See Carburetor Section for complete data.

Settings (Idle Setting, Float Level, and Accelerating Pump): *See Tune-Up data.*

Metering Jets—*See Holley-Ford Jet Specification Table in Carburetor Section.*

Fast Idle: Integral type. Operated by choke valve lever. No adjustment required.

CARB. EQUIPMENT

Fuel Pump (std.): Ford No. 7HA-9350-B.

Optl. (Fuel-&-Vacuum)—Ford No. 8HA-9350.

Pressure—4-5 lbs.

See Carburetion Equipment Section for complete data.

Gasoline Gauge: King-Seeley Electric.

Dash Unit—Ford No. 8A-9280 (K-S #42285).

Tank Unit (All exc. Sta. Wagon)—Ford No. 99A-9275-B (K-S #7540).

Tank Unit (Station Wagon)—Ford No. O1A-9275-A (K-S #7748).

See Carburetion Equipment Section for complete data.

Air Cleaner (std. —oil-wetted): Ford No. 8HA-9600-A.

Optl. (oil bath)—Ford No. 8HA-9600-B1 (1 pint capacity), 8HA-9600-B4 (1 quart capacity).

Servicing (oil-wetted type)—Wash filter assembly in cleaning fluid and re-oil when dry every 1000 miles.

Servicing (oil bath type)—Clean and refill sump (to level mark) with same grade oil used in crankcase at 1000 mile intervals. Occasionally wash filter in cleaning fluid.

BATTERY

Ford No. 81A-10655-A. 6 Volt, 17 Plate, 100 Amp. Hr.

Zero Capacity—300 amperes for 3.3 minutes. Five Second Voltage—4.2 volts.

Grounded Terminal—Positive (+).

Location—On left side in engine compartment.

Dimensions—L. 10½". W. 7⅛". H. 7¼".

STARTER

Ford Model No. 7HA-11002. Armature No. 18-11005.

►**Starter Motor Rusting Correction**—*See "Electrical System Notes" in Ford Shop Notes.*

Drive—Ford No. 7HA-11350. New 9 tooth pinion type for use with 114 tooth flywheel ring gear.

Rotation—Counter-clockwise at commutator end.

Brush Spring Tension—20-22 ounces.

Cranking Engine—100 RPM., 190-215 amperes.

Performance Data

Torque	R.P.M.	Volts	Amperes
4 ft. lbs.	1070	4.6	200
8 "	660	4.3	340
12 "	300	3.65	465
14 "	Lock	3.5	500

Starting Switch: Ford No. 21A-11450 Magnetic Switch mounted on left front fender apron and controlled by panel pushbutton switch Ford No. 6H-11500.

Removal: On right front face of flywheel housing cover. To remove, take off right engine splash pan (if used), free starter-to-oil pan bracket, take out 2 starter through bolts.

GENERATOR

Ford No. 8BA-10002-A (less pulley and bracket).

Armature No.—Ford No. 8BA-10005-A.

2 brush type with current and voltage regulation.

Charging Rate Adjustment—None. See Regulator.

Maximum Charging Rate—30 amperes, 7 volts, reached at approximately 20 MPH. Controlled by regulator and dependent on load and battery condition.

To Check Generator Output—Connect ammeter in series with charging line at regulator "ARM" terminal, connect short insulated jumper between generator "A" and "F" terminals (to short out regulator). Run engine at approximately 1500 RPM. and note ammeter reading. If generator output equals or exceeds rate output (below) generator performance is satisfactory. Remove jumper.

►*CAUTION—Do not operate generator at higher speeds or in service with jumper connected between generator armature and field terminals. This jumper eliminates all regulator action.*

Performance Data

Amperes	Engine R.P.M.
30	1500

Rotation—Counter-clockwise at commutator end.

Brush Spring Tension—20-24 ozs.

Removal: Separate generator mounting bracket mounted on engine bracket on left side of engine at front. To remove, slack off belt by loosening mounting bracket bolts, take out mounting strap bolt, lift off generator.

Belt Adjustment: ½" deflection midway between generator and pump pulleys. To adjust, loosen 2 mounting bracket bolts under generator and capscrew in bracket slot behind generator.

REGULATOR

Ford Numbers

Regulator	Generator	Amperes
51A-10505-A or C	8BA-10002-A (Std.)	30-33

Voltage-current 3-Unit types.

See Electrical Equipment Section for complete data.

NOTE—Separate ground wire extending to cowl must be in place when generator operated.

Cutout Relay

Cuts In—6.4-6.9 volts with engine at normal operating temperature.

Cuts Out—8 ampere discharge current (maximum).

Contact Gap—.010" (armature against upper stop).

Air Gap—.017" between armature and core with contacts open.

Voltage Regulator

Voltage Setting—7.0-7.5 volts with engine at normal operating temperature.

Checking & Adjustment—*See Electrical Equip. Section.*

Air Gap—.035" between armature and core with contacts just closed.

►*CAUTION—Make certain gauge contacts armature and not brass rivet on underside of armature.*

Contact Spring Tension—5 ounces minimum with contacts just opening.

Current Regulator

Current Setting—30-33 amperes with engine at normal operating temperature.

Checking & Adjustment—*See Electrical Equip. Section.*

Air Gap—.035" between armature and core with contacts just closed.

Contact Spring Tension—5 ounces minimum with contacts just opening.

LIGHTING

Headlamps: Ford "Sealed Beam" type.

See Electrical Equipment Section for complete data.

Adjustment—Aim upper beams straight ahead (hot spot centers 3" below lamp center height at 25 ft.).

Beam Indicator—Bulb between 50 and 60 on speedometer. Lighted with Upper Beam "on".

Direction Signal: Optl. *See Electrical Equipment Section.*

Direction Indicators—Right and Left indicators on lower edge of speedometer.

Direction Signal Flasher—Ford No. 8L-13350-B.

Switches

Lighting—Ford No. 7RA-11654.

Beam Selector—Ford No. 7RA-13532.

Instrument—Ford No. 21C-13740.

Dome Light—Ford No. 8A-13752.

Dome Light (Sta. Wagon)—Ford No. 8M-13752-A.

Door Switches (Optl.)—Ford No. 8M-13713.

Stop Light—Ford No. 11A-13480.

Bulb Specifications

Position	Candlepower	Mazda No.
Headlamps	Sealed Beam	4030
Parking (no Dir. Sig.)	3	63
Front Dir. Sig. & Park	21-3	1154
①All Instrument	1½	55
Beam & Dir. Sig. Indicators	1	51
②Stop & Tail	21-3	1154
Dome & Trunk	6	81
Dome (Station Wagon)	6	82
Courtesy (Optl.)	6	82
Rear License	3	63

①—With "Black Light" Filters No. 8A-13593.

②—Rear Direction Signal flashes Stop Light.

MISC. ELECTRICAL

CIRCUIT BREAKERS: Lighting (Headlights)—Ford No. 8A-12258-A. On bracket behind instrument panel together with two lighting fuses (see wiring diagram).

Convertible Top—Ford No. 51A-12250-A. 30 ampere. On hydraulic pump motor or on front of dash near convertible top control switch.

FUSES: Auxiliary Lights (Parking, Tail & Instrument)—14 ampere. On circuit breaker bracket behind instrument panel (see wiring diagram).

Dome & Stop Lights—14 ampere. Next to fuse listed above.

Clock—2 ampere. In clock feed wire.

Overdrive—30 ampere. On ignition terminal of overdrive relay (on dash under hood).

Direction Signal—15 ampere. In feed from ignition switch to flasher.

HORNS: Ford No. 51A-13832-A or B (High Pitch, Right Horn), No. 51A-13833-A or B (Low Pitch, Left Horn). Dual horns operated by relay. NOTE—"A" horns are 4.28" high, "B" horns are 4.14". Horns marked "HI" or "LO" on air columns.

Air Gap—.027-.029" for high pitch (right horn), .032-.034" for low pitch (left) for Sparks-Withington. NOTE—Air Gap for Auto-Lite type horns .040" HI, .050" LO.

Horn Current—13 amperes (high pitch), 14 (low).

Horn Relay: Ford No. 7RA-13853-B. On dash.

►*CAUTION—Use only Ford type relay No. 7RA-13853-B with TAN plastic cover. If Mercury relay No. 7RA-13853-A with Black plastic cover installed, shock at button may result when blowing horn.*

Contact Gap—.015-.025".

Contact Closing Voltage—4 volts max.

C NTINUED ON NEXT PAGE

C NTINUED FR M PRECEDIN PA E

ENGINE

ENGINE SPECIFICATIONS: Own 8HA. Six cylinder, "L" head type.
Bore—3.30". **Stroke**—4.40".
Displacement—226 cu. ins. **Rated HP**—26.13.
Developed Horsepower—95 at 3300 RPM.
Compression Ratio—6.8-1 cast iron head.
Compression & Vacuum Reading—*See Tune-Up.*

TIGHTENING TORQUES: *See Ford Shop Notes.*

CYLINDER HEAD AND GASKET INSTALLATION: *See "Cylinder Head" in Ford Shop Notes.*

►**CYLINDER HEAD STUD CHANGE:** *See "Cylinder Head" in Ford Shop Notes.*

CYLINDER SLEEVE: Cast iron dry type cylinder sleeves furnished for replacement service.

PISTONS: 4-ring (all above pin), flat head, aluminum alloy, steel strut, U-slot, cam ground type.
Weight—17.35 ozs.
Removal—Pistons and rods removed from above.
Clearance—See Fitting Pistons.

Replacement Pistons: Standard size and .0025", .005", .020", .030", .040", and .060" Oversize.

Fitting Pistons: Use ½" wide feeler inserted between piston and cylinder wall at right angles to pin. Feeler thickness .002" for New Piston in New Bore, .004" for New Piston in Worn Bore or Worn Piston in New or Worn Bore. Pull to withdraw feeler 6-10 lbs.

PISTON RINGS: 2 compression, 2 slotted oil rings, all above pin. Upper oil ring groove drilled with oil drain holes, lower ring groove slotted.

Ring	Width	End Gap	Side Clearance
Compr. (#1)	.093"	.012-.017"①	.0015-.0035"②
Compr. (#2)	.093"	.012-.017"①	.001-.004"③
Oil (#3, 4)	.186"	.012-.017"①	.001-.004"③

Worn Limits—① .035", ② .0045", ③ .005".

Replacement Rings: Snap type ring sets furnished std. size and .020", .030", .040", .060" Oversize.

PISTON PIN: Diameter .8504" (maximum). Floating type (lock ring in piston at each end). Pin hole in connecting rod bronze-bushed.
Pin Fit in Piston—.0003" (new), .0015" (worn limit).
Pin Fit in Rod Bushing—.0002-.0005" (new), .0015" (worn limit).

Replacement Pins: Sizes and paint marks: Std. (green), .001" Oversize (blue), .002" Oversize (yellow).

CONNECTING ROD: Length 8¼". **Weight** 29.0 ozs.
Crankpin Journal Diameter—2.2988". Maximum wear limits—Out-of-round .0015", Taper .001".
Lower Bearing—Removable, steel-backed, copper-lead alloy lined, locked in type. No shims. Upper and lower halves interchangeable.
Clearance—.000-.0025" (new), .005" (worn limit).
►***NOTE—Replace bearing shells less than .0593" thick.***
Sideplay—.006-.014" (new), .017" (worn limit).

Bearing Adjustment: None (no shims). Do not file caps. Replace bearings. Tang on bearing must engage groove in rod and cap.
PALNUT NOTE—Tighten finger tight plus 1/3 turn.

Replacement Bearings: Standard size and .002", .010", .020", .030", .040" Undersize.

CRANKSHAFT: 4 bearing, integral counterweights.
Vibration Dampener—Viscous or rubber type.
Journal Diameters—2.8740" (all bearings). Max. wear limits—Out-of-round .0015", Taper .001".
Bearings—Steel-backed, copper-lead alloy lined, replaceable shells. Upper and lower halves alike.
Clearance—.0009-.0032" (new), .0052" (worn limit).
►***NOTE—Replace main bearing shells less than .0938" thick.***

Bearing Adjustment: None (no shims). Do not file caps. Replace bearings. Tang on bearing must engage groove in block and cap.

Replacement Bearings: Std., .002", .020", .030" U. S.

End Thrust: Taken by rear main bearing. Adjust by replacing bearing if endplay excessive.
Endplay—.003-.006" (new), .008" (worn limit).

CAMSHAFT: Four bearing with helical gear drive. Gear at center of shaft for oil pump & distributor drive.
Bearing Diameter—1.9285" (replace bearing if diameter greater than worn limit 1.9315").
Bearings—Steel-backed, babbitt lined bushings.
Clearance—.001-.002".

Replacement Bearings: Three sizes as follows:
1—Std. size on both inside and outside diameter.
2—Std. on I.D., .080" Oversize on O.D.
3—.015" Undersize on I.D., std. size on O.D.

End Thrust: Thrust plate bolted to front of block behind camshaft hub (hub keyed on front end of shaft).

Timing Gears: Helical cast aluminum camshaft gear bolted on hub on camshaft, cast alloy iron crankshaft gear.
Replacement Camshaft Gears—Std., .006", .012" OS.

Camshaft Setting: Mesh marked tooth of crankshaft gear with marked space on camshaft gear.

VALVES:	Head Diam.	Stem Diam.	Stem Clearance
Intake	1.65"	.3410"①	.001-.0031"②
Exhaust	1.51"	.3405"③	.0015-.0035"④

	Seat Angle	Lift
All Valves	45°	.350"

Worn Limits (Stem Diam.)—① .3385", ③ .3375"
Worn Limits (Clearance)—③ .0046", ④ .006"

►***NOTE—Valves are straight-stemmed type operating in one-piece valve guides.***
Valve Seat Inserts—Used for exhaust valves.

Valve Guides: One-piece type pressed in block.
Removal: Use special tool 6510-0 to remove guides.
Installation—Upper end of guide 1.18" Intake, 1.08" Exhaust below top face of block. Install with stepped end down. Use tool 6510-N to drive guides in place.

Valve Lifters: Mushroom type with self-locking adjusting screws. Removable from below with camshaft out.
Diameter—.6240" (replace if worn to less than wear limit of .6225").
Clearance—.0005-.0015" (new) .003" (worn limit).

Valve Springs: Coated springs used. Install springs with closely spaced coils toward top (against block).
Spring Test—47-53 lbs. at 2.109". Free length 2.50".

VALVE TIMING

Tappet Clearance: .013-.015" Cold, All Valves.
►**High Speed Setting**—.002" additional exhaust valve clearance recommended by car manufacturer.
►***ADJUSTABLE SELF-LOCKING TAPPET SCREWS USED.***

Valve Timing: See Camshaft Setting above.
Intake Valves—Open 11° BTDC. Close 41° ALDC.
Exhaust Valves—Open 48° BLDC. Close 10° ATDC.
Valve Timing Check—Intake valve opens 11° BTDC. Valve timing mark location on vibration dampener.

LUBRICATION

Engine Oiling System: Pressure to main, connecting rod, and camshaft bearings. Timing gears lubricated by spray past camshaft thrust plate. Rotor type oil pump mounted externally on right side of engine.
Crankcase Capacity—4 quarts (5 quarts when changing filter).
Normal Oil Pressure—45 lbs. at 30 MPH.

Oil Pressure Relief Valve: In cylinder block just to rear of oil filter mounting. Not adjustable.
Spring Tension—12.62-12.88 ozs. at 1.14".

Oil Pump: Rotor type. Mounted externally on right side of engine with drive gear at center of camshaft.
Oil Pump Removal and Installation—*See Ford Shop Notes.*

Oil Filter: Mounted directly on block (no external oil lines) on left side. Replace cartridge each 5000 miles or more often if required.
Oil Filter Cartridge—Ford No. 7HA-6731 (for Purolator filter), No. 01A-18662-A (for Fram filter).

Oil Pressure Gauge: King-Seeley Electric.
Dash Unit—Ford No. 8A-9273.
Engine Unit—Ford No. 41A-9278.
See Miscellaneous Section for complete data.

Crankcase Ventilation: Filter element in oil filler cap (inlet) with outlet pipe in rear valve chamber extending down on right side of engine.
Servicing—Wash screen in cleaning fluid and wet with engine oil when dry at oil change period (2500 miles).

COOLING

Cooling System: Pressure type with relief valve in filler cap, one belt-driven pump, and by-pass.
NOTE—Water distributing tube not used.
Capacity—16 quarts.
Pressure Valve—In radiator filler cap. Ford No. 26H-8100-B (AC #846740). Opens at 3½-4½ lbs.

Water Pump: Centrifugal, belt-driven, packless type. Shaft mounted on sealed duplex ball bearing.
See Water Pump Section for complete data.
Belt Adjustment—*See Generator Belt Adjustment.*

Thermostat: In head water outlet. Ford No. 7HA-8575-A or B. Two makes used Standard-Thompson or Fulton-Sylphon.
Setting (7HA-8575-A)—Starts to open 157-162°F.
Setting (7HA-8575-B)—Starts to open 148-153°F.

Temperature Gauge: King-Seeley Electric.
Dash Unit—Ford No. 8A-10883.
Engine Unit—Ford No. 8A-10884.
See Miscellaneous Section for complete data.

CLUTCH

Long Model 9½CF-TS, Ford No. 8A-7563. Single plate, semi-centrifugal, dry disc type.

►DISC NOTE—Softer damper springs used on cars with Overdrive (black colored springs). Cars without Overdrive have aluminum colored damper springs.
See Clutch Section for complete data.
Facings—Thickness .125". Outside diameter 9½".

Pedal Adjustment: 1" free travel. Lock nut and adjusting nut at release lever end of release rod.

Removal: Remove transmission (see TRANSMISSION Removal below). Take off flywheel housing. Install wooden wedges between each release lever and cover to hold clutch in released position, take out 6 cover capscrews, lift assembly out.

TRANSMISSION

Own Make. 3-speed, all helical gear type. Constant-mesh, synchro-mesh (Second & High), sliding gear (Low & Reverse).
See Transmission Section for complete data.

Transmission Control: Steering column mounted shift
See Transmission Section for complete data.

Removal: Disconnect rear universal, slide propeller shaft out of transmission. Disconnect clutch, transmission and speedometer linkage. Support rear of engine and disconnect rear engine mounting from frame, Take out 4 transmission-to-flywheel housing capscrews and remove transmission.

OVERDRIVE

Warner Model AS1-R10E (exc. Conv. & Sta. Wagon). Optl. equipment. Overdrive is solenoid operated type (no centrifugal pawls) with Governor Control and throttle operated "kick-down."

Warner Model AS3-R10E (Conv. & Sta. Wagon). Similar to AS1-R10E (above) except a special solenoid adapter plate used (re-locates solenoid under overdrive), "X" type frame used on these cars has insufficient clearance for solenoid in regular mounting position on side of overdrive.
See Transmission Section for complete data.

►**Overdrive Noise Correction on Early Cars**—*See "Overdrive Notes" in Ford Shop Notes.*

Solenoid—Ford No. 8M-6916, (8A-6916 for Conv. & Station Wagon).

Control Relay—Ford No. 8M-6915. On engine side of dash. 30 ampere fuse on ignition terminal.

Lock-Out Switch—Ford No. 8M-6917-A.

Throttle Kick-down Switch—Ford No. 8A-6918.

Governor—Ford No. 8M-6919.

Removal: Same as for Std. transmission (above) after disconnecting overdrive control cable and wiring.

UNIVERSALS

Mechanics Type 2CR. Needle bearing type. 2 used.
See Universals Section for complete data.
NOTE—Slip joint formed by splined yoke of front universal engaging transmission mainshaft (or overdrive shaft). One-piece propeller shaft used.

►*CAUTION (ALL CARS EXCEPT STATION WAGON)—Rear universal joint companion flange nut controls pinion bearing "pre-load" (must be adjusted whenever nut is loosened). See 1949 Ford Passenger Car Rear Axle for data.*

REAR AXLE
PASSENGER CARS

Own Make. Semi-floating hypoid gear type with Hotchkiss drive **with separate carrier.** Axle ends flanged (no separate hub). Wheel bearings are sealed-ball pre-lubricated (no lubrication required).
See Rear Axle Section for complete data.

Ratio—Standard: 3.73-1 (39-11). With overdrive: 4.10-1 (41-10). Optional: 3.54-1 (41-11).

Backlash—.005-.008". *Screw adjustment.*

►*NOTE—Collapsible spacer used for pinion bearing "pre-load".*

Removal: Disconnect rear universal. Remove axle shafts (see instructions below). Remove carrier from housing.

►*CAUTION—Do not loosen universal joint companion flange nut (unless rear axle to be disassembled). This nut controls pinion bearing pre-load (must be adjusted whenever nut loosened).*

Axle Shaft Removal: Remove wheel. Take off drum. Remove 4 axle retainer locking type nuts (work through opening in axle shaft flange). Use Puller No. 4235-P and pull shaft (do not disturb brake backing plate or damage wheel bearing oil seal). Replace one nut to secure backing plate.

Wheel Bearing Adjustment: None (sealed ball-bearing).

REAR AXLE
STATION WAGON

Own Make. Semi-floating, hypoid gear type with Hotchkiss drive **(separate carrier not used).** Axle ends flanged —(no separate hub). Wheel bearings are sealed-ball pre-lubricated (no lubrication required).

►*NOTE—AXLE NOT SAME AS FORD PASSENGER CAR, similar to Mercury.*
See Rear Axle Section for complete data.

Ratio (Standard)—3.91-1 (43-11).

Ratio (with Overdrive)—4.27-1 (47-11).

Backlash—.003-.008". *Shim adjustment.*

Removal: Raise rear of car. Disconnect rear universal. Remove axle shafts (see instructions above). Disconnect brake line at "T" on left side of axle housing, and hand brake cable. Disconnect shock absorbers, spring U-bolts and shackles. Remove axle housing assembly from car.

Axle Shaft Removal: Same as for Ford Pass. Car Rear Axle (above).

SHOCK ABSORBERS

Front—Delco Model 1037-F or Houdaille No. H-180, Ford No. 8A-18045-A (Pass. Cars), Houdaille H-210, Ford No. 8A-18045-B (Station Wagon).

Rear—Delco Model 1031-R or Houdaille No. H-190, Ford No. 8A-18080-A (Pass. Cars), Houdaille H-200, Ford No. 8A-18080-B (Station Wagon).

Direct acting, hydraulic types. Two makes are used and are interchangeable.

►*NOTE—Shock absorbers are permanently sealed and cannot be refilled or repaired.*
See Shock Absorber Section for complete data.

Rear Shock Absorber Installation—Lower tube has welded stone shield on lower end which must be installed toward front of car.

FRONT SUSPENSION

Front Suspension: Independent, linked parallelogram type with coil springs, direct acting shocks, and front stabilizer.
See Front Suspension Section for complete data.

►**Pitman Arm and Idler Arm Bracket Change**—Requires 2 different Toe In Settings listed below. *For identification of parts, see 1949 Ford in Front Suspension Section.*

►*CAUTION—Specifications listed below supersede earlier 1949 Ford Front End Specifications.*

Kingpin Inclination—5° crosswise.

Caster—Positive ¼° to Negative ¾°. Threaded bushing adjustment at lower pivot pin.

Camber—Positive ¼° to Positive ¾°. Eccentric adjustment at upper pivot pin.

►**Toe In**—*CAUTION: Two settings as follows:*

1)—**1/8" toe out to 3/16" toe out for cars built before March 1, 1949.**

2)—**1/16" toe in to 1/8" toe in for cars built after March 1, 1949.**

Adjustment—Adjusting sleeve on outer end of each tie rod. Adjust equally.

STEERING GEAR

Gemmer design (Model 300), Ford Make. Worm-&-Roller type.
See Steering Gear Section for complete data.

BRAKES

Service: Ford-Bendix Hydraulic, Duo-Servo, Single Anchor type without eccentric adjustment. Hand lever applies rear wheel service brakes.
See Brake Section for complete data.

Wheel Cylinders—Diameter: Front wheel 1.128" (hone limit 1.132"). Rear Wheel: .878" (hone limit .880").

Drums—Diameter 10" (11" Sta. Wagon rear drums).

Lining—Molded or Woven. Width 2¼" (front wheel), 1¾" (rear wheel). Thickness 3/16". Length per shoe: 11¾" (11 15/16" Sta. Wag. rear wheel shoes).

Clearance—.010" at each end of secondary shoe with primary shoe forced out against drum (adjusting screw in each wheel backed off 14 notches or "clicks" from point where shoes drag on drum).

Hand Brake: See Service Brakes (above).

►**Hand Brake Linkage Change (for easier application) and Cable Interference Correction**—*See "Ford-Bendix Hydraulic" in Brake Section.*

MISC. MECHANICAL

Power Operated Convertible Top: Hydro-Lectric type (hydraulic actuation with motor-driven pump supplying oil under pressure for power cylinders).
See Miscellaneous Section for complete data.

HOOD LOCK: Pull T-handle under edge of instrument panel on left side, push back on safety catch under front edge of hood, raise hood, prop open with support rod located on plate ahead of radiator.

HOOD ALIGNMENT & RADIATOR GRILLE REMOVAL: *See Ford Shop Notes.*

MODEL IDENTIFICATION

VEHICLE NUMBER: Stamped on plate attached to engine side of dash and on top of right frame side rail just to rear of front suspension upper control arm.

TUNE-UP

COMPRESSION PRESSURE: 110 lbs. at cranking spd.

VACUUM READING: Steady 18-21" idling at 500 RPM.

FIRING ORDER: 1-5-4-8-6-3-7-2. See diagram.

SPARK PLUG GAPS: .030". Limits .029-.032".
Plug Type—Champion H-10. 14 mm.

IGNITION: *See Coil, Condenser, and Distributor.*
Breaker Gap—.014-.016".
Cam Angle or Dwell—27° closed, 18° open.
Breaker Arm Spring Tension—17-20 ounces.
Advance Performance—*See Distributor.*

IGNITION TIMING: 2° BTDC.
Timing Procedure—*See Ignition Timing.*
Crankshaft Pulley Mark—Circular boss aligned with timing pointer on right side of engine front cover.

CARBURETION: *See Carburetor & Carb. Equipment.*
Idle Setting—Approx. 1 turn open. Two screws—turning screws out gives richer mixture.
Idle Speed—Approximately 500 RPM.
Float Level—1.322-1.353" bottom of float to underside of bowl cover with needle valve seated (use Gauge No. 9550-A).
Accelerating Pump—Center hole average setting. Inner hole for hot weather, Outer for cold weather.
Fuel Pump Pressure—3½-4½ lbs.

MANIFOLD HEAT CONTROL: Automatic. No adjustment. Valve located between right end of exhaust pipe cross over and right exhaust manifold.

VALVE TAPPET CLEARANCE: .010-.012" Intake valves, .014-.016" Exhaust, Cold. No adjustment.
Valve Timing Check—*See Valve Timing.*

STARTING: *See Battery, Starter, Generator, Regulator.*

IGNITION

IGNITION SWITCH: Ford No. 6A-11572-A (Mitchell type), No. 6A-11572-B (Briggs & Stratton type).
Ignition Lock—Ford No. 8A-11582-A.

COIL: Ford No. 7RA-12029-A. Can type.
Location—On front lower corner of right cylinder head.
Ignition Current—Approx. 5.2-5.7 amperes at 6 volts, stopped. Primary current resistance 1.05-1.15 ohms (75°F.).

CONDENSER: Ford No. 7RA-12300-B.
Capacity—.21-.25 microfarad.

DISTRIBUTOR: Ford No. 7RA-12127-C (less Cap and Rotor). New "Pressure" distributor with spark advance controlled by vacuum diaphragm moving breaker plate to advance spark against two breaker plate springs. Operating vacuum taken from 1 carburetor connection (2 passages inside carburetor, 1 at venturi, 1 at throttle valve). Full spark advance obtained at 18-35 MPH. with normal road load or for part throttle operation at any speed.

►*NOTE—Distributor is single contact type (no "coil loading" contacts are used).*
Breaker Gap—.014-.016".
Cam Angle—27° closed, 18° open.
Breaker Arm Spring Tension—17-20 ounces.
Rotation—Clockwise viewed from above.

Advance Performance ►(at Wide Open Throttle)

Distributor			Engine		
Degrees	Vacuum	R.P.M.	Degrees	Vacuum	R.P.M
0°	0"	200	0°	0"	400
1¼-2¼°	0.4"	500	2½-4½°	0.4"	1000
4¼-5¼°	1.7"	1000	8½-10½°	1.7"	2000
6¼-7¼°	2.85"	1500	12½-14½°	2.85"	3000
7½-8½°	3.7"	2000	15-17°	3.7"	4000

Distributor Removal: Mounted at front of engine on right side. To remove, disconnect vacuum line, take out hold down screw, lift off.

IGNITION TIMING

Std. Setting ..... **2° BTDC.**

Crankshaft Pulley Mark—Circular boss on rear edge of pulley with timing pin on right side of engine front cover.

Timing—With #1 piston at firing position and timing mark on pulley aligned with timing pin on front of engine, loosen hold-down screw on distributor, rotate distributor until contacts begin to open, tighten hold-down screw. Check spark plug connections (see diagram), see that rotor opposite #1 terminal in cap.

►**Timing (with Neon Timing Light)**—***CAUTION—Vacuum line must be disconnected to avoid vacuum advance operating.*** Mark timing pin and pulley mark with white chalk. Connect timing light to #1 spark plug. Idle engine and adjust distributor (as directed above) until mark and timing pin aligned when light flashes.

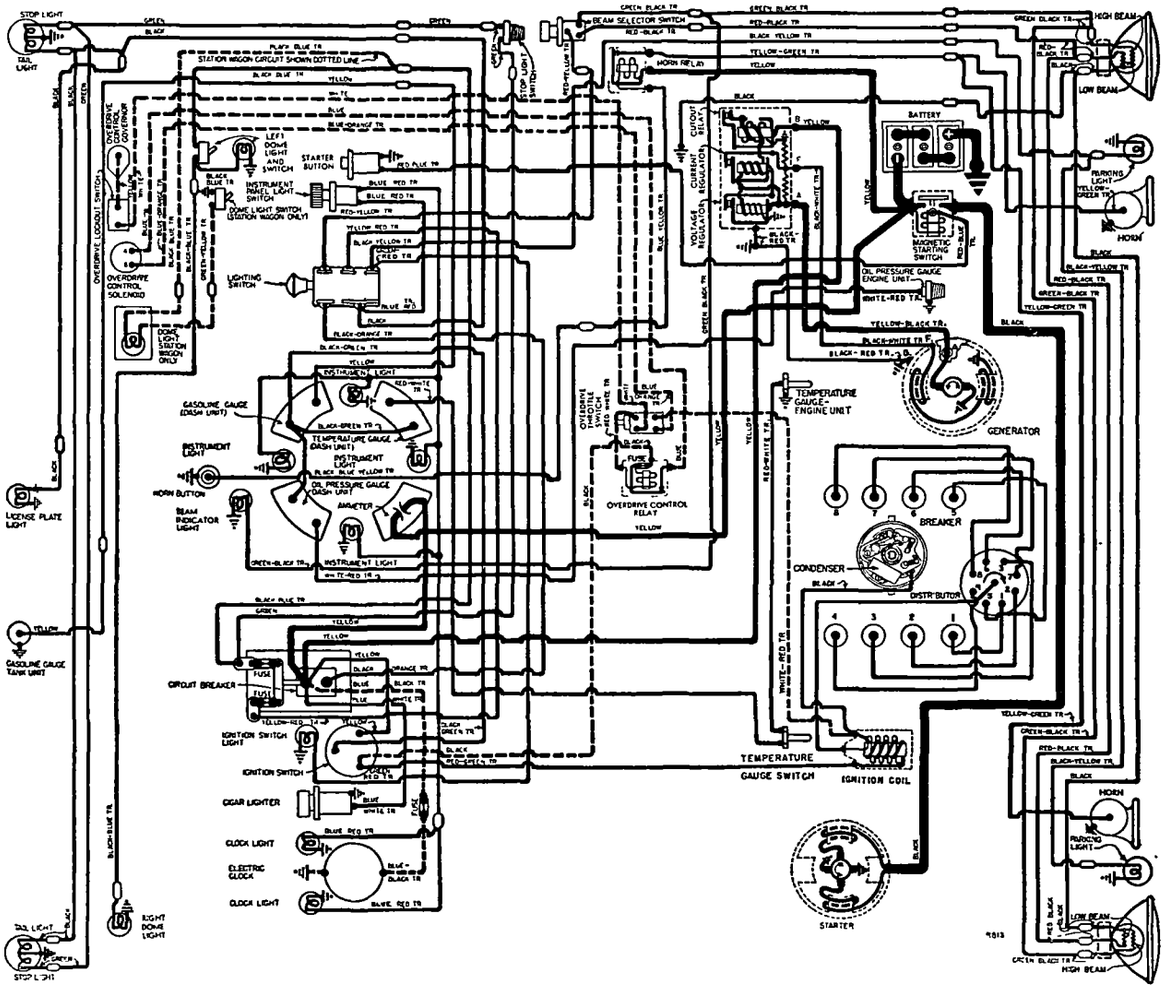

CARBURETOR

Holley-Ford No. 8BA-9510-A. Dual (double barrel) downdraft type with new vacuum passages for distributor operation.
See Carburetor Section for complete data.

Settings (Idle Setting, Float Level, and Accelerating Pump): *See Tune-Up data.*
Metering Jets—*See Holley-Ford Jet Specification Table in Carburetor Section.*

Fast Idle: Integral type. Operated by choke valve lever. No adjustment required.

CARB. EQUIPMENT

Fuel Pump (std.): Ford No. 7RA-9350-C.
Optl. (Fuel-&-Vacuum)—Ford No. 7RA-9350-E.
Pressure—3½-4½ lbs. (both types).
See Carburetion Equipment Section for complete data.

Gasoline Gauge: King-Seeley Electric.
Dash Unit—Ford No. 8A-9280 (K-S #42285).
Tank Unit (All exc. Sta. Wagon)—Ford No. 99A-9275-B (K-S #7540).
Tank Unit (Station Wagon)—Ford No. 01A-9275-A (K-S #7748).
See Carburetion Equipment Section for complete data.

Air Cleaner (std.—oil-wetted): Ford No. 8BA-9600-A3.
Optl. (oil bath)—Ford No. 8BA-9600-A1 or A2 (1 pt. capacity), 8BA-9600-A6 (1 quart capacity).
Servicing (oil-wetted type)—Wash filter assembly in cleaning fluid and re-oil when dry every 1000 miles.
Servicing (oil bath type)—Clean and re-fill sump (to level mark) with same grade oil used in crankcase at 1000 mile intervals. Occasionally wash filter in cleaning fluid.

BATTERY

Ford No. 81A-10655-A. 6 Volt, 17 Plate, 100 Amp. Hr.
Zero Capacity—300 amperes for 3.3 minutes. Five Second Voltage—4.2 volts.
Grounded Terminal—Positive (+).
Location—On left side in engine compartment.
Dimensions—L. 10½". W. 7⅛". H. 7¼".

STARTER

Ford Model No. 7RA-11002. Armature No. 18-11005.
►**Starter Motor Rusting Correction**—*See "Electrical System Notes" in Ford Shop Notes.*
Drive—Bendix No. A1472 (Ford No. B-11350).
Rotation—Counter-clockwise at commutator end.
Brush Spring Tension—20-22 ounces.
Cranking Engine—100 RPM., 190-215 amperes.

Performance Data

Torque	R.P.M.	Volts	Amperes
4 ft. lbs.	1070	4.6	200
8 "	660	4.3	340
12 "	300	3.65	465
14 "	Lock	3.5	500

Starting Switch: Ford No. 21A-11450 Magnetic Switch mounted on left front fender apron and controlled by panel pushbutton switch Ford No. 6H-11500.

Removal: On right front face of flywheel housing cover. To remove, take off right engine splash pan (if used), free starter-to-oil pan bracket, take out 2 starter through bolts.

GENERATOR

Ford No. 8BA-10002-A (less pulley and bracket).
Armature No.—Ford No. 8BA-10005-A.
2 brush type with current and voltage regulation.
Charging Rate Adjustment—None. See Regulator.
Maximum Charging Rate—30 amperes, 7 volts, reached at approximately 20 MPH. Controlled by regulator and dependent on load and battery condition.
To Check Generator Output—Connect ammeter in series with charging line at regulator "ARM" terminal, connect short insulated jumper between generator "A" and "F" terminals (to short out regulator). Run engine at approximately 1500 RPM. and note ammeter reading. If generator output equals or exceeds rate output (below) generator performance is satisfactory. Remove jumper.

►*CAUTION—Do not operate generator at higher speeds or in service with jumper connected between generator armature and field terminals. This jumper eliminates all regulator action.*

Performance Data

Amperes	Engine R.P.M.
30	1500

Rotation—Counter-clockwise at commutator end.
Brush Spring Tension—20-24 ozs.

Removal: On support secured to valve chamber cover by stud and nut, driven by belt in tandem with water pumps. To remove, loosen stud nut and disengage generator belt, take out capscrew in mounting strap, lift generator off support.

Generator Belt Adjustment: Loosen 2 bolts on fan mounting bracket, loosen generator support mounting stud nut, raise generator up until side movement on belt midway between generator and water pump pulleys is ½" (thumb and finger pressure), tighten stud nut. Adjust fan belt in similar manner, tighten 2 fan bracket bolts.

REGULATOR

Ford Numbers

Regulator	Generator	Amperes
51A-10505-A or C	8BA-10002-A (Std.)	30-33

Voltage-current 3-Unit types.
See Electrical Equipment Section for complete data.
NOTE—Separate ground wire extending to cowl must be in place when generator operated.

Cutout Relay
Cuts In—6.4-6.9 volts with engine at normal operating temperature.
Cuts Out—8 ampere discharge current (maximum).
Contact Gap—.010" (armature against upper stop).
Air Gap—.017" between armature and core with contacts open.

Voltage Regulator
Voltage Setting—7.0-7.5 volts with engine at normal operating temperature.
Checking & Adjustment—*See Electrical Equip. Section.*
Air Gap—.035" between armature and core with contacts just closed.

►*CAUTION—Make certain gauge contacts armature and not brass rivet on underside of armature.*
Contact Spring Tension—5 ounces minimum with contacts just opening.

Current Regulator
Current Setting—30-33 amperes with engine at normal operating temperature.
Checking & Adjustment—*See Electrical Equip. Section.*
Air Gap—.035" between armature and core with contacts just closed.
Contact Spring Tension—5 ounces minimum with contacts just opening.

LIGHTING

Headlamps: Ford "Sealed Beam" type.
See Electrical Equipment Section for complete data.
Adjustment—Aim upper beams straight ahead (hot spot centers 3" below lamp center height at 25 ft.).
Beam Indicator—Bulb between 50 and 60 on speedometer. Lighted with Upper Beam "on".

Direction Signal: Optl. *See Electrical Equipment Section.*
Direction Indicators—Right and Left indicators on lower edge of speedometer.
Direction Signal Flasher—Ford No. 8L-13350-B.

Switches
Lighting—Ford No. 7RA-11654.
Beam Selector—Ford No. 7RA-13532.
Instrument—Ford No. 21C-13740.
Dome Light—Ford No. 8A-13752.
Dome Light (Sta. Wagon)—Ford No. 8M-13752-A.
Door Switches (Optl.)—Ford No. 8M-13713.
Stop Light—Ford No. 11A-13480.

Bulb Specifications

Position	Candlepower	Mazda No.
Headlamps	Sealed Beam	4030
Parking (no Dir. Sig.)	3	63
Front Dir. Sig. & Park	21-3	1154
①All Instrument	1½	55
Beam & Dir. Sig. Indicators	1	51
②Stop & Tail	21-3	1154
Dome & Trunk	6	81
Dome (Station Wagon)	6	82
Courtesy (Optl.)	6	82
Rear License	3	63

①—With "Black Light" Filters No. 8A-13593.
②—Rear Direction Signal flashes Stop Light.

MISC. ELECTRICAL

CIRCUIT BREAKERS: Lighting (Headlights)—Ford No. 8A-12258-A. On bracket behind instrument panel together with two lighting fuses (see wiring diagram).
Convertible Top—Ford No. 51A-12250-A. 30 ampere. On hydraulic pump motor or on front of dash near convertible top control switch.

FUSES: Auxiliary Lights (Parking, Tail & Instrument)—14 ampere. On circuit breaker bracket behind instrument panel (see wiring diagram).
Dome & Stop Lights—14 ampere. Next to fuse listed above.
Clock—2 ampere. In clock feed wire.
Overdrive—30 ampere. On ignition terminal of overdrive relay (on dash under hood).
Direction Signal—15 ampere. In feed from ignition switch to flasher.

HORNS: Ford No. 51A-13832-A or B (High Pitch, Right Horn), No. 51A-13833-A or B (Low Pitch, Left Horn). Dual horns operated by relay. NOTE—"A" horns are 4.28" high, "B" horns are 4.14". Horns marked "HI" or "LO" on air columns.
Air Gap—.027-.029" for high pitch (right horn), .032-.034" for low pitch (left) for Sparks-Withington. NOTE—Air Gap for Auto-Lite type horns .040" HI, .050" LO.
Horn Current—13 amperes (high pitch), 14 (low).
Horn Relay: Ford No. 7RA-13853-B. On dash.
►*CAUTION—Use only Ford type relay No. 7RA-13853-B with TAN plastic cover. If Mercury relay No. 7RA-13853-A with Black plastic cover installed, shock at horn button may be felt when blowing horn.*
Contact Gap—.015-.025".
Contact Closing Voltage—4 volts max.

CONTINUED N NEXT PAGE

C NTINUED FROM PRECEDIN PAGE

ENGINE

ENGINE SPECIFICATIONS: Own 8BA. Eight cylinder, "L" head, 90° Vee type with both cylinder banks and crankcase cast Enbloc.
Bore—3.187". **Stroke**—3.75".
Displacement—239 cu. ins. **Rated HP**—32.5.
Developed Horsepower—100 at 3600 RPM.
Compression Ratio—6.8-1 cast-iron heads.
Compression & Vacuum Reading—*See Tune-Up.*

TIGHTENING TORQUES: *See Ford Shop Notes.*

CYLINDER SLEEVE: Cast iron dry type cylinder sleeves furnished for replacement service.

PISTONS: 4-ring (1 below pin), dome head, aluminum alloy, steel strut, U-slot, cam ground type.

►***CAUTION—1949 Ford and Mercury Pistons or Rings are not interchangeable.***
Weight—13.12 ozs.
Removal—Pistons and rods removed from above.
Clearance—See Fitting Pistons.

Replacement Pistons: Std., .005", .020", .030", .040", .060" OS.

Fitting Pistons: Use .50" wide feeler stock of correct thickness (as listed below) inserted between piston and cylinder wall at right angles to pin to check clearance. Pull required to withdraw feeler 6-10 lbs.
Feeler Thickness—.002" New Piston in New Plain Bore, .003" New Piston in New Sleeve, .004" New Piston in Worn Bore, .005" Worn Piston in Worn Bore.

PISTON RINGS: 2 compression, 2 slotted oil rings (lower oil ring below pin). Upper oil ring groove drilled with oil drain holes, lower groove slotted.

Ring	Width	End Gap	Side Clearance
Compr. (#1)	.0915-.0920"	.012-.017"①	.0015-.0035"②
Compr. (#2)	.0915-.0920"	.012-.017"①	.001-.004"③
Oil (#3, 4)	.1545-.1550"	.012-.017"①	.001-.004"③

Worn Limits—① .035" ② .0045" ③ .005"

Replacement Rings: Snap type, Expander type, or Steel Section type ring sets furnished in the following sizes: Std., .020", .030", .040", .060" Oversize.

PISTON PIN: Diameter .7504" (maximum). Floating type (lock ring in piston at each end). Pin hole in connecting rod bronze-bushed.
Pin Fit in Piston—.0005" (new), .0015" (worn limit).
Pin Fit in Rod Bushing—.0002-.0005" (new), .0015" (worn liimit).

Replacement Pins: Sizes and paint marks: Std. (green), .001" Oversize (blue), .002" OS (yellow).

CONNECTING ROD: Length 7". **Weight** 18.7 ozs.
Crankpin Journal Diamter—2.1390". Maximum wear limits—Out-of-round .0015", Taper .001".

►**Lower Bearing**—***Locked in (not floating type as used on earlier engines).*** Steel-backed, copper-lead alloy lined, replaceable shells. Upper and lower halves interchangeable.
Clearance—.0005-.003" (new), .005" (worn limit).

►***NOTE—Replace bearing shells less than .0745" thick.***
Sideplay—.006-.014" (new), .022" (worn limit).

Bearing Adjustment: None (no shims). Do not file caps. Replace bearings. Tang on bearing must engage groove in rod and cap.

►***NOTE—Self-locking connecting rod nuts used. Tighten to 40-45 ft. lbs. Palnuts not required.***

Replacement Bearings: Standard size and .002", .010", .020", .030", .040" Undersize.

CRANKSHAFT: 3 bearing with integral counterweights.

►***SLUDGE TRAPS—Crankpin throws equipped with sludge traps having removable plugs for cleaning. Always use new plugs if old plugs disturbed and peen or stake crankshaft to hold plugs in place securely.***

Journal Diameters—2.4990" (all bearings). Max. wear limits—Out-of-round .0015", Taper .001".

Bearings—Steel-backed, copper-lead alloy lined, replaceable shells. Upper and lower halves alike.

Clearance—.000-.003" (selective fit, crankshaft to turn free). Worn limit .005" maximum.

►***NOTE—Replace main bearing shells less than .0835" thick.***

Bearing Adjustment: None (no shims). Do not file caps. Replace bearings. Tang on bearing must engage groove in block and cap.

Replacement Bearings: Standard size and .002", .010", .020", .030" Undersize. Rear mains also furnished .015" Oversize in Overall Length for taking up endplay wear.

End Thrust: Taken by rear main bearing. Adjust by replacing bearing if endplay excessive.

Endplay—.002-.006" (new), .008" (worn limit).

CAMSHAFT: Three bearing. Helical gear drive. Distributor drive gear pressed on front end of shaft, oil pump drive gear on rear end.

Bearing Diameter—1.7985" (replace bearing if diameter greater than worn limit 1.8015").

Bearings—Steel-backed, babbitt lined bushings.

Clearance—.001-.002".

Replacement Bearings: Standard size and .010", .015" Undersize. Undersize bearings require finish reaming.

End Thrust: Taken by front end of camshaft and thrust surface on inner face of cylinder front cover. Adjust by replacing cover. **Endplay**—.007-.016".

Timing Gears: Helical cast aluminum camshaft gear bolted on camshaft, cast alloy iron crankshaft gear.

►***CAUTION—Camshaft gear teeth REVERSE (L.H.) providing one-way thrust to camshaft for silencing backlash.***

Replacement Camshaft Gears—Std. .006", .012" OS.

Camshaft Setting: Mesh marked tooth of crankshaft gear with marked space on camshaft gear.

VALVES:	Head Diameter	Stem Diameter	Length
All Valves	1.515"	.3410"①	4.8140"

	Seat Angle	Lift	Stem Clearance
All Valves	45°	.292"	.0015-.0035"②

Wear Limit—①—.3375". ②—.005" Int., .006" Exh.

►***NOTE—Valves are straight-stemmed type operating in one-piece valve guides.***

Valve Seat Inserts—Used on all valves.

Valve Guides: One-piece type positioned and retained by "C" washer. Inside diameter .344", Outside diameter 1.031". Length 2.20". NOTE—Rubber seal used on intake guide.

Valve Lifters: Barrel type operating in guide holes in cylinder block.

Diameter—.9992" (replace if worn to less than .9977"). Length limit after resurfacing 1.700".
Clearance—.0007-.0016" (new), .003" (worn limit).

Valve Springs: Coated springs used.

Spring Pressure—37-40 lbs. (closed), 78-80 (open).
Spring Test—37-40 lbs. at 2.125". Free length 2.41".

VALVE TIMING

Tappet Clearance: .010-.012" Intake, .014-.016" Exhaust, Cold. No adjustment.

Valve Timing: See Camshaft Setting above.
Intake Valves—Open at TDC. Close 44° ALDC.
Exhaust Valves—Open 48° BLDC. Close 6° ATDC.
Valve Timing Check—Intake valve opens at TDC. Valve timing mark location on crankshaft pulley.

LUBRICATION

Engine Oiling System: Pressure to main bearings, connecting rod lower bearings, camshaft bearings, timing gears and distributor drive gear. Piston pins and valve lifters lubricated by splash. Oil pump mounted in crankcase at rear of engine.
Crankcase Capacity—4 quarts (5 quarts when changing oil filter).
Normal Oil Pressure—45 lbs. at 30 MPH.

Oil Pressure Relief Valve: In oil pump body. Not adjustable.
Spring Tension—15 lbs. 2 ozs. to 15 lbs. 6 ozs. at 1.14".
NOTE—Cylinder block oil relief valve not used.

Oil Pump: Gear type (two types: one equipped with spur gears, second helical gears). In crankcase at rear of engine.

Oil Filter: On left cylinder head. Replace cartridge each 5000 miles or more often if required.
Oil Filter Cartridge—Ford No. O1A-18662-A.

Oil Pressure Gauge: King-Seeley Electric.
Dash Unit—Ford No. 8A-9273.
Engine Unit—Ford No. 41A-9278.
See Miscellaneous Section for complete data.

Crankcase Ventilation: Filter element in oil filler cap (inlet) with outlet pipe extending from top of engine down behind fan and out along left side.
Servicing—Wash screen in cleaning fluid and wet with engine oil when dry at oil change period (2500 miles).

COOLING

Cooling System: Pressure type with relief valve in filler cap and two belt-driven pumps (one for each bank) with re-circulating by-pass.
Capacity—21 quarts.
Pressure Valve—In radiator filler cap. Ford No. 26H-8100-B (AC #846740). Opens at 3½-4½ lbs.

Water Pumps: Two used. Centrifugal, belt-driven packless type. Shaft mounted on pre-packed ball-bearing at front, and bushing next to seal. Oil cup provided for bushing lubrication.

►***CAUTION—WATER PUMP LUBRICATION: Oil cup provided on each pump which should be filled with SAE #20 engine oil when new and every 1000 miles. Use length of wire inserted in oil cup if necessary when oiling.***
See Water Pump Section for complete data.
Fan Belt Adjustment—Loosen 2 fan mounting bracket bolts, raise fan up until side movement of belt midway between fan and crankshaft pulleys is ½".
Generator (& Water Pump) Belt Adjustment—*See GENERATOR.*

Thermostats: Two used (one in each head water outlet). Ford No. 8BA-8575-B or 8RT-8575-A. Two makes used Standard-Thompson or Fulton-Sylphon.
Setting (8BA-8575-B)—Starts to open 157-162°F.
Setting (8RT-8575-A)—Starts to open 148-153°F.

Temperature Gauge: King-Seeley Electric.
Dash Unit—Ford No. 8A-10883.
Engine Unit—Ford No. 8A-10990 (switch in right bank), No. 8A-10884 (reg. unit in left bank).
See Miscellaneous Section for complete data.

CLUTCH

Long Model 9½CF-TS, Ford No. 8A-7563. Single plate, semi-centrifugal, dry disc type.
See Clutch Section for complete data.

►**Flywheel Rubbing on Housing Cover when Clutch Disengaged Correction**—*See "Clutch Notes" in Ford Shop Notes.*

Facings—Thickness .125". Outside diameter 9½".

Pedal Adjustment: 1" free travel. Lock nut and adjusting nut at release lever end of release rod.

Removal: Remove transmission (see TRANSMISSION Removal below). Take off flywheel housing. Install wooden wedges between each release lever and cover to hold clutch in released position, take out 6 cover capscrews, lift assembly out.

TRANSMISSION

Own Make. 3-speed, all helical gear type. Constant-mesh, synchro-mesh (Second & High), sliding gear (Low & Reverse).
See Transmission Section for complete data.

Transmission Control: Steering column mounted shift
See Transmission Section for complete data.

Removal: Disconnect rear universal, slide propeller shaft out of transmission. Disconnect clutch, transmission and speedometer linkage. Support rear of engine and disconnect rear engine mounting from frame, Take out 4 transmission-to-flywheel housing capscrews and remove transmission.

OVERDRIVE

Warner Model AS1-R10E (exc. Conv. & Sta. Wagon). Optl. equipment. Overdrive is solenoid operated type (no centrifugal pawls) with Governor Control and throttle operated "kick-down."

Warner Model AS3-R10E (Conv. & Sta. Wagon). Similar to AS1-R10E (above) except a special solenoid adapter plate used (re-locates solenoid under overdrive), "X" type frame used on these cars has insufficient clearance for solenoid in regular mounting position on side of overdrive.
See Transmission Section for complete data.

►**Overdrive Noise Correction on Early Cars**—*See "Overdrive Notes" in Ford Shop Notes.*

Solenoid—Ford No. 8M-6916, (8A-6916 for Conv. & Station Wagon).

Control Relay—Ford No. 8M-6915. On engine side of dash. 30 ampere fuse on ignition terminal.

Lock-Out Switch—Ford No. 8M-6917-A.

Throttle Kick-down Switch—Ford No. 8A-6918.

Governor—Ford No. 8M-6919.

Removal: Same as for Std. transmission (above) after disconnecting overdrive control cable and wiring.

UNIVERSALS

Mechanics Type 2CR. Needle bearing type. 2 used.
See Universals Section for complete data.

NOTE—Slipjoint formed by splined yoke of front universal engaging transmission mainshaft (or overdrive shaft). One-piece propeller shaft used.

►*CAUTION (ALL CARS EXCEPT STATION WAGON)—Rear universal joint companion flange nut controls pinion bearing "pre-load" (must be adjusted whenever nut is loosened). See 1949 Ford Passenger Car Rear Axle for data.*

REAR AXLE
PASSENGER CARS

Own Make. Semi-floating hypoid gear type with Hotchkiss drive with separate carrier. Axle ends flanged (no separate hub). Wheel bearings are sealed-ball pre-lubricated (no lubrication required).
See Rear Axle Section for complete data.

Ratio—Standard: 3.73-1 (39-11). With overdrive: 4.10-1 (41-10). Optional: 3.54-1 (41-11).

Backlash—.005-.008". *Screw adjustment.*

►*NOTE—Collapsible spacer used for pinion bearing "pre-load".*

Removal: Disconnect rear universal. Remove axle shafts (see instructions below). Remove carrier from housing.

►*CAUTION—Do not loosen universal joint companion flange nut (unless rear axle to be disassembled). This nut controls pinion bearing pre-load (must be adjusted whenever nut loosened).*

Axle Shaft Removal: Remove wheel. Take off drum. Remove 4 axle retainer locking type nuts (work through opening in axle shaft flange). Use Puller No. 4235-P and pull shaft (do not disturb brake backing plate or damage wheel bearing oil seal). Replace one nut to secure backing plate.

Wheel Bearing Adjustment: None (sealed ball-bearing).

REAR AXLE
STATION WAGON

Own Make. Semi-floating, hypoid gear type with Hotchkiss drive (**separate carrier not used**). Axle ends flanged —(no separate hub). Wheel bearings are sealed-ball pre-lubricated (no lubrication required).

►*NOTE—AXLE NOT SAME AS FORD PASSENGER CAR, similar to Mercury.*
See Rear Axle Section for complete data.

Ratio (Standard)—3.91-1 (43-11).

Ratio (with Overdrive)—4.27-1 (47-11).

Backlash—.003-.008". *Shim adjustment.*

Removal: Raise rear of car. Disconnect rear universal. Remove axle shafts (see instructions above). Disconnect brake line at "T" on left side of axle housing, and hand brake cable. Disconnect shock absorbers, spring U-bolts and shackles. Remove axle housing assembly from car.

Axle Shaft Removal: Same as for Ford Pass. Car Rear Axle (above).

SHOCK ABSORBERS

Front—Delco Model 1037-F or Houdaille No. H-180, Ford No. 8A-18045-A (Pass. Cars), Houdaille H-210, Ford No. 8A-18045-B (Station Wagon).

Rear—Delco Model 1031-R or Houdaille No. H-190, Ford No. 8A-18080-A (Pass. Cars), Houdaille H-200, Ford No. 8A-18080-B (Station Wagon).

Direct acting, hydraulic types. Two makes are used and are interchangeable.

►*NOTE—Shock absorbers are permanently sealed and cannot be refilled or repaired.*
See Shock Absorber Section for complete data.

Rear Shock Absorber Installation—Lower tube has welded stone shield on lower end which must be installed toward front of car.

FRONT SUSPENSION

Front Suspension: Independent, linked parallelogram type with coil springs, direct acting shocks, and front stabilizer.
See Front Suspension Section for complete data.

►**Pitman Arm and Idler Arm Bracket Change**—Requires 2 different Toe In Settings listed below. *For identification of parts, see 1949 Ford in Front Suspension Section.*

►*CAUTION—Specifications listed below supersede earlier 1949 Ford Front End Specifications.*

Kingpin Inclination—5° crosswise.

Caster—Positive ¼° to Negative ¾°. Threaded bushing adjustment at lower pivot pin.

Camber—Positive ¼° to Positive ¾°. Eccentric adjustment at upper pivot pin.

►**Toe In**—*CAUTION: Two settings as follows:*

1)—**1/8" toe out to 3/16" toe out for cars built before March 1, 1949.**

2)—**1/16" toe in to 1/8" toe in for cars built after March 1, 1949.**

Adjustment—Adjusting sleeve on outer end of each tie rod. Adjust equally.

STEERING GEAR

Gemmer design (Model 300), Ford Make. Worm-&-Roller type.
See Steering Gear Section for complete data.

BRAKES

Service: Ford-Bendix Hydraulic, Duo-Servo, Single Anchor type without eccentric adjustment. Hand lever applies rear wheel service brakes.
See Brake Section for complete data.

Wheel Cylinders—Diameter: Front wheel 1.128" (hone limit 1.132"). Rear Wheel: .878" (hone limit .880").

Drums—Diameter 10" (11" Sta. Wagon rear drums).
Lining—Molded or Woven. Width 2¼" (front wheel), 1¾" (rear wheel). Thickness 3/16". Length per shoe: 11¾" (11 15/16" Sta. Wag. rear wheel shoes).
Clearance—.010" at each end of secondary shoe with primary shoe forced out against drum (adjusting screw in each wheel backed off 14 notches or "clicks" from point where shoes drag on drum).

Hand Brake: See Service Brakes (above).

►**Hand Brake Linkage Change (for easier application) and Cable Interference Correction**—*See "Ford-Bendix Hydraulic" in Brake Section.*

MISC. MECHANICAL

Power Operated Convertible Top: Hydro-Lectric type (hydraulic actuation with motor-driven pump supplying oil under pressure for power cylinders).
See Miscellaneous Section for complete data.

HOOD ASSEMBLY

1947-48 MODELS

HOOD REMOVAL: Lift hood. At each hood hinge, remove two capscrews from inside hood and two additional capscrews from outside (on lower edge of hood), remove hood props if used, lift hood off.

HOOD REPLACEMENT: Place hood in position on hinges, install one inside and one outside capscrew in each hinge (use punch to align screw holes), then install remaining capscrews in each hinge, install hood props (first type hinge only), check hood alignment and adjust for proper fit by loosening hood hinge capscrews and shifting hood on hinges (screw holes are slotted to permit this adjustment).

Hood Hinge Replacement Note—Whenever hood hinges require replacement, install new type hinges with heavier coil springs and larger (⅜") mounting studs. Hood props not required with this hinge.

TIGHTENING (TORQUE WRENCH) SPECIFICATIONS

1947-48 MODELS

NOTE—Torque figures given below are for threads which are clean and dry. CAUTION—If threads are oiled, reduce torque approximately 10%.

	Ft.Lbs.	In.Lbs.
Cylinder Head Bolts①	40-50	480-600
Spark Plugs	5-10	60-120
Con. Rod Bearing Bolts	40-45	480-540
Main Bearing Cap Bolts	85-95	1020-1140
Flywheel Mtg. Bolts	36-40	432-480
Camshaft Sprocket Bolts	35-40	420-480
Camshaft Retaining Nut	30-35	360-420
Timing Gear Cover Bolts	14-20	168-240
Filler Block Screws	14-16	168-192
Int. & Exh. Manifolds	31-35	372-420
Oil Pan Screws	10-14	120-168
Water Pump Mtg. Bolts	12-15	144-180
Water Outlet on Cyl. Head	20-25	240-300
Starter Mtg. Bolts	20-25	240-300
Generator Bracket Mtg. Bolts	31-35	372-420
Vibration Dampener Bolt	100-130	1200-1560
Engine Mountings		See Note
Steering Wheel Nut	10-15	120-180
Steering Gear Mtg. Bolts	25-30	300-360
Front Shock Mtg. Nuts	10-15	120-180
Rear Shock Mtg. Nuts	25-30	300-360
Rear Spring "U" Bolts	45-55	540-660
Wheel Mtg. Nuts or Bolts	85-90	1020-1080
Radiator Mtg. Nuts	4-7	48-84
Rear Axle Diff. Carrier	38-42	456-504
Rear Axle Shaft Nut②	160 Min.	1920

①—Tighten cold and recheck with engine at 150°.

②—Minimum Torque. Turn nut further to line up cotter pin holes in nut and shaft.

Engine Mounting Torque Note—Tighten front and rear Support Insulator nuts (1/2-20-NF-3) to 38-43 ft.lbs. Tighten support insulator-to-frame nuts (front) and support insulator-to-crossmember nuts (rear) to 15-20 ft.lbs. Tighten rear support-to-transmission bolt to 18-23 ft.lbs.

Palnut Tightening Note—Spin nuts down finger-tight, then tighten additional ¼-⅓ turn to lock.

CYLINDER HEAD

CYLINDER HEAD INSTALLATION: Use a Torque Indicating Wrench to tighten cylinder head bolts, tighten in correct sequence as shown in diagram. Heads should be tightened cold and rechecked after engine temperature reaches 150°F.

Tightening Torque: See Tightening Specifications.

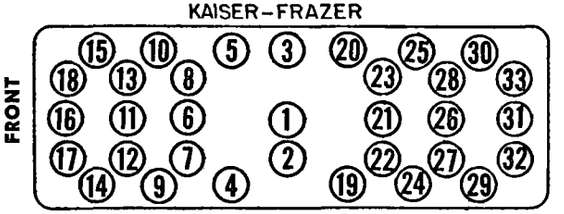

ENGINE REMOVAL

1947-48 MODELS

ENGINE REMOVAL: Proceed as follows:

1. Remove Hood (see Hood Assembly above).
2. Drain cooling system.
3. Disconnect windshield wiper hose at manifold (or at vacuum pump), disconnect fuel line at point where fuel pump flexible line connected to tubing at frame, disconnect exhaust pipe at manifold.
4. Remove Radiator (see Radiator removal below).
5. Remove Battery. Disconnect cables, lift out.
6. Disconnect Wiring. Disconnect ground cable near left front engine mounting, disconnect wiring at starter, generator, and distributor.
7. Remove Air Cleaner.
8. Disconnect Temperature Gauge by removing bulb from cylinder head (Frazer), disconnecting lead (Kaiser). Disconnect oil gauge by disconnecting line at flexible hose connection on left side of engine (Frazer), disconnecting lead at engine unit (Kaiser).
9. Disconnect throttle linkage at both cowl brackets and at carburetor throttle lever.
10. Remove Distributor. Disconnect spark plug leads and vacuum line at vacuum spark control unit, take out hold-down screw in advance arm, and lift off.
11. Free Front Engine Mountings by removing nuts.
12. Raise front end of car and support it securely on stands to provide access for following operations:
13. Disconnect clutch throw-out linkage and transmission control linkage at transmission case. On Overdrive cars, disconnect linkage and wiring.
14. Free Rear Engine Mountings from frame.
15. Disconnect propeller shaft at front universal.
16. Disconnect speedometer cable at transmission, drain transmission case.
17. Remove engine from chassis by attaching hoist to lifting bracket mounted on engine at #7 and #28 cylinder head bolts (see Cylinder Head diagram)

ORIGINAL BORE & PISTONS

1947-48 MODELS

BORE & PISTON SIZES: Engines originally equipped at factory with special oversize pistons may be identified by code letter following engine number:
"B"—Pistons are .002" Oversize.
"N"—Pistons are .020" Oversize.
"AB"—Pistons .002" Oversize. Main and connecting rod bearings Undersize (See Original Bearing Sizes).
"AN"—Pistons .020" Oversize. Main and connecting rod bearings Undersize (See Original Bearing Sizes).
"BX"—Pistons .002" Oversize. Main bearings are Undersize (see Original Bearing Sizes following).
"NX"—Pistons .020" Oversize. Main bearings are Undersize (see Original Bearing Sizes following).

PISTONS

1947-48 MODELS

PISTON IDENTIFICATION: Two types of aluminum alloy pistons used which can be identified as follows:

►*CAUTION—Piston weight different on each type.*

Strut Type Piston—Has wide strut embedded within skirt at each piston pin boss and drilled oil drain holes in both #3 and #4 ring grooves.

T-Slot Type Piston—Has horizontal slot in lower (#4) ring groove and short vertical slot on one side of piston skirt. #3 oil ring groove has drilled oil drain holes.

1947-48 MODELS

REPLACEMENT PISTONS: See "Piston Identification" for types used. Each type piston furnished in following sizes:

	Kaiser-Frazer Part No.	
Piston Size	Strut Type	T-Slot Type
Standard	200108	201947
.005" Oversize	200357	201949
.010" Oversize	200358	201950
.020" Oversize	200359	201951
.025" Oversize	202484	202487
.030" Oversize	200360	201952

►*CAUTION—Piston weight different on each type.*

PISTON RINGS

1947-48 MODELS

REPLACEMENT RINGS: Rings furnished as single rings (12 Compression, 12 Oil Rings required), or in complete sets (1 Set per car) as follows:

Single Rings

Ring Size	Compression—Part No.	—Oil
Standard	200111	200112
.010" Oversize	200361	200364
.020" Oversize	200362	200365
.030" Oversize	200363	200366

Ring Sets

Ring Size	Cyl. Size①	Part No.
Standard	Std. to .009" OS	203145
.020" Oversize	.010" to .029" OS	203146
.040" Oversize	.030" to .049" OS	203147
.060" Oversize	.050" to .069" OS	203148

①—Use ring indicated for oversize cylinders within this range (check End Gap).

ORIGINAL BEARING SIZES

1947-48 MODELS

MAIN & CONNECTING ROD BEARING SIZES: Engines originally equipped with special undersize main and connecting rod bearings may be identified by code letter following engine number:
"A"—Main & Connecting Rod Bearings .010" Undersize.
"X"—Main Bearings .002" Undersize.
"AB"—Main & Connecting Rod Bearings .010" Undersize and Pistons Oversize (see Original Bore and Pistons).
"AN"—Main & Connecting Rod Bearings .010" Undersize and Pistons Oversize (see Original Bore and Pistons).
"BX"—Main Bearings .002" Undersize and Pistons Oversize (see Original Bore and Pistons).
"NX"—Main Bearings .002" Undersize and Pistons Oversize (see Original Bore and Pistons).

CRANKSHAFT & MAIN BEARINGS

1947-48 MODELS

FRONT MAIN BEARING CHANGE: Two types of front main bearing used (flanged & unflanged). This bearing takes end thrust (see Endplay Adjustment).
1)—Front Main Bearing (Flanged Type). End thrust taken by flange on bearing.
2)—Front Main Bearing (Not Flanged). End thrust taken by thrust washer installed in front of bearing.

FRONT MAIN BEARING ASSEMBLY
Flanged Type Bearing①

K-F Part No.		K-F Part No.	
200070	Bearing Std.	200065	Thrustwasher
201928	" .002" US.	200067	.002" Shim
202062	" .004" US.	200068	.008" Shim
200337	" .010" US.	200066	Thrust Plate

①—Original type Bearing Cap used with flanged bearings not furnished for service (use No. 202689).

Bearing without Flange

202686	Bearing Std.	202685	Thrustwasher
202687	" .002"US.	202684	" pins (3)
202691	" .010" US.	200065	Thrustwasher
202689	Bearing Cap	200067	.002" Shim
202690	" Cap Dowel	200068	.008" Shim
		200066	Thrust Plate

Replacement Note—Both types of front main bearings are interchangeable. Flanged type can be used to replace unflanged type by removing thrustwasher and dowel pins.

1947-48 MODELS

CRANKSHAFT ENDPLAY ADJUSTMENT: Requires removal of vibration dampener and crankshaft pulley, timing gear cover, timing chain and sprockets (remove as an assembly). NOTE—Endplay can be checked at flywheel (after clutch cover pan removed) without otherwise disturbing engine.

Endplay Adjustment: With crankshaft removed, remove thrustwasher and adjusting shims from end of crankshaft, measure total thickness of shims with a micrometer (note this figure), re-install shims and thrustwasher. Make up a piece of 2" diameter steel tube exactly 2⅞" long, install this tube on end of crankshaft, install and tighten vibration dampener washer and nut (NOTE—Use of this tube will make it unnecessary to install and remove pulley, vibration dampener, and sprocket while checking & adjusting endplay). Measure crankshaft endplay with a dial indicator set up on the timing chain endplate (force crankshaft forward and backward to check endplay). Add or remove shims from shim pack back of thrustwasher until endplay is .004-.006".

►***CAUTION—Make certain that clearance exists between slinger on rear end of crankshaft and upper and lower filler blocks in rear end of crankcase.***

1947-48 MODELS

FRONT & REAR FILLER BLOCKS: Lower filler blocks (front and rear) are bolted on lower face of crankcase to close oil pan opening (filler blocks must be removed to replace pan gasket). Rear filler blocks (additional upper filler block located in crankcase) are grooved for cork oil seals which bear on polished surface of crankshaft directly behind oil slinger. Filler blocks can be removed and replaced without disturbing crankshaft as follows:

Front Filler Block (Lower) Servicing: Remove by taking out mounting capscrews and timing gear cover capscrews which enter the filler block. When installing filler block, first install oil pan side gaskets (No. 200266), install filler block (use Perma-tex), install new end gasket (No. 200267) on block.

Rear Filler Block (Lower) Servicing: Same as for the lower front block (above) except for crankshaft oil seal (square cork gasket). Remove and discard old gasket, clean out gasket groove, install new cork gasket (No. 200095) with projection at ends even on both sides, install lower filler block **after** upper block has been installed.

Rear Filler Block (Upper) Servicing: Block is seated in groove in crankcase and can be "rotated" out without disturbing crankshaft after lower filler block removed. Remove and discard old oil seal gasket (square cork gasket), clean out gasket groove, install new cork gasket with projection at ends even on both sides. Coat surface of block which seats in crankcase with Perma-tex before installing block.

CAMSHAFT & BEARINGS

1947-48 MODELS

CAMSHAFT CHANGE: Two different camshafts are used (camshaft changed when fuel pump mounting location changed) and can be identified as follows:
Early Cars—Fuel pump mounted at rear of engine.
Later Cars—Fuel pump mounted at front of engine.

Replacement Camshafts for All Engines

K-F Part No. 200113.....Fuel Pump at Rear
K-F Part No. 203017.....Fuel Pump at Front

1947-48 MODELS

CAMSHAFT REMOVAL: Camshaft can be removed with radiator off and engine in car as follows:
1. Remove timing gears (remove both gears and chain as an assembly). This requires removal of vibration dampener and pulley, timing gear cover.
2. Remove cylinder head. 3. Remove fuel pump.
4. Remove oil pan, oil pan return tube & oil pump.
5. Lift valves, using valve spring lifter tool C-482 (see Note below), block valves up by inserting a clothespin or block of wood under each valve head. NOTE—Remove right front tire and wheel and take off splash shield under fender for access to valves.
6. Block up Valve Lifters (lift each lifter up by hand and fasten in upper position with a wire).
7. Remove Camshaft Thrustplate by taking out two screws retaining thrustplate on crankcase.
8. Pull camshaft out through front of engine.

VALVE SYSTEM

1947-48 MODELS

VALVE LIFTER REMOVAL: Lifters can be removed **on some cars,** without disturbing head, as follows: Remove splash shield under right front fender for access to valve compartment. Remove valve spring seat lock (retaining pin on early cars, split type locks on later cars). Turn tappet clearance adjusting screw down as far as possible, remove valve spring. Working through spark plug hole, lift valve up with a wire to provide clearance. Turn tappet clearance adjusting screw up free of the lifter barrel, tilt adjusting screw and locknut to clear valve stem and lift these parts out of the lifter barrel. Raise lifter barrel up until lower end clears hole in block, then tilt barrel and remove.

►***NOTE—If lifter barrel cannot be removed in this manner, remove cylinder head and remove valve.***

OIL PAN REMOVAL

1947-48 MODELS

OIL PAN REMOVAL: Raise front end of car and support it securely on stands. Disconnect steering drag link at idler arm on frame, turn wheels to right and work drag link clear of oil pan. Drain oil, remove oil pan capscrews and lockwashers, slide pan to rear.

►INSTALLATION NOTE—Lower Filler Blocks (front and rear) must be removed to install new oil pan side gaskets. See "Front & Rear Filler Blocks" under Crankshaft & Main Bearings (above) for data.

OIL PUMP

1947-48 MODELS

OIL PUMP SERVICING: Pump can be removed from engine (with oil pan off) by taking off retaining nut on stud on #3 main bearing cap and pulling pump straight down to disengage drive gear and distributor drive coupling. Service pump as follows:

Disassembly—Take out cotter pin and remove screen float assembly. Drive out pin holding drive gear on shaft (pin peened in place), remove gear. Take out lower cover capscrews, remove cover and gasket, lift out pump gears and shaft. Do not remove idler gear shaft unless shaft being replaced.

Reassembly—Install pump gears and shaft in housing, install lower cover using a new gasket. Position new drive gear on upper end of shaft so that clearance between gear and end of pump housing is .002-.004", drill 3/16" hole through pump shaft, install pin through gear and shaft, peen pin securely in place. Install oil screen float assembly.

Oil Pump Installation: Turn oil pump shaft so that driving tongue on upper end of shaft lines up with slot in distributor drive shaft (with pump held in proper position for installation on engine), install pump and tighten mounting nut.

►***CAUTION—Check Ign. Timing after pump installed.***

RADIATOR

1947-48 MODELS

RADIATOR REMOVAL: Drain water, disconnect hose connections. Disconnect two tie rods at top of radiator. Remove nuts on mounting studs underneath radiator, lift radiator up and out.

PROPELLER SHAFT

1947-48 MODELS

CENTER SUPPORT BEARING: Consists of a ball bearing on rear end of front propeller shaft mounted in rubber in steel plate mounted on frame.

Removal & Disassembly—Disconnect front and intermediate universal joints, take off nuts on center support frame mounting bolts, remove front shaft and support bearing assembly. Clamp front shaft in a vise, remove bolt, lockwasher, and plain washer on rear end of shaft (in universal joint companion flange), pull companion flange using Puller C-452. Pull support plate off bearing insulator. Use jaw type puller and clamp to pull bearing, shield, and insulator off shaft. Remove insulator with a clamp-on jaw type puller.

►***CAUTION—Do not wash bearing in gasoline or solvent.***

Reassembly—Press front bearing shield and new bearing on rear end of front propeller shaft, install new insulator and support plate (use liquid soap on outer surface of insulator to allow easy fit of insulator in support), rear bearing shield, universal joint yoke, plain washer, lockwasher, and bolt. Tighten bolt to 30-35 ft. lbs.

Bearing Support Installation: When installing front propeller shaft and support bearing assembly in car, install washers and insulators on each support stud on frame cross-member in the following order: Spacer, Bushing, Front Support Insulator (fluted end to rear), Front Support Washer (has large hole), Support Bearing Plate, Rear Support Insulator (fluted end forward), Rear Support Washer (has small hole), and nut (tighten to 15-20 ft. lbs.).

HOOD REMOVAL & REPLACEMENT: *See "Hood Assembly" in Frazer Shop Notes.*

MODEL IDENTIFICATION

STARTING SERIAL NUMBERS

	Model	Serial Numbers
1947 Frazer	F-47	F-47-001001 Up
1947 Frazer Manhattan	F-47C	F-47C-1000001 Up
1948 Frazer	F-485	F-485-001001 Up
1948 Frazer Manhattan	F-486	F-486-001001 Up

SERIAL NUMBER: On left front door hinge post.
Body Number Note—Stamped on plate on left side of cowl or on right front face of dash.

ENGINE NUMBER: Stamped on pad on left front upper corner of engine block and on Engine Nameplate on left side of crankcase. NOTE—Numeral following Engine Model Designation (first part of Engine Number) indicates Engine Plant as follows: 4—Detroit, 8—Muskegon.

►**Engine Number Symbol (Special Bore & Bearing Sizes)** *See "Original Bore & Pistons" & "Original Bearing Sizes" in Frazer Shop Notes.* NOTE—Symbol consists of 1 or 2 letters following engine number.

TUNE-UP

COMPRESSION PRESSURE: 115-125 lbs. (6.86-1 Heads). 120-130 lbs. (7.3-1 Heads) at cranking speed of 140 RPM. (engine hot, all plugs out, throttle wide open). All cylinders must be equal within 10 lbs.

►*NOTE—7.3-1 Heads marked by "73" stamped on Head directly above engine number pad on block.*

VACUUM READING: 17½" steady idling at 550 RPM.

FIRING ORDER: 1-5-3-6-2-4.

SPARK PLUG GAPS: .032"
Plug Type—Auto-Lite A-5 (normal driving), A-7 (for short runs or to correct hard-starting in cold climates). 14 mm. metric type.

IGNITION: *See Coil, Condenser, and Distributor.*
Breaker Gap—.020" (.018-.022").
Cam Angle or Dwell—38° closed, 22° open.
Breaker Arm Spring Tension—17-20 ozs.
Automatic & Vacuum Advance—*See Distributor.*

IGNITION TIMING: TDC. (at Top Dead Center).
Timing Procedure—*See Ignition Timing.*
Timing Mark—Mark "DC" on flywheel (first cars), on vibration dampener (beginning Eng. No. 17160).
Octane Selector Setting—Set for slight ping when accelerating with wide open throttle.

CARBURETION: *See Carburetor & Carb. Equipment.*
Idle Setting—¾-1¼ turn open—one screw (WA1 Carb.), 1¼-2¼ turns open—one screw (W1 Carb.), 1-1¾ turns open—2 screws (WCD Carb.). Turn screws out for richer mixture.
Idle Speed—550 RPM.
Float Level (WA1 Carb.)—5/16" (610S), ⅜" (622S with first Float and Inlet Valve), ½" (622SA, SB & 622S with late type Float and Inlet Valve). Measure from top of projection on bowl cover to top of soldered seam on free end of float with bowl cover assembly inverted.
Float Level (W1)—½" from top of float at free end to gasket seat on cover.
Float Level (WCD Carb.)—9/64" (685S with first type Inlet Valve), 1/16" (685S & 685SA with later type Inlet Valve) from top of each float to gasket seat on cover with valve closed (bowl cover assembly inverted).
Accelerating Pump—Lower hole (medium) Normal.
NOTE—Pump on 574S has no seasonal adjustment.

Fuel Pump Pressure: 3½-4½ lbs. (for pump mounted at rear of engine), 3-4¼ lbs. (pump mounted at
►*CAUTION—Pump pressure must not exceed 4½ lbs.*

MANIFOLD HEAT CONTROL: Automatic thermostatic type. See that valve operates freely.

►**VALVE TAPPET CLEARANCE:** *CAUTION—Two settings used.*
Before Eng. No. 10769—.010" Int., .014" Exh. Cold.
After Eng. No. 10769—.014" All Valves, Cold.
NOTE—Remove splash shield under right front fender for convenience in adjusting valves.
Valve Timing Check—*See Valve Timing.*

STARTING: *See Battery, Starter, Generator, Regulator.*

IGNITION

IGNITION SWITCH: Douglas or Mitchellock. Frazer No. 201354 (Before Frazer No. F47-36877, Manhattan No. F47C-1033604), No. 203186 (After Above Nos.).
Lock Cylinder—Kaiser-Frazer No. 201898 (with key).

COIL: Auto-Lite Model IG-4093. On left side of engine opposite distributor.

Ignition Current—3 amperes idling, 5 amperes at 6.4 volts (stopped).

CONDENSER: Auto-Lite No. IG-2671K.
Capacity—.20-.25 microfarad.

DISTRIBUTOR: Auto-Lite Model IGS-4211. Full automatic advance type with auxiliary vacuum spark control and octane selector adjustment.
Breaker Gap—.020" (.018-.022").
Cam Angle—38° closed, 22° open.
Breaker Arm Spring Tension—17-20 ounces.
Rotation—Counter-clockwise viewed from above.

Automatic Advance

Distributor Degrees	Distributor RPM.	Engine Degrees	Engine R.P.M.
Start	350	0	700
1	365	2	730
3	400	6	800
7	1150	14	2300
10	1700	20	3400

Octane Selector—Manual adjustment at distributor providing 10° advance and retard. See Ignition Timing.

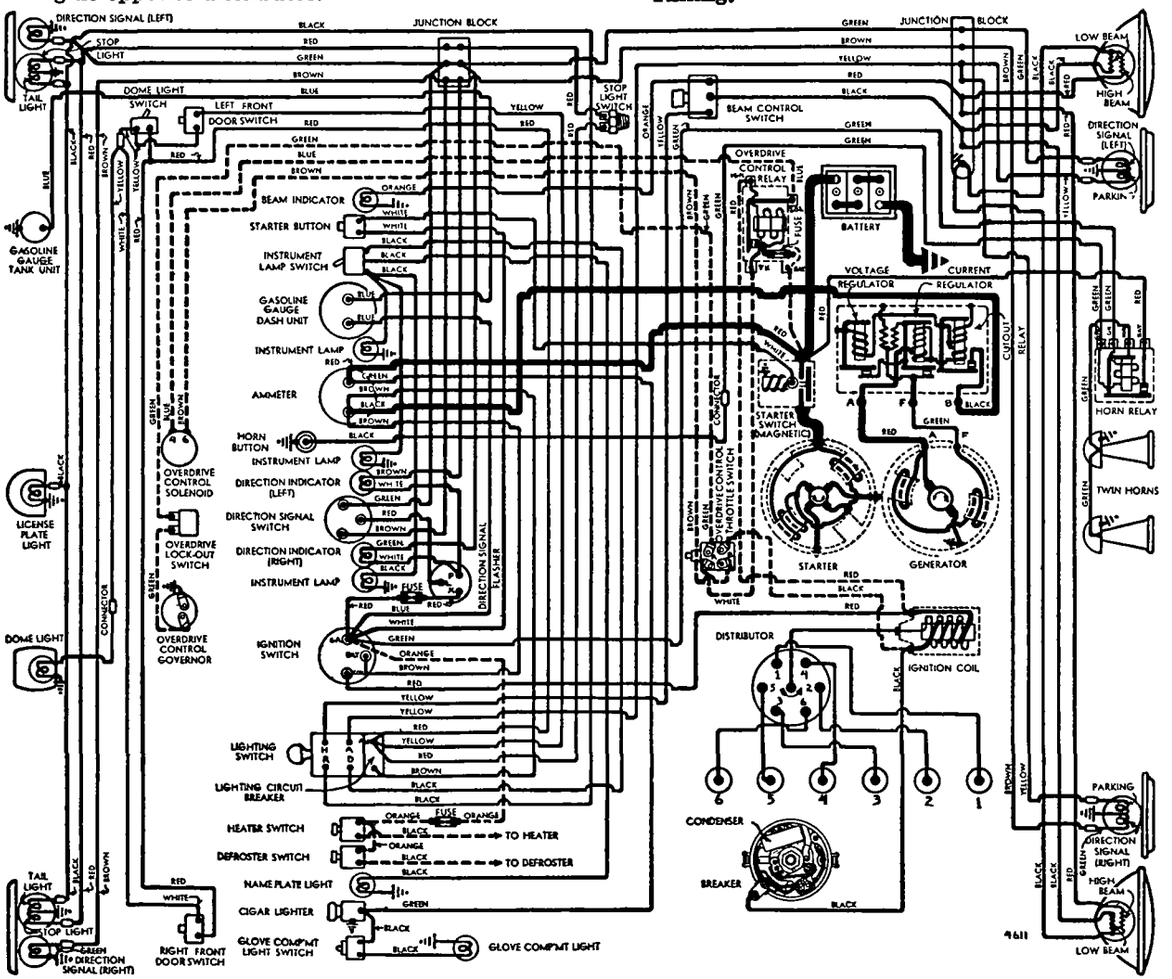

Vacuum Spark Control: Auto-Lite (Integral type). Linked directly to breaker plate. Provides additional advance at speeds above idling except when engine accelerated or operated with wide open throttle when spark retarded by return spring in unit.

Vacuum Advance

Distr. Degrees	Eng. Degrees	Vacuum (" of HG)
Start	0°	8"
4°	8°	11¼"
7.5°	15°	14"

Distributor Removal: On cylinder head between #4 and #5 cylinders. To remove, disconnect vacuum line, take out hold-down screw in advance arm.

IGNITION TIMING

Std. Setting ..... At TDC.
TIMING MARK NOTE—Timing mark located on flywheel (before Eng. No. 17160), on vibration dampener (Eng. No. 17160 up). Consists of "DC" mark or "0" mark at top dead center with 1° graduations
Timing (with Timing Light C-693)—Mark "DC" or "0" top dead center mark on flywheel (before Eng. No. 17160), on vibration dampener (Eng. No. 17160 Up) with chalk or white paint. Connect timing light to #1 spark plug terminal and direct light at timing mark. Idle engine at **400 RPM.** (back off throttle stopscrew to decrease normal idle speed of 550 RPM.). Loosen hold-down screw in advance arm, center screw in slot, tighten hold-down screw. Loosen clampscrew in end of arm under distributor, rotate distributor until timing mark appears in line with pointer, tighten clampscrew. Check octane selector setting.

►*CAUTION—Reset engine idling speed at 550 RPM.*
Octane Selector Setting—Set for slight ping when accelerating with wide-open throttle. To adjust, loosen hold-down screw in advance arm, rotate distributor clockwise (if no ping noted), counter-clockwise (if ping too severe).

CARBURETOR

CARTER WA-1

Carter WA1 Type 622SB superseding 622S & 622SA (All Models). 1¼" Single Barrel, Downdraft type
►NOTE—622S carburetor can be converted to 622SA by installing new Float and Inlet Valve assembly and changing float level.
See Carburetor Section for complete data.
Settings (Idle Setting, Float Level, and Accelerating Pump): *See Tune-Up data.*
Metering Rods & Jets—*See Carter Jet Table in Carburetor Section.*
Fast Idle (WA1 Carburetors): Carter Single Barrel type.
See Carburetion Equipment Section for data.
Setting—⅝" clearance between choke valve and air horn (Gauge T109-85) with throttle valve closed and stopscrew against (not on) first step of fast idle cam. Adjust by bending connector link at lower offset (Tool T109-41).
Automatic Choke (WA1 Carburetors): Carter Climatic Control (Single Carburetor Type).
See Carburetion Equipment Section for complete data.
Setting—Centered (coil housing at index mark).

CARBURETOR

CARTER WCD

Carter WCD Type 685S superseded by 685SA (Optl. on Manhattan F-486). 1¼" Dual (double barrel), Downdraft type with Fast Idle and Climatic Control.
►NOTE—685S carburetor can be converted to 685SA by installing new intake Needle & Valve Assembly and resetting float level to 685SA specifications.
See Carburetor Section for complete data.
Settings (Idle Setting, Float Level, and Accelerating Pump): *See Tune-Up data.*
Metering Rods & Jets—*See Carter Jet Table in Carburetor Section.*
Fast Idle (WCD Carburetors): Carter Dual (WCD) type.
See Carburetion Equipment Section for complete data.
Setting—.016" throttle opening with choke valve held closed and throttle lever stopscrew backed off
Automatic Choke (WCD Carburetors): Carter Climatic Control (Dual Carburetor Type).
See Carburetion Equipment Section for data.
Setting—Centered (coil housing at index mark).

CARBURETOR

CARTER W1

Carter W1 Type 574S. 1¼" Single Barrel, downdraft type with manual choke.
NOTE—This carburetor used for part production starting with following numbers: **F-47** 30,770; **F-47C** 1021118.
See Carburetor Section for complete data.
Settings (Idle Setting, Float Level, and Accelerating Pump): *See Tune-Up data.*
Metering Rods & Jets—*See Carter Jet Table in Carburetor Section.*

CARB. EQUIPMENT

Air Cleaner: AC. Oil-bath type. Kaiser-Frazer No. 200618 (All models with WA1 or W1 Carbs.), No. 203372 (F-486 Manhattan with WCD Carb.).
Servicing—Empty and clean reservoir, wash cleaner in kerosene, refill to indicator line with approx. 1 pint SAE No. 50 engine oil (No. 20 for below freezing tem.) at 1000 mile intervals or when engine tuned
Fuel Pump (Early type—mounted at rear of engine): AC No. 1539057, K-F No. 200281. Diaphragm type.
►*CAUTION—Install this pump with rocker arm OVER camshaft eccentric.*
See Carburetion Equipment Section for data.
Pressure—3½-4½ lbs. maximum.
Fuel Pump (Later type—mounted at front of engine): AC No. 1539073 (K-F No. 201509) Diaphragm type fuel pump or AC No. 1539074 (K-F No. 202319) combination Fuel-and-Vacuum Pump.
Replacement Pump—AC No. 574 (for 1539073), No. 582 (for 1539074 fuel-and-vacuum pump).
►*CAUTION—Install these pumps with rocker arms UNDER camshaft eccentric.*
See Carburetion Equipment Section for data.
Pressure—3-4¼ lbs.
Gasoline Gauge: Auto-Lite electric type.
Dash Unit—A-L No. NG-11104D, Frazer No. 200471.
Tank Unit—A-L No. NG-10987T, Frazer No. 200468.
See Carburetion Equipment Section for data.

BATTERY

Auto-Lite Type 1M-100D. 6 Volt, 15 Plate, 105 Ampere Hour capacity (20 hour rate).
Grounded Terminal—Positive (+) terminal grounded at left front engine support. Engine ground cable connected at same point.
Location—In engine compt. on left side.

STARTER

Auto-Lite Model MAW-4043. Armature MAW-2128.
Drive—Barrel type Bendix Drive No. A1792.
Rotation—Counter-clockwis at commutator end.
Brush Spring Tension—42-53 ozs. (new brushes).

Performance Data

Torque		R.P.M.	Volts	Amperes
0	ft. lbs.	4900	5.5	65
2.75	"	1480	5.0	200
5.75	"	820	4.5	300
8.50	"	400	4.0	400
11.55	"	110	3.5	500
18.0	"	Lock	4.0	670

Starting Switch: Auto-Lite Model SS-4001 magnetic switch. Mounted on starter and controlled by push-button on instrument panel.
See Electrical Equipment Section for complete data.
Removal: Flange mounted on left front fac of flywheel housing. To remove, disconnect cables, take out flange mounting screws.

GENERATOR

Auto-Lite Model GDZ-4818A. Armature GDZ-2006F. Two brush type with voltage and current regulation.
Maximum Charging Rate—35 amperes, 8.0 volts, 1900 RPM. or approximately 20 MPH.
Charging Rate Adjustment—None (see Regulator).

Performance Data

Cold			Hot		
Amperes	Volts	R.P.M.	Amperes	Volts	R.P.M.
0	6.4	925	0	6.4	1000
5	6.65	1060	5	6.65	1150
10	6.85	1200	10	6.85	1290
15	7.05	1340	15	7.05	1430
20	7.3	1480	20	7.3	1590
25	7.55	1620	25	7.55	1750
30	7.8	1760	30	7.8	1980
35①	8.0	1900	35	8.0	2250

①—Current Regulator setting. See Regulator data.
Rotation—Counter-clockwise at commutator end.
Brush Spring Tension—35-53 ozs. (new brushes).
Field Current—1.60-1.78 amperes at 6.0 volts.
Motoring Current—4.16-4.60 amperes at 6.0 volts.
Removal: Pivot mounting at left front of engine. To remove, disconnect leads, take out clamp bolt and pivot bolts. NOTE—Remove battery for access.
Belt Adjustment: ⅛" belt deflection midway between generator and fan pulleys (adjust by pulling generator out with 15 lb. force with all mounting bolts loose).

REGULATOR

Auto-Lite Model VRP-4004F-2. Vibrating type Voltage and current regulators with Cutout Relay.
See Electrical Equipment Section for complete data.
NOTE—Regulator cover sealed. Warranty void if seals broken.

Cutout Relay

Cuts In—6.4-7.0 volts (set to 6.4-6.6 volts).
Cuts Out—4.1-4.8 volts (approx. 4-6 amps. disch.).
Contact Gap—.015" minimum.
Air Gap—.031-.034" with contacts open (check at hinge end of core).

Voltage Regulator

Setting—7.2-7.5 volts at 70°F. See Electrical Equipment Section for settings at other temperatures.
Checking (without breaking seal) & Adjustment—*See Electrical Equipment Section.*
Contact Gap—.012" min. (armature against stop pin).
Air Gap—.048-.052" with contacts just opening.

Current Regulator

Setting—34-36 amperes (marked '35' on the cover).
Checking (without breaking seal) & Adjustment—*See Electrical Equipment Section.*
Contact Gap & Air Gap—Same as Voltage Regulator.

CONTINUED N NEXT PA E

CONTINUED FROM PRECEDING PAGE

LIGHTING

Headlamps: Hall "Sealed Beam" type. Upper and lower beams controlled by beam selector switch. *See Electrical Equipment Section for complete data.*
Adjustment—Aim upper beam straight ahead (hot spot center 3" below lamp center height at 25 ft.).
Beam Indicator—Red jewel on left side of instrument panel (above starter button). Lighted when upper (country beams) in use.

Direction Signal: Mitchell (United Specialties) type. *See Electrical Equipment Section for complete data.*
Direction Indicators—Right and Left indicator lights above instrument dials. Lighted when direction signal on same side of car in operation.

Switches

Lighting—Kaiser-Frazer No. 200819.
Beam Selector—Kaiser-Frazer No. 200863 (Frazer before No. F485-1838), No. 201605 (Frazer after above Nos. & All Manhattans).
Direction Signal—Kaiser-Frazer No. 201467 (Frazer before No. F485-1838), No. 202692 (Frazer after above Nos. & All Manhattans).
Instrument (Rheostat Type)—K-F No. 200821.

Bulb Specifications

Position	Candlepower	Mazda No.
Headlamps	Sealed Beam	4030
Park & Direc. Signal	21-3	1154
Beam Ind., Ign. Switch	1	51
Dir. Sig. Ind. & Clock	1	51
Instrument & Nameplate	1½	55
Rear Direc. Signal	21	1129
Stop & Tail	21-3	1154
License Plate, Rear Compt.	3	63
Dome, Glove Compt.	21	1129
Courtesy	6	81

MISC. ELECTRICAL

LIGHTING CIRCUIT BREAKER: Thermostatic type. On back of lighting switch.

FUSES: Clock—2 ampere. In clock lead.
Overdrive—20 amperes. On relay on dash.
Direction Signal—9 ampere. In flasher lead under instrument panel to left of steering column.

HORNS: Auto-Lite. Model HT-4021 or HT-4023 (Low Note), HT-4022 or HT-4024 (High Note). Twin horns.

Horn Relay: Auto-Lite Model HRL-4101. Relay connected through ignition switch (horns operative only with ignition switch "on").
Contacts Close—1.5-3.0 volts (seal to core with 4.0 volts maximum).
Contacts Open—.5 volt min. (open from seal).
Contact Gap—.026". **Air Gap**—.016-.020" (armature air gap with contacts closed but not sealed), .015-.018" (between armature leg and yoke with armature sealed to core).

ENGINE

ENGINE SPECIFICATIONS: Own (Continental). Six Cylinder, "L" head type.
Bore—3 5/16". **Stroke**—4⅜".
Displacement—226.2 cu. ins. **Rated HP.**—26.3.
Developed Horsepower—100 at 3600 RPM.
Compression Ratio—6.86-1 (First Cars), 7.3-1 (All Cars after Eng. No. 304305—Detroit, 66125—Muskegon).
NOTE—7.3-1 Heads marked by "73" stamped on left front directly above engine number on block.
Compression & Vacuum Reading—*See Tune Up data.*

ORIGINAL BORE & BEARING SIZES: *See Frazer Shop Notes.*

TIGHTENING TORQUES: *See Frazer Shop Notes.*

CYLINDER HEAD INSTALLATION: *See Frazer Shop Notes.*

ENGINE REMOVAL: *See Frazer Shop Notes.*

PISTONS: Two types used. Aluminum alloy, Cam-ground, Tin-plated, strut type with split skirt, or T-slot type. Length 3 9/16" (both types).
NOTE—Pistons can be identified by drilled oil drain holes in fourth ring groove and strut within skirt at each pin boss (Strut Type), or by horizontal slot in fourth ring groove and short vertical slot on one side of skirt (T-slot Type).
►*CAUTION—Piston weight different on each type.*
Weight—15.58 ozs. (strut type), 14.28 ozs. (T-slot).
Clearance—.0255-.0315" (Top Land). See Fitting new pistons.
Removal—Pistons and rods removed from above.

Fitting New Pistons: Use .0015" feeler stock ½" wide inserted on side opposite slot. Pull to withdraw feeler must be 5-10 lbs.

Replacement Pistons: *See Frazer Shop Notes.*

Installing Pistons: Slot in skirt toward left or away from camshaft (all types). NOTE—On pistons marked by arrow on head, arrow toward front of car.

PISTON RINGS: Two compression, two slotted oil rings, all above pin. Third ring groove drilled for oil drainage (all types), fourth groove drilled (strut type pistons), slotted (T-slot pistons).

Ring	Width	End Gap	Side Clearance
Compr. (#1)	.0925-.0935"	.008-.016"	.0025-.004"
Compr. (#2)	.0925-.0935"	.008-.016"	.0015-.0035"
Oil (#3, 4)	.1550-.1545"	.008-.016"	.001-.0025"

Installing Rings: Side marked "TOP" (compression rings) upward.

Replacement Rings: *See Frazer Shop Notes.*

PISTON PIN: Diameter—55/64". **Length**—2 13/16". Floating type, with lock ring at each end.
Pin Fit in Piston—Tight fit (—.0003" clearance). or push fit with piston heated to 212°F. (heat piston in water at 212°F. to install new pins).
Pin Fit in Rod Bushing: +.0003" clearance. When installing oversize pins or new bushings, ream bushings for this clearance with DD-82-2 Reamer (used also to ream piston pin bore in piston).

Replacement Pins: Std. size and .003", .005" Oversize.

CONNECTING ROD: Length—7". **Weight**—29.6 ozs.
Crankpin Journal Diameter—2.0619-2.0627".
►*CAUTION—Special bearing size used in some engines. See "Original Bearing Sizes" in Frazer Shop Notes.*
Lower Bearing—Removable steel-backed, babbitt-lined type. No shims.
Clearance—.0005-.0023". **Sideplay**—.006-.010".

Bearing Adjustment: None. Replace bearings. Do not file rods or bearing caps.

Replacement Bearings: Furnished Std. Size and .001", .002", .010", .012" Undersize.

Installing Rods: Rods and bearing caps marked. Install with marks together and toward camshaft in same order as when removed. Oil spray hole in lower end of rod toward camshaft. NOTE—Lower bearings offset with narrow side of rod toward nearest main bearing (#1, 3, 5 toward front; #2, 4, 6 toward rear of engine).

CRANKSHAFT: Four bearing, counterweighted type with vibration dampener on forward end.
Journal Diameters—2⅜" all bearings.
►*CAUTION—Special bearing size used in some engines. See "Original Bearing Sizes" in Frazer Shop Notes.*
Bearings—Removable, steel-backed babbitt-lined.
Clearance—.0015-.002".

Bearing Adjustment: None (no shims). Replace bearings. Do not file bearing caps. Upper main bearing shells can be "rotated" out by installing tool KF-8 in crankshaft journal hole (lug on tool engages edge of bearing when crankshaft rotated).
Filler Block (Front & Rear) Removal & Installation *See "Crankshaft & Main Bearings" in Frazer Shop Notes.*

Replacement Bearings: Furnished Std. size and .002", .004", .010" Undersize. NOTE—Two types of #1 bearings (flanged & unflanged). See Endplay data.

End Thrust: Taken by front (#1) bearing (special thrustwasher used with unflanged bearings). Controlled by shims installed between bearing journal and thrustwasher. **Endplay**—.004-.006".
Endplay Adjustment—*See "Crankshaft & Main Bearings" in Frazer Shop Notes.*

CAMSHAFT: Four bearing. Two-sprocket chain drive. NOTE—Two different camshafts used due to relocation of fuel pump. Camshaft No. 200113 (first cars—pump at rear), No. 203017 (later cars—pump at front).
Journal Diameters—#1, 1 7/8"; #2, 1 13/16"; #3, 1 3/4"; #4, 1 1/4".
Bearings—Steel-backed, babbitted bushings.
Clearance—.002-.004".

Bearing Adjustment: None. Replace bushings with camshaft removed.

End Thrust: Taken by thrust plate on front of engine (between front bearing journal and camshaft sprocket). **Endplay**—.003-.007".

Camshaft Removal: *See "Camshaft & Bearings" in Frazer Shop Notes.*

Timing Chain: Non-adjustable type. Width 1". Pitch .500", Length 23" or 46 links.

Camshaft Setting: Mesh chain with 9 links (or 10 link pins inclusive of pins opposite marks) between marks on sprockets with #6 piston at top dead center on compression stroke.

VALVES	Head Diameter	Stem Diameter	Length
Intake	1 33/64"	.3414-.3406"	5 3/16"
Exhaust	1 21/64"	.3395-.3387"	5 3/16"

	Seat Angle	Lift	Stem Clearance
Intake	30°	.3481"	.0008-.0026"
Exhaust	45°	.3315"	.0032-.0050"

NOTE—Valves with drilled stem (for lock pin) used on first cars, valves with grooved stem (for split type locks) used on later cars.

Valve Guides: Pressed in block. Replace when stem clearance exceeds maximum (above). Ream new guides for correct clearance using Reamer C-249.
Valve Guide Installation—Use Driver DD-849. Drive old guide down and out, drive new guide down into place (same height as old guide with mark on driver stem in line with top face of block). NOTE—Tapered end of guide must be upward.

Valve Springs: Check spring with tester C-647. Pressure should be 101±3 lbs. at 1⅜". Spring free length 1 15/16".

	Spring Pressure	Length
Valve Closed	51 lbs.	1 43/64"
Valve Open	113 lbs.	1 5/16"

Valve Lifters: Barrel type. NOTE—Lifters can be removed (some engines only) without disturbing cylinder head. *See "Valve System" in Frazer Shop Notes.*
Clearance—.0005-.0018". With correct clearance, lifter should rotate in bore with slight drag. Service by installing oversize lifter.
Replacement Lifters—Furnished Std. size and .0005", .001", .0015", .002" Oversize.

VALVE TIMING

►**Tappet Clearance:** *CAUTION—Two settings used:*
Before Eng. No. 10769—.010" Int., .014" Exh. Cold.
After Eng. No. 10769—.014" All Valves, Cold.

Valve Timing: See Camshaft Setting above.
Intake Valves—Open 10° BTDC. Close 60° ALDC.
Exhaust Valves—Open 55° BLDC. Close 10° ATDC.
Valve Timing Check—With tappet clearance set at .014" (running clearance), #1 exhaust valve should close with piston 10° or .045" after top dead center with the ten-degree mark after the dead center mark "DC" at indicator in flywheel housing inspection hole (before Eng. No. 17160). Beginning with Eng. No. 17160, marks located on dampener.

LUBRICATION

Lubrication System: Pressure to crankshaft, connecting rod, camshaft bearings, exhaust valve lifters, timing chain. Oil pump located in oil pan.
Crankcase Capacity—5 qts. (refill), 5½ (dry).
Normal Oil Pressure—35 lbs., 2000 RPM., 30 MPH.
Oil Pressure Regulator—Under plug on right side of crankcase between #4 & #5 cylinders. Opens at 35 lbs. Adjustable by adding or removing washer, No. 200272, between end of spring and plug.

Oil Pan Removal: *See Frazer Shop Notes.*

Crankcase Ventilation: Filter element in oil filler cap (air intake). Outlet pipe located on front valve cover plate on right side of engine.

Oil Pump: Gear Type. In crankcase.
Oil Pump Servicing—*See Frazer Shop Notes.*

Oil Filter: Replace cartridge at 10,000 mile intervals or more often if required by operating conditions.

COOLING

Cooling System: Sealed system (relief valve in filler cap) with positive circulation and thermostatic control. NOTE—Radiator changed—see Radiator.
Capacity (First 22" Radiator)—15 qts. (14 qts. at driving level). **(Later 17" Radiator)** 13½ qts. (13 qts. at driving level).
Pressure Valve—AC. No. 846740 (Radiator Filler Cap). Opens at 3¾ lbs. (3¼-4¼ lbs.).

Radiator: Two types used as follows:
First Cars—No. 200445 (22" wide). Service by installing later type (No. 202906) and installing Radiator Shroud Side Panel Extension No. 203100 (two required), using No. 576 screws (10 required).
Later Cars—Radiator No. 202906 (17" wide).
Radiator Removal—*See Frazer Shop Notes.*

Water Pump: Centrifugal type with ball bearing shaft.
See Water Pump Section for complete data.
Belt Adjustment—*See Generator Belt Adjustment.*

Thermostat: Kaiser-Frazer No. 200160 (Std.), No. 202349 (for Permanent Anti-freeze only). In water outlet eblow on cylinder head.
Setting (Std. type)—Begins to open at 148-155°F. Fully open at 173°F.

Temperature Gauge: Auto-Lite No. H-11103, Frazer No. 200453. Not electric.

CLUTCH

Borg & Beck.....**Model 9A7**
Auburn (Some Cars).....**Model 9251-15**
Clutch Identification—Types can be identified by number of pressure plate springs—3 (Auburn), 9 (Borg & Beck—cover also marked "951").
See Clutch Section for complete data.
Facings (Borg & Beck)—Woven asbestos, 2 required. I.D. 6". O.D. 9¼". Thickness ⅛".
Facings (Auburn)—Moulded metallic or Raybestos, 2 required. I.D. 6". O.D. 9¼. Thickness .135".

Pedal Adjustment: Pedal free travel ¾-1". To adjust, position nut on pedal assist spring link (at rear end of spring) so that it is lined up with spring adjusting gauge, KF-10, installed on spring.

Removal: Remove transmission (see Transmission Removal below), remove clutch housing underpan, disconnect clutch pedal cross-shaft from pedal linkage. Install Clutch Plate Aligning Arbor, C-360, to hold clutch parts in alignment, take out mounting screws in clutch cover flange (rotate flywheel so that all screws accessible through pan opening). Remove aligning arbor, remove clutch cover assembly and driven member through underpan opening.

TRANSMISSION

Warner Model AS11-T86E (Std.), Model AS12-T86E with new Type R10B Overdrive (Optl.). Constant-mesh, synchro-mesh (Second & High), sliding gear (Low & Reverse).
See Transmission Section for complete data.

Transmission Control: Remote control type with gearshift lever mounted on steering column.
See Transmission Section for complete data.

Removal: Disconnect front propeller shaft at front universal joint (take out bolts in transmission companion flange), move shaft out of the way. Disconnect speedometer drive cable and transmission control levers at transmission case, free parking brake cable support bracket from frame cross-member. Remove four bolts mounting engine support on frame cross-member (support comes out with transmission). Loosen all four bolts mounting transmission on clutch housing, remove two lower bolts only (CAUTION—two upper bolts must support transmission until ready for removal). Remove flywheel housing underpan, raise rear end of engine (place jack under flywheel, use wood block between jack and flywheel) for sufficient clearance for transmission removal. Remove the two upper transmission mounting bolts, move transmission back until clear of clutch, slide tranmission clear of cross-member and remove from beneath car.

OVERDRIVE

Warner Type R10B (with special AS12-T86E Transmission). Optl Equipment. New Governor controlled type (no centrifugal pawls) with electrical solenoid operation and throttle controlled "kick-down".
See Transmission Section for complete data.
Overdrive Solenoid—Delco-Remy 1118132, Warner No. 3AR10B-62 Kaiser-Frazer No. 200911.
Governor—Kaiser-Frazer No. 200908.
Control Relay—Auto-Lite HRT-4001, Kaiser-Frazer No. 201636. On left side of dash.
Kick-down Switch—Kaiser-Frazer No. 201638. Adjust switch by means of nuts on threaded sleeve so switch actuating cam on accelerator lever just contacts plunger on switch at wide open throttle
Lock-out Switch—Kaiser-Frazer No. 200915.

Removal: Disconnect all wiring at control units on overdrive case, disconnect control cable and speedometer cable. Remove Overdrive and Transmission as a unit (see Transmission Removal above).

UNIVERSALS

Detroit Series 4200. Ball-and-trunnion type or Mechanics. Roller bearing type. Three used with intermediate universal at propeller shaft support
See Universals Section for complete data.

Propeller Shaft & Support Bearing: Two shafts used:
Propeller Shaft & Support Bearing Servicing—*See "Propeller Shaft" in Frazer Shop Notes.*

REAR AXLE

Spicer (Salisbury) Model 41-2. Semi-floating, Hypoid Gear type with Hotchkiss Drive.
See Rear Axle Section for complete data.
Ratio (Without Overdrive)—4.09-1 Std., 3.73-1 Optl.
Ratio (With Overdrive)—4.27-1.
Backlash—.003-.006". Shim adjustment.

Removal: Hoist rear end of car and place supports under frame. Remove rear wheels and drums (use Puller C-319). Disconnect propeller shaft at rear universal flange, disconnect hydraulic brake line at connector on axle housing, disconnect rear shock absorbers and sway eliminator links (when used) at spring seat, disconnect parking brake cables. Disconnect both springs at front hanger and rear shackle, remove axle and spring assembly from beneath car. NOTE—Axle can be removed without disturbing springs by taking out spring "U" bolts.
Axle Shaft Removal—Remove rear wheel and drum using puller C-319. Disconnect hydraulic brake line at backing plate and brake cable. Remove outer oil seal and backing plate (CAUTION—do not lose adjusting shims between backing plate and housing flange). Pull axle shaft and bearing assembly out

Wheel Bearing Adjustment: Adjust endplay by adding or removing shims located between backing plate and axle housing flange (shims .003", .005", .010", .030" thick). Make certain that shim thickness at right wheel is .060" (to center thrust block on differential shaft), adjust endplay at left wheel.
Endplay—.001-.006".

SHOCK ABSORBERS

Monroe. Direct acting, hydraulic type. Serviced by replacement (mountings serviced separately).
See Shock Absorber Section for complete data.

	Front	Rear
Kaiser-Frazer No. (Std.)	201490	201493
Kaiser-Frazer No. (Exp.)	202864	202866

FRONT SUSPENSION

Front Suspension: Independent, linked parallelogram type with coil springs.
See Front Suspension Section for complete data.
Kingpin Inclination—4¾—5¾° crosswise.
Caster—0° preferred (—1° to +1°).
Camber—¼° preferred (0° to ¾°).
Toe-In—1/16". Adjust by turning both tie rods
Steering Geometry (Toe-out): Inner wheel 23°. Outer wheel 20°. No adjustment.

STEERING GEAR

Gemmer Model 305. Worm-and-Roller type with "push-pull" adjustments.
See Steering Gear Section for complete data.

BRAKES

Service Brakes: Bendix (Lockheed) Hydraulic type with floating self-centering shoes (no anchor pin adjustment). Hand lever applies rear service brakes.
See Brake Section for complete data.
Drums—Composite (cast-iron & steel). Diameter 11"
Clearance—.008" at heel and toe of each shoe.
Lining—Molded type. Width 2". Thickness 13/64". Length 12¼" (forward shoe—all wheels), 10 1/32" (rear shoe—all wheels).

Hand Brake: See Service brake data (above).

CYLINDER HEAD

CYLINDER HEAD INSTALLATION: Use a Torque Indicating Wrench to tighten cylinder head stud nuts, tighten in correct sequence as shown in the diagrams. Procedure for tightening Cast Iron and Aluminum heads is as follows:

Cast Iron Heads—With engine cold, tighten all nuts evenly to correct tension. Then run engine until it is thoroughly warmed up and recheck all nuts (additional tightening may be necessary for correct tension).

Aluminum Heads—With the engine cold, tighten all nuts to correct tension. Run engine until thoroughly warm, allow engine to cool off, and then recheck all nuts. Do not tighten aluminum heads when warm.

GRAHAM

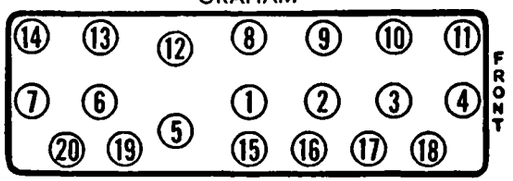

Tightening Torque—See Tightening (Torque Wrench) Specifications below.

1936-40 MODELS (EXCEPT HOLLYWOOD)

CYLINDER HEAD REMOVAL ON SUPERCHARGER MODELS:—Not necessary to remove Supercharger. Remove nuts holding supercharger bracket to cylinder block and at cylinder head, remove screws and nuts holding intake cross-tube to manifold and supercharger, disconnect gasoline line to carburetor, water pipes to supercharger, vacuum line to distributor. Tip supercharger away from engine block and proceed with cylinder head removal (do not disconnect carburetor throttle and choke connections).

TIGHTENING (TORQUE WRENCH) SPECIFICATIONS

ALL MODELS

	Ft. Lbs.	In. Lbs.
Aluminum Heads	40-45	480-540
Cast Iron Heads	55-60	660-720

PISTONS

1937-41 MODELS

PISTONS:—Pistons are full skirt type (no slot) with special oil groove extending entirely around piston at lower end of skirt and four vertical grooves on one side (pistons must be installed with these grooves toward camshaft). These grooves are part of the piston and cylinder wall metered-lubrication system.

CYLINDER WALL LUBRICATION

1937-41 MODELS

PISTON & CYLINDER WALL LUBRICATION SYSTEM:—Oil channel in block at side of lifter guide holes feeds oil from engine pressure system to oil groove on side of valve lifters (barrel type). When lifter raised by cam, this groove registers with drilled hole through cylinder wall and oil is fed to piston oil groove (see above) for piston and cylinder wall lubrication. This action occurs twice for each stroke of the piston.

Servicing—Clean out oil channels and drilled holes when pistons and lifters removed.

PISTON RINGS

1937-41 MODELS

PISTON RINGS:—Compression and top oil ring are special types and must be installed as follows:

Installing Rings:—Compression rings are taper-faced and must be installed with marks on edge of ring up. Top oil ring (wiper ring) is X-90 type. Install this ring with expander joint at back of ring, springs seated in notches at ring ends, word 'NO.' on expander right side up and visible in ring joint, and oil groove on ring face down.

Replacement Rings:—Compression and oil rings (except X-90) furnished standard and .010", .020", .030" oversize. X-90 ring furnished standard and .020" oversize.

CRANKSHAFT & MAIN BEARINGS

1936-41 MODELS

MAIN BEARING SERVICING:—Front Bearing 1938-41. Consists of a special bushing (not split) inserted in hole in front face of crankcase. This bearing cannot be adjusted and must be replaced if clearance excessive.

Front Bearing Replacement—Remove radiator, vibration dampener, chain case cover. Remove nut holding camshaft sprocket, pull camshaft and crankshaft sprockets together (to avoid damage to chain), remove front bearing bushing.

Bearing Replacement (All except No.1 1938-41):—To determine correct size for replacement bearing, install .003" feeler 1" long in bearing cap between bearing and crankshaft, tighten cap securely. If bearing is tight on this feeler, install standard replacement bearing. If crankshaft turns freely with this feeler in place, install .001" undersize bearing.

NOTE—No undersize bearings furnished on following models: 80, 80A, 85, 90, 90A, 110.

Bearing Installation—Not necessary to remove crankshaft. New upper bearing halves can be 'rotated' in place. Bearing caps are doweled to crankcase to insure alignment.

Bearing Clearance—Check clearance of new bearings by installing .002" feeler 1" long under bearing cap. With bearing cap tight, shaft should bind with feeler in place but should be free with feeler removed. Face bearing cap with emery cloth on surface plate to secure this fit.

Endplay Adjustment:—Remove radiator, vibration dampener, chain case cover. Check endplay with feeler gauge. To adjust, pull camshaft and crankshaft sprockets together, add or remove shims between crankshaft shoulder and steel thrust washer (furnished .002" & .008" thick). See that floating bronze thrust washer is in place between steel washer and main bearing.

VALVE SYSTEM

1936-41 MODELS

VALVE GUIDE REMOVAL & INSTALLATION:—Use special puller mounted on top of block (install steel plate under puller legs to distribute strain on block) and pull old guides up through top of block (if guides stick, use knock-out bar to loosen guide and avoid strain on puller draw-bar). Install new guides in same manner pulling guides up into holes in block from below.

SUPERCHARGER

1936 MODELS

SUPERCHARGER: Driven by separate chain from sprocket on crankshaft at front of engine.

Supercharger Drive Chain—Link-Belt. Width 1½". Pitch ⅜". Length 27¾" or 74 links.

Chain Adjustment—Chain adjusted by shifting supercharger drive sprocket. To adjust, loosen flange mounting screws, back off adjustment setscrew locknut, turn up adjustment setscrew until chain hums with engine running, back off screw until chain runs noiselessly, tighten locknut and mounting screws. This is the only adjustment necessary for supercharger operation.

1937-41 MODELS

SUPERCHARGER:—Supercharger is entirely separate unit mounted on left hand side of engine block and belt driven from the crankshaft.

Supercharger Drive:—Two exposed Vee belt drive taken from crankshaft pulley at front of engine. **Belt Adjustment**—None (automatic). Belt tension maintained by automatic take-up consisting of driven pulley mounted on pivoted arm with light coil spring pressing outward on arm and held by ratchet (allows outward movement to take up slack only).

1936-41 MODELS

Supercharger Removal:—Disconnect throttle and choke linkage, fuel line from pump, vacuum line to carburetor. Remove nuts holding supercharger bracket to cylinder block and at cylinder head, take out screws and nuts connecting cross-tube to supercharger cover at top and oil line to supercharger case at bottom, remove bolts in lower mounting bracket, lift supercharger and carburetor assembly out.

BRAKE NOTES

HAND BRAKE:—Consists of an external-contracting band on a drum at rear of the transmission. Hand lever is linked directly to operating lever on band.

1935-36 MODELS

Adjustment—With lever in released position, remove anchor screw locking wire, turn anchor screw to give 1/32" clearance between lining and drum, lock the anchor screw with wire. Adjust guide bolt nut to give 1/32" clearance for lower half of band, secure with locknut. Finally, adjust brake adjusting bolt nut to give 1/32" clearance (as above) for upper portion of band.

1937-40 MODELS (EXCEPT HOLLYWOOD)

Adjustment—With hand lever in released position, remove anchor screw locking wire, turn anchor screw to give .025" clearance between lining and drum, lock anchor screw with wire. Back off brake adjusting bolt nut (at top), loosen locknut on guide bolt and adjust to give .025" clearance for lower portion of band, tighten locknut, finally turn adjusting bolt nut to .025" clearance for upper portion of band (tension n guide bolt should just be relieved).

MODEL IDENTIFICATION

SERIAL NUMBER:—First number 300,001 (80, 80A), 315,001 (85). On plate on floor inside right door.

ENGINE NUMBER:—First number 305,001 (80, 80A), 320,001 (85). Stamped on plate on right side of engine and on serial number plate.

TUNE-UP

COMPRESSION:—Ratio 6.8-1. Pressure 115 lbs. at 50 R.P.M.

VACUUM READING:—Gauge should show steady reading of 15-17" with engine idling at 5-7 M.P.H.

FIRING ORDER: 1-5-3-6-2-4. See diagram.

SPARK PLUGS: Champion Type C7. 18 mm. Metric. Gaps—.025". Limits .023-.027".

IGNITION: See Coil, Condenser, and Distributor.
Breaker Gap—.018". **Cam Angle** 35° (closed).
Automatic Advance—9° max. at 1400 RPM. (distr.).
Vacuum Advance—5½° distr. with 9-13" vacuum (680-N Unit). 5° distr. with 13-16" vacuum (681-C Unit).

IGNITION TIMING: See Ignition Timing.
Std. Setting—At TDC. with flywheel mark "DC.IGN" at indicator on housing.

CARBURETION: See Carburetor & Carb. Equipment.
Idle Setting—Idle screw midway between "miss" and "roll" points Idle speed 300 RPM or 5-7 MPH.
Float Level—1⅜" from gasket seat on cover to bottom of float at free end (invert to check).
Accelerating Pump—#2 hole Normal, #3 cold weather. #1 (Summer), #4 (Winter) for extreme temperatures.
Fuel Pump Pressure: 3½ lbs. maximum.

VALVES: See Valve Timing.
Tappet Clearance—.010" All Valves, Engine Hot.

STARTING: See Battery, Starter, Generator, and Regulator (when used).

IGNITION

Ignition Switch:—Delco-Remy Model 431-U. Switch and cable assembly. Connected to coil by armored cable.

COIL: Delco-Remy Model 536-J. Mounted on dash.
Ignition Current—2 amperes idling, 4 stopped.

CONDENSER: Delco-Remy Part No. 829092.
Capacity—.20-.25 microfarad.

DISTRIBUTOR: Delco-Remy Model 623-A. Single breaker, 6 lobe cam, full automatic advance type with auxiliary vacuum spark control.
Breaker Gap—Set at .018". Limits .018-.024".
Cam Angle or Dwell—35° (closed), 25° (open).
Breaker Arm Spring Tension—17-21 ounces.

Automatic Advance

Distributor Degrees	R.P.M.	Engine Degrees	R.P.M.
Start	400	2	800
9	1400	18	2800

Vacuum Spark Control Model 680-N, 681-C. Provides additional advance for intermediate speeds above idling except when engine is suddenly accelerated or is operated with wide open throttle when spark will be retarded by return spring in unit.
NOTE—680-N used on first 3000 cars Model 80, all cars Model 85. 681-C used on Model 80 after first 3000 cars.

Vacuum Advance—680-N

Distr. Degrees	Eng. Degrees	Vacuum (" of HG)
Start	0°	7" Min.
5½°	11°	9-13"

Vacuum Advance—681-C

Start	0°	5-7"
5°	10°	13-16"

Distributor Removal:—Mounted on cylinder head. To remove, take out hold-down screw in advance arm.

IGNITION TIMING

IGNITION TIMING:—

	Flywheel Degrees	Piston Pos.
All Engines	0° TDC	.0000" TDC.

To Set Timing—With #1 piston on compression, turn engine over until piston reaches top dead center, stop when the flywheel mark 'D.C. IGN.' lines up with indicator on housing, loosen advance arm clamp bolt, rotate distributor until contacts begin to open, tighten clamp bolt, see that rotor is opposite #1 segment in distributor cap.

CARBURETOR

CARBURETION:—Carburetor—Marvel B-2-SU-10-1673 (80, 80A Before Engine No. 309995), 10-1690 (80, 80A After No. 309995, All 85). Downdraft type with manual choke control.

NOTE—See Carburetion Section for recommended jet changes on 1673 ('36) carburetors before Carburetor Serial No. 5093894.

For complete data, refer to Carburetor Index.

Idle Adjustment—With engine hot, close throttle, see that choke control button on instrument panel is pushed in, set throttle stopscrew so that engine idles at 300 R.P.M. or 5-7 M.P.H., turn idle adjusting screw out until engine begins to roll, then turn screw in until engine begins to miss, finally turn screw out until engine fires smoothly. Readjust throttle stopscrew for correct idling speed.

CONTINUED ON NEXT PAGE

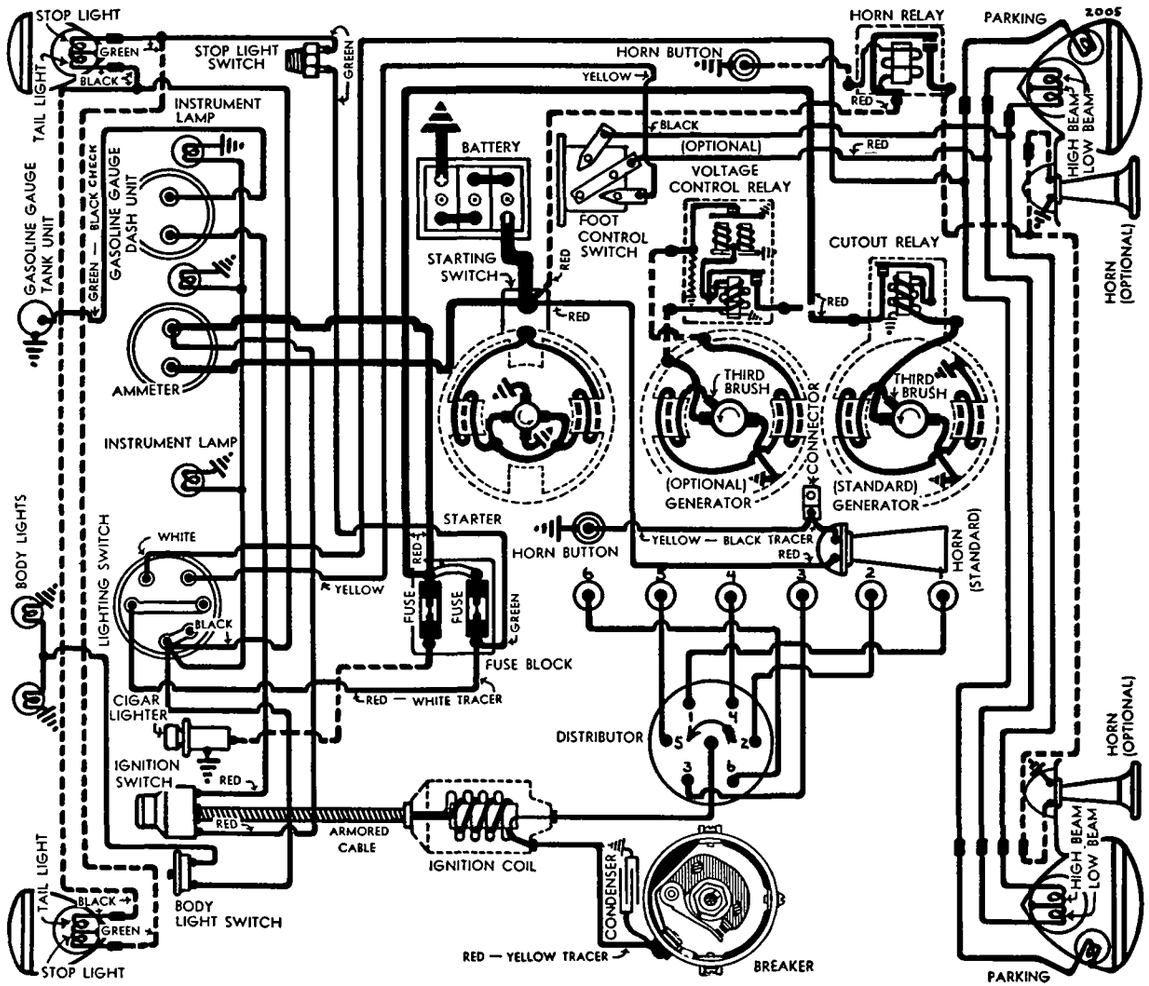

CONTINUED FROM PRECEDING PAGE

Accelerating Pump Setting—Pump lever has four holes for pump link engagement, set for seasonal requirements as follows:
#1—(Min. stroke) High test fuel or hot climate.
#2—Recommended for moderate climate.
#3—Cold climate or low test fuel.
#4—(Max. stroke) Extremely cold weather.

Fast Idle:—Integral with carburetor. No adjustment.

CARB. EQUIPMENT

Air Cleaner:—80, 80A—A.C. #1525951 oil-wetted type standard. Heavy duty oil bath type optional.
85—Burgess oil-bath type standard.

Fuel Pump:—AC. Type P #1523008. Diaphragm type.
For complete data, refer to Carburetion Equip. Index.

Gasoline Gauge:—Motometer Electric. 80, 80A—Dash unit NG-7842D (Early 80, 80A), NG-8042D (Late 80, 80A; all 85). Tank Unit—NG-7823T (all models).
For complete data, refer to Carburetion Equip. Index.

BATTERY

BATTERY:—Willard, WHT-1-90, RHT-1-90 (Export). 6 volt, 13 plate, 90 ampere hour capacity (20 hour rate).
Starting Capacity—114 amperes for 20 minutes.
Zero Capacity—300 amperes for 3.0 minutes.
Grounded Terminal—Positive (+) terminal.
Location—Under front seat.

Cars with Radio—Willard Type WHT-2-105, RHT-2-105 (Export). 6 volt, 13 plate, 105 ampere hour capacity (20 hour rate).
Starting Capacity—133 amperes for 20 minutes.
Grounded Terminal & Location—Same as above.

STARTER

Delco-Remy Model 738-J, 738-V. Armature 823881.
Drive—Manual pinion shift with overrunning clutch. Full travel—⅛" clearance between pinion and housing.
Cranking Engine—60 R.P.M., 175 amperes.
Rotation—Counter-clockwise at commutator end.
Brush Spring Tension—24-28 ounces each.

Performance Data

Torque	R.P.M.	Volts	Amperes
0 ft lbs	5000	5.0	65
12 "	Lock	3.37	525

Removal:—Flange mounted on left front face of flywheel housing. To remove, take out flange mounting capscrews.

Starting Switch:—Delco-Remy No. 820052. Monted on starter field frame. Operated by pinion shift lever

GENERATOR

STANDARD

Delco-Remy Model 937-Y, Armature No. 1859794. Model 936-L (Radio). Armature No. 1860284. Third brush control. External voltage (Step-voltage) control (936-L). Ventilated by fan on drive pulley.
Charging Rate Adjustment—Connect test ammeter in charging line at 'BAT' terminal. On 936-L model short out Voltage Control Relay by connecting jumper wire from generator field 'F' terminal to frame. Loosen lockscrew on commutator end plate, shift third brush by hand counter-clockwise to increase or clockwise to decrease charging rate, tighten lockscrew. Remove jumper wire (936-L).
Maximum Charging Rate (937-Y)—18 amps. (cold), 15 amps. (hot), 8.3 volts, 2000 R.P.M., 22-23 M.P.H. (936-L)—23 amperes (cold) at 8.8 volts, 2800 R.P.M., 23-26 M.P.H., 20 amps. (hot) at 8.5 volts, 3100 R.P.M.

Performance Data—937-Y

	Amperes	Volts	R.P.M.
Cold	15-18	7.9-8.3	2000
Hot	13-15	7.7-8.0	2400

Performance Data—936-L

Cold	20-23	8.5-8.8	2800
Hot	16-20	8.1-8.5	3100

Rotation—Counter-clockwise at commutator end.
Brush Spring Tension—22-26 ounces (main), 16-20 ounces (third brush).
Field Current—(937-Y) 3.5-4.5 amperes, (936-L) 2.3-2.6 amperes, at 6 volts.

Removal:—Cradle mounted at left front of engine with fan belt drive. To remove, slack off drive belt, disconnect water pump coupling, loosen mounting clamp band.

Belt Adjustment:—Belt adjustment provided at fan bracket. With correct adjustment sideplay of belt should be 1" between pulleys.

GENERATOR

SPECIAL EQUIPMENT

Delco-Remy Model 933-R (Special Police Service). Two brush (shunt) type with external voltage and current regulation.
Charging Rate Adjustment—None. See Regulator.
Maximum Charging Rate—As listed below.

Performance Data

	Amperes	Volts	R.P.M.
Cold	22	8.0	1200

Current Regulator limits output to 22 amperes.
Rotation—Counter-clockwise at commutator end.
Brush Spring Tension—25 ounces each.
Field Current—1.7-2.0 amperes at 6.0 volts.

Removal & Belt Adjustment—Same as Std. Gen.

CUTOUT RELAY

Delco-Remy Model 265-B (937-Y Gen.). Mounted on the generator.
For complete data, refer to Electrical Equipment Index.
Cuts In—6.75-7.5 volts.
Cuts Out—0-2.5 amperes discharge.
Contact Gap—.015-.025".
Air Gap—.012-.017" with contacts closed.

REGULATOR

STANDARD

Delco-Remy Model No. 5585 (936-L Gen.). Voltage **Control Relay.** Cutout Relay and non-vibrating type Voltage Regulator in single case on generator.
For complete data, refer to Electrical Equipment Index.

Cutout Relay

Cuts In—6.4-6.8 volts.
Cuts Out—3 amperes at 6.3 volts, discharge.
Contact Gap—.015-.025".
Air Gap—.012-.017" with contacts closed.

Voltage Control Relay

Contacts Open—8.35-8.65 volts at 70° F.
Contacts Close—7.3-7.7 volts at 70° F.
Contact Gap—.008-.013".
Air Gap—.028-.040" between armature and core (armature down against lower stop), .028-.040" armature travel (between armature and lower stop)

REGULATOR

SPECIAL EQUIPMENT

Delco-Remy Model No. 5596 (Special 933-R Gen.). Double Core Type Voltage & Current Regulator (With 'IGN' Terminal). Consists of Cutout Relay and vibrating type Voltage and Current Regulator
Refer to the Graham Model 110 article (following) for complete data on this Regulator.

LIGHTING

LIGHTING:—Headlamps—Corcoran-Brown, Prefocused type. Headlamps aimed straight ahead (upper beam with lenses in place). Upper and lower driving beams controlled by foot selector switch.

Switches

Lighting—Delco-Remy Model 481-Y.
Foot Selector—Delco-Remy Model 471-P.

Bulb Specifications

Position	Candlepower	Mazda No.
Headlamps	32-21	2320
Parking	1½	55
Stop and Tail	21-3	1158
Instrument, Body	3	63

MISC. ELECTRICAL

FUSES:—Lighting—One 20 ampere fuse mounted on fuse block on rear side of dash panel. Extra fuse on fuse block.
Cigar Lighter—One 20 ampere fuse on fuse block.

HORNS:—Klaxon Model K-16 Type 2001 Std. Twin horns optional. Twin horn set consists of Model K-33-B Type 1864 (80, 80A) 1873 (85) left hand—high note, K-33-C Type 2155 (80, 80A), 2156 (85)

	Current at 6 volts.	Air Gap
K33B 1864, 5	11-13 amperes	.036-.040"
K33C 2155, 6	11-13 amperes	.042-.046"

Horn Relays:—80, 80A. Model 266-T. Requires .25 ampere at 2 volts minimum to close contacts.
Contact Gap—.015-.025". **Spring Tension**—6-8 ozs.
Air Gap—.012-.017" with contacts closed.
85—Model 271-A. Closes at 2.7-4.0 volts.
Contact Gap—.015-.025". **Air Gap**—.010-.014".

ENGINE

ENGINE SPECIFICATIONS:—6 cylinder, 'L' head.
Bore—3". **Stroke**—4".
Displacement—169.6 cubic inches.
Rated Horsepower—21.6 (AMA).
Developed Horsepower—70 at 3500 R.P.M.
Compression Ratio—6.7-1 Std. 7.0-1 Optl.
Compression Pressure—115 lbs. at cranking speed.
Vacuum Reading—Gauge should show steady reading of 15-17" with engine idling at 5-7 M.P.H.

PISTONS:—Bohn Bohnalite, aluminum alloy, Invar strut, split skirt type. **Length**—3 11/16".
NOTE—1937 pistons are plated (bearing metal bearing surface).
Weight—14 ozs. Held to two gram variation.
Removal—Pistons and rods removed from above.
Clearance—Skirt .002". See Fitting New Pistons.

Replacement Pistons:—Finished replacement pistons furnished 2.997" to 3.006" (in .001" steps), 3.006" to 3.022" (in .002" steps) and 3.030" oversizes.

Fitting New Pistons:—Use .002" feeler ½" wide inserted between piston and cylinder wall on side opposite slot. Pull required to withdraw feeler should be 10-15 lbs.

ENGINE

C NTINUED FROM PRECEDING PAGE

Installing New Pistons:—Slot should be toward left or away from valves (on opposite side from head of piston pin clamp screw and oil hole in lower end of rod).

PISTON RINGS:—Two compression, one oil control ring per piston, all above pin. Lower ring groove drilled radially with eight 9/64" oil drain holes.
NOTE—Oil ring groove depth increased from .161" to .175" on 85, after engine number 320586.

Ring	Width	End Gap
Comp. all	1/8"	.008-.012"
Oil Cont.	3/16"	.008-.012"

NOTE—Side clearance for all rings .0015" min.

Replacement Rings:—Rings furnished standard and .010", .020", .030" oversize (Compression), standard and .020" oversize only (X-90 oil ring).

PISTON PIN:—Diameter 13/16". Length 2⅝".
Pin is locked in connecting rod with clamp screw.
Pin Fit in Piston—.0005" clearance (hand push fit).

Replacement Pins:—Pins furnished standard and .002", .005", .010" oversizes.
NOTE—Pin oiled by four 5/32" oil holes in upper part of piston bosses.

CONNECTING ROD:—Length 7". Bearing caps dowelled on rods and held by capscrews in blind tapped holes.
Crankpin Journal Diameter—1 15/16".
Lower Bearing—Removable steel-backed, cadmium-silver lined type.
Clearance—.002". **Sideplay**—.004-.006".

Bearing Adjustment: None (no shims). Replace bearings. New bearings should be tight with .002" feeler 1" long installed under cap (cap can be sanded on face plate to secure this fit). Install new bearings with tang engaging groove in rod and cap.

Installing Rods:—Lower bearings are offset. Install rods with widest half of bearing toward rear (#1, 3, 5) and toward front (#2, 4, 6). Oil hole in lower bearing upper half must be toward camshaft on all rods.
NOTE—Head of piston pin clamp screw should be toward camshaft on all rods.

CRANKSHAFT:—4 bearing. Integral counterweights.
Journal Diameters—2¼" (all bearings).
Bearing Type—Removable steel-backed, cadmium-silver lined.
Clearance—.002".

Bearing Adjustment & Replacement:—*See Graham Special Shop Notes for Main Bearing Servicing.*

End Thrust:—Taken by thrust plate at front (#1) bearing. Adjusted by adding or removing shims. Endplay .004-.006".

CAMSHAFT:—4 bearing. Non-adjustable chain drive.
Journal Diameters—#1, 1⅞"; #2, 1 13/16"; #3, 1¾"; #4, 1¼".
Bearing Type—Bronze.

End Thrust:—Taken by spring-loaded plunger in forward end of camshaft.
NOTE—Make certain that plunger and spring are in place when installing chain case cover.

Timing Chain:—Link-Belt. Width 1". Pitch .500". Length 23" or 46 links.

Camshaft Setting:—Sprockets are marked. Mesh chain so there are exactly 9 links between marks on sprockets or 10 pins inclusive of pins meshed opposite marks.

VALVES:

	Head Diameter	Stem Diameter	Length
Intake	1 33/64"	.3145"	4 61/64"
Exhaust	1 13/64"	.3135"	4 61/64"

	Seat Angle	Lift	Stem Clearance
Intake	30°	5/16"	.001-.0026"
Exhaust	45°	5/16"	.002-.0036"

Valve Guides:—Length 2¾". Finished inside diameter .3164" for all guides. Guides counterbored to .329" for 11/32" at upper end.

Valve Springs:—Free length 1 15/16".

	Spring Pressure	Spring Length
Valve Closed	36 lbs.	1 21/32"
Valve Open	87 lbs.	1 3/8"

Valve Lifters:—Single piece cast-iron, cylindrical type 1" diameter. Lifter guides 1 21/32" long, integral with block. Finished to give .0005-.0015" clearance

VALVE TIMING

Tappet Clearance: .010" All Valves, Engine Hot.

Valve Timing:—See Camshaft Setting above.
Intake Valves—Open 4½° BTDC. Close 47½° ALDC.
Exh. Valves—Open 47½° BLDC. Close 4½° ATDC.
To Check Valve Timing—Set tappet clearance #1 exhaust valve at .012". This valve should close with #1 piston .0079" past top dead center when flywheel mark 'EC-1' lines up with indicator in right front face of flywheel housing. Reset tappet clearance at .010" with engine hot.

LUBRICATION

LUBRICATION:—Pressure. Gear type oil pump located in crankcase.
NOTE—Ignition timing should be checked whenever oil pump is installed in engine.

Normal Oil Pressure:—40 lbs. at 30 M.P.H.

Oil Pressure Regulator:—Mounted on right hand side of crankcase. Opens at 50 lbs. Adjusted by adding or removing shims or washers above spring within cover plug.

Crankcase Capacity:—5 quarts (refill).

CLUTCH

CLUTCH:—Illinois (All '36 and first '37 models). Long Model 9CF-CS (Later '37 models). Single plate, dry disc type. Long Clutch is semi-centrifugal type.
See Clutch Section for complete data.
Facings (Illinois)—Moulded type, 2 required. Inside Diameter 5⅛". Outside Diameter 7⅞". Thickness ⅛".
Facings (Long)—Woven type, 2 required. Inside Diameter 5¾". Outside Diameter 9". Thickness .125".
Adjustment—Free movement of clutch pedal must be 1¼". To adjust, take out cotter pin at each end of clutch pedal connecting link, turn turnbuckle to secure correct lash, replace cotter pin, tighten turnbuckle locknut.
NOTE—On Illinois clutch when adjustment limit reached, loosen two capscrews in clutch mounting bracket slightly (reached through hand opening in bottom of clutch bell housing), pull out shim under bracket (shim holes are slotted—not necessary to take out capscrews completely), tighten bracket screws. This will provide new range of adjustment

Removal:—Remove transmission (see Transmission Section below), remove clutch bell housing, take out clutch bracket mounting bolts (Illinois) or clutch housing mounting screws, turning all screws out evenly to avoid distorting cover (Long).

TRANSMISSION

TRANSMISSION:—Warner Model AS4-TC84C (1937). Helical gear, constant mesh, synchro-mesh (second and high), sliding spur gear (low and reverse).
See Transmission Section for complete data.

Removal:—Disconnect drive shaft front and rear universals, hand brake linkage and clutch linkage. Support engine at rear, remove rear engine mounting, take out transmission mounting bolts, pull transmission straight back and remove.

UNIVERSALS

UNIVERSAL JOINTS:—Spicer. Needle bearing type, 2 used.
See Universals Section for complete data.

REAR AXLE

REAR AXLE:—Spicer. Semi-floating, spiral bevel gear type with Hotchkiss drive.
See Rear Axle Section for complete data.
Ratio—4.54-1 Std. 4.9-1 Optional.
Backlash—.004-.008". Shim adjustment.

Removal:—Jack up rear of car, remove wheels, disconnect brake line and brake cables, disconnect rear shock absorbers, disconnect drive shaft at rear universal, take off spring bolts at axle housing, disconnect rear spring rear shackles, remove axle assembly.

Wheel Bearing Adjustment—Before No. 315202 (std. ratio), 315529 (optl. ratio)—Jack up car, remove wheel and hub assembly, disconnect brake line, take out bolts and remove oil seal and backing plate. Remove shims between backing plate and axle housing flange until axle shaft clearance at thrust block in differential housing is .002-.007"
Adjustment (After No. 315202 or 315529)—No adjustment (New Departure sealed bearings used).

SHOCK ABSORBERS

SHOCK ABSORBERS:—Delco. Direct acting, hydraulic type. 1937 (Delco) Model Nos. 1165-L (frt.), 1165-K (rear).
See Shock Absorber Section for complete data.

FRONT SUSPENSION

Front Suspension:—Conventional 'I' beam section front axle with Reverse-Elliott ends and semi-elliptic springs.
Kingpin Inclination—7½° crosswise.
Caster—4½-5½°. Use wedge shims inserted between spring pad on axle to correct caster.
Camber—1°. Axle can be bent cold for minor corrections.
Toe In—⅛-3/16". Adjust in usual manner by changing length of tie rod.

STEERING GEAR

Steering Gear: Ross Model S-14. Cam-and-Lever type.
See Steering Gear Section for complete data.

BRAKES

BRAKES:—Service—Graham-Lockheed hydraulic, double anchor. Hand lever applies rear service brakes.
See Brake Section for complete data.
Drum Diameter—9".
Lining—Moulded type. Width 1¾". Thickness 3/16". Length 18" per wheel.
Clearance—.006" heel, .010" toe, for each shoe.
Hand Brake: See Service Brakes (above).

MODEL IDENTIFICATION

SERIAL NUMBER: On plate on floor inside right rear door (Sedans), or under front seat (Coupes).
1936 Nos.—(90, 90A) 200,001; (110) 100,101.
1937 Nos.—(95) 215,001; (116) 130,001; (120 Sedans) 110,001; (120 Coupes) 120,001.

ENGINE NUMBER: On plate on right side of crankcase and on chassis serial number plate (above).
1936 Nos.—(90) 205,001; (90A) 210,001; (110) 105,001.
1937 Nos.—(95) 220,001; (116) 135,001; (120) 115,001.

TUNE-UP

COMPRESSION:—Ratio 6.7-1 std. aluminum hd. Pressure 115 lbs. at cranking speed.

VACUUM READING:—Gauge should show steady reading of 15-17" with engine idling at 5-7 M.P.H.

FIRING ORDER: 1-5-3-6-2-4. See diagram.

SPARK PLUG: Champion Type J-9. 14 mm. Metric. Gaps—.025"

IGNITION: See Coil, Condenser, and Distributor.
Breaker Gap—.018". Limits .018-.024".
Cam Angle or Dwell—35° (closed), 25° (open).
Breaker Arm Spring Tension—17-21 ounces.
Automatic & Vacuum Advance—*See Distributor.*

IGNITION TIMING: See Ignition Timing.
Std. Setting—At TDC. (95), 4° ATDC. (116, 120) with flywheel mark "IGN" at indicator on right front face of housing.

CARBURETION: See Carburetor & Carb. Equipment.
Idle Setting—Idle screw midway between "miss" and "roll" points. Idle speed 350 RPM or 5-7 MPH.
Float Level—1⅜" from gasket seat on cover to bottom of float at free end (invert to check).
Accelerating Pump—#2 hole Normal, #3 cold weather. #1 (Summer), #4 (Winter) for extreme temperatures..

Fuel Pump Pressure: 3½ lbs. maximum.

VALVES: See Valve Timing.
Tappet Clearance—.010" All Valves, Engine Hot.

STARTING: See Battery, Starter, Generator, and Regulator (when used).

IGNITION

Ignition Switch: Delco-Remy 431-U, 435-P. Switch and cable assembly conected to coil by armored cable.

COIL: Delco-Remy 536-J (Non-supercharged Eng.), 536-M (Supercharger Eng.).
Ignition Current—1.8 amperes idling, 3 stopped.

CONDENSER: Delco-Remy Part No. 829092.
Capacity—.20-.25 microfarad.

DISTRIBUTOR: Delco-Remy. (90, 90A, 95) No. 623-A, (110) No. 623-E, (116, 120) No. 623-S. Single breaker, full automatic advance type with auxiliary vacuum spark control.
Rotation—Counterclockwise viewed from above.
Distributor Settings—*See Tune-Up data.*

Automatic Advance—623-A

Distributor Degrees	R.P.M.	Engine Degrees	R.P.M.
Start	400	2	800
9	1400	18	2800

Automatic Advance—623-E

Start	300	2	600
6	1000	12	2000

Automatic Advance—623-S

Start	275	2.0	550
3.0	400	6.0	800
8.0	1000	16.0	2000

Vacuum Spark Control 680-N, 681-C, 681-G. Provides additional advance at all speeds above idling except when engine is suddenly accelerated or is operated with wide open throttle when spark will be retarded by return spring within unit.

Vacuum Advance—Model 681-G

Distr. Degrees	Eng. Degrees	Vacuum (" of HG)
Start	0°	5-7"
5°	10°	14-18"

Vacuum Advance 681-C (623-E Distr.)

Start	0°	5-7"
5°	10°	13-16"

Vacuum Advance—Model 681-C

Distr. Degrees	Eng. Degrees	Vacuum (" of HG)
Start	0°	5-7"
5°	10°	13-16"

Distributor Removal:—Mounted on cylinder head. To remove, disconnect vacuum line, take out hold-down screw in advance arm.

IGNITION TIMING

IGNITION TIMING:—

	Flywheel Deg.	Piston Position
Other Engs.	TDC	.0000" TDC
116 & 120 Engs.	4° ATDC	.0063" ATDC

To Set Timing—With #1 piston on compression turn engine over until piston is 4° or .0063" after top dead center (116,120), top dead center (others), stop when flywheel mark 'IGN' lines up with indicator (under cover) on right front face of housing, loosen advance arm clamp bolt, rotate distributor until contacts begin to open, tighten clamp bolt, see that rotor is opposite #1 segment in distributor cap.

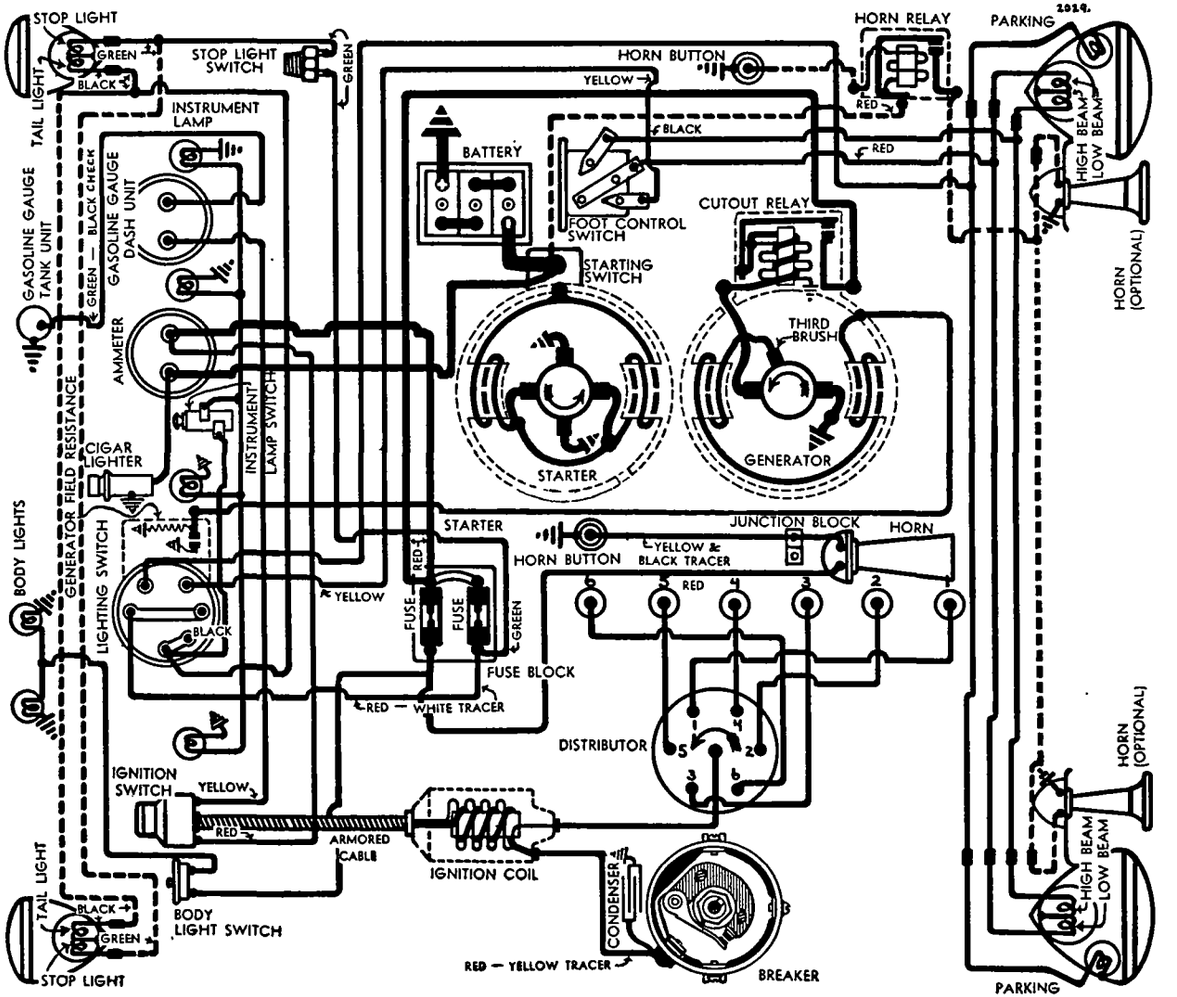

1936 M DELS—WITH 948-B GENERAT R

CARBURETOR

1936 MODELS

CARBURETION:—Carburetors—Marvel Model B-2 No. 10-1678 (90, 90A First Cars) 10-1691 (90 After Eng. No. 207235, 90A After Eng. No. 215764). Model B3, No. 10-1680 (110 First Cars), 10-1692 (110 After Eng. No. 108175).

For complete data, refer to Carburetor Index.

NOTE—See Carburetion Section for recommended jet changes on carburetors before carburetor No. 5092447 (90, 90-A), and No. 5090942 (110). Also changes in Accelerating Pump Assembly (after carburetor No. 6002388) and Vacuum Step-up Spring (after first 300 cars) on Supercharger models only.

Settings (Idle Setting, Float Level and Accelerating Pump): *See Tune-Up data.*

CARBURETOR

1937 MODELS

Marvel Model B2 No. 10-1691 (95), Model B3 No. 10-1744 (116, 120). 1¼" (B2), 1½" (B3) Single Barrel, d wndraft types with manual choke control.

For complete data, refer to Carburetor Index.

NOTE—See article in Carburetion Section for recommended changes on carburetors before car serial No. 217175 (95), 132010 (116), 115944 (120).

Settings (Idle Setting, Float Level, Accelerating Pump): *See Tune-Up data.*

Fast Idle:—Integral with carburetor. No adjustment.

CARB. EQUIPMENT

Air Cleaner: AC or Burgess. Oil-wetted type Std., Heavy-duty Oil-bath type Optl.

Fuel Pump: AC Diaphragm type. AC Nos. (Non-supercharged Eng.) Type P No. 1523008, (Supercharged Eng.) Type R No. 1523009.

For complete data, refer to Carburetion Equip. Index.

Gasoline Gauge (1936): Motometer Electric. First—NG-7842-D (dash), NG-7818-T (tank); Late type—NG-8042-D (dash), NG-7823-T (tank).

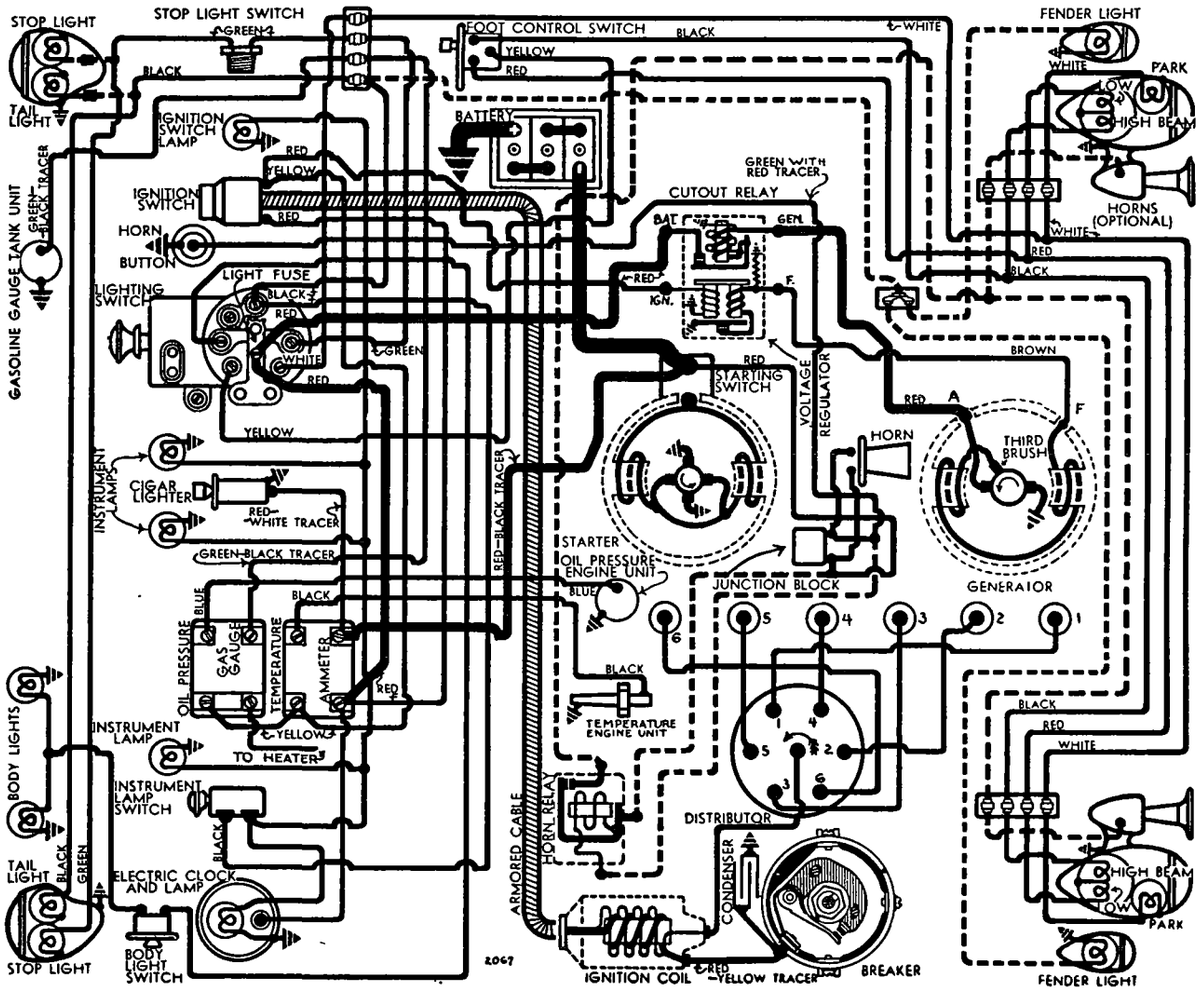

►SEE 1936 DIAGRAM FOR 948-B GENERATOR WIRING

For complete data, refer to Carburetion Equip. Index.

Gasoline Gauge (1937): King-Seeley. Dash Unit—(gas & oil gauge assembly) K-S #6610 (Cabriolet), #6090 (others), Tank Unit K-S #6120 (all).

For complete data, refer to Carburetion Equip. Index.

BATTERY

BATTERY: Willard Type WHT-1-90 (Std.), RHT-1-90 (Exp.). 6 volt, 13 plate, 90 AH. capacity (20 hr. rate).

Starting Capacity—114 amperes for 20 minutes.

Zero Capacity—300 amperes for 3.0 minutes.

Grounded Terminal—Positive (+) terminal.

Location—Under drivers seat.

(116, 120) Willard WHT-1-105, RHT-1-105 (Exp.). 6 volt, 15 plate, 105 AH. capacity (20 hr. rate).

Starting Capacity—133 amperes for 20 minutes.

Zero Capacity—300 amperes for 3.9 minutes.

Grounded Terminal and Location (as above).

STARTER

Delco-Remy Model 738-T, 738-X (RHD). Armature No. 823881.

Drive—Manual pinion shift (738-T), solenoid pinion shift (738-X), with overrunning clutch.

Cranking Engine—200 amperes at 5 volts.

Rotation—Counter-clockwise at commutator end.

Brush Spring Tension—24-28 ounces each.

Performance Data

Torque	R.P.M.	Volts	Amperes
0 ft. lbs.	5000	5.0	65
12 ft. lbs.	Lock	3.37	525

Removal:—Flange mounted on left front face of flywheel housing. To remove, take out flange mounting screws.

Starting Switch (738-T):—Delco-Remy No. 820052. Mounted on starter field frame. Operated by pinion shift lever (starter pedal).

(738-X)—Solenoid Switch Type 1516. Starter Push Switch Type 1388. Solenoid switch controlled thru relay by push switch on instrument panel.

For complete data, refer to Electrical Equipment Index.

GENERATOR

MODELS 90, 90A, 95, 110, 116 (STD.)

Delco-Remy Model 948-B. Armature No. 1853593. Third brush regulation, lighting switch control. Field resistance on switch is shorted out with lamps turned on, increasing generator output. Special switch position between 'Off' and 'Park' provides this high charging rate with lamps off. Generator is ventilated by fan on drive pulley.

For complete data, refer to Electrical Equipment Index.

Charging Rate Adjustment—Ground generator 'F' terminal, connect test ammeter in charging line at Cutout Relay 'BAT' terminal on generator, loosen lockscrew on commutator endplate, shift third brush by hand counter-clockwise to increase, or clockwise to decrease charging rate, tighten lockscrew, restore original field connection.

Maximum Charging Rate—21 amperes (cold), 18 amperes (hot), 8.5 volts, 2400 R.P.M., 38-40 M.P.H.

Performance Data

	Amperes	Volts	R.P.M.
Cold	18-21	8.2-8.5	2400
Hot	15-18	7.9-8.3	2900

Rotation—Counter-clockwise at commutator end.

Brush Spring Tension—22-26 zs. (main), 16-20 ozs. (third brush).

Field Current—2.3-2.6 amperes at 6 volts.

CONTINUED ON NEXT PA E

CONTINUED FR M PRECEDIN PAGE

Removal:—Generator pivot mounted at left front of engine. To remove, take out pivot bolts and clamp bolt.

Belt Adjustment:—Loosen mounting bolts, swing generator away from engine until belt sideplay midway between crankshaft and generator pulleys is 1", tighten mounting bolts.

GENERATOR

MODEL 120 (STD), 95 & 116 (RADIO)

Delco-Remy Model 948-Z. Armature No. 1854856. Fixed third brush control with external vibrating voltage regulator. Ventilated by fan on drive pulley.
NOTE—Third brush is clamped in position for maximum safe output and must not be disturbed.
Charging Rate Adjustment—Adjusted by changing setting of voltage regulator. See Regulator Data
Maximum Charging Rate—22 amperes at 8.0 volts (cold), 18 amperes at 8.0 volts (hot), 30-35 MPH.

Performance Data

	Amperes	Volts	R.P.M.
Cold	22	8.0	3000
Hot	18	8.0	3500

Rotation—Counter-clockwise at commutator end.
Brush Spring Tension—22-26 ounces (main), 16-20 unces (third).
Field Current—2.3-2.6 amperes at 6 volts.

Removal & Belt Adjustment: See 948B Gen. above.

GENERATOR

SPECIAL EQUIPMENT

Delco-Remy Model 954-A, Armature No. 1865306; Model 934-F, Armature 1861851. (Police).
Two brush (shunt) type with external voltage and current regulation.
Charging Rate Adjustment—None. See Regulator.
Maximum Charging Rate—As follows:

Performance Data—954-A

	Amperes	Volts	R.P.M.
Cold	22	8.0	1600

Model 934-F

	Amperes	Volts	RPM.
Cold	26	8.1-8.3	1325

Rotation—Counter-clockwise at commutator end.
Brush Spring Tension—25 ounces each.
Field Current—2.3-2.6 amperes (954-A), 1.7-2.0 amperes (934-F) at 6.0 volts.

Removal & Belt Adjustment:—Same as Std. Gen.

CUTOUT RELAY

WITH 948-B GENERATOR

Delco-Remy Model 265-H. On generator.
For complete data, refer to Electrical Equipment Index.
Cuts In—6.75-7.5 volts, 11 M.P.H.
Cuts Out—0-2.5 amperes discharge current.
Contact Gap—.015-.025". **Air Gap**—.012-.017".

REGULATOR

WITH 948-Z GENERATOR

(948-Z Gen.)—Delco-Remy Model 5812. Double Core Type Voltage Regulator (With 'IGN' Terminal). Cut-out Relay and vibrating type voltage regulator.
For complete data, refer to Electrical Equipment Index.

Cutout Relay

Cuts In—6.9-7.6 volts.
Cuts Out—3 amperes discharge.
Contact Gap—.018-.025".
Air Gap—.018-.022" with contacts closed.

Voltage Regulator

Setting—7.5-7.9 volts at 70°F, 7.4-7.6 volts at 150° F. Regulator is over-compensated for temperature and must be checked at these points.
Checking & Adjustment—*See Electrical Equipment Section.*
Contact Gap—.015-.025".
Contact Spring Tension—2.7-3.5 ounces.
Air Gap—.060-.070" between armature and center of core with armature down and fibre bumper touching stop; .008-.013" between fibre bumper and stop with armature up.

REGULATOR

WITH 934-F & 954-A GENERATOR

Delco-Remy Model 5596 (Special 954-A Gen.). 5597 (934-F Gen.). Double Core Type Voltage & Current Regulator (with 'IGN' Terminal). Cutout Relay and separate vibrating type Voltage and Current Regulator units in a single case.
For complete data, refer to Electrical Equipment Index.

Cutout Relay

Cuts In—6.9-7.6 volts at 70°F.
Cuts Out—0-4.0 ampere discharge current.
Contact Gap & Air Gap—.020".

Voltage Regulator

Setting—7.0-7.4 volts Cold (70°F), 6.95-7.15 volts Hot (150°F). Over-compensated for temperature.
Checking & Adjustment—*See Electrical Equipment Section.*
Contact Gap—.020". **Contact Spring Tension**—3.5 oz
Air Gap—.063" between armature and center of core with armature down, .010" between fibre bumper and stop with armature up.

Current Regulator

Setting—20-22 amperes (5596), 26-28 (for 5597).
Checking & Adjustment—*See Electrical Equipment Section.*
Contact Gap, Contact Spring Tension, Fibre Bumper Air Gap—Same as Voltage Regulator (above).
Armature Air Gap—.075" between armature and center of core (armature down, fibre bumper against stop).

LIGHTING

1936 MODELS

LIGHTING:—**Headlamps**—Corcoran - Brown, Pre-focused type. Headlamps aimed straight ahead (upper beams with lenses in place). Upper and lower driving beams controlled by foot selector switch.

Switches

Lighting—Delco-Remy Model 481-Z.
Foot Selector—Delco-Remy Mod. 471-P, 471-U (RHD)

Bulb Specifications

Position	Candlepower	Mazda No.
Headlamps	32-32	2331
Parking, Instr., Body	3	63
Tail	3	63
Stop	15	87

LIGHTING

1937 MODELS

LIGHTING:—Headlamps—Hall, pre-focused type. Headlamps aimed straight ahead (upper beams with lenses in place). Upper and lower driving beams controlled by foot selector switch mounted on floor board to left of clutch pedal.

Switches

Lighting—Delco-Remy Model 481-X.
Dash Light Switch—Delco-Remy Model 1410.
Foot Selector—Delco-Remy Model 471-P, 471-U

Bulb Specification

Position	Candlepower	Mazda No.
Headlamps	32-32	2330
Tail, Dome, Fender	3	63
Parking, Inst.	1½	55
Stop	15	87

MISC. ELECTRICAL

FUSES (1936): Lighting—20 ampere mounted on fuse block on dash.
Body Lights and Standard Horn—20 ampere fuse on fuse block. One extra fuse mounted on fuse block.

FUSES (1937): Lighting—20 ampere on switch.

HORNS:—Klaxon Model K-26-L. Type 1608 (standard). Twin horns K-33-B, type 1873 (right side—high note), K-33-C, type 2156 (left side—low note) or K-33-S type 2059 (low note), 2060 (high note). Twin horns with horn relay optional. All horns are vibrator type.

Horn Type	Current at 6 volts	Air Gap
1608 (std.)	6.5-8.5	.025-.029"
1873 (rt. side-high)	11-13	.036-.040"
2156 (left side-low)	11-13	.042-.046"
2059 (low)	11-13	.042-.046"
2060 (high)	10-12	.032-.036"

Horn Relay:—Model 271-A.
Contact Point Opening—.015-.030".
Points Close—2.7-4.0 volts.
Air Gap—.010-.025" (closed).

ENGINE

ENGINE SPECIFICATIONS (90A, 95, 116): Six cylinder, "L" head type. Supercharged (116 only).
Bore—3¼". Stroke—4".
Displacement—199.1 cubic inches.
Rated Horsepower—25.35 (AMA).
Developed Horsepower—(90A) 80 at 3300 RPM., (95) 85 at 3300 RPM., (116) 106 at 4000 RPM.
Compression Ratio—6.7-1 Std. 7.0-1 Optl.
Compression & Vacuum Reading—*See Tune-Up data.*

ENGINE SPECIFICATIONS (90, 110, 120): Six cylinder, "L" head type. Supercharged (all models).
Bore—3¼". Stroke—4⅜".
Displacement—217.8 cubic inches.
Rated Horsepower—25.35 (AMA).
Developed Horsepower—(90) 85 at 3300 RPM., (110) 112 at 4000 RPM., (120) 116 at 4000 RPM.
Compression Ratio—6.7-1 Std. 7.0-1 Optl.
Compression & Vacuum Reading—*See Tune-Up data.*

PISTONS:—Bohn, Autothermic, Silicon alloy, cam ground, plated type with special cylinder wall lubrication system on 1937 models. *See "Cylinder Wall Lubrication" in Graham Shop Notes.*
Weight—17 ozs. **Length**—3⅝".
Removal—Pistons and rods removed from above
Clearance—Top .024-.030". Skirt .0025". See Fitting New Pistons.
Replacement Pistons:—Finished pistons (with pins) furnished in oversizes of 3.247-3.252" (in .001" steps), 3.252-3.274" (in .002" steps), and 3.277".
NOTE—Piston size stamped on head of piston.
Fitting New Pistons:—Pull required to withdraw .0025" feeler ½" wide from between piston and cylinder wall at right angles to pin must be within 10-15 lbs.
Installing Pistons:—Vent hole in oil groove in skirt should be away from camshaft.

PISTON RINGS:—Tw compression, tw oil control rings per piston, all above pin.

ENGINE

CONTINUED FROM PRECEDING PAGE

Ring	Width	End Gap
Compression	3/32"	.007-.017"
Oil (upper)	3/16"	.007-.017"
Oil (lower)	5/32"	.007-.017"

NOTE—Side clearance for all rings .0015" min.

Replacement Rings & Installation Directions:—*See Graham Special Shop Notes for data.*

PISTON PIN:—Diameter 13/16". Length 2 13/16". Pin locked in rod by clampscrew. Pin holes in piston oiled by four 5/32" oil holes. Pins furnished standard and .002", .005", .010" oversize.

Pin Fit in Piston—.0005" clearance (hand push fit).

CONNECTING ROD:—Length 7". Bearing caps dowelled

Crankpin Journal Diameter—(1936) 1 15/16", (1937) 2 1/16".

Lower Bearing—Removable steel-backed, cadmium-silver lined type. Bearings not grooved. Clearance—.002". Sideplay—.004-.006".

Bearing Adjustment:—None (no shims). Replace bearings. New bearings should be tight with .002" feeler 1" long installed under cap (cap can be sanded on face plate to secure this fit). Install new bearings with tang engaging groove in rod and cap.

Installing Rods:—Lower bearings offset. Install rod with widest half of bearing toward rear (#1, 3, 5) and toward front (#2, 4, 6). No oil holes used.

CRANKSHAFT:—Four bearing. Integral counterweights. Lanchester type vibration dampener

Journal Diameters—2¼" all bearings.

Bearing Type—Removable steel-backed, cadmium-silver-lined type. No shims. Clearance—.002".

Bearing Adjustment & Replacement:—*See Graham Special Shop Notes for Main Bearing Servicing.*

End Thrust: At #1 front bearing. Endplay .004-.006". Adjusting shims furnished .002", .008", .036" thick.

CAMSHAFT:—4 bearing. Non-adjustable chain drive.

Journal Diameters—#1, 1⅞", #2, 1 13/16", #3, 1¾", #4, 1¼".

Bearing Type—Bronze bushings.

End Thrust:—Taken by spring-loaded plunger in forward end of camshaft.

Timing Chain:—Link-Belt. Width 1". Pitch .500". Length 23" or 46 links.

Camshaft setting:—Sprockets are marked. Mesh chain so that there are nine links between marks on sprockets or ten pins inclusive of pins meshed opposite marks.

VALVES:	Head Diameter	Stem Diameter	Length
Intake	1 33/64"	.3145"	4 61/64"
Exhaust	1 21/64"	.3135"	4 61/64"

	Seat Angle	Lift	Stem Clearance
Intake	30°	5/16"	.001-.0026"
Exhaust	45°	5/16"	.002-.0036"

NOTE—Exhaust valve stem diameter increased to .3704" after Engine No. 221394 (95), 136292 (116), 115726 (120).

Valve Guides:—Length 2¾". Finished inside diameter .3164" for all guides. Guides counterbored to .329" NOTE—Counterbore increased to .356" and exhaust guide inside diam. increased to .3435" after engine No. 221394 (95), 136292 (116), 115726 (120).

Valve Springs:—Free length 1 15/16".

	Spring Pressure	Spring Length
Valve Closed	36 lbs.	1 21/32"
Valve Open	87 lbs.	1 3/8"

Valve Lifters:—Cylindrical type. Diameter 1". Operate in guide holes 1 21/32" long finished directly in block. Pressure lubricated. Lifter groove meters oil for piston and cylinder wall lubrication.

Lifter Clearance in Guide—.0005-.0015".

VALVE TIMING

Tappet Clearance:—.010" all valves, engine hot.

Valve Timing:—See Camshaft Setting above.

Models 90A, 95

Intake Valves—Open 2° ATDC. Close 54° ALDC.

Exhaust Valves—Open 41° BLDC. Close 11° ATDC.

Models 90, 110, 116, 120

Intake Valves—Open 4½° BTDC. Close 47½° ALDC.

Exh. Valves—Open 47½° BLDC. Close 4½° ATDC.

To Check Timing—Set tappet clearance #1 exhaust valve at .012". This valve should close with #1 piston 11° or .0472" (90A, 95), 4½° (Other models) after top dead center when flywheel mark 'EC-1' lines up with indicator under cover in right front face of flywheel housing. Reset tappet clearance at .010" with engine hot.

SUPERCHARGER

MODELS 110, 116, 120

Centrifugal Type. Supercharger located between carburetor and manifold (downdraft carburetor is mounted on top of supercharger).

See Miscellaneous Section for complete data.

Supercharger Removal & Drive Data:—*See Graham Special Shop Notes for data.*

LUBRICATION

LUBRICATION:—Pressure system. Gear type oil pump

Normal Oil Pressure—40 lbs. at 30 M.P.H.

Oil Pressure Regulator—Located on right side of crankcase. Opens at 50 lbs. (overflow lubricates timing chain). Adjustable by adding or removing shims above spring within cover plug.

Oil Pressure Gauge (1937): King-Seeley electric. K-S No. 6090 (all except Cabriolet), 6610 (Cabriolet) dash unit, No. 6125 (engine unit).

See Miscellaneous Section for complete data.

Crankcase Capacity—5 qts.

CLUTCH

1936 MODELS

CLUTCH:—**Illinois.** Single plate, dry disc type.

See Clutch Section for complete data.

Facings—Moulded type, 2 required. Inside Diam. 5½". Outside Diam. 8⅞". Thickness ⅛".

Adjustment:—Free movement of clutch pedal must be 1-1¼". To adjust, loosen locknut on left hand end of clutch pedal shaft at pedal, shift pedal on shaft (pedal threaded on shaft), tighten locknut. NOTE—For all car models equipped with Illinois clutch, when the limit of the Clutch adjustment is reached, loosen two capscrews in clutch mounting bracket, pull out shim under bracket,

Removal—See 1937 type below.

CLUTCH

1937 MODELS

CLUTCH:—**Long Model 9CF-CS.** Semi-centrifugal, single plate, dry disc type.

See Clutch Section for complete data.

Facings—Woven, 2 required. I.D. 5¾". O.D. 9". Thickness .125".

Adjustment:—Free movement of clutch pedal must be 1¼". To adjust, loosen locknut on left hand end of clutch pedal shaft at pedal, shift clutch pedal on shaft (pedal threaded on shaft), tighten locknut.

Removal:—Remove Transmission (see Transmission Section below), remove clutch bell housing, take out clutch housing mounting screws in flywheel, turning all screws out evenly to avoid distorting cover.

TRANSMISSION

Warner Model (Std.) Overdrive Transmission (Optl.). Constant-mesh, synchro-mesh (Second & High), sliding gear (Low & Reverse).

See Transmission Section for complete data.

Removal:—Disconnect hand brake and clutch linkage. Drop driveshaft, support engine at rear, remove transmission mounting bolts, remove rear engine mounting, pull unit back and remove.

OVERDRIVE

Warner (Optl. with Overdrive Transmission). Integral type (1936), Type R6 (1937).

See Transmission Section for complete data.

Removal: Same as for Std. Transmission (without Overdrive) after overdrive control has been disconnected.

UNIVERSALS

(1936) Spicer. Needle bearing type.

(1937) Detroit Universal Series 4200. Ball-and-trunnion type.

See Universals Section for complete data.

REAR AXLE

REAR AXLE:—**Spicer**—Semi-floating, spiral bevel gear type with Hotchkiss drive.

See Rear Axle Section for complete data.

Std. Ratios—(90A, 95) 4.45-1. (90, 110) 4.7-1. (116, 120) 4.27-1. (Cars with Overdrive) 4.7-1.

Backlash—.004-.008". Shim adjustment.

Removal:—Hoist rear of car, disconnect rear universal, brake line at housing, shock absorbers, remove spring U-bolts, disconnect rear spring shackles and withdraw assembly. Bleed brake lines when installing assembly.

Wheel Bearing Adjustment—None (sealed bearings).

SHOCK ABSORBERS

SHOCK ABSORBERS:—**Delco**—Model 1166-K (front and rear). Two way direct acting, hydraulic type.

See Shock Absorber Section for complete data.

FRONT SUSPENSION

Front Suspension:—Spicer, conventional 'I' beam section front axle with Reverse-Elliott ends and semi-elliptic springs.

Kingpin Inclination—7½° crosswise.

Caster—(90, 90A, 110) 2½°. (95) 4-4½°. (116, 120) 3-4°. Adjust with wedge shims between spring and seat on axle.

Camber—1°.

Toe In—⅛-3/16". Adjust in usual manner by changing length of tie rod.

STEERING GEAR

Ross. Cam-and-Lever or Cam-and-Twin Lever type.

See Steering Gear Section for complete data.

BRAKES

BRAKES: — Service — 'Graham-Lockheed' hydraulic type. Hand lever applies independent shaft brake.

See Brake Section for complete data.

Drum Diameter—(90A, 95) 9". (Others) 11".

Lining—Molded type. Width 1¾". Thickness 3/16" (90A, 95), ¼" (Other models). Length per wheel 18" (90A, 95), 23" (Others).

Clearance—.006" heel, .010" toe, for each shoe.

Hand Brake:—External type on drum at rear of transmission.

Adjustment—*See Graham Shop Notes.*

Drum Diameter—6" (all models).

Lining—Width 2". Thickness 5/32". Length 17¾".

MODEL IDENTIFICATION

SERIAL NUMBER:—Stamped on plate on floor inside right rear door (Sedans), on seat frame (Coupe).

	Serial Number		Engine Number	
	96	97	96	97
1938	225000	140000	230000	145001
1939	600001	500001	610001	510001
	107	108	107	108
1940	505001	605001	515001	615001

ENGINE NUMBER:—Stamped on plate on right side of crankcase and on Serial No. Plate (See above).

TUNE-UP

COMPRESSION:—Ratio—6.7-1 Al. head Std. 96 ('38), 97 ('38-39), Optl. 96 ('39). 6.4-1, 6.6-1 Cast-iron head Std. 96 ('39), 6.65-1 Std. 107, 108. 7-1 or 7.25-1 optional on all models.
Pressure—120 lbs. (6.4-1, 6.6-1 hds.), 125 (6.65-1 hd. on 108), 130 lbs. (6.65-1 hd. on 107 and 6.7-1 head) at cranking speed.

VACUUM READING:—Gauge should show steady reading of 17" with engine idling at 5-7 M.P.H.

FIRING ORDER:—1-5-3-6-2-4. See wiring diagram.

SPARK PLUGS:—Champion J9 ('38), H10 ('39), J-10 ('40). 14 MM. Metric.
Gaps—.025" (or .033" for improved idling).

IGNITION: See Coil, Condenser, and Distributor.
Breaker Gap—Set at .018". Limits .018-.024".
Cam Angle or Dwell—35° (closed), 25° (open).
Breaker Arm Spring Tension—20 ounces.
Automatic & Vacuum Advance—*See Distributor.*

IGNITION TIMING: See Ignition Timing.
Std. Setting—At TDC (96 & 108), 4½° ATDC (97 & 107) with flywheel mark "IGN" at indicator on right front face of housing.

CARBURETION: See Carburetor & Carb. Equipment.
Idle Setting (Marvel Carb.)—Idle screw set midway between miss and roll points. Idle speed 6-7 MPH.
Idle Setting (Carter Carb.)—Idle screw ½-1½ turn open. Idle speed 7-8 MPH.
Float Level (Marvel Carb.)—19/32" from gasket seat on cover to nearest point on float (invert to check).
Float Level (Carter Carb.)—⅜" from projection on cover to top of seam on float at free end.
Accelerating Pump (Marvel Carb.)—#3 hole Normal, #2 hole Warm Temperatures, #1 hole (Summer), #4 (Winter) for extreme temperatures.
Accelerating Pump (Carter Carb.)—Center hole Normal, Inner hole (Summer), Outer hole (Winter)
Fuel Pump Pressure: 3½ lbs. maximum.

MANIFOLD HEAT CONTROL:—**Special. Thermostatic spring coil type. Supercharger. Upper half of Supercharger housing and cross-passage between supercharger and manifold water-jacketed to heat fuel mixture. No adjustment required.**

VALVES: See Valve Timing.
Tappet Clearance—.010" All Valves, Engine Hot.

STARTING: See Battery, Starter, Generator, and Regulator (when used).

IGNITION

Ignition Switch:—Delco-Remy Model 1116261. Connected to coil by armored cable.

COIL: Delco-Remy No. 1115022 (96, 108), 1115127 (97, 107). Mounted on engine side of dash.
Ignition Current—1.8 amperes idling, 3.0 amperes stopped (1115022). 2 amps. idling, 4 stopped (1115127).

CONDENSER: Delco-Remy Part No. 829092.
Capacity—.20-.25 microfarad.

DISTRIBUTOR: Delco-Remy Model 623-A (96, 108), 623-S (97, 107). Single breaker, 6 lobe cam, full automatic advance type with auxiliary vacuum spark control.
Rotation—Counter-clockwise viewed from top.
Distributor Settings—*See Tune-Up data.*

Automatic Advance—623-A

Distributor Degrees	R.P.M.	Engine Degrees	R.P.M.
Start	400	2	800
9	1400	18	2800

Automatic Advance—623-S

Start	275	2	550
3	400	6	800
8	1000	16	2000

Vacuum Spark Control 1116006 (623-A), 1116003 (623-S). Provides additional advance at intermediate speeds above idling except when engine is suddenly accelerated or is operated with wide open throttle

Vacuum Advance—1116006

Distr. Degrees	Eng. Degrees	Vacuum (" of HG.)
Start	0°	5-7"
5° Max.	10° Max.	14-18"

Vacuum Advance—1116003

Start	0°	5-7"
5° Max.	10° Max.	13-16"

Distributor Removal:—Mounted on cylinder head. To remove, loosen advance arm clamp bolt and lift distributor up (without disconnecting vacuum line).

IGNITION TIMING

IGNITION TIMING: Flywheel Degrees Piston Position
96, 108 ..... At TDC ..... .0000" TDC.
97, 107 ..... 4½° ATDC ..... .0088" ATDC.
To Set Timing—With #1 piston on compression turn engine over until flywheel mark 'IGN' lines up with indicator (under cover) on right front face of flywheel housing, loosen advance arm clamp bolt, rotate distributor until contacts begin to open, tighten clamp bolt.

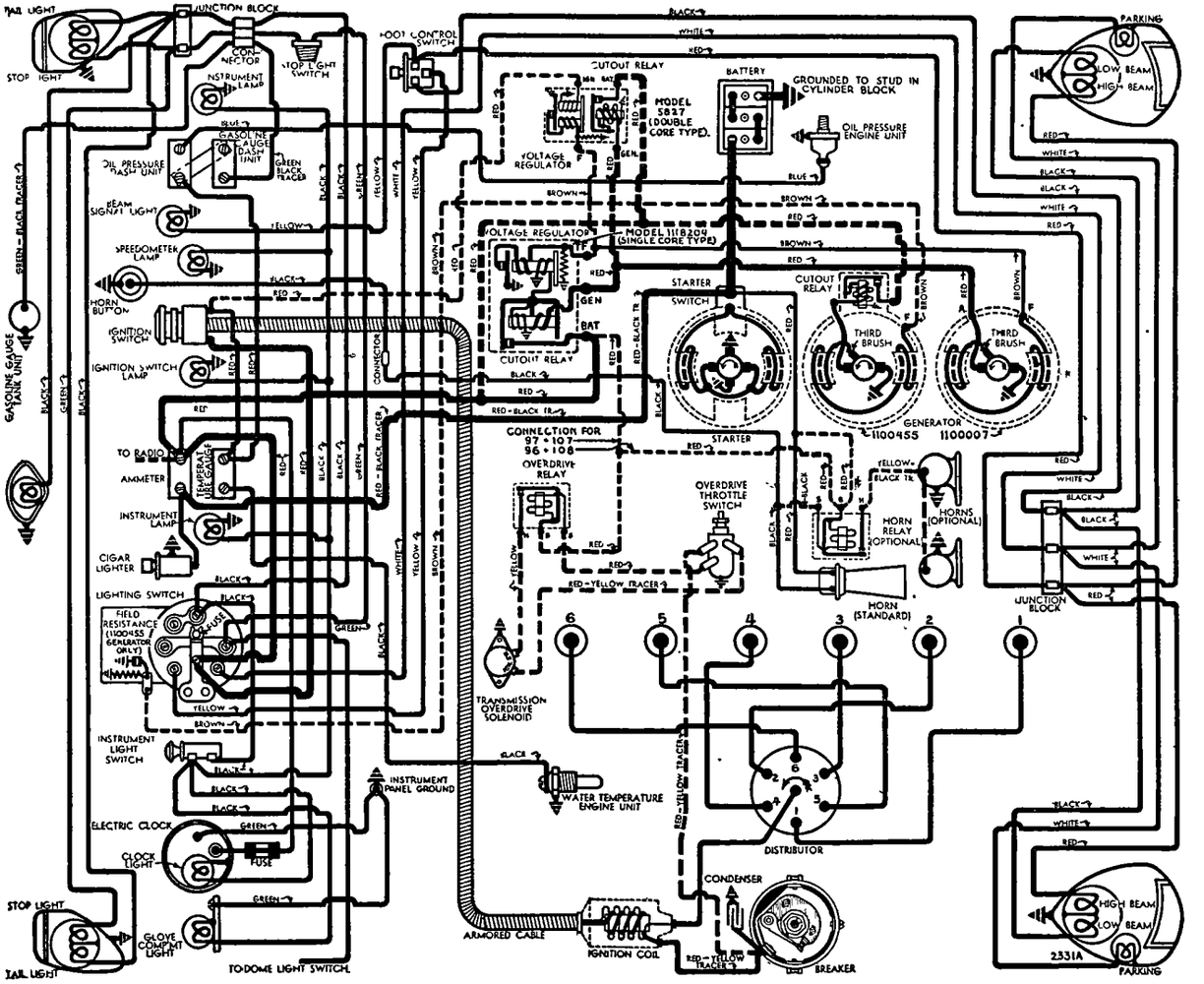

CARBURETOR

MODELS 96 & 97

CARBURETION:—Carburetor (96,97) Marvel Model C-2# 10-1808 (96), Model C-3 No. 10-1809 (97). 1¼" (96), 1½" (97) downdraft type with manual choke control. *For complete data, refer to Carburetor Index.*

Settings (Idle Setting, Float Level, Accelerating Pump Setting): *See Tune-Up data.*

CARBURETOR

MODELS 107 & 108

Carburetor (107-108):—Carter Type WA-1, Model 473-S (107), 472-S (108). Downdraft types. *See Carburetor Section for complete data.*

Settings (Idle Setting, Float Level, Accelerating Pump Setting): *See Tune-Up data.*

Choke Setting—1 Notch Rich (for 473-S only).

CARB. EQUIPMENT

Air Cleaner:—Burgess or AC #1528737 (Special), #1528738 (Supercharger) oil-wetted type standard.

Fuel Pump:—AC Type R #1523731 diaphragm type. *For complete data, refer to Carburetion Equip. Index.*

Gasoline Gauge:—King-Seeley Electric. K-S Nos. Dash Unit: 6923 (All '38, 96 '39), 7470 (97 '39), 7930 (107,108). Tank Unit: 6928 (96,97), 7916 (107,108). *For complete data, refer to Carburetion Equip. Index.*

BATTERY

BATTERY (SPECIAL):—Willard, WT-1-95 ('38), SW-1-95 ('39 & '40). 6 volt, 15 plate, 95 ampere hour capacity (20 hour rate).
Starting Capacity—117 amperes for 20 minutes.
Grounded Terminal—Positive (+) grounded to engine block (under starter) at forward end of clutch housing-to-engine brace.
Location—Left front of engine dash under hood.

BATTERY (SUPERCHARGER):—Willard, Type WHT-2-105 ('38), SW-2-105 ('39 & '40). 6 volt, 15 plate, 105 ampere hour capacity (20 hr. rate).
Starting Capacity—133 amperes for 20 minutes.
Grounded Terminal & Location—Same as above.

STARTER

Delco-Remy Model 738-T, 738-X (RHD). Armature No. 823881.
Drive—Manual pinion shift (738-T), solenoid pinionshift (738-X), with overrunning clutch.
Cranking Engine—140-145 amperes, 5 volts.
Rotation—Counter-clockwise at commutator end.
Brush Spring Tension—24-28 ounces each.

Performance Data.

Torque	R.P.M.	Volts	Amperes
0 ft. lbs.	5000	5.0	65
12 ft. lbs.	Lock	3.37	525

Removal:—Flange mounted on left front face of flywheel housing. To remove, take out flange mounting screws.

Starting Switch (738-T):—Delco-Remy No. 820052. (738-X)—Solenoid Switch type 1546 controlled through relay by push switch on instrument panel. *For complete data, refer to Electrical Equipment Index.*

GENERATOR

MODEL 96 (STD.)

Delco-Remy No. 1100455. Armature No. 1854856.
Armature Number—No. 1854856.
Third brush regulation, lighting switch control. *refer to Electrical Equipment Index for 'Delco-Remy Lamp-Control (Switch) type' generator article.*

Charging Rate Adjustment—Ground field terminal at generator, check output with test ammeter. Loosen lockscrew on commutator endplate, shift third brush by hand, counter-clockwise to increase, or clockwise to decrease charging rate, tighten lockscrew. NOTE—Resistance on switch can be changed for various operating conditions.
Maximum Charging Rate—As given below.

Performance Data

	Amperes	Volts	R.P.M.
Cold	18-21	8.2-8.5	2400
Hot	15-18	7.9-8.3	2900

Rotation—Counter-clockwise at commutator end.
Brush Spring Tension—22-26 ounces (main brush), 16-20 ounces (third brush).
Field Current—2.3-2.6 amperes at 6 volts.

Removal:—Pivot mounted at left front of engine. To remove, take out pivot bolts and clamp bolt.

Belt Adjustment:—Loosen pivot bolts and clamp bolt, swing generator away from engine until belt side-play midway between crankshaft and generator pulleys is 1", tighten clamp bolt and pivot bolts.

GENERATOR

97, 107, 108 (STD), 96 (RADIO)

Delco-Remy No. 1100007. Armature No. 1966789. Fixed third brush control with external vibrating Voltage Regulator (see Note). Ventilated by fan NOTE—'Double Core Type' Voltage Regulator (with 'IGN' terminal used on Models 96 & 97. 'Single Core Type' Voltage Regulator used on Models 107 & 108.
Charging Rate Adjustment—Adjusted by changing voltage regulator setting. See Regulator data.
Maximum Charging Rate—As given in table below.
NOTE—Do not operate generator on open-circuit.

Performance Data

	Amperes	Volts	R.P.M.
Cold	26-30	8.0	3400
Hot	25-28	8.0	3600

All other data as given for 1100455 generator above.

CUTOUT RELAY

WITH NO. 1100455 GENERATOR

Delco-Remy Model 265-H (Used with 1100455 Gen.). *For complete data, refer to Electrical Equipment Index.*
Cuts In—6.75-7.5 volts. 11 M.P.H.
Cuts Out—0-2.5 amperes discharge.
Contact Gap—.020". **Air Gap**—.015" (closed).
Armature Spring Tension—3.5 ounces.

REGULATOR

WITH NO. 1100007 GENERATOR

Delco-Remy Model 5827 (Used with 1100007 Gen.). Double Core Type Voltage Regulator (With 'IGN' Terminal). Cutout Relay and vibrating type Voltage Regulator in case on dash. *For complete data, refer to Electrical Equipment Index.*

Cutout Relay

Cuts In—6.9-7.6 volts.
Cuts Out—0-3.0 amperes discharge.
Contact Gap—.020". **Air Gap**—.020" (closed).

Voltage Regulator

Setting—7.5-7.9 volts (70°F.), 7.4-7.6 volts (150°F.) Regulator is over-compensated for temperature and must be checked at these points.
Checking & Adjustment—*See Electrical Equipment Section.*
Contact Gap—.020". **Contact Sp. Tension**—2.7-3.5 oz. **Air Gap**—.063" between armature and center of core with armature down. .010" between fibre bumper and stop with armature up.

REGULATOR

MODELS 107 & 108

Delco-Remy No. 1118204 (Used with 1100007 Gen.). Single Core Type Voltage Regulator. Cutout Relay and vibrating type Voltage Regulator in case. *Refer to Graham 1940-41 Model 109 & 113 article (following) for complete data on this Regulator.*

LIGHTING

LIGHTING:—**Headlamps.** Hall. Twin beam type with upper and lower beams controlled by selector switch
Headlamp Adjustment—Aim each headlamp so that hot spot aimed straight ahead and upper edge at lamp center height at distance of 25 feet.
Headlamp Beam Indicator—In upper half of speedometer dial. Lighted when upper beams in use.

Switches

Lighting—Delco-Remy Model 481-X (96 with 1100455 generator), 478-H (all others).
Beam Selector—Douglas No. 5544.
Instrument Panel—Delco-Remy Model 1997706.

Bulb Specifications

Position	Candlepower	Mazda No.
Headlamps	32-32	2330
Parking (in headlamps)	1½	55
Stop-Tail	21-3	1158
License, Dome	3	63
Instrument, Indicator	1	51

MISC. ELECTRICAL

FUSES:—**Lighting**—20 ampere fuse capacity mounted on lighting switch. **Clock**—S.F.E. 4 amp. (on clock).

HORNS:—**Klaxon**—K-16-2003 (96 & 108), K-26-S-1576 (97&107), single horn standard. Twin Horns—Model K-33-S, Type 2087 (low note—left side), 2088 (high note—right side), vibrator type, blended tone with horn relay optional. NOTE—Twin horns mounted on either side of radiator under hood.

Horn Type	Current (at 6 volts)	Air Gap
K-16-2003	5-7.5	.015-.017"
K-26-S-1576	6.5-8.5	.025-.029"
2087 (Low Note)	11-13	.042-.046"
2088 (High Note)	10-12	.032-.036"

Horn Relay:—Delco-Remy Model 271-A or 1116775.
Contact Gap—.020".
Contacts Close—2.7-4.0 volts. **Air Gap**—.015".

ENGINE

ENGINE SPECIFICATIONS:—Six cylinder, 'L' head. Engines same for both models except that Supercharger installed on Models 97 and 107 only.
Bore—3¼". **Stroke** 4⅜". **Displacement** 217.8 cu. ins.
Rated Horsepower—25.35 A.M.A.
Developed Horsepower—(96) 90 at 3600 RPM.; (108) 93@3800; (97) 116, (107) 120, at 4000 RPM.
Compression Ratio—6.7-1 aluminum, Std. 96('38),97, Optl. 96 ('39). 6.4 & 6.6-1 cast-iron, Std. 96 ('39). 6.65-1 Cast-iron, Std. 107 & 108. 7.0-1 & 7.25-1 Aluminum Optional on all models.
Compression & Vacuum Reading—*See Tune-Up data.*

PISTONS:—Bohn autothermic, aluminum alloy, cam ground, plated type with special cylinder wall lubrication system. *See Graham Shop Notes for data.*
Weight—14⅛ ozs. (stripped). **Length**—3⅝".
Removal—Pistons and rods removed from above.
Clearance—Top .024". Skirt .0025".

Replacement Pistons:—Finished pistons (with pins fitted) furnished in oversizes of 3.247" to 3.252" (in .001" steps), 3.252" to 3.274" (in .002" steps) and 3.277". NOTE—Piston size stamped on head.

CONTINUED N NEXT PA E

ENGINE

C NTINUED FROM PRECEDING PAGE

Fitting New Pistons:—Use .0025" feeler ½" wide inserted between piston and cylinder wall at right angles to pin. Pull required to withdraw feeler must be 10-15 lbs. at all points in cylinder.

Installing Pistons:—Install pistons with four vertical grooves on skirt toward camshaft (right side).

PISTON RINGS:—Two compression, two oil control rings per piston, all above pin.

Ring	Width	End Gap	Side Clearance
Compr.	3/32"	.007-.015"	.0015" Min.
Oil Cont.	5/32"	.007-.015"	.0015" Min.

Replacement Rings & Installation Directions:—*See Graham Shop Notes for data.*

PISTON PIN:—Diameter 13/16". Length 2 13/16". Pin locked in rod by clampscrew.

Pin Fit in Piston—.0005" clearance (hand push fit).

Replacement Pins:—Furnished Std. and .002", .005", .010" oversize (new pistons have fitted pins).

CONNECTING ROD:—Length 7". Bearing caps dowelled on rods and held by capscrews in blind tapped holes

Crankpin Journal Diameters—2 1/16".

Lower Bearing—Removable steel-backed, cadmium-silver-lined type (not grooved, no oil spray hole).

Clearance—.0008-.0021". **Sideplay**—.004-.006".

Bearing Adjustment:—None (no shims). Replace bearings. New bearings should be tight with .002" feeler 1" long installed under cap (cap can be sanded on face plate to secure this fit). Install new bearings with tang engaging groove in rod and cap.

Installing Rods:—Lower Bearings offset. Install rod with widest half of bearing toward rear (#1, 3, 5), toward front (#2, 4, 6). Head of piston pin clampscrew should be toward camshaft on all rods.

CRANKSHAFT:—4 bearing, integral counterweights with Lanchester type Vibration dampener.

Journal Diameters—2⅜" all bearings.

Bearing Type (Front)—Cadmium-silver lined bushing inserted in hole in crankcase from forward end with bushing flange doweled to crankcase.

Bearing Type (Others)—Conventional removable steel-backed, cadmium-silver lined type.

Clearance (all Bearings)—.0008-.0021".

Bearing Adjustment & Replacement:—*See Graham Shop Notes for Crankshaft Bearing data.*

End Thrust:—Taken by front bearing. Adjusted by adding or removing shims furnished .002", .008" thick. **Endplay**—.004-.006".

CAMSHAFT:—4 Bearing. Non-adjustable Chain Drive.

Journal Diameters—#1, 1⅞"; #2, 1 13/16"; #3, 1¾"; #4, 1¼". **Bearing Type**—Bronze bushings.

End Thrust:—Taken by spring-loaded plunger in forward end of camshaft.

Timing Chain:—Link-Belt No. 336. Width 1". Pitch .500". Length 23" or 46 links.

Camshaft Setting:—Sprockets are marked. With #1 and #6 pistons on top dead center and marks on both sprockets on upper left side, mesh chain so there are exactly 9 links or 10 pins (inclusive of pins meshed opposite marks) between marks.

VALVES:—	Head Diameter	Stem Diameter	Length
Intake	1 33/64"	.341"	4 61/64"
Exhaust	1 21/64"	.341"	4 61/64"

	Seat Angle	Lift	Stem Clearance
Intake	30°	5/16"	.002-.003"
Exhaust	45°	5/16"	.002-.003"

NOTE—96 & 97 stem diameter .3145" on Intake.

Valve Guides:—Pressed in block. Ream after installation for correct clearance.

Valve Springs:—Free length 1 15/16" ('38), 2" ('39-40).

	1938 Pressure	'39-40 Spring Length
Valve Closed	36 lbs.	44 lbs. 1 21/32"
Valve Open	87 lbs.	98 lbs. 1⅜"

Valve Lifters:—Cylindrical type. Diameter 1". Operate in guide holes 1 21/32" long finished in block.

Lifter Clearance in Guide—.0005-.0015".

VALVE TIMING

Tappet Clearance:—.010" all valves, engine hot.

Valve Timing:—See Camshaft Setting above.

Intake Valves—Open 4½° BTDC. Close 47½° ALDC.

Exhaust Valves—Open 47½° BLDC. Close 4½° ATDC.

To Check Timing—Set tappet clearance #6 exhaust valve at .012". This valve should close when flywheel mark 'EC-1' lines up with indicator under cover on right front face of flywheel housing. Reset tappet clearance at .010" with engine hot.

SUPERCHARGER

SUPERCHARGER:—97 and 107 only. Centrifugal type. Carburetor mounted directly on top of case (Supercharger blower between carburetor and engine).

See Miscellaneous Section for complete data.

Supercharger Removal & Drive Data:—*See Graham Shop Notes for complete instructions.*

LUBRICATION

LUBRICATION:—Pressure system. Gear type oil pump located in crankcase.

Normal Oil Pressure:—45 lbs. at 30 M.P.H.

Oil Pressure Regulator:—Located on right side of crankcase at rear of engine number plate. Opens at 50 lbs. Adjusted by adding or removing washers between spring and plunger.

Oil Pressure Gauge:—King-Seeley Electric, K-S Nos. Dash Unit: 6926 (All 1938, 96 '39), 7480 (97 '39), 7932 (107,108), Engine Unit: 6125 (all models).

See Miscellaneous Section for complete data.

Crankcase Capacity:—5 quarts (refill).

COOLING

COOLING:—Capacity—14 qts. (96, 108), 15 (97, 107).

Water Pump:—Packless type, sealed ball bearing shaft.

See Water Pump Section for complete data.

Thermostat—Fulton or Detroit Lubricator. Starts to open 140-150° (Fulton), 150° (Detroit Lubricator).

Temperature Gauge:—King-Seeley Electric. K-S Nos.

Dash Unit—No. 6923 (All '38), 7490 (96 '39), 7465 (97 '39), 7934 (All '40). **Engine Unit**—No. 5700 ('38), 7000 (1939-40). NOTE—Use No. 7000 Engine Unit to replace 5700 (requires new Dash Unit 7490).

See Miscellaneous Section for complete data.

CLUTCH

CLUTCH:—Long Model 9½CF-CS. Semi-centrifugal, single plate, dry disc type.

See Clutch Section for complete data.

Facings—Chevron or Spiral wound Moulded type, 2 required. I.D. 6". O.D. 9½". Thickness .125".

Adjustment—Free movement of clutch pedal must be about 1¼". To adjust, loosen lock nut above pivot block at pedal, turn adjusting nut below pivot block on connector rod until proper clearance obtained.

Removal:—Remove Transmission (See Transmission below), take off clutch housing underpan, take out clutch mounting screws in cover flange (turning all screws out evenly, remove clutch from below.

TRANSMISSION

TRANSMISSION:—Warner. Horizontal type (shift lever and cover on side of case). All helical gear type.

See Transmission Section for complete data.

Transmission Control:—Evans-Graham vacuum type (1938). Own remote control (1939-40).

See Transmission Section for complete data.

Removal:—Disconnect hand brake and clutch linkage, disconnect propeller shaft at front universal, support engine at rear, remove rear engine mounting cross-member, take out transmission mounting bolts, pull transmission straight back and remove. NOTE—On cars with remote gear shift, disconnect shifter rods at side of transmission case.

OVERDRIVE

Overdrive:—Warner type R6 ('38, early '39), AS9-T88 (late '39, all '40) with elec. 'kick-down' Optl.

See Transmission Section for complete data.

Removal: Same as std. transmission above after overdrive control has been disconnected.

UNIVERSALS

UNIVERSAL JOINTS:—Detroit-Universal Series 4200. Ball-and-trunnion type with roller bearings, 2 used.

See Universals Section for complete data.

REAR AXLE

REAR AXLE:—Spicer Model 41-2. Semi-floating, Hypoid gear type with Hotchkiss drive.

See Rear Axle Section for complete data.

Ratio—4.27-1 Standard. 4.55-1 Optional.

Backlash—.004-.008" Shim adjustment.

Removal:—Hoist rear of car, disconnect propeller shaft at rear universal, brake line, and shock absorbers, remove spring U-bolts, disconnect rear spring shackles, withdraw axle assembly.

Wheel Bearing Adjustment—Shims provided between flanged end of axle housing and brake backing plate. To adjust, remove wheel, hub, and drum assembly. Remove shims. Endplay .002-.007".

SHOCK ABSORBERS

SHOCK ABSORBERS:—Delco. Direct acting, hydraulic.

Model		Front	Rear
96, 97	1938	B-1161-K	B-1163-P
96, 97	1939	1112-J	1120-N
107, 108	'40	1000 Type	1000 Type

See Shock Absorber Section for complete data.

FRONT SUSPENSION

Front Suspension:—Spicer, conventional 'I' beam section front axle with Reverse-Elliott ends and semi-elliptic springs.

Kingpin Inclination—7½° crosswise.

Caster—3½°. Adjusted by inserting wedge shims between spring and spring pad on axle.

Camber—1°.

Toe In—⅛". Adjust in usual manner by changing length of tie rod.

STEERING GEAR

Steering Gear: Ross Model T-14 Cam-and-Twin Lever

See Steering Gear Section for complete data.

BRAKES

BRAKES:—Service—'Graham-Lockheed' hydraulic type. Hand lever applies independent shaft brake.

See Brake Section for complete data.

Drum—11" centrifuse type.

Lining—Moulded type. Width 1¾". Thickness ¼". Length per wheel 23".

Clearance—.006" heel, .010" toe, for each shoe.

Hand Brake:—On drum at rear of transmission.

Adjustment—*See Graham Shop Notes for data.*

Drum Diameter—6".

Lining—Width 2". Thickness 5/32". Length 18 9/16"

NoRol: Optional equipment on all models.

See Brake Section for complete data.

ENGINE HOOD NOTE:—Hood is Alligator type with latch at forward end. To raise hood, press toward left on hood latch handle in lower left front hood louvre, raise hood slightly, reach under lower edge of hood and release safety catch, raise hood.

MODEL IDENTIFICATION

SERIAL NUMBER:—First No. 700001 (109 '40), 700146 (109 '41), 900001 (113 '41). Stamped on plate on floor inside right rear door.

ENGINE NUMBER:—First No. 710001 (109 '40), 710222 (109 '41), 910001 (113 '41). On plate on right side of engine block and on Serial No. Plate (above).

TUNE-UP

COMPRESSION:—Ratio—6.65-1 Std. 7.0-1 & 7.25-1 Optl. Pressure—125 lbs. (113), 130 lbs. (109) at cranking speed (Std. Hd.).

VACUUM READING:—17" steady at idling speed.

FIRING ORDER:—1-5-3-6-2-4. See diagram.

SPARK PLUGS:—Champion J-10. 14 MM. Metric. Gaps—.025"

IGNITION: See Coil, Condenser, and Distributor.
Breaker Gap—Set at .018". Limits .018-.024".
Cam Angle or Dwell—35° closed, 25° open.
Breaker Arm Spring Tension—20 ounces.
Automatic & Vacuum Advance—*See Distributor.*

IGNITION TIMING: See Ignition Timing.
Std. Setting—At TDC (113), 4½° ATDC (109) with flywheel mark "IGN" at indicator on right front face of housing.

CARBURETION: See Carburetor & Carb. Equipment.
Idle Setting—One idle screw (472-S), both screws (488-S) ½-1½ turn open. Idle speed 7-8 MPH.
Float Level (472-S)—⅜" from top of float seam at free end to top of projection on bowl cover.
Float Level (488-S) 3/16" from top of float to gasket seat on bowl cover (invert to check).
Accelerating Pump (472-S)—Outer lower hole (medium stroke) Normal, Inner hole (Summer), Outer upper hole (Winter) for extreme hot & cold temperatures.
Accelerating Pump (488-S)—Inner hole—Summer, Outer hole—Winter.
Fuel Pump Pressure: 3½ lbs. maximum.

MANIFOLD HEAT CONTROL:—Model 109. Upper half of supercharger case and cross-passage between supercharger and manifold are water-jacketed for fuel mixture heating. No attention required.
Model 113. Heat control valve in manifold controlled by automatic thermostatic coil spring. No adjustment required.

VALVES: See Valve Timing.
Tappet Clearance—.010" All Valves, Engine Hot.

STARTING: See Battery, Starter, Generator, Regulator.

IGNITION

Ignition Switch:—Delco-Remy Model 1116261. Connected to ignition coil by armored cable.
Ignition Lock—Chicago lock cylinder.

COIL: Delco-Remy No. 1115127 (109), 1115022 (113). Mounted on engine side of dash.
Ignition Current—2 amperes idling, 4 stopped.

CONDENSER: Delco-Remy Part No. 829092.
Capacity—.20-.25 microfarad.

DISTRIBUTOR: Delco-Remy Model 623-S (109), 623-A (113). Single breaker, 6 lobe cam, full automatic advance type with auxiliary vacuum spark control.
Rotation—Counter-clockwise viewed from above.
Distributor Settings—*See Tune-Up data.*

Automatic Advance—623-A

Distributor Degrees	R.P.M.	Engine Degrees	R.P.M.
Start	400	2	800
9	1400	18	2800

Automatic Advance—623-S

Start	275	2	550
3	400	6	800
8	1000	16	2000

Vacuum Spark Control Model 1116006 (623-A Dist.), 1116003 (623-S Dist.). Provides additional advance at speeds above idling except when engine accelerated or operated with wide open throttle when spark retarded by return spring within unit.

Vacuum Advance—1116006.

Dist. Degrees	Eng. Degrees	Vacuum (" of HG)
Start	0°	5-7"
5°	10°	14-18"

Vacuum Advance—1116003.

Start	0°	5-7"
5°	10°	12-16"

Distributor Removal:—Mounted on cylinder head. To remove, loosen advance arm clamp bolt and lift distributor out (not necessary to disconnect vacuum line).

IGNITION TIMING

IGNITION TIMING:—Flywheel Degrees Piston Position

109	4½° ATDC	.0088" ATDC
113	AT TDC	.0000" TDC

To Set Timing—With #1 piston on compression stroke, turn engine over until 'IGN' mark on flywheel lines up with indicator on housing (under cover on right front face of flywheel housing). Loosen advance arm clamp bolt, rotate distributor until contacts begin to open, tighten clamp bolt. See that rotor is opposite #1 segment in distributor cap.

CONTINUED ON NEXT PAGE

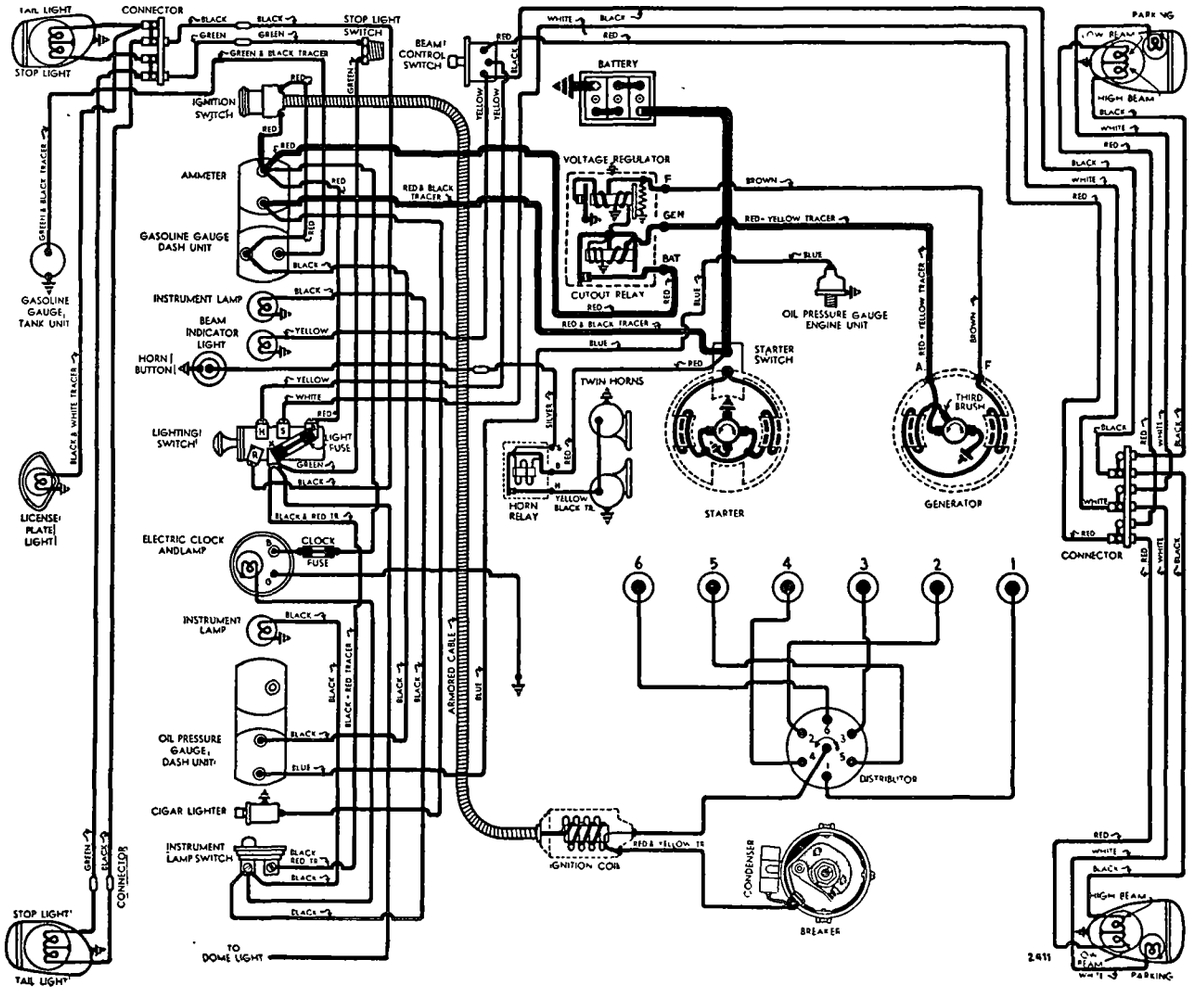

CONTINUED FROM PRECEDING PAGE

CARBURETOR
MODEL 109

CARBURETION:—Carburetor (109)—Carter WDO, Model 488-S. 1" dual, downdraft type with Climatic Control.
For complete data, refer to Carburetor Index.
Idle Setting—Both idle screws set alike and approx. ½-1¼ turns open (turn screws in for leaner mixture). Idle speed 7-8 MPH. (hot or slow idle).
Accelerating Pump Setting—Two holes provided in pump arm for connector rod engagement. Connect rod in outer hole (long radius) for maximum stroke, inner hole (short radius) for minimum stroke.
Float Level—3/16" from top of float to bowl cover with valve seated (remove gasket & invert to check).
Metering Rods & Jets—*See Carter Jet Specification Table in Carburetor Section for complete data.*
Fast Idle Setting—Set fast idle screw for .026" throttle opening with choke valve closed.
Automatic Choke Setting—Center index mark in line with reference mark on housing.

CARBURETOR
MODEL 113

Carburetor (113):—Carter WA-1, Model 472-S, 1¼" single, downdraft type with Climatic Control.
For complete data, refer to Carburetor Index.
Idle Setting—Idle screw approx. ½-1½ turns open (turn screw in for leaner mixture). Idle speed 7-8 MPH (hot or slow idle—fast idle inoperative).
Accelerating Pump Setting—Three holes provided in pump arm (under dustcover on bowl cover) for connector rod engagement. Connect rod in inner hole (short radius) for minimum stroke, outer (upper hole) for maximum stroke, outer (lower) hole for medium stroke.
Float Level—⅜" from top of seam at free end to top of projection on bowl cover (invert to check).
Metering Rods & Jets—*See Carter Jet Specification Table in Carburetor Section for complete data.*
Fast Idle Setting—Adjust by bending connector rod offset so choke valve opening is ⅝" with stopscrew against (not on) first step of fast idle cam.
Automatic Choke Setting—At Center Index mark.

CARB. EQUIPMENT

Air Cleaner:—AC oil-wetted type Std., Heavy duty oil-bath type Optl.
Fuel Pump:—AC Type R, #1523731. Diaphragm type.
For complete data, refer to Carb. Equip. Index.
Gasoline Gauge:—Stewart (Stewart-Warner) Electric.
For complete data, refer to Carb. Equip. Index.

BATTERY

BATTERY:—**Willard Type SWB-100.** 6 volt, 17 plate, 100 ampere hour capacity (20 hour rate).
Starting Capacity—120 amperes for 20 minutes.
Zero Capacity—300 amperes for 3.5 minutes at 0°. Five second voltage 4.3 volts.
Grounded Terminal—Positive (+) terminal.
Location—Under left front seat or under rear compartment floor on left side.

Radio Battery—Willard Type HWB-110. 6 volt, 19 plate, 110 ampere hour capacity (20 hour rate).
Starting Capacity—134 amperes for 20 minutes.
Grounded Terminal, Dimensions, Location—Same as for Std. battery (above).

STARTER

Delco-Remy Model 738-T, 738-X (RHD). Armature No. 823881.
Drive—Manual pinion shift (738-T), solenoid pinion shift (738-X), with overrunning clutch.
Cranking Engine—140-145 amperes, 5 volts.
Rotation—Counter-clockwise at commutator end.
Brush Spring Tension—24-28 ounces each.

Performance Data

Torque	R.P.M	Volts	Amperes
0 ft. lbs	5000	5.0	65
12 "	Lock	3.37	525

Removal:—Flange mounted on left front face of flywheel housing. To remove, take out flange mounting screws.
Starting Switch (738-T):—Delco-Remy No. 820052. Mounted on starter field frame. Operated by pinion shift lever (starter pedal).
(738-X):—Solenoid Switch type 1546. Solenoid switch controlled through relay by push switch on instrument panel.
For complete data, refer to Electrical Equipment Index.

GENERATOR

Delco-Remy Model 1100007. Armature No. 1966789. Fixed third brush control with external vibrating voltage regulator. Ventilated by fan on drive pulley.
Charging Rate Adjustment—Adjusted by changing voltage regulator setting. See Regulator data.
NOTE—Third brush clamped in position for maximum safe output and should not be disturbed.
Maximum Charging Rate—As given in table below. To check charging rate, connect test ammeter in charging line at regulator 'BAT' terminal, voltmeter between 'BAT' terminal and ground, ground generator 'F' terminal to eliminate regulator action.
NOTE—Do not operate generator on open-circuit. Restore original connections after completing test.

Performance Data

	Amperes	Volts	R.P.M.
Cold	26-30	8.0	3400
Hot	25-28	8.0	3600

Rotation—Counter-clockwise at commutator end.
Brush Spring Tension—25 ozs. (all brushes).
Field Current—2.3-2.6 amperes at 6.0 volts.
Removal:—Pivot mounted at left front of engine. To remove, take out pivot bolts and clamp bolt.
Belt Adjustment:—Loosen pivot bolts and clamp bolt, swing generator away from engine until belt deflection is 1" midway between generator and fan pulleys (use straightedge across pulleys).

REGULATOR

Delco-Remy Model 1118204. "Single Core" Type. Vibrating Voltage Regulator in case on dash.
For complete data, refer to Electrical Equipment Index.
CAUTION—Check generator for grounded field coils and leads before changing regulator settings to correct High Charging Rate or High Voltage.

Cutout Relay

Cuts In—6.2-6.7 volts hot.
Cuts Out—0-4.0 ampere discharge current.
Contact Gap—.020" (same for both sets).
Air Gap—.020" (with contacts just closed).

Voltage Regulator

Setting—7.2-7.4 volts hot (operating temperature). Regulator over-compensated for temperature. Should be checked with cover in place and hot.
Checking & Adjustment—*See Electrical Equipment Section.*
Air Gap—.070" between center of core and armature with contacts just closing (press down on armature to open contacts, release pressure, check gap at point where contacts just close).

LIGHTING

LIGHTING:—**Headlamps**—Hall. Upper and lower beams controlled by beam selector switch on toe-board.
Headlamp Adjustment—Aim each headlamp straight ahead with high intensity spot centered on vertical line directly ahead of each lamp center and upper edge of this high intensity spot on horizontal line at lamp-center height.
Beam Indicator—In knob at right of ignition switch. Lighted when upper beams in use.

Switches

Lighting—Soreng-Manegold.
Beam Selector—R-B-M Model 1050.
Instrument—Delco-Remy No. 1997706.

Bulb Specifications

Position	Candlepower	Mazda No
Headlights	32-32	2330
Parking	1½	55
Instrument, Beam Ind.	1	51
Stop & Tail	21-3	1158
License Plate, Dome	3	63

MISC. ELECTRICAL

FUSES:—**Lighting**—20 ampere. In lighting switch.
Clock—SFE. 4 ampere. In clock lead.
HORNS:—**Delco-Remy.** Blended tone, twin horns No. 1999519 (109 Low Note), 1999520 (109 High Note), 1999531 (113 Low Note), 1999532 (113 High Note).

	Current (at 6 volts)	Air Gap
1999519, 31 (low note)	18-20	.044-.049"
1999520, 32 (high note)	19-21	.034-.039"

Horn Relay:—Delco-Remy No. 1116775.
Contact Gap—.025". **Air Gap**—.015" (closed).
Contacts Close—2.75-4.0 volts.

ENGINE

ENGINE SPECIFICATIONS:—Six cylinder, 'L' head. 109 engine equipped with Graham Supercharger.
Bore—3¼". **Stroke**—4⅜".
Displacement—217.8 cu. ins.
Rated Horsepower—25.35 AMA.
Developed Horsepower—93 at 3800 RPM (113), 120 at 4000 RPM (Supercharged 109).
Compression Ratio—6.65-.1 Std. 7.0-1 & 7.25-1 Optl.
Compression & Vacuum Reading—*See Tune-Up data.*

PISTONS:—Bohn autothermic, aluminum alloy, cam ground, plated type with special cylinder wall lubrication system. *See Graham Shop Notes for data.*
Weight—14⅛ ozs. (stripped). **Length**—3⅝".
Removal—Pistons and rods removed from above.
Clearance—Top .024". Skirt .0025".

Replacement Pistons:—Finished pistons (with pins fitted) furnished in oversizes of 3.247" to 3.252" (in .001" steps), 3.252" to 3.274" (in .002" steps) and 3.277". NOTE—Piston size stamped on head.

Fitting New Pistons:—Use .0025" feeler ½" wide inserted between piston and cylinder wall at right angles to pin. Pull required to withdraw feeler must be 10-15 lbs. at all points in cylinder.

Installing Pistons:—Install pistons with four vertical grooves on skirt toward camshaft (right side).

ENGINE

CONTINUED FROM PRECEDING PAGE

PISTON RINGS:—Two compression, two oil control rings per piston, all above pin.

Ring	Width	End Gap	Side Clearance
Compr.	3/32"	.007-.015"	.0015" Min.
Oil Cont.	5/32"	.007-.015"	.0015" Min.

Replacement Rings & Installation Directions:—*See Graham Shop Notes for data.*

PISTON PIN:—**Diameter 13/16". Length 2 13/16".** Pin locked in rod by clampscrew.
Pin Fit in Piston—.0005" clearance (hand push fit).

Replacement Pins:—Furnished Std. and .002", .005", .010" oversize (new pistons have fitted pins).

CONNECTING ROD:—**Length 7".** Bearing caps dowelled on rods and held by capscrews in blind tapped holes.
Crankpin Journal Diameters—2 1/16".
Lower Bearing—Removable steel-backed, cadmium-silver-lined type (not grooved, no oil spray hole).
Clearance—.0008-.0021". **Sideplay**—.004-.006".

Bearing Adjustment:—None (no shims). Replace bearings. New bearings should be tight with .002" feeler 1" long installed under cap (cap can be sanded on face plate to secure this fit). Install new bearings with tang engaging groove in rod and cap.

Installing Rods:—Lower Bearings offset. Install rod with widest half of bearing toward rear (#1, 3, 5), toward front (#2, 4, 6). Head of piston pin clampscrew should be toward camshaft on all rods.

CRANKSHAFT:—4 bearing, integral counterweights with Lanchester type Vibration dampener.
Journal Diameters—2⅜" all bearings.
Bearing Type (Front)—Cadmium-silver lined bushing inserted in hole in crankcase from forward end with bushing flange doweled to crankcase.
Bearing Type (Others)—Conventional removable steel-backed, cadmium-silver lined type.
Clearance (All Bearings)—.002".

Bearing Adjustment & Replacement:—*See Graham Shop Notes for Crankshaft Bearing data.*

End Thrust:—Taken by front bearing. Adjusted by adding or removing shims furnished .002", .008" thick. **Endplay**—.004-.006".

CAMSHAFT:—4 Bearing. Non-adjustable Chain Drive.
Journal Diameters—#1, 1⅞"; #2, 1 13/16"; #3, 1¾"; #4, 1¼". **Bearing Type**—Bronze bushings.

End Thrust:—Taken by spring-loaded plunger in forward end of camshaft.

Timing Chain:—Link-Belt No. 336. Width 1". Pitch .500". Length 23" or 46 links.

Camshaft Setting:—Sprockets are marked. With #1 and #6 pistons on top dead center and marks on both sprockets on upper left side, mesh chain so there are exactly 9 links or 10 pins (inclusive of pins meshed opposite marks) between marks.

VALVES:—	Head Diameter	Stem Diameter	Length
Intake	1 33/64"	.341"	4 61/64"
Exhaust	1 21/64"	.341"	4 61/64"

	Seat Angle	Lift	Stem Clearance
Intake	30°	5/16"	.002-.003"
Exhaust	45°	5/16"	.002-.003"

Valve Guides:—Pressed in block. Ream after installation for correct clearance.

Valve Springs:—Spring free length 2",

	Spring Pressure	Length
Valve Closed	44 lbs.	1 21/32"
Valve Open	98 lbs.	1 11/32"

Valve Lifters:—Cylindrical type. Diameter 1". Operate in guide holes 1 21/32" long finished in block.
Lifter Clearance in Guide—.0005-.0015".

VALVE TIMING

Tappet Clearance:—.010" all valves, engine hot.

Valve Timing:—See Camshaft Setting above.
Intake Valves—Open 4½° BTDC. Close 47½° ALDC.
Exhaust Valves—Open 47½°BLDC. Close 4½°ATDC
To Check Valve Timing—Set tappet clearance #6 exhaust valve at .012". This valve should close with piston 4½° or .0088" past top dead center when flywheel mark 'EC-1' lines up with indicator under cover on right front face of flywheel housing. Reset tappet clearance at .010" hot.

SUPERCHARGER

SUPERCHARGER (109):—Own make, centrifugal type. Carburetor mounted directly on top of supercharger case (Supercharger blower between carburetor and manifold).
See Miscellaneous Section for complete data.

Supercharger Removal & Drive Data:—*See Graham Shop Notes for complete instructions.*

LUBRICATION

LUBRICATION:—Pressure system. Gear type oil pump located in crankcase.

Normal Oil Pressure:—45 lbs. at 30 M.P.H.

Oil Pressure Regulator:—Located on right side of crankcase at rear of engine number plate. Opens at 50 lbs. Adjusted by adding or removing washers between spring and plunger.

Oil Pressure Gauge:—Stewart (Stewart-Warner) electric.
See Miscellaneous Section for complete data.

Crankcase Capacity—5 quarts (refill).

COOLING

COOLING SYSTEM:—**Capacity**—16 quarts.
Water Pump:—Packless type. Sealed ballbearing shaft.
See Water Pump Section for complete data.
Removal—Remove fan belt and pump mounting bolts, remove fan and pump as an assembly.

Thermostat:—Detroit Lubricator. In cyl. head outlet.
Setting—Starts to open 150°F. Fully open at 180°.

CLUTCH

CLUTCH:—**Long Model 9½CF-CS.** Semi-centrifugal, single plate, dry disc type.
See Clutch Section for complete data.
Facings—Chevron or Spiral wound Moulded type, 2 required. I.D. 6". O.D. 9½". Thickness .125".
Adjustment—Free movement of clutch pedal must be about 1¼". To adjust, loosen lock nut above pivot block at pedal, turn adjusting nut below pivot block on connector rod until proper clearance obtained

Removal:—Remove Transmission (See Transmission below), take off clutch housing underpan, take out clutch mounting screws in cover flange (turning all screws out evenly, remove clutch from below.

TRANSMISSION

TRANSMISSION:—**Warner.** Constant-mesh, synchromesh, (Second & High), sliding gear (Low & Reverse), all helical gear type.
See Transmission Section for complete data.

Transmission Control:—Own remote control type mounted on steering column.
See Transmission Section for complete data.

Removal:—Disconnect hand brake and clutch linkage, disconnect propeller shaft at front universal, support engine at rear, remove rear engine mounting cross-member, disconnect transmission shift linkage. Take out transmission mounting bolts, pull transmission straight back and remove.

UNIVERSALS

UNIVERSAL JOINTS:—**Spicer 1271-101 (Frt.), 1278-101 (Rear).** Needle bearing type.
See Universals Section for complete data.

REAR AXLE

REAR AXLE:—**Spicer Model 41-3.** Semi-floating, hypoid gear type with Hotchkiss drive.
See Rear Axle Section for complete data.
Ratio—4.09-1 Std., 4.55-1 Opti.
Backlash—.004-.008". Shim adjustment.

Removal:—Disconnect shock absorbers, brake line and hand brake linkage. Hoist rear end of car, disconnect propeller shaft at rear universal. Remove rear spring U-bolts, disconnect spring shackles, withdraw axle assembly from under car.

Wheel Bearing Adjustment:—Shims provided between flanged end of axle housing and backing plate. To adjust, remove wheel, hub, and drum assembly, remove shims to decrease endplay. **Endplay**—.002-.007".

SHOCK ABSORBERS

SHOCK ABSORBERS:—**Delco.** Direct acting, hydraulic
See Shock Absorber Section for complete data.

FRONT SUSPENSION

Front Suspension:—Spicer, conventional 'I' beam section front axle with Reverse-Elliott ends and semi-elliptic springs.
Kingpin Inclination—7½° crosswise.
Caster—3½°. Adjust by inserting wedge shims between spring and spring pad on axle.
Camber—1°. No adjustment.
Toe In—⅛". Adjust in usual manner by loosening clamp bolts and turning tie rod to change length.

STEERING GEAR

Steering Gear: Gemmer Model 305 Worm-and-Roller type with "push-pull" adjustments.
See Steering Gear Section for complete data.

BRAKES

BRAKES:—**Service**—Lockheed hydraulic type. Hand lever applies rear wheel service brakes.
See Brake Section for complete data.
Drums—10". Cast iron type.
Lining—Moulded type. Width 2". Thickness ¼"
Clearance—.006" heel, .010" toe for each shoe.

Hand Brake:—See Service Brakes above.

NoRol:—Optional equipment on all cars.
See Brake Section for complete data.

HOOD ASSEMBLY

1938 MODELS

ENGINE HOOD AND SIDE PANELS (112 Only): Hood hinged at front. Secured by handle on each side panel. To raise, turn one handle (handles interconnected), grasp hood along edge and lift forward until self-locking hinge support locks hood in raised position. Hinge support released by raising hood slightly and pushing lower half to rear.

Side Panels—When removing panels, free hood handle from tie rod at clamp bolt on one panel, remove other panel with handle and tie rod attached as an assembly.

1939 MODELS

ENGINE HOOD (BONNET) LOCK: Hood hinged at front and secured by lock handle in driver's compartment on lower edge of instrument panel to left of steering column (operates rod on engine side of dash which engages each side of hood). To unlock hood, push down on handle. Hood can then be raised by lifting on either side at rear (press support hinge forward before releasing hood).

Hood and Support Removal—Remove front bumper. Raise hood, take out 3 cap screws and tapping plate at front hood hinge, hood support upper pin springs, pins and washers, freeing hood. Remove cotter pins and washers at ends of support lower rod, unhook springs freeing hood support.

Hood Alignment—Check alignment at cowl, side panels, and at name plate. To align, raise hood, loosen 3 cap screws at front hinge, shift hood at front end until aligned, raise hood, tighten screws.

Side Panel Removal (91, 92, 93, 95, 97)—Raise hood, remove 3 bolts at shell extension and 1 capscrew at cowl. Remove 1 capscrew attaching fender to front lower frame bonnet side panel (accessible through hole in top of radiator shell after removing horn). Loosen but do not remove capscrews on lower edge of panel (holes in panel slotted). Lift panel out. CAUTION—On cars equipped with bonnet side panel lamps, pull sockets out.

Side Panel Removal (90 & 98)—Raise hood, remove bolts at radiator shell and along lower edge. Take out screw at cowl and lift panel out.

Right Front Fender Dust Shield Removal (91, 92, 93, 95, 97)—For work on right side of engine (valves, etc.) remove shield as follows: Raise hood, remove 4 capscrews along top edge of shield (in engine compartment), 4 capscrews along front edge at radiator shell, and 3 capscrews along frame side member. Jack up front end of car and remove right front wheel. Take off fender stone guard at fender and dust shield. Pull out lower edge and remove.

Right Front Fender Dust Shield Removal (90 & 98)—Remove as follows: Raise hood, remove bolts at hood side panel, radiator shell and frame side member (in engine compartment). Jack up front end of car and remove right front wheel. Remove capscrews at fender and one dust shield fender brace bolt. Pull out lower edge of shield and remove.

1940-47 MODELS

ENGINE HOOD (BONNET) LOCK: Alligator type hood (hinged at front) with integral side panels and instrument panel lock. To raise hood, push forward on lock handle located under edge of instrument panel to left of steering column, lift rear of hood.

Hood (Bonnet) Removal—Unlock and raise hood. Disconnect bonnet light wires from terminals on fender junction block. Remove bonnet-to-bonnet support bolts and bonnet-to-bonnet hinge bolts. Lift bonnet straight up and remove from car. Align Hood and Front Fenders as directed below

Radiator Louvre Panel Removal—Remove panel-to-fender bolts from under fender. Remove front bumper bolt and and loosen rear bolt permitting bumper assembly to be lowered. Remove center front screw from under panel and lift panel off.

1940-41 MODELS

HOOD (BONNET) & FRONT FENDER ALIGNMENT: —U-shaped bonnet hinge consisting of cross-bar in back of grille with an upright arm at each end which attach to each side of hood. Hinge cross-bar equipped with loose fitting bracket at each end which is attached to frame bracket by screws. Frame and hood hinge brackets have serrated faces. Thick and thin hinge positioning washers assembled on each end of hinge cross-bar and are retained by a large cotter pin. Each front fender positioned by brace rod anchored to frame at lower end and to fender bracket on upper end by means of positioning nuts.

Hood (Bonnet) Adjustments—Bonnet alignment can be adjusted at three points as follows: For full fore-and-aft bonnet movement, loosen bonnet-to-bonnet hinge bolts (three on each side along lower edge of hood). For slight sidewise or lengthwise movement, loosen bonnet hinge frame bracket-to-frame bolts. To position bonnet hinge assembly for sidewise movement, take out large cotter pin in each end of hinge cross-bar and add or remove washers for correct fit.

Fender Adjustment—Fender fit can be adjusted by means of positioning nut on each side of fender bracket at upper end of brace rod. Separate brace rod for each fender located under bonnet behind radiator louvre panel.

Radiator Louvre Panel Adjustment—Louvre panel fit can be adjusted by loosening louvre-to-fender bolts on outer ends of panel. Bolts on back side of panel and are accessible from behind panel with bonnet raised. Louvre panel should be pushed forward as far as possible for correct fit.

1942 MODELS

HOOD (BONNET) & FRONT FENDER ALIGNMENT: —Bonnet alignment can be obtained by loosening fender bracket bolt at bonnet hinge (lower end of each bonnet hinge arm behind radiator louvre panel). Bolt hole in each fender is enlarged which permits bonnet being shifted until fitted properly. Hinge to fender bracket bolt should be installed as follows: Place flat washer on bolt, then rubber shouldered washer and assemble in bonnet hinge hole (see that rubber washer seats properly). slide second rubber shouldered washer, plain washer and spring over bolt, screw bolt in fender bracket and install locknut.

Front Fender Alignment—Fenders can be fitted for sidewise movement at front end by means of adjusting nut and locknut on fender brace rods under bonnet behind radiator louvre assembly. Adjust fenders to obtain proper fit along bonnet.

FRONT FENDERS

1940-41 MODELS

FRONT FENDER REMOVAL: Unlock and raise hood. Disconnect headlamp wires at junction block, unclip wires from fender and dash and push headlamp cables through hole in fender (remove battery if left fender to be removed). Remove fender bolts at following points: running board, brace rod top nut, louvre panel, fender cross member (with spacers), brace to cross member screw, core baffle to fender screws (right fender only), radiator lower tank shield screws, hood support screws, apron support to inspection cover screw, and horn bracket to frame screws. Lift fender off.

Right Front Fender Inspection Hole Plate Removal—This plate replaces fender dust shield (now welded to fender) used on 1939 models for access to valve tappets, fuel pump, and oil pump. To remove, unlock and raise hood, remove horn mounting bolts and push horns forward (in engine compartment). Raise front end of car, remove right front wheel and 12 cap screws along the top, bottom and front edge of plate (under fender).

1942 MODELS

FRONT FENDER REMOVAL: Remove wheel, raise bonnet and support in open position. Remove battery (if left fender being removed). Disconnect light wires at junction block on left fender (if right fender being removed pull wires back through hole in fender and remove grommet). Take off dust shield hole cover (right fender only). Remove fender screws and bolts as follows: 2 bolts at bonnet support, 2 Phillips head screws at radiator tank lower shield, all screws in radiator baffle and remove baffle, 2 hex head bolts in louvre end bracket, 1 hex head bolt at frame bracket (under car), 2 hex head bolts at frame cross member, 4 hex head bolts at front bumper splash guard, 6 hex head bolts at cowl, 2 hex head bolts at bonnet hinge bracket, and fender brace rod nut. Lift fender off car. Mouldings, lamp and brace can be disassembled from fender after fender removed from car. NOTE—When installing fender, assemble headlamp after fender installed on car. Fender to cowl bolts should not be tightened until bonnet fitted to fender.

CYLINDER HEAD

1936-48 MODELS

CYLINDER HEAD INSTALLATION: Use Torque Indicating Wrench to tighten cylinder head stud nuts, tighten in correct sequence as shown in the diagrams. Procedure for tightening Cast Iron and Aluminum heads is as follows:

HUDSON 6 & TERRAPLANE

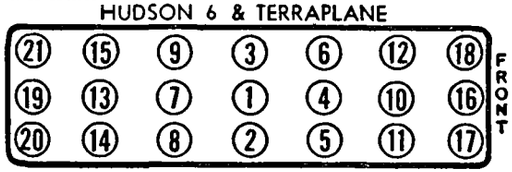

HUDSON 8

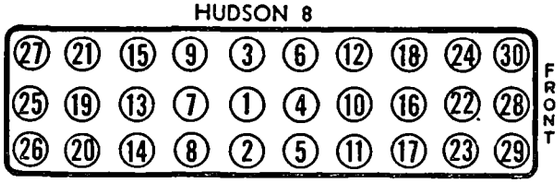

Cast Iron Heads—With engine cold, tighten all nuts evenly to correct tension. Then run engine until it is thoroughly warmed up and recheck all nuts

Aluminum Heads—With the engine cold, tighten all nuts to correct tension. Run engine until thoroughly warm, allow engine to cool off, and then recheck all nuts. Do not tighten aluminum heads when warm.

Tightening Torque—See Tightening (Torque Wrench) Specifications below.

TIGHTENING (TORQUE WRENCH) SPECIFICATIONS

1948 MODELS

	Ft. Lbs.	In. Lbs.
Cylinder Head Capscrews (6)	70-75	840-900
Cylinder Head Stud Nuts (8)	45-50	540-600
Main Bearing Capscrews (6)	75-80	900-960
Main Bearing Capscrews (8)	70-80	840-960
Connecting Rod Bolts	40-45	480-540
Camshaft Gear Bolt	20-30	240-360
Intake Manifold Stud Nuts	12-15	144-180
Exhaust Manifold Stud Nuts	20-30	240-360
Engine Mounting Bolts	40-45	480-540
Vibration Dampener Screw	100-120	1200-1440
Clutch Cover Bolts	20-25	240-360
Differential Carrier Bolts	35-40	420-480
Rear Axle Shaft Nut	125-200	1500-2400
Brake Anchor Pin Nut	80-90	960-1080
Steering Wheel Nut	20-30	240-360
Pitman Arm Nut	125-140	1500-1680
Strg. Center Arm Pivot Nut	50-60	600-720
Steering Gear to Frame	50-60	600-720

1941-47 MODELS

Cylinder Head Stud Nuts (6)	40	480
Cylinder Head Stud Nuts (8)	50	600
Spark Plugs (14 MM. Type)	28	336
Main Bearing Bolts	75	920
Connecting Rod Bolt Nuts	40	480
Flywheel to Crankshaft	45	540
Water Jacket Cover Bolt	15	180
Front Engine Support Bolt	45	540
Clutch Cover Mounting Bolts	22	264
Differential Carrier Nuts	37	444
Axle Shaft Nut	95	1140
Wheel Nuts	65	780
Brake Anchor Pin Nuts	85	1020
Clutch & Brake Pedal Nuts	22	264
Steering Wheel Nut	25	300
Pitman Arm Nut	140	1680
Steering Arm Nut	105	1260
Steering Center Arm Bolt Nut	65	780

1940 & PREVIOUS MODELS

Cylinder Head Stud Nuts (6)	45	540
Cylinder Head Stud Nuts (8)	55	660
Main Bearing Stud Nuts	91⅔	1100
Connecting Rod Bolt Nuts	52½	630

ENGINE REMOVAL

1939 MODELS

ENGINE ASSEMBLY REMOVAL: All engines can be removed as follows: Remove bonnet (see Hood and Support Removal) and radiator (see Radiator Core Removal). Disconnect generator, starter, temperature gauge and oil check valve wires. Remove wire harness along left side of engine, spark plug cables (with brackets) and distributor cap. Disconnect flexible fuel pump feed line and remove fuel line to carburetor. Disconnect throttle linkage and choke wire (if used). Remove accelerator cross shaft, carburetor and air cleaner. Disconnect exhaust pipe. Remove front motor support bolts, flywheel guard, accelerator pedal, floor mat, transmission hole cover, clutch housing-to-engine support bolts, engine ground strap and exhaust pipe bracket at rear engine support. Hoist engine out of car (move engine forward carefully to disconnect from transmission mainshaft). Finally, remove distributor, generator, fuel pump and clutch.

Installation—Reverse procedure listed above and note following points. Wrap a piece of soft wire around clutch throwout bearing oil seal with ends of wire extending up through clutch housing, lower engine in place (use care not to damage clutch driving plate assembly when engaging transmission mainshaft), pull wire out (this will prevent edge of seal from being curled by clutch cover). Install starter after engine in place.

1940-47 MODELS

ENGINE ASSEMBLY REMOVAL: All engines can be removed as follows: Remove bonnet (see Hood Removal), front seat cushion, accelerator pedal, front floor mat, transmission hole cover, clutch housing to engine bolts, engine ground strap, radiator core (see Radiator Core Removal), radiator stay rods and horns. Disconnect generator, starter, temperature gauge, and oil check valve wires and remove wiring harness from clips on left side of engine. Disconnect flexible fuel pump feed line and remove fuel line to carburetor. Disconnect throttle linkage leading from accelerator cross shaft and remove cross shaft (pull shaft toward spring and slip shaft out of opposite bracket). Disconnect windshield wiper hose at manifold. Remove spark plug wires and bracket, distributor cap, carburetor and air cleaner. Disconnect exhaust pipe at manifold. Remove front engine support bolts and nuts. Hoist engine out of car (use Tool J-917 attached to engine) move engine forward carefully to disconnect from transmission mainshaft. Finally, remove distributor, generator, fuel pump and clutch.

Installation—Reverse procedure listed above and note following point. Wrap a piece of soft wire around clutch throwout bearing oil seal with ends of wire extending up through clutch housing, lower engine in place (use care not to damage clutch driving plate assembly when engaging transmission mainshaft), pull wire out (this will prevent edge of seal from curling over).

ENGINE MOUNTINGS

1940-47 MODELS

ENGINE FRONT SUPPORT REMOVAL: Drain cooling system. Remove generator, fan belt, radiator outlet hose and raise front end of car. Remove radiator lower tank shield, vibration dampener (see Vibration Dampener Removal) and timing gears (see Timing Gear Removal). Block up front end of engine and remove front engine mounting bolts and nuts. Take out engine support bolt and locks and remove plate.

Installation—Reverse procedure listed above, note the following points: Clean front face of cylinder block thoroughly and use new gaskets. When replacing engine mounting bolts, tighten nuts until upper and lower plates are against spacer.

ORIGINAL BORE

1936-48 MODELS

ORIGINAL BORE SIZE: Original production (new engine) bore size indicated by code mark stamped on lower edge of valve chamber opposite cylinders. See table below for size and code marks.

1947 & EARLIER SIX CYLINDER BORE SIZE
1948 & EARLIER EIGHT CYLINDER B RE SIZE

Code Mark	Cylinder Diameter	Code Mark	Cylinder Diameter
Standard Size		.010" Oversize	
A	3.000"	AO	3.010"
B	3.0005"	BO	3.0105"
C	3.001"	CO	3.011"
D	3.0015"	DO	3.0115"
E	3.002"	EO	3.012"

1948 SIX CYLINDER B RE SIZE

Code Mark	Cylinder Diameter	Code Mark	Cylinder Diameter
Standard Size		.010" Oversize	
A	3.562"	AO	3.572"
B	3.5625"	BO	3.5725"
C	3.563"	CO	3.573"
D	3.5635"	DO	3.5735"
E	3.564"	EO	3.574"

Note—Recondition cylinders to size for which replacement pistons and rings available (see below).

Original Piston Size—Sizes and markings for original pistons same as for Replacement Pistons. See Replacement Piston Table and Piston Markings

PISTONS

1936-48 MODELS

REPLACEMENT PISTONS: Standard and oversize pistons marked by letter stamped on head and furnished for cylinder diameter sizes listed below. See Replacement Rings (following) for ring sizes.

Piston Markings—Code marks stamped on head of piston indicate the following: **Letter** indicates piston size and cylinder size for which piston to be fitted (see table below). **Number** indicates piston weight in ounces (if 2 numbers used, one over the other, top number indicates weight in ounces, lower number ¼ ounces). All pistons in one engine should be of same weight (carry same weight marks on head). NOTE—Original factory installed pistons carry two additional numbers, one number indicates cylinder in which piston installed, second number indicates cylinder block number.

1947 & EARLIER SIX CYLINDER PIST N SIZES
1948 & EARLIER EIGHT CYLINDER PIST N SIZES

Piston Mark	Piston Size	Cylinder Size
Standard Size		
B	2.9985"	3.000" & 3.0005"
D	2.9995"	3.001" & 3.0015"
F	3.0005"	3.002" & 3.0025"
J	3.0025"	3.004"
L	3.0035"	3.005"
P	3.0055"	3.007"
.010" Oversize		
BO	3.0085"	3.010" & 3.0105"
DO	3.0095"	3.011" & 3.0115"
FO	3.0105"	3.012" & 3.0125"
LO	3.0135"	3.015"
.020" Oversize		
BB	3.0185"	3.020"
DD	3.0195"	3.021"
FF	3.0205"	3.022"
.030" Oversize		
BOOO	3.0285"	3.030"
EOOO	3.0300"	3.0315"

C NTINUED ON NEXT PAGE

PISTONS

CONTINUED FROM PRECEDING PAGE

1948 SIX CYLINDER PISTON SIZES

Piston Mark	Piston Size	Cylinder Size
	Standard Size	
B	3.560"	3.562" & 3.5625"
D	3.561"	3.563" & 3.5635"
F	3.562"	3.564" & 3.5645"
J	3.564"	3.5665"
L	3.565"	3.5675"
P	3.567"	
	.010" Oversize	
BO	3.570"	3.572" & 3.5725"
DO	3.571"	3.573" & 3.5735"
FO	3.572"	3.574" & 3.5745"
LO	3.575"	3.5765"
	.020" Oversize	
BB	3.580"	3.5825"
DD	3.581"	3.5835"
FF	3.582"	3.5845"
	.030" Oversize	
BOOO	3.590"	3.5925"
EOOO	3.5915"	3.594"

PISTON RINGS

1936-48 MODELS

REPLACEMENT RINGS: Use Standard or Oversize rings for replacement pistons listed above. Ring size and pistons for each size as follows:

Ring Size	Piston Mark	Ring Size	Piston Mark
Standard	B, D, F	.015" OS.	LO
.003" OS.	J	.020" OS.	BB, DD, FF
.005" OS.	L	.030" OS.	BOOO, EOOO
.010" OS.	BO, DO, FO		

Piston Ring Sets—Cast iron or steel segment types furnished standard size, .010" and .020" oversize.

Note—If rings filed, keep clearance at pin uniform with end gap (.005" minimum).

1939 MODELS

PISTON RINGS: Compression. "Granoseal" treated rings used starting with car number 25000.

Oil Ring Width Change—Lower oil ring (below pin) changed during production as follows: Ring width reduced to 5/32" starting with following car numbers: (90) 24626, (91) all cars, (92) 24903, (93) 24896. (95 & 97) 28659, (98) 24502. NOTE—Top oil ring width unchanged (3/16").

PISTON PINS

1936-48 MODELS

PISTON PIN REPLACEMENT: When replacing pins, manufacturer recommends that oversize piston pins be fitted to the piston boss and new piston pin bushings be installed in rod. Piston pin bosses are diamond-bored and should not be reamed.

Replacement Piston Pins—Furnished in standard size and .002", .005", .010" oversize.

Fitting Pins (1947 & Earlier)—Hand press fit in piston with piston heated to 200°F. (heat in boiling water or electric furnace—do not use torch or direct heat). Replace pin bushing in rod and ream or burnish to .0003" greater diameter than pin (giving desired .0003" clearance on pin). To check pin fit in rod bushing, hold piston with rod in horizontal position, rod should just turn on pin of own weight.

Fitting Pins (1948)—Pins should be a hand press fit in piston with piston at 70°F.

CAUTION—Do not ream piston pin bosses in piston.

ORIGINAL BEARING SIZES

1936-48 MODELS

CRANKSHAFT SIZE CODE: Cars equipped with .010" undersize main bearing pins and connecting rod pins identified by marks as follows:

MU—.010" undersize main bearing pins.

PU—.010" undersize connecting rod pins.

PMU—.010" undersize main and connecting rod pins.

NOTE—These pins require .010" undersize bearings.

Location of Marks—As follows:

All 1947 & Earlier Cars and 1948 Eight—On left front corner of cylinder block on bottom face beside oil pan gasket (visible from underneath without removing oil pan).

1948 Six Cylinder—On front face of No. 1 crankshaft counterweight.

CONNECTING ROD & BEARINGS

1938-39 MODELS

CONNECTING ROD CHANGE: On 1938 engines starting with following car numbers: (80 and 88) 54885, (81) 53909, (82) 54165, (83) 54382, (84, 85, 87) 54616 and all 1939 engines (except early '112' which started with car number 901625) new rods used. These connecting rods are drop forged steel with thinner (.015" thick) large end bearings ('Bermax' alloy). Thrust now taken by sides of rod (formerly by bearing flanges). These rods may be used for replacement on earlier cars either singly or in sets.

IMPORTANT—**Do not file rods or caps.** If bearing clearance excessive, replace rods. No shims used.

1938-48 MODELS

CONNECTING ROD & MAIN BEARING PALNUTS: Palnut (locknut or companion nut) used in place of cotter pin to lock connecting rod bolt nuts (starting with 1938 models), and main bearing cap stud nuts (starting with 1941 models). Palnut consists of a small single thread nut stamped from light gauge tempered steel.

Installation—After tightening regular nuts (refer to Tightening Specifications-Torque Wrench data on preceding pages), install palnut with smooth face toward nut, turn palnut up finger tight, then lock in place with wrench an additional ¼-1/3 turn. **NOTE—Palnuts should not be re-used.**

CRANKSHAFT & MAIN BEARINGS

1936-39 MODELS

CRANKSHAFT REMOVAL: 1936-38 Models. Crankshaft must be removed for main bearing replacement. To remove shaft, remove vibration dampener (following) and timing gear cover. Remove crankshaft gear with Gear Puller J-471, oil reservoir, transmission (see Car article for data) and clutch. Disconnect connecting rods. Remove main bearing caps (use Puller J-377 for removal of Front and Rear caps) and lower crankshaft out.

1939 Models—Remove engine (see Engine Assembly Removal), vibration dampener, timing gear cover and oil reservoir. Disconnect connecting rods and remove main bearing caps as directed above.

Installation:—Reverse procedure listed above for removal and note following points. Front and rear oil seal grooves in caps and case must be cleaned of all oil packing. After caps secured in place, drive new packing in grooves using Tool J-392 (install in horizontal groove first on front cap). See Connecting Rod Palnuts (above) for 1938-39 models. Use Tool J-843 to press crankshaft gear and dampener in place. Check oil seal on timing gear cover and do not fold or damage when installing. See Checking Oiling System for oil reservoir installation.

1940-47 MODELS

CRANKSHAFT REMOVAL: Crankshaft can be removed with engine in chassis as follows: Remove bonnet (see Hood (Bonnet) Removal above), radiator (see Radiator Core Removal following), vibration dampener (see Vibration Dampener Removal following), timing gears (see Removal instructions following), transmission and clutch (see Hudson 6 and 8 Car articles for data). Remove flywheel and engine oil pan and tray. Remove connecting rod bearing caps and push rods up clear of crankshaft. Remove front and rear main bearing caps with Puller Tool J-377. Remove center main bearing cap with care and take out crankshaft.

Installation—Reverse removal procedure listed above. Install new oil seals at front and rear main bearing cap (see Front and Rear Main Bearing Cap Installation following) and new palnuts on main and connecting rod bolts (see Connecting Rod and Main Bearing Palnut Installation above).

1936-40 MODELS

MAIN BEARINGS: Adjustment. Laminated shims are provided on top of caps. Remove caps (use Puller J-377 for front and rear caps) and remove shims until clearance is .001". See Crankshaft Installation

Replacement Bearings:—Finished bearings (with attaching screws) furnished standard and .010" undersize (see Crankpin Size Code for original bearing sizes). Unfinished bearings furnished with 1/32" extra stock and must be line-reamed (see below).

Removal:—Bearing shells are removable type and are held in case and caps by screws. To replace bearings, crankshaft must be removed (see Crankshaft Removal above). With shaft out, take out screws securing shells in cap and case.

Installation:—With crankshaft removed, secure bearing shells in case and cap with machine screws. If unfinished bearings installed, line-ream as directed below. Install crankshaft (see Crankshaft Installation). Add or remove shims on bearing caps until .001" clearance obtained. Secure caps in place.

Line-Reaming Main Bearings:—Where unfinished bearings used for replacement, bearings must be line-reamed to size as follows: install bearings in cap and case, place .021" shims between case and cap and tighten cap, then line ream bearings. Thrust flange on center (Six), #3 (Eight) bearing must be faced for .006" endplay.

ALL 1941-47 MODELS
1948 EIGHT CYLINDER

MAIN BEARINGS: Removal and Installation (with engine in car). Bearing halves are retained in crankcase and caps by a machine screw in each half, requiring removal of crankshaft for access to screw in upper half. Remove crankshaft (see Crankshaft Removal above), take out machine screw in each bearing half in crankcase and caps, remove bearings. Reverse removal instructions to install bearings. NOTE—No shim pack used on 1941-42.

Replacement Bearings—Hudson replacement bearings furnished reamed (standard size or .010" undersize) and not reamed (see Line-Reaming data below). Reamed bearings carry punch marks on one side and when installed these marks should be together and on the same side for all bearings so that they will be in the same position as when reamed.

IMPORTANT—Lower half of bearing shell extends .002" above surface of cap (allows bearing to seat in cap and crankcase when stud nuts tightened).

Fitting Bearings—See Replacement Bearings above. Bearings can be fitted with shims (do not file caps) as follows: Install bearing shells in caps and case and oil bearing surface. Fit each bearing separately. Install crankshaft and bearing cap (on front and rear bearings, caps should be centralized on studs by inserting ¼" drill rod in vertical packing holes on each side of cap), tighten stud nuts to 75 ft. lbs. Test bearing fit by using two hand pull on crankshaft, shaft should start hard but be able to be turned over. If shaft cannot be moved, insert .005" shim between cap and case (trim shim flush with bearing shell). Repeat test until shaft turns easily. Shims are furnished .003" and .005" thick.

Line-Reaming Bearings—See Replacement Bearings above. Semi-finished bearings available for service which must be line-reamed on engine as follows: Place bearing shells in place in caps and crankcase, and secure with machine screws (see that screws are seated in countersink hole in shells), bearing shell in cap should project .002" above cap while shell in case should be flush, tighten caps to 75 ft. lbs. (front and rear caps should be centralized on studs by inserting ¼" drill rod in vertical packing holes on each side of cap). Line-ream bearings for .001" maximum clearance on crankshaft and face flange on center bearing for .006" shaft endplay.

Front and Rear Main Bearing Cap Removal and Installation—These caps fit in machined openings in crankcase. Front cap has vertical and horizontal grooves, rear cap vertical grooves only, with packing installed in these grooves to seal caps in place. When removing these caps a special removing Tool J-377 must be used to pull caps out of engine. After caps removed, grooves in caps and crankcase must be cleaned of all old packing. If old packing not removed from crankcase, oil passages may be clogged. When installing main bearing caps, insert new packing in horizontal grooves in upper end of front cap first, using Crankshaft Bearing Packing Inserter Tool J-392, then install packing in vertical grooves on each side of front and rear caps (horizontal grooves not used on rear cap). Lower half of oil retainer on rear cap should be a tight fit against upper half to prevent oil leaks at this point.

VIBRATION DAMPENER

1935-39 MODELS

VIBRATION DAMPENER REMOVAL: 1936-38. Remove fan belt, radiator shell, and radiator. Unscrew starting jaw. Pull dampener using Tool J-676. Install dampener using Tool J-483.

1939 Models—Dampener can be removed from beneath car without removing radiator core or shell as follows: Remove fan belt, raise front end of car, unscrew starting jaw, pull dampener using Tool J-676 (set puller tool screw in place through starting crank hole in frame cross member) and remove from below. Install dampener using Tool J-483.

Servicing—No adjustment other than replacing 2 rubber discs (drive flywheel from hub) if worn.

1940-47 MODELS

VIBRATION DAMPENER REMOVAL: Dampener can be removed from beneath car without removing radiator louvre panel or radiator (radiator must be removed on Eight only) as follows: Remove radiator louvre panel center moulding, front bumper bracket bolts permitting bumper to drop down, and fan belt. On Eight only, remove radiator (see Radiator Core removal data above). Unscrew crankshaft starting jaw from end of crankshaft. Install jaw of special vibration dampener removal tool over dampener and place screw of tool through starting crank hole. Withdraw dampener by turning screw of dampener tool and remove from beneath car (6), or above (8).

CAMSHAFT & BEARINGS

1940-47 SIX CYL. MODELS

REPLACEMENT CAMSHAFT (6 CYL. ENGINES): One type camshaft only furnished for service on all engines, Part No. 166195 (superseding first replacement camshaft 162962). This camshaft same as type used on small (3x4⅛") engine beginning with part production 1941 and has special cam contours which **require special tappet clearance** (see Tappet Clearance Note below) and results in **different valve timing** (see Valve Timing Note below). Camshafts used originally on each model are as follows:

Model	Engine	Original Camshaft
40 ('40)	Small (3"x4⅛")	159505
41, 42, 43, 48 ('40)	Large (3"x5")	159505
10 ('41) First	Small (3"x4⅛")	159505
10 ('41) Later	Small (3"x4⅛")	162962
10, 11, 12, 18 ('41)	Large (3"x5")	159505
20 ('42)	Small (3"x4⅛")	162962
20, 21, 22, 28 ('42)	Large (3"x5")	159505
All ('46 On)	Large (3"x5")	166195①

①—Supersedes first type No. 162962.

Camshaft Identification: New type No. 166195 (and first type replacement camshaft 162962) camshaft has new cam contours which are not apparent to the eye and shaft is marked for identification by "X" on face of camshaft gear mounting flange and has shoulder (increased diameter section) ¼" wide exactly midway between 2nd. and 3rd. cams from front end (visible from below with oil pan and upper tray removed).

Installation Caution: A Warning decalcomania is furnished with each of these camshafts and this should be placed on valve cover when camshaft installed in engine. This warning tag specifies the special tappet clearance required when these No. 162962 or 166195 camshafts are used.

1940-47 SIX CYL. MODELS

Tappet Clearance (With No. 162962 or 166195 Camshaft): Tappet clearance on all engines with either of these camshafts must be set as follows:

Intake Valves—.010"
Exhaust Valves—.012"

Tappet clearance should be set with engine at normal operating temperatures.

CAUTION—This tappet clearance is essential for proper Idling and Low Speed operation.

Valve Timing (With No. 162962 or 166195 Camshaft): When either of these camshafts installed on 6 cyl. engines, valve timing will be as follows:

Intake—Opens 27°30' BTDC. Closes 68°10' ALDC.
Exhaust—Opens 51°50' BLDC. Closes 32°10' ATDC.
These figures correct with .010" tappet clearance.

1941 MODELS

CAMSHAFT CHANGE ON 3" x 4⅛" SMALL 6 CYLINDER ENGINE:—New design camshaft used on Model 10 engine after car no. 6848. Cams machined to new contour, intake and exhaust cams alike, which requires new valve timing and tappet clearance. This camshaft is same type furnished for replacement on all 6 cylinder engines (see Replacement Camshaft data above).

Identification—New camshaft used after car no. 6848 and may be identified by letter 'X' stamped on front face of shaft behind camshaft gear. Engines with this camshaft carry a decalcomania on valve cover stating "Tappet Clearance Hot, Inlet .010", Exhaust .012"."

Interchangeability—This new type camshaft can be installed on early 1941 engines and all 1940 engines (3" x 4⅛"). See Replacement Camshaft data above. When installed on engine originally equipped with old style camshaft, a decalcomania with the new tappet clearance figures of .010" Inlet and .012"Exhaust Hot, should be installed on cover plate.

1939 MODELS

CAMSHAFT REMOVAL: Remove bonnet (see Hood and Support Removal) and radiator (see Radiator Core Removal). Raise front end of engine and remove front engine guard. Remove radiator center grille (all except 112) which is attached by 8 sheet metal screws. Remove radiator shell on 112 only. Unscrew starting crank jaw. Remove vibration dampener, timing gear case cover, and camshaft gear. Remove right front wheel and fender dust shield (see Right Front Fender Dust Shield Removal). Remove valve covers, cylinder head, valves, tappets, oil pump, fuel pump, distributor, camshaft, thrust button and spring. If camshaft will not clear radiator shell splash guard, guard can be pressed down until shaft clears.

1940 MODELS

CAMSHAFT REMOVAL: Remove bonnet (see Hood Removal), radiator (see Radiator Core Removal), radiator louvre panel assembly, vibration dampener (see Vibration Dampener Removal), fan blades, fan belt, timing gear cover, camshaft gear (3 bolts), valve chamber cover, cylinder head, valves, tappets, oil pump, fuel pump and distributor (on Six cylinder cars, remove distributor shaft and support assembly). Loosen front engine support and raise front end of engine until camshaft clears radiator tank lower shield. Withdraw camshaft with thrust button and spring. CAUTION—Two special washer head timing gear cover bolts used at lower left corner of cover and must be re-installed in same holes when cover replaced.

Camshaft Bearing Removal:—Remove camshaft as directed above. Remove oil pan and bearings. See Rear Camshaft Bearing Installation for Six Cylinder Engines following.

Replacement Camshaft Bearings:—Finished bearings available which are reamed sufficiently oversize to provide correct running fit when installed in engine without reaming or scraping. Standard bearings with added wall thickness provided for instal-

CONTINUED ON NEXT PAGE

C NTINUED FR M PRECEDIN PAGE

lations where reaming equipment to be used. These bearings must be line-reamed for .001" clearance.

Rear Camshaft Bearing Installation (Six Cylinder only):—Due to new location of distributor at top rear of cylinder block, distributor gear is now cut in rear bearing journal with a special cut-out machined in camshaft rear bushing for the distributor support shaft gear. **Whenever rear bearing replaced, this cut-out must be made in bearing after installing in engine as follows:** With distributor driveshaft and support assembly off engine, remove driveshaft from support, insert cutting tool in support (making up cutting tool by mounting 1 ⅛" hole saw on end of 12" length of ½" cold rolled stock, thread opposite end for hex nut), install support (with cutting tool) on engine and tighten support anchor bolt. Cut bearing (use nut on end of cutting tool and turn with rachet wrench) using light pressure to give a clean cut. IMPORTANT—Place oil soaked rag under bearing to catch chips (avoiding necessity of removing crankshaft). Remove support (together with cutting tool). Drill hole in side of bearing for anchor plug by using ⅜" drill inserted in camshaft anchor plug hole on right side of engine. Install new anchor plugs. Remove oil soaked rag and use extreme care to remove all bearing chips and cuttings.

1941-47 MODELS

CAMSHAFT SERVICING: Camshaft Remov'l. Remove bonnet (see Hood (Bonnet) Removal above), radiator (see Radiator Core Removal following), radiator louvre panel, vibration dampener (see Vibration Dampener Removal above), fan blades, fan belt, timing gear cover and gasket, vibration dampener spacer, camshaft gear (3 bolts and lockwire), valve chamber cover, valves, tappets, oil pump, fuel pump, and distributor. Camshaft with thrust button and spring can then be withdrawn from engine by pressing down on radiator lower tank shield.

Camshaft Installation—See Timing Gear data below (note CAUTION on cover bolt installation).

Camshaft Bearings—New thin type steel-backed, babbitt-lined bushings used (cannot be used for service on earlier cars). Factory reamed bearings available for replacement which require no reaming or scraping. Standard bearings with extra wall thickness permitting line-reaming on engine also available (line-ream for .001" bearing clearance).

Camshaft Bearing Removal & Installation—Bearings can be removed as follows: Remove camshaft (see Camshaft Removal above), remove oil pan and tray, press old bearings out. New bearings can be installed as follows: Press new bearings in place with locating notch on front edge at top (back of bearing has 1/16" chamfer so that bearings can be readily installed in crankcase, bearing material on front of bearing has light chamfer at front). Coat bearings with light engine oil, install camshaft.

TIMING GEARS

1936-47 MODELS

REPLACEMENT TIMING GEARS: Laminated Fibre. Starting with 1941 engines timing gears have new design 20° pressure angle teeth (formerly 14½°) providing increased gear life and quieter operation. All other specifications (material and size) same as for preceding gears **These new type gears can be used for replacement on 1940 & earlier cars in sets**

Identification Marking—Figure '20' used to mark these gear types. Cast on front of crankshaft gear (also carries mark 'FRONT'), and moulded on front face of camshaft gear.

REPLACEMENT TIMING GEARS: Aluminum Type. A new aluminum Camshaft Gear has been used on all models beginning with 1946 engines (later cars only—first cars have laminated fibre type gear). This gear (and cast iron crankshaft gear used with it) have 20° pressure angle teeth and in addition, teeth have slight crown or curvature to improve quietness. These gears **furnished for service in Matched Sets only.** See Installation data below for changes necessary when aluminum camshaft gear used to replace the laminated fibre type.

Identification Marking—Both gears marked by figure "20" on front face of gear. Crankshaft gear has additional marking "FRONT" to insure correct installation.

Camshaft Gear Installation (Aluminum Type): When using aluminum gear to replace laminated fibre type, additional clearance must be provided for this gear as follows:

Support Plate Screws—With camshaft gear out, remove front support plate (see Engine Front Support Removal), countersink the two screw holes in the plate behind the camshaft gear, and the corresponding holes in the cylinder block, to take special countersunk head screws and lockwashers furnished for use at this point.

Support Plate Cutout—The cutout in the plate adjacent to the camshaft flange should be increased in size or chamfered to provide adequate clearance when aluminum gear installed.

1940-47 MODELS

TIMING GEAR REMOVAL: Drain cooling system. Remove fan belt, radiator outlet hose, vibration dampener (see Vibration Dampener Removal), timing gear cover bolts, cover, cover gasket and vibration dampener spacer. Turn engine over until timing marks (2 teeth mark on camshaft gear, 1 tooth mark on crankshaft gear) coincide. Remove camshaft gear (retained by 3 capscrews and lock wire). Remove crankshaft gear using Puller Tool J-471.

Gear Installation—Reverse removal procedure above (use Tool J-483 to replace camshaft gear). Use new timing cover gasket and check leather oil seal in timing gear cover. If new seal to be installed, coat seal seat in cover with red or white lead and press seal securely in place. Do not curl edge of seal over when cover installed. CAUTION—On 1940-41 engines, two special washer head timing gear cover bolts used at lower left corner of cover and must be re-installed in same holes when cover installed. All bolts are washer-head type beginning with 1942 engines.

Replacement Camshaft Gear:—A special .008" oversize camshaft gear (marked with daub of yellow paint on front face of gear) available for service.

VALVE SYSTEM

1938-47 MODELS

VALVE TOOLS: Valve stem diameter reduced to 11/32" starting 1938 (was ⅜"). Due to this decrease in stem diameter, new pilot size necessary for valve servicing tools. Tool numbers as follows:

Tool	Tool No.
Valve Stem Guide Replacer Pilot	J883-6
Valve Stem Guide Reamer Pilot	J129-2
Valve Stem Guide Remover Pilot	J267
Valve Seat Reamer Pilot	J491-12

ALL 1936-47 MODELS
1948 EIGHT CYLINDER

VALVE LIFTER REMOVAL: Valve lifters may be removed without removing cylinder head as follows: Remove Right Front Fender Dust Shield on '39 cars, Right Front Fender Inspection Hole Plate on '40-'42 cars (see first page). Remove valve cover, break loose tappet adjusting screws, remove spring seat retainer using Tool J-915, remove tappet adjusting screw, spring seats, spring dampeners, tappet guide clamp screws and clamps. Take out tappet and guide assemblies.

OILING SYSTEM

ALL 1936-47 MODELS
1948 EIGHT CYLINDER

CHECKING OILING SYSTEM: See that oil lines securely in place and not bent or damaged. Drop oil reservoir and clean thoroughly every six months. When installing oil reservoir, check flapper valve on rear main bearing oil return tube (soldered in rear of reservoir). Valve must work freely and should be slightly open with reservoir level. Holes in gaskets between crankcase and oil dipper tray and between tray and reservoir must align with oil return tube and register with hole in bearing cap.

NOTE—Beginning with 1942 engines, oil suction pipe was redesigned and lower end extended into center of oil reservoir to insure constant supply of oil to oil pump.

1939 MODELS

OILING SYSTEM CHANGES ON "112" & SIX CYLINDER ENGINES:—Oil passages from oil pump through cylinder block to front and rear of engine have been relocated. Front line now delivers oil directly to #1 trough in oil tray (formerly directed oil to timing gear compartment). Timing gears now lubricated by splash from connecting rods and higher oil level in gear compartment maintained by use of baffle on timing gear cover and elimination of oil drain hole in front main bearing cap (formerly used to supply oil to front of oil pan). Rear line from oil pump delivers oil to check valve (operates oil signal on instrument panel) which has been relocated farther forward in cylinder block allowing direct oil passage to #6 trough in oil tray.

Oil Pan Tray ('112' Engine)—New type conveyors used at front and rear ends of tray. Oil dams now used opposite #1 and #2 troughs and #5 and #6 troughs which direct oil draining from right side of cylinder block directly into #1 and #6 troughs.

REPLACEMENT NOTE—1939 trays can be used on earlier cars. Old type cannot be used on 1939 cars.

Oil Pan Tray (Six Engine)—New baffles used between #1 and #2 troughs and between #5 and #6 troughs which maintain higher oil levels in #1 and #6 troughs and overflow from these troughs fed to remaining troughs. REPLACEMENT NOTE—Same as for '112' above.

1939-47 MODELS

OIL SUCTION PIPE SEAL: Synthetic rubber suction pipe oil seal fitted in counter-bore in cylinder block flange at point where suction pipe passes through oil pan flange. Seal fitted around pipe and compressed by pan (pan gasket widened at this point). NOTE—Use new seal whenever pan installed.

OIL PAN REMOVAL

1948 MODELS

OIL PAN REMOVAL: Raise front end of the car. Drain the oil pan. Take out Center Steering Bracket bolts and move bracket aside. Remove oil pan bolts. Slide pan out to rear and down. NOTE—No special tools required.

RADIATOR

1939 MODELS

RADIATOR CORE REMOVAL: Remove hood and support (see Hood and Support Removal). Drain cooling system. Remove shell extension-to-side panel bolts and spacers (except 90, 98) and radiator hoses. Take out shell-to-core bolts. Remove water pump, fan belt, front engine splash guard and 2 radiator anchor bolt nuts. Lift out radiator core. IMPORTANT—When reassembling, reverse procedure listed above. **Install water pump after core installed.**

1940-47 MODELS

RADIATOR CORE REMOVAL: Drain radiator and remove upper and lower hoses. Disconnect radiator stay rod bolts at radiator and remove 2 radiator mounting bolts. Lift core out of car.

CLUTCH NOTES

1936-48 MODELS

CLUTCH OIL SERVICING: Hudsonite (oil) in clutch must be renewed every 5000 miles. Turn engine over until hexagonal drain plug on front face of flywheel is visible in timing inspection hole on left side of motor rear support above starting motor. Remove hex head drain plug with a socket wrench, turn engine over ⅓ revolution until star on flywheel is at inspection hole, allow engine to stand in this position one minute to drain old oil, turn engine over until filler plug is again at inspection hole, insert ⅓ pint Hudsonite (use J-485 gun) replace plug. Capacity & Oil—⅓ pt. Hudsonite Clutch Compound.

FRONT SUSPENSION NOTES

1936-39 MODELS

TORQUE ARMS: Assembled between bracket on each frame siderail and rear of front axle. When removing axle, disconnect each torque arm at frame bracket (use Bolt Press J-885 to remove bolts from rubber grommets) and remove axle with torque arms attached. When assembling axle to springs (with torque arms mounted on axle), adjust U-bolt nuts so torque arms will fall slowly of own weight when raised at rear end, install jam nuts on U-bolts. Finally connect torque arms to frame brackets by assembling rubber grommets in eye of each arm (immerse rubber in gasoline before installing to allow bolt to enter freely), insert bolt through bracket and arm, tighten nut.

1938-39 MODELS

KING PIN THRUST BEARING: King pin end thrust taken by 5 loose balls in upper bushing above king pin. Ball seat in bushing and on king pin end.

Installation—To install king pin, insert king pin from below until it enters top bushing (with keyways aligned and 'Corprene' seal in place under top bushing). Drop 5 loose balls through lubrication fitting hole on top of bushing, insert driver J-479-1 in hole to position balls, drive king pin into place (keyways aligned).

1939-47 MODELS

AUTOPOISE CONTROL: Used On All Passenger Cars—New type linkage (similar to stabilizer) connecting front wheels together and helps maintain front wheels in straight ahead position. Consists of transverse bar suspended in rubber bushings mounted in brackets bolted to frame (ahead of front axle). Ends of bar curve to rear and are attached to brackets bolted to spindles by rubber bushed link at each end. In operation, bar is twisted or sprung whenever wheels turned away from straight ahead position which results in wheels being returned to straight ahead position when turning force on steering wheel released. A slight increase in force required to turn wheel results.

NOTE—Autopoise Control may be installed on all 1937-38 Hudson and Terraplane models.

CAUTION—Autopoise control must be centralized (to avoid tendency to turn front wheels in one direction to the other). Check and adjust Autopoise as follows:

Checking Autopoise Centralization—Jack up front of car so that front wheels are free. Disconnect drag link at steering gear pitman arm. Note position of front wheels (wheels should point straight ahead). Any tendency of wheels to turn right or left indicates Autopoise bar not centralized and has greater projection on side toward which wheels tend to turn.

Adjusting Autopoise—Loosen frame bracket bolt nuts at each Autopoise bushing bracket to relieve tension on bushings, turn front wheels to extreme right and left positions (this will cause Autopoise bar to centralize itself in brackets). Wheels should return to straight ahead position of own accord when released. Tighten frame bracket mounting bolts. Recheck Autopoise action with bracket bolts tight.

NOTE—Autopoise should be adjusted whenever bar removed or brackets disturbed.

Autopoise Servicing: Removal—Disconnect Autopoise bar from links at each side (remove nut on upper end of links). Lift engine hood. Remove bolts from Autopoise frame brackets on each side. Cut one rubber bushing off Autopoise bar (slice bushing neatly from end-to-end so that it may be re-used). Work bar out of hole in fender on opposite side from which bushing was cut, remove bar from the opposite fender and lift bar out through engine hood opening. NOTE—Bushings cannot be pulled through holes in fenders.

Installation—With one bushing off Autopoise bar, insert bar through engine hood opening, installing the end without a bushing through hole in fender first, then maneuver opposite end into place. Install rubber bushing and both frame brackets, tighten bracket bolts loosely. Connect Autopoise links. Adjust Autopoise as directed above before tightening bracket bolts securely.

BRAKE NOTES

1939 MODELS

BRAKE LINING CHANGE: Later cars use new type primary shoe lining. This lining is harder than first type and provides less sensitive brake. New lining should be installed on first cars in complete sets only (Brake Shoe and Lining Sets).

MODEL IDENTIFICATION

SERIAL NUMBER:—First number—63-101. Stamped on plate on dash under engine hood.

ENGINE NUMBER:—First number—79,000. Stamped on left side of cylinder block opposite #6 cylinder.

TUNE-UP

COMPRESSION:—Ratio 6.25-1 Std cast-iron head, 7.0-1 Optl. high compression aluminum head. Check compression pressure by removing all spark plugs and cranking engine with throttle wide open.

Cylinder Head	Compression Pressure
Std. 6.25-1	116 lbs. at 219 R.P.M.
Optl. 7.0-1	127 lbs. at 207 R.P.M.

VACUUM READING—Gauge should show steady reading of 18-20" of HG. with engine idling at 350 R.P.M.

FIRING ORDER: 1-5-3-6-2-4. See Diagram.

SPARK PLUGS: Champion Type J-8 (Std. 6.25-1 Eng.), Type J-9 (Optl. 7.0-1 Eng.) 14mm. Metric.
Gaps—.025" (Std. Eng.), .022" (H. C. Eng.).

IGNITION: See Coil, Condenser, and Distributor.
Breaker Gap—.020" **Cam Angle** 38° (closed).
Automatic Advance—14° max. at 1580 RPM (distr.).

IGNITION TIMING: See Ignition Timing.
Std. Setting—At TDC. with flywheel mark "UDC. 1-6/" at indicator on left front face of housing.

CARBURETION: See Carburetor & Carb. Equipment.
Idle Setting—Idle screw ½-1 turn open. Idle speed 350 RPM or 7 MPH.
Float Level—⅜" from gasket seat on cover to nearest point on float (top at free end).
Accelerating Pump—Center hole Normal. Inner hole (Summer), Outer hole (Winter) for temperature extremes.

Fuel Pump Pressure: 3½ lbs. maximum.

VALVES: See Valve Timing.
Tappet Clearance—.006" Int. .008" Exh. Hot.

STARTING: See Battery, Starter, Generator, Regulator.

IGNITION

Ignition Switch:—Mitchellock Model 24-B, Type 6696. Connected to coil by armored cable.
Ignition Lock—Briggs & Stratton No. 50184, Mitchell No. 6095.

COIL: Auto-Lite Model IG-4633. Resistor unit mounted on distributor terminal is connected in series with coil primary.
Coil Draw—2.5 amperes idling, 4.5 stopped.

CONDENSER: Auto-Lite Part No. IGB-1025J.
Capacity—.20-.25 microfarad.

DISTRIBUTOR: Auto-Lite Model IGB-4301-B. Single breaker, 6 lobe cam, full automatic advance type.
Breaker Gap—Set at .020". Limits .018-.020".
Cam Angle or Dwell—38° closed, 22° open (distr.).
Breaker Arm Spring Tension—16-20 ounces.

Automatic Advance

Distributor Degrees	Distributor R.P.M.	Engine Degrees	Engine R.P.M.
Start	300	0	600
3	400	6	800
5	615	10	1230
10	1150	20	2300
14	1580	28	3160

Distributor Removal:—Mounted on right side of crankcase. To remove, take out hold-down screw in advance arm.

IGNITION TIMING

IGNITION TIMING:—Initial setting for all engines as shown. See Final Setting section for adjustment in accordance with octane rating of fuel used.

Flywheel Degrees	Piston Position
At TDC	.000" TDC.

NOTE—High octane type fuel must be used in engines with high compression 7.0-1 aluminum head.

To Set Timing (Initial Setting)—With #1 piston on compression, turn engine over until flywheel mark 'UDC.1-6/' lines up with pointer in inspection hole in left front face of flywheel housing above starter. Loosen hold-down screw in advance arm, rotate distributor clockwise to limit of advance arm slot, then slowly rotate distributor counter-clockwise until contacts begin to open, tighten hold-down screw.

Final Setting—Check ignition setting by road testing car. With engine warm and running in high gear on level road, a slight spark knock should be evident when car is accelerated from 10-15 M.P.H. with wide open throttle. Adjust by loosening hold-down screw in advance arm and rotating distributor one graduation on scale counter-clockwise (if no knock evident) or clockwise (if knock too severe). Repeat test until slight knock is evident. Final setting must not be more than ¾" on flywheel before 'UDC.1-6/' mark.

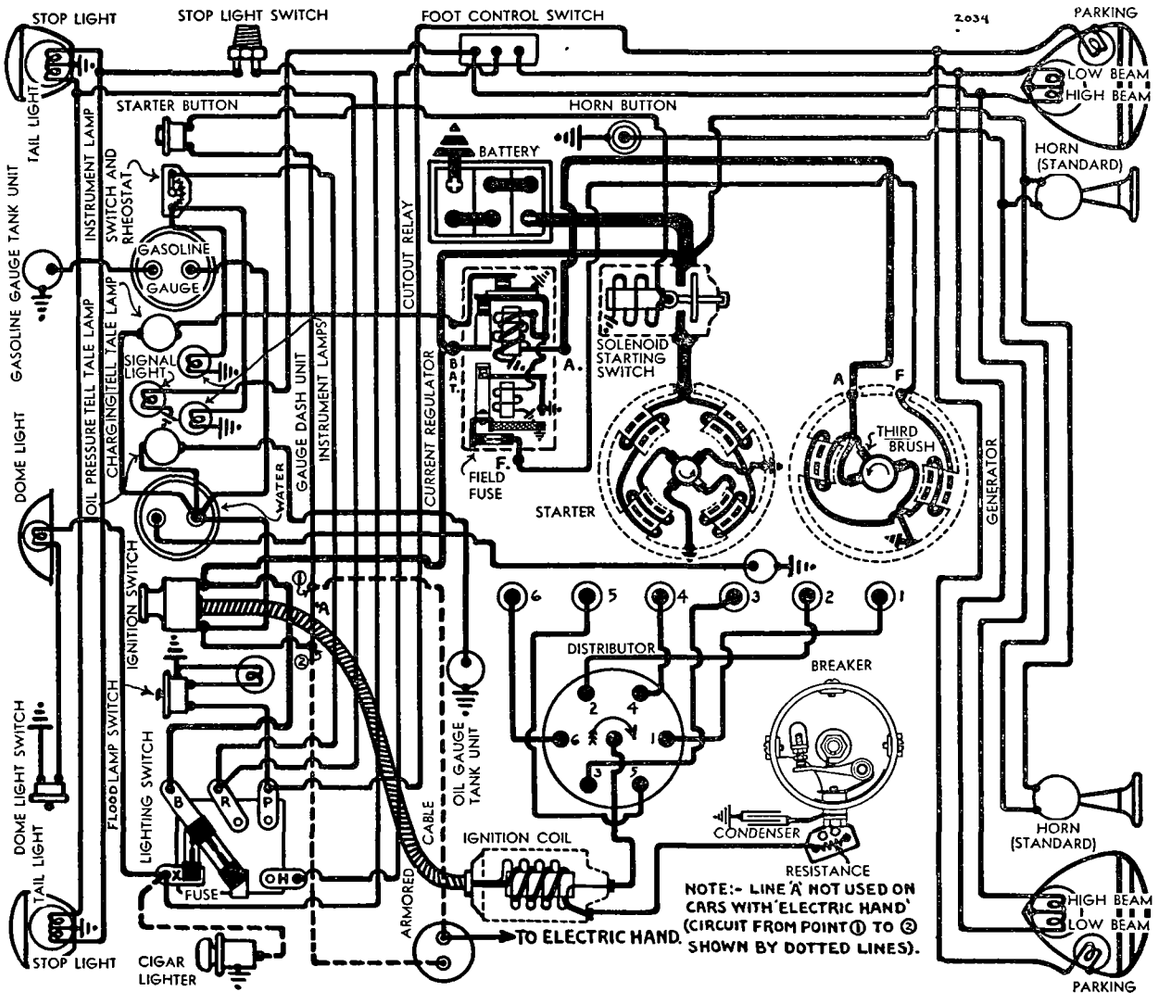

CARBURETOR

CARBURETION:—Carburetor—Carter Mod. 329-S, 1¼" downdraft type. See Carburetion Section for complete adjustment, overhaul, and Jet Specifications.
For complete data, refer to Carburetor Index.

NOTE—Do not adjust carburetor until engine is warmed up so that choke valve is wide open and engine idling at slow or hot idling speed.

Idle Adjustment—Adjust throttle stopscrew so that speed is 350 R.P.M. or 7 M.P.H. Turn idle adjusting screw in until engine begins to miss, then turn screw out until engine begins to roll, finally turn screw in slowly until engine fires smoothly. Final setting should be ½-1 turn open from seated position. Readjust throttle stopscrew for correct idling speed.

Accelerating Pump Setting—Pump lever (under dust cover at top of carburetor) has three holes for pump link engagement. Change for seasonal requirements as follows:
Center Hole—Normal summer temperatures.
Inner Hole (Min. stroke)—Extreme hot weather.
Upper Hole (Max. stroke)—Extreme cold weather.

Fast Idle:—Integral with carburetor. No adjustment required. See article on Carter Fast Idle in Carburetion Section.
For complete data, refer to Carburetion Equip. Index.

Automatic Choke:—Carter Climatic Control. See article in Carburetion Section.
For complete data, refer to Carburetion Equip. Index.

CARB. EQUIPMENT

Air Cleaner:—AC. #1526650 Std. #1526651 on cars with Electric Hand. Heavy duty oil-bath type optl.

Fuel Pump:—AC. Type R #1521450. Diaphragm type. See article in Carburetion Section.

See 'Servicing AC Fuel Pumps' in Carburetion Equipment Section for recommended replacement pumps.
For complete data, refer to Carburetion Equip. Index.

Gasoline Gauge:—King-Seeley Electric K-S #5820 (dash unit—stamped 'G' on case), #5835 (tank unit).
For complete data, refer to Carburetion Equip. Index.

BATTERY

BATTERY:—National. Type ST-317X. 6 volt, 17 plate, 96 ampere hour (20 hour rate).
Starting Capacity—120 amperes for 20 minutes.
Zero Capacity—300 amperes for 3.2 minutes.
Grounded Terminal—Positive (+) terminal.
Location—On left hand side under front floor board.

STARTER

Auto-Lite Model MAB-4075 Armature MAB-2113.
Drive—Inboard Bendix, Type A-1673.
Cranking Engine—150 R.P.M. 120-125 amps. at 5 vs.
Rotation—Counter-clockwise at commutator end.
Brush Spring Tension—42-53 ozs. (new brushes).

Performance Data

Torque	R.P.M.	Volts	Amperes
0 ft. lbs.	3700	5.5	60
.6 "	1910	5.5	100
3.4 "	1100	5.0	200
6.6 "	695	4.5	300
10.15 "	420	4.0	400
15.8 "	Lock	3.	582
22.5 "	Lock	4.	775

NOTE—Lock torque figures correct without switch.

Removal:—Flange mounted on left front face of flywheel housing. To remove, take out flange mounting bolts.

Starting Switch:—Solenoid Switch Type SS-4001. Controlled by pushbutton switch (R.B.M. Model 1800) on dash. Operative with ignition turned 'on'. On cars with Electric Hand clutch must be disengaged also. See article in Equipment Section.
For complete data, refer to Electrical Equipment Index.

Solenoid Switch

Closes with terminal voltage of 4 volts or less and will remain closed until voltage drops to .75-2.0 volts. Current draw 3 amperes at 6 volts.

GENERATOR

STANDARD

Auto-Lite Model GAR-4701-6. Armature GAR-2077. Third brush control in conjunction with Current Regulator (two-rate charging control). Ventilated by fan on drive pulley.

Charging Rate Adjustment—Use test meters to check generator output. Short out current regulator by connecting jumper wire from 'F' terminal on generator to ground. Take off commutator cover band, shift third brush by hand counter-clockwise to increase or clockwise to decrease charging rate until output is 22.8 amperes at 8.0 volts with generator at room temperature. Third brush held in position by friction. Remove jumper.

Maximum Charging Rate—As given above. Do not exceed.

Performance Data

Cold Regulator Inoperative			Hot		
Amps.	Volts	R.P.M.	Amps.	Volts	R.P.M.
0	6.4	780	0	6.4	820
4	6.7	930	4	6.8	1000
8	6.95	1060	8	7.1	1180
12	7.25	1210	12	7.35	1400
16	7.6	1440	16	7.8	1790
22.8	8.0	2400	18.4	8.0	2700

Rotation—Counter-clockwise at commutator end.
Brush Spring Tension—18-22 ozs. (new brushes).
Field Curent—3.51-3.89 amperes at 6.0 volts.
Motoring Current—5.32-5.88 amperes at 6 volts.
Field Fuse—5 ampere in knurled cup on side of regulator case.

Removal:—Pivot mounted at left front of engine with fan belt drive. To remove, take out two pivot bolts, one clamp bolt.

Belt Adjustment:—Swing generator away from engine until slack on belt midway between fan pulley and generator pulley is 1¼" (measure from straightedge across pulleys).

GENERATOR

SPECIAL EQUIPMENT

SPECIAL GENERATORS:—Other Makes—*Refer to Electrical Equipment Index for 'Special Generators' for data on special Generators and Regulators which may be found installed on these models.*

REGULATOR

Auto-Lite Model TC-4304A. Two Charge Type. On engine side of dash. Consists of Cutout Relay and Current Regulator (two-rate charging control). See Equipment Section article for complete data. Cutout Relay has extra set of ground contacts for generator charging tell-tale signal light control.
For complete data, refer to Electrical Equipment Index.

Cutout Relay

Cuts In—6.5-7.25 volts. 8 M.P.H.
Cuts Out—.5-2.5 ampere discharge current.
Contact Gap—.015-.045" (with upper or ground contacts closed—ground contacts must be open with main contacts closed).
Air Gap—.010-.030" with contacts closed.

Current Regulator

Contacts Open—8.0-8.50 volts at 70° F.
Contacts Close—1.2-1.4 volts below opening point.
Contact Gap—.005" minimum.
Air Gap—.045" with contacts closed.

LIGHTING

LIGHTING:—Headlamps—Hall, Pre-focused type. Head lamps aimed straight ahead (upper beam with lenses in place). Upper and lower beams controlled by foot selector switch.
Headlamp Beam Indicator—In lower portion of speedometer dial. Lighted when upper beams in use.

Switches

Lighting—R.B.M. Model 1650.
Foot Selector—R.B.M. Model 1082.
Instrument Lights—Soreng-Manegold Mod. K2060A.
Stop Light—Motometer Model 58012-C hydraulic type mounted in brake line on left frame side rail in channel at rear.

Bulb Specifications

Position	Candlepower	Mazda No.
Headlamps	32-32	2331
Parking, Instrument	1	55
Signal Lights	1	51
Stop and Tail	21-3	1158
Dome	15	87

MISC. ELECTRICAL

SIGNAL LIGHTS:—Battery Charge Telltale and Oil Pressure Tell-tale lights mounted on instrument panel. See Equipment Section for complete data.
For complete data, refer to Electrical Equipment Index.

FUSES:—Lighting—Two 20 ampere capacity on switch.
Generator Field—5 ampere in regulator.

HORNS:—E.A. Vibrator type. Twin horns.

ENGINE

ENGINE SPECIFICATIONS:—Type—6 cyl. 'L' head.
Bore—3". **Stroke**—5".
Displacement—212 cubic inches. **Rated H.P.**—21.6.
Developed Horsepower—93 at 3800 R.P.M. (Std. 6.25-1 head), 100 at 3800 R.P.M. (Optl. 7.0-1 head).
Compression Ratio & Pressure—To check pressures, remove spark plugs, crank engine with throttle wide open.

Std. 6.25-1 Head.....116 lbs. at 219 R.P.M.
Optl. 7.0-1 Head.....127 lbs. at 207 R.PM..

Vacuum Reading—Gauge should show steady reading of 18-19" of HG. with engine idling at 350 R.P.M. or 7 M.P.H.

PISTONS:—Own Lo-Ex aluminum alloy, "T" slot, Cam ground type. Use finished replacement pistons when reconditioning engine. See Reconditioning paragraph.
Weight—10.5 ozs. stripped. Stamped on piston head.
Length—3 3/16".
Removal—Pistons and rods removed from above.
Clearance—Top .016". Skirt .002". See Fitting new Pistons.

C NTINUED ON NEXT PA E

ENGINE

C NTINUED FROM PRECEDING PAGE

Reconditioning Cylinders:—Size of original bore indicated by letter stamped on lower edge of valve chamber opposite cylinder as follows: A-3.000", B-3.0005", C-3.001", D-3.0015", E-3.002", AO-3.010", BO-3.0105", CO-3.011", DO-3.0115", EO-3.012". Recondition cylinder to standard oversize for which replacement piston and rings are available (see piston and ring data below).

Replacement Pistons:—Standard and oversize pistons marked by letter on head available for cylinder bores of size indicated: 'B'-3.000 & 3.0005", 'D'-3.001 & 3.0015", 'F'-3.002 & 3.0025", 'J'-3.004", 'L'-3.005". 'BO'-3.010 & 3.0105", 'DO'-3.011 & 3.0115", 'FO'-3.012 & 3.0125", 'LO'-3.015", 'BB'-3.020", 'DD'-3.021, 'FF'-3.022". All pistons installed in engine must be of same weight as indicated by mark on head.

Fitting New Pistons:—Use .0015" feeler ½" wide on side opposite slot at right angles to pin bosses to check clearance. Tension to withdraw feeler must be 3-4 lbs.

Installing Pistons:—Slot toward left or away from camshaft.

PISTON RINGS:—Two compression, one oil ring above pin, one oil ring below pin per piston. Upper oil ring groove drilled with twelve 5/16" oil drain holes and two 5/16" holes to pins. Lower oil ring groove drilled with four 5/16" holes and two oil drain slots. Rings are straight cut and are positioned by pin in piston ring groove.

Ring	Width	End Gap	Wall Thickness
Comp.	3/32"	.005" Min.	.123"
Oil (both)	3/16"	.005" Min.	.128"

NOTE—Use standard or oversize rings of size indicated for replacement pistons (see replacement piston section above): 3.000"—B, D, F; 3.003"—J; 3.005"—L; 3.010"—BO, DO, FO; 3.015"—LO; 3.020"—BB, DD, FF. If rings are filed, clearance at pin must be kept uniform with end gap.

PISTON PIN:—Diameter ¾". Length 2 7/16".
Pin floats in piston and rod. Held by locking ring at each end. Pin hole in rod is bronze-bushed. Pins furnished standard, .002", .005", .010" oversize.
Pin Fit in Piston—Hand push fit with piston heated to 200° F.
Pin Fit in Rod Bushing—.0003" clearance. With this clearance, rod will just turn of own weight.

CONNECTING ROD:—Weight 29.4 ozs. Length 8 3/16".
Crankpin Journal Diameter—1 15/16".
Lower Bearing—Spun-babbitt lined type. Rods serviced on 'exchange' basis.
Clearance—.001". **Sideplay**—.006-.010".

Bearing Adjustment:—Laminated shims. Do not file rods or caps.

Installing Rods:—Lower bearings are offset. Install rods with right hand offset (widest half of bearing toward rear) in cylinders #1, 2, 4, and rods with left hand offset (widest half of bearing toward front) in cylinders #3, 5, 6. Oil scoop on bearing must be toward camshaft on all rods.

CRANKSHAFT:—Three bearing. Integral counterw'ts.
See Hudson Shop Notes for Crankshaft and Vibration Dampener removal, Main Bearing Removal, Installation and Line-Reaming data.
Journal Diameters—#1, 2 11/32"; #2, 2⅜"; #3, 2 13/32".
Bearings—Bronze backed, babbitt lined type. Bearings secured in cap and crankcase by brass screws.
Clearance—.001".

Bearing Adjustment:—Shims. ***See Hudson Shop Notes.***
►***CAUTION—Replacement of main bearings requires removal of crankshaft. Bearings retained by brass screws.***
Replacement Bearings: ***See Hudson Shop Notes.***
End Thrust:—Taken by flanges on #2 (center) main bearing. Endplay .006-.012". Adjusted by replacing bearing.

CAMSHAFT:—Three bearing. Gear driven.
Journal Diameters—#1, 2"; #2, 1 31/32". #3, 1½".
Bearing Clearance—.0015".

End Thrust:—Taken by spring loaded plunger in end of camshaft and thrust plate on gear case cover.
NOTE—If gear case cover removed, see that spring and plunger are in place when cover replaced.

Timing Gears:—Crankshaft gear cast-iron. Camshaft gear GE. or Continental Diamond Fibre Bakelite.
1941 Type Timing Gear Set can be installed on these models (tooth angle redesigned to provide quieter operation). Refer to Hudson Shop Notes.

Camshaft Setting:—Gears are marked. Mesh marked tooth of crankshaft gear between two marked teeth on camshaft gear.

VALVES:—Head Diameter Stem Diameter Length

All Valves	1 ⅜"	⅜"	5 11/32"

	Seat Angle	Lift	Stem Clearance
Intake	45°	11/32"	.0015-.003"
Exhaust	45°	11/32"	.003-.005"

Valve Guides:—Removable type. Pressed in block. Finish ream guides after installation to size giving correct clearance.

Valve Springs:—Dampeners originally used on bottom of all springs. Car manufacturer recommends that they be omitted when servicing valves.

	Spring Pressure	Spring Length
Valve Closed	44 lbs.	2"
Valve Open	102 lbs.	1 21/32"

Valve Lifters:—Slipper-type operating in individual removable guides. Lifter is prevented from turning by pin in guide.

VALVE TIMING

Tappet Clearance:—.006" Intake, .008" Exhaust (hot).

Valve Timing:—See Camshaft Setting above.
Intake Valves—Open 10°40' BTDC. Close 60° ALDC.
Exhaust Valves—Open 50° BLDC. Close 18°44' ATDC.
These figures correct with .010" tappet clearance.
To Check Timing—Set tappet clearance #1 intake valve at .010". This valve should open with piston 10°40' or .0562" before top dead center when point on flywheel appoximately 3.94 teeth before 'UDC. 1-6/' mark lines up with indicator in hole in left front face of flywheel housing. Reset tappet clearance at .006" hot.

LUBRICATION

LUBRICATION:—Duo-flow (splash) system. Force feed by oil pump to connecting rod troughs and timing gears. Splash to all other bearing points from troughs.
Normal Oil Pressure—3 lbs.
Oil Pressure Regulator—Operates at 3 lbs. Located on right side of crankcase. Not adjustable.
Crankcase Capacity—6 qts. refill.

Oil Pump:—Oscillating plunger type pump mounted on right side of crankcase and driven by gears from the camshaft.

Oil Pressure Indicator:—Consists of signal light on instrument panel and switch built in oil pressure regulator.
For complete data, refer to Electrical Equipment Index.

CLUTCH

CLUTCH:—Own Make—Single plate, cork insert type operating in oil. Driven plate can be recorked but is customarily replaced.
See Clutch Section for complete data.
Clutch Plate—Thickness .203". Inside diameter 5.375". Outside diameter 8.625". Facing consists of 90 cork inserts.
Adjustment—Free movement of clutch pedal must be 1½" at all times. To adjust, remove clevis pin in clutch pedal link rod (between frame and leg of 'X' member below clutch pedal shaft), loosen locknut at top of clevis, turn clevis to shorten or lengthen rod as required, tighten locknut, replace clevis pin. On cars with automatic clutch control, check linkage whenever clutch is adjusted.
Automatic Clutch Linkage Adjustment—Hold accelerator pedal in depressed position, pull backward on clutch control power unit rod at left of engine. With rod in extreme rear position check clearance between back of slot in rod yoke and clevis pin which attaches it to operating lever. Clearance at this point must be ⅞".
See Clutch Section for complete data.

Clutch Oil Servicing:—***See Hudson Shop Notes for data.***

FRONT SUSPENSION

Front Suspension:—Conventional 'I' beam section front axle with Elliott type ends and semi-elliptic springs. Torque arm at each end of axle connected to frame at rear by rubber-bushed bolt maintains axle alignment.

Specifications & Adjustment—Kingpin inclination, Caster, Camber, Toe In, Steering Geometry, and Kingpin thrust bearing specifications and adjustment same as for Hudson Eight (following article).

STEERING GEAR

Steering Gear: Gemmer Model. Worm-and-Sector type
See Steering Gear Section for complete data.
NOTE—An adjustable drag link with ¾" adjustment (made by shifting shims from front to rear of pitman arm ball seat) is used on cars after #633110 (except 633153 to 633185 inclusive).

BRAKES

BRAKES:—Service—Bendix Hydraulic, Duo-Servo, Single Anchor type. Brake pedal connected to rear wheel brakes through cable linkage for additional reserve mechanical application of brakes. Hand lever applies rear brakes through same linkage.
See Brake Section for complete data.
Brake Drum Diameters—10 1/16".
Brake Lining—Moulded & Woven type. Width 1¾". Thickness 7/32". Length 22⅛" per wheel.
Brake Clearance—.010" heel and toe of each shoe.

Brake Pedal Adjustment:—For correct mechanical follow-up feature, adjust position of nut on connecting rod so that clearance between face of nut and end of push rod is 1 29/32" with equalizer against stop.

Hand Brake:—See Service Brakes above.

MISC. MECHANICAL

AUTOMATIC SHIFT (ELECTRIC HAND):—Bendix electro-pneumatic type. Optl. Equipment.
See Transmission Section for complete data.

MODEL IDENTIFICATION

SERIAL NUMBER:—First number (64) 64101, (65) 65101, (66) 66101, (67) 67101. On plate on engine side of dash. All model numbers will carry these prefixes: '64', '65', '66', or '67'.

ENGINE NUMBER:—First number—1000 (all models). Stamped on left side of engine block near top.

TUNE-UP

COMPRESSION:—Ratio 6.0-1 Std. cast-iron head, 7.0-1 Optl. high compression aluminum head. Check compression pressure by removing all spark plugs and cranking engine with throttle wide open.

Cylinder Head	Compression Pressure
Std. 6.0-1	110 lbs. @ 150 R.P.M.
Optl. 7.0-1	128 lbs. @ 150 R.P.M.

VACUUM READING:—Gauge should show steady reading of 18-20" of HG. with engine idling at 350 R.P.M.

FIRING ORDER: 1-6-2-5-8-3-7-4. See diagram.

SPARK PLUGS: Champion Type J-8 (Std. 6.0-1 Eng.), Type J-9 (Optl. 7.0-1 Eng.). 14 mm. Metric.
Gaps—.025" (Std. Eng.), .022" (Optl. Eng.).

IGNITION: See Coil, Condenser, and Distributor.
Breaker Gap—.017" **Cam Angle** 27½° (closed).
Automatic Advance—17.5° at 1700 RPM (distr.).

IGNITION TIMING: See Ignition Timing.
Std. Setting—At TDC. with flywheel mark "UDC. 1-8/" at indicator on left front face of housing.

CARBURETION: See Carburetor & Carb. Equipment.
Idle Setting—Idle screw ½-1 turn open. Idle speed 350 RPM or 7 MPH.
Float Level—⅜" from gasket seat on cover to nearest point on float (top at free end).
Accelerating Pump—Center hole Normal. Inner hole (Summer), Outer hole (Winter) for temperature extremes.
Fuel Pump Pressure: 3½ lbs. maximum.

VALVES: See Valve Timing.
Tappet Clearance—.006" Int. .008" Exh. Hot.

STARTING: See Battery, Starter, Generator, Regulator.

IGNITION

Ignition Switch:—Mitchellock Model 24-B, Type 6696. Connected to coil by armored cable.
Ignition Lock—Briggs & Stratton No.50184, Mitchell No. 6095.

COIL: Auto-Lite Model CE-4617. Resistor unit mounted on distributor terminal is connected in series with coil primary.
Resistance Unit—Part No. SP-4009.
Coil Draw—2.5 amperes idling, 4.5 amps. stopped.

CONDENSER: Auto-Lite Part No. IG-2671.
Capacity—.20-.25 microfarad.

DISTRIBUTOR: Auto-Lite Model IGP-4001-B. Single breaker, 8 lobe cam, full automatic advance type.
Breaker Gap—Set at .017".
Cam Angle or Dwell—27½° (closed), 17½° (open).
Breaker Arm Spring Tension—18 ozs. minimum, 20 ozs. maximum.

Automatic Advance

Distributor Degrees	R.P.M.	Engine Degrees	R.P.M.
Start	300	0	600
3	400	6	800
5	575	10	1150
10	1025	20	2050
15	1475	30	2950
17.5	1700	35	3400

Distributor Removal:—Mounted on right side of crankcase. To remove take out hold-down screw in advance arm.

IGNITION TIMING

IGNITION TIMING:—Initial setting for all engines as shown. See Final Setting Section for adjustment in accordance with octane rating of fuel used.

Flywheel Degrees	Piston Position
At TDC	.00" TDC

NOTE—High octane type fuel must be used in engines with high compression 7.0-1 aluminum head.

To Set Timing (Initial Setting)—With #1 piston on compression turn engine over until flywheel mark 'UDC 1-8/' lines up with pointer in inspection hole in left front face of flywheel housing above starter. Loosen hold-down screw in advance arm, rotate distributor clockwise to limit of advance arm slot, then slowly rotate distributor counter-clockwise until contacts begin to open. Tighten hold-down screw.
Final Setting—Check ignition setting by road testing car. With engine warm and running in high gear on level road, a slight spark knock should be evident when car is accelerated from 10-15 M.P.H. with wide open throttle. Adjust by loosening hold-down screw in advance arm and rotating distributor one graduation on scale counter-clockwise (if no knock evident) or clockwise (if knock too severe). Repeat test until slight knock is evident. Final setting must not be more than ¾" on flywheel before 'UDC 1-8/' mark.

CONTINUED N NEXT PA E

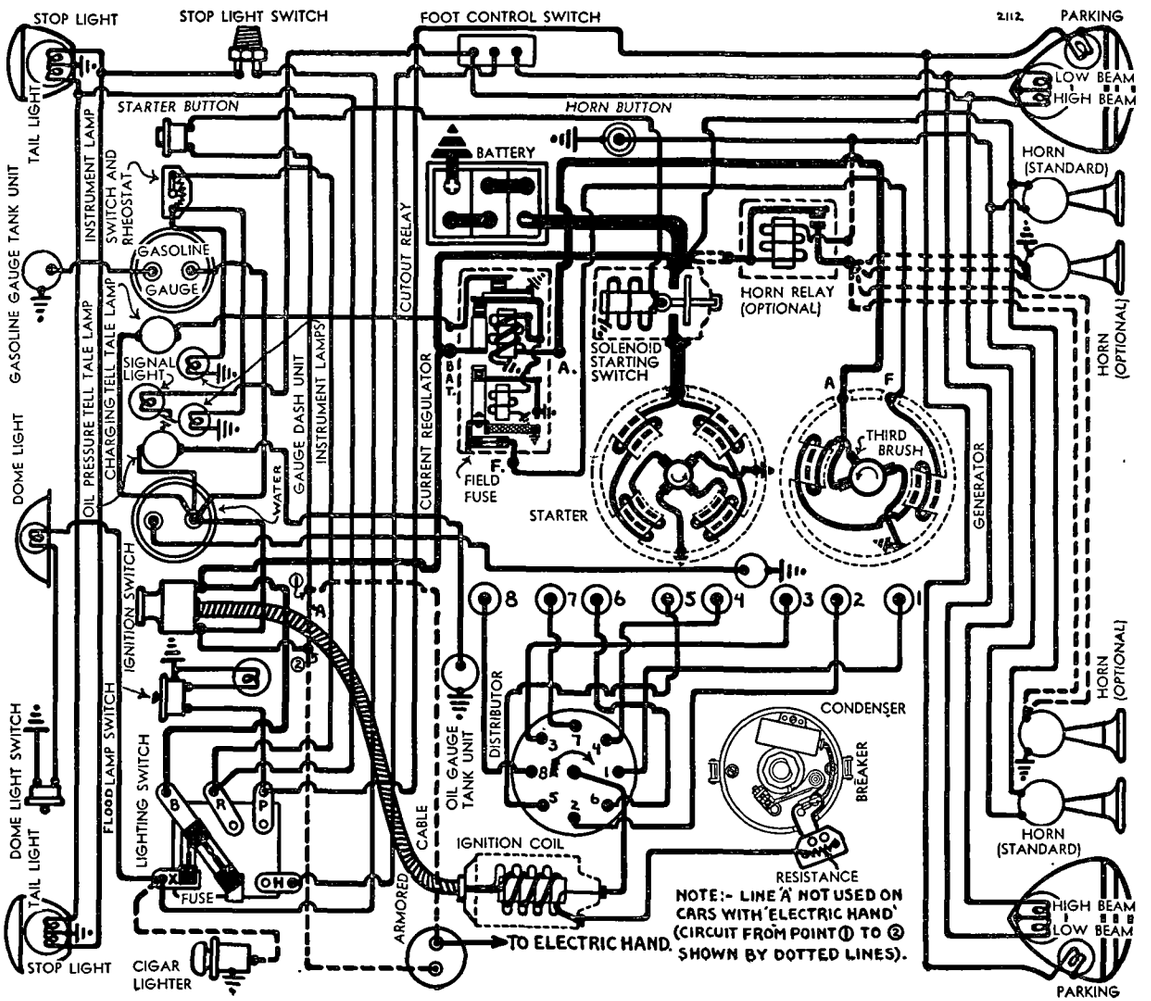

C NTINUED FR M PRECEDIN PAGE

CARBURETOR

CARBURETION:—Carburetor—Carter Model 330-S, 1¼" downdraft type. See Carburetion Section for complete adjustment, overhaul, and Jet Specifications.

For complete data, refer to Carburetor Index.

NOTE:—Do not adjust carburetor until engine warmed up so that choke valve is wide open and engine idling at slow or hot idling speed.

Idle Adjustment—Adjust throttle stopscrew so that speed is 350 R.P.M. or 7 M.P.H. Turn idle adjusting screw in until engine begins to miss, then turn screw out until engine begins to roll, finally turn screw in slowly until engine fires smoothly. Final setting should be ½-1 turn open from seated position. Readjust throttle stopscrew for correct idling speed.

Accelerating Pump Setting—Pump lever (under dust cover at top of carburetor) has three holes for pump link engagement. Change for seasonal requirements as follows:

Center Hole—Normal summer temperatures.
Inner Hole (Min. stroke)—Extreme hot weather.
Upper Hole (Max. stroke)—Extreme cold weather.

Fast Idle:—Integral with carburetor. No adjstment required. See article on Carter Fast Idle in Carburetion Section.

For complete data, refer to Carburetion Equip. Index.

Automatic Choke:—Carter Climatic Control. See article in Carburetion Section.

For complete data, refer to Carburetion Equip. Index.

CARB. EQUIPMENT

Air Cleaner.—AC. #1526650 Std. # 1526651 on cars with Electric Hand. Heavy duty oil-bath type optl.

Fuel Pump:—AC. Type R #1521450. Diaphragm type. See article in Carburetion Section.

See 'Servicing AC Fuel Pumps' in Carburetion Equipment Section for recommended replacement pumps.

For complete data, refer to Carburetion Equip. Index.

Gasoline Gauge:—King-Seeley Electric.K-S #5820 (dash unit—stamped 'G' on case),#5835 (tank unit).

For complete data, refer to Carburetion Equip. Index.

BATTERY

BATTERY:—National, Type ST-319X. 6 volt, 19 plate, 108 ampere hour (20 hour rate).

Starting Capacity—135 amperes for 20 minutes.
Zero Capacity—300 amperes for 4.3 minutes.
Grounded Terminal—Positive (+) terminal.
Location—On left hand side under front floor bds.

STARTER

Auto-Lite Model MAB-4075 Armature MAB-2113.
Drive—Inboard Bendix (barrel) Type A-1673.
Cranking Engine—150 R.P.M. 120-125 amps,. at 5 v.
Rotation—Counter-clockwise at commutator end.
Brush Spring Tension—42-53 ozs. (new brushes).

Performance Data

Torque	R.P.M.	Volts	Amperes
0 ft. lbs.	3700	5.5	60
.6 "	1910	5.5	100
3.4 "	1100	5.0	200
6.6 "	695	4.5	300
10.15 "	420	4.0	400
15.8 "	Lock	3.	582
22.5 "	Lock	4.	775

NOTE—Lock torque figures correct without switch.

Removal:—Flange mounted on left front face of flywheel housing. To remove, take out flange mounting bolts.

Starting Switch:—Solenoid Switch Type SS-4001. Controlled by pushbutton switch (R.B.M. Model 1800) on dash. Operative with ignition turned 'on.' On cars with Electric Hand clutch must be disengaged also. See article in Equipment Section.

For complete data, refer to Electrical Equipment Index.

Solenoid Switch

Closes with terminal voltage of 4 volts or less and will remain closed until voltage drops to .75-2.0 volts. Current draw 3 amperes at 6 volts.

GENERATOR

STANDARD

Auto-Lite Model GAR-4701-6. Armature GAR-2077. Third brush control in conjunction with Current Regulator (two-rate charging control). Ventilated by fan on drive pulley.

Charging Rate Adjustment—Use test meters to check generator output. Short out current regulator by connecting jumper wire from 'F' terminal on generator to ground. Take off commutator cover band, shift third brush by hand counter-clockwise to increase or clockwise to decrease charging rate until output is 22.8 amperes at 8.0 volts with generator at room temperature. Third brush held in position by friction. Remove jumper.

Maximum Charging Rate—As given above. Do not exceed.

Performance Data

Cold — Regulator Inoperative — Hot					
Amperes	Volts	R.P.M.	Ampere	Volts	R.P.M.
0	6.4	780	0	6.4	820
4	6.7	930	4	6.8	1000
8	6.95	1060	8	7.1	1180
12	7.25	1210	12	7.35	1400
16	7.6	1440	16	7.8	1790
22.8	8.0	2400	18.4	8.0	2700

Rotation—Counter-clockwise at commutator end.
Brush Spring Tension—18-22 ozs. (new brushes).
Field Current—3.51-3.89 amperes at 6.0 volts.
Motoring Current—5.32-5.88 at 6.0 volts.
Field Fuse—5 ampere in knurled cup on side of regulator case.

Removal:—Pivot mounted at left front of engine with fan belt drive. To remove, take out two pivot bolts, one clamp bolt.

Belt Adjustment:—Swing generator away from engine until slack on belt midway between fan pulley and generator pulley is 1¼" (measure from straightedge across pulleys).

GENERATOR

SPECIAL EQUIPMENT

SPECIAL GENERATORS:—Other Makes—*Refer to Electrical Equipment Index for 'Special Generators' for data on special Generators and Regulators which may be found installed on these models.*

REGULATOR

Auto-Lite Model TC-4304A. Two Charge Type. On engine side of dash. Consists of Cutout Relay and Current Regulator (two-rate charging control). See Equipment Section article for complete data. Cutout Relay has extra set of ground contacts for generator charging tell-tale signal light control.

For complete data, refer to Electrical Equipment Index.

Cutout Relay

Cuts In—6.5-7.25 volts, 8 M.P.H.
Cuts Out—.5-2.5 ampere discharge current.
Contact Gap—.015-.045" (with upper or ground contacts closed—ground contacts must be open with main contacts closed).
Air Gap—.010-.030" with contacts closed.

Current Regulator

Contacts Open—8.0-8.50 volts at 70° F.
Contacts Close—1.2-1.4 volts below opening point.
Contact Gap—.005" minimum.
Air Gap—.045" with contacts closed.

LIGHTING

LIGHTING:—Headlamps—Hall, Pre-focused type. Headlamps aimed straight ahead (upper beam with lenses in place). Upper and lower beams controlled by foot selector switch.

Headlamp Beam Indicator—In lower portion of speedometer dial. Lighted when upper beams in use.

Switches

Lighting—R.B.M. Model 1650.
Foot Selector—R.B.M. Model 1082.
Instrument Lights—Soreng-Manegold Model K2060A.
Stop Light—Motometer Model 58012-C hydraulic type mounted in brake line on left frame side rail in channel at rear.

Bulb Specifications

Position	Candlepower	Mazda No.
Headlamps	32-32	2331
Parking, Instrument	1	55
Signal Lights	1	51
Stop and Tail	21-3	1158
Dome	15	87

MISC. ELECTRICAL

SIGNAL LIGHTS:—Battery Charge Telltale and Oil Pressure Tell-tale lights mounted on instrument panel. See Equipment Section for complete data.

For complete data, refer to Electrical Equipment Index.

FUSES:—Lighting—Two 20-ampere capacity on switch.
Generator Field—5 ampere in regulator.

HORNS:—E. A. Vibrator type. Twin horns.

ENGINE

ENGINE SPECIFICATIONS:—Type—8 cyl., 'L' head.
Bore—3". **Stroke** 4½".
Displacement—254 cubic inches.
Rated Horsepower—28.8 (AMA).
Developed Horsepower—113 at 3800 R.P.M. (Std. 6.0-1 head), 124 at 4000 R.P.M. (Optl. 7.0-1 head).
Compression Ratio & Pressure—To check pressures, remove spark plugs, crank engine with throttle wide open.

Std. 6.0-1 Head.....110 lbs. at 150 R.P.M.
Optl. 7.0-1 Head.....128 lbs. at 150 R.P.M.

NOTE—High Octane fuel must be used in engines with high compression 7.0-1 heads.

Vacuum Reading—Gauge should show steady reading of 18-19" of HG. with engine idling at 350 R.P.M. or 7 M.P.H.

PISTONS:—Own Lo-Ex aluminum alloy, "T" slot, Cam ground type. Use finished replacement pistons when reconditioning engine. See Reconditioning Section.
Weight—10.88 ozs. stripped. Stamped on piston head.
Length—3 3/16".
Removal—Pistons and rods removed from above.

ENGINE

CONTINUED FROM PRECEDIN PAGE

Clearance—Top .016". Skirt .0015". See Fitting New Pistons.

Reconditioning Cylinders:—Original cylinder size marking same as for Hudson Six and should be reconditioned in same manner (see previous page).

Replacement Pistons:—Furnished in same sizes as for 1936 Hudson Six (see preceding article).

Fitting New Pistons:—Pistons fitted in same manner as on 1936 Hudson Six (see preceding article).

Installing Pistons:—Slot toward left or away from camshaft.

PISTON RINGS:—Two compression, one oil ring above pin, one oil ring below pin per piston. Upper oil ring groove drilled with twelve 5/16" oil drain holes and two 5/16" holes to pins. Lower oil ring groove drilled with four 5/16" holes and two oil drain slots. Rings are straight cut and positioned by pin in groove.

Ring	Width	End Gap	Wall Thickness
Comp.	3/32"	.005" Min.	.123"
Oil (both)	3/16"	.005" Min.	.128"

NOTE—See Hudson Six (previous page) for ring oversizes and pistons for which used. If rings are filed, clearance at pin must be kept uniform with end gap.

PISTON PIN:—Diameter ¾". Length 2 7/16". Pin floats in piston and rod. Held by locking ring at each end. Pin hole in rod is bronze-bushed. Pins furnished standard, .002", .005", .010" oversize.

Pin Fit in Piston—Hand push fit with piston heated to 200° F.

Pin Fit in Rod Bushing—.0003" clearance.

CONNECTING RODS:—Weight 29.4 ozs. Length 8 3/16".

Crankpin Journal Diameter—1 15/16".

Lower Bearing—Spun-babbitt lined type. Rods serviced on 'exchange' basis.

Clearance—.001". **Sideplay**—.006-.010".

Bearing Adjustment:—Laminated shims. Do not file rods or caps.

Installing Rods:—Lower bearings are offset. Install rods with right hand offset (widest half of bearing toward rear) in cylinders #1, 3, 5, 7 and rods with left hand offset (widest half of bearing toward front) in cylinders # 2, 4, 6, 8. Oil scoop on bearing cap must be toward camshaft on all rods.

CRANKSHAFT:—Five bearing. Integral counterweights. ***See Hudson Shop Notes for Crankshaft and Vibration Dampener Removal, Main Bearing Removal, Installation and Line-Reaming data.***

Journal Diameters—#1, 2 9/32"; #2, 2 5/16"; #3, 2 11/32"; #4, 2⅜"; #5, 2 13/32".

Bearings—Bronze backed, babbitt lined type. Bearings secured in cap and crankcase by brass screws.

Clearance—.001".

Bearing Adjustment:—Shims. ***See Hudson Shop Notes.***

►***CAUTION—Replacement of main bearings requires removal of crankshaft. Bearings retained by brass screws.***

Replacement Bearings: ***See Hudson Shop Notes.***

End Thrust:—Taken by flanges on #3 center bearing. Endplay .006-.012". Adjusted by replacing bearing.

CAMSHAFT:—Five bearing. Gear driven.

Journal Diameters—#1, 2 1/32"; #2, 2"; #3, 1 31/32"; #4, 1 15/16"; #5, 1½".

Bearing Clearance—.0015".

End Thrust:—Taken by spring loaded plunger in end of gear and thrust plate on gear case cover.

NOTE—If gear case cover removed, see that spring and plunger are in place when cover replaced.

Timing Gears:—Crankshaft gear cast-iron. Camshaft gear GE. or Continental Diamond Fibre Bakelite. ***1941 Type Timing Gear Set can be installed on these models (tooth angle redesigned to provide quieter operation). Refer to Hudson Shop Notes.***

Camshaft Setting:—Gears are marked. Mesh marked tooth of crankshaft gear between two marked teeth on camshaft gear.

VALVES:—	Head Diam.	Stem Diam.	Length
Intake	1½"	⅜"	5 3/32"
Exhaust	1⅜"	⅜"	5 3/32"

	Seat Angle	Lift	Stem Clearance
Intake	45°	11/32"	.0015-.003"
Exhaust	45°	11/32"	.003-.005"

Valve Guides:—Removable. Pressed in block. Finish ream after installation to size for correct clearance.

Valve Springs:—Dampeners originally used on bottom of all springs. Car manufacturer recommends that they be omitted when servicing valves.

	Spring Pressure	Spring Length
Valve Closed	44 lbs.	2"
Valve Open	102 lbs.	1 21/32"

Valve Lifters:—Slipper type operating in individual removable guides. Lifter is prevented from turning by pin in guide.

VALVE TIMING

Tappet Clearance—.006" intake, .008" exhaust hot.

Valve Timing:—See Camshaft Setting above.

Intake Valves—Open 10°40' BTDC. Close 60° ALDC.

Exhaust Valves—Open 50° BLDC. Close 18°44' ATDC.

To Check Valve Timing—Set tappet clearance #1 intake valve at .010".' This valve should open with piston 10°40' or .0494" BTDC. when point on flywheel approximately 3.97 teeth before 'UDC. 1-8/' mark lines up with indicator in hole in left front face of flywheel housing. Reset tappet clearance at .006".

LUBRICATION

LUBRICATION:—Duo-flow (splash) system. Force feed by oil pump to connecting rod troughs and timing gears. Splash to all other points from troughs.

Normal Oil Pressure—3 lbs.

Oil Pressure Regulator—Operates at 3 lbs. Not adjustable. Located on right side of crankcase at rear.

Crankcase Capacity—9 qts.

Oil Pump:—Oscillating plunger type pump mounted on right side of crankcase and driven by gears from camshaft.

Oil Presure Indicator:—Consists of signal light on instrument panel and switch built in oil pressure regulator.

For complete data, refer to Electrical Equipment Index.

CLUTCH

CLUTCH:—Own Make—Single plate, cork insert type operating in oil. Driven plate can be recorked but is customarily replaced.

See Clutch Section for complete data.

Clutch Plate—Thickness .203". Inside diameter 6.375". Outside diameter 9.75". Facing consists of 108 cork inserts.

Adjustment:—Free movement of clutch pedal must be 1½" at all times. To adjust, remove clevis pin in clutch pedal link rod (between frame and leg of 'X' member below clutch pedal shaft), loosen locknut at top of clevis, turn clevis to shorten or lengthen rod as required, tighten locknut, replace clevis pin. On cars with automatic clutch control, check linkage whenever clutch is adjusted.

Automatic Clutch Linkage Adjustment—Hold accelerator pedal in depressed position, pull backward on clutch control power unit rod at left of engine. With rod in extreme rear position check clearance between back of slot in rod yoke and clevis pin which attaches it to operating lever. Clearance at this point must be ⅞".

See Clutch Section for complete data.

Clutch Oil Servicing:—***See Hudson Shop Notes for data.***

FRONT SUSPENSION

Front Suspension:—Conventional 'I' beam section front axle with Elliott type ends and semi-elliptic springs. Torque arm at each end of axle connected to frame by rubber-bushed bolt used to maintain axle alignment.

King Pin Inclination—7° crosswise.

NOTE—Kingpin end thrust taken by five loose balls in upper bushing above king pin. Ball seat formed in bushing and on king pin end. To install king pin, assemble sufficient shims to allow .006-.010" endplay below spindle, insert king pin until it enters top bushing, drop 5 loose balls through lubrication fitting hole on top of bushing, insert driver J-479-1 in hole to position balls, drive king pin up into place.

Caster—3½-4½°. To adjust, loosen nut on horizontal arm attaching torque arm to axle yoke, take out capscrew between arm and yoke at top, decrease shim thickness between arm and yoke to increase caster, or increase shim thickness to decrease caster. .060" difference in shim thickness changes caster 1°. Shim thickness on both sides of car must be kept equal.

Camber—1-1½°. No adjustment. Axle may be bent cold for minor corrections.

Toe In—⅛" (0-⅛"). Adjusted in usual manner by loosening clamp nuts and turning tie rod.

Steering Geometry—Inner wheel turned 20°, outer wheel 17°. Check tie rod ends and steering arms for looseness, replace steering arms if bent.

STEERING GEAR

Steering Gear: Gemmer Model. Worm-and-Sector type

See Steering Gear Section for complete data.

NOTE—An adjustable drag link with ¾" adjustment made by shifting shims from front to rear of pitman arm ball seat is used on cars after #641008 (except 641134 to 641135 inclusive), #65374, #661791, and #671681.

BRAKES

BRAKES:—Service—Bendix Hydraulic, Duo-Servo, Single Anchor type. Brake pedal connected to rear wheel brakes through cable linkage for additional reserve mechanical application of brakes. Hand lever applies rear brakes through same linkage.

See Brake Section for complete data.

Brake Drum Diameters—11 1/16".

Brake Lining—Moulded & Woven type. Width 1¾". Thickness 7/32". Length 23 15/16" per wheel.

Brake Clearance—.010" heel and toe of each shoe.

Brake Pedal Adjustment:—For correct mechanical follow-up feature. See article in Brake Section.

Hand Brake Adjustment:—See Service Brakes.

MISC. MECHANICAL

AUTOMATIC SHIFT (ELECTRIC HAND):—Bendix electro-pneumatic type. Optional equipment.

See Transmission Section for complete data.

MODEL IDENTIFICATION

SERIAL NUMBER: First No. 73-101 (1937), 83-101 (1938). Stamped on plate on right front door hinge pillar post. Number prefix (73-, 83-) indicates model.

ENGINE NUMBER: First No. 73-101 (1937), 83-101 (1938). Stamped on left side of cylinder block opposite #6 cylinder (1937), top of block between #1 and #2 exhaust flanges (1938). Number prefix (73-, 83-) indicates model.

TUNE-UP

COMPRESSION:

	Compression Pressure
6.25-1 std. CI. hd.	103 lbs. @ 170 R.P.M.
7.0-1 Optl. Al. hd.	119 lbs. @ 170 R.P.M.

NOTE—7.0-1 aluminum head—Super Power Dome.

VACUUM READING:—Gauge should show steady reading of 18-21" with engine idling at 350 R.P.M.

FIRING ORDER: 1-5-3-6-2-4. See diagram.

SPARK PLUGS: Champion Type J-8A (Std. 6.25-1 Eng.), Type H-10 (Optl. 7.0-1 Eng.). 14 mm. Metric. Gaps—.032"

IGNITION: See Coil, Condenser, and Distributor.
Breaker Gap—.020" **Cam Angle** 35° (closed).
Automatic Advance—14° max. at 1580 RPM (distr.).

IGNITION TIMING: See Ignition Timing.
Std. Setting—At TDC. Flywheel mark "UDC.1-6/" at indicator in left front face of housing.

CARBURETION: See Carburetor & Carb. Equipment.
Idle Setting—Both idle screws ¼-¾ turn open. Idle speed 7 MPH.
Accelerating Pump—Inner hole Warm Temperatures, Outer hole—Cold Temperatures.
Float Level—15/64" from gasket seat on cover to top of float (not soldered seam). Invert to check.
Fuel Pump Pressure: 4½ lbs. maximum.

MANIFOLD HEAT CONTROL:—Thermostatic coil type. Located within manifold housing behind carburetor. No adjustment required.

VALVES: See Valve Timing.
Tappet Clearance—.006" Int., .008" Exh. Hot.

STARTING: See Battery, Starter, Generator, Regulator.

IGNITION

IGNITION SWITCH: Mitchellock Model 24-B, Type 7063 (1937), 7642 (1938). Connected to coil by armored cable.
Ignition Lock—Briggs & Stratton, Mitchell No. 6095. B&S No. 50184. **Key Series**—H601-H1100.

COIL: Auto-Lite Model IG-4644 (1937), IG-4650 (1938). Service Coil (less Switch & Cable) IG-3224JS.
Ignition Current—2.5 amperes idling, 4.5 stopped.

CONDENSER: Auto-Lite Part No. IGB-1025 (1937), IGB-1025J (1938). **Capacity**—.20-.25 microfarad.

DISTRIBUTOR: Auto-Lite Model IGW-4013-A (1937), IGW-4103-A (1938). Single breaker, 6 lobe cam, full automatic advance type.
Breaker Gap—Set at .020".
Cam Angle or Dwell—35° (closed), 25° (open).
Breaker Arm Spring Tension—16-20 ounces.
Rotation—Clockwise viewed from the top.

Automatic Advance

Distributor Degrees	R.P.M.	Engine Degrees	R.P.M.
Start	300	0	600
3	400	6	800
4	500	8	1000
9	1040	18	2080
14	1580	28	3160

Fuel Compensator—Provides manual adjustment at distributor for octane rating of fuel used. See Fuel Compensator Setting (following).

Distributor Removal:—Mounted on right side of crankcase. To remove, take out hold-down screw in advance arm.

IGNITION TIMING

IGNITION TIMING:—Initial Setting as shown. See Fuel Compensator Setting following.

	Flywheel Degrees	Piston Position
All engines	0° TDC	.000" TDC.

NOTE—High octane fuel must be used in engines with 7.0-1 'Super Power Dome' head.

To Set Timing—With #1 piston on compression, turn engine over until flywheel mark 'UDC.1-6/', lines up with pointer in left front face of flywheel housing. Loosen hold-down screw in advance arm, rotate distributor clockwise to limit of slot, then slowly rotate distributor counter-clockwise until contacts begin to open, tighten hold-down screw.

To Set Timing (Using Synchroscope)—Car manufacturer recommends this method. Clip lead to #6 spark plug, fill in timing mark with white chalk and direct light on flywheel through hole in housing.

Fuel Compensator Setting—Road test car and note performance when accelerating from 10-15 M.P.H. with wide open throttle on level road (engine must be warm). Slight spark knock should be evident. Adjust by loosening hold-down screw and rotating distributor one graduation on scale counter-clockwise (if no knock), clockwise (if knock too severe). Repeat test. Final setting must not be advanced beyond ¾" before 'UDC.1-6/' mark on flywheel.

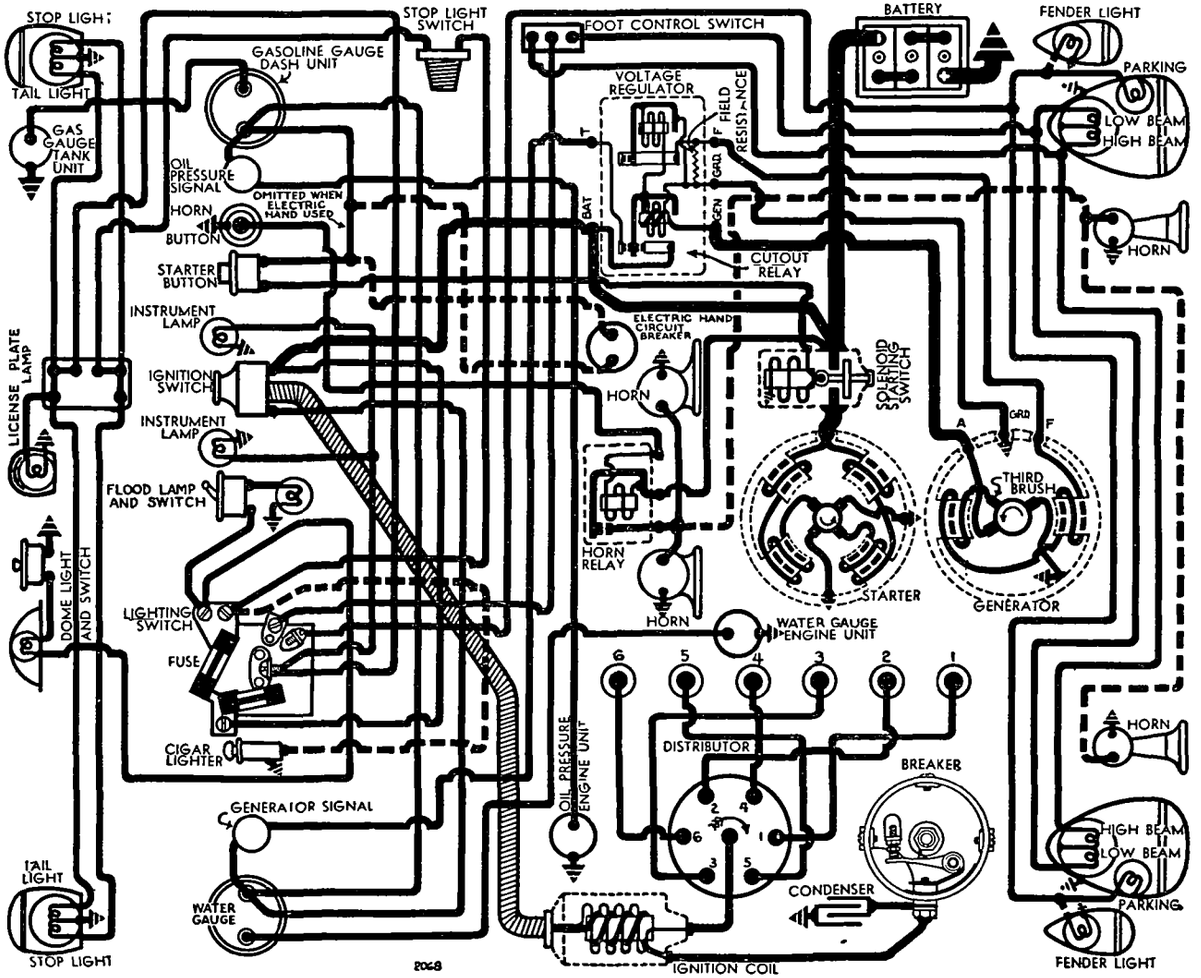

1937 MODEL 73

CARBURETOR

Carter Model WDO, Type 344-S & 377-S (1937), 402-S (1938). 1" Dual (double barrel), downdraft type with Automatic Choke.
For complete data, refer to Carburetor Index.

Idle Adjustment—Engine must be warm so that fast idle and automatic choke control inoperative. Set throttle lever stopscrew so that idling speed is 7 MPH. Turn each idle adjusting screw, in succession, in until engine begins to miss, then slowly out until engine fires smoothly. Final setting should be ¼-¾ turn out from inner seated position and screws must be adjusted equally so that engine fires smoothly on all cylinders. Readjust throttle stopscrew if necessary.

Accelerating Pump Setting—Adjustable for minimum and maximum stroke as follows:
Short stroke (inner hole) Hot temperatures.
Long stroke (outer hole)—Cold temperatures.

Fast Idle: Integral with carburetor.
For complete data, refer to Carburetion Equip. Index.
Setting—.018" throttle opening with choke valve closed (T109-44 checking gauge).

CARB. EQUIPMENT

Air Cleaner:—AC. #1528161 (std.), #1528160 (with Electric Hand) oil-wetted type. United (oil-bath type) optional.

Fuel Pump:—AC. Type AK #1523289 (LHD), #1523313 (RHD), diaphragm type, standard. Type AB #1523290 (LHD), #1523314 (RHD), combination fuel-and-vacuum pump optional.
For complete data, refer to Carburetion Equip. Index.

Gasoline Gauge:—King-Seeley Electric type. K-S No.
Dash Unit—No. 6190 (1937—Black Dial, Early Cars), 6570 (1937—Tan Dial, Later Cars), 6756 (1938).
Tank Unit—No. 5835 (1937-38).
For complete data, refer to Carburetion Equip. Index.

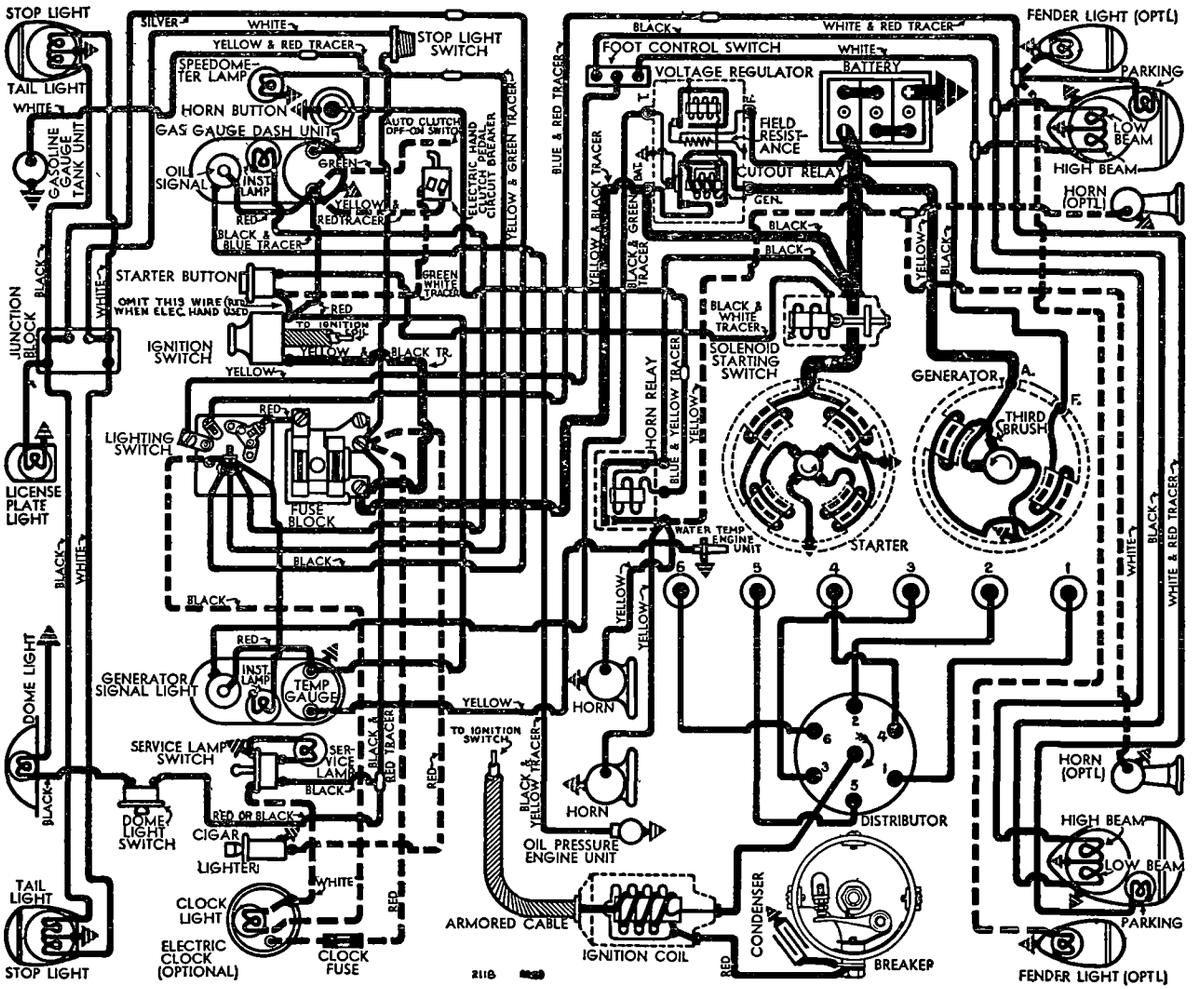

1938 M DEL 83

BATTERY

National, Type ST-317X (1937), HT-17 (1938 Orig. Equip.), L-17-1F (1938 Replacement). 6 volt, 17 plate, 96 ampere hour (ST-317X), 100 ampere hour (HT-17 & L-17-1F) capacity (20 hour rate).
Starting Capacity—120 amperes for 20 minutes.
Zero Capacity—300 amperes for 3.2 minutes (ST-317X), 3.5 minutes (HT-17 & L-17-1F).
Grounded Terminal—Positive (+) terminal. Grounded to left front fender support bracket. Engine grounded to frame by ground strap at bell housing.
Dimensions—Length 10 9/16". Width 7¼". Height 7 15/16".
Location—In left front fender under hood. Accessible from engine compartment by taking out 3 slotted screws in cover flange (2 top, 1 rear) and removing cover.

STARTER

Auto-Lite Model MAB-4075. Armature MAB-2113.
Drive—Inboard Barrel Type Bendix No. A-1673.
Rotation—Counter-clockwise at commutator end.
Brush Spring Tension—42-53 ozs. (new brushes).
Cranking Engine—150 RPM., 120-125 amperes, 5 v.

Performance Data

Torque	R.P.M.	Volts	Amperes
0 ft. lbs.	3700	5.5	60
.6 "	1910	5.5	100
3.4 "	1100	5.0	200
6.6 "	695	4.5	300
10.15 "	420	4.0	400
15.8 "	Lock	3.	582
22.5 "	Lock	4.	775

NOTE—Lock torque figures correct without switch.
Removal:—Starter flange mounted on left front face of flywheel housing. To remove, take out flange mounting screws.
Starting Switch:—Type SS-4001. Magnetic solenoid type mounted on starter. Controlled by pushbutton on instrument board (RBM Model 1815). Operative only with ignition on (and clutch disengaged on cars with Electric Hand).
For complete data, refer to Electrical Equipment Index.

GENERATOR

MODEL 73

Auto-Lite Model GCJ-4803A. Armature No. GCJ-2006. Third brush control type with external voltage regulation. Ventilated by fan on drive pulley.
Maximum Charging Rate—25 amperes (cold), 22 amperes (hot), 8.0 volts, 2500 R.P.M. Actual charging rate controlled by Voltage Regulator and dependent on battery condition.
Charging Rate Adjustment—Maximum output controlled by third brush. Do not adjust third brush for output greater than shown in table below (with field terminal grounded to render regulator inoperative). Actual charging rate controlled by regulator setting. See Regulator Section below.

Cold Performance Data			Hot Performance Data		
Amperes	Volts	R.P.M.	Amperes	Volts	R.P.M.
0	6.4	760	0	6.4	850
4	6.65	920	4	6.7	1020
8	6.9	1080	8	7.0	1240
12	7.2	1240	12	7.3	1400
16	7.45	1400	16	7.6	1650
20	7.7	1580	20	7.9	2100
25	8.0	2500	22	8.0	2700

CONTINUED N NEXT PA E

CONTINUED FROM PRECEDING PAGE

Rotation—Counter-clockwise at commutator end.
Brush Spring Tension—53 ozs. max. (new brushes).
Field Current—1.9-2.1 amperes at 6.0 volts.
Motoring Current—4.0-4.4 amperes at 6.0 volts.

Removal:—Generator pivot mounted at left front of engine with fan belt drive. To remove, take out clamp bolt and two pivot bolts.

Belt Adjustment:—Loosen clamp bolt and pivot bolts, swing generator out until slack in belt midway between generator and fan pulleys is ¾-1¼" (measured with straightedge across pulleys).

GENERATOR

MODEL 83

Auto-Lite Model GDF-4802A. Armature No. GDF-2006. Third brush control type with external voltage regulation. Ventilated by fan on drive pulley.
Maximum Charging Rate—32.0 amperes (cold), 29.5 amperes (hot) at 8.0 volts, 3100 R.P.M., 30-35 M.P.H. Actual charging rate controlled by Voltage Regulator and dependent on battery condition.
Charging Rate Adjustment—Maximum output controlled by third brush. Do not adjust third brush for output greater than shown in table below (with field terminal grounded to render regulator inoperative). See Regulator Section below.
NOTE—Standard third brush setting 2⅛ commutator bars from nearest main brush.

Performance Data

Amperes	Volts	R.P.M.	Amperes	Volts	R.P.M.
0	6.4	920	0	6.4	1000
4	6.6	1030	4	6.6	1140
8	6.8	1140	8	6.85	1280
12	7.0	1300	12	7.1	1440
16	7.25	1460	16	7.3	1640
20	7.45	1650	20	7.55	1840
24	7.65	1880	24	7.75	2220
28	7.9	2220	28.2	8.0	3200
32	8.0	3100			

Rotation—Counter-clockwise at commutator end.
Brush Spring Tension—53 ozs. max. (new brushes).
Field Current—1.90-2.10 amperes at 6.0 volts.
Motoring Current—5.3-5.9 amperes at 6.0 volts.

Removal:—Generator pivot mounted at left front of engine with fan belt drive. To remove, take out clamp bolt and two pivot bolts.

Belt Adjustment:—Loosen clamp bolt and pivot bolts, swing generator out until slack in belt midway between generator and fan pulleys is ¾-1¼" (measured with straightedge across pulleys).

GENERATOR

SPECIAL EQUIPMENT

SPECIAL GENERATORS:—Other Makes—*Refer to Electrical Equipment Index for 'Special Generators' for data on special Generators and Regulators which may be found installed on these models.*

REGULATOR

Auto-Lite Model VRD-4003A, 4003B (GCJ-4803A Gen.), VRD-4008A (GDF-4802A Gen.). Voltage Type. Cutout Relay and vibrating type Voltage Regulator in case on dash. Cutout Relay has extra set of ground contacts for generator charge signal control. *For complete data, refer to Electrical Equipment Index.*
NOTE—Regulator case cover is sealed. Serviced on exchange basis if seals not broken. Cover must be removed to make adjustments.

Cutout Relay

Cuts In—6.4-7.0 volts Cold. Approx. 10 MPH.
Cuts Out—.5-3.0 ampere discharge (Before Serial No. 2T-000001), 1.5-4.5 amperes (After 2T-000001).
Contact Gap—.015" minimum (with ground contacts closed—ground contacts must be open with main contacts closed).
Air Gap—.034" Min., .038" Max. with contacts open. Measure at hinge end of core.

Voltage Regulator

Setting (VRD-4003-A)—7.5-7.8 volts at 70°F (Before #8R-000001), 7.35-7.65 volts at 70°F (After #8R-000001).
Setting (VRD-4003-B)—7.8-8.1 volts at 70°F (Before #8R-000001), 7.35-7.65 volts at 70°F (After #8R-000001).
Setting (VRD-4008A)—7.35-7.65 volts at 70°F.
See Electrical Equipment Section for complete settings and changes on these Regulator models.
To Check—Connect ammeter in charging line at 'B' terminal on regulator (use short heavy leads), connect voltmeter between regulator 'B' and 'GD' terminals. Operate generator, charging fully charged battery, at speed equivalent to 30 MPH. car speed until voltage is steady. Voltmeter reading should be within limits of 7.4-7.9 volts (VRD-4003-A before #8R-000001), 7.8-8.1 volts (VRD-4003-B before #8R-000001), 7.1-7.8 volts (all models after #8R-000001). If outside these limits, regulator is defective.
To Adjust—Change regulator armature spring tension by bending lower spring hanger. See Electrical Equipment Section for complete instructions.
Contact Gap—.010" Min., .020" Max. with armature against stop pin.
Air Gap—.0595-.0625" with contacts just opening.

LIGHTING

LIGHTING:—Headlamps—Hall, pre-focused type with interchangeable lenses. Upper and lower beams (lower beam deflected slightly to right) controlled by foot selector switch with lighting switch in driving (right hand) position.
Headlamp Adjustment—Aim headlamps straight ahead with top of beam at lamp center height at 25' (car unloaded, upper beams lighted). Headlamps aimed by means of two screws on underside of headlamp body. Vertical movement obtained by turning both screws equally in or out, horizontal movement by turning one screw in until half desired movement obtained and completing movement by turning opposite screw out an equal amount.

Switches

Lighting—R.B.M.
Foot Selector—R.B.M. No. 1076.
Dome Light—R.B.M. No. 1220.
Stop Light—R.B.M. No. 965.

Bulb Specifications

Position	Candlepower	Mazda No.
Headlamps	32-32	2331
Headlamps (export)	21-50	2520D
Park, Instrument, Service	1½	55
License, Fender	3	63
Stop—Tail	21-3	1158
Dash Signals	1	51
Dome	15	87

MISC. ELECTRICAL

SIGNAL LIGHTS:—Teleflash Generator Charging Indicator and Oil Pressure Indicator mounted on instrument panel.
For complete data, refer to Electrical Equipment Index.

FUSES:—Lighting—Two 20 ampere capacity mounted on lighting switch (1937), on fuse block on lower flange of instrument panel on left side (1938).

HORNS: Standard—Klaxon (Delco-Remy) Model K-33-S (1937), Sparton (1938). Twin Horns operated by Delco-Remy or R-B-M relay.
Optl.—Klaxon K-33-F. Type 2117 (left—low note), 2118 (right—high note), twin horns, blended tone with Delco-Remy horn relay (optional—outside mounting).
NOTE—Data below for Delco-Remy equipment.

Horn	Current (6 volts)	Air Gap
K-33-S, 2051 (low note)	11-13 amps.	.042-.046"
K-33-S, 2052 (high note)	10-12 "	.032-.036"
K-33-F, 2117 (low note)	11-13 "	.040-.044"
K-33-F, 2118 (high note)	9-11 "	.032-.036"

Horn Relay:—Model 271-A (with Klaxon horns). Contacts close 2.7-4.0 volts.
Contact Gap—.020". **Air Gap**—.015".
NOTE—R.B.M. Model 780 horn relay also used.

ENGINE

ENGINE SPECIFICATIONS:—6 cylinder, 'L' head type.
Bore—3". **Stroke**—5". **Displacement**—212 cu. ins.
Rated Horsepower—21.6 A.M.A.
Developed Horsepower—101 (Std. 6.25-1 Head), 107 (Optl. 7.0-1 head) at 4000 R.P.M.
Compression Ratio & Pressure—Check at cranking speed, spark plugs removed, throttle wide open.
Std. 6.25-1 head ..... 103 lbs. at 170 R.P.M.
Optl. 7.0-1 head ..... 119 lbs. at 170 R.P.M.
Vacuum Reading—18-21" at 350 RPM. or 7 MPH.

PISTONS:—Own Lo-Ex aluminum alloy, 'T' slot, cam ground type. Use finished replacement pistons.
Weight—10.5 ozs. stripped. **Length**—3 3/16".
Removal—Pistons and rods removed from above.
Clearance—.016" top, .002" skirt (see below).
Original Bore Size:—*See Hudson Shop Notes.*
Replacement Pistons:—*See Hudson Shop Notes.*
Fitting New Pistons:—3-4 lb. tension should be required to withdraw .0015" feeler ½" wide from between piston and cylinder wall on side opposite slot at right angles to pin bosses.
Installing Pistons:—Slot away from camshaft side.

PISTON RINGS:—Two compression, one oil ring above pin, one oil ring below pin. Rings positioned by pin in groove.

Model 73 (1937)

Ring	Width	End Gap	Side Clearance
Compression	3/32"	.009-.011"	.001"
Oil (both)	3/16"	.009-.011"	.001"

Model 83 (1938)

Ring	Width	End Gap	Side Clearance
Compression	3/32"	.005-.010"	.001"
Oil (both)	3/16"	.005"	.001"

Replacement Rings:—*See Hudson Shop Notes.*

PISTON PIN:—Diameter—¾". **Length**—2 7/16".
Pin floats in piston and rod, held by locking rings. Pin hole in rod bronze-bushed. Pins furnished std., .002", .005", .010" oversize.
Pin Fit in Piston—.0003" clearance or hand push fit with piston heated to 200° F.
Pin Fit in Rod Bushing—.0003" clearance.

ENGINE

C NTINUED FROM PRECEDING PA E

CONNECTING ROD: Length—8 3/16".
Weight—29.4 ozs. (1937), 30.3 ozs. (1938).
Crankpin Journal Diameter—1 15/16".
See Hudson Shop Notes for Connecting Rod change.
Lower Bearing—Spun-babbitt. Rods exchanged.
Clearance—.001". **Sideplay**—.006-.010".
Bearing Adjustment: Laminated shims (1937), No adjustment (1938—no shims). Replace rods.
See Hudson Shop Notes for connecting rod palnut (locknut) installation instructions.
Installing Rods:—Offset. Install rods with widest half of bearing toward rear (#1, 2, 4), toward front (#3, 5, 6). Oil scoop on all rods toward camshaft.

CRANKSHAFT:—3 bearing, integral counterweights
See Hudson Shop Notes for Crankshaft and Vibration Dampener removal, Main Bearing Removal, Installation and Line-Reaming data.
Journal Diameters—#1, 2 11/32"; #2, 2⅜"; #3, 2 13/32".
Bearings—Bronze backed, babbitt lined type. Bearings secured in cap and crankcase by brass screws.
Clearance—.001".
Bearing Adjustment:—Shims. *See Hudson Shop Notes.*
►*CAUTION—Replacement of main bearings requires removal of crankshaft. Bearings retained by brass screws.*
Replacement Bearings: *See Hudson Shop Notes.*
End Thrust:—Taken by center bearing. Replace bearing to adjust. Endplay .006-.012".

CAMSHAFT:—Three bearing. Gear driven.
Journal Diameters—#1, 2"; #2, 1 31/32"; #3, 1½".
Bearing Clearance—.0025".
End Thrust:—Taken by thrust washer assembled between front face of crankcase and rear side of camshaft front flange, and by spring-loaded button in camshaft hub and thrust plate on gear cover. See that spring and button in place under cover.
Timing Gears:—Crankshaft gear cast-iron. Camshaft gear GE. or Continental Diamond Fibre Bakelite.
1941 Type Timing Gear Set can be installed on these models (tooth angle redesigned to provide quieter operation). Refer to Hudson Shop Notes.
Camshaft Setting:—Mesh marked crankshaft gear tooth between two marked teeth on camshaft gear.

VALVES:—Lighter valves (smaller stem diameter) used, than on previous models. New pilot size necessary for servicing tools. *See Hudson Shop Notes for data.*

	Head Diameter	Stem Diameter	Length
All Valves	1⅜"	⅜" ('37), 11/32" ('38)	5 11/32"

	Seat Angle	Lift	Stem Clearance
Intake	45°	11/32"	.0015-.003"
Exhaust	45°	11/32"	.003-.005"

Valve Guides:—2 9/16" long. Top 1 1/16" below top of block. Finish ream to size after installation.
Valve Springs:—Springs are cadmium plated, Dampeners originally used on bottom of all springs, but should be discarded when valves serviced.
Valve Spring Check—34 lbs. min. at 2".

	Spring Pressure	Spring Length
Valve Closed	44 lbs	2"
Valve Open	102 lbs	1 21/32"

Valve Lifters:—Roller shoe type, fitted in removable guides. *See Hudson Shop Notes for lifter removal.*

VALVE TIMING

Tappet Clearance—.006" Int., .008" Exh., engine hot.
Valve Timing:—See camshaft setting above.
Intake Valves—Open 10°40' BTDC. Close 60° ALDC.
Exhaust Valves—Open 50° BLDC. Close 18°44' ATDC.
These figures correct with .010" tappet clearance.
To Check Timing—Set tappet clearance #1 intake valve at .010". This valve should open with piston 10°40' or .0562" BTDC. when point on flywheel approximately 3.94 teeth before 'UDC.1-6/' mark lines up with pointer in hole in left front face of flywheel housing. Reset tappet clearance at .006" hot.

LUBRICATION

LUBRICATION:—Duo-flo (pressure & positive splash).
Oil Pump:—Oscillating plunger type, gear driven by camshaft. Mounted on right side of crankcase.
Normal Oil Pressure—3 lbs. (no gauge).
Oil Pressure Regulator:—Located on right side of crankcase at rear. Opens at 3 lbs. Not adjustable.
Oil Pressure Indicator:—Teleflash Oil Pressure indicator. *For data, refer to Electrical Equip. Index.*
Checking Oiling System:—*See Hudson Shop Notes.*
Crankcase Capacity:—5 qts. (refill), 6 qts. (dry).
NOTE—Capacity decreased ½ qt. after car #43845. in 1938.

COOLING

COOLING SYSTEM:—Water Pump. Centrifugal, belt-driven, packless type.
See Water Pump Section for complete data.
Removal—With water drained and fan belt removed, disconnect two inlet and one outlet hoses, remove mounting bolts and lift off fan and pump
Thermostat:—Mounted in cylinder head water outlet.
Setting—Start to open 150-155°F. Fully open 185°F.
Water Capacity: 13 quarts (1937), 12½ quarts (1938).

CLUTCH

CLUTCH:—Own make. Single plate, cork insert type, operating in oil.
See Clutch Section for complete data.
Driven Member (1937)—Inside Diam. 5.375", Outside Diam. 8.625". Thickness .203". Facing 90 cork inserts.
Driven Member (1938)—Inside Diam. 6.375". Outside Diam. 9.75". Thickness .203". Facing 108 cork inserts.
Automatic Clutch Control:—Optional equipment.
See Clutch Section for complete data.
Adjustment:—Pedal free movement must be 1½". To adjust, remove clevis pin at lower end of connecting link on throw-out shaft lever, loosen locknut, turn clevis. On cars with Automatic Clutch control, check setting whenever clutch adjusted.
Clutch Oil Servicing:—*See Hudson Shop Notes for data.*
Removal:—Remove transmission (see Transmission Removal following), take out 16 clutch cover capscrews and remove clutch assembly from below.

TRANSMISSION

TRANSMISSION:—Own make. Constant-mesh, helical gear (second & high), sliding spur (low & reverse).
NOTE—Shifter Rail Locks used to prevent gear engagement with clutch engaged.
See Transmission Section for complete data.
Electric Hand Transmission Control—Optl.
See Transmission Section for complete data.
Removal:—Remove Electric Hand and Automatic Clutch Control units and wiring from transmission first, if car model so equipped. See separate articles in Clutch and Transmission Sections for all necessary adjustments on these units when reinstalling. Disconnect transmission side bumpers, interlock straps, speedometer cable, driveshaft at front universal. Support engine at rear and free rear engine mounting. Take out bell housing-to-engine mounting bolts, pull transmission straight back and remove.

UNIVERSALS

UNIVERSAL JOINTS:—Spicer. 1271 (front), 1278 (rear). Needle bearing type.
See Universals Section for complete data.

REAR AXLE

REAR AXLE:—Own make. Semi-floating, spiral bevel
See Rear Axle Section for complete data.
Ratios (1937)—4.11-1 Std., 4.56-1, 3.89-1, 3.56-1 Optl.
Ratios (1938)—4 1/9-1 Std., 4 5/9-1, 3 5/9-1, 3 8/9-1 Optl.
Backlash—.0005-.003". Screw adjustment.
Removal:—Remove rear wheel and hub assembly (use screw type hub puller only), take out four nuts on bearing cap bolts, push bolts out through backing plate (allows cap removal without disturbing hand brake operating link), remove shims, pull wheel bearing and axle shaft, disconnect drive shaft at rear universal joint, remove 8 nuts from axle housing stud bolts, withdraw differential carrier.
Wheel Bearing Adjustment:—Controlled by shims under bearing cap. To adjust, remove bearing caps (as directed above), add or remove shims equally at both wheels. **Endplay**—.004-.010".

SHOCK ABSORBERS

Delco. Direct acting hydraulic types. As follows:
Front—Model 1175S (1937), 1164S (1938).
Rear—Model 1174T (1937), 1163T (1938).
See Shock Absorber Section for complete data.

FRONT SUSPENSION

Front Suspension:—Conventional 'I' beam section front axle with Elliott type ends and semi-elliptic springs. Axle alignment maintained by torque arm at each end (rubber-bushed bolt at frame).
Torque Arms—*See Hudson Special Shop Notes.*
Kingpin Inclination—7° crosswise. *See Hudson Shop Notes for Kingpin Thrust Bearing data.*
Caster—1-2° and equal within ½° for both wheels. To adjust, loosen capscrews at forward end of torque arm, insert shim between arm and axle at upper screw, or remove shim at lower screw to decrease caster, remove shim at upper screw or insert shim at lower screw to increase caster. Shims .020" thick, change caster ½°.
Camber—1-1½°. No adjustment. Make minor corrections by bending axle cold.
Toe In—0-⅛" measured 10" up from ground. Adjust by loosening clamp bolts and turning tie rod.
Steering Geometry—Inner wheel 20°. Outer 17¾°.

STEERING GEAR

Steering Gear: Gemmer Model 305 Worm-and-Roller type with "push-pull" adjustments.
See Steering Gear Section for complete data.

BRAKES

BRAKES:—Service—Bendix hydraulic, Duo-Servo, Single anchor type. Mechanical follow-up (pedal linked to hand brake cables) provided. Hand lever applies rear service brakes.
See Brake Section for complete data.
Drum—Alloy-steel. Diameter—10 1/16".
Lining—Moulded (primary), woven (secondary). Width 1¾". Thickness 7/32" (1937), 3/16" (1938), Length per wheel 22⅛".
Clearance—.010" heel and toe of each shoe.
Hand Brake:—See Service Brakes above.
Hill-Holder: Optional. *See article in Brake Section..*

MODEL IDENTIFICATION

SERIAL NUMBER: First No. 101 (1937), 101 (1938) with prefix indicating model (74-, 75-, 76-, 77- for 1937; 84-, 85-, 87- for 1938). Stamped on plate on right front door hinge pillar post.

ENGINE NUMBER: First No. 18000 (1937—All Models), 101 (1938 with prefix indicating model 84-, 85-, 87-). Stamped on left side of engine block near front end or on top of block between #1 and #2 exhaust manifold flanges.

TUNE-UP

COMPRESSION:—Ratio—6.25-1 cast-iron head. No optional ratios.

Pressure—103 lbs. at 170 RPM. Check with all plugs removed, crank engine with wide open throttle.

VACUUM READING:—18-20" steady reading with engine idling at 350 RPM or 7 MPH.

FIRING ORDER: 1-6-2-5-8-3-7-4. See diagram.

SPARK PLUGS: Champion Type J-8A. 14 mm. Metric. **Gaps**—.032"

IGNITION: See Coil, Condenser, and Distributor.
Breaker Gap—.017" **Cam Angle** 31° (closed).
Automatic Advance—17.5° max. at 1700 RPM (distr.).

IGNITION TIMING: See Ignition Timing.
Std. Setting—At TDC. Flywheel mark "UDC. 1-8/" at indicator in left front face of housing.

CARBURETION: See Carburetor & Carb. Equipment.
Idle Setting—Both idle screws ¼-¾ turn open. Idle speed 7 MPH.
Accelerating Pump—Inner hole Warm Temperatures. Outer hole—Cold Temperatures.
Float Level—15/64" from gasket seat on cover to top of float (not soldered seam). Invert to check.
Fuel Pump Pressure: 4½ lbs. maximum.

MANIFOLD HEAT CONTROL:—Thermostatic coil type. Located within manifold housing behind carburetor. No adjustment required.

VALVES: See Valve Timing.
Tappet Clearance—.006" Int., .008" Exh. Hot.

STARTING: See Battery, Starter, Generator, Regulator.

IGNITION

IGNITION SWITCH: Mitchellock Model 24-B, Type 7063 (1937), 7642 (1938). Connected to coil by armored cable.
Ignition Lock—Briggs & Stratton, Mitchell No. 6095. B&S No. 50184. **Key Series**—H601-H1100.

COIL: Auto-Lite Model CE-4625 (1937), CE-4629 (1938). Service Coil (less Switch & Cable) CE-3224JS.
Ignition Current—2.5 amperes idling, 4.5 stopped.

CONDENSER: Auto-Lite Part No. IG-2671.
Capacity—.20-.25 microfarad.

DISTRIBUTOR: Auto-Lite Model IGP-4008-A. Single breaker, 8 lobe cam, full automatic advance type.
Breaker Gap—Set at .017".
Cam Angle or Dwell—31° closed, 14° open (distr.).
Breaker Arm Spring Tension—18-20 ounces.
Rotation—Clockwise viewed from top.

Automatic Advance

Distributor Degrees	Distributor R.P.M.	Engine Degrees	Engine R.P.M.
Start	300	0	600
3.0	400	6.0	800
8.5	900	17.0	1800
13.0	1300	26.0	2600
17.5	1700	35.0	3400

Distributor Removal:—Mounted on right side of engine. To remove, take out hold-down screw in advance arm, lift off.

Fuel Compensator—Provides manual adjustment at distributor for octane rating of fuel used. See Fuel Compensator Setting (following).

IGNITION TIMING

IGNITION TIMING:—Initial Setting as shown. See Fuel Compensator Setting following.

Flywheel Degrees	Piston Position
All engines 0°	TDC .000" TDC.

To Set Timing—With #1 piston on compression, turn engine over until flywheel mark 'UDC.1-8/', lines up with pointer in left front face of flywheel housing. Loosen hold-down screw in advance arm, rotate distributor clockwise to limit of slot, then slowly rotate distributor counter-clockwise until contacts begin to open, tighten hold-down screw.

To Set Timing (Using Synchroscope)—Car manufacturer recommends this method. Clip lead to #8 spark plug, fill in timing mark with white chalk and direct light on flywheel through hole in housing.

Fuel Compensator Setting—Road test car and note performance when accelerating from 10-15 M.P.H. with wide open throttle on level road (engine must be warm). Slight spark knock should be evident. Adjust by loosening hold-down screw and rotating

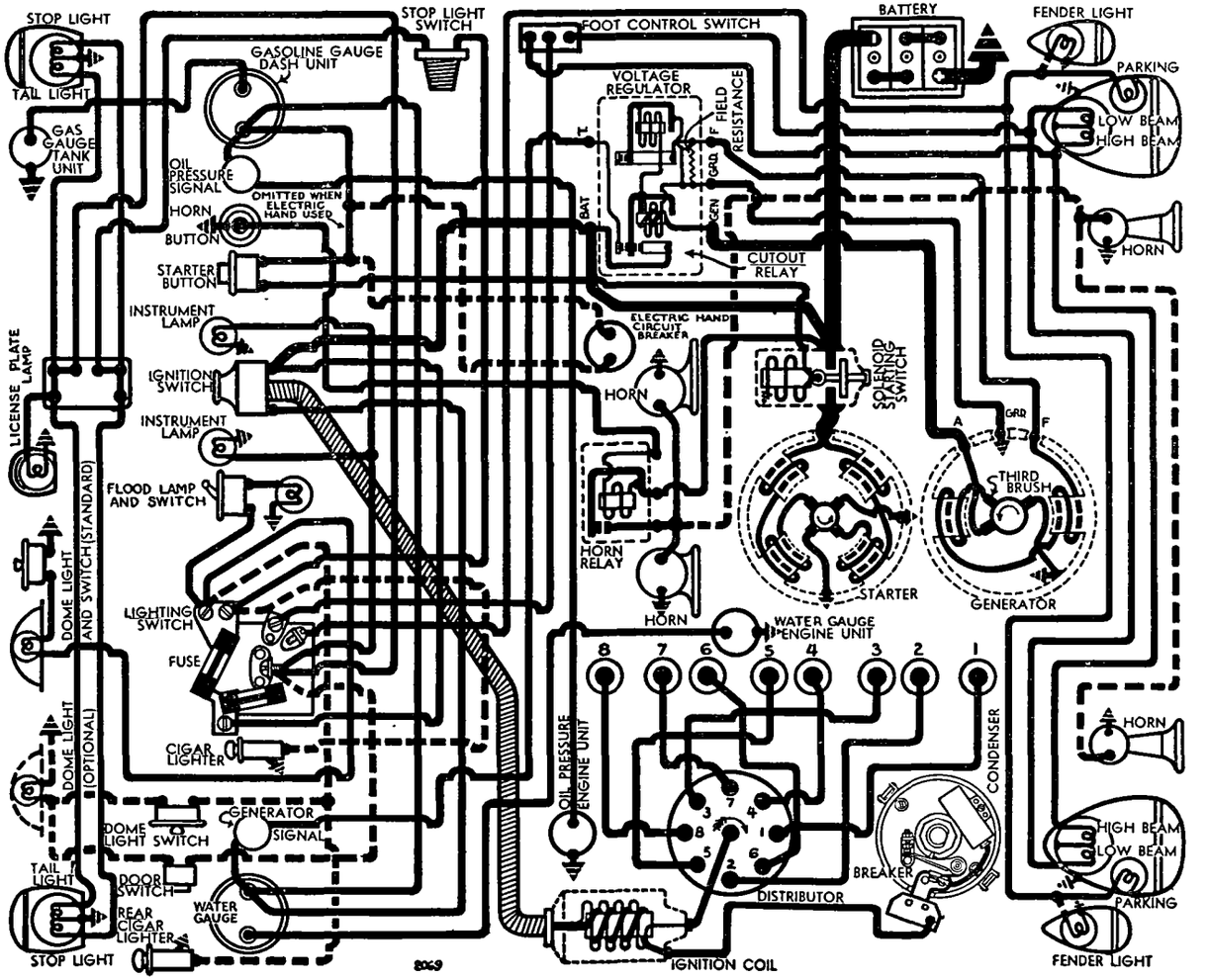

1937 MODELS 74, 75, 76, 77

distributor one graduation on scale counter-clockwise (if no knock), clockwise (if knock too severe). Repeat test. Final setting must not be advanced beyond ¾" before 'UDC.1-8/' mark on flywheel.

CARBURETOR

Carter Model WDO, Type 344-S & 377-S (1937), 402-S (1938). 1" Dual (double barrel), downdraft type with Automatic Choke.
For complete data, refer to Carburetor Index.

Idle Adjustment—Engine must be warm so that fast idle and automatic choke control inoperative. Set throttle lever stopscrew so that idling speed is 7 MPH. Turn each idle adjusting screw, in succession, in until engine begins to miss, then slowly out until engine fires smoothly. Final setting should be ¼-¾ turn out from inner seated position and screws must be adjusted equally so that engine fires smoothly on all cylinders. Readjust throttle stopscrew if necessary.

Accelerating Pump Setting—Adjustable for minimum and maximum stroke as follows:
Short stroke (inner hole)—Hot temperatures.
Long stroke (outer hole)—Cold temperatures.

Fast Idle: Integral with carburetor.
For complete data, refer to Carburetion Equip. Index.
Setting—.018" throttle opening with choke valve closed (T109-44 checking gauge).

CARB. EQUIPMENT

Air Cleaner:—AC. #1528161 (std.), #1528160 (with Electric Hand) oil-wetted type. United (oil-bath type) optional.

Fuel Pump:—AC. Type AK #1523289 (LHD), #1523313 (RHD), diaphragm type, standard. Type AB #1523290 (LHD), #1523314 (RHD), combination fuel-and-vacuum pump optional.
For complete data, refer to Carburetion Equip. Index.

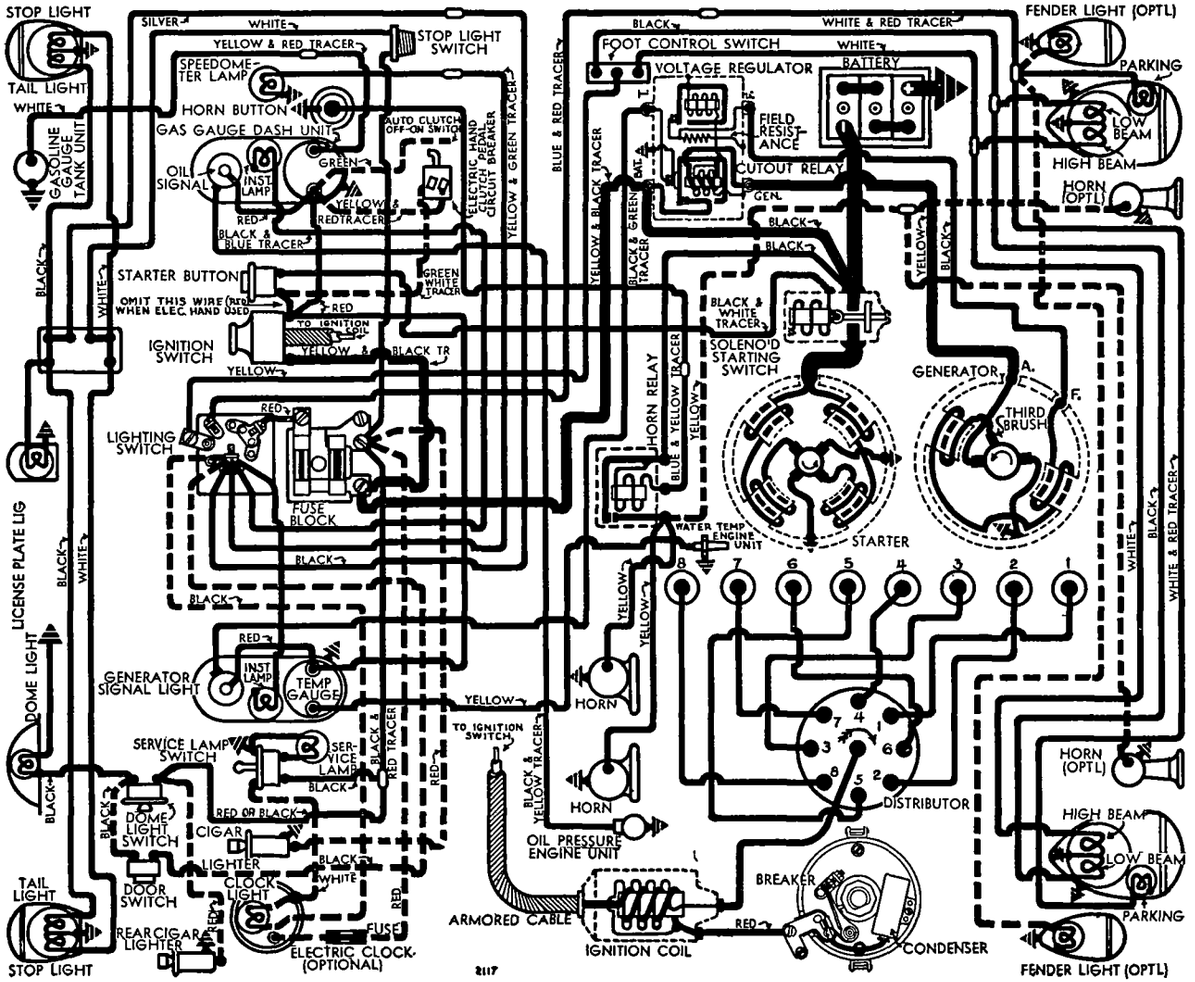

1938 MODELS 84, 85, 87

Gasoline Gauge:—King-Seeley Electric type. K-S No.
Dash Unit—No. 6190 (1937—Black Dial, Early Cars), 6570 (1937—Tan Dial, Later Cars), 6756 (1938).
Tank Unit—No. 5835 (1937-38).
For complete data, refer to Carburetion Equip. Index.

BATTERY

National, Type ST-319X (1937), HT-19 (1938 Orig. Equip.), L-19-2F (1938 Replacement). 6 volt, 19 plate, 108 ampere hour (ST-319X), 115 ampere hour (HT-19 & L-19-2F) capacity (20 hour rate).
Starting Capacity—135 amperes for 20 minutes.
Zero Capacity—300 amperes for 4.3 minutes.
Grounded Terminal—Positive (+) terminal. Grounded to left front fender support bracket. Engine grounded to frame by ground strap at bell housing.
Dimensions—Length 11¾". Width 7¼". Height 7 15/16".
Location—In left front fender under hood. Accessible from engine compartment by taking out 3 slotted screws in cover flange (2 top, 1 rear) and removing cover.

STARTER

Auto-Lite Model MAB-4075. Armature MAB-2113.
Drive—Inboard Barrel Type Bendix No. A-1673.
Rotation—Counter-clockwise at commutator end.
Brush Spring Tension—42-53 ozs. (new brushes).
Cranking Engine—150 R.P.M., 120-125 amperes, 5 v.

Performance Data

Torque	R.P.M.	Volts	Amperes
0 ft. lbs.	3700	5.5	60
.6 " "	1910	5.5	100
3.4 " "	1100	5.0	200
6.6 " "	695	4.5	300
10.15 " "	420	4.0	400
15.8 " "	Lock	3.	582
22.5 " "	Lock	4.	775

NOTE—Lock torque figures correct without switch.
Removal:—Starter flange mounted on left front face of flywheel housing. To remove, take out flange mounting screws.
Starting Switch:—Type SS-4001. Magnetic solenoid type mounted on starter. Controlled by pushbutton on instrument board (RBM Model 1815). Operative only with ignition on (and clutch disengaged n cars with Electric Hand).
For complete data, refer to Electrical Equipment Index.

Switch Specifications

Closes with terminal voltage of 4.0 volts or less. Remains closed until voltage drops to .75-2.0 volts. Current draw, 3 amperes at 6.0 volts.

GENERATOR

MODELS 74, 75, 76, 77

Auto-Lite Model GCJ-4803A. Armature No. GCJ-2006. Third brush control type with external voltage regulation. Ventilated by fan on drive pulley.
Maximum Charging Rate—25 amperes (cold), 22 amperes (hot), 8.0 volts, 2500 R.P.M. Actual charging rate controlled by Voltage Regulator and dependent on battery condition.
Charging Rate Adjustment—Maximum output controlled by third brush. Do not adjust third brush for output greater than shown in table below (with field terminal grounded to render regulator inoperative). Actual charging rate controlled by regulator setting. See Regulator Section below.

CONTINUED N NEXT PAGE

CONTINUED FROM PRECEDING PAGE

Cold Performance Data			Hot		
Amperes	Volts	R.P.M.	Amperes	Volts	R.P.M.
0	6.4	760	0	6.4	850
4	6.65	920	4	6.7	1020
8	6.9	1080	8	7.0	1240
12	7.2	1240	12	7.3	1400
16	7.45	1400	16	7.6	1650
20	7.7	1580	20	7.9	2100
25	8.0	2500	22	8.0	2700

Rotation—Counter-clockwise at commutator end.
Brush Spring Tension—53 ozs. max. (new brushes).
Field Current—1.9-2.1 amperes at 6.0 volts.
Motoring Current—4.0-4.4 amperes at 6.0 volts.

Removal:—Generator pivot mounted at left front of engine with fan belt drive. To remove, take out clamp bolt and two pivot bolts.

Belt Adjustment:—Loosen clamp bolt and pivot bolts, swing generator out until slack in belt midway between generator and fan pulleys is ¾-1¼" (measured from straightedge across pulleys).

GENERATOR

MODELS 84, 85, 87

Auto-Lite Model GDF-4802A. Armature No. GDF-2006. Third brush control type with external voltage regulation. Ventilated by fan on drive pulley.
Maximum Charging Rate—32.0 amperes (cold), 29.5 amperes (hot), 8.0 volts, 3100 R.P.M., 30-35 M.P.H. Actual charging rate controlled by Voltage Regulator and dependent on battery condition.
Charging Rate Adjustment—Maximum output controlled by third brush. Do not adjust third brush for out put greater than shown in table below (with field terminal grounded to render regulator inoperative). See Regulator Section below.
NOTE—Standard third brush setting 2⅛ commutator bars from nearest main brush.

Performance Data

Cold			Hot		
Amperes	Volts	R.P.M.	Amperes	Volts	R.P.M.
0	6.4	920	0	6.4	1000
4	6.6	1030	4	6.6	1140
8	6.8	1140	8	6.85	1280
12	7.0	1300	12	7.1	1440
16	7.25	1460	16	7.3	1640
20	7.45	1650	20	7.55	1840
24	7.65	1880	24	7.75	2220
28	7.9	2220	28.2	8.0	3200
32	8.0	3100			

Rotation—Counter-clockwise at commutator end.
Brush Spring Tension—53 ozs. max. (new brushes).
Field Current—1.90-2.10 amperes at 6.0 volts.
Motoring Current—5.3-5.9 amperes at 6.0 volts.

Removal:—Generator pivot mounted at left front of engine with fan belt drive. To remove, take out clamp bolt and two pivot bolts.

Belt Adjustment:—Loosen clamp bolt and pivot bolts, swing generator out until slack in belt midway between generator and fan pulleys is ¾" (measured with straightedge across pulleys).

GENERATOR

SPECIAL EQUIPMENT

SPECIAL GENERATORS:—Other Makes—*Refer to Electrical Equipment Index for 'Special Generators' for data on special Generators and Regulators which may be found installed on these models.*

REGULATOR

Auto-Lite Model VRD-4003A, 4003B (GCJ-4803A Gen.), VRD-4008A (GDF-4802A Gen.). Voltage Type. Cutout Relay and vibrating type Voltage Regulator in case on dash. Cutout Relay has extra set of ground contacts for generator charge signal control.
For complete data, refer to Electrical Equipment Index.
NOTE—Regulator case cover is sealed. Serviced on exchange basis if seals not broken. Cover must be removed to make adjustments.

Cutout Relay

Cuts In—6.4-7.0 volts Cold. Approx. 10 MPH.
Cuts Out—.5-3.0 ampere discharge (Before Serial No. 2T-000001), 1.5-4.5 amperes (After 2T-000001).
Contact Gap—.015" minimum (with ground contacts closed—ground contacts must be open with main contacts closed).
Air Gap—.034" Min., .038" Max. with contacts open. Measure at hinge end of core.

Voltage Regulator

Setting (VRD-4003-A)—7.5-7.8 volts at 70°F (Before #8R-000001), 7.35-7.65 volts at 70°F (After #8R-000001).
Setting (VRD-4003-B)—7.8-8.1 volts at 70°F (Before #8R-000001), 7.35-7.65 volts at 70°F (After #8R-000001).
Setting (VRD-4008A)—7.35-7.65 volts at 70°F.
See Electrical Equipment Section for complete settings and changes on these Regulator models.
To Check—Connect ammeter in charging line at 'B' terminal on regulator (use short heavy leads), connect voltmeter between regulator 'B' and 'GD' terminals. Operate generator, charging fully charged battery, at speed equivalent to 30 MPH. car speed until voltage is steady. Voltmeter reading should be within limits of 7.4-7.9 volts (VRD-4003-A before #8R-000001), 7.8-8.1 volts (VRD-4003-B before #8R-000001), 7.1-7.8 volts (all models after #8R-000001). If outside these limits, regulator is defective.
To Adjust (with cover removed)—Change regulator armature spring tension slightly by bending lower spring hanger. Check setting as directed above. See Electrical Equipment Section for complete directions.
Contact Gap—.010" Min., .020" Max. with armature against stop pin.
Air Gap—.0595-.0625" with contacts just opening.

LIGHTING

LIGHTING:—Headlamps—Hall, pre-focused type with interchangeable lenses. Upper and lower beams (lower beam deflected slightly to right) controlled by foot selector switch with lighting switch in driving (right hand) position.
Headlamp Adjustment—Aim headlamps straight ahead with top of beam at lamp center height at 25' (car unloaded, upper beams lighted). Headlamps aimed by means of two screws on underside of headlamp body. Vertical movement obtained by turning both screws equally in or out, horizontal movement by turning one screw in until half desired movement obtained and completing movement by turning opposite screw out an equal amount.

Switches

Lighting—R.B.M.
Foot Selector—R.B.M. No. 1076.
Dome Light—R.B.M. No. 1220.
Stop Light—R.B.M. No. 965.

Bulb Specifications

Position	Candlepower	Mazda No.
Headlamps	32-32	2331
Headlamps (export)	21-50	2520D
Park, Instrument, Service	1½	55
License, Fender	3	63
Stop-Tail	21-3	1158
Dash Signals	1	51
Dome	15	87

MISC. ELECTRICAL

SIGNAL LIGHTS:—Teleflash Generator Charging Indicator and Oil Pressure Indicator mounted on instrument panel.
For complete data, refer to Electrical Equipment Index.
FUSES:—Lighting—Two 20 ampere capacity mounted on lighting switch (1937), on fuse block on lower flange of instrument panel on left side (1938).
HORNS: Standard—Klaxon (Delco-Remy) Model K-33-S (1937), Sparton (1938). Twin Horns operated by Delco-Remy or R-B-M relay.
Optl.—Klaxon K-33-F. Type 2117 (left—low note), 2118 (right—high note), twin horns, blended tone with Delco Remy horn relay (optional—outside mounting).
NOTE—Data below for Delco-Remy equipment.

Horn	Current (6 volts)	Air Gap
K-33-S, 2051 (low note)	11-13 amps.	.042-.046"
K-33-S, 2052 (high note)	10-12 "	.032-.036"
K-33-F, 2117 (low note)	11-13 "	.040-.044"
K-33-F, 2118 (high note)	9-11 "	.032-.036"

Horn Relay:—Model 271-A (with Klaxon horns). Contacts close 2.7-4.0 volts.
Contact Gap—.020". **Air Gap**—.015".
NOTE—R.B.M. Model 780 horn relay also used.

ENGINE

ENGINE SPECIFICATIONS:—8 cylinder, 'L' head type.
Bore—3". **Stroke**—4½".
Displacement—254 cubic inches. **Rated HP**—28.8.
Developed Horsepower—122 HP. at 4200 R.P.M.
Compression Ratio—6.25-1 No Optl. Ratios.
Compression Pressure—103 lbs. at 170 R.P.M. cranking speed (plugs removed, throttle wide open).
Vacuum Reading—18-21" at 350 RPM. or 7 MPH.
PISTONS:—Own Lo-Ex aluminum alloy, "T" slot, cam ground type. Use finished replacement pistons.
Weight—10.5 ozs. stripped. **Length**—3 3/16".
Removal—Pistons and rods may be removed from above or below.
Clearance—.016" top, .002" skirt (see below).
Original Bore Size:*See Hudson Shop Notes.*
Replacement Pistons:—*See Hudson Shop Notes.*
Fitting New Pistons:—3-4 lbs. tension should be required to withdraw .0015" feeler ½" wide from between piston and cylinder wall on side opposite slot at right angles to pin bosses.
Installing Pistons:—Slot away from camshaft side.
PISTON RINGS:—Two compression, one oil ring above pin, one oil ring below pin. Rings positioned by pin in groove.

Models 74, 5, 6, 7 (1937)

Ring	Width	End Gap	Side Clearance
Compression	3/32"	.009-.011"	.001"
Oil (both)	3/16".	.009-.011"	.001"

Models 84, 5, 7 (1938)

Ring	Width	End Gap	Side Clearance
Compression	3/32"	.005-.010"	.001"
Oil (both)	3/16"	.005"	.001"

Replacement Rings:—*See Hudson Shop Notes.*
PISTON PIN:—Diameter—¾". **Length**—2 7/16".
Pin floats in piston and rod, held by locking rings.

ENGINE

CONTINUED FR M PRECEDING PA E

Pin hole in rod bronze-bushed. Pins furnished std., .002", .005", .010" oversize.

Pin Fit in Piston—.0003" clearance or hand push fit with piston heated to 200° F.

Pin Fit in Rod Bushing—.0003" clearance.

CONNECTING ROD: Length—8 3/16".

Weight—29.4 ozs. (1937), 30.3 ozs. (1938).

Crankpin Journal Diameter—1 15/16".

See Hudson Shop Notes for Connecting Rod change.

Lower Bearing—Spun babbitt. Rods exchanged.

Clearance—.001". **Sideplay**—.006-.010".

Bearing Adjustment: Laminated shims (1937), No adjustment (1938—no shims). Replace rods.

See Hudson Shop Notes for connecting rod palnut (locknut) installation instructions.

Installing Rods:—Offset. Install rods with widest half of bearing toward rear (#1, 3, 5, 7), toward front (#2, 4, 6, 8). Oil scoop on all rods toward camshaft.

CRANKSHAFT:—5 bearing with integral counterweights

See Hudson Shop Notes for Crankshaft and Vibration Dampener removal, Main Bearing Removal, Installation and Line-Reaming data.

Journal Diameters—#1, 2 9/32"; #2, 2 5/16"; #3, 2 11/32"; #4, 2⅜"; #5, 2 13/32".

Bearings—Bronze backed, babbitt lined type. Bearings secured in cap and crankcase by brass screws.

Clearance—.001".

Bearing Adjustment:—Shims. *See Hudson Shop Notes.*

►*CAUTION—Replacement of main bearings requires removal of crankshaft. Bearings retained by brass screws.*

Replacement Bearings: *See Hudson Shop Notes.*

End Thrust:—Taken by center bearing. Replace bearing to adjust. Endplay .006-.012".

CAMSHAFT:—Five bearing. Gear driven.

Journal Diameters—#1, 2 1/32"; #2, 2"; #3, 1 31/32"; #4, 1 15/16"; #5, 1½".

Bearing Clearance—.0025".

End Thrust:—Taken by thrust washer assembled between front face of crankcase and rear side of camshaft front flange, and by spring-loaded button in camshaft hub and thrust plate on gear cover. See that spring and button in place under cover.

Timing Gears:—Crankshaft gear cast-iron. Camshaft gear GE. or Continental Diamond Fibre Bakelite.

1941 Type Timing Gear Set can be installed on these models (tooth angle redesigned to provide quieter operation). Refer to Hudson Shop Notes.

Camshaft Setting:—Mesh marked crankshaft gear tooth between two marked teeth on camshaft gear.

VALVES:—Lighter valves (smaller stem diameter) used, than on previous models. New pilot size necessary for servicing tools. *See Hudson Shop Notes for data.*

	Head Diameter	Stem Diameter	Length
Intake	1½"	⅜" ('37), 11/32" ('38)	5 3/32"
Exhaust	1⅜"	⅜" ('37), 11/32" ('38)	5 3/32"

	Seat Angle	Lift	Side Clearance
Intake	45°	11/32"	.0015-.003"
Exhaust	45°	11/32"	.003-.005"

Valve Guides:—2 9/16" long. Top 15/16" below top of block. Finish ream to size after installation.

Valve Springs:—Springs are cadmium plated, Dampeners originally used on bottom of all springs, but should be discarded when valves serviced.

Valve Spring Check—34 lbs. min. at 2".

	Spring Pressure	Spring Length
Valve Closed	44 lbs.	2"
Valve Open	102 lbs.	1 21/32"

Valve Lifters:—Roller shoe type, fitted in removable guides. *See Hudson Shop Notes for lifter removal.*

VALVE TIMING

Tappet Clearance—.006" Int., .008" Exh., engine hot.

Valve Timing:—See Camshaft Setting above.

Intake Valves—Open 10°40' BTDC. Close 60° ALDC.

Exhaust Valves—Open 50° BLDC. Close 18°44' ATDC.

These figures correct with .010" tappet clearance.

To Check Timing—Set tappet clearance #1 intake valve at .010". This valve should open with piston 10°40' or .0494" BTDC. when point on flywheel approximately 3.97 teeth before 'UDC.1-8/' mark lines up with pointer in hole in left front face of flywheel housing. Reset tappet clearance at .006" hot.

LUBRICATION

LUBRICATION:—Duo-flo (pressure & positive splash).

Oil Pump:—Oscillating plunger type, gear driven by camshaft. Mounted on right side of crankcase.

Normal Oil Pressure—3 lbs. (no gauge).

Oil Pressure Regulator:—Located on right side of crankcase at rear. Opens at 3 lbs. Not adjustable.

Oil Pressure Indicator:—Teleflash Oil Pressure indicator. *For data, refer to Electrical Equipment Index.*

Checking Oiling System:—*See Hudson Shop Notes.*

Crankcase Capacity:—7 qts. (refill), 9 qts. (dry).

COOLING

COOLING SYSTEM:—**Water Pump.** Centrifugal, belt-driven, packless type.

See Water Pump Section for complete data.

Removal—With water drained and fan belt removed, disconnect pump hoses, remove mounting bolts and lift off fan and pump assembly.

Thermostat:—Mounted in cylinder head water outlet.

Setting—Start to open 150-155°F. Fully open 185°F.

Water Capacity: 20 quarts (1937), 17½ quarts (1938).

CLUTCH

CLUTCH:—Own make. Single plate, cork insert type operating in oil.

See Clutch Section for complete data.

Automatic Clutch Control:—Optional equipment.

See Clutch Section for complete data.

Driven Member—Thickness .203". Inside Diameter 6.375", Outside Diam. 9.75". Facing 108 Cork Inserts.

Adjustment:—Pedal free movement must be 1½". To adjust, remove clevis pin at lower end of connecting link on throw-out shaft lever, loosen locknut, turn clevis. On cars with Automatic Clutch control, check setting whenever clutch adjusted.

Clutch Oil Servicing:—*See Hudson Shop Notes.*

Removal:—Remove transmission (see Transmission Removal following), take out 16 clutch cover capscrews and remove clutch assembly from below.

TRANSMISSION

TRANSMISSION:—**Own Make.** Constant-mesh, helical gear (second & high), sliding spur (low & reverse). NOTE—Shifter Rail Locks used to prevent gear engagement with clutch engaged.

See Transmission Section for complete data.

Electric Hand Transmission Control—Optl.

See Transmission Section for complete data.

Removal:—Remove Electric Hand and Automatic Clutch Control units and wiring from transmission first, if car model so equipped. See separate articles in Clutch and Transmission Sections for necessary adjustments on these units when reinstalling. Disconnect transmission side bumpers, interlock straps, speedometer cable, drive shaft at front universal. Support engine at rear, free rear engine mounting. Take out bell housing-to-engine mounting bolts, pull transmission straight back and remove.

UNIVERSALS

UNIVERSAL JOINTS:—**Spicer.** 1281 (front), 1288 (rear).

See Universals Section for complete data.

REAR AXLE

REAR AXLE:—**Own make.** Semi-floating, spiral bevel

See Rear Axle Section for complete data.

Ratios (1937)—4.11-1 Std., 4.56-1, 3.89-1, 3.56-1 Optl.

Ratios (1938)—4 1/9-1 Std., 4 5/9-1, 3 5/9-1, 3 8/9-1 Optl.

Backlash—.0005-.003". Screw adjustment.

Removal:—Remove rear wheel and hub assembly (use screw type hub puller only), take out four nuts on bearing cap bolts, push bolts out through backing plate (allows cap removal without disturbing hand brake operating link), remove shims, pull wheel bearing and axle shaft, disconnect driveshaft at rear universal joint, remove 8 nuts from axle housing stud bolts, withdraw differential carrier.

Wheel Bearing Adjustment:—Controlled by shims under bearing cap. Measure endplay by dial indicator clamped to backing plate with plunger against end of axle shaft. To adjust, remove bearing caps (as directed above), add or remove shims equally at both wheels. **Endplay**—.004-.010".

SHOCK ABSORBERS

Delco. Direct acting hydraulic types. As follows:

Front—Model 1175S (1937), 1164S (1938).

Rear—Model 1174T (1937), 1163T (1938).

See Shock Absorber Section for complete data.

FRONT SUSPENSION

Front Suspension:—Conventional 'I' beam section front axle with Elliott type ends and semi-elliptic springs. Axle alignment maintained by torque arm at each end (rubber-bushed bolt at frame).

Torque Arms—*See Hudson Special Shop Notes.*

Kingpin Inclination—7° crosswise. *See Hudson Shop Notes for Kingpin Thrust Bearing data.*

Caster—1-2° and equal within ½° for both wheels. To adjust, loosen capscrews at forward end of torque arm, insert shim between arm and axle at upper screw or remove shim at lower screw to decrease caster, remove shim at upper screw or insert shim at lower screw to increase caster. Shims .020" thick, change caster ½°.

Camber—1-1½°. Not adjustable.

Toe In:—0-⅛" measured 10" up from ground. Adjust by loosening clamp bolts and turning tie rod.

Steering Geometry—Inner wheel 20°. Outer 17¾°.

STEERING GEAR

Steering Gear: Gemmer Model 305 Worm-and-Roller type with "push-pull" adjustments.

See Steering Gear Section for complete data.

BRAKES

BRAKES:—**Service**—Bendix Hydraulic, Duo-servo, Single anchor type. Mechanical follow-up (pedal linked to hand brake cables) provided. Hand lever applies rear service brakes.

See Brake Section for complete data.

Drum—Alloy-steel. Diameter—11 1/16".

Lining—Moulded (primary), woven (secondary). **Width** 1¾". Thickness 7/32" (1937), 3/16" (1938). Length per wheel 23 15/16".

Clearance—.010" at heel and toe of each shoe.

Hand Brake:—See Service Brakes above.

Hill-Holder: Optional. *See article in Brake Section.*

ENGINE HOOD:—Hood hinged at front. Secured by handle on each side panel. To raise, turn one handle (handles inter-connected), grasp hood along edge and lift forward until self-locking hinge support locks hood in raised position. Hinge support released by raising hood slightly and pushing lower half to rear.

Hood Side Panels—When removing panels, free hood handle from tie rod at either end. Clamp bolt provided on tie rod.

MODEL IDENTIFICATION

SERIAL NUMBER:—First number 8928566. Stamped on plate on right front door hinge pillar post.

ENGINE NUMBER:—First number 8928566. Stamped on top of cylinder block between #1 and #2 exhaust manifold flanges.

TUNE-UP

COMPRESSION:—Ratio—6.50-1 Std. No Optl. ratios. Pressure—Approx. 100-105 lbs. at 170 R.P.M.

VACUUM READING:—Gauge should show steady reading of 18-21" with engine idling at 7 M.P.H.

FIRING ORDER: 1-5-3-6-2-4. See diagram.

SPARK PLUGS: Champion Type J-8A. 14 mm. Metric. Gaps—.032".

IGNITION: See Coil, Condenser, and Distributor.
Breaker Gap—.020" Cam Angle 35° (closed).
Automatic Advance—14° max. at 1580 RPM (distr.).

IGNITION TIMING: See Ignition Timing.
Std. Setting—¼" (flywheel travel) BTDC. with flywheel mark "UDC.1-6/" ¼" before indicator on left front face of rear motor support (housing).

CARBURETION: See Carburetor & Carb. Equipment.
Idle Setting—Idle screw ¾-1½ turns open. Idle speed 7 MPH.
Float Level—⅜" from gasket seat on cover to nearest point on float (top at free end).
Accelerating Pump—Lower hole (medium) Normal. Inner hole (Summer), Outer upper hole (Winter) for temperature extremes.
Fuel Pump Pressure: 3 lbs. maximum.

MANIFOLD HEAT CONTROL:—Manual adjustment type located at center of exhaust manifold behind carburetor. Setting should be changed for seasonal requirements.
Setting—To adjust, loosen nuts on strut bar on face of valve cover, turn cover so that pointer is in line with 'W' mark on manifold (Winter temperatures), straight up (Normal summer temperatures), toward front in line with 'S' mark (Extremely hot temperatures). Tighten strut nuts securely to prevent exhaust gas leaks.

VALVES: See Valve Timing.
Tappet Clearance:—.006" Intake, .008" Exhaust, (hot). NOTE—For access to valve compartment, remove fender dust shield as follows: Remove shield bolts along frame side member and at radiator shell (in engine compartment), remove right front wheel, take out shield capscrews under fender and fender brace bolt. Lower shield out by grasping lower edge.

STARTING: See Battery, Starter, Generator, and Regulator (when used).

IGNITION

Ignition Switch:—Mitchellock Model 24-B, Type 7642.
Ignition Lock—Briggs & Stratton, Mitchell No. 6095.

COIL: Auto-Lite Model IG-4650. Service Coil (less Switch & Cable) IG-3224JS.
Ignition Current—5-6 amperes stopped.

CONDENSER: Auto-Lite Part No. IGB-1025J.
Capacity—.20-.25 microfarad.

DISTRIBUTOR: Auto-Lite Model IGW-4104-A. Single breaker, 6 lobe cam, full automatic advance type.
NOTE—Resistor unit (mounted on distributor terminal connected in primary circuit) must be removed when radio generator with regulator installed or replace with IGW-4103A (no resistor).
Breaker Gap—Set at .020".
Cam Angle or Dwell—35° (closed), 25° (open).
Breaker Arm Spring Tension—16-20 ounces.
Rotation—Clockwise viewed from top.

Automatic Advance

Distributor Degrees	Distributor R.P.M.	Engine Degrees	Engine R.P.M.
Start	300	0	600
3	400	6	800
4	500	8	1000
9	1040	18	2080
14	1580	28	3160

Fuel Compensator—Provides manual adjustment at distributor for octane rating of fuel used. See Fuel Compensator Setting (following).

Distributor Removal:—Mounted on right side of engine. To remove, take out hold-down screw in advance arm.

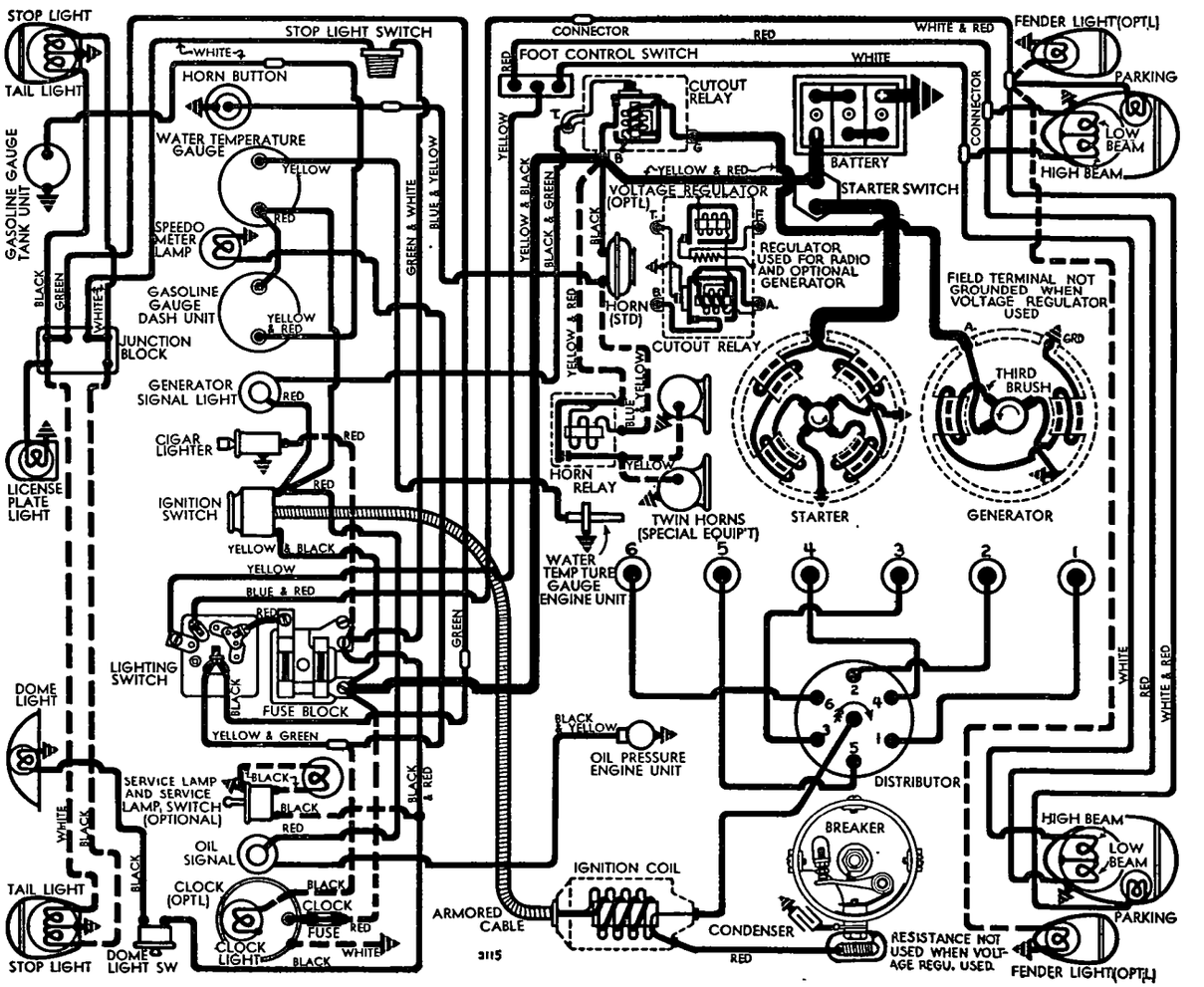

IGNITION TIMING

IGNITION TIMING:—Initial setting given below. See Fuel Compensator (following) for final setting.

	Flywheel Travel
All Engines	¼" BTDC.

To Set Timing—With #1 piston on compression turn engine over until a point ¼" before the top dead center mark 'U.D.C.1-6/' lines up with pointer in front face of left rear motor support. Loosen hold-down screw in advance arm, rotate distributor clockwise to limit of slot, then slowly rotate distributor counter-clockwise until contacts begin to open, tighten hold-down screw.

To Set Timing (Using Synchroscope)—Car manufacturer recommends this method. Mark flywheel ¼" before 'U.D.C.1-6/' mark with white chalk or paint. Clip lead to #6 spark plug wire, insert other lead in distributor cap from which #6 spark plug wire removed. Direct light on flywheel through hole on front face of left rear engine support.

Fuel Compensator Setting—Road test car and note performance when accelerating from 10-15 MPH. with wide open throttle on level road (engine must be warm). Slight spark knock should be evident. Adjust by loosening hold-down screw and rotating distributor one graduation on scale counter-clockwise (if no knock), clockwise (if knock too severe). Repeat test. Final setting must not be advanced beyond ¾" before 'U.D.C.1-6/' mark on flywheel.

CARBURETOR

CARBURETION:—**Carburetor**—Carter Model W1, Type 411-S (first cars), 417-S (after Serial & Engine number 8936572 and up). 1¼" single barrel, downdraft, vacumeter type. NOTE—Types may be identified by Casting No. on face of flange: 411-S (359), 417-S (362).
For complete data, refer to Carburetor Index.

Idle Adjustment—Engine must be warm so that choke valve is wide open and throttle cracker inoperative. Set throttle lever stopscrew to idle engine at 7 MPH. Turn idle adjusting screw in until engine begins to miss, then turn screw out until engine begins to roll, finally turn screw in slowly until engine fires smoothly. Final setting should be ¾-1½ turns open from innerseated position. Readjust throttle stopscrew for correct idle speed.

Accelerating Pump Setting—Pump lever (under dust cover at top of carburetor) has three holes for pump link engagement. Set as follows:
Lower Hole (medium stroke)—Normal setting.
Inner Hole (min. stroke)—Hot temp., hi-test fuel.
Outer Hole (max. stroke)—Cold temp., low-test fuel.

Throttle Cracker:—With choke valve closed, throttle opening should be .036-.040"

CARB. EQUIPMENT

Air Cleaner:—AC #1528159 oil-wetted type Std., United (oil-bath type) Optl.

Fuel Pump:—AC. Type AF #1523753, diaphragm type.
For complete data, refer to Carburetion Equip. Index.

Gasoline Gauge:—King-Seeley Electric Type. K-S No. 7085 (dash unit), No. 5835 (tank unit).
For complete data, refer to Carburetion Equip. Index.

BATTERY

BATTERY:—**National, Type HT-17 (original equipment), L-17-1F (replacement).**

Starting Capacity—120 amperes for 20 minutes.

Zero Capacity—300 amperes for 3.5 minutes.

Grounded Terminal—Positive (+) terminal. Battery grounded to left front fender support bracket. Engine grounded to frame by ground strap at bell housing.

Dimensions—Length 10 9/16". Width 7¼". Height 7 15/16".

Location—In left front fender under hood.

STARTER

Auto-Lite Model MAJ-4057. Armature MAJ-2062.

Drive—Inboard Barrel type Bendix No. A-1673.

Rotation—Counter-clockwise at commutator end.

Brush Spring Tension—42-53 ounces.

Cranking Engine—150 R.P.M., 125 amps. at 5.4 volts.

Performance Data

Torque	R.P.M.	Volts	Amperes
0 ft. lbs.	4100	5.5	67
.3 " "	2500	5.5	100
2.25 " "	1450	5.0	200
4.6 " "	960	4.5	300
7.3 " "	575	4.0	400
10.3 " "	225	3.5	500
12. " "	Lock	3.	550
17. " "	Lock	4.	750

Removal:—Starter flange mounted on left rear corner of engine. To remove, take out flange mounting bolts.

Starting Switch:—SW-4010. Mounted on side of steering gear housing. Controlled by shaft extending to toeboard.

GENERATOR
STANDARD

Auto-Lite Model GBM-4609A. Armature No. GBM-2065. Third brush control type. Ventilated by fan on drive pulley.

Charge Rate Adjustment—Remove commutator cover band, shift third brush by hand counter-clockwise to increase, or clockwise to decrease charging rate (brush held in position by friction).

Maximum Charging Rate—20 amperes (cold), 18 amperes (hot), 8.5 volts, 30-35 MPH. Use test ammeter connected in charging line at battery terminal of cutout relay to check generator output.

Performance Data

Cold			Hot		
Amperes	Volts	R.P.M.	Amperes	Volts	R.P.M.
0	6.4	760	0	6.4	800
4	6.8	920	4	6.9	960
8	7.25	1050	8	7.35	1150
12	7.65	1240	12	7.8	1360
16	8.1	1450	16	8.3	1750
20	8.5	2150	18	8.5	2450

Rotation—Counter-clockwise at commutator end.

Brush Spring Tension—50-60 ozs. (new brushes).

Field Current—3.80-4.20 amperes at 6.0 volts.

Motoring Current—5.7-6.3 amperes at 6.0 volts.

Removal:—Generator pivot mounted at left front of engine with fan belt drive. To remove, take out clamp and pivot bolts.

Belt Adjustment:—Loosen clamp and pivot bolts, swing generator out until slack in belt midway between generator and fan pulleys is ¾" (measured with straight edge across pulleys).

GENERATOR
CARS WITH RADI

Auto-Lite Model GDF-4802A. (Cars with Radio). Armature No. GDF-2006. Third brush control type with external voltage regulator. Ventilated by fan on drive pulley.

Maximum Charging Rate—32.0 amperes (cold), 29.5 amperes (hot), at 8.0 volts, 35 MPH. Actual charging rate controlled by Voltage Regulator and dependent on battery condition.

Charging Rate Adjustment—Maximum output controlled by third brush. Do not adjust third brush for output greater than shown in table below (with field terminal grounded to render regulator inoperative). See Regulator Section below.
NOTE—Standard third brush setting 2⅛ commutator bars from nearest main brush.

Performance Data

Cold			Hot		
Amperes	Volts	R.P.M.	Amperes	Volts	R.P.M.
0	6.4	920	0	6.4	1000
4	6.6	1030	4	6.6	1140
8	6.8	1140	8	6.85	1280
12	7.0	1300	12	7.1	1440
16	7.25	1460	16	7.3	1640
20	7.45	1650	20	7.55	1840
24	7.65	1880	24	7.75	2220
28	7.9	2220	28.2	8.0	3200
32	8.0	3100			

Rotation—Counter-clockwise at commutator end.
Brush Spring Tension—53 ozs. max. (new brushes).
Field Current—1.90-2.10 amperes at 6.0 volts.
Motoring Current—5.3-5.9 amperes at 6.0 volts.

Removal & Belt Adjustment:—As given for std. generator.

GENERATOR
SPECIAL EQUIPMENT

SPECIAL GENERATORS:—**Other Makes**—***Refer to Electrical Equipment Index for 'Special Generators' for data on special Generators and Regulators which may be found installed on these models.***

CUTOUT RELAY

Auto-Lite Model CBA-4003. (Used with Std. GBM-4609A Generator). Mounted on engine side of dash. Relay has extra set of contacts for Teleflash Generator Charging Indicator.
For complete data, refer to Electrical Equipment Index.

Cuts In—6.75-7.5 volts. Approx. 10 M.P.H.

Cuts Out—1.5-4.5 amperes discharge current (after charging at 16 amperes).

Contact Gap—.015-.045" with upper ground contacts closed (upper contacts must open when main contacts close).

Air Gap—.010-.030" with contacts closed.

CONTINUED ON NEXT PA E

C NTINUED FROM PRECEDING PAGE

REGULATOR

CARS WITH RADIO

Auto-Lite Model VRD-4008A (Used with Gen. GDF-4802A). Voltage type. Consists of Cutout Relay & vibrating Voltage Regulator in case on dash. Cut-out Relay has extra set of contacts for Teleflash Generator Charging Indicator.

NOTE—See distributor note for change to be made when this unit installed in field.

For complete data, refer to Electrical Equipment Index.

NOTE—Regulator case cover is sealed. Serviced on exchange basis if seals not broken.

Cutout Relay

Cuts In—6.4-7.0 volts Cold. Approx. 10 MPH.

Cuts Out— .5-3.0 ampere discharge (Before Serial No. 2T-000001), 1.5-4.5 amperes (After 2T-000001).

Contact Gap—.015" minimum (with ground contacts closed—ground contacts must be open with main contacts closed).

Air Gap—.034" min., .038" max. with contacts open. Measure at hinge end of core.

Voltage Regulator

Setting—7.35-7.65 volts at 70°F. (after 15 minutes operation charging at 10 amperes).

To Check (without breaking seal)—Connect ammeter in charging line at 'BAT' terminal on regulator, connect voltmeter between 'BAT' terminal and ground. Operate generator at speed equivalent to 30 MPH., charging fully charged battery until voltage is constant. Voltmeter reading should be within 7.1-7.8 volts (high limit cold, low limit hot). If outside these limits regulator is defective.

To Adjust (with cover removed)—Change regulator armature spring tension slightly by bending lower spring hanger. Check setting as above.

Contact Gap—.010" min., .020" max. with armature against stop pin.

Air Gap—.0595-.0625" with contacts just opening.

LIGHTING

LIGHTING:—Headlamps—Hall, pre-focused type with interchangeable lenses. Upper and lower beams (lower beams deflected slightly to right) controlled by foot selector switch with lighting switch in driving (right hand) position.

Headlamp Adjustment—Aim headlamps straight ahead with top of beam 38 13/16" above floor level on screen placed at 25' (car unloaded and upper beams lighted). Headlamps aimed by loosening mounting stud on inside of radiator shell (reached by raising hood and working through opening in top radiator tank shield) and shifting lamp by hand.

Switches

Lighting—R.B.M. Model 1725.
Foot Selector—R.B.M. Model 1076.

Bulb Specifications

Position	Candlepower	Mazda No.
Headlamps	32-32	2331
Headlamps (export)	21-50	2520D
Parking, Instrument	1½	55
Dash Signals	1	51
Stop and Tail	21-3	1158
License, Fender	3	63
Dome	15	87

MISC. ELECTRICAL

SIGNAL LIGHTS:—Teleflash Generator Charging Indicator and Oil Pressure Indicator mounted on instrument panel.

For complete data, refer to Electrical Equipment Index.

FUSES:—Lighting—20 ampere capacity mounted on fuse block on lower flange of instrument panel.

Accessory—20 ampere capacity on same fuse block —has two terminals for accessory connections.

HORN:—Single horn standard. Sparton twin horns with R.B.M. horn relay optional (engine dash mounting). R.B.M. Model 780 horn relay optl. (dash mounted).

ENGINE

ENGINE SPECIFICATIONS:—6 cylinder, 'L' head type.

Bore—3". **Stroke**—4⅛".

Displacement—175 cubic inches.

Rated Horsepower—21.6 (A.M.A.)

Developed Horsepower—83 HP at 4000 R.P.M.

Compression Ratio—6.50-1 cast-iron head.

Compression Pressure—Approx. 100-105 lbs. at 170 R.P.M. Check with plugs removed and wide open throttle.

Vacuum Reading—18-21" steady at 7 M.P.H.

PISTONS:—Own Lo-Ex aluminum alloy, 'T' slot, cam ground type. Use finished replacement pistons.

Weight—10.5 ozs. (stripped). **Length**—3 3/16".

Removal—Pistons and rods removed from above.

Clearance—Top .016". Skirt .002".

Original Bore Sizes & Replacement Pistons:—***See Hudson Shop Notes for complete data.***

Fitting New Pistons:—Insert .0015" feeler ½" wide in extreme right of cylinder, insert piston with slot to left and pin bosses parallel to crankshaft. Tension to withdraw feeler must be within 3-4 lbs.

Installing Pistons:—Slot away from camshaft side.

PISTON RINGS:—Pinned type, 2 compression, 1 oil ring above pin, one oil ring below pin. 5/16" oil drain holes, 12 drain holes (2 to pin bosses) in upper oil ring groove, 4 holes and 2 slots drilled in lower groove. Rings positioned by pin in grooves.

Ring	Width	End Gap	Side Clearance
Compression	3/32"	.005-.010"	.001"
Oil (both)	3/16"	.005"	.001"

Replacement Rings:—***See Hudson Shop Notes.***

PISTON PIN:—Diameter—¾". Length—2 7/16". Pin floats in piston and rod, held by locking rings. Pin hole in rod bronze bushed. Pins furnished standard and .002", .005" and .010" oversize.

Pin Fit in Piston—.0003" clearance (hand push fit) with piston heated to 200°F.

Pin Fit in Rod Bushing—.0003" clearance.

CONNECTING ROD:—Weight 30½ oz. Length 8⅝".

Crankpin Journal Diameter—1 15/16".

See Hudson Shop Notes for Connecting Rod change.

Lower Bearing—Spun-babbitt. Rods exchanged. Finished bearings furnished standard and undersize (special order).

Clearance—.001". **Sideplay**—.006-.010".

Bearing Adjustment:—None (no shims). Replace rods. After tightening bolt nuts, install new palnut (smooth face to nut), turn palnut on bolt with fingers until tight, then lock in place by turning with wrench an additional ¼-⅓ turn.

Installing Rods:—Offset. Install rods with widest half of bearing toward rear (#1, 2, 4). toward front (#3, 5, 6). Oil scoop on all rods toward camshaft.

CRANKSHAFT:—3 bearing, integral counterweights

See Hudson Shop Notes for Crankshaft and Vibration Dampener removal, Main Bearing Removal, Installation and Line-Reaming data.

Journal Diameters—#1, 2 11/32"; #2, 2⅜"; #3, 2 13/32".

Bearings—Bronze backed, babbitt lined type. Bearings secured in cap and crankcase by brass screws.

Clearance—.001".

Bearing Adjustment:—Shims. ***See Hudson Shop Notes.***

►***CAUTION—Replacement of main bearings requires removal of crankshaft. Bearings retained by brass screws.***

Replacement Bearings: ***See Hudson Shop Notes.***

End Thrust:—Taken by center bearing. Replace bearing to adjust. **Endplay**—.006-.012".

CAMSHAFT:—Three bearing. Gear driven.

Journal Diameters—#1, 2"; #2, 1 31/32"; #3, 1½".

Bearing Clearance—.0025".

End Thrust:—Taken by thrust washer assembled between front face of crankcase and rear side of camshaft front flange, and by spring loaded button in camshaft hub and thrust plate on gear cover. See that spring and button in place under cover.

Timing Gears:—Crankshaft gear cast-iron. Camshaft gear GE. or Continental Diamond Fibre Bakelite. ***1941 Type Timing Gear Set can be installed on these models (tooth angle redesigned to provide quieter operation). Refer to Hudson Shop Notes.***

Camshaft Setting:—Gears marked. Mesh marked tooth of crankshaft gear between two marked teeth on camshaft gear.

VALVES:—	Head Diameter	Stem Diameter	Length
All valves	1⅜"	11/32"	5 11/32"

	Seat Angle	Lift	Stem Clearance
Intake	45°	11/32"	.0015-.003"
Exhaust	45°	11/32"	.003-.005"

See Hudson Shop Notes for valve tool data.

Valve Guides: 2 9/16" long. Top 1 1/16" below top of block. Finish ream to size after installation.

Valve Springs:—Springs are cadmium plated, Dampeners originally used on bottom of all springs, but car manufacturer recommends that they be omitted whenever valves are serviced. Spring check (out of engine)—34 lbs. min. at 2".

	Spring Pressure	Spring Length
Valve Closed	44 lbs.	2"
Valve Open	102 lbs.	1 21/32"

Valve Lifters:—Roller shoe type, fitted in removable guides. ***See Hudson Shop Notes for valve lifter removal instructions.***

VALVE TIMING

Tappet Clearance—.006" Int., .008" Exh., engine hot.

Valve Timing:—See Camshaft Setting above.

Intake Valves—Open 10°40' BTDC. Close 60° ALDC.

Exhaust Valves—Open 50° BLDC. Close 18°44'ATDC. These figures correct with .010" tappet clearance.

To Check Timing—Set tappet clearance #1 intake valve at .010". This valve should open with piston 10°40' or .0441" before top dead center when a point on the flywheel approximately 3.97 teeth before dead center mark 'U.D.C.1-6/' lines up with pointer in inspection hole in front face of left rear motor support. Reset tappet clearance at .006" with engine warm.

LUBRICATION

LUBRICATION:—Duo-flow (pressure and positive splash) system. Force feed by oil pump to connecting rod oil troughs and timing gears, splash to all other bearing points.

Oil Pump:—Oscillating plunger type, gear driven by camshaft. Mounted on right center of crankcase.

Normal Oil Pressure—3 lbs. (no gauge).

Oil Pressure Regulator:—Located at right side of crankcase at rear. Opens at 3 lbs. Not adjustable.

Oil Pressure Indicator:—Teleflash Oil Pressure indicator. Operated by oil pressure regulator.
For complete data, refer to Electrical Equipment Index.

Checking Oiling System:—See Hudson Shop Notes.

Crankcase Capacity:—5½ qts. (dry), 4½ qts. refill).

COOLING

COOLING SYSTEM:—**Water Pump.** Centrifugal, belt-driven, packless type.
See Water Pump Section for complete data.

Removal—With water drained and fan belt removed, disconnect hoses at pump, remove mounting bolts, lift fan and pump assembly off.

Thermostat:—Mounted in cylinder head water outlet.
Setting—Start to open 150-155°F. Fully open 185°F.

Water Capacity:—12 quarts.

CLUTCH

CLUTCH:—**Own make.** Single plate, cork insert type operating in oil.
See Clutch Section for complete data.
Driven Member—Thickness .203". Inside Diameter 5.375". Outside Diam. 8.625". Facing 90 cork inserts.

Adjustment:—Pedal free movement must be 1½". To adjust, remove clevis pin at lower end of connecting link on throw-out shaft lever, loosen locknut, turn clevis for proper clearance.

Clutch Oil Servicing:—*See Hudson Shop Notes.*

Removal:—Remove transmission (see Transmission Removal following), take out 16 clutch cover capscrews and remove clutch assembly from below.

TRANSMISSION

TRANSMISSION:—**Own make.** Constant-mesh, helical gears (Second & High), sliding spur gears (Low & Reverse).
See Transmission Section for complete data.

Removal:—Disconnect speedometer cable and drive shaft at front universal. Support engine at rear and take out rear mounting bolts. Remove bell housing to engine mounting bolts, pull transmission straight back and remove.

UNIVERSALS

UNIVERSAL JOINTS:—**Spicer. 1271 (front), 1278 (rear).** Needle bearing type.
See Universals Section for complete data.

REAR AXLE

REAR AXLE:—**Own make.** Semi-floating, spiral bevel gear type.
See Rear Axle Section for complete data.
Ratio—4 1/9 Std. 4 5/9 optional.
Backlash—.0005-.003". Screw adjustment.

Removal:—Remove rear wheel and hub assembly (use screw type puller only), take out four nuts on bearing cap bolts, push bolts out through backing plate (allows cap removal without disturbing hand brake operating link), remove shims, pull wheel bearing and axle shaft, disconnect drive shaft at rear universal joint, remove 8 nuts from axle housing-to-carrier stud bolts, withdraw differential carrier assembly without disturbing axle housing.

Wheel Bearing Adjustment:—Controlled by shims under bearing cap. Measure endplay by dial indicator clamped to backing plate with plunger against end of axle shaft. To adjust, remove bearing caps (as directed above), add or remove shims equally at both wheels. **Endplay**—.004-.010".

SHOCK ABSORBERS

SHOCK ABSORBERS:—**Monroe**—156778 (front), 156578 or 156779 (rear). Hydraulic, direct acting type.
See Shock Absorber Section for complete data.

FRONT SUSPENSION

Front Suspension:—Conventional 'I' beam front axle with Elliott ends and semi-elliptic springs.

Kingpin Inclination—7° crosswise. See Kingpin Thrust bearing data in Hudson Shop Notes.

Caster—2-2½° and equal within ½° for both wheels. Adjusted in usual manner by wedge shims between spring seat on axle and spring.

Camber—1-1½°. No adjustment. Make minor corrections by bending axle cold.

Toe In—0-⅛". Measured 10" up from ground. Adjust by loosening clamp bolts and turning tie rod.

Steering Geometry—Inner wheel 20°. Outer wheel 17¾°.

STEERING GEAR

Steering Gear: Gemmer Model 305. Worm-and-Roller type with "push-pull" adjustments.
See Steering Gear Section for complete data.

BRAKES

BRAKES:—**Service**—Bendix Hydraulic, Duo-Servo, double anchor type. Mechanical follow-up (pedal linked to hand brake cables) provided. Hand lever applies rear service brakes.
See Brake Section for complete data.

Drum—Alloy-steel. Diameter—9 1/16".

Lining—Moulded (primary), woven (secondary). Width 1¾". Thickness 3/16". Length per wheel 19".

Clearance—.010" at heel and toe of each shoe.

Hand Brake:—See Service Brakes above.

ENGINE BONNET LOCK, HOOD, SIDE PANEL AND DUST SHIELD REMOVAL:—*See Hudson Shop Notes*

MODEL IDENTIFICATION

SERIAL NUMBER: First No. 90-101 (1939), 40-101 (1940). On plate on right front door hinge pillar post.

ENGINE NUMBER:—Same as Serial Number (above). Stamped on top of cylinder block between #1 & #2 exhaust manifold flanges.

TUNE-UP

COMPRESSION PRESSURE: 115 lbs. (1939), 125 lbs. (1940) at cranking speed of 125 R.P.M.

VACUUM READING: Steady 18-21" idling at 7 MPH.

FIRING ORDER: 1-5-3-6-2-4. See diagram.

SPARK PLUGS: Champion Type J-8. 14 mm. Metric. Gaps—.032"

IGNITION: See Coil, Condenser, and Distributor.
Breaker Gap—.020" Cam Angle 35° (closed).
Automatic & Vacuum Advance—See tables below.

IGNITION TIMING: See Ignition Timing.
Std. Setting—¼" flywheel travel BTDC. (1939), At TDC. (1940) with flywheel mark "UDC. 1-6/" ¼" ahead (1939), or at indicator (1940) in inspection hole in left front face of rear motor support.

CARBURETION: See Carburetor & Carb. Equipment.
Idle Setting—Idle screw ¼-1 turn open (1939), ¾-1½ turn open (1940). Idle speed 7 MPH.
Float Level (1939)—⅜" from gasket seat on cover to top of float at free end (invert to check)
Float Level (1940)—⅜" from top of machined projection on bowl cover to top of soldered seam on free end of float (invert to check).
Accelerating Pump—Lower hole Normal Inner hole (Summer), Outer hole (Winter) for temp. extremes.
Fuel Pump Pressure: 3 lbs. maximum.

MANIFOLD HEAT CONTROL:—Manual adjustment on center of manifold behind carburetor. Change setting for seasonal requirements as follows:
Setting—Arrow on valve should be lined up with 'W' on manifold for winter temperatures, 'S' for summer temperatures. For high speed driving in extremely hot weather, line arrow up with boss ahead of 'S' mark. To adjust, loosen two nuts on valve bar to release valve, turn valve by hand, tighten nuts

VALVES: See Valve Timing.

►**Tappet Clearance:** *CAUTION*—2 settings used:

1)—.006" Intake, .008" Exhaust, hot & idling for All 1939 Engines (& 1940 with Original Camshaft).

2)—.010" Intake, .012" Exhaust, hot & idling for All 1940 Engines with Replacement Camshaft.
These engines should carry decalcomania on valve cover specifying this .010" & .012" setting.

See Hudson Shop Notes for Replacement Camshaft data.

STARTING: See Battery, Starter, Generator, Regulator.

IGNITION

IGNITION SWITCH: Mitchellock. Model 24-B. Type 8062 (1939), 8273 (1940). Coil connection armored.
Ignition Lock—Briggs & Stratton. Mitchell No. 6095. B & S #50184 Key Series H601-H1100. Groove #1.

COIL: Auto-Lite Model IG-4656 (1939), IG-4662 (1940). Service Coil (less Switch & Cable) IG-3224JS.
Ignition Current—2.5 amperes idling, 4 5 stopped.

CONDENSER: Auto-Lite Part No. IGW-3075B (IGW-4125A & IGW-4202A), IGW-3075C (IGW-4203).
Capacity—.20-.25 microfarad.

DISTRIBUTOR: Auto-Lite Model IGW-4125A (1939—First 6493 Cars), IGW-4202A (1939—6493 Up), IGW-4203 (1940). Single Breaker, 6 lobe cam, full automatic advance type with Fuel Compensator adjustment. Model IGW-4203 has auxiliary vacuum spark NOTE—Primary circuit resistor on '39 distributor (used only with low-rate generator without regulator). Resistor must be removed or IGW-4201A distributor installed when regulator installed.

Breaker Gap—.020".
Cam Angle or Dwell—35° closed, 25° open (distr.).
Breaker Arm Spring Tension—16-20 ounces.
Rotation—Clockwise (for 1939 cars), counter-clockwise (1940), viewed from above.

Distributor Degrees	R.P.M.	Automatic Advance Degrees	Engine R.P.M.
Start	300	0	600
3	400	6	800
6	720	12	1440
9	1040	18	2080
12	1360	24	2720
14	1580	28	3160

Vacuum Spark Control (IGW-4203 Distr.)—Mounted on distributor hold-down plate and linked to quadrant scale on side of distributor. Provides additional advance at speeds above idling except when engine is accelerated or operated at wide open throttle when spark is retarded by return spring within unit.

Vacuum Advance (IGW-4203 Distr. only)

Distr. Degrees	Eng. Degrees	Vacuum (" of HG)
Start	0°	5⅞"
4°	8°	9¼"
7.5°	15°	11¼"

Fuel Compensator Adjustment—Manual adjustment for octane rating of fuel. See Ignition Timing.

Removal (1939): Distributor mounted on right side of crankcase. To remove, take out hold-down screw in advance arm.

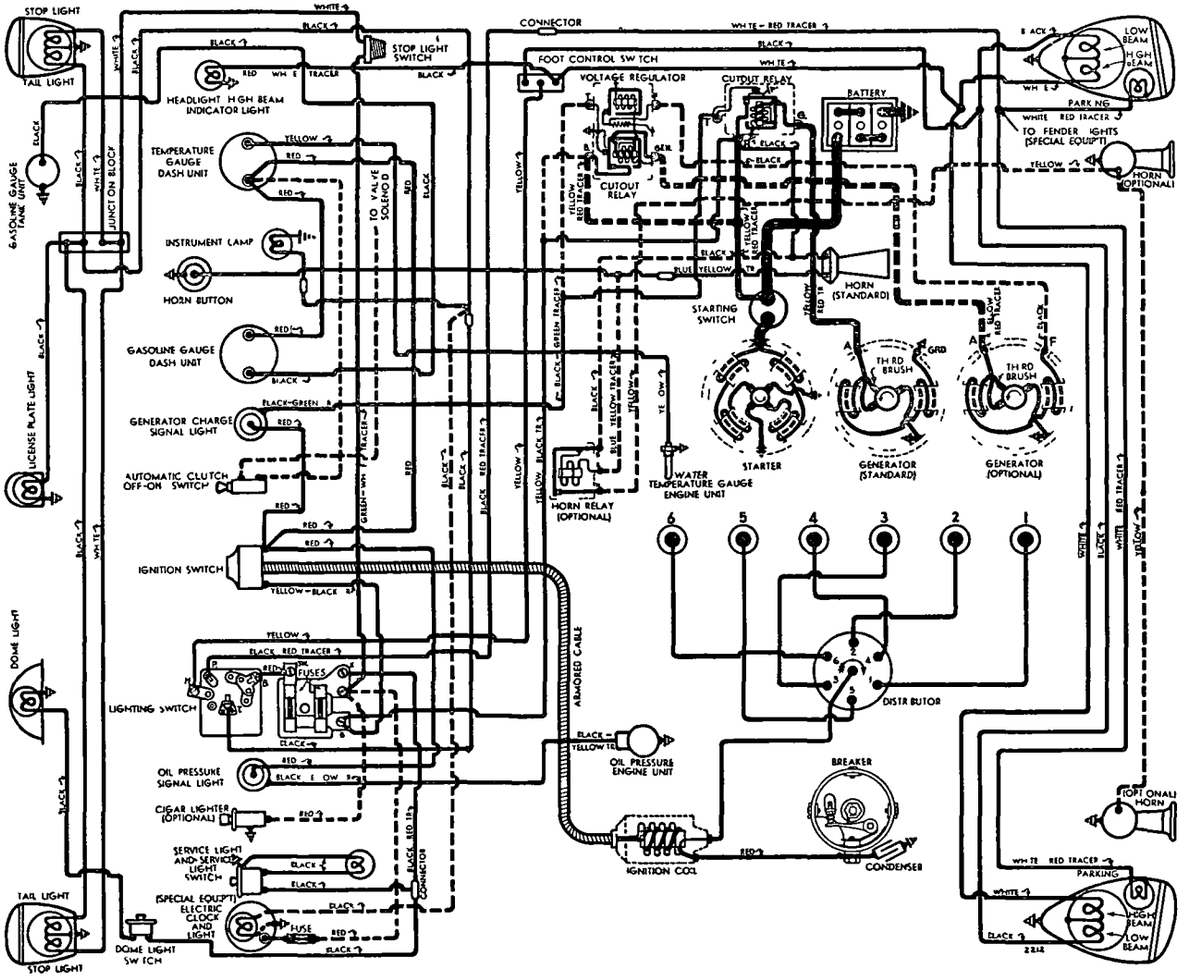

1939 "112" M DEL 90

FOR 1940 MODELS 40, 40P, 40T—SEE 1940 DIAGRAM FOLLOWING

Removal (1940): Distributor mounted at top rear of cylinder block. To remove, disconnect vacuum line, take out cylinder head stud nuts on hold-down plate.

IGNITION TIMING

IGNITION TIMING:—Initial setting as given. See Fuel Compensator setting (following) for correction.

Model	Flywheel Degrees
90 (1939)	¼" BTDC.
40 (1940)	0° At TDC.

Timing—With #1 piston on compression, turn engine over until piston reaches firing position with flywheel mark 'UDC.1-6' ¼" before indicator (90), at indicator (40) in inspection hole in front face of left rear motor support above starter. Loosen advance arm hold-down screw, rotate distributor clockwise to limit of slot, then slowly rotate distributor counter-clockwise until contacts begin to open, tighten hold-down screw. Check Fuel Compensator **Timing (Using Synchroscope)**—Recommended by manufacturer. Mark flywheel with white chalk or paint, connect at #6 spark plug. Idle engine and adjust distributor as directed above.

Fuel Compensator Setting—Road test car and note performance when acelerating from 10-15 M.P.H. with wide open throttle on level road (warm engine). Slight ping should be evident. To adjust, loosen hold-down screw, rotate distributor one graduation on scale counter-clockwise (if no ping), clockwise (if ping too severe), repeat test. Final setting must not be more than ¾" before 'UDC.1-6/' mark on flywheel.

CARBURETOR

(1939)—Carter Model W1 Vacumeter Type 438-S (Std.), 437-S (With Automatic Clutch Control). 1¼" Single Barrel, Downdraft type.

(1940)—Carter Model WA-1 Type 454-S. 1¼" Single Barrel, Downdraft type with Fast Idle and Automatic Choke.

For complete data, refer to Carburetor Index.

Idle Adjustment—With engine warmed up, choke valve wide open and throttle-cracker inoperative, set throttle lever stopscrew to idle engine at 7 MPH., Turn idle adjusting screw in until engine begins to miss, then out until engine begins to roll, finally turn screw in slowly until engine fires smoothly. Final setting should be ¼-1 turn (1939), ¾-1½ turn (1940) out from inner seated position. Readjust throttle stopscrew for correct idle speed.

Accelerating Pump Setting—Pump lever (under dust cover on float bowl cover) has three holes for pump link engagement. Adjust as follows:
Lower Hole (Med. Stroke)—Normal setting.
Inner Hole (Min.)—Hot weather, high-test fuel.
Outer Hole (Max.)—Cold weather, low-test fuel.

Throttle Cracker (1939): Connecting linkage between choke valve and throttle lever, opens throttle valve .036-.040" with choke valve fully closed.

Fast Idle (1940): Integral type (part of carburetor).
For complete data, refer to Carburetion Equip. Index.
Setting—Adjust by bending connecting link offset for ⅝" choke valve opening with stopscrew against (not on) first step of fast idle cam.

Automatic Choke (1940): Carter Climatic Control.
For complete data, refer to Carburetion Equip. Index.
Setting—Centered (at index).

CARB. EQUIPMENT

Air Cleaner: AC No. 1528159 Std. Oil-wetted type. United heavy duty oil-bath type Optl.

Fuel Pump:—AC Type AF #1523753 Std., Type #1523937 combination fuel-and-vacuum pump Optl.
For complete data, refer to Carburetion Equip. Index.

Gasoline Gauge:—King-Seeley Electric. K-S Nos. Dash Unit—7175 (Pass. Cars), 7098 (Comm'l.), 6783 (Sta Wagon), 8118 (1940 Early—White lines), 7752 (1940 Later Cars—White Diamonds).
Tank Unit—5835 (1939 First Cars), 7500 (1939 Later Cars & Service Unit), 7550 (1940).
For complete data, refer to Carburetion Equip. Index.

BATTERY

BATTERY:—National Type HT-17. 6 volt, 17 plate, 96 A.H. capacity (20 hour rate).
Starting Capacity—120 amperes for 20 minutes.
Zero Capacity—300 amperes for 3.5 minutes. Five second voltage 4.24 volts.
Grounded Terminal—Positive (+) to frame.
Engine Ground—Strap connector from rear motor support plate to frame.
Dimensions—Length 10 9/16". Width 7¼". Height 7 11/16".
Location—In engine compartment on left side.

STARTER

Auto-Lite Model MAJ-4057 (1939 First Cars), MAJ-4061 (1939 Later Cars), MZ-4079 & 4079A (1940). Armature MAJ-2062 (MAJ-4057 & 4061), MZ-2138 (MZ-4079 & 4079A).
Drive—Inboard Barrel type Bendix No. A-1673 (MAJ-4057), No. A-1684 (all others).
Rotation—Counter-clockwise at commutator end.
Brush Spring Tension—42-53 ozs. (new brushes).
Cranking Engine—150 RPM., 125 amperes, 5 volts.

Performance Data.

MAJ-4057, 4061

Torque	R.P.M.	Volts	Amperes
0 ft. lbs.	4100	5.5	67
.3 "	2500	5.5	100
2.25 "	1450	5.0	200
4.6 "	960	4.5	300
7.3 "	575	4.0	400
10.3 "	225	3.5	500
12.0 "	Lock	3.0	550
17.0 "	Lock	4.0	750

MZ-4079, 4079A

0 ft. lbs.	4300	5.5	70
2.55 " "	1325	5.0	200
4.95 " "	750	4.5	300
7.65 " "	220	4.0	400
7.8 " "	Lock	3.0	420
11.8 " "	Lock	4.0	560

Removal:—Starter flange mounted on left front face of rear motor support. To remove, take out flange mounting screws.

Starting Switch (1939): Auto-Lite Model SW-4010. Manual type. Operated by button directly below steering column.

Starting Switch (1940): R-B-M Model 5607. Magnetic type. On starter. Controlled by pushbutton on instrument panel, Douglas No. 5751.

GENERATOR

STANDARD (1939)

Auto-Lite Model GBM-4609A. Armature Number GBM-2065. Third brush control type. Ventilated by fan on drive pulley.
Charging Rate Adjustment—Remove commutator cover band, shift third brush by hand counter-clockwise to increase, or clockwise to decrease, charging rate. Brush held in position by friction.
Maximum Charging Rate—20 amperes (cold), 18 amperes (hot), 8.5 volts, 30-35 M.P.H. Use test ammeter connected in charging line to check output.

Performance Data—GBM-4609A

Cold			Hot		
Amperes	Volts	R.P.M.	Amperes	Volts	R.P.M.
0	6.4	760	0	6.4	800
4	6.8	920	4	6.9	960
8	7.25	1050	8	7.35	1150
12	7.65	1240	12	7.8	1360
16	8.1	1450	16	8.3	1750
20	8.5	2150	18	8.5	2450

Rotation—Counter-clockwise at commutator end.
Brush Spring Tension—50-60 ozs. (new brushes).
Field Current—3.80-4.20 amperes at 6.0 volts.
Motoring Current—5.7-6.3 amperes at 6.0 volts.
Removal:—Pivot mounted at left front of engine. To remove, take out pivot and clamp bolts.
Belt Adjustment:—Swing generator out until possible belt deflection midway between generator and fan pulleys is ¾" (use straightedge across pulleys).

GENERATOR

OPTL. (1939), STD. (1940)

Auto-Lite Models GDS-4801A. Armature Number GDF-2006. Third brush control type with external voltage regulator. Ventilated by fan on pulley.
Maximum Charging Rate—33 amperes cold, 27.5 amperes (hot), 8.0 volts, 30-35 MPH. Actual charging rate controlled by Voltage Regulator and dependent on battery condition.
Charging Rate Adjustment—Maximum output controlled by third brush and secured with standard setting of 1 commutator bar from nearest (insulated) main brush. Do not exceed output shown in table below. See Regulator data below for adjustment. To check output, connect ammeter in charging line at regulator 'BAT' terminal, ground 'F' terminal to eliminate regulator action.

Performance Data—GDS-4801A

Cold			Hot		
Amperes	Volts	R.P.M.	Amperes	Volts	R.P.M.
0	6.4	920	0	6.4	960
4	6.6	1050	4	6.6	1120
8	6.8	1175	8	6.85	1280
12	7.0	1300	12	7.1	1430
16	7.2	1450	16	7.3	1640
20	7.4	1600	20	7.55	1900
24	7.6	1820	24	7.75	2320
28	7.9	2075	27.5	8.0	3200
33	8.0	2900			

Rotation—Counter-clockwise at commutator end.
Brush Spring Tension—53 ozs. max. (new brushes).
Field Current—1.65-1.82 amperes at 6.0 volts.
Motoring Current—5.10-5.45 amperes at 6.0 volts.
Removal & Belt Adjustment:—Same as std. generator.

GENERATOR

SPECIAL EQUIPMENT

SPECIAL GENERATORS:—Other Makes—*Refer to Electrical Equipment Index for 'Special Generators' for data on special Generators and Regulators which may be found installed on these models.*

CUTOUT RELAY

Auto-Lite Model CBA-4003 (Used with GBM-4609A Gen.). Mounted on engine side of the dash.
Relay has extra set of contacts for Generator Teleflash Charging Indicator Control.
For complete data, refer to Electrical Equipment Index.
Cuts In—6.75-7.5 volts.
Cuts Out 1.5-4.5 amp. discharge after 16 amp. charge.

CONTINUED ON NEXT PAGE

C NTINUED FR M PRECEDING PAGE

Contact Gap—.015-.045" with upper ground contacts closed (Upper contacts must open when main contacts close).
Air Gap—.010-.030" with contacts closed.

REGULATOR

Auto-Lite Model VRD-4008A (1939), VRD-4008B (1940 First Cars), VRR-4001A (1940 Later Cars). Used with GDS-4801A Gen. Cutout Relay and vibrating Voltage Regulator in case on dash. Cutout Relay has special upper contacts for Generator Teleflash Signal control.
For complete data, refer to Electrical Equipment Index.
NOTE—Regulator cover sealed. Serviced on exchange basis if seals not broken.

Cutout Relay

Cuts In—6.4-7.0 volts (VRD), 6.4-6.6 volts (VRR).
Cuts Out—.5-3.0 amperes (before Regulator Serial No. 2T-000001), 1.5-4.5 amperes (after No. 2T-000001). (VRD); 4.2-4.8 volts with approximately 4-6 ampere discharge current (VRR).
Contact Gap—.015" min. with ground contacts closed (ground contacts must open when main contacts close).
Air Gap—.034-.038" (VRD), .031-.034" (VRR) at hinge end of core with contacts open (ground contacts closed).

Voltage Regulator

Setting—7.1-7.4 volts at 110°F (all models).
Checking (without breaking seal) & Adjustment—*See Electrical Equipment Section.*
Contact Gap—.010-.020" (VRD), .012" Min. (VRR) with armature against stop pin.
Air Gap—.0595-.0625" (VRD), .048-.052" (VRR) with contacts just opening.

LIGHTING

Headlamps—Hall Pre-focused type (1939), Hall "Sealed Beam" type (1940). Upper and lower beams controlled by Beam Selector Switch on toeboard.
Headlamp Adjustment—Aim upper beam of each headlamp straight ahead with hot spot centered on horizontal line 3" below lamp center height.
Beam Indicator—On upper left hand corner of instrument panel. Lighted whenever upper beams on.

Switches

Lighting—R-B-MNo.1725(1939), Cole-Hersee(1940).
Beam Selector—Douglas or R-B-M No. 1076 (1939), R-B-M No. 2467 (1940). **Instrument**—Douglas.

MISC. ELECTRICAL

SIGNAL LIGHTS:—Generator Charge, and Oil Pressure Indicators. Hudson Teleflash Electric type.
For complete data, refer to Electrical Equipment Index.
FUSES:—Lighting—20 ampere. On fuse block on lower flange of instrument panel at center.
Accessory—20 ampere. On fuse block.
Twin Horns—30 ampere on block on engine dash.
Transmission Overdrive Control—20 ampere.
Direction Indicator—10 ampere.
Electric Clock—2 ampere. On back of clock.
HORNS:—Std. Single Horn—Schwartze Model 42 (Before #7418), Model EX3099 (After #7418).
Optl. Dual Horns—Delco-Remy Air-trumpet type or Sparton Air-Electric, vibrator type with relay.
Horn Relay—R-B-M Model 4751 (1939), 4790 (1940). **Contacts Close**—3.5-4.5 volts. **Current Draw** ¾ amp.

ENGINE

ENGINE SPECIFICATIONS:—6 cylinder, 'L' head type.
Bore—3". **Stroke**—4⅛".
Displacement—175 cu. ins. **Rated HP**—21.6.
Developed Horsepower—86 (1939), 92 (1940) at 4000 RPM.
Compression Ratio—6.5-1 '39, 7.0-1 '40. Iron heads.
Compression & Vacuum Reading—*See Tune-up data.*
PISTONS:—Own Lo-Ex aluminum alloy, 'T' slot, cam ground type. Use finished replacement pistons.
Weight—10.5 ozs. (stripped). **Length**—3 3/16".
Removal—Pistons and rods removed from above.
Clearance—Top .016". Skirt .001-.002".
Original Bore Sizes & Replacement Pistons:—*See Hudson Shop Notes for complete data.*
Fitting New Pistons:—Use .0015" feeler ½" wide inserted between piston and cylinder wall on side opposite slot at right angles to pin. Pull to withdraw feeler must be within 3-4 lbs.
Installing Pistons:—Slot away from camshaft.
PISTON RINGS:—2 compression, 2 oil rings (1 above pin, 1 below pin). Rings positioned by pin in groove.

Model 90 (1939)

Ring	Width	End Gap	Side Clearance
Compression	3/32"	.005-.010"	.001"
Oil Control①	3/16"	.005-.010"	.001"
Oil Control②	5/32"	.005-.010"	.001"

①—Both rings on early cars, top ring on later cars.
②—Lower oil ring on later cars. *See Hudson Shop Notes for complete data on Oil Ring Width change.*

Model 40 (1940)

Ring	Width	End Gap	Side Clearance
Compression	3/32"	.009-.011"	.001"
Oil Cont. (#1)	3/16"	.009-.011"	.001"
Oil Cont. (#2)	5/32"	.009-.011"	.001"

Replacement Rings:—*See Hudson Shop Notes for data.*
PISTON PIN:—Diameter—¾". **Length**—2 7/16".
Floating Type. Retained by locking rings. *See Hudson Shop Notes for Pin Servicing data.*
Pin Fit in Piston—.0003" clearance (hand push fit) with piston heated to 200°F.
Pin Fit in Rod Bushing—.0003" clearance.
Replacement Pins:—Std., .002", .005", .010" oversize.
CONNECTING ROD:—Weight—30¾". **Length**—8⅝".
Crankpin Journal Diameter 1 15/16".
Lower Bearing—'Bermax'alloy spun type. Exchange rods furnished Std. & .010" undersize. *See Crankshaft Size Code in Hudson Shop Notes for bearing sizes.*
Clearance—.001". **Sideplay**—.006-.010".
Bearing Adjustment:—None (no shims). Replace rods. *See Hudson Shop Notes for Palnut (locknut) data.*
Installing Rods:—Offset. Install rods with widest half of bearing toward rear (#1, 2, 4), toward front (#3, 5, 6). Oil scoop on all rods toward camshaft.
CRANKSHAFT:—3 bearing, integral counterweights. *See Hudson Shop Notes for Crankshaft and Vibration Dampener Removal, Main Bearing Removal, Installation, Replacement Bearings and Line-reaming data.*
Journal Diameters—#1, 2 11/32"; #2, 2⅜"; #3, 2 13/32".
See Crankshaft Size Code Note in Hudson Shop Notes for original bearing sizes.
Bearings—Bronze backed, Bermax alloy. Bearings secured in cap and crankcase by brass screws.
Clearance—.001".
Bearing Adjustment:—Shims. *See Hudson Shop Notes.*
►*CAUTION—Replacement of main bearings requires removal of crankshaft. Bearings retained by brass screws.*
Replacement Bearings: *See Hudson Shop Notes.*
End Thrust:—Taken by center bearing. Replace bearing if endplay excessive. **Endplay**—.006-.012".
CAMSHAFT:—3 bearing, gear driven. *See Hudson Shop Notes for Camshaft Removal & Special Bearing Installation (Cutout must be made in rear bearing on 1940 cars).*
Journal Diameters #1, 2"; #2, 1 31/32"; #3 (1939) 1½"; #3 (1940), 1 9/16".
Bearings—Babbitt type. **Clearance**—.0025".
►**Replacement Camshaft for 1940 Engines:** Original 159505 camshaft superseded by new re-designed camshaft with new cam contours.
►*CAUTION*—When above shaft installed, **Tappet Clearance and Valve Timing changed.** See Valve Timing (following) or *see Replacement Camshaft in Hudson Shop Notes.*
End Thrust:—Thrust washer between camshaft flange and crankcase. Spring loaded button in camshaft hub bears against thrust plate on gear cover.
Timing Gears:—Crankshaft gear cast-iron. Camshaft gear GE or Continental Diamond Fibre Bakelite.
1941 Type Timing Gear Set can be installed on these models. Refer to Hudson Shop Notes for data.
Camshaft Setting:—Mesh marked crankshaft gear tooth between two marked teeth on camshaft gear.

VALVES:—	Head Diameter	Stem Diameter	Length
All valves	1⅜"	11/32"	5 11/32"
	Seat Angle	**Lift**	**Stem Clearance**
Intake	45°	11/32"	.0025"
Exhaust	45°	11/32"	.004"

Valve Guides:—2 9/16" long. Install with top 1 1/16" below top of block and finish ream to size.
Valve Springs:—Dampeners (originally used on bottom of spgs.) should be omitted when valves serviced.

Free length 2 17/64".	Spring Pressure	Length
Valve Closed	40 lbs.	2"
Valve Open	80 lbs.	1 21/32"

NOTE—Replace if pressure below 34 lbs. at 2".
Valve Lifters:—Roller shoe type, fitted in removable guides. *See Hudson Shop Notes for lifter removal.*

VALVE TIMING

►**Tappet Clearance:** *CAUTION*—2 settings used:
1)—.006" **Intake, .008" Exhaust, hot & idling for** All 1939 Engines (& 1940 with Original Camshaft).
2)—.010" **Intake, .012" Exhaust, hot & idling for** All 1940 Engines with Replacement Camshaft.
These engines should carry decalcomania on valve cover specifying this .010" & .012" setting.
Valve Timing:—See Camshaft Setting above.
►*1940 Valve Timing Change:* **On 1940 engines when new replacement camshaft installed, intake opening point advanced to 27°30' BTDC.** or 10 flywheel teeth ahead of 'UDC. 1-6/' flywheel mark.

ORIGINAL VALVE TIMING SPECIFICATIONS
►for All 1939 Engines (& 1940 with Original Camshaft)
Intake Valves—Open 10°40' BTDC. Close 60° ALDC.
Exhaust Valves—Open 50° BLDC. Close 18°44' ATDC.
These figures correct with .010" tappet clearance.

NEW VALVE TIMING SPECIFICATIONS
►for 1940 Engines with new Replacement Camshaft
Intake—Open 27°30' BTDC. Close 68°10' ALDC.
Exhaust—Open 51°50' BLDC. Close 32°10' ATDC.
These figures correct with .010" tappet clearance.

Valve Timing Check (All 1939 Engines; 1940 with original camshaft)—With .010" tappet clearance #1 intake valve should open with piston 10°40' or .0441" BTDC. when point on flywheel approx. 3.95 teeth before 'UDC.1-6/' lines up with indicator in hole above starter. Reset tappet cl. .006" Hot.

(1940 Engines with new replacement camshaft)—With .010" tappet clearance #1 intake valve should open with piston 27°30' BTDC. when point on flywheel 10 teeth before 'UDC. 1-6/' lines up with indicator in hole above starter.

LUBRICATION

LUBRICATION:—Duo-flo (pressure & positive splash).
Oil Pump:—Oscillating plunger type, gear driven by camshaft. Mounted on right side of crankcase.
Normal Oil Pressure—3 lbs. (no gauge).
Oil Pressure Regulator:—Located on right side of crankcase at rear. Opens at 3 lbs. Not adjustable.
Oil Pressure Indicator:—Teleflash Oil Pressure indicator. *For data, refer to Electrical Equipment Index.*
Checking Oiling System:—*See Hudson Shop Notes.*
Crankcase Capacity:—4½ qts. (refill), 5½ (dry). NOTE—Whenever pan installed, place 1½ qts. in upper tray, then 4 qts. through filler.

COOLING

Capacity: 12½ qts. (1939), 13 qts. (1940).
See Hudson Shop Notes for radiator core removal.
Water Pump:—Centrifugal, belt driven, packless type.
See Water Pump Section for complete data.
Removal—Drain water, remove fan belt, disconnect pump hoses, remove mounting bolts and lift off
Thermostat:—Fulton. In cylinder head water outlet.
Setting—Starts to open 150-155°F. Fully open 185°.
Temperature Gauge:—King-Seeley Electric K-S Nos.
Dash Unit—7170 (1939 Pass. Cars), 7096 (1939 Comml.), 7121 (1939 Sta. Wagon), 8120 (1940 Early—White Lines), 7755 (1940 Later—White Diamonds).
Engine Unit—No. 7000 (All Models).
See Miscellaneous Section for complete data.

CLUTCH

CLUTCH:—**Own make.** Single plate, cork insert type operating in oil. **Overdrive Cars**—equipped with heavier clutch housing and larger (10") clutch.
See Clutch Section for complete data.
Driven Member—Cork Insert type (operates in oil).

	Inside—Diameter	Outside	No. Corks
1939	5⅜"	8 23/32"	90
1940 Std.	5⅜"	9"	90
1940 With OD	6½"	10"	108

Corks are .244-.255" thick (1939), .077" thick (1940).
Pedal Adjustment:—1½" free travel. Adjust yoke on lower end of pedal connector link. Check Automatic Clutch Control & Hill-holder (if used).
Clutch Oil Servicing:—*See Hudson Shop Notes.*
Removal:—Remove transmission (see below), drain clutch oil, take out mounting screws in clutch cover rim, remove clutch assembly from below.
Automatic Clutch Control:—Electric type. Optl.
See Clutch Section for complete data.

TRANSMISSION

TRANSMISSION:—**Own Make.** Constant-mesh, helical gear (second & high), sliding spur (low & reverse).
See Transmission Section for complete data.
Transmission Control:—Hudson 'Handy-Shift' type.
See Transmission Section for complete data.
Removal (1939): Disconnect the "Handy-Shift" at transmission and remove Automatic Clutch Control unit (if used)—see articles in Clutch and Transmission Sections for adjustment of these units when re-installed. On cars with standard shift, remove transmission cover (install temporary cover to keep transmission clean until removed from car). Disconnect speedometer cable and front universal. Remove transmission side bumpers. Raise front end of car, support engine at rear. Remove flywheel guard, rear engine mounting bolts, clutch cross shaft (2 screws in bracket), shift engine to right. Take out clutch housing-to-engine support bolts.
Removal (1940): Remove front cushion and push seat back, remove accelerator pedal. Remove floor mat and transmission hole cover. Disconnect front universal joint. Remove clutch pedal return spring, assist spring, and cross-shaft. Release transmission side bumpers and rods, disconnect handy-shift controls at transmission, remove speedometer cable. Raise front end of car, remove lower flywheel guard and engine rear mounting bolts, raise rear end of engine off frame. Remove clutch housing-to-engine mounting bolts, pull transmission back and lift out. NOTE—Transmission can be taken out without disturbing clutch housing by taking out transmission-to-clutch housing bolts.
Installation Note—Wrap one strand of soft wire around throw-out bearing oil seal to prevent leather curling over when transmission installed. Remove wire after transmission installed.

OVERDRIVE

Overdrive:—Warner Model AS13-R6 with electrical 'Kick-down' control optional.
See Transmission Section for complete data.
Overdrive Transmission Removal—Same as Std. Transmission (above) except overdrive solenoid wires and control cable must also be disconnected.
Overdrive Solenoid—Delco-Remy No. 1569.
Throttle Control Switch—R-B-M Model 6013. Adjust so contact washer on accelerator linkage just contacts switch plunger with throttle wide open.
Control Relay—Auto-Lite Model HR-4201.

UNIVERSALS

Spicer. Needle Bearing type. Model Nos. as follows: Front—1271-01X (1939 Early Cars), 1261-01X (1939 Later Cars), 1261-101 (1940 Std.), 1271-101 (1940 with Overdrive).
Rear—1278-01X (1939 Early Cars), 1268-01X (1939 Later Cars), 1268-101 (1940 Std.), 1278-101 (1940 with overdrive).
See Universals Section for complete data.

REAR AXLE

REAR AXLE:—**Own Make.** Semi-floating spiral bevel gear & Hotchkiss drive. *See Rear Axle Section.*
Ratio (1939)—4 1/9-1 (Std. Pass Cars, Optl. Business Cars), 4 5/9-1 (Std. Business, Optl. Pass. Cars)
Ratio (1940)—4 5/9-1 (Std.—Optl. with Overdrive), 4⅞-1 (Std. with Overdrive, Optl. without Overdrive), 4 1/9-1 (Optl. all models).
Backlash—.0005-.003". Screw adjustment.
Removal:—Disconnect drive shaft at rear universal. Remove axle shafts (see below) and capscrews on carrier flange. Pull carrier assembly out.
Axle Shaft Removal:—Remove wheel and hub (use screw type puller only), remove 4 nuts on bearing cap bolts, push bolts out of backing plate, remove cap (without disturbing brake link), remove shims, pull shaft & wheel bearing (do not drag on seal).
Wheel Bearing Adjustment:—Controlled by shims under bearing cap. To adjust, remove bearing cap (see Removal directions above), add or remove shims equally at both wheels. **Endplay**—.002-.004".

SHOCK ABSORBERS

Monroe. Direct Acting, Hydraulic type. Rear Shock Absorbers Optl. on 1939 Business Cars (not Std.).
Front—Monroe No. 156778 (1939), 160101 (1940—Std. Springs), 160102 (1940—Heavy Duty Springs).
Rear—Monroe No. 157800 (1939), 160107 (1940—Std. Springs), 160108 (1940—Heavy Duty Springs).
See Shock Absorber Section for complete data.

FRONT SUSPENSION

1939 MODELS

Front Axle: Conventional "I" beam section axle with Elliott type ends, semi-elliptic springs.
Autopoise Control—*See Hudson Shop Notes.*
Kingpin Inclination—7° crosswise. *See Hudson Shop Notes for Kingpin Thrust Bearing servicing data.*
Caster—1-2° (equal for both wheels within ½°). Adjust with wedge shims between axle and spring.
Camber—1-1½°. Bend axle cold for minor changes.
Toe-In—0-⅛". Measure on inside of rims 10" above ground. Adjust by turning tie rod.
Steering Geometry—Inner Wheel 20°. Outer 17¼°.

FRONT SUSPENSION

1940 MODELS

Front Suspension (1940): Independent, linked parallelogram type with coil springs & Autopoise control.
See Front Suspension Section for complete data.
Kingpin Inclination—4°36' crosswise.
Caster—0° (Neg. ¼° to Pos. ¼°). Adjustable.
Camber—Positive ¼° to Pos. ¾°. Adjustable.
Toe In—0-1/16". Adjust each tube equally.
Steering Geometry—Inner wheel 24°. Outer 20°50'.

STEERING GEAR

Steering Gear: Gemmer Model 305 Worm-and-Roller with "push-pull" adjustments. NOTE—1940 Cars have new Center Point Steering Linkage (for Suspension) *See Steering Gear Section for complete data.*

BRAKES

1939 MODELS

BRAKES:—**Service**—Bendix Hydraulic, duo-servo, Double Anchor (90 pass. cars, Utility Coach and Coupe), Single Anchor (90 others, 98) with mechanical follow-up (pedal linked to hand brake cables). Hand lever applies rear service brakes.
See Brake Section for complete data.
Drum—Alloy steel. Diameter 9 1/16"(90 pass. cars, Utility Coach & Coupe), 10 1/16" (90 others, 98).
Lining—Moulded (primary), woven (secondary). Thickness 7/32". Width 1¾". Length per wheel 19" (90 pass., Util. Coach & Coupe), 22⅛" (Others).
See Hudson Shop Notes for Brake Lining change.
Clearance—.010" at heel and toe of each shoe.

Hand Brake:—See Service Brakes above.

Hill-Holder: Optional. *See article in Brake Section..*

BRAKES

1940 MODELS

BRAKES (40T,40P):—**Service**—Bendix hydraulic, Double Anchor, duo-servo type with Mechanical Follow-up. Hand lever applies rear service brakes.
See Brake Section for complete data.
Drums—Alloy steel. Diameter—9 1/16".
Lining—Moulded (primary), woven (secondary). Width 1¾". Thickness 7/32". Length per wheel 19".
Clearance—.010" at heel and toe of each shoe.

Hand Brake:—See Service Brakes above.

Hill-Holder: Optional. *See article in Brake Section..*

BRAKES (40 BUSINESS CARS): Service—Same as Model 40 (above) except for: **Drums**—Diam. 10 1/16". **Lining**—Length per wheel 22⅛".

ENGINE HOOD (BONNET) LOCK & FENDER PLATE REMOVAL:—*See Hudson Shop Notes.*

MODEL IDENTIFICATION

SERIAL NUMBER: Stamped on plate on right front door hinge pillar post First Nos. as follows:

	1939	1940
Pacemaker Six	9132576	
Six	92101	41101
Country Club Six	93101	43101
Business Cars	98101	48101

ENGINE NUMBER:—Same as Serial No. On top of cylinder block between #1 and 2 exhaust flanges.

TUNE-UP

COMPRESSION PRESSURE: 120 lbs at 125 RPM
VACUUM READING: Steady 18-21" idling at 7 MPH.
FIRING ORDER: 1-5-3-6-2-4. See diagram.
SPARK PLUGS: Champion Type J-8. 14 mm. Metric. Gaps—.032"
IGNITION: See Coil, Condenser, and Distributor.
Breaker Gap—.020" **Cam Angle** 35° (closed).
Automatic & Vacuum Advance—*See Distributor.*
IGNITION TIMING: See Ignition Timing.
Std. Setting—At TDC. with flywheel mark "UDC. 1-6/" at indicator in inspection hole in left front face of rear motor support
CARBURETION: See Carburetor & Carb. Equipment.
Idle Setting (Single Carb.)—Idle screw ¼-1 turn (437-S, 438-S), ¾-1½ turn (454-S) open. Idle speed 7 MPH.
Idle Setting (Dual Carb).—Both idle screws ¼-1 turn (430-S), ¼-1¼ turn (430-SV, 461-S) open. Idle speed 7 MPH.
Float Level (437-S, 438-S)—⅜" from gasket seat on cover to top of float at free end.
Float Level (454-S)—⅜" from top of machined projection on bowl cover to top of soldered seam on free end of float.
Float Level (430-S, 430-SV, 461-S)—3/32" from gasket seat on cover to top of float at each end.
Accelerating Pump (Single Carb.)—Lower hole Normal. Inner hole (Summer), Outer hole (Winter).
Accelerating Pump (Dual Carb.)—Outer hole Normal. Inner hole (min stroke) when required.
Fuel Pump Pressure: 3 lbs. max. (98, 48), 4½ (Others).
MANIFOLD HEAT CONTROL: (91, 92, 98, 48)—Manual adjustment type on center of manifold behind carburetor. 1939 type should be adjusted for seasonal requirements as follows:
Setting (91, 92, 98)—Arrow on valve should be lined up with "W" on manifold for winter temperatures, "S" for summer temperatures. For high speed driving in extremely hot weather, line arrow up with boss ahead of "S" mark. To adjust, loosen two nuts on valve bar, turn valve by hand, tighten nuts.
Setting (48)—Valve set at factory with pointer toward rear in "W" position. Correct for all seasons
(Models 93, 41, 43)—Automatic thermostatic coil type. No adjustment. See that valve operates freely.
VALVES: See Valve Timing.
Tappet Clearance: *CAUTION*—2 settings used:
1)—.006" **Intake, .008" Exhaust, hot & idling for** All 1939 Engines (& 1940 with Original Camshaft).
2)—.010" **Intake, .012" Exhaust, hot & idling for** All 1940 Engines with Replacement Camshaft.
These engines should carry decalcomania on valve cover specifying this .010" & .012" setting.
See Hudson Shop Notes for Replacement Camshaft data.
STARTING: See Battery, Starter, Generator, Regulator.

IGNITION

IGNITION SWITCH: Mitchellock. Model 24-B. Type 8062 (1939), 8273 (1940). Coil connection armored.
Ignition Lock—Briggs & Stratton B & S No. 50184.
Key Series—H601 to H1100. **Groove**—No. 1.
COIL: Auto-Lite Model IG-4656 (1939), IG-4662 (1940). Service Coil (less Switch & Cable) IG-3224JS.
Ignition Current—2.5 amperes idling, 4.5 stopped.
CONDENSER: Auto-Lite Part No. IGW-3075A (IGW-4125A, 4126A, 4201A, 4202A), IGW-3075C (IGW-4203).
Capacity—.20-.25 microfarad.
DISTRIBUTOR: Auto-Lite Model IGW-4202A (91—see Note), IGW-4126A (92, 93 before No. 5146), IGW-4201A (91, 93 No. 5146 Up), IGW-4125A (98 before No. 6493—see Note), IGW-4202A (98 No. 6493 Up—see Note), IGW-4203 (41, 43, 48). Single breaker, 6 lobe cam, full automatic advance type. 1940 distributor (IGW-4203) has vacuum spark control.
Model 91, 98 Note—Has resistor for primary circuit (used only with low-rate generator without regulator). Resistor must be removed or IGW-4201A distributor installed when regulator used.
1940 Note—Distributor mounted at top of cylinder block at rear and driven through offset tongue-and-slot coupling by intermediate shaft. Rotation is now counter-clockwise (reversed from 1939 models).
Breaker Gap—.020".
Cam Angle or Dwell—35° closed, 25° open (dist.).
Breaker Arm Spring Tension—17-20 ounces.
Rotation—Clockwise (for 1939 cars), counter-clockwise (1940), viewed from above.

Automatic Advance

Distributor Degrees	Distributor R.P.M.	Engine Degrees	Engine R.P.M.
Start	300	0	600
3	400	6	800
7	825	14	1650
11	1255	22	2510
14	1580	28	3160

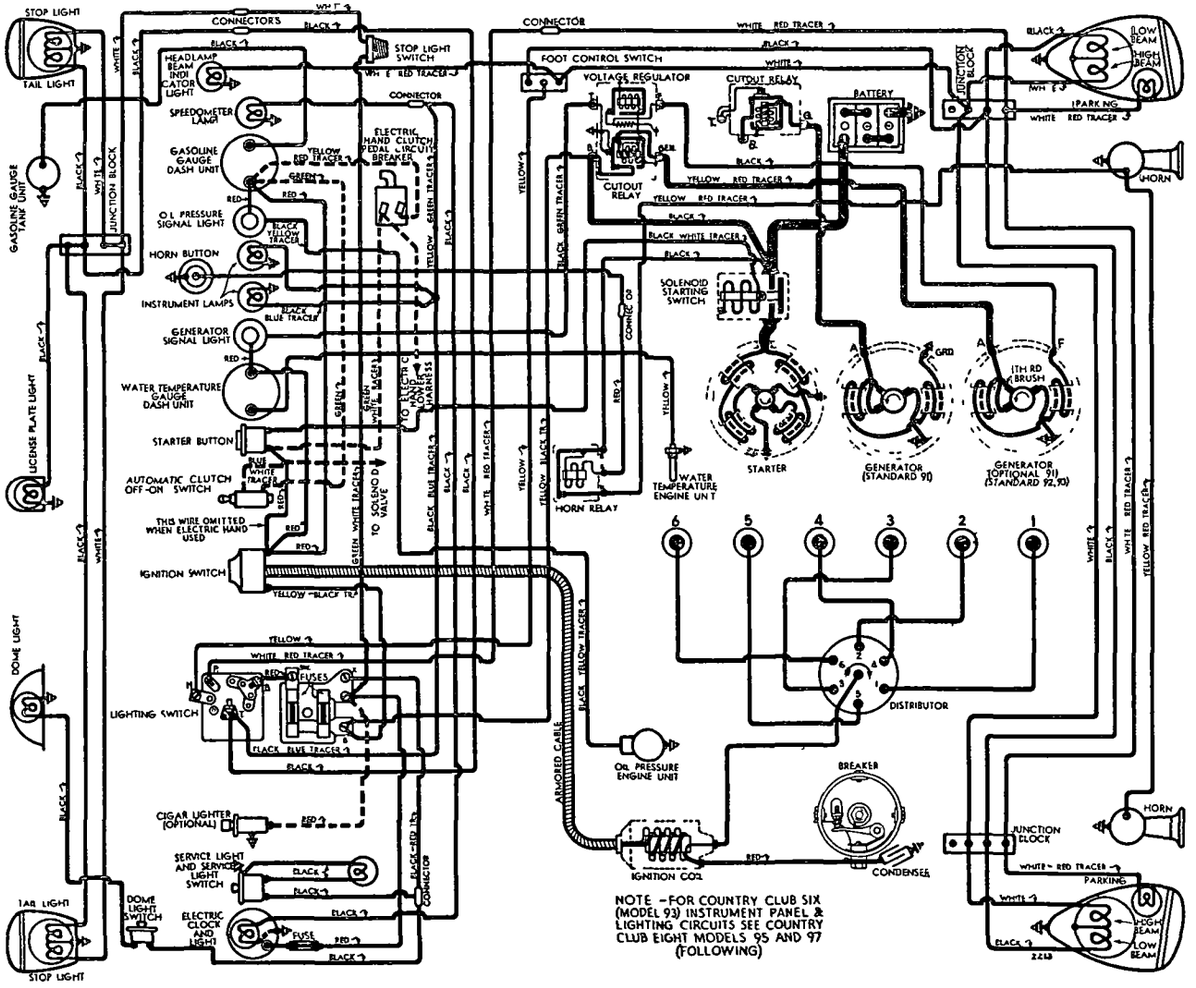

1939 M DELS

Vacuum Spark Control (IGW-4203)—On distributor hold-down plate and linked to quadrant scale on side of distributor. Provides additional advance at speeds above idling (vacuum port in carburetor above throttle) except when engine is accelerated or operated with wide open throttle when spark is retarded by return spring within unit.

Vacuum Advance

Distr. Degrees	Eng. Degrees	Vacuum (" of HG)
Start	0°	5⅞"
4°	8°	9¼"
7 5°	15°	11¼"

Fuel Compensator—Manual adjustment for octane rating of fuel used. See Ignition Timing.

Removal (1939): Distributor mounted on right side of crankcase. To remove, take out hold-down screw in advance arm.

Removal (1940): Distributor mounted at top rear of cylinder block. To remove, disconnect vacuum line, take out cylinder head stud nuts on hold-down plate.

IGNITION TIMING

IGNITION TIMING:—Initial setting (for 70 octane fuel). See Fuel Compensator Setting following.

	Flywheel Degrees	Piston Position
All engines	0° at TDC	.0000" TDC

Timing—With #1 piston on compression, turn engine over until piston reaches top dead center, when flywheel mark 'UDC.1-6/' lines up with pointer in left front face of rear motor support above starter. Loosen advance diaphragm screw (at rear end of link), rotate distributor counter-clockwise to limit of slot, then slowly rotate clockwise until contacts begin to open, tighten diaphragm screw securely Check Fuel Compensator Setting below.

Timing (Using Synchroscope)—Recommended by manufacturer. Mark flywheel with white chalk or paint, connect at #6 spark plug. Idle engine and adjust distributor as directed above.

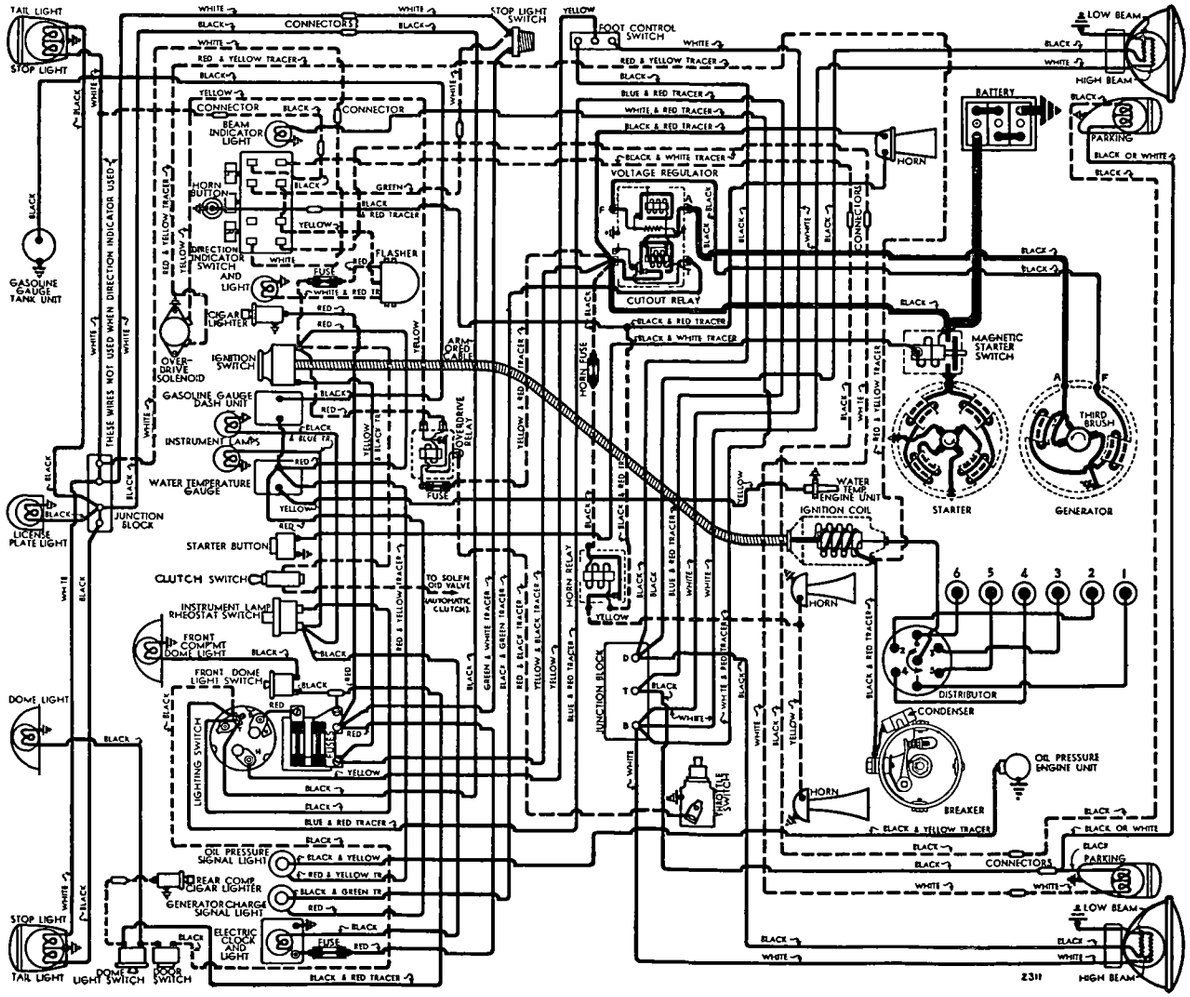

1940 MODELS (INCLUDIN 40, 40P, & 40T)

Fuel Compensator Setting—Road test car with engine at normal operating temperature. With car running at 7 MPH slight ping should occur between 10-15 MPH when accelerating with wide open throttle. To adjust, loosen advance diaphragm screw, rotate distributor one graduation on quadrant scale clockwise (if no ping), counter-clockwise (if ping too severe), repeat test. Final setting not more than ¾" before 'UDC.1-6/' mark.

CARBURETOR

SINGLE BARREL

(Model 91, 92—First Cars, 98): Carter Model W1 Vacumeter Type 438-S (Std.), 437-S (Cars with Automatic Clutch Control). 1¼" Single barrel downdraft types. NOTE—Model 92 (after No. 31834) fitted with Carter WDO dual carburetor.

(Model 48)—Carter Model WA-1 Type 454-S. 1¼" single barrel downdraft type with Fast Idle and Automatic Choke.

For complete data, refer to Carburetor Index.

Idle Adjustment—With engine warm and running at slow idle speed (choke valve wide open, fast idle inoperative), set throttle stopscrew for 7 MPH idle speed. Adjust idle adjusting screw until engine fires smoothly—idle screw approximately ¼-1 turn open (437-S, 438-S), ¾-1½ turn open (454-S)—turn screw in for leaner mixture. Readjust idle speed.

Accelerating Pump Setting—Pump arm has 3 holes for pump link. Set as follows:

Lower Hole (med. stroke)—Normal setting.

Inner Hole (min.)—Hot weather, high-test fuel.

Upper Hole (max.)—Cold weather, low-test fuel.

Float Level (437-S, 438-S)—⅜" from gasket seat on cover to top of float at free end (invert to check).

Float Level (454-S)—⅜" from top of machined projection on bowl cover to top of soldered seam on free end of float (invert to check).

Throttle Cracker (437-S, 438-S only):—Connecting linkage between choke valve and throttle lever. Opens throttle .036-.040" with choke valve closed.

Fast Idle (454-S): Integral with carburetor.

For complete data, refer to Carburetion Equip. Index.

Setting—Adjust by bending connecting link offset for ⅝" choke valve opening with stopscrew against (not on) first step of fast idle cam.

NOTE—With choke valve fully closed and pin on fast idle cam at bottom of slot in fast idle link, clearance between top of fast idle cam (behind link) and trip lever should be .010". To adjust, bend trip lever stop (on engine side of link).

Automatic Choke (454-S): Carter Climatic Control (Single Carburetors).

See Carburetion Equipment Section for complete data.

Setting—Centered (at index mark).

CARBURETOR

DUAL (DOUBLE BARREL)

(Model 92—After No. 31834, 93, 41, 43): Carter Model WDO Type 430-S (1939), 430-SV (1940 before Eng. No. 3116), 461-S (1940 after Eng. No. 3116). 1" Dual (double barrel) downdraft types with Fast Idle and Automatic Choke.

For complete data, refer to Carburetor Index.

Idle Adjustment—With engine warm and running at slow idle speed (Fast Idle and Automatic Choke inoperative), set throttle stopscrew to idle engine at

C NTINUED ON NEXT PAGE

CONTINUED FROM PRECEDING PAGE

7 MPH. Turn each idle adjusting screw (in succession) in until engine begins to miss, then turn screw out until engine begins to roll, finally turn screw in until engine fires smoothly. Final setting of both screws should be ¼-1 turn open (1939), ¼-1¼ turn open (1940). Readjust for 7 MPH idle speed.

Accelerating Pump Setting—Pump lever (under dust cover on top of bowl) has two holes for pump link engagement. Adjust as follows:
Outer Hole (max. stroke)—Normal setting.
Inner Hole (min. stroke)—If less charge required.

Float Level—3/32" from gasket seat on cover to top of float at each end (invert to check).

Fast Idle (430-S, 430-SV, 461-S): Integral with carburetor.
For complete data, refer to Carburetor Index.
Setting—Adjust fast idle screw so that throttle opening is .018" with choke valve tightly closed.

Automatic Choke: Carter Climatic Control (Dual Carburetors).
For complete data, refer to Carburetion Equip. Index.
Setting—Center thermostatic coil housing.

CARB. EQUIPMENT

Air Cleaner: AC No. 1528161 (Std. 91, 92, 93, 41, 43), 1528160 (91, 92, 93 with Electric Hand), 1528159 (Std. 98, 48), 1523937 (98 with Electric Hand), Oil-wetted type. United heavy duty Oil-bath type Optl.

Fuel Pump: AC Type AK, No. 1523289 (Std. 91, 92, 93, 41, 43); Type AF, No. 1523753 (Std. 98, 48). Diaphragm type fuel pump. Combination Fuel-and-Vacuum Pump No. 1523297 (91, 92, 93), 1523937 (98) Optl.
For complete data, refer to Carburetion Equip. Index.

Gasoline Gauge:—King-Seeley Electric. K-S Nos. **Dash Unit**—No. 6783 (91, 92), 7415 (93), 7175 (98 Pass. Cars), 7098 (98 Comml.), 8118 (1940 Early—White Lines), 7752 (1940 Later—White Diamonds). **Tank Unit**—No. 5835 (1939 First), 7500 (1939 Later & Service Unit), 7550 (1940 All Models).
For complete data, refer to Carburetion Equip. Index.

BATTERY

BATTERY:—National, Type HT-17. 6 volt, 17 plate, 96 ampere hour capacity (20 hour rate).

Starting Capacity—120 amperes for 20 minutes.

Zero Capacity—300 amperes for 3.5 minutes. Five second voltage—4.24 volts.

Grounded Terminal—Positive (+) grounded to frame. **Engine Ground**—Strap connector from rear motor support to frame.

Location—Left side of engine comp't. (under hood).

STARTER

Auto-Lite Model MAB-4075 (92, 93 Early), MAB-4100 (91 All; 92, 93 Later), MAJ-4057 (98 Early), MAJ-4061 (98 Later Cars), MZ-4079 or 4079A (1940 All Models).

Armature—Auto-Lite MAB-2113 (All MAB- Starters), MAJ-2062 (All MAJ- Starters), MZ-2138 (All MZ- Starters).

Drive—Inboard Barrel Type Bendix Drives Nos. A-1673 (MAB-4075, MAJ-4057), No. A-1684 (All others).
Rotation—Counter-clockwise at commutator end.
Brush Spring Tension—42-53 ozs. (new brushes).
Cranking Engine—150 RPM., 125 amperes, 5.4 volts.

Performance Data
MAJ-4057, 4061

Torque	R.P.M.	Volts	Amperes
0 ft. lbs.	4100	5.5	67
.3 "	2500	5.5	100
2.25 "	1450	5.0	200
4.6 "	960	4.5	300
7.3 "	575	4.0	400
10.3 "	225	3.5	500
12.0 "	Lock	3.0	550
17.0 "	Lock	4.0	750

MAB-4075, 4100

0 ft. lbs.	3700	5.5	60
3.4 "	1100	5.0	200
6.6 "	695	4.5	300
10.15 "	420	4.0	400
15.8 "	Lock	3.0	582
22.5 "	Lock	4.0	775

MZ-4079, 4079A

0 ft. lbs.	4300	5.5	70
.65 " "	2500	5.5	100
2.55 " "	1325	5.0	200
4.95 " "	750	4.5	300
7.65 " "	220	4.0	400
7.8 " "	Lock	3.0	420
11.8 " "	Lock	4.0	560

Removal:—Flange (new heavier casting) mounted on left front face of rear motor support. To remove, take out flange mounting screws.

Starting Switch (MAB-4075, 4100): Auto-Lite Model SS-4001. Magnetic type. Mounted on starter and controlled by pushbutton on instrument panel. Operative only with ignition "on" and clutch disengaged on cars with Electric Hand.
(MAJ-4057, 4061)—Auto-Lite Model SW-4010. Manual type. Mounted on starter and operated by button directly below steering column.
(MZ-4079, 4079A)—R-B-M Model 5607. Magnetic type. On starter, controlled by pushbutton on instrument panel Douglas #5751. NOTE—Switch is new type.

GENERATOR

MODELS 91 & 98

Auto-Lite Model GDF-4803A-1 (91 First 15000 Cars), GDS-4803A-1 (91 After 15000 Cars, 98 Optl.), GBM-4609A (98 Std.). Third brush control type. Used with Cutout Relay. Ventilated by fan on drive pulley.
Armature—Auto-Lite No. GBM-2065 (GBM-4609A), GDF-2006 (GDF-4803A-1 & GDS-4803A-1).
Charging Rate Adjustment—Remove commutator cover band, shift third brush by hand counter-clockwise to increase, or clockwise to decrease charging rate. Brush held in position by friction.
Maximum Charging Rate—As given in table below.

Performance Data—GBM-4609A

Cold			Hot		
Amperes	Volts	R.P.M.	Amperes	Volts	R.P.M.
0	6.4	760	0	6.4	800
4	6.8	920	4	6.9	960
8	7.25	1050	8	7.35	1150
12	7.65	1240	12	7.8	1360
16	8.1	1450	16	8.3	1750
20	8.5	2150	18	8.5	2450

Performance Data—GDF-4803A-1

0	6.4	860	0	6.4	1020
4	6.75	1200	4	6.8	1260
8	7.1	1450	8	7.15	1500
12	7.45	1680	12	7.55	1740
16	7.8	2020	16	7.9	2240
18	8.0	2800	17	8.0	2800

Performance Data—GDS-4803A-1

Cold			Hot		
Amperes	Volts.	R.P.M'	Amperes	Volts	R.P.M.
0	6.4	800	0	6.4	820
4	6.75	1160	4	6.8	1200
8	7.05	1325	8	7.1	1380
12	7.35	1520	12	7.45	1600
16	7.7	1775	16	7.8	1960
20	8.0	2550	18.5	8.0	2600

Rotation—Counter-clockwise at commutator end.
Brush Spring Tension—50-60 ozs. (GBM- Gen.), 53 ozs. (GDF-, GDS- Gen.) for new brushes.
Field Current—3.8-4.2 amperes (GBM- Gen.), 1.90-2.10 amperes (GDF- Gen.), 1.65-1.82 amperes (GDS-Gen.) at 6.0 volts.
Motoring Current—5.7-6.3 amperes (GBM- Gen.), 4.6-5.2 amperes (GDF- Gen.), 4.8-5.0 amperes (GDS- Gen.) at 6.0 volts.

Removal:—Pivot mounted at left front of engine. To remove, take out pivot and clamp bolts.

Belt Adjustment:—Swing generator out until possible belt deflection midway between generator and fan pulleys is ¾" (measure with straightedge).

GENERATOR

MODELS 92, 93, 41, 43, 48

Auto-Lite Model GDS-4801A (92,93,48 Std.; 98 Optl.), GEC-4801A (41, 43 Std.). Third brush control with external vibrating voltage regulation. Ventilated by fan on drive pulley.
Armature—GDF-2006F (GDS), GDZ-2006F (GEC).
Maximum Charging Rate—GDS—32-34 amperes (cold), 8.0 volts, 2900 RPM or approx. 35 MPH. GEC—39-44 amperes (cold), 8.0 volts, 3350 RPM or approx. 43 MPH. Actual charging rate controlled by Voltage Regulator and dependent on battery condition. See Regulator. To check output, ground generator "F" terminal (to eliminate regulator).
Charging Rate Adjustment—See Regulator data. Third brush setting: GDS—1 commutator bar minus 1 mica strip minimum, 1 commutator bar maximum from insulated (nearest) main brush. GEC—1 commutator bar Min., 1 comm. bar plus 1 mica strip Max. Setting adjustable by shifting third brush.

Performance Data—GDS-4801A

Cold			Hot		
Amperes	Volts	R.P.M.	Amperes	Volts	R.P.M.
0	6.4	920	0	6.4	960
4	6.6	1050	4	6.65	1120
8	6.8	1175	8	6.9	1280
12	7.0	1300	12	7.1	1430
16	7.2	1450	16	7.35	1640
20	7.4	1600	20	7.6	1900
24	7.6	1820	24	7.8	2320
28	7.8	2075	27.5	8.0	3400
33	8.0	2900			

Performance Data—GEC-4801A

0	6.4	960	0	6.4	1040
4	6.55	1060	4	6.6	1140
8	6.7	1160	8	6.8	1280
12	6.85	1280	12	6.95	1440
16	7.0	1400	16	7.15	1600
20	7.15	1550	20	7.35	1820
24	7.25	1700	24	7.55	2090
28	7.5	1890	28	7.75	2440
32	7.65	2100	32	7.9	3000
36	7.8	2375	34	8.0	3800
41	8.0	3350			

Rotation—Counter-clockwise at commutator end.
Brush Spring Tension—53 ozs. max. (new brushes).
Field Current—1.65-1.82 amperes (GDS), 1.60-1.78 amperes (GEC) at 6.0 volts.

Motoring Current—5.10-5.45 (GDS), 4.85-5.4 (GEC) amperes at 6.0 volts.
Removal & Belt Adjustment: Same as 91 & 98 above.

GENERATOR

SPECIAL EQUIPMENT

SPECIAL GENERATORS:—Auto-Lite GEG-4801A, GEA-4803B, GEB-4802B (Police etc.). Used with Regulator Models VRP-4008A (GEG Gen.), VRP-4008B GEA Gen.), VRP-4008C (GEB Gen.). *Refer to 1940 Hudson Eight article (following) for complete data.*

SPECIAL GENERATORS:—Other Makes—*Refer to Electrical Equipment Index for 'Special Generators' for data on special Generators and Regulators which may be found installed on these models.*

CUTOUT RELAY

Auto-Lite Model CBA-4003 (Used with GBM-4609A, GDF-4803A-1, GDS-4803A-1 Gen.). Mounted on engine side of dash. Relay has extra set of contacts for Generator "Teleflash" signal Charging Indicator *For complete data, refer to Electrical Equipment Index.*
Cuts In—6.75-7.5 volts.
Cuts Out—1.5-4.5 ampere discharge current (after charging at 16 amperes).
Contact Gap—.015-.045" with upper ground contacts closed (upper contacts must open when main contacts close).
Air Gap—.010-.030" with contacts closed.

REGULATOR

Auto-Lite Model VRD-4008A (1939), VRD-4008-B (1940 First Cars), VRR-4001A (1940 Later Cars). Used with GDS-4801A & GEC-4801A Gen. Cutout Relay and vibrating Voltage Regulator in case on dash. Cutout Relay has special upper contacts for Generator Teleflash Signal control.
For complete data, refer to Electrical Equipment Index.
NOTE—Regulator case cover is sealed. Serviced on exchange basis if seals not broken.

Cutout Relay

Cuts In—6.4-7.0 volts (VRD), 6.4-6.6 volts (VRR) 825 RPM., 9.4 MPH.
Cuts Out—.5-3.0 amperes (before Regulator Serial No. 2T-000001), 1.5-4.5 amperes (after No. 2T-000001) (VRD); 4.2-4.8 volts with approximately 4-6 amperes discharge current (VRR).
Contact Gap—.015" minimum with ground contacts closed (must open when main contacts close).
Air Gap—.034-.038" (VRD), .031-.034" (VRR), at hinge end of core (contacts open, ground contacts closed).

Voltage Regulator

Setting—7.1-7.4 volts at 110° F. (all models).
Checking (without breaking seal) & Adjustment—*See Electrical Equipment Section.*
Contact Gap—.010-.020" (VRD), .012" Min. (VRR) (armature against stop pin).
Air Gap—.0595-.0625" (VRD), .048-.052" (VRR) with contacts just opening.

LIGHTING

Headlamps—Hall Pre-focused type (1939), Hall "Sealed Beam" type (1940).
For complete data, refer to Electrical Equipment Index.
Headlamp Adjustment—Aim upper beam of each headlamp straight ahead with hot spot centered on horizontal line 3" below lamp center height.
Beam Indicator—Red pilot bulb on speedometer dial. Lighted with Country (upper) beam in use.
Direction Indicator—Standard equipment on 43, Optl. on 40, 41, 48. *See Electrical Equipment Section.*

Switches

Lighting—R-B-MNo.1725(1939), Cole-Hersee(1940).
Beam Selector—Douglas or R-B-M No. 1076 (1939), R-B-M No. 2467 (1940).
Instrument (43 only)—R-B-M Model 5203.

MISC. ELECTRICAL

SIGNAL LIGHTS:—Generator Charge and Oil Pressure Indicators. Hudson Teleflash Electric type.
For complete data, refer to Electrical Equipment Index.
FUSES:—**Lighting**—20 ampere. Lower fuse on fuse block on lower edge of instrument panel to right of steering column. **Accessory**—20 amperes. Top fuse on fuse block. NOTE—Silver-plated fuses used.
Twin Horns—30 ampere on block on engine dash.
Transmission Overdrive Control—20 amp. On Relay.
Direction Indicator—10 ampere. In case on back of instrument panel near speedometer.
Electric Clock—2 ampere on back of clock.
HORNS: Single—Schwarze Type 42 (98 before #7418), EX3099 (98 After #7418), Schwarze Electric type (48)
Dual Horns—Vibrator type twin horns operated by relay. Delco-Remy K-33 (92), Sparton (93, 41, 43).
Horn Relay: R-B-M Model 4751 (1939), 4790 (1940).
Contacts Close—3.5-4.5 volts. **Current Draw** ¾ amp.

ENGINE

ENGINE SPECIFICATIONS:—6 cylinder, 'L' head type.
Bore—3". **Stroke**—5".
Displacement—212 cubic inches. **Rated HP** 21.6.
Developed Horsepower—For each model as follows:
91, 92, 98 (Single Carb.) .....96 HP. at 3900 RPM.
92, 93 (Dual Carb.) .....101 HP. at 4000 RPM.
48 (Single Carb.) .....98 HP. at 4000 RPM.
41, 43 (Dual Carb).....102 HP. at 4000 RPM.
Compression Ratio—6.25-1 '39, 6.5-1 '40 Iron heads.
Compression & Vacuum Reading—*See Tune-up data.*
PISTONS:—Own Lo-Ex aluminum alloy, 'T' slot, cam ground type. Use finished replacement pistons.
Weight—10.5 ozs. (stripped). **Length**—3 3/16".
Removal—Pistons and rods removed from above.
Clearance—Top .016". Skirt .001-.002".
Original Bore Sizes & Replacement Pistons:—*See Hudson Shop Notes for complete data.*
Fitting New Pistons:—Use .0015" feeler ½" wide inserted between piston and cylinder wall on side opposite slot at right angles to pin. Pull to withdraw feeler must be within 3-4 lbs.
Installing Pistons:—Slot away from camshaft.
PISTON RINGS:—2 compression, 2 oil rings (1 above pin, 1 below pin). Rings positioned by pin in groove.

Models 91, 92, 93, 98 (1939)

Ring	Width	End Gap	Side Clearance
Compression	3/32"	.005-.010"	.001"
Oil Control①	3/16"	.005-.010"	.001"
Oil Control②	5/32"	.005-.010"	.001"

①—Both rings on early cars, top ring on later cars.
②—Lower oil ring on later cars. *See Hudson Shop Notes for complete data on Oil Ring Width change.*

Models 41, 43, 48 (1940)

Ring	Width	End Gap	Side Clearance
Compression	3/32"	.009-.011"	.001"
Oil Cont. (#1)	3/16"	.009-.011"	.001"
Oil Cont. (#2)	5/32"	.009-.011"	.001"

Replacement Rings:—*See Hudson Shop Notes for data.*
PISTON PIN:—**Diameter**—¾". **Length**—2 7/16".
Floating Type. Retained by locking rings. *See Hudson Shop Notes for Pin Servicing data.*
Pin Fit in Piston—.0003" clearance (hand push fit) with piston heated to 200°F.
Pin Fit in Rod Bushing—.0003" clearance.
Replacement Pins:—Std., .002", .005", .010" oversize.

CONNECTING ROD:—**Weight** 30 ozs. **Length** 8 3/16".
Upper Bearing (Piston Pin Bushing)—Bronze.
Crankpin Journal Diameter 1 15/16".
Lower Bearing—'Bermax' alloy spun type. Exchange rods furnished Std. & .010" undersize. *See Crankshaft Size Code in Hudson Shop Notes for bearing sizes.*
Clearance—.001". **Sideplay**—.006-.010".
Bearing Adjustment:—None (no shims). Replace rods. *See Hudson Shop Notes for Palnut (locknut) data.*
Installing Rods:—Offset. Install rods with widest half of bearing toward rear (#1, 2, 4), toward front (#3, 5, 6). Oil scoop on all rods toward camshaft.

CRANKSHAFT:—3 bearing, integral counterweights.
See Hudson Shop Notes for Crankshaft and Vibration Dampener Removal, Main Bearing Removal, Installation, Replacement Bearings and Line-reaming data.
Journal Diameters—#1, 2 11/32"; #2, 2⅜"; #3, 2 13/32".
See Crankshaft Size Code Note in Hudson Shop Notes for original bearing sizes.
Bearings—Bronze backed, Bermax alloy. Bearings secured in cap and crankcase by brass screws.
Clearance—.001".
Bearing Adjustment:—Shims. *See Hudson Shop Notes.*
►*CAUTION—Replacement of main bearings requires removal of crankshaft. Bearings retained by brass screws.*
Replacement Bearings: *See Hudson Shop Notes.*
End Thrust:—Taken by center bearing. Replace bearing if endplay excessive. **Endplay**—.006-.012".

CAMSHAFT:—3 bearing, gear driven. *See Hudson Shop Notes for Camshaft Removal & Special Bearing Installation (Cutout must be made in rear bearing on 1940)*
Journal Diameters #1, 2"; #2, 1 31/32"; #3 (1939) 1½"; #3 (1940), 1 9/16".
Bearings—Babbitt type. **Clearance**—.0025".
►**Replacement Camshaft for 1940 Engines:** Original 159505 camshaft superseded by new re-designed camshaft with new cam contours.
►*CAUTION*—When above shaft installed, **Tappet Clearance and Valve Timing changed.** See Valve Timing (following) or *see Replacement Camshaft in Hudson Shop Notes.*
End Thrust:—Thrust washer between camshaft flange and crankcase. Spring loaded button in camshaft hub bears against thrust plate on gear cover.
Timing Gears:—Crankshaft gear cast-iron. Camshaft gear GE or Continental Diamond Fibre Bakelite.
1941 Type Timing Gear Set can be installed on these models. Refer to Hudson Shop Notes for data.
Camshaft Setting:—Mesh marked crankshaft gear tooth between two marked teeth on camshaft gear.

VALVES:—	Head Diameter	Stem Diameter	Length
All valves	1⅜"	11/32"	5 11/32"

	Seat Angle	Lift	Stem Clearance
Intake	45°	11/32"	.0025"
Exhaust	45°	11/32"	.004"

Valve Guides:—2 9/16" long. Install with top 1 1/16" below top of block and finish ream to size.
Valve Springs:—Dampeners (originally used on bottom of spgs.) should be omitted when valves serviced.

Free length 2 17/64".	Spring Pressure	Length
Valve Closed	40 lbs.	2"
Valve Open	80 lbs.	1 21/32"

NOTE—Replace if pressure below 34 lbs. at 2".
Valve Lifters:—Roller shoe type, fitted in removable guides. *See Hudson Shop Notes for lifter removal.*

CONTINUED ON NEXT PA E

CONTINUED FR M PRECEDING PA E

VALVE TIMING

►**Tappet Clearance:** *CAUTION*—2 settings used:

1)—.006" **Intake, .008" Exhaust, hot & idling for** All 1939 Engines (& 1940 with Original Camshaft).

2)—.010" **Intake, .012" Exhaust, hot & idling for** All 1940 Engines with Replacement Camshaft. ***These engines should carry decalcomania on valve cover specifying this .010" & .012" setting.***

VALVE TIMING: See Camshaft Setting above.

►***1940 Valve Timing Change:*** **On 1940 engines when new replacement camshaft installed, intake opening point advanced to 27°30' BTDC.** or 10 flywheel teeth ahead of 'UDC. 1-6/' flywheel mark.

ORIGINAL VALVE TIMING SPECIFICATIONS
►for All 1939 Engines (& 1940 with Original Camshaft)

Intake Valves—Open 10°40' BTDC. Close 60° ALDC.
Exhaust Valves—Open 50° BLDC. Close 18°44'ATDC.

NEW VALVE TIMING SPECIFICATIONS
►for 1940 Engines with new Replacement Camshaft

Intake—Open 27°30' BTDC. Close 68°10' ALDC.
Exhaust—Open 51°50' BLDC. Close 32°10' ATDC.
These figures correct with .010" tappet clearance.

Valve Timing Check (All 1939 Engines; 1940 with original camshaft)—With .010" tappet clearance #1 intake valve should open with piston 10°40' or .0562" BTDC when a point on the flywheel approx. 3.94 teeth before 'UDC.1-6/' lines up with indicator in hole above starter. Reset tappet cl. 006" Hot.

(1940 Engines with new replacement camshaft)—With .010" tappet clearance #1 intake valve should open with piston 27°30' BTDC. when point on flywheel 10 teeth before 'UDC. 1-6/' lines up with indicator in hole above starter.

LUBRICATION

LUBRICATION:—Duo-flo (pressure & positive splash).
Oil Pump:—Oscillating plunger type, gear driven by camshaft. Mounted on right side of crankcase.
Normal Oil Pressure—3 lbs. (no gauge).
Oil Pressure Regulator:—Located on right side of crankcase at rear. Opens at 3 lbs. Not adjustable.
Oil Pressure Indicator:—Teleflash Oil Pressure indicator. ***For data, refer to Electrical Equipment Index.***
Checking Oiling System:—***See Hudson Shop Notes.***
Crankcase Capacity:—4½ qts. (refill), 5½ (dry).
NOTE—If pan off, install 1½ qts. in upper tray.

COOLING

Capacity: 12½ qts. (1939), 13 qts. (1940).
See Hudson Shop Notes for radiator core removal.
Water Pump:—Centrifugal, belt driven, packless type.
See Water Pump Section for complete data.
Thermostat:—Fulton. In cylinder head water outlet.
Setting—Starts to open 150-155°F. Fully open 185°.
Temperature Gauge:—King-Seeley Electric K-S Nos.
Dash Unit—No. 7121 (91, 92), 7420 (93), 7170 (98 Pass. Cars), 7096 (98 Comml.), 8120 (1940 Early—White Lines), 7755 (1940 Later—White Diamonds).
Engine Unit—No. 7000 (1939-40 All Models).
See Miscellaneous Section for complete data.

CLUTCH

CLUTCH:—**Own make.** Single plate, cork insert type operating in oil. **Overdrive Cars**—equipped with heavier clutch housing and larger redesigned disc
See Clutch Section for complete data.

Driven Member—Cork Insert type (operates in oil).

	Inside—Diameter	Outside	No. Corks
91,92,98(Sedan)	5⅜"	8 23/32"	90
93,98 (Comml.)	6½"	9 27/32"	108
41(without OD)	5⅜"	9"	90
41 OvDr,43,48....	6½"	10"	108

Corks are .244-.255" thick (1939), .077" (1940).
Pedal Adjustment:—1½" free travel. Adjust yoke on lower end of pedal connector link. Check Automatic Clutch Control & Hill-holder (if used).
Clutch Oil Servicing:—***See Hudson Shop Notes.***
Removal:—Remove transmission (see below), drain clutch oil, take out mounting screws in clutch cover rim, remove clutch assembly from below.
Automatic Clutch Control:—Electric type. Optl.
See Clutch Section for complete data.

TRANSMISSION

TRANSMISSION:—**Own Make.** Constant-mesh, helical gear (second & high), sliding spur (low & reverse).
See Transmission Section for complete data.
Transmission Control:—Hudson 'Handy-Shift' type.
See Transmission Section for complete data.
Removal (1939): Disconnect "Handy-shift" controls at transmission, remove Automatic Clutch Control unit and Electric Hand power unit after disconnecting all wires and vacuum and air hoses if car is so equipped (NOTE—See Clutch and Trans. Sections for necessary adjustments on these units when reinstalled). Disconnect transmission side bumpers, interlock straps, and speedometer cable. Disconnect drive shaft at front universal, support engine at rear, free rear engine mounting. Take out bell housing-to-engine mounting bolts, pull transmission straight back and remove.
Removal (1940): Remove front cushion and push seat back, remove accelerator pedal. Remove floor mat and transmission hole cover. Disconnect front universal joint. Remove clutch pedal return spring, assist spring, and cross-shaft. Release transmission side bumpers and rods, disconnect handy-shift controls at transmission, remove speedometer cable. Raise front end of car, remove lower flywheel guard and engine rear mounting bolts, raise rear end of engine off frame. Remove clutch housing-to-engine mounting bolts, pull transmission back and lift out. NOTE—Transmission can be taken out without disturbing clutch housing by taking out transmission-to-clutch housing bolts.
Installation Note—Wrap one strand of soft wire around throw-out bearing oil seal to prevent leather curling over when transmission installed. Remove wire after transmission installed.

OVERDRIVE

Overdrive:—Warner Model AS13-R6 with electrical 'Kick-down' control optional.
See Transmission Section for complete data.
Overdrive Transmission Removal—Same as Std. Transmission (above) except overdrive solenoid wires and control cable must also be disconnected.
Overdrive Solenoid—Delco-Remy No. 1569.
Throttle Control Switch—R-B-M Model 6013. Adjust so contact washer on accelerator linkage just contacts switch plunger with throttle wide open.
Control Relay—Auto-Lite Model HR-4201.

UNIVERSALS

Spicer. Needle bearing type. Model Nos. as follows: Front—1271-01X (91,92,93), 1281-01X (98), 1271-101 (41,43,48). Rear—1278-01X ('39), 1278-101 ('40).
See Universals Section for complete data.

REAR AXLE

REAR AXLE:—**Own Make.** Semi-floating spiral bevel gear & Hotchkiss drive. ***See Rear Axle Section.***
Ratio—4 1/9-1 (Std., Optl. on Overdrive), 4 5/9-1 (Std. on Overdrive, Optl. reg. transmission).
Backlash—.0005-.003". Screw adjustment.
Removal:—Remove wheel and hub assembly (use screw type puller), remove nuts on 4 bearing cap bolts, push bolts back through backing plate, remove cap (without disturbing brake link), remove shims, pull axle shaft and wheel bearing. Disconnect drive shaft at rear universal, remove nuts on housing to carrier studs, withdraw carrier.
Wheel Bearing Adjustment:—Controlled by shims under bearing cap. To adjust, remove bearing cap (see Removal directions above), add or remove shims equally at both wheels. **Endplay**—.002-.004".

SHOCK ABSORBERS

SHOCK ABSORBERS:—Direct acting, hydraulic types.

Car Model	Make	Front	Rear
91, 92	Monroe	157400	157801
93 (Dom. & Exp.)	Delco	1113-R	1120-S
41, 48 (std. springs)	Monroe	160101	160107
41, 48 (hvy. springs)	Monroe	160102	160108
43 (Dom. & Exp.)	Delco	1007-C	1008-S

See Shock Absorber Section for complete data.

FRONT SUSPENSION

1939 MODELS

Front Suspension (1939): Conventionel "I" beam section front axle with Elliott type ends and semi-elliptic springs with Autopoise Control.
Autopoise Control—***See Hudson Shop Notes.***
Kingpin Inclination—7° crosswise. ***See Hudson Shop Notes for Kingpin Thrust Bearing data.***
Caster—1-2° and equal within ½° for both wheels. To adjust, loosen capscrews at forward end of torque arm, insert shim between arm and axle at upper screw, or remove shim at lower screw to decrease caster, remove shim at upper screw or insert shim at lower screw to increase caster. Shims .020" thick, change caster ½°.
Camber—1-1½°. Bend axle cold for minor changes.
Toe In—0-1/8" measured 10" up from ground.
Steering Geometry—Inner wheel 20°. Outer 17¼°.

1940 MODELS

Front Suspension (1940): Independent, linked parallelogram type with coil springs & Autopoise control.
See Front Suspension Section for complete data.
Kingpin Inclination—4°36' crosswise.
Caster—0° (Neg. ¼° to Pos. ¼°). Adjustable.
Camber—Positive ¼° to Pos. ¾°. Adjustable.
Toe In—0-1/16". Adjust each tube equally.
Steering Geometry—Inner wheel 24°. Outer 20°50'.

STEERING GEAR

Steering Gear: Gemmer Model 305 Worm-and-Roller
See Steering Gear Section for complete data.

BRAKES

BRAKES:—**Service.** Bendix hydraulic, duo-servo, single anchor type with eccentric adjustment. Mechanical follow-up (pedal linked to hand brake cables) provided. Hand lever applies rear service brakes.
See Brake Section for complete data.
Drums Steel. Diam 11 1/16" (43), 10 1/16" (others).
Lining—Moulded (primary), woven (secondary). Thickness 7/32". Width 1¾". Length per wheel 22⅛". **(except 43), 23 15/16" (43).**
Clearance—.010" at heel and toe of each shoe.
Hand Brake:—See Service Brakes above.
Hill-Holder: Optional. ***See article in Brake Section..***

ENGINE HOOD (BONNET) LOCK & FENDER PLATE REMOVAL:—*See Hudson Shop Notes.*

MODEL IDENTIFICATION

SERIAL NUMBER: Stamped on right front door hinge pillar post. First Nos. as follows:

	1939	1940
Eight		44101
Deluxe Eight		45101
Country Club Eight	95101	47101
Country Club Cust. Sedan	97101	

ENGINE NUMBER:—Same as Serial No. On top of engine block between #1 & 2 exhaust flanges.

TUNE-UP

COMPRESSION: Ratio—6.25-1 (1939), 6.5-1 (1940).
Pressure—118 lbs. (1939), 120 lbs. (1940) at cranking speed of 125 RPM.

VACUUM READING:—18-21" steady idling at 7 MPH.

FIRING ORDER: 1-6-2-5-8-3-7-4. See diagram.

SPARK PLUGS: Champion Type J-8. 14 mm. Metric.
Gaps—.032"

IGNITION: See Coil, Condenser, and Distributor.
Breaker Gap—.017" **Cam Angle** 31° (closed).
Automatic Advance—17.5° max at 1700 RPM (distr.).

IGNITION TIMING: See Ignition Timing.
Std. Setting—At TDC. with flywheel mark "UDC. 1-8/" at indicator in inspection hole in left front face of rear motor support.

CARBURETION: See Carburetor & Carb. Equipment.
Idle Setting—Both idle screws ¼-1 turn open (430-S), ½-1½ turns open (455-S). Idle speed 7 MPH.
Float Level—3/32" from gasket seat on cover to top of float at each end (invert to check).
Accelerating Pump—Outer hole (max. stroke) Normal. Inner hole (min. stroke) when required.
Fuel Pump Pressure: 4 lbs. max. (Comb. fuel & vacuum pump), 4½ lbs. max. (fuel pump only).

MANIFOLD HEAT CONTROL:—Automatic thermostatic coil type. No adjustment required.

VALVES: See Valve Timing.
Tappet Clearance:—.006" Intake, .008" Exhaust (with engine hot and idling). Remove right front fender plate for access to valves. ***See Hudson Shop Notes for Fender Plate removal.***

STARTING: See Battery, Starter, Generator, Regulator.

IGNITION

IGNITION SWITCH: Mitchellock. Model 24-B, Type 8062 (1939), 8273 (1940). Connected to coil by armored cable.
Ignition Lock—Briggs & Stratton. B & S No. 50184. **Key Series**—H601 to H1100. **Groove**—No. 1.

COIL: Auto-Lite Model 4635 (1939), 4641 (1940). Service Coil (less Switch & Cable) CE-3224JS.
Ignition Current—2.5 amperes idling, 4.5 stopped.

CONDENSER: Auto-Lite Part No. IG-2671.
Capacity—.20-.25 microfarad.

DISTRIBUTOR: Auto-Lite Model IGP-4008A. Full auto-automatic advance type with manual (octane selector) adjustment. No vacuum spark control.
Breaker Gap—.017".
Cam Angle or Dwell—31° closed, 14° open (dist.).
Breaker Arm Spring Tension—17-20 ounces.
Rotation—Clockwise viewed from above.

Automatic Advance

Distributor Degrees	R.P.M.	Engine Degrees	R.P.M.
Start	300	0	600
3	400	6	800
8	850	16	1700
13	1300	26	2600
17.5	1700	35	3400

Fuel Compensator Adjustment—Manual adjustment for octane rating of fuel. See Ignition Timing.

Removal:—Mounted on right side of crankcase. To remove take out hold-down screw in advance arm.

IGNITION TIMING

IGNITION TIMING:—Initial Setting (for 70 octane rating fuel). See Fuel Compensator setting following.

	Flywheel Degrees	Piston Position
All Engines	0° at TDC	.0000" TDC

Timing—With #1 piston on compression, turn engine over until piston reaches top dead center when flywheel mark 'UDC.1-8/' lines up with pointer in left front face of rear motor support. Loosen hold-down screw in advance arm, rotate distributor clockwise to limit of advance arm slot, then slowly rotate distributor counter-clockwise until contacts begin to open, tighten hold-down screw. Check Fuel Compensator setting.
Timing (Using Synchroscope)—Recommended by manufacturer. Mark flywheel with white chalk or

CONTINUED N NEXT PA E

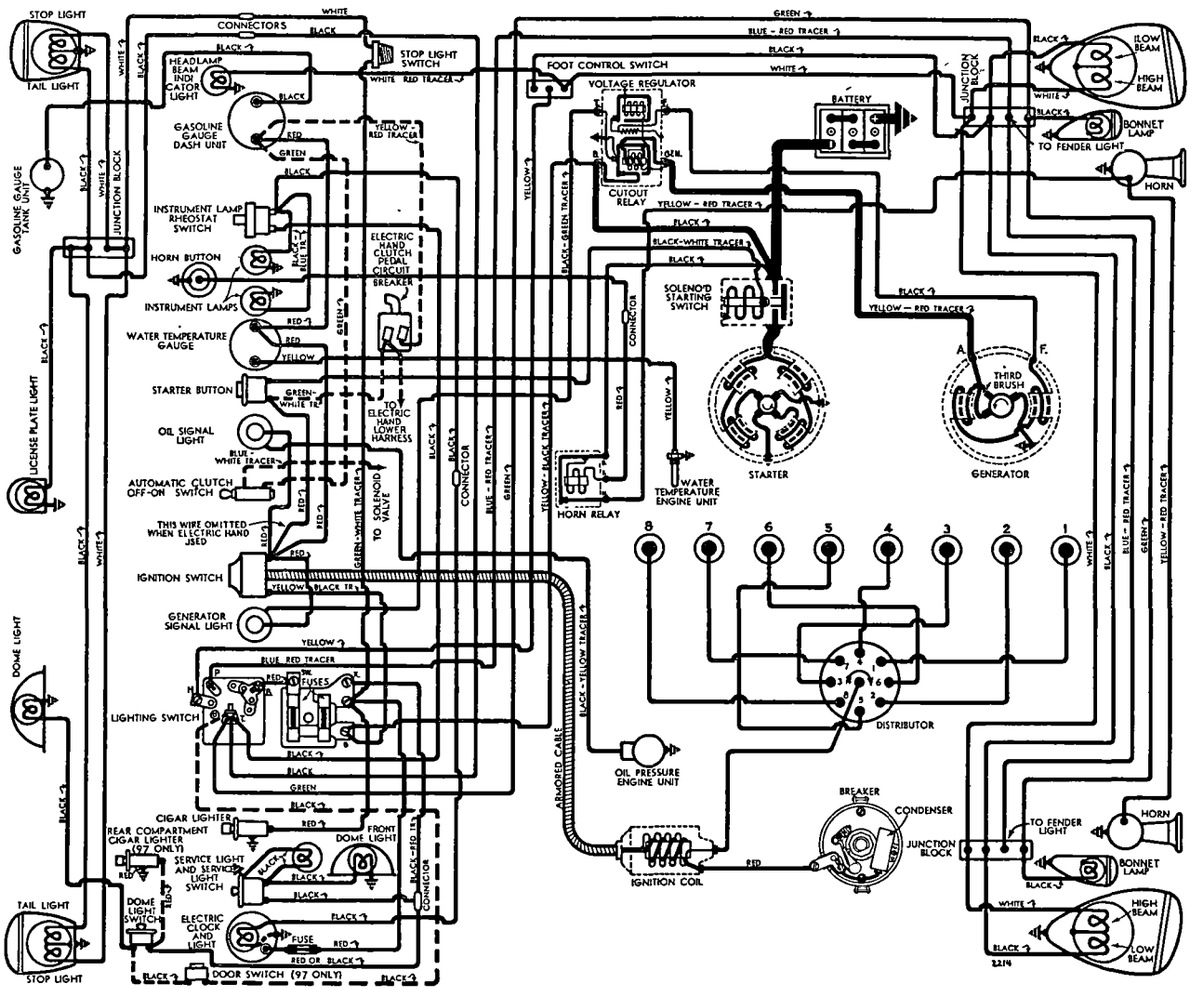

1939 M DELS

C NTINUED FROM PRECEDING PAGE

paint, connect at #8 spark plug. Idle engine and adjust distributor as directed above.

Fuel Compensator Setting—Road test car and note performance when accelerating from 10-15 M.P.H. with wide open throttle on level road (warm engine). Slight ping should be evident. To adjust, loosen hold-down screw, rotate distributor one graduation on scale counter-clockwise (if no ping), clockwise (if ping, too severe), repeat test. Final setting should not be more than ¾" before 'UDC. 1-8/' mark on flywheel.

CARBURETOR

Carter Model WDO, Type 430-S (1939), 455-S (1940). 1" (430-S), 1¼" (455-S), Dual (double barrel), downdraft type with Fast Idle & Automatic Choke. ***For complete data, refer to Carburetor Index.***

Flange Gasket Note—Eight gaskets now used (was two in 1939) on all carburetors.

Idle Adjustment—With engine warm and running at slow idle speed (choke valve wide open, fast idle inoperative), set throttle stopscrew for 7 MPH idle speed. Adjust idle adjusting screws (2 used, 1 for each barrel) in succession until engine fires smoothly. Final setting should be ¼-1 turn (430-S), ½-1½ turns (455-S) open for each idling adjusting screw. Readjust idle speed. NOTE—Car manufacturer recommends use of vacuum gauge. Adjust one screw at a time for highest steady gauge reading.

Accelerating Pump Setting—Pump lever (under dust cover at top of carburetor) has 2 holes for pump link engagement. Adjust as follows:
Outer Hole (Max. stroke)—Normal setting.
Inner Hole (Min. stroke)—If less charge required.

Float Level—3/32" from top of float to gasket seat on cover (invert to check).

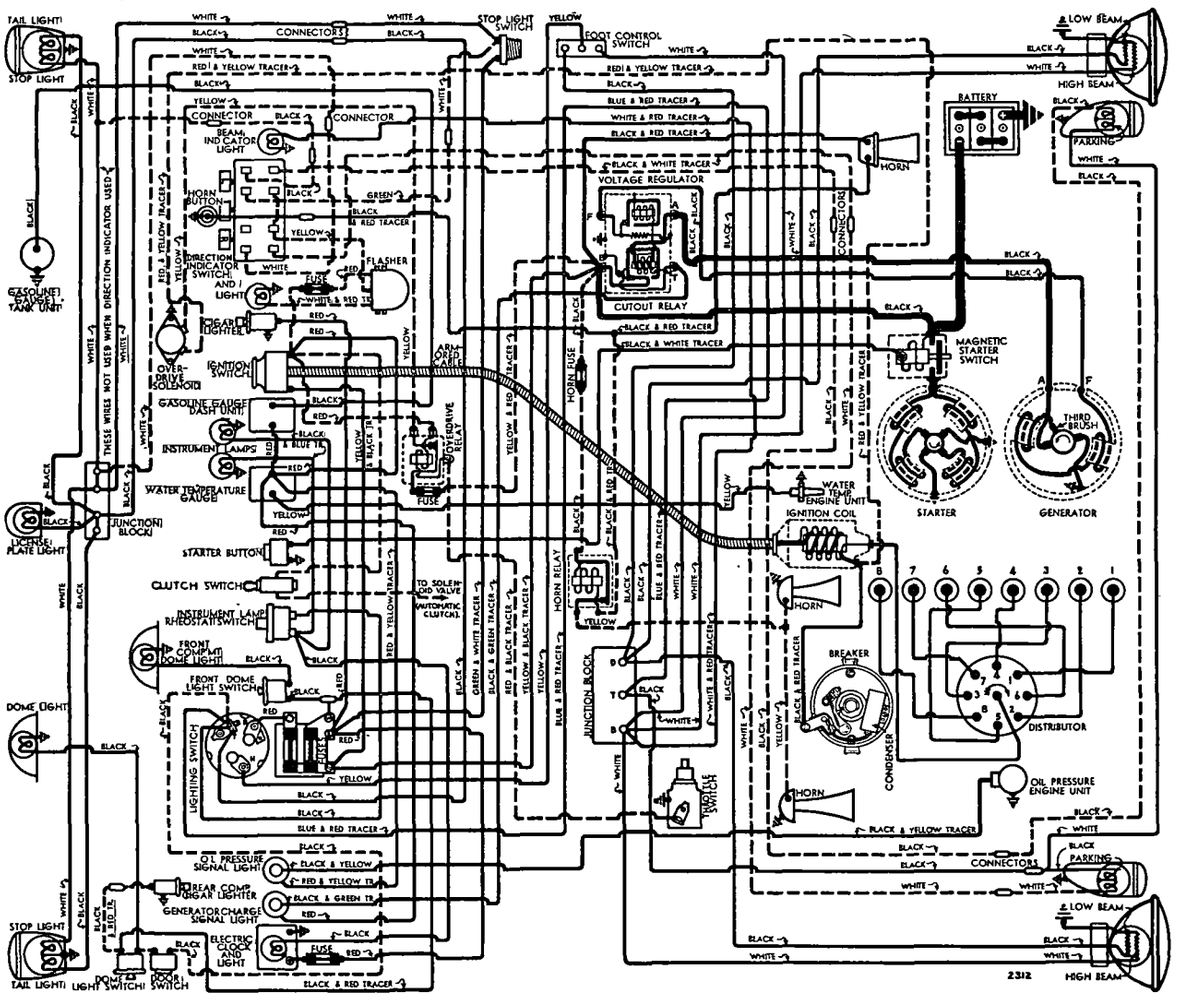

1940 MODELS

Fast Idle:—Integral type (built-in carburetor). ***For complete data, refer to Carburetion Equip. Index.***
Fast Idle Setting—Turn fast idle adjusting screw in to secure .018" throttle opening with choke valve tightly closed.

Automatic Choke:—Carter Climatic Control. ***For complete data, refer to Carburetion Equip. Index.***
Choke Setting—Thermostatic coil housing centered on piston plate housing reference mark.

CARB. EQUIPMENT

Air Cleaner:—AC #1528161 oil-wetted type Std. #1628160 (1939 Cars with Electric Hand). United heavy duty Oil-bath type Optl.

Fuel Pump:—AC Type AK #1523289 diaphragm type Std.—Type AJ #1523936 fuel & vacuum pump Optl. Type AK, #1533313 Pump used on 1939 RHD. cars. ***For complete data, refer to Carburetion Equip. Index.***

Gasoline Gauge:—King-Seeley Electric. K-S Nos. Dash Unit—No. 7415 (1939), 8118 (1940 Early—White Lines), 7752 (1940 Later—White Diamonds). Tank Unit—No. 5835 (1939 First Cars), 7550 (1939 Later Cars & 1940). ***For complete data, refer to Carburetion Equip. Index.***

BATTERY

BATTERY:—National Type HT-19. 6 volt, 19 plate, 108 ampere hour capacity (20 hour rate).
Starting Capacity—135 amperes for 20 minutes.
Zero Capacity—300 amperes for 4.0 minutes. Five second voltage—4.43 volts.
Grounded Terminal—Positive (+) grounded to frame. **Engine Ground**—Strap connector from rear motor support to frame.
Dimensions—Length 11¾". Width 7¼". Height 7 11/16".
Location—In engine compartment on left side.

STARTER

Auto-Lite Model MAB-4075 (1939 First Cars), MAB-4100 (1939 Later Cars), MAB-4103 & 4103A (1940).
Armature—Auto-Lite MAB-2113 (All Models).
Drive—Inboard Barrel Type Bendix Drive, No. A-1673 (MAB-4075), A-1684 (Others).
Rotation—Counter-clockwise at commutator end.
Brush Spring Tension—42-53 ozs. (new brushes).
Cranking Engine—150 RPM, 120-125 amperes, 5 v.

Performance Data

Torque		R.P.M.	Volts	Amperes
0	ft. lbs.	3700	5.5	60
.6	"	1910	5.5	100
3.4	"	1100	5.0	200
6.6	"	695	4.5	300
10.15	"	420	4.0	400
15.8	"	Lock	3.0	582
22.5	"	Lock	4.0	775

NOTE—Lock torque figures correct without switch.

Removal:—Flange (new heavier casting) mounted on left front face of rear motor support. To remove, take out flange mounting screws.

Starting Switch (1939): Auto-Lite Model SS-4001. Magnetic type. Mounted on starter and controlled by pushbutton on instrument panel. Operative only with ignition "on" (and clutch disengaged on cars with Electric Hand). ***For complete data, refer to Electrical Equipment Index.***
1940—R-B-M Model 5607. Magnetic type switch. On starter, controlled by pushbutton on instrument panel Douglas #5751. NOTE—Switch is new type.

GENERATOR

STANDARD

Auto-Lite Model GDS-4801A (1939), GEC-4801A (1940). Third brush control with external vibrating voltage regulation. Ventilated by fan on drive pulley.

Armature—GDF-2006F (GDS), GDZ-2006F (GEC).

Maximum Charging Rate—(GDS Gen.) 33 amperes (cold), 27.5 amperes (hot), 8.0 volts, 30-35 MPH (GEC Gen.) 39-44 amperes (cold), 3350 RPM or approximately 43 MPH. Actual charging rate controlled by voltage regulator and dependent on battery condition. When checking generator output, ground generator "F" terminal to eliminate regulator action.

Charging Rate Adjustment—See Regulator data. Third Brush setting should be as follows: (GDS) 1 commutator bar minus 1 mica strip (Min.), 1 commutator bar (Max.) from nearest main brush; (GEC) 1 commutator bar (Min.), 1 commutator bar plus 1 mica strip (Max.) from nearest main brush.

Performance Data—GDS-4801A

Cold			Hot		
Amperes	Volts	R.P.M.	Amperes	Volts	R.P.M.
0	6.4	920	0	6.4	960
4	6 6	1050	4	6.65	1120
8	6.8	1175	8	6.9	1280
12	7.0	1300	12	7.1	1430
16	7.2	1450	16	7.45	1640
20	7.4	1600	20	7.6	1900
24	7.6	1820	24	7.8	2320
28	7.8	2075	27.5	8.0	3200
33	8.0	2900			

Performance Data—GEC-4801A

Cold			Hot		
Amperes	Volts	R P M.	Amperes	Volts	R.P.M.
0	6 4	960	0	6 4	1040
4	6 55	1060	4	6 6	1140
8	6 7	1160	8	6.8	1280
12	6 85	1280	12	6 95	1440
16	7.0	1400	16	7 15	1600
20	7.15	1550	20	7.35	1820
24	7 25	1700	24	7.55	2090
28	7 5	1890	28	7 75	2440
32	7 65	2100	32	7 9	3000
36	7 8	2375	34	8 0	3800
41	8 0	3350			

Rotation—Counter-clockwise at commutator end.

Brush Spring Tension—53 ozs max (new brushes).

Field Current—1.65-1 82 amperes (GDS Gen.), 1.60-1.78 amperes (GEC Gen.) at 6.0 volts.

Motoring Current—5.10-5.45 amperes (GDS Gen.), 4.85-5.4 amperes (GEC Gen.) at 6.0 volts.

Removal:—Pivot mounted at left front of engine. To remove, take out pivot and clamp bolts.

Belt Adjustment:—Swing generator out until possible belt deflection midway between generator and fan pulleys is ¾" (use straightedge across pulleys).

GENERATOR

SPECIAL EQUIPMENT

SPECIAL GENERATORS:—Auto-Lite GEG-4801A, GEA-4803B, GEB-4802A, B. Two brush types with voltage and current regulation

Armatures—No. GEG-2006F (GEG Gen.), GDZ-2006F (GEA Gen.), GEB-2006F (GEB Gens.).

Charging Rate Adjustment—None. See Regulator.

Maximum Charging Rate—For each model as follows:

Performance Data

Cold			Hot		
Model GEA-4803B					
0	6.4	780	0	6.4	840
4	6.6	870	4	6.6	935
8	6.8	960	8	6.8	1025
12	6 95	1050	12	6 95	1120
16	7.15	1140	16	7.15	1220
20	7.3	1230	20	7.3	1320
24	7.6	1320	24	7.6	1420
28	7.7	1410	28	7 7	1520
32	7.85	1500	32	7.85	1685
35	8.0	1570	35	8.0	1800
Models GEB-4802A, GEB-4802B①					
0	6.4	560	0	6.4	600
4	6.6	630	4	6.6	675
8	6.8	700	8	6.8	750
12	7.0	775	12	7.0	840
16	7.2	845	16	7.2	930
20	7.4	920	20	7.4	1030
24	7.6	1000	24	7.6	1140
28	7.8	1075	28	7.8	1260
32	8.0	1150	32	8.0	1400

①—Before Serial No. 2V-000001.

Model GEG-4801A

Amperes	Volts	R.P.M.	Amperes	Volts	R.P.M.
0	6.4	780	0	6.4	820
5	6 6	870	5	6.6	900
10	6.8	960	10	6.8	990
15	7.0	1040	15	7.0	1080
20	7 2	1130	20	7.2	1170
25	7.4	1220	25	7.4	1270
30	7.6	1310	30	7.6	1380
35	7.8	1410	35	7.8	1510
40	8.0	1520	40	8.0	1680

Rotation—Counter-clockwise at commutator end.

Brush Spring Tension—53 ozs. max. (GEA Gen.), 64-68 ozs. (GEB, GEG Gen.) with new brushes.

Field Current—1.57-1.75 amperes (GEA Gen.), 1.6-1.78 amperes (GEB, GEG Gen.) at 6 0 volts.

Motoring Current—4.45-4.9 amps. (GEA Gen.), 4-4.5 amps. (GEB), 4.7-5.2 amps. (GEG) at 6 0 volts.

Removal & Belt Adjustment:—Same as for Std. Gen.

SPECIAL GENERATORS:—Other Makes—***Refer to Electrical Equipment Index for 'Special Generators' for data on special Generators and Regulators which may be found installed on these models.***

REGULATOR

STANDARD

Auto-Lite Model VRD-4008A (1939), VRD-4008B (1940 First Cars), VRR-4001A (1940 Later Cars). Used with GDS-4801A & GEC-4801A Gen. Cutout Relay and vibrating Voltage Regulator in case on dash. Cutout Relay has special upper contacts for Generator Teleflash Signal control.

For complete data, refer to Electrical Equipment Index.

NOTE—Regulator case cover is sealed. Serviced on exchange basis if seals not broken.

Cutout Relay

Cuts In—6.4-7.0 volts (VRD), 6.4-6.6 volts (VRR) 825 RPM., 9 4 MPH.

Cuts Out—.5-3.0 amperes (before Regulator Serial No. 2T-000001), 1.5-4.5 amperes (after No. 2T-000001) (VRD); 4.2-4 8 volts with approximately 4-6 amperes discharge current (VRR).

Contact Gap—.015" minimum with ground contacts closed (must open when main contacts close).

Air Gap—.034-.038" (VRD), .031-.034" (VRR), at hinge end of core (ground contacts closed).

Voltage Regulator

Setting—7.1-7.4 volts at 110° F. (all models).

To Check (without breaking seals)—Connect ammeter in charging line at regulator 'B' terminal, voltmeter between this terminal and ground. Operate generator at speed of 30 MPH charging battery until voltage is constant. Voltmeter reading should be within limits of 7.1-7.4 volts at 110°. See Electrical Equipment Section for voltages at other temp.

To Adjust (with cover removed)—Change regulator armature spring tension by bending lower spring hanger slightly. See Electrical Equipment Section.

Contact Gap—.010-.020" (VRD), .012" Min. (VRR) (armature against stop pin).

Air Gap—.048-.052" with contacts just opening.

REGULATOR

SPECIAL EQUIPMENT

REGULATOR (SPEC. GEN.):—Auto-Lite VRP-4008A (GEG Gen.), VRP-4008B (GEA Gen.), VRP-4008C (GEB-4802A, B Gen.), VRP-4008D (GEB-4802B-2 Gen.). Cutout Relay and vibrating type Voltage & Current Regulator units in a single case on the dash. Same design as Std. VRR Regulator except for additional Current Regulator.

For complete data, refer to Electrical Equipment Index.

Cutout Relay & Voltage Regulator

All specifications same as for Std. VRR Type (above).

Current Regulator

Setting—39-41 amperes—marked '40' on cover (VRP-4008A), 34-36 amperes—marked '35' (VRP-4008B, 8D), 31-33 amps. marked '32' (VRP-4008C).

To Check—Connect test meters as for voltage check (above), operate generator at speed for maximum output, turn on lights so that generator charges at peak rate and current regulator operates, check ammeter reading which should agree with setting given above.

Adjustment, Contact Gap, Air Gap—Same as for VRR Voltage Regulator unit as given abov .

LIGHTING

Headlamps—Hall Pre-focused type (1939), Hall "Sealed Beam" type (1940). Upper and lower beams controlled by Beam Selector Switch on toeboard.

Headlamp Adjustment—With car unloaded, 25' from screen and upper beams lighted, aim each headlamp so that center of hot spot is 3" below horizontal line at lamp center height, and hot spot centered on lamp vertical center-line.

Beam Indicator—On upper left hand corner of instrument panel. Lighted whenever upper beams in use.

Bonnet Side Panel Lamps—Used instead of parking bulb in headlamp. NOTE—To remove bulb, pull bulb socket out of lamp.

Switches

Lighting—R-B-M No. 1725 (1939), Cole-Hersee (1940).

Beam Selector—Douglas or R-B-M No. 1076 (1939), R-B-M No. 2467 (1940).

Instrument—Douglas.

CONTINUED N NEXT PA E

C NTINUED FROM PRECEDING PAGE

Bulb Specifications

Position	Candlepower	Mazda No.
Headlamps (1939)	32-32	2331
Headlamps (Export)	21-50	2520
Headlamps (1940)		Sealed Beam
Bonnet Side Panel, Radio	1½	55
Instr., Spdmtr., Service	1½	55
Beam Indicator & Signals	1	51
Stop & Tail	21-3	1158
License, Fender	3	63
Dome	15	87

Front Direction Signal bulb (1940) is 21-3 cp. Mazda No. 1154. The 3 cp. filament of this bulb is used in place of the regular parking (bonnet side panel) bulb (No. 55).

MISC. ELECTRICAL

SIGNAL LIGHTS:—Generator Charge and Oil Pressure Indicators. Hudson Teleflash Electric type. ***For complete data, refer to Electrical Equipment Index.***

FUSES:—**Lighting**—20 ampere. Lower fuse on fuse block on lower edge of instrument panel to right of steering column. **Accessory**—20 amperes. Top fuse on fuse block. NOTE—Silver-plated fuses used.

Twin Horns—30 ampere on block on engine dash.

Transmission Overdrive Control—20 amp. On Relay.

Direction Indicator—10 ampere. In case on back of instrument panel near speedometer.

Electric Clock—2 ampere on back of clock.

HORNS:—**Sparton**—Twin, vibrator type, air trumpet horns standard. Operated by relay.

Horn Relay: R-B-M Model 4751 (1939), 4790 (1940). Mounted on horn bracket.

Contacts Close—3.5-4.5 volts. **Current Draw ¾ amp.**

ENGINE

ENGINE SPECIFICATIONS:—8 cylinder, 'L' head type.

Bore—3". **Stroke**—4½".

Displacement—254 cubic inches. **Rated HP**—28.8.

Developed Horsepower—128 at 4200 RPM.

Compression Ratio—6.25-1 (1939), 6.5-1 (1940). Heads are Cast Iron.

Compression Pressure—118 lbs. (1939), 120 lbs. (1940) at cranking speed of 125 RPM.

Vacuum Reading—Steady 18-21" idling at 7 MPH.

PISTONS:—Own Lo-Ex aluminum alloy, 'T' slot, cam ground type. Use finished replacement pistons.

Weight—10.5 ozs. (stripped). **Length**—3 3/16".

Removal—Piston and rod assemblies may be removed from above or below.

Clearance—Top .016". Skirt .001-.002".

Original Bore Sizes & Replacement Pistons:—***See Hudson Shop Notes for complete data.***

Fitting New Pistons:—Use .0015" feeler ½" wide inserted between piston and cylinder wall on side opposite slot at right angles to pin. Pull to withdraw feeler must be within 3-4 lbs.

Installing Pistons:—Slot away from camshaft.

PISTON RINGS:—2 compression, 2 oil rings (1 above pin, 1 below pin). Rings positioned by pin in groove.

Models 95, 97 (1939)

Ring	Width	End Gap	Side Clearance
Compression	3/32"	.005-.010"	.001"
Oil Control①	3/16"	.005-.010"	.001"
Oil Control②	5/32"	.005-.010"	.001"

①—Both rings on early cars, top ring on later cars. ②—Lower oil ring on later cars. ***See Hudson Shop Notes for complete data on Oil Ring Width change.***

Models 44, 45, 47 (1940)

Ring	Width	End Gap	Side Clearance
Compression	3/32"	.009-.011"	.001"
Oil Cont. (#1)	3/16"	.009-.011"	.001"
Oil Cont. (#2)	5/32"	.009-.011"	.001"

Replacement Rings:—***See Hudson Shop Notes for data.***

PISTON PIN:—**Diameter**—¾". **Length**—2 7/16". Floating Type. Retained by locking rings. ***See Hudson Shop Notes for Pin Servicing data.***
Pin Fit in Piston—.0003" clearance (hand push fit) with piston heated to 200°F.
Pin Fit in Rod Bushing—.0003" clearance.

Replacement Pins:—Std., .002", .005", .010" oversize.

CONNECTING ROD:—**Weight** 30 ozs. **Length** 8 3/16". **Upper Bearing (Piston Pin Bushing)**—Bronze. **Crankpin Journal Diameter** 1 15/16". **Lower Bearing**—'Bermax' alloy spun type. Exchange rods furnished Std. & .010" undersize. ***See Crankshaft Size Code in Hudson Shop Notes for bearing sizes.*** **Clearance**—.001". **Sideplay**—.006-.010".

Bearing Adjustment:—None (no shims). Replace rods. ***See Hudson Shop Notes for Palnut (locknut) data.***

Installing Rods:—Offset. Install rods with widest half of bearing toward rear (#1, 3, 5, 7), toward front (#2, 4, 6, 8). Oil scoop on all rods toward camshaft.

CRANKSHAFT:—5 bearing, integral counterweights. ***See Hudson Shop Notes for Crankshaft and Vibration Dampener Removal, Main Bearing Removal, Installation, Replacement Bearings and Line-reaming data.*** **Journal Diameters**—#1, 2 9/32"; #2, 2 5/16"; #3, 2 11/32"; #4, 2⅜"; #5, 2 13/32". ***See Crankshaft Size Code Note in Hudson Shop Notes for original bearing sizes.*** **Bearings**—Bronze-backed, 'Bohnalloy' type. Bearings secured in cap and crankcase by brass screws. **Clearance**—.001".

Bearing Adjustment:—Shims. ***See Hudson Shop Notes.***

►***CAUTION—Replacement of main bearings requires removal of crankshaft. Bearings retained by brass screws.***

Replacement Bearings: ***See Hudson Shop Notes.***

End Thrust:—Taken by center bearing. Replace bearing if endplay excessive. **Endplay**—.006-.012".

CAMSHAFT:—5 bearing, gear driven. ***See Hudson Shop Notes for Camshaft Removal.*** **Journal Diameters (1939)**—#1, 2 1/32"; #2, 2"; #3, 1 31/32"; #4, 1 15/16"; #5, 1½". **Journal Diameters (1940)**—#1, 2.029"; #2, 1.998"; #3, 1.966"; #4, 1.935"; #5, 1.498". **Bearings**—Babbitt type. **Clearance**—.0025".

End Thrust:—Thrust washer between camshaft flange and crankcase. Spring loaded button in camshaft hub bears against thrust plate on gear cover.

Timing Gears:—Crankshaft gear cast-iron. Camshaft gear GE or Continental Diamond Fibre Bakelite. ***1941 Type Timing Gear Set can be installed on these models (tooth angle redesigned to provide quieter operation). Refer to Hudson Shop Notes.***

Camshaft Setting:—Mesh marked crankshaft gear tooth between two marked teeth on camshaft gear.

VALVES:	Head Diameter	Stem Diameter	Length
Intake	1½"	11/32"	5 3/32"
Exhaust	1⅜"	11/32"	5 3/32"

	Seat Angle	Lift	Stem Clearance
Intake	45°	11/32"	.0025"
Exhaust	45°	11/32"	.004"

Valve Guides: 2 9/16" long. Install with top 1 1/16" (1939), 15/16" (1940) below top of block and finish ream to size.

Valve Springs:—Dampeners (originally used on bottom of spgs.) should be omitted when valves serviced.

Free length 2 17/64".	Spring Pressure	Length
Valve Closed	40 lbs.	2"
Valve Open	80 lbs.	1 21/32"

NOTE—Replace if pressure below 34 lbs. at 2".

Valve Lifters:—Roller shoe type, fitted in removable guides. ***See Hudson Shop Notes for lifter removal.***

VALVE TIMING

Tappet Clearance:—.006" Int., .008" Exh., hot & idling. ***See Hudson Shop Notes for Fender Plate Removal.***

Valve Timing:—See Camshaft Setting above.

Intake Valves—Open 10°40' BTDC. Close 60° ALDC.

Exhaust Valves—Open 50° BLDC. Close 18°44' ATDC. These figures correct with .010" tappet clearance.

Valve Timing Check—With .010" tappet clearance #1 intake valve should open with piston 10°40' or .0494" BTDC when a point on the flywheel approx. 3.97 teeth before 'UDC.1-8/' mark lines up with indicator. Reset tappet clearance .006" hot and idling.

LUBRICATION

LUBRICATION:—Duo-flo (pressure & positive splash).

Oil Pump:—Oscillating plunger type, gear driven by camshaft. Mounted on right side of crankcase.

Normal Oil Pressure—3 lbs. (no gauge).

Oil Pressure Regulator:—Located on right side of crankcase at rear. Opens at 3 lbs. Not adjustable.

Oil Pressure Indicator:—Teleflash Oil Pressure indicator. ***For data, refer to Electrical Equipment Index.***

Checking Oiling System:—***See Hudson Shop Notes.***

Crankcase Capacity:—7 qts. (refill). NOTE—Install 2 qts. add'tl oil in upper tray when pan installed.

COOLING

Water Capacity: 17½ qts. (1939), 18 qts. (1940). ***See Hudson Shop Notes for radiator core removal.***

Water Pump:—Centrifugal, belt driven, packless type. ***See Water Pump Section for complete data.***

Removal—Drain water, remove fan belt, disconnect pump hoses, remove mounting bolts and lift off fan and pump assembly.

Thermostat:—Fulton. In cylinder head water outlet.

Setting—Starts to open 150-155°F. Fully open 185°.

Temperature Gauge:—King-Seeley Electric K-S Nos.

Dash Unit—No. 7420 (1939), 8120 (1940 Early—White Lines), 7755 (1940 Later—White Diamonds).

Engine Unit—No. 7000 (1939-40 models). ***See Miscellaneous Section for complete data.***

CLUTCH

CLUTCH:—Own make. Single plate, cork insert type operating in oil. **Overdrive Cars**—equipped with heavier clutch housing and larger redesigned disc *See Clutch Section for complete data.*

Driven Member—Cork Insert type. Cork thickness .244-.255" (1939), .077" (1940). Inside Diameter 6½". Outside Diameter 9 27/32" (1939), 10" (1940). No. of corks 108.

Pedal Adjustment:—1½" free travel. Adjust yoke on lower end of pedal connector link. Check Automatic Clutch Control & Hill-holder (if used).

Clutch Oil Servicing:—*See Hudson Shop Notes.*

Removal:—Remove transmission (see below), drain clutch oil, take out mounting screws in clutch cover rim, remove clutch assembly from below.

Automatic Clutch Control:—Electric type. Optl. *See Clutch Section for complete data.*

TRANSMISSION

TRANSMISSION:—Own Make. Constant-mesh, helical gear (second & high), sliding spur (low & reverse). *See Transmission Section for complete data.*

Transmission Control:—Hudson 'Handy-Shift' type. *See Transmission Section for complete data.*

Removal (1939): Disconnect "Handy-shift" controls at transmission, remove Automatic Clutch Control unit and Electric Hand power unit after disconnecting all wires and vacuum and air hoses if car is so equipped (NOTE—See Clutch and Trans. Sections for necessary adjustments on these units when reinstalled). Disconnect transmission side bumpers, interlock straps, and speedometer cable. Disconnect drive shaft at front universal, support engine at rear, free rear engine mounting. Take out bell housing-to-engine mounting bolts, pull transmission straight back and remove.

Removal (1940): Remove front cushion and push seat back, remove accelerator pedal. Remove floor mat and transmission hole cover. Disconnect front universal joint. Remove clutch pedal return spring, assist spring, and cross-shaft. Release transmission side bumpers and rods, disconnect handy-shift controls at transmission, remove speedometer cable. Raise front end of car, remove lower flywheel guard and engine rear mounting bolts, raise rear end of engine off frame. Remove clutch housing-to-engine mounting bolts, pull transmission back and lift out. NOTE—Transmission can be taken out without disturbing clutch housing by taking out transmission-to-clutch housing bolts.

Installation Note—Wrap one strand of soft wire around throw-out bearing oil seal to prevent leather curling over when transmission installed. Remove wire after transmission installed.

OVERDRIVE

Overdrive:—Warner Model AS13-R6 with electrical 'kick-down' control. Optional equipment. *See Transmission Section for complete data.*

Overdrive Transmission Removal—Same as Std. Transmission (above) except overdrive solenoid wires and control cable must also be disconnected.

Overdrive Solenoid—Delco-Remy No. 1569.

Throttle Control Switch—R-B-M Model 6013. Adjust so contact washer on accelerator linkage just contacts switch plunger with throttle wide open.

Control Relay—Auto-Lite Model HR-4201.

UNIVERSALS

Spicer. Needle Bearing type. Model Nos. as follows: Front—1281-01X (1939), 1271-101 (1940 exc. 47 without Overdrive), 1281-101 (1940 47 Std.). Rear—1278-01X (1939), 1278-101 (1940). *See Universals Section for complete data.*

REAR AXLE

REAR AXLE:—Own Make. Semi-floating spiral bevel gear type with Hotchkiss drive. *See Rear Axle Section for complete data.*

Ratio—4 1/9-1 (Std., Optl. on Overdrive), 4 5/9-1 (Std. on Ovdr., Optl. on reg. transmission).

Backlash—.0005-.003". Screw adjustment.

Removal:—Disconnect drive shaft at rear universal. Remove axle shafts (see below) and capscrews on carrier flange. Pull carrier assembly out.

Axle Shaft Removal:—Remove wheel and hub (use screw type puller only), remove 4 nuts on bearing cap bolts, push bolts out of backing plate, remove cap (without disturbing brake link), remove shims, pull axle shaft and wheel bearing out.

Wheel Bearing Adjustment:—Controlled by shims under bearing cap. To adjust, remove bearing cap (see Removal directions above), add or remove shims equally at both wheels. **Endplay**—.002-.004".

SHOCK ABSORBERS

Delco. Direct Acting, Hydraulic type. Model Nos. as follows: Front—1113-R (1939 Std.), 1132-S (1939 Exp.), 1007-C (1940). Rear—1120-S (1939 Std.), 1131-T (1939 Exp.), 1008-S (1940). *See Shock Absorber Section for complete data.*

FRONT SUSPENSION

1939 MODELS

Front Suspension (1939): "I" beam section type front axle with Elliott type ends and semi-elliptic springs. Axle alignment maintained by torque arm at side of each spring seat and held by rubber-bushed bolt at frame rail.

Autopoise Control—*See Hudson Shop Notes.*

Kingpin Inclination—7° crosswise. *See Hudson Shop Notes for Kingpin Thrust Bearing data.*

Caster—1-2° and equal within ½° for both wheels. To adjust, loosen capscrews at forward end of torque arm, insert shim between arm and axle at upper screw, or remove shim at lower screw to decrease caster, remove shim at upper screw or insert shim at lower screw to increase caster. Shims .020" thick, change caster ½°.

Camber—1-1½°. Bend axle cold for minor changes.

Toe In—0-⅛" measured 10" up from ground. Adjust by loosening clamp bolts and turning tie rod.

Steering Geometry—Inner wheel 20°. Outer 17¾°.

FRONT SUSPENSION

1940 MODELS

Front Suspension (1940): Independent, linked parallelogram type with coil springs and Autopoise Control. *See Front Suspension Section for complete data.*

Kingpin Inclination—4°36' crosswise.

Caster—0° (Neg. ¼° to Pos. ¼°). Adjustable.

Camber—Positive ¼° to Pos. ¾°. Adjustable.

Toe In—0-1/16". Loosen clamp at outer end of each tube (adjust tubes equally).

Steering Geometry—Inner wheel 24°. Outer 20°50'.

STEERING GEAR

Steering Gear: Gemmer Model 335 Worm-and-Roller type with "push-pull" adjustments. *See Steering Gear Section for complete data.*

BRAKES

BRAKES:—Service. Bendix hydraulic, duo-servo, single anchor type with eccentric adjustment. Mechanical follow-up (pedal linked to hand brake cables) provided. Hand lever applies rear service brakes. *See Brake Section for complete data.*

Drums—Alloy steel. Diameter—11 1/16".

Lining—Moulded (primary), woven (secondary). Thick. 7/32". Width 1¾". Length per whl. 23 15/16".

Clearance—.010" at heel and toe of each shoe.

Hand Brake:—See Service Brakes above.

Hill-Holder: Optional. *See article in Brake Section..*

ENGINE HOOD (BONNET) LOCK, HOOD REMOVAL AND ADJUSTMENT:—*See Hudson Shop Notes.*

MODEL IDENTIFICATION

	1941 Model	1941 Serial No.	1942 Model	1942 Serial No.
Six Traveler	10T①	10101	20T②	20101
Six Deluxe	10P①	10101	20P②	20101
Super Six	11	11101	21	21101
Commodore Six 12	12	12101	22	22101
Business Cars	10C①	10101	20C②	20101
Big Boy	18	18101	28	28101

①—See Model 10 Note (below).
②—See Model 20 Note (below).

MODEL 10 NOTE:—3"x 5" engine optional (when this engine used **all equipment listed below for Model 11 used on these cars**). Serial No. plate carries identification prefixes as follows: **3"x4⅛" Eng.** 'T' (Traveler), 'P' (Deluxe), 'C' (Commercial). **3"x5" Engine** additional letter 'L' thus: 'TL', 'PL', 'CL'.

MODEL 20 NOTE:—3" x 5" engine optional (when this engine used **all equipment listed below for Model 21 used on these cars**). Serial No. plate carries identification prefixes as follows: **3"x4⅛" Eng.** 'T' (Six), 'P' (Deluxe), 'C' (Commercial). **3"x5" Engine** an additional letter 'L' thus: 'TL', 'PL', 'CL'.

SERIAL NUMBER: First No. for each model as shown in table above. Stamped on plate on right front door hinge pillar post. NOTE—First two figures of number indicate model thus: 10-101.

ENGINE NUMBER:—Same as Serial No. On top of cylinder block between #1 and 2 exhaust flanges.

TUNE-UP

COMPRESSION: Ratio & Pressure—As follows:

Model	Ratio	Pressure (At 125 RPM)
10, 20	7.25-1	125 lbs.
10, 20 (3"x5" Eng.)	6.5-1	120 lbs.
11, 12, 18 ('41)	6.5-1	120 lbs.
21, 22, 28 ('42)	6.5-1	120 lbs.

VACUUM READING:—18-21" steady idling at 600 RPM.

FIRING ORDER:—1-5-3-6-2-4. See diagram.

SPARK PLUGS:—Champion Spec. J9 Hudson. 14 MM. Gaps—.032"
Optl. Plug Note—Champion J-5 (Hotter) for continuous slow speed service or J-10 Commercial (Cooler) for continuous high speed service.

IGNITION: See Coil, Condenser, and Distributor.
Breaker Gap—.020" Cam Angle 35° (Closed).
Automatic & Vacuum Advance—*See Distributor.*

IGNITION TIMING: See Ignition Timing.
Std.Setting—½" flywheel travel BTDC. with 2nd graduation on flywheel ahead of mark "UDC.1-6/" at indicator on left front face of rear motor support above starter.

CARBURETION: See Carburetor & Carb. Equipment.
Idle Setting (Single Carb.)—Idle screw ¾-1½ turn open. Idle speed 580-600 RPM.
Idle Setting (Dual Carb.)—Both idle screws ¼-1¼ turn open (461-S), ½-1½ turn open (501-S). Idle speed 580-600 RPM.
Float Level (Single Carb.)—⅜" from top of bowl cover projection to top of soldered seam on free end of float with valve seated (invert to check).
Float Level (Dual Carb.)—3/32" (461-S), ⅛" (501-S) from gasket seat on bowl cover to top of float at each end (invert to check).
Accelerating Pump (Single Carb.)—Lower hole (medium stroke) Normal. Inner hole (Summer), Upper hole (Winter) for temperature extremes.
Accelerating Pump (Dual Carb.)—Outer hole (max. stroke) Normal. Inner hole (min.) when required.
Fuel Pump Pressure: 3½ lbs. max. (AF), 4½ lbs. max. (AK).

MANIFOLD HEAT CONTROL: Models 10, 18 ('41), 20, 28 ('42). Manual type. Located on manifold behind carburetor.
Setting—Arrow on valve cover pointing to "W" cast on top of manifold. Correct for **Summer & Winter.**
Models 11, 12 ('41), 21, 22 ('42)—Automatic thermostatic type. No adjustment. See that valve operates freely. NOTE—This type used on Models 10 and 20 with 3"x5" Engine.

VALVES: See Valve Timing.

►**Tappet Clearance:** *CAUTION*—2 settings used:
1)—.006" Intake, .008" Exhaust, hot & idling for
a) 1941-42 3" x 5" engine with original camshaft.
b) 1941 3" x 4⅛" engine up to car no. 6848 with original camshaft.
2)—.010" Intake, .012" Exhaust, hot & idling for
a) 1941 Small 3"x4⅛" Engine after car No. 6848.
b) 1942 Small 3"x4⅛" Engine.
c) **All 1941-42 engines with** new design **replacement camshaft** (Valve Cover Plate should carry decalcomania specifying this .010" Int., .012" Exh. setting where replacement camshaft installed).

See Hudson Shop Notes for data on this new Camshaft.

STARTING: See Battery, Starter, Generator, Regulator.

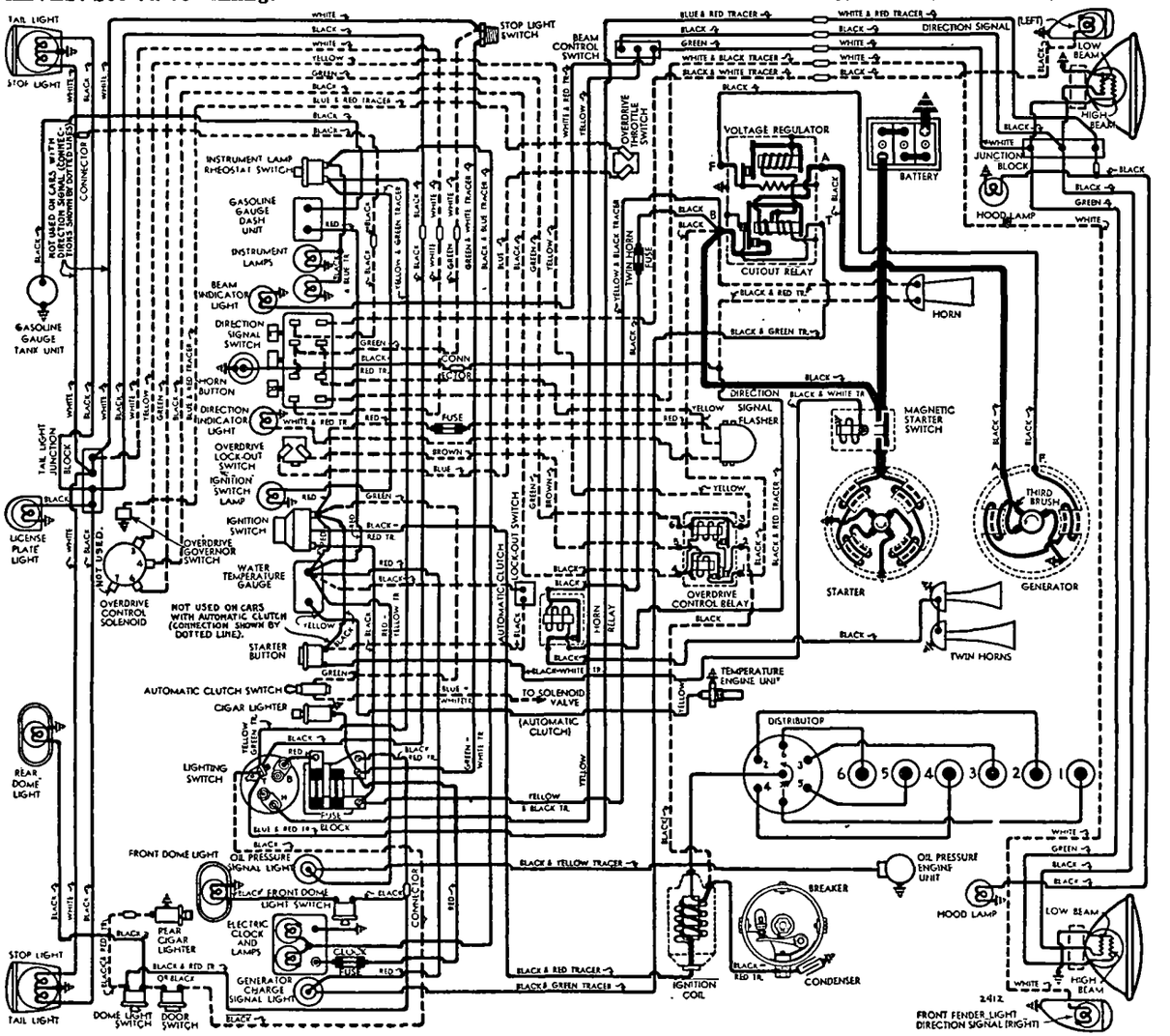

1941 M DELS

IGNITION

Ignition Switch:—Mitchellock Model 24-B, No. 8797.
Ignition Lock—Briggs & Stratton B & S No. 50184.
Key Series—H601 to H1100. **Groove**—No. 1.

COIL: Auto-Lite Model IG-4098. Mounted on the dash. IMPORTANT—Coil is hooked up reversed from conventional manner (as shown on 1940 diagram) with switch lead connected to terminal on high tension terminal end of coil, breaker lead to terminal on opposite end. Will not operate satisfactorily if connected otherwise.
Ignition Current—2.5 amperes idling, 4.5 stopped.

CONDENSER: Auto-Lite Part No. IGW-3075C.
Capacity—.20-.25 microfarad.

DISTRIBUTOR: Auto-Lite Model IGW-4203A. Single breaker, 6 lobe cam, full automatic advance type with auxiliary vacuum spark control.
Breaker Gap—.020".
Cam Angle or Dwell—35° closed, 25° open (distr. °).
Breaker Arm Spring Tension—17-20 ounces.
Rotation—Counter-clockwise viewed from above.

Distributor Degrees	Automatic Advance R.P.M	Engine Degrees	R.P.M.
Start	400	0	800
3	700	6	1400
6	1000	12	2000
9	1300	18	2600
11.75	1570	23.5	3140

Vacuum Spark Control—On distributor hold-down plate, linked to quadrant scale on distributor. Provides additional advance at speeds above idling except when engine accelerated or operated with wide open throttle (spark retarded by return spring within unit).

Vacuum Advance

Distr. Degrees	Eng. Degrees	Vacuum (" of HG)
Start	0°	5⅞"
4°	8°	9¼"
7.5°	15°	11¼"

Fuel Compensator—Manual adjustment for octane rating of fuel used. See Ignition Timing for setting.
Distributor Removal:—Mounted at top rear of cylinder head. To remove, disconnect vacuum line, take out cyl. head stud nuts on hold-down plate.

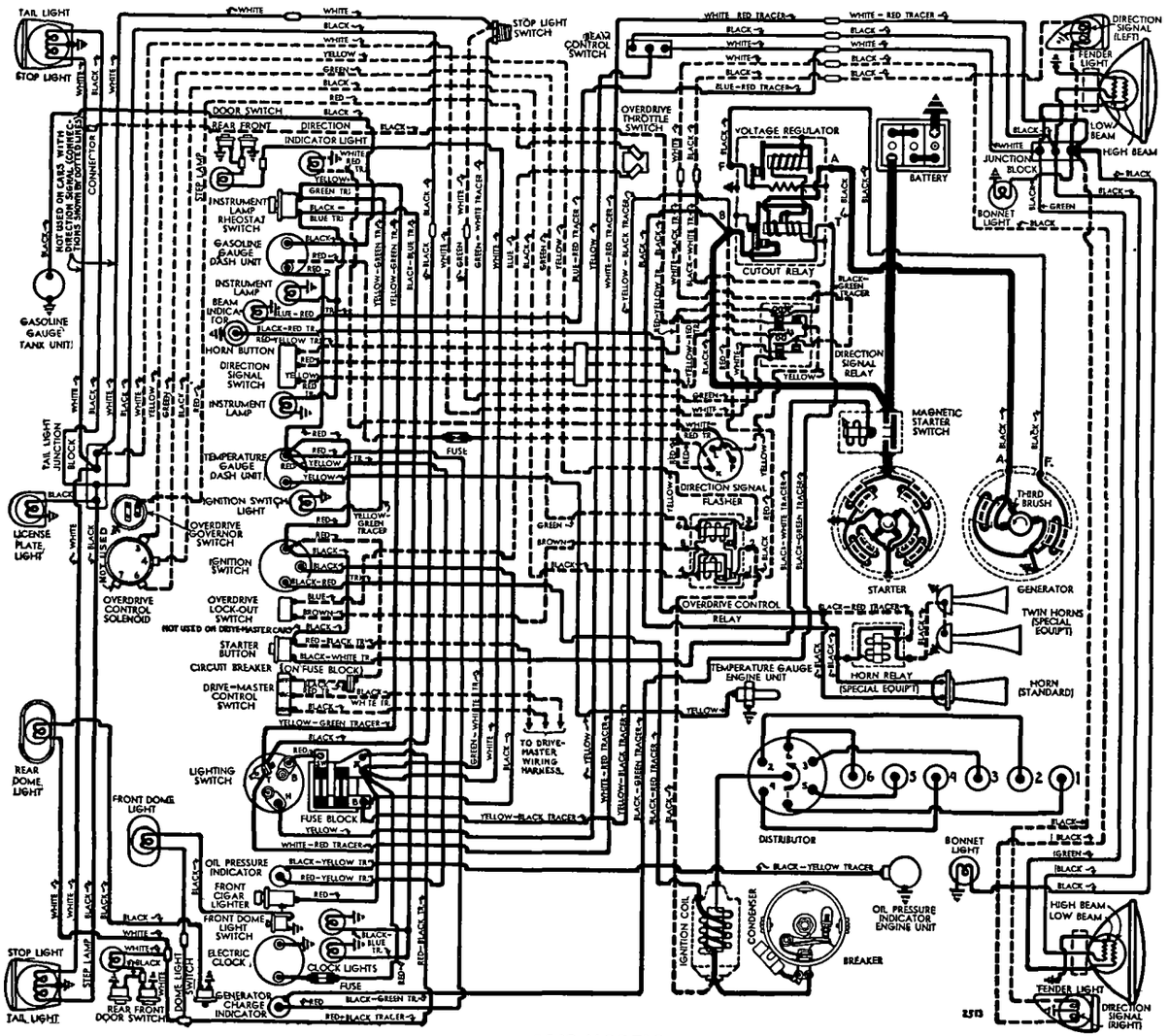

1942 MODELS

IGNITION TIMING

IGNITION TIMING:—Initial Setting—½" (two spaces) BTDC. for fuel of approximately 72 Octane rating.
Flywheel Marks—'UDC.1-6/' at TDC with 4 graduations (¼" apart) ahead of this mark.
Timing—With #1 piston on compression, turn engine over until second graduation before flywheel mark 'UDC.1-6/' lines up with pointer on left front face of rear motor support above starter. Loosen vacuum advance diaphragm screw on quadrant scale, rotate distributor counter-clockwise to limit of slot, then slowly rotate clockwise until contacts begin to open, tighten diaphragm screw securely. Check Fuel Compensator Setting below.
Timing (Using Synchroscope)—Recommended by car manufacturer. Mark flywheel with white chalk or paint. Idle engine, adjust distributor (above).
Fuel Compensator Setting—Road test car (engine warm). When running at 8 MPH slight ping should occur between 10-15 MPH when accelerating with wide open throttle. To adjust, loosen vacuum unit link screw on distributor quadrant, rotate distributor one graduation on quadrant scale clockwise (if no ping), counter-clockwise (if ping too severe).
Final setting must not be more than 1" (4th graduation) before 'UDC.1-6/' flywheel mark.

CARBURETOR

SINGLE BARREL

(Models 10—see Note, 18, 20—see Note, 28)—Carter Model WA-1, Type 454-S. 1¼" Single Barrel, downdraft type with Fast Idle and Carter Climatic Control (automatic choke).
Model 10, 20 Note—Cars with 3"x 5" Engine have dual carburetor (same as Models 11, 21 below).
For complete data, refer to Carburetor Index.
Idle Adjustment—With engine warm, set throttle stopscrew for 600 RPM hot or slow idle speed (fast idle inoperative), adjust idle adjusting screw so engine fires smoothly and vacuum reading at maximum (screw ¾-1½ turns open—turn screw in for leaner setting), recheck idle speed.
Accelerating Pump Setting—Pump arm has three holes for pump link engagement. Set as follows:
Lower Hole (med. stroke)—Normal setting.
Inner Hole (min.)—Hot weather or hi-test fuel.
Upper Hole (max.)—Cold weather or low-test fuel.
Float Level—⅜" from top of bowl cover projection to top of soldered seam on float at free end.
Metering Rods & Jets—***See Carter Jet Table in Carburetor Section for complete data.***

C NTINUED N NEXT PAGE

CONTINUED FR M PRECEDING PA E

Fast Idle (454-S): Integral with carburetor.
For complete data, refer to Carburetion Equip. Index.
Setting—Adjust by bending connecting link offset for 5/8" choke valve opening with throttle stopscrew against (not on) first step of fast idle cam.
Automatic Choke (454-S): Carter Climatic Control (Single Carburetors).
See Carburetion Equipment Section for complete data.
Setting—Centered (at index mark).

CARBURETOR

DUAL (DOUBLE BARREL)

(Models 11, 12, 21, 22): Carter Model WDO, Type 461-S (1941 before No. 2150), Type 501-S (1941 After No. 2150 & 1942). 1" Dual (double barrel), downdraft types with Fast Idle and Carter Climatic Control (automatic choke). NOTE—Type 461-S, only, has "Slow-Closing Throttle" dashpot device.
Idle Adjustment—With engine warm, set throttle stopscrew for 580-600 RPM hot or slow idle speed (fast idle inoperative). Adjust both idle screws (two used, one for each barrel) in succession until engine fires smoothly. Final setting should be 1/4-1 1/4 turn open (461-S), 1/2-1 1/2 turn open (501-S) from inner seated position. Turn screws in for leaner mixture. If vacuum gauge used, adjust for highest steady reading of the gauge. Readjust stopscrew for correct idling speed.
Accelerating Pump Setting—Pump lever (under dust cover on bowl cover) has two holes for pump link engagement. Adjust as follows:
Outer Hole (max. stroke)—Normal Setting.
Inner Hole (min. stroke)—If less charge required.
Float Level—3/32" (461-S), 1/8" (501-S) from top of float to bowl cover with valve seated.

Fast Idle (461-S, 501-S): Integral with carburetor.
For complete data, refer to Carb. Equip. Index.
Setting (461-S)—With choke valve closed, adjust fast idle screw for .018" throttle opening.
Setting (501-S)—With choke valve closed and fast idle screw on high lobe of fast idle cam, turn fast idle screw in until throttle opening is .045".

Automatic Choke:—Carter Climatic Control.
For complete data, refer to Carburetion Equip. Index.
Setting (461-S)—Centered (at index mark).
Setting (501-S)—One Notch Lean (supersedes "Centered" setting originally specified for this model.

CARB. EQUIPMENT

Air Cleaner:—AC oil wetted types.

Car Model	Standard	Cars with Drive-Master	Replacement Filter Elem.
10,18,20,28	1528159	1542384	Type #1
11,12,21,22	1528161	1542385	Type #2

Fuel Pump: AC Type AF, No. 1523753 (10,18,20,28 Pass. Cars); Type AK, No. 1523289 (All others). Pump Exchange No. 509 (Type AF), 499 (Type AK).
For complete data, refer to Carburetion Equip. Index.

Gasoline Gauge:—King-Seeley Electric. K-S No. 8305 (Dash Unit—stamped 'G'), No. 7550 (Tank Unit).
For complete data, refer to Carburetion Equip. Index.

BATTERY

BATTERY:—National, Type HT-17. 6 volt, 17 plate, 96 ampere hour capacity (20 hour rate).
Starting Capacity—120 amperes for 20 minutes.
Zero Capacity—300 amperes for 3.5 minutes. Five second voltage—4.24 volts.
Grounded Terminal—Positive (+) to frame. **Engine Ground**—Strap (rear motor support to frame).
Dimensions—Lgth. 10 9/16". W. 7 1/4". Hght. 7 13/16".
Location—On left side under engine hood.

STARTER

Auto-Lite Model MZ-4092. Armature No. MZ-2138.
Drive—Inboard Barrel type Bendix No. A-1684.
Rotation—Counter-clockwise at commutator end.
Brush Spring Tension—42-53 ozs. (new brushes).
Cranking Engine—150 RPM, 125 amperes, 5.4 volts.

Performance Data

Torque	R.P.M.	Volts	Amperes
0 ft. lbs	4300	5.5	70
2.55 "	1325	5.0	200
4.95 "	750	4.5	300
7.65 "	220	4.0	400
7.8 "	Lock	3.0	420
11.8 "	Lock	4.0	560

Removal:—On left front face of rear motor support. To remove, take out flange mounting screws.
Starting Switch:—A-L Model SS-4001. Magnetic type.
For complete data, refer to Electrical Equipment Index.

GENERATOR

STANDARD

Auto-Lite Model GDS-4801A (Std. 10, 18, 20, 28); GEC-4801A (Std. 11, 12, 21, 22, 20P Conv. Sedan, 20 with 3" x 5" Eng., All Cars with DriveMaster). Third brush control type with vibrating voltage regulator. Ventilated by fan on drive pulley.
Armature—GDF-2006F (GDS), GDZ-2006F (GEC).
Maximum Charging Rate (GDS)—32-34 amperes (cold), 8.0 volts, 2900 RPM or approx. 35 MPH.
(GEC) 39-43 amperes (cold), 8.0 volts, 3350 RPM or approx. 43 MPH. Actual charging rate controlled by Voltage Regulator (see Regulator). Ground generator 'F' terminal when checking generator output.
Charging Rate Adjustment—See Regulator. Third brush setting (GDS) 1 comm. bar minus 1 mica strip min., 1 comm. bar max. from insulated (nearest main brush). (GEC) 1 comm. bar min., 1 comm. bar plus 1 mica strip max. Adjust by shifting 3rd brush.

Performance Data—GDS-4801A

Cold Amperes	Volts	R.P.M.	Hot Amperes	Volts	R.P.M
0	6.4	920	0	6.4	960
4	6.6	1050	4	6.65	1120
8	6.8	1175	8	6.9	1280
12	7.0	1300	12	7.1	1430
16	7.2	1450	16	7.35	1640
20	7.4	1600	20	7.6	1900
24	7.6	1820	24	7.8	2320
28	7.8	2075	27.5	8.0	3400
33	8.0	2900			

Performance Data—GEC-4801A

0	6.4	960	0	6.4	1040
4	6.55	1060	4	6.6	1140
8	6.7	1160	8	6.8	1280
12	6.85	1280	12	6.95	1440
16	7.0	1400	16	7.15	1600
20	7.15	1550	20	7.35	1820
24	7.25	1700	24	7.55	2090
28	7.5	1890	28	7.75	2440
32	7.65	2100	32	7.9	3000
36	7.8	2375	34	8.0	3800
41	8.0	3350			

Rotation—Counter-clockwise at commutator end.
Brush Spring Tension—53 ozs. max. (new brushes).
Field Current—1.65-1.82 amperes (GDS), 1.60-1.78 amperes (GEC) at 6.0 volts.
Motoring Current—5.10-5.45 (GDS), 4.85-5.4 (GEC) amperes at 6.0 volts.

Removal:—Pivot mounted at left front of engine. To remove, take out pivot and clamp bolts.

Belt Adjustment:—3/4" slack midway between pulleys.

GENERATOR

SPECIAL EQUIPMENT

SPECIAL GENERATORS:—**Police & Spec. Service**—*Refer to 1941-42 Hudson Eight article (following) for complete data on these Generators and Regulators.*

REGULATOR

REGULATOR:—**Auto-Lite VRR-4001A.** Cutout Relay and vibrating Voltage Regulator in case on dash. Cutout Relay has extra set of contacts for Generator Teleflash Indicator control. NOTE—Regulator enclosed in close-fitting metal cover on dash.
For complete data, refer to Electrical Equipment Index.
NOTE—Regulator case cover is sealed. Serviced on exchange basis if seals not broken.

Cutout Relay

Cuts In—6.4-6.6 volts, 825 RPM. 9.4 MPH.
Cuts Out—4.2-4.8 volts (approx. 4-6 amps. disch.).
Contact Gap—.015" min. ground contacts closed (ground contacts open when main contacts close).
Air Gap—.031-.034" at hinge end of core with contacts open (ground contacts closed).

Voltage Regulator

Setting—7.1-7.4 volts at 70°F.
To Check (without breaking seals)—Connect ammeter in charging line at regulator 'B' terminal, voltmeter between this terminal and ground. Operate generator at speed of 30 MPH charging battery until voltage is constant. Voltmeter reading should be within limits of 7.1-7.4 volts at 70°F. See Electrical Equipment Section for other temperatures.
To Adjust (with cover removed)—Change regulator armature spring tension by bending lower spring hanger slightly. See Electrical Equipment Section.
Contact Gap—.012" Min. (armature against stop).
Air Gap—.048-.052" with contacts just opening.

LIGHTING

LIGHTING:—**Headlamps**—Hall 'Sealed Beam' type.
For complete data, refer to Electrical Equipment Index.
Headlamp Adjustment—Aim upper beam of each headlamp straight ahead with hot spot centered on horizontal line 3" below lamp center height.
Beam Indicator—Red pilot bulb on speedometer dial. Lighted with Country (upper) beam in use.
Direction Indicator—Optional equipment.
For complete data, refer to Electrical Equipment Index.

Switches—1941

Lighting—Douglas. Hudson No. 147835.
Beam Selector—R-B-M Model 2484.
Instrument—R-B-M. Hudson No. 160092.

Switches—1942

Lighting—Douglas. Hudson Part No. 200417.
Beam Selector—R-B-M. Hudson Part No. 164439.
Instrument—R-B-M. Hudson Part No. 160092.

Bulb Specifications—1941

Position	Candlepower	Mazda No.
Headlamps		Sealed Beam
Side Panel (Parking)	1½	55
Fender Lamp (see Note)	3	63
Speedometer, Elec. Clock	1½	55
Generator & Oil Signals	1½	55
Ign. Lock, Mech. Clock	1	51
Beam & Direct. Indic.	1	51
Stop & Tail	21-3	1154
Rear License	3	63
Dome	15	87

NOTE—21 cp. No. 1129 for Direction Indicator.

Bulb Specifications—1942

Position	Candlepower	Mazda No.
Headlamps		Sealed Beam
Bonnet Side Panel (Park)	1.5	55
Fender Lamp (see Note)	3	63
Ign. Lock, Clock	1.5	55
Indicators (Gen.,Oil,Beam,Dir.)	1	51
Speedometer	1	51
Stop & Tail	21-3	1154
Rear License	3	63
Dome & Courtesy	15	88

NOTE—No. 1158 21-3 cp. used with Direction Indic.

MISC. ELECTRICAL

SIGNAL LIGHTS:—Generator Charge and Oil Pressure Indicators used. Hudson Teleflash Electric type. ***For complete data, refer to Electrical Equipment Index.***

FUSES:—**Lighting**—30 ampere. Lower fuse on fuse block on lower edge of instrument panel to right of steering column. **Accessory**—30 amp. Top fuse on block. NOTE—Silver-plated fuses used. 30 amp. fuse supersedes 20 ampere fuse used on early cars.
Twin Horns (1939)—30 ampere. On engine dash.
Direction Indicator—10 amp. near speedometer.
Electric Clock—2 amp. in case behind clock.
NOTE—Feed wire for electric clock on early cars connected to fuse block 'Bat' terminal. Should be changed to accessory 'X' terminal (as shown).

CIRCUIT BREAKER:—**Used on Drive-Master Cars only.** On fuse block. Protects Drive-Master circuit only.

HORNS: Single—Schwarze Electric type. Std. on Models 10T, 18 (1939), 20T, 28 (1940).
Twin—Sparton air electric type operated by relay. Fuse on dash. **(Air Gap)** .026-.030" high pitch (short), .032-.035" low pitch (long).

Horn Relay:—R-B-M Model 6004. On dash. **Contacts Close 3-4** volts (relay upright, terminals down).

ENGINE

ENGINE SPECIFICATIONS (10T, 10P, 10C '41; 20T, 20P, 20C '42): 6 Cylinder, "L" Head type.
Bore—3". Stroke—4⅛".
Displacement—175 cubic inches.
Rated Horsepower—21.6.
Developed Horsepower—92 at 4000 RPM.
Compression Ratio—7.25-1 cast-iron head.
Compression Pressure—125 lbs. at 125 RPM (cranking speed). 90 lbs. minimum (10 lbs. max. variation).
Vacuum Reading—Steady 18-21" idling at 600 RPM.

ENGINE SPECIFICATIONS (10TL, 10PL, 10CL, 11, 12, 18 '41; 20TL, 20PL, 20CL, 21, 22, 28 '42): 6 Cylinder, "L" Head type.
Bore—3". Stroke—5".
Displacement—212 cubic inches. Rated HP—21.6.
Developed Horsepower—102 at 4000 RPM (all models except Models 18, 28), 98 at 4000 RPM (Models 18, 28 only). NOTE—Model 18 & 28 Engines equipped with single carburetor. Dual carburetor used on all other models.
Compression Ratio—6.50-1 cast-iron head.
Compression Pressure—120 lbs. at 125 RPM (cranking speed). 90 lbs. minimum (10 lbs. max. variation).
Vacuum Reading—Steady 18-21" idling at 600 RPM.
See Hudson Shop Notes for Engine Removal instructions and Engine Front Support Removal and Installation.

PISTONS: Lo-Ex aluminum alloy (1941), Cast Alloy (1942), cam ground type. Use finished replacement pistons.
Weight—10.5 ozs. (stripped). **Length—3 3/16".**
Removal—Pistons and rods removed from above.
Clearance—Top .016". Skirt .0005-.001". See Fitting New Pistons below.
Original Bore & Piston Sizes, Replacement Pistons:—***See Hudson Shop Notes for sizes and markings.***
Fitting New Pistons:—Use .0015" feeler ½" wide inserted between piston and cylinder wall on side opposite slot at right angles to pin. Pull to withdraw feeler must be within 3-4 lbs. Use Tool J-888-A Piston Feeler Scale to measure pull.
Installing Pistons: Slot away from camshaft.

PISTON RINGS:—Two compression, two oil rings (one above pin, one below pin) per piston. Rings are square end type. Rings pinned to prevent rotation. Rings cut and notched to fit pin (clearance on pin equal to ring end gap).

Ring	Width	End Gap	Side Clearance
Compression	3/32"	.009-.011"	.001"
Oil (upper)	3/16"	.009-.011"	.001"
Oil (lower)	5/32	.009-.011"	.001"

Replacement Rings:—***See Hudson Shop Notes for data.***

PISTON PIN:—**Diameter—¾". Length—2 7/16".**
Floating type. Retained by locking rings.
See Hudson Shop Notes for Pin Servicing data.
Pin Fit in Piston—.0003" clearance (hand push fit) with piston heated to 200°F.
Pin Fit in Rod Bushing—.0003" clearance.
Replacement Pins:—Standard and .002", .005", .010" oversize.

CONNECTING ROD:—**Weight**—30¾ ozs. (3" x 4⅛" engines), 30 ozs. (3" x 5" engines).
Length—8⅝" (3" x 4⅛" engines), 8 3/16" (3" x 5" engines).
Crankpin Journal Diameter—1 15/16".
See Crankshaft Size Code Note in Hudson Shop Notes for Original Connecting Rod Bearing sizes.
Lower Bearing—Lead alloy-lined (1941), babbitt-lined (1942), Spun type. Exchange Rods furnished Standard Size and .010" Undersize.
Clearance—.001". **Sideplay**—.006-.010".
Bearing Adjustment:—None (no shims). Do not file rods or caps. ***See Hudson Shop Notes for Palnut (rod bolt nut locknut) installation data.***
Installing Rods:—Lower end of rods offset. Install rods with widest half of bearing toward the rear (#1, 2, 4), toward front (#3, 5, 6). Oil scoop on lower end of rod toward camshaft.

CRANKSHAFT:—3 bearing, integral counterweights.
See Hudson Shop Notes for Crankshaft and Vibration Dampener Removal, Main Bearing Removal and Installation, Replacement Bearings & Line-Reaming data.
Journal Diameters—#1, 2 11/32"; #2, 2⅜"; #3, 2 13/32".
See Crankshaft Size Code Note in Hudson Shop Notes for Original Main Bearing Sizes.
Bearings—Bronze backed, babbitt lined type. Bearings secured in cap and crankcase by brass screws.
NOTE—No shim pack is used. Palnuts used in place of cotter pins to lock bearing cap nuts.
Clearance—.001".
Bearing Adjustment:—None (no shims). Do not file caps. ***See Hudson Shop Notes for Bearing Adjustment and Palnut (locknut) Tightening procedure.***

►***CAUTION—Replacement of main bearings requires removal of crankshaft. Bearings retained by brass screws.***

Replacement Bearings: ***See Hudson Shop Notes.***
End Thrust:—Taken by center bearing. Replace bearing if endplay excessive. NOTE—If new unfinished bearings installed, thrust face for center bearing must be faced for proper endplay.
Endplay—.006-.012".

►**CAMSHAFT:** ***CAUTION*—Two types of production camshafts used as follows:**
1)—**Part No. 159505.** For all 1941-42 3" x 5" engines, and up to car no. 6848 on 1941 3" x 4⅛" engines.
2)—**Part No. 162962.** For all 1942 3" x 4⅛" engines, and after car no. 6848 on 1941 3" x 4⅛" engines.

►***CAUTION*—Different Tappet Clearance Settings and Valve Timing** used with each camshaft listed above. See Valve Timing (following).
1942 Note—Camshaft Bearing Clearance and Timing Gear Backlash reduced from that used on previous models for quieter operation of valve mechanism. No valve spring dampeners used.
Journal Diameters—#1, 2.000"; #2, 1.968"; #3, 1.5625".
Bearings—New type steel-backed, 'Bermax' (babbitt) lined bushings (formerly solid type babbitt).
Clearance—.002-.0025" (1941), .001-.0025" (1942).
See Hudson Shop Notes for Camshaft Removal and Camshaft Bearing installation instructions.

►**Replacement Camshaft for ALL ENGINES:** New replacement camshaft no. 166195 (similar to No. 2 Production Camshaft listed above). ***See Replacement Camshaft in Hudson Shop Notes for changes and identification.***

►***CAUTION***—When replacement camshaft installed on engines with No. 1 (159505) production camshaft (listed above), **Tappet Clearance Settings and Valve Timing changed.** See Valve Timing (following) or ***see Replacement Camshaft in Hudson Shop Notes.***

End Thrust:—Thrust washer between camshaft flange and crankcase. Spring loaded button in camshaft hub bears against thrust plate on gear cover.
NOTE—Service thrust washer available which can be split and installed without removing camshaft.

Timing Gears:—Crankshaft gear cast-iron, camshaft gear laminated fibre. Tooth shape changed to 20° pressure angle (was 14½°) to provide quieter operation and longer gear life. Gears can be identified by figure 20 stamped on front face (crankshaft gear carries additional FRONT mark to insure correct installation). Gears may be installed in sets only (not singly) on earlier car models (new type gears similar to previous type except for tooth pressure angle).

C NTINUED ON NEXT PAGE

ENGINE

CONTINUED FROM PRECEDING PAGE

NOTE—Camshaft gear available in .008" Oversize (can be distinguished from Std. Size by spot of yellow paint on front face).

Backlash—.002-.004".

See Hudson Shop Notes for Timing Gear removal and installation instructions.

Camshaft Setting:—Mesh marked crankshaft gear tooth between two marked teeth on camshaft gear.

VALVES:—	Head Diameter	Stem Diameter	Length
All valves	1⅜"	11/32"	5 11/32"
	Seat Angle	**Lift**	**Stem Clearance**
Intake	45°	11/32"	.0025"
Exhaust	45°	11/32"	.004"

Valve Guides: Removable type. New longer exhaust guide used in 1942 (counterbore at top increased) and lengthened approx. ⅜", lower end of guide has been lengthened approx. ⅜" to compensate for increased length of counterbore at top). This new guide designed to reduce tendency of exhaust valves to stick due to fuel or oil gum formations at upper end of valve stem.

Servicing—Use Tool J-1188 to drive guides out. Install guides with Tool J-883-A with top of guide 1 1/16" below top of cylinder block. With guides installed, ream guides with Tool J-129-2 to .3437" (11/32") which will provide proper valve stem-to-guide clearance. NOTE—Car manufacturer recommends that guides be cleaned with Tool KMO-122

Valve Springs:—Cadmium plated springs used with dampener installed on bottom with open side toward cylinder (Dampener used on 1941 cars only). Use Tool J-587-A to install valve spring and seat

NOTE—Car manufacturer recommends that dampeners be omitted whenever valves are serviced.

Spring Free Length—2 17/64".

	Spring Pressure	Spring Length
Valve Closed	40 lbs.	2"
Valve Open	80 lbs.	1 21/32"

NOTE—When springs removed, test for pressure (Tool U-15). Replace if pressure below 34 lbs. at 2".

Valve Lifters:—Roller shoe type, fitted in removable guides. ***See Hudson Shop Notes for lifter removal.***

VALVE TIMING

►**Tappet Clearance:** *CAUTION*—2 settings used:

1)—.006" Intake, .008" Exhaust, hot & idling for

a) 1941-42 3" x 5" engine with original camshaft.

b) 1941 3" x 4⅛" engine up to car no. 6848 with original camshaft.

2)—.010" Intake, .012" Exhaust, hot & idling for

a) 1941 Small 3"x4⅛" Engine after car No. 6848.

b) 1942 Small 3"x4⅛" Engine.

c) **All 1941-42 engines with new design replacement camshaft** (Valve Cover Plate should carry decalcomania specifying this .010" Int., .012" Exh. setting where replacement camshaft installed).

NOTE—See Replacement Camshaft data on preceding page for data.

See Hudson Shop Notes for Fender Plate Removal for access to valve compartment.

VALVE TIMING: See Camshaft Setting above.

ORIGINAL VALVE TIMING SPECIFICATIONS

►for 1941-42 3" x 5" Engines

►for 1941 3" x 4⅛" Engines up to car no. 6848 (with production 159505 camshaft)

Intake Valves—Open 10°40' BTDC. Close 60° ALDC.
Exhaust Valves—Open 50° BLDC. Close 18°44' ATDC.
These figures correct with .010" tappet clearance.

►for 1941-42 3" x 4⅛" Engines after '41 car no. 6848 (with production 162962 camshaft)

Intake Valves—Open 28°30' BTDC. Close 68°30' ALDC.
Exhaust Valves—Open 52°40' BLDC. Close 32°40' ATDC. These figures correct with .010" tappet clear.

NEW VALVE TIMING SPECIFICATIONS

►for all 1941-42 Engines (with replacement 166195 camshaft)

Intake—Open 27°30' BTDC. Close 68°10' ALDC.
Exhaust—Open 51°50' BLDC. Close 32°10' ATDC.
These figures correct with .010" tappet clearance.

Valve Timing Check (for engines with production 159505 camshaft)—With .010" tappet clearance, #1 intake valve should open with piston 10°40' BTDC. when point on flywheel 4 teeth before "UDC. 1-6/" lines up with indicator in hole in support above starter. Reset tappet clearance to .006" Intake.

(for engines with production 162962 camshaft or replacement 166195 camshaft)—With .010" tappet clearance, #1 intake valve should open with piston 27°30' BTDC. when point on flywheel 10 teeth before "UDC. 1-6/" lines up with indicator in support above starter.

LUBRICATION

LUBRICATION:—Duo-flo (pressure and positive splash) lubricating system.

Oil Pump:—Oscillating plunger type, gear driven by camshaft. Mounted on right side of crankcase.

Normal Oil Pressure—4-12 lbs. with hot oil. No gauge used (see Oil Pressure Indicator below).

NOTE—On 1942 engines, lower end of oil reservoir suction pipe (from oil pan to crankcase wall) extends to center of oil reservoir to insure constant oil supply to pump.

Oil Check Valve:—Located on right side of crankcase at rear. Opens at 4-12 lbs. with hot oil. Operates dash signal to indicate oil flow.

Oil Pressure Indicator:—Hudson Teleflash Oil Pressure Indicator. Consists of signal light on instrument panel operated by switch mounted on oil check valve.

For complete data, refer to Electrical Equipment Index.

Checking Oiling System:—***See Hudson Shop Notes.***

Crankcase Capacity:—4½ quarts (refill), 5½ (dry).

Servicing Note—When changing oil without removing oil pan, refill with 4½ quarts. If oil pan removed, place 1½ quarts in upper tray before oil pan installed, then 4 quarts through filler with pan in place.

COOLING

COOLING SYSTEM:—**Capacity**—13 quarts.

See Hudson Shop Notes for radiator core removal.

Water Pump:—Centrifugal, belt-driven, packless type with single outlet (no by-pass). Grease fitting provided for front & rear bearing lubrication.

See Water Pump Section for complete data.

Thermostat:—Fulton. Choke type located in cylinder head water outlet.

Setting—Starts to open150-155°F. Fully open 185°.

NOTE—Special high temperature thermostats available for use with ethylene glycol type anti-freeze. Starts to open 160-165°F. Fully open 190°F.

Temperature Gauge:—King-Seeley Electric. K-S Nos. 8310 (Dash Unit—stamped 'T'), 7000 (Eng. Unit).

See Miscellaneous Section for complete data.

NOTE—Temperature gauge inoperative with ignition 'off'. Pointer returns to 'H' (hot) position.

CLUTCH

CLUTCH:—**Own Make.** Single plate, cork insert type operating in oil.

See Clutch Section for complete data.

Driven Member—Cork Insert type (90 cork inserts on 9" size, 108 cork inserts on 10" size). Corks are .203" thick.

	Inside—Diameter—Outside
10, 10L, 11 (no O.D.)	5¼" — 9"
10, 10L, 11 (With O.D.)	6⅜" — 10"
12, 18	6⅜" — 10"
20, 21 (no O.D.)	5¼" — 9"
20, 21 (with O.D.)	6⅜" — 10"
22, 28	6⅜" — 10"

Pedal Adjustment (1941): Setting used dependent on connector link position on cross shaft lever. Normal setting (with connector link in center hole on cross shaft lever) 1½" clearance between underside of toeboard and center of clutch pedal clamp bolt. Second setting (with connector link in lower hole—for lighter clutch pedal pressure) clearance increased to 2". To adjust, loosen lock nut on connector link above clevis, take out clevis pin and turn clevis in or out for correct clearance. Check Automatic Clutch Control adjustment if used.

Pedal Adjustment (1942): Clearance between underside of toeboard and top of pedal shaft should be 1½" with link engaged in pedal and cross-shaft levers as given in table below. To adjust, loosen locknut on adjusting link above clevis, take out clevis pin (at lower end of link), adjust length of rod for proper clearance by turning clevis in or out on adjusting link.

Model	Top	Bottom
20T, 20P, 20C	Inner Hole	Outer Hole
20TL, 20PL, 20CL; 21	Outer Hole	Outer Hole
22,24,25,27,28 & ①	Outer Hole	Center Hole

①—All Six & Eight cylinder cars with Vacumotive Drive, Drive-Master, or Overdrive.

Clutch Oil Servicing:—***See Hudson Shop Notes for data.***

Removal:—Remove transmission (see Transmission Removal following). Drain clutch oil by turning engine over until plug on flywheel is accessible through timing inspection hole in rear engine support plate above starter, remove plug, turn engine over ⅓ revolution until star on flywheel visible through timing hole (drain hole then at bottom), allow lubricant to be drained. Loosen mounting bolts in clutch cover rim to release spring tension, remove bolts and lift clutch assembly off car.

NOTE—See Installation Note following Transmission Removal for Clutch Throwout Bearing Oil Seal

VACUMOTIVE DRIVE

Vacumotive Drive: Automatic clutch control. Optl.

NOTE—Governor switch changed during production.

See Clutch Section for complete data.

TRANSMISSION

TRANSMISSION:—Own Make. New all helical gear, constant-mesh type with synchro-mesh (Second and High), sliding gears (Low & Reverse) and steering column gear shift. NOTE—External shift rail locks not used but are available in Accessory Kits for installation on cars operated in mountainous regions where Second Gear operation required for long periods.
See Transmission Section for complete data.

Transmission Control:—Hudson 'Handy-Shift' type.
See Transmission Section for complete data.

Removal:—Transmission can be removed from inside car as follows: Take off accelerator pedal by removing cotter pins in anchor bracket and bell crank link clevis pins. Move steering column rubber hole cover up out of way. Remove floor mat by taking out screws at kick pads on dash and mat trim clips. Remove front seat cushion and transmission floor opening cover (CAUTION—Accelerator pedal operating rod should be secured so as not to drop on starter switch). Disconnect front universal by taking out four nuts and lock plates on U-bolts. Release clutch pedal return spring. Remove two cross shaft bracket bolts, clutch control link clevis pin and clutch pedal assisting spring. Remove Handy Shift control tube-to-transmission shift rod cotter pin, washer and grommet; transmission casing lower anchor bracket screws and anchor bracket; transmission case outer lever retainer nut and retainer nut washer; and lever. Remove two flywheel guard-to-clutch housing screws and two rear engine mounting bolts (CAUTION—Do not remove rear engine mounting-to-clutch housing bolt). Jack rear of engine up ½" off frame. Remove clutch housing to transmission bolts. Disconnect speedometer cable from transmission. Pull transmission back and lift out.

Installation Note—Wrap one strand of soft wire around throw-out bearing oil seal to prevent leather curling over when transmission installed (twist wire with ends extending up through clutch housing so that it will come off the seal after transmission installed).

DRIVE-MASTER TRANSMISSION

Drive-Master:—Conventional 3-speed transmission with automatic gearshifting between second and high gears in conjunction with Vacumotive Drive (automatic clutch control). Optl. equipment.
See Transmission Section for complete data.

OVERDRIVE

Overdrive:—Warner Model AS1-R9B with electrical 'kick-down' control (new type—no centrifugal clutch pawls used). Optional equipment.

1941 Governor Switch Change to Correct Late Cut-In—New Governor Switch Part No. 162867 with purple dots on terminal screw heads and purple band around switch has reversed oil threads in shaft bushings to keep transmission lubricant out of switch, overcoming improper operation of switch. Used on Late '41 cars.
See Transmission Section for complete data.

Overdrive Transmission Removal—Same as standard transmission removal (above) except that overdrive control and wiring connections must be disconnected. Special Tool J-1502-H (hoist and dolly) should be used to lift transmission and lower onto dolly. Transmission and overdrive assembly can then be rolled out from beneath car.

Overdrive Solenoid—Delco-Remy. Hudson #163305.

Throttle Switch—Cole-Hersee. Hudson No. 162594. Adjust position of contact washer on accelerator pedal rod so that it just contacts switch plunger with carburetor throttle in wide open position.

Governor Switch—Bendix No. 162867. NOTE—Changed to new type with purple dots on terminals.

UNIVERSALS

UNIVERSAL JOINTS:—Spicer. Needle bearing type.

Car Model	Spicer Model No. Front	Rear
10, 20 Std.	1261-101	1268-101
11, 12, 21, 22 Std.	1271-101	1278-101
18,28 Std.	1281-101	1278-101
All Models (with Overdrive)	1281-101	1278-101

See Universals Section for complete data.

REAR AXLE

REAR AXLE:—Own Make. Semi-floating, spiral bevel gear type with Hotchkiss drive.
See Rear Axle Section for complete data.

Ratios	4 1/9-1	4 5/9-1	4 7/8-1
10 Std.	Optl.	Std.	Optl.
10 With Overdrive	Optl.	Optl	Std.
11, 12 Std.	Std.	Optl.	
11, 12 With Overdrive	Optl.	Std.	
18 Pass. Car Std.	Std.	Optl.	
18 Comml. Std.		Std.	
18 Pass. Car With O.D.	Optl.	Std.	
18 Comml. With Overdrive		Optl.	Std.
20 Std.	Optl.	Std.	Optl.
20 With Overdrive	Optl.	Optl.	Std.
21, 22, 28 Pass. Std.	Std.	Optl.	
21, 22, 28 Pass. O.D.	Optl.	Std.	
28 Comml. Std.		Std.	
28 Comml. With O.D.		Std.	

Backlash—.0005-.0035". Screw adjustment.

Removal:—Disconnect rear universal by taking out four nuts and lock plates on U-bolts, drop rear end of propeller shaft. Remove axle shafts (see instructions below). Remove bolts nuts on carrier flange, pull carrier assembly out of axle housing.

Axle Shaft Removal:—Hoist rear of car. Remove rear wheels. Remove axle shaft nut and washer (use Tool J-351). Remove hub and drum assembly using screw type wheel puller (Tool J-736—CAUTION—Car manufacturer recommends that screw type puller be used, if knock out type puller is used serious damage to differential parts may result). Remove 4 nuts on bearing cap bolts, push bolts out of backing plate, remove bearing cap and shims (without disturbing hand brake link). Take out rear wheel bearing and axle shaft using puller Tool J-352. Do not drag axle shaft on oil seal assembly in housing.

Wheel Bearing Adjustment:—Controlled by shims under bearing cap. To adjust, remove bearing cap (see directions above under Axle Shaft Removal), add or remove shims equally at both wheels (necessary to keep thrust spacer centered on differential pinion shaft—if adjustment made at one wheel only spacer will bind on shaft.

Endplay—.002-.004".

SHOCK ABSORBERS

SHOCK ABSORBERS:—Direct acting, hydraulic types.

Car Model	Make	Front	Rear
10, 11, 18① Std. Springs	Monroe	160101	160107
10, 11, 18① Hvy. Springs	Monroe	161636	160108
10, 11, 12, 18②	Monroe	161657	161658
12, 22①	Delco	1007-C	1008-S
20, 21, 22, 28③	Monroe	164545	164546
20, 21, 22, 28④	Monroe	164547	164548
20, 21, 28⑤	Monroe	164786	164787

①—All Sedans. ②—Coupes (3 & 4 Pass.).
③—Early Sedans (exc. 22), Late 3 Pass. & Club Coupe.
④—Early 3 Pass. & Club Coupe.
⑤—Late Sedans.
See Shock Absorber Section for complete data.

FRONT SUSPENSION

Front Suspension:—Independent, linked parallelogram type with coil springs and Autopoise Control.
See Front Suspension Section for complete data.

Kingpin Inclination—4°36' crosswise.

Caster—0° (Neg. ¼° to Pos. ¼°). Adjustable.

Camber—Positive ¼° to Positive ¾°. Adjustable.

Toe In—0-1/16". Center steering arm on frame must be at center of car. To adjust, loosen clamps at ends of each tie rod and adjust tubes equally (to increase toe-in turn rods in direction of wheel travel, to decrease, turn in opposite direction).

Steering Geometry (Toe-out on Turns)—With outer wheel turned 25°. Inner wheel turn should be 30°.

STEERING GEAR

Steering Gear: Gemmer Model 305. Worm-and-Roller type with "push-pull" adjustments. All models have Center Point steering linkage.
See Steering Gear Section for complete data.

BRAKES

BRAKES:—Service. Bendix hydraulic, duo-servo, single anchor type without eccentric adjustment. Mechanical follow-up (pedal linked to rear wheel brakes through hand brake cables) provided. Hand lever applies rear wheel service brakes.
See Brake Section for complete data.

Commercial Cars Model 10C Note—Early 1941 Model 10C cars (up to Car No. 1054730) equipped with 11" brakes (see 1941 Hudson 8 page following for 11" brake specifications). Data below applies to Model 10C starting with Car No. 1054731 & all other Sixes.

Drums—New centrifuse type. Diameter 10".

Lining—Multibestos molded (primary), Ferodo woven (secondary). Width 1¾". Thickness 7/32". Length per wheel 22⅛".

Clearance—.015" at each end of secondary shoe with primary shoe forced out against drum.

Hand Brake:—See Service Brakes above.

MISC. MECHANICAL

CONVERTIBLE TOP CONTROL: Hydro-electric type (hydraulic actuation with motor-driven hydraulic pump). Used on Convertible models.
See Miscellaneous Section for complete data.

Top Control Motor—Auto-Lite Model MBM-4001.

ENGINE HOOD (BONNET) LOCK, HOOD REMOVAL AND ADJUSTMENT:—*See Hudson Shop Notes.*

MODEL IDENTIFICATION

	1941 Model	1941 Serial No.	1942 Model	1942 Serial No.
Commodore Eight	14	14101	24	24101
Commo. Cust. Coupe	15	15101	25	25101
Commo. Cust. Sedan	17	17101	27	27101

SERIAL & ENGINE NUMBER:—See Model Notation for first Nos. (first 2 figures indicate model thus: 14-101). Stamped on plate on right front door hinge pillar post and on top of engine block between #1 and #2 exhaust manifold flanges.

TUNE-UP

COMPRESSION:—Ratio—6.5-1 Std. No Optl. ratios.
Pressure—120 lbs. at 125 RPM cranking speed.

VACUUM READING:—18-21" steady idling at 600 RPM.

FIRING ORDER:—1-6-2-5-8-3-7-4. See diagram.

SPARK PLUGS:—Champion Spec. J9 Hudson, 14 MM.
Gaps—.032"
Optional Plugs—Champion J5 (hotter plug) for continuous low speed service or J10 Commercial (cooler plug) for continuous high speed service.

IGNITION: See Coil, Condenser, and Distributor.
Breaker Gap—.017" **Cam Angle** 31° (closed).
Automatic Advance—17.5° max. at 1700 RPM(distr.).

IGNITION TIMING: See Ignition Timing.
Std. Setting—At TDC. with flywheel mark "UDC. 1-8/" at indicator in inspection hole in left rear motor support.

CARBURETION: See Carburetor & Carb. Equipment.
Idle Setting—Both idle screws ½-1½ turn open. Idle speed 580-600 RPM.
Float Level—3/32" (455-S), ⅛" (502-S) from gasket seat on cover to top of float (valve seated).
Accelerating Pump—Outer hole (max. stroke) Normal. Inner hole (min. stroke) when required.

Fuel Pump Pressure: 4½ lbs. max. (AK), 4 lbs. (AJ).

MANIFOLD HEAT CONTROL:—Automatic thermostatic type. No adjustment required.

VALVES: See Valve Timing.
Tappet Clearance:—.006" Intake, .008" Exhaust (with engine hot and idling). Remove right front fender plate for access to valves. ***See Hudson Shop Notes for Fender Plate Removal.***

STARTING: See Battery, Starter, Generator, Regulator.

IGNITION

Ignition Switch:—Mitchellock Model 24-B, No. 8797.
Ignition Lock—Briggs & Stratton. B & S No. 50184.
Key Series—H601 to H1100. **Groove**—No. 1.

COIL: Auto-Lite Model CE-4029. Mounted on dash. Service Coil (less switch & cable) CE-3224JS.
Ignition Current—2.5 amperes idling, 4.5 stopped.

CONDENSER: Auto-Lite Part No. IG-2671.
Capacity—.20-.25 microfarad.

DISTRIBUTOR: Auto-Lite Model IGP-4008A. Single breaker, 8 lobe cam, full automatic advance type.
Breaker Gap—.017".
Cam Angle or Dwell—31° closed, 14° open (dist.).
Breaker Arm Spring Tension—17-20 ounces.
Rotation—Clockwise viewed from above.

Automatic Advance

Distributor Degrees	Distributor R.P.M.	Engine Degrees	Engine R.P.M.
Start	300	0	600
3	400	6	800
8	850	16	1700
13	1300	26	2600
17.5	1700	35	3400

Fuel Compensator—Manual adjustment for octane rating of fuel used. See Ignition Timing for setting.
Removal:—Mounted on right side of crankcase. To remove take out hold-down screws in advance arm.

IGNITION TIMING

IGNITION TIMING:—Initial Setting (for 72 octane rating fuel). See Fuel Compensator setting following.

	Flywheel Degrees	Piston Position
All Engines	0° at TDC	.0000" TDC

Flywheel Marks—'UDC.1-8/' at TDC with 4 graduations (¼" apart) ahead of this mark.
Timing—With #1 piston on compression, turn engine over until piston reaches top dead center when

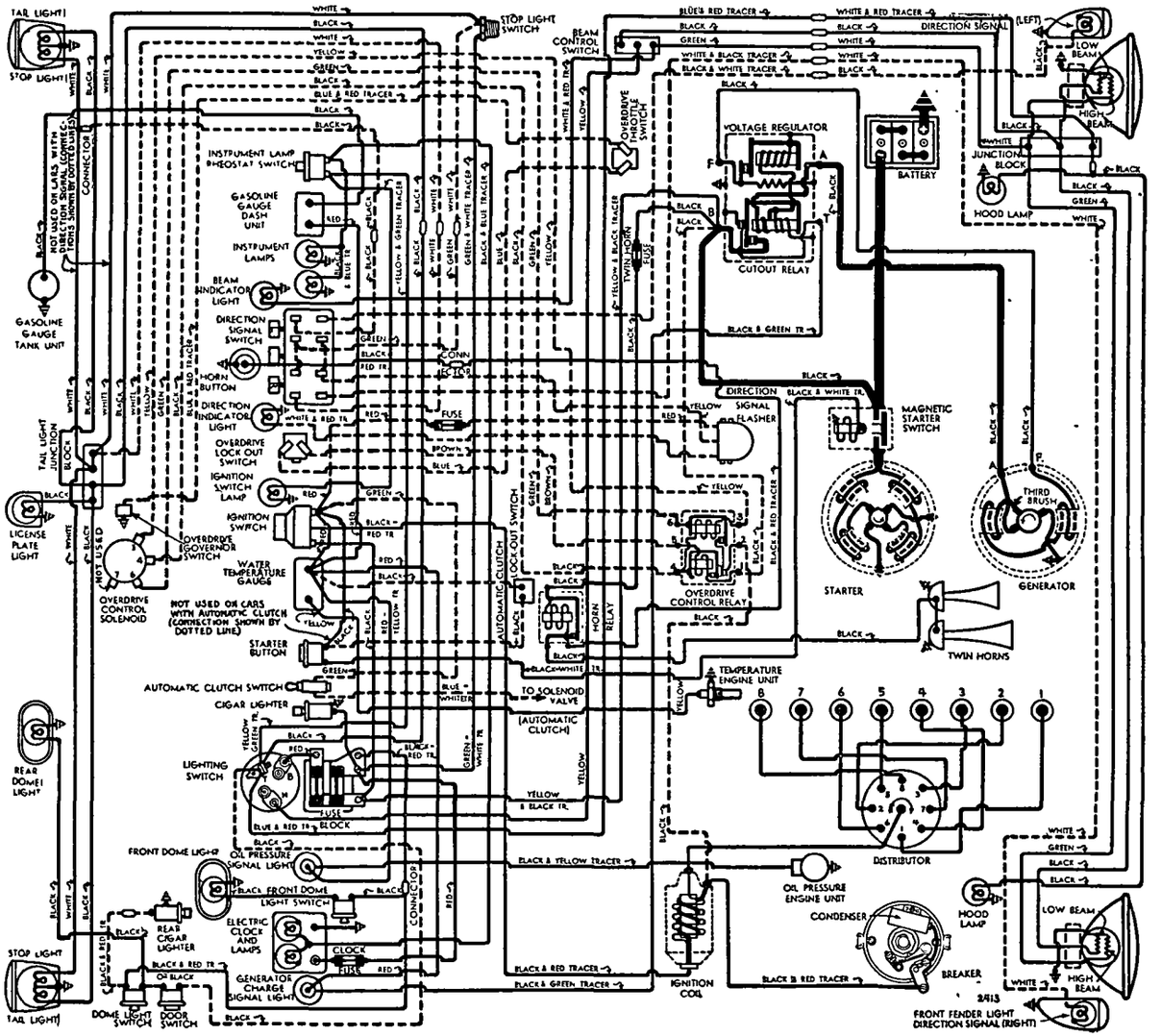

1941 MODELS

flywheel mark 'UDC.1-8/' lines up with pointer in left front face of rear motor support. Loosen hold-down screw in advance arm, rotate distributor clockwise to limit of advance arm slot, then slowly rotate distributor counter-clockwise until contacts begin to open, tighten hold-down screw. Check Fuel Compensator setting.

Timing (Using Synchroscope)—Recommended by manufacturer. Mark flywheel with white chalk or paint, connect at #1 spark plug. Idle engine and adjust distributor as directed above.

Fuel Compensator Setting—Road test car (engine warm). When running at 8 MPH slight ping should occur between 10-15 MPH when accelerating with wide open throttle. To adjust, loosen hold-down screw, rotate distributor one graduation on scale counter-clockwise (if no ping), clockwise (if ping to severe). **Final setting must not be more than ¾" (3rd graduation) before 'UDC.1-8/' mark.**

CARBURETOR

CARBURETION (EIGHT):—Carburetor—Carter Type WDO Model 455-S (before Serial & Engine No. 7293), Model 502-S (1941 after No. 7293 and 1942 Models). 1¼" dual downdraft types. #279 cast on face of carburetor flange (both carburetors). Slow closing throttle 'dashpot' device used on Model 455-S only. ***For complete data, refer to Carburetor Index.***

Idle Adjustment—With engine warm and running at slow idle speed (choke valve wide open, fast idle inoperative), set throttle stopscrew for 600 RPM idle speed. Adjust idle adjusting screws (2 used, 1 for each barrel) in succession until engine fires smoothly. Final setting should be ½-1½ turns open for each screw (turn screws in for leaner mixture). If vacuum gauge used, adjust for highest steady reading of gauge. Readjust throttle stopscrew for correct idling speed.

Accelerating Pump Setting—Pump lever (under dust cover at top of carburetor) has 2 holes for pump link engagement. Adjust as follows:
Outer Hole (Max. stroke)—Normal setting.
Inner Hole (Min. stroke)—If less charge required.

Float Level—3/32" (455-S), ⅛" (502-S) from top of float to bowl cover with valve seated.

Fast Idle:—Integral type (part of carburetor).
For complete data, refer to Carb. Equip. Index.

Setting (455-S)—With choke valve closed, adjust fast idle screw for .018" throttle opening.

Setting (502-S)—With choke valve closed and fast idle screw on high lobe of fast idle cam, turn fast idle screw in until throttle opening is .053".

Automatic Choke:—Carter Climatic Control.
For complete data, refer to Carb. Equip. Index.

Setting—Centered (at index mark) for 455-S, 1 Notch Lean for 502-S (supersedes "Centered" setting originally specified for 502-S).

CARB. EQUIPMENT

Air Cleaner:—AC #1528161 oil-wetted type Std. #1542385 (Cars with Drive Master) Oil-wetted type. Replacement Filter Element Assembly Type #1. United heavy duty oil-bath type cleaner Optl.

Fuel Pump: AC Type AK, No. 1523289 diaphragm type fuel pump Std. Type AJ combination fuel-and-vacuum pump Optl. Replacement Exchange Pump (AK) No. 499.
For complete data, refer to Carb. Equip. Index.

Gasoline Gauge:—King-Seeley Electric. K-S No. 8305 (Dash Unit—stamped 'G'), No. 7550 (Tank Unit).
For complete data, refer to Carb. Equip. Index.

BATTERY

BATTERY:—National, Type HT-19. 6 volt, 19 plate, 108 ampere hour capacity (20 hour rate).
Starting Capacity—135 amperes for 20 minutes.
Zero Capacity—300 amperes for 4.0 minutes. Five second voltage—4.43 volts.
Grounded Terminal—Positive (+) to frame. **Engine Ground**—Strap (rear motor support to frame).
Dimensions—Lgth. 11¾". Width 7¼". Hght. 7 13/16".
Location—On left side under engine hood.

STARTER

STARTER:—Auto-Lite MAB-4100. Armature MAB-2113.
Drive—Inboard Barrel type Bendix No. A-1684.
Rotation—Counter-clockwise at commutator end.
Brush Spring Tension—42-53 ozs. (new brushes).
Cranking Engine—150 RPM, 120-125 amperes, 5 v.

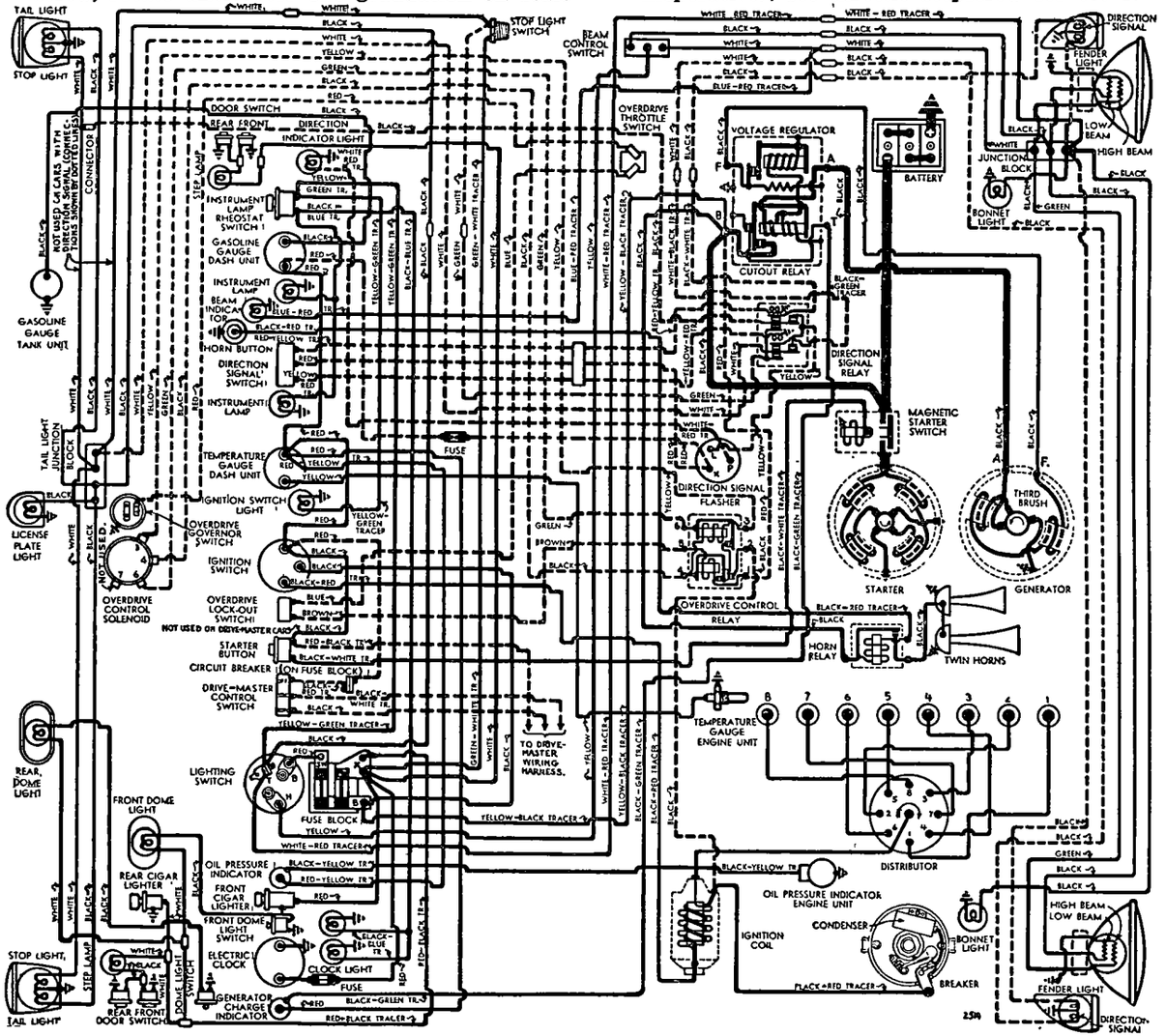

1942 M DELS

C NTINUED N NEXT PA E

CONTINUED FROM PRECEDING PAGE

Performance Data

Torque	R.P.M.	Volts	Amperes
0 ft. lbs	3700	5.5	60
0.6 "	1910	5.5	100
3.4 "	1100	5.0	200
6.6 "	695	4.5	300
10.15 "	420	4.0	400
15.2 "	Lock	3.0	575
21.5 "	Lock	4.0	750

NOTE—Lock torque figures correct with switch.

Removal:—On left front face of rear motor support. To remove, take out flange mounting screws.

Starting Switch:—A-L Model SS-4001. Magnetic type. Mounted on starter, controlled by switch on instrument panel. Operative only with ignition on (and clutch disengaged on cars with Vacumotive Drive or Hudson Drive Master). Starter pushbutton Douglas, Hudson No. 147834 (1941).

For complete data, refer to Electrical Equipment Index.

GENERATOR

STANDARD

GENERATOR:—Auto-Lite GEC-4801A. Armature GDZ-2006F. Third brush control with voltage regulation. Ventilated by fan on drive pulley.

Maximum Charging Rate—39-43 amperes (cold), 3350 RPM, 39 MPH ('41), 43 MPH ('42). Charging rate controlled by Voltage Regulator and dependent on battery. See Regulator. Ground generator 'F' terminal when checking generator output.

Charging Rate Adjustment—See Regulator data. Third brush setting 1 commutator bar minimum, 1 commutator bar plus 1 mica strip maximum, from nearest (insulated) main brush. Setting adjustable by shifting third brush.

Performance Data

Cold Amperes	Cold Volts	Cold R.P.M.	Hot Amperes	Hot Volts	Hot R.P.M
0	6.4	980	0	6.4	1040
4	6.55	1060	4	6.6	1140
8	6.7	1160	8	6.8	1280
12	6.85	1280	12	6.95	1440
16	7.0	1400	16	7.15	1600
20	7.15	1550	20	7.35	1820
24	7.25	1700	24	7.55	2090
28	7.5	1890	28	7.75	2440
32	7.65	2100	32	7.9	3000
36	7.8	2375	34	8.0	3800
41	8.0	3350			

Rotation—Counter-clockwise at commutator end.
Brush Spring Tension—53 ozs. max. (new brushes).
Field Current—1.60-1.78 amperes at 6 0 volts.
Motoring Current—4.85-5.4 amperes at 6 0 volts.

Removal:—Pivot mounted at left front of engine. To remove, take out pivot and clamp bolts.

Belt Adjustment:—Swing generator out until possible belt deflection midway between generator and fan pulley is ¾" (use straightedge across pulleys).

GENERATOR

SPECIAL EQUIPMENT

Auto-Lite Generator	Armature Number	Regulator Model
GEA-4803-B	GDZ-2006F	VRP-4008B
GEB-4802-A	GEB-2006F	VRP-4008C
GEB-4802B	GEB-2006F	①
GEB-4802-B2	GEB-2006F	VRP-4008D
GEG-4801-A	GEG-2006F	VRP-4008A

①—VRP-4008C before generator serial #2V-000001
VRP-4008D after generator serial #2V-000001

Type—Two-brush with current-voltage regulators
Charging Rate Adjustment—None. See Regulator.
Maximum Charge Rate—As listed below.

Model GEA-4803B

Cold Amperes	Cold Volts	Performance Data R P M.	Hot Amperes	Hot Volts	Hot R.P.M
0	6.4	780	0	6.4	840
4	6 6	870	4	6 6	935
8	6 8	960	8	6.8	1025
12	6 95	1050	12	6 95	1120
16	7.15	1140	16	7.15	1220
20	7.3	1230	20	7.3	1320
24	7.6	1320	24	7 6	1420
28	7.7	1410	28	7.7	1520
32	7 85	1500	32	7.85	1685
35	8.0	1570	35	8.0	1800

Models GEB-4802B①, GEB-4802B-2

0	6.4	560	0	6.4	620
5	6.6	640	5	6.6	700
10	6 8	720	10	6.8	800
15	7.1	800	15	7.1	910
20	7.3	880	20	7.3	1040
25	7.5	980	25	7 5	1170
30	7 8	1080	30	7.8	1340
35	8 0	1200	35	8 0	1520

①—After Generator Serial Number 2V-000001. ***For GEB-4802-B data before this number, refer to the 1940 Hudson Eight article (preceding).***

Model GEG-4801A

0	6.4	780	0	6 4	820
5	6 6	870	5	6.6	900
10	6.8	960	10	6.8	990
15	7.0	1040	15	7 0	1080
20	7 2	1130	20	7 2	1170
25	7.4	1220	25	7.4	1270
30	7.6	1310	30	7.6	1380
35	7 8	1410	35	7 8	1510
40	8 0	1520	40	8.0	1680

Rotation—Counter-clockwise at commutator end
Brush Spring Tension—53 ozs. max (GEA Gen), 64-68 ounces (GEB & GEG Gen) with new brushes
Field Current—1 57-1.75 amperes (for GEA Gen), 1 60-1 78 amperes (for GEB, GEG Gen) at 6 0 volts
Motoring Current—4 45-4 9 amperes (GEA Gen), 4-4 5 amps (GEB), 4.7-5 2 amps (GEG) at 6 0 volts.
Removal & Belt Adjustment: Same as for Std. Gen.

REGULATOR

STANDARD

REGULATOR:—Auto-Lite VRR-4001A. Cutout Relay and vibrating Voltage Regulator in case on dash. Cutout Relay has extra set of contacts for Generator Teleflash Indicator control. NOTE—Regulator enclosed in tight fitting metal cover on dash.

For complete data, refer to Electrical Equipment Index.

NOTE—Regulator case cover is sealed. Serviced on exchange basis if seals not broken.

Cutout Relay

Cuts In—6 4-6 6 volts, 825 RPM 9 4 MPH.
Cuts Out—4.2-4 8 volts (approx. 4-6 amps. disch.).
Contact Gap—.015" min. ground contacts closed (ground contacts open when main contacts close).
Air Gap—.031-.034" at hinge end of core with contacts open (ground contacts closed).

Voltage Regulator

Setting—7.1-7.4 volts at 70°F.
To Check (without breaking seals)—Connect ammeter in charging line at regulator 'B' terminal, voltmeter between this terminal and ground. Operate generator at speed of 30 MPH charging battery until voltage is constant. Voltmeter reading should be within limits of 7 1-7 4 volts at 70°F. See Electrical Equipment Section for other temperatures.
To Adjust (with cover removed)—Change regulator armature spring tension by bending lower spring hanger slightly. See Electrical Equipment Section.
Contact Gap—.012" Min. (armature against stop).
Air Gap—.048-.052" with contacts just opening.

REGULATOR

SPECIAL EQUIPMENT

Auto-Lite Regulator	Generator Used On
VRP-4008-A	GEG-4801-A
VRP-4008-B	GEA-4803-B
VRP-4008-C	GEB-4802-A
VRP-4008-C	①GEB-4802-B
VRP-4008-D	②GEB-4802-B
VRP-4008-D	GEB-4802-B2

①—Before Generator Serial Number 2V-000001.
②—After Generator Serial Number 2V-000001.

Type—Cutout Relay and vibrating type Voltage & Current Regulator units in a single case on dash. Same design as Std. VRR Regulator except for the additional Current Regulator.

For complete data, refer to Electrical Equipment Index.

Cutout Relay & Voltage Regulator

All specifications same as for Std. VRR type (above).

Current Regulator

Setting—39-41 amps.....marked '40'..... VRP-4008-A
34-36 amps.....marked '35'..VRP-4008-B&D
31-33 amps. .....marked '32'.....VRP-4008-C
To Check—Connect test meters as for voltage check (above), operate generator at speed for maximum output, turn on lights so that generator charges at peak rate and current regulator operates, check ammeter reading, should agree with setting above.
Adjustment, Contact Gap, Air Gap—Same as for VRR Voltage Regulator unit data as given above.

LIGHTING

Headlamps—Hall "Sealed Beam" type.

For complete data, refer to Electrical Equipment Index.

Headlamp Adjustment—Aim upper beam of each headlamp straight ahead with hot spot centered on horizonal line 3" below lamp center height.

Beam Indicator—Red Pilot bulb on speedometer dial. Lighted when Country (upper) beams in use.
Direction Indicator—Optional Equipment.
For complete data, refer to Electrical Equipment Index.

Switches—1941

Lighting—Douglas. Hudson No. 147835.
Beam Selector—R-B-M Model 2484.
Instrument—R-B-M. Hudson No. 160092.

Switches—1942

Lighting—Douglas. Hudson No. 200417.
Beam Selector—R-B-M. Hudson No. 164439.
Instrument—R-B-M. Hudson No. 160092.

Bulb Specifications

Position	Candlepower	Mazda No.
Headlamps		Sealed Beam
Bonnet Side Panel (Park)	1.5	55
Fender Lamp (See Note)	3	63
Ign. Lock ('42), Clock	1.5	55
Speedometer ('41)	1.5	55
Spdmtr. ('42), Ign. Lock ('41)	1	51
Gen. & Oil Signal ('41)	1.5	55
Gen. & Oil Signal ('42)	1	51
Beam & Direction Ind.	1	51
Stop & Tail	21-3	1154
Rear License	3	63
Dome & Courtesy	15	88

NOTE—Front Direction Indicator bulb is separate 21 cp. Mazda No. 1129 (1941), combined with Fender Lamp in 21-3 cp. Mazda No. 1158 bulb (1942).

MISC. ELECTRICAL

SIGNAL LIGHTS:—Generator Charge and Oil Pressure Indicators used. Hudson Teleflash Electric type.
For complete data, refer to Electrical Equipment Index.

FUSES:—**Lighting**—30 ampere. Lower fuse on fuse block on lower edge of instrument panel to right of steering column. **Accessory**—30 amp. Top fuse on block. NOTE—Silver-plated fuses used. 30 amp. fuse supersedes 20 ampere fuse used on early cars.
Twin Horns (1941)—30 ampere. On engine dash.
Direction Indicator—10 amp. near speedometer.
Electric Clock—2 amp. in case behind clock.
NOTE—Feed wire for electric clock on early cars connected to battery 'B' terminal on fuse block. Car manufacturer recommends that feed be connected to accessory 'X' terminal (see diagram).

HORNS:—**Sparton**—Twin air electric type operated by relay. 30 amp. fuse in case on dash.
Air Gap—.026-.030" high pitch (short horn), .032-.035" low pitch (long horn).
Horn Relay:—R-B-M Model 6004. On engine dash.
Contacts Close—3 volts min., 4 volts, max.
Open—2 volts min. (relay upright, terminals down).

ENGINE

ENGINE SPECIFICATIONS:—8 cylinder, 'L' head type.
Bore—3". **Stroke**—4½".
Displacement—254 cubic inches. **Rated HP.**—28.8.
Developed Horsepower—128 at 4200 RPM.
Compression Ratio—6.50-1 cast-iron head.
Compression Pressure—120 lbs. at 125 RPM.
Vacuum Reading—Steady 18-21" idling at 600 RPM.
See Hudson Shop Notes for Engine Removal data.

PISTONS: Lo-Ex aluminum alloy (1941), Cast Alloy (1942), cam ground type. Use finished replacement pistons.
Weight—10.5 ozs. (stripped). **Length**—3 3/16".
Removal—Piston and rod assemblies may be removed from above or below.
Clearance—Top .016". Skirt .0005-.001".

Original Bore & Piston Sizes, Replacement Pistons:—*See Hudson Shop Notes for sizes and markings.*

Fitting New Pistons:—Use .0015" feeler ½" wide (Piston Feeler Scale Tool J-888-A) inserted between piston and cylinder wall on side opposite slot 90° from pin. Pull to withdraw feeler 3-4 lbs.

Installing Pistons: Slot away from camshaft.

PISTON RINGS:—2 compression, 2 oil rings (1 above pin, 1 below pin). Rings positioned by pin in groove.

Ring	Width	End Gap	Side Clearance
Compression	3/32"	.009-.011"	.001"
Oil Cont. (#1)	3/16"	.009-.011"	.001"
Oil Cont. (#2)	5/32"	.009-.011"	.001"

Replacement Rings:—*See Hudson Shop Notes for data.*

PISTON PIN:—**Diameter**—¾". **Length**—2 7/16". Floating type. Retained by locking rings.
See Hudson Shop Notes for Pin Servicing data.
Pin Fit in Piston—.0003" clearance (hand push fit) with piston heated to 200°F.
Pin Fit in Rod Bushing—.0003" clearance.

Replacement Pins:—Std., .002", .005", .010" oversize.

CONNECTING ROD:—**Weight** 30 ozs. **Length** 8 3/16".
Crankpin Journal Diameter—1 15/16". *See Crankshaft Size Code Note in Hudson Shop Notes for original bearing size.*
Lower Bearing—Lead alloy-lined (1941), babbitt-lined (1942), Spun type. Exchange Rods furnished Standard Size and .010" Undersize.
Clearance—.001". **Sideplay**—.006-.010".

Bearing Adjustment:—None (no shims). Replace rods. *See Hudson Shop Notes for Palnut (locknut) data.*

Installing Rods:—Offset. Install rods with widest half of bearing toward rear (#1, 3, 5, 7), toward front (#2, 4, 6, 8). Oil scoop on all rods toward camshaft.

CRANKSHAFT:—5 bearing, integral counterweights. *See Hudson Shop Notes for Crankshaft and Vibration Dampener Removal, Main Bearing Removal and Installation, Replacement Bearings & Line-Reaming data.*
Journal Diameters—#1, 2 9/32"; #2, 2 5/16"; #3, 2 11/32"; #4, 2⅜"; #5, 2 13/32". *See Crankshaft Size Code in Hudson Shop Notes for original bearing sizes.*
Bearings—Bronze backed, babbitt lined type. Bearings secured in cap and crankcase by brass screws.
NOTE—No shim pack is used. Palnuts used in place of cotter pins to lock bearing cap nuts.
Clearance—.001".

Bearing Adjustment:—None (no shims). Do not file caps. *See Hudson Shop Notes for Bearing Adjustment and Palnut (locknut) tightening procedure.*

►*CAUTION—Replacement of main bearings requires removal of crankshaft. Bearings retained by brass screws.*

Replacement Bearings: *See Hudson Shop Notes.*

End Thrust:—Taken by center bearing. Replace bearing if endplay excessive. **Endplay**—.006-.012".

CAMSHAFT:—Five bearing, gear driven type with new type bearings and timing gears. *See Hudson Shop Notes for Camshaft Removal and Bearing Installation.*
1942 Note—Camshaft Bearing Clearance and Timing Gear Backlash reduced from that used on previous models for quieter operation of valve mechanism. No valve spring dampeners used.
Journal Diameters—#1, 2.029"; #2, 1.998"; #3, 1.966"; #4, 1.935"; #5, 1.498".
Bearings—New type steel-backed, 'Bermax' (babbitt) lined bushings (formerly solid type babbitt).
Clearance—.002-.0025" (1941), .001-.0025" (1942).

End Thrust:—Thrust washer between camshaft flange and crankcase. Spring loaded button in camshaft hub bears against thrust plate on gear cover.
NOTE—Service thrust washer available which can be split and installed without removing camshaft.

Timing Gears: Crankshaft gear Cast Iron, camshaft gear Laminated Fibre. Tooth shape changed to 20° pressure angle (was 14½°) to provide quieter operation and longer gear life. Gears can be identified by figure 20 stamped on front face (crankshaft gear carries additional FRONT mark to insure correct installation). Gears may be installed in sets only (not singly) on earlier car models (new type gears similar to previous type except for pressure angle).
NOTE—Camshaft gear available in .008" Oversize (can be distinguished from Std. Size by spot of yellow paint on front face).

Camshaft Setting:—Mesh marked crankshaft gear tooth between two marked teeth on camshaft gear.

VALVES:	Head Diameter	Stem Diameter	Length
Intake	1½"	11/32"	5 3/32"
Exhaust	1⅜"	11/32"	5 3/32"

	Seat Angle	Lift	Stem Clearance
Intake	45°	11/32"	.0025"
Exhaust	45°	11/32"	.004"

Valve Guides: Removable type. New longer exhaust guide used in 1942 (counterbore at top increased and lengthened approx. ⅜", lower end of guide has been lengthened approx. ⅜" to compensate for increased length of counterbore at top.) This new guide designed to reduce tendency of exhaust valves to stick due to fuel or oil gum formations at upper end of valve stem.
Servicing—Use Tool J-1188 to drive guides out. Install guides with Tool J-883-A with top of guide 15/16" below top of cylinder block. With guides installed, ream guides with Tool J-129-2 to .3437" (11/32") which will provide proper valve stem-to-guide clearance. NOTE—Car manufacturer recommends that guides be cleaned with Tool KMO-122 to remove carbon and scale out of guides (pay particular attention to carbon in counterbore at top of exhaust guide).

Valve Springs:—Cadmium plated springs used with dampener installed on bottom with open side toward cylinder (Dampener used on 1941 cars only). Use Tool J-587-A to install valve spring and seat assembly.

C NTINUED N NEXT PAGE

ENGINE

C NTINUED FROM PRECEDIN PA E

NOTE—Car manufacturer recommends that dampeners be omitted whenever valves are serviced.

	Spring Pressure	Spring Length
Valve Closed	40 lbs.	2"
Valve Open	80 lbs.	1 21/32"

NOTE—Replace if pressure below 34 lbs. at 2".

Valve Lifters:—Roller shoe type, fitted in removable guides. *See Hudson Shop Notes for lifter removal.*

VALVE TIMING

Tappet Clearance:—.006" Int., .008" Exh., hot & idling. *See Hudson Shop Notes for Fender Plate Removal.*

Valve Timing:—See Camshaft Setting above.

Intake Valves—Open 10°40' BTDC. Close 60° ALDC.

Exhaust Valves—Open 50° BLDC. Close 18°44'ATDC. Above figures correct with .010" tappet clearance.

Valve Timing Check—With .010" tappet clearance #1 intake valve should open with piston 10°40' or .0494" BTDC when a point on the flywheel approximately 3.97 teeth before 'UDC.1-8/' mark lines up with indicator in inspection hole above starter. Reset tappet clearance at .006" hot and idling.

LUBRICATION

LUBRICATION:—Duo-flo (pressure & positive splash). NOTE—On 1942 engines, lower end of oil reservoir suction pipe (from oil pan to crankcase wall) extends to center of oil reservoir to insure constant oil supply to pump.

Oil Pump:—Oscillating plunger type, gear driven by camshaft. Mounted on right side of crankcase.

Normal Oil Pressure—4-12 lbs. with hot oil. No gauge used (see Oil Pressure Indicator below).

Oil Check Valve:—Located on right side of crankcase at rear. Opens at 4-12 lbs. with hot oil. Operates dash signal to indicate oil flow.

Oil Pressure Indicator:—Hudson Teleflash Oil Pressur Indicator. *For data, refer to Elec. Equip. Index.*

Checking Oiling System:—*See Hudson Shop Notes.*

Crankcase Capacity:—7 qts. (refill), 9 qts. (dry).

Servicing Note—Whenever pan removed, install 2 qts. in upper tray before pan installed, then add 7 qts. through oil filler after pan in place on engine.

COOLING

COOLING SYSTEM:—Capacity—18 quarts. *See Hudson Shop Notes for radiator core removal.*

Water Pump:—Centrifugal, belt-driven, packless type with single outlet (no by-pass) on Models 14 & 24, double outlet (with by-pass) on Models 15, 17, 25, 27. *See Water Pump Section for complete data.*

Thermostat: Fulton. Choke type (Models 14, 24), By-pass type (Models 15, 17, 25, 27). In cylinder head water outlet.

Setting—Starts to open 150-155°F. Fully open 185°F.

NOTE—Special high temperature thermostats available for use with ethylene glycol type anti-freeze. Starts to open 160-165°F (14, 24), 165-170°F (15, 17, 25, 27); Fully open 190°F (14, 24), 195°F (15, 17, 25, 27).

Temperature Gauge:—King-Seeley Electric. K-S Nos. 8310 (Dash Unit—stamped 'T'), 7000 (Eng. Unit). *See Miscellaneous Section for complete data.*

NOTE—Gauge reads HOT with ignition 'off'.

CLUTCH

CLUTCH:—**Own Make.** Single plate, cork insert type operating in oil. *See Clutch Section for complete data.*

Driven Member—Cork insert type. Inside Diam. 6⅜". Outside Diam. 10". Facing 108 corks .203" thick.

Pedal Adjustment (1941): Two settings used dependent on connector link position on cross-shaft lever. Normal setting (with connector link in center hole on cross-shaft lever) 1½" clearance between underside of toeboard and center of clutch pedal clamp bolt. Second setting (with connector link in lower hole for lighter clutch pedal pressure) clearance increased to 2". To adjust, loosen locknut on connector link above clevis, remove clevis pin, turn clevis in or out for correct clearance. Check Automatic Clutch Control adjustment (if used).

Pedal Adjustment (1942): Clearance between underside of toeboard and top face of pedal shaft should be 1½" with adjusting link engaged in pedal and cross-shaft levers as listed in table below. To adjust, loosen locknut on adjusting link above clevis, remove clevis pin at lower end of link, turn clevis in or out for correct clearance.

Model	Top	Bottom
24, 25, 27	Outer Hole	Center Hole

Clutch Oil Servicing:—*See Hudson Shop Notes for data.*

Removal:—Remove transmission (see Transmission Removal following). Drain clutch oil by turning engine over until plug on flywheel is accessible through timing inspection hole in rear engine support plate above starter, remove plug, turn engine over ⅓ revolution until star on flywheel visible through timing hole (drain hole then at bottom), allow lubricant to be drained. Loosen mounting bolts in clutch cover rim to release spring tension, remove bolts and lift clutch assembly off car.

NOTE—See Installation Note following Transmission Removal for Clutch Throwout Bearing Oil Seal

VACUMOTIVE DRIVE

Vacumotive Drive:—Automatic clutch control. Optl.

NOTE—Governor switch changed during production. *See Clutch Section for complete data.*

TRANSMISSION

TRANSMISSION:—**Own Make.** New all helical gear, constant-mesh type with synchro-mesh (Second & High), sliding gears (Low & Reverse) and steering column gear shift. NOTE—External shift rail locks are not used. *See Transmission Section for complete data.*

Transmission Control:—Hudson 'Handy-Shift' type. *See Transmission Section for complete data.*

Removal:—Transmission can be removed from inside car as follows: Take off accelerator pedal by removing cotter pins in anchor bracket and bell crank link clevis pins. Move steering column rubber hole cover up out of way. Remove floor mat by taking out screws at kick pads on dash and mat trim clips. Remove front seat cushion and transmission floor opening cover (CAUTION—Accelerator pedal operating rod should be secured so as not to drop on starter switch). Disconnect front universal by taking out four nuts and lock plates on U-bolts. Release clutch pedal return spring. Remove two cross shaft bracket bolts, clutch control link clevis pin and clutch pedal assisting spring. Remove Handy Shift control tube-to-transmission shift rod cotter pin, washer and grommet; transmission casing lower anchor bracket screws and bracket, shift shaft outer lever nut, washer and lever. Remove two flywheel guard-to-clutch housing screws and two rear engine mounting bolts (CAUTION—Do not remove rear engine mounting-to-clutch housing bolt). Jack rear of engine up ½" off frame. Remove clutch housing to transmission bolts. Disconnect speedometer cable from transmission. Pull transmission back and lift out.

Installation Note—Wrap one strand of soft wire around throw-out bearing oil seal to prevent leather curling over when transmission installed (twist wire with end extending up through clutch housing so that it will come off the seal after transmission installed).

DRIVE-MASTER TRANSMISSION

Drive-Master: Conventional 3-speed transmission with automatic gear shifting between second and high gears in conjunction with Vacumotive Drive (automatic clutch control). Optl. equipment. *See Transmission Section for complete data.*

OVERDRIVE

Overdrive:—Warner Model AS1-R9B with electrical 'kick-down' control (new type—no centrifugal clutch pawls used). Optional equipment.

1941 Governor Switch Change to Correct Late Cut-In—New Governor Switch Part No. 162867 with purple dots on terminal screw heads and purple band around switch has reversed oil threads in shaft bushings to keep transmission lubricant out of switch, overcoming improper operation of switch. Used on Late '41 cars. *See Transmission Section for complete data.*

Overdrive Transmission Removal—Same as standard transmission removal (above) except that overdrive control and wiring connections must be disconnected. Special Tool J-1502-H (hoist and dolly) should be used to lift transmission and lower onto dolly. Transmission and overdrive assembly can then be rolled out from beneath car.

Overdrive Solenoid—Delco-Remy. Hudson #163305.

Throttle Switch—Cole-Hersee. Hudson No. 162594. Adjust position of contact washer on accelerator pedal rod so that it just contacts switch plunger with carburetor throttle in wide open position.

Governor Switch—Bendix No. 162867.

NOTE—Switch changed to Part No. 162867 during production (identified by purple dots on terminal screw heads & purple band around switch body).

UNIVERSALS

Spicer. Needle bearing type. Spicer Model Nos.:
Front—1271-101 (14, 15, 24, 25), 1281-101 (17, 27).
Rear—1278-101 (All Models).
See Universals Section for complete data.

REAR AXLE

REAR AXLE:—Own Make. Semi-floating, spiral bevel gear type with Hotchkiss drive.
See Rear Axle Section for complete data.

Ratio—4 1/9-1 (Standard, Optl. on Overdrive), 4 5/9-1 (Std. with Ovdr., Optl. on reg. transmission).

Backlash—.0005-.0035". Screw adjustment.

Removal:—Disconnect rear universal by taking out four nuts and lock plates on U-bolts, drop rear end of propeller shaft. Remove axle shafts (see instructions below). Remove bolt nuts on carrier flange, pull carrier assembly out of axle housing.

Axle Shaft Removal:—Hoist rear of car. Remove rear wheels. Remove axle shaft nut and washer (use Tool J-351). Remove hub and drum assembly using screw type wheel puller (Tool J-736—CAUTION—Car manufacturer recommends that screw type puller be used, if knock-out type puller is used serious damage to differential parts may result). Remove 4 nuts on bearing cap bolts, push bolts out of backing plate, remove bearing cap and shims (without disturbing hand brake link). Take out rear wheel bearing and axle shaft, using puller Tool J-352. Do not drag axle shaft on oil seal assembly in housing.

Wheel Bearing Adjustment:—Controlled by shims under bearing cap. To adjust, remove bearing cap (see directions above under Axle Shaft Removal), add or remove shims equally at both wheels (necessary to keep thrust spacer centered on differential pinion shaft). **Endplay—**.002-.004".

SHOCK ABSORBERS

SHOCK ABSORBERS:—Delco—Sedans & Club Coupes: 1007-C (front), 1008-S (rear). **Monroe—**3 & 4 passenger Coupes: (Front) 161657 (1941), 164547 (1942 Early Cars), 164545 (1942 Later Cars). (Rear) 161658 (1941), 164548 (1942 Early Cars), 164546 (1942 Later Cars). All shock absorbers are Direct Acting, Hydraulic type.
See Shock Absorber Section for complete data.

FRONT SUSPENSION

Front Suspension:—Independent, linked parallelogram type with coil springs and Autopoise Control.
See Front Suspension Section for complete data.

Kingpin Inclination—4°36′ crosswise.

Caster—0° (Neg. ¼° to Pos. ¼°). Adjustable.

Camber—Positive ¼° to Positive ¾°. Adjustable

Toe In—0-1/16". Loosen clamps at ends of each tie rod (adjust rods equally with steering arm centered).

Steering Geometry—Inner wheel 30°. Outer 25°.

STEERING GEAR

Steering Gear: Gemmer Model 335. Worm-and-Roller type with "push-pull" adjustments and Center Point steering linkage.
See Steering Gear Section for complete data.

BRAKES

BRAKES:—Service. Bendix hydraulic, duo-servo, single anchor type without eccentric adjustment. Mechanical follow-up (pedal linked to hand brake cables) provided. Hand lever applies rear service brakes.
See Brake Section for complete data.

Drums—Centrifuse. Diameter 11".

Lining—Multibestos molded (primary), Ferodo woven (secondary). Width 1¾". Thickness 7/32". Length per wheel 23 15/16".

Clearance—.015" at both ends of secondary (rear) shoe with primary shoe forced out against drum.

Hand Brake:—See Service Brakes above.

MISC. MECHANICAL

CONVERTIBLE TOP CONTROL: Hydro-electric type (hydraulic actuation with motor-driven hydraulic pump). Used on Convertible models.
See Miscellaneous Section for complete data.

Top Control Motor—Auto-Lite Model MBM-4001.

HOOD LOCK: Hood is Reverse Alligator type hinged at radiator. To raise hood, press in on lock handle to left of steering column, raise rear end of hood.

MODEL IDENTIFICATION

	Super 6 Model	Super 6 Ser.No.	Commodore 6 Model	Commodore 6 Ser.No.	Bus. Cars Model	Bus. Cars Ser.No.
1946	51	31-101	52	32-101	58	38-101
1947	171	171-101	172	172-101	178	178-101

SERIAL & ENGINE NUMBER: See model notation above for First No. and prefix (first two figures indicate model thus: 31-101). Stamped on plate on right front door hinge pillar post and on top of engine block between #1 and #2 exhaust flanges.

TUNE-UP

COMPRESSION: Pressure—120 lbs. at 125 RPM.

VACUUM READING: Steady 18-21" idling 7½-8 MPH.

FIRING ORDER: 1-5-3-6-2-4.

SPARK PLUGS: Champion Special J-9 Hudson. 14 mm. Gaps—.032"

IGNITION: See Coil, Condenser, and Distributor.
Breaker Gap .020". Cam Angle 35° (closed).
Breaker Arm Spring Tension—17-20 ozs.
Automatic & Vacuum Advance See tables following.

IGNITION TIMING: See Ignition Timing.
Std. Setting—½" on flywheel before TDC.
Timing Mark—Flywheel marked "UDC.1-6/" with four graduations ¼" apart ahead of this mark. Set timing with the 3rd white line aligned with pointer in inspection hole in motor support above starter, then adjust Fuel Compensator as follows:
Fuel Compensator Setting—Advance spark (loosen vacuum unit link screw on distributor quadrant) until slight ping noted accelerating with wide open throttle between 10-15 MPH. **Final setting must not be more than 1" before "UDC.1-6/".**

CARBURETION: See Carburetor & Carb. Equipment.
Idle Setting—Set both idle adjusting screws for smooth running and highest steady vacuum gauge reading (each screw ½-1½ turns open—turn screws in for leaner mixture). Idle speed 7½-8 MPH.
Float Level—⅛" from top of float to gasket seat on cover with valve seated (invert to check).
Accelerating Pump—Outer hole (max.) Normal.

Fuel Pump Pressure: 3-4 lbs. (AC. mechanical type), 2½-3 lbs. (Autopulse electrical type).

MANIFOLD HEAT CONTROL: Automatic thermostatic type (no adj.). Valve must operate freely.

VALVES: See Valve Timing.
Tappet Clearance—.010" Intake, .012" Exhaust, engine idling at normal operating temperatures.

STARTING: See Battery, Starter, Generator and Regulator.

IGNITION

IGNITION SWITCH: Mitchellock 24-B, No. E8996.
Ignition Lock—Briggs & Stratton. B & S No. 50184.
Key Series—H601 to H1100. **Groove**—No. 1.

COIL: Auto-Lite Model IG-4098. Service Coil IG-4098S. Mounted on dash. NOTE—Coil connections are reversed (breaker connection at base of coil).
Ignition Current—2½ amperes idling, 5 stopped.

CONDENSER: Auto-Lite Part No. IGW-3075C.
Capacity—.20-.25 microfarad.

DISTRIBUTOR: Auto-Lite Model IGW-4203-A with separate VC-3060ES Vacuum unit. Full automatic advance type with auxiliary vacuum spark control and Fuel Compensator adjustment.

Breaker Gap—.020". Limits .020-.024".

Cam Angle or Dwell—35° closed, 25° open.

Breaker Arm Spring Tension—17-20 ozs.

Rotation—Counter-clockwise viewed from above.

Distributor Degrees	Automatic Advance R.P.M.	Engine Degrees	Engine R.P.M.
Start	400	0	800
3	700	6	1400
6	1000	12	2000
9	1300	18	2600
11.75	1570	23.5	3140

Fuel Compensator—Manual adjustment for octane rating of fuel used. See Ignition Timing for setting.

Vacuum Spark Control: Auto-Lite No. VC-3060ES Unit. Separate unit mounted on distrib. hold-down plate, linked to quadrant scale on distributor. Provides additional advance at speeds above idling except when engine accelerated or operated with wide open throttle (spark retarded by return spring within unit).

Vacuum Advance		
Distr. Degrees	Eng. Degrees	Vacuum (" of HG)
Start	0°	5⅞"
4°	8°	9¼"
7.5°	15°	11¼"

Distributor Removal:—Mounted at top rear of cylinder head. To remove, disconnect vacuum line, take out cyl. head stud nuts on hold-down plate.

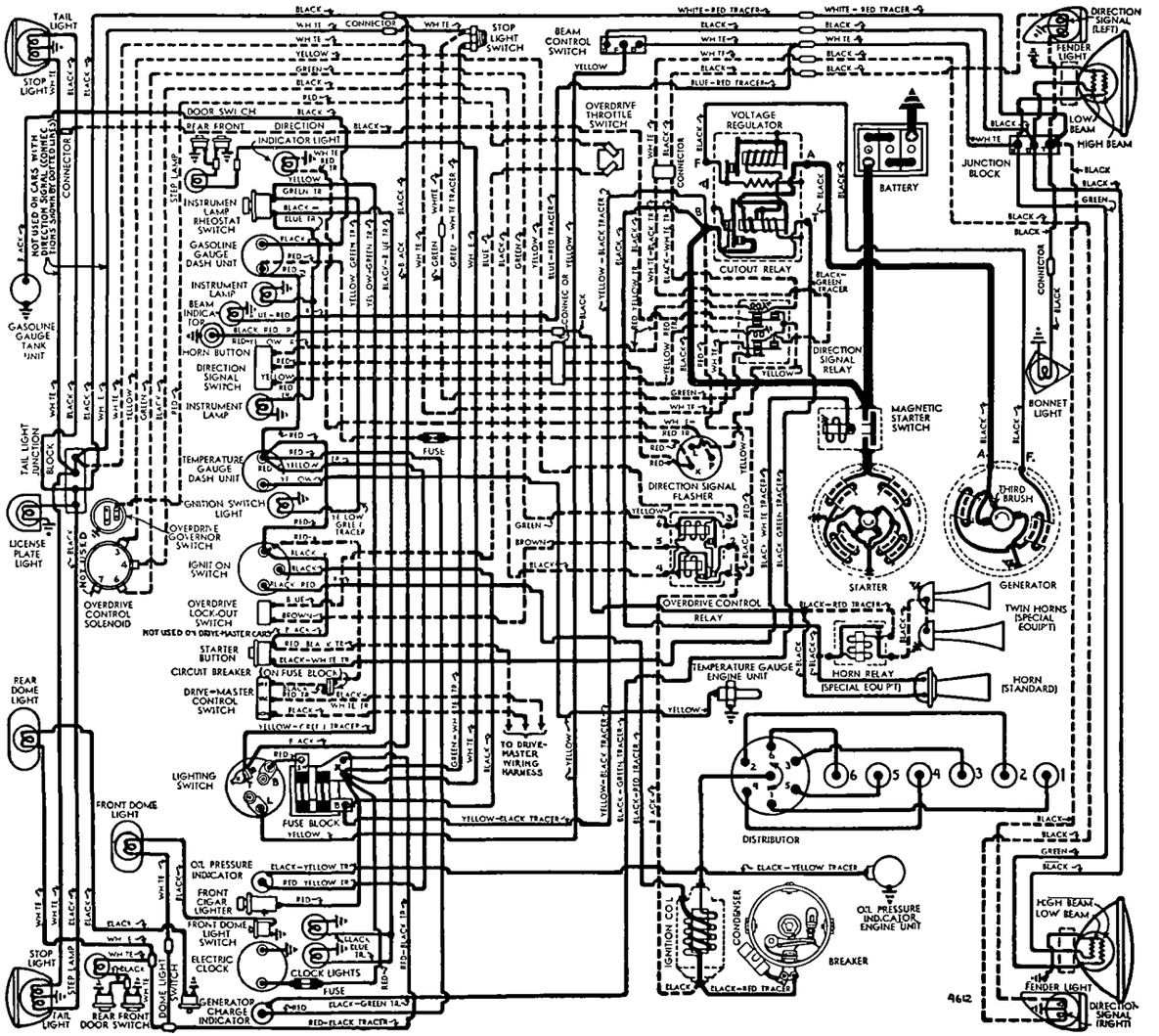

IGNITION TIMING

Std. Setting .....½" On Flywheel BTDC This setting correct for fuel of approximately 72 Octane Rating. See Fuel Compensator Setting for fuel and operating condition correction.

Flywheel Marks—'UDC.1-6/' at TDC with 4 white graduations (¼" apart) ahead of this mark.

Timing—With #1 piston on compression, turn engine over until second graduation before flywheel mark 'UDC.1-6/' lines up with pointer on left front face of rear motor support above starter. Loosen vacuum advance diaphragm screw on quadrant scale, rotate distributor counter-clockwise to limit of slot, then slowly rotate clockwise until contacts begin to open, tighten diaphragm screw securely. Check Fuel Compensator Setting below.

Timing (Using Synchroscope)—Recommended by car manufacturer. Mark flywheel with white chalk or paint. Idle engine, adjust distributor (above).

Fuel Compensator Setting—Road test car (engine warm). When running at 8 MPH slight ping should occur between 10-15 MPH when accelerating with wide open throttle. To adjust, loosen vacuum unit link screw on distributor quadrant, rotate distributor one graduation on quadrant scale clockwise (if no ping), counter-clockwise (if ping too severe).

Final setting must not be more than 1" (4th graduation) before 'UDC.1-6/' flywheel mark.

CARBURETOR

Carter Model WDO, Type 501S. 1" Dual (double barrel) downdraft type with Carter Climatic Control. *See Carburetor Section for complete data.*

Idle Adjustment—With engine warm (Fast Idle and Automatic Choke inoperative), set throttle stop-screw for idle speed of 7½-8 MPH. Adjust both idle adjusting screws (two used—one for each barrel), in succession until engine fires smoothly. Final setting of each screw should be ½-1½ turns open from inner seated position (turn screws in for leaner mixture). Recheck idle speed.

Accelerating Pump Setting—Pump lever (under dust cover at top of bowl cover) has two holes for pump link engagement. Set as follows:
Outer Hole (Max. stroke)—Normal setting.
Inner Hole (Min. stroke)—If less charge required.

Float Level—⅛" from top of float to bowl cover with valve seated (remove gasket, invert to check).

Metering Rods & Jets—*Refer to Carburetor Index for Carter Downdraft Carburetor Jet Specification Table.*

Fast Idle:—Integral type (part of carburetor). *See Carburetion Equipment Section for data.*

Setting—With choke valve closed and fast idle screw on high lobe of fast idle cam, turn fast idle screw in until throttle opening is .045".

Automatic Choke: Carter Climatic Control. *See Carburetion Equipment Section for data.*

Setting—1 Point Lean.

CARB. EQUIPMENT

Air Cleaner: AC. Oil-wetted type Std., United Oil-bath type Optl.

Servicing (Oil-wetted type)—Clean and re-oil filter element (use same grade engine oil used in crankcase) at 2000 mile intervals or more often if required by operating conditions.

Servicing (Oil-bath type)—Remove filter element, clean sump with kerosene (clean filter element with kerosene also if necessary), refill with 1 Pint engine oil (service same as for Oil-wetted type).

Fuel Pump: AC. Type AK Diaphragm type mechanical pump or Autopulse electric pump Std., AC. Type AJ combination fuel and vacuum pump Optl. *See Carburetion Equipment Section for data.*

Pressure—3-4 lbs. (Type AK), 2½-3 (Autopulse).

Gasoline Gauge: King-Seeley Electric type. K-S Nos. 41050 (dash unit), 7550 (tank unit). *See Carburetion Equipment Section for data.*

BATTERY

National Type HT-17. 6 Volt, 17 Plate, 96 Ampere Hour Capacity (20 hour rate).

Starting Capacity—120 amperes for 20 minutes.

Zero Capacity—300 amperes for 3.5 minutes. Five second voltage—4.24 volts.

Grounded Terminal—Positive (+) to frame. **Engine Ground**—Strap (rear motor support to frame).

Dimensions—Lgth. 10 9/16". W. 7¼". Hght. 7 13/16".

Location—On left side under engine hood.

STARTER

Auto-Lite Model MZ-4092. Armature MZ-2138.

Drive—Inboard Barrel type Bendix No. A-1684.

Rotation—Counter-clockwise at commutator end.

Brush Spring Tension—42-53 ozs. (new brushes).

Cranking Engine—150 RPM, 125 amperes, 5.4 volts.

Performance Data

Torque		R.P.M.	Volts	Amperes
0	ft. lbs.	4300	5.5	70
2.55	"	1325	5.0	200
4.95	"	750	4.5	300
7.65	"	220	4.0	400
7.8	"	Lock	3.0	420
11.8	"	Lock	4.0	560

Removal:—On left front face of rear motor support. To remove, take out flange mounting screws.

Starting Switch:—A-L Model SS-4001. Magnetic type. Mounted on starter, controlled by switch on instrument panel. Operative only with ignition on (and clutch disengaged on cars with Vacumotive Drive or Drive-Master). *See Electrical Equipment Section for complete data.*

GENERATOR

Auto-Lite Model GEC-4801A. Armature GDZ-2006F.
SEE 1946-47 HUDSON 8 CAR PAGES FOR DATA

REGULATOR

Auto-Lite Model VRR-4001A. Voltage Regulator.
SEE 1946-47 HUDSON 8 CAR PAGES FOR DATA

LIGHTING

Headlamps: Hall "Sealed Beam" type with upper lower beams controlled by Beam Selector Switch on toeboard. *See Electrical Equipment Section for complete data.*

Adjustment—Aim upper beams straight ahead (hot spot centers 3" below lamp center height at 25 ft.).

Beam Indicator—Red pilot bulb on speedometer dial. Lighted with Country (upper) beam in use.

Direction Signal: *See Electrical Equipment Section.*

Direction Signal Indicator—At extreme left hand side of instrument panel. Flashes whenever Right or Left Direction Signal is operating.

Switches

Lighting—Hudson No. 200417.
Beam Selector—Hudson No. 164439.
Instrument—Hudson No. 160092.

Bulb Specifications

Position	Candlepower	Mazda No.
Headlamps	35-45watts	Sealed Beam
Front Bonnet (Park)	1½	55
Fender (no Dir. Sig.)	3	63
Fender (with Dir. Sig.)	21-3	1158
Beam & Dir. Sig. Indicator	1	51
Gen. & Oil Indicators	1	51
Spdmtr. (51, 58)	1	51
Spdmtr. (54), Clock	1½	55
Courtesy, Dome	15	88
Ignition Lock	1½	55
Stop & Tail	21-3	1154
Rear License	3	63
Fog Lamp	50	1211S
Spot Lamp	32	1209S

MISC. ELECTRICAL

GENERATOR CHARGE SIGNAL: Red indicator on right hand side of instrument panel (to right of clock). Should light when ignition turned on and should go out when generator begins to charge. *See Electrical Equipment Section for complete data.*

OIL PRESSURE SIGNAL: Red indicator on right hand side of instrument panel (to left of clock). Should light when ignition turned on and go out as soon as engine is started. *See Electrical Equipment Section for complete data.*

FUSES: Lighting—30 ampere. Bottom fuse on fuse block to right of steering column behind instrument panel. **Accessory**—30 ampere. Top fuse on fuse block. NOTE—Silver-plated fuses used.

Direction Indicator—10 ampere. Near flasher.

Electric Clock—3 ampere. In lead behind clock.

Weathermaster—14 ampere.

Radio—20 ampere.

CIRCUIT BREAKER: Drive-Master Cars only. Thermostatic type. Mounted on fus block. Protects Drive-Master circuits only.

HORNS: Sparton. Twin type air electric horns operated by horn relay.

Air Gap—.026-.030" high pitch (short horn), .032-.035" low pitch (long horn).

Horn Relay:—R-B-M Model 6004. On dash. Contacts Close 3-4 volts (relay upright, terminals down).

ENGINE

ENGINE SPECIFICATIONS: Own Make. Six Cylinder, "L" Head type.
Bore—3". **Stroke**—5".
Displacement—212 cubic inches.
Rated Horsepower—21.6.
Developed Horsepower—102 at 4000 RPM.
Compression Ratio—6.5-1 Std. Cast Iron Head.
Compression & Vacuum Reading—*See Tune-up data.*

ENGINE REMOVAL: *See Hudson Shop Notes.*

ENGINE FRONT SUPPORT REMOVAL & INSTALLATION: *See Hudson Shop Notes.*

ORIGINAL BORE & PISTONS: *See Hudson Shop Notes.*

TIGHTENING TORQUES: *See Hudson Shop Notes.*

C NTINUED N NEXT PAGE

ENGINE

C NTINUED FR M PRECEDIN PAGE

CYLINDER HEAD: Tightening Torque & Cylinder Head Diagram—*See Hudson Shop Notes.*

PISTONS: Aluminum alloy, Cam ground, T-slot type. Use finished replacement pistons.
Weight—10.5 ozs. (stripped). **Length**—3 3/16".
Removal—Pistons and rods removed from above.
Clearance—Top .016". Skirt .0005-.001". See Fitting New Pistons below.

Replacement Pistons: *See Hudson Shop Notes.*

Fitting New Pistons:—Use .0015" feeler ½" wide inserted between piston and cylinder wall on side opposite slot at right angles to pin. Pull to withdraw feeler must be within 3-4 lbs. Use Tool J-888-A Piston Feeler Scale to measure pull.

Installing Pistons:—Slot away from camshaft.

PISTON RINGS: Two compression, two oil rings (one above pin, one below pin) per piston. Rings are square end type. Rings pinned to prevent rotation. Rings cut and notched to fit pin (clearance on pin equal to ring end gap).

Ring	Width	End Gap	Side Clearance
Compression	3/32"	.009-.011"	.001"
Oil (upper)	3/16"	.009-.011"	.001"
Oil (lower)	5/32"	.009-.011"	.001"

Replacement Rings:—*See Hudson Shop Notes for data.*

PISTON PIN: Diameter—¾". **Length**—2 7/16".
Floating type with diamond-drilled pin holes in piston and bronze bushing in connecting rod. Pin retained by lock ring at each end.
Piston Pin Servicing—*See Hudson Shop Notes.*
Pin Fit in Piston—.0003" clearance (hand push fit) with piston heated to 200°F.
Pin Fit in Rod Bushing—.0003" clearance.

Replacement Pins:—Std., .002", .005", .010" oversize.

CONNECTING ROD: Weight 29.75 ozs. **Length** 8 3/16"
Lower Bearing Diameter—1 15/16".
See Crankshaft Size Code Note in the Hudson Shop Notes for Original Connecting Rod Bearing sizes.
Lower Bearing—Babbitt lined, spun type.
Clearance—.001". **Sideplay**—.007-.013".

Bearing Adjustment: None (no shims). Install replacement rods furnished on exchange basis. Do not file rods or bearing caps. Palnuts used on bolt nuts.
Palnut Installation—*See Hudson Shop Notes.*

Replacement Rods: Exchange rods furnished Std. size and .010" Undersize.

Installing Rods:—Lower end of rods offset. Install rods with widest half of bearing toward the rear (#1,2,4), toward front (#3,5,6). Oil scoop on lower end of rod toward camshaft.

CRANKSHAFT: Three bearing type with integral counterweights and vibration dampener on forward end.
Vibration Dampener Removal—*See Hudson Shop Notes.*
Crankshaft & Main Bearing Removal & Installation—*See Hudson Shop Notes.*
Bearing Diameters—#1, 2 11/32"; #2, 2⅜"; #3, 2 13/32".
See Crankshaft Size Code Note in the Hudson Shop Notes for original Main Bearing Sizes.
Bearings—Bronze backed, babbitt lined type. Bearings secured in cap and crankcase by brass screws.
Clearance—.001".

Bearing Adjustment:—None (no shims). Do not file bearing caps. Palnuts used on bearing cap bolt nuts. *See Palnut Installation in Hudson Shop Notes.*

►*CAUTION—Replacement of main bearings requires removal of crankshaft. Bearings retained by brass screws.*

Replacement Bearings: *See Hudson Shop Notes.*

End Thrust:—Taken by center bearing. Replace bearing if endplay excessive. NOTE—If new unfinished bearings installed, thrust face for center bearing must be faced for proper endplay.
Endplay—.006-.012".

CAMSHAFT: Three bearing type. Helical gear drive. New design camshaft used. *See Hudson Shop Notes for Replacement Camshaft data.*
CAUTION—Special tappet clearance required for this camshaft. *See Tappet Clearance in "Tune-up" and "Valve Timing".*
Camshaft Removal—*See Hudson Shop Notes.*
Bearing Diameters—#1, 2"; #2, 1 31/32"; #3 1 9/16".
Bearings—Steel-backed, babbitt-lined bushings.
Clearance—.001-.002".

Bearing Removal & Installation: *See Hudson Shop Notes.*

End Thrust:—Thrust washer between camshaft flange and crankcase. Spring loaded button in camshaft hub bears against thrust plate on gear cover. NOTE—Service thrust washer available which can be split and installed without removing camshaft.

Timing Gears:—Crankshaft gear cast-iron, camshaft gear Laminated Fibre (first cars), Aluminum (Later Cars). All gears have 20° pressure angle teeth. Aluminum gears (and crankshaft gear used with them) have teeth slightly crowned to improve quietness.
NOTE—Gears have figure 20 on front face (crankshaft gear carries additional FRONT mark to insure correct installation). NOTE—Camshaft gear available in .008" oversize and can be distinguished from std. size by spot of yellow paint on front face.
Replacement Gear Caution—Aluminum Camshaft Gear furnished in Matched Sets only with crankshaft gear (aluminum gear has slight crown or curvature of teeth for quietness and must be used with similarly crowned teeth type crankshaft gear).
Backlash—.002-.004".
Timing Gear Removal & Installation—*See Hudson Shop Notes.*

Camshaft Setting:—Mesh marked crankshaft gear tooth between two marked teeth on camshaft gear.

VALVES:	Head Diameter	Stem Diameter	Length
All Valves	1⅜"	11/32"	5 11/32"

	Seat Angle	Lift	Stem Clearance
Intake	45°	11/32"	.0025"
Exhaust	45°	11/32"	.004"

Valve Guides: Removable type pressed in block.
Servicing—Use Tool J-1188 to drive guides out. Install guides with Tool J-883-A with top of guide 1 1/16" below top of cylinder block. With guides installed, ream guides with Tool J-129-2 to .3437" (11/32") which will provide proper valve stem-to-guide clearance. NOTE—Car manufacturer recommends that guides be cleaned with Tool KMO-122

Valve Springs:—Cadmium plated springs are used. Use tool J-587-A to install valve spring and seat
Spring Free Length—2 17/64".

	Spring Pressure	Spring Length
Valve Closed	40 lbs.	2"
Valve Open	80 lbs.	1 21/32"

NOTE—When springs removed, test for pressure (Tool U-15). Replace if pressure below 34 lbs. at 2".

Valve Lifters:—Roller shoe type, fitted in removable guides in cylinder block.
Valve Lifter Removal—*See Hudson Shop Notes.*

VALVE TIMING

Tappet Clearance: .010" Intake, .012" Exhaust with engine at operating temperature.
CAUTION—This tappet clearance required by new camshaft. See Camshaft data above.

Valve Timing:—See Camshaft Setting above.
Intake Valves Open 27°30'BTDC. Close 68°10' ALDC.
Exhaust Valves—Open 51°50' BLDC. Close 32°10' ATDC. These figures correct with .010" tappet clear.
Valve Timing Check—With .010" tappet clearance No. 1 intake valve opens 27°30' BTDC. with point on flywheel approximately 10½ teeth before top dead center mark "UDC. 1-6/" in line with indicator in inspection hole in flywheel housing above starter.

LUBRICATION

Engine Oiling System: Duo-flow (pressure and positive splash) system. Pump delivers oil to front and rear ends of upper tray in oil reservoir. Connecting rod bearings are lubricated by dippers on caps which dip into troughs in this upper tray and also splash oil inside crankcase. Part of this oil is caught in channels inside crankcase and fed into reservoirs directly over each camshaft and crankshaft bearing from which it flows into the bearings.
NOTE—Lower end of oil reservoir suction pipe (from oil pan to crankcase wall) now extends to center of oil reservoir to insure constant oil supply to pump.
Crankcase Capacity—5½ qts. (dry), 4½ (refill).
Servicing Note—When changing oil without removing oil pan, refill with 4½ quarts. If oil pan removed, place 1½ quarts in upper tray before oil pan installed, then 4 quarts through filler with pan in place.
Normal Oil Pressure—4-12 lbs. with hot oil. No gauge used (see Oil Pressure Indicator below).

Oil Pump:—Oscillating plunger type, gear driven by camshaft. Mounted on right side of crankcase.

Oil Filter: Special Hudson type. Optl. equipment.
Servicing—Replace filter cartridge at 5000 mile intervals.

Oil Check Valve:—Located on right side of crankcase at rear. Opens at 4-12 lbs. with hot oil. Operates dash signal to indicate oil flow.

Oil Pressure Indicator:—Hudson Teleflash Oil Pressure Indicator. Consists of signal light on instrument panel operated by switch mounted on oil check valve.
See Electrical Equipment Section for complete data.

Checking Oiling System:—*Refer to Hudson Shop Notes.*

COOLING

Cooling System: Positive circulation type with the water pump at water inlet on front of engine.
Capacity—13 quarts.

Water Pump:—Centrifugal, belt-driven, packless type with single outlet (no by-pass). Grease fitting provided for front and rear bearing lubrication.
See Water Pump Section for complete data.
Belt Adjustment—*See Generator Belt Adjustment.*

Thermostat:—Fulton Choke type. In cyl. head outlet. **Setting**—Starts to open 150-155°F. Fully open 185°.

Temperature Gauge:—King-Seeley Electric. K-S Nos. 41053 (dash unit), No. 41085 (engine unit).
See Miscellaneous Section for complete data.

CLUTCH

Own Make. Single plate, fluid cushioned type (cork insert type driven member operating in oil). 9" Type Std. on Passenger Cars, 10" Type Std. on Commercial (Business) Cars and all Passenger Cars with Vacumotive Drive, Overdrive, or Drive-Master.
See Clutch Section for complete data.

Facings—Cork Insert type as follows:

	No. Corks	Inside Diam.	Outside Diam.
9" Type	90	5¼"	9"
10" Type	108	6⅜"	10"

Pedal Adjustment: Clearance between underside of toeboard and top face of pedal shank must be 1½". To adjust, loosen locknut above clevis, remove clevis pin in throw-out lever at lower end of connector link, turn clevis in or out of link, tighten locknut after re-connecting clevis. CAUTION—Make certain that clevis pin inserted in same hole in lever.

Clutch Oil Servicing:—*See Hudson Shop Notes.*

Removal:—Remove transmission (see Transmission Removal following). Drain clutch oil by turning engine over until plug on flywheel is accessible through timing inspection hole in rear engine support plate above starter, remove plug, turn engine over ⅓ revolution until star on flywheel visible through timing hole (drain hole then at bottom), allow lubricant to be drained. Loosen mounting bolts in clutch cover rim to release spring tension, remove bolts and lift clutch assembly off car. NOTE—See Installation Note following Transmission Removal for Clutch Throwout Bearing Oil Seal.

VACUMOTIVE DRIVE

Vacumotive Drive:—Automatic clutch control. Optl.
See Clutch Section for complete data.

TRANSMISSION

Own Make. All helical gear type. Constant-mesh, synchro-mesh (Second & High), sliding gear (Low & Reverse) with remote (steering column) shift.
See Transmission Section for complete data.
NOTE—External shift rail lock accessory kits available for installation on cars operated in mountainous regions where long 2nd gear operation required.

Transmission Control: Handy-Shift remote control type with shift lever mounted on steering column.
See Transmission Section for complete data.

Removal:—Transmission can be removed from inside car as follows: Take off accelerator pedal by removing cotter pins in anchor bracket and bell crank link clevis pins. Move steering column rubber hole cover up out of way. Remove floor mat by taking out screws at kick pads on dash and mat trim clips. Remove front seat cushion and transmission floor opening cover (CAUTION—Accelerator pedal operating rod should be secured so as not to drop on starter switch). Disconnect front universal by taking out four nuts and lock plates on U-bolts. Release clutch pedal return spring. Remove two cross shaft bracket bolts, clutch control link clevis pin and clutch pedal assisting spring. Remove Handy Shift control tube-to-transmission shift rod cotter pin, washer and grommet; transmission casing lower anchor bracket screws and bracket, shift shaft outer lever nut, washer and lever. Remove two flywheel guard-to-clutch housing screws and two rear engine mounting bolts (CAUTION—Do not remove rear engine mounting-to-clutch housing bolt). Jack rear of engine up ½" off frame. Remove clutch housing to transmission bolts. Disconnect speedometer cable from transmission. Pull transmission back and lift out.

Installation Note—Wrap one strand of soft wire around throw-out bearing oil seal to prevent leather curling over when transmission installed (twist wire with end extending up through clutch housing so it will come off after transmission installed).

OVERDRIVE

Warner Model AS2-R9B. Optl. equipment, used with Hudson Transmission. Overdrive is solenoid operated type (no centrifugal pawls) with Governor control and throttle operated "kick-down".
See Transmission Section for complete data.

Overdrive Solenoid—Delco-Remy. Hudson #163305.

Throttle Switch—R-B-M. Hudson No. 164438. On toeboard under accelerator pedal. Not adjustable.

Governor Switch—Auto-Lite Model TGA-4002 (two terminal type), Model TGB-4002 (five terminal type used on cars with Hudson Drive-Master transmsn.).

Removal: Same as standard transmission removal (above) except that overdrive control and wiring connections must be disconnected. Special Tool J-1502-H (hoist and dolly) should be used to lift transmission and lower onto dolly for removal.

DRIVE-MASTER TRANSMISSION

Drive-Master Transmission: Optl. Conventional 3-speed transmission with automatic gear shifting between Second & High Gears. Used in conjunction with Vacumotive Drive (automatic clutch control).
See Transmission Section for complete data.

UNIVERSALS

Spicer. Needle bearing type. Two used.

	Front — Spicer Model	— Rear
Standard	1261-101X	1268-101X
With Overdrive	1261-101X	1278-101X
Commercial	1281-101X	1278-101X
" with OD.	1261-101X	1268-101X

See Universals Section for complete data.

REAR AXLE

Own Make. Semi-floating type with Spiral Bevel Gears and Hotchkiss Drive.
See Rear Axle Section for complete data.

Ratios	Pass. Cars	Comm'l.
Standard	4 1/9-1	4 5/9-1
Optl.	4 5/9-1	
Std. with Overdrive	4 5/9-1	4 5/9-1
Optl. with Overdrive	4 1/9-1	
Std. with Drive-Master	4 5/9-1	4 5/9-1
Optl. with Drive-Master	4 1/9-1	

Backlash—.0005-.003". Screw adjustment.

Removal:—Disconnect rear universal by taking out four nuts and lock plates on U-bolts, drop rear end of propeller shaft. Remove axle shafts (see instructions below). Remove bolt nuts on carrier flange, pull carrier assembly out of axle housing.

Axle Shaft Removal:—Hoist rear of car. Remove rear wheels. Remove axle shaft nut and washer (use Tool J-351). Remove hub and drum assembly using screw type wheel puller (Tool J-736—CAUTION—Car manufacturer recommends that screw type puller be used, if knock-out type puller is used serious damage to differential parts may result). Remove 4 nuts on bearing cap bolts, push bolts out of backing plate, remove bearing cap and shims (without disturbing hand brake link). Take out rear wheel bearing and axle shaft, using puller Tool J-352. Do not drag axle shaft on oil seal aseembly in housing.

Wheel Bearing Adjustment:—Controlled by shims under bearing cap. To adjust, remove bearing cap (see directions above under Axle Shaft Removal), add or remove shims equally at both wheels (necessary to keep thrust spacer centered on differential pinion shaft). **Endplay**—.004-.010".

SHOCK ABSORBERS

Delco or Monroe. Direct acting, hydraulic type.
Delco Model 1037-C (front), 1041-S (rear).
Monroe Model 18076 (front), 18077 (rear).
See Shock Absorber Section for complete data.

FRONT SUSPENSION

Front Suspension:—Independent, linked parallelogram type with coil springs and Autopoise Control.
See Front Suspension Section for complete data.

Kingpin Inclination—4°36' crosswise.

Caster—0° (Neg. ¼° to Pos. ¼°). Adjustable.

Camber—Positive ¼° to Positive ¾°. Adjustable.

Toe In—0-1/16". Center steering arm on frame must be at center of car. To adjust, loosen clamps at ends of each tie rod and adjust tubes equally (to increase toe-in turn rods in direction of wheel travel, to decrease, turn in opposite direction).

Steering Geometry (Toe-out on Turns)—With outer wheel turned 25°, inner wheel turn should be 30°.

STEERING GEAR

Gemmer Model 305. Worm-and-Roller type with "push-pull" adjustments.
See Steering Gear Section for complete data.

BRAKES

Service: Bendix Hydraulic, 4-wheel, Duo-servo, Single anchor type without eccentric adjustment. Mechanical follow-up (pedal linked to hand brake cables) provided. Hand lever applies rear service brakes.
See Brake Section for complete data.

Drums—Centrifuse type. Diameter 10" (Std. on Pass. Cars), 11" (Comm'l Cars & Optl. for Police Car & Taxicab).

Lining—Multibestos molded (primary), Ferodo woven (secondary). Width 1¾". Thickness 7/32". Length per wheel 22⅛" (10" type), 23 15/16" (11" type).

Clearance—.0075" at each end of each shoe. (.015" at each end of secondary or rear shoe with primary shoe forced out against drum).

Mechanical Follow-up (Reserve): Over-running linkage between brake pedal and parking (hand-brake) linkage which causes rear wheel brakes to be applied mechanically by pedal if hydraulic system not operating.
See Brake Section for complete data.

Setting—1¼" clearance between face of pedal pushrod and end of actuating tube with brakes released.

Hand Brake: See Service Brakes above..

MISC. MECHANICAL

CONVERTIBLE TOP CONTROL: Hydraulic (hydro-electric) type with hydraulic power cylinders actuated by motor driven hydraulic pump.
See Miscellaneous Section for complete data.

HOOD LOCK: Hood is Reverse Alligator type hinged at radiator. To raise hood, press in on lock handle to left of steering column, raise rear end of hood.

MODEL IDENTIFICATION

	Super Eight Model	Ser. No.	Commodore Eight Model	Ser. No.
1946	53	33-101	54	34-101
1947	173	173-101	174	174-101

SERIAL & ENGINE NUMBER: See model notation above for first No. and prefix (first two figures indicate model thus: 33-101). Stamped on plate on right front door hinge pillar post and on top of engine block between #1 and #2 exhaust flanges.

TUNE-UP

COMPRESSION: Pressure—120 lbs. at cranking speed of 125 RPM.

VACUUM READING: Steady 18-21" idling 7½-8 MPH.

FIRING ORDER: 1-6-2-5-8-3-7-4.

SPARK PLUGS: Champion Special J-9 Hudson. 14 mm.. **Gaps**—.032"

IGNITION: See Coil, Condenser, and Distributor.
Breaker Gap—.017" **Cam Angle** 31° (closed).
Breaker Arm Spring Tension—17-20 ozs.
Automatic Advance—Starts at 300 RPM., 3° at 400 RPM., Maximum 17.5° at 1700 RPM (Distr. ° & RPM)

IGNITION TIMING: See Ignition Timing.
Std. Setting—At Top Dead Center.
Timing Mark—Flywheel marked "UDC.1-8" with four graduations ¼" apart ahead of this mark. Set timing with first white line aligned with pointer in inspection hole in motor support above starter, then adjust Fuel Compensator as follows:
Fuel Compensator Setting—Advance spark (loosen hold-down screw and rotate distributor) until slight ping noted when accelerating with wide open throttle between 10-15 MPH. **Final setting must not be more than ¾" before "UDC.1-8/".**

CARBURETION: See Carburetor & Carb. Equipment.
Idle Setting—Set both idle adjusting screws for smooth running and highest steady vacuum gauge reading (each screw ½-1½ turns open—turn screws in for leaner mixture). Idle speed 7½-8 MPH.
Float Level—⅛" from top of float to gasket seat on cover with valve seated (invert to check).
Accelerating Pump—Outer hole (max.) Normal.

Fuel Pump Pressure: 3-4 lbs. (AC. mechanical type), 2½-3 lbs. (Autopulse electrical type).

MANIFOLD HEAT CONTROL: Automatic thermostatic type (no adj.). Valve must operate freely.

VALVES: See Valve Timing.
Tappet Clearance—.006" Intake, .008" Exhaust, engine idling at normal operating temperatures.

STARTING: See Battery, Starter, Generator and Regulator.

IGNITION

IGNITION SWITCH: Mitchellock 24-B, No. E8996.
Ignition Lock—Briggs & Stratton. B & S No. 50184.
Key Series—H601 to H1100. **Groove**—No. 1.

COIL: Auto-Lite Model CE-4029. Service Coil CE-3224JS. Mounted on the dash.
Ignition Current—2½ amperes idling, 5 stopped.

CONDENSER: Auto-Lite Part No. IG-2671.
Capacity—.20-.25 microfarad.

DISTRIBUTOR: Auto-Lite Model IGP-4008-A or IGP-4008-B. Full automatic advance type (no vacuum control) with Fuel Compensator adjustment.
Breaker Gap—.017".
Cam Angle or Dwell—31° closed, 14° open.
Breaker Arm Spring Tension—18-20 ozs.
Rotation—Clockwise viewed from above.

Distributor Degrees	Automatic Advance R.P.M.	Engine Degrees	R.P.M.
Start	300	0	600
3	400	6	800
8	850	16	1700
13	1300	26	2600
17.5	1700	35	3400

Fuel Compensator—Manual adjustment for octane rating of fuel used. See Ignition Timing for setting.
Removal:—Mounted on right side of crankcase. To remove take out hold-down screws in advance arm.

IGNITION TIMING

Std. Setting.....At Top Dead Center
This setting correct for fuel of approximately 72 Octane Rating. See Fuel Compensator Setting for fuel and operating condition correction.

Flywheel Marks—'UDC.1-8/' at TDC with 4 graduations (¼" apart) ahead of this mark.

Timing—With #1 piston on compression, turn engine over until piston reaches top dead center when flywheel mark 'UDC.1-8/' lines up with pointer in left front face of rear motor support. Loosen hold-down screw in advance arm, rotate distributor clockwise to limit of advance arm slot, then slowly rotate distributor counter-clockwise until contacts begin to open, tighten hold-down screw. Check Fuel Compensator setting.

Timing (Using Synchroscope)—Recommended by

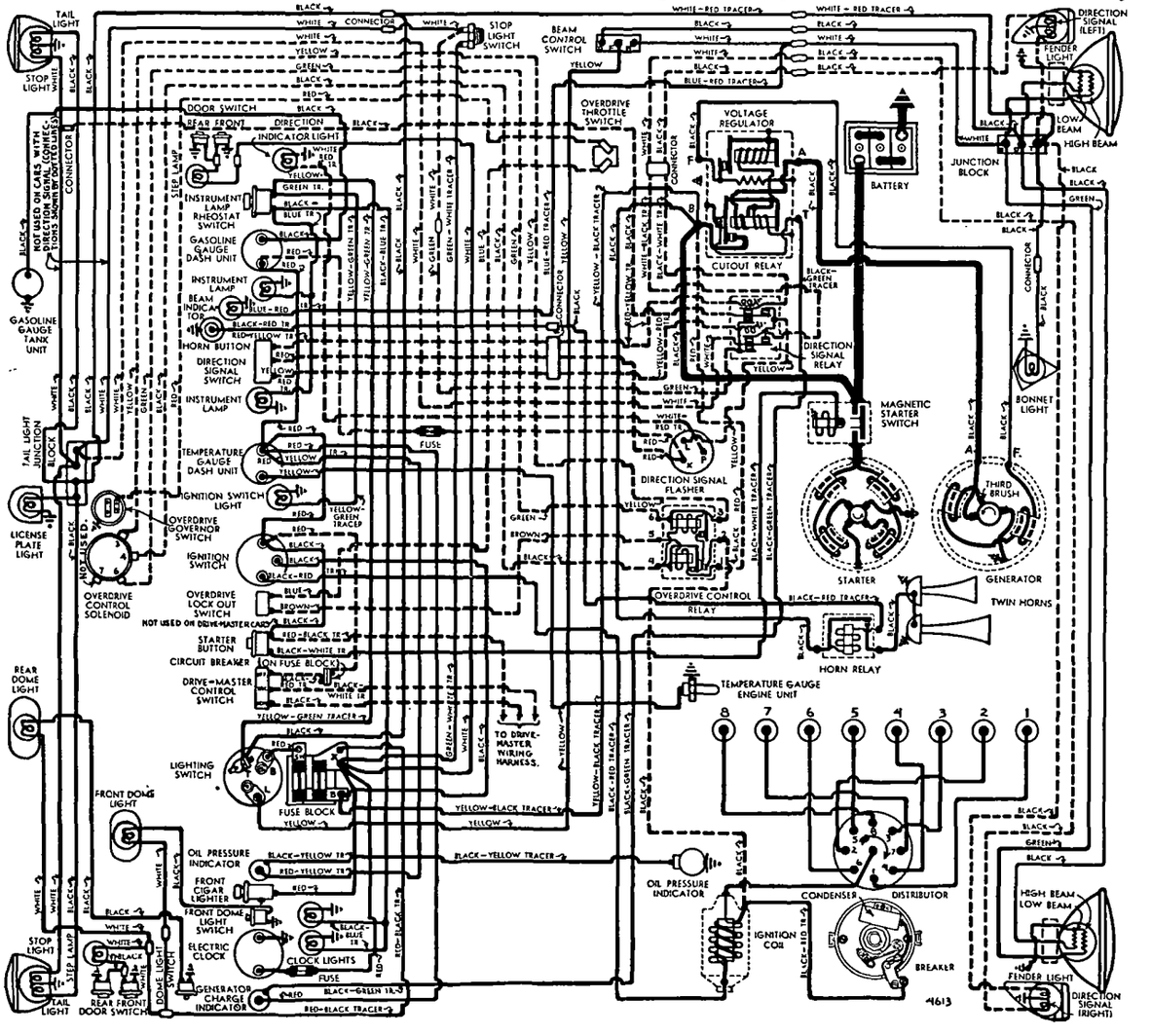

manufacturer. Mark flywheel with white chalk or paint, connect at #1 spark plug. Idle engine and adjust distributor as directed above.

Fuel Compensator Setting—Road test car (engine warm). When running at 8 MPH slight ping should occur between 10-15 MPH when accelerating with wide open throttle. To adjust, loosen hold-down screw, rotate distributor one graduation on scale counter-clockwise (if no ping), clockwise (if ping too severe). **Final setting must not be more than ¾" (3rd graduation) before 'UDC.1-8/' mark.**

CARBURETOR

Carter Model WDO, Type 502S. 1¼" Dual (double barrel), downdraft type with Carter Climatic Control.
See Carburetor Section for complete data.

Idle Adjustment—With engine warm and running at slow idle speed (choke valve wide open, fast idle inoperative), set throttle stopscrew for 7½-8 MPH. idling speed. Adjust both idle adjusting screws (2 used, one for each barrel) in succession until engine fires smoothly. Final setting should be ½-1½ turns open for each screw (turning screws in gives leaner mixture) to give highest reading on vacuum gauge. Recheck idle speed.

Accelerating Pump Setting—Pump lever (under dust cover at top of carburetor) has two holes for pump link engagement. Set as follows:
Outer Hole (Max. stroke)—Normal setting.
Inner Hole (Min. stroke)—If less charge required.

Float Level—⅛" from top of float to bowl cover with valve seated (remove gasket, invert to check).

Metering Rods & Jets—*Refer to Carburetor Index for Carter Downdraft Carburetor Jet Specification Table.*

Fast Idle:—Integral (built-in each carburetor).
See Carburetion Equipment Section for complete data.

Fast Idle Setting—With choke valve closed and fast idle screw on high lobe of fast idle cam, turn fast idle screw in until throttle valve opening is .053".

Automatic Choke:—Carter Climatic Control.
See Carburetion Equipment Section for complete data.

Setting—Set coil housing 1 Notch Lean.

CARB. EQUIPMENT

Air Cleaner: AC. Oil-wetted type Std., United Oil-bath type Optl.

Servicing (Oil-wetted type)—Clean and re-oil filter element (use same grade engine oil used in crankcase) at 2000 mile intervals or more often if required by operating conditions.

Servicing (Oil-bath type)—Remove filter element, clean sump with kerosene (clean filter element with kerosene also if necessary), refill with 1 Pint engine oil of same grade used in crankcase at 2000 mile intervals or more often if required by operating conditions.

Fuel Pump: AC. Type AK Diaphragm type mechanical pump or Autopulse electric pump Std., AC. Type AJ combination fuel and vacuum pump Optl.
See Carburetion Equipment Section for data.

Pressure—3-4 lbs. (AC. Type AK), 2½-3 lbs. (Autopulse type).

Gasoline Gauge: King-Seeley Electric type. K-S Nos. 41050 (dash unit), 7550 (tank unit).
See Carburetion Equipment Section for complete data.

BATTERY

National Type HT-19. 6 Volt, 19 Plate, 108 Ampere Hour Capacity (20 hour rate).
Starting Capacity—135 amperes for 20 minutes.
Zero Capacity—300 amperes for 4.0 minutes. Five second voltage—4.43 volts.
Grounded Terminal—Positive (+) to frame. **Engine Ground**—Strap (rear motor support to frame).
Dimensions—Lgth. 11¾". Width 7¼". Hght. 7 13/16".
Location—On left side under engine hood.

STARTER

Auto-Lite Model MAB-4100. Armature MAB-2113.
Drive—Inboard Barrel type Bendix No. A-1684.
Rotation—Counter-clockwise at commutator end.
Brush Spring Tension—42-53 ozs. (new brushes).
Cranking Engine—150 RPM, 120-125 amperes, 5 v.

Performance Data

Torque	R.P.M.	Volts	Amperes
0 ft. lbs.	3700	5.5	60
0.6 "	1910	5.5	100
3.4 "	1100	5.0	200
6.6 "	695	4.5	300
10.15 "	420	4.0	400
15.2 "	Lock	3.0	575
21.5 "	Lock	4.0	750

NOTE—Lock torque figures correct with switch.

Removal:—On left front face of rear motor support. To remove, take out flange mounting screws.

Starting Switch:—A-L Model SS-4001. Magnetic type. Mounted on starter, controlled by switch on instrument panel. Operative only with ignition on (and clutch disengaged on cars with Vacumotive Drive or Hudson Drive-Master).
See Electrical Equipment Section for complete data.

GENERATOR

Auto-Lite Model GEC-4801A. Armature No. GDZ-2006F. Third brush control with voltage regulation. Ventilated by fan on drive pulley.
Maximum Charging Rate—44 amperes (Cold), 38 amperes (hot), 35 MPH. Actual charging rate controlled by Voltage Regulator and dependent on battery condition. See Regulator data. When checking generator output, ground "F" terminal.
Charging Rate Adjustment—See Regulator data. Third brush setting 1 commutator bar minimum, 1 commutator bar plus 1 mica strip maximum, from nearest (insulated) main brush. Setting adjustable

Performance Data

Cold			Hot		
Amperes	Volts	R.P.M.	Amperes	Volts	R.P.M.
0	6.4	960	0	6.4	1040
4	6.55	1060	4	6.6	1140
8	6.7	1160	8	6.8	1280
12	6.85	1280	12	6.95	1440
16	7.0	1400	16	7.15	1600
20	7.15	1550	20	7.35	1820
24	7.25	1700	24	7.55	2090
28	7.5	1890	28	7.75	2440
32	7.65	2100	32	7.9	3000
36	7.8	2375	34	8.0	3800
41	8.0	3350			

Rotation—Counter-clockwise at commutator end.
Brush Spring Tension—53 ozs. max. (new brushes).
Field Current—1.60-1.78 amperes at 6.0 volts.
Motoring Current—4.85-5.4 amperes at 6.0 volts.
Removal:—Pivot mounted at left front of engine. To remove, take out pivot and clamp bolts.

Belt Adjustment:—Swing generator out until possible belt deflection midway between generator and fan pulley is ¾" (use straightedge across pulleys).

REGULATOR

Auto-Lite Model VRR-4001A. Voltage Type. Cutout Relay and Voltage Regulator in case on dash.
NOTE—Cutout Relay has extra set of contacts for Generator "Teleflash" Indicator control.
See Electrical Equipment Section for complete data.
NOTE—Regulator case cover is sealed. Serviced on exchange basis if seals not broken.

Cutout Relay

Cuts In—6.4-6.6 volts, 825 RPM. 9.4 MPH.
Cuts Out—4.2-4.8 volts (approx. 4-6 amps. disch.).
Contact Gap—.015" min. ground contacts closed (ground contacts open when main contacts close).
Air Gap—.031-.034" at hinge end of core with contacts open (ground contacts closed).

Voltage Regulator

Setting—7.1-7.4 volts at 70°F.
To Check (without breaking seals)—Connect ammeter in charging line at regulator 'B' terminal, voltmeter between this terminal and ground. Warm up generator by running engine at speed of 20 MPH for 15 minutes. Then increase speed to 30 MPH charging battery until voltage is constant. Voltmeter reading should be within limits of 7.1-7.4 volts at 70°F. See Electrical Equipment Section for voltages at other temperatures.
To Adjust (with cover removed)—Change regulator armature spring tension by bending lower spring hanger slightly. See Electrical Equipment Section.
Contact Gap—.012" Min. (armature against stop).
Air Gap—.048-.052" with contacts just opening.

LIGHTING

Headlamps: Hall "Sealed Beam" type with upper lower beams controlled by Beam Selector Switch.
See Electrical Equipment Section for complete data.
Adjustment—Aim upper beams straight ahead (hot spot centers 3" below lamp center height at 25 ft.).
Beam Indicator—Red pilot bulb at upper center of speedometer dial. Lights with Upper Beam "on".

Direction Signal: *See Electrical Equipment Section.*
Direction Signal Indicator—At extreme left hand side of instrument panel. Flashes whenever Right or Left Direction Signal is operating.

Switches

Lighting—Hudson No. 200417.
Beam Selector—Hudson No. 164439.
Instrument—Hudson No. 160092.

Bulb Specifications

Position	Candlepower	Mazda No.
Headlamps	35-45watts	Sealed Beam
Front Bonnet (Park)	1½	55
Fender (no Dir. Sig.)	3	63
Fender (with Dir. Sig.)	21-3	1158
Beam & Dir. Sig. Indicator	1	51
Gen. & Oil Indicators	1	51
Spdmtr. (53)	1	51
Spdmtr. (52), Clock	1½	55
Courtesy, Dome	15	88
Ignition Lock	1½	55
Stop & Tail	21-3	1154
Rear License	3	63
Fog Lamp	50	1211S
Spot Lamp	32	1209S

CONTINUED N NEXT PAGE

CONTINUED FROM PRECEDIN PAGE

MISC. ELECTRICAL

GENERATOR CHARGE SIGNAL: Red indicator on right hand side of instrument panel (to right of clock). Should light when ignition turned on and should go out when generator begins to charge.
See Electrical Equipment Section for complete data.

OIL PRESSURE SIGNAL: Red indicator on right hand side of instrument panel (to left of clock). Should light when ignition turned on and go out as soon as engine is started.
See Electrical Equipment Section for complete data.

FUSES: Lighting—30 ampere. Bottom fuse on fuse block to right of steering column behind instrument panel. **Accessory**—30 ampere. Top fuse on fuse block. NOTE—Silver-plated fuses used.
Direction Indicator—10 ampere. Near flasher.
Electric Clock—3 ampere. In lead behind clock.

CIRCUIT BREAKER: Drive-Master Cars only. Thermostatic type. Mounted on fuse block. Protects Drive-Master circuits only.

HORNS: Sparton. Twin type air electric horns operated by horn relay.
Air Gap—.026-.030" high pitch (short horn), .032-.035" low pitch (long horn).

Horn Relay:—R-B-M Model 6004. On engine dash.
Contacts Close—3 volts min., 4 volts, max.
Open—2 volts min. (relay upright, terminals down).

ENGINE

ENGINE SPECIFICATIONS: Own Make. Eight Cylinder "L" Head type.
Bore—3". **Stroke**—4½".
Displacement—254 cubic inches. **Rated HP**—28.8.
Developed Horsepower—128 at 4200 RPM.
Compression Ratio—6.50-1 cast-iron head.
Compression & Vacuum Reading—*See Tune-up data.*

ENGINE REMOVAL: *See Hudson Shop Notes.*

ENGINE FRONT SUPPORT REMOVAL & INSTALLATION: *See Hudson Shop Notes.*

ORIGINAL BORE & PISTONS: *See Hudson Shop Notes.*

TIGHTENING TORQUES: *See Hudson Shop Notes.*

CYLINDER HEAD: Tightening Torque & Cylinder Head Diagram—*See Hudson Shop Notes.*

PISTONS: Aluminum alloy, Cam ground, T-slot type. Use finished replacement pistons.
Weight—10.5 ozs. (stripped). **Length**—3 3/16".
Removal—Piston & rod removed from above or below. **Clearance**—Top .016". Skirt .0005-.001".

Replacement Pistons: *See Hudson Shop Notes.*

Fitting New Pistons:—Use .0015" feeler ½" wide (Piston Feeler Scale Tool J-888-A) inserted between piston and cylinder wall on side opposite slot 90° from pin. Pull to withdraw feeler 3-4 lbs.

Installing Pistons:—Slot away from camshaft.

PISTON RINGS: Two compression, two oil rings (one oil ring above piston, second ring on skirt below pin). All rings are positioned by pin in ring groove.

Ring	Width	End Gap	Side Clearance
Compression	3/32"	.009-.011"	.001"
Oil (upper)	3/16"	.009-.011"	.001"
Oil (lower)	5/32"	.009-.011"	.001"

Replacement Rings:—*See Hudson Shop Notes for data.*

PISTON PIN: Diameter—¾". **Length**—2 7/16".
Floating type with diamond-drilled pin holes in piston and bronze bushing in connecting rod. Pin retained by lock ring at each end.
Piston Pin Servicing—*See Hudson Shop Notes.*
Pin Fit in Piston—.0003" clearance (hand push fit) with piston heated to 200°F.
Pin Fit in Rod Bushing—.0003" clearance.

Replacement Pins:—Std., .002", .005", .010" oversize.

CONNECTING ROD: Weight 29.75 oz. **Length** 8 3/16".
Lower Bearing Diameter—1 15/16".
See Crankshaft Size Code Note in Hudson Shop Notes for Original Connecting Rod Bearing sizes.
Lower Bearing—Babbitt lined, spun type.
Clearance—.001". **Sideplay**—.007-.013".

Bearing Adjustment: None (no shims). Install replacement rods furnished on exchange basis. Do not file rods or bearing caps. Palnuts used on bolt nuts.
Palnut Installation—*See Hudson Shop Notes.*

Replacement Rods: Exchange rods furnished Std. size and .010" Undersize.

Installing Rods:—Offset. Install rods with widest half of bearing toward rear (#1, 3, 5, 7), toward front (#2, 4, 6, 8). Oil scoop on all rods toward camshaft.

CRANKSHAFT: Five bearing type with integral counterweights and vibration dampener on forward end.
Vibration Dampener Removal—*See Hudson Shop Notes.*
Crankshaft & Main Bearing Removal & Installation—*See Hudson Shop Notes.*
Bearing Diameters—#1, 2 9/32"; #2, 2 5/16"; #3, 2 11/32"; #4, 2⅜"; #5, 2 13/32". *See Crankshaft Size Code in Hudson Shop Notes for original bearing sizes.*
Bearings—Bronze backed, babbitt lined type. Bearings secured in cap and crankcase by brass screws.
Clearance—.001".

Bearing Adjustment:—None (no shims). Do not file bearing caps. Palnuts used on bearing cap bolt nuts. *See Palnut Installation in Hudson Shop Notes.*

►*CAUTION—Replacement of main bearings requires removal of crankshaft. Bearings retained by brass screws.*

Replacement Bearings: *See Hudson Shop Notes.*

End Thrust:—Taken by center bearing. Replace bearing if endplay excessive. **Endplay**—.006-.012".

CAMSHAFT: Five bearing type. Helical gear drive.
Camshaft Removal—*See Hudson Shop Notes.*
Bearing Diameters—#1, 2 1/32"; #2, 2"; #3 1 31/32"; #4, 1 15/16"; #5, 1½".
Bearings—Steel-backed, babbitt-lined bushings.
Clearance—.001-.002".

Bearing Removal & Installation—*See Hudson Shop Notes.*

End Thrust:—Thrust washer between camshaft flange and crankcase. Spring loaded button in camshaft hub bears against thrust plate on gear cover.

Timing Gears: Crankshaft gear Cast Iron, camshaft gear Laminated Fibre (first cars), Aluminum (later cars). All gears have 20° pressure angle teeth. Aluminum gears (and crankshaft gears used with them) have teeth slightly crowned to improve quietness. NOTE—Gears have figure "20" on front face for identification (crankshaft gear also marked "FRONT" to insure correct installation).
Replacement Gear Caution—Aluminum Camshaft Gear furnished in Matched Sets only with crankshaft gear (aluminum gear has slight crown or curvature of teeth for quietness and must be used with similarly crowned teeth type crankshaft gear).
Backlash—.002-.004".
Timing Gear Removal & Installation—*See Hudson Shop Notes.*

Camshaft Setting:—Mesh marked crankshaft gear tooth between two marked teeth on camshaft gear.

VALVES:	Head Diameter	Stem Diameter	Length
Intake	1½"	11/32"	5 3/32"
Exhaust	1⅜"	11/32"	5 3/32"

	Seat Angle	Lift	Stem Clearance
Intake	45°	11/32"	.0025"
Exhaust	45°	11/32"	.004"

Valve Guides: Removable type pressed in block.
Servicing—Use Tool J-1188 to drive guides out. Install guides with Tool J-883-A with top of guide 15/16" below top of cylinder block. With guides installed, ream guides with Tool J-129-2 to .3437" (11/32") which will provide proper valve stem-to-guide clearance. NOTE—Car manufacturer recommends that guides be cleaned with Tool KMO-122

Valve Springs: Cadmium plated springs are used. Use tool J-587-A to install valve spring and seat assembly. **Spring Free Length**—2 17/64".

	Spring Pressure	Spring Length
Valve Closed	40 lbs.	2"
Valve Open	80 lbs.	1 21/32"

NOTE—When springs removed, test for pressure (Tool U-15). Replace if pressure below 34 lbs. at 2".

Valve Lifters: Roller shoe type, fitted in removable guides in cylinder block.
Valve Lifter Removal—*See Hudson Shop Notes.*

VALVE TIMING

Tappet Clearance:—.006" Int., .008" Exh., hot & idling.

Valve Timing:—See Camshaft Setting above.
Intake Valves—Open 10°40' BTDC. Close 60° ALDC.
Exhaust Valves—Open 50° BLDC. Close 18°44'ATDC.
Above figures correct with .010" tappet clearance.
Valve Timing Check—With .010" tappet clearance #1 intake valve should open with piston 10°40' or .0494" BTDC when a point on the flywheel approximately 3.97 teeth before 'UDC.1-8/' mark lines up with indicator in inspection hole above starter. Reset tappet clearance at .006" hot and idling.

LUBRICATION

Engine Oiling System: Duo-flow (pressure and positive splash) system. Pump delivers oil to front and rear ends of upper tray in oil reservoir. Connecting rod bearings are lubricated by dippers on caps which dip into troughs in this upper tray and also splash oil inside crankcase. Part of this oil is caught in channels inside crankcase and fed into reservoirs directly over each camshaft and crankshaft bearing from which it flows into the bearings.
NOTE—Lower end of oil reservoir suction pipe (from oil pan to crankcase wall) now extends to center of oil reservoir to insure constant oil supply
Crankcase Capacity—9 qts. (dry), 7 (refill).
Servicing Note—Whenever pan removed, install 2 qts. in upper tray before pan installed, then 7 qts. through oil filler after pan in place on engine.

Oil Filter: Special Hudson type. Optl. equipment.
Servicing—Replace filter cartridge at 5000 mile intervals.

Normal Oil Pressure—4-12 lbs. with hot oil. No gauge used (see Oil Pressure indicator below).

Oil Check Valve:—Located on right side of crankcase at rear. Opens at 4-12 lbs. with hot oil. Operates dash signal to indicate oil flow.

Oil Pump:—Oscillating plunger type, gear driven by camshaft. Mounted on right side of crankcase.

Oil Pressure Indicator:—Hudson Teleflash Oil Pressure Indicator. *For data, refer to Elec. Equip. Index.*

Checking Oiling System:—*See Hudson Shop Notes.*

COOLING

Cooling System: Positive circulation type with water pump at water inlet on front of engine. On Commodore Eight only, by-pass passage between outlet elbow on head and water pump inlet provides recirculation of water through block with thermostat closed.

Capacity—18 quarts.

Water Pump: Centrifugal, belt driven, packless type.

NOTE—Pump used on Commodore Eight has double inlet (for by-pass).

See Water Pump Section for complete data.

Belt Adjustment—*See Generator Belt Adjustment.*

Thermostat: Fulton. Choke type (Super Eight), By-pass type (Commodore Eight). In cylinder head water outlet elbow.

Setting—Starts to open 150-155°F. Fully open 185°F.

Temperature Gauge:—King-Seeley Electric. K-S Nos. 41053 (dash unit), No. 41085 (engine unit).

See Miscellaneous Section for complete data.

NOTE—Gauge reads HOT with ignition 'Off'.

CLUTCH

Own Make. Single plate, fluid cushioned type (cork insert type driven member operating in oil). 10" type used on all models.

See Clutch Section for complete data.

Driven Member—Cork insert type. Inside Diam. 6⅜". Outside Diam. 10". Facing 108 corks, .203" thick.

Pedal Adjustment: Clearance between underside of toeboard and top face of pedal shank must be 1½". To adjust, loosen locknut above clevis, remove clevis pin in throw-out lever at lower end of connector link, turn clevis in or out of link, tighten locknut after re-connecting clevis. CAUTION—Make certain that clevis pin inserted in same hole in throw-out lever from which removed.

Clutch Oil Servicing:—*See Hudson Shop Notes.*

Removal:—Remove transmission (see Transmission Removal following). Drain clutch oil by turning engine over until plug on flywheel is accessible through timing inspection hole in rear engine support plate above starter, remove plug, turn engine over ⅓ revolution until star on flywheel visible through timing hole (drain hole then at bottom), allow lubricant to be drained. Loosen mounting bolts in clutch cover rim to release spring tension, remove bolts and lift clutch assembly off car.

NOTE—See Installation Note following Transmission Removal for Clutch Throwout Bearing Oil Seal.

VACUMOTIVE DRIVE

Vacumotive Drive:—Automatic clutch control. Optl.

See Clutch Section for complete data.

TRANSMISSION

Own Make. All helical gear type. Constant-mesh, synchro-mesh (Second & High), sliding gear (Low & Reverse) with remote (steering column) shift.

See Transmission Section for complete data.

Transmission Control: Handy-Shift remote control type with shift lever mounted on steering column.

See Transmission Section for complete data.

Removal:—Transmission can be removed from inside car as follows: Take off accelerator pedal by removing cotter pins in anchor bracket and bell crank link clevis pins. Move steering column rubber hole cover up out of way. Remove floor mat by taking out screws at kick pads on dash and mat trim clips. Remove front seat cushion and transmission floor opening cover (CAUTION—Accelerator pedal operating rod should be secured so as not to drop on starter switch). Disconnect front universal by taking out four nuts and lock plates on U-bolts. Release clutch pedal return spring. Remove two cross shaft bracket bolts, clutch control link clevis pin and clutch pedal assisting spring. Remove Handy Shift control tube-to-transmission shift rod cotter pin, washer and grommet; transmission casing lower anchor bracket screws and bracket, shift shaft outer lever nut, washer and lever. Remove two flywheel guard-to-clutch housing screws and two rear engine mounting bolts (CAUTION—Do not remove rear engine mounting-to-clutch housing bolt). Jack rear of engine up ½" off frame. Remove clutch housing to transmission bolts. Disconnect speedometer cable from transmission. Pull transmission back and lift out.

Installation Note—Wrap one strand of soft wire around throw-out bearing oil seal to prevent leather curling over when transmission installed (twist wire with end extending up through clutch housing so that it will come off the seal after transmission installed).

DRIVE-MASTER TRANSMISSION

Drive-Master Transmission: Optl. Conventional 3-speed transmission with automatic gear shifting between Second & High Gears. Used in conjunction with Vacumotive Drive (automatic clutch control).

See Transmission Section for complete data.

OVERDRIVE

Warner Model AS2-R9B. Optl. equipment, used with Hudson Transmission. Overdrive is solenoid operated type (no centrifugal pawls) with Governor control and throttle operated "kick-down".

See Transmission Section for complete data.

Overdrive Solenoid—Delco-Remy. Hudson #163305.

Throttle Switch—R-B-M. Hudson No. 164438. On toeboard under accelerator pedal. Not adjustable.

Governor Switch—Auto-Lite Model TGA-4002 (two terminal type), Model TGB-4002 (five terminal type used on cars with Hudson Drive-Master transmsn.).

Removal: Same as standard transmission removal (above) except that overdrive control and wiring connections must be disconnected. Special Tool J-1502-H (hoist and dolly) should be used to lift transmission and lower onto dolly. Transmission and overdrive assembly can then be rolled out from beneath car.

UNIVERSALS

Spicer. Needle bearing type. Two used.

	Front—Spicer Model—	Rear
Std.	1261-101X	1268-101X
With Overdrive	1261-101X	1278-101X

See Universals Section for complete data.

REAR AXLE

Own Make. Semi-floating, Spiral Bevel gear type with Hotchkiss Drive.

See Rear Axle Section for complete data.

Ratio—	Standard	Optional
Std. Transmission	4 1/9-1	4 5/9-1
With Overdrive	4 5/9-1	4 1/9-1
With Drive-Master	4 1/9-1	4 5/9-1

FOR OTHER REAR AXLE DATA SEE 1946-47 HUDSON SIX CAR PAGES

SHOCK ABSORBERS

Delco Model 1037-C (front), Model 1041-S (rear). Direct acting, hydraulic types.

See Shock Absorber Section for complete data.

FRONT SUSPENSION

Front Suspension:—Independent, linked parallelogram type with coil springs and Autopoise Control.

See Front Suspension Section for complete data.

Kingpin Inclination—4°36' crosswise.

Caster—0° (Neg. ¼° to Pos. ¼°). Adjustable.

Camber—Positive ¼° to Positive ¾°. Adjustable.

Toe In—0-1/16". Loosen clamps at ends of each tie rod (adjust rods equally with steering arm centered).

Steering Geometry—Inner wheel 30°, Outer 25°.

STEERING GEAR

Gemmer Model 335. Worm-and-Roller type with "push-pull" adjustments.

See Steering Gear Section for complete data.

BRAKES

Service: Bendix Hydraulic, 4-wheel, Duo-servo, Single anchor type without eccentric adjustment. Mechanical follow-up (pedal linked to hand brake cables) provided. Hand lever applies rear service brakes.

See Brake Section for complete data.

Drums—Centrifuse. Diameter 11".

Lining—Multibestos molded (primary), Ferodo woven (secondary). Width 1¾". Thickness 7/32". Length per wheel 23 15/16".

Clearance—.0075" at each end of each shoe. (.015" at each end of secondary or rear shoe with primary shoe forced out against drum).

Mechanical Follow-up (Reserve): Over-running linkage between brake pedal and parking (hand-brake) linkage which causes rear wheel brakes to be applied mechanically by pedal if hydraulic system not operating.

See Brake Section for complete data.

Setting—1¼" clearance between face of pedal pushrod & end of actuating tube with brakes off.

Hand Brake: See Service Brakes above..

MISC. MECHANICAL

CONVERTIBLE TOP CONTROL: Hydraulic (hydro-electric) type with hydraulic power cylinders actuated by motor driven hydraulic pump.

See Miscellaneous Section for complete data.

HOOD LOCK: Pull handle under edge of instrument panel on left side, pull forward on safety catch under front edge of hood, raise front end of hood.

MODEL IDENTIFICATION

SERIAL & ENGINE NUMBER: Stamped on plate on right front door hinge pillar post and stamped vertically on right side of cylinder at upper front end.
1948 Numbers—481101 Up (481), 482101 Up (482).
Identification—First three figures of number indicate model as follows: 481101 or 482101.

TUNE-UP

COMPRESSION PRESSURE: 100 lbs. min. at 150 RPM.
VACUUM READING: 18-21" idling at 550-575 RPM. (std.), 575-600 RPM. (with Vacumotive or Drive-Master).
FIRING ORDER: 1-5-3-6-2-4.
SPARK PLUG GAPS: .032".
Plugs for Cast-iron Head—Champion J-7 (old marking Champion J-9). 14 mm.
Plugs for Aluminum Head—Champion H-10. 14 mm.
IGNITION: ***See Coil, Condenser, and Distributor.***
Breaker Gap—.020". Limits .018-.022".
Cam Angle or Dwell—38° Closed. 22° Open.
Breaker Arm Spring Tension—17-20 ounces.
Automatic & Vacuum Advance—***See Distributor.***
IGNITION TIMING: TDC (top dead center).
Timing Procedure—***See Ignition Timing.***
Flywheel Mark—"UDC-1-6/" aligned with lower edge of rear engine support plate opening behind starter.
Fuel Compensator Setting—Slight ping at 15 MPH. when accelerating from 10 MPH. in high gear.
CARBURETION: ***See Carburetor & Carb. Equipment.***
Idle Setting—1¼-1¾ turns open. Two screws—turn screws out for richer mixture.
Idle Speed (standard)—550-575 RPM.
Idle Speed (with Vacumotive or Drive-Master)—575-600 RPM.
Float Level—3/16". Measured from top of float to gasket seat (machined surface) on bowl cover with needle valve seated.
Accelerating Pump—Outer hole (Normal). Inner hole if less charge required.
Fuel Pump Pressure—3½-4½ lbs.
MANIFOLD HEAT CONTROL: Automatic. No adjustment. Valve must operate freely.
VALVE TAPPET CLEARANCE: .008" Int., .010" Exh. Hot.
►***CAUTION—This figure supersedes earlier data.***
NOTE—Self-locking tappet adjusting screws used. Remove apron in right front fender for access.
Valve Timing Check—***See Valve Timing.***
STARTING: ***See Battery, Starter, Generator, Regulator.***

IGNITION

IGNITION SWITCH: Mitchellock. Hudson No. 300644, 301826 (RHD). Ignition Lock Case and Bracket.
Ignition Lock—Briggs & Stratton. B&S No. 50184.
Key Series—H601 to H1100. Groove No. 1.
COIL: Auto-Lite No. CE-6006.
Location—Left side of engine above distributor.
Ignition Current—2½ amperes idling, 5 stopped.
CONDENSER: Auto-Lite Part No. IG-3927G.
Capacity—.25-.28 microfarad.
DISTRIBUTOR: Auto-Lite Model IGS-4213-1. Automatic advance type with Vacuum Spark Control and Fuel Compensator adjustment.
Breaker Plate Identification—No. 8.5 stamped on plate (vacuum advance limiting slot size).
Breaker Gap—.020". Limits .018-.022".
Cam Angle—38° Closed, 22° Open.
Breaker Arm Spring Tension—17-20 ounces.
Rotation—Clockwise viewed from above.
NOTE—Rotation reversed over previous models.

Automatic Advance

Degrees Distr.	R.P.M.	Degrees Eng.	R.P.M.
Start	400	0	800
3	800	6	1600
6	1200	12	2400
9	1600	18	3200
12	2000	24	4000

Fuel Compensator: 10° advance or retard adjustment at distrbutor. See Ignition Timing.
Vacuum Spark Control: Auto-Lite. Integral type. Linked directly to breaker plate. Provides additional advance at speeds above idling except when engine accelerated or operated with wide open throttle when spark retarded by return spring in unit.

Vacuum Advance

Distr. Degrees	Eng. Degrees	Vacuum (" of HG)
Start	0°	9½"
2°	4°	10½"
4°	8°	11⅝"
6°	12°	12⅝"
8.5°	17°	14"

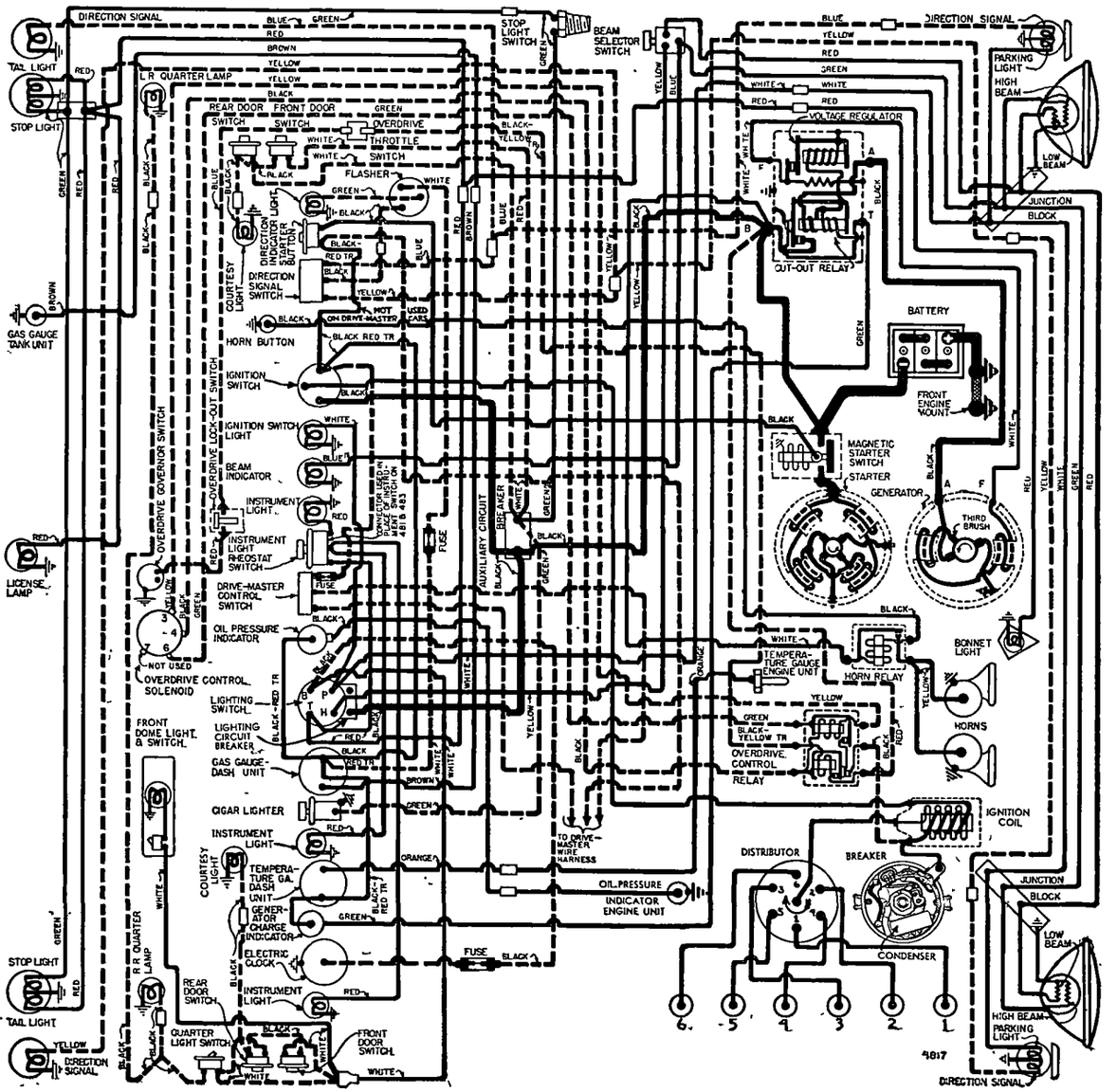

Distributor Removal: On left side of engine. Disconnect vacuum line, take out hold-down screw in advance arm. Lift off.

IGNITION TIMING

Std. Setting.....At Top Dead Center
NOTE—Modify this setting for special fuel and altitude conditions. See Fuel Compensator Setting.
Flywheel Mark—"UDC-1-6" (#1 and #6 piston top dead center position) with 4 short marks (¼" apart) ahead of this mark. Visible in opening behind starter.
Timing—With #1 piston at firing position and long line of "UDC-1-6/" flywheel mark aligned with lower edge of opening in rear engine support plate behind starter, loosen hold-down screw in Fuel Compensator. Rotate distributor until contacts begin to open, tighten hold-down screw. Check spark plug connections (see diagram), see that rotor at #1 segment in cap. Check Fuel Compensator setting.
Timing (with Neon Timing Light)—Mark long line of "UDC-1-6/" flywheel mark with white paint, connect timing light to #1 spark plug. Idle engine below 800 RPM., adjust distributor (as directed above) until mark lines up with lower edged of opening behind starter.
Fuel Compensator Setting—Set for slight ping at 15 MPH. when accelerating from 10 MPH. with wide open throttle. To adjust, loosen hold-down screw, rotate distributor counter-clockwise (if ping too severe), clockwise (if no ping). **Final setting must not be more than 1" (4th short line) ahead of "UDC-1-6/" flywheel mark.**

CARBURETOR

Carter WDO, No. 647S. 1¼" dual barrel downdraft type with Carter Climatic Control.
Casting No. on Flange—542.
See Carburetor Section for complete data.

Settings (Idle Setting, Float Level, and Accelerating Pump: ***See Tune-Up data.***
Metering Rods & Jets—***See Carter Jet Table in Carburetor Section.***

Fast Idle: Carter Dual (WDO) Carburetor type.
See Carburetion Equipment Section for complete data.
Setting—.054" throttle opening with choke valve closed. Adjust by turning fast idle screw on high step of cam.

Automatic Choke: Carter Climatic Control (Dual Carbs.).
See Carburetion Equipment Section for complete data.
Setting—Set coil housing 1 point lean.

CARB. EQUIPMENT

Fuel Pump (std.): AC Type AH No. 1539109.
Optl. (Fuel-&-Vacuum)—AC Type AJ No. 1539108.
Replacement Pump—No. 584 (for AH), 583 (AJ).
Pressure—3½-4½ lbs.
RHD NOTE—AC No. 1539255 (std.), No. 1539254 (comb. fuel-&-vacuum). Repl. No. 9255 (std.), 9254 (comb.).
See Carburetion Equipment Section for complete data.

Gasoline Gauge: King-Seeley Electric.
Dash Unit—K-S No. 42120 (481), 42135 (482).
Tank Unit—K-S No. 41765.
See Carburetion Equipment Section for complete data.

Air Cleaner (std.—oil wetted): AC #1544265 (element Type #5), Hudson No. 301136 (301261 for Drive-Master.
Optl. (oil bath)—AC #1544266 (element #1542245), Hudson No. 300824 (301384 for Drive-Master).
Servicing (oil-wetted type)—Clean and re-oil filter element (use same grade engine oil used in crankcase) at 2000 mile intervals or more often if required by operating conditions.
Servicing (oil-bath type)—Service same as oil-wetted type except that filter element not oiled and 1 pint engine oil used in cleaner body.

BATTERY

National Type S17-2HF. 6 Volt, 17 Plate, 120 Ampere Hour Capacity (20 hour rate).
Zero Capacity—300 amperes for 4.3 minutes. Five second voltage—4.35 volts.
Grounded Terminal—Positive (+) to frame and engine by a single strap.
Dimensions—Lgth. 10 9/16". W. 7⅛". H. 9 1/16".
Location—On left side under engine hood.

STARTER

Auto-Lite Model MCL-6006. Armature MCH-2023.
Drive—Bendix No. A-1806. Inboard Barrel type.
Rotation—Counter-clockwise at commutator end.
Brush Spring Tension—42-53 ozs. (new brushes).
Cranking Engine—Approx. 160 amperes at 150 RPM.

Performance Data

Torque	R.P.M.	Volts	Amperes
0 ft. lbs.	5500	5.5	65
8.0 "	Lock	2.0	410

Removal: On left front face of rear motor support. To remove, take out flange mounting bolts.

Starting Switch: Auto-Lite Magnetic type SS-4001 on starter with pushbutton (Hudson No. 300646) on instrument panel. Operative only with ignition "on" (and clutch disengaged on cars with Vacumotive Drive or Drive-Master).
See Electrical Equipment Section for complete data.

GENERATOR

Auto-Lite Model GEC-4801A. Armature GDZ-2006F. Third brush control with voltage regulation.
Maximum Charging Rate—44 amperes (Cold), 37 amperes (Hot), at approx. 35 MPH. Ground "F" terminal when checking generator output.
Charging Rate Adjustment—See Regulator data. Third brush setting 1 commutator bar minimum, 1 commutator bar plus 1 mica strip maximum, from nearest (insulated) main brush. Adjust 3rd brush.

Performance Data

Cold Amperes	Cold Volts	Cold R.P.M.	Hot Amperes	Hot Volts	Hot R.P.M.
0	6.4	960	0	6.4	1040
4	6.55	1060	4	6.6	1140
8	6.7	1160	8	6.8	1280
12	6.85	1280	12	6.95	1440
16	7.0	1400	16	7.15	1600
20	7.15	1550	20	7.35	1820
24	7.25	1700	24	7.55	2090
28	7.5	1890	28	7.75	2440
32	7.65	2100	32	7.9	3000
36	7.8	2375	34	8.0	3800
41	8.0	3350			

Rotation—Counter-clockwise at commutator end.
Brush Spring Tension—53 ozs. max. (new brushes).
Field Current—1.60-1.78 amperes at 6.0 volts.
Motoring Current—4.85-5.4 amps. at 6.0 volts.

Removal: Pivot mounted at left front of engine. To remove, take out pivot and clamp screws and nuts.

Belt Adjustment: ¾" belt deflection between generator and pump pulleys. Loosen bolts, swing generator out.

REGULATOR

Auto-Lite Model VRR-4001A. Voltage type.
NOTE—Cutout Relay has extra set of contacts for Generator "Teleflash" Indicator control.
See Electrical Equipment Section for complete data.
NOTE—Regulator cover sealed. Warranty void if seals broken.

Cutout Relay

Cuts In—6.4-6.6 volts.
Cuts Out—4.2-4.8 volts (approx. 4-6 amps. disch.).
Contact Gap—.015" min., ground contacts closed (ground contacts open when main contacts close).
Air Gap—.013-.034" at hinge end of core with contacts open (ground contacts closed).

Voltage Regulator

Voltage Setting—7.1-7.4 volts at 70°F.
Contact Gap—.012" Min. (armature against stop).
Air Gap—.048-.052" with contacts just opening.
Checking (without breaking seals) & Adjustment—
See Electrical Equipment Section for complete data.

LIGHTING

Headlamps: Hall "Sealed Beam" type.
See Electrical Equipment Section for complete data.
Adjustment—Aim upper beams straight ahead (hot spot centers 3" below lamp center height at 25 ft.).
Beam Indicator—Red pilot bulb at lower center of speedometer dial. Lights when Upper Beam "on".

Direction Signal: Optl. ***See Electrical Equipment Section.***
Direction Signal Indicator—At left end of instrument panel. Flashes when Signal in use.
Direction Signal Flasher—Hudson No. 300877.

Switches

Lighting—Hudson No. 300641 (with Circuit Breaker), No. 300642 (switch only).
Beam Selector—Hudson No. 300799.
Instrument (Commodore)—Hudson No. 160092.
Door Switch—Hudson No. 300796.
Front Dome Light—Hudson No. 211312.
Rear Quarter Pillar—Hudson No. 160091.
Stop Light—Hudson No. 300356.
Direction Signal—Hudson No. 300875 (with wires).

Bulb Specifications

Position	Candlepower	Mazda No.
Headlamps	Sealed Beam	4030
Parking (no Dir. Signal)	3	63
Parking & Dir. Signal	21-3	1154
Rear Direction Signal	21	1129
Stop & Tail	21-3	1154
Rear License	3	63
All Instrument Lights	1½	55
Dir. Sig. Indicator	1	51
Front Dome & Courtesy	15	87
Rear Qtr. Dome (Cmdre.)	6	81
Bonnet (Hood) Light	1½	55

MISC. ELECTRICAL

CIRCUIT BREAKERS: Vibrating thermostatic types.
Lighting—Hudson No. 300643. 30 ampere. On lighting switch.
Misc. Lighting—Hudson No. 301853. 20 ampere. On steering support bracket behind instrument panel.
Convertible Top & Hydraulic Window Regulators—Hudson No. 300626. 30 ampere. On steering support bracket behind instrument panel.

FUSES: Electric Clock—3 ampere. Behind clock.
Direction Signal—10 ampere. On Direction Signal Harness behind instrument panel.
Drive-Master—10 ampere. On Drive-Master Switch.
Weather Control—14 ampere. On heater.
Radio—14 ampere. In lead wire to radio.

CONTINUED N NEXT PAGE

CONTINUED FR M PRECEDING PA E

GENERATOR CHARGE SIGNAL: Red indicator on instrument panel (to right of temperature gauge). Should light when ignition turned on and should go out when generator begins to charge.
See Electrical Equipment Section for complete data.

OIL PRESSURE SIGNAL: Red indicator on instrument panel (to left of gas gauge). Should light with ignition on, go out as soon as engine started.
Oil Pressure Warning Switch—Carter No. A658S. Hudson No. 300828. On right side of engine above oil pump. Contacts open at 11-15 lbs. Switch sealed. Not adjustable. *See Electrical Equip. Section for data.*

HORNS: Sparton. Dual horns operated by relay.
Air Gap—.026-.030" for high pitch (short horn), .032-.035" low pitch (long horn).

Horn Relay: Hudson No. 164401. On engine dash.
Contacts Close—3 volts min., 4 volts max.
Open—2 volts min. (relay upright, terminals down).

ENGINE

ENGINE SPECIFICATIONS: Own Make. Six cylinder, "L" head type.
Bore—3 9/16". **Stroke**—4⅜".
Displacement—262 cu. ins. **Rated HP**—30.4.
Developed Horsepower—121 at 4000 RPM.
Compression Ratio (std.)—6.50-1 cast-iron head.
Compression Ratio (optl.)—7.00-1 aluminum head.
Compression & Vacuum Reading—*See Tune-Up.*

ORIGINAL BORE & PISTONS: *See Hudson Shop Notes.*

ORIGINAL BEARING SIZES: *See Hudson Shop Notes.*

TIGHTENING TORQUES: *See Hudson Shop Notes.*

OIL PAN REMOVAL: *See Hudson Shop Notes.*

PISTONS: Aluminum alloy, Cam ground, T-slot type.
Weight—18⅛ ozs. (stripped). **Length**—3¾".
Removal—Pistons and rods removed from above.
Clearance—.001 to .0015" (skirt).

Replacement Pistons: *See Hudson Shop Notes.*

Installing Pistons: Slot away from camshaft.

PISTON RINGS: Two compression, two oil rings (one above pin, one below pin) per piston. Rings are square end type. Rings pinned to prevent rotation. Rings cut and notched to fit pin (clearance on pin equal to ring end gap.

Ring	Width	End Gap	Side Clearance
Compression	5/64"	.007-.012"	.001"
Oil (upper)	3/16"	.007-.012"	.001"
Oil (lower)	5/32"	.007-.012"	.001"

Replacement Rings: *See Hudson Shop Notes.*

PISTON PIN: Diameter—31/32". **Length**—2 15/16". Floating type with diamond-drilled pin holes in piston and rolled steel babbitt faced bearing in connecting rod. Pin retained by lock ring at each end.
Pin Fit in Piston—.0000-.0003" at 70°F.
Pin Fit in Rod Bushing—Hand push fit at 70°F.

Piston Pin Replacement: *See Hudson Shop Notes.*
Pin Sizes—Std., .002", .005", .010" oversize.

CONNECTING ROD: Length—8⅛".
Weight—34.23 ozs. (without bearings).
Lower Bearing Diameter—2⅛".
For Original Connecting Rod Bearing Sizes, see "Crankshaft Size Code Note" in Hudson Shop Notes.
Lower Bearing—Steel-backed, babbitt-lined type with upper and lower halves interchangeable. No shims.
Clearance—.0005-.0015". **Sideplay**—.007-.013".

Bearing Adjustment: None (no shims). Replace bearings. Do not file rods or bearing caps.
NOTE—Identifying nibs on side of cap and rod must be together when cap installed on rod.
Palnut Installation—*See Hudson Shop Notes.*

Replacement Bearings: Large std., small std., .010" US.

Installing Rods: Not offset. Oil spit hole in lower end of rod must be toward valve side of engine.

CRANKSHAFT: Four bearing type with integral counterweights. Vibration dampener on front end.
Bearing Diameter—2½" all bearings.
Bearings—Removable steel-backed, babbitt-lined type. Upper and lower halves of each bearing are interchangeable.
Clearance—.0005-.0015".
Oil Seals—Wood packing wedges used at front and rear main bearings. Graphite impregnated wiper seal fitted in groove (formed between engine rear support plate and rear of block for upper half, and in rear groove in bearing cap for lower half) behind oil slinger groove. Cap has oil return hole at bottom.

Bearing Adjustment: None (no shims). Replace bearings. Do not file bearing caps.
NOTE—Bearing shells positioned in cap and crankcase by tang on edge of shell.
Palnut Installation—*See Hudson Shop Notes.*

Replacement Bearings: Std., optl. std., .010" US.

End Thrust: Taken by #3 bearing. Replace bearing if endplay excessive.
Endplay—.003-.009".

CAMSHAFT: 4 bearing type. Non-adjustable chain
Bearing Diameters—#1, 2⅜"; #2, 2"; #3, 1 31/32"; #4, 1½".
Bearings—Steel-backed, babbitt-lined bushings.
Clearance—.001-.002".

Replacement Bearings: Furnished reamed or unfinished.

End Thrust: Steel thrust plate fitted between front end of camshaft and sprocket. Plate attached to crankcase by two capscrews and locks.

Timing Chain: Morse. Hudson No. 300186. 60 links. ⅜" pitch.
Chain Tension Shoe—Fibre shoe backed by synthetic rubber plunger mounted inside timing chain cover at top. Holds chain in close mesh with sprockets and prevents whip.

Camshaft Setting: Sprockets marked. Two chain guide links marked with center holes. Mesh chain with center hole in each link opposite "O" mark on each sprocket with #1 piston at top dead center (crankshaft sprocket keyway at top with #1 piston at TDC). NOTE—With this setting, there should be 6 full links plus two half-links between marks on sprockets (half-links opposite sprocket marks).

VALVES:	Head Diameter	Stem Diameter	Length
Intake	1 53/64"	11/32"	5 47/64"
Exhaust	1 9/16"	11/32"	5 47/64"

	Seat Angle	Lift	Stem Clearance
Intake	45°	11/32"	.0015-.003"
Exhaust	45°	11/32"	.002-.004"

Valve Guides: Removable, one-piece, cast-iron Exhaust guides counterbored at upper end. Install guides as follows:
Intake Guide—Upper end 1 7/16" below top of valve seat. Finish ream to .3432-3442".
Exhaust Guides—Upper end 1 3/32" below top of valve seat. Finish ream to .3432-.3442". Counterbored 9/16" deep to diameter of 25/64".

Valve Springs: Cadmium plated springs are used.

	Spring Pressure	Length
Valve Closed	77 lbs.	2 3/16"

Valve Lifters: Mushroom type fitted directly in crankcase. Removed from below with camshaft out.

VALVE TIMING

Tappet Clearance: .008" Intake, .010" Exhaust, Hot.
►*CAUTION—This figure supersedes earlier data.*
Self-locking tappet screws are used. Remove right front fender apron for access to valve compartment.

Valve Timing: See Camshaft Setting above.
Intake Valves—Open 7°18' BTDC. Close 53°42' ALDC.
Exhaust Valves—Open 53°18' BLDC. Close 7°42' ATDC. These figures correct with .010" tappet clear.
Valve Timing Check—With .010" tappet clearance No. 1 intake valve opens 7°18' BTDC. with point on flywheel approximately 2¾ teeth before top dead center mark "UDC-1-6/" in line with lower edge of opening in rear engine support plate behind starter.

LUBRICATION

Engine Oiling System: Pressure to crankshaft, connecting rod, and camshaft bearings, piston pins, valve lifters, and to timing chain at crankshaft sprocket. Rotor type oil pump angle mounted on right side of engine.
Crankcase Capacity—7 qts. (refill), 7½ qts. (dry).
Normal Oil Pressure—No gauge used. See Oil Pressure Indicator below.
Oil Pressure Relief Valve—Non-adjustable release valve and spring under plug on left side of engine ahead of starter.

Oil Pan Removal: *See Hudson Shop Notes.*

Oil Pump: Rotor type consisting of inner and outer rotor, shaft, body, and cover. Angle mounted on right side of crankcase and driven from camshaft.

Oil Filter: Optl. Replace cartridge every 5000 miles or when oil shows signs of being dirty.

Oil Pressure Indicator: Hudson Signal Light with new Oil Pressure Warning Switch. Consists of light on instrument panel operated by switch as follows:
Oil Pressure Warning Switch—Carter No. A658S. Hudson No. 300828. On right side of engine above oil pump. Contacts open at 11-15 lbs. Switch sealed. No adjustment. *See Electrical Equip. Section for data.*

Crankcase Ventilation: Oil-wetted type filter element in oil filler cap (air intake). Outlet pipe in rear valve compartment cover on right side of engine.
Servicing—Wash filter element in gasoline and re-oil when changing oil.

COOLING

Cooling System: Positive circulation with pump on front of engine, by-pass type thermostat, and brass water distribution tube in cylinder block.
Capacity—17 quarts.

Water Pump: Centrifugal, belt-driven, packless type. Shaft mounted on sealed duplex ball bearing.
See Water Pump Section for complete data.
Belt Adjustment—*See Generator Belt Adjustment.*

Thermostat: Hudson No. 166272. By-pass type in water outlet on cylinder head.
Setting—Starts to open 150-155°F. Fully open 185°.

Temperature Gauge: King-Seeley Electric.
Dash Unit—K-S No. 42125 (481), 42140 (482).
Engine Unit—K-S No. 41085.
See Miscellaneous Section for complete data.

CLUTCH

Own Make. Single plate, fluid cushioned type (cork insert type driven member operating in Hudsonite oil. 10" type used on all models.

See Clutch Section for complete data.

Facings—Cork insert type. Inside Diameter 6⅜". Outside Diam. 10". 108 corks, .203" thick.

Pedal Adjustment: Clearance between underside of toeboard and top face of pedal shank must be 1½". To adjust, loosen locknut above clevis, remove clevis pin, turn clevis in or out of link, tighten locknut after re-connecting clevis.

Clutch Oil Servicing: *See Hudson Shop Notes.*

Removal: Remove transmission (see Transmission Removal following). Drain clutch oil by turning engine over until plug on flywheel is accessible through timing inspection hole in rear engine support plate behind starter, remove plug, turn engine over ¼ revolution until star on flywheel visible through timing hole (drain hole then at bottom), allow lubricant to be drained. Loosen mounting bolts in clutch cover rim to release spring tension, remove bolts and lift clutch assembly off car.

VACUMOTIVE DRIVE

Vacumotive Drive: Automatic clutch control. Optl.
See Clutch Section for complete data.

TRANSMISSION

Own Make. All helical gear type. Constant-mesh, synchro-mesh (Second & High), sliding gear (Low & Reverse) with remote (steering column) shift.

Identification—Metal tag attached by a cover bolt screw carries second speed ratio 1.65:1 (std.), 1.82:1 (cars with Drive-Master).

See Transmission Section for complete data.

Transmission Control: Handy-shift remote control type with shift lever mounted on steering column.
See Transmission Section for complete data.

Transmission Removal: Remove front seat cushion, disconnect front seat from track, disconnect seat adjusting lever and remove seat back from car. Disconnect accelerator pedal at accelerator rod, brake pedal rod at lever. Remove floor mat, remove Weather Control blower unit (2 screws each side), disconnect bowden wire at control valve at cylinder head. Remove floor opening cover over transmission. Disconnect front universal joint at transmission (wire bearings on universal joint spider). Remove bolts attaching center bearing support bracket, move propeller shaft to rear to clear companion flange at transmission. Disconnect clutch pedal lever return spring, remove clutch cross-shaft and bracket, disconnect clutch control link clevis. Disconnect Handy Shift by removing shifter shaft outer lever, nut, and washer. Remove flywheel guard from bottom of clutch housing. Remove two engine rear mounting bolts and nuts, jack up rear end of engine about ½" off frame cross-member (CAUTION—use block of wood on jack to prevent damage to oil pan). Disconnect speedometer cable at transmission case, plug hole with wood plug. Remove two top screws attaching clutch housing to engine, install guide studs (headless screws) in these holes to support transmission, remove remaining screws. Remove breather pipe bracket from clutch housing and bolt attaching breather pipe and rear valve cover. Pull transmission straight back on guide studs, lift transmission out through floor opening (NOTE—Hoist J-1502 can be used to lift transmission out).

DRIVE-MASTER TRANSMISSION

Drive-Master Transmission: Optl. Conventional 3-speed transmission with automatic gear shifting between Second & High Gears. Used in conjunction with Vacumotive Drive (automatic clutch control).

Identification—Metal tag attached by a cover bolt screw carries second speed ratio 1.82:1.
See Transmission Section for complete data.

OVERDRIVE

Warner Model AS1-R10D. Optl. equip. used with the Hudson Transmission. Overdrive is solenoid operated type (no centrifugal pawls) with Governor control and throttle operated "kick-down".
See Transmission Section for complete data.

Overdrive Solenoid—Hudson No. 301757.

Lock-Out Switch—Hudson No. 301755.

Throttle Switch—Hudson No. 164438.

Governor—Hudson No. 165829 (standard), Hudson No. 165831 (cars with Drive-Master).

Relay—Hudson No. 165826. On left fender shield.

Removal: Same as standard transmission removal (above) except that overdrive control cable and wiring must also be disconnected.

UNIVERSALS

Spicer. Needle bearing type. Three used with intermediate universal to rear of propeller shaft center bearing.
See Universals Section for complete data.

Propeller Shaft & Center Bearing: Two shafts used: 1) Front shaft supported by sealed ball-bearing just ahead of rear coupling flange (no slip joint). 2) Rear shaft with slip joint at forward end.

Center Bearing—Prelubricated sealed annular ball bearing fitted in cast steel housing bolted to support mounting which is secured to underside of frame cross members. Housing cradle mounted on two rubber supports and forward end of support mounting fitted with rubber cushion.

REAR AXLE

Own Make. Semi-floating, hypoid gear type with Hotchkiss drive.

See Rear Axle Section for complete data.

Ratio—Std. or Drive-Master Cars: 4.1-1 standard, 4 5/9-1 Optl. Overdrive Cars: 4 5/9-1 std., 4.1-1 Optl.

Backlash—.004-.006". Screw adjustment.

Removal: Disconnect rear universal by taking out four nuts and lock plates on U-bolts, drop rear end of propeller shaft. Remove axle shafts (see instructions below). Remove bolt nuts on carrier flange, pull carrier assembly out of axle housing.

Axle Shaft Removal: Hoist rear of car. Remove rear wheels. Remove axle shaft nut and washer (use Tool J-351). Remove hub and drum assembly using screw type wheel puller (Tool J-736—CAUTION—Car manufacturer recommends that screw type puller be used, if knock-out type puller is used serious damage to differential parts may result). Remove 4 nuts on bearing cap bolts, push bolts out of backing plate, remove bearing caps and shims (without disturbing hand brake link). Take out rear wheel bearing and axle shaft, using puller Tool J-352. Do not drag axle shaft on oil seal assembly in housing.

Wheel Bearing Adjustment: Controlled by shims (.003", .005", or .015" thick) under bearing cap. To adjust, remove bearing cap (see directions above under Axle Shaft Removal), add or remove shims equally at both wheels (necessary to keep thrust spacer centered on differential pinion shaft).

Endplay—.001-.004".

SHOCK ABSORBERS

Delco or Monroe. Direct acting, hydraulic types. Hudson Nos. for cars with light control (std.) springs: Front 301240 (Delco), 300350 (Monroe). Rear 301241 (Delco), 300351 (Monroe).
See Shock Absorber Section for complete data.

FRONT SUSPENSION

Front Suspension: Independent, linked parallelogram type with coil springs and lateral stabilizer.
See Front Suspension Section for complete data.

Kingpin Inclination—3°36' crosswise.

Caster—½-1½°. Eccentric adjustment.

Camber—½-1½°. Eccentric adjustment.

Toe In—1/32" ± 1/32". Center steering arm on frame must be at center of car. To adjust, loosen clamps at ends of each tie rod and adjust tubes equally (to increase toe-in turn rods in direction of wheel travel, to decrease, turn in opposite direction).

Steering Geometry (Toe-out on Turns)—With Inner wheel turned 30°, Outer Wheel should be turned 25°. No adjustment.

STEERING GEAR

Gemmer Model 335. "3-tooth" Worm-and-Roller type with "push-pull" adjustments.
See Steering Gear Section for complete data.

BRAKES

Service: Bendix Hydraulic, Duo-Servo, Single Anchor type without eccentric adjustment. Mechanical follow-up (pedal linked to hand brake cables) provided. Hand lever applies rear wheel service brakes.
See Brake Section for complete data.

Wheel Cylinders—Diameters: Front wheel 1⅛", Rear wheel 15/16".

Drums—11" centrifuse type.

Lining—Moulded. Width 2¼" (front wheels), 1¾" (rear wheels). Length 20.87" per wheel.

Clearance—.010" at both ends of brake shoe.

Mechanical Follow-Up (Reserve): Over-running linkage between brake pedal and parking (hand-brake) linkage which causes rear wheel brakes to be applied mechanically by pedal if hydraulic system not operating.
See Brake Section for complete data.
Setting—1¼" clearance between clevis pin and rear end of slot in pedal rod rear clevis.

Hand Brake: See Service Brakes above.

HOOD LOCK: Pull handle under edge of instrument panel on left side, pull forward on safety catch under front edge of hood, raise front end of hood.

MODEL IDENTIFICATION

SERIAL & ENGINE NUMBER: Stamped on plate on right front door hinge pillar post and stamped on top of cylinder block between No. 1 and No. 2 exhaust manifold flanges.
1948 Numbers—483101 Up (483), 484101 Up (484).
Identification—First three figures of number indicate models as follows: 483101 or 484101.

TUNE-UP

COMPRESSION PRESSURE: 100 lbs. min. at 150 RPM.
VACUUM READING: 18-21" idling at 550-575 RPM. (std.), 575-600 RPM. (with Vacumotive or Drive-Master).
FIRING ORDER: 1-6-2-5-8-3-7-4. See diagram.
SPARK PLUG GAPS: .032".
Plugs for Cast-iron Head—Champion J-7 (old marking Champion J-9). 14 mm.
Plugs for Aluminum Head—Champion H-10. 14 mm.
IGNITION: *See Coil, Condenser, and Distributor.*
Breaker Gap—.017". Limits .015-.019".
Cam Angle or Dwell—27° closed with .017" gap.
Breaker Arm Spring Tension—17-20 ounces.
Automatic & Vacuum Advance—*See Distributor.*
IGNITION TIMING: TDC (top dead center).
Timing Procedure—*See Ignition Timing.*
Flywheel Mark—"UDC-1-8/" aligned with lower edge of rear engine support plate opening behind starter.
Fuel Compensator Setting—Slight ping at 15 MPH. when accelerating from 10 MPH. in high gear.
CARBURETION: *See Carburetor & Carb. Equipment.*
Idle Setting—1-1½ turns open. Two screws—turn screws out for richer mixture.
Idle Speed (standard)—550-575 RPM.
Idle Speed (with Vacumotive or Drive-Master)—575-600 RPM.
Float Level—13/64". Measured from top of float to gasket seat (machined surface) on bowl cover with needle valve seated (invert when checking).
Accelerating Pump—Outer hole (Normal). Inner Hole if less charge required.
Fuel Pump Pressure—3½-4½ lbs.
MANIFOLD HEAT CONTROL: Automatic. No adjustment. Valve must operate freely.
VALVE TAPPET CLEARANCE: .006" Int., .008" Exh. Hot.
NOTE—Remove apron in right front fender for access to valve compartment.
Valve Timing Check—*See Valve Timing.*
STARTING: *See Battery, Starter, Generator, Regulator.*

IGNITION

IGNITION SWITCH: Mitchellock. Hudson No. 300644, 301826 (RHD). Ignition Lock Case and Bracket.
Ignition Lock—Briggs & Stratton. B & S No. 50184.
Key Series—H601 to H1100. Groove No. 1.
COIL: Auto-Lite No. CE-6006.
Location—Right side of engine above distributor.
Ignition Current—2½ amperes idling, 5 stopped.
CONDENSER: Auto-Lite No. IG-2671G.
Capacity—.20-.25 microfarad.
DISTRIBUTOR: Auto-Lite Model IGT-4204A-1. Automatic advance type with Vacuum Spark Control and Fuel Compensator adjustment.
Breaker Plate Identification—No. 8.5 stamped on plate (vacuum advance limiting slot size).
Rotation—Clockwise viewed from above.
Breaker Gap—.017". Limits .015-.019".
Cam Angle—27° closed with .017" gap.
Breaker Arm Spring Tension—17-20 ounces.

Automatic Advance

Degrees Distr.	R.P.M.	Degrees Eng.	R.P.M.
Start	300	0.	600
3	400	6	800
8	850	16	1700
13	1300	26	2600
17.5	1700	35	3400

Fuel Compensator: 10° adjustment at distributor. See Ignition Timing for adjustment and setting.
Vacuum Spark Control: Auto-Lite. Integral type. Linked directly to breaker plate. Provides additional advance at speeds above idling except when engine accelerated or operated with wide open throttle when spark retarded by return spring in unit.

Vacuum Advance

Distr. Degrees	Eng. Degrees	Vacuum (" of HG)
Start	0°	9½"
2°	4°	10½"
4°	8°	11⅝"
6°	12°	12⅝"
8.5°	17°	14"

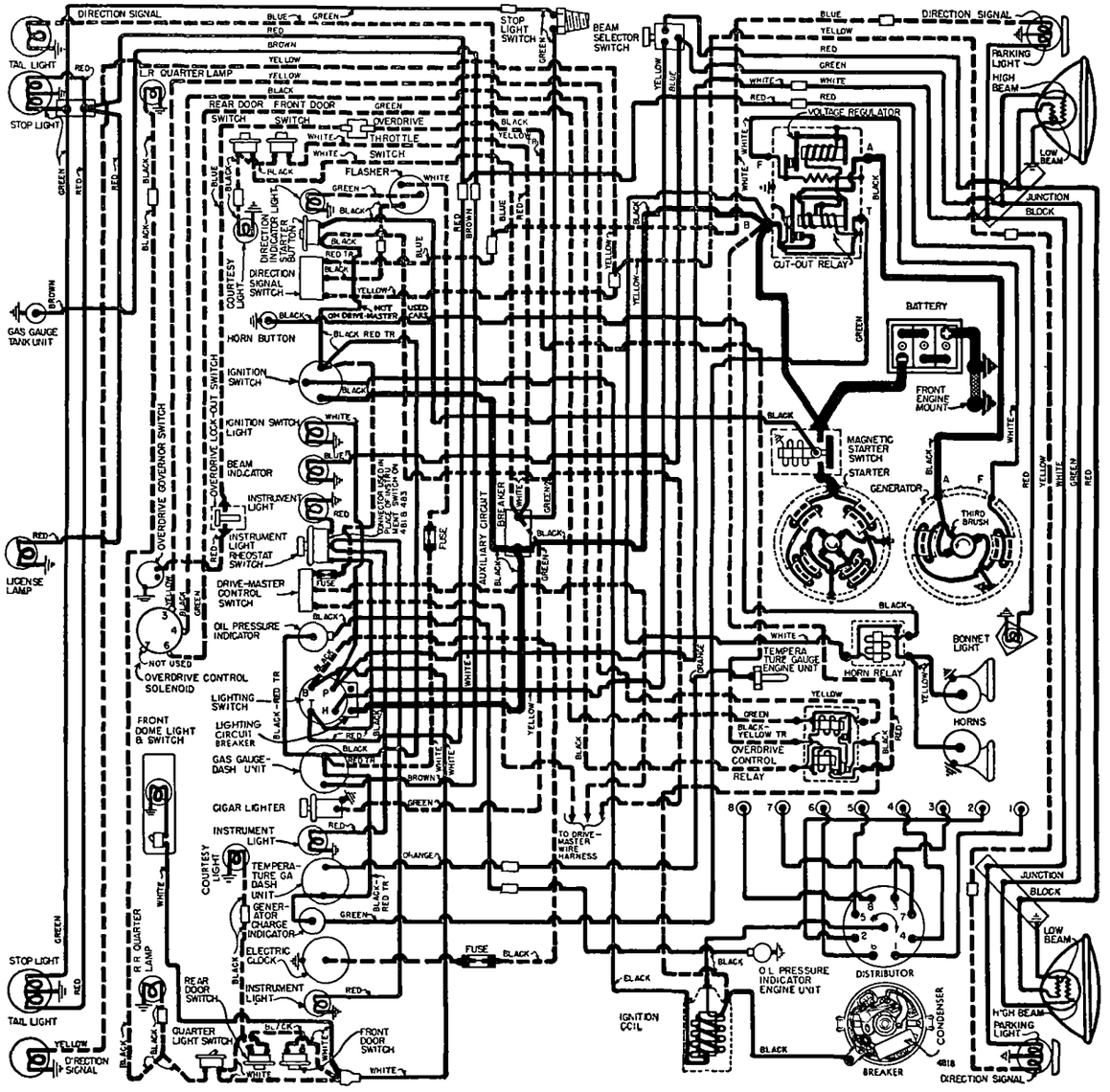

Distributor Removal: On right side of engine. Disconnect vacuum line, take out hold-down screw in advance arm. Lift off.

IGNITION TIMING

Std. Setting.....At Top Dead Center
NOTE—Modify this setting for special fuel and altitude conditions. See Fuel Compensator Setting.
Flywheel Mark—"UDC-1-8/" (#1 and #8 piston top dead center position) with 4 short marks (¼" apart) ahead of this mark. Visible in opening behind starter.

Timing—With #1 piston at firing position and long line of "UDC-1-8/" flywheel mark aligned with lower edge of opening in rear engine support plate behind starter, loosen hold-down screw in Fuel Compensator. Rotate distributor until contacts begin to open, tighten hold-down screw. Check spark plug connections (see diagram), see that rotor at #1 segment in cap. Check Fuel Compensator setting.
Timing (with Neon Timing Light)—Mark long line of "UDC-1-8/" flywheel mark with white paint, connect timing light to #1 spark plug. Idle engine below 600 RPM., adjust distributor (as directed above) until mark lines up with lower edged of opening behind starter.

Fuel Compensator Setting—Set for slight ping at 15 MPH. when accelerating from 10 MPH. with wide open throttle. To adjust, loosen hold-down screw, rotate distributor counter-clockwise (if ping too severe), clockwise (if no ping). **Final setting must not be more than 1" (4th short line) ahead of "UDC-1-8/" flywheel mark.**

CARBURETOR

Carter WDO, No. 648S. 1¼" dual barrel downdraft type with Carter Climatic Control.
Casting No. on Flange—542.
See Carburetor Section for complete data.

Settings (Idle Setting, Float Level, and Accelerating Pump: ***See Tune-Up data.***
Metering Rods & Jets—***See Carter Jet Table in Carburetor Section.***

Fast Idle: Carter Dual (WDO) Carburetor type.
See Carburetion Equipment Section for complete data.
Setting—.054" throttle opening with choke valve closed. Adjust by turning fast idle screw on high step of cam.

Automatic Choke: Carter Climatic Control (Dual Carbs.).
See Carburetion Equipment Section for complete data.
Setting—Coil housing centered (at index).

CARB. EQUIPMENT

Fuel Pump (std.): AC Type AH No. 1539109.
Optl. (Fuel-&-Vacuum)—AC Type AJ No. 1539108.
Replacement Pump—No. 584 (for AH), 583 (AJ).
Pressure—3½-4½ lbs.
RHD NOTE—AC No. 1539255 (std.), No. 1539254 (comb. fuel-&-vacuum). Repl. No. 9255 (std.), 9254 (comb.).
See Carburetion Equipment Section for complete data.

Gasoline Gauge: King-Seeley Electric.
Dash Unit—K-S No. 42120 (483), 42135 (484).
Tank Unit—K-S No. 41765.
See Carburetion Equipment Section for complete data.

Air Cleaner (std.—oil wetted): AC #1544265 (element Type #5), Hudson No. 301136 (301261 for Drive-Mstr.).
Optl. (oil bath)—AC #1544266 (element #1542245), Hudson No. 300824 (301384 for Drive-Master).
Servicing (oil-wetted type)—Clean and re-oil filter element (use same grade engine oil used in crankcase) at 2000 mile intervals or more often if required by operating conditions.
Servicing (oil-bath type)—Service same as oil-wetted type except that filter element not oiled and 1 pint engine oil used in cleaner body.

BATTERY

National Type S17-2HF. 6 Volt, 17 Plate, 120 Ampere Hour Capacity (20 hour rate).
Zero Capacity—300 amperes for 4.3 minutes. Five second voltage—4.35 volts.
Grounded Terminal—Positive (+) to frame and engine by a single strap.
Dimensions—Lgth. 10 9/16". W. 7⅛". H. 9 1/16".
Location—On left side under engine hood.

STARTER

Auto-Lite Model MCL-6006. Armature MCH-2023.
Drive—Bendix No. A-1806. Inboard Barrel type.
Rotation—Counter-clockwise at commutator end.
Brush Spring Tension—42-53 ozs. (new brushes).
Cranking Engine—Approx. 160 amperes at 150 RPM.

Performance Data

Torque	R.P.M.	Volts	Amperes
0 ft. lbs.	5500	5.5	65
8.0 "	Lock	2.0	410

Removal: On left front face of rear motor support. To remove, take out flange mounting bolts.
Starting Switch: Auto-Lite Magnetic type SS-4001 on starter with pushbutton (Hudson No. 300646) on instrument panel. Operative only with ignition "on" (and clutch disengaged on cars with Vacumotive Drive or Drive-Master).
See Electrical Equipment Section for complete data.

GENERATOR

Auto-Lite Model GEC-4801A. Armature GDZ-2006F. Third brush control with voltage regulation.
Maximum Charging Rate—44 amperes (Cold), 37 amperes (Hot), at approx. 35 MPH. Ground "F" terminal when checking generator output.
Charging Rate Adjustment—See Regulator data. Third brush setting 1 commutator bar minimum, 1 commutator bar plus 1 mica strip maximum, from nearest (insulated) main brush. Adjust 3rd brush.

Performance Data

Cold Amperes	Cold Volts	Cold R.P.M.	Hot Amperes	Hot Volts	Hot R.P.M.
0	6.4	960	0	6.4	1040
4	6.55	1060	4	6.6	1140
8	6.7	1160	8	6.8	1280
12	6.85	1280	12	6.95	1440
16	7.0	1400	16	7.15	1600
20	7.15	1550	20	7.35	1820
24	7.25	1700	24	7.55	2090
28	7.5	1890	28	7.75	2440
32	7.65	2100	32	7.9	3000
36	7.8	2375	34	8.0	3800
41	8.0	3350			

Rotation—Counter-clockwise at commutator end.
Brush Spring Tension—53 ozs. max. (new brushes).
Field Current—1.60-1.78 amperes at 6.0 volts.
Motoring Current—4.85-5.4 amps. at 6.0 volts.
Removal: Pivot mounted at left front of engine. To remove, take out pivot and clamp screws and nuts.
Belt Adjustment: ¾" belt deflection between generator and pump pulleys. Loosen bolts, swing generator out.

REGULATOR

Auto-Lite Model VRR-4001A. Voltage type.
NOTE—Cutout Relay has extra set of contacts for Generator "Teleflash" Indicator control.
See Electrical Equipment Section for complete data.
NOTE—Regulator cover sealed. Warranty void if seals broken.

Cutout Relay

Cuts In—6.4-6.6 volts.
Cuts Out—4.2-4.8 volts (approx. 4-6 amps. disch.).
Contact Gap—.015" min., ground contacts closed (ground contacts open when main contacts close).
Air Gap—.013-.034" at hinge end of core with contacts open (ground contacts closed).

Voltage Regulator

Voltage Setting—7.1-7.4 volts at 70°F.
Contact Gap—.012" Min. (armature against stop).
Air Gap—.048-.052" with contacts just opening.
Checking (without breaking seals) & Adjustment—***See Electrical Equipment Section for complete data.***

LIGHTING

Headlamps: Hall "Sealed Beam" type.
See Electrical Equipment Section for complete data.
Adjustment—Aim upper beams straight ahead (hot spot centers 3" below lamp center height at 25 ft.).
Beam Indicator—Red pilot bulb at lower center of speedometer dial. Lights when Upper Beam "on".
Direction Signal: Optl. ***See Electrical Equipment Section.***
Direction Signal Indicator—At left end of instrument panel. Flashes when Signal in use.
Direction Signal Flasher—Hudson No. 300877.

Switches

Lighting—Hudson No. 300641 (with Circuit Breaker), No. 300642 (switch only).
Beam Selector—Hudson No. 300799.
Instrument (Commodore)—Hudson No. 160092.
Door Switch—Hudson No. 300796.
Front Dome Light—Hudson No. 211312.
Rear Quarter Pillar—Hudson No. 160091.
Stop Light—Hudson No. 300356.
Direction Signal—Hudson No. 300875 (with wires).

Bulb Specifications

Position	Candlepower	Mazda No.
Headlamps	Sealed Beam	4030
Parking (no Dir. Signal)	3	63
Parking & Dir. Signal	21-3	1154
Rear Direction Signal	21	1129
Stop & Tail	21-3	1154
Rear License	3	63
All Instrument Lights	1½	55
Dir. Sig. Indicator	1	51
Front Dome & Courtesy	15	87
Rear Qtr. Dome (Cmdre.)	6	81
Bonnet (Hood) Light	1½	55

MISC. ELECTRICAL

CIRCUIT BREAKERS: Vibrating thermostatic types.
Lighting—Hudson No. 300643. 30 ampere. On lighting switch.
Misc. Lighting—Hudson No. 301853. 20 ampere. On steering support bracket behind instrument panel.
Convertible Top & Hydraulic Window Regulators—Hudson No. 300626. 30 ampere. On steering support bracket behind instrument panel.
FUSES: Electric Clock—3 ampere. Behind clock.
Direction Signal—10 ampere. On Direction Signal Harness behind instrument panel.
Drive-Master—10 ampere. On Drive-Master Switch.
Weather Control—14 ampere. On heater.
Radio—14 ampere. In lead wire to radio.

CONTINUED ON NEXT PAGE

CONTINUED FROM PRECEDING PAGE

GENERATOR CHARGE SIGNAL: Red indicator on instrument panel (to right of temperature gauge). Should light when ignition turned on and should go out when generator begins to charge.
See Electrical Equipment Section for complete data.

OIL PRESSURE SIGNAL: Red indicator on instrument panel (to left of gas gauge). Should light with ignition on, go out as soon as engine started.
See Electrical Equipment Section for complete data.

HORNS: Sparton. Dual horns operated by relay.
Air Gap—.026-.030" for high pitch (short horn), .032-.035" low pitch (long horn).

Horn Relay: Hudson No. 164401. On engine dash.
Contacts Close—3 volts min., 4 volts max.
Open—2 volts min. (relay upright, terminals down).

ENGINE

ENGINE SPECIFICATIONS: Own Make. 8 cylinder, "L" head type.
Bore—3". **Stroke**—4½".
Displacement—254 cubic inches. **Rated HP**—28.8.
Developed Horsepower—128 at 4200 RPM.
Compression Ratio (std.)—6.50-1 cast-iron head.
Compression Ratio (optl.)—7.00-1 aluminum head.
Compression & Vacuum Reading—*See Tune-Up.*

ORIGINAL BORE & PISTONS: *See Hudson Shop Notes.*

ORIGINAL BEARING SIZES: *See Hudson Shop Notes.*

TIGHTENING TORQUES: *See Hudson Shop Notes.*

CYLINDER HEAD DIAGRAM: *See Hudson Shop Notes.*

OIL PAN REMOVAL: *See Hudson Shop Notes.*

PISTONS: Aluminum alloy, Cam ground, T-slot type.
Weight—10¼ ozs. (stripped). **Length**—3 3/16".
Removal—Pistons and rods removed from above or below.
Clearance—.0005-.001" Skirt. See Fitting New Pistons.

Replacement Pistons: *See Hudson Shop Notes.*

Fitting New Pistons: Use .0015" feeler ½" wide inserted between piston and cylinder wall on side opposite slot at right angles to pin. Pull to withdraw feeler must be within 3-4 lbs. Use Tool J-888-A Piston Feeler Scale to measure pull.

Installing Pistons: Slot away from camshaft.

PISTON RINGS: Two compression, two oil rings (one above pin, one below pin) per piston. Rings are square end type. Rings pinned to prevent rotation. Rings cut and notched to fit pin (clearance on pin equal to ring end gap.

Ring	Width	End Gap	Side Clearance
Compression	3/32"	.004-.009"	.001"
Oil (upper)	3/16"	.004-.009"	.001"
Oil (lower)	5/32"	.004-.009"	.001"

Replacement Rings: *See Hudson Shop Notes.*

PISTON PIN: Diameter—¾". **Length**—2 7/16". Floating type with diamond-drilled pin holes in piston and bronze bushing (with oil grooves at sides) in connecting rod. Lock ring used at each end of pin.
Pin Fit in Piston—.0000-.0003" at 70°F.
Pin Fit in Rod Bushing—Hand push fit at 70°F.

Piston Pin Replacement—*See Hudson Shop Notes.*
Pin Sizes—Std., .002", .005", .010" oversize.

CONNECTING ROD: Length—8 3/16".
Weight—31.36 ozs. (with bearings).
Lower Bearing Diameter—1 15/16".
For Original Connecting Rod Bearing Sizes, see "Crankshaft Size Code Note" in Hudson Shop Notes.
Lower Bearing—Babbitt-lined, spun type.
Clearance—.0003-.0007". **Sideplay**—.007-.013".

Bearing Adjustment: None (no shims). Install replacement rods furnished on exchange basis. Do not file rods or caps. Palnuts used on bolt nuts.
Palnut Installation—*See Hudson Shop Notes.*

Replacement Rods: Std. size and .010" undersize.

Installing Rods: Offset. Install rods with widest half of bearing toward rear (#1, 3, 5, 7), toward front (#2, 4, 6, 8). Oil scoop on all rods toward camshaft.

CRANKSHAFT: Five bearing type with integral counterweights and vibration dampener on forward end.

►***CAUTION—Crankshaft not interchangeable with earlier 8 cylinder shaft. 1948 shaft longer at rear end between oil slinger and flywheel flange.***
Bearing Diameters—#1, 2 9/32"; #2, 2 5/16"; #3, 2 11/32"; #4, 2 3/8"; #5, 2 13/32".
For Original Main Bearing Sizes, see "Crankshaft Size Code Note" in Hudson Shop Notes.
Bearings—Bronze backed, babbitt lined type. Bearings secured in cap and crankcase by brass screws.
Clearance—.001".

Bearing Adjustment: None (no shims). Replace bearings. Do not file bearing caps.

►***CAUTION—Replacement of main bearings requires removal of crankshaft. Bearing shells retained by brass screws.***
Palnut Installation—*See Hudson Shop Notes.*

Replacement Bearings: Reamed bearings furnished standard size and .010" Undersize. Unfinished bearings also supplied. ***For Line-Reaming of Unfinished Replacement Bearings, see "Crankshaft & Main Bearings" in Hudson Shop Notes.***

End Thrust: Taken by center (#3) bearing. Replace bearing if endplay excessive.
Endplay—.006-.012".

CAMSHAFT: Five bearing type. Helical gear drive.
Bearing Diameters—#1, 2 1/32";, #2, 2"; #3, 1 31/32"; #4, 1 15/16"; #5, 1 1/2".
Bearings—Steel-backed, babbitt-lined bushings.
Clearance—.001-.002".

End Thrust: Bakelite thrust washer between gear and crankcase. Spring loaded button in front end of camshaft bears against hardened plate on gear cover.

Timing Gears: Crankshaft gear Cast-iron, camshaft gear Aluminum. Teeth have 20° pressure angle and are slightly crowned for quiet operation.
Identification of Gears—Figure "20" on front face of gears (crankshaft gear also marked "FRONT").
Replacement Gear Caution—Camshaft gear not furnished singly (set only). Crankshaft gear furnished singly or in matched set.
Backlash—.002-.004".

Camshaft Setting: Mesh marked crankshaft gear tooth between two marked teeth on camshaft gear.

VALVES:	Head Diameter	Stem Diameter	Length
Intake	1½"	11/32"	5 3/32"
Exhaust	1⅜"	11/32"	5 3/32"

	Seat Angle	Lift	Stem Clearance
Intake	45°	11/32"	.0015-.003"
Exhaust	45°	11/32"	.003-.005"

Valve Guides: Removable type pressed in block.
Guide Removal & Installation—Use Tool J-1188 to drive guides out. Install guides with Tool J-883-A with top of guide 15/16" below top of cylinder block. With guides installed, ream guides with Tool J-129-2 to .3437" (11/32") which will provide proper valve stem-to-guide clearance. NOTE—Car manufacturer recommends that guides be cleaned with Tool KMO-122 to remove carbon and scale out of guides (pay particular attention to carbon in counterbore at top of exhaust guide).

Valve Springs: Cadmium plated springs are used. Use tool J-587-A to install valve spring and seat assembly. **Spring Free Length**—2 17/64".

	Spring Pressure	Spring Length
Valve Closed	40 lbs.	2"
Valve Open	80 lbs.	1 21/32"

NOTE—When springs removed, test for pressure (Tool U-15). Replace if pressure below 34 lbs. at 2"

Valve Lifters: Roller shoe type, fitted in removable guides in cylinder block.
Valve Lifter Removal—*See Hudson Shop Notes.*

VALVE TIMING

Tappet Clearance: .006" Intake, .008" Exh. Hot.
NOTE—Remove apron in right front fender for access to valve compartment.

Valve Timing:—See Camshaft Setting above.
Intake Valves—Open 10°40' BTDC. Close 60° ALDC.
Exhaust Valves—Open 50° BLDC. Close 18°44' ATDC.
Above figures correct with .010" tappet clearance.
Valve Timing Check—With .010" tappet clearance #1 intake valve should open with piston 10°40' or .0494" BTDC when a point on the flywheel approximately 3.97 teeth before 'UDC.1-8/' mark lines up with indicator in inspection hole above starter. Reset tappet clearance at .006" hot and idling.

LUBRICATION

Engine Oiling System: Duo-flow (pressure and positive splash) system. Pump delivers oil to front and rear ends of upper tray in oil reservoir. Connecting rod bearings are lubricated by dippers on caps which dip into troughs in this upper tray and also splash oil inside crankcase. Part of this oil is caught in channels inside crankcase and fed into reservoirs directly over each camshaft and crankshaft bearing from which it flows into the bearings.
Crankcase Capacity—9 qts. (dry), 7 (refill).
Oil Filling Note—Whenever pan removed, install 2 qts. in upper tray before pan installed, then 7 qts. through oil filler after pan in place on engine.

Oil Pan Removal: *See Hudson Shop Notes.*

Oil Filter: Special Hudson type. Optl. equipment.
Servicing—Replace filter cartridge at 5000 mile intervals.
Normal Oil Pressure—4-12 lbs. with hot oil. No gauge used (see Oil Pressure Indicator below).

Oil Check Valve:—Located on right side of crankcase at rear. Opens at 4-12 lbs. with hot oil. Operates dash signal to indicate oil flow.

Oil Pump:—Oscillating plunger type, gear driven by camshaft. Mounted on right side of crankcase.

Oil Pressure Indicator:—Hudson Teleflash Oil Pressure Indicator. *See Electrical Equipment Section for complete data.*

Checking Oiling System:—*See Hudson Shop Notes.*

Crankcase Ventilation: Outlet pipe in rear valve compartment cover on right side of engine.

COOLING

Cooling System: Positive circulation with pump on front of engine and by-pass type thermostat.
Capacity—18 quarts.

Water Pump: Centrifugal, belt-driven, packless type. Shaft mounted on sealed duplex ball bearing.
See Water Pump Section for complete data.
Belt Adjustment—*See Generator Belt Adjustment.*

Thermostat: Hudson No. 166272. By-pass type in water outlet on cylinder head.
Setting—Starts to open 150-155°F. Fully open 185°.

Temperature Gauge: King-Seeley Electric.

Dash Unit—K-S No. 42125 (483), 42140 (484).

Engine Unit—K-S No. 41085.

See Miscellaneous Section for complete data.

CLUTCH

Own Make. Single plate, fluid cushioned type (cork insert type driven member operating in Hudsonite oil. 10" type used on all models.

See Clutch Section for complete data.

Facings—Cork insert type. Inside Diameter 6⅜". Outside Diam. 10". 108 corks, .203" thick.

Pedal Adjustment: Clearance between underside of toeboard and top face of pedal shank must be 1½". To adjust, loosen locknut above clevis, remove clevis pin, turn clevis in or out of link, tighten locknut after re-connecting clevis.

Clutch Oil Servicing: *See Hudson Shop Notes.*

Removal: Remove transmission (see Transmission Removal following). Drain clutch oil by turning engine over until plug on flywheel is accessible through timing inspection hole in rear engine support plate behind starter, remove plug, turn engine over ⅓ revolution until star on flywheel visible through timing hole (drain hole then at bottom), allow lubricant to be drained. Loosen mounting bolts in clutch cover rim to release spring tension, remove bolts and lift clutch assembly off car.

VACUMOTIVE DRIVE

Vacumotive Drive: Automatic clutch control. Optl.

See Clutch Section for complete data.

TRANSMISSION

Own Make. All helical gear type. Constant-mesh, synchro-mesh (Second & High), sliding gear (Low & Reverse) with remote (steering column) shift.

Identification—Metal tag attached by a cover bolt screw carries second speed ratio 1.65:1 (std.), 1.82:1 (cars with Drive-Master).

See Transmission Section for complete data.

Transmission Control: Handy-shift remote control type with shift lever mounted on steering column.

See Transmission Section for complete data.

Transmission Removal: Remove front seat cushion, disconnect front seat from track, disconnect seat adjusting lever and remove seat back from car. Disconnect accelerator pedal at accelerator rod, brake pedal rod at lever. Remove floor mat, remove Weather Control blower unit (2 screws each side), disconnect bowden wire at control valve at cylinder head. Remove floor opening cover over transmission. Disconnect front universal joint at transmission (wire bearings on universal joint spider). Remove bolts attaching center bearing support bracket, move propeller shaft to rear to clear companion flange at transmission. Disconnect clutch pedal lever return spring, remove clutch cross-shaft and bracket, disconnect clutch control link clevis. Disconnect Handy Shift by removing shifter shaft outer lever, nut, and washer. Remove flywheel guard from bottom of clutch housing. Remove two engine rear mounting bolts and nuts, jack up rear end of engine about ½" off frame cross-member (CAUTION—use block of wood on jack to prevent damage to oil pan). Disconnect speedometer cable at transmission case, plug hole with wood plug. Remove two top screws attaching clutch housing to engine, install guide studs (headless screws) in these holes to support transmission, remove remaining screws. Remove breather pipe bracket from clutch housing and bolt attaching breather pipe and rear valve cover. Pull transmission straight back on guide studs, lift transmission out through floor opening (NOTE—Hoist J-1502 can be used to lift transmission out).

DRIVE-MASTER TRANSMISSION

Drive-Master Transmission: Optl. Conventional 3-speed transmission with automatic gear shifting between Second & High Gears. Used in conjunction with Vacumotive Drive (automatic clutch control). **Identification**—Metal tag attached by a cover bolt screw carries second speed ratio 1.82:1.

See Transmission Section for complete data.

OVERDRIVE

Warner Model AS1-R10D. Optl. equip. used with the Hudson Transmission. Overdrive is solenoid operated type (no centrifugal pawls) with Governor control and throttle operated "kick-down".

See Transmission Section for complete data.

Overdrive Solenoid—Hudson No. 301757.

Lock-Out Switch—Hudson No. 301755.

Throttle Switch—Hudson No. 164438.

Governor—Hudson No. 165829 (standard), Hudson No. 165831 (cars with Drive-Master).

Relay—Hudson No. 165826. On left fender shield.

Removal: Same as standard transmission removal (above) except that overdrive control cable and wiring must also be disconnected.

UNIVERSALS

Spicer. Needle bearing type. Three used with intermediate universal to rear of propeller shaft center bearing.

See Universals Section for complete data.

Propeller Shaft & Center Bearing: Two shafts used: 1) Front shaft supported by sealed ball-bearing just ahead of rear coupling flange (no slip joint).

2) Rear shaft with slip joint at forward end.

Center Bearing—Prelubricated sealed annular ball bearing fitted in cast steel housing bolted to support mounting which is secured to underside of frame cross members. Housing cradle mounted on two rubber supports and forward end of support mounting fitted with rubber cushion.

REAR AXLE

Own Make. Semi-floating, hypoid gear type with Hotchkiss drive.

See Rear Axle Section for complete data.

Ratio—Std. or Drive-Master Cars: 4.1-1 standard, 4 5/9-1 Optl. Overdrive Cars: 4 5/9-1 std., 4.1-1 Optl.

Backlash—.004-.006". Screw adjustment.

Removal: Disconnect rear universal by taking out four nuts and lock plates on U-bolts, drop rear end of propeller shaft. Remove axle shafts (see instructions below). Remove bolt nuts on carrier flange, pull carrier assembly out of axle housing.

Axle Shaft Removal: Hoist rear of car. Remove rear wheels. Remove axle shaft nut and washer (use Tool J-351). Remove hub and drum assembly using screw type wheel puller (Tool J-736—CAUTION—Car manufacturer recommends that screw type puller be used, if knock-out type puller is used serious damage to differential parts may result). Remove 4 nuts on bearing cap bolts, push bolts out of backing plate, remove bearing caps and shims (without disturbing hand brake link). Take out rear wheel bearing and axle shaft, using puller Tool J-352. Do not drag axle shaft on oil seal assembly in housing.

Wheel Bearing Adjustment: Controlled by shims (.003", .005", or .015" thick) under bearing cap. To adjust, remove bearing cap (see directions above under Axle Shaft Removal), add or remove shims equally at both wheels (necessary to keep thrust spacer centered on differential pinion shaft). **Endplay**—.001-.004".

SHOCK ABSORBERS

Delco or Monroe. Direct acting, hydraulic types. Hudson Nos. for cars with light control (std.) springs: Front 301240 (Delco), 300350 (Monroe). Rear 301241 (Delco), 300351 (Monroe).

See Shock Absorber Section for complete data.

FRONT SUSPENSION

Front Suspension: Independent, linked parallelogram type with coil springs and lateral stabilizer.

See Front Suspension Section for complete data.

Kingpin Inclination—3°36' crosswise.

Caster—½-1½°. Eccentric adjustment.

Camber—½-1½°. Eccentric adjustment.

Toe In—1/32" ± 1/32". Center steering arm on frame must be at center of car. To adjust, loosen clamps at ends of each tie rod and adjust tubes equally (to increase toe-in turn rods in direction of wheel travel, to decrease, turn in opposite direction).

Steering Geometry (Toe-out on Turns)—With Inner wheel turned 30°, Outer Wheel should be turned 25°. No adjustment.

STEERING GEAR

Gemmer Model 335. "3-tooth" Worm-and-Roller type with "push-pull" adjustments.

See Steering Gear Section for complete data.

BRAKES

Service: Bendix Hydraulic, Duo-Servo, Single Anchor type without eccentric adjustment. Mechanical follow-up (pedal linked to hand brake cables) provided. Hand lever applies rear wheel service brakes.

See Brake Section for complete data.

Wheel Cylinders—Diameters: Front wheel 1⅛", Rear wheel 15/16".

Drums—11" centrifuse type.

Lining—Moulded. Width 2¼" (front wheels), 1¾" (rear wheels). Length 20.87" per wheel.

Clearance—.010" at both ends of brake shoe.

Mechanical Follow-Up (Reserve): Over-running linkage between brake pedal and parking (hand-brake) linkage which causes rear wheel brakes to be applied mechanically by pedal if hydraulic system not operating.

See Brake Section for complete data.

Setting—1¼" clearance between clevis pin and rear end of slot in pedal rod rear clevis.

Hand Brake: See Service Brakes above.

MODEL IDENTIFICATION

Model	First Number
Aerodynamic Six 618G (1936)	G-5001
Six 822E (1938)	ES-35001 & E-50001.
Senior Six 922E (1939)	E-72001
Skylark Model R (1939-40)	R-100501

SERIAL NUMBER: Stamped on plate on right side of engine dash under hood. First Nos. listed above.

ENGINE NUMBER:—First number same as Serial Number (above). Stamped on boss on left side of crankcase just ahead of distributor.

TUNE-UP

COMPRESSION:—**Ratio—5.75-1 Standard. 6.25-1 Optl. Pressure**—141 lbs. at 3000 R.P.M. or 107 lbs. at 160 R.P.M. (cranking speed) for standard head. 110 lbs. at 350 R.P.M. for optl. 6.25-1 head.

VACUUM READING:—18-20" steady reading at idling speed.

FIRING ORDER: 1-5-3-6-2-4. See diagram.

SPARK PLUGS: Champion No. 7, 18 mm. Metric type. **Gaps**—.0275-.030"

IGNITION: See Coil, Condenser, and Distributor.
Breaker Gap—Set at .020". Limits .018-.020".
Cam Angle or Dwell—(IGC-4277) 40° closed, 20° open. (IGB-4319) 38° closed, 22° open (distr.). (IGW-4141) 35° closed, 25° open (distr.).
Breaker Arm Spring Tension—17-20 ounces.
Automatic Advance—7° max. at 1400 RPM (distr.).

IGNITION TIMING: See Ignition Timing.
Std. Setting—7° BTDC. with ignition mark on flywheel (7° ahead of dead center mark "DC/1-6") at indicator on right front face of housing.

CARBURETION: See Carburetor & Carb. Equipment.
Idle Setting—Idle adjusting screw ⅜-1 turn open (333S), ¾-1¼ turn open (398S).
Idle Speed—300 RPM.
Float Level—⅜" from gasket seat on cover to top of float at free end with valve seated.
Accelerating Pump—Lower hole (medium stroke) Normal. Inner hole (Summer), Upper hole (Winter) for temperature extremes.
Fuel Pump Pressure: 3½ lbs. maximum.

MANIFOLD HEAT CONTROL:—Thermostatic coil type. No adjustment required. Make certain that balance spring is correctly installed and that shaft turns freely.

VALVES: See Valve Timing.
Tappet Clearance—.010" Int., .013" Exh. running clearance with engine warm.

STARTING: See Battery, Starter, Generator, Regulator.

IGNITION

IGNITION SWITCH: Mitchellock. As follows: 1936—Model 24B, Type 6702. (1938-39) Model 24B, Type 7644. (1939-40) Model 24R Type 8182 or Delco-Remy No. 1116300. All models connected to coil by armored cable.
Ignition Lock—Briggs & Stratton No. 50184 (Lock cylinder). Key Series—5 digits. Groove—#1.

COIL: Auto-Lite. (1936) Model IG-4619), (1938-39) Model IG-4651, (1939-40) Model IG-4659). Service Coil (less switch & cable) IG-3224JS (1936-39), IG-3224ES (1939-40).
Ignition Current—2 amperes idling, 5 stopped.

CONDENSER: Auto-Lite Part No. IG-2671 (IGC-4277 & IGW-4141 Distr.), IGB-1025 (IGB-4319 Distr.).
Capacity—.20-.25 microfarad.

DISTRIBUTOR: Auto-Lite. (1936) IGB-4319, (1938-39) IGC-4277, (1939-40) IGW-4141. Single breaker, full automatic advance type with manual adjustment.
Rotation—Counter-clockwise viewed from top.
Distributor Settings—*See Tune-up data.*

Automatic Advance

Distributor Degrees	Distributor R.P.M.	Engine Degrees	Engine R.P.M.
Start	400	0	800
2	680	4	1360
4	975	8	1950
6	1265	12	2530
7	1400	14	2800

Manual Adjustment—Provides means for slight changes in ignition timing at distributor (advance or retard from center '0' position on scale). See Ignition Timing for adjustment.

Removal:—Mounted on left side of crankcase. To remove, take out hold-down screw in advance arm.

IGNITION TIMING

IGNITION TIMING:—Setting listed below correct for std. and HC. heads. See Manual Adjustment Setting (following) for final ignition setting.

	Flywheel Degrees	Piston Position
All engines	7° BTDC	.022" BTDC

To Set Timing—With #1 piston on compression, turn engine over until piston is 7° or .022" before top dead center, stop when ignition mark on flywheel lines up with finished bosses on right hand front face of clutch housing (this mark located 7° before top dead center mark 'D-C/1-6'). Loosen hold-down screw in advance arm, center pointer on scale, tighten hold-down screw. Loosen advance arm clamp bolt, rotate distributor until contacts begin to open, tighten clamp bolt.

Manual Adjustment Setting—Road test car with engine warm and using fuel regularly used. Note performance when accelerating car with wide open

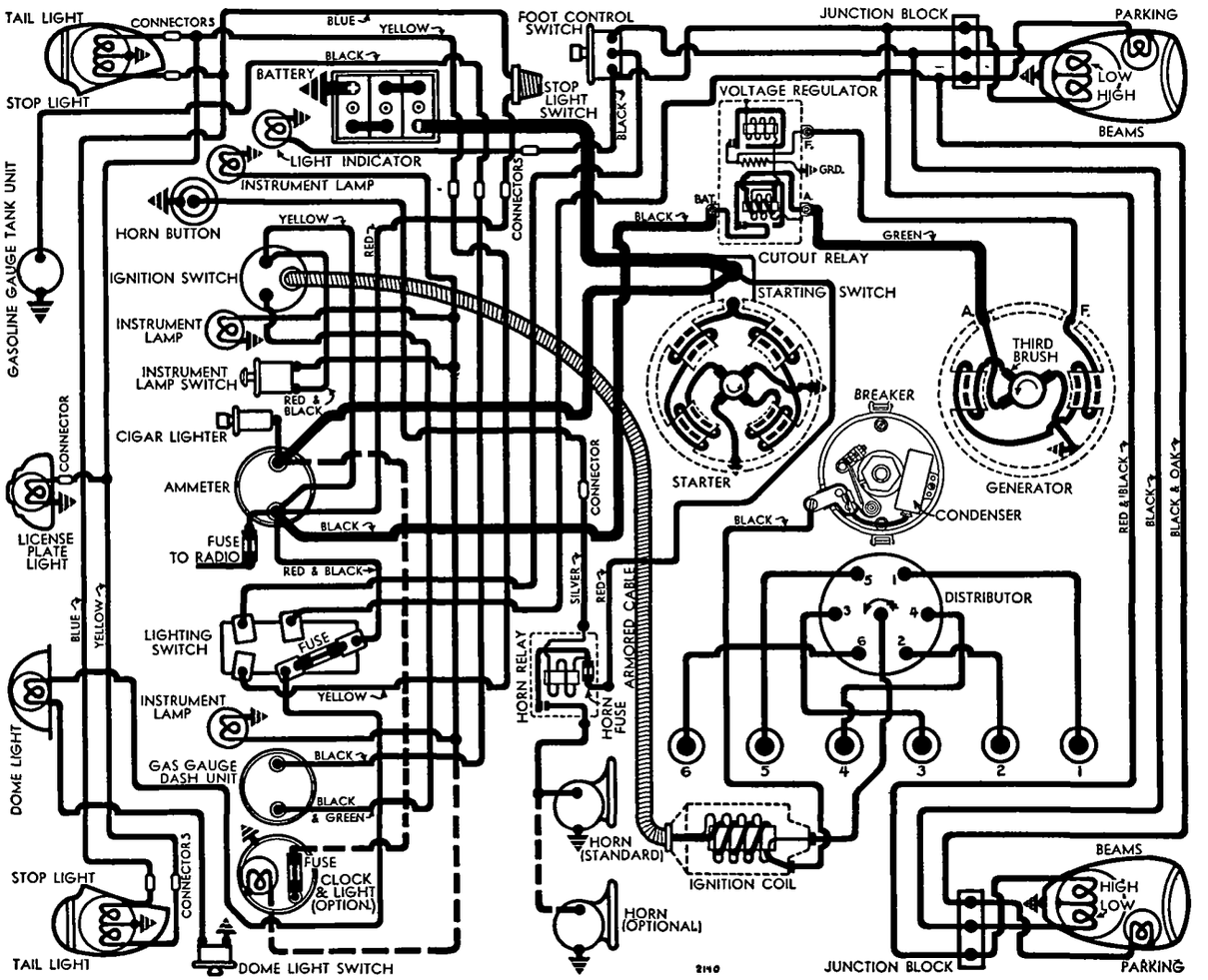

M DELS 618G, 822E, 922E

throttle at low speeds. Slight spark knock should be evident. To adjust, loosen hold-down screw, move pointer on scale one graduation at a time clockwise (if knock too severe), counter-clockwise (if no knock), tighten hold-down screw. Repeat test until setting correct.

CARBURETOR
1936 MODELS

Carter Model W-1, Type 333-S. Single barrel, down-draft type with manual choke control.
For complete data, refer to Carburetor Index.

Settings (Idle Setting, Float Level, Accelerating Pump): *See Tune-Up data.*

CARBURETOR
1938-40 MODELS

CARBURETION:—Carburetor—Carter Model W1, Type 398-S. 1¼" Single Barrel Vacumeter type with Climatic Control.
For complete data, refer to Carburetor Index.

Settings (Idle Setting, Float Level, Accelerating Pump): *See Tune-Up data.*

Automatic Choke:—Carter Climatic Control.
For complete data, refer to Carburetion Equip. Index.

Setting: Thermostatic coil housing centered.

Fast Idle:—Carter Cam Type.
For complete data, refer to Carburetion Equip. Index.

Setting—Bend fast idle link so that choke valve opening is ⅝" with throttle valve closed and stop-screw turned in to contact lowest step of fast idle cam (cam revolved so stopscrew against but not on first step of cam).

CARB. EQUIPMENT

Air Cleaner:—AC #1528707 oil-wetted type standard, #1528714 heavy duty oil-bath type optional.

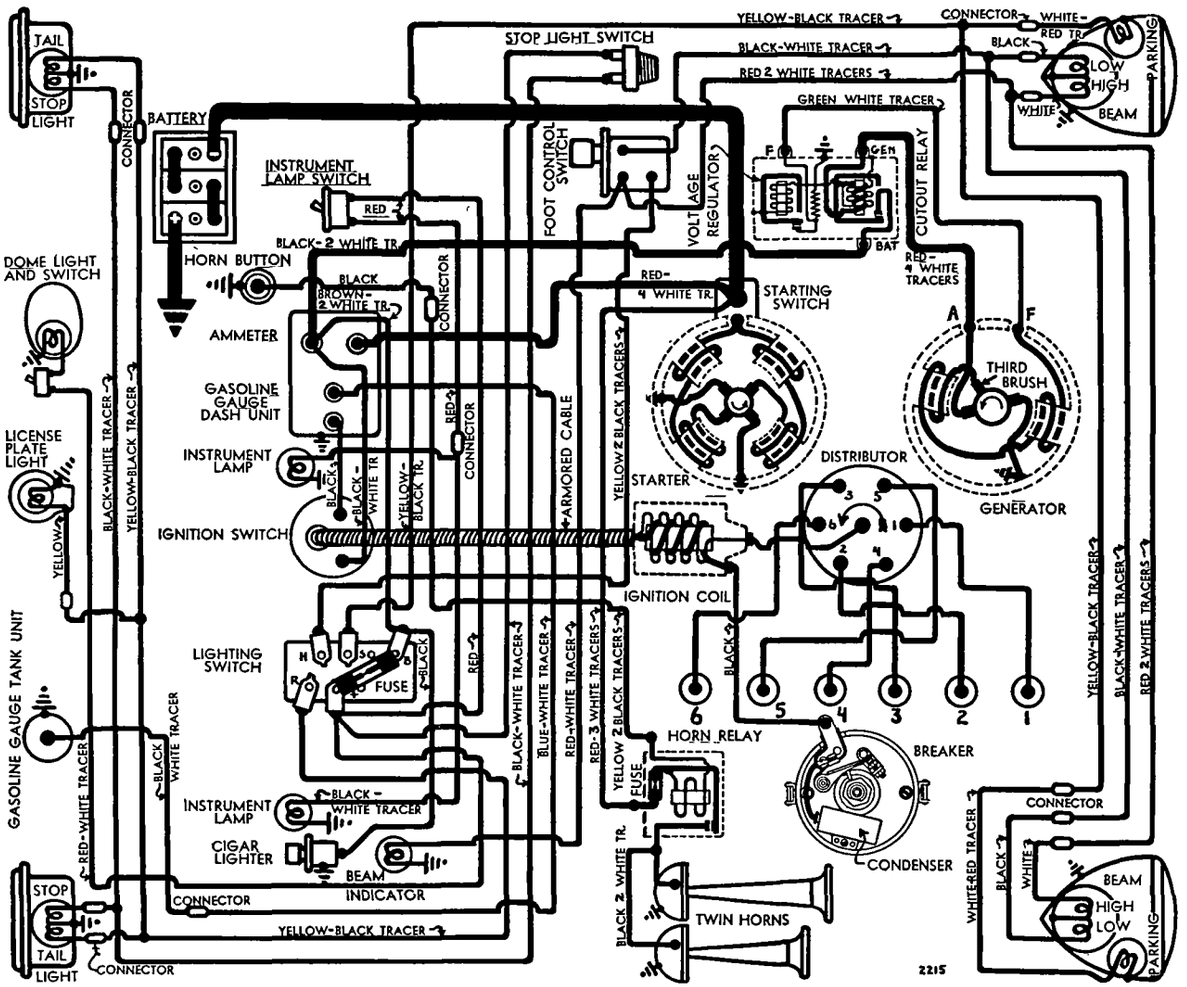

SKYLARK M DEL R

Fuel Pump:—AC Type T #1521811 diaphragm type.
For complete data, refer to Carburetion Equip. Index.

Gasoline Gauge:—Stewart Electric type.
For complete data, refer to Carburetion Equip. Index.

BATTERY

BATTERY:—Willard, Type SW-2-105. 6 volt, 15 plate, 105 Ampere Hour capacity (20 hour rate).
Starting Capacity—133 amperes for 20 minutes.
Zero Capacity—300 amperes for 3.9 minutes. Five second voltage—4.3 volts.
Grounded Terminal—Positive (+) terminal.
Location—Under front seat on left hand side.

STARTER
1936-39 MODELS

Auto-Lite Model MAJ-4044. Armature MAJ-2048.
Drive—Inboard Bendix Model LCD11FX-10.
Rotation—Counter-clockwise at commutator end.
Brush Spring Tension—42-53 ozs. (new brushes).
Cranking Engine—160 RPM., 150 amperes, 5.25 volts.

Performance Data

Torque	R.P.M.	Volts	Amperes
0 ft. lb.	4100	5.5	67
2.25 " "	1450	5.0	200
4.6 " "	960	4.5	300
7.3 " "	575	4.0	400
10.3 " "	225	3.5	500
12.0 " "	Lock	3.0	550
17.0 " "	Lock	4.0	750

Starter Removal & Starting Switch: See 1939-40 model below.

STARTER
1939-40 MODELS

Auto-Lite Model MZ-4076. Armature No. MZ-2134.
Drive—Inboard Barrel type Bendix No. A-1792.
Rotation—Counter-clockwise at commutator end.
Brush Spring Tension—42-53 ozs. (new brushes).
Cranking Engine—160 RPM., 150 amperes, 5.25 volts.

Performance Data

Torque	R.P.M.	Volts	Amperes
0 ft. lbs.	4300	5.5	70
2.55 "	1325	5.0	200
4.95 "	750	4.5	300
7.65 "	220	4.0	400
7.8 "	Lock	3.0	420
11.8 "	Lock	4.0	560

Removal:—Starter flange mounted on left front face of flywheel. To remove, take out flange mounting screws, disconnect starting switch cable (remove starter and switch as assembly).
Starting Switch:—Model SW-3737S. Mounted on starter field frame and operated through flexible cable by pull-button on instrument panel. Pull to close switch contacts must be not less than 2.3 lbs. (measured at right angles to switch lever at hole in outer end).

GENERATOR
1936 MODELS

Auto-Lite Model GBK-4604. Armature No. GBK-2055. Third brush control type. Ventilated by fan on drive pulley.
Charging Rate Adjustment—Take off commutator cover band, shift third brush by hand, counter-clockwise to increase charging rate, clockwise to decrease charging rate. Brush held in position by friction.
Maximum Charging Rate—20 amperes (cold), 17 amperes (hot), 8.0 volts, 2200 R.P.M., 29-30 M.P.H.

CONTINUED ON NEXT PAGE

CONTINUED FROM PRECEDING PAGE

Performanc Data

Cold Amperes	Volts	R.P.M.	Hot Amperes	Volts	R.P.M.
0	6.4	850	0	6.4	875
4	6.7	1000	4	6.8	1040
8	7.05	1165	8	7.2	1200
12	7.4	1320	12	7.55	1480
16	7.7	1550	16	7.9	1980
20	8.0	2250	17	8.0	2400

Rotation—Counter-clockwise at commutator end.
Brush Spring Tension—18-22 ozs. each.
Field Current—3.94-4.36 amperes at 6.0 volts.
Field Fuse—5 ampere (under cover on top of generator frame).
Motoring Current—4.56-5.04 amperes at 6.0 volts.
Removal & Belt Adjustment: Same as 1938-40 model.

GENERATOR

1938-40 MODELS

Auto-Lite Model GDF-4804-A. Armature No. GDF-2006. Third brush control in conjunction with external vibrating voltage regulator. Generator ventilated by fan on drive pulley.
Charging Rate Adjustment—Maximum charging rate controlled by third brush. Shift third brush counter-clockwise to increase or clockwise to decrease charging rate (brush held in position by friction. Maximum must not exceed figure given below which is equivalent to third brush position 2⅛ commutator bars away from insulated (nearest) main brush.
Maximum Charging Rate—31 amperes (cold), 28.3 (hot), 8.0 volts, 3200 R.P.M., 34 M.P.H. Actual charging rate controlled by voltage regulator and dependent on battery condition. To check charging rate, connect ammeter in charging line at 'BAT' terminal on regulator, connect voltmeter between 'BAT' terminal and ground, disconnect lead at 'F' terminal, ground generator 'F' terminal. Operate generator. Output must not exceed figure given above.

Performance Data

Cold Amperes	Volts	R.P.M.	Hot Amperes	Volts	R.P.M.
0	6.4	920	0	6.4	1000
4	6.6	1030	4	6.6	1140
8	6.8	1140	8	6.85	1280
12	7.0	1300	12	7.1	1440
16	7.25	1460	16	7.3	1640
20	7.45	1650	20	7.55	1840
24	7.65	1880	24	7.75	2220
28	7.9	2220	28.3	8.0	3200
32	8.0	3100			

Rotation—Counter-clockwise at commutator end.
Brush Spring Tension—53 ozs. max. (new brushes).
Field Current—1.90-2.10 amperes at 6.0 volts.
Motoring Current—5.3-5.9 amperes at 6.0 volts.
Removal:—Generator pivot mounted at left front of engine. To remove, take out pivot and clamp bolts.
Belt Adjustment:—Loosen pivot and clamp bolts, move generator out until all slack is taken up.

CUTOUT RELAY

WITH "GBK" GENERATOR

Auto-Lite Model CB-4023. Mounted on generator.
For complete data, refer to Electrical Equipment Index.
Cuts In—6.5-7.25 volts.
Cuts Out—.5-2.5 ampere discharge current.
Contact Gap—.015-.045".
Air Gap—.010-.030" with contacts closed.

REGULATOR

WITH "GDF" GENERAT R

Auto-Lite Model VRD-4009A r VRR-4005A. Cutout Relay and vibrating type Voltage Regulator in case on dash in engine compartment.
For complete data, refer to Electrical Equipment Index.
NOTE—Regulator cover is sealed. Serviced on exchange basis if seals unbroken. Cover must be removed to make adjustments.

Cutout Relay

Cuts In—6.4-7.0 volts Cold, 870 RPM (gen.), 9.5 MPH.
Cuts Out—.5-3.0 amperes discharge (VRD), 6.0 amperes maximum discharge (VRR).
Contact Gap—.015" Minimum.
Air Gap—.034" Min., .038" Max. measured at hinge end of core with contacts open.

Voltage Regulator

Setting—7.3-7.6 volts at 70°F.
To Check (Without Breaking Seal)—Connect ammeter in charging line at 'BAT' terminal on regulator, connect voltmeter between 'BAT' terminal and ground. Operate generator at speed equivalent to 30-35 MPH., charging fully charged battery until voltage is constant. Voltmeter reading should be 7.3-7.6 volts (cold—70°F), 7.4-7.6 volts (hot—140°F).
To Adjust (with cover removed)—Change regulator armature spring tension slightly by bending lower spring hanger. Check setting as directed above. See Electrical Equipment Section for complete instructions.
Contact Gap—.010-.020" (VRD), .012" minimum (VRR) with armature against stop pin.
Air Gap—.0595-.0625" (VRD), .048-.052" (VRR) with contacts just opening.

LIGHTING

LIGHTING:—**Headlamps**—Hall 'Depress Beam' type. Upper and lower beams controlled by selector switch on toeboard.
Headlamp Adjustment—With car on level floor 25' from screen and with upper beams lighted, aim each headlamp so that upper edge of bright spot is on horizontal line at lamp-center height, and centered on vertical line directly ahead of lamp center.
Beam Indicator—Located at bottom of speedometer dial. Lighted whenever upper or driving beams lighted.

Switches

Lighting—(1936) Cole-Hersee, (1938-39) R. B. M., (1939-40) Soreng-Manegold.

Bulb Specifications

Position	Candlepower	Mazda No.
Headlamps	32-21	2320
Parking, License	3	63
Instrument	1½	55
Clock, Beam Indicator	1	51
Stop & Tail	21-3	1158

MISC. ELECTRICAL

FUSES:—**Lighting**—20 ampere. On back of lighting switch.
Horn—30 ampere. In plug on base of horn relay.
Clock—2 ampere. On back of clock.
Field Fuse (GBK Generator)—5 ampere.
HORNS:—**Auto-Lite Horn Set Model HC-5105. Single** horn std., Twin horns Optl. Vibrator type. Operated by horn relay. Current draw 12 amperes (each).
Single Horn—Auto-Lite Model HB-4001. Standard Horn Relay: Auto-Lite HR-4002 or HR-4101.
Contacts Close—2.5-3.5 volts.
Contact Gap—.026". **Air Gap**—.012" Min., .017" Max. with contacts closed.

ENGINE

ENGINE SPECIFICATIONS:—Six cylinder, 'L' head type.
Bore—3½". **Stroke**—4¼".
Displacement—245.3 cubic inches.
Rated Horsepower—29.4.
Developed Horsepower—101 at 3600 R.P.M.
Compression Ratio—5.75-1 Std. 6.25-1 Optl.
Compression & Vacuum Reading—*See Tune-Up data.*
PISTONS:—Bohn, aluminum alloy, Invar Strut, split skirt type. **Length**—4 3/32".
Weight—21.7 ozs. without rings or pin.
Removal—Pistons and rods removed from above
Clearance—See Fitting New Pistons.
Original Bore Sizes:—Mark opposite each bore indicate original bore size as follows:

1938-39 Models

	1st Standard Marking	Cyl. Size	2nd Standard Marking	Cyl. Size
.001" under.	'A'	3.4990"	'AA'	3.5190"
.0005" under.	'B'	3.4995"	'BB'	3.5195"
Standard	'C'	3.5000"	'CC'	3.5200"
.0005" over.	'D'	3.5005"	'DD'	3.5205"
.001" over.	'E'	3.5010"	'EE'	3.5210"

1939-40 Skylark Model R

1st Standard Marking	Cylinder Size	2nd Standard Marking	Cylinder Size
(A)	3.500"	(AA)	3.520"
(B)	3.5005"	(BB)	3.5205"
(C)	3.501"	(CC)	3.521"
(D)	3.5015"	(DD)	3.5215"
(E)	3.502"	(EE)	3.522"
(F)	3.5025"	(FF)	3.5225"

Replacement Pistons:—Finished pistons furnished standard (3.499") and .001", .002", .003", .005", .010", .020", .025", .032" oversize. Semi-finished in one size only (3.542").
Fitting New Pistons:—Use .002" feeler gauge inserted between piston and cylinder wall on side opposite slot. Pull required to remove feeler must be within 10-13 lbs. (1936-39), 13-15 lbs. (1939-40).
Installing Pistons:—Slot on left side (away from valves).
NOTE—Piston pin offset in piston toward right or camshaft side of engine.
PISTON RINGS:—Two compression, two oil control rings per piston, all above pin.

Ring	Width	End Gap	Side Clearance
Comp.	⅛"	.007-.012"	.0005"
Oil Cont.	5/32"	.007-.015"	.0005"

Replacement Rings:—Furnished in standard and .005", .010", .020", .030" oversize.
PISTON PIN:—**Diameter**—⅞". **Length**—2 15/16". Pin floats in piston and rod. Held by locking ring at each end. Pin hole in connecting rod bronze bushed.
Pin Fit in Piston—.0005" clearance or hand push fit with piston heated to 212° F.
Pin Fit in Rod Bushing—.0005" clearance.
Replacement Pins:—Std. & .003", .006" oversize.
CONNECTING ROD:—**Weight**—35 ozs. **Length**—8¼".
Crankpin Journal Diameter—2⅛".
Lower Bearing—Steel-backed, babbitt-lined type.
Clearance—.001-.0025". **Sideplay**—.005-.010".
Bearing Adjustment:—None (no shims). Replace bearings. Do not file rods or bearing caps.
Replacement Bearings:—Std. and .001" undersize.
Installing Rods:—Lower bearings offset. Install rods with narrow half of bearing toward nearest main bearing or pointing toward front of engine for #1, 3, 5 and toward rear for #2, 4, 6.

ENGINE

C NTINUED FR M PRECEDING PA E

CRANKSHAFT:—Four bearing. Integral counterweights.
Journal Diameters—2.560" all bearings.
NOTE—Journals "stepped" type on early 1936 cars.
Bearing Type—Steel-backed, babbitt-lined.
Clearance—.001-.003".

Bearing Adjustment:—None (no shims). Replace bearings. Do not file bearing caps.
NOTE—Bearings may be rotated out.

Replacement Bearings:—Std. and .001" undersize.

End Thrust:—Taken by #2 main bearing. Not adjustable (replace bearing). **Endplay**—.004-.008".

CAMSHAFT:—4 bearing. Non-adjustable chain drive.
Journal Diameters:—#1, 2.186"; #2, 2.076"; #3, 2.060", #4, 1.498".
Bearing Type—Leaded-bronze bushings.
Clearance—.0015".
End Thrust—Taken by thrust plate at rear of camshaft sprocket. Adjustable by adding or removing shims. **Endplay**—.004".

Timing Chain:—Morse. Width 1". Pitch .500". Length 25½" or 51 links.

Camshaft Setting:—Sprockets are marked. Mesh chain with sprockets turned so that marks are adjacent & in line with straightedge across shafts.

VALVES:—	Head Diameter	Stem Diameter	Length
Intake	1 21/32"	.3405-.3415"	4 7/16"
Exhaust	1 17/32"	.3405-.3415"	4 7/16"

	Seat Angle	Lift	Stem Clearance
All Valves	45°	11/32"	.001-.0015"

Valve Guides:—Pressed in block from above. To remove guides, work from lifter opening and press guides out from below.

Valve Springs:—Damper installed on all springs at top.

	Spring Pressure	Length
Valve Closed	40 lbs.	1 13/16"
Valve Open	100 lbs.	1 15/32"

Valve Lifters:—Mushroom type. Removable from below only. Guides must be removed first. Lifters furnished .002", .004" oversize. Lifters must be free fit in guide at room temperature.

VALVE TIMING

Tappet Clearance:—.010" Intake, .013" Exhaust, running clearance with engine warm.
NOTE—Tappet clearance for timing is .014" (Intake—opening side), .018" (Intake—closing side), .017" (Exhaust—opening side), .021" (Exhaust—closing).

Valve Timing:—See Camshaft Setting above.
Intake Valves—Open 2° BTDC. Close 51° ALDC.
Exhaust Valves—Open 44° BLDC. Close 3° ATDC.
To Check Valve Timing—Set tappet clearance #1 intake valve at .014", #1 exhaust valve at .021". With this clearance, intake valve will open and exhaust valve will close with piston at top dead center when flywheel mark 'D-C/1-6' lines up with finished bosses on right front face of clutch housing. Reset tappets for correct running clearance (see above).

LUBRICATION

LUBRICATION:—Pressure system. Gear type oil pump located on right hand side of crankcase.
Oil Pump Installation—Whenever oil pump removed, turn engine over to firing position for #1 piston (see Ignition Timing), rotate oil pump shaft so that tongue-and-slot drive connection will mesh without disturbing distributor when pump replaced.

Normal Oil Pressure:—3-5 lb. idling, 30 lb. @ 30 MPH.

Oil Pressure Regulator:—Located on oil pump cover. Adjustable by turning screw which controls regulator valve spring tension (turn screw in to increase, or out to decrease pressure).
Crankcase Capacity—6½ qts. (dry), 6 qts. (refill).

COOLING

COOLING SYSTEM:—**Capacity**—18 quarts.

Water Pump:—Belt-driven, adjustable packing type.
See Water Pump Section for complete data.
Removal—Drain cooling system, remove fan belt, take out pump mounting bolts. Lift off pump.

Thermostat:—Fulton. In water outlet on cyl. head.
Setting—Opening temperature 145-160°F.

CLUTCH

Borg & Beck. (1936) Model 10A6, (1938-39) 10A7, (1939-40) 9A6. Single plate, dry disc type.
See Clutch Section for complete data.
Facings (10A6, 7)—Molded (flywhl), molded-woven type (pressure plate side), one of each required. 6⅛" Inside Diam., 9⅞" Outside Diam., ⅛" thick (flywheel side), .133" thick (pressure plate side).
Facings (9A6)—Molded (flywhl. side), woven (pressure plate side). I. D. 6⅛", O. D. 9⅞", Thickness ⅛".
Adjustment—Pedal free movement should be ¾-1". Adjustment provided on connecting link. Turn screw in or out for proper clearance.
Removal—Remove transmission (see Transmission Removal below), take off clutch housing pan, punch mark clutch cover and flywheel (to insure replacing in same position to maintain balance), take out mounting screws in clutch cover flange turning all screws out evenly, remove clutch from below.

TRANSMISSION

TRANSMISSION:—**Warner Model T-86 Std.** Special transmission with Superdrive (Overdrive) Optl. on 1938-39 models only.
See Transmission Section for complete data.

Transmission Control:—Remote steering column type. Optl. (1938-39), Std. (1939-40 Skylark).
See Transmission Section for complete data.
Removal—Disconnect clutch linkage and drive shaft at front universal joint. Install pilot studs in upper transmission mounting bolt holes, take out lower mounting bolts and pull transmission back.

OVERDRIVE

1936-39 MODELS

Warner Type R6. Optl. with special "Superdrive" Transmission.
See Transmission Section for complete data.

Removal: Same as for standard transmission (above) after overdrive control has been disconnected.

UNIVERSALS

UNIVERSAL JOINTS:—**Spicer Model 1281-1288.** Needle bearing type, 2 used.
See Universals Section for complete data.

REAR AXLE

Spicer (Salisbury). Spiral Bevel (1936-39), Hypoid Gear (1939-40 Skylark), semi-floating type with Hotchkiss drive.
See Rear Axle Section for complete data.
Std. Ratio—(1938-39) 4.545-1, (1939-40) 4.27-1.
Backlash—.004-.007". Shim adjustment.

Removal:—Disconnect hand brake cables, brake line, and drive shaft at rear universal joint. Remove wheels, take off spring clips at axle housing, remove axle from beneath car.

Axle Shaft Removal:—Remove wheel, hub, drum and backing plate. Pull axle shaft & wheel bearing.
Wheel Bearing Adjustment—Shims provided between flanged end of axle housing and brake backing plate. To adjust, remove wheel, hub and drum assembly. Remove shims to decrease endplay, add shims to increase. **Endplay**—.003-.006".

SHOCK ABSORBERS

Gabriel. Hydraulic, double acting type (1938), direct acting type (1939 on).
1938—Model KT (front & rear).
1939—Model B-6002 (front), B-7006 (rear).
1939-40 Skylark—B-7005 (front), B-7504 (rear).
See Shock Absorber Section for complete data.

FRONT SUSPENSION

Front Suspension:—Conventionel 'I' beam section front axle with Reverse-Elliott ends and semi-elliptic springs.
Kingpin Inclination—7½° crosswise.
Caster—1½° (1936-39), 2° (1939-40) plus or minus ½°. Adjust by installing wedge shims between spring and axle.
Camber—1°. No adjustment provided.
Toe In—1/16-3/16". Adjust in usual manner by loosening clamp bolts and turning tie rod.

STEERING GEAR

(1936)—Ross Model S14. Cam-and-Lever type.
(1938-40)—Gemmer Model 305. Worm-and-roller type with "push-pull" adjustments.
See Steering Gear Section for complete data.

BRAKES

BRAKES:—**Service**—Hupp-Lockheed hydraulic type. Hand lever apples rear service brakes.
See Brake Section for complete data.
Brake Drums—Cast-iron. **Diameter**—10".
Lining—Moulded type. Width 2". Thickness 3/16". Length 20⅞" per wheel.
Clearance—.010" toe, .005" heel for each shoe.

Hand Brake:—See service brakes above.

ENGINE HOOD & SIDE PANEL REMOVAL:—To raise hood, turn lock handle to left as far as possible, raise hood slightly, reach under front edge and release safety catch.

Side Panels—With hood up, move locking handle (at top center inside panel) toward front of car, disengage rear end of panel, slide panel out toward rear.

MODEL IDENTIFICATION

Model	First Number
Aerodynamic Eight 621N (1936)	N-5001
Eight, 825H (1938)	H-25001
Eight, 925H (1939)	H-30001

SERIAL NUMBER: Stamped on plate on right side of dash under engine hood. First Nos. listed above.

ENGINE NUMBER:—First number same as Serial Number (above). Stamped on left side of crankcase.

TUNE-UP

COMPRESSION:—Ratio—5.8-1 Std. No Optl. ratios. **Pressure**—113 lbs. at cranking speed of 160 R.P.M.

VACUUM READING:—18-20" steady reading at idling speed.

FIRING ORDER: 1-4-7-3-8-5-2-6. See diagram.

SPARK PLUGS: Champion No. 7. 18 mm. Metric type.
Gaps—.0275-.030"

IGNITION: See Coil, Condenser, and Distributor.
Breaker Gap—Set at .015". Limits .017" Max.
Cam Angle or Dwell—(IGT-4008) 27° Closed, 18° Open, (IGP-4003) 27.5° Closed, 17.5° Open. With .017" gap.
Breaker Arm Spring Tension—18-20 ounces.
Automatic Advance—6.5° max. at 1600 RPM (distr.).
Vacuum Advance (IGT-4008 Distr.)—8° max. (distr.) with 14" vacuum.

IGNITION TIMING: See Ignition Timing.
Std. Setting—7° BTDC. with straight line mark on flywheel (7° before dead center mark "1°8") at indicator in inspection hole in right front face of housing.

CARBURETION: See Carburetor & Carb. Equipment.
Idle Setting—Both idle screws ¼-1 turn open. Idle speed 350 RPM or 6 MPH.
Float Level—3/16" from top of float to gasket seat on cover with valve seated (invert to check).
Accelerating Pump—Not adjustable.
Fuel Pump Pressure: 4¼ lbs. maximum.

VALVES: See Valve Timing.
Tappet Clearance:—.006" Int., .013" Exh. (eng. warm).

STARTING: See Battery, Starter, Generator, Regulator.

IGNITION

IGNITION SWITCH: Mitchellock. Model 24-B (1936) Type 6704, (1938-39) Type 7644. Connected to coil by armored cable.
Ignition Lock—Briggs & Stratton No. 50184 (Lock cylinder). Key Series—b digits. Groove—#1.

COIL: Auto-Lite. (1936) Model CE-4611, (1938-39) Model CE-4630. Service Coil (less switch & cable) Auto-Lite CE-3224JS.
Ignition Current—2 amperes idling, 5 stopped.

CONDENSER: Auto-Lite Part No. IG-3927 (IGT-4008 Distr.), IG-2671 (IGP-4003 Distr.).
Capacity—.25-.28 mfd. (IG-3927), .20-.25 mfd. (IG-2671).

DISTRIBUTOR: Auto-Lite. (1936) Model IGP-4003, (1938-39) IGT-4008. Single breaker, full automatic advance type with auxiliary vacuum spark control (IGT-4008 only) and manual adjustment.
See Electrical Equipment Section for special Distributor Servicing data.
Rotation—Clockwise viewed from the top.
Distributor Settings—*See Tune-Up data.*

Automatic Advance

Distributor Degrees	R.P.M.	Engine Degrees	R.P.M.
Start	400	0	800
.6	500	1.2	1000
2	750	4	1500
4	1150	8	2300
6.5	1600	13	3200

Vacuum Spark Control (IGT-4008)—Mounted on distributor cup and linked directly to breaker plate. Provides additional advance except when engine accelerated or operated with wide open throttle when spark retarded by return spring within unit.

Vacuum Advance

Distr. Degrees	Eng. Degrees	Vacuum (" of HG)
Start	0°	5"
2°	4°	7-7.5"
4°	8°	9.5"
6°	12°	11.5-12"
8°	16°	14"

Removal:—Distributor mounted on right hand side of cylinder head. To remove, disconnect vacuum line (IGT-4008 only), take out hold-down screw in advance arm.

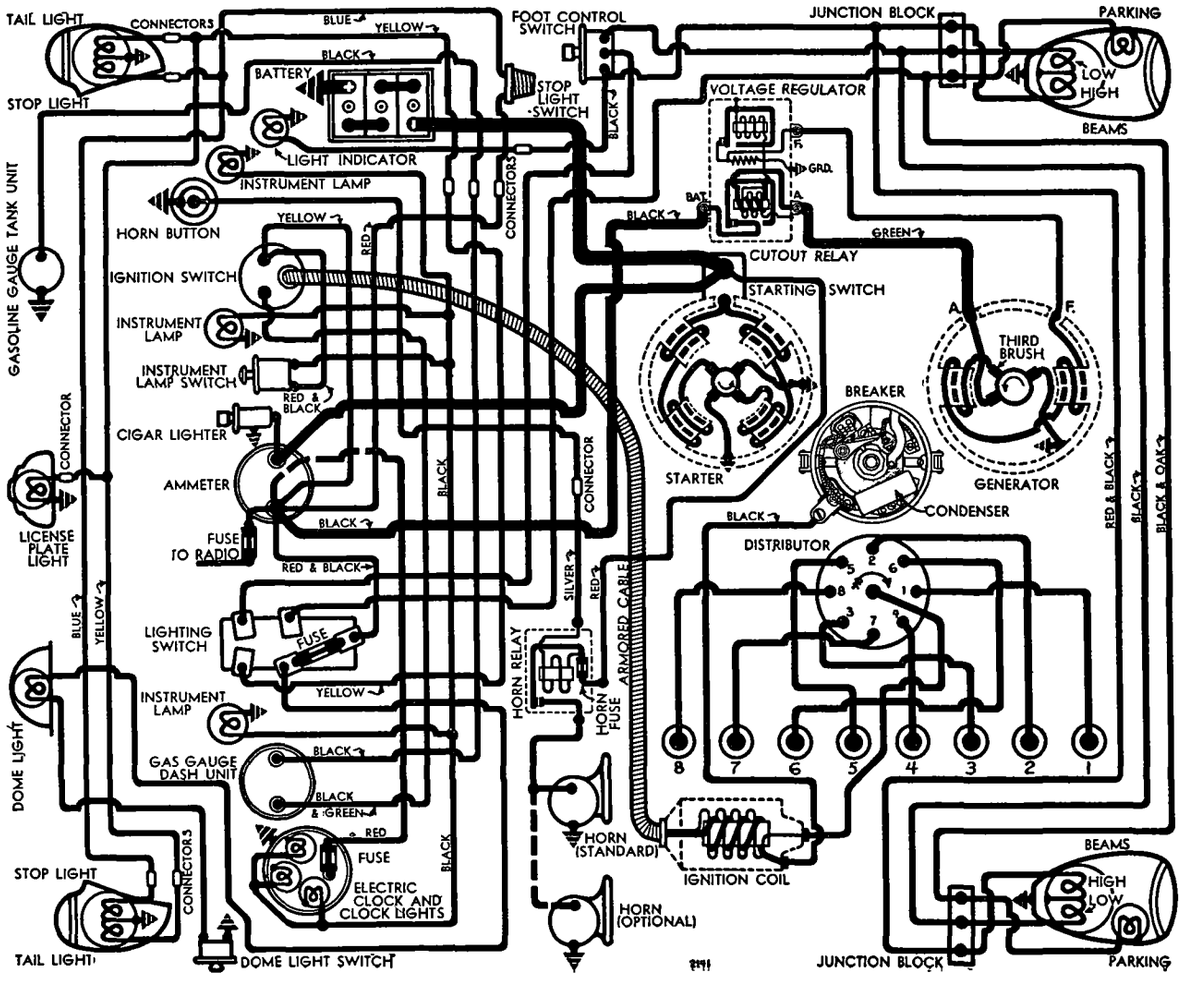

IGNITION TIMING

IGNITION TIMING:— Flywheel Degrees Piston Pos.
All Engines .....7° BTDC.....0221" BTDC.

To Set Timing—With #1 piston on compression, turn engine over until piston is 7° or .0221" before top dead center, stop when straight line mark '/' on flywheel, which is 7° before top dead center mark '1°8', lines up with indicator in inspection hole in right front of flywheel housing. Loosen advance arm clamp bolt, rotate distributor until breaker contacts begin to open, tighten clamp bolt, check spark plug cable connections.

CARBURETOR

Carter Model WDO, (1936) Type 317S, (1938-39) Type 399S. 1" Dual downdraft type with Climatic Control and Fast Idle.

For complete data, refer to Carburetor Index.

Idle Adjustment—With engine warm and idling at hot or slow idle speed (Automatic Choke and Fast Idle inoperative), set throttle stopscrew so that engine idles at 350 R.P.M., turn idle adjusting screw for each carburetor barrel (in succession) in until engine begins to hesitate or miss, then turn screw out slowly until engine fires smoothly. Readjust throttle stopscrew for correct idle speed.

Accelerating Pump Setting—Not adjustable.

Fast Idle:—Integral with carburetor. See article on Carter Fast Idle in Carburetion Section.

For complete data, refer to Carburetion Equip. Index.

Automatic Choke:—Carter Climatic Control. See article in Carburetion for servicing directions.

For complete data, refer to Carburetion Equip. Index.

CARB. EQUIPMENT

Air Cleaner:—AC #1528757 heavy duty oil-bath type.

Fuel Pump:—AC. Type D #1523014. Diaphragm type.

For complete data, refer to Carburetion Equip. Index.

Gasoline Gauge: Stewart Electric type.

For complete data, refer to Carburetion Equip. Index.

BATTERY

1936 MODELS

BATTERY:—Willard, Type WH-2-15, RH-2-15 (Export). 6 volt, 15 plates, 119 ampere hours (20 hour rate).

Starting Capacity—140 amperes for 20 minutes.

Zero Capacity—300 amperes for 4.3 minutes.

Grounded Terminal—Positive (+) terminal.

Location—On left side under driver's seat.

BATTERY

1938-39 MODELS

BATTERY:—Willard, Type WHT-2-120. 6 volt, 17 plate, 120 ampere hour capacity (20 hour rate).

Starting Capacity—152 amperes for 20 minutes.

Zero Capacity—300 amperes for 4.9 minutes. Five Second Voltage—4.46 volts.

Grounded Terminal—Positive (+) terminal.

Dimensions—Width 7 1/16". Length 10 5/16". Height 8 13/16".

Location—On left hand side under front seat.

STARTER

Auto-Lite (1936) MAB-4081, (1938-39) MAB-4095.
Armature—Auto-Lite No. MAB-2046.
Drive—Outboard Bendix Type RCD10FXD-9.
Rotation—Counter-clockwise at commutator end.
Brush Spring Tension—42-53 ozs. (new brushes).
Cranking Engine—160 R.P.M., 100 amperes, 5.5 volts.

Performance Data

Torque	R.P.M.	Volts	Amperes
0 ft. lb.	3700	5.5	60
.6 " "	1910	5.5	100
3.4 " "	1100	5.0	200
6.6 " "	695	4.5	300
10.15 " "	420	4.0	400
15.8 " "	Lock	3.0	582
22.5 " "	Lock	4.0	775

Lock torque figures correct without Starting Switch.

Removal:—Starter sleeve mounted on right front face of flywheel housing. To remove, take out pilot mounting screw in flywheel housing above starter sleeve, remove starter and switch as an assembly.

Starting Switch:—Model SW-3737CS. Mounted on starter field frame and operated through flexible cable by pull-button on instrument panel. Pull to close switch contacts must not be less than 5½ lbs. (measured at right angles to switch lever at hole in outer end).

GENERATOR

1936 MODELS

Auto-Lite Model GAR-4620-5. Armature No. GAR-2116-B (Export Car Equip.). Third brush control type in conjunction with non-vibrating Current Regulator (two-rate charge control). Ventilated by fan on drive pulley.

Charging Rate Adjustment—Use test meters to check generator output. Connect jumper between fuse cup on regulator and ground to cut out regulator action. Shift third brush counter-clockwise to increase, or clockwise to decrease output (brush held in position by friction). Remove jumper wire. **Maximum Charging Rate**—22 amperes (cold), 19 amperes (hot), 8.8 volts, 2200 R.P.M.

Performance Data

Cold (Regulator Inoperative)			Hot		
Amperes	Volts	R.P.M.	Amperes	Volts	R.P.M.
0	6.4	720	0	6.4	760
4	6.8	860	4	6.8	925
8	7.25	1000	8	7.25	1125
12	7.7	1160	12	7.7	1350
16	8.1	1360	16	8.1	1680
20	8.5	1660	19.2	8.4	2600
22.5	8.8	2200			

Rotation—Counter-clockwise at commutator end.
Brush Spring Tension—50-60 ozs. (new brushes).
Field Current—3.51-3.89 amperes at 6.0 volts.
Field Fuse—5 ampere (in fuse cup on regulator).
Motoring Current—5.03-5.57 amperes at 6.0 volts (½ ampere additional if relay and regulator in circuit).

Removal:—Pivot mounted at left front of engine with fan belt drive. To remove, take out two pivot bolts and one clamp bolt.

Belt Adjustment:—Inspect at 1000-mile intervals. Adjust in usual manner by loosening pivot and clamp bolts and swinging generator away from engine to take up all slack in belt.

GENERATOR

1938-39 MODELS

Auto-Lite Model GDF-4804-A. Armature No. GDF-2006. Third brush control in conjunction with external vibrating voltage regulator. Generator ventilated by fan on drive pulley.

Charging Rate Adjustment—Maximum charging rate controlled by third brush. Shift third brush counter-clockwise to increase or clockwise to decrease charging rate (brush held in position by friction. Maximum must not exceed figure given below which is equivalent to third brush position 2⅛ commutator bars away from insulated (nearest) main brush.

Maximum Charging Rate—31 amperes (cold), 28.3 (hot), 8.0 volts, 3200 R. P. M., 31.8 M.P.H. Actual charging rate controlled by voltage regulator and dependent on battery condition. To check charging rate, connect ammeter in charging line at 'BAT' terminal on regulator, connect voltmeter between 'BAT' terminal and ground, disconnect lead at 'F' terminal, ground generator 'F' terminal. Operate generator. Output must not exceed figure given above.

Performance Data

Cold			Hot		
Amperes	Volts	R.P.M.	Amperes	Volts	R.P.M.
0	6.4	920	0	6.4	1000
4	6.6	1030	4	6.6	1140
8	6.8	1140	8	6.85	1280
12	7.0	1300	12	7.1	1440
16	7.25	1460	16	7.3	1640
20	7.45	1650	20	7.55	1840
24	7.65	1880	24	7.75	2220
28	7.9	2220	28.3	8.0	3200
32	8.0	3100			

Rotation—Counter-clockwise at commutator end.
Brush Spring Tension—53 ozs. max. (new brushes).
Field Current—1.90-2.10 amperes at 6.0 volts.
Motoring Current—5.3-5.9 amperes at 6.0 volts.

Removal:—Generator pivot mounted at left front of engine. To remove, take out pivot and clamp bolts.

Belt Adjustment:—Loosen pivot and clamp bolts, swing generator out until all slack in belt taken up.

REGULATOR

WITH "GAR" GENERATOR

Auto-Lite Model TC-4302A. (Used with GAR-4620-5 Gen.). "Two Charge" Type. Consists of Cutout Relay and non-vibrating regulator in a single case.

For complete data, refer to Electrical Equipment Index.

Cutout Relay

Cuts In—6.5-7.25 volts (5 ampere max. charging current).

Cuts Out—.5-2.5 ampere discharge current.

Contact Gap—.015-.045".

Air Gap—.010-.030" with contacts closed.

Regulator

Contacts Open—8.25-8.75 volts at 70°F.

Contacts Close—1.2-1.4 volts below opening point.

Contact Gap—.005" minimum.

Air Gap—.045" with contacts closed.

C NTINUED N NEXT PAGE

C NTINUED FROM PRECEDING PAGE

REGULATOR

WITH "GDF" GENERATOR

Auto-Lite Model VRD-4009A (With GDF-4804-A Std. Gen.). Cutout Relay and vibrating type Voltage Regulator in case on engine compartment dash.

For complete data, refer to Electrical Equipment Index.

NOTE—Regulator cover is sealed. Serviced on exchange basis if seals unbroken. Cover must be removed to make adjustments.

Cutout Relay

Cuts In—6.4-7.0 volts Cold, 9.5 M.P.H.

Cuts Out—.5 ampere min., 3.0 amperes max. (cold).

Contact Gap—.015" Minimum.

Air Gap—.034" Min., .038" Max. measured at hinge end of core with contacts open.

Voltage Regulator

Setting—7.3-7.6 volts at 70°F. (Regulator Serial No. 8R-000001 Up). **See Electrical Equipment Section for settings and changes on units before this serial no.**

To Check (Without Breaking Seal)—Connect ammeter in charging line at 'BAT' terminal on regulator, connect voltmeter between 'BAT' terminal and ground. Operate generator at speed equivalent to 30-35 M.P.H., charging fully charged battery until voltage is constant. Voltmeter reading should be within limits of 7.3-7.6 volts (cold—70°F), 7.1-7.4 volts (hot—140°F). See Regulator Setting above.

To Adjust (with cover removed)—Change regulator armature spring tension slightly by bending lower spring hanger. Check setting as directed above. See Electrical Equipment Section for complete instructions.

Contact Gap—.010" Min., .020" Max. with armature against stop pin.

Air Gap—.0595-.0625" with contacts just opening.

LIGHTING

LIGHTING:—Headlamps—Hall 'Depress Beam' type. Upper and lower beams controlled by selector switch on toeboard.

Headlamp Adjustment—With car on level floor 25' from screen and with upper beams lighted, aim each headlamp so that upper edge of bright spot is on horizontal line at lamp-center height, and center bright spot on vertical line directly ahead of lamp center. Adjusting screws (accessible after removing headlamp door) located at each side of lense (for side motion), and at top (onc screw for vertical motion).

Beam Indicator—Located at bottom of speedometer dial. Lighted whenever upper or driving beams lighted.

Switches

Lighting—(1936) Clum Model 9526, (1938-39) R.B.M.

Bulb Specifications

Position	Candlepower	Mazda No.
Headlamps	32-21	2320
Parking, License	3	63
Instrument	1½	55
Clock, Beam Indicator	1	51
Stop & Tail	21-3	1158
Dome	6	81

MISC. ELECTRICAL

1936 MODELS

FUSES:—Lighting—15 amperes on fuse block behind instrument panel.

Stop Light—15 amperes on fuse block behind instrument panel.

Generator Field—5 amperes in knurled cup on regulator case.

HORN:—Sparton—Vibrator type. Horn current 15 amp.

MISC. ELECTRICAL

1938-39 MODELS

FUSES:—Lighting—20 ampere. On back of lighting switch.

Horn—30 ampere. In plug on base of horn relay.

Clock—2 ampere. On back of clock.

Radio—15 ampere. In power line plug.

Field Fuse—(Spec. Exp. Generator only)—5 ampere.

HORNS:—Auto-Lite Horn Set Model HC-5105. Single horn std., Twin horns Optl. Vibrator type. Operated by horn relay. Current draw 12 amperes (each).

Horn Relay Model HR-4002:—Contacts Close—3.0 volts Min., 4.0 volts Max. **Contacts Open**—1.5-2.0 volts.

Contact Gap—.026". **Air Gap**—.012" Min., .017" Max. with contacts closed.

ENGINE

ENGINE SPECIFICATIONS:—8 Cylinder, 'L' head type.

Bore—3 3/16". **Stroke**—4¾".

Displacement—303.2 cubic inches.

Rated Horsepower—32.51.

Developed Horsepower—120 at 3500 R.P.M.

Compression Ratio—5.8-1 Std. No Optl. heads.

Compression Pressure—142 lbs. at 2000 R.P.M. or 113 lbs. at cranking speed of 160 R.P.M.

Vacuum Reading—18-20" steady at idling speed.

PISTONS:—Bohn, aluminum alloy, Invar Strut, split skirt type. **Length**—3⅞".

Weight—18.4 ozs. without rings or pin.

Removal—Pistons and rods removed from below.

Clearance—See Fitting New Pistons.

Original Bore Sizes:—Mark opposite each bore indicates original bore size as follows:

	First Standard Marking	Cyl. Size	Second Standard Marking	Cyl. Size
.001" under.	'A'	3.1865"	'AA'	3.2065"
.0005" under.	'B'	3.1870"	'BB'	3.2070"
Standard	'C'	3.1875"	'CC'	3.2075"
.0005" over.	'D'	3.1880"	'DD'	3.2080"
.001" over.	'E'	3.1885"	'EE'	3.2085"

Replacement Pistons:—Finished pistons furnished standard (3.187"), and .001", .002", .003", .005", .010", .020", .022", .025", .032" oversize. Semi-finished pistons furnished in one size only (3.230").

Fitting New Pistons:—Use .002" feeler gauge inserted between piston and cylinder wall on side opposite slot. Pull required to remove feeler must be within 6-8 lbs.

Installing Pistons:—Slot to left (away from valves).

NOTE—Piston pin offset in piston toward right or camshaft side of engine.

PISTON RINGS:—Two compression, two oil control rings per piston, all above pin. Both oil ring grooves drilled with oil drain holes.

Ring	Width	End Gap	Side Clearance
Comp.	⅛"	.007-.012"	.0005"
Oil Cont.	5/32"	.007-.015"	.0005"

Replacement Rings:—Furnished in standard and .005", .010", .020", .030" oversize.

PISTON PIN:—Diameter—⅞". **Length**—2 15/16". Pin floats in piston and rod. Held by locking ring at each end. Pin hole in connecting rod bronze bushed.

Pin Fit in Piston—.0005" clearance or hand push fit with piston heated to 212°F.

Pin Fit in Rod Bushing—.0005" clearance.

Replacement Pins:—Std. & .003", .006" oversize.

CONNECTING ROD:—Weight 39.4 ozs. **Length** 9½".

Crankpin Journal Diameter—2¼".

Lower Bearing—Steel-backed, babbitt-lined type.

Clearance—.0008-.0026". **Sideplay**—.005-.010".

Bearing Adjustment:—None (no shims). Replace bearings. Do not file rods or bearing caps.

Replacement Bearings:—Std. and .001" undersize.

Installing Rods:—Lower bearings offset. Install rods with narrow half of bearing toward nearest main bearing or pointing toward front of engine for #1, 3, 5, 7 and toward rear for #2, 4, 6, 8.

CRANKSHAFT:—Five bearing. Integral counterweights.

Journal Diameters—2.665" all bearings.

Bearing Type—Steel-backed, babbitt-lined.

Clearance—.001-.003".

Bearing Adjustment:—None (no shims). Replace bearings. Do not file bearing caps.

NOTE—Bearings can be 'rotated' out without removing crankshaft.

Replacement Bearings:—Std. and .001" undersize.

End Thrust:—Taken by #3 main bearing. Not adjustable (replace bearing). **Endplay**—.004-.008".

CAMSHAFT:—Six bearing. Non-adjustable chain drive.

Journal Diameters—#1, 2.186"; #2, 2.166"; #3, 2.146"; #4, 2.126"; #5, 2.106"; #6, 1.622".

Bearing Type—Leaded-bronze bushings.

Clearance—.001".

End Thrust—Taken by thrust plate at rear of camshaft sprocket. Adjustable by adding or removing shims. **Endplay**—.004".

Timing Chain:—Morse. Width 1¼". Pitch .375". Length 23¾" or 66 links.

Camshaft Setting:—Sprockets are marked. Turn crankshaft so that keyway is straight up, mesh chain so there are exactly 15 links (or 16 teeth inclusive of teeth meshed opposite marks) between marks on sprockets.

VALVES:—	Head Diameter	Stem Diameter	Length
Intake	1 17/32"	.3405-.3415	5⅛"
Exhaust	1 13/32"	.3405-.3415	5⅛"

	Seat Angle	Lift	Stem Clearance
All Valves	45°	.325"	.0015" Max.

ENGINE

CONTINUED FROM PRECEDING PAGE

Valve Guides:—Pressed in block from above. To remove guides, work from lifter opening and press guides out from below.

Valve Springs:—Damper installed on all springs at top.

	Spring Pressure	Length
Valve Closed	40 lbs.	1 13/16"
Valve Open	100 lbs.	1 15/32"

Valve Lifters:—Mushroom type. Removable from below only. Guides must be removed first. Lifters furnished .002", .004" oversize.

Lifter Clearance in Guide—Free fit in guide at room temperature (move through guide of own weight without oil when cold).

VALVE TIMING

Tappet Clearance—.006" Int., .013" Exh. running clearance with engine warm.

NOTE—Tappet cl. for timing .010" Int., .017" Exh.

Valve Timing:—See Camshaft Setting above.

Intake Valves—Open 1° ATDC. Close 49° ALDC.

Exhaust Valves—Open 45° BLDC. Close 3° ATDC.

To Check Valve Timing—Set tappet clearance #1 intake valve at .010", #1 exhaust valve at .017". With this clearance, intake valve will open and exhaust valve close at top dead center when flywheel mark '1°8' lines up with indicator in inspection hole in right top face of flywheel housing. Reset tappet clearance at .006" Int., .013" Exh. with engine warm.

LUBRICATION

LUBRICATION:—Pressure type. Gear type oil pump located in crankcase (driven by vertical shaft).

Oil Pump Installation—Whenever oil pump removed, turn engine over to firing position for #1 piston (see Ignition Timing), rotate oil pump shaft so that tongue-and-slot drive connection will mesh without disturbing distributor driveshaft.

Normal Oil Pressure:—3-5 lbs. idling, 30 lbs. at 30 MPH.

Oil Pressure Regulator:—Operates at 35-45 lbs. Located on left side of crankcase at approximate center of engine. Adjustable by turning screw in (clockwise) to increase pressure, or out to decrease.

Crankcase Capacity:—8½ qts. (dry), 8 qts. (refill).

COOLING

COOLING SYSTEM:—**Water Pump.** Centrifugal, belt-driven, packless type.
See Water Pump Section for complete data.

Thermostat:—Bishop & Babcock. In water outlet.

Setting—Opening temperature 145-160°F.

Cooling System Capacity—21½ quarts.

CLUTCH

CLUTCH:—**Long Model 10CF-CL** Semi-centrifugal, single plate, dry disc type.
See Clutch Section for complete data.

Facings—Woven, spiral wound type, 2 required. Inside Diam. 6". Outside Diam. 10". Thickness .125".

Adjustment—Pedal free movement should be 1¼-1½". Adjustment provided on connecting link. Turn screw in or out for proper clearance.

Removal—Remove transmission (see Transmission Removal below), take off clutch housing pan, punchmark clutch cover and flywheel (to insure replacing in same position to maintain balance), take out mounting screws in clutch cover flange turning all screws out evenly, remove clutch from below through pan opening.

TRANSMISSION

TRANSMISSION:—**Warner Model T-85.** Superdrive (Overdrive) is standard equipment. Constant-mesh, synchro-mesh (second and high), sliding helical gear (low and reverse).
See Transmission Section for complete data.

Transmission Control:—Own steering column type remote control. Optl. on 1939 models.
See Transmission Section for complete data.

Removal—Disconnect clutch linkage and drive shaft at front universal joint. Install pilot studs in upper transmission mounting bolt holes, take out lower mounting bolts and pull transmission back to free clutch shaft from driven disc.

OVERDRIVE

Warner Type R1. Separate type in case on rear of transmission.
See Transmission Section for complete data.

UNIVERSALS

UNIVERSAL JOINTS:—**Detroit (Universal Products) Series 5150.** Roller bearing 'cross' type. 2 used.
See Universals Section for complete data.

REAR AXLE

REAR AXLE:—**Spicer.** Hypoid Gear, semi-floating type with Hotchkiss drive.
See Rear Axle Section for complete data.

Ratio—4.545-1 Std., 4.27-1 and 4.09-1 Optl.

Backlash—.004-.007". Shim adjustment.

Removal:—Disconnect hand brake cables, brake line, and drive shaft at rear universal joint. Remove wheels, take off spring clips at axle housing, remove axle from beneath car.

Axle Shaft Removal:—Remove wheel, hub, drum and backing plate. Pull axle shaft and wheel bearing. **Wheel Bearing Adjustment**—Shims provided between flanged end of axle housing and brake backing plate. To adjust, remove wheel, hub and drum assembly. Remove shims to decrease endplay, add shims to increase. **Endplay**—.003-.006".

SHOCK ABSORBERS

SHOCK ABSORBERS:—**Gabriel Model OT (front), KT (rear).** Double acting, hydraulic type with thermostatic control.
See Shock Absorber Section for complete data.

FRONT SUSPENSION

Front Suspension:—Conventional 'I' beam section front axle with Reverse-Elliott ends and semi-elliptic springs.

Kingpin Inclination—8½° crosswise.

Caster—1½°. Adjust by installing wedge shims between spring and spring seat on axle.

Camber—1¼°. No adjustment provided.

Toe In—1/16-3/16". Adjust in usual manner by loosening clamp bolts and turning tie rod.

STEERING GEAR

Steering Gear: Gemmer Model 300. Worm-and-Roller type.
See Steering Gear Section for complete data.

BRAKES

BRAKES:—**Service**—Hupp-Lockheed hydraulic type. Hand lever applies rear service brakes.
See Brake Section for complete data.

Brake Drum—Cast-iron. Diameter—12".

Lining—Moulded type. Width 2". Thickness 3/16". Length per wheel 24⅜".

Clearance—.010" toe, .005" heel for each shoe.

Braking Power—55% Front, 45% Rear.

Hand Brake:—See Service Brakes above.

MODEL IDENTIFICATION

NOTE: Army designation for this model is "¼ Ton 4x4 Truck." Built by Ford and Willys to same design under the following model designations which are stamped on name plate on right hand side of instrument panel:

Ford.....**GPW.** **Willys**.....**MB.**

SERIAL NUMBER: Stamped on Name Plate on right hand side of instrument panel.

ENGINE NUMBER: Stamped on boss on right front upper corner of engine block near water pump.

TUNE-UP

COMPRESSION: Pressure—110 lbs. at cranking speed of 185 RPM for Std. 6.48-1 Cast Iron Head.

VACUUM READING: Steady 21-23" idling at 8 MPH.

FIRING ORDER: 1-3-4-2. See diagram.

SPARK PLUGS: Auto-Lite Type AN-7 or A-7. 14 mm. Gaps—.030".

IGNITION: See Coil, Condenser, and Distributor.
Breaker Gap—.020". **Cam Angle** 47° closed (IGC-4705), 41° closed (IAD-4008).
Automatic Advance—Starts at 250 RPM. Maximum advance 11° at 1500 RPM (Distr. degrees & RPM).

IGNITION TIMING: See Ignition Timing.
Std. Setting—5° BTDC (72 Octane Fuel), At TDC (68 Octane Fuel) with flywheel mark "IGN" (5° BTDC setting), "TC" (TDC setting) at center of inspection hole in right front face of housing.

CARBURETION: See Carburetor & Carb. Equipment.
Idle Setting—Idle screw 1-2 turns open (turn screw out for richer mixture). Idle speed 8 MPH.
Float Level—⅜" from top of float at free end to machined surface (gasket seat) on bowl cover. Invert assembly to check. Do not compress spring in valve stem.
Accelerating Pump—No seasonal adjustment.

Fuel Pump Pressure: 4½ lbs. maximum.

MANIFOLD HEAT CONTROL: Automatic thermostatic type. No adjustment required. When installing assembly, see that thermostatic spring end rests on top of spring stop bracket on manifold.
CAUTION—Check valve for free operation when tuning up engine.

CRANKCASE VENTILATOR: Remove and clean Vacuum Control Valve on manifold. *See Crankcase Ventilator (following CARB. EQUIPMENT) for data.*

VALVES: See Valve Timing.
Tappet Clearance—.014" All Valves, Hot or Cold.
NOTE—Adjusting screws are self-locking type (no locknuts).

STARTING: See Battery, Starter, Generator, Regulator.

IGNITION

IGNITION SWITCH: Douglas Model 6282.

COIL: Auto-Lite No. IG-4070L. Service Coil IG-4070NS. or No. IG-4070U. Service Coil IG-4070. Mounted on right side of engine block near distributor.
Ignition Current—2.5 amperes idling, 5 stopped.

CONDENSER: Auto-Lite Part No. IGW-3139.
Capacity—.18-.26 microfarad.

DISTRIBUTOR: Auto-Lite Model IGC-4705 or IAD-4008. Single breaker, 4 lobe cam, full automatic advance type.
Breaker Gap—.020". Limits .020-.024".
Cam Angle (IGC-4705)—47° (closed), 43° (open).
Cam Angle (IAD-4008)—41° (closed), 49° (open).
Breaker Arm Spring Tension—17-20 ozs.
Rotation—Counter-clockwise viewed from above.

Automatic Advance

Distributor Degrees	Distributor R.P.M.	Engine Degrees	Engine R.P.M.
Start	250	0	500
3	580	6	1160
6	930	12	1860
9	1270	18	2540
11	1500	22	3000

Distributor Removal: Mounted on right hand side of engine. To remove, take out hold-down screw in advance arm.
Installation Note—If crankshaft has been turned with distributor off engine, install distributor as follows: Turn crankshaft to cylinder #1 firing position (see Timing), turn distributor rotor to #1 distributor cap segment position (see diagram), insert distributor drive shaft in drive housing on engine, rock shaft back and forth until drive lug on end of shaft enters slot in drive coupling, push distributor down into place and install hold-down screw. Check Ignition Timing.

IGNITION TIMING

Std. Setting	Flywheel Degs.	Piston Position
72 Octane Fuel	5° BTDC	.010" BTDC
68 Octane Fuel	At TDC	.000" TDC

NOTE—Set timing as specified in accordance with Octane Rating of fuel customarily used.
Timing—With #1 piston on compression, turn crankshaft until piston reaches firing position (see Timing Table above), with flywheel mark "IGN" (5° BTDC setting) or "TC" (At TDC setting) centered in inspection hole in right front face of flywheel housing below starter. Loosen advance arm clamp bolt, rotate distributor until contacts begin to open (press rotor clockwise to eliminate backlash), tighten clamp bolt. See that rotor is at #1 segment in distributor cap and check spark plug cable connections (see diagram).
NOTE—Manufacturer recommends that ignition timing be checked with a Neon Timing Light with engine warm and running at idling speed.

CARBURETOR

Carter Model WO, Type 539-S, 1", Single Barrel, Downdraft type with manual choke control (interconnected with throttle to provide fast idle).
See Carburetor Section for complete data.

Idle Adjustment—With engine warm (choke valve

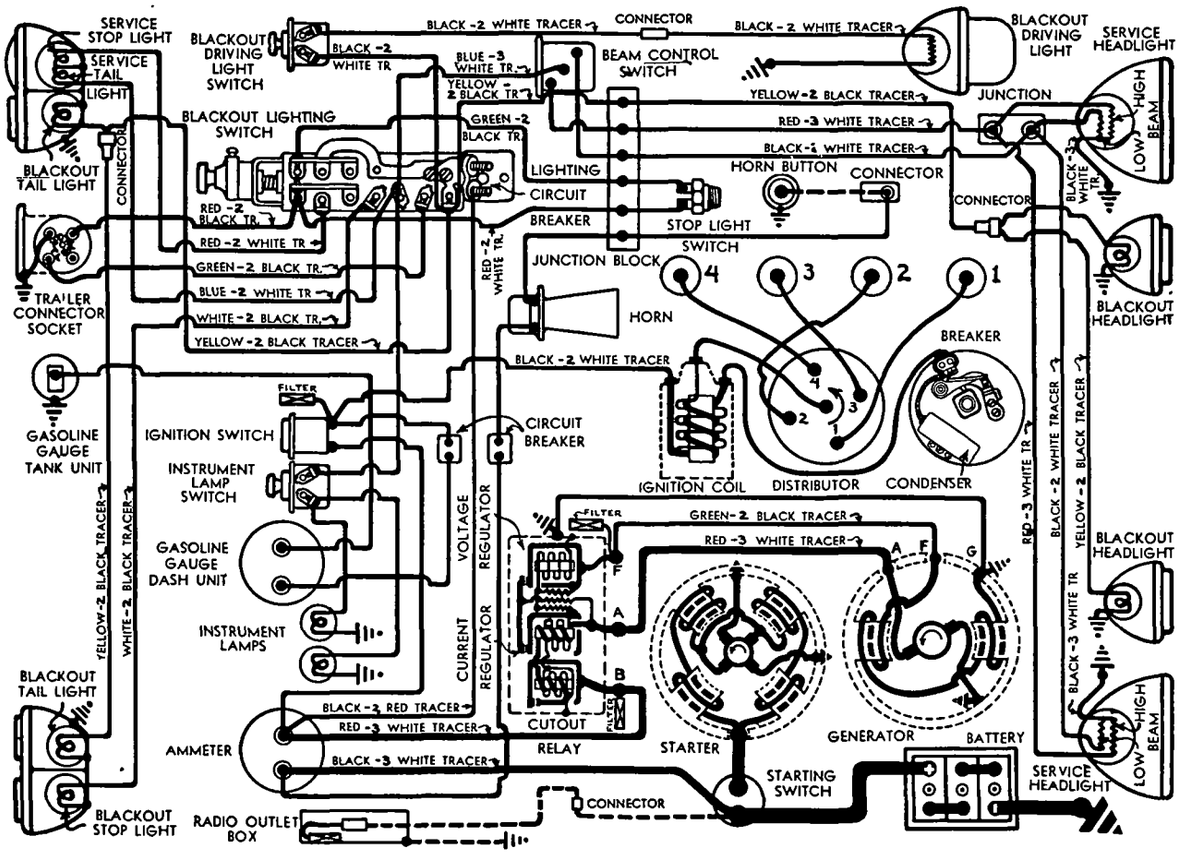

wide open and fast idle inoperative), set throttle stopscrew for idling speed of 600 Engine RPM or 8 MPH. Turn idle adjusting screw out until engine begins to roll, then turn screw in until engine fires smoothly. Final setting of idle screw should be 1-2 turns open. Recheck idle speed.

Accelerating Pump—No seasonal adjustment.

Float Level—⅜" from top of float at free end to machined surface (gasket seat) on cover with valve seated. To check, invert assembly and allow float to hang freely. Do not compress spring in valve stem.

Metering Rods & Jets—*See Carter Jet Table in Carburetor Section for complete data.*

Fast Idle: Choke valve interconnected with throttle valve to open throttle to fast idle position when choke in use. No adjustment required.

CARB. EQUIPMENT

Air Cleaner: Oakes Model No. 613300. Oil-bath type.

Capacity—1¼ pints SAE No. 20 or 30 (Summer), 10 (Winter) engine oil. Change oil at 2000 mile intervals; more often if required by operating conditions.

Fuel Pump: AC Type No. 1523096 or 1538312. Diaphragm type fuel pump. NOTE—Pump has hand lever on side of pump body for hand operation (priming).

Pressure—1½-2½ lbs. (4½ lbs. max. at 1800 RPM).

Fuel Strainer: Type T2, AC No. 1595848. Disc type mounted on right side of dash.

Servicing—Remove plug and drain bowl, remove bowl and filter element, clean element in solvent, wash out bowl, re-install (weekly).

Gasoline Gauge: Auto-Lite (Motometer) Electric type.

Dash Unit—No. NG-10026D or No. NG-9799D.

Tank Unit—No. NG-9979T.

See Carb. Equipment Section for complete data.

CRANKCASE VENTILATOR

Sealed Positive Ventilation Type. Consists of Air Intake Pipe from Air Cleaner to Crankcase Oil Filler (Oil Filler Cap has gasket and must seat tightly to prevent air leaks at this point) and Air Outlet Pipe from Valve Chamber Cover to Intake Manifold. There is a Vacuum Valve at the manifold connection and this valve must close at idling speed for satisfactory engine idling performance.

Servicing—Make certain that connecting pipes are tight and that oil filler cap gasket seals cap tightly. Remove and clean control valve when tuning engine or whenever system does not operate satisfactorily.

Vacuum Control Valve: Remove control valve by disconnecting pipe at valve chamber cover and unscrewing valve from manifold, clamp valve in vise and remove top of housing, withdraw valve and spring. Clean valve and valve seat thoroughly. Reassemble and re-install unit.

BATTERY

Auto-Lite Type TS-2-15 or Willard Type SW-2-119 (Orig. Equip.), Auto-Lite TG-2-15 or Willard MW-2-125 (Replacement). 6 volt, 15 plate, 118 Ampere Hour Capacity (Auto-Lite), 6 volt, 17 plate, 125 Ampere Hour Capacity (Willard) at 20 hour rate.

Starting Capacity—140 amperes (Auto-Lite), 160 amperes (Willard) for 20 minutes.

Zero Capacity—300 amperes for 4.0 min. (Auto-Lite), 5.3 min. (Willard). Five second voltage 4.15 volts (Auto-Lite), 4.4 volts (Willard).

Grounded Terminal—Negative (—) to frame.

Engine Ground—Strap connector at left front engine mounting bracket and additional ground strap between cylinder head (at rear) and dash.

Location—In engine compartment on right side.

STARTER

Auto-Lite Model MZ-4113. Armature No. MZ-2089.

Drive—Special Bendix Drive No. A2233.

Rotation—Counter-clockwise at commutator end.

Brush Spring Tension—42-53 ozs. (new brushes).

Cranking Engine—185 RPM, 150-175 amps., 5 volts.

Performance Data

Torque		RPM	Volts	Amperes
0	ft. lbs.	4300	5.5	70
.65	"	2500	5.5	100
2.55	"	1325	5.0	200
4.95	"	750	4.5	300
7.65	"	220	4.0	400
7.8	"	Lock	3.0	420
11.7	"	Lock	4.0	560

Removal: Starter flange mounted on right front face of flywheel housing. To remove, take out two flange mounting capscrews and one bolt in bracket at commutator end.

Starting Switch: Auto-Lite Model SW-4001 or SW-4015. Mounted on toeboard and operated manually by switch button.

GENERATOR

Auto-Lite Model GEG-5001A, GEG-5002D or GEG-5101D. Armature No. GEG-2120F (GEG-5001A, 2D), GEG-2134F (5101D). Two brush with external vibrating type voltage and current regulation.

►*CAUTION*—Internal wiring of this generator (and regulator) is not similar to other Auto-Lite units and these generators and regulators must always be used together.

Maximum Charging Rate—40 amperes, 8.0 volts, 1465 RPM. Actual charging rate controlled by regulator and dependent on battery condition.

Charging Rate Adjustment—None. See Regulator.

Performance Data

Amperes	Volts	RPM
8	7.0	930
8	7.6	955
40	7.6	1460
40	8.0	1465

Rotation—Counter-clockwise at commutator end.

Brush Spring Tension—64-68 ozs. (new brushes).

Field Current—1.60-1.78 amperes at 6.0 volts.

Motoring Current—4.7-5.2 amperes at 6.0 volts.

Belt Adjustment: Make certain generator brace is locked (pull generator out until brace locks), loosen brace nut, move generator out until belt deflection midway between generator and fan pulleys is 1", tighten brace nut.

NOTE—Generator brace is designed to stop fan and generator rotation when desired. Lifting up on brace handle slackens off drive belt.

Removal: Special pivot mounting at right front of engine with fan belt drive. To remove, pull up on brace handle to slacken off drive belt, move generator toward engine, remove belt, take out generator brace bolt and two pivot bolts, lift generator out.

REGULATOR

Auto-Lite No. VRY-4203-A,B,E, or G. Voltage-Current Type. Regulator case mounted on right side in engine compartment. Consists of Cutout Relay and vibrating type Voltage and Current Regulators.

►*CAUTION*—Internal wiring of this regulator (and generator) is not similar to other Auto-Lite units and these regulators and generators must always be used together.

Cutout Relay

Cuts In—6.5-7.0 volts.

Cuts Out—.5-6.0 ampere discharge current.

Contact Gap—.025" minimum.

Air Gap—.0595-.0625" with contacts open.

Voltage Regulator

Setting—7.35 volts at 70° F.

To Check—Connect ammeter in charging line at regulator "B" terminal (use short heavy leads), connect voltmeter between "B" terminal and ground. Operate generator at speed equivalent to 30 MPH charging a fully charged battery until voltage is steady (charging rate approx. 10 amperes), note voltmeter reading which should agree with setting above.

To Adjust (with cover removed)—Change regulator armature spring tension by bending lower spring hanger slightly. Increase tension to increase operating voltage, decrease tension to decrease voltage.

Contact Gap—.010-.012". **Spring Tension** 7-8 ozs.

Air Gap—.040-.042" with the contacts just opening (.010-.016" between contact spring and armature stop).

Current Regulator

Setting—40-42 amperes.

To Check—Connect test meters as for voltage check (above). Operate generator at speed equivalent to 30 MPH charging battery, turn on car lights and accessories or connect load (bank of headlamp bulbs, etc.) between ammeter and battery so that generator charges at peak rate and current regulator operates. Note ammeter reading which should agree with Setting above.

To Adjust (with cover removed)—Same as for Voltage Regulator (above).

Contact Gap—.030-.033". **Spring Tension** 7-8 ozs.

Air Gap—.047-.049" with the contacts just opening (.010-.016" between contact spring and armature stop).

LIGHTING

Lighting System—Two distinct lighting systems provided, both controlled by the main lighting switch (Blackout Lighting Switch) as follows:

Blackout (1st Switch "On" Position)—Blackout Headlights, Blackout Tail Lights (right & left) and Blackout Stop Light (right side) operative. Blackout Driving Light (on left fender) operative with Blackout Driving Light Switch "on".

Service (2nd Switch "On" Position)—Service Headlights, Service Tail Light (left side) and Stop Light (left side) operative. Panel Lights operative with Panel Light Switch "on". Headlight upper and lower beams are controlled by Beam Selector Switch on toeboard.

C NTINUED N NEXT PA E

C NTINUED FROM PRECEDING PAGE

Day Driving (3rd Switch "On" Position)—Switch knob must be placed in this position to make the Service Stop Light operative for daytime driving (stop light lead taken through switch—see diagram). NOTE—Switch knob has lock button which must be pressed down to enable switch to be placed in any other position than "Off" and "Blackout."

Service Headlamps—Sealed Beam type. Headlamps are adjusted so that center of Upper Beam "hot spot" is aimed straight ahead and 7" below lamp center height at 25 feet.

Blackout Driving Light—Special shielded Sealed Beam type. This light adjusted so that center of beam "hot spot" is aimed straight ahead and 2.1" below lamp center height at 10 feet.

Switches

Blackout Lighting (Main) Switch—To remove switch, loosen setscrew in knob, unscrew knob, loosen hex. head screw at side of switch bushing on front of panel, press Blackout control button in and pull bushing off, remove mounting nut, take switch out from under panel, mark all wires before disconnecting them.

Blackout Driving Light Switch—Clum. To remove, loosen setscrew in knob, unscrew knob, remove mounting nut on front of panel, remove switch from under panel, disconnect wires.

Panel Light Switch—Clum. Removed in same manner as Blackout Driving Light Switch.

Beam Control Switch—Clum Model 9634.

Stop Light Switch—Auto-Lite No. 100810F. Hydraulic type.

Bulb Specifications

Position	Candlepower	Mazda No.
Service Headlamps	(Sealed Beam)	4031
Blackout Headlamps	3	1235①
Blackout Driving Light	(Sealed Beam)	2405S
Service Tail & Stop	21-3	1158
Panel Lights	3	63②
Blackout Stop	3	63①
Blackout Tail	3	63①

①—Replace as unit (lense, gasket, reflector, bulb).
②—To replace, pry off shield, pull light socket out of shield, remove lamp from socket. Re-install in same manner.

MISC. ELECTRICAL

LIGHTING CIRCUIT BREAKER: Mounted on back of lighting switch. Vibrating thermostatic type. Protects lighting circuits by limiting current to 30 amperes. No adjustment.

GASOLINE GAUGE & HORN CIRCUIT BREAKERS: Mounted on back of instrument panel. Vibrating thermostatic types. Protect circuits by limiting current. No adjustment.

HORN: Vibrator type. Mounted on left side of dash in engine compartment.

ENGINE REMOVAL

ENGINE REMOVAL: To remove engine from chassis as required for such service items as crankshaft and camshaft overhaul, perform the following operations in sequence:

1. Drain Cooling System. Drain cocks located at lower left corner of radiator and right front corner of cylinder block.

2. Remove Battery. Disconnect battery cables, remove battery from box on right side of engine.

3. Remove Radiator. Disconnect and remove upper and lower hoses, radiator stay rod, and hold-down nuts, lift radiator out. Do not lose radiator mounting pads. NOTE—Not necessary to remove radiator grille.

4. Remove Air Cleaner. Disconnect and remove air cleaner hose connection, remove wing nuts on mounting bracket and lift cleaner out.

CAUTION—Use care not to spill oil in cleaner.

5. Remove Starter. Disconnect cable at starter terminal. Remove two flange mounting capscrews and bolt in support bracket at commutator end, pull starter forward to clear Bendix Drive and lift out.

6. On Right Side of Engine, disconnect generator leads and ignition coil leads to distributor. Remove heat indicator bulb from cylinder head (CAUTION—Use care not to kink or break tube), disconnect engine ground strap (at right front engine mounting bracket), remove two bolts in engine mounting.

7. On Left Side of Engine, disconnect throttle and choke control rods at carburetor, and governor dash control cable at governor (if used). Disconnect and remove horn. Remove fuel tank filler cap (to relieve pressure), disconnect fuel line at fuel pump. Disconnect oil gauge lines at crankcase, remove accelerator linkage rod. Disconnect exhaust pipe at manifold. Remove two bolts in left front engine mounting.

8. Underneath Engine, disconnect rear end of engine stay cable at frame cross-member (left side), remove bell housing attaching bolts **leaving one bolt at each side to support engine weight.**

9. Remove Engine. Attach chain hoist to engine and take up on hoist just enough to support engine without binding remaining bell housing bolts, remove these bolts. Swing engine forward to withdraw clutch shaft from bushing in flywheel, lift engine out.

INSTALLATION CAUTION—Place small amount of grease in clutch shaft bushing in flywheel before installing engine.

CYLINDER HEAD

CYLINDER HEAD: Installation—Use a torque indicating wrench to tighten cylinder head stud nuts and capscrews, tighten in correct sequence.

Tightening Torque—See Tightening (Torque Wrench) Specifications below.

TIGHTENING (TORQUE WRENCH) SPECIFICATIONS

TIGHTENING TORQUES: Use a torque indicating wrench to tighten capscrews or bolt nuts retaining the parts listed below and tighten to tensions listed:

	Ft. Lbs.	In. Lbs.
Cylinder Head Capscrews	65-70	780-840
Cylinder Head Stud Nuts	60-65	720-780
Main Bearing Capscrews	65-70	780-840
Connecting Rod Bolts	50-55	600-660
Manifold Attaching Stud Nuts (Intake & Exhaust)	31-35	372-420
Spring Clip "U" Bolts	50-55	600-660
Torque Reaction Spring Bolt	60-65	720-780
Spring Pivot Bolt	27-30	324-360

ENGINE

ENGINE SPECIFICATIONS: Own Make. Four cylinder, "L" Head type. Cylinder block and crankcase cast enbloc. Cylinders offset from center-line of crankshaft toward camshaft side of engine.

Bore—3⅛" (3.125-3.127"). **Stroke**—4⅜".

Displacement—134.2 cubic inches.

Rated Horsepower (SAE)—15.63

Developed Horsepower—54 at 4000 RPM.

Compression Ratio—6.48-1 Std. Cast Iron Head.

Compression Pressure—110 lbs. at cranking speed of 185 RPM (70 lbs. minimum). All cylinders must be equal within 10 lbs.

Vacuum Reading—Steady 21-23" idling at 8 MPH.

PISTONS: Lynite Lo-Ex Aluminum Alloy, "T" Slot, Cam ground, tin-plated type with heat insulation groove above top piston ring.
Length—3¾".
Removal—Pistons and rods removed from above.
Clearance—.0205-.0225" top, .003" skirt.

Replacement Pistons: Finished pistons furnished .010", .020", .030" Oversize. CAUTION—Pistons must not be "lapped" in (will destroy tin-plating).

Fitting New Pistons: Use .003" feeler stock, ¾" wide, inserted between piston and cylinder wall on opposite side from "T" slot. Pull required to withdraw feeler must be within 5-10 lbs. at 70°F.

Installing Pistons: "T" slot toward valve (left) side of engine (opposite side from oil spray hole in connecting rod lower end).

PISTON RINGS: Two compression, one oil control ring per piston, all above pin (piston has narrow heat insulation groove above top ring groove). Oil ring groove drilled with oil drainage holes.

Ring	Width	End Gap	Side Clearance
Compression	3/32"	.008-.013"	.0005-.001"
Oil Contr.	3/16"	.008-.013"	.001-.0015"

Replacement Rings: Furnished .010", .020", .030" Oversize. See "Installing Rings" for types used.

Installing Rings: Install compression rings with mark "TOP" (on side) toward top. Rings have taper face and must be installed correctly. Top ring inner bevel edge must be up.

PISTON PIN: Diameter .8117-.8119". Length 2 25/32". Pin is locked in connecting rod by clampscrew.
NOTE—On new pistons, pin hole is .8118-.8120" in diameter and is diamond-bored and tin-plated.
Pin Fit in Piston—.0001-.0005" clearance or light thumb push fit with piston and pin at 70°F.

Replacement Pins: Furnished Standard and .001", .002", .003" Oversize.

CONNECTING ROD: Length 9.1875".
Crankpin Journal Diameter—1 15/16".
Lower Bearing—Steel-backed, babbitt-lined, replaceable type. CAUTION—Oil spray hole in upper half of bearing must line up with oil spray hole in rod.
Clearance—.0005-.0025". **Sideplay**—.005-.009".
NOTE—"Palnuts" used as locknuts on connecting rod bolts. To install palnut, after regular bolt nut tightened to 50-55 ft.lbs., turn palnut up against regular nut (flat face in), then tighten palnut ½ turn additional.

Bearing Adjustment: None (no shims). Replace bearings. Do not file connecting rods or bearing caps.

ENGINE

C NTINUED FR M PRECEDING PA E

NOTE—Replace bearings when clearance exceeds .005" or sideplay exceeds .013".

Replacement Bearings: Furnished Standard & .010", .020", .030" Undersize.

Installing Rods: Lower bearing offset. Install rods with offset (wider side) away from nearest main bearing or toward front of engine (#2, #4), toward rear (#1, #3). Oil spray hole in lower end of rod away from camshaft.

CRANKSHAFT: Three bearing type with four integral counterweights.

Journal Diameters—2.3340. (all bearings).

Bearings—Steel-backed, babbitt-lined, replaceable type. Bearing shells are dowelled in bearing caps and crankcase.

Clearance—.001-.0025" (.0005-.001" new).

NOTE—Replace bearings when clearance exceeds .006" or when endplay exceeds .018".

Bearing Adjustment: None (no shims). Replace bearings. Do not file bearing caps. *See Crankshaft Servicing data below.*

Replacement Bearings: Furnished Standard & .010", .020", .030" Undersize.

NOTE—Engine must be removed from chassis for bearing replacement and crankshaft servicing. *See Engine Removal instructions (above).*

Crankshaft Servicing: Main Bearing Replacement—Make certain that oil holes in bearings line up with oil holes in crankcase and see that bearings fit snugly on dowel pins in crankcase and bearing caps.

Rear Bearing Oil Seal—Consists of a wick type packing installed in grooves in bearing cap and crankcase. To install new packing, insert packing in groove, use round piece of wood or steel to "roll" packing into groove, working from both ends toward center. With packing firmly seated in groove, cut off ends flush with surface. NOTE—Crankshaft must be removed to install packing in upper (crankcase) half of bearing.

Rear Bearing Cap Seal—Bearing cap sealed by cylindrical rubber packing strips inserted in holes between cap and case. When installing bearing cap, coat upper face lightly with sealing compound, insert new packing strips after cap is in place. Packing strips should protrude ¼" to provide proper compression when oil pan installed. CAUTION—Do not cut off this protruding portion of the packing.

Front (Timing Cover) Oil Seal—Braided asbestos type impregnated with graphite and oil. Seal is installed in recess in inner face of timing chain cover and retained by steel retainer. To remove seal, pry out retainer and seal assembly.

CAUTION—Always use new steel retainer when installing new seal.

End Thrust: Taken by flanged faces of #1 (front) bearing. Adjustable by adding or removing shims between crankshaft sprocket thrust washer and sprocket. NOTE—Crankshaft sprocket must be removed with a gear puller in order to make endplay adjustments.

Endplay—.004-.006".

CAMSHAFT: 4 bearing. Non-adjustable chain drive.

Journal Diameters—#1, 2.188"; #2, 2¼"; #3, 2 3/16"; #4, 1¾".

Bearings—Removable steel-backed, babbitt-lined bushing (front), machined in crankcase (all others).

Clearance—.002-.0035". Service limit .006" (front), .008" (all others).

Camshaft Servicing: Removal—Drain both radiator and cylinder block, remove radiator and grille, cylinder head, manifold, valves, and valve springs. Remove oil pump, fuel pump, oil pan, crankshaft pulley (use puller), fan and governor drive belts, and fan assembly. Remove nuts on front engine support rubber insulators. Remove timing chain cover, take out camshaft sprocket mounting screws, remove sprocket and chain. Block up all valve lifters (can be tied up by string from adjusting screw to manifold mounting studs). Place jack under crankcase (use block on jack to avoid damage to pan), raise front end of engine until camshaft will clear front cross-member, pull camshaft out.

Camshaft Front Bearing—Consists of a steel-backed, babbitt-lined bushing which takes thrust. When installing this bushing, make certain oil hole lines up with drilled oil hole in crankcase, stake bearing in place to prevent turning in service.

Camshaft Thrust Plunger—Plunger and spring should be installed in camshaft hub with round end out. Stationary pin on timing chain cover must be perpendicular so as to bear on spring-loaded plunger.

End Thrust: Taken by thrust washer behind camshaft sprocket and spring loaded plunger in forward end of camshaft which bears against stationary thrust pin on chain case cover. NOTE—Make certain that plunger and spring are in place when installing chain case cover.

Timing Chain: Link-Belt two-sprocket (non-adjustable) type. Width 1". Pitch ½". Length 47 links or 23½".

Camshaft Setting: With #1 piston on top dead center, mesh chain with marks on sprockets adjacent and in line with a straightedge across the shaft centers.

NOTE—Camshaft sprocket mounting screw holes offset to insure correct position of sprocket on shaft.

VALVES:	Head Diameter	Stem Diameter	Length
Intake	1 17/32"	.373"	5¾" (overall)
Exhaust	1 15/32"	.3725"	5¾" (overall)

	Seat Angle	Lift	Stem Clearance
Intake	45°	23/64"	.0015-.00325"
Exhaust	45°	23/64"	.002 -.00375"

Valve Guides: Removable type. Remove guides from above with puller, install new guides with driver or press guides down in place to following dimensions:

Intake Guide—Top of guide 1 5/16" below top face of block. The shorter smaller-diameter section end of the guide should be up.

Exhaust Guide—Top of guide 1" below top face of block. Taper end (counter-bored end) of guide should be up.

Valve Springs: Install springs with closed-coil end up toward cylinder block. Spring free length 2½".

	Spring Pressure	Spring Length
Valve Closed	50 lbs.	2 7/64"
Valve Open	116 lbs.	1 3/4"

Valve Lifters: Mushroom type operating in reamed holes in block. Serviced by installing oversize lifters. Lifters furnished .004" Oversize.

Lifter Diameter—.6240-.6245".

Lifter Clearance—.0005-.002".

NOTE—Camshaft must be removed for lifter removal.

VALVE TIMING

Tappet Clearance: .014" All Valves, Hot or Cold.

NOTE—Tappet adjusting screws are "self-locking" type (no locknuts).

Valve Timing: See Camshaft Setting (above).

Intake Valves—Open 9° BTDC. Close 50° ALDC.

Exhaust Valves—Open 47° BLDC. Close 12° ATDC.

Valve Timing Check—Set tappet clearance #1 intake valve at .020". This valve should open with #1 piston 9° or .039" before top dead center with flywheel mark "I.O." centered in inspection hole on right front face of flywheel housing below starter. Reset tappet clearance to .014" running clearance.

LUBRICATION

Lubrication System: Pressure to crankshaft, connecting rod, and camshaft bearings and to timing chain. Oil pump mounted externally on left side of crankcase.

Crankcase Capacity—5 qts. (Dry—when filter drained or replaced), 4 qts. (refill).

Normal Oil Pressure—40-50 lbs. (20-25 lbs. actual) at normal speeds or 10 lbs. minimum idling.

NOTE—On first cars, oil pressure was 75 lbs. (40 lbs. actual) at 30 MPH.

Oil Pressure Relief Valve—Located under plug on oil pump cover. Opens at 25 lbs. (50 lbs. gauge pressure). Adjustable by adding or removing shims above spring within plug.

Oil Pump: Planetary gear type. Mounted on left hand side of crankcase.

Pump Removal—Remove oil pump cover nuts on three mounting studs, slide pump off studs. To disassemble pump, remove one screw in pump cover, lift off cover, remove idler gear and rotor disc. To remove rotor shaft assembly, file off end of pin in drive gear hub, drive pin through shaft, using a small drift, remove gear, withdraw rotor shaft assembly from housing.

Pump Installation—Turn flywheel to #1 piston firing position with flywheel mark "IGN" centered in inspection hole in right front face of flywheel housing below starter. Turn distributor shaft to #1 firing position with distributor rotor finger opposite #1 terminal in distributor cap. Hold oil pump in same relative position as when installed on engine, turn pump shaft until tongue offset is upward (widest part of shaft down) and line up gear retaining pin with right hand side of slot in pump body. Slide pump into place on mounting studs, recheck rotor position. NOTE—If distributor rotor not at #1 terminal with pump installed, remove pump, turn shaft as required, and re-install.

Oil Filter: Mounted on bracket on right side of engine. Oil Filter Element Purolator No. 26637.

CAUTION—Filter should be drained at 1000 mile intervals and filter element replaced at 6000 mile intervals for normal service.

Oil Pressure Gauge: Auto-Lite No. G-10024 or G-10017.

CONTINUED N NEXT PA E

C NTINUED FROM PRECEDIN PAGE

COOLING

Cooling System: Pressure type with pressure valve (relief valve) in filler cap.
Capacity—11 quarts.
Pressure Valve—AC No. 846709 (Radiator Filler Cap). Opens at 3¾ lbs. (3¼-4¼ lbs.).

Water Pump: Centrifugal, packless, ball bearing type.
Pump Removal—Loosen drive belt adjustment and remove belt, disconnect hose, remove pump mounting screws. Lift out pump and fan assembly.
Belt Adjustment—*See Generator Belt Adjustment.*

Thermostat: In outlet elbow on cylinder head.
Setting—Starts to open 145-155°F. Fully open 170°F.

Temperature Gauge: Auto-Lite Type H-10014 (not electric type).
See Miscellaneous Section for complete data.

CLUTCH

Atwood Model TP-2B-7-1 with Borg & Beck No. 11123 Driven Member. Single plate, dry disc type.
See Clutch Section for complete data.

Facings—One Woven, one Molded Asbestos. Inside Diameter 5⅛", Outside Diameter 7⅞". Thickness ⅛" (.125").

Adjustment: Pedal free travel ¾" (provides 1/16" clearance between release bearing and clutch release levers). To adjust, loosen locknut on clutch fork connecting cable clevis at cross-shaft connection, screw cable end out of clevis, tighten locknut.

Removal: Remove Transmission & Transfer Case Assembly (see Transmission Removal below), remove flywheel bell housing. Mark clutch pressure plate and flywheel to insure re-installation in same relative position. Take out mounting screws in clutch cover flange, turning all screws out evently to relieve spring pressure, remove clutch assembly and driven member.

TRANSMISSION

Transmission: Warner Model T84J. Three-speed type with conventional shift lever mounted on top of case. Constant-mesh, synchro-mesh, helical gears (Second & High), sliding spur gear (Low & Reverse).
See Transmission Section for complete data.

Transfer Case: Spicer Model 18. Two-speed auxiliary transmission and front-wheel drive unit mounted on rear of transmission case. Separate control levers provided for Low-High range (right hand lever), and front-wheel drive engagement (left hand lever).
See Transmission Section for complete data.

Removal: Remove transmission and transfer case as an assembly. Remove transmission floor cover, remove shift lever by unscrewing control housing cap and withdrawing lever. Remove transfer case shift lever pivot pin setscrew and lubricator fitting in right end of shaft, drive out shaft and remove shift levers. Remove exhaust pipe guard and exhaust pipe clamp on skid plate, remove skid flanges at transfer case end. Disconnect front and rear propeller shafts at transfer case universal joints, tie propeller shafts up to frame. Place support jack under engine oil pan. Disconnect speedometer cable at transfer case, remove transfer case rubber snubber bolt nut on right hand side of cross-member. Remove clevis pin in lower end of hand brake cable, remove hand brake retracting lever. Disconnect engine stay cable at cross-member, bonding strap on transmission and transfer case, and clutch pedal pull back spring. Remove nuts on engine rear support insulator studs at cross-member. Place second support jack under transmission. Remove frame-to-cross member bolts at each end and remove cross-member. CAUTION—With cross-member removed, entire engine and transmission weight will be supported on the jacks. Push transmission to right until clutch control cross-shaft can be freed from ball stud end on transfer case. Remove inspection cover on bell housing, disconnect and remove clutch fork and cable assembly. Remove four transmission mounting bolts in bell housing, slide transmission straight back until clutch shaft clears bell housing (lower jack under engine just enough so that transmission will clear floor pan), lower transmission and remove from beneath car.

Transmission Removal from Transfer Case—Drain transmission and transfer case, remove transfer case rear cover and gasket. Remove cotter pin, nut and washer on rear end of transmission main shaft, pull off main shaft gear and oil slinger. Remove control housing on top of transmission by taking out four mounting screws, remove shifter plate spring and shifter plate. Retain second speed gear by looping a piece of wire around gear and fastening wire tightly to front of transmission case. Remove transfer case mounting screws on rear of transmission, withdraw transfer case by tapping lightly on rear end of main shaft while pulling case to the rear. CAUTION—Do not lose transmission interlock plunger located in groove between transmission and transfer cases.

UNIVERSALS

Front & Rear Drive Propeller Shaft Joints: Spicer Model 1261 (transmission end), Model 1268 (axle end). Needle roller bearing types.
See Universals Section for complete data.

Front Axle Shaft Joint: Bendix or Rzeppa Constant-velocity type. One joint used at outer end of each shaft (within steering knuckle housing).
See Universals Section for complete data.

FRONT AXLE

Spicer Model 25. Full floating, hypoid gear type. Differential assembly (ring & pinion gear assembly) is identical with Rear Axle and is serviced in the same manner.
See Rear Axle Section for complete data.
Ratio—4.88-1 Std.
Backlash—.005-.007". Shim adjustment.

Removal: Support front end of car securely with a chain hoist, remove front wheels. Disconnect front shock absorbers, front brake line (at frame connection), and steering linkage (at idler lever on frame front cross-member). Disconnect propeller shaft by removing universal joint "U" bolts at axle end of shaft. Place support jacks under axle housing so that springs relieved of weight, remove nuts on spring center clip "U" bolts, remove bolts at rear ends of springs and lower the springs, remove axle assembly from beneath the car.

Axle Shaft & Universal Joint Assy Removal: Remove wheel, hub cap, axle shaft cotter pin, nut, and washer. Remove drive flange capscrews and washers, remove flange with a puller. Bend lip on bearing nut lockwasher out and remove locknut, lockwasher, adjusting nut, and bearing lockwasher. Remove wheel hub and bearing assembly (CAUTION—use care not to damage oil seal). Disconnect brake tube, take out mounting screws on backing plate, remove backing plate and wheel spindle. Pull axle shaft and universal assembly out of axle housing.

INSTALLATION CAUTION—Adjust front wheel bearings and bleed brake line when installation completed.

Wheel Bearing Adjustment: Jack up the front wheel, remove the hub cap, then remove axle shaft nut, washer, and driving flange (use puller to remove flange). Bend lip of adjusting nut lockwasher back to free nut, remove locknut. Tighten adjusting nut until wheel binds (turn wheel while tightening nut), back off nut 1/6 turn or until wheel rotates freely. Replace lockwasher and locknut, tighten locknut securely and bend ear of lockwasher up against nut to prevent loosening in service. Check adjustment of bearings by grasping front and rear of tire and shaking wheels from side to side. A barely perceptible shake should be felt in the bearings. Install flange shims and flange. On cars with Bendix Universals, check axle shaft endplay (below) before completing assembly. NOTE—On cars with Rzeppa Universals, disregard endplay note below and install shim pack of .060" under flange.

Axle Shaft Endplay Check (With Bendix Universal Joints)—Tighten the flange nut (do not install lockwasher), swing wheel to maximum left or right position with punchmark on end of axle shaft straight up or down. Back off flange nut until clearance between nut and flange is .050" (measure with feeler gauge). Tap end of shaft with a soft hammer (shaft will move in an amount equal to the endplay). Recheck clearance between nut and flange with a feeler gauge. **Subtract this measured clearance from the original .050" clearance.** If resulting figure is less than .015", add shims to shim pack under flange, if figure is more than 035", remove shims from shim pack under flange. With correct thickness of shim pack under flange, install axle shaft lockwasher, nut, and cotter pin.

REAR AXLE

Spicer Model 23-2. Full floating, hypoid gear type with Hotchkiss Drive.
See Rear Axle Section for complete data.
Ratio—4.88-1 Std.
Backlash—.005-.007". Shim adjustment.

Removal: Support rear end of car securely with a chain hoist and support placed under frame ahead of rear springs, remove rear wheels. Disconnect rear shock absorbers, rear brake line (at frame connection), and propeller shaft by removing universal joint "U" bolts at axle end of shaft. Place support jacks under axle housing so that springs relieved of weight, remove nuts on spring center clip "U" bolts, remove pivot bolts at front end of springs and lower the springs, remove axle assembly from beneath the car.

INSTALLATION CAUTION—Bleed brake lines after axle re-installed and lines connected.

Axle Shaft Removal: Remove six capscrews and washers holding axle shaft driving flange on wheel hub, thread two of these screws into "extra" holes (between regular mounting screw holes) and turn

screws up evenly to pull axle shaft out, withdraw axle shaft from housing.

Wheel Bearing Adjustment: Remove the six axle shaft flange screws, turn two of these screws into "extra" holes in flange to start shaft, withdraw axle shaft. Adjust bearings in same manner as front wheels (above). When re-installing axle shaft, make certain that gasket installed under flange.

NOTE—Disregard the axle Shaft Endplay Check instructions required for front wheels only.

SHOCK ABSORBERS

Monroe. Direct acting, double acting, hydraulic, adjustable type with rubber-bushed end fittings. *See Shock Absorber Section for complete data.*

Adjustment: Remove mounting bolt at lower end, fully collapse shock absorber by pressing up on lower end until adjusting key within unit engages slot in adjusting plate (can be determined by feel), turn unit in clockwise direction until limit of adjustment is reached (full range of adjustment is four turns), back off adjustment by turning unit counter-clockwise **exactly two turns** for standard setting. CAUTION—See that adjusting key does not slip out of engagement with slot while making adjustment.

Refilling: Requires dismantling of unit. *See Shock Absorber article in Shock Absorber Section for data.*

FRONT SUSPENSION

Front Axle—Spicer Model 25. Special full-floating driving unit. *See Front Axle data (above).*

Kingpin Inclination—7½° crosswise.

Caster—3°. No adjustment. If caster incorrect, check entire front end and correct by installing new parts.

Camber—1½°. No adjustment. Correct by installing new parts. Do not attempt to correct camber by cold bending or heating of parts.

Toe In—3/64-3/32" (1/32" each wheel). To adjust, first set each front wheel straight ahead (see Note below), then set toe in by shortening right hand tie rod only. This procedure necessary to maintain correct position of steering idler arm.

NOTE—To set front wheels straight ahead, first set tie rod end of steering bell crank (idler lever on frame front cross-member) exactly at right angles to front axle. Check front wheels by using a straight edge or sighting along rear and front wheels. Adjust each tie rod (loosen end clamp bolts and turn rod) until front wheels are exactly straight ahead. Then make toe in adjustment as directed above. Tie rod lengths between ball end centers should be 17 11/32" (left), 24¼" (right).

Steering Geometry—With inner wheel turned 20°, outer wheel should be turned exactly 19°45'.

Steering Knuckle Bearings: The Steering Knuckle is mounted on two "stub" kingpins with Timken roller bearings in ball ends of axle housing. Bearings are adjustable by adding or removing shims located under kingpin bearing caps (upper cap integral with steering arm). Bearings must be disassembled for adjustment as follows:

Disassembly—With Axle Shaft & Universal Joint Assembly removed (see Front Axle data above). Remove eight screws holding oil seal retainers in place on inner face of knuckle support, remove oil seal retainer halves. Remove four nuts and lockwashers on lower bearing cap, remove bearing cap and bearing adjusting shims (under cap). Remove four nuts and lockwashers on upper bearing cap (steering arm), remove brake hose shield, steering arm, and bearing adjusting shims (under steering arm). Remove steering knuckle (CAUTION—Do not allow lower bearing cone and roller assembly to fall when knuckle is pulled off).

Bearing Adjustment—Install steering knuckle on axle housing (reverse order of disassembly directions) **without the oil seal** placing one each of the following shims under both the upper and lower bearing caps—.003", .005", .010", .030" (total shim thickness at each end .048"), tighten bearing cap stud nuts securely. Then check bearing tension by hooking spring scale in tie rod hole at end of steering arm and noting pull required to turn steering knuckle on axle end. This pull or bearing tension should be 25-35 in. lbs. with oil seals out. Adjust by adding or removing shims under bearing caps. CAUTION—Total shim thickness under upper and lower bearing caps must be equal. Shims furnished in thicknesses of .003", .005", .010", .030" for this purpose.

Oil Seal Replacement—Felt type mounted in metal retainers bolted on inner face of steering knuckle. When replacing oil seal, make certain that spherical surface of axle housing is not scored or scratched (smooth down any roughness with emery cloth), bolt seal retainer halves on housing using lockwashers under mounting screw heads, make certain that felts have good fit at point where upper and lower halves join.

STEERING GEAR

Ross Model T-12. Cam-and-Twin Lever type. *See Steering Gear Section for complete data.*

BRAKES

Service Brakes: Bendix (Lockheed) Four wheel, Hydraulic, Double anchor type. Hand lever applies independent brake on drive shaft at rear of transfer case.

See Brake Section for complete data.

Drum Diameter—9".

Lining—Width 1¾". Thickness 3/16". Length per shoe 10 7/32" (forward shoes), 6 39/64" (rear shoes). NOTE—Manufacturer recommends use of new or replacement shoe assemblies with factory-installed linings.

Clearance—.008" toe, .005" heel, for each shoe.

Hand Brake: Mechanical type. External, contracting band on drum mounted on driveshaft at rear of transfer case.

Drum Diameter—8".

Lining—Woven type. Width 2". Thickness 5/32". Length 18 9/16".

Adjustment—Place hand brake lever under instrument panel in fully released position, check brake lever to make certain that cable is free and released. Remove brake band anchor adjusting screw lockwire, turn adjusting screw until .005" feeler is just snug between lining and drum at this point, reinstall adjusting screw lockwire. Tighten adjusting nut (at lower end of large adjusting bolt) until brake band is tight on drum, loosen bracket bolt locknut and back off inner bracket bolt nut two turns, tighten locknut. Back off adjusting nut until brake band has approximately .010" clearance on drum at each end.

HOOD LOCK: Hood is Alligator type. To raise hood, pull out on control button under left side of instrument panel, press down on safety catch tab beside latch under front edge of hood.

Hood Removal & Replacement—*See "Hood Assembly" in Frazer Shop Notes.*

MODEL IDENTIFICATION

STARTING SERIAL NUMBERS

	Model	Serial Numbers
1947 Kaiser	K-100	K-100-001001 Up
1947 Kaiser Custom	K-101	K-101-2000001 Up
1948 Kaiser	K-481	K-481-001001 Up
1948 Kaiser Custom	K-482	K-482-001001 Up

SERIAL NUMBER: On left front door hinge post.

Body Number Note—Stamped on plate on left side of cowl or on right front face of dash in engine compartment.

ENGINE NUMBER: Stamped on pad on left front upper corner of engine block and on Engine Nameplate on left side of crankcase. NOTE—Numeral following Engine Model Designation (first part of Engine Number) indicates Engine Plant as follows: 4—Detroit, 8—Muskegon.

►**Engine Number Symbol (Special Bore & Bearing Sizes)** *See "Original Bore & Pistons" & "Original Bearing Sizes" in Frazer Shop Notes.* NOTE—Symbol consists of 1 or 2 letters following engine number.

TUNE-UP

COMPRESSION PRESSURE: 115-125 lbs. (for 6.86-1 Heads), 120-130 lbs. (7.3-1 Heads) at cranking speed of 140 RPM. (engine hot, all plugs out, throttle wide open). All cylinders must be equal within 10 lbs.

►*NOTE—7.3-1 Heads marked by "73" stamped on head directly above engine number pad on block.*

VACUUM READING: 17½" steady idling at 550 RPM.

FIRING ORDER: 1-5-3-6-2-4.

SPARK PLUG GAPS: .032"

Plug Type—Auto-Lite A-5 (normal driving), A-7 (for short runs or to correct hard-starting in cold climates). 14 mm. metric type.

IGNITION: *See Coil, Condenser, and Distributor.*

Breaker Gap—.020" (.018-.022").
Cam Angle or Dwell—38° closed, 22° open.
Breaker Arm Spring Tension—17-20 ozs.
Automatic & Vacuum Advance—*See Distributor.*

IGNITION TIMING: TDC. (at Top Dead Center).

Timing Procedure—*See Ignition Timing.*

Timing Mark—Mark "DC" on flywheel (first cars), on vibration dampener (beginning Eng. No. 17160).

Octane Selector Setting—Set for slight ping when accelerating with wide open throttle.

CARBURETION: *See Carburetor & Carb. Equipment.*

Idle Setting—¾-1¼ turn open—one screw (WA1 Carb.), 1¼-2¼ turns open—one screw (W1 Carb.), 1-1¾ turns open—2 screws (WCD Carb.). Turn screws out for richer mixture.

Idle Speed—550 RPM.

Float Level (WA1 Carb.)—5/16" (610S), ⅜" (622S with first Float and Inlet Valve), ½" (622SA, SB & 622S with late type Float and Inlet Valve). Measure from top of projection on bowl cover to top of soldered seam on free end of float with bowl cover assembly inverted.

Float Level (W1)—½" from top of float at free end to gasket seat on cover.

Float Level (WCD Carb.)—9/64" (685S with first type Inlet Valve), 1/16" (685S & 685SA with later type Inlet Valve) from top of each float to gasket seat on cover with valve closed (bowl cover assembly inverted).

Accelerating Pump—Lower Hole (med.) Normal.
NOTE—Pump on 574S has no seasonal adjustment.

Fuel Pump Pressure: 3½-4½ lbs. (for pump mounted at rear of engine), 3-4¼ lbs. (pump mounted at front of engine).

►*CAUTION—Pump pressure must not exceed 4½ lbs.*

►**VALVE TAPPET CLEARANCE:** *CAUTION—Two settings used.*

Before Eng. No. 10769—.010" Int., .014" Exh. Cold.

After Eng. No. 10769—.014" All Valves, Cold.

NOTE—Remove splash shield under right front fender for convenience in adjusting valves.

Valve Timing Check—*See Valve Timing.*

STARTING: *See Battery, Starter, Generator, Regulator.*

IGNITION

IGNITION SWITCH: Douglas or Mitchellock. Kaiser Frazer No. 201354 (Before Kaiser No. K-100-65372 & Kaiser Custom No. K-101-2005405), No. 203186 (After above numbers).

Lock Cylinder—Kaiser-Frazer No. 201898 (with key).

COIL: Auto-Lite Model IG-4093. Mounted on left side of cylinder head opposite distributor.

Ignition Current—3 amperes idling, 5 amperes at 6.4 volts (stopped).

CONDENSER: Auto-Lite No. IG-2671K.

Capacity—.20-.25 microfarad.

DISTRIBUTOR: Auto-Lite Model IGS-4211. Full automatic advance type with auxiliary vacuum spark control and octane selector adjustment.

Breaker Gap—.020" (.018-.022").

Cam Angle—38° closed, 22° open.

Breaker Arm Spring Tension—17-20 ozs.

Rotation—Counter-clockwise viewed from above.

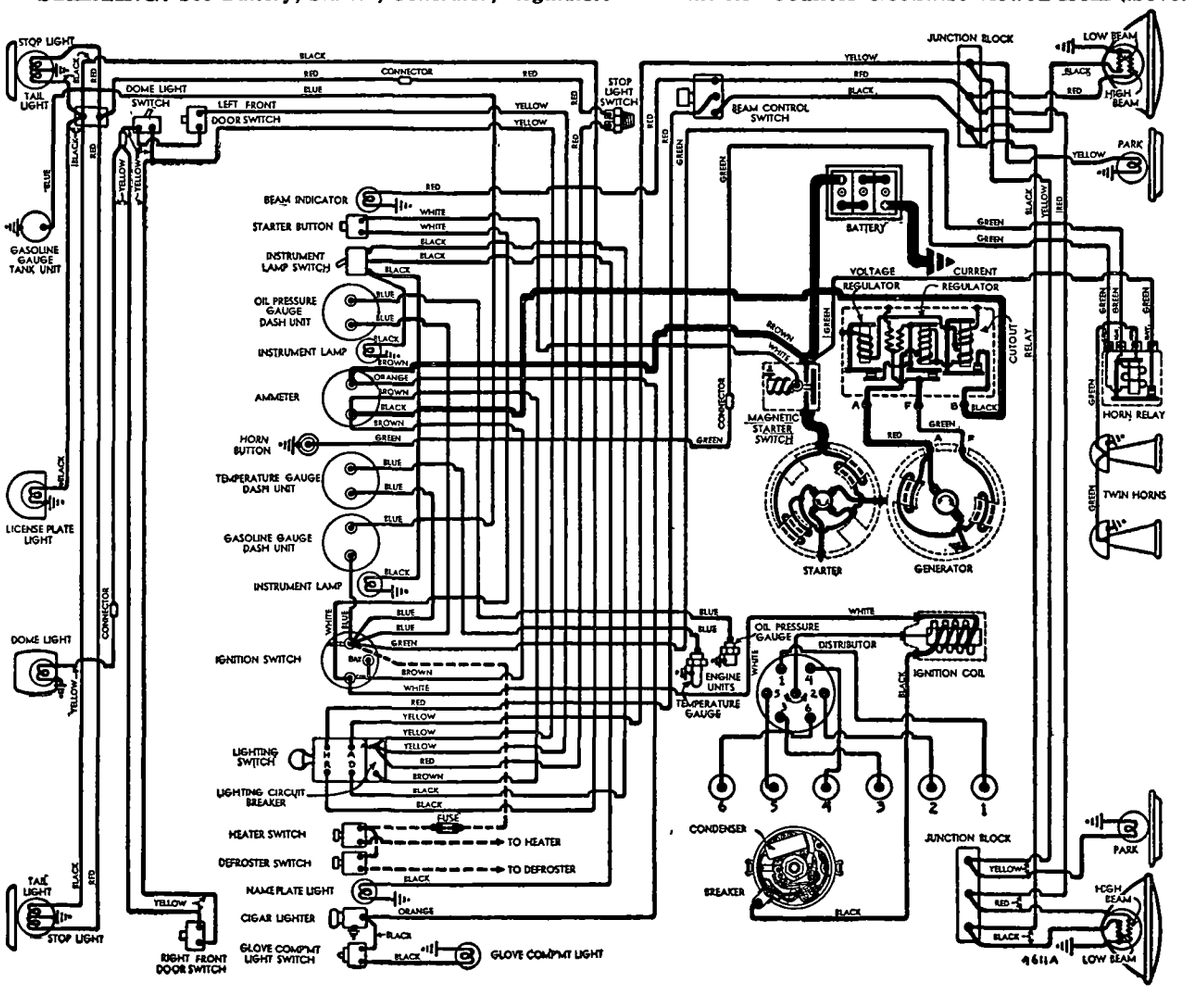

Automatic Advance

Distributor Degrees	RPM.	Engine Degrees	R.P.M.
Start	350	0	700
1	365	2	730
3	400	6	800
7	1150	14	2300
10	1700	20	3400

Octane Selector—Manual adjustment at distributor providing 10° advance and retard. See Ignition Timing.

Vacuum Spark Control: Auto-Lite (integral type). Linked directly to breaker plate. Provides additional advance at speeds above idling except when engine accelerated or operated with wide open throttle when spark retarded by return spring in unit.

Vacuum Advance

Distr. Degrees	Eng. Degrees	Vacuum (" of HG)
Start	0°	8"
2°	4°	9¼"
4°	8°	11¼"
6°	12°	12¾"
7.5°	15°	14"

Distributor Removal: On cylinder head between #4 and #5 cylinders. To remove, disconnect vacuum line, take out hold-down screw in advance arm.

IGNITION TIMING

Std. Setting ..... At TDC.

TIMING MARK NOTE—Timing mark located on flywheel (before Eng. No. 17160), on vibration dampener (Eng. No. 17160 up). Consists of "DC" mark or "0" mark at top dead center with 1° graduations before and after this point.

Timing (with Timing Light C-693)—Mark "DC" or "0" top dead center mark on flywheel (before Eng. No. 17160), on vibration dampener (Eng. No. 17160 Up) with chalk or white paint. Connect timing light to #1 spark plug terminal and direct light at timing mark. Idle engine at **400 RPM.** (back off throttle stopscrew to decrease normal idle speed of 550 RPM.). Loosen hold-down screw in advance arm, center screw in slot, tighten hold-down screw. Loosen clampscrew in end of arm under distributor, rotate distributor until timing mark appears in line with pointer, tighten clampscrew. Check octane selector setting.

►CAUTION—Reset engine idling speed at 550 RPM.

Octane Selector Setting—Set for slight ping when accelerating with wide-open throttle. To adjust, loosen hold-down screw in advance arm, rotate distributor clockwise (if no ping noted), counter-clockwise (if ping too severe).

CARBURETOR

CARTER WA-1

Carter WA1 Type 622SB superseding 622S & 622SA (All Models). 1¼" Single Barrel, Downdraft type with Fast Idle and Climatic Control.

►NOTE—622S carburetor can be converted to 622SA by installing new Float and Inlet Valve assembly and changing float level.

See Carburetor Section for complete data.

Settings (Idle Setting, Float Level, and Accelerating Pump): *See Tune-Up data.*

Metering Rods & Jets—*See Carter Jet Table in Carburetor Section.*

Fast Idle (WA1 Carburetors): Carter Single Barrel *See Carburetion Equipment Section for data.*

Setting—⅝" clearance between choke valve and air horn (Gauge T109-85) with throttl valve closed and stopscrew against (not on) first step f fast idle cam. Adjust by bending connector link at lower offset (Tool T109-41).

Automatic Choke (WA1 Carburetors): Carter Climatic Control (Single Carburetor Type).

See Carburetion Equipment Section for complete data.

Setting—Centered (coil housing at index mark).

CARBURETOR

CARTER WCD

Carter WCD Type 685S superseded by 685SA (Optl. on Custom K-482). 1¼" Dual (double barrel), Downdraft type with Fast Idle and Climatic Control.

►NOTE—685S carburetor can be converted to 685SA by installing new intake Needle & Valve Assembly and resetting float level to 685SA specifications.

See Carburetor Section for complete data.

Settings (Idle Setting, Float Level, and Accelerating Pump): *See Tune-Up data.*

Metering Rods & Jets—*See Carter Jet Table in Carburetor Section.*

Fast Idle (WCD Carburetors): Carter Dual (WCD) *See Carburetion Equipment Section for complete data.*

Setting—.016" throttle opening with choke valve held closed and throttle lever stopscrew backed off (adjust by turning fast idle screw in or out).

Automatic Choke (WCD Carburetors): Carter Climatic Control (Dual Carburetor Type).

See Carburetion Equipment Section for data.

Setting—Centered (coil housing at index mark).

CARBURETOR

CARTER W1

Carter W1 Type 574S. 1¼" Single Barrel, downdraft type with manual choke.

NOTE—This carburetor used for part production starting with following numbers: **K-100 51361, K-101 2000001.**

See Carburetor Section for complete data.

Settings (Idle Setting, Float Level, and Accelerating Pump): *See Tune-Up data.*

Metering Rods & Jets—*See Carter Jet Table in Carburetor Section.*

CARB. EQUIPMENT

Air Cleaner: AC Oil-bath type. Kaiser-Frazer No. 200618 (All Models with WA1 or W1 Carburetors), No. 203372 (K-482 Custom with WCD Carburetor).

Servicing—Empty and clean reservoir, wash cleaner in kerosene, refill to indicator line with approx. 1 pint SAE No. 50 engine oil (No. 20 for below freezing tem.) at 1000 mile intervals or when engine tuned up (more often if required by operating conditions).

Fuel Pump (Early type—mounted at rear of engine): AC No. 1539057, K-F No. 200281. Diaphragm type.

►*CAUTION—Install this pump with rocker arm OVER camshaft eccentric.*

See Carburetion Equipment Section for data.

Pressure—3½-4½ lbs. maximum.

Fuel Pump (Later type—mounted at front of engine): AC No. 1539073 (K-F No. 201509) Diaphragm type fuel pump or AC No. 1539074 (K-F No. 202319) combination Fuel-and-Vacuum Pump.

Replacement Pump—AC No. 574 (for 1539073), No. 582 (for 1539074 fuel-and-vacuum pump).

►*CAUTION—Install these pumps with rocker arms UNDER camshaft eccentric.*

See Carburetion Equipment Section for data.

Pressure—3-4¼ lbs.

Gasoline Gauge: King-Seeley electric type.

Dash Unit—K-S No. 41405, Kaiser-Frazer No. 201545 (First Type—Ivory on Green), K-S No. 42015, Kaiser-Frazer No. 202786 (Later Type—White on Beige).

Tank Unit—K-S No. 7916, Kaiser-Frazer No. 201546.

See Carburetion Equipment Section for complete data.

BATTERY

Auto-Lite Type 1M-100D. 6 Volt, 15 Plate, 105 Ampere Hour capacity (20 hour rate).

Grounded Terminal—Positive (+) terminal grounded at left front engine support. Engine ground cable connected at same point.

Location—In engine compt. on left side.

STARTER

Auto-Lite Model MAW-4043. Armature MAW-2128.

Drive—Barrel type Bendix Drive No. A1792.

Rotation—Counter-clockwise at commutator end.

Brush Spring Tension—42-53 ozs. (new brushes).

Performance Data

Torque	R.P.M.	Volts	Amperes
0 ft. lbs.	4900	5.5	65
2.75 "	1480	5.0	200
5.75 "	820	4.5	300
8.50 "	400	4.0	400
11.55 "	110	3.5	500
18.0 "	Lock	4.0	670

Starting Switch: Auto-Lite Model SS-4001 magnetic switch. Mounted on starter and controlled by push-button on instrument panel.

See Electrical Equipment Section for complete data.

Removal: Flange mounted on left front face of flywheel housing. To remove, disconnect cables, take out flange mounting screws.

GENERATOR

Auto-Lite Model GDZ-4818A. Armature GDZ-2006F. Two brush type with voltage and current regulation.

Maximum Charging Rate—35 amperes, 8.0 volts, 1900 RPM. or approximately 20 MPH.

Charging Rate Adjustment—None (see Regulator).

Performance Data

Cold Amperes	Volts	R.P.M.	Hot Amperes	Volts	R.P.M.
0	6.4	925	0	6.4	1000
5	6.65	1060	5	6.65	1150
10	6.85	1200	10	6.85	1290
15	7.05	1340	15	7.05	1430
20	7.3	1480	20	7.3	1590
25	7.55	1620	25	7.55	1750
30	7.8	1760	30	7.8	1980
35①	8.0	1900	35	8.0	2250

①—Current Regulator setting. See Regulator data.

Rotation—Counter-clockwise at commutator end.

Brush Spring Tension—35-53 ozs. (new brushes).

Field Current—1.60-1.78 amperes at 6.0 volts.

Motoring Current—4.16-4.60 amperes at 6.0 volts.

Removal: Pivot mounting at left front of engine. To remove, disconnect leads, take out clamp bolt and pivot bolts. NOTE—Remove battery for access.

Belt Adjustment: ⅛" belt deflection midway between generator and fan pulleys (adjust by pulling generator out with 15 lb. force with all bolts loose).

REGULATOR

Auto-Lite Model VRP-4004F-2. Vibrating type Voltage and current regulators (with Cutout Relay) in case on left fender shield.

See Electrical Equipment Section for complete data.

NOTE—Regulator cover sealed. Warranty void if seals broken.

C NTINUED N NEXT PAGE

C NTINUED FR M PRECEDIN PAGE

Cutout Relay

Cuts In—6.4-7.0 volts (set to 6.4-6.6 volts).
Cuts Out—4.1-4.8 volts (approx. 4-6 amps. disch.).
Contact Gap—.015" minimum.
Air Gap—.031-.034" with contacts open (check at hinge end of core).

Voltage Regulator

Setting—7.2-7.5 volts at 70°F. See Electrical Equipment Section for settings at other temperatures.
Checking (without breaking seal) & Adjustment—*See Electrical Equipment Section.*
Contact Gap—.012" min. (armature against stop pin).
Air Gap—.048-.052" with contacts just opening.

Current Regulator

Setting—34-36 amperes (marked '35' on the cover).
Checking (without breaking seal) & Adjustment—*See Electrical Equipment Section.*
Contact Gap & Air Gap—Same as Voltage Regulator.

LIGHTING

Headlamps: Hall "Sealed Beam" type. Upper and lower beams controlled by beam selector switch.
See Electrical Equipment Section for complete data.
Adjustment—Aim upper beam straight ahead (hot spot center 3" below lamp center height at 25 ft.).
Beam Indicator—Red jewel on left side of instrument panel (above starter button). Lighted when upper (country beams) in use.
Direction Signal (Custom Models): Mitchell (United Specialties) type.
See Electrical Equipment Section for complete data.
Direction Indicators—Right and Left indicator lights above instrument dials. Lighted when direction signal on same side of car is operating.

Switches

Lighting—Kaiser-Frazer No. 200819.
Beam Selector—Kaiser-Frazer No. 201605.
Direction Signal—Kaiser-Frazer No. 202692.
Instrument—Kaiser-Frazer No. 200821 (Before Kaiser No. K100-46044), No. 202715 (Kaiser after No. K100-46044 & all Custom cars).

Bulb Specifications

Position	Candlepower	Mazda No.
Headlamps	Sealed Beam	4030
Parking	3	63
Beam Ind., Clock	1	51
Instrument, Nameplate	1½	55
Stop & Tail	21-3	1154
Rear License	3	63
Dome, Glove Compt.	21	1129

MISC. ELECTRICAL

LIGHTING CIRCUIT BREAKER: Thermostatic type. On back of lighting switch.
FUSES: Clock—2 ampere. In clock lead.
Direction Signal—9 ampere. In flasher lead under instrument panel to left of steering column.
HORNS: Auto-Lite. Model HT-4021 or HT-4023 (Low Note), HT-4022 or HT-4024 (High Note). Twin horns.
Horn Relay: Auto-Lite Model HRL-4101. Relay connected through ignition switch (horns operative only with ignition switch "on").
Contacts Close—1.5-3.0 volts (seal to core with 4.0 volts maximum).
Contacts Open—.5 volt min. (open from seal).
Contact Gap—.026". **Air Gap**—.016-.020" (armature air gap with contacts closed but not sealed), .015-.018" (between armature leg and yoke with armature sealed to core).

ENGINE

ENGINE SPECIFICATIONS: Own (Continental). Six Cylinder, "L" head type.
Bore—3 5/16". **Stroke**—4⅜".
Displacement—226.2 cu. ins. **Rated HP.**—26.3.
Developed Horsepower—100 at 3600 RPM.
Compression Ratio—6.86-1 (First Cars), 7.3-1 (All Cars after Eng. No. 304305—Detroit, 66125—Muskegon).
►*NOTE—7.3 Heads marked by "73" stamped on left front directly above engine number on block.*
Compression & Vacuum Reading—*See Tune Up data.*
ORIGINAL BORE & BEARING SIZES: *See Frazer Shop Notes.*
TIGHTENING TORQUES: *See Frazer Shop Notes.*
CYLINDER HEAD INSTALLATION: *See Frazer Shop Notes.*
ENGINE REMOVAL: *See Frazer Shop Notes.*
PISTONS: Two types used. Aluminum alloy, Cam-ground, Tin-plated, strut type with split skirt, or T-slot type. Length 3 9/16" (both types).
NOTE—Pistons can be identified by drilled oil drain holes in fourth ring groove and strut within skirt at each pin boss (Strut Type), or by horizontal slot in fourth ring groove and short vertical slot on one side of skirt (T-slot Type).
►*CAUTION—Piston weight different for each type.*
Weight—15.58 ozs. (strut type), 14.28 ozs. (T-slot).
Clearance—.0255-.0315" (Top Land). See Fitting new pistons.
Removal—Pistons and rods removed from above.
Fitting New Pistons: Use .0015" feeler stock ½" wide inserted on side opposite slot. Pull to withdraw feeler must be 5-10 lbs.
Replacement Pistons: *See Frazer Shop Notes.*
Installing Pistons: Slot in skirt toward left or away from camshaft (all types). NOTE—On pistons marked by arrow on head, arrow toward front of car.
PISTON RINGS: Two compression, two slotted oil rings, all above pin. Third ring groove drilled for oil drainage (all types), fourth groove drilled (strut type pistons), slotted (T-slot pistons).

Ring	Width	End Gap	Side Clearanec
Compr. (#1)	.0925-.0935"	.008-.016"	.0025-.004"
Compr. (#2)	.0925-.0935"	.008-.016"	.0015-.0035"
Oil (#3, 4)	.1550-.1545"	.008-.016"	.001-.0025"

Installing Rings: Side marked "TOP" (compression rings) upward.
Replacement Rings: *See Frazer Shop Notes.*
PISTON PIN: Diameter—55/64". **Length**—2 13/16". Floating type, with lock ring at each end.
Pin Fit in Piston—Tight fit (—.0003" clearance), or push fit with piston heated to 212°F. (heat piston in water at 212°F. to install new pins).
Pin Fit in Rod Bushing: +.0003" clearance. When installing oversize pins or new bushings, ream bushings for this clearance with DD-82-2 Reamer (used also to ream piston pin bore in piston).
Replacement Pins: Std. size and .003", .005" Oversize.
CONNECTING ROD: Length—7". **Weight**—29.6 ozs.
Crankpin Journal Diameter—2.0619-2.0627".
►*CAUTION—Special bearing sizes used in some engines. See "Original Bearing Sizes" in Frazer Shop Notes.*
Lower Bearing—Removable steel-backed, babbitt-lined type. No shims.
Clearance—.0005-.0023". **Sideplay**—.006-.010".
Bearing Adjustment: None. Replace bearings. Do not file rods or bearing caps.
Replacement Bearings: Furnished Std. Size and .001", .002", .010", .012" Undersize.
Installing Rods: Rods and bearing caps marked. Install with marks together and toward camshaft in same order as when removed. Oil spray hole in lower end of rod toward camshaft. NOTE—Lower bearings offset with narrow side of rod toward nearest main bearing (#1, 3, 5 toward front; #2, 4, 6 toward rear of engine).
CRANKSHAFT: Four bearing, counterweighted type with vibration dampener on forward end.
Journal Diameters—2⅜" all bearings.
►*CAUTION—Special bearing sizes used in some engines. See "Original Bearing Sizes" in Frazer Shop Notes.*
Bearings—Removable, steel-backed babbitt-lined.
Clearance—.0015-.002".
Bearing Adjustment: None (no shims). Replace bearings. Do not file bearing caps. Upper main bearing shells can be "rotated" out by installing tool KF-8 in crankshaft journal hole (lug on tool engages edge of bearing when crankshaft rotated).
Filler Block (Front & Rear) Removal & Installation *See "Crankshaft & Main Bearings" in Frazer Shop Notes.*
Replacement Bearings: Furnished Std. size and .002", .004", 010" Undersize. NOTE—Two types of #1 bearings (flanged & unflanged). See Endplay data.
End Thrust: Taken by front (#1) bearing (special thrustwasher used with unflanged bearings). Controlled by shims installed between bearing journal and thrustwasher. **Endplay**—.004-.006".
Endplay Adjustment—*See "Crankshaft & Main Bearings" in Frazer Shop Notes.*
CAMSHAFT: Four bearing. Two-sprocket chain drive. NOTE—Two different camshafts used due to relocation of fuel pump. Camshaft No. 200113 (first cars—pump at rear), No. 203017 (later cars—pump at front).
Journal Diameters—#1, 1 7/8"; #2, 1 13/16"; #3, 1 3/4"; #4, 1 1/4".
Bearings—Steel-backed, babbitted bushings.
Clearance—.002-.004".
Bearing Adjustment: None. Replace bushings with camshaft removed.
End Thrust: Taken by thrust plate on front of engine Between front bearing journal and sprocket.
Camshaft Removal: *See "Camshaft & Bearings" in Frazer Shop Notes.*
Timing Chain: Non-adjustable type. Width 1". Pitch .500", Length 23" or 46 links.
Camshaft Setting: Mesh chain with 9 links (or 10 link pins inclusive of pins opposite marks) between marks on sprockets with #6 piston at top dead center on compression stroke.

VALVES	Head Diameter	Stem Diameter	Length
Intake	1 33/64"	.3414-.3406"	5 3/16"
Exhaust	1 21/64"	.3395-.3387"	5 3/16"

	Seat Angle	Lift	Stem Clearance
Intake	30°	.3481"	.0008-.0026"
Exhaust	45°	.3315"	.0032-.0050"

NOTE—Valves with drilled stem (for lock pin) used on first cars, valves with grooved stem (for split type locks) used on later cars.
Valve Guides: Pressed in block. Replace when stem clearance exceeds maximum (above). Ream new guides for correct clearance using Reamer C-249.
Valve Guide Installation—Use Driver DD-849. Drive old guide down and out, drive new guide down into place (same height as old guide with mark on driver stem in line with top face of block). NOTE—Tapered end of guide must be upward.
Valve Springs: Check spring with tester C-647. Pressure should be 101±3 lbs. at 1⅜". Spring free length 1 15/16".

	Spring Pressure	Length
Valve Closed	51 lbs.	1 43/64"
Valve Open	113 lbs.	1 5/16"

Valve Lifters: Barrel type. NOTE—Lifters can be removed (some engines only) without disturbing cylinder head. *See "Valve System" in Frazer Shop Notes.*
Clearance—.0005-.0018". With correct clearance, lifter should rotate in bore with a slight drag.
Replacement Lifters—Furnished Std. size and .0005", .001", .0015", .002" Oversize.

VALVE TIMING

►**Tappet Clearance:** *CAUTION—Two settings used:*
Before Eng. No. 10769—.010" Int., .014" Exh. Cold.
After Eng. No. 10769—.014" All Valves, Cold.

Valve Timing: See Camshaft Setting above.
Intake Valves—Open 10° BTDC. Close 60° ALDC.
Exhaust Valves—Open 55° BLDC. Close 10° ATDC.
Valve Timing Check—With tappet clearance set at .014" (running clearance), #1 exhaust valve should close with piston 10° or .045" after top dead center with the ten-degree mark after the dead center mark "DC" at indicator in flywheel housing inspection hole (before Eng. No. 17160). Beginning with Eng. No. 17160, marks located on dampener.

LUBRICATION

Lubrication System: Pressure to crankshaft, connecting rod, camshaft bearings, exhaust valve lifters, timing chain. Oil pump located in oil pan.
Crankcase Capacity—5 qts. (refill), 5½ (dry).
Normal Oil Pressure—35 lbs., 2000 RPM., 30 MPH.
Oil Pressure Regulator—Under plug on right side of crankcase between #4 & #5 cylinders. Opens at 35 lbs. Adjustable by adding or removing washer, No. 200272, between end of spring and plug.
Oil Pan Removal: *See Frazer Shop Notes.*
Crankcase Ventilation: Filter element in oil filler cap (air intake). Outlet pipe located on front valve cover plate on right side of engine.
Oil Pump: Gear Type. In crankcase.
Oil Pump Servicing—*See Frazer Shop Notes.*
Oil Filter: Replace cartridge at 10,000 mile intervals or more often if required by operating conditions.
Oil Pressure Gauge: King-Seeley electric type.
Dash Unit—K-S No. 41410, Kaiser-Frazer No. 201539 (First Type—Ivory on Green), K-S No. 42020, Kaiser-Frazer No. 202787 (Later Type—White on Beige).
Engine Unit—K-S No. 40767, Kaiser-Frazer No. 201540.
See Miscellaneous Section for complete data.

COOLING

Cooling System: Sealed system (relief valve in filler cap) with positive circulation and thermostatic control. NOTE—Radiator changed—see Radiator.
Capacity (First 22" Radiator)—15 qts. (14 qts. at driving level). **(Later 17" Radiator)** 13½ qts. (13 qts. at driving level).
Pressure Valve—AC. No. 846740 (Radiator Filler Cap). Opens at 3¾ lbs. (3¼-4¼ lbs.).
Radiator: Two types used as follows:
First Cars—No. 200445 (22" wide). Service by installing later type (No. 202906) and installing Radiator Shroud Side Panel Extension No. 203100 (two required), using No. 576 screws (10 required).
Later Cars—Radiator No. 202906 (17" wide).
Radiator Removal—*See Frazer Shop Notes.*
Water Pump: Centrifugal type with ball bearing shaft.
See Water Pump Section for complete data.
Belt Adjustment—*See Generator Belt Adjustment.*
Thermostat: Kaiser-Frazer No. 200160 (Std.), No. 202349 (for Permanent Anti-freeze only). In water outlet eblow on cylinder head.
Setting (Std. type)—Begins to open at 148-155°F.
Temperature Gauge: King-Seeley electric type.
Dash Unit—K-S No. 41415, Kaiser-Frazer No. 201543 (First Type—Ivory on Green), K-S No. 42025, Kaiser-Frazer 42025 (Later—White on Beige).
Engine Unit—K-S 40380, Kaiser-Frazer 201550.
See Miscellaneous Section for complete data.

CLUTCH

Borg & Beck.....**Model 9A7**
Auburn (Some Cars).....**Model 9251-15**
Clutch Identification—Types can be identified by number of pressure plate springs—3 (Auburn), 9 (Borg & Beck—cover also stamped "951").
See Clutch Section for complete data.
Facings (Borg & Beck)—Woven asbestos, 2 required. I.D. 6". O.D. 9¼". Thickness ⅛".
Facings (Auburn)—Moulded metallic or Raybestos, 2 required. I.D. 6". O.D. 9¼. Thickness .135".
Pedal Adjustment: Pedal free travel ¾-1". To adjust, position nut on pedal assist spring link (at rear end of spring) so that it is lined up with spring adjusting gauge, KF-10, installed on spring.
Removal: Remove transmission (see Transmission Removal below), remove clutch housing underpan, disconnect clutch pedal cross-shaft from pedal linkage. Install Clutch Plate Aligning Arbor, C-360, to hold clutch parts in alignment, take out mounting screws in clutch cover flange (rotate flywheel so that all screws accessible through pan opening). Remove aligning arbor, remove clutch cover assembly and driven member through underpan opening.

TRANSMISSION

Warner Model AS11-T86E. All helical gear type. Constant-mesh, synchro-mesh (Second and High), sliding gear (Low and Reverse).
See Transmission Section for complete data.
Transmission Control: Remote control type with gearshift lever mounted on steering column.
See Transmission Section for complete data.
Removal: Disconnect front propeller shaft at front universal joint (take out bolts in transmission companion flange), move shaft out of the way. Disconnect speedometer drive cable and transmission control levers at transmission case, free parking brake cable support bracket from frame crossmember. Remove four bolts mounting engine support on frame cross-member (support comes out with transmission). Loosen all four bolts mounting transmission on clutch housing, remove two lower bolts only (CAUTION—two upper bolts must support transmission until ready for removal). Remove flywheel housing underpan, raise rear end of engine (place jack under flywheel, use wood block between jack and flywheel) for sufficient clearance for transmission removal. Remove the two upper transmission mounting bolts, move transmission back until clear of clutch, slide tranmission clear of cross-member and remove from beneath car.

UNIVERSALS

Detroit Series 4200. Ball-and-trunnion type or **Mechanics.** Roller bearing type. Three used with intermediate universal at propeller shaft support
See Universals Section for complete data.
Propeller Shaft & Support Bearing: Two shafts used:
Propeller Shaft & Support Bearing Servicing—*See "Propeller Shaft" in Frazer Shop Notes.*

REAR AXLE

Spicer (Salisbury) Model 41-2. Semi-floating, Hypoid Gear type with Hotchkiss Drive.
See Rear Axle Section for complete data.
Ratio—4.09-1 Std., 3.73-1 Special.
Backlash—.003-.006". Shim adjustment.
Removal: Hoist rear end of car and place supports under frame. Remove rear wheels and drums (use Puller C-319). Disconnect propeller shaft at rear universal flange, disconnect hydraulic brake line at connector on axle housing, disconnect rear shock absorbers and sway eliminator links (when used) at spring seat, disconnect parking brake cables. Disconnect both springs at front hanger and rear shackle, remove axle and spring assembly from beneath car. NOTE—Axle can be removed without disturbing springs by taking out spring "U" bolts.
Axle Shaft Removal—Remove rear wheel and drum using puller C-319. Disconnect hydraulic brake line at backing plate and brake cable. Remove outer oil seal and backing plate (CAUTION—do not lose adjusting shims between backing plate and housing flange). Pull axle shaft and bearing assembly out using Puller KF-15.
Wheel Bearing Adjustment: Adjust endplay by adding or removing shims located between backing plate and axle housing flange (shims .003", .005", .010", .030" thick). Make certain that shim thickness at right wheel is .060" (to center thrust block on differential pinion), then adjust endplay at left wheel. **Endplay**—.001-.006".

SHOCK ABSORBERS

Monroe. Direct acting, hydraulic type. Serviced by replacement (mountings serviced separately).
See Shock Absorber Section for complete data.

	Front	Rear
Kaiser-Frazer No. (Std.)	201490	201493
Kaiser-Frazer No. (Exp.)	202864	202866

FRONT SUSPENSION

Front Suspension: Independent, linked parallelogram type with coil springs.
See Front Suspension Section for complete data.
Kingpin Inclination—4¾—5¾° crosswise.
Caster—0° preferred (—1° to +1°).
Camber—¼° preferred (0° to ¾°).
Toe-In—1/16". Adjust by turning both tie rods
Steering Geometry (Toe-out): Inner wheel 23°. Outer wheel 20°. No adjustment. Check for bent steering arms.

STEERING GEAR

Gemmer Model 305. Worm-and-Roller type with "push-pull" adjustments.
NOTE—Both "2-tooth Roller" and "3-tooth Roller" types used. Both gears are similar design.
See Steering Gear Section for complete data.

BRAKES

Service Brakes: Bendix (Lockheed) Hydraulic type with floating self-centering shoes (no anchor pin adjustment). Hand lever applies rear wheel service brakes.
See Brake Section for complete data.
Drums—Composite (cast-iron & steel). Diameter 11"
Clearance—.008" at heel and toe of each shoe.
Lining—Molded type. Width 2". Thickness 13/64". Length 12¼" (forward shoe—all wheels), 10 1/32" (rear shoe—all wheels).
Hand Brake: See Service brake data (above).

MODEL IDENTIFICATION

SERIAL NUMBER: On top left front corner of engine block below head. First number 2,210,001.

ENGINE NUMBER: Same as Serial Number (above).

TUNE-UP

COMPRESSION:—Ratio—6.25-1 Std. 5.75-1 Optl.
Pressure—160 lbs. at 1000 R.P.M. or approximately 105-110 lbs. at cranking speed.

VACUUM READING:—Gauge should show steady reading of 20-21" with engine idling at 6 M.P.H.

FIRING ORDER: 1-6-2-5-8-3-7-4. See diagram.

SPARK PLUG GAP: .025-.030".
Plug Type—AC K-7, 14 mm. Metric.

IGNITION: See Coil, Condenser, and Distributor.
Breaker Gap (663-J)—.016" Cam Angle 31° (closed).
Automatic Advance—14° max. at 1850 RPM (distr.).
Vacuum Advance (663-J)—9° distr. with 15-18" vacuum.

IGNITION TIMING: See Ignition Timing.
Std. Setting—8° BTDC. with harmonic balancer mark "IGA" at indicator on front of engine.

CARBURETION: See Carburetor & Carb. Equipment.
Idle Setting—Both idle screws midway between "miss" and "roll" points. Idle speed 6 MPH.
Float Level—Fuel level 15/32" below top of bowl.
Accelerating Pump—No adjustment.

Fuel Pump Pressure: 4½ lbs. maximum.

VALVES: See Valve Timing.
Tappet Clearance—.006" Int., .009" Exh., Hot.

STARTING: See Battery, Starter, Generator, Regulator.

IGNITION

Ignition Switch:—Delco-Remy Model 431-L. Switch and cable asembly. Connected to coil by armored cable.
Ignition Lock—Briggs & Stratton.

COIL: Delco-Remy Model 539-C. Mounted on dash.
Ignition Current—2.2 amperes idling, 4.4 stopped.

CONDENSER: Delco-Remy No. 1839231.
Capacity—.20-.25 microfarad.

DISTRIBUTOR Delco-Remy 663-J. Single breaker, 8 lobe cam, full automatic advance type with auxiliary vacuum spark control and manual adjustment at distributor. No synchronization required.
Breaker Gap—Set at .016". Limits .012-.018".
Cam Angle or Dwell—31° (closed), 14° open).
Breaker Arm Spring Tension—19-23 ounces.

Automatic Advance

Distributor Degrees	R.P.M.	Engine Degrees	R.P.M.
Start	500	1	1000
5.75	1300	11	2600
14	1850	28	3700

Vacuum Spark Control Model 680-Z. Integral type. Mounted on housing and linked directly to breaker plate. Provides additional advance at speeds above idling except when engine is accelerated or operated with wide open throttle when spark is retarded by return spring in unit.

Vacuum Advance

Engine Degrees	Vacuum (" of HG)
Start	8-10"
18° Max.	15-18"

Distributor Removal:—Mounted on cylinder head. To remove, disconnect vacuum line, take out hold-down screw in advance arm.

IGNITION TIMING

IGNITION TIMING:—Setting for all engines as follows. See Manual Adjustment Section below.

	Flywheel Degrees	Piston Position
All engines	8° BTDC	.0264" BTDC

To Set Timing (Using Synchroscope)—Recommended by manufacturer. Clip Synchroscope lead to #1 spark plug and direct light on harmonic balancer at front of engine. Idle engine, loosen hold-down screw in advance arm, rotate distributor until timing mark 'IG/A' which is 8° before top dead center mark 'C.1/6', lines up with pointer on chain case, tighten hold-down screw.

Timing (Without Synchroscope)—With #1 piston on compression, turn engine over until piston is 8° (or .0264") before top dead center, stop when 'IG/A' mark on harmonic balancer lines up with pointer on chain case, losen hold-down screw, rotate distributor until contacts begin to open, tighten hold-down screw.

Manual Adjustment—With ignition set as above, slight 'ping' should be noticeable when engine is accelerated with wide open throttle at speeds below 15 M.P.H. If 'ping' is too severe, loosen hold-down screw in advance arm, rotate distributor one graduation on scale clockwise to retard spark, repeat test. Adjustment permits 10° advance or retard from center '0' position.

NOTE—Check engine for faulty spark plugs, excessive carbon deposits or localized 'hot spots' before changing manual adjustment.

CARBURETOR

CARBURETION:—Carburetor—Stromberg Model EE-15. 1" dual downdraft type.

For complete data, refer to Carburetor Index.

NOTE—Do not adjust carburetor until engine is warmed up so that choke valve is wide open and engine idling at hot or slow idling speed.

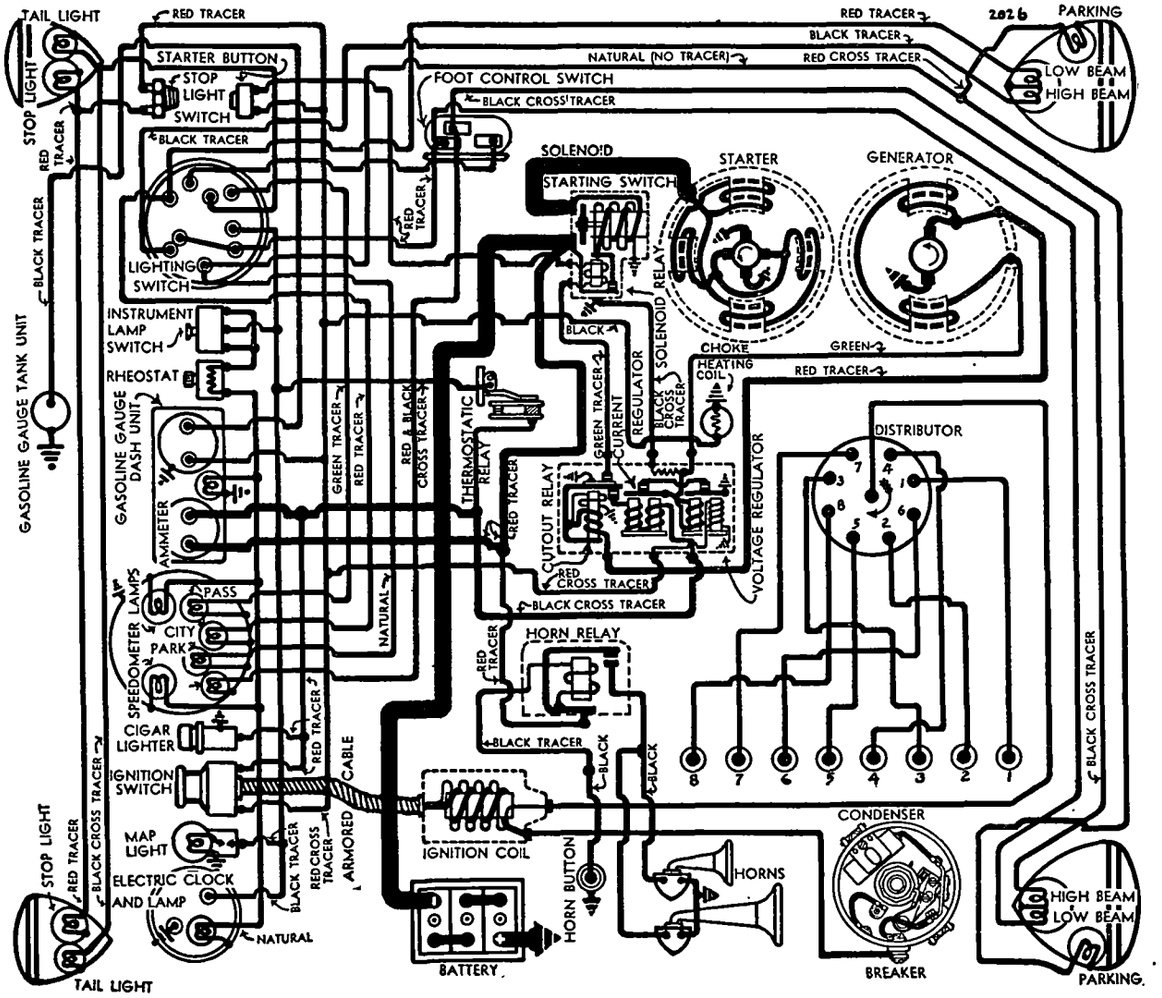

Idle Adjustment—Set throttle stopscrew so that idling speed is 6 M.P.H. Turn each idle adjusting screw in until engine begins to lag or miss, then turn each out until engine begins to roll, finally turn screws in slowly until engine fires smoothly. Readjust throttle stopscrew for correct idling speed.
Accelerating Pump Setting—Not adjustable.

Fast Idle:—Integral with carburetor. See article on Fast Idle and Automatic Choke as used on EE-15 Stromberg carburetors.
For complete data, refer to Carburetion Equip. Index.

Automatic Choke:—Triple Range Automatic and manual choke control.
For complete data, refer to Carburetion Equip. Index.

CARB. EQUIPMENT

Air Cleaner:—A.C. #1525600 oil-wetted type standard, #1525979 oil-bath type heavy duty optional.
NOTE—Smaller main metering jet must be used in carburetor when heavy duty oil-bath type cleaner used. See Stromberg Jet Specifications in Carburetion Section.

Fuel Pump: AC Type I, No. 1522248 (fuel & vacuum).
For complete data, refer to Carburetion Equip. Index.

Gasoline Gauge:—AC. Electric type. #1515303 (dash unit), #1515428 (tank unit).
For complete data, refer to Carburetion Equip. Index.

BATTERY

BATTERY:—Delco, Type 17-K. 6 volt, 17 plate, 110 ampere hour capacity (20 hour rate).
Starting Capacity—131 amperes for 20 minutes.
Zero Capacity—300 amperes for 4.4 minutes.
Grounded Terminal—Positive (+) terminal.
Location—Under right hand front seat.

STARTER

Delco-Remy Model 727-N. Armature No. 823881.
Drive—Overrunning clutch and manual pinion shift operated by solenoid switch.
Rotation—Counter-clockwise at commutator end.
Brush Spring Tension—24-28 ounces each.

Performance Data

Torque	R.P.M.	Volts	Amperes
0 ft. lbs.	5500	5.0	65
15 "	Lock	3.0	600

Removal:—Starter flange mounted on left front face of flywheel housing. To remove, take out flange mounting screws.

Starting Switch:—Solenoid switch Type 1514. Push-button 1405 on instrument panel. Solenoid is con trolled through relay by push button on instrument board. Operative only with ignition "on".
For complete data, refer to Electrical Equipment Index.

GENERATOR

Delco-Remy Model 961-D. Armature No. 1857866. Straight shunt (two brush) type with external voltage and current regulation. Ventilated by fan on drive pulley.

Charging Rate Adjustment—No adjustment at generator. Charging rate controlled by Voltage Regulator and maximum output controlled by Current Regulator. See Regulator Section following.

Maximum Charging Rate—20 amperes (cold) with discharged battery as indicated on test ammeter connected in charging line at 'BAT' terminal on control unit. Decreases as battery comes up on charge. Generator output constant at all speeds above 1550 R.P.M. or aproximately 20 M.P.H.

Performance Data—Generator Cold

Amperes	Volts	R.P.M.
22	8.0	1550

Rotation—Counter-clockwise at commutator end.
Brush Spring Tension—22-26 ounces each.
Field Current—1.7-1.9 amperes at 6 volts.

Removal:—Pivot mounted at left front of engine with fan belt drive. To remove, take out two pivot bolts and one clamp bolt.

Belt Adjustment:—Loosen generator pivot bolts and clamp bolt, pull generator out until belt deflection midway between fan and generator pulleys is ⅞-1" (measured from straightedge with ⅞" projection at center laid along belt).

REGULATOR

Delco-Remy Model 5559. Double Core Type Voltage & Current Regulator (With 'IGN' Terminal). Cutout Relay and vibrating Voltage & Current Regulators in case on dash.
For complete data, refer to Electrical Equipment Index.
NOTE—Units are sealed. Performance can be checked as directed below without breaking seals. Seals must be broken and cover removed (voiding warranty) to make adjustments.

Cutout Relay

Cuts In—6.9-7.6 volts, 12 M.P.H.
Cuts Out—3 ampere max. discharge at 6.3 volts.
Contact Gap—.018-.025".
Air Gap—.018-.022" with contacts closed.

Voltage Regulator

Setting—7.55-7.85 volts at 72° F., 7.45-7.55 volts at 150° F. Regulator is over-compensated for temperature and must be checked at these points.

To Check—Disconnect lead at 'IGN' terminal on regulator case, connect jumper between 'IGN' and 'BAT' terminals, connect test ammeter in charging line at 'BAT' terminal, connect voltmeter between 'IGN' terminal and ground. Operate generator at 2800-3200 R.P.M., adjust charging rate to 8-10 amperes, note voltmeter reading. Voltage should agree with setting given above.

To Adjust—Change regulator spring tension slightly by bending spring hanger at lower end of armature spring.
NOTE—Do not operate generator on open-circuit at any time. All Voltage Regulator readings must be taken with cover on unit and setting should be checked by decreasing speed until Cutout Relay contacts open, and then increasing speed to original point.
Contact Gap—.015-.025".
Contact Spring Tension—3.5 ozs. minimum.
Air Gap—.060-.070" between armature and core with armature down so that fibre bumper just touches stop, .007-.010" between fibre bumper and stop with armature up.

Current Regulator

Setting—20-22 amperes.
To Check—Connect ammeter in charging line at 'BAT' terminal on regulator, discconect lead n 'IGN' terminal (to eliminate voltage regulator action). Turn on lights, perate generator and increase speed until current regulator begins to operate and output remains constant. Ammeter reading should agree with setting given above.
To Adjust—Change regulator spring tension slightly by bending spring hanger at lower end of armature spring slightly.
NOTE—Generator voltage must not be allowed to exceed 8.5 volts with Voltage Regulator shorted out.
Contact Gap—.015-.025".
Contact Spring Tension—3.5 ozs. minimum.
Air Gap—.070-.080" between armature and core with armature down so that fibre bumper just touches stop, .007-.010" between fibre bumper and stop with armature up.

LIGHTING

LIGHTING:—Headlamps—Guide Multi-beam, Pre-focused, Cross-beam type with special non-interchangeable lenses. Headlamps aimed straight-ahead with lenses removed. Asymetrical passing beam (upper beam left hand headlamp, lower beam right hand headlamp), controlled by foot selector switch with lighting switch in 'Country Driving' position.

Headlamp Beam Indicators—Consist of four bulbs in lower half of speedometer which illuminate markers as follows:
City—Lower beam both headlamps.
Drive—Upper beam both headlamps.
Pass—Asymetrical passing beam.
Park—Parking bulbs in headlamps.

Switches

Lighting—Delco-Remy Model 487-P (L. H. S. R.), 487-N (R.H.S.R.), 487-R (L.H. or R.H.S.R.).
Foot Selector—Delco-Remy Model 471-Z, U (RHD).
Instrument Lamp—Delco-Remy Model 1764.
Stop Lamp—Hydraulic type on distributor at rear of brake master cylinder.

Bulb Specifications

Position	Candlepower	Mazda No.
Headlamp (Right)	50-32	2530-L
Headlamp (Left)	32-32	2330-L
Instrmt., Map, Qtr., Step, Tail	3	63
Parking, Clock	1.5	55
Beam Indicators	1	51
Stop, Dome	15	87

NOTE—Headlamp bulbs are Pre-focused, 'Long-life' type. In all states where 50 cp. bulbs are prohibited, the 32-32 cp. 2330-L bulb is used in both headlamps.

MISC. ELECTRICAL

THERMOSTATIC RELAY:—Model 411-A. Contacts remain closed with current of 25 amperes but open within one minute with load of 38 amperes. Non-adjustable.

HORNS:—Klaxon Model K-33-D, Type 1951 (low note), 1952 (high note). Vibrator type, twin horns with blended tone operated by horn relay.

Horn Type	Current at 6 volts	Air Gap
1951	12-14	.045-.050"
1952	11-13	.036-.040"

Horn Relay: Delco-Remy Model 266-T or 266-TK.
Contacts Close—.25 ampere at 2 volts min.
Current Draw—.8 ampere.
Contact Gap—.015-.025". **Spring Tension**—6-8 zs.
Air Gap—.012-.017" with contacts closed.

CONTINUED ON NEXT PA E

CONTINUED FR M PRECEDING PAGE

ENGINE

ENGINE SPECIFICATIONS:—8 cylinder, 'L' head.

Bore—3". **Stroke**—4⅜".

Displacement—248 cubic inches.

Rated Horsepower—28.8.

Developed Horsep wer—105 at 3600 R.P.M. (Std. 6.25-1 head).

Compression Ratio—6.25-1 Std. cast-iron head.

NOTE—Shims for reducing compression ratio to 5.75-1 available for special operating conditions.

Compression Pressure—160 lbs. at 1000 R.P.M. or approximately 105-110 lbs. at cranking speed for std. 6.25-1 head.

Vacuum Reading—Gauge should show steady reading of 20-21" with engine idling at 6 M.P.H.

PISTONS:—Lynite, Lo-Ex aluminum alloy, "T" slot, Cam ground type with anodized finish (special hard oxide formed on bearing surface). Pistons cannot be ground. **Length**—3 11/16". **Weight**—12.128 ozs.

Removal—Pistons and rods removed from below.

Clearance—Top .015". Bottom of Skirt .0011-.0015". See Fitting New Pistons.

Replacement Pistons:—Finished anodized pistons furnished in standard (2.9982-3.0002") and .003" (3.0012-3.0032"), .005" (3.0032-3.0052"), .010" (3.0082-3.0102"), .015" (3.0142-3.0152") oversizes. Cylinder bores should be finished with a 500 grit wet stone.

NOTE—Cylinder bores held within .002" limits. Maximum cylinder bore out-of-round .0005".

Fitting New Pistons:—Check piston with micrometer gauge at vertical slot 1¼" below top of head and ½" above lower edge of skirt. Using ⅜-½" feeler gauges inserted between piston and cylinder wall on side pposite slot to check clearance, piston should drop of its own weight with .0015" feeler and should hold its own weight with .002" feeler.

Installing Pistons:—Slot should be toward left or away from camshaft

PISTON RINGS:—Two compression, two oil control rings per piston, all above pin. Lower ring grooves drilled radially with oil drain holes.

NOTE—A narow heat deflector groove located above top compression groove. No ring fitted in this groove.

Ring	Width	End Gap	Side Clear.
Comp. (all)	⅛"	.007-.012"	.0015-.0028"
Oil Cont (#3)	⅛"	.007-.015"	.0013-.0026"
Oil Cont. (#4)	5/32"	.007-.015"	.0013-.0026"

NOTE—Worn limits on all rings .025" (End gap) and .004" (Side Clearance).

PISTON PIN:—Diameter 55/64". Length 2 11/16". Pin is locked in one piston boss by locking screw. Split-type bushing used in pin hole in rod. See Note below.

Pin Fit in Piston—.0001" clearance or free fit (no play) at room temperature 70° F. (free end), .0003" press fit (locking pin end).

Pin Fit in Rod Bushing—.0002-.0008" (new), .0015" maximum (worn).

Removal:—Remove lockscrew, place piston in boiling water for one minute, then push pin out by hand from locking screw side (to install, proceed as mentioned, except that the pin is pushed in from the opposite direction).

NOTE—In removing and installing split-type bushing an arbor press and special tool kit (Tool No. HM-250) are required.

CONNECTING ROD:—Weight 32.336 ozs. Length 9".

Crankpin Journal Diameter—2¼".

Lower Bearing—Removable steel-backed, babbitt-lined type. No shims.

Clearance—.001-.0025" (new), .006" max. (worn). Sideplay .003-.006".

Bearing Adjustment:—None (no shims). Replace bearings. Do not file rods or caps.

Installing Rods:—Oil hole in lower bearing upper half must be toward right or camshaft side on all rods.

CRANKSHAFT—5 bearing. Integral counterweights.

Journal Diameters—#1, 2⅜"; #2, 2 9/16"; #3, 2⅝"; #4, 2 11/16"; #5, 2¾".

NOTE—Journal out-of-round .002" maximum.

Bearing Type—Removable steel-backed, babbitt-lined shells. New bearings need no line-reaming.

Clearance—.002" (new), .004" (worn).

Bearing Adjustment:—None (no shims). Replace bearings. Do not file bearing caps. Upper halves of bearings can be removed and installed by rotating crankshaft with 'T' shaped cotter pin installed in oil passage.

NOTE—When reinstalling rear main bearing cap use new wooden plugs in grooves.

End Thrust:—Taken by flange on front (#1) bearing and steel washer behind timing sprocket. Endplay .001-.004" (new), .010 max. (worn).

CAMSHAFT:—6 bearing. Non-adjustable chain drive.

Journal Diameters—#1, 2.3095-2.3100"; #2, 2.2470-2.2475"; #3, 2.1845-2.1850"; #4, 2.1220-2.1225"; #5, 2.0595-2.0600"; #6, 1.8095-1.8100".

Bearing Type—Removable bronze bushings.

Clearance—.002-.004" (new), .005" (worn limit).

End Thrust:—Taken by spring-loaded plunger or thrust button in forward end of camshaft. No end-play permissible.

Timing Chain:—Whitney #CL-205. Width 1¼". Pitch ½". Length 23" or 46 links.

Camshaft Setting:—Sprockets are marked. Mesh chain with sprockets turned so that 'O' marks are adjacent and in line with a straightedge across the shaft centers.

VALVES:—	Head Diam.	Stem Diam.	Length
Intake	1.562"	.3415-.3425"	5 9/32"
Exhaust	1.421"	.3405-.3415"	5 9/32"

	Seat Angle	Lift	Stem Clearance
Intake	30°	5/16"	.006" (worn limit)
Exhaust	45°	5/16"	.005" (worn limit)

Valve Guides:—Removable. Pressed in block with long stepped end down and finish reamed to provide clearance of .001-.002" Int., .001-.003" Exh.

Valve Springs:—Install springs with close coils below. Free spring length 2 9"16".

	Spring Pressure	Length
Valve Closed	40-46 lbs.	2¼"
Valve Open	112-120 lbs.	1 15/16"

Valve Lifters:—Mushroom type. Clearance in Lifter Guide .0003-.0008" (new), .005" (worn).

VALVE TIMING

Tappet Clearance—.006" Int., .009" Exh. Hot.

Valve Timing:—See Camshaft Setting above.

Intake Valves—Open 6° ATDC. Close 37° ALDC.

Exhaust Valves—Open 34° BLDC. Close 5° ATDC.

To Check Valve Timing—No. 1 intake valve pens with piston on top dead center with .0118" tappet clearance.

LUBRICATION

LUBRICATION:—Pressure system from oil pump in crankcase through main oil channel in right hand crankcase wall.

Oil Pump:—Gear type located in crankcase. Ignition timing not disturbed by oil pump removal.

Oil Pump Drive Clearances—Drive gear endplay .003-.010" (new), .015" (worn limit). Drive gear backlash must not exceed .018". Clearance between bushing and drive shaft .001-.0025" (new), .010" (worn limit).

Oil Pump Gear Clearances—Clearance between pump gears and pump housing .0025-.0085" (new), .010" (worn limit). Pump gear endplay .0025-.0055" (new), .015" (worn limit).

Normal Oil Pressure:—15 lbs. idling, 25 lbs. at 60 M.P.H.

Oil Pressure Regulator:—Operates at 25 lbs. Mounted on oil pump. Not adjustable.

Crankcase Capacity:—7 qts. (refill).

COOLING

COOLING SYSTEM:—Water Pump. Centrifugal type. Belt-driven in tandem with generator.

See Water Pump Section for complete data.

Thermostat: Harrison, By-pass type. In cylinder head water outlet.

Setting—Two types available as follows:

Standard: Starts to open 140-145°F. Fully open 170°F.

High Reading (for use with Heaters): Starts to open 160-165°F. Fully open 185°F.

CLUTCH

CLUTCH:—Borg & Beck Model 10A4 with Long Driven Member (10CF-CI). Single plate dry disc type.

See Clutch Section for complete data.

Facings—Moulded type, 2 required. Inside Diam. 6". Outside Diam. 10". Thickness .137".

Adjustment—Free movement of clutch pedal should be ⅞-1⅛". Adjust by loosening locknut and turning stopscrew on auxiliary cross shaft. Clearance between pedal and underside of toeboard should be ⅜-⅝". Adjust by changing length of clutch release rod. Free rod at front end, turn rod in or out. Pedal should touch toeboard when clutch fully released. Adjust clutch release rod (as above) if necessary.

Removal—Disconnect front universal joint, remove transmission, drop clutch housing pan, remove clutch release yoke retaining screw, prick punch clutch cover, spring pressure plate and flywheel (install in same position to maintain balance), take out clutch mounting bolts, turning all bolts out evenly to release spring tension. Rem ve clutch from below.

TRANSMISSION

TRANSMISSION:—Own Make. Constant-mesh helical gear (second), synchro-mesh (second and high), sliding helical gear (low and reverse).

See Transmission Section for complete data.

Removal: Disconnect front universal and remove from shaft. Disconnect speedometer cable. Take out transmission mounting capscrews, pull transmission straight back and remove from car.

NOTE—Keep transmission in high gear or install brace across face of case to hold clutch connection in position, preventing high-speed synchronizing drum from pulling out of splines in main shaft.

UNIVERSALS

UNIVERSAL JOINTS:—Mechanics Model 3-C. Needle bearing type, 2 used.

See Universals Section for complete data.

REAR AXLE

Own Make—Semi-floating, spiral bevel gear type with Hotchkiss drive.

See Rear Axle Section for complete data.

NOTE—Manufacturer recommends Differential Carrier Assembly be returned to factory for servicing.

Ratio—Standard 4.55-1. Optional 4.10-1.
NOTE—Ratio stamped on bottom of differential carrier. Can be read from beneath car.
Backlash—.004-.008". Screw adjustment.

Removal:—Disconnect drive shaft at rear universal, remove axle shafts (see below), remove capscrews on differential carrier flange, pull carrier assembly out without disturbing axle housing.

Axle Shaft Removal—Jack up car, remove rear wheels, pull wheel hub and brake drum assembly, disconnect brake line and remove backing plates (bleed brake line when re-installed). Use tool J-838, pull shaft and bearing assembly out.

Wheel Bearing Adjustment:—None (sealed type).

SHOCK ABSORBERS

Delco. Double acting hydraulic type (front & rear).

See Shock Absorber Section for complete data.

FRONT SUSPENSION

Front Suspension:—Independent, linked parallelogram type with coil springs.

See Front Suspension Section for complete data.

Kingpin Inclination—4°51' crosswise.
Caster—1½-2°.
Camber—¼-1° with car weight on wheels.
Toe In—0-1/16".

Steering Geometry—Inner wheel turned 21¾-23¼°, outer wheel 20°. Check tie rod ends and kingpins for looseness.

STEERING GEAR

Steering Gear: Saginaw Model. Worm-and-Double roller type with center steering.

See Steering Gear Section for complete data.

BRAKES

BRAKES:—Bendix Hydraulic, single anchor type. Hand lever applies rear wheel service brakes. See article in Brake Section for complete data.

See Brake Section for complete data.

Wheel Cylinders—Diameters: front 1 1/16", rear 15/16". No part of assembly is interchangeable between front and rear wheels.

Drum Diameter—11.995-12.005". Out-of-round .007" maximum. Run out (installed) .010" maximum.

Lining—Primary (front) shoe moulded. Secondary (rear) shoe woven. Length front wheel (front shoe 10⅛", rear shoe 13"), rear wheel (each shoe 13"). Width 2". Thickness 3/16". Length per wheel 23⅛" (front), 26" (rear).

Clearance—.010" between lining and drum.

Hand Brake Adjustment:—See Service Brake.

ENGINE HOOD & SIDE PANEL REMOVAL:—*See Cadillac Special Shop Notes for complete instructions.*

MODEL IDENTIFICATION

SERIAL NUMBER: First No. 2,230,001 (1937), 2,270,001 (1938). Stamped on crankcase (parallel to dash) behind left cylinder bank (visible from left side with engine hood up) and on left frame side member in rear of front engine support on 1938 cars.

ENGINE NUMBER: Same as Serial Number. Stamped on crankcase (parallel to dash) behind left cylinder bank and on left frame side member in rear of front engine support.

TUNE-UP

COMPRESSION:—**Ratio**—6.25-1 Std., 5.75-1 Optl. **Pressure**—155 lbs. at 1000 R.P.M. or approximately 105-110 lbs. at cranking speed.

VACUUM READING:—Gauge should show steady reading of 20-21" with engine idling at 6 M.P.H.

FIRING ORDER: 1-8-7-3-6-5-4-2. See diagram for cylinder numbering and spark plug cable connections.

SPARK PLUGS: AC No. 45. 14 mm. Metric type. **Gaps**—.025-.027"

IGNITION: See Coil, Condenser, and Distributor. **Breaker Gap**—.015" **Cam Angle** 31° (closed). **Automatic Advance**—12° max. at 2000 RPM (Distr.).

IGNITION TIMING: See Ignition Timing. **Std. Setting**—5° BTDC. with mark "IGA" on crankshaft pulley at indicator on front of engine.

CARBURETION: See Carburetor & Carb. Equipment. **Idle Setting (Stromberg Carb.)**—Both idle screws midway between "miss" and "roll" points. Idle speed 6 MPH. **Idle Setting (Carter Carb.)**—Both idle screws ¾-1¼ (374-S), ¼-1 (392-S) turn open. Idle speed 6 MPH. **Float Level (Stromberg Carb.)**—Fuel level ⅝" below top edge of bowl. **Float Level (Carter Carb.)**—13/64" (374-S), 3/16" (392-S) from gasket seat on cover to top of float. **Accelerating Pump (Stromberg Carb.)**—Inner hole (min. stroke)—Summer, Outer hole (max)—Winter. **Accelerating Pump (Carter Carb.)**—Inner hole—Normal. Outer hole extreme winter temperatures. **Fuel Pump Pressure:** 4½ lbs. maximum.

VALVES: See Valve Timing. **Tappet Clearance**—None in service (hydraulic type take-up used).

STARTING: See Battery, Starter, Generator, Regulator.

IGNITION

Ignition Switch:—Delco-Remy Model 435-K. Connected to coil by armored cable. **Ignition Lock**—Briggs & Stratton No. 45792 (cylinder), 80203 (case). Key Series—8000-9499.

COIL: Delco-Remy Model 539-C. Mounted on dash. **Ignition Current**—2.2 amps. idling, 4.4 stopped.

CONDENSER: Delco-Remy Part No. 829107 (665-G Distr.), No. 1869704 (1110604 Distr.). **Capacity**—.20-.25 microfarad.

DISTRIBUTOR: Delco-Remy Model 665-G (1937), 1110604 (1938). Single breaker, 8 lobe cam, full automatic advance type with manual adjustment at distributor. Vacuum spark control not used.

Breaker Gap—.0125-.0175".
Cam Angle or Dwell—31° closed, 14° open.
Breaker Arm Spring Tension—22 ounces.
Rotation—Clockwise viewed from top.

Automatic Advance

Distributor Degrees	Distributor R.P.M.	Engine Degrees	Engine R.P.M.
Start	500	1	1000
3	820	6	1640
6	1200	12	2400
9	1600	18	3200
12	2000	24	4000

Removal:—Distributor mounted between cylinder banks at rear of engine. To remove, take out two capscrews in mounting bracket.

NOTE—When installing distributor on engine, turn crankshaft to firing position for #1 piston, mesh distributor drive gear so that slot in upper end of shaft is offset toward rear of engine.

IGNITION TIMING

IGNITION TIMING:—Initial setting given for fuel of 70 octane rating. NOTE—See Manual Adjustment (following) for final setting giving best performance with type of fuel regularly used.

Flywheel Degrees	Piston Position
5° BTDC.	.0114" BTDC.

To Set Timing (With Synchroscope)—Recommended by manufacturer. Clip Synchroscope lead to #1 spark plug, direct light on crankshaft pulley at front of engine. Idle engine, loosen hold-down screw in advance arm, rotate distributor until 'IG/A' mark on pulley (which is 5° before dead center mark 'C.1/6') appears to line up with pointer on chain case cover, tighten hold-down screw. Adjust for fuel (see Manual Adjustment).

Timing (Without Synchroscope)—Turn engine over to firing position for piston #1 (front piston, left

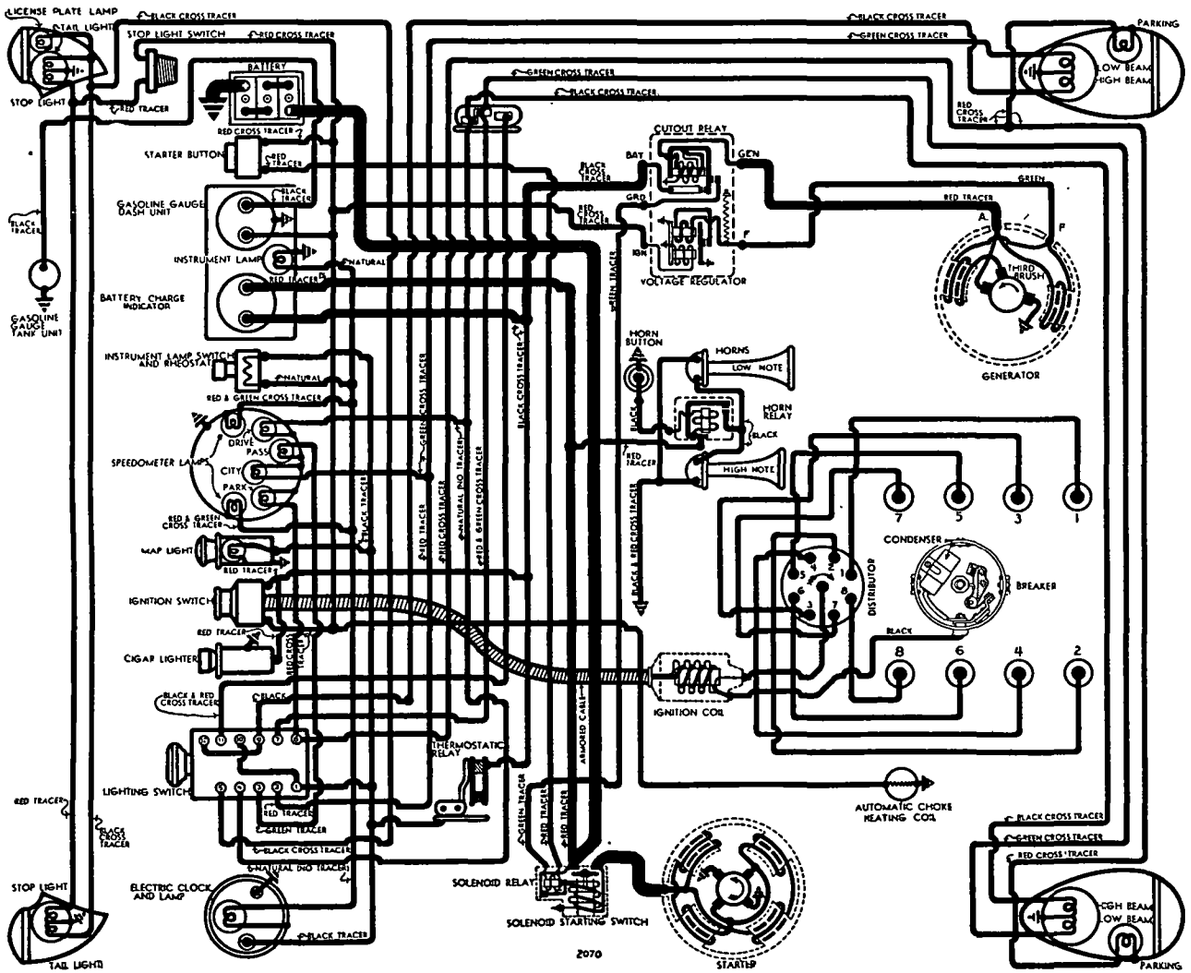

1937 SERIES 37-50

bank) with mark 'IG/A' on crankshaft pulley (5° before dead center mark 'C.1/6' lined up with pointer on chain case. Loosen hold-down screw on advance arm, center pointer on scale, tighten hold-down screw on advance arm. Loosen advance arm clamp bolt, rotate distributor until contacts begin to open, tighten clamp bolt. Adjust for fuel (see Manual Adjustment).

Manual Adjustment—Slight ping should be evident at speeds below 15 M.P.H. when car accelerated with wide open throttle. To adjust, loosen hold-down screw on advance arm, rotate distributor one graduation on scale clockwise (if ping too severe), counter-clockwise (if no ping noted), repeat test, adjust until best performance is secured. NOTE—Check engine for faulty spark plugs, excessive carbon deposits, localized hot spots, or lean carburetor setting before changing manual adjustment.

CARBURETOR

STR MBERG

(Early 1937)—Stromberg Model AA-25. 1¼" Dual (double barrel), downdraft type with Fast Idle and Automatic Choke.

For complete data, refer to Carburetor Index.

Idle Adjustment (all models)—Engine must be warmed up so that Automatic Choke and Fast Idle are inoperative. Set throttle lever stopscrew so that engine idles at 6 M.P.H. Turn each idle adjusting screw in until engine begins to miss, then turn screws out until engine begins to roll, finally turn screws in slowly until engine fires smoothly. Both screws must be adjusted equally. Readjust throttle stopscrew for correct idling speed.

Accelerating Pump Setting (Stromberg)—Engage pump link in holes in throttle lever as follows:
Inner Hole (Min. stroke)—Summer temperatures.
Outer Hole (Max. stroke)—Winter temperatures.

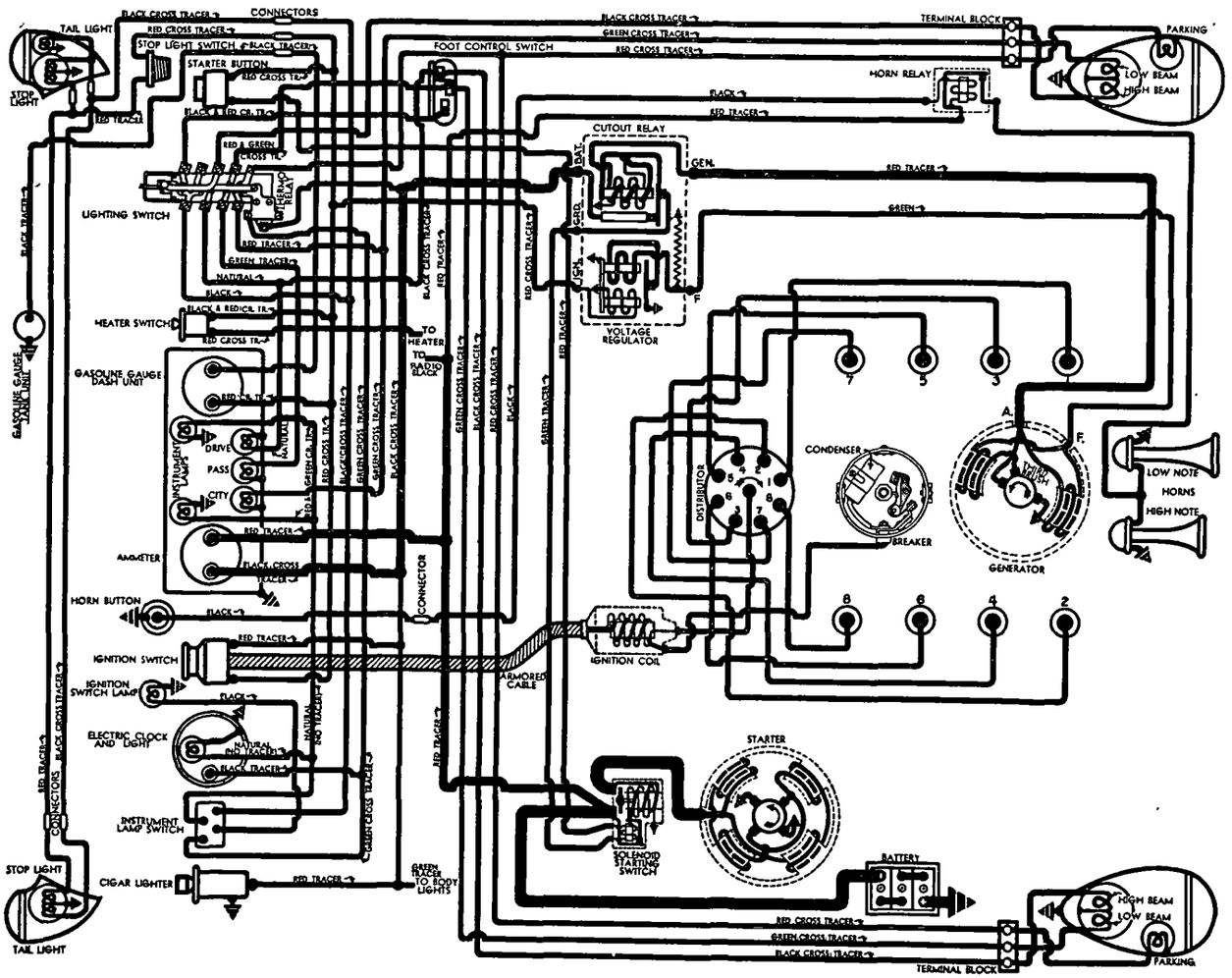

1938 SERIES 38-50

Fast Idle: Stromberg Type (AA-25 Carburetor).
See Carburetion Equipment Section for data.
Automatic Choke: Stromberg Type (AA-25 Carburetor).
See Carburetion Equipment Section for data.

CARBURETOR

CARTER

(Late 1937 & All 1938 Cars)—Carter Model WDO Vacumeter Type 374-S (1937), 392-S (1938). 1¼" Dual (double barrel), downdraft types with Fast Idle and Carter Climatic Control (Automatic Choke).
For complete data, refer to Carburetor Index.
Idle Adjustment—With engine warm (fast idle and automatic choke inoperative) adjust throttle stopscrew so that engine idles at 6 M.P.H. Turn each idle adjusting screw in until engine begins to miss, then turn screws out until engine begins to roll, finally turn screws in slowly until engine fires smoothly. Both screws must be adjusted equally and final setting should be ¾-1¼ turn open (374-S), ¼-1 turn open (392-S) from inner seated position. Readjust throttle stopscrew for 6 MPH. idle speed.
Accelerating Pump Setting—Two holes provided in throttle lever for pump link engagement. Set as follows:
Inner hole (short stroke)—Normal operation.
Outer hole (long stroke)—Winter temperatures.
Fast Idle: Carter Dual (WDO) Carburetor type.
See Carburetion Equipment Section for data.
Automatic Choke: Carter Climatic Control (Dual Carburetors).
See Carburetion Equipment Section for data.

CARB. EQUIPMENT

Air Cleaner: AC No. 1528136 (1937 Std.), 1528137 (1937 Optl.), 1528516 (1938 Std.) oil-bath type. NOTE—Oil Vent Cleaner No. 864384 used on 1938 car models.
Fuel Pump:—AC. Type AB #1522119. Diaphragm type. Combination fuel-and-vacuum pump.
For complete data, refer to Carburetion Equip. Index.
Gasoline Gauge: AC Electric type. AC Part Nos:
Dash Unit—1515338 (1937), 1515346 (1938).
Tank Unit—1515442 (1937), 1515473 (1938).
For complete data, refer to Carburetion Equip. Index.

BATTERY

Delco. Type 17-K (1937), 17-K-1 (1938). 6 volt, 17 plate, 112 ampere hour cap. (20 hr. rate).
Starting Capacity—135 amperes for 20 minutes.
Zero Capacity—300 amperes for 4.3 minutes. Five second voltage—4.38 volts.
Grounded Terminal—Positive (+) terminal. Grounded to frame. Engine grounded to same point on right frame side member by strap connector (second ground strap at left front of engine on some models).
Dimensions—Length 10⅜". Width 7". Height 8⅝".
Location—Under front seat on left side (1937), under hood on right side (1938). NOTE—To remove, take out through bolt on outer edge (under fender), raise carrier and battery to free clamps from frame and lower assembly to floor.

STARTER

Delco-Remy Model 727-V,729-F (RHD).Armature No. 820158. Overrunning Clutch and solenoid pinion shift type.
Rotation—Counter-clockwise at commutator end.
Brush Spring Tension—24-28 ounces.

CONTINUED ON NEXT PAGE

CONTINUED FROM PRECEDING PA E

Performance Data

Torque	R.P.M.	Volts	Amperes
0 ft. lbs.	5500	5.0	65
16 "	Lock	3.0	600

Removal:—Starter flange mounted on right front face of flywheel housing. To remove, take out flange mounting screws, pull starter forward, remove from below.

Starting Switch:—Solenoid Switch Type 1512 (727-V), 1542 (729-F). Pushbutton Switch Type 1389. Solenoid switch controlled through relay in switch case by pushbutton on instrument panel. See article in Electrical Equipment Section.
For complete data, refer to Electrical Equipment Index.

Solenoid Switch Specifications

Closes against 70 lbs. pull with ½" air gap drawing 65-71 amperes at 5 volts. Holds switch closed with current draw of 12-14 amperes (hold-in coil only).

Solenoid Relay Specifications

Contacts Close—3.2 volts max. (1512), 1.9 v. (1542). **Contacts Open**—1.6-2.0 volts (1512), 1.0-1.2 v. (1542). **Contact Gap**—.035". **Air Gap**—.010" (closed).

GENERATOR

Delco-Remy Model 918-C (1937), 1101051 (1938). Split field type with fixed third brush and vibrating voltage regulator control.
Armature—Delco-Remy No. 1866789 (all models).
For complete data, refer to Electrical Equipment Index.
Charging Rate Adjustment—Adjusted by changing regulator setting. See Regulator data.
Maximum Charging Rate—As given in table below. Reached at 4000 R.P.M. or 50 M.P.H. cold. To check charging rate, connect test ammeter in line at 'BAT' terminal on regulator, voltmeter between 'GEN' terminal and ground, ground 'F' terminal to eliminate regulator action.
NOTE—Do not operate generator on open-circuit.

Performance Data

	Amperes	Volts	R.P.M.
Cold	27-31	8.0	4000
Hot	25-28	8.0	4200

Rotation—Counter-clockwise at commutator end.
Brush Spring Tension—22-26 ounces (main), 16-20 ounces (third brush).
Field Current—1.44-1.56 amperes at 6.0 volts (Shunt field), .89-.94 amperes at 6.0 volts (third brush field).

Removal:—Flange mounted at front of engine between cylinder banks. Belt driven in tandem with water pump (separate belt for fan). To remove, take out two flange mounting bolts.

Belt Adjustment:—Loosen both generator flange mounting bolts. Lift generator up until only slight slack evident in belt when moved sideways with fingers (generator pivots on left mounting bolt, right bolt hole slotted to permit this movement). NOTE—Separate adjustment provided at fan bracket for fan belt.

REGULATOR

Delco-Remy Model 5817. Double Core Type Voltage Regulator (With 'IGN' Terminal). Cutout Relay and vibrating type Voltage Regulator. Cutout Relay has extra 'ground' contacts for starter control.
For complete data, refer to Electrical Equipment Index.

Cutout Relay

Cuts In—6.9-7.6 volts.
Cuts Out—0-3.0 amperes discharge current.
Contact Gap—.020". **Air Gap**—.020" (closed).

Voltage Regulator

Setting—7.5-7.9 volts (70°F), 7.4-7.6 volts (150°F). Regulator over-compensated for temperature and must be checked at these points.
Adjustment—Connect ammeter in charging line at 'BAT' terminal on regulator, disconnect lead on 'IGN' terminal and connect jumper between this terminal and 'BAT' terminal, connect voltmeter between 'IGN' terminal and ground. Operate generator at 2000-3000 R.P.M., adjust charging rate to 8-10 amperes (use variable rheostat or AVR set), adjust regulator by bending spring hanger at lower end of armature slightly.
NOTE—Regulator cover must be in place when making tests. Do not operate generator on open-circuit.
Contact Gap—.020". **Contact Sp. Tens.**—2.7-3.5 ozs. **Air Gap**—.063" between armature and center of core with armature down. .010" between fibre bumper and stop with armature up.

LIGHTING

LIGHTING:—**Headlamps**—Guide Multi-beam, prefocused type with non-interchangeable lenses (marked 'Right' and 'Left' at top). Asymetrical passing beam (upper beam left hand headlamp, lower beam right hand headlamp) controlled by foot selector switch with lighting switch in Country Driving position.
NOTE—With lighting switch in second position (City), foot selector switch controls upper 'Driving' beam and lower 'City' beam (for both headlamps).
Headlamp Adjustment—Adjust headlamps only with doors in place. Aim right hand headlamp so that top edge of high intensity spot is on horizontal line at lamp center height and centered on vertical lamp center-line. Aim left hand headlamp for same height but high intensity spot must be to right of vertical lamp center-line. Adjusting screw for up and down movement accessible through hole in bottom of lamp, screw for side movement at inner side of each lamp (accessible after removing spring retained cup).
Headlamp Indicators—Located on lower edge of speedometer panel. Marked as follows:
Drive—Upper beam, both headlamps.
Pass—Special passing beam (see above).
City—Lower beam, both headlamps.
Park (1937 only)—Parking bulbs lighted.

Switches

Lighting (1937)—Delco-Remy 480-S, 480-N (Exp.).
Lighting (1938)—Delco-Remy 1994502, 1995005 (Exp.)
Dimmer—D-R Model 471-T, 471-U (RHD).
Dash Lamp—D-R Model 1406.

Bulb Specifications—1937

Position	Candlepower	Mazda No.
R. H. Headlamp (see note)	32-50	2530-L
L. H. Headlamp	32-32	2330-L
Parking, Instrument	1½	55
Clock, Indicators	1	51
Map, Quarter, License	3	63
Stop and Tail	21-3	1154-L
Dome	15	87

NOTE—In states where this bulb not legal, 32-32 cp., 2330-L bulb used in both headlamps. Type 1154 bulb has stop pin which insures correct installation.

Bulb Specifications—1938

Position	Candlepower	Mazda No.
Headlamps	32-32	2330
Stop and Tail	21-3	1154
Parking	1½	55
License, Quarter	3	63
Dome	15	87
Instrument, Clock, Ind.	1	51

MISC. ELECTRICAL

THERMOSTATIC RELAY: Delco-Remy No. 1866707 (1937), 1866467 (1938). Mounted on lighting switch. Contacts remain closed with 25 ampere current but open within 1 minute with 38 amperes at 70°F. Not adjustable.

HORNS: Klaxon Model K-33-D. Type 1965 (Low Note—1937), 1966 (High Note—1937), 1967 (Low Note—1938), 1968 (High Note—1938). Vibrator type, blended tone, twin horns, operated by relay.
NOTE—Horns mounted vertically behind radiator grille with horn relay on left front fender dust shield. Grille must be removed for horn service.

Horn Type	Current (at 6 volts)	Air Gap
1965, 67 Low Note	12-14 amperes	.045-.050"
1966, 68 High Note	11-13 amperes	.036-.040"

Horn Relay:—Model 271-A. **Contact Gap**—.020". **Contacts Close**—2.7-4.0 volts. **Air Gap**—.015".

ENGINE

ENGINE SPECIFICATIONS:—**Own.** 8 cylinder, 90° Vee, 'L' head type. Upper crankcase and cylinder blocks cast enbloc. **Bore**—3⅜". **Stroke**—4½".
Displacement 322 cu. ins. **Rated HP.**—36.45.
Developed Horsepower—125 at 3400 RPM.
Compression Ratio—6.25-1 Std., 5.75-1 Optl.
See Cadillac Special Shop Notes for cylinder head identification and interchangeability data.
Compression Pressure—155 lbs. at 1000 R.P.M. r approx. 105-110 lbs. at cranking speed (std. head).
Vacuum Reading—20-21" steady at 6 M.P.H.

PISTONS:—Lynite or Bohn Lo-Ex aluminum alloy, 'T' slot, Cam Ground type with Anodized finish (special hard oxide bearing surface). **Length**—4⅛".
Weight—16.88 oz. stripped. 25.13 oz. complete.
Removal—Pistons and rods removed from above
Clearance—Skirt .0019". See Fitting New Pistons.
Replacement Pistons:—***See Cadillac Shop Notes.***
NOTE—Hold all cylinders in same block within .002" size limits. Max. allowable out-of-round .0005".
Fitting New Pistons:—Check piston diameter with micrometer gauge at right angles to pin hole just below lower ring groove and also ½" above lower edge. If feeler gauges (⅜-½" wide) used, insert feeler at high point of piston next to T slot. Piston should fall of own weight on .002" feeler and hold on .0025" feeler. NOTE—Cylinder bore out-of-round not over .0005", taper .000".
Installing Pistons:—Slot toward left (viewed from drivers seat) for all pistons.

PISTON RINGS:—Two compression, two oil control rings per piston, all above pin (no ring in narrow top heat deflector groove).

Ring	Width	End Gap	Side Clearance
Compression	⅛"	.007-.012"	.0015-.0028"
Oil Control	5/32"	.007-.015"	.0013-.0026"

NOTE—Worn limits .025" (end gap), .004" (side cl.).
Replacement Rings:—Rings furnished .003", .005", .010", .015", .030" oversize.

ENGINE

CONTINUED FROM PRECEDING PAGE

PISTON PIN:—Diameter ⅞". Length 2 15/16". Pin floats in piston and rod. Held by locking rings.
See Cadillac Shop Notes for special pin removal and installation instructions.
Pin Fit in Piston—.0004" press fit (ribbed end), .000" clearance or free fit at 70° F. (plain end).
Pin Fit in Rod Bushing—.0002-.0008" clearance (new), .0015" (worn limit).

CONNECTING ROD:—Weight 37.472 ozs. **Length** 8¾". **Crankpin Journal Diameter**—2.460".
Lower Bearing—Steel-backed, babbitt-lined.
Clearance—.0015" (new), .006" Max. (worn).
Sideplay—.003-.006".
Bearing Adjustment:—None (no shims). Replace bearings. Do not file rods or caps.
See Cadillac Special Shop Notes for Connecting Rod Bearing data and bearing installation.
NOTE—Use new lockwashers under bearing cap bolts. Use only 12" wrench to tighten (Tool J-835).
Installing Rods:—Number on rods and bearing caps on same side and installed in same numbered cylinders with numbers down toward oil pan.

CRANKSHAFT:—3 bearing, 6 counterweights.
Journal Diameters—2½" all bearings.
Bearing—Bronze or steel-backed, babbitt-lined.
Clearance—.0015" (new), .004" (worn limit).
Bearing Adjustment:—None (no shims). Replace bearings. Do not file bearing caps. Upper halves can be rotated out without removing shaft.
See Cadillac Special Shop Notes for Main Bearing Removal instructions, and Rear Main Bearing Oil Seal renewal (new type used in 1938).
End Thrust:—Taken by center bearing. Endplay .001-.005" (new), .010" Max. (worn).

CAMSHAFT:—3 bearing. Non-adjustable chain drive.
Journal Diameters—#1 and 2, 2.4071-2.4078"; #3, 2.0009-2.0016".
Bearing Type—Steel-backed, babbitt-lined.
Clearance—.0027-.0037" (new), .005" (worn limit).
See Cadillac Special Shop Notes for Camshaft Bushing removal and installation instructions.
End Thrust:—Taken by thrust plate behind camshaft sprocket. No endplay should be permitted.
Timing Chain:—Morse Type C #3682-R Side Guide type. Width 1⅛". Pitch ⅜". Length 23¼" or 62 links. NOTE—Install chain 'endless' as an assembly with sprockets. Use tool J-836 to pilot camshaft sprocket
Camshaft Setting:—Sprockets marked. Mesh chain with sprockets turned so that '0' marks are adjacent and in line with a straightedge across shaft centers.

VALVES:—	Head Diameter	Stem Diameter	Length
Intake	1.876-1.886"	.3415-.3425"	5 33/64"
Exhaust	1.626-1.636"	.3405-.3415"	5 33/64"

	Seat Angle	Lift	Stem Clearance
Intake	45°	.335"	.001-.0023"
Exhaust	45°	.345"	.002-.0033"

NOTE—Worn limit for valve stem-to-guide clearance .006" Intake, 005" Exhaust.
See Cadillac Special Shop Notes for valve removal and installation instructions.
Valve Guides:—Pressed in block with long stepped end down and reamed to correct size.
Valve Lifters:—Wilcox-Rich 'Zero-lash' type hydraulic lifters. Lifters are mushroom type operating in removable guide brackets.
See Miscellaneous Section for complete data.
Clearance—.001-.0025" (new), .005" (worn limit).

Valve Springs:—	Pressure	Length
Valve Closed	66 lbs.	1.926"
Valve Open	145 lbs.	1.581"

VALVE TIMING

Tappet Clearance:—None in service (hydraulic type lifter). *See Valve Servicing in Cadillac Shop Notes.*
Valve Timing:—See Camshaft Setting above.
Intake Valves—Open at TDC. Close 42° ALDC.
Exhaust Valves—Open 52° BLDC. Close 10° ATDC.
To Check Timing—Intake valve for #1 cylinder opens with piston on top dead center when mark 'C.1/6' on crankshaft pulley lines up with pointer.

LUBRICATION

LUBRICATION:—Pressure system with gear type oil pump located in crankcase.
See Cadillac Special Shop Notes for oil pump data.
Normal Oil Pressure—25 lbs. at 30 M.P.H.
Oil Pressure Regulator—Located on oil pump. Operates at 30 lbs. Not adjustable.
Crankcase Capacity—7 qts. (refill).

COOLING

Water Capacity: 25 quarts.
Water Pump: Centrifugal type with self-adjusting (spring-loaded) packing. Belt driven.
See Water Pump Section for complete data.
Thermostat:—Mounted in radiator top tank, linked to radiator shutters by rod on forward side.
Setting—(Std. Type) Starts to open 148-153°F., fully open at 170°F. (High Reading Type—use with heaters). Starts 163-168°F. Fully open 185°F.
Shutter Adjustment—Adjust clevis on threaded end of rod to secure 1/16" tension (shutters closed).

CLUTCH

CLUTCH:—Long Model 11CF-10½CI. Semi-centrifugal, single plate dry disc type.
See Clutch Section for complete data.
Facings—Woven joined type, 2 required. Inside Diameter 6½". Outside Diameter 10½". Thickness .137" (1937), .125" (1938).
Adjustment:—Free movement of pedal should be ⅞-1⅛". To adjust, turn nut on forward end of connector link in front of clutch fork.
Removal:—Remove transmission (see Transmission Section below), drop cluteh housing pan, punch mark clutch cover, pressure plate, and flywheel to insure correct installation, take out mounting bolts in cover flange, remove clutch from below.
See Cadillac Shop Notes for clutch locking pin removal (on replacement clutches) and clutch balancing data.

TRANSMISSION

TRANSMISSION:—Own make. Constant-mesh helical gear (second), synchro-mesh (second and high), sliding helical gear (low and reverse).
See Transmission Section for complete data.
Transmission Control (1938): Own Make, Remote Control type with shift lever on steering column.
See Transmission Section for complete data.
Removal:—Disconnect shifter rods at levers on left hand side of case, disconnect drive shaft at front universal joint, support engine with jack under oil pan (use wooden block to avoid damage to pan), free transmission extension at rear support crossmember, disconnect engine support stabilizer on right hand (take out pin at forward end), disconnext exhaust pipe brace, disconnect speedometer cable. Take out transmission mounting capscrews, pull transmission straight back (plug clutch connection shaft bearing drain hole as soon as it is accessible to prevent lubricant loss. CAUTION—When installing transmission, shift transmission into Reverse Gear before attempting installation and make certain that cork is removed from clutch connection bearing drain hole.

UNIVERSALS

UNIVERSAL JOINTS:—Mechanics Model 3-C. Needle bearing type, 2 used.
See Universals Section for complete data.

REAR AXLE

REAR AXLE:—Own make. Hypoid gear, semi-floating type with Hotchkiss drive.
See Rear Axle Section for complete data.
NOTE—Manufacturer recommends Differential Carrier Assembly be returned to factory for servicing.
Ratio—3.92-1 Std. No optional ratios.
Backlash—.004-.008". Screw adjustment.
Removal:—Disconnect drive shaft at rear universal, remove axle shafts (see below), remove capscrews on carrier flange, pull carrier assembly out.
Axle Shaft Removal—Jack up car, remove rear wheels, pull wheel hub and brake drum assembly, disconnect brake line and remove backing plates. Use tool J-838, pull shaft and bearing assembly out. NOTE—Early '37 shafts have no locating shoulder for wheel bearing. Install bearing with 5/32" clearance between inner edge of hub and bearing. CAUTION—Bleed brake lines after axle shaft reinstalled and brakes reconnected.
Wheel Bearing Adjustment:—None (sealed type).

SHOCK ABSORBERS

Delco. Double Acting, hydraulic types (front & rear). Delco Model Numbers as follows:
Front—1946-C, D (1937), 1946-E, F (1938).
Rear—1751-A, B (1937), 1751-E, F (1938).
See Shock Absorber Section for complete data.

FRONT SUSPENSION

Front Suspension:—Independent linked parallelogram type with coil springs.
See Front Suspension Section for complete data.
Kingpin Inclination—4°51' crosswise.
Caster—Pos. ¼° to Pos. 1° (1937), Neg. ¼° to Neg. 1¼° (1938) at curb weight (Fuel tank full, no Passengers). Adjustable.
Camber—Pos. ¼° to Pos. 1° (1937), Neg. ¼° to Pos. ½° (1938). Adjustable.
Toe In—1/32-3/32" (at rest), 0-1/16" (in motion).
Steering Geometry (Toe out on turns)—Inner wheel turned 21 ¾-23¼° (1937), 23½° (1938); Outer wheel turned exactly 20°. Not adjustable.

STEERING GEAR

Steering Gear: Saginaw Model. Worm-and-Roller type
See Steering Gear Section for complete data.

BRAKES

BRAKES:—Service—Bendix hydraulic, Duo-Servo, Single Anchor type. Hand lever applies rear brakes.
See Brake Section for complete data.
Braking Power—54½% Front, 45½% Rear).
Drum Diameter—12". Centrifuse type. Drum out-of-round .007" max. Run-out (installed) .010" max.
Lining—Molded type. Width 2¼" (front wheels), 2" (rear wheels), Thickness 3/16". Length per shoe 12 15/16".
Clearance—.010" for all shoes.
Hand Brake:—See Service Brake above.

ENGINE HOOD & SIDE PANEL REMOVAL:—*See Cadillac Shop Notes f r complete instructions.*

MODEL IDENTIFICATION

SERIAL & ENGINE NUMBER:—First number 2290601. Stamped on left side of crankcase at rear of left cylinder block and on left frame side member opposite steering gear.

TUNE-UP

COMPRESSION:—Ratio—6.25-1 Std., 5.75-1 Optl.
Pressure—155 lbs. at 1000 R.P.M. or approximately 110-115 lbs. at cranking speed for Std. head.

VACUUM READING: Steady 20-21" idling at 7-8 MPH.

FIRING ORDER: 1-8-7-3-6-5-4-2. See diagram for cylinder numbering and spark plug cable connections.

SPARK PLUGS: AC No. 104. 10 mm. Metric type.
Gaps—.025-.030"
NOTE—Do not tighten these small plugs excessively (7-10 ft. lbs. tension).

IGNITION: See Coil, Condenser, and Distributor.
Breaker Gap—.015" **Cam Angle** 31° (closed).
Automatic Advance—12° max. at 2000 RPM (distr.).

IGNITION TIMING: See Ignition Timing.
Std. Setting—5° BTDC. with crankshaft pulley mark "IGA" at indicator on front of engine.

CARBURETION: See Carburetor & Carb. Equipment.
Idle Setting—Both idle screws ½-1½ turns open. Idle speed 7-8 MPH.
Float Level—⅛" from top of float to gasket seat on cover with valve seated (invert to check).
Accelerating Pump—Not adjustable.
Fuel Pump Pressure: 4½ lbs. maximum.

VALVES: See Valve Timing.
Tappet Clearance—None in Service (hydraulic type take-up used).

STARTING: See Battery, Starter, Generator, Regulator.

IGNITION

Ignition Switch:—Delco-Remy No. 1865711. Connected to coil by armored cable.
Ignition Lock—Briggs & Stratton No. 45792. Key Series—8000 to 9499. Groove—No. 15.

COIL: Delc -Remy No. 1115128. Mounted on dash.
Ignition Current—2.2 amperes idling, 4.4 stopped.

CONDENSER: Delco-Remy Part No. 1869704.
Capacity—.18-.25 microfarad.

DISTRIBUTOR: Delco-Remy No. 1110604. Single breaker, 8 lobe cam, full automatic advance type with manual adjustment at distributor.
Breaker Gap—.0125-.0175".
Cam Angle or Dwell—31° closed, 14° pen (distr.).
Breaker Arm Spring Tension—22 ounces.
Rotation—Clockwise viewed from the top.

Automatic Advance

Distributor Degrees	Distributor R.P.M.	Engine Degrees	Engine R.P.M.
Start	500	1	1000
3	820	6	1640
6	1200	12	2400
9	1600	18	3200
12	2000	24	4000

Manual Adjustment—Permits 10° advance or retard from center position. See Ignition Timing for adjustment.

Removal:—Distributor mounted between cylinder banks at rear of engine. To remove, take out two capscrews in mounting bracket. NOTE—When installing distributor, turn crankshaft to firing position for #1 piston, mesh distributor drive gear so slot in upper end of shaft is offset toward rear or left hand side of engine.

IGNITION TIMING

IGNITION TIMING:—As given below for fuel f 70 octane rating. See Manual Adjustment (following) for correction dependent on fuel regularly used.

Flywheel Degrees	Piston Position
5° BTDC	.0114" BTDC

Timing (With Synchroscope)—This method recommended by manufacturer. Clip synchroscope lead to #1 spark plug, direct light on crankshaft pulley, idle engine. Loosen hold-down screw in advance arm, rotate distributor until 'IG/A' mark on pulley (5° before dead center mark 'C.1/6') appears in line with pointer on chain case cover, tighten hold-down screw. Adjust for fuel (see Manual Adjustment).

Timing (Without Synchroscope)—Turn engine over to firing position for #1 piston (front piston, left bank) with crankshaft pulley mark 'IG/A' (5° before dead center mark 'C.1/6') lined up with pointer

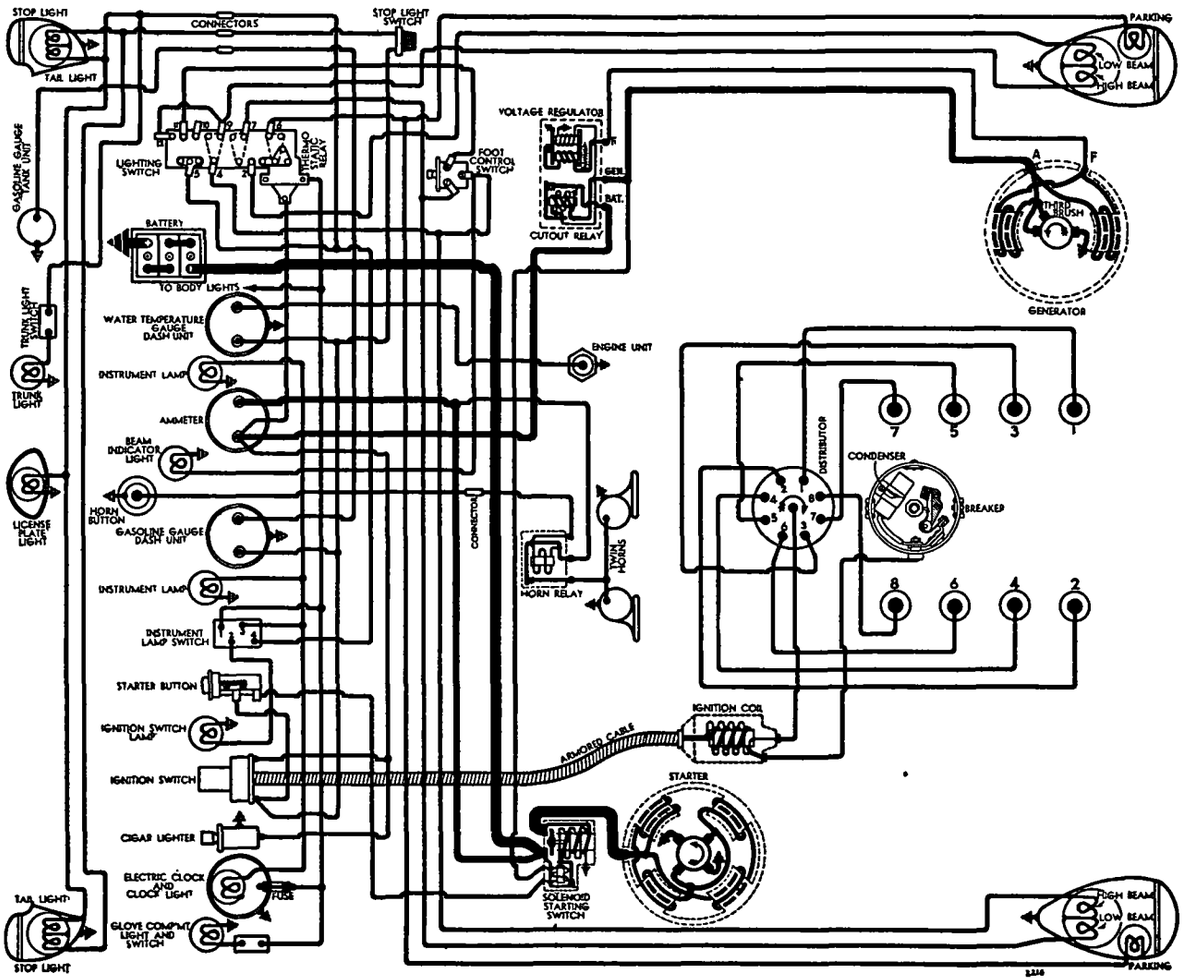

on chain case cover. Loosen hold-down screw in advance arm, center pointer on scale, tighten screw. Loosen advance arm clamp bolt, rotate distributor until contacts begin to open, tighten clamp bolt, check Manual Adjustment.

Manual Adjustment—Should be set for slight ping when accelerating engine with wide open throttle at speeds below 15 M.P.H. To adjust, loosen hold-down screw in advance arm, rotate distributor clockwise (if ping too severe), counter-clockwise (if no ping noted) one graduation at a time until correct performance secured. NOTE—Check engine for faulty spark plugs, excessive carbon deposits, localized hot spots, lean carburetor setting before changing adjustment to correct pinging.

CARBURETOR

CARBURETION:—Carburetor—Carter Model WDO Type 423-S (marked 248 on face of flange). 1⅛" dual, downdraft type.
For complete data, refer to Carburetor Index.

Idle Adjustment—With engine warm so that Automatic Choke and Fast Idle inoperative, set throttle stopscrew for 7-8 MPH. idling speed. Turn each idle adjusting screw (one for each barrel) in until engine begins to miss, then turn screws out until engine begins to roll, finally turn screws in slowly until engine fires smoothly. Reset stopscrew for correct 7-8 MPH. idling speed.

Accelerating Pump—Not adjustable.

Fast Idle:—Integral type (part of carburetor).
For complete data, refer to Carburetion Equip. Index.
Setting—Adjust fast idle screw for .030" throttle opening (measured with T-109-29 gauge between throttle valve edge and wall on side opposite idle port) with choke valve tightly closed.

Automatic Choke:—Carter Climatic Control.
For complete data, refer to Carburetion Equip. Index.
Setting—Mark on thermostatic coil housing should be in line with reference mark on mounting plate.

CARB. EQUIPMENT

Air Cleaner:—AC #1528940 oil-both type used in conjunction with #864384 crankcase ventilator cleaner.

Fuel Pump:—AC Type AB #1523865. Diaphragm type, combination fuel-and-vacuum pump.
For complete data, refer to Carburetion Equip. Index.

Gasoline Gauge:—AC Electric type. #1515361 (dash unit), #1515485 (tank unit).
For complete data, refer to Carburetion Equip. Index.

BATTERY

BATTERY:—Delco Model 17K-1. 6 volt, 17 plate, 112 A.H. Capacity (20 hour rate).
Starting Capacity—135 amperes for 20 minutes.
Zero Capacity—300 amperes for 4.3 minutes. Five second voltage 4.38 volts.
Grounded Terminal—Positive (+) grounded to frame (engine grounded to same point n right side of frame by strap—second ground at left front corner f engine n some models).
Dimensions—Length 10⅜". Width 7". Height 8⅝".
Location—Under left front floor.

Commercial Battery—Delco Model 19-Q. 6 volt, 19 plate, 122 A.H. Capacity (20 h ur rate).
Starting Capacity—140 amperes for 20 minutes.
Zero Capacity—300 amperes for 4.8 minutes. Five second voltage 4.5 volts.
Dimensions—Same as 17K-1 except Height 8 9/16".
Grounded Terminal, Location—See 17K-1 above.

STARTER

Delco-Remy Model 1107912 (Std.), 1107913 (RHD), Armature No. 820158 (all models).
Drive—Solenoid pinion shift (overrunning clutch).
Rotation—Counter-clockwise at commutator end.
Brush Spring Tension—24-28 ounces.

Performance Data

Torque	R.P.M.	Volts	Amperes
0 ft. lbs.	5500	5.0	60
16 "	Lock	3.0	600

Removal:—Flange mounted on right front face of flywheel housing. To remove, take out flange mounting screws, pull starter forward and remove from below.

Starting Switch:—Solenoid Switch Type 1542 (all). Mounted on starter, controlled through relay (in switch) by Control Switch Type 1996003 on instrument panel.
For complete data, refer to Electrical Equipment Index.

Solenoid Switch Specifications

Closes against 70 lb. pull with ½" air gap drawing 65-71 amperes at 5 volts. Holds switch closed with current draw of 12-14 amperes (hold-in coil only).

Solenoid Relay Specifications

Contacts Close—1.9 volts max. **Open**—1.0-1.2 volts.
Contact Gap—.035". **Air Gap**—.010" (closed).

GENERATOR

Delco-Remy Model 1101056. Armature No. 1866789. Split field type with fixed third brush and vibrating type voltage regulator control.
For complete data, refer to Electrical Equipment Index.

Charging Rate Adjustment—See regulator setting below. Do not attempt to change third brush position.

Maximum Charging Rate—29 amperes, 8.0 volts, 4000 R.P.M., 50 M.P.H. with discharged battery. Actual charging rate determined by regulator and dependent on battery condition. To check charging rate, connect ammeter in charging line at regulator 'BAT' terminal, voltmeter between 'GEN' terminal and ground, ground regulator 'F' terminal to eliminate regulator action. NOTE—Do not operate generator on open-circuit.

Performance Data

	Amperes	Volts	R.P.M.
Cold	27-31	8.0	4000
Hot	25-28	8.0	4200

Rotation—Counter-clockwise at commutator end.
Brush Spring Tension—25 ozs. (main), 17 ozs. (3rd).
Field Current—1.44-1.56 amperes at 6.0 volts (shunt field), .89-.94 amperes at 6 volts (third brush field).

Removal:—Flange mounted between cylinder banks at front of engine, belt driven in tandem with water pump (separate belt for fan). To remove, take out flange mounting bolts.
IMPORTANT AIR SCOOP NOTE—When installing air scoop on generator, make certain that raised portion provides clearance at terminals and that scoop does not cover drive end oil cup.

Belt Adjustment:—Loosen generator mounting bolts, lift generator up until only slight slack evident in belt (new type belt engages bottom of pulley groove not sides), tighten bolts. Generator pivots on left hand bolt, right bolt hole slotted. NOTE—Fan belt adjustment provided at fan bracket.

REGULATOR

Delco-Remy Model 5860. Double Core Type Voltage Regulator (No 'IGN' Terminal). Cutout Relay and vibrating type Voltage Regulator in case on dash.
For complete data, refer to Electrical Equipment Index.

Cutout Relay

Cuts In—6.3-6.9 volts (relay compensated for temperature—closing voltage same Cold and Hot).
Cuts Out—0-4.0 ampere discharge current.
Contact Gap—.020". Air Gap—.020" (closed).

Voltage Regulator

Setting—7.5-7.9 volts at 70°F., 7.4-7.6 volts at 150°F. Regulator over-compensated for temperature and must be checked at these points.
Adjustment—Connect ammeter in charging line at regulator 'BAT' terminal, voltmeter between 'BAT' terminal and ground. Operate generator at 2800-3000 RPM., adjust charging rate to 8-10 amperes (use variable rheostat or 'AVR' set), adjust regulator by bending spring hanger at lower end f armature spring slightly to secure setting shown above.
CAUTION—Regulator cover must be in place when testing. Do not operate generator on open-circuit.
Contact Gap—.020". Contact Spring Tension 3.5 ozs.
Air Gap—.063" between armature and center of core with armature down, .010" between fibre bumper and stop with armature up.

LIGHTING

LIGHTING:—Headlamps—Guide Multi-beam, pre-focused type (lenses not interchangeable, marked 'Right' and 'Left'). Asymetrical passing beam (upper beam left lamp, lower beam right lamp) controlled by beam selector switch with lighting switch in Country Driving position. NOTE—With lighting switch in City (second) position, beam selector switch controls upper and lower driving beams.

Headlamp Adjustment—Adjust only with lenses in place. Aim left hand lamp so that top edge of high intensity spot is at horizontal line at lamp center height and entire high intensity spot to right of lamp vertical center-line. Aim right hand lamp for same height and center high intensity spot on lamp vertical center-line. Adjusting screw for vertical movement at bottom of lamp, screw for horizontal movement at engine side of lamp body under snap-in plug.

Beam Indicator—Above center of speedometer dial. Lighted whenever Driving or upper beams in use.

C NTINUED N NEXT PA E

C NTINUED FR M PRECEDIN PAGE

Switches

Lighting—D-R. No. 1994506, 480-R Export.

Beam Selector—D-R No. 1997002 or 471-T.

Bulb Specifications

Position	Candlepower	Mazda No.
Headlamps	32-21	2320
Parking, Instr., Clock	1½	55
Glove & Trunk Compt.	1½	55
Indicator, Ign. Lock, Radio	1	51
Stop & Tail	21-3	1154
License, Fender	3	63
Dome, Quarter	15	87

MISC. ELECTRICAL

THERMOSTATIC RELAY:—No. 1865577. On lighting switch. Contacts remain closed with 25 amperes but open in 2 minutes with 38 amperes at 70°F. Not adjustable.

HORNS:—Klaxon Model K-33-H. No. 1999501 (low note), 1999502 (high note). New 'Seashell', vibrator type, blended tone, twin horns operated by relay.

Type	Current (at 6 volts)	Air Gap
1999501 (low note)	10-12 amperes	.042-.046"
1999502 (high note)	9-11 amperes	.032-.036"

Horn Relay:—D-R. Models 271-A, 1116775.

Contact Gap—.020". **Air Gap** .015" (closed).

Contacts Close—2.3-3.5 volts.

ENGINE

ENGINE SPECIFICATIONS:—Own. 8 cylinder, 90° Vee, 'L' head type. Upper crankcase and cylinder blocks cast enbloc. **Bore**—3⅜". **Stroke**—4½".

Displacement—322 cu. ins. **Rated HP.**—36.45.

Developed Horsepower—125 at 3400 R.P.M.

Compression Ratio—6.25-1 Std., 5.75-1 Optl.

See Cadillac Shop Notes for cylinder head identification and shims for lowering compression ratio.

Compression Pressure—155 lbs. at 1000 R.P.M. or approx. 105-110 lbs. at cranking speed (std. head).

Vacuum Reading—Steady 20-21" idling at 7-8 MPH.

PISTONS:—Lynite or Bohn Lo-Ex aluminum alloy, "T" slot, Cam Ground type with Anodized finish (special hard oxide bearing surface). **Length**—4⅛".

Weight—16.88 ozs. (stripped), 25.12 ozs. (complete).

Removal—Pistons and rods removed from above.

Clearance—Skirt .0020-.0025". See Fitting Pistons.

Replacement Pistons:—*See Cadillac Shop Notes.*

Fitting New Pistons:—Check piston diameter with micrometer gauge at right angles to pin hole just below lower ring groove and also ½" above lower edge. If feeler gauges (⅜x½" wide, 7-10" long) used, insert feeler next to T-slot. Piston should fall through bore of own weight on .002" feeler, and hold on .0025" feeler. NOTE—Cylinder bore out-of-round .0005" max., taper .0003".

Installing Pistons:—Slot to left, for all pistons.

PISTON RINGS:—Two compression, two oil control rings per piston, all above pin.

Ring	Width	End Gap	Side Clearance
Comp. (Top)	3/32"	.007-.012"	.0023-.0041"
Comp. (#2)	⅛"	.007-.012"	.0013-.0026"
Oil Control	5/32"	.007-.015"	.0013-.0026"

Replacement Rings:—.003", .005", .010", .015", .030" O.S.

PISTON PIN:—**Diameter**—⅞". **Length**—2 15/16". Pin floats in piston and rod. Held by locking rings.

See Cadillac Shop Notes for special pin removal and installation instructions.

Pin Fit in Piston—.0004" press fit (ribbed end), .0000" clearance or free fit at 70° F. (plain end).

Pin Fit in Rod Bushing—.0002-.0008" clearance (new), .0018" (worn limit).

CONNECTING ROD:—**Weight** 37.472 ozs. **Length** 8¾".

Crankpin Journal Diameter—2.4590-2.4595".

Lower Bearing—Steel-backed, babbitt-lined type.

Clearance—.0015-.0025" (new), .0045" Max. (worn).

Sideplay—.008-.014".

Bearing Adjustment:—None (no shims). Replace bearings. Do not file rod or caps. *See Cadillac Shop Notes for connecting rod and bearing installation data.*

Installing Rods:—Numbers on rods and bearing caps on same side and installed in same numbered cylinders with marks down to oil pan.

CRANKSHAFT:—3 bearing. 6 counterweights.

See Cadillac Shop Notes for main bearing servicing and rear main bearing oil seal renewal.

Journal Diameters—2½" all bearings.

Bearings—Steel or bronze backed, babbitt-lined.

Clearance—.0015-.0025" (new), .005" (worn).

Bearing Adjustment:—None (no shims). Replace bearings. Do not file bearing caps. Upper halves can be rotated out without removing crankshaft.

End Thrust:—Taken by center (#2) bearing.

Endplay—.001-.005" (new), .010" Max. (worn).

CAMSHAFT:—3 bearing, non-adjustable chain drive.

See Cadillac Shop Notes for Camshaft Bushing data.

Journal Diameters—#1 and #2, 2.4071-2.4078"; #3, 2.0009-2.0016".

Bearing Type—Steel-backed, babbitt-lined.

Clearance .0015-.0033" (new), .0045" (worn).

End Thrust:—Taken by thrust plate behind camshaft sprocket. No endplay should be permitted.

Timing Chain:—Morse Type C #3682-R Side Guide type. Width 1¼". Pitch ⅜". Length 23¼" or 62 links.

NOTE—Install chain 'endless' as an assembly with sprockets. Use Tool J-836 to pilot camshaft sprocket.

Camshaft Setting:—Sprockets marked. Mesh chain with sprockets turned so that '0' marks are adjacent and in line with a straightedge across shaft centers.

VALVES:—	Head Diameter	Stem Diameter	Length
Intake	1.876-1.886"	.3415-.3425"	5 33/64"
Exhaust	1.626-1.636"	.3405-.3415"	5 33/64"

	Seat Angle	Lift	Stem Clearance
Intake	45°	.335"	.0012-.0032"
Exhaust	45°	.345"	.0022-.0042"

NOTE—Worn limit for stem clearance .005" (all valves). Valve heads not slotted.

See Cadillac Shop Notes for Valve Servicing data.

Valve Guides:—Press in (long stepped end down).

Valve Lifters:—Wilcox-Rich 'Zero-lash' type hydraulic lifters. Lifters are mushroom type operating in removable guide brackets.

See Miscellaneous Section for complete data.

Clearance—.0010-.0024" (new), .0035" (worn).

Valve Springs:—Free length 2.210".

	Spring Pressure	Length
Valve Closed	66 lbs.	1.926"
Valve Open	145 lbs.	1.581"

VALVE TIMING

Tappet Clearance:—None in service (hydraulic type lifter). *See Valve Servicing in Cadillac Shop Notes.*

Valve Timing:—See Camshaft Setting above.

Intake Valves—Open at TDC. Close 42° ALDC.

Exhaust Valves—Open 52° BLDC. Close 10° ATDC.

To Check Timing—#1 cylinder (front—left bank) intake valve should open with piston at TDC and mark 'C.1/6' on crankshaft pulley aligned with chain case cover pointer.

LUBRICATION

LUBRICATION:—Pressure (gear type oil pump in crankcase). *See Cadillac Shop Notes for oil pump data.*

Normal Oil Pressure:—15 lbs. idling, 25 lbs. at 30 MPH.

Oil Pressure Regulator:—Opens at 30 lbs. On oil pump. Non-adjustable type.

Crankcase Capacity:—7 quarts.

COOLING

COOLING SYSTEM:—**Capacity**—25 quarts.

See Cadillac Shop Notes for radiator core removal and fan pulley replacement instructions.

Water Pump:—Self-adjusting packing type.

See Water Pump Section for complete data.

Removal—Drain water, remove pump belt, hose and pump mounting screws. Lift pump out.

Thermostat:—Mounted in radiator top tank, linked to radiator shutters by rod on forward side.

Setting—(Std. Type) Starts to open 148-153°F., fully open at 170°F. (High Reading Type—use with Heaters) Starts to open 163-168°F. Fully open 185°F.

Shutter Adjustment—Adjust clevis on threaded end of rod to secure 1/16" tension (shutters closed).

Temperature Gauge:—AC. Electric. #1510773 (dash unit), #1510774 (engine unit).

See Miscellaneous Section for complete data.

CLUTCH

CLUTCH:—**Long Model 11CF-10½CI (before engine unit 2-D-701), 10CF-CI (after engine unit 2-D-700).** Semi-centrifugal, single plate, dry disc type.

See Clutch Section for complete data.

Facings—Woven joined type, 2 required. Inside Diam. 6½" (early), 6" (late). Outside Diam. 10½" (early), 10" (late). Thickness .123-.127".

Adjustment:—Free movement of pedal should be ⅞-1⅛" (adjusting nut on connector link at fork).

Removal:—Remove transmission (see below), drop clutch housing pan, punch mark clutch cover, pressure plate, and flywheel (re-install to these marks),

remove 6 cover screws (release tension evenly), remove assembly. *See Cadillac Shop Notes for clutch locking pin removal (on replacement clutches) and clutch balancing data.*

TRANSMISSION

TRANSMISSION:—Own Make. Constant-mesh, synchro-mesh, all helical gear (sliding gear, low & reverse) with remote shift.
See Transmission Section for complete data.

Transmission Control:—Remote steering col. shift.
See Transmission Section for complete data.

Removal:—Support engine with jack under rear end of oil pan (use wooden block to avoid damage to pan), remove propeller shaft (disconnect front and rear universals), free transmission extension at engine rear support, remove crossmember with engine rear support, disconnect speedometer cable, remove shifter rods from levers at transmission, support transmission at rear, take out mounting screws, pull straight back (plug clutch connection shaft bearing drain hole as soon as accessible to prevent lubricant loss), lower front end of transmission and remove from car. NOTE—*For linkage adjustments, refer to Transmission Section for La Salle Transmission Control.*

UNIVERSALS

UNIVERSAL JOINTS:—Mechanics Model 3C. Needle bearing type. Two used.
See Universals Section for complete data.

REAR AXLE

REAR AXLE:—Own Make. Hypoid gear, semi-floating type with Hotchkiss drive.
See Rear Axle Section for complete data.

NOTE—Manufacturer recommends Differential Carrier Assembly be returned to factory for servicing.

Ratio—3.92-1.

Backlash—.004-.010". Screw adjustment.

Removal:—Disconnect drive shaft at rear universal, remove axle shafts (see below), remove capscrews on carrier flange, pull carrier assembly out.

Axle Shaft Removal—Remove rear wheels, take off axle shaft nut, pull wheel hub and brake drum, disconnect brake line and remove backing plate. Pull shaft and bearing assembly out (use Tool J-838).

Wheel Bearing Adjustment:—None (sealed type).

SHOCK ABSORBERS

SHOCK ABSORBERS:—Delco. Front 1946-G (right), H (left). Rear 1751-V (right), W (left). Double acting, hydraulic types (front and rear).
See Shock Absorber Section for complete data.

FRONT SUSPENSION

Front Suspension:—Independent linked parallelogram type with coil springs.
See Front Suspension Section for complete data.

Kingpin Inclination—5°6′ crosswise.

Caster—Neg. ¼° to Neg. 2¼°. Adjustable.

Camber—Neg. ¼° to Pos. ¾°. Adjustable.

Toe In—1/32-3/32" (at rest), 0-1/16" (in motion).

NOTE—Adjusting sleeve at wheel end of each tie rod provided for toe in adjustment.

Steering Geometry (Toe out on turns)—Inner wheel turned 22¼-23¾°. Outer wheel 20°.

STEERING GEAR

Steering Gear: Saginaw Model. Worm-and-Double Roller type.
NOTE—New type steering linkage with idler arm attached to right frame sidemember.
See Steering Gear Section for complete data.

BRAKES

BRAKES:—Service—Bendix hydraulic, duo-servo, single anchor type (no eccentric adjustment). Hand lever applies rear service brakes.
See Brake Section for complete data.

Drums—Centrifuse. Diameter—11.995-12.005". Drum out-of-round .007", turn down limit .030".

Lining—Moulded. Length per shoe—Front 11 17/32", Rear 12 31/32". Width 2". Thickness 3/16".

Clearance—.015" both ends of secondary shoe.

Braking Power—45½% rear, 54½% front.

Hand Brake:—See Service Brakes.

ENGINE HOOD, SIDE PANEL REMOVAL & FRONT SHEET METAL ASSEMBLY ALIGNMENT:—*See Cadillac Shop Notes.*

MODEL IDENTIFICATION

SERIAL & ENGINE NUMBER:—First number (50) 2320001, (52) 4320001. Stamped on crankcase at rear of left cylinder block and on left frame side member opposite steering gear.

TUNE-UP

COMPRESSION:—**Ratio**—6.25-1 Std., 5.75-1 Optl.

Pressure—155 lbs .at 1000 RPM or approximately 105-110 lbs. at cranking speed for Std. head.

VACUUM READING:—Steady 20-21" idling at 7-8 MPH.

FIRING ORDER: 1-8-7-3-6-5-4-2. See diagram for cylinder numbering and spark plug cable connections.

SPARK PLUGS: AC No. 104. 10 mm. Metric type.

Gaps—.025-.030"

NOTE—Do not tighten these small plugs excessively (7-10 ft. lbs. tension).

IGNITION: See Coil, Condenser, and Distributor.

Breaker Gap—.015" **Cam Angle** 31° (closed).

Automatic Advance—12° max. at 2000 RPM (distr.).

Vacuum Advance—9° distr. with 15-18" vacuum.

IGNITION TIMING: See Ignition Timing.

Std. Setting—5° BTDC. with crankshaft pulley mark "IGA" at indicator on front of engine.

CARBURETION: See Carburetor & Carb. Equipment.

Idle Setting—Both idle screws ½-1½ turns open. Idle speed 7-8 MPH.

Float Level—⅛" from top of float to gasket seat on cover with valve seated (invert to check).

Accelerating Pump—Not adjustable.

Fuel Pump Pressure: 4½ lbs. maximum.

VALVES: See Valve Timing.

Tappet Clearance—None in Service (hydraulic type take-up used).

STARTING: See Battery, Starter, Generator, Regulator.

IGNITION

Ignition Switch:—Delco-Remy Model 1116282. Connected to coil by armored cable.

Ignition Lock—Briggs & Stratton No. 45792. Key Series—8000 to 9499. Groove—No. 15.

COIL: Delco-Remy No. 1115128. Mounted on dash.

Ignition Current—2.2 amperes idling, 4.4 stopped.

CONDENSER: Delco-Remy Part No. 1869704.

Capacity—.18-.25 microfarad.

DISTRIBUTOR: Delco-Remy Model 1110806. Single breaker, 8 lobe cam, full automatic advance type with auxiliary vacuum spark control and manual adjustment.

Breaker Gap—.0125-.0175".

Cam Angle or Dwell—31° closed, 14° open (distr.).

Breaker Arm Spring Tension—19-23 ounces.

Rotation—Clockwise viewed from above.

Automatic Advance

Distributor Degrees	Distributor R.P.M.	Engine Degrees	Engine R.P.M.
Start	500	1	1000
12	2000	24	4000

Vacuum Spark Control 1116020. Integral type (on distributor, linked to breaker plate). Provides additional advance at speeds above idling except when engine accelerated or operated with wide open throttle when spark retarded by return spring within unit. Plunger travel 13/64" maximum

Vacuum Advance

Distr. Degrees	Eng. Degrees	Vacuum (" of HG)
Start	0°	5.5-7.5"
9°	18°	15-18"

Manual Adjustment—Permits 10° advance or retard from center position. See Ignition Timing for adjustment.

Removal:—Distributor mounted between cylinder banks at rear of engine. To remove, disconnect vacuum line, take out two hold-down screws in advance arm, lift out. NOTE—When installing distributor, turn crankshaft to firing position for #1 cylinder, mesh distributor drive gear with slot in upper end of drive shaft offset toward left-hand or rear side of engine (narrow portion of coupling to rear).

IGNITION TIMING

IGNITION TIMING:—Setting for 72 octane fuel. See Manual Adjustment (following) for correction dependent on operating conditions and fuel regularly used.

Flywheel Degrees	Piston Position
5° BTDC	.0114" BTDC

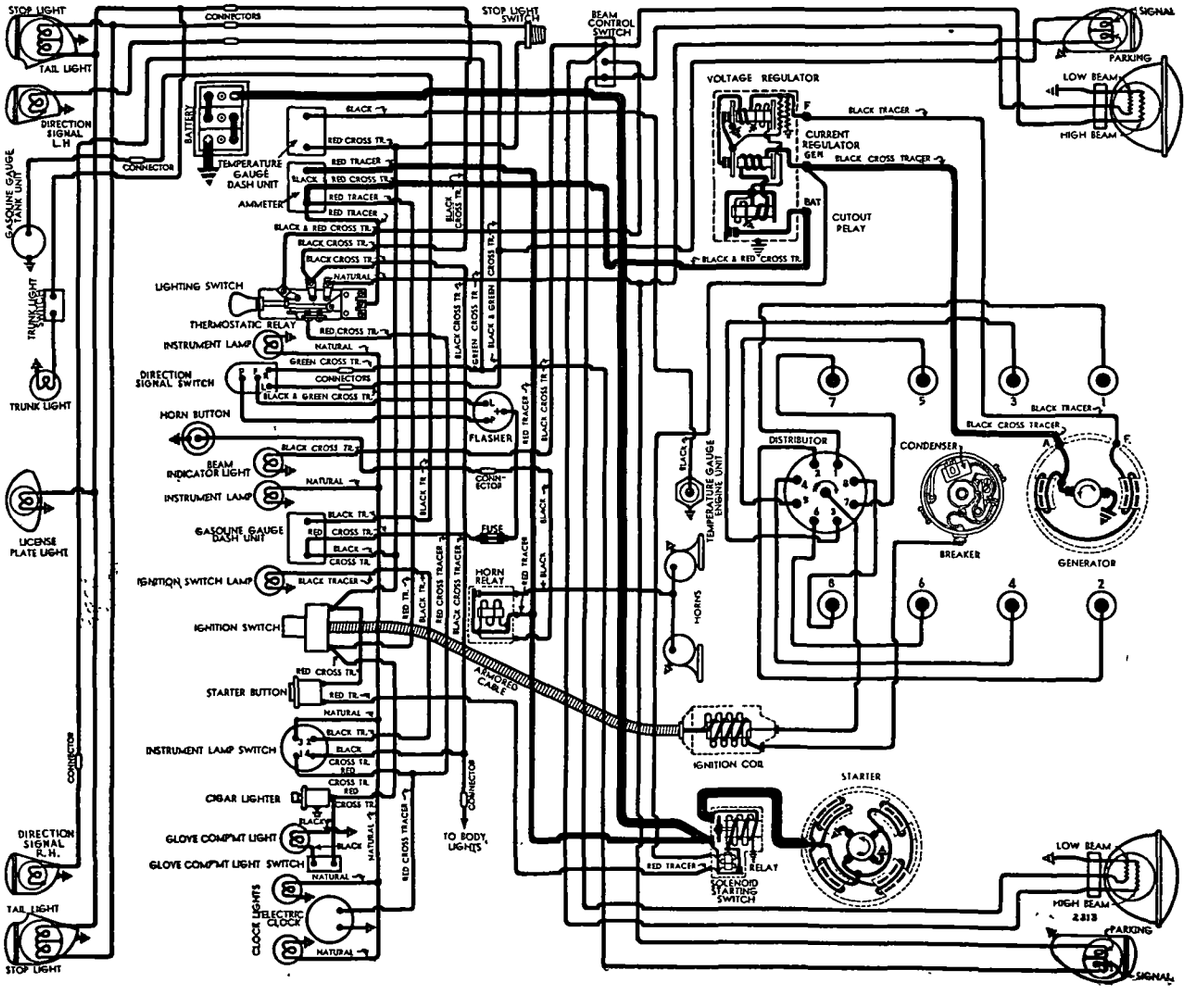

Timing (With Synchroscope)—This method recommended by manufacturer. Clip synchroscope lead to #1 sparkplug, direct light on crankshaft pulley, idle engine. Loosen hold-down screw in advance arm, rotate distributor until 'IG/A' mark on pulley (5° before dead center mark 'C.1/6') appears in line with pointer on chain case cover, tighten hold-down screw. Adjust for fuel (see Manual Adjustment).

Timing (Without Synchroscope)—Turn engine over to firing position for #1 piston (front piston, left bank) with crankshaft pulley mark 'IG/A' (5° before dead center mark 'C.1/6') lined up with pointer on chain case cover. Loosen hold-down screw in advance arm, center pointer on scale, tighten screw. Loosen advance arm clamp bolt, rotate distributor until contacts begin to open, tighten clamp bolt, check Manual Adjustment.

Manual Adjustment—Should be set for slight ping when accelerating engine with wide open throttle at speeds below 15 M.P.H. To adjust, loosen hold-down screw in advance arm, rotate distributor clockwise (if ping too severe), counter-clockwise (if no ping noted) one graduation at a time until correct performance secured. NOTE—Check engine for faulty spark plugs, excessive carbon deposits, localized hot spots, lean carburetor setting before changing adjustment to correct pinging.

CARBURETOR

CARBURETION:—**Carburetor**—Carter Model WDO Type 460-S (marked 277 on face of flange). 1¼" dual downdraft type with Carter Climatic Control. ***For complete data, refer to Carburetor Index.***

Idle Adjustment—With engine warm and running at slow idle speed (choke valve wide open, fast idle inoperative), set throttle stopscrew for 7-8 MPH idle speed. Adjust idle adjusting screw for each barrel until engine fires smoothly (½-1½ turns out from inner seated position—turn screws in for leaner mixture). Readjust idle speed.

Accelerating Pump—Non-adjustable.

Float Level—⅛" from top of float to gasket seat on cover with needle valve seated (invert to check).

Fast Idle:—Integral type (part of carburetor). ***For complete data, refer to Carburetion Equip. Index.***

Setting—Adjust fast idle screw for .023" throttle opening with choke valve fully closed.

Automatic Choke:—Carter Climatic Control. ***For complete data, refer to Carburetion Equip. Index.***

Choke Setting—Set center index mark to coincide with mark on carburetor flange.

CARB. EQUIPMENT

Air Cleaner:—AC #1529297 heavy duty oil-bath type.

Fuel Pump:—AC Type AX #1537083. Diaphragm type combination fuel-and-vacuum pump. ***For complete data, refer to Carburetion Equip. Index.***

Gasoline Gauge:—AC Electric type. #1515368 (dash unit), #1516155 (tank unit). ***For complete data, refer to Carburetion Equip. Index.***

BATTERY

BATTERY:—**Delco Model 17K-2. 6 volt, 17 plate, 115** ampere hour capacity (20 hour rate).

Starting Capacity—137 amperes for 20 minutes.

Zero Capacity—300 amperes for 4.3 minutes. Five second voltage 4.4 volts.

Grounded Terminal—Positive (+) terminal.

Engine Ground—Strap connector at right front engine support.

Dimensions—Length 10⅜". Width 7". Height 8⅝".

Location—Under left front floor boards.

Commercial Battery—Delco Model 19Q-1. 6 volt, 19 plate, 125 A. H. Capacity (20 hour rate).

Starting Capacity—145 amperes for 20 minutes.

Zero Capacity—300 amperes for 5.0 minutes. Five second voltage 4.5 volts.

Dimensions—Same as 17K-2 except Height 8 9/16".

Grounded Terminal, Location—See 17K-2 above.

STARTER

Delco-Remy Model 1107912 (Std.), 1107913 (RHD), Armature No. 820158 (all models).

Drive—Solenoid pinion shift (overrunning clutch).

Rotation—Counter-clockwise at commutator end.

Brush Spring Tension—24-28 ounces.

Performance Data

Torque		R.P.M.	Volts	Amperes
0	ft. lbs.	5500	5.0	65
16	"	Lock	3.0	600

Removal:—Flange mounted on right front face of flywheel housing. To remove, take out flange mounting screws, pull starter forward and remove from below.

Starting Switch:—Solenoid Switch Type 1542 (all). Mounted on starter, controlled through relay (in switch) by Control Switch Type 1996005 on instrument panel. ***For complete data, refer to Electrical Equipment Index.***

Solenoid Switch Specifications

Closes against 70 lb. pull with ½" air gap drawing 65-71 amperes at 5 volts. Holds switch closed with current draw of 12-14 amperes (hold-in coil only).

Solenoid Relay Specifications

Contacts Close—1.9 volts max. **Open**—1.0-1.2 volts. **Contact Gap**—.035". **Air Gap**—.012".

GENERATOR

Delco-Remy Model 1102661. Armature No. 1878211. Two brush type with voltage-current control.

Charging Rate Adjustment—No adjustment at generator. Charging rate controlled by Voltage Regulator and maximum output by Current Regulator. ***See Regulator data following.***

Maximum Charging Rate—32 amperes min. (hot), 8.0 volts, 2450 RPM, 27 MPH and above with load or discharged battery (Current Regulator setting). Actual charging rate controlled by Voltage Regulator and dependent on battery condition.

Performance Data

	Amperes	Volts	R.P.M.
Cold	30*	8.0	1750

*—Not maximum output—See Current Regulator.

Rotation—Counter-clockwise at commutator end.

Field Current—1.67-1.82 amperes at 6.0 volts.

Brush Spring Tension—25 ounces each.

Removal:—Flange mounted between cylinder banks at front of engine, belt driven in tandem with water pump (separate belt for fan). To remov , take out flange mounting bolts.

IMPORTANT AIR SCOOP NOTE—When installing air scoop on generator, make certain that raised portion provides clearance at terminals and that scoop does not cover drive end oil cup.

Belt Adjustment:—Loosen generator mounting bolts, lift generator up until only slight slack evident in belt (new type belt engages bottom of pulley groove not sides), tighten bolts. Generator pivots on left hand bolt, right bolt hole slotted. NOTE—Fan belt adjustment provided at fan bracket.

REGULATOR

Delco-Remy Model 1118202. "Singl Core" Type. Cutout Relay and vibrating type Voltage and Current Regulators in case on dash.

CAUTION—Check generator for grounded fields before changing regulator settings. ***For complete data, refer to Electrical Equipment Index.***

Cutout Relay

Cuts In—6.2-6.7 volts (hot).

Cuts Out—0-4.0 amperes discharge current.

Contact Gap—.020" (same for both sets).

Air Gap—.020" (with points just closed).

Voltage Regulator

Setting—7.2-7.4 volts hot (operating temperature). Regulator over-compensated for temperature.

To Check—Connect ammeter in charging line at 'BAT' regulator terminal, voltmeter between 'BAT' terminal and ground. Operate generator at 2800 RPM, adjust charging rate to 8-10 amperes (use variable rheostat or 'AVR' set). With regulator at hot operating temperature, retard generator speed until cut-out relay points open, then increase generator speed to 2800 RPM and check hot voltage setting (above).

To Adjust—Change regulator armature spring tension slightly by bending lower spring hanger for light (left) spring (or one spring if both alike) only. If further adjustment required, see Single Core Regulator article in Electrical Equipment Section for Heavy (or other spring) adjustment.

Air Gap—.070" between center of core and armature with contacts just closed.

Current Regulator

Setting—34-36 amperes hot (at operating temp.).

To Check—Remove cover, connect short jumper from voltage regulator frame to upper contact support bracket (shorting out Voltage Regulator). Con-

CONTINUED N NEXT PA E

CONTINUED FROM PRECEDIN PAGE

nect ammeter in charging line at 'BAT' regulator terminal. Turn on lights and accessories, operate generator and increase speed until output remains stationary (run until hot). Check setting with regulator at operating temperature.

To Adjust—Change regulator armature spring tension slightly by bending lower spring hanger for one spring. If further adjustment required see Single Core Regulator article in Electrical Equipment Section for adjustment of other spring.

Air Gap—.080" (check same as Voltage Regulator).

LIGHTING

LIGHTING:—Headlamps—Guide 'Sealed Beam' type. ***For complete data, refer to Electrical Equipment Index.***

Headlamp Adjustment—Aim upper beam straight ahead with center of hot spot 3" below lamp center height.

Beam Indicator—On speedometer face. Lighted whenever Country (upper) beam in use.

Direction Signal—***Refer to Electrical Equip. Index.***

Switches

Lighting—Delco-Remy 1995010.

Beam Selector—Delco-Remy 1997002.

Bulb Specifications

Position	Candlepower	Mazda No.
Headlamps		Sealed Beam
Front Indic. & Park	21-3	1154
Instr., Clock, Radio	1.5	55
Glove & Trunk Comp't	1.5	55
Beam Indicator, Ign. Lock	1	51
Stop & Tail	21-3	1154
*Rear Indicator (Early)	21-3	1154
*Rear Indicator (Later)	32	1133
License Plate	3	63
Dome & Quarter	15	87

*—When replacing Rear Indicator Bulb use same type bulb as formerly used (1154 double contact—1133 single contact) in order for circuit to function properly.

MISC. ELECTRICAL

THERMOSTATIC RELAY:—Delco-Remy. On lighting switch. Contacts remain closed with 30 amperes, open in 3 minutes with 42 ampere load at 70° F. Non-adjustable type.

FUSES:—Direction Signal—9 ampere. In Flasher lead under instrument panel.

Fog Lights—20 ampere. On switch.

Radio & Under Seat Heater—14 amperes each.

HORNS:—Delco-Remy Model K-33-H. No. 1999501, 519 (low note), 1999502, 520 (high note). Vibrator type, blended tone, operated by horn relay. Horn set 1999501 & 502 used on early cars.

Type	Current (at 6 volts)	Air Gap
1999501 (Low)	16-18 amperes	.044-.049"
1999502 (High)	15-17 amperes	.034-.039"
1999519 (Low)	19-21 amperes	.044-.049"
1999520 (High)	18-20 amperes	.034-.039"

Horn Relay:—Delco-Remy Model 1116775.

Contact Gap—.020". **Air Gap**—.015" (closed).

Contacts Close—2.75-4.0 volts.

ENGINE

ENGINE SPECIFICATIONS:—Own. 8 cylinder, 90° Vee, 'L' head type. Upper crankcase and cylinder blocks cast Enbloc. **Bore**—3⅜". **Stroke**—4½".

Displacement—322 cu. ins. **Rated HP** 36.45.

Developed Horsepower—130 at 3400 RPM.

Compression Ratio—6.25-1 Std. 5.75-1 Optl.

See Cadillac Shop Notes for cylinder head identification and shims for lowering compression ratio.

Compression Pressure—155 lbs. at 1000 RPM or approx. 105-110 lbs. at cranking speed (Std. head).

Vacuum Reading—Steady 20-21" idling at 7-8 MPH.

PISTONS:—Lynite or Bohn Lo-Ex aluminum alloy, 'T' slot, Cam Ground type with Anodized finish (special hard oxide bearing surface). **Length**—4⅛".

Weight—16.88 ozs. (stripped), 25.12 ozs. (complete).

Removal—Pistons and rods removed from above.

Clearance—Skirt .0020-.0025". See Fitting Pistons.

Replacement Pistons:—***See Cadillac Shop Notes.***

Fitting New Pistons:—Check piston diameter with micrometer gauge at right angles to pin hole just below lower ring groove and also ½" above lower edge. If feeler gauges (¼-½" wide, 7-10" long) used, insert feeler next to T-slot. Piston should fall through bore of own weight on .002" feeler, and hold on .0025" feeler. NOTE—Cylinder bore out-of-round .0005" maximum, taper .0003".

Installing Pistons:—T-slot to left, for all pistons.

PISTON RINGS:—2 compression, 2 oil control rings per piston, all above pin. Oil ring grooves drilled for oil drains.

Ring	Width	End Gap	Side Clearance
Compr. (Top)	3/32"	.007-.012"	.0023-.0041"
Compr. (#2)	⅛"	.007-.012"	.0013-.0026"
Oil Control	5/32"	.007-.015"	.0013-.0026"

Replacem't Rings:—.003",.005",.010",.015",.030" oversize.

PISTON PIN:—Diameter—⅞". **Length**—2 15/16". Pin floats in piston and rod. Held by locking rings.

See Cadillac Shop Notes for special pin removal and installation instructions.

Pin Fit in Piston—.0004" press fit (ribbed end), .0000" clearance or free fit at 70° F. (plain end).

Pin Fit in Rod Bushing—.0002-.0008" clearance (new), .0018" (worn limit).

CONNECTING ROD:—Weight 37.472 ozs. **Length** 8¾".

Crankpin Journal Diameter—2.4590-2.4595".

Lower Bearing—Steel-backed, babbitt-lined type.

Clearance—.0015-.0025" (new), .0045" Max. (worn).

Sideplay—.008-.014".

Bearing Adjustment:—None (no shims). Replace bearings. Do not file rod or caps. ***See Cadillac Shop Notes for connecting rod and bearing installation data.***

Installing Rods:—Numbers on rods and bearing caps on same side and installed in same numbered cylinders with marks down toward oil pan.

CRANKSHAFT:—3 bearing with 6 counterweights. ***See Cadillac Shop Notes for main bearing servicing and rear main bearing oil seal renewal.***

Journal Diameters—2½" all bearings.

Bearings—Removable steel-backed, babbitt-lined. **Clearance**—.0015-.0025" (new), .005" Max. (worn).

Bearing Adjustment:—None (no shims). Replace bearings. Do not file bearing caps.

End Thrust:—Taken by center (#2) bearing. **Endplay**—.001-.005" (new), .010" Max. (worn).

CAMSHAFT:—3 bearing, non-adjustable chain drive. ***See Cadillac Shop Notes for camshaft bushing data.***

Journal Diameters—#1 and #2, 2.4071-2.4078"; #3, 2.0009-2.0016".

Bearing Type—Steel-backed, babbitt bushings.

Clearance—.0015-.0033" (new), .0045" Max. (worn).

End Thrust:—Taken by thrust plate behind camshaft sprocket. No endplay should be permitted.

Timing Chain:—Morse Type C #3682-R Side Guide type. Width 1¼". Pitch ⅜". Length 23¼" or 62 links.

NOTE—Install chain 'endless' as an assembly with sprockets. Use Tool J-836 to pilot camshaft sprocket.

Camshaft Setting:—Sprockets marked. Mesh chain with sprockets turned so that '0' marks are adjacent and in line with a straightedge across shaft centers.

VALVES:—	Head Diameter	Stem Diameter	Length
Intake	1.876-1.886"	.3415-.3425"	5 33/64"
Exhaust	1.626-1.636"	.3405-.3415"	5 33/64"

	Seat Angle	Lift	Stem Clearance
Intake	45°	.335"	.0012-.0032"
Exhaust	45°	.345"	.0022-.0042"

NOTE—Stem clearance worn limit .005" (all valves). ***See Cadillac Shop Notes for valve servicing.***

Valve Guides:—Press in block (long step end down).

Valve Lifters:—Wilcox-Rich 'Zero-lash' type hydraulic lifters (Mushroom type) in removable brackets. ***See Miscellaneous Section for complete data.***

Clearance—.0010-.0024" (new), .0035" (worn).

Valve Springs:—Free length 2.210".

	Spring Pressure	Spring Length
Valve Closed	66 lbs.	1.926"
Valve Open	145 lbs.	1.581"

VALVE TIMING

Tappet Clearance:—None in service (hydraulic type lifter). ***See Valve Servicing in Cadillac Shop Notes.***

Valve Timing:—See Camshaft Setting above.

Intake Valves—Open at TDC. Close 42° ALDC.

Exhaust Valves—Open 52° BLDC. Close 10° ATDC.

Valve Timing Check—#1 cylinder (front-left bank) intake valve should open with piston at TDC and mark 'C.1/6' on crankshaft pulley aligned with chain case cover pointer (on right side).

LUBRICATION

LUBRICATION:—Pressure type (gear type pump in crankcase). ***See Cadillac Shop Notes for oil pump data.***

Normal Oil Pressure:—15 lbs. idling, 25 lbs. at 30 MPH.

Oil Pressure Regulator:—Opens at 30 lbs. On oil pump. Non-adjustable type.

Crankcase Capacity:—7 quarts.

COOLING

COOLING SYSTEM:—Capacity—25 quarts.
See Cadillac Shop Notes for radiator core removal.

Water Pump:—Self-adjusting packing type.
See Water Pump Section for complete data.

Removal—Drain water, remove pump belt, hose and pump mounting screws. Lift pump out.

Thermostat:—Mounted in radiator top tank, linked to radiator shutters by rod on forward side.

Setting—(Std. Type) Starts to open 153-158° F., fully open at 175° F. (High Reading Type—use with Heaters) Starts to open 168-173° F. Fully open 190°.

Shutter Adjustment—Adjust clevis on threaded end of rod to secure 1/16" tension on thermostat with shutters closed.

Temperature Gauge:—AC Electric. #1510773 (dash unit), #1510774 (engine unit).
See Miscellaneous Section for complete data.

CLUTCH

CLUTCH:—Long Model 10CF-TI. Semi-centrifugal, single plate, dry disc type.
NOTE—Borg & Beck Model 11A6 (marked #946) Single plate, dry disc type with 'Borglite' driven member used on early cars.
See Clutch Section for complete data.

Facings (Long)—Spiral or chevron wound woven (spiral grooved). Inside Diam. 6¾". Outside Diam. 10". Thickness .137".

Pedal Adjustment:—Pedal free travel ⅞-1⅛" (adjusting nut on connector link at clutch fork).

Removal:—Remove transmission (see below), drop clutch housing pan, punch mark clutch cover, pressure plate, and flywheel (re-install to these marks), remove 6 cover screws (release tension evenly).
NOTE—Install driven disc with oil guard (cover over dampener springs) to rear.
See Cadillac Shop Notes for clutch locking pin removal (on replacement clutches) and balancing data.

TRANSMISSION

TRANSMISSION:—Own Make. All helical gear, constant-mesh, synchro-mesh (second & high), sliding gear (low & reverse) with remote shift.
See Transmission Section for complete data.

Transmission Control:—Remote steering col. shift.
See Transmission Section for complete data.

Removal:—Support engine with jack under rear end of oil pan (use wooden block to avoid damage to pan), remove propeller shaft (disconnect front and rear universals), free transmission extension at engine rear support, remove crossmember with engine rear support, disconnect speedometer cable, remove shifter rods from levers at transmission, support transmission at rear, take out mounting screws, pull straight back (plug clutch connection shaft bearing drain hole as soon as accessible to prevent lubricant loss), lower front end of transmission and remove.

UNIVERSALS

UNIVERSAL JOINTS:—Mechanics 3C. Needle bearing.
See Universals Section for complete data.

REAR AXLE

REAR AXLE:—Own Make. Hypoid gear, semi-floating type with Hotchkiss drive.
See Rear Axle Section for complete data.

NOTE—Manufacturer recommends Carrier assembly be serviced by factory.

Ratio—3.92-1.

Backlash—.004-.010". Screw adjustment.

Removal:—Disconnect rear universal, remove axle shafts (see below), carrier flange capscrews and carrier.

Axle Shaft Removal:—Remove wheel, axle shaft nut, dust seal from rim of drum, pull off hub and drum, disconnect brake line and remove backing plate. Pull shaft and bearing assembly (use Tool J-838).

Wheel Bearing Adjustment—None.

SHOCK ABSORBERS

SHOCK ABSORBERS:—Delco. 1946-G, H (front), 1751-V, W (rear). Double acting, hydraulic type.
See Shock Absorber Section for complete data.

FRONT SUSPENSION

Front Suspension:—Independent linked parallelegram type with coil springs.
See Front Suspension Section for complete data.

Kingpin Inclination—5°6' crosswise.

Caster—Negative 1¾° to Neg. 2¾°. Adjustable.

Camber—0° to Positive ¾°. Adjustable.

Toe In—1/32-3/32" (at rest). Adjusters at outer end of each tie rod. Adjust equally.

Steering Geometry (Toe-out on Turns)—Inner wheel turned 22¼-23¾°. Outer wheel 20°.

STEERING GEAR

Steering Gear: Saginaw Model. Worm-and-Double Roller type.
See Steering Gear Section for complete data.

BRAKES

BRAKES:—Service. Bendix hydraulic, duo-servo, single anchor type without eccentric adjustment. Hand lever applies rear wheel service brakes.
See Brake Section for complete data.

Drums—Centrifuse. Diameter—11.995-12.0005". Drum out-of-round .007", Turn down limit .030" cut.

Lining—Molded. Length—Primary 11 17/32", Secondary 12 31/32". Width 2" (50,52), 2¼" (50 Com'l front), 2½" (50 Com'l rear). Thickness 3/16".

Clearance—.015" at both ends of secondary shoe with primary shoe forced out against drum.

Braking Power—45½% front wheels, 54½% rear.

Hand Brake:—See Service Brakes above.

CYLINDER HEAD

CYINDER HEAD INSTALLATION: Use Torque Indicating Wrench to tighten cylinder head stud nuts, tighten in sequence from the center of the head outwards. Precedure for tightening Cast Iron and Aluminum Heads is as follows:

Cast Iron Heads—With engine cold, tighten all nuts evenly to correct tension. Then run engine until it is thoroughly warmed up and recheck all nuts (additional tightening may be necessary for correct tension).

Aluminum Heads—With the engine cold, tighten all nuts to correct tension. Run engine until thoroughly warm, allow engine to cool off, and then recheck all nuts. Do not tighten aluminum heads when warm.

LINCOLN ZEPHYR

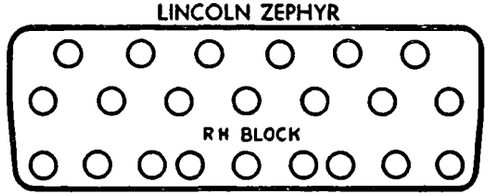

TIGHTENING (TORQUE WRENCH) SPECIFICATIONS

1949 LINCOLN & LINCOLN COSMOPOLITAN

	Ft. Lbs.	In. Lbs.
Cylinder Head Stud Nuts	50-55	600-660
Cylinder Head Capscrews	65-70	780-840
Main Bearing "Place Bolts"	120-130	1440-1560
Connecting Rod Nuts	52-60	624-720
Flywheel to Crankshaft	75-85	900-1020
Vib. Damper to Crankshaft	120-130	1440-1560
Engine Front Support	65-70	780-840
Eng. Rear Support to Trans.	55-60	660-720
Clutch Cover Mounting Screws	22-26	264-312
Flywheel Housing:		
To Cylinder Block	40-45	480-540
To Oil Pan Sump	45-50	540-600
To Engine Rear Plate	30-35	360-420
Trans. to Flywheel Housing	45-50	540-600
Exten. (or OvDr.) to Trans.	55-60	660-720
Pitman Arm to Shaft	120-130	1440-1560
Steering Gear to Frame	30-35	360-420
Steering Idler Arm to Bracket	90-110	1080-1320
Idler Arm Bracket to Frame	40-45	480-540
Front Suspension:		
Upper Arm to Frame	75-80	900-960
Lower Arm to Frame	48-53	576-636
Upper Arm to Spindle	90-110	1080-1320
Lower Arm to Spindle	110-130	1320-1560
Front Brake Drum to Hub	13-15	156-180
Rear Brake Drum to Flange	12-17	144-204
Rear Shock Absorber	60-65	720-780
Rear Spring U-bolts	65-70	780-840
Rear Spring Shackles	35-40	420-480

1936-48 MODELS

	Ft. Lbs.	In. Lbs.
All Aluminum Heads	40	480
All Cast Iron Heads	50	600
Spark Plugs:		
⅞-18 Cast Iron Head	34-38	408-456
14 MM. Cast Iron Head	24-28	288-336
14 MM. Aluminum Head	20-24	240-288
18 MM. Aluminum Head	24-28	288-336

ENGINE REMOVAL

1946-47-48 MODELS

ENGINE REMOVAL (For Servicing or Exchange): To remove engine from chassis, drain cooling system and crankcase, then proceed as follows:

1. Disconnect and remove battery.
2. Remove hood (disconnect horn lead at relay, mark hood hinge location on dash, remove hinges).
3. Disconnect all radiator hoses, remove hoses and thermostats, remove radiator.
4. Disconnect all electrical wires and cables at engine accessories (remove spark plug wires and conduits, disconnect ground strap at rear of engine).
5. Disconnect control cables (hand throttle and choke cables—free hand throttle cable clamp at dash and loop cable out of the way by hooking it back of generator regulator, dispose of choke cable similarly by hooking it back of battery box), disconnect fuel line at fuel pump.
6. Remove all engine accessories (except water pumps and starter), remove oil filler pipe.
7. Remove two engine front support bolts.
8. Loosen clamp on exhaust cross-pipe, disconnect both exhaust pipes at exhaust manifolds.
9. Attach hoist to engine sling, take up slack in sling and hoist cables.
10. Remove front floor pan, place support under front end of transmission case, take out capscrews mounting transmission on flywheel housing.
11. Move engine straight forward to disengage clutch shaft, then lift engine out of car.

ENGINE EXCHANGE

1936-46 MODELS

RECONDITIONED ENGINE & CYLINDER BLOCK: —Reconditioned engines (complete with heads and oil pan) and cylinder blocks (with fitted pistons) are furnished as follows:

RECONDITIONED ENGINES

Model 901H ('36), HB ('37)

Part Number	Size
HB-6012-A	.015" Oversize

Model 86H (1938)

86H-6012-A	.015" Oversize

Model 96H (1939)

96H-6012-A	.015" Oversize

Models 06H (1940), 16H, 168H (1941)

Part Number	Used On:
06H-6012-A	06H, 16H (Zephyr)
06H-6012-B	168H; 06H, 16H (Contl.)

Models 26H, 268H (1942)

26H-6012-A	All (Std. Trans.)
26H-6012-B	All (Liquamatic Trans.)

Model 66H (Early 1946)①

26H-6012-A	To Eng. No. 138051

①—Engines with 2.937" Bore.

CYLINDER BLOCKS & PISTONS

Model 901H (1936)

Part Number	Size
H-6014-A	Standard
HB-6014-B	.015" Oversize

Model HB (1937)

HB-6014-A	Standard
HB-6014-B	.015" Oversize
HB-6014-C	.030" Oversize

Model 86H (1938)

86H-6014-A (Order 96H-6014-A)	Standard
86H-6014-B (Order 96H-6014-B)	.015" Oversize
86H-6014-C (Order 96H-6014-C)	.030" Oversize

CYLINDER BLOCKS & PISTONS (Cont.)

Model 96H (1939)

Part Number	Size
96H-6014-A	Standard
96H-6014-B	.015" Oversize
96H-6014-C	.030" Oversize

Models 06H (1940), 16H, 168H (1941)

06H-6014-A	Standard
06H-6014-B	.015" Oversize
06H-6014-C	.030" Oversize

Models 26H, 268H (1942)
Model 66H (Early 1946)①

Standard	Liquamatic Drive 1942	Size
26H-6014-A	26H-6014-D	Standard
26H-6014-B	26H-6014-E	.015" Oversize
26H-6014-C	26H-6014-F	.030" Oversize

①—Engines with 2.937" Bore (To No. 138051).

CYLINDER SLEEVES

1936-48 MODELS

CYLINDER SLEEVES: Cast iron, dry type cylinder sleeves available for replacement where bore size worn beyond Oversize Piston limit.

Sleeve Installation—Rebore cylinder to size .0012" smaller than outside diameter of sleeve to provide correct press fit, counterbore top of cylinder to fit flange on upper end of sleeve, press sleeve in place.

NOTE—These sleeves are furnished with finished cylinder bore to fit a standard size piston. No finishing operations are necessary.

PISTONS

1936-48 MODELS

REPLACEMENT PISTONS: Finished pistons are furnished in the sizes listed below with each size graded in steps as follows:

MODELS 901H ('36), HB ('37), 86H ('38), 96H ('39)

Part No.	Standard Pistons	Size
86H-6110-A2		2.7482-2.7485"
86H-6110-A4		2.7493-2.7496"
	.002" Oversize	
86H-6110-A6		2.7505-2.7508"
86H-6110-A8		2.7517-2.7520"
	.015" Oversize	
86H-6110-B2		2.7632-2.7635"
86H-6110-B4		2.7643-2.7646"
	.030" Oversize	
86H-6110-C2		2.7782-2.7785"
86H-6110-C4		2.7793-2.7796"

MODELS 06H ('40), 16H, 168H ('41)
MODEL 66H (Late 1946 & 1947-48)②

Part No.	Standard Pistons	Size
06H-6110-B2		2.8732-2.8735"
06H-6110-B4		2.8743-2.8746"
06H-6110-B6		2.8755-2.8758"
06H-6110-B8		2.8767-2.8770"
	.015" Oversize	
06H-6110-C2		2.8882-2.8885"
06H-6110-C4		2.8893-2.8896"
	.030" Oversize	
06H-6110-D2		2.9032-2.9035"
06H-6110-D4		2.9043-2.9046"

②—Engines with 2.875" Bore (Eng. #138052 and Up)

PISTONS (Continued)

MODELS 26H, 268H (1942)
MODEL 66H (Early 1946)①

Part Number	Nominal Size	Actual Size
26H-6110-A2	Standard	2.9357-2.9360"
26H-6110-A3	"	2.9362-2.9365"
26H-6110-A4	"	2.9368-2.9371"
26H-6110-A6	"	2.9380-2.9383"
26H-6110-A8	"	2.9392-2.9395"
26H-6110-D2	.020" Oversize	2.9557-2.9560"
26H-6110-D3	"	2.9562-2.9565"
26H-6110-D4	"	2.9568-2.9571"
26H-6110-C2	.030" Oversize	2.9657-2.9660"
26H-6110-C3	"	2.9662-2.9665"
26H-6110-C4	"	2.9668-2.9671"
26H-6110-E2	.040" Oversize	2.9757-2.9760"
26H-6110-E3	"	2.9762-2.9765"
26H-6110-E4	"	2.9768-2.9771"

①—Engines with 2.937" Bore (To No. 138051).

PISTON RINGS

1936-39 MODELS

REPLACEMENT PISTON RINGS: Piston rings (and Expanders for #2 Compression and Oil Ring) furnished in sets and singly in following sizes:

CAUTION—1936-37 models have narrower (5/32") oil ring. 1938-39 models use 3/16" oil ring.

1936-37 RING SETS IN CARTONS

Part Number	(5/32" Oil Rings)	Size
HS-6149-A	(Steel Segment Type)	Standard
HS-6149-B	(Steel Segment Type)	.015" Oversize

1938-39 RING SETS IN CARTONS

Part Number	(3/16" Oil Rings)	Size
96HS-6149-A	(Steel Segment Type)	Standard
96HS-6149-B	(Steel Segment Type)	.015" Oversize
96HS-6149-C	(Steel Segment Type)	.030" Oversize

1936-39 SINGLE COMPRESSION RINGS

Upper Compression (No Expander)

Part No.	Type	Size
H-6150-B	Plain	Standard
H-6150-C	Plain	.015" Oversize
H-6150-D	Plain	.030" Oversize

Lower Compression (With Expander)

86H-6152-A①	Expander	Standard
86H-6152-B①	Expander	.015" Oversize
86H-6152-C①	Expander	.030" Oversize
96HS-6152-A	Steel Segment	Standard
96HS-6152-B	Steel Segment	.015" Oversize
96HS-6152-C	Steel Segment	.030" Oversize

①—Used with new Cylinder Blocks.

1936-37 SINGLE 5/32" OIL RINGS

Part No.	Oil Control (with Expander)	Size
HS-6153-A	Steel Segment	Standard
HS-6153-B	Steel Segment	.015" Oversize

1938-39 SINGLE 3/16" OIL RINGS

Part No.	Oil Control (with Expander)	Size
96H-6153-D①	Expander	Standard
96H-6153-E①	Expander	.015" Oversize
96H-6153-F①	Expander	.030" Oversize
96HS-6153-A	Steel Segment	Standard
96HS-6153-B	Steel Segment	.015" Oversize
96HS-6153-C	Steel Segment	.030" Oversize

①—Used with new Cylinder Blocks.

1940-48 MODELS

PISTON RINGS: Piston rings (and expanders for #2 Compression Ring & Oil Ring) are furnished in Sets in Cartons and single as listed below (Rings should be ordered in sets).

1940-41 & LATE 1946-47-48②
RING SETS IN CARTONS

Part No.	(Steel Segment Type)	Size
06HS-6149-A		Standard
06HS-6149-B		.015" Oversize
06HS-6149-C		.030" Oversize

②—Engines with 2.875" Bore (Eng. #138052 and Up)

1940-41 & LATE 1946-47-48②
SINGLE PISTON RINGS

Upper Compression (No Expander)

Part No.	Type	Size
06H-6150-B		Standard
06H-6150-C		.015" Oversize
06H-6150-D		.030" Oversize

②—Engines with 2.875" Bore (Eng. #138052 and Up)

Lower Compression (With Expander)

06H-6152-B①	Expander	Standard
06H-6152-C	Expander	.015" Oversize
06H-6152-D	Expander	.030" Oversize
06HS-6152-A	Steel Segment	Standard
06HS-6152-B	Steel Segment	.015" Oversize
06HS-6152-C	Steel Segment	.030" Oversize

①—Used with new Cylinder Blocks.
②—Engines with 2.875" Bore (Eng. #138052 and Up)

Oil Control (With Expander)

06H-6153-B①	Expander	Standard
06H-6153-C	Expander	.015" Oversize
06H-6153-D	Expander	.030" Oversize
06HS-6153-A	Steel Segment	Standard
06HS-6153-B	Steel Segment	.015" Oversize
06HS-6153-C	Steel Segment	.030" Oversize

①—Used with new Cylinder Blocks.
②—Engines with 2.875" Bore (Eng. #138052 and Up)

1942-EARLY 1946①
SINGLE PISTON RINGS

Upper Compression Ring (No Expander)

Part No.	Type	Size
26H-6150-A		Standard
26H-6150-D		.020" Oversize
26H-6150-C		.030" Oversize
26H-6150-E		.040" Oversize

①—Engines with 2.937" Bore (to Eng. No. 138051).

Lower Compression Ring (with Expander)

26H-6152-A	Expander	Standard
26H-6152-D	Expander	.020" Oversize
26H-6152-C	Expander	.030" Oversize
26H-6152-E	Expander	.040" Oversize
26HS-6152-A	Steel Segment	Standard
26HS-6152-D	Steel Segment	.020" Oversize
26HS-6152-C	Steel Segment	.030" Oversize
26HS-6152-E	Steel Segment	.040" Oversize

①—Engines with 2.937" Bore (to Eng. No. 138051).

Oil Control Ring (With Expander)

26H-6153-A	Expander	Standard
26H-6153-D	Expander	.020" Oversize
26H-6153-C	Expander	.030" Oversize
26H-6153-E	Expander	.040" Oversize
26HS-6153-A	Steel Segment	Standard
26HS-6153-D	Steel Segment	.020" Oversize
26HS-6153-C	Steel Segment	.030" Oversize
26HS-6153-E	Steel Segment	.040" Oversize

①—Engines with 2.937" Bore (To No. 138051).

PISTON PINS

1936-48 MODELS

REPLACEMENT PISTON PINS: Piston pins furnished for service in the following sizes:

1936-48 PISTON PINS

Part Numbers 1936-39	1940-48	Size
H-6135-B	06H-6135-A	Standard
H-6135-C	06H-6135-B	.001" Oversize
H-6135-D	06H-6135-C	.002" Oversize

1936-48 MODELS

PISTON PIN FITTING: Pins can be removed and installed without heating pistons. New pins, pistons, and connecting rods are held to close limits so that no fitting is required. Check pin fit as directed below. Oversize pins can be fitted in old pistons (and rod bushings) if clearances excessive and diameter of pin hole does not exceed .7536". Ream and burnish pin holes to size providing correct clearance for .001" or .002" Oversize.

CAUTION—Do not use oversize pins in **new pistons.**

If connecting rod bushing worn so that clearance excessive with new Standard Size Pin (as used with new pistons), install new bushing in rod (following).

Pin Fit in Piston: Pin should be light hand push fit with piston and pin at room temperature (70°F) or .0003-.0009" clearance (new), .0015" (worn).

Pin Fit in Rod Bushing: Pin should pass through bushing slowly of own weight. Clearance (new) should be .0002-.0005" and the worn limit is .0015". Renew bushing if clearance excessive (with new pistons), or ream and burnish bushing and install oversize pin (with old pistons).

1936-48 MODELS

CONNECTING ROD BUSHING SERVICING: Drive old bushing out of connecting rod (use suitable driver to avoid damage to rod). Press new bushing in place, drill four oil holes (to same size as holes in rod), ream and burnish or hone bushing to inside diameter of .7503-.7506" which will provide correct fit for new standard size pin.

CAUTION—Check alignment of the connecting rod after bushing installed and correct any misalignment caused by this operation.

CONNECTING ROD & BEARINGS

1936-48 MODELS

REPLACEMENT CONNECTING ROD BEARINGS: Bearing halves (upper and lower halves have same part number) furnished in Standard Size and following Undersizes:

1936-48 CONNECTING ROD BEARINGS

Part Numbers 1936-41	1942-47	Size
H-6211-C	26H-6211-A	Standard
H-6211-D	26H-6211-B	.0015" Undersize
H-6211-G	26H-6211-C	.003" Undersize
H-6211-F①	26H-6211-D①	.020" Undersize
H-6211-E②	26H-6211-E②	.040" Undersize

①—Used with .020" Undersize Crankshaft.
②—Used with .040" Undersize Crankshaft.

NOTE—24 pieces (2 halves) required for set.

CONTINUED ON NEXT PA E

CONTINUED FROM PRECEDING PAGE

CRANKSHAFT & MAIN BEARINGS

1936-48 MODELS

REPLACEMENT MAIN BEARINGS: Bearing halves (upper and lower halves have same part number) furnished in following sizes:

1936-48 MAIN BEARINGS

Bearing Part Numbers Front	#2 & #3	Rear	Size
H-6338-C	H-6342-C	H-6337-C	Standard
H-6338-D	H-6342-D	H-6337-D	.0015" U.S.
H-6338-G	H-6342-G	H-6337-G	.003" U.S.
H-6338-F	H-6342-F	H-6337-F	①.020" U.S.
H-6338-K	H-6342-K	H-6337-K	.030" U.S.
H-6338-E	H-6342-E	H-6337-E	②.040" U.S.

①—Used with .020" Undersize Crankshaft.
②—Used with .040" Undersize Crankshaft.

NOTE—8 pieces (2 halves of each) required for set.

TIMING GEARS

1940-48 MODELS

TIMING GEARS: Camshaft Gear. New type aluminum alloy camshaft gear is bolted on camshaft hub flange by four offset capscrews and can be replaced without removing camshaft from engine. To remove gear, remove screw in front end of crankshaft, pull fan and dampener assembly (use Puller 6360-A), remove timing gear cover. Bend back lockplate tangs and take out four camshaft gear mounting screws, remove gear. When replacing gear, make certain that marks on camshaft gear and crankshaft gear are lined up and see that lockplate tangs are bent up against flats on mounting screws. Use 6360-B Dampener Replacer tool to install dampener.

NOTE—Camshaft gear mounting screw holes are offset so that gear can only be installed in correct position.

Crankshaft Gear—To replace crankshaft gear, pull fan and dampener assembly (see Camshaft Gear Removal above), use 6306-C puller to remove crankshaft gear, 6306-D Gear Replacer to install gear.

VALVE SYSTEM

1936-48 MODELS

VALVE SERVICING: Complete valve assembly (valve, spring, guide) should be removed from the engine and dismantled on the bench as follows:

Valve Assembly Removal—Use special bar type lifter, VZ-185, inserting end of lifter through spring coils to engage flanged lower end of guide, pull guide down slightly to release retaining 'C' washer, pull 'C' washer out, lift valve assembly out through top of block.

CAUTION—Mark valve assembly with cylinder number to insure re-installation in same position.

Valve Assembly Dismantling—Use special bench fixture to compress valve spring so that spring retainer can be removed, then remove spring, separate guide halves and remove valve. Re-assemble valves in same manner.

CAUTION—Mark valve guide halves to insure each assembly being kept together and re-installed in same cylinder.

Valve Installation N te—Intake valve guides have relief groove cut on one edge of each guide half. Install guides with this relief groove up.

Valve Seat Insert Grinding:—Manufacturer recommends use of eccentric grinding equipment to reface seat inserts (inserts are high-tungsten, chrome-alloy steel and are exceedingly hard).

1938-48 MODELS

Hydraulic Valve Lifter Servicing:—When lifters removed they should be installed dry (will fill with oil and become quiet more rapidly than if installed with oil film between plunger and cylinder which will trap air in unit). Whenever lifters removed from engine, service as follows:

Lifter Installation—Remove plunger from lifter body, wash out all oil, dry with air, re-install plunger in lifter body and install in engine.

CAUTION—Plunger is selective fit in lifter body and must not be interchanged. Make certain that plunger re-installed in lifter from which removed.

Lifter Clearance—Clearance between plunger and valve stem must be .030-.070" with no oil in unit and plunger and spring fully compressed. To check this clearance, see that lifter is on heel of cam, use screwdriver to fully depress plunger in lifter body, check clearance with feeler gauge.

Refer to article in the Miscellaneous Section for complete Wilcox-Rich 'Zero-lash' hydraulic lifter servicing data.

OIL PUMP

1936-48 MODELS

OIL PUMP: Removal & Disassembly—To remove pump from engine, remove locking wire and take out mounting screw in pump mounting flange, pull pump down and out (NOTE—Pump body fits in recess in cylinder block and it may be necessary to jar it slightly to loosen it). To dismantle pump, remove 4 screen cover capscrews, take out screen cover, pump cover plate, screen, and screen cover gasket. Lift out pump driven gear. Remove relief valve plug, spring, and plunger (on side of pump housing). If pump shaft and driving gear are to be removed, drive out pin in drive (upper) gear, place pump in arbor press with support under oil screen cover gasket seat (below relief valve), press shaft and driving gear out through lower end of housing.

Servicing—Clean out all oil passages in pump housing with compressed air. Replace all worn parts when clearances exceed following limits:

Pump Shaft & Bushings—Shaft clearance in bushing should be .001-.003" and bushings should be replaced if clearance exceeds .005". Replace shaft if pump gear worn or if bearing surface worn to diameter of less than .497". Replace bushings if worn to inside diameter greater than .502" (check by pushing shaft gear from side-to-side in pump housing, replace bushings if play greater than .005". Remove old bushings with driver, press new bushings in place, line ream to inside diameter of .499".

Pump Driven Gear & Shaft—Clearance between driven gear and stub shaft in pump housing should be .002-.0035". Replace shaft if clearance exceeds .005" or shaft diameter under .434". To replace shaft, drive old shaft out of housing, press new shaft in place (make certain end of shaft will clear cover when installed).

Oil Pump Relief Valve—Check relief valve spring tension. Replace if not within limits as follows:

Spring Number	Pressure & Length
H-6670 ("H" & "86H" pumps)	134-144 ozs. @ 1.06"
06H-6670 (for "06H" pumps)	95-101 ozs. @ 1.195"
41A-6654 (for "56H" pumps)	78-87 ozs. @ 1.38"

Pump Assembly—Insert pump shaft in housing, press drive gear on shaft until clearance between gear hub and end of housing (endplay) is .017", drill new 5/32" hole through shaft in line with hole in gear, install 5/32" pin and peen both ends of pin. Complete assembly by reversing disassembly (above). CAUTION—Make certain that pump mounting screw is locked with wire and lockwashers used under screen cover capscrews. Stake oil relief valve plug in place with punch.

1936-48 MODELS

OIL PUMP DRIVE (Camshaft Gear): Pump drive gear is pressed on rear end of camshaft. Remove old gear with gear puller, No. 6254-A, drive new gear on shaft with a fibre block (support shaft in vise with brass jaws). NOTE—Late design camshafts have flat on oil pump drive gear hub and gears have similar flat to prevent the gear turning in service. These gears and camshaft must be used together and flats must be lined up when installing gear. Drive gear on shaft until it is firmly seated against the shoulder on the shaft.

Oil Pump Idler Gear: This gear located in rear end of cylinder block between camshaft gear and oil pump drive gear on pump shaft.

Removal & Disassembly—Take out capscrews in cover on rear face of cylinder block, lift off cover and gear assembly, and gasket.

Servicing—Replace all worn parts when clearances exceed following limits:
Idler Gear & Bushing—Clearance on shaft should be .0005-.002". Replace bushing if worn to inside diameter greater than .752" or if clearance exceeds .005". To replace bushing, drive old bushing out, press new bushing in gear, ream bushing to provide shaft clearance of .0005-.002".

Idler Gear Shaft—Replace shaft if scored or worn to diameter less than .747". To replace shaft, press old shaft out of cover, press new shaft in until end of shaft is flush with face of cover.

1936-48 MODELS

OIL-PRESSURE REGULATOR (Relief Valve): Relief valve located under plug directly above **front** camshaft bearing (under valve cover) on all engines. Oil pump relief valve located on side of oil pump. Additional hydraulic lifter by-pass valve located above **rear** camshaft bearing (under valve cover) on cars with hydraulic valve lifters starting with 1938. Check relief valve spring tension and replace all springs which are not within limits listed below. CAUTION—Correct type spring must be used.

Front Cylinder Block Relief Valve (Engines without Hydraulic Valve Lifters)—Replace valve spring if not within limits of 36-43 ozs. compressed to 1.38".

Front Cylinder Block Relief Valve (Engines equipped with Hydraulic Valve Lifters)—Replace valve spring if not within 33-36 ozs. compressed to .53".

Rear Cylinder Block Hydraulic Lifter By-Pass Valve—Replace by-pass valve if spring broken or if valve does not seat properly (or clean metering plug which was used in place of by-pass valve in early 1938).

Oil Pump Relief Valve—Three different spring used. See Oil Pump Removal & Disassembly data above.

1936-48 MODELS

LOW OIL PRESSURE NOTE: Low oil pressure may be caused by fuel pump push rod bushing being worn through, permitting oil to escape from main oil channel. Replace bushing by driving old bushing out of cylinder block and driving new bushing in until top of bushing is 7/8" above face of casting. New bushings need not be reamed.

OIL PAN REMOVAL

1936-48 MODELS

OIL PAN REMOVAL: Drain crankcase. Disconnect drag link at steering gear pitman arm. Loosen clamp on exhaust cross pipe, disconnect cross pipe at left cylinder bank exhaust manifold, remove cross-pipe. Remove capscrews in ball cap at rear end of front radius rods, lower radius rods to provide additional clearance at pan (rods can be held down by inserting wooden block between ball connection at rear end and frame). Remove right and left splash pan mounting screws and move pans out of the way. Remove starter motor. Disconnect oil filter return line at oil pan. Take out oil pan capscrews and remove pan from beneath car. NOTE—Front end of car can be raised by means of hoist attached to bumper bars (not axle) for additional pan clearance at front end.

Installation Caution—Install new packing in groove at front end of oil pan and use new pan gasket. Packing should be soaked in engine oil for two hours before it is used.

1949 LINCOLN

►**OIL PAN REMOVAL (LINCOLN):** ***CAUTION—For access to oil pump and screen or for clean out, oil sump only can be removed. Oil sump secured by 4 lower capscrews on bell housing and 18 nuts to oil pan.***

Oil Pan Removal—Car manufacturer recommends following method be used:

1)—Drain oil, set #2 piston at top dead center (2nd cylinder right hand bank), turn wheels to extreme right, take off exhaust cross-over pipe (secure manifold heat valve with one nut).

2)—Remove steering idler arm bracket from right frame rail and pull down. Take off starter and oil dip stick tube.

3)—Remove oil sump (4 lower capscrews on bell housing and 18 nuts to oil pan). Take off oil pan baffle (clipped to oil pan). Disconnect filter return line on left side of pan.

4)—Remove 20 oil pan-to-block capscrews using 3/8" drive tools. Move outlet pipe to left after freeing bracket for access to front oil pan screws. Lower rear end of pan and slide out to rear.

1949 LINCOLN COSMOPOLITAN

OIL PAN REMOVAL (LINCOLN COSMOPOLITAN): Same as given for LINCOLN above except that front end of engine must be raised as follows:

1)—Drain radiator and remove lower radiator hoses.

2)—Turn fan so that wide angle between blades up.

3)—Remove fuel & vacuum pump from adapter.

4)—Take off 2 nuts from front engine mounts, raise front of engine 2 1/4-2 3/8", block engine up by inserting blocks between brackets and engine mounts.

5)—When removing oil pan, pan should be turned so front oil seal will pass over left capscrew of front main bearing cap.

RADIATOR

1946-47-48 MODELS

RADIATOR REMOVAL: Drain cooling system. Disconnect and remove upper and lower radiator hoses. Remove two horizontal capscrews at bottom of radiator, lift radiator out.

COOLING SYSTEM

1949 LINCOLN & LINCOLN COSMOPOLITAN

►**PRODUCTION CHANGE FOR IMPROVED COOLING: New Cylinder Head Gasket No. 8EL-6051-D.** This gasket required for new water holes added during production, 4 holes in block (1 in upper corners of each bank) with matching holes in each cylinder head. This gasket furnished for service on **all** engines (can be used on early engines without the additional holes).

Drilling of Additional Water Passage Holes on Early Cylinder Blocks and Heads for Improved Circulation—Allowed by car manufacturer where overheating conditions cannot be corrected by regular methods. Use new gasket No. 8EL-6051-D as template, drill 5/16" additional holes as follows: 4 in cylinder block (1 in upper corner front and rear of each bank), 2 in each cylinder head (1 in upper corner front and rear).

►***CAUTION—Holes in cylinder block should not be drilled deeper than 5/8".***

MODEL IDENTIFICATION

SERIAL NUMBER: On plate on front of dash. Use Engine Number (following).

ENGINE NUMBER: Stamped on left side of crankcase below center of block. First No. K-5501 (1936), K-7501 (1937), K-9001 (1938), K-9451 (1939).

TUNE-UP

COMPRESSION:—Ratio—6.38-1 Std. aluminum head. Pressure—138 lbs. at 1000 R.P.M. or 105-110 lbs. at cranking speed of 100 R.P.M.

VACUUM READING:—18-20" steady reading with engine idling at 5-7 M.P.H.

FIRING ORDER: 1-4-9-8-5-2-11-10-3-6-7-12. See diagram for cylinder numbering and spark plug cable connections.

SPARK PLUGS: Champion No. 7. 18 mm. Metric type. Gaps—.028-.030".

IGNITION: See Coil, Condenser, and Distributor.
Breaker Gap—.020" Cam Angle 36° (closed).
Synchronization—Movable contacts open 33½° (distr.) after fixed set (unequal 33½-26½-33½° firing intervals).
Automatic Advance—*See Distributor.*

IGNITION TIMING: See Ignition Timing.
Std. Setting—At TDC. with flywheel mark "D2/12C" at indicator in inspection hole in top right face of housing. NOTE—Movable contacts open 33½° (distr.) after this point (unequal 33½-26½-33½° intervals).

CARBURETION: See Carburetor & Carb. Equipment.
Idle Setting—Both idle screws midway between "miss" and "roll" points or set for highest steady vacuum gauge reading. Idle speed 5-7 MPH.
Float Level—Fuel level 9/16" below top edge of float bowl.
Accelerating Pump—Inner hole—Summer, Outer hole—Winter.
Fuel Pump Pressure: 4½ lbs. maximum.

VALVES: See Valve Timing.
Tappet Clearance (1936)—.004" Int., .006" Exh. Cold. (1937-40)—None in service (hydraulic type take-up)

STARTING: See Battery, Starter, Generator, Regulator.

IGNITION

Ignition Switch:—Oakes Steering Column & Ignition Lock No. 301539, Lincoln Part No. K-7675-F.
Lock Cylinder—Hurd.

COIL: Auto-Lite Model CE-4001-L. Two coil unit mounted on dash above distributor.
Ignition Current—1.5 amperes idling, 5 amperes stopped for each coil.

CONDENSER: Auto-Lite Part No. IG-2671A & IG-2671E (one each). **Capacity**—.20-.25 microfarad.

DISTRIBUTOR: *Auto-Lite Model* IGM-4003 (Std.), IGM-4003A (Exp.). Double breaker, 6 lobe cam, full automatic advance type. Contacts open alternately.
Firing Interval—Alternate opening at 33½ and 26½° intervals corresponding to unequal 67 and 53° firing intervals of engine. Contacts must be synchronized. See Timing.
Breaker Gap—Set at .020" (both sets equal).
Cam Angle r Dwell—36° closed, 24° open. Each set operates independently.
Breaker Arm Spring Tension—17-20 ozs.

Automatic Advance—IGM-4003

Distributor Degrees	R.P.M.	Engine Degrees	R.P.M.
Start	300	0	600
2	660	4	1320
4	1000	8	2000
6	1365	12	2730
8.5	1800	17	3600

Automatic Advance—IGM-4003-A

Start	300	0	600
4	450	8	900
6	800	12	1600
8	1140	16	2280
10	1500	20	3000
12	1840	24	3680

Removal:—Distributor mounted between banks at rear of engine. To remove, take off distributor conduits and cap, take out hold-down screws in advance arm.

IGNITION TIMING

IGNITION TIMING:—	Flywheel Degrees	Piston Pos.
All engines	At TDC.	.000" TDC.

NOTE—Right hand (stationary) contacts control right coil and fire spark plugs in right cylinder bank. Left hand (movable) contacts control left coil and fire plugs in left bank.

Timing (Stationary Contacts)—With #2 piston (front cylinder, right bank) on top dead center entering power stroke and flywheel mark 'D2/12C' at indicator in inspection hole in right top face of flywheel housing, loosen taper lockscrew in center of breaker cam, carefully locate cam so that right hand (stationary) contacts are beginning to open, tighten lockscrew. Synchronize movable contacts.

Synchronization (On the Engine)—Turn engine over 67° to firing position of piston #1 (front cylinder, left bank), stop with piston on top dead center when flywheel mark 'D1/11C' lines up with indica-

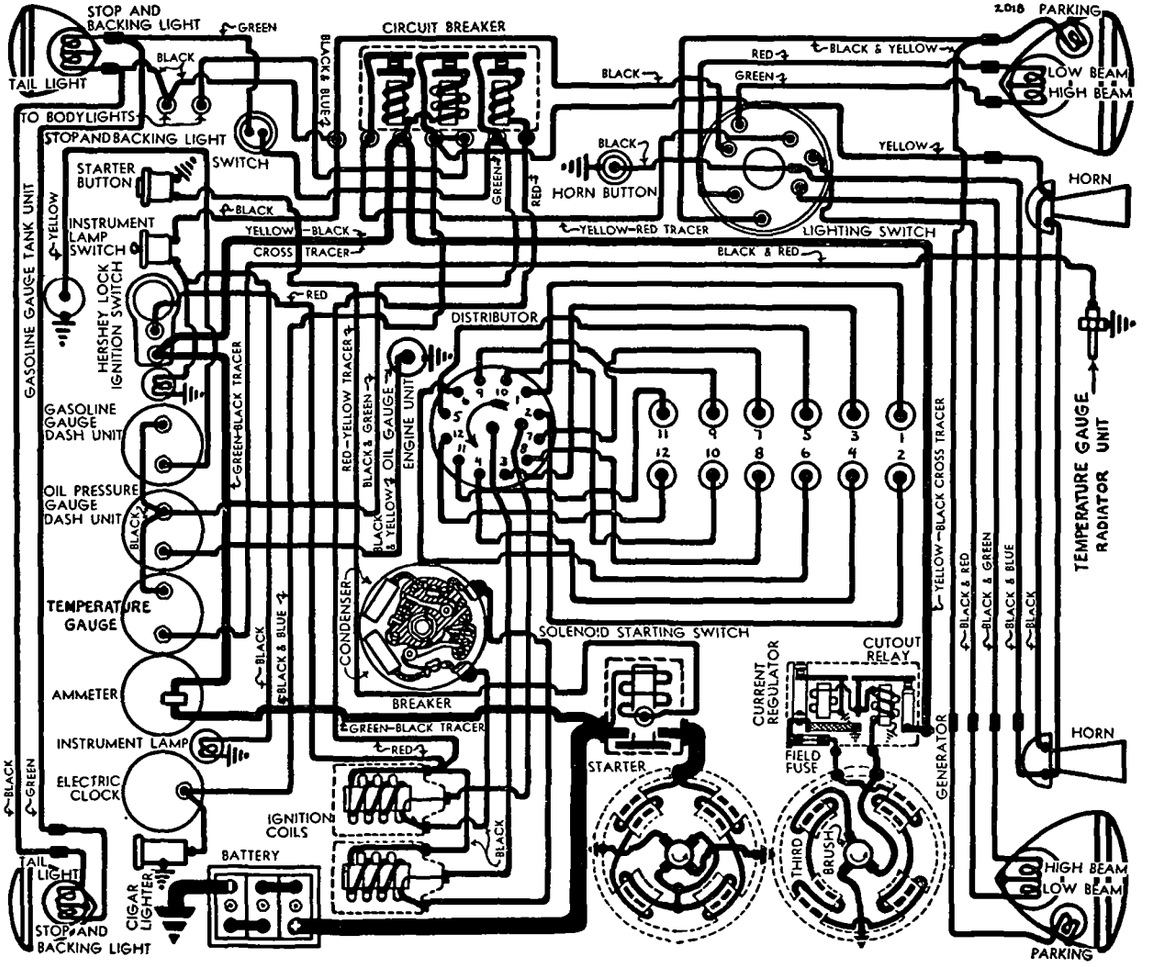

1936 MODEL

tor. Loosen lockscrews on movable subplate, shift plate by turning eccentric adjusting screw until movable contacts begin to open, tighten lockscrews.

Synchronization (Other methods)—If distributor synchronized on rotary spark gap or other types of equipment, set movable contacts to open 33½° after stationary contacts. Firing intervals unequal 33½-26½-33½ distributor degrees.

CARBURETOR

CARBURETION:—Carburetor—Stromberg Model EE-22, 1.437" (1 7/16") dual downdraft type.

For complete data, refer to Carburetor Index.

Idle Adjustment—Warm up engine before adjusting. Manufacturer recommends use of vacuum gauge and adjustment of idle adjusting screws for highest steady vacuum. If vacuum gauge not used, adjust throttle stopscrew for 5-7 M.P.H. idling speed, cut out one bank of cylinders by disconnecting coil primary lead, adjust idling adjusting screw for carburetor barrel feeding the other bank by turning screw in until engine begins to miss and then out until engine fires smoothly. Reconnect coil, disconnect second coil and repeat adjustment for other idle adjusting screw. Idle engine for all 12 cylinders and readjust for correct 5-7 MPH idling speed.

Accelerating Pump Adjustment—Engage pump link in proper hole in throttle lever as follows:
Inner Hole—Minimum stroke—Summer setting.
Outer Hole—Maximum stroke—Winter setting.

CARB. EQUIPMENT

Air Cleaner: AC #1525939 (1936), #1528347 (1937), #1528497 (others), oil-wetted type.

Fuel Pump:—AC. Type I #1521218 Diaphragm type combination fuel-and-vacuum pump.

For complete data, refer to Carburetion Equip. Index.

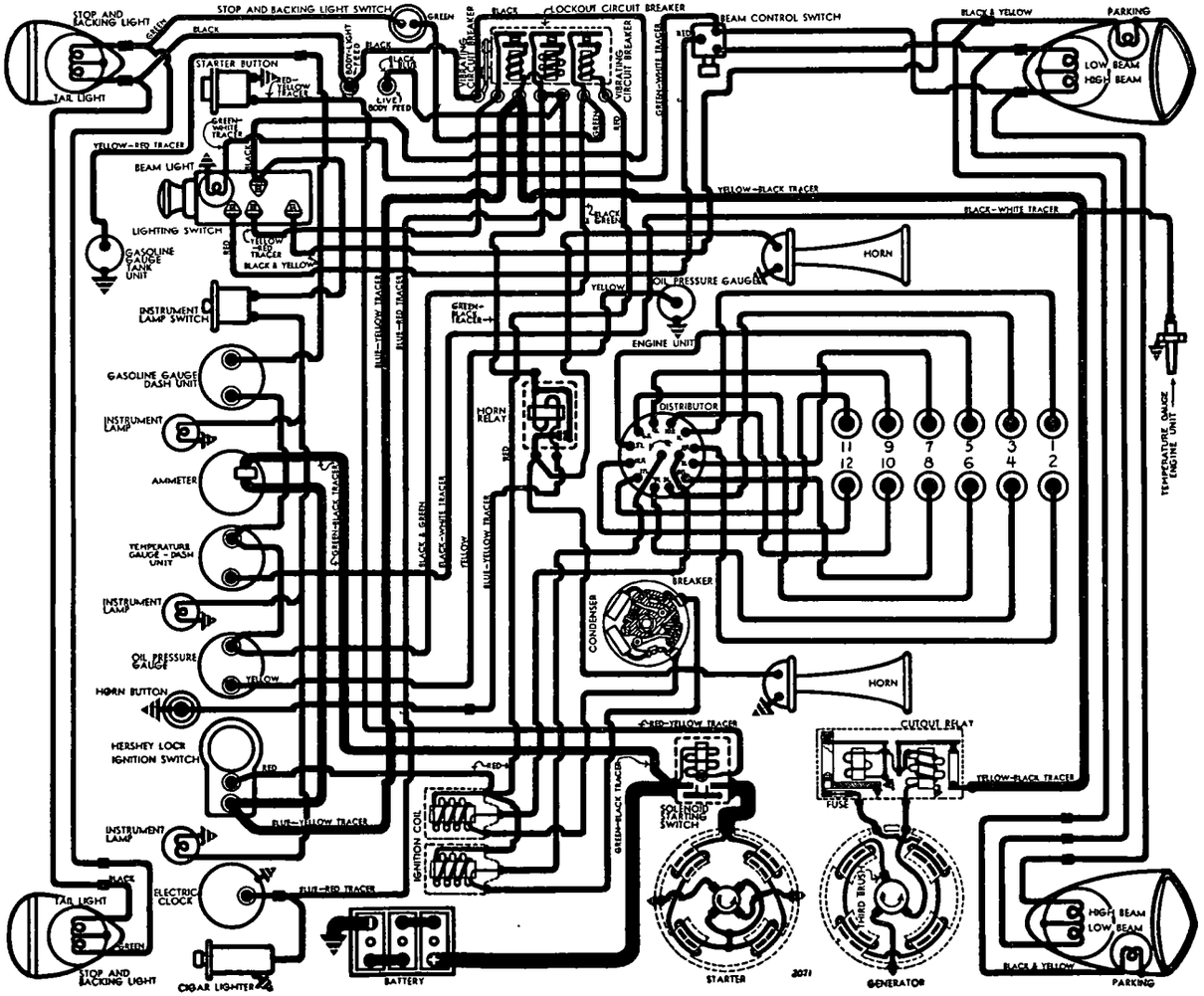

1937-40 M DELS

Gasoline Gauge (1936)—King-Seeley Electric type. K-S No. 5766 (Dash Unit—stamped 'G' on edge), No. 5852 (Tank Unit—stamped 'Lincoln K8380E'). (1937-40)—King Seeley Electric. K-S No. 6250, Lincoln No. K-13099D (dash unit), K-S No. 5850, Lincoln No. 70-9275 (tank unit).

For complete data, refer to Carburetion Equip. Index.

BATTERY

BATTERY:—Exide, Type X-21-L. 6 volt, 21 plate, 147 ampere hour capacity (20 hour rate).
Starting Capacity—175 amperes for 20 minutes.
Zero Capacity—300 amperes for 6.1 minutes.
Grounded Terminal—Negative (—) terminal.
Location—On right side under front floor.

STARTER

Auto-Lite Model MAO-4003B (Std.), MAO-4004B (Exp.). Armature No. MAO-2006.
Drive—Outboard Bendix Type RB10FXXTD.
Cranking Engine—100 RPM, 150-200 amp., 5 volts.
Rotation—Counter-clockwise at commutator end.
Brush Spring Tension—24-32 ozs. (new brushes).

Performance Data

Torque		R.P.M.	Volts	Amperes
0	ft. lbs	2700 Min	5.5	44 Max.
1.5	"	1360	5.5	100
5.7	"	740	5.0	200
11.1	"	500	4.5	300
16.8	"	320	4.0	400
22.3	"	180	3.5	500
34.0	"	Lock	3.0	715
48.5	"	Lock	4.0	975

Starting Switch:—Model SS-4004 (MAO-4003B), SS-4005 (MAO-4004B). Pushbutton R.B.M. No. 3225. Magnetic type switch mounted on starter and controlled by pushbutton on instrument panel.

For complete data, refer to Electrical Equipment Index.

Removal:—Starter flange mounted on right front face of flywheel housing. To remove, take out 3 flange mounting screws.

GENERATOR

Auto-Lite Model GBC-4103, Armature No. GBC-2035. Third brush control in conjunction with Current Regulator (two-rate charging control). Ventilated by fan on drive pulley.

Charging Rate Adjustment—Use test meters to check output. Ground regulator by connecting short jumper between fuse cap on regulator and generator frame while making adjustment. Turn slotted screw on commutator endplate (upper hexagonal headed screw) clockwise to increase or counter-clockwise to decrease charging rate. Remove jumper wire.

IMPORTANT NOTE—Third brush stop is set to limit maximum possible output of generator to 24-25 amperes at 8.0 volts and is locked in this position (third brush cannot be shifted beyond this point).

Maximum Charging Rate—22 amperes (cold), 16 amperes (hot), 1300 R.P.M., 20-25 M.P.H.

Performance Data

Cold Regulator Contacts Closed			Hot Regulator Contacts Closed		
Amps.	Volts	R.P.M.	Amps.	Volts	R.P.M.
0	6.4	460	0	6.4	525
4	6.7	525	4	6.8	640
8	6.95	600	8	7.2	750
12	7.25	680	12	7.6	940
16	7.55	800	16	8.0	1500
22	8.0	1300			

CONTINUED ON NEXT PAGE

CONTINUED FROM PRECEDING PAGE

Rotation—Counter-clockwise at commutator end.
Brush Spring Tension—22-27 ounces.
Field Current—2.47-2.73 amperes at 6.0 volts.
Field Fuse—5 ampere in cup on regulator.
Motoring Current—4.46-4.94 amperes at 6.0 volts.

Removal:—Generator flange mounted on right rear face of timing chain case. Water pump and oil temperature regulator mounted on commutator end of generator. To remove, drain radiator, disconnect hose couplings and oil leads, remove water pump (optional). Take out 3 capscrews in generator mounting flange, pull generator to rear to disengage drive coupling. Do not disturb intermediate plate carrying drive sprocket or timing chain automatic idler sprocket will require resetting.

REGULATOR

Auto-Lite Model TC-4305A. Two Charge Type. On generator. Consists of Cutout Relay and Two-Rate Charge Control Regulator in a single case.
For complete data, refer to Electrical Equipment Index.

Cutout Relay

Cuts In—6.5-7.25 volts, 10 M.P.H.
Cuts Out—.5-2.5 ampere discharge current.
Contact Gap—.025-.040".
Air Gap—.010-.030" with contacts closed.

Regulator.

Contacts Open—8.25-8.75 volts at 70°F. Unit is overcompensated for temperature (operating voltage lower when hot).
Contacts Close—1.2-1.4 volts below opening point.
Contact Gap—.005" minimum.
Air Gap—.045" with contacts closed.

LIGHTING

Headlamps—Hall, pre-focused type.
1936 Models. Upper and lower beams controlled by light switch lever on steering wheel.
1937-40 Models. Upper and lower beams controlled by foot selector switch on toeboard.
Adjustment—Aim headlamps straight ahead with top of upper beam 37" (lamp bulb height) above floor at 25 feet. Adjusting screws located on reflector flange and lense must be removed. Make final check with lenses in place.
Beam Indicator—Located in light switch button Lighted whenever upper beams are lighted.

Switches (1936)

Lighting—R.B.M. Model 1300.
Compartment—R.B.M. Model 1260.
Door Switch—R.B.M. Model 1550.

Switches (1937-40)

Lighting—R.B.M. No. 2400 ('37), 2430 ('38-39).
Foot Selector—R.B.M. No. 2450 ('37), 1092 ('38-39).
Instrument—Douglas, Lincoln No. 86-13740-B.
Stop Light—Gen'l. Ind., Lincoln K-10428-B.

Bulb Specifications

Position	Candlepower	Mazda No.
Headlamps	32-32	2330
Parking	1½	55
Indicator	1	51
Instr., Luggage Cmpt.	6	81
Dome, Quarter	6	81
Stop & Tail	21-3	1158

MISC. ELECTRICAL

CIRCUIT BREAKER:—R.B.M. Model 1630. Consists of two vibrating and one lock-out circuit breaker in case on dash (see diagram for circuits controlled by each unit.
Performance—Begin to operate with load of 35-40 amperes, limiting load to 15 amperes maximum with dead short-circuit across terminals.
Contact Spring Tension—5 ounces minimum.

FUSES: Generator Field—5 ampere on regulator.

HORNS:—Sparton. Vibrator type twin horns. Operated by horn relay. Horn current 11-13 amperes each.
Horn Relay:—R.B.M. No. 100072-L.
Contacts Close—4 volts Maximum across windings
Current Draw—.4-.55 amperes at 6.0 volts.

ENGINE

ENGINE SPECIFICATIONS:—Own. 12 cylinder, 67° Vee, 'L' head type. Cylinder block for each bank cast enbloc and separate from crankcase.
Bore—3.125". **Stroke**—4.50".
Displacement—414 cubic inches.
Rated Horsepower—46.8 S.A.E.
Developed Horsepower—150 at 3400 R.P.M.
Compression Ratio—6.38-1 Std. aluminum head.
Compression Pressure—138 lbs. at 1000 R.P.M. or 105-110 lbs. at cranking speed of 100 R.P.M.
Vacuum Reading—18-20" steady reading with engine idling at 5-7 M.P.H.

PISTONS:—Lynite, aluminum alloy, T slot, Cam ground type with oxidized bearing surface (hard oxide formed on outer surface). Recondition engines to take finished replacement pistons. **Length**—3.87". **Weight**—12.5 ozs. (less rings, pin, locking screw). **Removal**—Pistons and rods removed from below. **Clearance**—.025" top, .002" bottom. See Fitting New Pistons.
Replacement Pistons:—Finished pistons furnished standard and .0025", .015", .030" oversize.
Fitting New Pistons: Use .002" feeler inserted between piston and wall on side opposite slot at right angles to pin bosses to check clearance. Pull required to withdraw feeler must be within 5-7 lbs.
Installing Pistons:—Slot toward left (viewed from drivers seat) for all pistons.

PISTON RINGS:—Two compression, two oil control rings per piston, all above pin. Lower ring groove drilled with oil drain holes.

Ring	Width	End Gap	Side Clearance
Comp. Top	.1235-.1240"	.008-.015"	.0025"
Comp. #2	.1235-.1240"	.008-.015"	.0015"
Oil Cont.	.1545-.1550"	.007-.015"	.0015"

Replacement Rings: Std., .002", .015",. 030" oversize.

PISTON PIN:—Diameter—.875". **Length**—3". Pin locked in piston by locking screw in one boss.
Pin Fit in Rod Bushing—.0005" clearance.

CONNECTING ROD:—Weight—38 ozs. **Length**—10.875".
Crankpin Journal Diameter—2.500".
Lower Bearing—Steel-backed, copper-lead lined.
Clearance—.0015-.003". Sideplay .006-.015" (total).
Bearing Adjustment:—None (no shims). Replace bearings. Do not file rods or caps. Bearings furnished .020" undersize.
Installing Rods:—Number on rod and cap must correspond. Install in same numbered cylinder with marks pointing down toward oil pan.

CRANKSHAFT:—4 Bearing. Integral counterweights.
Journal Diameters—2.625" (all bearings).
Bearing Type—Steel-backed, copper-lead lined.
Clearance—.001-.003".
Bearing Adjustment:—Shims. Do not file caps.
Replacement Bearings:—Furnished .020" undersize.
End Thrust:—Taken by rear main bearing. Endplay .004-.007". No adjustment (replace bearing).

CAMSHAFT:—5 bearing. Duplex chain drive with automatic idler sprocket take-up. *For data on Morse Automatic Take-up Idler, see article in Miscellaneous Sec.*
Journal Diameters—#1, 1.500"; #2, 3, 4, 2.250"; #5, 1.250". Front bearing must be removed to take out camshaft.
Bearing Type—Steel-backed, babbitt bushings.
Clearance—.0015-.003".
End Thrust:—Taken by front bearing. Endplay .004-.006". No adjustment (replace bearing).
Timing Chain:—Morse Duplex. Width 1½". Pitch ⅜". Length 104 links or 39".
Camshaft Setting:—Sprockets marked. Mesh chain with sprockets turned so that marks are adjacent and in line with a straightedge across shaft centers.

VALVES:—	**Head Diameter**	**Stem Diameter**	**Length**
All valves	1.687"	.3125"	6.750"
	Seat Angle	**Lift**	**Stem Clearance**
All valves	45°	.343"	.003-.004"

Valve Guides:—Press fit in block. Finish ream to size for correct stem clearance.
Valve Lifters (1936): Cylindrical, roller type. Diameter 1.122-1.1225". Lifter guides single piece, flanged top, removed from above.
(1937-40)—Wilcox-Rich Zero-Lash hydraulic valve lifters. Mushroom type. Diameter .750".
See Miscellaneous Section for complete data.

Valve Springs (1936):	Pressure	Length
Valve Closed	60-66 lbs.	2.687"
Valve Open	187-199 lbs.	2.343"
(1937-40)	Pressure	Length
Valve Closed	55-60 lbs.	2.687"
Valve Open	130-140 lbs.	2.343"

VALVE TIMING

Tappet Clearance (1936): .004" Intake, .006" Exhaust, Cold. Adjustable type.
(1937-40)—None in service (hydraulic take-up).
Valve Timing:—See Camshaft Setting above.
Intake Valves—Open 21° BTDC. Close 49° ALDC.
Exhaust Valves—Open 57° BLDC. Close 11° ATDC.
To Check Timing—No flywheel marks provided. No. 2 intake valve (front cylinder, right hand bank) opens when a point on the flywheel approximately 6.77 teeth before dead center mark 'D2/12C' lines up with indicator on housing.
1937-40 Note—Hydraulic type valve take-up makes it impossible to determine valve opening except by removing cylinder head and using dial indicator to check valve movement.

LUBRICATION

LUBRICATION:—Pressure system. Gear type oil pump mounted in crankcase at rear of engine. Harrison type oil temperature regulator mounted on right side of crankcase.
Normal Oil Pressure—40 lbs. at 50 M.P.H.
Crankcase Capacity—12 quarts.
Oil Pressure Regulator: Located on outlet header near oil temperature regulator on right side of crankcase. Operates at 40 lbs. Not adjustable. Additional non-adjustable by-pass valve located at forward end of oil header in crankcase.

Oil Temperature Regulator: Harrison. Located on right hand side of crankcase and connected in water pump inlet line.

Oil Pressure Gauge ('36): King-Seeley Electric. K-S Part No. 5760 (dash unit), 5460 (motor unit). Dash unit identified by letter 'O' stamepd on edge.

(1937-40 Models)—King Seeley Electric. K-S No. 6255, Lincoln No. K-13116D (dash unit), K-S No. 5460, Lincoln No. 48-9278 (engine unit).

See Miscellaneous Section for complete data.

COOLING

COOLING SYSTEM:—Water Pump:—Centrifugal type with adjustable packing. On rear of generator.
See Water Pump Section for complete data.

Removal—Drain radiator, disconnect hose couplings, oil temperature regulator lines, drive coupling, take out water pump mounting screws.

Radiator Shutter Thermostat:—In radiator top tank, connected to shutters by rod and levers. Should be practically closed at 145°F., open at 160°F.

Hood Shutter Thermostat: One on each hood side panel. Linked to ventilator doors on panel. Start to open at 95°F, full open at 110°F.
See Miscellaneous Section for complete data.

Water Capacity—32 quarts.

Drain Valves:—One only, at lower inlet elbow of water pump.

CLUTCH

CLUTCH:—Long Model 12CB-CL. Single plate, dry disc
See Clutch Section for complete data.
Facings—Woven type, 2 required. Inside Diam. 7", Outside Diam. 12". Thickness .137".

Adjustment:—Free movement of clutch pedal should be 1". To adjust, loosen locknut and turn adjusting screw on clutch throw-out fork below pedal shaft. Clearance between pedal and underside of toeboard controlled by stopscrew above pedal shaft.

Removal:—Disconnect speedometer cable, rear brake cables, shock absorber links, spring clips on axle housing. Take out clutch housing mounting screws (housing integral with transmission case), slide entire transmission and rear axle assembly to rear to expose clutch. Take out clutch mounting screws in cover flange on flywheel.

TRANSMISSION

TRANSMISSION:—Own make. All helical gears. Constant mesh, synchro-mesh (second and high), sliding gears (low & reverse). NOTE—'Blocker' type synchronizer used on 1938-40 models.
See Transmission Section for complete data.

Removal:—Remove rear axle or slide assembly back to free transmission (see Rear Axle Section below). Take out clutch housing mounting screws (integral with transmission case), pull transmission straight back and remove.

UNIVERSALS

UNIVERSAL JOINT:—Spicer. One joint mounted within ball housing at rear of transmission case (torque tube drive).
See Universals Section for complete data.

REAR AXLE

REAR AXLE:—Own make. Full floating, spiral bevel gear type with straddle-mounted pinion and Torque Tube drive.
See Rear Axle Section for complete data.
Ratio—4.58-1. **Backlash**—.010". Screw adjustment.

Removal:—Disconnect speedometer cable, rear brake cables, shock absorber links, spring clips on axle housing. Take out universal joint ball housing bolts, pull rear axle to rear to free drive shaft at splined joint at universal.

Axle Shaft Removal—Axle shaft flange bolted to wheel at outer end (under dustcap). To remove shaft, take out flange screws, pull shaft out (does not disturb wheel bearings).

Wheel Bearing Adjustment:—Remove axle shaft, unscrew locknut within wheel hub, take off lockwasher, turn up adjusting nut until bearing clearance is hardly perceptible, replace lockwasher, locknut and axle shaft.

SHOCK ABSORBERS

SHOCK ABSORBERS:—Houde (Houdaille), Type 'ALG'. Double acting hydraulic, automatic thermostatic valve type.
See Shock Absorber Section for complete data.

FRONT SUSPENSION

Front Suspension:—Conventional 'I' beam section front axle with Reverse-Elliott ends and semi-elliptic springs.
Kingpin Inclination—7½° crosswise.
Caster—1½° (normal load). Limits 1-2°. Adjust by inserting wedge shims between spring and spring pad on axle.
Camber—1°. Limits ½-1°. Bending of axle to correct camber not recommended.
Toe In—1/16-⅛". Adjusted in usual manner by loosening clamp bolts and turning tie rod.
Steering Geometry—Inner wheel turned 22¾° (136" WB), 22 1/3° (145" WB), outer wheel 20° (all cars). Allowable variation ½°.

STEERING GEAR

Steering Gear: Gemmer Special Lincoln Model. Worm-and-Roller type.
See Steering Gear Section for complete data.

BRAKES

BRAKES:—Service—Bendix Mechanical, Duo-Servo, Single anchor type with Vacuum Power operation. Hand lever applies all four service brakes.
See Brake Section for complete data.
Drum Diameter—15.125". Cast-iron, steel-web type.
Lining—Molded (all shoes 1936-37 ,primary '38-40), woven (secondary shoes '38-40). Width 2½". Thickness ¼". Length per wheel 33½".
Clearance—.010" at heel and toe of each shoe.
Braking Power—50% Front, 50% Rear.

Hand Brake:—See Service Brakes above.

Power Unit:—Bendix plain type vacuum cylinder mounted on right front leg of 'X' member and linked to brake cross-shaft. Control valve connected in linkage between brake pedal and cross-shaft.
See Brake Section for complete data.

NOTE:—Engine Hood—Hinged at cowl and lifts from forward end. Free hood latch by turning radiator ornament.

Engine Removal — Remove the hood, radiator splash pan, grille and brace rods, remove radiator. Remove transmission cover in front compartment, disconnect transmission, lift engine out.

OIL PAN REMOVAL: *See Lincoln Shop Notes.*

MODEL IDENTIFICATION

SERIAL NUMBER:—Same as engine number. Stamped n top of clutch housing and on left side of front cross member.

ENGINE NUMBER:—First number H-1. Stamped on top of clutch housing and on left side of front frame cross-member.

TUNE-UP

COMPRESSION:—Ratio—6.7-1 Std. No Optl. ratios.
Pressure—146 lbs. at 1000 R.P.M. Max. or 118 lbs. at cranking speed of 100 RPM.

VACUUM READING:—18-20" steady reading with engine idling at 5 M.P.H.

FIRING ORDER: 1-4-9-8-5-2-11-10-3-6-7-12. See diagram for cylinder numbering and spark plug cable connections.

SPARK PLUGS: Champion Type J-9. 14 mm. Metric type.
Gaps—.028-.030"

IGNITION: See Coil, Condenser, and Distributor.
Breaker Gap—.014-.016" Cam Angle 36.5° closed (each set operating independently.
Synchronization—Unequal alternate opening at 37½-22½-37½° (distr.) intervals.
Automatic Advance—8° max. at 950 RPM (Orig. H-12127 Distr.), 11-12° max. at 650 RPM (Repl. 16H-12127 Distr.). Distributor degrees & RPM.

IGNITION TIMING: See Ignition Timing.
Std. Setting—4° BTDC (Orig H-12127 Distr.), 2° BTDC (Repl. 16H-12127 Distr.). No flywheel marks provided. See Ignition Timing for timing procedure and Vacuum Brake Setting.

CARBURETION: See Carburetor & Carb. Equipment.
Idle Setting—Both idle screws set midway between "miss" and "roll" points (approx. ⅝-¾ turn open. Idle speed 5-7 MPH.
Float Level—Fuel level 15/32" below top edge of bowl.
Accelerating Pump—Not adjustable.
Fuel Pump Pressure 3½ lbs. maximum.

VALVES: See Valve Timing.
Tappet Clearance—.010-.012" Intake, .014-.016" Exhaust. No adjustment.

STARTING: See Battery, Starter, Generator, Regulator.

IGNITION

IGNITION:—Part No. H-12000 (Complete Ignition Unit). Mounted on front of gear case and driven through tongue-and-slot coupling from camshaft.

Ignition Switch:—Oakes Hershey type co-incidental ignition switch and steering post lock.

COIL: Ford Part No. H-12024. Two coil unit mounted on top of ignition unit (one coil for each bank).
Ignition Current—3.2 amperes idling, 4.2 stopped.
Ignition Resistance—Mounted on lighting circuit breaker. One resistance unit connected in each coil primary circuit. Resistance per unit .325-.375 ohms at 68° F.

CONDENSER: Ford Part No. H-12300 (two used).
Capacity—.30-.34 microfarad.

DISTRIBUTOR: Ford No. H-12127 (Orig. Equip.), 16H- 12127 (Repl. Unit). Double breaker, 6 lobe cam, full automatic advance type with Vacuum Brake Control (see Ignition Setting for adjustment). Right hand contacts (movable or adjustable set) control right hand coil and fire spark plugs in right cylinder bank. Left hand contacts (fixed set) control left hand coil and fire plugs in left bank. Contacts open alternately at 37½ and 22½ degree intervals corresponding to 75 and 45 degree engine firing intervals (caused by 75° angle between banks) and must be synchronized (see Ignition Timing).
Breaker Gap—.014-.016" (both sets). Use special **two-step feeler to check gap. First step (.014") 'Go', second step (.016") 'No Go'.**
Cam Angle or Dwell—36.5° closed, 23.5° open. Each set operating independently.
Breaker Arm Spring Tension—20-24 ounces.

No. H-12127
Distributor Automatic Advance Engine

Degrees	R.P.M.	Degrees	R.P.M.
Start	200	0	400
8	950	16	1900

NOTE—Limits are 7½-8½° (distributor).

No. 16H-12127
Distributor Automatic Advance Engine

Degrees	R.P.M.	Degrees	R.P.M.
Start	200	0	400
11-12	650	22-24	1300

Distributor Removal:—At front of engine. To remove, disconnect vacuum line, take out 3 capscrews in mounting flange.

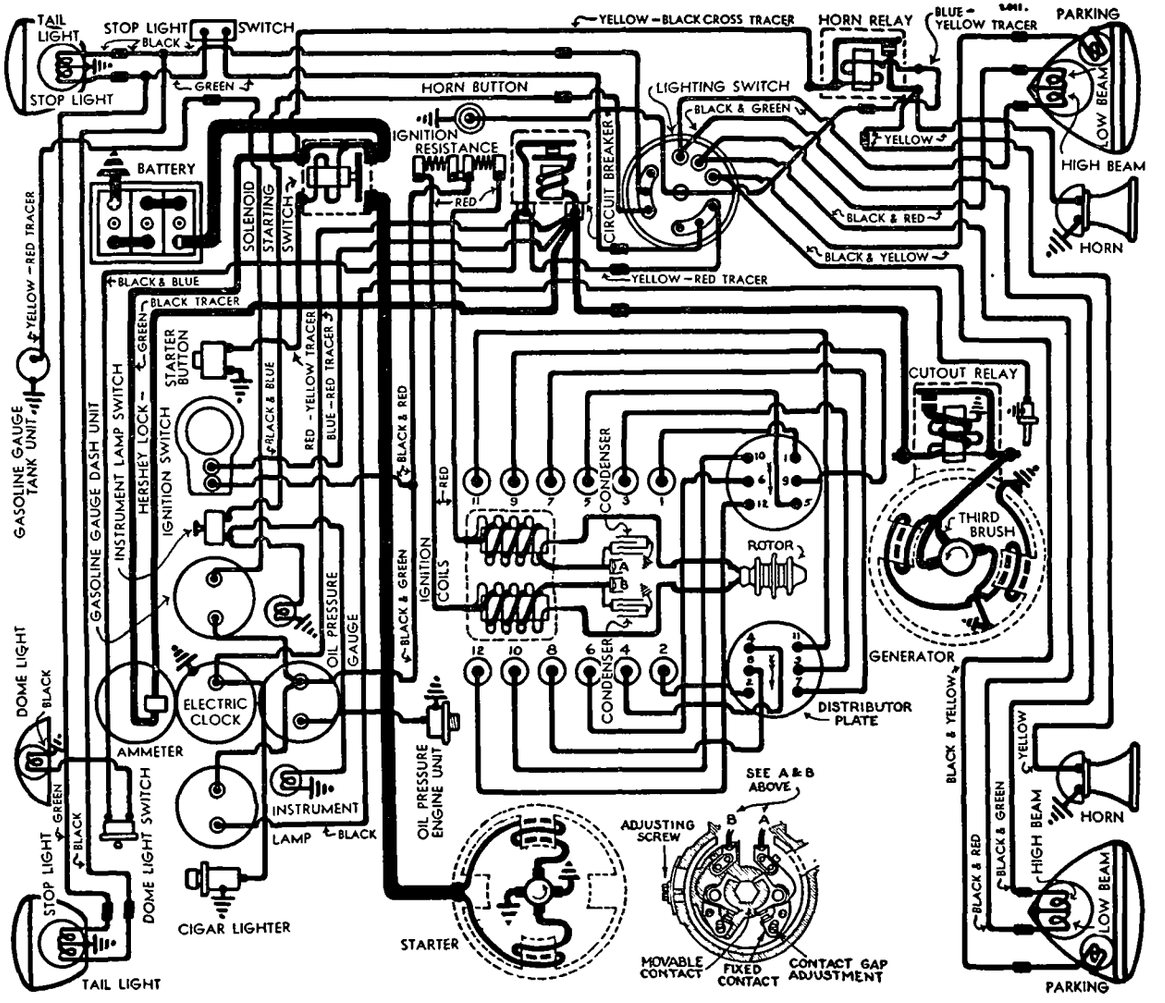

1936 MODELS

IGNITION TIMING

IGNITION TIMING:—Special setting for each type distributor. See Vacuum Brake Setting also.

Ignition Timing (Flywheel Degrees)

	H-12127 Distr.	16H-12127 Distr.
All Engines	4° BTDC	2° BTDC

Note—On Ford Stroboscope, settings will be 2° BTDC (H-12127 Distr.), 1° BTDC (16H-12127 Distr.).

NOTE—Movable contacts should be synchronized and Timing Fixture V-126 or Stroboscope should be used for this purpose. Manufacturer recommends use of this fixture for both synchronization and timing. V-126 fixture (Ford) modified for use on Zephyr by addition of correct timing marks on edge of disc.

Timing (Fixed Set—on V126 Fixture)—Mount ignition unit on fixture, check contact gap and breaker arm spring tension, rotate disc in direction of arrow (counter-clockwise) until hole lines up with locking plunger, clip timing light lead to left hand coil terminal, loosen adjusting screw on side of ignition unit housing, move screw down (away from coil) to bottom of slot, then move screw up slowly until timing light goes out, tighten screw. Check by rotating disc one full revolution, stop when timing mark on outer edge of disc lines up with pointer on fixture. Contacts should open at this point.

Synchronization (Movable Set—on V-126 Fixture) Clip timing light lead to right hand coil, rotate disc counter-clockwise until next mark on edge of disc lines up with pointer. If timing light does not go out at this point, remove adjusting screw and graduated plate on side of housing, turn eccentric adjusting screw in slot clockwise to advance or counter-clockwise to retard spark until movable contacts begin to open and timing light goes out. Readjust breaker point gap (changed by synchronizing adjustment), repeat test.

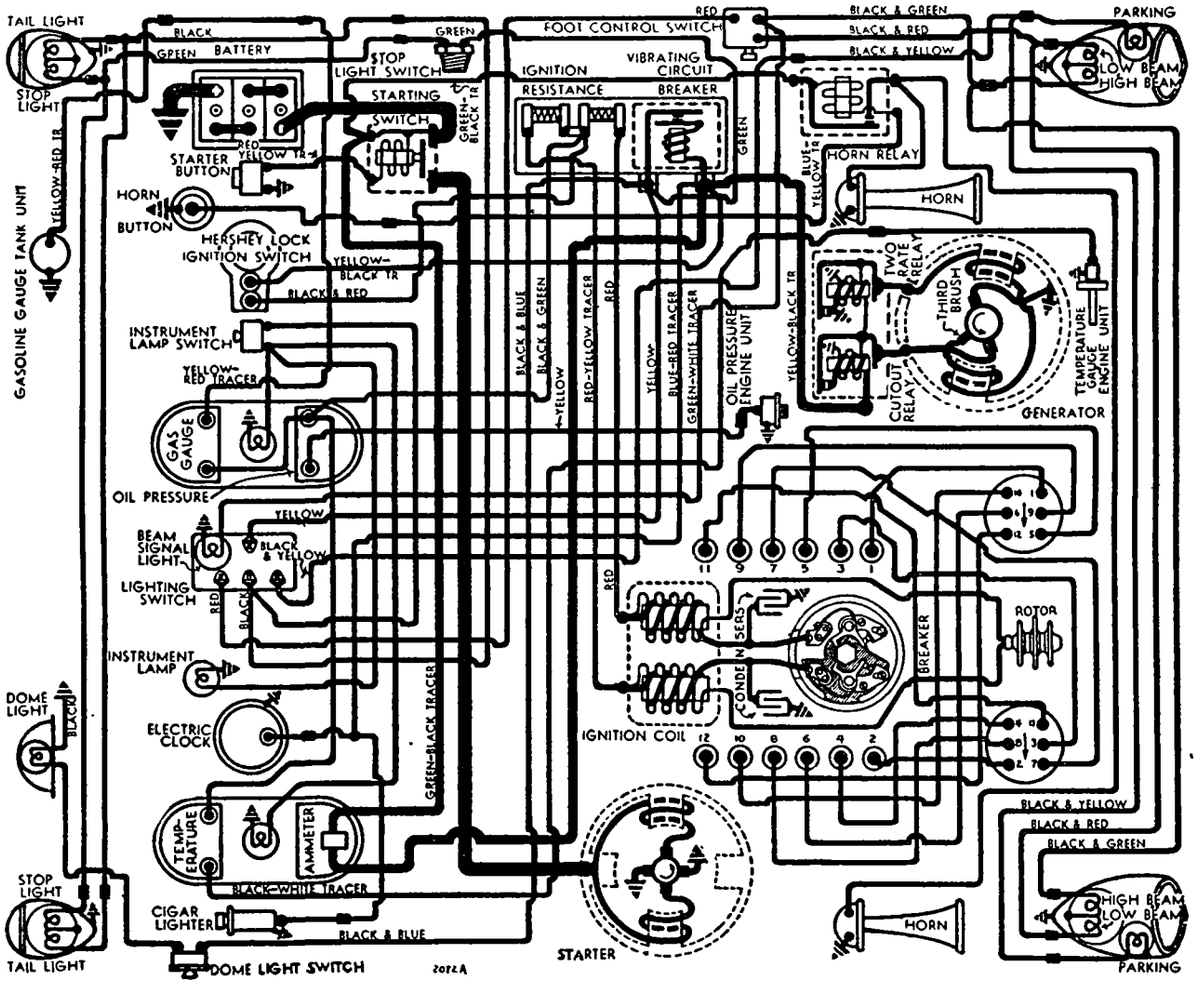

1937 M DELS

Timing (On Engine)—With #1 piston on top dead center, loosen adjusting screw on side of ignition unit housing, move screw down to bottom of slot, then move screw up slowly until left hand (fixed) contacts begin to open. Note graduation on plate under screw head in line with reference mark on housing, move screw up exactly one additional graduation (H-12127 Dist.), or up ½ graduation (16H-12127 Dist.), for correct timing as given above. No means provided to synchronize contacts on engine.

Vacuum Brake Setting:—Vacuum Brake should be adjusted for best performance with particular fuel and operating conditions. To adjust, loosen locknut, back off adjusting screw until engine 'pings' under load, turn up adjusting screw just enough to eliminate ping, tighten locknut. When adjusted on Stroboscope, brake should retard spark to peepsight (set at 0° advance) at speed of 950 RPM. (H-12127), 650 RPM. (16H-12127) with no vacuum to release brake.

CARBURETOR

CARBURETION:—**Carburetor**—Stromberg Model EE-1, Ford No. H-9510-A1. 31/32", dual downdraft type. ***For complete data, refer to Carburetor Index.***

Idle Adjustment—Engine must be warm and idling at hot or slow idling speed. Manufacturer recommends use of Vacuum Gauge and adjustment of idling screws for highest vacuum reading. If vacuum gauge is not used, set throttle stopscrew for 5 M.P.H. idling speed, turn each idle adjusting screw (in succession) in until engine begins to miss, out until engine begins to roll, finally turn screw in slowly until engine fires smoothly. Readjust throttle stopscrew for correct idling speed.

Accelerating Pump—Not adjustable.

Fast Idle:—Integral with carburetor and operative with choke valve closed. No adjustment required.

CARB. EQUIPMENT

Air Cleaner: AC No. 1526761 (1936), 1528239 (1937) Oil-wetted type Std. Heavy duty oil-bath typl Optl.

Fuel Pump: AC Type R, No. 1521764 (1936), 1523307 (1937). Diaphragm type. Ford Nos. 40-9350 (1936), 68-9350 (1937).
For complete data, refer to Carburetion Equip. Index.

Gasoline Gauge:—King-Seeley Electric. Ford Nos. **Dash Unit**—No. H-9280 (1936), HB-9280A (1937—Eng. No. 15530 to 20630), HB-9280B (1937—Eng. No. HB-20631 to 31007), HB-9280C (1937—Eng. No. 31008 to 45529).

Tank Unit—No. H-9275 (1936—marked "Lincoln H-9275" on case), 70-9275B (1937—Use as replacement unit for H-9275).
For complete data, refer to Carburetion Equip. Index.

BATTERY

BATTERY:—**Ford No. 40-10655C (81A-10655 B Replm't.).** 6 volt, 17 plate, 100 A.H. Cap. (20 hour rate).

Starting Capacity—126 amperes for 20 minutes.

Zero Capacity—300 amperes for 3.3 minutes.

Grounded Terminal—Positive (+) terminal.

Location—Under left front seat.

C NTINUED N NEXT PAGE

CONTINUED FROM PRECEDING PAGE

STARTER

Ford Model No. 18-11002. Armature No. 18-11005. Drive—Inboard Bendix No. L11FX-10. Ford No. B-11350.
Cranking Engine—110 R.P.M., 225 amps., 4.75 volts.
Rotation—Counter-clockwise at commutator end.
Brush Spring Tension—2 lbs. each.

Performance Data

Torque	R.P.M.	Volts	Amperes
4 ft. lbs.	1070	4.6	200
8 "	660	4.3	340
12 "	300	3.65	465
14 "	Lock	3.5	500

Starting Switch:—R.B.M. No. 2295, Ford No. H-11450-A. Pushbutton R.B.M. No. 3224. Magnetic type switch mounted on engine side of dash and controlled by pushbutton No. H-11500-C on instrument panel.

Removal:—Starter mounted on right front face of flywheel housing. To remove, take off pan at right of engine, take out two through bolts on commutator endplate, remove starter from below.

GENERATOR

Ford Model No. 68-10000-A (Std. 1936), 68-10000-HA (Radio 1936), 78-10000-HA (Std. 1937). Third brush control types in conjunction with regulator (non-vibrating) Two-Rate Relay (except 68-10000-A). Ventilated by fan on drive pulley.

NOTE—These models replaced by 81A-10000-A (68-10000-A), 81A-10000-B (68-10000-HA & 78-10000-HA).

Armatures—Ford No. 18-10005 (68-10000-A), 68-10005-H (68-10000-HA), 78-10005-HA (78-10000-HA).
Maximum Charging Rate—18 amperes (hot) at 1650 RPM or 27.5 MPH (68-10000-A), 26 amperes (hot) reached at 2000 RPM or 30 MPH (68- & 78-10000-HA).

NOTE—When regulator installed, charging rate must not be set for less than 20 amperes.

Charging Rate Adjustment—Remove commutator cover band, shift third brush counter-clockwise (down) to increase, or clockwise to decrease charging rate. Third brush held in position by friction.

Performance Data

Model 68-10000-A—Generator Hot

Amperes	Volts	R.P.M.
0	6.2	660
5	6.45	865
10	6.6	1110
14	6.65	1315
18	6.75	1650
20.4	6.8	2775

Model 68-10000-HA & 78-10000-HA—Hot.

Amperes	Volts	R.P.M.
0	6.2	660
5	6.4	790
10	6.55	900
15	6.7	1030
20	6.95	1180
25	7.3	1400
30	7.6	1800
31.6	7.7	2000

Performance Stds.—See Note

68-10000-A		68, 78-10000-HA	
Amperes	Eng. RPM	Amperes	Eng. RPM
Start	550	Start	525
20	1800	26	1250
20	2500	16	2500

NOTE—If generator does not test up to this Performance Std., it should be examined and overhauled.
Rotation—Counter-clockwise at commutator end.
Brush Spring Tension—Approx. 26-28 ozs.
Field Current—6 amperes at 6.0 volts (68-10000-A—field resistance 1.0 ohm at 70°F), 4.16 amperes at 6.0 volts (68- & 78-10000-HA—field resistance 1.44 ohms at 70°F).

Removal:—Generator mounted between cylinder banks at front of engine. Driven by Vee belt in tandem with two water pumps. To remove, take out support bolt in bracket under generator.

Belt Adjustment:—Loosen generator support bolt, raise generator until total sideplay on belt midway between generator and water pump pulleys is ¾-1".

CUTOUT RELAY

Ford Part No. B-10505 (Used with 68-10000-A Gen.). Mounted on generator field frame. Generator field lead (black wire) grounded to relay mounting screw.
Cuts In—5.8-6.3 volts, 10 MPH.
Cuts Out—3 ampere maximum discharge.
Contact Gap—.015-.020".
Air Gap—.010-.015" with contacts closed.

REGULATOR

Ford Part No. 68-10505 (used with 68-10000-HA & 78-10000-HA Gen.). Cutout Relay and non-vibrating type voltage regulator (two-rate relay) in case on generator.
For complete data, refer to Electrical Equipment Index.

Cutout Relay

Cuts In—5.8-6.3 volts, 10 MPH.
Cuts Out—3 ampere maximum discharge.
Contact Gap—.015-.020".
Air Gap—.010-.015" with contacts closed.

Regulator

Regulator—Contacts open at 8.0-8.3 volts reducing charging rate to approximately 50% of high rate, and remain open until cutout relay contacts open.

LIGHTING

LIGHTING:—**Headlamps**—Hall, Pre-focused type. Upper and lower beams controlled by lighting switch (1936), Beam Selector Switch on toeboard (1937).
Adjustment—Aim headlamps straight ahead with top of beam 33" (lamp bulb height) above floor at 25 feet. Adjusting screws located in reflector flange (lense must be removed). Make final check with lenses in place.
Beam Indicator—Located in switch button. Lighted whenever upper or driving beam is lighted.

Switches—1936

Lighting—No. H-11653 (with wiring assembly). No. B-11657 (body & contact assembly), B-11673-B (switch plate assembly).
Instrument—No. H-13740.

Switches—1937

Lighting—R-B-M 2400. Ford No. HB-701616 with No. 701618 Switch Knob.
Beam Selector—R-B-M 1092. Ford No. HB-13532 (switch only), HB-11653 (with Headlamp & Horn Wiring).
Instrument—Ford No. 50-13740.
Stop Light—Ford No. 48-13480.
Dome Light—R-B-M 1200A. Ford No. B-13752-A.

Bulb Specifications

Position	Candlepower	Mazda No.
Headlamps	32-32	2330
Parking	1½	55
Indicator	1	51
Instrument, Dome	6	81
Stop & Tail	21-3	1158

MISC. ELECTRICAL

CIRCUIT BREAKER:—**R.B.M. Model 1640, Ford Part No. H-11624.** Vibrating type circuit breaker mounted on dash. Connected in lighting circuits. Begins to operate with load of 52-54 amperes limiting load to 15 amperes.

HORNS:—Sparton. Air-Electric type twin horns operated by horn relay. Horn current 11-13 amperes each.

Horn Relay:—R.B.M. Model 10072. Contacts close with terminal voltage of 4.0 volts max. (relay inverted).
Current Draw—.40-.55 amperes at 6.0 volts.
Coil Resistance—11-14 ohms.

ENGINE

ENGINE SPECIFICATIONS:—**Own Model H. 12 cylinder, 75° Vee, 'L' head type. Both cylinder banks and crankcase cast Enbloc.**
Bore—2.75". **Stroke**—3.75".
Displacement—267.28 cubic inches.
Rated Horsepower—36.39 S.A.E.
Developed Horsepower—110 at 3900 R.P.M.
Compression Ratio—6.7-1 Std. Aluminum head.
Compression Pressure—146 lbs. at 1000 R.P.M. or 118 lbs. at cranking speed of 100 RPM.
Vacuum Reading—18-20" steady reading with engine idling at 5 M.P.H.

CYLINDER SLEEVES:—Cast iron, dry type cylinder sleeves available for replacement where bore size worn beyond Oversize Piston Limit.
Sleeve Installation—*See Lincoln Shop Notes.*

PISTONS:—New type special heat-treated steel-alloy, Cam ground type. Length 3.245-3.305".
Weight—326 grams (without rings or pin).
Removal—Pistons and rods removed from above.
Clearance—See Fitting New Pistons.

Replacement Pistons: *See Lincoln Shop Notes.*

Fitting New Pistons: Use .50" wide feeler stock of correct thickness (as listed below) inserted between piston and cylinder wall at right angles to pin to check clearance. Pull required to withdraw feeler should be 5-8 lbs. (all types).

Feeler Thickness—.002" New Piston in New Plain Bore, .004" for New Piston in Worn Plain Bore .005" for Worn Piston in Worn Plain Bore.

PISTON RINGS:—Two compression, one oil ring per piston, all above pin. Oil ring groove drilled with oil drain holes.

Ring	Width	End Gap	Side Clearance
Comp.	.093-.0935"	.008-.013"	.003" (top)
Oil Cont.	.1545-.155"	.008-.013"	.0015"

Replacement Rings:—*See Lincoln Special Shop Notes for complete data and new expander type rings.*

ENGINE

CONTINUED FROM PRECEDING PAGE

PISTON PIN:—Diameter .7501-.7504". Length 2.482". Pin floats in piston and rod. Held by locking ring at each end. Connecting rod bronze-bushed.

Pin Fit in Piston—.0003-.0009" clearance or light hand push fit with piston at 70°F.

Pin Fit in Rod Bushing—.0002-.0005" clearance (pin should pass through bushing slowly of own weight).

See Lincoln Shop Notes for Pin Fitting Directions.

Replacement Pins: *See Lincoln Shop Notes.*

CONNECTING ROD:—Weight 638 grams. Length 7.400". Crankpin Journal Diameter—2.126".

Lower Bearing—Removable steel-backed, copper-lead lined bearing shells in each rod.

Bearing Dimensions—Thickness .0855". Length..787".

Clearance—.001-.0025". **Sideplay** .014" (both rods).

Bearing Adjustment: None (no shims). Do not file caps. Replace bearings if less than .08375" thick.

Replacement Bearings: *See Lincoln Shop Notes.*

Installing Rods:—Rods and caps marked 'R1', 'L1', etc. Assemble with marks together, install in same numbered cylinders with marks pointing down on all rods.

CRANKSHAFT:—4 bearing. Integral counterweights.

Journal Diameters—2.401" (all bearings).

Bearing Type—Steel-backed, copper-lead lined.

Clearance—.001-.003".

Replacement Bearings: *See Lincoln Shop Notes.*

Bearing Adjustment:—None (no shims). Replace bearings. Do not file bearing caps.

End Thrust:—Taken by rear main bearing. Endplay .002-.006". Adjusted by replacing bearing.

CAMSHAFT:—Four bearing. Helical gear drive.

Bearing Diameters—1.797" (replace bearings if the diameter more than 1.802", replace camshaft if the journal diameter less than 1.7955").

Bearing Type—Steel-backed, babbitt-lined bushings pressed in block. **Clearance**—.002".

End Thrust:—Taken by front bearing and gear hub and by gear hub and cover plate. Endplay .004-.008". Adjusted by replacing bearing or front plate.

Timing Gears:—Crankshaft gear Cast-steel. Camshaft gear Bakelized Fabric.

Camshaft Setting:—Gears marked. Mesh crankshaft gear tooth marked '0' with space between teeth on camshaft gear marked '/' (this mark in line with mark on gear hub).

VALVES:—

	Head Diam.	Stem Diam.	Length
All valves	1.537"	.3105-.3115"	4.750-4.751"

	Seat Angle	Lift	Stem Clearance
Intake	45°	.292"	.0015-.0035"
Exhaust	45°	.292"	.0025-.0045"

NOTE—Service limit for valve stem diameter is .309" Intake, .3065" Exhaust. Valves interchangeable.

For Valve Servicing data, see Lincoln Shop Notes.

NOTE—Valve seat inserts used for exhaust valves.

Valve Guides: Split type retained by "C" washer and valve spring. NOTE—Replace both halves of all guides measuring less than .6665" (thickness of guide half and valve stem at top of guide with valve of .311" stem diameter in place in guide half).

For Valve Guide Servicing data, see Lincoln Shop Notes.

Valve Lifters: Barrel type in reamed holes in block. **Diameter**—.9995". Replace if worn to less than .998" in diameter or length less than 1.700" after any necessary resurfacing of ends (cast type can be resurfaced on both ends, pressed steel type on bottom end only).

Clearance—.0005-.0015". Lifter should slip into hole in block of own weight.

Valve Springs:—Free length 2.42".

	Spring Pressure	Length
Valve Closed	37-40 lbs.	2.13"
Valve Open	76-80 lbs.	1.84"

NOTE—Replace springs which do not test to 47-57 lbs. at 2⅛" or if paint coating has been removed.

VALVE TIMING

Tappet Clearance: .010-.012" Intake, .014-.016" Exhaust. No adjustment.

Valve Timing:—See Camshaft Setting above.

Intake Valves—Open 19°30' BTDC. Close 54°30' ALDC.

Exh. Valves—Open 57°30' BLDC. Close 16°30'ATDC.

To Check Valve Timing—No flywheel marks or other means provided to check timing. If dead center point for any piston established on flywheel, intake valve opening for this cylinder should be approximately 6 2/3 teeth before this point with piston .1334" BTDC.

LUBRICATION

LUBRICATION:—Pressure system. Gear type oil pump mounted in crankcase at rear of engine.

Normal Oil Pressure—40-45 lbs. at 2000 R.P.M.

Oil Pump and Oil Pressure Regulator: *See Lincoln Shop Notes for complete data.*

Crankcase Capacity—6 qts.

Oil Pressure Gauge:—King-Seeley Electric. Ford No. (1936) H-9273 dash unit, 48-9278 (motor unit). (1937) HB-9273 (dash unit—1st 5500 cars, black markings), HB-9273B (dash unit—next 10,000 cars, red-brown markings), HB-9273C (dash unit—later cars, brown-gray markings). No. 48-9278 (engine unit

See Miscellaneous Section for complete data.

CLUTCH

CLUTCH:—Long Model 10CF-CI. Semi-centrifugal, single plate, dry disc type.

See Clutch Section for complete data.

Clutch Facings—Moulded type, 2 required. Inside Diam. 6.00", Outside Diam. 10.00". Thickness .140".

Pedal Adjustment:—Free movement should be 1½-2". To adjust, remove clevis pin on adjusting rod at clutch pedal lever, loosen locknut, turn clevis (lengthen rod to increase free movement).

Removal:—Remove transmission cover in front compartment, disconnect speedometer cable, remove shift lever. Disconnect rear brake cables and shock absorber links, disconnect rear spring at center mounting on body. Support engine, take out rear engine mounting bolts, take out clutch housing flange mounting screws (housing integral with transmission case), slide entire drive unit to rear exposing clutch. Take out clutch mounting screws on flywheel.

TRANSMISSION

TRANSMISSION:—Own Make. 3 speed, helical gears (all speeds), Constant-mesh, Synchro-mesh (second and high).

See Transmission Section for complete data.

Removal:—Disconnect rear spring at center mounting on body, disconnect speedometer cable, take out mounting bolts in front universal ball housing, slide rear end to rear. Remove transmission cover in front compartment, remove shift lever. Support engine, take out rear engine mounting bolts, take out clutch housing flange mounting screws, pull transmission to rear.

UNIVERSALS

UNIVERSAL JOINT:—Spicer. 1 joint mounted at rear of transmission (within torque tube ball housing).

See Universals Section for complete data.

REAR AXLE

REAR AXLE:—Own make. ¾ floating, spiral bevel type with Torque Tube drive and straddle mounted pinion.

See Rear Axle Section for complete data.

Ratio—4.33-1 (1936), 4.44-1 (1937) Std.

Backlash—.006-.010".

Optional Axle:—Columbia Two-Speed type.

See Rear Axle Section for complete data.

Removal:—Disconnect rear shock absorbers and brake cables, disconnect rear spring at center connection on body, disconnect speedometer cable, take out mounting bolts in universal joint ball housing, pull axle assembly back to free shaft at splined joint at universal.

Axle Shaft Removal:—Axle housing must be separated at pinion mounting and shafts removed from inner end (differential side gear integral with shaft).

Wheel Bearing Adjustment—None.

SHOCK ABSORBERS

SHOCK ABSORBERS:—Ford (Houde). Hydraulic type.

See Shock Absorber Section for complete data.

FRONT SUSPENSION

Front Suspension:—Conventional 'I' beam section front axle with Reverse-Elliott type ends and transverse cantilever springs.

Kingpin Inclination—8° ('36), 4° ('37) crosswise.

Caster—9° Max., 4½° Min. ('36), 6° Max., 1½° Min. ('37). Must be alike within ½° for both wheels. Axle may be bent cold to correct caster if proper tools used (wedges and blocks to prevent crushing flange).

Camber—¾° (¾° Max., ¼° Min.). Both wheels must be alike within ¼°, right wheel must not exceed left. Correct in same manner as caster.

Toe In—1/16-⅛". Adjust in usual manner by loosening tie rod clamp bolts and turning rod.

Steering Geometry (Toe Out)—Inner wheel turned 23°, outer wheel 20°. Allowable variation ½°.

STEERING GEAR

Steering Gear: Gemmer Model 330. Worm-and-Roller type.

See Steering Gear Section for complete data.

BRAKES

BRAKES:—Service—Bendix Duo-Servo, single anchor, mechanical type. Hand lever applies all four service brakes.

See Brake Section for complete data.

Drum Diameter—12" Cast alloy iron type.

Lining—Moulded (primary), Woven (secondary). Width 1.75". Thickness .21". Length per shoe 11.95".

Hand Brake:—See Service Brakes above.

ENGINE HOOD & ENGINE REMOVAL:—Turn radiator ornament counter-clockwise to free latch, lift hood

Engine Removal:—Detach water hoses and heat indicator wire, take out radiator mounting screws, remove radiator (right and left grille sections can be removed if required). Disconnect all engine wires and controls, and fuel line. Disconnect exhaust pipe at manifolds. Disconnect transmission from engine, free engine mountings, lift engine out.

OIL PAN REMOVAL: *See Lincoln Shop Notes.*

MODEL IDENTIFICATION

SERIAL & ENGINE NUMBER:—Stamped on top of clutch housing and on left side of front frame cross-member.

TUNE-UP

COMPRESSION:—Ratio—6.7-1 Std. aluminum head. **Pressure**—146 lbs. at 1000 R.P.M. Max. or 118 lbs. at cranking speed of 100 RPM.

VACUUM READING:—18-20" steady idling at 5 M.P.H.

FIRING ORDER: 1-4-9-8-5-2-11-10-3-6-7-12. See diagram for numbering and cable connections on caps.

SPARK PLUGS: Champion Type H-10. 14 mm. Metric. Gaps—.030" Limits .028-.030"
NOTE—Use J-10 plugs for hot climate or high speed.

IGNITION: See Coil, Condenser, and Distributor.
Breaker Gap—.014-.016" **Cam Angle** 36.5° closed (each set operating independently.
Synchronization—Unequal alternate opening at 37½-22½-37½° (distr.) intervals.
Automatic Advance—8° max. at 950 RPM (Orig. H-12127 Distr.), 11-12° max. at 650 RPM (Repl. 16H-12127 Distr.). Distributor degrees & RPM.

IGNITION TIMING: See Ignition Timing.
Std. Setting—Special settings as follows:

	H-12127 Distr.	16H-12127 Distr.
Eng. H-45530 to 57738 ('38)	At TDC	2° ATDC
All Other Engines	4° BTDC	2° BTDC

No flywheel marks provided. See Ignition Timing for timing procedure and Vacuum Brake adjustment.

CARBURETION: See Carburetor & Carb. Equipment.
Idle Setting—Both idle screws ⅝-¾ turn open (Stromberg Carb.), ⅞ turn open (Chandler-Groves Carb.). Idle speed 5-7 MPH.
Float Level (Stromberg Carb.)—Fuel level 15/32" below top of float bowl.
Float Level (Chandler-Groves Carb.)—Fuel level 11/16" plus or minus 1/32" below top of bowl.
Accelerating Pump (Stromberg Carb.).—Inner Hole—Summer, Outer Hole—Winter.
Accelerating Pump (Chandler-Groves Carb.)—Center hole—Normal. Upper hole (Summer), Lower hole (Winter) for temperature extremes.
Fuel Pump Pressure: 3½ lbs. maximum.

VALVES: See Valve Timing.
Tappet Clearance None in service (hydraulic lifter)

STARTING: See Battery, Starter, Generator, Regulator.

IGNITION

IGNITION SWITCH: Oakes Steering Column & Ignition Lock Assembly. Oakes No. 301650, Ford No. 86H-3676 (1938); No. 301970, Ford No. 96H-3676A (1939 Std.); 302005, Ford No. 96H-3676B (1939 Custom). Ignition Switch Oakes No. 301708 (1938), 301987 (1939 Std.), 302006 (1939 Custom). NOTE—96H-3676A Assy. used as replacement for 1938 86H-3676 Assy.
Lock Cylinder—Hurd or Briggs & Stratton. Ford No. 81A-3686A (1938), 91A-3686A (1939) with two keys.

COIL: Ford Part No. H-12024. Two coil unit assembled as part of Ignition Unit.
Ignition Current—Approx. 3.2 amperes idling, 4.2 stopped (per coil). Ignition primary circuit resistance 1.0-1.33 ohms.
Resistor Unit—One unit connected in each coil primary circuit (2 used). Mounted on Lighting Circuit Breaker assembly No. 86H-11624.

CONDENSER: Ford Part No. H-12300 (two used). Capacity—.30-.34 microfarad.

DISTRIBUTOR: Ford No. H-12127 (Orig. Equip.), 16H- 12127 (Repl. Unit). Double breaker, 6 lobe cam, full automatic advance type with vacuum brake control. Same design as used on other Zephyr models (alternate contact opening, requires synchronization).
Firing Interval—Movable contacts open 37½° after fixed set. Unequal 37½° and 22½° intervals (corresponding to 75° and 45° of crankshaft rotation) caused by 75° included angle between banks.
Breaker Gap—.014-.016" Both sets. Use tw step feeler gauge, .014" step 'go', .016" step 'no go'.
Cam Angle or Dwell—36.5° closed, 23.5° open (each set—operate independently).
Breaker Arm Spring Tension—20-24 ounces.
Rotation—Clockwise viewed from drive end.

No. H-12127
Distributor Automatic Advance Engine

Degrees	R.P.M.	Degrees	R.P.M.
Start	200	0	400
8	950	16	1900

NOTE—Limits are 7½-8½° (distributor).

No. 16H-12127

Start	200	0	400
11-12	650	22-24	1300

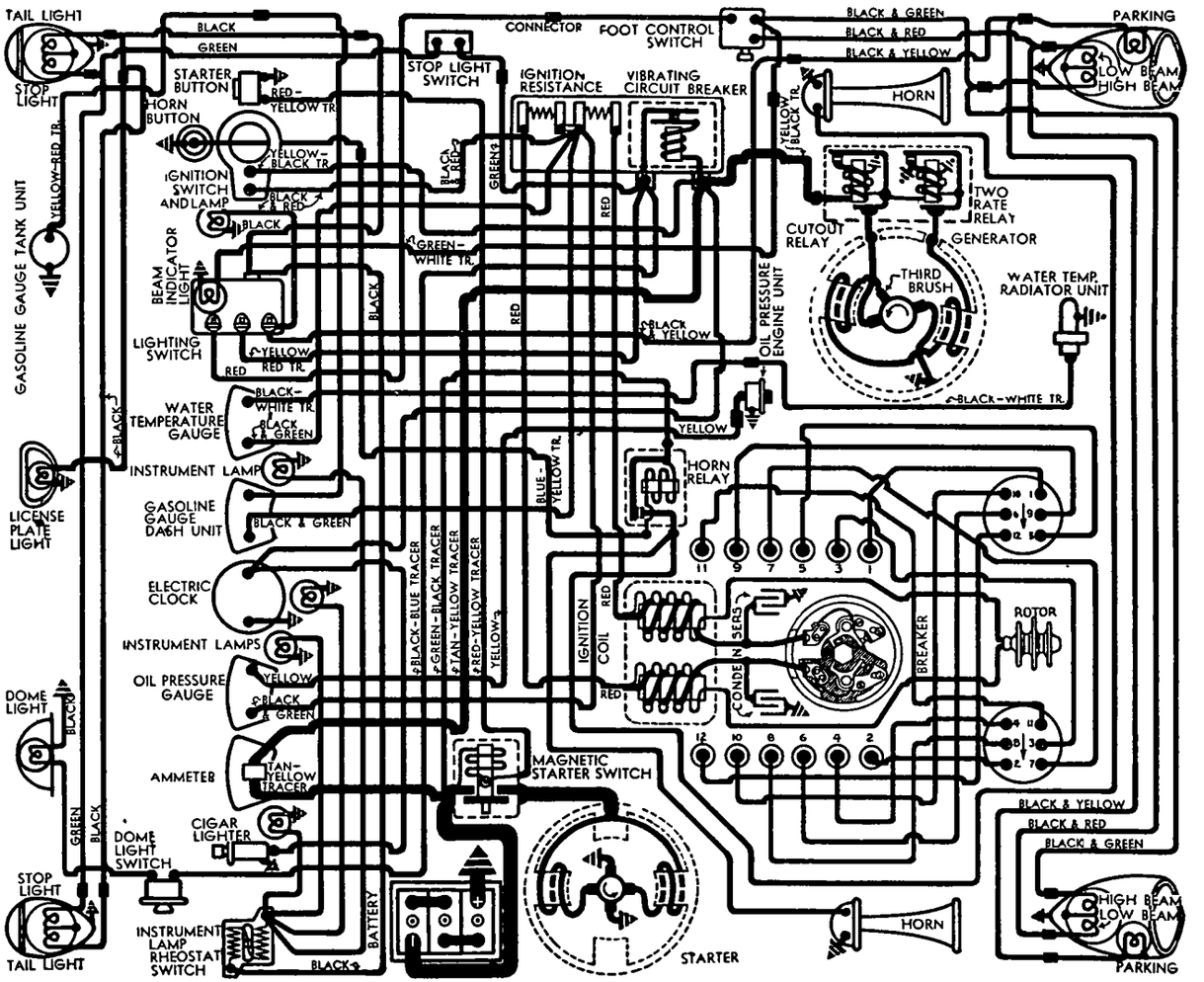

1938 MODELS

Distributor Removal:—Mounted on front of engine. Remove generator, disconnect vacuum line and primary leads, remove distributor cap, take ut 3 capscrews in mounting flange.

IGNITION TIMING

IGNITION TIMING:—Important Note—Special setting for each type distributor and different setting for Engs. No. H-45530 to H-57738 (see below). See Vacuum Brake Setting also.

Ignition Timing (Flywheel Degrees)

	H-12127 Distr.	16H-12127 Distr.
Eng. H-45530 to H-57738	At TDC	2° ATDC
All Other Engines	4° BTDC	2° BTDC

On Stroboscope settings will 2° BTDC (H-12127 except Engs. H-45530 to H-57738), 1° Before or After TDC (16H-12127 Dist.).

Timing & Synchronizing Note—Manufacturer recommends use of Stroboscope or V-126 Timing Fixture for both operations. See 1937 Lincoln-Zephyr article for all Timing Fixture data. No flywheel marks or other means provided to synchronize distributor on engine.

Timing (On Engine)—With #2 piston on top dead center (starting power stroke), loosen adjusting screw on right side of ignition unit housing, move screw down to bottom of slot, then move screw up slowly until left hand (fixed contacts) begin to open, note graduation on plate under screw head in line with reference mark on housing, move screw up one additional graduation (4° BTDC. setting), up ½ graduation (2° BTDC setting), down ½ graduation (2° ATDC setting). **Engine Nos. H-45530 to H-57738 must be specially timed as directed above. Synchronization (Movable Contacts)**—No means provided for synchronization on engine (see note above). If Stroboscope, Timing Fixture, etc. used, set movable contacts to open exactly 37½° (distributor rotation) after fixed set. To adjust, remove timing adjusting screw and plate on side of housing, turn eccentric adjusting screw (visible in slot).

Vacuum Brake Setting:—Should be set for best performance with particular fuel and operating conditions. To adjust, loosen locknut and back off adjusting screw until engine pings when accelerated, then turn screw in just enough to eliminate this ping, tighten locknut. When adjusted on Stroboscope, brake should retard spark to peepsight (set at 0° advance) at speed of 950 RPM. (H-12127 Dist.), 650 RPM. (16H-12127 Dist.) with no vacuum to release brake.

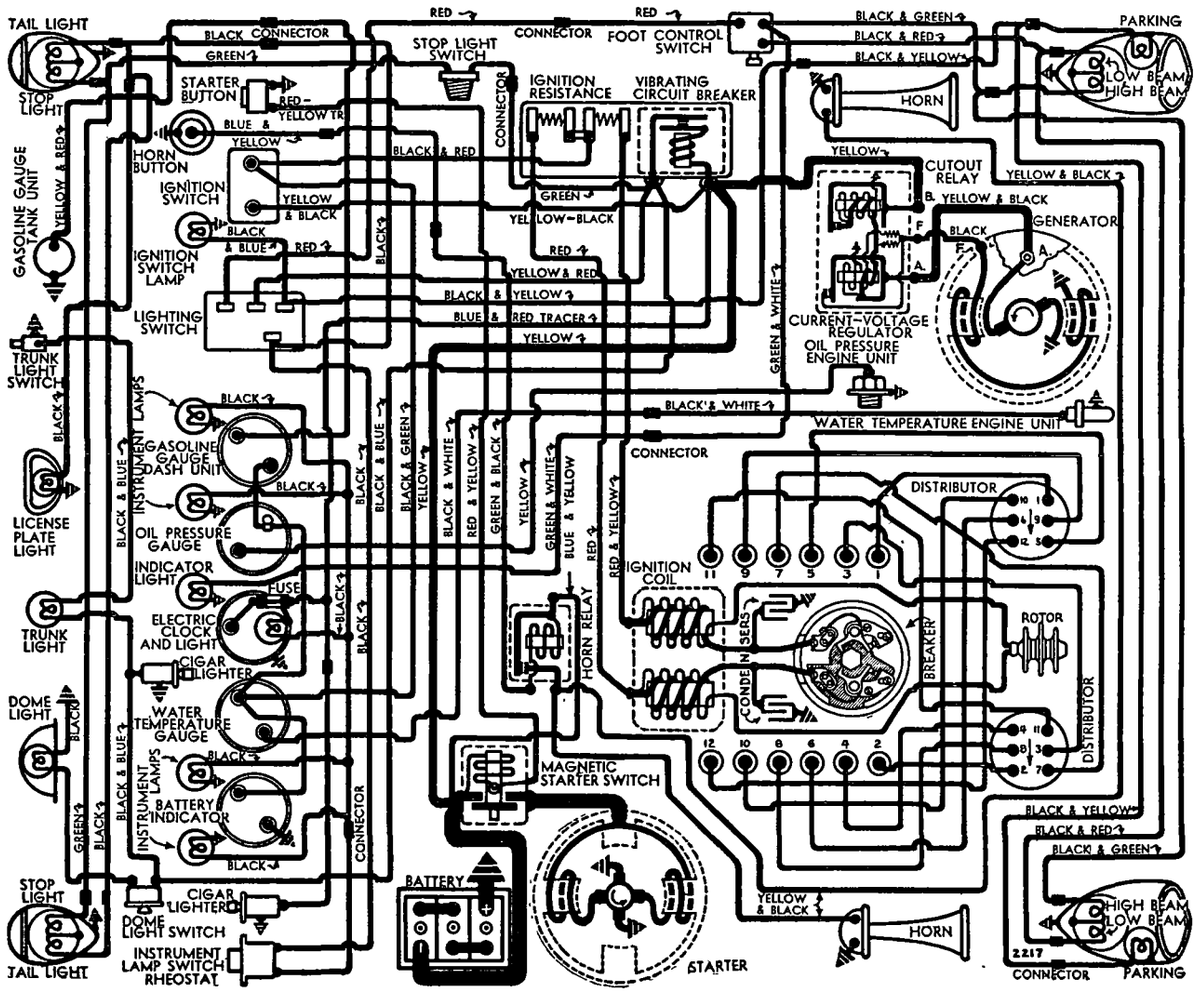

1939 MODELS

CARBURETOR

Stromberg Model EE-1, Ford No. 86H-9510-A1, or Holley (Chandler-Groves) Model AA-1, Ford No. 86H-9510-A2. Dual (double barrel) downdraft type. *For complete data, refer to Carburetor Index.*

Idle Adjustment—With engine warm, choke valve wide open, and Fast Idle inoperative, set throttle lever stopscrew for 5 M.P.H. idle speed, turn each idle adjusting screw (one for each barrel, adjust in succession) in until engine begins to miss, out until engine begins to roll, finally turn screw in slowly until engine fires smoothly. Final setting should be approximately ⅝-¾ (Stromberg), ⅞ (Chandler-Groves) turn from inner seated position. Readjust stopscrew for correct idling speed.

NOTE—Vacuum gauge recommended for idling adjustment, set for highest steady reading on gauge.

Accelerating Pump Setting (Stromberg)—Two ball studs provided for pump link connection:
'S' Minimum Stroke—Summer Operation.
'W' Maximum Stroke—Winter Operation.

Accelerating Pump Setting (Chandler-Groves)—Three holes provided for pump link connection:
Upper (Short Radius)—Min. Stroke, Hot weather.
Center—Medium Stroke, Normal temperatures.
Lower (Long Radius)—Max. Stroke, Cold weather.
NOTE—Link locked in pump rod by snap lock. Pull link shaft out of pump rod to disengage lock.

Fast Idle (All Models):—Integral with carburetor, operated by choke lever. No adjustment required.

CARB. EQUIPMENT

Air Cleaner: AC No. 1528239 Oil-wetted type (1938), 1528816 Oil-bath type (1939). NOTE—Heavy duty oil-bath type cleaner Optl. in 1938.

Fuel Pump:—AC Type R #1523307. Diaphragm type. Ford No. 68-9350. AC Replacement Pump No. 541 *For complete data, refer to Carburetion Equip. Index.*

Gasoline Gauge:—King-Seeley Electric. Ford No. Dash Unit—86H-9280 (1938), 96H-9280 (1939). Tank Unit—70-9275B (1938-39). *For complete data, refer to Carburetion Equip. Index.*

BATTERY

BATTERY:—Ford No. 86H-10655-A. 6 volt, 17 plate, 100 ampere hour capacity (20 hour rate).
Starting Capacity—126 amperes for 20 minutes.
Zero Capacity—300 amperes for 3.3 minutes.
Grounded Terminal—Positive (+) grounded to cylinder head stud on right hand bank.
Location—On right side in engine compartment.
Dimensions—Length 10.5". Width 7.2". Height 7.1".
Battery Indicator:—King-Seeley Voltmeter. Ford No. 96H-10844. *See Electrical Equipment Section.*

CONTINUED ON NEXT PAGE

CONTINUED FROM PRECEDIN PAGE

STARTER

Ford Model No. 18-11002. Armature No. 18-11005. Drive—Inb'd Bendix L11FX-10. Ford No. B-11350. **Cranking Engine**—100 R.P.M., 190-215 amperes. **Rotation**—Counter-clockwise at commutator end. **Brush Spring Tension**—2 lbs. each.

Performance Data

Torque	R.P.M.	Volts	Amperes
0 ft. lbs.			45-60
4 "	1070	4.6	200
8 "	660	4.3	340
12 "	300	3.65	465
14 "	Lock	3.5	500

Removal:—Mounted on right front face of flywheel housing. To remove, take off pan at right of engine, remove 2 through bolts on commutator endplate.

Starting Switch:—R-B-M. Ford No. 78-11450. Magnetic type. Mounted on dash. Controlled by Push-pushbutton switch No. 86H-11500A (1938—15/16" mtg. hole), 86H-11500B (1938—23/32" mtg. hole), 96H-11500A (1939 Std.), 96H-11500B (1939 Custom).

GENERATOR

EARLY 1938 TYPE

Ford Model 81A-10000-B (1938 First Cars). Armature No. 79-10005-HA. Third brush control with Two-Rate Relay (regulator). Ventilated by fan.

Charging Rate Adjustment—Remove commutator cover band, shift third brush by hand counter-clockwise (down) to increase, clockwise to decrease output. Brush held in position by friction. With standard setting, third brush should be 1½ commutator segments from nearest main brush.

Maximum Charging Rate—26 amperes (cold), 30 M.P.H. To check output, use 'BRS' set or rheostat connected across battery terminals and apply load until voltage is exactly 6 volts, operate generator at 1000 R.P.M., check output with ammeter connected in charging line at generator terminal.

Amperes	Performance Standards	Eng. RPM.
Start		525
26		1250
16		2500

Rotation—Counter-clockwise at commutator end. **Field Current**—3.43-4.17 amperes at 6.0 volts (field resistance 1.44-1.75 ohms).

Removal & Belt Adjustment: Same as '38-39 below.

GENERATOR

1938 & 1939 TYPE

Ford Model No. 81A-10000-D (1938 Later Cars), No. 91A-10000 (1939). Armature No. 78-10005-A (All Models). Two brush, shunt type with vibrating type voltage and current regulation. Ventilated by fan NOTE—Armature 78-10005-A replaced by 78-10005-C **Charging Rate Adjustment**—None. See Regulator. **Maximum Charging Rate**—Controlled by regulator (dependent on battery condition and load). To check generator capacity, disconnect field lead at generator, connect both generator terminals together (use short insulated wire), use 'BRS' set or rheostat connected across battery terminals and apply load until voltage is exactly 6 volts. Operate generator at 1000 R.P.M., check output with ammeter connected in charging line at generator terminal. After making test, restore original connections, **do not operate generator in service with terminals connected together (this eliminates all regulator action).**

Amperes	Performance Standards	Eng. RPM.
Start		500
28		1250
28		2500

Rotation—Counter-clockwise at commutator end. **Field Current**—2.2 amperes at 6.0 volts (field resistance 2.7 ohms at 70° F.). **Brush Spring Tension**—Approximately 28 ozs.

Removal (All Models):—Mounted between cylinder banks at front of engine (belt driven in tandem with both water pumps). To remove, take out support bolt in bracket under generator.

Belt Adjustment (All Models):—Loosen generator support bolt, move generator up until belt deflection ¾-1" midway between gen. and water pump.

REGULATOR

EARLY 1938 TYPE

Ford No. 68-10505 (Used with 81A-10000-B Gen.). Cutout Relay and non-vibrating type regulator (Two Rate Relay). Mounted on the generator.

For complete data, refer to Electrical Equipment Index.

Cutout Relay

Cuts In—5.8-6.3 volts, 10 MPH.
Cuts Out—3 amperes maximum discharge.
Contact Gap—.015-.020".
Air Gap—.010-.015" with contacts closed.

Regulator

Setting—Contacts open when generator voltage reaches 8.0-8.3 volts, reducing charging rate to approximately 50% of the high rate.
Checking—*See article in Electrical Equipment Section*

REGULATOR

1938 & 1939 TYPE

Ford Model No. 81A-10505A-1 (81A-10000-D Gen.), 91A-10505A (91A-10000 Gen.). Consists of Cutout Relay and vibrating type Voltage-Current Regulator in case on dash. NOTE—Regulator mounted on rubber cushions with separate ground lead to dash. NOTE—This regulator serviced by new type No. 01A-10505-C4 3-unit Regulator.

For complete data, refer to Electrical Equipment Index.

Cutout Relay

Cuts In—6.5-7.0 volts, 510 Eng. R.P.M.
Cuts Out—2 ampere maximum discharge current.

Voltage-Current Regulator

Setting—7.6 volts max. at 70° F.
Current Setting—30 amperes.
Checking—*See article in Electrical Equipment Section.*

LIGHTING

LIGHTING:—**Headlamps**—Hall 'Two-Lite', pre-focused type. Upper and lower beams controlled by selector switch on toeboard.

Headlamp Adjustment—With upper beams lighted, aim each headlamp straight ahead so that beam centered on vertical line directly ahead of lamp center (26½" each side of car center-line) and upper edge at horizontal line at lamp center height 30¾" above floor) at 25 feet.

Beam Indicator—In Light Switch handle (1938), in upper face of Speedometer dial (1939). Lighted when Upper Beams in use.

Switches—1938

Lighting—Ford # 86H-701616 with Knob # 701618.
Beam Selector—Same as listed for 1939 cars.
Instrument—Ford No. 86H-13740 (rheostat type).
Stop Light—Ford No. 48-13480.
Dome Light—Ford No. B-13752-A.

Switches—1939

Lighting—Ford No. 96H-11654 with Switch Knob No. 96H-11661A (Std.), 96H-11661B (Cust.).
Beam Selector—Ford No. 86H-11653 (with Horn Wiring), No. HB-13532 (switch only).
Instrument—Ford 96H-13740-B (Std.), C (Custom).
Dome Light—Ford No. B-13752-A.
Stop Light—Ford No.91A-13480 (hydraulic).

Bulb Specifications

Position	Candlepower	Mazda No.
Headlamps	32-32	2330
Parking, Instrument	1½	55
Clock, Ign. Switch	1½	55
Beam Indicator	1	51
Stop & Tail	21-3	1158
License Plate	3	63
Dome, Luggage Comp't	6	81

MISC. ELECTRICAL

LIGHTING CIRCUIT BREAKER:—**R-B-M. Ford No. 86H-11624.** Mounted on left side of dash under cowl (ignition resistors mounted on same base as part of assembly). Vibrating type, protects lighting circuits.

HORNS:—**Ford No. 86H-13832 (High Note—R.H.), 86H-13833 (Low Note—L.H.).** Air electric dual horns.
Horn Current—11-13 amperes each.
Horn Relay:—R-B-M. Ford No. 96H-13842.

ENGINE

ENGINE SPECIFICATIONS: Own Model. 12 Cylinder, 75° Vee, "L" head type. Both cylinder blocks and crankcase cast together.
Bore—2.75". **Stroke**—3.75". **Displ'mt.** 267.28 cu. ins.
Rated Horsepower—36.39.
Developed Horsepower—110 at 3900 R.P.M.
Compression Ratio—6.7-1 Std. No Optl. ratios.
Compression & Vacuum Reading—*See Tune-up data.*

CYLINDER SLEEVES:—Cast iron, dry type cylinder sleeves available for replacement where bore size worn beyond Oversize Piston Limit.
Sleeve Installation—*See Lincoln Shop Notes.*

PISTONS:—Special heat-treated steel alloy, cam-ground type. **Length** 3.245-3.305".
Weight—326 grams (without rings or pin).
Removal—Pistons and rods removed from above.
Clearance—See Fitting New Pistons.
Replacement Pistons: *See Lincoln Shop Notes.*
Fitting New Pistons: Use .50" wide feeler stock of correct thickness (as listed below) inserted between piston and cylinder wall at right angles to pin to check clearance. Pull required to withdraw feeler should be 5-8 lbs. (all types).
Feeler Thickness—.002" New Piston in New Plain Bore, .004" for New Piston in Worn Plain Bore .005" for Worn Piston in Worn Plain Bore.

PISTON RINGS:—Two compression, one oil control ring per piston, all above pin. Oil ring groove drilled with oil drain holes. NOTE—Expanders used with #2 Compression and both oil rings on 1939 cars. Install this #2 compression ring with mark "TOP" up.

1938 Ring Specifications

Ring	Width	End Gap	Side Clearance
Compr.	.093-.0935"	.008-.013"	.0025-.003"
Oil Cont.	.186-.1865"	.008-.013"	.0015-.002"

1939 Ring Specifications

Ring	Width	End Gap	Side Clearance
Compr. #1	.093-.0935"	.008-.013"	.0025-.003"
Compr. #2	.093-.0935"	.008-.013"	.002-.0025"
Oil Contr.	.1845-.185"	.008-.013"	.0015-.002"

Replacement Rings:—*See Lincoln Special Shop Notes for complete data and new expander type rings.*

ENGINE

C NTINUED FROM PRECEDING PAGE

PISTON PIN:—Diameter .7501-.7504". Length 2.482". Pin floats in piston and rod, held by locking ring at each end. Connecting rod bronze bushed.
Pin Fit in Piston—.0003-.0009" clearance or light hand push fit with piston at 70°F.
Pin Fit in Rod Bushing—.0002-.0005" clearance (pin should pass through bushing slowly of own weight). *See Lincoln Shop Notes for Pin Fitting Directions.*
Replacement Pins: *See Lincoln Shop Notes.*

CONNECTING ROD:—Weight 638 grams. **Length** 7.400".
Crankpin Journal Diameter—2.126".
Lower Bearing—Removable steel-backed, copper-lead lined bearing shells in each rod.
Clearance—.001-.0025". **Endplay** .014" (total).
Bearing Adjustment: None (no shims). Do not file caps. Replace bearings if less than .08375" thick.
Replacement Bearings: *See Lincoln Shop Notes.*
Installing Rods:—Assemble rods with marks on rod and cap together. Install in same numbered cylinder with marks pointing toward pan.

CRANKSHAFT:—4 Bearing. Integral counterweights.
NOTE—Crankshafts furnished Std. and .020", .040" undersize.
Journal Diameters—2.401" (all bearings).
Bearing Type—Steel-backed, copper-lead lined.
Clearance—.001-.003".
Bearing Adjustment: None. Replace bearings.
End Thrust:—Taken by rear main bearing. Adjusted by replacing bearing. **Endplay**—.002-.006".
Replacement Bearings: *See Lincoln Shop Notes.*

CAMSHAFT:—Four bearing. Helical Gear Drive.
Bearing Diameters—1.797" (replace bearings if the diameter more than 1.802", replace camshaft if the journal diameter less than 1.7955").
Bearing Type—Steel-backed, babbit-lined bushings pressed in block. **Clearance**—.001-.002".
End thrust:—Taken by gear hub and coverplate. Adjusted by replacing coverplate. **Endplay** .004-.008"
Timing Gears:—Crankshaft gear cast-steel. Camshaft gear Bakelized Fabric.
Camshaft Setting:—Mesh marked crankshaft gear tooth with camshaft space between teeth marked by straight line (in line with mark on hub).

VALVES:—

	Head Diameter	Stem Diameter	Length
All Valves	1.537"	.3105-.3115"	4.750-4.751"

	Seat Angle	Lift	Stem Clearance
Intake	45°	.292"	.0015-.0035"
Exhaust	45°	.292"	.0025-.0045"

NOTE—Service limit for valve stem diameter is .309" Intake, .3065" Exhaust. Valves interchangeable. *For Valve Servicing data, see Lincoln Shop Notes.*
NOTE—Special seat inserts for exhaust valves.
Valve Guides: Split type retained by "C" washer and valve spring. NOTE—Replace both halves of all guides measuring less than .6665" (thickness of guide half and valve stem at top of guide with valve of .311" stem diameter in place in guide half). *For Valve Guide Servicing data, see Lincoln Shop Notes.*
Valve Lifters:—Barrel type with hydraulic tappet take-up (Wilcox-Rich Zero-lash type).
Diameter—.9995".
See Miscellaneous Section for complete data.
Valve Springs:—Free length 2.42".

	Spring Pressure	Length
Valve Closed	51-57 lbs.	2.13"
Valve Open	111-121 lbs.	1.84"

NOTE—Replace springs which do not test to 47-57 lbs. at 2⅛" or if paint coating has been removed.

VALVE TIMING

Tappet Clearance:—None in service (hydraulic lifter). *See Valve Lifter Servicing in Lincoln Shop Notes.*
Valve Timing:—See Camshaft Setting above.
Int. Valves—Open 10.42° BTDC Close 35.58° ALDC.
Exh. Valves—Open 50.92° BLDC. Close 8.08° ATDC.
To Check Valve Timing—No flywheel marks provided to check timing. If dead center position for any piston established on flywheel, intake valve for this cylinder should open approx. 3.24 flywheel teeth before this point with piston .0389" BTDC.

LUBRICATION

LUBRICATION:—Pressure system. Gear type oil pump mounted in crankcase. System changed to include oil-relief valve on oil pump, and channel for each row of hydraulic valve lifters in block (fed through metering hole from oil channel at rear of engine, excess oil flows to pressure regulator at front end).
Normal Oil Pressure—40-45 lbs. at 2000 R.P.M.
Oil Pump and Oil Pressure Regulator: *See Lincoln Shop Notes for complete data.*
Crankcase Capacity—5 quarts.
Oil Pressure Gauge:—King-Seeley Electric. Ford No.
Dash Unit—86H-9273 (1938), 96H-9273 (1939).
Engine Unit—48-9278 (1938-39).
See Miscellaneous Section for complete data.

COOLING

Water Pump: Packless type, 2 used (1 for each bank) *See Water Pump Section for complete data.*
Removal—Slack off drive belt, disconnect hose couplings, remove mounting screws in pump flange.
Thermostat:—In Upper radiator hose. NOTE—On first cars with thermostat at lower (engine) end of hose, reverse hose to provide additional clearance for drive belt **thermostat must be reversed in hose when this change made.** Later cars have thermostat at upper end.
Setting—Starts to open at 145°F. Fully open 180°F.
Temperature Gauge: King-Seeley Electric. Ford No.
Dash Unit—86H-10883 (1938), 96H-10883 (1939).
Radiator Unit—H-8586 (1938), 99A-10884 (1939).
See Miscellaneous Section for complete data.
Water Capacity—30 quarts.
Drain Valves—One in left hand water outlet elbow, one at each front lower corner of engine block.

CLUTCH

CLUTCH:—**Long Model 10CF-CI.** Single plate, semi-centrifugal, dry disc type.
See Clutch Section for complete data.
Facings—Moulded type, chevron or spiral wound, 2 used. Inside Diam. 6". Outside Dia. 10". Thick. .140".
Adjustment:—Pedal free movement 1½-2". To adjust, loosen locknut and turn clevis on connector link.
Removal:—Slide transmission and rear axle to rear as a unit (see Transmission Removal below), take out mounting screws in clutch cover flange.

TRANSMISSION

TRANSMISSION:—Own Make. All helical gear, constant-mesh, synchro-mesh (second and high), sliding gear (Low and reverse) with new 'Blocker' type Synchronizer (for second and high).
See Transmission Section for complete data.
Removal:—Disconnect rear spring at center mounting on body, disconnect speedometer cable, brake cables, shock absorber links, take out mounting bolts in universal joint ball housing, slide axle assembly to rear. Remove side panel on shift lever housing, remove pin at lower end of shift lever, free lever from transmission. Support engine, take out rear engine mounting bolts, remove clutch housing mounting screws, pull transmission to rear.
NOTE—On cars before Eng. No. 47980 (without plate over rear bearing) use extreme care to prevent transmission mainshaft and rear main bearing pulling out of case when removing transmission which will allow synchronizer balls to drop out. Cars after 11/24/37 have bearing retained by plate

UNIVERSALS

UNIVERSAL JOINT:—Spicer. 1 used (at rear of transmission). *See Universals Section for complete data.*

REAR AXLE

REAR AXLE:—Own Make. New Hypoid Gear, 3/4 floating type with torque tube drive.
See Rear Axle Section for complete data.
Ratio—4.44-1 Std. **Backlash**—.002-.004".
Optional Axle:—Columbia Two-Speed type.
See Rear Axle Section for complete data.
Removal:—Disconnect shock absorber links, brake cables, rear spring at center connection on body, speedometer cable. Take out mounting bolts in universal joint ball housing, pull axle assembly back to free drive shaft at splined joint.
Axle Shaft Removal—Axle housing must be separated at pinion mounting and shafts removed from inner end (diff. side gear integral with shaft).

SHOCK ABSORBERS

SHOCK ABSORBERS:—Houde (Houdaille) No. BBLCE (front), BBCU (rear). Adjustable, hydraulic type.
See Shock Absorber Section for complete data.

FRONT SUSPENSION

Front Suspension:—Conventional 'I' beam section front axle with Reverse-Elliott ends and transverse spring. Axle positioned by radius rods.
Kingpin Inclination—4° crosswise.
Caster—5° Max., 3° Min. Caster must be alike within ½° for both wheels. Axle may be bent cold to correct caster if correct tools used (wedges and blocks to prevent crushing axle flange).
Camber—¾° Max., ¼° Min. Camber must be alike within ¼° both wheels. Correct as for Caster above.
Toe In—1/16-⅛". Adjust in usual manner by loosening tie rod clamp bolts and turning rod.
Steering Geometry (Toe out on turns)—Inner wheel turned 23°, outer 20°. Allowable variation ½°.

STEERING GEAR

Steering Gear: Gemmer Model 330. Worm-and-Roller
See Steering Gear Section for complete data.

BRAKES

Service (1938): Bendix Mechanical, duo-servo, single anchor type. Hand lever applies all service brakes.
See Brake Section for complete data.
Service (1939): Bendix Hydraulic, duo-servo, single anchor type without Eccentric Adjustment. Hand lever applies rear wheel service brakes.
See Brake Section for complete data.
Wheel Cylinders ('39)—Dia. 1.125" (front), 1.00" (rear). Not interchangeable between wheels.
Drums—Diameter 12".
Lining—Molded (Primary or forward shoe), Woven (Secondary or rear shoe). Width 1.75". Thickness .21". Length per shoe 11.95".
Clearance—.010" at each end of each shoe.
Hand Brake: See Service Brakes above.

ENGINE HOOD NOTE:—Turn radiator ornament counter-clockwise to free latch, lift hood up at front.
OIL PAN REMOVAL: *See Lincoln Shop Notes.*

MODEL IDENTIFICATION

SERIAL & ENGINE NUMBER:—Stamped on top of clutch housing and on left side of front frame cross-member.

TUNE-UP

COMPRESSION:—Ratio—7.2-1 aluminum alloy head. Pressure—125 lbs. at cranking speed of 100 RPM.
VACUUM READING:—18-20" steady idling at 6 MPH.
FIRING ORDER: 1-4-9-8-5-2-11-10-3-6-7-12. See diagram for numbering and cable connections on caps.
SPARK PLUGS: Champion Type H-10. 14 mm. Metric. Gaps—.028-.030"
IGNITION: See Coil, Condenser, and Distributor.
Breaker Gap—.014-.016" Cam Angle 36.5° closed (each set operating independently.
Synchronization—Unequal alternate opening at 37½-22½-37½° (distr.) intervals.
Automatic Advance—8° max. at 950 RPM (Orig. H-12127 Distr.), 11-12° max. at 650 RPM (Repl. 16H-12127 Distr.). Distributor degrees & RPM.
IGNITION TIMING: See Ignition Timing.
Std. Setting—4° BTDC (Orig H-12127 Distr.), 2° BTDC (Repl. 16H-12127 Distr.). No flywheel marks provided. See Ignition Timing for timing procedure and Vacuum Brake Setting.
CARBURETION: See Carburetor & Carb. Equipment.
Idle Setting—Both idle screws approx. ⅞ turn open or set for highest steady vacuum gauge reading. Idle speed 6 MPH.
Float Level—Fuel level 19/32" plus or minus 1/32" below top edge of float bowl.
Accelerating Pump—Inner (#1) hole—Summer, Center (#2) hole—Winter, Outer (#3) hole—Extreme Winter temperatures.
Fuel Pump Pressure: 3½ lbs. maximum.
VALVES: See Valve Timing.
Tappet Clearance None in service (hydraulic lifter)
STARTING: See Battery, Starter, Generator, Regulator.

IGNITION

IGNITION SWITCH: Oakes Steering Column & Ignition Lock Assembly. Part Numbers as follows:

Model	Steering Post & Ign. Lock Assy. Oakes No.	Ford No.	Ignition Switch Oakes No.
Zephyr '40①	302099	06H-3676A	302136
Zephyr '40②	302131	06H-3676B	302137
Contl. '40③	302180	06H-3676C	302182④
Contl. '40	302180	06H-3676D	302440⑤
Zephyr '41①	302490	16H-3675A	302440⑤
Zephyr '41②	302545	16H-3675B	302440⑤
Contl. '41	302516	16H-3675C	302440⑤
Cust. Sedan '41	302599	168H-3675A	302440⑤
Cust. Limo. '41	302565	168H-3675B	302440⑤

①—With Standard Trim. ②—With Custom Trim. ③—Cabriolet Models only.
④—Ford No. 06H-3680. ⑤—Ford No. 16H-3680.
Lock Cylinder—Hurd or Briggs & Stratton. Ford No. 91A-3686A (1940 Zephyr), 06H-3686A (1940 Zephyr Limo. & Contl. with Custom Trim), 06H-3686B (1940 Contl. Cabr.), 06H-3686C (1940 Contl.), 36H-3686A (1941 Zephyr with Std. Trim), 16H-3686B (1941 Zephyr with Custom Trim, Contl., Custom).
COIL: Ford Part No. H-12024. Two coil unit assembled as part of Ignition Unit.
Ignition Current—Approx. 3.2 amperes idling, 4.2 stopped (per coil). Ignition primary circuit resistance 1.0-1.33 ohms.
Resistor Unit—One unit connected in each coil primary circuit (2 used). Mounted on Lighting Circuit Breaker Assy. No. 06H-11624 ('40), 16H-11624 ('41).
CONDENSER: Ford Part No. H-12300 (two used). Capacity—.30-.34 microfarad.
DISTRIBUTOR: Ford No. H-12127 (Orig. Equip.), 16H-12127 (Repl. Unit). Double breaker, 6 lobe cam, full automatic advance type with vacuum brake control. Same design as used on other Zephyr models (with alternate contact opening).
Firing Interval—Movable contacts open 37½° after fixed set. Unequal 37½° and 22½° intervals (corresponding to 75° and 45° of crankshaft rotation)
Breaker Gap—.014-.016" (both sets equal).
Cam Angle or Dwell—36.5° closed, 23.5° open (each set—operate independently).
Breaker Arm Spring Tension—20-24 ozs.
Rotation—Clockwise viewed from drive end.

N . H-12127
Distributor Automatic Advance Engine

Degrees	R.P.M.	Degrees	R.P.M.
Start	200	0	400
8	950	16	1900

No. 16H-12127

Start	200	0	400
11-12	650	22-24	1300

Distributor Removal:—Mounted on front of engine. Remove generator, disconnect vacuum line and primary leads, remove distributor cap, take out 3 capscrews in mounting flange.

IGNITION TIMING

IGNITION TIMING:—Special setting for each type distributor. See Vacuum Brake Setting also.

	Ignition Timing (Flywheel Degrees) H-12127 Distr.	16H-12127 Distr.
All Engines	4° BTDC	2° BTDC

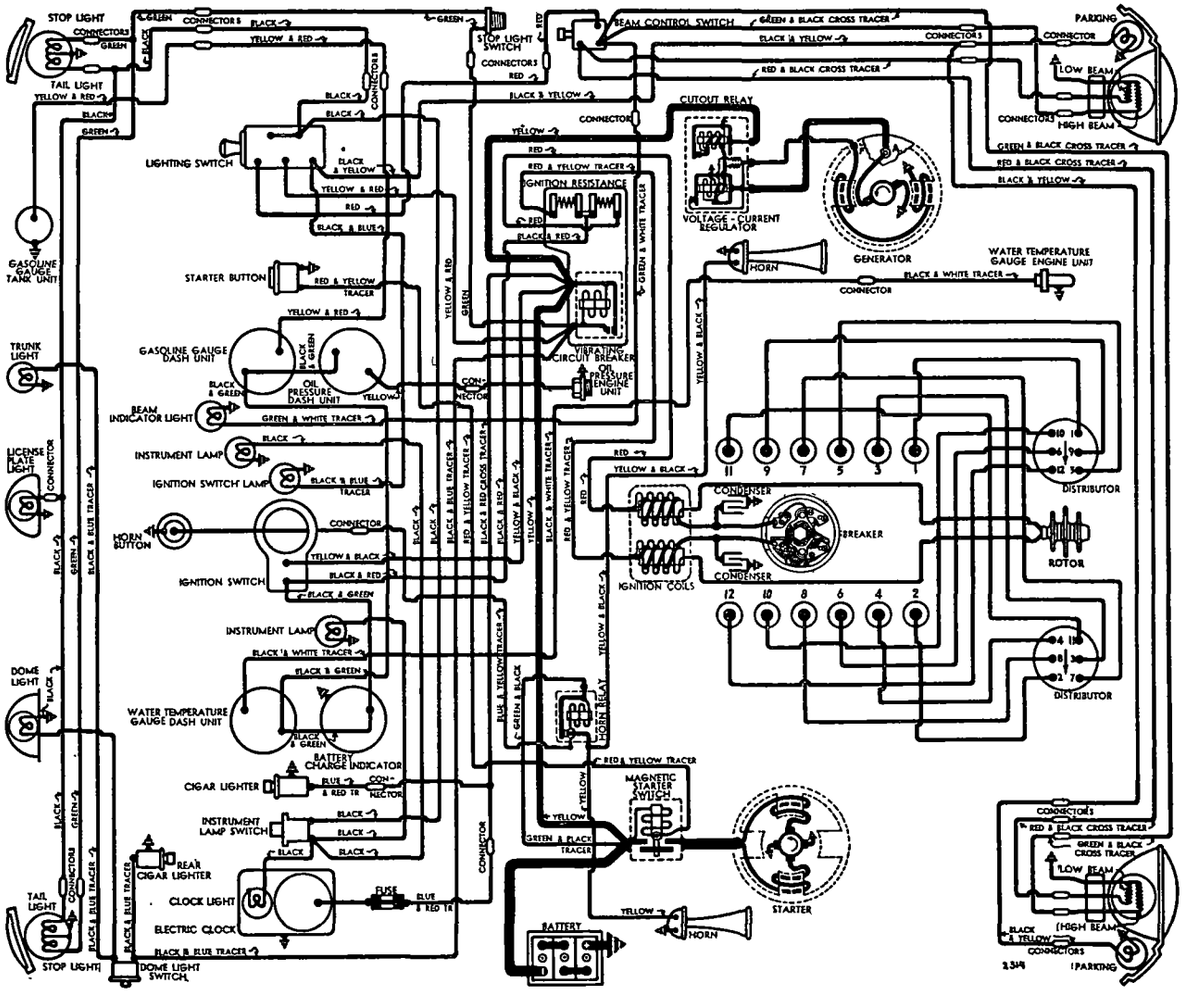

1940 M DELS

Note—On Ford Stroboscope, settings will be 2° BTDC (H-12127 Distr.), 1° BTDC (16H-12127 Distr.).

Timing & Synchronizing Note—Manufacturer recommends use of Stroboscope or V-126 Timing Fixture for both operations. See 1937 Lincoln-Zephyr article for all Timing Fixture data.

Timing (On Engine)—With #2 piston on top dead center (starting power stroke), loosen adjusting screw on right side of ignition unit housing, move screw down to bottom of slot, then move screw up slowly until left hand (fixed contacts) begin to open, note graduation on plate under screw head in line with reference mark on housing, move screw up one additional graduation (H-12127 Dist.), or up ½ graduation (16H-12127 Dist.) for correct timing

Synchronization (Movable Contacts)—No means provided for synchronization on engine (see note above). If Stroboscope, Timing Fixture, etc. used, set movable contacts to open exactly 37½° (distributor rotation) after fixed set. To adjust, remove timing adjusting screw and plate on side f housing, turn eccentric adjusting screw (visible in slot).

Vacuum Brake Setting:—Should be set for best performance with particular fuel and operating conditions. To adjust, loosen locknut and back off adjusting screw until engine pings when accelerated, then turn screw in just enough to eliminate this ping, tighten locknut. When adjusted on Stroboscope, brake should retard spark to peepsight (set at 0° advance) at speed of 950 RPM. (H-12127 Dist.), 650 RPM (16H-12127 Distr.) with no vacuum.

CARBURETOR

Holley (Chandler-Groves) Model AA-1, Ford No. 06H-9510 (1940-41), 16H-9510-B (1941) Std. on Zephyr Models (no Automatic Choke). Ford No. 16H-9505-A or 16H-9505-C Carburetor & Automatic Choke Assy. (Optl. on 1941 Zephyr, Std. on Contl. & Custom). 1" Dual (double barrel) downdraft types. ***For complete data, refer to Carburetor Index.***

Idle Adjustment—With engine warm, choke valve wide open and Fast Idle inoperative, set throttle lever stopscrew for 6 M.P.H. idle speed. Turn each idle adjusting screw (one for each barrel, adjust in succession) in until engine begins to miss, then out until engine begins to roll, finally turn screw in slowly until engine fires smoothly. Final setting should be approximately ⅞ turn out from the inner seated position. Reset for 6 MPH idle speed.

Float Level—Fuel level should be 19/32" plus or minus 1/32" (9/16-10/16") below top edge of bowl.

Accelerating Pump Adjustment—Three holes provided in throttle lever for pump link connection.
Inner (#1)—Min. stroke, Summer temperatures.
Center (#2)—Med. stroke, Winter temperatures.
Outer (#3)—Max. stroke, Extreme cold weather.
NOTE—Pump link locked in pump rod by snap lock.

Fast Idle:—Integral with carburetor. Operated by choke lever. No adjustment required.

CARB. EQUIPMENT

Automatic Choke (1941): Ford No. 16H-9850. Selectomatic type with automatic control when control button turned so that "A" is up, manual control when button turned so that "M" up. Automatic Choke is special Sisson type (connected to starter). ***For complete data, refer to Carburetion Equip. Index.***

Air Cleaner: Ford No. 06H-9600A (1940 Zephyr—with tube to manifold), 06H-9600E (1940-41 Zephyr, 1941 Custom), 06H-9600D (1940-41 Contl.) Oil-wetted type Std. Heavy duty Oil-bath type Optl. as follows: Ford No. 06H-9625A (1940 Zephyr), 16H-9625 (1941 Zephyr & Custom), 06H-9625C (1940-41 Contl.).

Gasoline Gauge:—King-Seeley Electric. Ford No.
Dash Unit—06H-9280A (1940 Zephyr), 06H-9280B (1940-41 Contl.), 16H-9280 (1941 Zephyr & Custom).
Tank Unit—01T-9275 (1940), 21C-9275A (1941).
For complete data, refer to Carburetion Equip. Index.

Fuel Pump:—AC Type R. #1523307. Ford No. 68-9350. AC Replacement Exchange Pump No. 541.
For complete data, refer to Carburetion Equip. Index.

BATTERY

BATTERY:—Ford No. 06H-10655-A. 6 volt, 17 plate, 120 ampere hour capacity (20 hour rate).
Starting Capacity—150 amperes for 20 minutes.
Zero Capacity—300 amperes for 4.0 minutes.
Grounded Terminal—Positive (+) to cyl. head stud.
Location—On right side in engine compartment.
Dimensions—Length 10.6". Width 7.3". Height 9.2".

Battery Indicator:—King-Seeley. Voltmeter type. Ford No. 06H-10844-A (except Contl.), 06H-10844-B (Contl.). **NOTE—This unit not used on 1941 models.**
For complete data, refer to Electrical Equipment Index.

STARTER

STARTER:—Ford No. 18-11002. Armature No. 18-11005.
Drive—Inboard Bendix L11FX-10. Ford #B-11350.
Rotation—Counter-clockwise at commutator end.
Brush Spring Tension—2 lbs. each.
Cranking Engine—100 RPM., 190-215 amperes.

Performance Data

Torque	R.P.M.	Volts	Amperes
4 ft. lbs.	1070	4.6	200
8 "	660	4.3	340
12 "	300	3.65	465
14 "	Lock.	3 5	.500

Starting Switch: R-B-M Model 5604, Ford No. 01A-11450 magnetic switch mounted on dash and controlled by pushbutton on instrument panel, R-B-M 3243, Ford No. 06H-11500A (1940 Zephyr—Std. Trim),

C NTINUED N NEXT PAGE

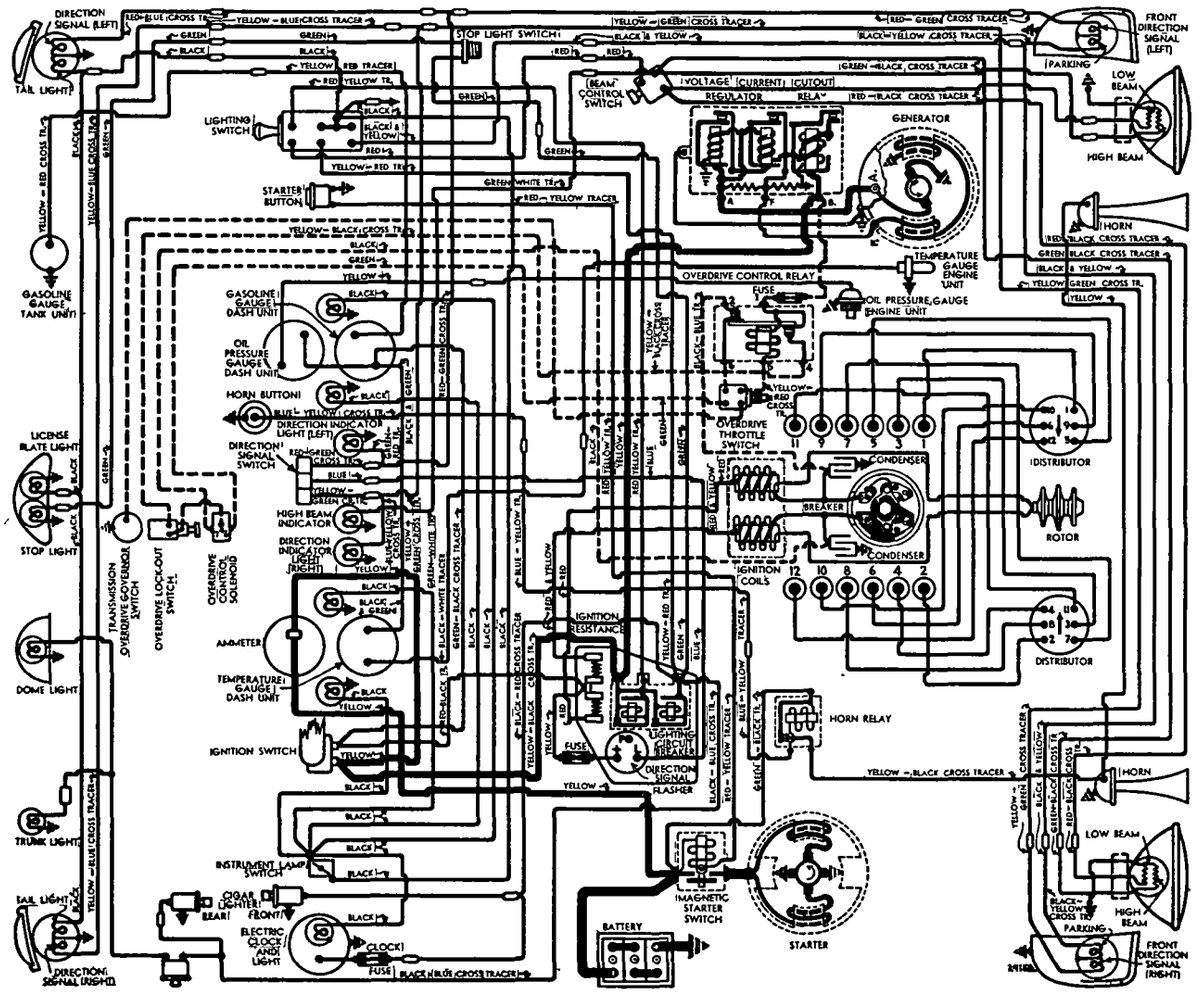

1941 M DELS

CONTINUED FROM PRECEDING PAGE

3244, Ford No. 06H-11500B (1940 Contl., Zephyr Convertible Coupe & Limo., Zephyr other models with Custom Trim); 3234, Ford No. 16H-11500C (1941 Zephyr—Std. Trim), 3234B, Ford No. 16H-11500D (1941 Contl., Custom, Zephyr with Custom Trim).

Removal:—Starter mounted on right front face of flywheel housing. To remove, take off pan at right of engine, take out starter through-bolts.

GENERATOR

GENERATOR:—Ford No. 01A-10000A & 01A-10000B. Armature No. 01A-10005. Two brush shunt type with Voltage and Current regulation. Ventilated by fan NOTE—01A-10000-A & B replaced by 21A-10000.

Charging Rate Adjustment—None. See Regulator.

Maximum Charging Rate—Controlled by regulator and dependent on battery condition and load. To check generator output, disconnect generator field lead at generator, connect both generator terminals together (use short insulated wire). Use 'BRS' set or rheostat connected across battery terminals and apply load until voltage is exactly 6 volts. Connect ammeter in charging line, run engine at approximately 1000 RPM., check output at 3 speeds given in performance table below. Restore original connections after completing test. ***Do not operate generator in service with both terminals connected together. This eliminates all regulator action.***

Performance Data

01A-10000-A		01A-10000-B	
Amperes	Eng. RPM.	Amperes	Eng. RPM.
Start	580	Start	520
32	1100	30	1060
32	2500	30	2500

Rotation—Counter-clockwise at commutator end.

Field Current—2.86 amperes at 6.0 volts (01A-10000-A), 2.08 amperes at 6.0 volts (01A-10000-B). Field resistance at 70° F. is 2.1 ohms (01A-10000-A). 2.88 ohms (01A-10000-B).

Brush Spring Tension—Approximately 28 ozs.

Removal:—Generator mounted on bracket between cylinder banks at front of engine, driven in tandem with water pumps by Vee belt. To remove, loosen nut on bracket stud.

Belt Adjustment:—Loosen nut on bracket mounting stud, raise generator up until side movement on belt midway between generator and water pump pulleys is 1" (thumb and finger pressure).

REGULATOR

Ford No. 01A-10505-A3 (1940), 01A-10505-C4 (1941), Two-unit (1940), Three-unit (1941) Type. Cutout Relay and vibrating type voltage and current regulators in single case mounted on engine dash.

NOTE—Regulator case is mounted on rubber cushions (separate ground lead on case).

For complete data, refer to Electrical Equipment Index.

REPLACEMENT REGULATOR NOTE—New type 3-unit Regulator only furnished for replacement.

Cutout Relay

Cuts In—5.8-6.3 volts at operating temperature.

Cuts Out—5.5 amperes max. (Cold 60°), 1.7 amperes (Hot 180°)—***see Regulator article in Electrical Equipment Section for specifications at other temperatures.***

Voltage-Current Regulator

Voltage Setting—6.9-7.2 volts at 70-80°F.

Current Setting—30-33 amperes.

Regulator Checking & Adjustment—*See Ford Regulator article in Electrical Equipment Section for data.*

LIGHTING

LIGHTING:—Headlamps—Ford Sealed Beam type. ***For complete data, refer to Electrical Equipment Index.***

Headlamp Adjustment—Aim upper beam of each headlamp straight ahead with hot spot centered on horizontal line 3" below lamp center height.

Beam Indicator—Red jewel on instrument panel directly above speedometer (1940), at top of instrument cluster (1941 Zephyr & Custom), above clock (Contl.) between Right and Left Direction Signal indicators. Lighted whenever Upper Beams in use.

Direction Signal—Std. on all 1941 models.

For complete data, refer to Electrical Equipment Index.

Switches—1940

Lighting—R-B-M Model 2440, Ford No. 06H-11654 (all models). Light Switch Knob Ford No. 06H-11661-A (Std.), 06H-11661-B (Custom).

Beam Selector—R-B-M Model 2480, Ford No. 06H-13532 (Zephyr), HB-13532 (Contl.). Switch with Headlamp & Horn Wiring No. 06H-11653A (Zephyr), 06H-11653B (Contl.).

Instrument—Ford No. 06H-13740-A (Std.), 06H-13740B (Custom & Contl.).

Dome Light—Ford No. B-13752-A.

Stop Light—Ford No. 91A-13480 (hydraulic type).

Switches—1941

Lighting—R-B-M Model 2445, Ford No. 11A-11654 (Switch only). Light Switch Knob No. 16H-11661-C (Zephyr & Custom), No. 06H-11661-B (Continental).

Beam Selector—R-B-M Model 2486. Ford No. 16H-11653-A (Zephyr & Custom—with Horn wiring), 16H-11653-B (Continental—with Horn wiring). No. 16H-13532-A (Switch only—Zephyr & Custom), 16H-13532-B (Switch only—Continental).

Instrument—Ford No. 16H-13740-C (Zephyr with Std. Trim), 16H-13740-D (Zephyr with Custom Trim, all Continental & Custom).

Stop Light—Ford No. 11A-13480 (hydraulic type).

Direction Signal—Ford No. 16H-13335.

Bulb Specifications

Position	Candlepower	Mazda No.
Headlamps		Sealed Beam
Parking (1940)	1.5	55
Park & Frt. Dir. Signal ('41)	21-3	1154
Instrument, Clock	1.5	55
Beam & Dir. Signal Ind.	1	51
Stop & Tail (1940)	21-3	1158
Stop (1941)	21	1129
Tail & Rear Dir. Signal ('41)	21-3	①
Rear License	3	63
Dome, Quarter, Trunk	6	81

①—No. 1154 (Zephyr & Custom), No. 1158 (Contl.)

MISC. ELECTRICAL

LIGHTING CIRCUIT BREAKER:—R-B-M Model 6720, Ford No. 06H-11624 ('40); 6740, Ford No. 16H-11624 ('41). This unit is combined with Ignition Resistor assembly on block on dash under left side of cowl. Combination thermostatic and wound-coil type. Contacts open with current of 50 amperes and vibrate to control current load.

FUSES:—**Clock**—3 amperes. In clock lead.
Overdrive—15 ampere. In control relay lead.
Direction Signal—10 ampere. In flasher lead.

HORNS:—Air electric type dual horns. Ford No. 06H-13832 (Right Hand—high note), 06H-13833 (Left Hand—low note). Horns operated by horn relay.
Horn Current—24-28 amperes (total).
Horn Relay:—R-B-M Model 4750, Ford No. 96H-13842. **Contacts Close** 3.5-4.5 volts. **Current Draw** ¾ amp.

ENGINE

ENGINE SPECIFICATIONS:—Own Model 06H. 12 cylinder 75° Vee, L head type. Both blocks and crankcase cast enbloc. **Bore**—2.875". **Stroke**—3.75".
Rated Horsepower—39.6. **Displ'mt.**—292 cu. ins.
Developed Horsepower—120 at 3500 RPM.
Compression Ratio—7.2-1 Std. aluminum head.
Compression & Vacuum Reading—*See Tune-up data.*

CYLINDER SLEEVES:—Cast iron, dry type cylinder sleeves available for replacement where bore size worn beyond Oversize Piston Limit.
Sleeve Installation—*See Lincoln Shop Notes.*

PISTONS:—Steel alloy, light weight, cam-ground, with slipper type skirt. Recondition cylinders for finished replacement pistons.
Weight—442 grams (without rings or piston pin).
Removal—Pistons and rods removed from above.
Clearance—See Fitting New Pistons.
Replacement Pistons: *See Lincoln Shop Notes.*
Fitting New Pistons: Use .50" wide feeler stock of correct thickness (as listed below) inserted between piston and cylinder wall at right angles to pin to check clearance. Pull required to withdraw feeler should be 5-8 lbs. (all types).
Feeler Thickness—.002" New Piston in New Plain Bore, .004" for New Piston in Worn Plain Bore .005" for Worn Piston in Worn Plain Bore.

PISTON RINGS:—Two compression, one oil ring, all above pin. Oil ring groove drilled with drain holes. NOTE—Expander used with #2 Compr. and oil ring. Install this #2 Compr. ring with mark 'TOP' up.

Ring	Width	End Gap	Side Clearance
Compr. #1	.093-.0935"	.008-.013"	.0025-.003"
Compr. #2	.093-.0935"	.008-.013"	.002-.0025"
Oil Contr.	.1845-.185"	.008-.013"	.0015-.002"

Replacement Rings:—*See Lincoln Special Shop Notes for complete Ring and Expander size data.*

PISTON PIN: Diameter—.7501-.7504". **Length** 2.607". Floating type (lock ring in piston at each end). Pin hole in rod is bronze-bushed.
Pin Fit in Piston—.0003-.0009" clearance or light hand push fit with piston at 70°F.
Pin Fit in Rod Bushing—.0002-.0005" clearance (pin should pass through bushing slowly of own weight).
See Lincoln Shop Notes for Pin Fitting Directions.
Replacement Pins: *See Lincoln Shop Notes.*

CONNECTING ROD:—Length 7.40". **Weight** 638 grams.
Crankpin Journal Diameter—2.126".
Bearing Type—Steel-backed, copper-lead lined bearing halves clamped in each rod.
Clearance—.001-.0025". **Sideplay** .014" (both rods).
Bearing Adjustment:—None (no shims). Replace bearings if less than .08375" thick. NOTE—Engage tang on bearing in groove in rod and cap. See that long and short bearing cap bolts installed on correct side (rod split at angle, bolts unequal length).
Replacement Bearings: *See Lincoln Shop Notes.*
Installing Rods:—Marks on rods and caps must be together and installed in same numbered cylinder with marks pointing down toward oil pan.

CRANKSHAFT:—Four bearing with integral counterweights. NOTE—Crankshafts furnished Std. and .020", .040" undersize.
Journal Diameters—2.401" (all bearings).
Bearing Type—Steel-backed, copper-lead lined.
Clearance—.001-.003".
Bearing Adjustment:—None (no shims). Replace bearings. Do not file bearing caps. NOTE—See that tang on bearing engages groove in block and cap.
Replacement Bearings: *See Lincoln Shop Notes.*

ENGINE

C NTINUED FROM PRECEDIN PAGE

End Thrust:—Taken by rear main bearing. To adjust, replace bearing. **Endplay**—.002-.006".

CAMSHAFT:—Four bearing. Helical gear drive.

NOTE—New bolted-on type Aluminum Alloy camshaft timing gear is used on these models.

Bearing Diameters—1.797" (replace bearings if the diameter more than 1.802", replace camshaft if the journal diameter less than 1.7955").

Bearing Type—Steel-backed, babbitt-lined bushings pressed in block. **Clearance**—.001-.002".

End Thrust:—Taken by gear hub and coverplate. Adjusted by replacing coverplate. **Endplay**—.005-.015"

Timing Gears: Cast-alloy iron (Crankshaft Gear), Aluminum alloy—bolted on type (Camshaft).

Backlash—.004" Max. *See Lincoln Special Shop Notes for Timing Gear servicing data.*

Camshaft Setting:—Mesh marked tooth of crankshaft gear with space marked by line on camshaft gear (this line must be in line with mark on hub).

NOTE—Capscrew holes in camshaft gear and shaft are unevenly spaced insuring correct gear position.

VALVES:—

	Head Diameter	Stem Diameter	Length
All Valves	1.537"	.3115"	4.750-4.751"

	Seat Angle	Lift	Stem Clearance
Intake	45°	.292"	.0015-.0035"
Exhaust	45°	.292"	.0025-.0045"

NOTE—Service limit for valve stem diameter is .309" Intake, .3065" Exhaust. Valves interchangeable.

For Valve Servicing data, see Lincoln Shop Notes.

NOTE—Valve Seat Inserts used for exhaust valves.

Valve Guides: Split type retained by "C" washer and valve spring. NOTE—Replace both halves of all guides measuring less than .6665" (thickness of guide half and valve stem at top of guide with valve of .311" stem diameter in place in guide half).

For Valve Guide Servicing data, see Lincoln Shop Notes.

Valve Lifters: Barrel type hydraulic tappet take-up (Wilcox-Rich Zero-Lash type or Johnson type).

Diameter—.9995".

See Miscellaneous Section for complete data.

Valve Springs:—	**Pressure**	**Length**
Valve Closed	51-57 lbs.	2.13"
Valve Open	111-121 lbs.	1.84"

NOTE—Replace springs which do not test to 47-57 lbs. at 2⅛" or if paint coating has been removed.

VALVE TIMING

Tappet Clearance:—None in service (hydraulic lifter).

See Valve Lifter Servicing in Lincoln Shop Notes.

Valve Timing:—See Camshaft Setting above.

Int. Valves—Open 10.42° BTDC. Close 35.58° ALDC.

Exh. Valves—Open 50.92° BLDC. Close 8.08° ATDC.

To Check Timing—No flywheel marks provided. If dead center position for any cylinder established on flywheel, intake valve for this cylinder should open approx. 3.24 teeth before this point with piston .0389" before top dead center.

LUBRICATION

LUBRICATION:—Pressure type with gear type oil pump

Normal Oil Pressure—40-45 lbs. at 2000 R.P.M.

Oil Pump and Oil Pressure Regulator: *See Lincoln Shop Notes for complete data.*

Oil Pressure Gauge:—King-Seeley Electric. Ford No.

Dash Unit—06H-9273A (1940 Zephyr), 16H-9273 (1941 Zephyr & Custom), 06H-9273B (1940-41 Contl.).

Engine Unit—48-9278 (All Models).

See Miscellaneous Section for complete data.

Crankcase Capacity:—5 qts.

COOLING

Water Capacity: 27 quarts (All Models).

Water Pump:—Packless type, 2 used (1 for each bank).

See Water Pump Section for complete data.

Thermostat:—In outlet hose for each bank (2 used).

Setting—Starts to open at 145°F. Fully open 180°F.

Temperature Gauge:—King-Seeley Electric. Ford No.

Dash Unit—06H-10883A (1940 Zephyr), 16H-10883 ('41 Zephyr & Custom), 06H-10883B (Continental).

Engine Unit—99A-10884 (All Models).

See Miscellaneous Section for complete data.

CLUTCH

Long Model 10CF-TI. Semi-centrifugal, single plate, dry disc type. *See Clutch Section for complete data.*

Facings—Woven type, 2 required. Inside Diameter 6". Outside Diameter 10". Thickness .140".

Adjustment:—Pedal free movement 1½-2". To adjust, loosen locknuts and turn clevis on connector link.

Removal:—Slide transmission and rear axle to rear as a unit to expose clutch (see Transmission Removal below), take out mounting screws in clutch cover.

TRANSMISSION

TRANSMISSION:—Own Model. All helical gear, constant-mesh, synchro-mesh (second & high), sliding gear (low & reverse) with steering col. shift.

See Transmission Section for complete data.

Transmission Control: Steering column shift Std.

See Transmission Section for complete data.

Removal:—Disconnect hand brake cable, hydraulic brake line at torque tube connection (bleed lines when re-connected), speedometer cable, shock absorber links. Disconnect rear spring at center frame connection. Take off universal joint ball housing bolts, slide axle assembly to rear. Disconnect shifter rods from levers at transmission. Support engine at rear, take out rear engine mounting bolts, remove clutch housing mounting screws, pull transmission

OVERDRIVE

Warner Type R10 (Optl. on 1941 Models). Electrical control type (with "kick-down" control). Used with Lincoln Transmission.

See Transmission Section for complete data.

Overdrive Solenoid—Ford No. 16H-6916.

Throttle 'Kick-down' Switch—Ford No. 16H-6918-A (Zephyr & Custom), 16H-6918-B (Continental). Adjust switch so that it closes when carburetor throttle valve is wide open.

Lock-Out Switch—Ford No. 16H-6917.

Governor Switch—Ford No. 16H-6919.

Control Relay—Ford No. 16H-6915.

Removal: Remove Overdrive Control Solenoid before removing Overdrive and Transmission from car. To remove solenoid, disconnect wires on solenoid terminals, take out mounting bolts, in solenoid flange, **turn solenoid approximately 60° right or left to disengage solenoid stem from pawl** (ball end of stem is flattened on two sides), pull solenoid out. Then remove Overdrive and Transmission (see data above).

►INSTALLATION CAUTION—Do not install Solenoid until Overdrive unit installed on transmission. To install solenoid, insert stem in adapter with ball end flats horizontal, make certain that short pilot on end of solenoid body enters counterbore in adapter casting, **turn solenoid approximately 60° to left to engage stem in pawl** and line up solenoid flange mounting holes. Check engagement of stem and pawl by attempting to pull solenoid out. Install bolts, connect leads **with solenoid terminals UP.**

UNIVERSALS

Spicer Model 2102-1. Needle bearing type. One used

See Universals Section for complete data.

REAR AXLE

REAR AXLE:—Own Model. ¾ floating, Hypoid Gear type with Torque Tube drive.

See Rear Axle Section for complete data.

Ratio—4.44-1. Backlash—.002-.004".

Optl. Axle:—Columbia Two-speed type.

See Rear Axle Section for complete data.

Removal:—Disconnect hand brake cable, hydraulic brake line at torque tube connection (bleed lines when re-connected), speedometer cable, shock absorber links. Disconnect rear spring at center frame connection, take out universal joint ball housing bolts, pull axle assembly to rear to free drive shaft

Axle Shaft Removal—*Refer to the Rear Axle Section Index for article on Lincoln (Zephyr) Rear Axle.*

SHOCK ABSORBERS

Houde (Houdaille) Type BBCM (1940 Front), BBCX (1940 Rear), BBCHN (1941 Front), BBCLZ (1941 Rear). Double acting, hydraulic. Ford Numbers:

	Right	Left
1940 Models—Front	06H-18045	06H-18046
1940 Models—Rear	06H-18080	06H-18081
1941 Models—Front	16H-18045	16H-18046
1941 Models—Rear	16H-18080	16H-18081

See Shock Absorber Section for complete data.

FRONT SUSPENSION

Front Suspension:—Conventional I-beam section axle with Reverse-Elliott ends and transverse spring. Axle positioned by radius rods and anti-sway bar.

Kingpin Inclination—4° crosswise.

Caster—3° Min., 5° Max. Must be equal for both wheels within ½°. No adjustment.

Camber—¼° Min., ¾° Max. Must be equal for both wheels within ¼°, right wheel must not exceed left.

Toe In—1/16". Set at 1-10 ratio to Camber. To adjust, loosen clamp bolts, turn tie rod.

Steering Geometry (Toe out on turns)—Inner wheel turned 23°, outer 20°. Allowable variation ½°.

STEERING GEAR

Gemmer Model 330. Worm-and-Roller type.

See Steering Gear Section for complete data.

BRAKES

BRAKES:—Service—Bendix Hydraulic, duo-servo, single anchor type without eccentric adjustment. Hand lever applies rear wheel service brakes.

See Brake Section for complete data.

Wheel Cylinders—Diameter 1.125" (front), 1.00" (rear). Not interchangeable from one wheel to another. **Drums**—Diameter 12".

Lining—Molded (primary or forward shoe), Woven (secondary shoe). Width 1.75". Thickness .21", Length per shoe 11.95".

Clearance—.010" at each end of each shoe.

Hand Brake:—See Service Brakes above.

MISC. MECHANICAL

Power Operated Conv. Top: (1940) Vacuum Power type.

(1941) Auto-Lite Electric type.

See Miscellaneous Section for complete data.

Window Regulators (1941): Hydro-Electric type.

See Miscellaneous Section for complete data.

ENGINE HOOD NOTE:—Hood is Alligator type with release knob under instrument panel at extreme left side. To raise hood, pull out on release knob (hood will raise slightly), press in on safety catch under front edge of hood.

OIL PAN REMOVAL: *See Lincoln Shop Notes.*

MODEL IDENTIFICATION

SERIAL & ENGINE NUMBER:—Stamped on top of the clutch housing (Body No. only on plate on dash).

TUNE-UP

COMPRESSION:—**Ratio**—7.1-1 Cast Iron Head.
Pressure—125 lbs. at cranking speed of 100 RPM.

VACUUM READING:—18-20" steady idling at 6 MPH.

FIRING ORDER:—1-4-9-8-5-2-11-10-3-6-7-12. See diagram for cylinder numbering and spark plug distributor connections.

SPARK PLUGS:—Champion H10. 14 MM. Metric type.
Gaps—.028-.030".

IGNITION: See Coil, Condenser, and Distributor.
Breaker Gap—.014-.016" **Cam Angle** 36.5° closed (each set operating independently).
Automatic Advance—11-12° max. at 650 RPM (distr.)

IGNITION TIMING: See Ignition Timing.
Std. Setting—2° BTDC. No flywheel marks provided. See Ignition Timing for timing procedure and Vacuum Brake adjustment.
Synchronization—Unequal alternate opening at 37½-22½-37½° (distr). intervals.

CARBURETION: See Carburetor & Carb. Equipment.
Idle Setting—Both idle screws approx. ⅞ turn open. Idle speed 6 MPH. (Cars with Std. Trans.), 350 Eng. RPM (Cars with Liquamatic Drive).
Float Level—Fuel level 19/32" plus or minus 1/32" below top edge of float bowl.
Accelerating Pump—Inner (#1) hole—Summer, Center (#2) hole—Winter, Outer (#3) hole—Extreme Winter temperatures.

Fuel Pump Pressure: 1½-2¾ lbs. (3½ lbs. max.).

VALVES: See Valve Timing.
Tappet Clearance—None in service (hydraulic type take-up used).

STARTING: See Battery, Starter, Generator, Regulator.

IGNITION

Ignition Switch:—Oakes steering column and ignition lock assembly. NOTE—Steering post and ignition lock Assem. No. includes lock cylinder and keys.

	Steering Post & Ign. Lock Assem. Oakes No.	Ford No.	Ignition Switch Oakes No.
Zephyr	302725	26H-3675-A	302406
Continental	302748	26H-3675-B	302406
Custom①	302746	268H-3675-A	302406
Custom②	302747	268H-3675-B	302406

① Sedan Model 268H31. ② Limousine Model 268H32.

Lock Cylinder—Hurd. Ford No. 26H-3677-A (Zephyr), 26H-3677-B (Continental), 268H-3677 (Custom), with keys.

COIL: Ford Part No. H-12024. Two coil unit (part of Ignition Unit assembly). Mounted on distributor at front of engine.
Ignition Current—Approximately 3.2 amperes idling, 4.2 amperes stopped, per coil. Ignition primary circuit resistance 1.0-1.33 ohms.
Resistor Unit—One resistor connected in each coil primary circuit (2 used). Part of Lighting Circuit Breaker Assembly No. 16H-11624.

CONDENSER: Ford Part No. H-12300 (two used).
Capacity—.30-.34 microfarad.

DISTRIBUTOR: Ford Part No. 16H-12127 (less coils, plates and caps). Double breaker, 6 lobe cam, full automatic advance type with Vacuum Brake control (see Ignition Timing). Same design as used on late 1941 Lincoln (begin with '41 Motor No. 118869) and similar to previous designs except for new automatic advance data (given below).
Firing Interval—Movable contacts open 37½° after fixed set with unequal intervals of 37½° and 22½° (75° & 45° crankshaft rotation) caused by the 75° included angle between cylinder banks.
Breaker Gap—.014-.016" (both sets set alike).
Cam Angle or Dwell—Approx. 36½° closed, 23½° open, set dwell at 60% (limits 58-60% at 2000 RPM.) on Ford Test Set. Correct for each set (operate independently).
Breaker Arm Spring Tension—20-24 ounces.
Rotation—Clockwise viewed from drive end.

Automatic Advance
(Vacuum Brake Disconnected)

Distributor Degrees	R.P.M.	Engine Degrees	R.P.M.
Start	200	0	400
11-12	650	22-24	1300

Distributor Removal:—Mounted on front of engine. To remove, remove generator, disconnect vacuum line and primary leads, remove distributor caps, take out 3 capscrews in mounting flange.

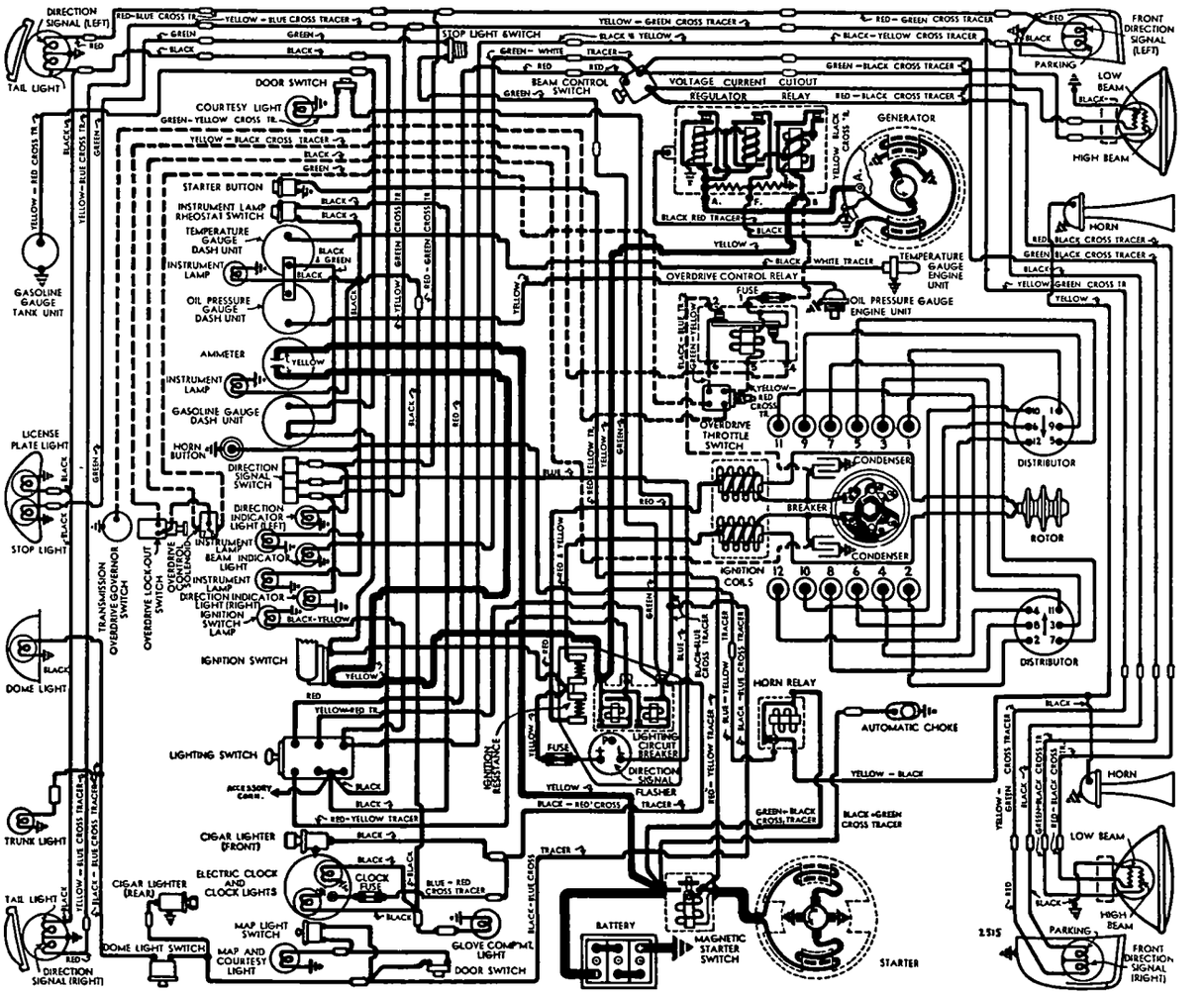

IGNITION TIMING

IGNITION TIMING:—See Vacuum Brake Setting below for correction dependent on fuel and operating conditions.

	Flywheel Degrees
All Engines (16H-12127 Distr.)	2° BTDC.

Timing—Manufacturer recommends use of Ford Laboratory Test Set (Heyer H1) with Distributor Stroboscope (Heyer H1-DFZ) and Stroboscope Attachment (Heyer H1-BRS). On Stroboscope, set Stroboscopic Disc at 37½°, set Timing Index at 1° before top dead center, set peepsight at Zero. Adjust distributor by loosening adjusting screw in slot on right hand side of housing, move screw down (to retard spark), up (to advance spark) in slot until stroboscopic disc light is in line with peepsight. Synchronize Movable Contacts (see below).

Timing (On the Car)—No flywheel marks provided. With distributor adjusted as described above (and movable contacts synchronized), this will give correct 2° BTDC. timing when installed on engine.

Synchronization (Movable Contacts)—No means provided for synchronization on engine. If Stroboscope, etc. used, set movable contacts to open exactly 37½° (distributor rotation) after fixed set. To adjust, remove adjusting screw and turning synchronizing screw visible in slot.

Vacuum Brake Setting—Should be adjusted to eliminate pinging when engine operated with load. To adjust, loosen locknut, back off adjusting screw until engine pings with load, then turn screw in just enough to eliminate ping, tighten locknut. When adjusted on Stroboscope, vacuum brake should retard spark to peep sight with peep sight set at 1° when distributor is driven at 650 RPM. with no vacuum to release brake.

CARBURETOR

Holley (Chandler-Groves)—Two models used:
Ford No. 26H-9505-C (without Automatic Choke).
Ford No. 26H-9505-D (cars with Automatic Choke).
Dual (double barrel) downdraft type.
See Carburetor Section for complete data.

Idle Adjustment—With engine warm, choke valve wide open and Fast Idle inoperative, set throttle lever stopscrew for 6 MPH. idle speed. Turn each idle adjusting screw (one for each barrel. adjust in succession) in until engine begins to miss, then out until engine begins to roll, finally turn screw in slowly until engine fires smoothly. Final setting should be approximately ⅞ turn out from the inner seated position. Re-adjust throttle stopscrew for correct idling speed of 6 MPH. NOTE—If vacuum gauge used, set for highest steady gauge reading.

Liquamatic Drive Idle Speed Note—Set idle speed for cars with Liquamatic Drive at 350 RPM.

Accelerating Pump Setting—Three holes provided in the throttle lever for pump rod link connection. Adjust for seasonal requirements as follows:
#1 (Inner)—Min. stroke, Summer temperatures.
#2 (Center)—Med. stroke, Winter temperatures.
#3 (Outer)—Max. stroke, Extreme cold weather.

Float Level—Use Ford Gauge 9550-A to set the float level **with 1/16" feeler between float and gauge** (1.353" end 'Go', 1.322" end 'No Go') measuring from bottom of bowl cover to bottom of float (with 1/16" feeler between float and gauge). Fuel level in bowl should be **18/32-20/32".**

Metering Jets—*See Holley (Chandler-Groves) Ford Jet Specification Table in Carburetor Section.*

Anti-Stall Device (Cars with Liquamatic Drive):—Ford No. 26H-9944. Vacuum operated throttle kicker.

Fast Idle (Cars without Automatic Choke):—Integral type. Operated by choke lever. No adjustment.

Automatic Choke:—Std. on Continental & Custom, Optl. Zephyr. *Refer to Carburetion Equipment Index. for Sisson Automatic Choke article for complete data.*

CARB. EQUIPMENT

Air Cleaner:—Ford No. 26H-9625-A (Zephyr & Custom), 26H-9625-B (Continental) oil bath type.

Fuel Pump:—AC Type R, #1537709. Ford No. 26H-9350. Diaphragm type. **Pressure**—1½-2¾ lbs.
For complete data, refer to Carburetion Equip. Index.

Gasoline Gauge:—King-Seeley Electric type. Ford No. 26H-9280 (dash unit), No. 21C-9275-A (tank unit).
For complete data, refer to Carburetion Equip. Index.

BATTERY

BATTERY:—**Ford No. 06H-10655-A.** 6 volt, 17 plate, 120 ampere hour capacity (20 hour rate).

Starting Capacity—150 amperes for 20 minutes.

Zero Capacity—300 amperes for 4.0 minutes.

Grounded Terminal—Positive (+) grounded to cylinder head stud of right hand bank.

Location—On right side in engine compartment.

Dimensions—Length 10.6". Width 7.3". Height 9.2".

STARTER

STARTER:—

Car Model	Ford Nos. Starter	Armature
Conv. Coupe (76)①	26H-11001-A	26H-11005-A
Conv. Coupe (76)②	26H-11001-B	
All Others①	18-11002	18-11005

①—Std. transmission. ②—With Liquamatic Drive.

Drive—With Std. Trans.: Inboard Bendix L11FX-10, Ford No. B-11350 (All exc. Conv. Coupe). Ford B&S Drive No. 91A-11350 (Conv. Coupe). **With Liquamatic Drive:** Barrel Type Bendix No. A-2100, Ford No. 09B-11350 (All Models). *Refer to Electrical Equipment Index for Ford B&S Starter Drive article for data.*

Rotation—Counter-clockwise at commutator end.

Brush Spring Tension—2 lbs. each.

Cranking Engine—100 RPM., 190-215 amperes.

Performance Data

Torque	R.P.M.	Volts	Amperes
4 ft. lbs.	1070	4.6	200
8 "	660	4.3	340
12 "	300	3.65	465
14 "	Lock	3.5	500

Starting Switch:—R-B-M Model 5604, Ford No. 01A-11450-A magnetic switch mounted on the dash and controlled by pushbutton on instrument panel Ford No. 26H-11500-A (Zephyr), 26H-11500-B (Others).

Removal:—Starter mounted on right front face of flywheel housing. To remove, take off pan at right of engine, free starter-to-oil pan support bracket, take out through-bolts on commutator end plate.

GENERATOR

GENERATOR:—**Ford No. 21A-10000. Armature No. 01A-10005.** Two brush (shunt) type with vibrating type voltage and current regulation. Ventilated by fan on drive pulley.

Charging Rate Adjustment.—None. See Regulator.

Maximum Charging Rate—Controlled by regulator and dependent on battery condition and load. To check generator output, disconnect generator field lead at generator, connect both generator terminals together (use short insulated wire). Use 'BRS' set or rheostat connected across battery terminals and apply load until voltage is exactly 6 volts. Connect ammeter in charging line, run engine, check output at 2 speeds given in performance table below. Restore original connections after completing test.

Do not operate generator in service with both terminals connected together. This eliminates all regulator action and will damage generator.

Performance Data

Amperes	Engine RPM.
Start	520
30	1060
30	2500

Rotation—Counter-clockwise at commutator end.

Field Current—2.1 amperes at 6.0 volts (field resistance 2.88 ohms at 70°F.).

Brush Spring Tension—Approximately 28 ozs.

Removal:—Generator mounted on bracket between cylinder banks at front of engine, driven in tandem with water pumps by Vee belt. To remove, loosen nut on bracket stud.

Belt Adjustment:—Loosen nut on bracket mounting stud, raise generator up until side movement on belt midway between generator and water pump pulleys is 1" (thumb and finger pressure).

REGULATOR

REGULATOR:—**Ford No. 11A-10505. Three-Unit type.** Consists of Cutout Relay, vibrating Voltage Regulator and vibrating Current Regulator (separate units) in single case on engine side of dash.
For complete data, refer to Electrical Equipment Index.
NOTE—Regulator case is grounded through separate ground wire extending from regulator to generator frame. This ground connection must be in place when regulator being operated or tested.

Cutout Relay

Cuts In—5.8-6.3 volts at operating temperature.
Cuts Out—8 ampere discharge current (maximum).

Voltage Regulator

Setting—6.9-7.2 volts at 70-80° F. See Ford Regulator article in the Electrical Equipment Section for voltages at other temperatures.

Checking & Adjusting—*Refer to Electrical Equipment Index for article on 'Ford Regulator—3-unit type'.*

Current Regulator

Setting—30-33 amperes hot (after engine run for 5 minutes).

Checking & Adjusting—See Voltage Regulator above.

CONTINUED ON NEXT PA E

C NTINUED FR M PRECEDIN PA E

LIGHTING

LIGHTING:—Headlamps—Ford Sealed Beam type. Controlled by Lighting Switch on instrument panel and Beam Selector Switch on toeboard.
For complete data, refer to Electrical Equipment Index.
Headlamp Adjustment—Aim upper beam straight ahead (hot spot center 3" below lamp center height).
Beam Indicator—At top of speedometer dial. Lighted whenever Country (upper) beams in use.
Direction Signal—*Refer to Electrical Equip. Index.*

Switches

Lighting—R-B-M Model 2445, Ford No. 11A-11654 (switch only). Light Switch Knob No. 26H-11666-A (Zephyr), 26H-11666-B (Continental), 268H-11666 (Custom). Light Switch Knob Shaft No. 26H-11663.
Beam Selector—R-B-M. **Switch Only:** Ford No. 16H-13532-A (Zephyr & Custom), 16H-13532-B (Continental). **With Headlamp & Horn Wiring:** Ford No. 26H-11653A (Zephyr & Cust.), 26H-11653B (Cont'l.).
Instrument—Ford No. 26H-13740.
Map Light (Floor Light)—Ford No. B-13752-A.
Front & Rear Door Switches—Ford No. 16H-13752.
Stop Light—Ford No. 11A-13480 (hydraulic type).
Direction Signal—Ford No. 16H-13335 (Switch Assembly).

Bulb Specifications

Position	Candlepower	Mazda No.
Headlamps		Sealed Beam
Front Dir. Signal & Park	21-3	1154
Instrument, Ignition Switch	1½	55
Speedometer, Clock	1½	55
Beam & Dir. Sig. Indicators	1	51
Rear Dir. Signal & Tail	21-3	1154
Stop	21	1129
Rear License	3	63
Trunk (Luggage Comp't.)	3	63
Dome (exc. Convertibles)	3	63
Rear Quarter (Custom)	6	81

MISC. ELECTRICAL

LIGHTING CIRCUIT BREAKER:—R-B-M Model 6740, Ford No. 16H-11624. Combined with Ignition Resistor (twin unit) on block on dash under cowl (Direction Signal Flasher also mounted on same block). Consists of two separate circuit breaker units (one unit protects headlight circuits, second unit protects other lighting circuits) of the thermostatic and wound-coil type. Contacts open with current of 50 amperes and vibrate rapidly to control current.

FUSES:—Direction Signal—10 ampere. In Flasher lead.
Overdrive—15 ampere. In control relay lead.
Liquamatic Drive—15 ampere. In control relay lead.
Electric Clock—2 ampere. In feed wire connector.

HORNS:—Air electric type dual horns. Ford No. 26H-13832 (Right Hand—high note), 26H-13833 (Left Hand—low note). Horns operated by horn relay.
Horn Current—24-28 amperes (total).

Horn Relay:—R-B-M Model 4750, Ford No. 96H-13842.
Contact Closing Voltage—3.5-4.5 volts.
Current Draw—Approximately ¾ ampere.

ENGINE

ENGINE SPECIFICATIONS:—Own Model 26H. 12 cylinder 75° Vee, L head type. Both blocks and crankcase cast enbloc. **Bore**—2.93". **Stroke**—3.75".
Rated Horsepower—41.4. **Displacement**—306 cu. ins.
Developed Horsepower—130 at 3600 RPM.
Compression Ratio—7.1-1 cast-iron head.
Compression Pressure—125 lbs. at cranking speed.
Vacuum Reading—18-20" steady idling at 6 MPH. NOTE—Idling sp. 350 Eng. RPM. on Liquamatic cars.

CYLINDER SLEEVES:—Cast iron, dry type cylinder sleeves available for replacement where bore size worn beyond Oversize Piston Limit.
Sleeve Installation—*See Lincoln Shop Notes.*

PISTONS:—Steel alloy, light weight, cam ground, with slipper type skirt. Recondition cylinders for finished replacement pistons.
Weight—442 grams (without rings or pin).
Removal—Pistons and rods removed from above.
Clearance—See Fitting New Pistons.
Replacement Pistons: *See Lincoln Shop Notes.*
Fitting New Pistons: Use .50" wide feeler stock of correct thickness (as listed below) inserted between piston and cylinder wall at right angles to pin to check clearance. Pull required to withdraw feeler should be 5-8 lbs. (all types).
Feeler Thickness—.002" New Piston in New Plain Bore, .004" for New Piston in Worn Plain Bore .005" for Worn Piston in Worn Plain Bore.

PISTON RINGS:—Two compression, one oil ring, all above pin. Oil ring groove drilled with drain holes.

Ring	Width	End Gap	Side Clearance
Compr. #1	.093-.0935"	.012-.017"	.0025-.003"
Compr. #2	.093-.0935"	.012-.017"	.002-.0025"
Oil Contr.	.1845-.185"	.008-.013"	.0015-.002"

Replacement Rings:—*See Lincoln Special Shop Notes*

PISTON PIN:—Diameter .7501-.7504". **Length** 2.607".
Floating type (locking ring in piston at each end). Pin hole in connecting rod bronze-bushed.
Pin Fit in Piston—.0003-.0009" clearance or light hand push fit with piston at 70°F.
Pin Fit in Rod Bushing—.0002-.0005" clearance (pin should pass through bushing slowly of own weight).
See Lincoln Shop Notes for Pin Fitting Directions.
Replacement Pins: *See Lincoln Shop Notes.*

CONNECTING ROD:—Length 7.40". **Weight** 711 grams.
Crankpin Journal Diameter—2.250".
Bearing Type—Steel-backed, copper-lead lined bearing halves clamped in each rod.
Clearance—.001-.0025". **Sideplay** .014" (both rods).
Bearing Adjustment:—None (no shims). Replace bearings if less than .08375" thick. NOTE—Engage tang on bearing in groove in rod and cap. See that long and short bearing cap bolts installed on correct side (rod split at angle, bolts unequal length).
Replacement Bearings: *See Lincoln Shop Notes.*
Installing Rods:—Marks on rods and caps must be together and installed in same numbered cylinder with marks pointing down toward oil pan.

CRANKSHAFT:—Four bearing with integral counterweights. NOTE—New crankshaft used.
Journal Diameters—2.401" (all bearings).
Bearing Type—Steel-backed, copper-lead lined.
Clearance—.001" (or slight drag with .002" feeler assembled in bearing for clearance check).
Bearing Adjustment:—None (no shims). Replace bearings. Do not file bearing caps. NOTE—See that tang on bearing engages groove in block and cap.
Replacement Bearings: *See Lincoln Shop Notes.*
End Thrust:—Taken by rear main bearing. To adjust, replace bearing. **Endplay**—.002-.006".

CAMSHAFT:—Four bearing with Helical Gear drive. NOTE—Camshaft gear Aluminum-alloy type and is bolted on camshaft.
Bearing Diameters—1.797" (replace bearings if the diameter more than 1.802", replace camshaft if the journal diameter less than 1.7955").
Bearing Type—Steel-backed, babbitt-lined bushings pressed in block. **Clearance**—.001-.002".
End Thrust:—Taken by gear hub and coverplate. Adjusted by replacing coverplate. **Endplay**—.005-.015".
Timing Gears:—Cast alloy iron type (Crankshaft), Aluminum alloy—bolted on shaft (Camshaft). **Backlash**—.004" Maximum.
See Lincoln Shop Notes for Timing Gear data.
Camshaft Setting:—Mesh marked tooth of crankshaft gear with space marked by line on camshaft gear (this line must be in line with mark on hub). NOTE—Cap screw holes in camshaft gear and shaft are unevenly spaced insuring correct gear position.

VALVES:—	Head Diameter	Stem Diameter	Length
All Valves	1.537"	.3115"	4.750-4.751"

	Seat Angle	Lift	Stem Clearance
Intake	45°	.292"	.0015-.0035"
Exhaust	45°	.292"	.0025-.0045"

NOTE—Service limit for valve stem diameter is .309" Intake, .3065" Exhaust. Valves interchangeable.
For Valve Servicing data, see Lincoln Shop Notes.
NOTE—Valve Seat Inserts used for exhaust valves.
Valve Guides: Split type retained by "C" washer and valve spring. NOTE—Replace both halves of all guides measuring less than .6665" (thickness of guide half and valve stem at top of guide with valve of .311" stem diameter in place in guide half).
For Valve Guide Servicing data, see Lincoln Shop Notes.
Valve Lifters: Barrel type hydraulic tappet take-up (Wilcox-Rich Zero-Lash type or Johnson type).
Diameter—.9995".
See Miscellaneous Section for complete data.

Valve Springs:	Pressure	Length
Valve Closed	51-57 lbs.	2.13"
Valve Open	111-121 lbs.	1.84"

NOTE—Replace springs which do not test to 47-57 lbs. at 2⅛" or if paint coating has been removed.

VALVE TIMING

Tappet Clearance:—None in service (hydraulic lifter).
See Valve Lifter Servicing in Lincoln Shop Notes.
Valve Timing:—See Camshaft Setting above.
Int. Valves—Open 10.42° BTDC. Close 35.58° ALDC.
Exh. Valves—Open 50.92° BLDC. Close 8.08° ATDC.
To Check Timing—No flywheel marks provided. If dead center position for any cylinder established on flywheel, intake valve for this cylinder should open approx. 3.24 teeth before this point with piston .0389" before top dead center.

LUBRICATION

LUBRICATION:—Pressure type with gear type oil pump in crankcase at rear of engine.
Normal Oil Pressure—40-45 lbs. at 2000 RPM.

Oil Pump and Oil Pressure Regulator: *See Lincoln Shop Notes for complete data.*

Oil Pressure Gauge:—King-Seeley Electric. Ford No. 26H-9273 (dash unit), No. 48-9278 (engine unit). *See Miscellaneous Section for complete data.*

Crankcase Capacity:—5 qts.

COOLING

COOLING SYSTEM:—**Capacity**—27 quarts.

Water Pump:—Packless type, 2 used (1 for each bank). *See Water Pump Section for complete data.*
Removal—Slack off drive belt, disconnect hose couplings, take out mounting screws on pump.

Thermostat:—In outlet hose for each bank (2 used). **Setting**—Starts to open at 145°F. Fully open 180°F.

Temperature Gauge:—King-Seeley Electric. Ford No. 26H-10883 (dash unit), No. 99A-10884 (engine unit). *See Miscellaneous Section for complete data.*

CLUTCH

CLUTCH:—**Long Model 10CF-TL** Semi-centrifugal single plate, dry disc type. *See Clutch Section for complete data.*
Liquamatic Drive Cars—These cars equipped with different type driven member. *See Clutch Section for complete data.*
Facings—Woven type, 2 required. Inside Diam. 6". Outside Diameter 10". Thickness .140".
Adjustment:—Pedal free movement 1½-2". To adjust, loosen locknuts and turn clevis on connector link.
Removal:—Slide transmission and rear axle to rear as a unit to expose clutch (see Transmission Removal below), take out mounting screws in clutch cover.

TRANSMISSION

STANDARD

TRANSMISSION (STD.):—**Own Make.** Constant-mesh, synchro-mesh (second and high), sliding gear (low and reverse). All helical gear type. *See Transmission Section for complete data.*

Transmission Control:—Mechanical steering col. shift. *See Transmission Section for complete data.*

Removal:—Disconnect hand brake cable, hydraulic brake line at torque tube connection (bleed lines when re-connected), speedometer cable, shock absorber links. Disconnect rear spring at center frame connection. Take off universal joint ball housing bolts, slide axle assembly to rear. Disconnect shifter rods from lever at transmission. Support engine at rear, take out rear engine mounting bolts, remove clutch housing mounting screws, pull transmission straight back.

TRANSMISSION

PTIONAL EQUIPMENT

LIQUAMATIC DRIVE:—Consists of liquid coupling and Warner Model T94A-R10A 3 speed semi-automatic transmission (automatic shifting between 2nd & 3rd speeds) with overdrive. Optional equipment. *See Transmission Section for complete data.*

OVERDRIVE

Overdrive (Optl.):—Warner Type R10A overdrive with electrical solenoid control (no centrifugal pawls) and 'kick-down' feature. *See Transmission Section for complete data.*
Overdrive Solenoid—Ford No. 16H-6916.
Throttle 'Kick-down' Switch—Ford No. 16H-6918-A (Zephyr & Custom), 16H-6918-B (Continental). Adjust switch so that it closes when carburetor throttle valve is wide open.
Lock-out Switch—Ford No. 16H-6917. Mounted on Overdrive case.
Governor Switch—Ford No. 16H-6919.
Control Relay—Ford No. 26H-6915.

Removal: Remove Overdrive Control Solenoid before removing Overdrive and Transmission from car. To remove solenoid, disconnect wires on solenoid terminals, take out mounting bolts in solenoid flange, **turn solenoid approximately 60° right or left to disengage solenoid stem from pawl** (ball end of stem is flattened on two sides), pull solenoid. Then remove Overdrive and Transmission (see data above).

►INSTALLATION CAUTION—Do not install Solenoid until Overdrive Unit installed on transmission. To install solenoid, insert stem in adapter with ball end flats horizontal, make certain that short pilot on end of solenoid body enters counterbore in adapter, **turn solenoid approx. 60° to left to engage stem in pawl** and line up solenoid flange mounting holes. Check engagement of stem and pawl by attempting to pull solenoid out (solenoid should not be free and resistance of solenoid spring should be felt.) Install mounting bolts and connect leads at terminals.
CAUTION—Solenoid terminals must be "up."

UNIVERSALS

UNIVERSAL JOINT:—**Spicer Model 2102-1.** Needle bearing type. Single joint at rear of transmission. *See Universals Section for complete data.*

REAR AXLE

REAR AXLE:—**Own Model.** ¾ floating, Hypoid Gear type with Torque Tube drive. *See Rear Axle Section for complete data.*
Ratio—4.44-1. Backlash—.002-.004".

Removal:—Disconnect hand brake cable, hydraulic brake line at torque tube connection (bleed lines when re-connected), speedometer cable, shock absorber links. Disconnect rear spring at center frame connection. Take out universal joint ball housing bolts, pull axle assembly to free shaft at joint.
Axle Shaft Removal—*Refer to the Rear Axle Section Index for article on Lincoln Rear Axle for data.*

SHOCK ABSORBERS

SHOCK ABSORBERS:—**Houde (Houdaille)—Types** BBCHO (Front), BBCLY (Rear). Lincoln No. 26H-18045 (Right Front), 26H-18046 (Left Front), 26H-18080 (Right Rear), 26H-18081 (Left Rear). Double acting, hydraulic, adjustable type. *See Shock Absorber Section for complete data.*

FRONT SUSPENSION

Front Suspension:—Conventional I-beam section axle with Reverse-Elliott ends and transverse spring. Axle held by radius rods and anti-sway strut rod.
Kingpin Inclination—4° crosswise.
Caster—3° Min., 5° Max. Must be equal for both wheels within ½°. No adjustment.
Camber—¼° Min., ¾° Max. Must be equal for both wheels within ¼°, right wheel must not exceed left.
Toe In—1/16". Set at 1-10 ratio to Camber. To adjust, loosen clamp bolts, turn tie rod.
Steering Geometry (Toe out on turns)—Inner wheel turned 23°, outer 20°. Allowable variation ½°.

STEERING GEAR

Gemmer Model 330. Worm-and-Roller type. *See Steering Gear Section for complete data.*

BRAKES

BRAKES:—**Service**—Bendix-Hydraulic, duo-servo, single anchor type without eccentric adjustment. Hand lever applies rear wheel service brakes. *See Brake Section for complete data.*
Wheel Cylinders—Diameter 1.125" (front), 1.00" (rear). Not interchangeable from one wheel to another. **Drums**—Diameter 12".
Lining—Molded (primary or forward shoe), Woven (secondary shoe). Width 1.75". Thickness .21", Length per shoe 11.95".
Clearance—.010" at each end of each shoe.
Hand Brake:—See Service Brakes above.

MISC. MECHANICAL

Power Operated Convertible Top: Auto-Lite Electric type. *See Miscellaneous Section for complete data.*
Window Regulators: Hydro-Electric type. *See Miscellaneous Section for complete data.*

HOOD LOCK: Hood is Alligator type. To raise hood, pull out lock button on left side of instrument panel, press in on safety catch under front edge of hood.

MODEL IDENTIFICATION

SERIAL & ENGINE NUMBER: Stamped on top of clutch housing (visible through opening in floor) and on left side of frame front cross-member near left front engine support.

TUNE-UP

COMPRESSION: Pressure—105-125 lbs. at cranking speed.

VACUUM READING: Steady 18-20" idling at 6 MPH.

FIRING ORDER: 1-4-9-8-5-2-11-10-3-6-7-12 with cylinders numbered 1-3-5-7-9-11—Left Bank, 2-4-6-8-10-12—Right Bank (front-to-rear).

SPARK PLUGS: Champion Type H-10. 14 mm. Metric. Gaps—.025"

IGNITION: See Coil, Condenser, and Distributor.
Breaker Gap—.014-.016" (both sets equal).
Cam Angle or Dwell—36.5° closed, 23.5° open (each set—contacts operate independently).
Breaker Arm Spring Tension—20-24 ozs.
Automatic Advance—Starts at 200 RPM. Max. advance 11-12° at 650 RPM (Distr. ° and RPM).

IGNITION TIMING: See Ignition Timing.
Std. Setting—2° BTDC.
Timing Marks—None. See Ignition Timing for directions on setting and synchronizing of distributor for correct timing when installed on engine.
Vacuum Brake Setting—Set to just eliminate ping with engine pulling load (back off adjusting screw until engine pings, then turn screw in just enough to eliminate pinging).

CARBURETION: See Carburetor & Carb. Equipment.
Idle Setting—With engine warm, set throttle stop-screw for 500 RPM idle speed. Set idle adjusting screws (1 for each barrel—adjust in succession) for smooth idle (turn screws in for leaner mixture).
Float Level—1.322-1.353" bottom of float to underside of bowl cover with needle valve seated (Gauge 9550-A). Fuel level 11/16" plus or minus 1/32" below top edge of bowl.
Accelerating Pump—Inner (#1) Hole—Summer, Center (#2) Hole—Winter, Outer (#3) Hole—extremely cold temperatures.

Fuel Pump Pressure: 1½-3½ lbs.

MANIFOLD HEAT CONTROL: Automatic thermostatic type. Located at exhaust pipe connection to exhaust manifold for left hand cylinder bank. See that valve operates freely.

VALVES: See Valve Timing.
Tappet Clearance—None in service. Zero-lash type hydraulic lifter used.

STARTING: See Battery, Starter, Generator, and Regulator.

IGNITION

IGNITION SWITCH: Oakes Steering Column & Ignition Lock.

Assembly	Oakes No.	Ford No.
Lincoln	302945	5EH-3675-A
Continental	303000	5EH-3675-B
Lincoln RHD.	302964	5EHF-3675

Ignition Switch Assembly—Oakes No. 302440, Ford N . 16H-3680.
Lock Cylinder—Hurd.

COIL: Ford No. H-12024 (Part of Ignition Unit Assy.). Two-coil unit mounted on distributor.
Primary Resistor—One resistor connected in series with each coil primary (two used). Resistors are part of Lighting Circuit Breaker Assy. 16H-11624.
Ignition Current—Approx. 3.2 amperes idling, 4.2 amperes stopped, for each coil. Primary circuit resistance 1.0-1.33 ohms.

CONDENSER: Ford Part No. H-12300 (two used).
Capacity—.30-.34 microfarad.

DISTRIBUTOR: Ford No. 16H-12127 (Less Coil, Distributor Caps, and Plates). Double breaker, 6 lobe cam, full automatic advance type with Vacuum Brake adjustment. Contacts open alternately at 37½° and 22½° intervals corresponding to unequal 75° & 45° firing intervals (must be synchronized).
Firing Interval—Movable contacts open 37½° after fixed set with unequal intervals of 37½° and 22½° (75° & 45° crankshaft rotation) caused by 75° included angle between cylinder banks.
Breaker Gap—.014-.016" (both sets set alike).
Cam Angle or Dwell—36.5° closed, 23.5° open (each set—operate independently).
Breaker Arm Spring Tension—20-24 ozs.
Rotation—Clockwise viewed from drive end.

Distributor **Automatic Advance** Engine

Degrees	R.P.M.	Degrees	R.P.M.
Start	200	0	400
11-12	650	22-24	1300

Distributor Removal:—Mounted on front of engine. To remove, remove generator, disconnect vacuum line and primary leads, remove distributor caps, take out 3 capscrews in mounting flange.

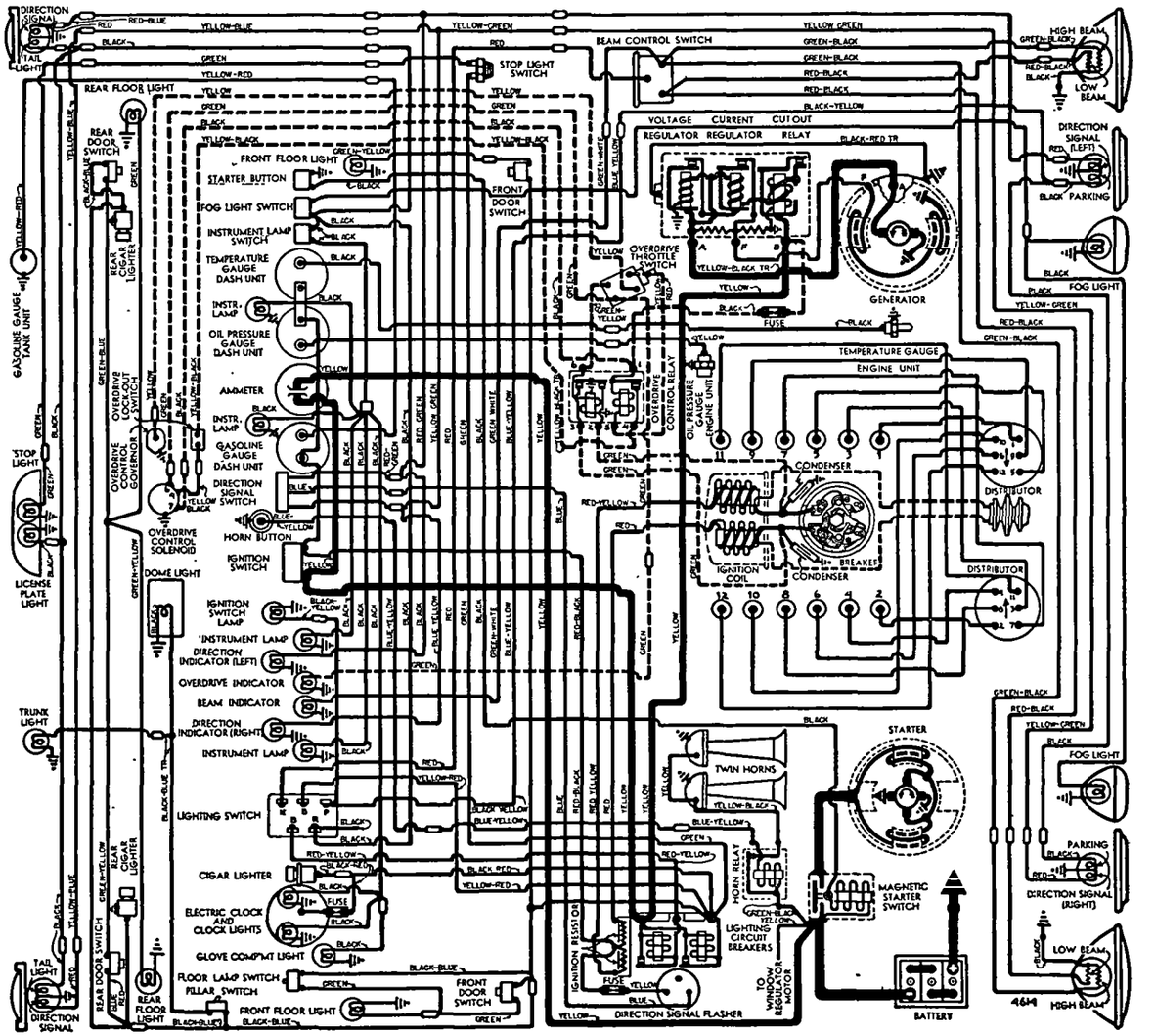

Vacuum Brake: Consists of a spring-loaded, vacuum controlled brake piston which bears on edge of retard disc of breaker advance mechanism and acts as a "drag" to retard normal advance when engine is accelerated or operated under load. Piston is normally held out of engagement by manifold vacuum.

IGNITION TIMING

Std. Setting—All Engines.....2° BTDC. See Vacuum Brake Setting for service correction for operating conditions and octane rating of fuel used.

Ignition Timing (Basic Setting)—Distributor can be set for correct ignition timing when off engine as follows: Place a small straight edge or scale against the tang on the drive end of the shaft (scale must be on wide side of shaft), rotate distributor in direction of rotation (clockwise) until the **trailing** edge of the scale is exactly 11/32" past the nearest edge of the mounting hole in the flange which is nearest the vacuum brake. If left hand (fixed) breaker contacts do not open at this point, loosen adjusting screw on side of distributor housing, move screw up (to advance timing), down (to retard timing) until contacts begin to open, tighten adjusting screw. Then check synchronization of movable contacts as follows:

Synchronization (Basic Setting)—Remove timing adjusting screw and plate on side of distributor for access to synchronizing screw (visible in adjusting screw slot). Place a scale on the wide side of the shaft and against the tang (as for timing above), rotate distributor shaft in direction of rotation (clockwise) until **leading** edge of scale is exactly 27/32" before the nearest edge of the mounting hole in the flange which is nearest the vacuum brake. If right hand (movable) contacts do not open at this point, turn synchronizing adjusting screw until contacts begin to open. Replace adjusting screw and plate, recheck timing of left hand (fixed) contacts as directed above.

Timing (On Engine)—No flywheel marks or other means provided to check or adjust ignition timing on the engine. If basic setting (timing & synchronizing of contacts) is correct as directed above, all necessary adjustments for operating conditions and octane rating of fuel being used can be made by means of Vacuum Brake Setting as follows:

Vacuum Brake Setting:—Should be set for best performance with particular fuel and operating conditions. To adjust, loosen locknut and back off adjusting screw until engine pings when accelerated, then turn screw in just enough to eliminate this ping, tighten the locknut.

CARBURETOR

Holley (Chandler-Groves) Ford No. 26H-9510-C. Dual (double barrel) downdraft with manual choke. *See Carburetor Section for complete data.*

Idle Adjustment—With engine warm, choke valve wide open and Fast Idle inoperative, set throttle lever stopscrew for 6 M.P.H. idle speed. Turn each idle adjusting screw (one for each barrel, adjust in succession) in until engine begins to miss, then out until engine begins to roll, finally turn screw in until engine fires smoothly. Recheck idle speed.
NOTE—Set for highest reading on Vacuum Gauge.

Float Level—Use Gauge 9550-A to check float level. Invert air horn and float assembly, place gauge on face of bowl cover. Bottom of float should be 1.322-1.353" from face of cover (1.353" part of gauge "Go", 1.322" part of gauge "No Go"). Adjust by bending lip of float lever. Fuel level in bowl should be 11/16" plus or minus 1/32" below top edge of bowl.

Accelerating Pump Adjustment—Three holes provided in throttle lever for pump link connection.
Inner (#1)—Min. stroke, Summer temperatures.
Center (#2)—Medium stroke, Normal Temperature.
Outer (#3)—Max. stroke, Extreme cold weather.
NOTE—Pump link locked in pump rod by snap lock. Pull link shaft out of pump rod to disengage lock.

Metering Jets—*See Chandler-Groves (Ford) Jet Specification Table in Carburetor Section.*

Fast Idle:—Integral with carburetor. Operated by choke lever. No adjustment required.

CARB. EQUIPMENT

Air Cleaner: Ford No. 26H-9625-A (Lincoln), 26H-9625-B (Cont'l) Heavy duty Oil-bath type.

Servicing—Clean and re-fill (to level mark on case) with same grade engine oil used in crankcase at 3500 mile intervals (when crankcase drained) or more often if required. Wash filter element.
NOTE—Clean and re-oil filter element in oil filler cap (crankcase breather) every 1000 miles.

Gasoline Gauge: King-Seeley Electric. Ford Nos. **Dash Unit:** 5EH-9280A ('46 Lincoln), 5EH-9280B ('46 Continental), 5EH-9280C ('47 All). **Tank:** 21C-9275A.

Fuel Pump: AC Type R, No. 1537709, Ford No. 26H-9350A. Diaphragm type.
See Carburetion Equipment Section for data.
Pressure—3½ lbs. maximum (1½-3½ lbs.).

BATTERY

Ford Type 06H-10655-A. 6 Volt, 17 Plate, 120 Ampere Hour Capacity (20 hour rate).

Starting Capacity—150 amperes for 20 minutes.

Zero Capacity—300 amperes for 4.0 minutes.

Grounded Terminal—Positive (+) grounded to cylinder head stud of right hand bank.

Location—On right side in engine compartment.

Dimensions—Length 10.6". Width 7.3". Height 9.2".

STARTER

Ford Model No. 18-11002 or Ford No. 5EH-11001.

Armature No.—Ford No. 18-11005 (for 18-11001).

Drive—Bendix No. A1472 (Ford No. B-11350) or Bendix No. A-2100 (June 1947, starting Ser. No. 7H-165897).

Rotation—Counter-clockwise at commutator end.

Brush Spring Tension—2 lbs. each.

Cranking Engine—100 RPM., 190-215 amperes.

Performance Data

Torque	R.P.M.	Volts	Amperes
4 ft. lbs.	1070	4.6	200
8 "	660	4.3	340
12 "	300	3.65	465
14 "	Lock	3.5	500

Starting Switch: Ford No. 21A-11450. Magnetic switch mounted on the dash and is controlled by panel pushbutton switch Ford No. 5EH-11500.

Removal:—Starter mounted on right front face of flywheel housing. To remove, take off pan at right of engine, remove bolts on commutator endplate

GENERATOR

Ford Model No. 21A-10000. Armature No. 01A-10005A. Two brush (shunt) type with vibrating voltage and current regulation. Ventilated by fan

Charging Rate Adjustment.—None. See Regulator.

Maximum Charging Rate—Controlled by regulator and dependent on battery condition and load. To check generator output, disconnect generator field lead at generator, connect both generator terminals together (use short insulated wire). Use 'BRS' set or rheostat connected across battery terminals and apply load until voltage is exactly 6 volts. Connect ammeter in charging line, run engine, check output at 2 speeds given in performance table below. Restore original connections after completing test.

Do not operate generator in service with both terminals connected together. This eliminates all regulator action and will damage generator.

Amperes	Engine RPM.
Start	520
30	1060
30	2500

Rotation—Counter-clockwise at commutator end.

Field Current—2.1 amperes at 6.0 volts (field resistance 2.88 ohms at 70°F.).

Brush Spring Tension—Approximately 28 ozs.

Removal:—Generator mounted on bracket between cylinder banks at front of engine, driven in tandem with water pumps by Vee belt. To remove, loosen nut on bracket stud.

Belt Adjustment:—Loosen nut on bracket mounting stud, raise generator up until side movement on belt midway between generator and water pump pulley is ½" (thumb and finger pressure).

REGULATOR

Ford Model No. 01A-10505-C. Three Unit Type. Consists of Cutout Relay, vibrating Voltage Regulator and vibrating Current Regulator (separate units) in single case on engine side of dash.
See Electrical Equipment Section for complete data.

NOTE—Regulator case is grounded through braided wire 'pigtail' or separate ground wire extending from regulator to generator frame. Ground wire must be in place when generator operated.

Cutout Relay

Cuts In—5.8-6.3 volts at operating temperature.
Cuts Out—8 ampere discharge current (maximum).

Voltage Regulator

Setting—6.9-7.2 volts at 70-80° F. See Ford Regulator article in Electrical Equipment Section for voltages at other temperatures.

Checking & Adjusting—*Refer to Electrical Equipment Index for article on 'Ford Regulator—3-unit Type'*

Current Regulator

Setting—30-33 amperes hot (after 5 minutes run).

Checking&Adjusting—See Voltage Regulator above.

LIGHTING

Headlamps: Ford "Sealed Beam" type.

Controlled by Lighting Switch on instrument panel and Beam Selector Switch on toeboard.
See Electrical Equipment Section for complete data.

C NTINUED ON NEXT PA E

CONTINUED FROM PRECEDING PAGE

Adjustment—Aim upper beam straight ahead (hot spot center 3" below lamp center height at 25 ft.).
Beam Indicator—In upper center of speedometer dial. Lighted whenever upper beams in use.
Direction Signal: *See Electrical Equipment Section.*
Direction Indicators—Right and Left hand arrows on face of speedometer dial.
Direction Signal Flasher—Ford No. 16H-13350.

Switches

Lighting—R-B-M Model 2445, Ford No. 11A-11654 (switch only). Light Switch Knob No. 5EH-11666-A (Lincoln), 5EH-11666-B (Continental).
Beam Selector (Switch Only)—Ford No. 16H-13532-A (Lincoln), 16H-13532-B (Continental).
Beam Selector (With Headlamp & Horn Wiring)—Ford 26H-11653-A (Lincoln), 26H-11653-B (Contl.).
Instrument—Ford No. 5EH-13740-B.
Dome Light & Map Light—Ford No. 5EH-13752-A.
Door Switches—Ford No. 16H-13752.
Stop Light—Ford No. 11A-13480.
Direction Signal—Ford No. 16H-13335 (switch).

Bulb Specifications

Position	Candlepower	Mazda No.
Headlamps		Sealed Beam
Park & Frt. Direc. Signal	21-3	1154
Instrument, Clock	1.5	55
Beam & Direc. Sig. Indicators	1	51
Tail & Rear Direc. Signal	21-3	1154
Stop	21	1129
Dome & Quarter	6	81
Rear License	3	63
Trunk (Luggage Comp't.)	6	81

MISC. ELECTRICAL

LIGHTING CIRCUIT BREAKER: RBM Model 6740, Ford No. 16H-11624. Combined with Ignition Resistor (twin unit) on block on dash under cowl (Direction Signal Flasher also mounted on same block). Consists of two separate circuit breaker units (one unit protects headlight circuits, second unit protects other lighting circuits) of the thermostatic and wound-coil type. Contacts open with current of 50 amperes and vibrate rapidly to control current.

WINDOW REGULATOR CIRCUIT BREAKER: Ford No. 51A-12250-A. 30 ampere capacity.

FUSES: Overdrive—20 ampere. In control relay lead.
Direction Signal—10 ampere. In flasher lead.

HORNS: Ford No. 26H-13832 (High Note), 26H-13833 (Low Note). Air electric type twin horns operated by horn relay. **Horn Current**—24-28 amperes total.

Horn Relay: Ford No. 96H-13842.
Contact Closing Voltage—3.5-4.5 volts.
Current Draw—Approximately ¾ ampere.

ENGINE

►**ENGINE PRODUCTION CHANGE:** *See Engine Specifications (below) for 1946 production change.*

►**ENGINE SPECIFICATIONS (to Engine No. 138051):** Twelve Cylinder, "L" Head, 75° Vee type with both cylinder banks and crankcase cast Enbloc.
Bore—2.937" **Stroke**—3.75"
Displacement—305 cu. ins. **Rated H. P.** 41.4.
Developed Horsepower—130 at 3600 RPM.
Compression Ratio—7.2-1. Cast Iron Heads.

►**ENGINE SPECIFICATIONS (Beginning Engine No. 138052):** Twelve Cylinder, "L" Head, 75° Vee type with both cylinder banks and crankcase cast Enbloc.
Bore—2.875" **Stroke**—3.75"
Displacement—292 cu. ins. **Rated H. P.**—39.6
Developed Horsepower—120 at 3600 RPM.
Compression Ratio—7.2-1. Cast Iron Heads.
Compression & Vacuum Reading—*See Tune-up data.*

OIL PAN REMOVAL: *See Lincoln Shop Notes.*

ENGINE REMOVAL: *See Lincoln Shop Notes.*

TIGHTENING TORQUES: *See Lincoln Shop Notes.*

CYLINDER HEAD: Tightening. *See Lincoln Shop Notes.*

CYLINDER SLEEVE: Cast iron, dry type cylinder sleeves available for replacement where bore size worn beyond Oversize Piston limit.
Servicing—Press sleeve in cylinder rebored to .0012" smaller diameter than outside diameter of sleeve and counterbored at top for sleeve flange. Sleeve finished for std. pistons without honing.

PISTONS: Steel alloy, light weight, cam ground, with slipper type skirt. Recondition cylinders for finished replacement pistons (or sleeves if required).
Weight—442 grams (without rings or pin).
Removal—Pistons and rods removed from above.
Clearance—See Fitting New Pistons.

Replacement Pistons: *See Lincoln Shop Notes.*

Fitting New Pistons:—Use .002" feeler, .50" wide, inserted between piston and cylinder wall at right angle to pin. Pull to withdraw feeler must be within 5-8 lbs. *NOTE*—For New Pistons installed in Worn Bore use .004" feeler, or .005" for Worn Pistons in Worn Bore (all within 5-8 lbs. pull).

PISTON RINGS: Two compression, one oil ring, all above pin. Oil ring groove drilled with drain holes. NOTE—Expander used with #2 Compr. and oil ring. Install this #2 Compr. ring with mark 'TOP' up.

Ring	Width	End Gap	Side Clearance
Compr. (#1)	.093-.0935"	.008-.013"	.0015-.0035"
Compr. (#2)	.093-.0935"	.008-.013"	.001-.004"
Oil Cont. (#3)	.1845-.185"	.008-.013"	.001-.004"

Replacement Rings: *See Lincoln Shop Notes.*

PISTON PIN: Diameter .7501-.7504". **Length** 2.607".
Floating type (locking ring in piston at each end). Pin hole in connecting rod bronze-bushed.
Pin Fit in Piston—.0003-.0009" clearance or light hand push fit with piston at 70°F.
Pin Fit in Rod Bushing—.0002-.0005" clearance (pin should pass through bushing slowly of own weight).

Replacement Pins: Std., .001", .002" Oversize.

CONNECTING ROD: Length 7.40". **Weight** 711 grams.
Crankpin Journal Diameter—2.250"
Bearing Type—Steel-backed, copper-lead lined bearing halves clamped in each rod.
Clearance—.001-.0025". **Sideplay** .014" (both rods).

Bearing Adjustment: None (no shims). Do not file bearing caps. Replace bearings if less than .08375" thick. NOTE—Rods and caps carry cylinder number. Engage tang on bearing in groove in rod and cap. Install long and short bearing cap bolts correctly.

Replacement Bearings: *See Lincoln Shop Notes.*

CRANKSHAFT: Four bearing with integral counterweights. NOTE—Crankshafts furnished Std. and .020", .040" undersize.
Journal Diameters—2.401" (all bearings).
Bearing Type—Steel-backed, copper-lead lined.
Clearance—.001-.003".

Bearing Adjustment:—None (no shims). Replace bearings. Do not file bearing caps. NOTE—See that tang on bearing engages groove in block and cap.

Replacement Bearings: *See Lincoln Shop Notes.*

End Thrust:—Taken by rear main bearing. To adjust, replace bearing. **Endplay**—.002-.006".

CAMSHAFT: Four bearing with helical gear drive.
Bearing Diameters—1.797" (replace bearings if diameter more than 1.802", replace camshaft if journal diameter less than 1.7955".
Bearing Type—Steel-backed, babbitt-lined bushings pressed in block. **Clearance**—.001-.002".

End Thrust:—Taken by gear hub and coverplate. Adjusted by replacing coverplate. **Endplay**—.005-.015".

Timing Gears:—Cast alloy iron (Crankshaft), New Aluminum Alloy—bolted on shaft (Camshaft).
Backlash—.004" Maximum.
Timing Gear Replacement—*See Lincoln Shop Notes.*

Camshaft Setting:—Mesh marked tooth of crankshaft gear with space marked by line on camshaft gear (this line must be in line with mark on hub).

VALVES:—

	Head Diameter	Stem Diameter	Length
All Valves	1.537"	.3115"	4.750-4.751"

	Seat Angle	Lift	Stem Clearance
Intake	45°	.292"	.0015-.0035"
Exhaust	45°	.292"	.0025-.0045"

NOTE—Service limit for valve stem diameter is .309" Intake, .3065" Exhaust. Valves interchangeable.
Valve Seat Inserts—Used for exhaust valves.
For Valve Servicing data, see Lincoln Shop Notes.

Valve Guides: Split type retained by "C" washer and valve spring. NOTE—Replace both halves of all guides measuring less than .6665" (thickness of guide half and valve stem at top of guide with valve of .311" stem diameter in place in guide half).
For Valve Servicing data, See Lincoln Shop Notes.

Valve Lifters: Barrel type hydraulic tappet take-up (Wilcox-Rich Zero-Lash type or Johnson type).
Diameter—.9995".
See Miscellaneous Section for complete data.

Valve Springs:	Pressure	Length
Valve Closed	51-57 lbs.	2.13"
Valve Open	111-121 lbs.	1.84"

NOTE—Replace springs which do not test to 47-57 lbs. at 2⅛" or if paint coating has been removed.

VALVE TIMING

Tappet Clearance:—None in service (hydraulic lifter). ***See Valve Lifter Servicing in Lincoln Shop Notes.***

Valve Timing:—See Camshaft Setting above.
Int. Valves—Open 10.42° BTDC. Close 35.58° ALDC.
Exh. Valves—Open 50.92° BLDC. Close 8.08° ATDC.
To Check Timing—No flywheel marks provided. If dead center position for any cylinder established on flywheel, intake valve for this cylinder should open approx. 3.24 teeth before this point with piston .0389" before top dead center.

LUBRICATION

Engine Oiling System: Pressure to main bearings, connecting rod lower bearings, camshaft bearings, valve lifters (hydraulic type) and timing gears. Oil pump mounted in crankcase at rear of engine.

Oil Pan Removal: *See Lincoln Shop Notes.*
Crankcase Capacity—5 qts.
Normal Oil Pressure—40-45 lbs. at 2000 RPM.
Oil Pressure Regulator—Located under plug above front camshaft bearing (under manifold) and on oil pump body (in crankcase).
NOTE—Check relief valve tension spring whenever engine overhauled. Replace cylinder block relief valve spring if tension not within limits of 33-36 ozs. at .53". Replace oil pump relief spring if tension not within limits of 78-87 ozs. at 1.38".

Oil Pump: Gear type. In crankcase at rear of engine.
Oil Pump Servicing—*See Lincoln Shop Notes.*

Oil Filter: Replace cartridge at 5000 mile intervals (Ford No. 01A-18662-A1).

Oil Pressure Gauge: King-Seeley Electric. Ford Nos.
Dash Unit: 5EH-9273A ('46 Lincoln), 5EH-9273B('46 Continental), 5EH-9273C (All 1947).
Engine Unit—No. 48-9278 (All Models).
See Miscellaneous Section for complete data.

COOLING

Cooling System: Positive circulation with two water pumps at front of engine (pump for each bank), pressure system with relief valve in radiator cap.
Capacity—27 quarts.
Pressure Valve—In radiator filler cap. Opens at 3½-4½ lbs. Radiator Cap No. 26H-8100-B.

Water Pump: Packless type with ball bearing at pulley end (plain bushing at impeller). Two used.
See Water Pump Section for complete data.
Removal—Drain cooling system, loosen generator belt adjustment, remove belt. Disconnect and remove hose at water pump. Take out four capscrews mounting pump on cylinder block, lift pump out.
Belt Adjustment—*See Generator Belt Adjustment.*

Thermostat: In outlet hose for each bank (2 used).
Setting—Start to open at 150-155°F. Fully open at 175-180°F.

Temperature Gauge: King-Seeley Electric. Ford Nos.
Dash Unit: 5EH-10883A ('46 Lincoln), 5EH-10883B ('46 Continental), 5EH-10883C (All 1947).
Engine Unit—No. 99A-10884 (All Models).
See Miscellaneous Section for complete data.

CLUTCH

Long Model 10CF-TI, Ford No. 26H-7563. Semi-centrifugal, single plate, dry disc type.
See Clutch Section for complete data.
Facings—Woven asbestos composition. I. D. 6¾". O. D. 10". Thickness .125" (⅛").

Pedal Adjustment: Pedal free travel 1¼-2". To adjust, loosen locknuts and turn adjusting turnbuckle on connector rod between clutch throw-out lever and equalizer shaft lever. CAUTION—Opening in turnbuckle must be horizontal to prevent it binding on transmission case.

Removal: Remove transmission (see Transmission Removal below), block clutch release levers in disengaged position by inserting wedge between each lever and clutch cover. Take out six capscrews mounting clutch on flywheel, lift out assembly.

TRANSMISSION

Own Make No. 01A-7005 (Std.), 26H-7005-A (With Overdrive). All helical gear type, constant-mesh, synchro-mesh (Second & High), sliding gear (Low & Reverse).
See Transmission Section for complete data.

Transmission Control: Mechanical steering col. shift.
See Transmission Section for complete data.

Removal: Remove rear axle assembly (see Rear Axle Removal below). Disconnect Overdrive control and wires at solenoid, lockout switch and governor, remove solenoid as directed under Overdrive (cars with Overdrive Transmission only). Disconnect gearshift rods at transmission case levers, take out capscrew and washer mounting universal joint on transmission shaft, slide universal to rear and remove. Disconnect and remove clutch throw-out equalizer shaft. Remove nuts and flat washers on engine rear support bolts. Place support jack under rear end of engine (use wood block on jack), raise rear end of engine so that rear support clears mounting bolts. Take out eight capscrews mounting transmission on flywheel housing, pull transmission straight back and remove from car.

OVERDRIVE

Warner Model AS2-R10 (before Mar. 1, 1947), AS3-R10 (After Mar. 1, 1947). Optl. equipment, used with special Lincoln Transmission. Overdrive is solenoid operated with governor control and throttle operated "kick-down".
See Transmission Section for complete data.
Solenoid—Ford No. 16H-6916.
Control Relay—Ford No. 26H-6915-A.
Control Governor—Ford No. 16H-6919.
Throttle Kick-down Switch—Ford No. 16H-6918-A (Lincoln), 16H-6918-B (Continental).
Lock-out Switch—Ford No. 16H-6917.

Removal: Same as for Std. transmission (above) except for removal and installation of the solenoid.

►IMPORTANT SERVICE NOTE—Solenoid should be removed before transmission or overdrive removed from car (and installed after these units installed) and must be removed exactly as follows to avoid damage to unit: Disconnect wires at solenoid terminals, take out two mounting screws in base flange, **rotate solenoid approximately 60° to right** to disengage pawl rod from pawl (this will line up flats on end of rod with slot in pawl), withdraw solenoid and pawl rod assembly. To install solenoid, insert pawl rod in adapter with flats horizontal, make certain that short pilot on end of solenoid body enters counterbore in adapter casting, **rotate solenoid approximately 60° to left** to engage pawl rod in pawl and to line up solenoid flange mounting holes. Check engagement of pawl by attempting to pull solenoid out (solenoid should not come out and resistance of solenoid spring should be felt). Install solenoid mounting screws and connect wires.

UNIVERSALS

Spicer Model 2102-1X. Needle bearing type. Single universal in torque ball at rear of transmission.
See Universals Section for complete data.

REAR AXLE

Own Make. ¾ Floating, Hypoid Gear type with Torque Tube drive.
See Rear Axle Section for complete data.
Ratio—4.22-1 Std.
Backlash—.002-.004"

Removal: Raise rear end of car. Disconnect track bar. Disconnect rear spring (use spring spreader if available) by placing block under each rear spring eye and lowering car so that weight keeps spring extended, then remove spring shackle bolts and bars. Take out pin in hand brake equalizer and disconnect hand brake cable. Disconnect hand brake conduit retainer and hydraulic brake line at torque tube, disconnect shock absorber links. Remove front floor pan. Disconnect speedometer cable at torque tube. Take off nuts on four universal housing ball cap bolts, remove two bolts holding ball cap halves together, remove ball cap. Pull rear axle assembly straight back to disconnect torque tube from transmission, remove axle assembly from beneath car.
Axle Shaft Removal—*See Lincoln Rear Axle article in Rear Axle Section for complete data.*

SHOCK ABSORBERS

Houde (Houdaille). Double acting, hydraulic type.
See Shock Absorber Section for complete data.

	Houde Model	Right—Ford No.—Left
Front	BBCHO-6	5EH-18045.....5EH-18046
Rear	BBCLY-6	5EH-18080.....5EH-18081

Adjustment—Std. setting marked by line on face of lever hub (pointer should be aligned with this mark). Adjustment can be varied by turning pointer clockwise (for more control), or counter-clockwise (for less control) not more than **1 or 2 serrations at a time.** NOTE—Stops are provided to limit adjustment in either direction.

Refilling: Check at 5000 mile intervals and fill to level of filler plug hole. Use Ford No. M-4633-B fluid only (Houde L-1404) which is required for these new shock absorbers with **round top filler plug.**

FRONT SUSPENSION

Front Suspension:—Conventional I-beam section axle with Reverse-Elliott ends and transverse spring. Axle held by radius rods and anti-sway strut rod.
Kingpin Inclination—4° crosswise.
Caster—3° Min., 5° Max. Must be equal for both wheels within ½°. No adjustment.
Camber—¼° Min., ¾° Max. Must be equal for both wheels within ¼°, right wheel must not exceed left.
Toe In—1/16". Set at 1-10 ratio to Camber. To adjust, loosen clamp bolts, turn tie rod.
Steering Geometry—Outer wheel 20°, Inner 23° ± ½°

STEERING GEAR

Gemmer Model 330. Worm-and-Roller type.
See Steering Gear Section for complete data.

BRAKES

Service: Bendix Hydraulic, Duo-servo, Single Anchor type **without eccentric adjustment.** Hand lever applies rear wheel service brakes.
See Brake Section for complete data.
Wheel Cylinders—Diameter 1.125" (front), 1.00" (rear). Not interchangeable between wheels.
Drums—Composite Cast Iron type. Diameter 12".
Lining—Molded (primary or forward shoe), Woven (secondary shoe). Width 1.75". Thickness .21", Length per shoe 11.95".
Clearance—.010" at each end of each shoe (adjusting screw in each wheel backed off 14 notches or "clicks" from point where shoes drag on drum.

Hand Brake:—See Service Brakes above.

MISC. MECHANICAL

Power Operated Convertible Top: Auto-Lite Electric type.
See Miscellaneous Section for complete data.

Window Regulators: Hydro-Electric type.
See Miscellaneous Section for complete data.

HOOD LOCK: Pull T-handle under edge of instrument panel on left side, push back on safety catch under front edge of hood, raise hood.

MODEL IDENTIFICATION

VEHICLE NUMBER: Stamped on plate attached to engine side of dash and on top of right frame side rail to rear of front suspension upper control arm.

TUNE-UP

COMPRESSION PRESSURE: 110 lbs. at cranking speed. Maximum compression pressure 175 lbs.

VACUUM READING: Steady 18-21" idling at 500 RPM.

FIRING ORDER: 1-5-4-8-6-3-7-2. See diagram.

SPARK PLUG GAPS: .030". Limits .029-.032".
Plug Type—Champion H-10. 14 mm.

IGNITION: *See Coil, Condenser, and Distributor.*
Breaker Gap—.015-.018".
Cam Angle or Dwell—28-30° (closed).
Breaker Arm Spring Tension—17-20 ounces.
Automatic & Vacuum Advance—*See Distributor.*

IGNITION TIMING: 4° BTDC.
Timing Procedure—*See Ignition Timing.*
Dampener Mark—"/" mark aligned with timing pin on front engine cover above top of dampener.

CARBURETION: *See Carburetor & Carb. Equipment.*
Idle Setting—Set for highest steady vacuum reading. 2 screws (turning out gives richer mixture).
Idle Speed—Approximately 500 RPM.
Float Level—Fuel level ½" ± 1/32" below top edge of bowl. Use Fuel Level Gauge No. 9550-B.
Accelerating Pump—Center hole average setting. Inner hole for Hot weather, outer for cold weather.
Fuel Pump Pressure—3½-4½ lbs.

MANIFOLD HEAT CONTROL: Automatic. No adjustment. Valve located between right end of exhaust pipe cross over and right exhaust manifold.

VALVE TAPPET CLEARANCE: None in service (Hydraulic type lifters).
Valve Timing Check—*See Valve Timing.*

STARTING: *See Battery, Starter, Generator, Regulator.*

IGNITION

IGNITION SWITCH: Lincoln No. 6A-11572-A.
Ignition Lock—Lincoln No. 8H-11582-A.

COIL: Lincoln No. 7RA-12029-A. Can type.
Location—On engine side of dash.
Ignition Current—Approx. 5.2-5.7 amperes at 6 volts, stopped. Primary circuit resistance 1.05-1.15 ohms (75°F.).

CONDENSER: Lincoln No. 8EL-12300-A.
Capacity—.20-.25 microfarad.

DISTRIBUTOR: Auto-Lite Model No. IGT-4302-1, Lincoln No. 8EL-12100. Automatic advance type with Vacuum Spark Control and Fuel Compensator
Breaker Plate Identification—No. 7 stamped on plate (vacuum advance limiting slot size).
Breaker Gap—.015-.018".
Cam Angle or Dwell—28-30° (closed).
Breaker Arm Spring Tension—17-20 ounces.
Rotation—Clockwise viewed from above.

Automatic Advance

Degrees Distr.	R.P.M.	Degrees Eng.	R.P.M.
Start	275	0	550
1	340	2	680
2	400	4	800
7	1000	14	2000
12	1600	24	3200

Fuel Compensator: Slot in distributor timing arm permits minor timing variation adjustment. See Ignition Timing.

Vacuum Spark Control: Integral type (advances breaker plate). Provides additional advance at speeds above idling except when engine accelerated or operated with wide open throttle (spark retarded by return spring).

Vacuum Advance

Distr. Degrees	Eng. Degrees	Vacuum (" of HG)
Start	0°	9"
2°	4°	10⅜"
4°	8°	11⅞"
6°	12°	13¼"
7°	14°	14"

Distributor Removal: Mounted at rear of engine on left side. To remove, disconnect vacuum line, take out hold-down screw in timing arm.

IGNITION TIMING

Std. Setting ..... **4° BTDC.**
Dampener Mark—"/" groove mark on edge of dampener with timing pin on front of engine.
Timing—With #1 piston at firing position and "/" groove mark on dampener aligned with timing pin on front of engine, loosen clamp screw in timing arm, rotate distributor until contacts begin to open, tighten clamp screw. Check spark plug connections (see diagram), see that rotor at #1 cap terminal.
Timing (with Neon Timing Light)—Mark timing pin and "/" groove mark on dampener with white chalk. Connect timing light to #1 spark plug. Idle engine below 550 RPM., adjust distributor (as directed above) until mark and timing pin aligned when light flashes.

CARBURETOR

Holley-Ford. Lincoln No. 8EL-9510-A. Dual concentric (double barrel) downdraft type with Automatic Choke.
See Carburetor Section for complete data.

►**New Float and Float Spring change for stabilizing float level**—*See 1949 Lincoln in Carburetor Section.*

Settings (Idle Setting, Float Level, and Accelerating Pump): *See Tune-Up data.*
Metering Jets—*See Holley-Ford Jet Specification Table in Carburetor Section.*

Fast Idle: Holley-Ford Carburetor type.
See Carburetion Equipment Section for complete data.

Automatic Choke: Holley-Ford Carburetor type.
See Carburetion Equipment Section for complete data.

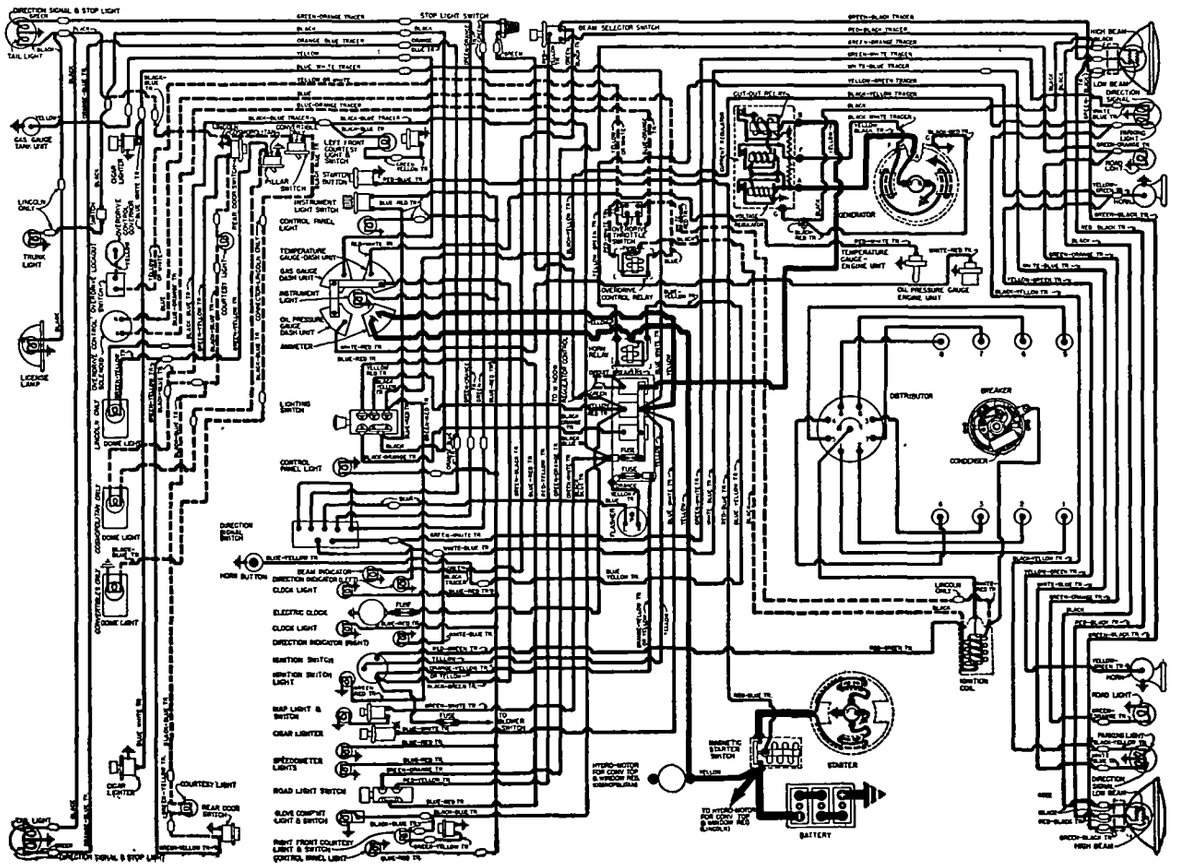

CARB. EQUIPMENT

Fuel Pump (Fuel-&-Vacuum): Lincoln No. 8EL-9350-A.
Pressure—3½-4½ lbs.
See Carburetion Equipment Section for complete data.

Gasoline Gauge: King-Seeley Electric.
Dash Unit—Lincoln 8L-9280 (K-S #42235).
Tank Unit (Lincoln)—99A-9275B (K-S #7540).
Tank Unit (Cosmopolitan)—Lincoln No. 21C-9275A, K-S No. 8435.
See Carburetion Equipment Section for complete data.

Air Cleaner (Oil Bath): Lincoln No. 8EL-9600.
Servicing (Oil Bath type)—Clean and re-fill sump (to level mark) with same grade oil used in crankcase at 2500 mile intervals (when crankcase drained). Occasionally wash filter in cleaning fluid.

BATTERY

Lincoln No. 06H-10655-A. 6 Volt, 17 Plate, 120 Ampere Hour Capacity (20 hour rate).
Starting Capacity—150 amperes for 20 minutes.
Zero Capacity—300 amperes for 4.3 minutes. Five Second Voltage—4.4 volts.
Grounded Terminal—Positive (+) terminal.
Location—On right side in engine compartment.
Dimensions—L. 10⅝". W. 7 5/16". H. 9 3/16".

STARTER

Lincoln Model No. 7EH-11002-B. Armature 18-11005.
Drive—Bendix No. A1472 (Lincoln No. B-11350).
Rotation—Counter-clockwise at commutator end.
Brush Spring Tension—20-22 ounces.
Cranking Engine—100 RPM., 190-215 amperes.

Performance Data

Torque	R.P.M.	Volts	Amperes
4 ft. lbs.	1070	4.6	200
8 "	660	4.3	340
12 "	300	3.65	465
14 "	Lock	3.5	500

Starting Switch: Lincoln No. 21A-11450 Magnetic Switch mounted on right front fender apron and controlled by panel pushbutton switch Lincoln No. 6H-11500.

Removal: On right front face of engine rear plate. To remove, take off right engine splash pan (if used), free starter-to-oil pan bracket, take out 2 starter through bolts.

GENERATOR

Lincoln No. 8EL-10002 (less pulley & bracket).
Armature No.—Lincoln No. 8EH-10005. Two brush type with current and voltage regulation.
Maximum Charging Rate—40 amperes, 7 volts, reached at approximately 19.5 MPH. Controlled by regulator and dependent on load and battery condition.
To Check Generator Output—Connect ammeter in series with charging line at regulator "ARM" terminal, connect short insulated jumper between generator "A" and "F" terminals (to short out regulator). Run engine at approximately 1500 RPM. and note ammeter reading. If generator output equals or exceeds rate output (below) generator performance is satisfactory. Remove jumper.

►***CAUTION—Do not operate generator at higher speeds or in service with jumper connected between generator armature and field terminals. This jumper eliminates all regulator action.***

Performance Data

Amperes	Engine R.P.M.
40	1500

Rotation—Counter-clockwise at commutator end.
Brush Spring Tension—20-24 ozs.

Removal: On support secured to intake manifold by stud nut, driven by belt in tandem with water pumps. To remove, loosen stud nut and disengage generator belt, take out capscrews in mounting strap, lift generator off support.

Generator Belt Adjustment: Loosen nut on support mounting stud, raise generator up until side movement on belt midway between generator and water pump pulley is ½" (thumb and finger pressure).

Fan Belt Adjustment: *See COOLING.*

REGULATOR

Lincoln No. 5EH-10505-C or E. Voltage-Current 3-Unit.
See Electrical Equipment Section for complete data.
NOTE—Separate ground wire extending to cowl must be in place when generator operated.

Cutout Relay

Cuts In—6.4-6.9 volts with engine at normal operating temperature.
Cuts Out—8 ampere discharge current (maximum).
Contact Gap—.010" (armature against upper stop).
Air Gap—.017" between armature and core with contacts open.

Voltage Regulator

Voltage Setting—7.0-7.5 volts with engine at normal operating temperature.
Air Gap—.035" between armature and core with contacts just closed.
►***CAUTION—Make certain gauge contacts armature and not brass rivet on underside of armature.***
Contact Spring Tension—5 ounces minimum with contacts just opening.
Checking & Adjustment—*See Electrical Equip. Section.*

Current Regulator

Current Setting—38-42 amperes with engine at normal operating temperature.
Air Gap—.035" between armature and core with contacts just closed.
Contact Spring Tension—5 ounces minimum with contacts just opening.
Checking & Adjustment—*See Electrical Equip. Section.*

LIGHTING

Headlamps: Ford "Sealed Beam" type.
See Electrical Equipment Section for complete data.
Adjustment—Aim upper beams straight ahead (hot spot centers 3" below lamp center height at 25 ft.).
Beam Indicator—Bulb above Left Direction Indicator on face of clock. Lights with Upper Beam "on"

Direction Signal: Std. *See Electrical Equipment Section.*
Direction Indicators—Right and Left indicators on lower edge of clock face.
Direction Signal Flasher—Lincoln No. 8L-13350-B.

Switches

Lighting—Lincoln No. 7RA-11654.
Beam Selector—Lincoln No. 7RA-13532.
Instrument—Lincoln No. 8L-13740.
Map Light—Lincoln No. 8L-15653.
Glove Box—Lincoln No. 8L-14413.
Dome Light (exc. Conv.)—Lincoln No. 8M-13752-A.
Dome (Convertible only)—Lincoln No. 8M-13754.
Door Switches—Lincoln No. 8M-13713.
Stop Light—Lincoln No. 91A-13480.
Trunk (with wire assy.)—Lincoln No. 8M-13546.
Road Light—Lincoln No. 8L-15224.
Direction Signal—Lincoln No. 8L-13335 (for service use part No. 8L-14486—includes wire assy.).

Bulb Specifications

Position	Candlepower	Mazda No.
Headlamps	Sealed Beam	4030
Road Lamps	35 watts	Sealed Beam
Front Dir. Sig. & Park.	21-3	1154
All Instruments	1½	55
Beam & Dir. Sig. Indicators	1	51
①Stop & Tail	21-3	1154
Dome	15	88
Courtesy & Dome	6	82
Rear License	3	63
Trunk	6	81

①—Rear Direction Signal flashes Stop Light.

MISC. ELECTRICAL

CIRCUIT BREAKERS: Lincoln No. 8L-12258-A Lincoln), No. 8H-12258-A (Lincoln Cosmopolitan, Lincoln Convertible). Consists of the following separate circuit breakers mounted on bracket (together with 2 fuses) behind instrument panel (see wiring diagram for positions on bracket).
Headlight & Roadlights—30 ampere.
Auxiliary Lights—15 ampere.
Hydraulic Window, Seat Regulator, and Convertible Top Switches—15 ampere.

FUSES: Courtesy, Dome, Glove Box & Map Lights—14 ampere. On circuit breaker bracket behind instrument panel (see wiring diagram).
Direction Signal—14 ampere (next to fuse listed above).
Clock—2 ampere. In clock feed wire.
Overdrive—30 ampere. On ignition terminal of overdrive relay (on dash under hood).
Heater—20 ampere. In lead to heater switch.

HORNS: Lincoln No. 51A-13832-A or B (High Pitch, Right Horn), No. 51A-13833-A or B (Low Pitch, Left Horn). Dual horns operated by relay.
Air Gap—.027-.029" for high pitch (right horn), .032-.034" for low pitch (left horn).
Horn Current—13 amperes (High Pitch), 14 (Low).

Horn Relay: Lincoln No. 7RA-13853-A. On dash.
Contact Gap—.015-.025".
Contact Closing Voltage—4 volts max.

ENGINE

ENGINE SPECIFICATIONS: Own Make. Eight cylinder, "L" head, 90° Vee type with both cylinder banks and crankcase cast Enbloc.
Bore—3½". **Stroke**—4⅜".
Displacement—336.7 cu. ins. **Rated HP**—39.2.
Developed Horsepower—152 at 3600 RPM.
Compression Ratio—7.0-1 cast-iron head.
Compression & Vacuum Reading—*See Tune-Up.*

OIL PAN REMOVAL: *See Lincoln Shop Notes.*
TIGHTENING TORQUES: *See Lincoln Shop Notes.*
►***PRODUCTION CHANGE FOR IMPROVED COOLING:***
New Cylinder Head Gasket No. 8EL-6051-D—***Two additional water passage holes (one at each corner on upper edge of gasket) used to match new holes added to latest production engines. This gasket used for service on all engines. These additional water passage holes can be added on earlier engines as described under COOLING in Lincoln Shop Notes.***

CYLINDER SLEEVES: Not used.
PISTONS: Aluminum alloy, steel strut, flat head, split skirt, cam ground type.

C NTINUED ON NEXT PA E

ENGINE

C NTINUED FR M PRECEDIN PAGE

Weight—548 grams. **Length**—3.84".
Removal—Pistons and rods removed from above.
Clearance—.0005-.001". See Fitting Pistons.

Replacement Pistons: Std. .0025", .020", .030", .040" OS.

Fitting Pistons: Use ½" wide feeler inserted between piston (on side opposite slot) and cylinder wall at right angles to pin. Feeler thickness .0015" for New Piston in New Bore, .003" for New Piston in Worn Bore or Worn Piston in New Bore, .004" for Worn Piston in Worn Bore. Pull to withdraw feeler 6 to 12 pounds.

Cyl. Bore Max. Wear Limits: Out-of-round, .003", Taper .006".

PISTON RINGS: Top compr. (internal bevel), #2 Compr. (tapered), #3 & #4 oil rings (one piece, wedge channel), all above pin. Oil ring grooves drilled with drain holes.

Ring	Width	①End Gap	Side Clearance
Compr. #1	.165"	.008-.016"	.002-.0035"②
Compr. #2	.165"	.008-.016"	.0015-.003"③
Oil #3 & 4	.152"	.008-.016"	.0015-.003"③

Worn Limit—①—.035", ②—.0045", ③—.004".
Ring Thickness—Compression .0933", Oil .186".

Replacement Rings: Ring sets furnished standard size and .020", .030", .040" Oversize.

PISTON PIN: Diameter—.8503". **Length**—3.118". Floating type (lock ring in piston at each end). Pin hole in connecting rod bronze bushed.
Pin Fit in Piston—.0001-.00005" clearance (new), .001" (worn limit).
Pin Fit in Rod Bushing—.0001-.0002" clearance (new), .0012" (worn limit).

Replacement Pins: Std. size & .001", .002" Oversize.

CONNECTING ROD: Length—8.062".
Weight—773 grams (less bearings).
Crankpin Journal Diameter—2.400". Maximum wear limits—out-of-round .0015", taper .001".
Lower Bearing—Steel-backed, copper-lead alloy lined, replaceable shells. Upper and lower halves are interchangeable.
Clearance—.0005-.003" (new), .005" (worn limit).
Sideplay—.007-.013" (new), .022" (worn limit).

►*NOTE—Replace rod bearings less than .0745" thick.*

Bearing Adjustment: None (no shims). Do not file caps. Replace bearings. Tang on bearing must engage groove in rod and cap.

►*PALNUT NOTE—Tighten finger tight plus 1/3 turn.*

Replacement Bearings: Standard size and .002", .010", .020", .030", .040" Undersize.

CRANKSHAFT: 3 bearing with 6 integral counterweights and vibration dampener on front end.

►*SLUDGE TRAPS—Crankpin throws equipped with sludge traps having removable plugs for cleaning.*

Vibration Dampener—Viscous type (inertia ring floats in Dow-Corning fluid in damper housing). Sealed unit. Serviced by replacement only.
Main Journal Diameter—#1 & #2, 2.8740"; #3, 2.8735". Max. wear limits—out-of-round .0015", taper .001".
Bearings—Steel-backed, copper-lead alloy lined, replaceable shells. Upper and lower halves alike.
Clearance—Zero-.0025" (selective fit, crankshaft to turn free). Worn limit .0044" (#1, 2), .005" (#3).

►*NOTE—Replace main bearings less than .0938" thick.*

Bearing Adjustment: None (no shims). Do not file caps. Replace bearings. Tang on bearing must engage groove in block and cap.

►*NOTE—Self-locking bearing cap bolts used.*

Replacement Bearings: Standard size and .002", .010", .020", .030", .040" Undersize.

End Thrust: Taken by rear main bearings. Adjust by replacing bearings if clearance excessive.
Endplay—.002-.006" (new), .010" (worn limit).

CAMSHAFT: 3 bearing with helical gear drive. Oil pump drive gear, fuel pump drive eccentric (and removable bushing over eccentric) assembled on rear end of shaft.
Bearing Diameter—1.9285" (replace bearing if diameter greater than worn limit of 1.9315").

Replacement Bearings: Three sizes as follows:
1—Std. size on both inside and outside diameter.
2—Std. on I. D., .080" Oversize on O. D.
3—.015" Undersize on I. D., Std. on O. D. (must be finished reamed in assembly).

End Thrust: Thrust plate bolted on front of block.

Timing Gears: Helical cast aluminum camshaft gear bolted on camshaft, cast alloy iron crankshaft gear.

Camshaft Setting: Mesh marked tooth of crankshaft gear with space marked by line on camshaft gear.

VALVES:	Head Diameter	Stem Diameter	Length
Intake	1.800"	.3417"	5.7145"
Exhaust	1.515"	.3410"	5.7145"

	Seat Angle	Lift	Stem Clearance
Intake	45°	.357"	.0015-.003"①
Exhaust	45°	.340"	.0022-.0037"②

Wear Limit—①—.005", ②—.006".
Valve Seat Inserts—On exhaust only.

Valve Guides: One piece type pressed in block. Inside diameter .344". Length 2.66".
Guide Installation—Press in block from above with small diameter end down. Distance from top of valve seat to upper end of valve guide 1.30".

Valve Lifters: Mushroom type, hydraulic tappet take-up (Wilcox-Rich Zero-Lash type).
Body Diameter—.7177" (new), .7167" (wear limit).
Clearance in Block—.0003-.0018" (new), .003" (worn).
See Miscellaneous Section for complete data.

Valve Springs: Coated springs used.
Spring Pressure—62-68 lbs. (closed), 140-152 (open).
Spring Test—63-69 lbs. at 1.680". Free length 2.08".

VALVE TIMING

Tappet Clearance: None in service (hydraulic lifter).

Valve Timing: See Camshaft Setting above.
Intake Valves—Open 14° BTDC. Close 60° ALDC.
Exhaust Valves—Open 62° BLDC. Close 16° ATDC.
Valve Timing Check—Intake valve opens 14° BTDC. Valve timing mark location on vibration dampener.

LUBRICATION

Engine Oiling System: Pressure to main bearings, connecting rod lower bearings, camshaft bearings, valve lifters (hydraulic type) and timing gears. Oil pump mounted in crankcase at rear of engine.
Crankcase Capacity—6 quarts (refill).
Normal Oil Pressure—50 lbs. at 2000 RPM.

Oil Pressure Relief Valves: Two used as follows:
1—**Oil Pump Relief Valve**—In oil pump body and regulates pressure to 50 lbs. for engine lubrication. Spring tension 199 ozs. at 2.18".
2—**Cylinder Block Oil Relief Valve**—At front end of valve chamber and regulates pressure to 15 lbs. for hydraulic valve lifters.

Oil Pump: Gear type. In crankcase at rear of engine.

►*NOTE—Removable sump attached to oil pan for access to oil pump and screen.*

Oil Filter: On left cylinder head. Replace cartridge every 5000 miles or more often if required.
Oil Filter Cartridge—Lincoln No. 8EL-18662.

Oil Pressure Gauge: King-Seeley Electric.
Dash Unit—Lincoln No. 8L-9273.
Engine Unit—Lincoln No. 41A-9278.
See Miscellaneous Section for complete data.

Crankcase Ventilation: Filter element in oil filler breather cap (inlet), and in upper end of outlet pipe at elbow connection just below generator on left side.
Servicing—Wash screen in cleaning fluid and wet with engine oil when dry at oil change period (2500 miles).

COOLING

►*PRODUCTION CHANGE FOR IMPROVED COOLING:*
New Cylinder Head Gasket No. 8EL-6051-D—*Two additional water passage holes (one at each corner on upper edge of gasket) used to match new holes added to latest production engines. This gasket used for service on all engines. These additional water passage holes can be added on earlier engines as described under COOLING in Lincoln Shop Notes.*

Cooling System: Pressure type with relief valve in filler cap and two belt-driven pumps (one for each bank) with re-circulating by-pass.
Capacity—34½ quarts.
Pressure Valve—In radiator filler cap. Lincoln No. 26H-8100-B (AC #846740). Opens at 3½-4½ lbs.

Water Pumps: Two used. Centrifugal, belt-driven, packless type. Shaft mounted on sealed duplex ball bearing.
See Water Pump Section for complete data.
Fan Belt Adjustment—Loosen fan mounting bracket bolts, raise fan up until side movement on belt midway between fan and crankshaft pulleys is ½".
Generator (& Water Pump) Belt Adjustment—*See GENERATOR.*

Thermostats: Two used (one in each cylinder head water outlet). Lincoln No. 8EL-8575-A (std.), C (optl.).
Setting (std.)—148-170° maximum.
Setting (optl.)—178-200° maximum.

Temperature Gauge: King-Seeley Electric.
Dash Unit—Lincoln No. 8L-10883.
Engine Unit—Lincoln No. 8A-10884.
See Miscellaneous Section for complete data.

CLUTCH

Long Model 11CF-10½TI, Lincoln No. 8EL-7563. Semi-centrifugal, single plate, dry disc type.
See Clutch Section for complete data.
Facings—Moulded or Woven. Inside Diameter 7". Outside Diameter 10½". Thickness .125".

Pedal Adjustment: Pedal free travel 1.00-1.25".

Removal: Remove transmission (see TRANSMISSION Removal below). Take off flywheel housing, block clutch release levers in disengaged position by inserting wedge between each lever and clutch cover. Take out cover mounting screws, lift assembly out.

TRANSMISSION

Warner Model AS1-T85B (Std.), AS2-T85B (with Overdrive). All helical gear type, constant-mesh, synchro-mesh (Second & High), sliding gear (Low & Reverse).
See Transmission Section for complete data.

Transmission Control: Steering column mounted shift.
See Transmission Section for complete data.

Removal: Disconnect rear universal, slide propeller shaft out of transmission. Disconnect clutch, transmission and speedometer linkage. Support rear of engine and disconnect rear engine mounting from

frame. Take out four transmission-to-flywheel housing capscrews and remove transmission.

OVERDRIVE

Warner Model AS2-T85B (Transmission & Overdrive). Optl. equipment. Overdrive is solenoid operated type (no centrifugal pawls) with Governor Control and throttle operated "kick-down".
See Transmission Section for complete data.
Solenoid—Lincoln No. 8M-6916.
Control Relay—Lincoln No. 8M-6915. On engine side of dash. 30 ampere fuse on ignition terminal.
Lock-Out Switch—Lincoln No. 8M-6917-A.
Throttle Kick-down Switch—Lincoln No. 8A-6918.
Governor—Lincoln No. 8M-6919.

Removal: Same as for Std. transmission (above) after disconnecting overdrive control cable and wiring.

UNIVERSALS

Spicer 1310. Needle bearing type. Two used.
See Universals Section for complete data.

►***NOTE—Slip joint formed by splined slip yoke of front universal engaging transmission mainshaft (or overdrive shaft). One-piece propeller shaft used.***

REAR AXLE

Own Make. Semi-floating, hypoid gear type with Hotchkiss drive (**separate carrier not used**). Axle ends flanged (no separate hub). Wheel bearings are sealed ball, pre-lubricated (no lubrication required).
See Rear Axle Section for complete data.
Ratio—3.9-1 (Std.), 4.27-1 (with Overdrive).
Backlash—.005-.008". Shim adjustment.

Removal: Raise rear of car. Disconnect rear universal. Remove axle shafts (see instructions below). Disconnect brake line hose at "T" on left side of axle housing, and hand brake cable. Disconnect shock absorbers, spring U-bolts and shackles. Remove axle housing assembly from car.

Axle Shaft Removal: Remove wheel. Take out drum to hub capscrews, remove drum. Take out 4 axle retainer nuts (work through opening in axle shaft flange). Use Puller No. 4235 and pull shaft (do not disturb brake backing plate or damage wheel bearing oil seal). Replace one nut to secure backing plate.

SHOCK ABSORBERS

Std.—Lincoln 8M-18045-A (front), 8M-18080-A (rear).
Heavy Duty (special equip.)—Lincoln No. 8M-18045-B (front), 8M-18080-B (rear).
Direct acting, hydraulic types. Two makes are used and are interchangeable.

►***NOTE—Shock absorbers are permanently sealed and cannot be refilled or repaired.***
See Shock Absorber Section for complete data.

►**Rear Shock Absorber Installation**—Lower tube has welded stone shield on lower end which must be installed toward front of car.

FRONT SUSPENSION

Front Suspension: Independent, linked parallelogram type with coil springs, direct acting shocks, and front stabilizer.
See Front Suspension Section for complete data.

►***CAUTION—Specifications listed below supersede earlier 1949 Lincoln Front End Specifications.***

Kingpin Inclination—5° crosswise.
Caster—Pos. ½° to Neg. 1°. Threaded bushing adjustment at lower pivot pin.
Camber—0° to +¾°. Eccentric adjustment at upper pivot pin.
Toe In—3/32-5/32". Adjusting sleeve on outer end of each tie rod. Adjust equally.
Steering Geometry (toe out on turns)—Inner wheel turned 36°, outer wheel 26°5'.

STEERING GEAR

Gemmer Model 335. "3-tooth" Worm-and-Roller type with "push-pull" adjustment.
See Steering Gear Section for complete data.

BRAKES

Service: Lincoln-Bendix Hydraulic, Duo-Servo, Single Anchor type **without eccentric adjustment.** Hand lever applies rear wheel service brakes.
See Brake Section for complete data.
Wheel Cylinders—Diameter: Front wheel 1.128" (hone limit 1.132"). Rear wheel .940" (hone limit .942").
Drums—Diameter 12".
Lining—Molded or Woven. Width 2¼" (front wheel), 2" (rear wheel). Thickness 3/16". Length per shoe 12 15/16".
Clearance—.010" at each end of secondary shoe with primary shoe forced out against drum (adjusting screw in each wheel backed off 14 notches or "clicks" from point where shoes drag on drum).
Braking Power—59% front wheels, 41% rear.

Hand Brake: See Service Brakes above.

MISC. MECHANICAL

Power Operated Convertible Tops, Windows & Front Seat: Hydro-Lectric type (hydraulic actuation with motor-driven pump supplying oil under pressure for power cylinders).
See Miscellaneous Section for complete data.

TIGHTENING (TORQUE WRENCH) SPECIFICATIONS

1949 MERCURY

	Ft. Lbs.	In. Lbs.
Cylinder Head Capscrews	65-70	780-840
Main Bearing Capscrews	80-90	960-1080
Connecting Rod Nuts	45-50	540-600
Flywheel to Crankshaft	75-85	900-1020
Engine Front Support	65-70	780-840
Eng. Rear Support to Trans.	55-60	660-720
Clutch Cover Mounting Screws	22-26	264-312
Flywheel Housing:		
To Cylinder Block	40-45	480-540
To lower Front Cover	15-18	180-216
Trans. to Flywheel Housing	30-35	360-420
Exten. (or OvDr.) to Trans.	40-45	480-540
Pitman Arm to Shaft	120-130	1440-1560
Steering Gear to Frame	30-35	360-420
Steering Idler Arm to Bracket	90-110	1080-1320
Idler Arm Bracket to Frame	40-45	480-540
Front Suspension:		
Upper Arm to Frame	75-80	900-960
Lower Arm to Frame	48-53	576-636
Upper Arm to Spindle	90-110	1080-1320
Lower Arm to Spindle	110-130	1320-1560
Front Brake Drum to Hub	13-15	156-180
Rear Brake Drum to Flange	12-17	144-204
Rear Shock Absorber	60-65	720-780
Rear Spring U-bolts	65-70	780-840
Rear Spring Shackles	35-40	420-480

CYLINDER HEAD

CYLINDER HEAD INSTALLATION: Use Torque Indicating Wrench to tighten cylinder head capscrews in correct sequence as shown in diagram. Tighten all screws to correct tension and recheck after engine has been run and thoroughly warmed up.

MERCURY

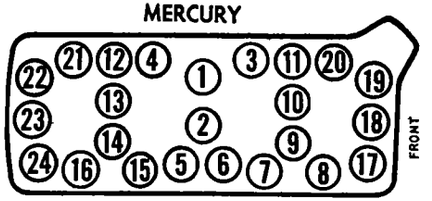

Tightening Torques—See Tightening (Torque Wrench) specifications.

OIL PAN REMOVAL

1949 MERCURY

OIL PAN REMOVAL (MERCURY): Car manufacturer recommends following method be used (pan can be removed without draining oil):

1)—Take off exhaust pipe cross-over (secure manifold heat valve with one nut).

2)—Remove steering idler arm bracket from right frame rail and pull down.

3)—Remove starter.

4)—Take off flywheel housing lower front cover (cover drops straight down after removing nuts and bolts). Remove oil dip stick tube from pan.

5)—Remove 16 oil pan-to-block capscrews using 3/8" drive tools. Lower rear end of pan and slide out to rear.

NOTE—Front end of engine does not have to be raised to remove pan.

CAMSHAFT & BEARINGS

1949 MERCURY

CAMSHAFT PRODUCTION CHANGE (1949 MERCURY VEHICLE NO. 9CM-826 UP): Change to REVERSE helix timing gears giving forward thrust at front end of camshaft for silencing backlash (was toward rear on early engines with normal gears). Oiling at front end modified with a change in front camshaft bearing position (same bearing used). Parts for both types are as follows:

CAMSHAFT PRODUCTION PARTS CHANGES

	Early Type	9CM-826 UP Type
Camshaft	8CM-6250	8CM-6250-B
Camshaft Gear	7RA-6256	8BA-6256-A
Crankshaft Gear	48-6306	8BA-6306
Oil Line Plug	8BA-6026	7HA-6026

Following modifications made for use of new REVERSE helix timing gears:

1)—**Timing Gears.** Reverse helical gears (L.H. teeth on camshaft gear, R.H. teeth on crankshaft gear).

2)—**Camshaft.** Oil hole in front bearing journal moved 1/16" (center of hole .440-.450" to rear of flange on shaft, was .507-.512" on early shafts). Inside diameter increased to 3/16" (was 1/8" on early shafts). Outer end of hole is at front of shaft on both types of camshafts.

►3)—**Camshaft Front Bearing Position**—***CAUTION—Same bearing used but position in block different for each type camshaft. This is important to provide correct lubrication for front end of camshaft (alignment of upper oil hole in bearing with oil hole in camshaft front bearing journal). Bearing positioned as follows:***

Bearing Position for Late (8CM-6250-B) Camshaft—Installed with front edge **flush** with front face of block to align upper oil hole in bearing with relocated hole in camshaft front bearing journal (see No. 2 above).

Bearing Position for Early (8CM-6250) Camshaft—Installed with front edge **1/16" back** from face of block for oil hole alignment.

4)—**Cylinder Block Front Oil Line Plug.** Solid plug in oil line (above camshaft). Early type plug equipped with oil hole for front end gear lubrication. With this new plug front end gears and thrust surfaces lubricated from front end of camshaft (oil fed from main oil line lead at front camshaft bearing into oil lead in shaft and out through front end of shaft).

►FOR 1939-48 MERCURY SHOP NOTES, SEE FORD SHOP NOTES

FORD TRUCK NOTE:—All Mercury Engine data below applies to Ford Truck Models with '95' Engine as well as Mercury models.
clutch housing and on left frame member in front

OIL PAN REMOVAL:—*See Ford Shop Notes for data.*

MODEL IDENTIFICATION

SERIAL & ENGINE NUMBER:—Stamped on top of clutch housing and on left frame side member near generator.

TUNE-UP

COMPRESSION:—**Ratio**—6.3-1 Std. cast-iron head.
Pressure—145 lbs. at 2400 R.P.M. or 112 lbs. at cranking speed of 100 R.P.M.

VACUUM READING:—Steady 18-20" at 5-7 MPH.

FIRING ORDER: 1-5-4-8-6-3-7-2. See diagram for cylinder numbering and spark plug cable connections.

SPARK PLUGS: Champion Type H-10. 14 mm. Metric.
Gaps—.025"

IGNITION: See Coil, Condenser, and Distributor.
Breaker Gap—.014-.016" **Cam Angle** 36° closed (both sets together with correct coil-loading lead).
Automatic Advance—8° max. at 950 RPM (78-12127 Distr.), 11° max. at 600 RPM (11A-12127 Distr.). Distributor degrees and RPM.

IGNITION TIMING: See Ignition Timing.
Std. Setting—4° BTDC. No flywheel marks provided. See Ignition Timing for method of timing ignition and Vacuum Brake adjustment.

CARBURETION: See Carburetor & Carb. Equipment.
Idle Setting—Both idle screws ⅝-⅞ turn open or set for highest steady vacuum gauge reading. Idle speed 5-7 MPH or 350 RPM.
Float Level—Fuel level 11/16" plus or minus 1/32" below top edge of float bowl.
Accelerating Pump—Inner (#1) hole—Summer, Center (#2) hole—Winter, Outer (#3) hole—Extreme Winter temperatures.
Fuel Pump Pressure: 3½ lbs. maximum.

VALVES: See Valve Timing.
Tappet Clearance—.010-.012" Intake, .014-.016" Exhaust. No adjustment provided.

STARTING: See Battery, Starter, Generator, Regulator.

IGNITION

Ignition Switch:—Oakes Steering Column & Ignition Lock Assy. No. 301941, Ford No. 99A-3676 (1939); 302142, Ford No. 09A-3676 (1940). Ignition Switch No. 301683 (1939), 302159 (1940).
Lock Cylinder—Hurd or Briggs & Stratton No. 8500, Ford No. 99A-3686 (with keys).
Key Series—FK000 to FK999. **Groove**—No. 17.

COIL: Ford Part No. 78-12036 or 81A-12036 (less Condenser). Mounted on ignition unit (part of ignition assembly).
Resistor Unit—Connected in coil primary circuit. Mounted on Circuit Breaker Assembly No. 01A-12250.
Ignition Current—4½-6 amperes (engine stopped). Ignition primary circuit resistance 1-1⅓ ohms.

CONDENSER: Ford Part No. 78-12300 (78-12036 Coil), 81A-12300 (81A-12036 Coil).
Capacity—.33-.36 microfarad.

DISTRIBUTOR: Ford Part No. 78-12127 (Orig. Equip). or 11A-12127 (Repl. Unit) less coil, caps, and plates. Double breaker, 8 lobe cam, full automatic advance type with Vacuum Brake Control (see Ignition Timing for adjustment). Both types alike except for automatic advance. Same design as used on Ford V8 models.
Breaker Gap—.014-.016" (both sets). Use special two step feeler—.014" step 'go', .016" step 'no go'.
Cam Angle—36° closed, 9° open. For both sets operating together with correct coil-loading lead.
Breaker Arm Spring Tension—20-24 ozs.
Rotation—Clockwise viewed from drive end.

No. 78-12127

Distributor Degrees	Automatic Advance R.P.M.	Engine Degrees	R.P.M.
Start	200	0	400
8	950	16	1900

NOTE—Limits are 7½-8½° (distributor).

No. 11A-12127

Distributor Degrees	Automatic Advance R.P.M.	Engine Degrees	R.P.M.
Start	200	0	400
11	600	22	1200

NOTE—Limits are 10½-11½° (distributor).

Removal:—Ignition unit mounted on front of engine. To remove, disconnect vacuum line, take off caps, take out screws in mounting flange.

CONTINUED ON NEXT PA E

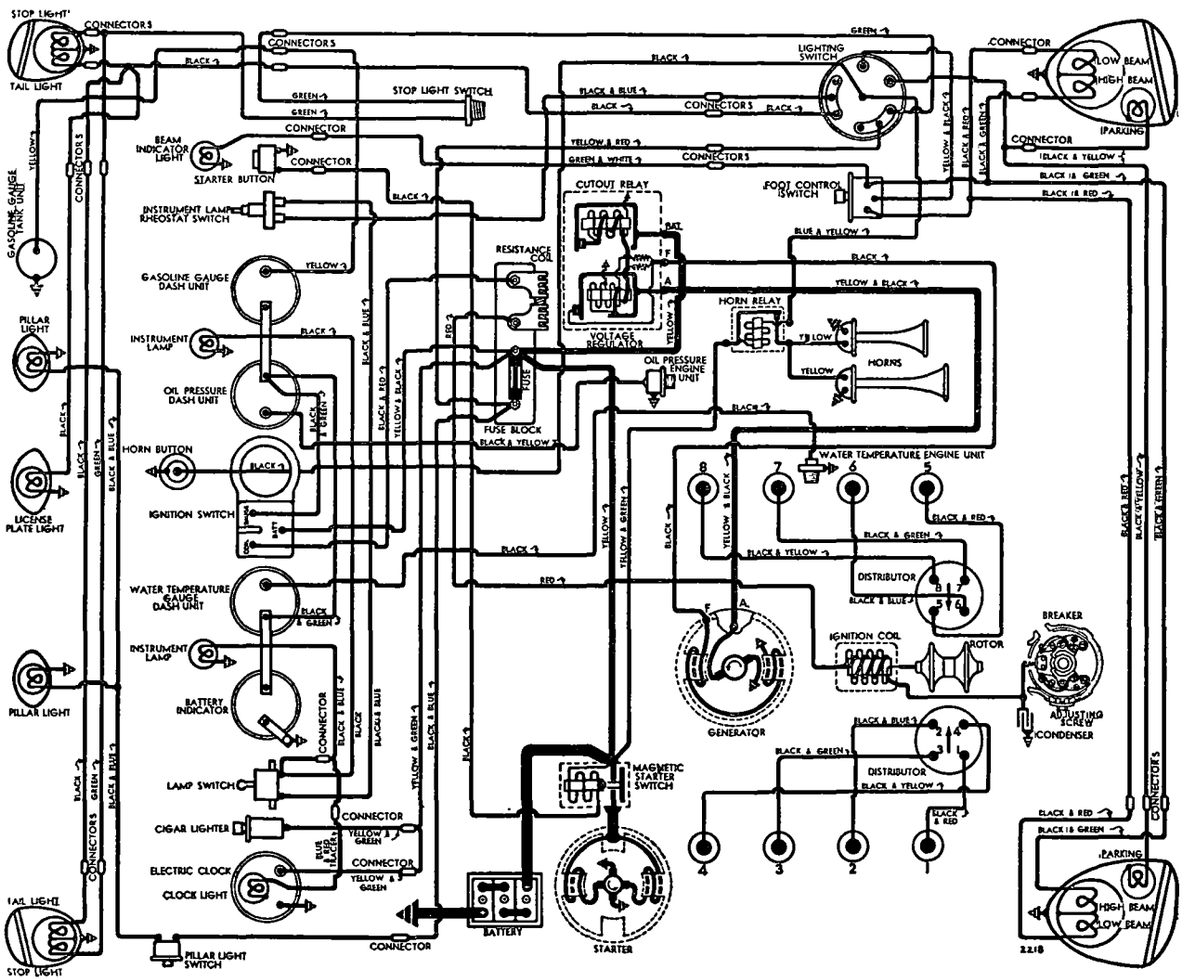

1939 M DELS

C NTINUED FR M PRECEDING PAGE

IGNITION TIMING

IGNITION TIMING:—For each engine as follows (see Vacuum Brake Setting below for adjustment depending on type of service and fuel used).

	Flywheel Degrees	Piston Position
All Engines	4° BTDC	.0058" BTDC.

Timing Note—Manufacturer recommends use of Laboratory Test Set with Stroboscope attachment or V-126 Timing Fixture for all ignition settings.

Timing (On Engine)—No flywheel marks provided and timing should be set with piston on top dead center. With #1 piston on top dead center entering power stroke, loosen timing adjusting screw on left hand side of ignition unit housing, place screw in retard position at lower end of slot, move screw slowly up until timing contacts begin to open, note graduation on plate under screw head which is in line with reference mark on housing, move screw up exactly one additional graduation, tighten screw.

NOTE—Dead center position can be determined by inserting gauge rod in cylinder or by measuring to tops of #2 and #3 pistons (should be equal).

Vacuum Brake Setting:—Should be adjusted to eliminate pinging when engine operated with load. To adjust, loosen locknut, back off adjusting screw until engine pings with load, turn screw in just enough to eliminate ping, tighten locknut. When adjusted on Stroboscope, vacuum brake should retard spark to peepsight (set at 2°) at 950 RPM. (78-12127), 650 RPM. (11A-12127) with no vacuum

CARBURETOR

Holley (Chandler-Groves) Model AA-1, Ford No. 91A-9510-A. Dual (double barrel) downdraft type.

NOTE—Model 91A-9510A replaced by 21A-9510-A.

For complete data, refer to Carburetor Index.

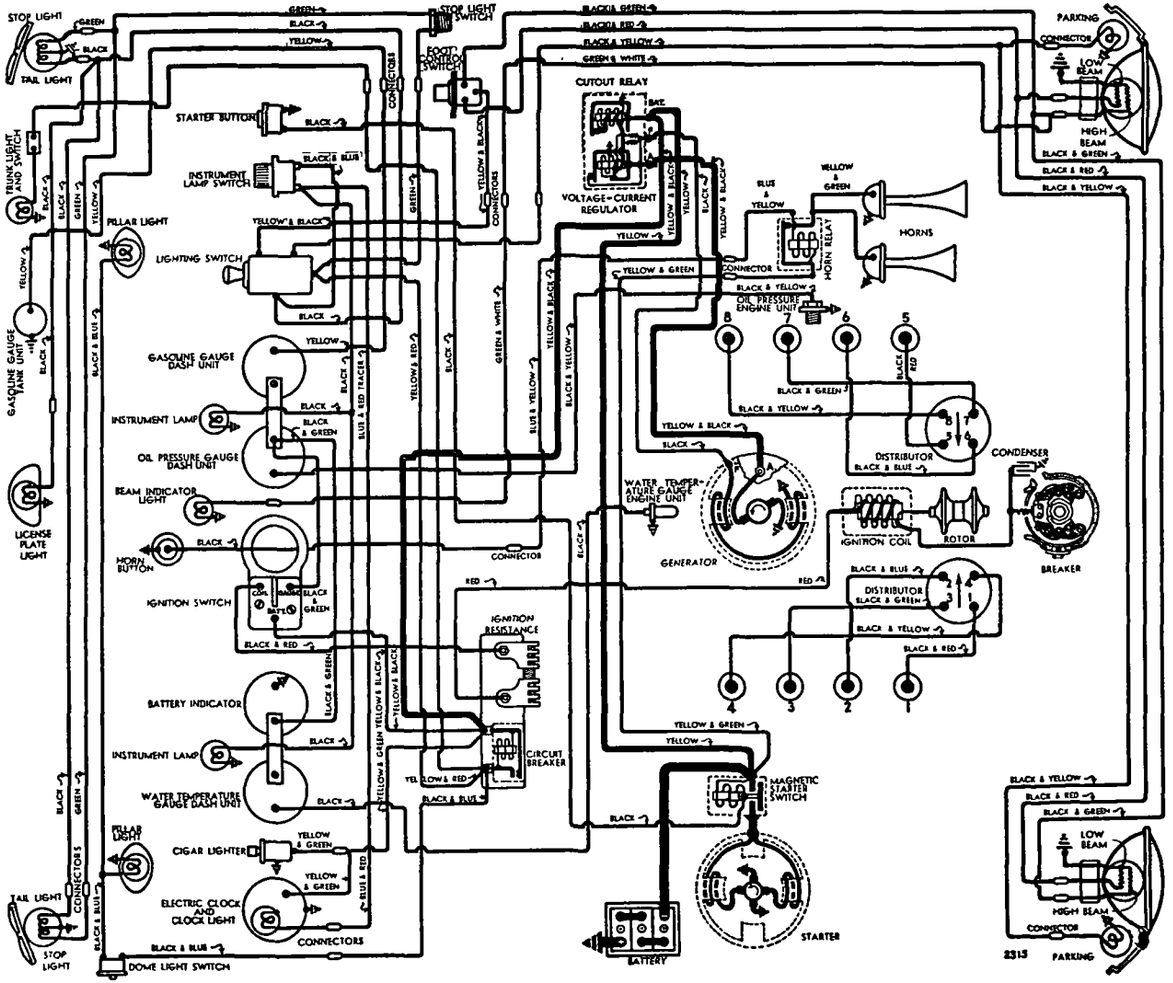

1940 MODELS

Idle Adjustment—With engine warm, choke valve wide open, and Fast Idle inoperative, set throttle lever stopscrew for 5-7 MPH. idling speed, turn each idle adjusting screw (one for each barrel, adjust in succession) in until engine begins to miss, then out until engine begins to roll, finally turn screw in until engine fires smoothly. Final setting should be approximately ⅝-⅞ turn of screw from inner seated position. Readjust stopscrew for correct idling speed of 5-7 MPH. or 350 RPM.

NOTE—Vacuum gauge recommended for idling adjustment. Set for highest steady gauge reading.

Float Level—1⅜-1 11/32" from bottom of float to face of cover with valve seated (invert to check). Fuel level 21/32-23/32" below top edge of bowl.

Accelerating Pump Setting—Three holes provided for pump link connection as follows:
Inner (#1)—Min. stroke, Summer Temperatures.
Center (#2)—Med. stroke, Winter Temperatures.
Outer (#3)—Max. stroke, Extreme Cold Weather.

NOTE—Link locked in pump rod by snap-lock. Pull link shaft out of pump rod to disengage this lock.

Fast Idle:—Integral with carburetor. Operated by choke valve lever. No adjustment required.

CARB. EQUIPMENT

Air Cleaner: AC No. 1528237 (1939), 1529224 (1940); Ford No. 91A-9600A Oil-wetted type Std. Heavy duty Oil-bath type Optl.

Gasoline Gauge: King-Seeley Electric type. Ford No.
Dash Unit—99A-9280 (1939), 09A-9280 (1940).
Tank Unit—99A-9275B (All Models).
For complete data, refer to Carburetion Equip. Index.

Fuel Pump:—AC Type R. #1523307, Ford No. 68-9350, Diaphragm type.
For complete data, refer to Carburetion Equip. Index.

BATTERY
1939

BATTERY (1939): Ford No. 81A-10655A. 6 volt, 17 plate, 100 ampere hour capacity (20 hour rate).
Starting Capacity—126 amperes for 20 minutes.
Zero Capacity—300 amperes for 3.3 minutes.
Grounded Terminal—Positive (+) grounded to dash. **Engine Ground**—Strap connector between right rear cylinder head stud and dash.
Dimensions—Length 10.5". Width 7.2". Height 7.1".
Location—On right side in engine compartment.

Battery Indicator:—King Seeley. Ford No. 99-A-10844. Voltmeter type. ***See Electrical Equipment Section.***

BATTERY
1940

BATTERY (1940): Ford No. 01A-10655A. 6 volt, 17 plate, 120 ampere hour capacity (20 hour rate).
Starting Capacity—150 amperes for 20 minutes.
Zero Capacity—300 amperes for 4.0 minutes.
Grounded Terminal—Positive (+) grounded to dash.
Engine Ground—Strap connector between right rear cylinder head and dash.
Dimensions—Length 10.6". Width 7.3". Height 9.2".
Location—On right side in engine compartment.

Battery Indicator—King-Seeley. Voltmeter type. Ford No. 09A-10844.
For complete data, refer to Electrical Equipment Index.

STARTER

Ford Model No. 18-11002. Armature No. 18-11005.

Drive—Inboard Bendix No. L11FX-10. Ford No. B-11350 or Ford B&S Drive No. 91A-11350.

Refer to Electrical Equipment Index for article on Ford B&S Starter Drive for servicing instructions.

Rotation—Counter-clockwise at commutator end.

Brush Spring Tension—2 lbs. each.

Cranking Engine—100 RPM., 190-215 amperes.

Performance Data

Torque	R.P.M.	Volts	Amperes
4 ft. lbs	1070	4.6	200
8 "	660	4.3	340
12 "	300	3.65	465
14 "	Lock	3.5	500

Starting Switch:—R-B-M Model 5604. Ford No. 01A-11450A. Magnetic switch mounted on dash and controlled by pushbutton on instrument panel R-B-M No. 3239, Ford No. 09A-11500.

Removal:—Starter mounted on right front face of flywheel housing. To remove, take off pan at right of engine, free starter-to-oil pan support bracket, take out through-bolts on commutator end plate.

GENERATOR

STANDARD

Ford Model No. 91A-10000 (1939), 01A-10000A & 01A-10000B (1940). Two brush, shunt type with vibrating type voltage and current regulation. Ventilated by fan on drive pulley.

NOTE—01A-10000-A & B replaced by 21A-10000.

Armature—Ford No. 78-10005A (91A-10000), 01A-10005 (01A-10000A & 10000B).

Charging Rate Adjustment—No adjustment. See Regulator data below.

Maximum Charging Rate—Controlled by regulator and dependent on battery condition and load. To check generator output, disconnect generator field lead at generator, connect both generator terminals together (use short insulated wire). Use 'BRS' set or rheostat connected across battery terminals and apply load until voltage is exactly 6 volts. Connect ammeter in charging line, run engine at approximately 1000 RPM., check output at 3 speeds given in performance table below. Restore original connections after completing test. **Do not operate generator in service with both terminals connected together. This eliminates all regulator action and will damage generator.**

Performance Stds.

91A-10000

Amperes	Engine RPM.
Start	500
28	1250
28	2500

01A-10000-A		01A-10000-B	
Amperes	Eng. RPM.	Amperes	Eng. RPM.
Start	580	Start	520
32	1100	30	1060
32	2500	30	2500

Rotation—Counter-clockwise at commutator end.

Field Current—2.86 amperes at 6.0 volts (01A-10000-A), 2.08 amperes at 6.0 volts (01A-10000-B). 2.2 amperes at 6.0 volts (91A-10000). Field resistance at 70°F is 2.1 ohms (01A-10000A), 2.88 ohms (01A-10000B), 2.7 ohms (91A-10000).

Brush Spring Tension—Approximately 28 ozs.

Removal:—Generator mounted on bracket between cylinder banks at front of engine and driven in tandem with water pumps by Vee belt. To remove, loosen nut on mounting bracket stud.

Belt Adjustment:—Loosen nut on bracket mounting stud, raise generator up until side movement on belt midway between generator and water pump pulleys is 1" (thumb and finger pressure).

GENERATOR

SPECIAL EQUIPMENT

SPECIAL GENERATORS:—Other Makes—***Refer to Electrical Equipment Index for 'Special Generator' article for complete data on special Generators and Regulators which may be used on these models.***

REGULATOR

Ford No. 91A-10505A (91A-10000 Gen.), 01A-10505A (01A-10000A & 10000B Gen.). Cutout Relay and vibrating type voltage-regulator in case mounted on engine dash. NOTE—Regulator mounted on rubber cushions (separate ground wire attached to case).

REPLACEMENT NOTE—This 2-unit regulator superseded by new 3-unit type No. 01-A-10505C.

Cutout Relay

Cuts In—5.8-6.3 volts at operating temperature.

Cuts Out—5.5 amperes max. (Cold 60°), 1.7 amperes (Hot 180°)—***see Regulator article in Electrical Equipment Section for specifications at other temperatures.***

Voltage-Current Regulator

Voltage Setting—6.9-7.2 volts at 70-80°F.

Current Setting—30-33 amperes.

Regulator Checking & Adjustment—***See Ford Regulator article in Electrical Equipment Section for complete testing data.*** Not adjustable (case sealed).

LIGHTING

Headlamps—Ford (Corcoran-Brown) Two-Lite, Prefocused type (1939), Ford Sealed Beam type (1940). Upper and lower beams controlled by Beam Selector switch on toeboard.

Headlamp Adjustment—With upper beams lighted, aim each headlamp straight ahead so that beam centered on vertical line directly ahead of lamp upper edge of beam at lamp center height (1939), hot spot centered on horizontal line 3" below lamp center height (1940) at distance of 25 feet.

Beam Indicator—Red jewel on instrument panel in upper left hand corner (1939), directly above speedometer (1940). Lighted with Upper Beams "on".

Switches—1939

Lighting—R-B-M. Ford No. 91-A-11653-B (switch and wiring assembly), 81-A-11657 (body and contact assembly).

Beam Selector—R-B-M. Ford No. 81-A-13532.

Instrument—Ford No. 99A-13740.

Stop Light—Ford No. 91A-13480.

Switches—1940

Lighting—R-B-M Model 6425. Ford No. 01A-11652. Switch mounted on instrument panel with separate Beam Selector Switch on toeboard. Light Switch Knob & Insert Ford No. 09A-11661-B.

Beam Selector—R-B-M Model 2480. Ford No. 81A-13532 (Switch only), No. 01A-11653-A (with Wiring).

Instrument—Ford No. 09A-13740-A.

Stop Light—Ford No. 11A-13480.

Bulb Specifications

Position	Candlepower	Mazda No.
Headlamps (1939)	32-32	2330
Headlamps (1940)	Sealed Beam	
Parking	1.5	55
Instrmt., Beam Ind.	1	51
Stop & Tail	21-3	1158
Pillar	3	63
License Plate	3	63

MISC. ELECTRICAL

LIGHTING CIRCUIT BREAKER (1939): Ford No. 91A-12250 (Circuit Breaker) or No. 40-12250 (Fuse Block). Mounted on rear of dash under cowl with Ignition Resistor as an assembly. Vibrating type circuit breaker serviced by No. 01-A-12250 (1940 type).

Fuse Capacity—20 amps. (for 40-12250 Fuse Block).

LIGHTING CIRCUIT BREAKER (1940): R-B-M 6700, Ford No. 01A-12250. Combined with Ignition Resistor on block on dash under cowl. Combination thermostatic and wound-coil type. Contacts open at 50 amperes and vibrate to control current.

HORNS:—Air Electric type dual horns. Ford N . 91A-13832 (high note), 91A-13833 (low note).

Horn Current—24-28 amperes (total).

Horn Relay:—R-B-M Model 4700, Ford No. 91A-13842.
Contact Closing Voltage—3.5-4.5 volts.
Current Draw—Approximately ¾ ampere.

ENGINE

ENGINE SPECIFICATIONS:—Own 95. 8 Cylinder, 90° Vee, L head. Both banks & crankcase cast enbloc.
Bore—3.187". **Stroke**—3.75".
Rated Horsepower—32.5. **Displacement**—239 cu. ins.
Developed Horsepower—95 at 3600 RPM.
Compression Ratio—6.30-1 (Pass. Cars, Ford Comm.), 5.9-1 (Ford Trucks). Cast-iron heads.
Compression & Vacuum Reading—***See Tune-up data.***

OIL PAN REMOVAL: ***See Ford Shop Notes.***

CYLINDER HEAD: Tightening Torque and Cylinder Head Diagram—***See Ford Shop Notes.***

►**Re-working Head for Improved Cooling:** ***See Ford Shop Notes for instructions (and new Head Gaskets).***

CYLINDER SLEEVES:—Hardened, dry type cylinder sleeves used on engines marked 'HS' on cylinder block above upper front corner of left cylinder head.

Servicing:—***See Ford Shop Notes for complete data.***

PISTONS:—Steel alloy, light weight, cam ground type (Mercury), Aluminum alloy, T-slot type (Ford Trucks). Recondition engine for finished replacement pistons.
Weight—Without rings or pin, 358-362 grams (Mercury), 364-368 grams (Ford Truck).
Removal—Pistons and rods removed from above.
Clearance—See Fitting New Pistons.

Replacement Pistons:—***See Ford Shop Notes for data.***

Fitting New Pistons: Use .50" wide feeler stock of correct thickness (see Table below) inserted between piston and cylinder wall at right angles to

. C NTINUED N NEXT PAGE

ENGINE

CONTINUED FROM PRECEDIN PAGE

pin to check clearance. Pull required to withdraw feeler should be 6-10 lbs. (all types).

Engine With Sleeves	Feeler Thickness Steel Piston	Aluminum Piston
New Piston & Sleeve	.003"	.003"
New Piston—Worn Sleeve	.004"	.004"
Worn Piston & Sleeve	.005"	.005"
Engines Without Sleeves		
New Piston & Bore	.0025"	.002"
New Piston—Worn Bore	.004"	.004"
Worn Piston & Bore	.005"	.005"

PISTON RINGS:—Two compression, one slotted oil ring, all above pin (drain holes in oil ring groove).

NOTE—Expander used with #2 Compr. and oil ring.

Ring	Width	End Gap	Side Clearance
Compr. #1	.0915-.0920"	.012-.017"	.0025-.003"
Compr. #2	.0915-.0920"	.012-.017"	.002-.0025"
Oil Contr.	.1535-.1540"	.012-.017"	.0015-.002"

Replacement Rings:—*See Ford Shop Notes for data.*

PISTON PIN: Diameter—.7501-.7504". **Length**—2.975" (with steel pistons), 2.850" (with aluminum pistons). Pin hole in connecting rod bronze-bushed.

Pin Fit in Piston—.0001-.0002" clearance (aluminum pistons), .0003-.0009" clearance (steel pistons) or light hand push fit with piston at 70°F.

Pin Fit in Rod Bushing—.0002-.0005" clearance (pin should pass through bushing slowly of own weight).

See Ford Shop Notes for Pin Fitting directions.

Replacement Pins: *See Ford Shop Notes.*

CONNECTING ROD:—**Length 7.002". Weight 488 grams.**

Crankpin Journal Diameter—2.139" (connecting rod diameter on crankpin—2.360").

Bearing Type—Steel-backed, special-alloy lined. Bearing floats in both rods (side-by-side mounting) with bearing surface on both inner and outer face.

Bearing Dimensions—Length 1.747". Thick. .1095".

Clearance—.0015-.0035" (see Bearing Adjustment).

Sideplay—.003-.007" (bearing endplay), .006-.014" (side clearance for both rods).

Bearing Adjustment: None (no shims). Do not file bearing caps. Replace bearings if less than .1085" thick, replace or hone rods for oversize bearings if worn more than .0015" over original size of 2.3597-2.3603". CAUTION—Both rods must be same size.

Replacement Bearings: *See Ford Shop Notes.*

Installing Rods:—Marks on rods and caps must be together and installed in same numbered cylinder with marks pointing down toward oil pan.

CRANKSHAFT:—3 bearing. Integral counterweights.

Journal Diameters—2.499" (all bearings).

Bearing Type—Steel-backed, special-alloy lined.

Clearance—.001-.003".

Bearing Adjustment:—None (no shims). Do not file.

End Thrust:—Taken by rear main bearing. Adjust by replacing bearing. **Endplay**—.002-.006".

Replacement Bearings: *See Ford Shop Notes.*

CAMSHAFT:—3 bearing. Helical gear drive (2 types of camshaft gears used—Bakelized Fabric pressed on shaft or new Aluminum Alloy type bolted on shaft).

Bearing Diameters—1.797" all bearings. Replace camshaft if worn to less than 1.7955" diameter.

Bearings—Steel-backed, babbitt-lined bushings.

Clearance—.002".

End Thrust:—Taken by gear hub and cover plate. Adjusted by replacing coverplate. **Endplay**—.005-.015".

Timing Gears:—Cast alloy iron (crankshaft), Bakelized Fabric—pressed on shaft, or Aluminum Alloy—bolted on shaft (camshaft). **Backlash—.004" max.**

See Ford Shop Notes for Timing Gear Replacement.

Camshaft Setting:—Mesh '0' marked tooth of crankshaft gear with '/' marked space on camshaft gear (this mark must be in line with mark on hub).

VALVES:—	Head Diameter	Stem Diameter	Length
All Valves	1.537"	.3115"	4.750-4.751"

	Seat Angle	Lift	Stem Clearance
All Valves	45°	.292"	.0015-.0035"

NOTE—Service limit for valve stem diameter is .309" Intake, .3065" Exhaust. Valves interchangeable.

See Ford Shop Notes for Valve Servicing data.

NOTE—Seat inserts used for all valves.

Valve Guides:—Split type retained by 'C' washer and valve spring. NOTE—Replace both halves of all guides measuring less than .6665" (thickness of guide half and valve stem at top of guide with valve of .311" stem diameter in place in guide).

For Valve Guide servicing data, see Ford Shop Notes.

Valve Lifters:—Barrel type in reamed holes in block. **Diameter**—.9995". Replace if worn to less than .998" in diameter or length less than 1.710" after any necessary resurfacing of ends (cast type can be resurfaced on both ends, pressed steel type on bottom end only).

Clearance—.0005-.0015". Lifter should slip into hole in block of own weight.

Valve Springs:	Pressure	Length
Valve Closed	37-40 lbs.	2.13"
Valve Open	76-80 lbs.	1.84"

NOTE—Replace spring if the pressure is less than 30 lbs. when compressed to 2.125".

VALVE TIMING

Tappet Clearance: .010-.012" Intake, .014-.016" Exh.

Valve Timing:—See Camshaft Setting above.

Intake Valves—Open at TDC. Close 44° ALDC.

Exhaust Valves—Open 48° BLDC. Close 6° ATDC.

To Check Valve Timing—No flywheel marks provided. Intake valve opens with piston at TDC.

LUBRICATION

LUBRICATION:—Pressure. Gear type oil pump mounted in crankcase at rear of engine.

Oil Pan Removal: *See Ford Shop Notes.*

Normal Oil Pressure:—30 lbs. at 2000 R.P.M.

Oil Pump and Oil Pressure Regulator: *See "Oil Pump" in Ford Shop Notes for data.*

Oil Pressure Gauge:—King-Seeley Electric. Ford No. Dash Unit: 99A-9273 ('39), 09A-9273 ('40). Engine unit: 48-9278 (all models).

See Miscellaneous Section for complete data.

Crankcase Capacity:—5 qts.

COOLING

COOLING SYSTEM:—Capacity 22 qts.

Water Pump:—Packless type, 2 used (1 for each bank).

See Water Pump Section for complete data.

Removal—Slack off drive belt, support engine at forward end, remove front engine mounting bolts, take out mounting screws in pump body.

Thermostat:—In each cylinder head outlet (2 used).

Setting—Starts to open at 145°F. Fully open 180°.

Temperature Gauge:—King-Seeley Electric. Ford No. Dash Unit: 99A-10883 ('39), 09A-10883 ('40). Engine Unit: 99A-10884 (all models).

See Miscellaneous Section for complete data.

CLUTCH

CLUTCH:—Long Model 9CF-CS. Single, plate, dry disc, semi-centrifugal type.

See Clutch Section for complete data.

Facings—Moulded type, 2 required. Inside Diam. 5.76". Outside Diameter 9". Thickness .137".

Adjustment:—Pedal free movement must be 1.0-1.25". To adjust, remove pin at throw-out shaft lever end of connecting link, turn clevis on link rod.

NOTE—Pedal free movement 1.5-1.75" for '39 cars.

Removal:—Slide rear axle and transmission to rear as a unit to expose clutch (See Transmission Removal (below), take out mounting screws in cover.

TRANSMISSION

TRANSMISSION:—Own Make. Constant-mesh, synchro-mesh (second & high), sliding gear (low & reverse), all helical gear type.

See Transmission Section for complete data.

Transmission Control (09A):—Steering col. shift Std.

See Transmission Section for complete data.

Removal:—Disconnect rear shock absorbers, hand brake cables, hydraulic brake line (at torque tube connection—bleed lines when re-connected), speedometer cable, shock absorber links. Disconnect rear spring at center frame connection. Take out universal joint ball housing screws, slide rear axle assembly back to disengage drive shaft at splined joint. Support engine at rear, take out rear engine mounting bolts, remove clutch housing screws, pull transmission straight back.

NOTE—Disconnect gear shifter rods from levers at transmission on 1940 models.

UNIVERSALS

UNIVERSAL JOINT:—Spicer 6454-SF ('39), 202-6 ('40). Steel bushing type. 1 joint to rear of transmission.

See Universals Section for complete data.

REAR AXLE

REAR AXLE—Own make. ¾ floating, Spiral Bevel gear type with Torque Tube drive.

See Rear Axle Section for complete data.

Ratio—3.54-1 Std., 3.78-1 Optl.

Backlash—.010" max.

Optional Axle:—Columbia Two-speed type.

See Rear Axle Section for complete data.

Removal:—Disconnect rear shock absorbers, hand brake cables, hydraulic brake line (at torque tube connection—bleed lines when re-connected), speedometer cable, shock absorber links. Disconnect rear spring at center frame connection. Take out universal joint ball housing screws, pull axle assembly to rear to disengage drive shaft at splined joint.

Axle Shaft Removal—*See Mercury Rear Axle article in Rear Axle Section.*

SHOCK ABSORBERS

SHOCK ABSORBERS:—Houde (Houdaille). Front—BBDK (1939), BBDM (1940). Rear—BBDW (1939), BBCX (1940). Double acting, hydraulic, adjustable.

See Shock Absorber Section for complete data.

FRONT SUSPENSION

Front Suspension:—Conventional 'I' beam section front axle with Reverse Elliott ends and transverse spring. Axle positioned by radius rods.

Kingpin Inclination—8° crosswise.

Caster—9° Max., 4½° Min. Must be equal within ½°. Axle may be bent cold to correct caster if proper tools (to prevent axle damage) are used.

Camber—1° Max., ¼° Min. Must be equal within ¼°, right wheel must not exceed left. Adjust in same manner as for caster (see caster data above).

Toe In—1/16". Set at 1-10 ratio to Camber. Adjust by loosening clamp bolts and turning tie rod.

Steering Geometry (Toe Out on Turns)—Outer wheel turned 20°, Inner wheel 23⅓°. No adjustment.

STEERING GEAR

Steering Gear: Gemmer Model 305. Worm-and-Roller type with "push-pull" adjustments.

See Steering Gear Section for complete data.

BRAKES

BRAKES:—Service. Lockheed hydraulic, double anchor type. Hand lever applies rear service brakes.

See Brake Section for complete data.

Drum—Cast iron. Diameter 12".

Wheel Cylinders—Stepped type as follows: Front Wheel....1.25"-1.00". Rear Wheel....1.125"-1.00".

Lining—Woven (forward shoes), Molded (rear shoes). Width 1.75". Thickness .20". Length per shoe 13.18" (forward shoes), 10.1" (rear shoes).

Clearance—Least possible amount without drag.

Hand Brake:—See Service Brakes above.

MISC. MECHANICAL

1940 Power Operated Conv. Top: Vacuum Power type.

See Miscellaneous Section for complete data.

COMMERCIAL & TRUCK NOTE:—All Engine data below applies also to Ford Commercial & Truck Models with V8 '100' engine. See Ford Commercial & Truck articles for all other data.

ENGINE HOOD NOTE:—Hood is Alligator type with release knob under instrument panel to left of steering column. To raise hood, pull out on release knob (hood will raise slightly), press in on safety catch under front edge of hood.

OIL PAN REMOVAL:—*See Ford Shop Notes for data.*

MODEL IDENTIFICATION

SERIAL & ENGINE NUMBER:—Stamped on top of clutch housing and on left frame rail (near gen.).

TUNE-UP

COMPRESSION: Ratio—6.6-1 (Pass. Car, Comm'l, ¾ & 1 Ton), 5.9-1 ('41 Other Trucks), 6.4-1 ('42 Other Trucks). All heads cast-iron except 6.6-1 '41 Alum. **Pressure**—116 lbs. (6.6-1), 106 lbs. (5.9-1), 120 lbs. (6.4-1) at cranking speed (100 RPM).

VACUUM READING:—Steady 18-20" idling at 5-7 MPH.

FIRING ORDER:—1-5-4-8-6-3-7-2. See wiring diagram

SPARK PLUGS:—Champion H-10. 14 MM. Metric. **Gaps**—.025".

IGNITION: See Coil, Condenser, and Distributor. Breaker Gap—.014-.016" **Cam Angle** 36° closed (both sets with correct coil loading lead). **Automatic Advance**—8° max. at 950 RPM (78-12127 Distr.), 11° max. at 600 RPM (11A-12127 & 21A-12127 Distr.). Distributor degrees and RPM.

IGNITION TIMING: See Ignition Timing. Std. Setting—4° BTDC. No flywheel marks provided. See Ignition Timing for method of timing ignition and Vacuum Brake adjustment.

CARBURETION: See Carburetor & Carb. Equipment. Idle Setting—Both idle screws ⅝-¾ turn open or set for highest steady vacuum gauge reading. Idle speed 5-7 MPH (Cars with Std. Trans.), 350 Eng. RPM. (Cars with Liquamatic Drive Trans.). **Float Level**—Fuel level 11/16" plus or minus 1/32" below top edge of float bowl. **Accelerating Pump**—Inner (#1) hole—Summer, Center (#2) hole—Winter, Outer (#3) hole—Extreme Winter temperatures.

Fuel Pump Pressure: 3½ lbs. maximum.

VALVES: See Valve Timing. Tappet Clearance—.010-.012" Intake, .014-.016" Exh.

STARTING: See Battery, Starter, Generator, Regulator.

IGNITION

Ignition Switch:—Oakes Steering Column & Ignition Lock Assy. No. 302370 (1941 First Cars), Ford No. 19A-3676A; 302595 (1941 After approx. Nov. 15, '40), Ford No. 19A-3676B; 302758 (1942), Ford No. 29A-3676. Ignition Switch No. 302513 (1941 First Cars), 302606 (1941 Later Cars), 302494 (1942).
NOTE—First type 1941 switch has Starter Button in lock body, later type 1941 switch has starter button mounted separately on instrument panel.
Lock Cylinder—Hurd or Briggs & Stratton #80935. Ford No. 19A-3686A (19A-3676A Lock Assy)., 91A-3686A (19A-3676B & 29A-3676 Lock Assy.) with keys. **Key Series**—FK000 to FK999. **Groove**—No. 17.

COIL: Ford No. 78-12036 or 81A-12036 (1941), IGA-12024 (1942). 1941 type Ignition Coils are mounted on ignition unit as part of Ignition Assembly. 1942 type Ignition Coil is new type coil mounted separately on bracket on left of engine.

Ignition Current—4½-6 amperes (engine stopped). Ignition primary circuit resistance 1-1⅓ ohms.
Resistor Unit—Connected in coil primary circuit. Mounted on Circuit Breaker Assembly 11A-12250-A.

CONDENSER: Ford Part No. 78-12300 (78-12036 Coil), 81A-12300 (81A-12036 Coil), IGA-12300B (IGA-12036 Coil).
Capacity—.33-.36 mfd. (78-12300 & 81A-12300), .29-.32 mfd. (IGA-12300B).

DISTRIBUTOR (1941): Ford No. 78-12127 or 11A-12127 (less Coil, Caps, & Plate). Double breaker, 8 lobe cam, full automatic advance with Vacuum Brake control (see Ignition Timing for adjustment). Both types alike except for automatic advance. Same design as used on Ford V8 and previous Mercury cars.
Breaker Gap—.014-.016" (both sets). Use special two step feeler—.014" step 'go', .016" step 'no go'.
Cam Angle—36° closed, 9° open. For both sets operating together with correct coil-loading lead.
Breaker Arm Spring Tension—20-24 ozs.
Rotation—Clockwise viewed from drive end.

No. 78-12127

Distributor Degrees	Automatic Advance R.P.M.	Engine Degrees	R.P.M.
Start	200	0	400
8	950	16	1900

NOTE—Limits are 7½-8½° (distributor).

No. 11A-12127

Distributor Degrees	Automatic Advance R.P.M.	Engine Degrees	R.P.M.
Start	200	0	400
11	600	22	1200

NOTE—Limits are 10½-11½° (distributor).

Removal:—Ignition unit mounted on front of engine. To remove, disconnect vacuum line, take off caps, take out screws in mounting flange.

DISTRIBUTOR (1942): Ford No. 21A-12127 (less Terminal Housing). New flat ignition unit (coil is sepa-

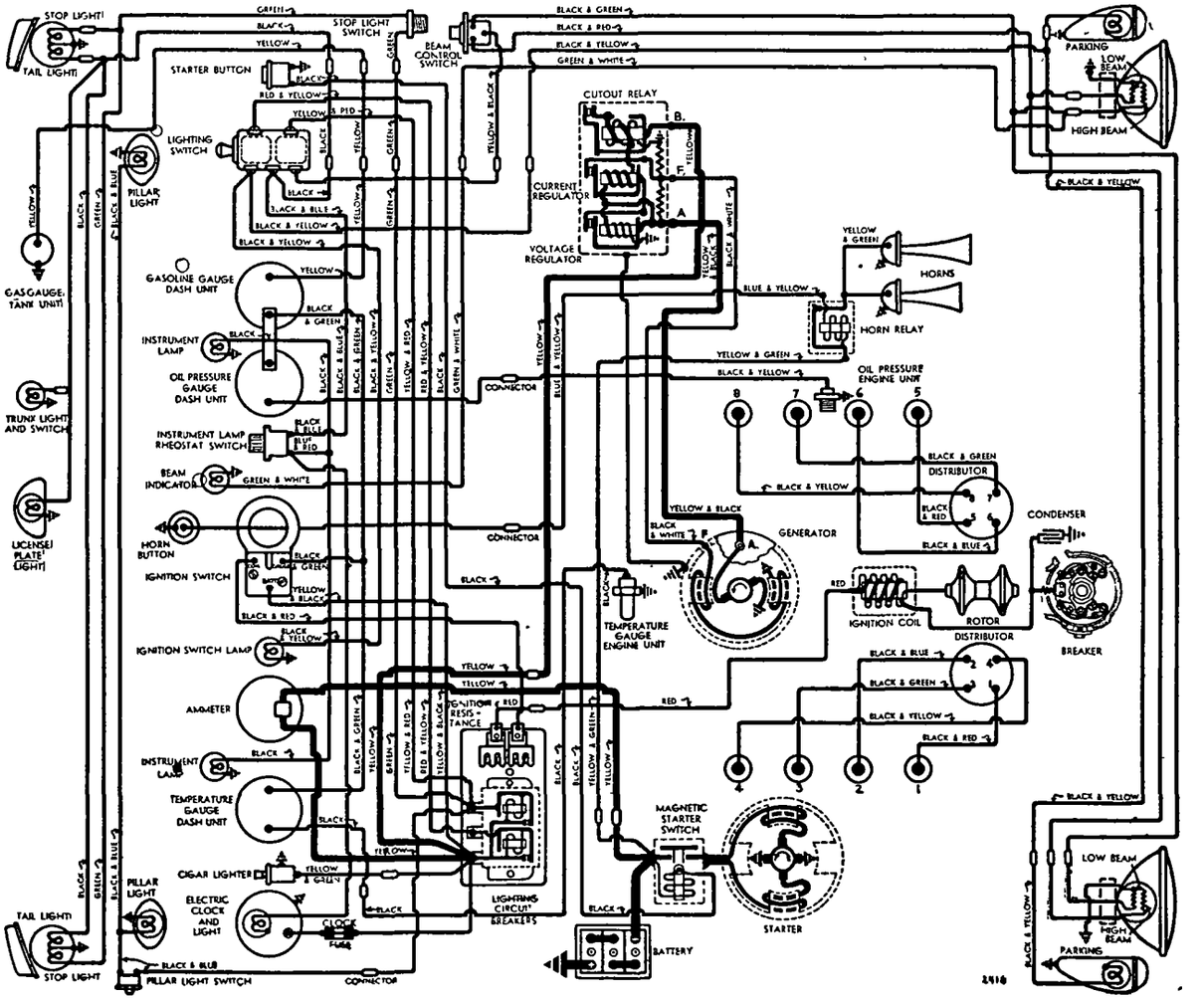

1941 MODELS

rate) mounted on front of the engine and driven directly off end of camshaft. Double breaker, 8 lobe cam, full automatic advance type with Vacuum Brake control (breaker design unchanged).
Breaker Gap—.014-.016" (both sets). Use special two step feeler—.014" step 'go', .016" step 'no go'.
Cam Angle or Dwell—Approx. 36° closed, 9° open. Set dwell at 80% (limits 78-80% at 2000 RPM.) on Ford Test Set. For both sets operating together with correct coil-loading lead.
Breaker Arm Spring Tension—20-24 ounces.
Rotation—Clockwise viewed from drive end (counter-clockwise viewed from front of car).

No. 21A-12127

Distributor Degrees	Automatic Advance R.P.M.	Degrees	Engine R.P.M.
Start	200	0	400
11	600	22	1200

NOTE—Limits are 10½-11½° (distributor degrees).

Removal:—Distributor mounted on front of engine. To remove, disconnect primary lead, remove distributor cap, take out mounting screws in distributor flange, lift unit out.

IGNITION TIMING

IGNITION TIMING:—See Vacuum Brake Setting for final adjustment dependent on operating conditions.

	Flywheel Degrees	Piston Position
All V8 Engines	4° BTDC	.0058" BTDC.

Timing—Manufacturer recommends use of Ford Laboratory Test Set (Heyer H1) with Distributor Stroboscope (Heyer H1-DFZ). On Stroboscope set timing index at 2° before top dead center, set peepsight at Zero, adjust distributor by loosening adjusting screw in slot on left side of housing and moving screw up (to retard spark), down (to advance spark) in slot until Stroboscopic disc light is in line with peepsight, tighten adjusting screw.

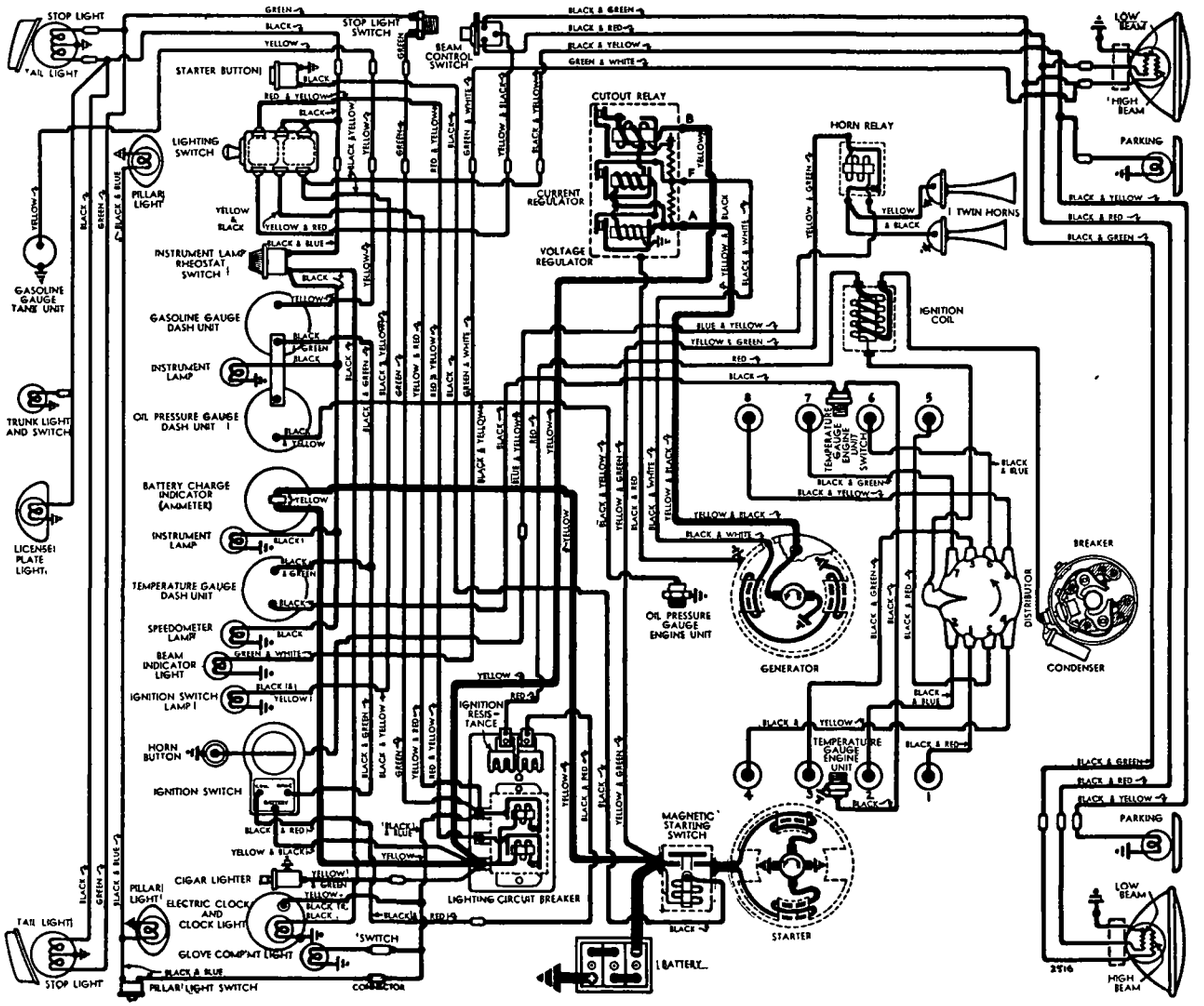

1942 M DELS

Timing (On Engine)—No flywheel marks provided and timing should be set with piston on top dead center. With #1 piston on top dead center entering power stroke, loosen timing adjusting screw on left hand side of ignition unit housing, place screw in retard position at lower end of slot, move screw slowly up until timing contacts begin to open, note graduation on plate under screw head which is in line with reference mark on housing, move screw up exactly one additional graduation, tighten screw. NOTE—Dead center position can be determined by inserting gauge rod in cylinder or by measuring to tops of #2 and #3 pistons (should be equal).
Vacuum Brake Setting—Should be adjusted to eliminate pinging when engine operated with load. To adjust, loosen locknut, back off adjusting screw until engine pings with load, then turn screw in just enough to eliminate ping, tighten locknut. When adjusted on the stroboscope, vacuum brake should retard spark to peep sight with peep sight set at 2° when distributor is driven at 950 RPM. (78-12127), 650 RPM. (11A-12127 & 21A-12127) with no vacuum to release brake.

CARBURETOR

Holley (Chandler-Groves) Model AA-1, Ford No. 91A-9510A (1941), 21A-9510A (1942—and replacement for 1941 type). Dual, downdraft type.
NOTE—New 1942 carburetor has bowl vent at rear and must be used with new type higher fan (bowl vent location prevents fuel fluctuations in bowl from cooling air fan blast).
For complete data, refer to Carburetor Index.
Idle Adjustment—With engine warm, choke valve wide open, and Fast Idle inoperative, set throttle lever stopscrew for 5-7 MPH. idling speed, turn each idle adjusting screw (one for each barrel, adjust in succession) in until engine begins to miss, then out until engine begins to roll, finally turn screw in until engine fires smoothly. Final setting should be approximately ⅝-¾ turn of screw from inner seated position. Readjust stopscrew for correct idling speed of 5-7 MPH. NOTE—Vacuum gauge recommended (set for highest steady reading).
Liquamatic Drive Idle Speed Note—Set idle speed for cars with Liquamatic Drive at 350 RPM.
Accelerating Pump Setting—Three holes provided in the throttle lever for pump rod link connection. Adjust for seasonal requirements as follows:
#1 (Inner) Hole—Summer or Hot weather.
#2 (Center) Hole—Average fuel and weather.
#3 (Outer) Hole—Extremely Cold weather.
Float Level—Use 9550-A gauge to set the float level (1.353" end 'Go', 1.332" end 'No Go') measuring from underside of bowl cover to bottom of float (with cover and float assembly inverted). Fuel level in bowl should be 11/16" plus or minus 1/32".
Metering Jets—*See Holley Chandler-Groves (Ford) Jet Specification Table in Carburetor Section.*

CARB. EQUIPMENT

Air Cleaner:—Ford No. 19A-9600-A oil-wetted type standard. Heavy duty oil-bath type optional.
Fast Idle:—Integral with carburetor. Operated by choke valve lever. No adjustment required.
Fuel Pump:—AC 'R' No. 1537383—Exchange No. 541, Ford No. 11A-9350 diaphragm type fuel pump.
For complete data, refer to Carburetion Equip. Index.
Pressure—1½-2¾ lbs.

CONTINUED ON NEXT PAGE

CONTINUED FR M PRECEDING PAGE

Gasoline Gauge: King-Seeley Electric. Ford Nos.
Dash Unit—19A-9280 (1941), 29A-9280 (1942).
Tank Unit—99A-9275B (All Models).
For complete data, refer to Carburetion Equip. Index.

BATTERY

Ford No. 01A-10655A. 6 volt, 17 plate, 120 amp. hr.
Starting Capacity—150 amperes for 20 minutes.
Zero Capacity—300 amperes for 4.0 minutes.
Grounded Terminal—Positive (+) grounded to dash.
Engine Ground—Strap connector between right rear cylinder head and dash.
Dimensions—Length 10.6". Width 7.3". Height 9.2".
Location—On right side in engine compartment.

STARTER

Ford Model No. 18-11002. Armature No. 18-11005.
Drive—Inboard Bendix No. L11FX-10. Ford No. B-11350, or Ford B & S Drive (operates through rubber—no springs are used) Number 91A-11350. Cars with Liquamatic Drive use Barrel Type Bendix N . A-2100. *For complete data, refer to Electrical Equipment Index for Ford B&S Starter Drive article.*
Rotation—Counter-clockwise at commutator end.
Brush Spring Tension—2 lbs. each.
Cranking Engine—100 RPM., 190-215 amperes.

Performance Data

Torque	R.P.M.	Volts	Amperes
4 ft. lbs.	1070	4.6	200
8 "	660	4.3	340
12 "	300	3.65	465
14 "	Lock	3.5	500

Starting Switch:—R-B-M Model 5604, Ford No. 01A-11450-A. Magnetic switch mounted on the dash and controlled by pushbutton on instrument panel. Ford No. 19A-11500 or 21A-11500 (Broadcloth or Leather Trim), 29A-11500-B (Bedford Cord Trim).

Removal:—Starter mounted on right front face of flywheel housing. To remove, take off pan at right of engine, free starter-to-oil pan support bracket, take out through-bolts on commutator end plate.

GENERATOR

Ford Model No. 01A-10000-B (1941), 21A-10000 ('42), Armature No. 01A-10005 (All). Two brush (shunt) type with vibrating type voltage and current regulation. Ventilated by fan on drive pulley.
Charging Rate Adjustment—None. See Regulator.
Maximum Charging Rate—Controlled by regulator and dependent on battery condition and load. To check generator output, disconnect generator field lead at generator, connect both generator terminals together (use short insulated wire). Use 'BRS' set or rheostat connected across battery terminals and apply load until voltage is exactly 6 volts. Connect ammeter in charging line, run engine, check output at 2 speeds given in performance table below. Restore original connections after completing test. **Do not operate generator in service with both terminals connected together. This eliminates all regulator action and will damage generator.**

Performance Data

Amperes	Engine RPM.
Start	520
30	1060
30	2500

Rotation—Counter-clockwis at commutator end.
Field Current—2.1 amperes at 6.0 volts (field resistance 2.88 ohms at 70°F.).
Brush Spring Tension—Approximately 28 ozs.
Removal:—Generator mounted on bracket between cylinder banks at front of engine, driven in tandem with water pumps by Vee belt. To remove, loosen nut on bracket stud.
Belt Adjustment:—1" deflection midway between generator and water pump pulleys. NOTE—Generator mounting bracket modified to include fan mounting (fan driven by a separate belt). Both belts adjusted in same manner by loosening mounting bolt and raising mounting brackets.

REGULATOR

Ford Model No. 01A-10505-C. Three-unit Type. Consists of Cutout Relay, vibrating Voltage Regulator and vibrating Current Regulator (separate units) in single case on engine side of dash.
For complete data, refer to Electrical Equipment Index.
NOTE—Regulator case is grounded through separate ground wire extending to generator frame.

Cutout Relay

Cuts In—5.8-6.3 volts at operating temperature.
Cuts Out—8 ampere discharge current maximum.

Voltage Regulator

Setting—6.9-7.2 volts at 70-80°F.
Checking & Adjusting—*Refer to Electrical Equipment Index for 'Ford Regulator 3-Unit Type' article.*

Current Regulator

Setting—30-33 amperes hot (after 5 minutes run).
Checking & Adjusting—See Voltage Regulator above.

LIGHTING

LIGHTING:—Headlamps—Ford Sealed Beam type.
For complete data, refer to Electrical Equipment Index.
Headlamp Adjustment—Aim upper beam straight ahead (hot spot center 3" below lamp center height).
Beam Indicator—Red jewel on instrument panel directly above speedometer dial (1941), on lower edge (1942). Lighted with Upper Beams "on".
Direction Signal—*Refer to Electrical Equip. Index.*

Switches

Lighting—R-B-M Model 2445, Ford No. 11A-11652. Light Switch Knob & Insert Ford No. 19A-11661 (1941), 29A-11661A (1942 Cars with Broadcloth and Leather Trim) 29A-11661B ('42 with Bedford Trim).
Beam Selector—R-B-M. Ford No. 11A-13532 (switch only). Switch & Wiring Assy. Ford No. 11A-11653 (1941), 29A-11653 (1942).
Instrument—Ford No. 19A-13740.
Stop Light—Ford No. 11A-13480.
Direction Signal—Ford No. 29AS-13335 (in Turn Indicator Kit No. 29AS-18440).

Bulb Specifications

Position	Candlepower	Mazda No.
Headlamps	Sealed Beam	
Parking, Instrument, Clock	1½	55
Beam Indicator, Ign. Lock	1	51
Stop & Tail	21-3	1154
Stop (Station Wagon)	21	1129
Tail (Station Wagon)	3	63
Rear License, Dome Trunk	3	63

NOTE—When Direction Signal used, Parking Light is combined with front Direction Signal (21-3 cp. bulb, Mazda No. 1154). Direction Signal Indicator bulb on instrument panel is 1½ cp. Mazda No. 55.

MISC. ELECTRICAL

LIGHTING CIRCUIT BREAKER:—Ford No. 11A-12250A. Combined with Ignition Resistor on block on dash under cowl. Consists of two separate circuit breaker units (on unit protects headlight circuits, second unit protects ther lighting circuits) of the thermostatic and wound-coil type. Contacts open with current of 50 amperes and vibrate to control current.
FUSES:—Electric Clock—2 amperes.
Liquamatic Drive—15 amperes. In connector in feed wire from ignition switch to relay (on dash).
HORNS:—Air Electric type dual horns. Ford No. 91A-13832 (High Note), 91A-13833 (Low Note).
Horn Current—24-28 amperes (total).
Horn Relay:—R-B-M Ford No. 11A-13842-D.
Contact Closing Voltage—3.5-4.5 volts.
Current Draw—Approximately ¾ ampere.

ENGINE

ENGINE SPECIFICATIONS:—Own 100. 8 Cylinder, 90° Vee, L head. Both banks & crankcase cast enbloc.
Bore—3.187". **Stroke**—3.75".
Rated Horsepower—32.5. **Displacement**—239 cu. ins.
Developed Horsepower—100 at 3800 RPM.
Compression Ratio and Pressure—As follows:

Car Model	Ratio	Lbs.	RPM	Pressure Lbs.	RPM
'41 Mercury①	6.6-1	145	at 2000	116	at 100
'42 Mercury①	6.6-1	150	at 2200	116	at 100
'41 Ford V8②	5.9-1	135	at 2200	106	at 100
'42 Ford V8②	6.4-1	152	at 2300	120	at 100

①—Ford V8 '100' HP Commercial, ¾ & 1 Ton Trucks.
②—Ford V8 '100' HP All Other Truck Models.
Vacuum Reading—Steady 18-20" at 5MPH.
OIL PAN REMOVAL: *See Ford Shop Notes.*
CYLINDER HEAD: Tightening Torque and Cylinder Head Diagram—*See Ford Shop Notes.*
►**Re-working Head for Improved Cooling:** *See Ford Shop Notes for instructions (and new Head Gaskets).*
CYLINDER SLEEVES:—Hardened, dry type cylinder sleeves used on some engines. May carry mark 'HS' on block beside inner front corner of left cyl. head.
Servicing:—*See Ford Shop Notes for data.*
PISTONS:—Steel alloy, light weight, cam ground type or Aluminum alloy, T slot type. Recondition engine to take finished replacement pistons (replace sleeves, install Std. pistons. See Cylinder Sleeves). NOTE—1942 engines equipped with new steel pistons with wide top land (used with new type crankshaft).
Weight—Without rings or pin, 358-362 grams (Mercury), 364-368 grams (Ford Truck).
Removal—Pistons and rods removed from above.
Clearance—See Fitting New Pistons.
Replacement Pistons:—*See Ford Shop Notes for data.*
Fitting New Pistons:—Use .50" wide feeler stock t correct thickness inserted between piston and cylinder wall at right angles to pin to check clearance. Pull to withdraw feeler 6-10 lbs. (all types).

Engine With Sleeves	Feeler Thickness Steel Piston	Aluminum Piston
New Piston & Sleeve	.003"	.003"
New Piston—Worn Sleeve	.004"	.004"
Worn Piston & Sleeve	.005"	.005"
Engines Without Sleeves		
New Piston & Bore	.0025"	.002"
New Piston—Worn Bore	.004"	.004"
Worn Piston & Bore	.005"	.005"

PISTON RINGS:—Two compression, one slotted oil ring, all above pin (drain holes in oil ring groove). NOTE—Expander used with #2 Compr. and oil ring.

Ring	Width	End Gap	Side Clearance
Compr. #1	.0915-.0920"	.012-.017"	.0025-.003"
Compr. #2	.0915-.0920"	.012-.017"	.002-.0025"
Oil Contr.	.1535-.1540"	.012-.017"	.0015-.002"

Replacement Rings:—*See Ford Shop Notes for data.*
PISTON PIN: Diameter—.7501-.7504". **Length**—2.975" (with steel pistons), 2.850" (with aluminum pistons).

ENGINE

C NTINUED FR M PRECEDING PAGE

Floating type (locking ring in piston at each end).
Pin Fit in Piston—.0001-.0002" clearance (aluminum pistons), .0003-.0009" clearance (steel pistons) or light hand push fit with piston at 70°F.
Pin Fit in Rod Bushing—.0002-.0005" clearance (pin should pass through bushing slowly of own weight).
See Ford Shop Notes for Pin Fitting directions.
Replacement Pins: *See Ford Shop Notes.*

CONNECTING ROD:—Length 7.000". Weight 488 grams. **Crankpin Journal Diameter**—2.139" (connecting rod diameter on crankpin—2.360").
Bearing Type—Steel-backed, special-alloy lined. Bearing floats in both rods (side-by-side mounting) with bearing surface on both inner and outer face.
Bearing Dimensions—Length 1.747". Thick. .1095".
Clearance—.0015-.0035" (see Bearing Adjustment).
Sideplay—.003-.007" (bearing endplay), .006-.014" (side clearance for both rods).
Bearing Adjustment: None (no shims). Do not file bearing caps. Replace bearings if less than .1085" thick, replace or hone rods for oversize bearings if worn more than .0015" over original size of 2.3597-2.3603". CAUTION—Both rods must be same size.
Replacement Bearings: *See Ford Shop Notes.*
Installing Rods:—Marks on rods and caps must be together and installed in same numbered cylinder with marks pointing down toward oil pan.

CRANKSHAFT:—3 bearing. Integral counterweights.
NOTE—1942 engines equipped with new crankshaft (used in conjunction with new wide land pistons).
Journal Diameters—2.499" (all bearings).
Bearing Type—Steel-backed, special-alloy lined.
Clearance—.001-.003".
Bearing Adjustment:—None (no shims). Do not file.
End Thrust:—Taken by rear main bearing. Adjust by replacing bearing. **Endplay**—.002-.006".
Replacement Bearings: *See Ford Shop Notes.*

CAMSHAFT:—Three bearing. Helical gear drive.
Bearing Diameters—1.797" all bearings. Replace camshaft if worn to less than 1.7955" diameter.
Bearings—Steel-backed, babbitt-lined bushings.
Clearance—.002".
End Thrust:—Taken by gear hub and cover plate. Adjusted by replacing coverplate. **Endplay**—.005-.015".
Timing Gears:—Cast alloy iron (crankshaft), Bakelized Fabric or Alum. bolted on shaft (camshaft).
Backlash—.004" maximum. *Refer to Ford Shop Notes for Timing Gear Replacement data.*
Camshaft Setting:—Mesh '0' marked tooth of crankshaft gear with '/' marked space on camshaft gear (this mark must be in line with mark on hub).

VALVES:—	**Head Diameter**	**Stem Diameter**	**Length**
All Valves	1.537"	.3115"	4.750-4.751"

	Seat Angle	**Lift**	**Stem Clearance**
All Valves	45°	.292"	.0015-.0035"

NOTE—Service limit for valve stem diameter is .309" Intake, .3065" Exhaust. Valves interchangeable.
See Ford Shop Notes for Valve Servicing data.
NOTE—Seat inserts on all valves ('41), exhaust ('42).
Valve Guides:—Split type retained by 'C' washer and valve spring. NOTE—Replace both halves of all guides measuring less than .6665" (thickness of guide half and valve stem at top of guide with valve of .311" stem diameter in place in guide).
For Valve Guide servicing data, see Ford Shop Notes.
Valve Lifters:—Barrel type in reamed holes in block. **Diameter**—.9995". Replace if worn to less than .998" in diameter or length less than 1.710" after any necessary resurfacing of ends (cast type can be resurfaced on both ends, pressed steel on bottom only). **Clearance**—.0005-.0015". Lifter should slip into hole in block of own weight.

Valve Springs:	**Pressure**	**Length**
Valve Closed	37-40 lbs.	2.13"
Valve Open	76-80 lbs.	1.84"

NOTE—Minimum spring tension 30 lbs. at 2.125".

VALVE TIMING

Tappet Clearance:—.010-.012" Intake, .014-.016" Exh.
Valve Timing:—See Camshaft Setting above.
Intake Valves—Open at TDC. Close 44° ALDC.
Exhaust Valves—Open 48° BLDC. Close 6° ATDC.
To Check Valve Timing—No flywheel marks provided. Intake valve opens with piston at TDC.

LUBRICATION

LUBRICATION:—Pressure. Gear type oil pump mounted in crankcase at rear of engine.
Oil Pan Removal: *See Ford Shop Notes.*
Normal Oil Pressure:—30 lbs. at 2000 R.P.M.
Oil Pump and Oil Pressure Regulator: *See "Oil Pump" in Ford Shop Notes for data.*
Oil Pressure Gauge:—King-Seeley Electric. Ford No.
Dash Unit—19A-9273 (1941), 29A-9273 (1942).
Engine Unit—48-9278 (All Models).
See Miscellaneous Section for complete data.
Crankcase Capacity:—5 quarts.

COOLING

COOLING SYSTEM:—Capacity 25½ qt. ('41), 22 qt. ('42).
Water Pump:—Packless type, 2 used (1 for each bank).
See Water Pump Section for complete data.
Thermostat:—In each cylinder head outlet (2 used).
Setting—Starts to open at 145°F. Fully open 180°.
Temperature Gauge:—King-Seeley Electric. Ford No.
Dash Unit—19A-10883 (1941), 29A-10883 (1942).
Engine Unit—99A-10884 (All Models).
See Miscellaneous Section for complete data.
NOTE—Accessory Temperature Gauge Switch (for Other Bank) No. 01A-10990. Kit No. 11A-18381.

CLUTCH

CLUTCH:—Long Model 10CF-TI (Std.), 9CF-CS (with Liquamatic Drive). Semi-centrifugal, single plate, dry disc type. *See Clutch Section for complete data.*
Facings Woven, 2 used. I.D. 6¾", O.D. 10". Thick ⅛".
Adjustment:—Pedal free movement must be 1.0-1.25". To adjust, remove pin at throw-out shaft lever end of connecting link, turn clevis on link rod.
Removal:—Slide rear axle and transmission to rear as a unit to expose clutch (see Transmission Removal below), take out mounting screws in cover.

TRANSMISSION

STANDARD

TRANSMISSION (STD.):—Own Make. Constant-mesh, synchro-mesh (second and high), sliding gear (low and reverse). All helical gear type.
See Transmission Section for complete data.
Transmission Control:—Mechanical steering col. shift.
See Transmission Section for complete data.
Rem val:—Disconnect gear shifter rods at levers on transmission case. Disconnect rear shock absorbers, hand brake cables, hydraulic brake line at torque tube connection (bleed lines when re-connected), speedometer cable. Disconnect rear spring at center frame connection. Take ut universal joint ball housing screws, slide rear axle assembly back to disengage drive shaft at splined joint. Support engine at rear, take out rear engine mounting bolts, and clutch housing screws. Remove transmission.

TRANSMISSION

OPTIONAL

LIQUAMATIC DRIVE (29A):—Consists of fluid coupling & 3 speed automatic transmission (automatic shifting between 2nd & 3rd speeds). Optl. equipment.
See Transmission Section for complete data.

UNIVERSALS

UNIVERSAL JOINT:—Spicer 202-6 Steel bushing type.
See Universals Section for complete data.

REAR AXLE

REAR AXLE: Own Make. ¾ floating, Spiral Bevel Gear Torque Tube drive. *See Rear Axle Section for data.*
Ratio—3.54-1 Std., 3.78-1 & 4.11-1 Optl.
Backlash—.010" maximum.
Removal:—Disconnect rear shock absorbers, hand brake cables, hydraulic brake line (at torque tube connection—bleed lines when re-connected), speedometer cable, shock absorber links. Disconnect rear spring at center frame connection. Take out universal joint ball housing screws, pull axle assembly to rear to disengage drive shaft at splined joint.
Axle Shaft Removal—*See Mercury Rear Axle article*

SHOCK ABSORBERS

Houde. Double acting, hydraulic, adjustable type.

	Houde Model	**Right—Ford No.—Left**	
Front '41	BBCN	11A-18045A	11A-18046A
Front '42	BBCN	21A-18045	21A-18046
Rear	BBCZ	11A-18080A	11A-18081A

See Shock Absorber Section for complete data.

FRONT SUSPENSION

Front Suspension:—Conventional 'I' beam section front axle with Reverse Elliott ends and transverse spring. Axle positioned by radius rods.
Kingpin Inclination—8° crosswise.
Caster—9° Max., 4½° Min. Must be equal within ½°.
Camber—1° Max., ¼° Min. Must be equal within ¼° and the right wheel must not exceed the left. Axle may be bent cold to adjust caster & camber if proper tools (to prevent axle flange damage) used.
Toe In—1/16". Set at 1-10 ratio to Camber.
Steering Geometry—Inner wheel 23⅓°. Outer 20°.

STEERING GEAR

Steering Gear: Gemmer Model 305. Worm-and-Roller type with "push-pull" adjustments.
See Steering Gear Section for complete data.

BRAKES

BRAKES:—Service. Lockheed hydraulic, double anchor type. Hand lever applies rear service brakes.
See Brake Section for complete data.
Drum—Cast iron. Diameter 12".
Wheel Cylinders—Stepped type as follows:
Front Wheel....1.25"-1.00". Rear Wheel....1.125"-1.00".
Lining—Woven (all shoes). Width 1.75". Thickness .20". Length per shoe 13.18" (forward), 10.1" (rear).
Clearance—Least possible amount without drag.
Hand Brake:—See Service Brakes above.

MISC. MECHANICAL

Power Operated Convertible Top: Auto-Lite Electric type. *See Miscellaneous Section for complete data.*

ENGINE HOOD NOTE: Hood is alligator type with release knob under instrument panel to left of steering column. To raise hood, pull out on release knob (hood will raise slightly), press in on safety catch under front edge of hood, lift hood up.

OIL PAN REMOVAL: *See Ford Shop Notes.*

MODEL IDENTIFICATION

SERIAL & ENGINE NUMBER: Stamped on top of clutch housing and on left frame side member near generator.

TUNE-UP

COMPRESSION: Pressure—105-125 lbs. at cranking speed of 100 RPM (Std. 6.75-1 Cast Iron Head).

VACUUM READING: Steady 18-20" idling at 500 RPM.

FIRING ORDER: 1-5-4-8-6-3-7-2 (Cyl. Nos. 1-2-3-4 Right Bank, 5-6-7-8 Left Bank, front-to-rear). See diagram.

SPARK PLUGS: Champion Type H-10. 14 mm. Metric. **Gaps**—.025"

IGNITION: See Coil, Condenser, and Distributor.

Breaker Gap—.014-.016" (both sets).

Cam Angle—36° (both sets operating together).

Breaker Arm Spring Tension—20-24 ozs.

Rotation—Clockwise viewed from drive end (distributor off engine).

Automatic Advance—Starts at 200 RPM. Maximum 11° at 600 RPM (distr. degrees & RPM).

IGNITION TIMING: See Ignition Timing.

Std. Setting—4° BTDC.

Timing Marks—None. See Ignition Timing for directions on setting of distributor for correct timing when installed on engine.

Vacuum Brake Setting—Set to just eliminate pinging when engine operated under load (back off screw until engine pings, then turn screw in until ping is eliminated).

CARBURETION: See Carburetor & Carb. Equipment.

Idle Setting—Both idle screws ⅝-¾ turn open and set for smooth idle and highest steady reading of vacuum gauge (when used). Idle speed 500 RPM. (can be judged by marking fan belt and setting speed for 25 revolutions of the belt in 10 seconds).

Float Level—Fuel level 11/16" (21/32 - 23/32") below top edge of bowl.

Accelerating Pump—Center (#2) hole Normal. Inner (#1) hole—Summer, Outer (#3) hole—Winter, for temperature extremes.

Fuel Pump Pressure: 3½ lbs. maximum (1½-3½ lbs.).

MANIFOLD HEAT CONTROL: Automatic thermostatic control type. Located in exhaust manifold outlet connection of left hand cylinder bank, diverts exhaust gases through by-pass in intake manifold to right cylinder bank when valve closed. See that valve operates freely.

VALVES: See Valve Timing.

Tappet Clearance—.010-.012" Intake, .014-.016" Exhaust, Cold. No adjustment.

STARTING: See Battery, Starter, Generator, and Regulator.

IGNITION

IGNITION SWITCH: Oakes Steering Column & Ignition Lock Assembly No. as follows:

	Steering Col. & Ign. Lock Oakes No.	Ignition Switch Ford No.	Oakes No.	Ford No.
LHD. Cars①	302995	59A-3676A	302494	11A-3680
LHD. Cars②	302960	59A-3676B	302494	11A-3680
RHD. Cars①	302998	59AF-3676D	302494	11A-3680
Sportsman	302992	59A-3676C	302494	11A-3680
Canadian Cars	302970	C59A-3676	302494	11A-3680

①—With Brown Trim. ②—With Grey-Green Trim.

Lock Cylinder—Hurd or Briggs & Stratton No. 80935. Ford No. 91A-3686A (with Keys).

Key Series—FK000 to FK999. **Groove**—No. 17.

COIL: Ford No. 1GA-12024. Mounted separately on left front corner of cylinder block.

Resistor Unit—Connected in coil primary circuit. Mounted on Circuit Breaker Assembly No. 11A-12250.

Ignition Current—4½-6 amperes (engine stopped). Ignition primary circuit resistance 1-1⅓ ohms.

CONDENSER: Ford Part No. 1GA-12300-B. **Capacity**—.29-.32 microfarad.

DISTRIBUTOR: Ford No. 59A-12127 (Less Terminal Housing, Cap, and Rotor). New flat type, single cap, "Sealed Dry" type with "V" outlet. Double breaker, 8 lobe cam, full automatic advance type with Vacuum Brake adjustment. Breaker "loading" and "timing" contacts operation unchanged.

Breaker Gap—.014-.016" (both sets). Use special two step feeler—.014" step "Go", .016" "No Go".

Cam Angle or Dwell—36° closed, 9° open. For both sets operating together with correct coil-loading lead. NOTE—Cam Angle for each set operating singly approximately 22½° closed, 22½° open (50%).

Breaker Arm Spring Tension—20-24 ounces.

Rotation—Clockwise viewed from drive end of unit.

Distributor		**Automatic Advance**	Engine
Degrees	R.P.M.	Degrees	R.P.M.
Start	200	0	400
11	600	22	1200

Vacuum Brake: Consists of a spring-loaded, vacuum controlled, brake piston which bears on edge of

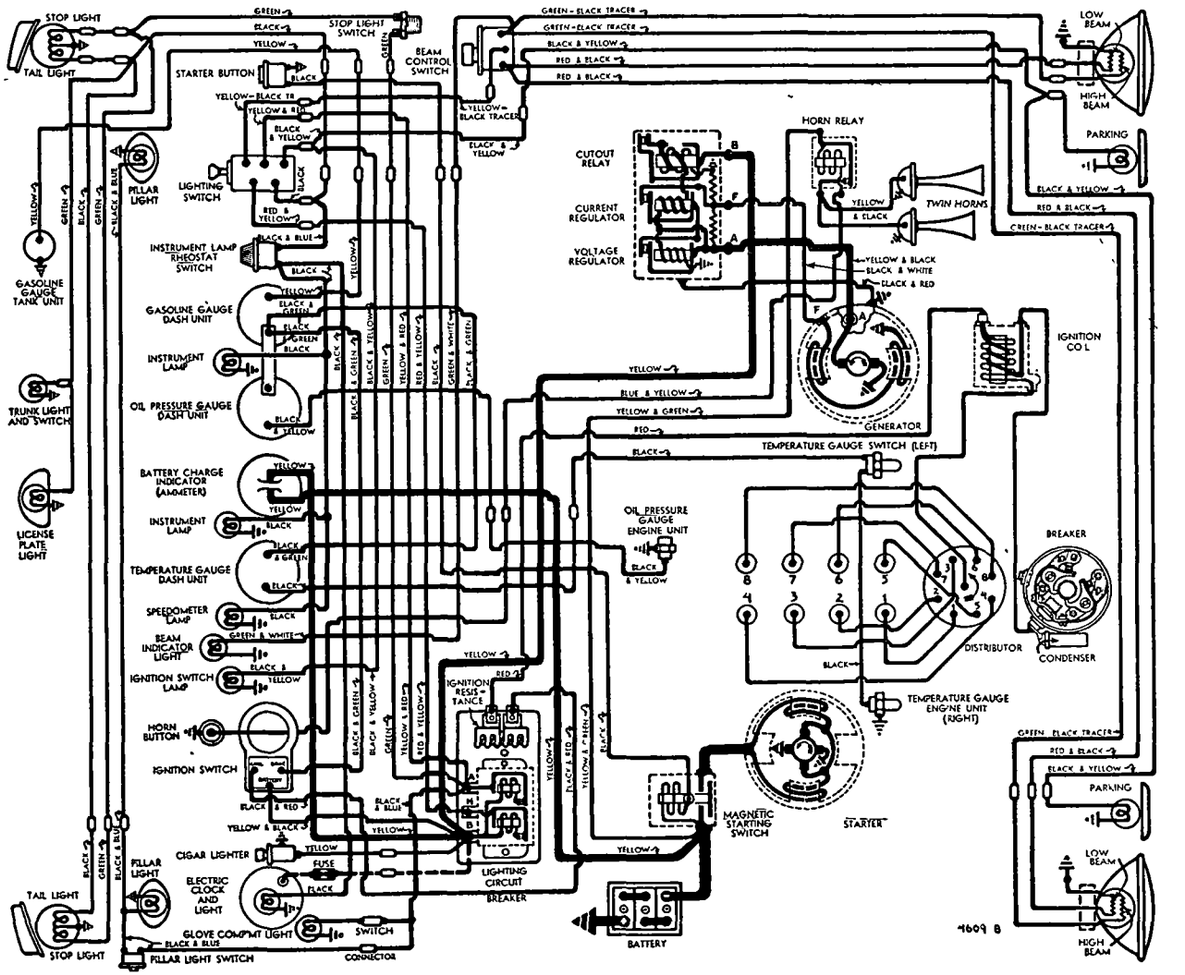

retard disc of breaker advance mechanism and acts as a "drag" to retard normal advance when engine is accelerated or operated under load. Piston is normally held out of engagement by manifold vacuum.

Removal: Distributor mounted on front of engine. To remove, disconnect coil primary lead, unsnap bail clip and remove terminal housing and conduit assembly, remove distributor rotor. Take out two capscrews mounting distributor on engine, remove distributor and gasket. NOTE—Vacuum connection (for Vacuum Brake operation) is through hole in face of mounting flange.

IGNITION TIMING

Std. Setting—See Vacuum Brake Setting for service correction for operating conditions.

	Flywheel Degrees	Piston Position
All Engines	4° BTDC	.0058" BTDC.

Ignition Timing (Basic Setting)—Distributor can be timed for correct ignition timing when off engine as follows: Place a small straight edge or scale against tang on drive end of distributor shaft (scale must be on wide side of shaft), rotate distributor in direction of rotation (clockwise) until trailing edge of scale is exactly ⅜" past the nearest edge of the small mounting hole (left hand hole—nearest vacuum brake) on the mounting flange. If left hand (timing) contacts do not begin to open at this point, loosen adjusting screw on side of distributor housing, move screw down (to advance spark), up (to retard spark), in slot until contacts begin to open, tighten adjusting screw. This setting will provide correct 4° BTDC. ignition timing when distributor installed on engine.

NOTE—Timing is controlled by opening of **left hand breaker contacts** only (right hand contacts "load" coil and open and close earlier than the left hand contacts).

Timing (On the Engine)—No flywheel marks provided. With basic timing of distributor properly set (above), ignition timing will be correct when distributor installed on engine and all necessary adjustments for operating conditions and octane rating of fuel being used can be made by means of the Vacuum Brake adjustment as follows:

Vacuum Brake Setting:—Should be adjusted to eliminate pinging when engine operated with load. To adjust, loosen locknut, back off adjusting screw until engine pings with load, turn screw in just enough to eliminate ping.

CARBURETOR

Holley (Chandler-Groves) Ford No. 59A-9510-A. Dual (double barrel), downdraft type with manual choke control.

See Carburetor Section for complete data.

Idle Adjustment—With engine warm, choke valve wide open, and Fast Idle inoperative, set throttle lever stopscrew for 500 RPM. idling speed, turn each idle adjusting screw (one for each barrel, adjust in succession) in until engine begins to miss, then out until engine begins to roll, finally turn screw in until engine fires smoothly. Final setting should be approximately ⅝-¾ turn f screw from inner seated position. Readjust stopscrew for correct idling speed. NOTE—Idling speed can be estimated by marking spot n fan belt and setting speed for 25 revolutions of the belt in 10 seconds.

NOTE—Vacuum gauge recommended for idling adjustment. Set for highest steady gauge reading.

Float Level—Use 9550-A gauge to set float level (1.353" end "Go", 1.322" end "No Go") measuring from underside of bowl cover to bottom of float with cover and float assembly inverted. Fuel level in bowl should be 11/16" plus or minus 1/32".

Accelerating Pump Setting—Three holes provided for pump link connection as follows:
Inner (#1)—Min. stroke, Summer Temperatures.
Center (#2)—Medium Stroke, Normal temperature.
Outer (#3)—Max. stroke, Extreme Cold Weather.
NOTE—Link locked in pump rod by snap-lock. Pull link shaft out of pump rod to disengage this lock.

Metering Jets—***Refer to Carburetor Index for Chandler-Groves (Ford) Carburetor Jet Specification Table.***

Fast Idle: Integral with carburetor. Operated by Choke Valve lever. No adjustment required.

CARB. EQUIPMENT

Air Cleaner: Ford No. 91A-9600-A. Oil-bath type.
Servicing—Clean and refill (to level mark on case) with same grade engine oil used in crankcase at 3500 mile intervals (when crankcase drained) or more often if required. Clean filter element by washing in cleaning fluid.
NOTE—Clean and re-oil filter element in oil filler cap (crankcase breather) every 1000 miles.

Fuel Pump: AC. Type R, Ford No. 11A-9350. Diaphragm type. Exchange Pump AC No. 541 ('46), 571 ('47).
See Carburetion Equipment Section for data.
Pressure—3½ lbs. maximum (1½-3½ lbs.).

Gasoline Gauge: King-Seeley Electric. Ford Nos.
Dash Unit—No. 59A-9280 ('46), No. 6M-9280 ('47).
Tank Unit—No. 99A-9275-B.
See Carburetion Equipment Section for data.

BATTERY

Ford Type No. 01A-10655-A. 6 Volt, 17 Plate, 120 Ampere Hour Capacity (20 hour rate).
Starting Capacity—150 amperes for 20 minutes.
Zero Capacity—300 amperes for 4.0 minutes.
Grounded Terminal—Positive (+) grounded to dash.
Engine Ground—Strap connector between right rear cylinder head and dash.
Dimensions—Length 10.56". Width 7.28". Height 8.25".
Location—On right side in engine compartment.

STARTER

Ford Model No. 18-11002. Armature No. 18-11005.
Drive—Inboard Bendix Drive No. A1472, Ford No. B-11350.
Rotation—Counter-clockwise at commutator end.
Brush Spring Tension—2 lbs. each.
Cranking Engine—100 RPM., 190-215 amperes.

Performance Data

Torque	R.P.M.	Volts	Amperes
4 ft. lbs.	1070	4.6	200
8 "	660	4.3	340
12 "	300	3.65	465
14 "	Lock	3.5	500

Starting Switch: Ford No. 21A-11450 Magnetic Switch mounted on the dash and controlled by pushbutton switch on instrument panel, Ford No. 19A-11500.

Removal:—Starter mounted on right front face of flywheel housing. To remove, take off pan at right of engine, free starter-to-oil pan support bracket, take out through-bolts on commutator end plate.

GENERATOR

Ford Model No. 21A-10000. Armature No. 01A-10005A. Two brush (shunt) type with vibrating type voltage and current regulation. Ventilated by fan on drive pulley.
Charging Rate Adjustment—No adjustment. See Regulator data below.
Maximum Charging Rate—Controlled by regulator and dependent on battery condition and load. To check generator output, disconnect generator field lead at generator, connect both generator terminals together (use short insulated wire). Use 'BRS' set or rheostat connected across battery terminals and apply load until voltage is exactly 6 volts. Connect ammeter in charging line, run engine, check output at 2 speeds given in performance table below. Restore original connections after completing test. **Do not operate generator in service with both terminals connected together. This eliminates all regulator action and will damage generator.**

Performance Data

Amperes	Engine RPM.
Start	520
30	1060
30	2500

Rotation—Counter-clockwise at commutator end.
Field Current—2.1 amperes at 6.0 volts (field resistance 2.88 ohms at 70°F.).
Brush Spring Tension—Approximately 28 ozs.

Removal:—Generator mounted on bracket between cylinder banks at front of engine, driven in tandem with water pumps by Vee belt. To remove, loosen nut on bracket stud.

Belt Adjustment:—Loosen nut on bracket mounting stud, raise generator up until side movement on belt midway between generator and water pump pulley is ½" (thumb and finger pressure).

REGULATOR

Ford Model No. 01A-10505-C. Three-Unit Type. Consists of Cutout Relay, vibrating Voltage Regulator and vibrating Current Regulator (separate units) in single case on engine side of dash.
See Electrical Equipment Section for complete data.
NOTE—Regulator case is grounded through braided wire 'pigtail' or separate ground wire extending from regulator to generator frame. This ground connection must be in place when regulator being operated or tested (disturbed by removal of regulator cover).

Cutout Relay

Cuts In—5.8-6.3 volts at operating temperature.
Cuts Out—8 ampere discharge current (maximum).

Voltage Regulator

Setting—6.9-7.2 volts at 70-80° F. See Ford Regulator article in Electrical Equipment Section for voltages at other temperatures.
Checking and Adjusting—***Refer to Electrical Equipment Index for article on 'Ford Regulator—3-unit Type' for complete instructions.***

Current Regulator

Setting—30-33 amperes hot (after generator has been operating for 5 minutes).
Checking & Adjusting—See Voltage Regulator (above).

C NTINUED ON NEXT PA E

CONTINUED FR M PRECEDING PAGE

LIGHTING

Headlamps: Ford "Sealed Beam" type.
Controlled by Lighting Switch on instrument panel and Beam Selector Switch on toeboard.
See Electrical Equipment Section for complete data.
Headlamp Adjustment—Aim upper beam of each headlamp straight ahead with hot spot centered on horizontal line 3" below lamp center height at 25 ft.
Beam Indicator—Red Jewel on lower edge of speedmeter dial. Lighted whenever upper beam in use.

Switches

Lighting—Ford No. 11A-11652 (Switch & Wiring), Light Switch Knob & Insert Ford No. 59A-11661.
Beam Selector—Ford No. 11A-13532 (Switch only), No. 29A-11653 (Switch & Wiring).
Instrument—Ford No. 19A-13740.
Stop Light—Ford No. 11A-13480.

Bulb Specifications

Position	Candlepower	Mazda No.
Headlamps		Sealed Beam
Parking	3	63
Instrument, Clock	1.5	55
Beam Indicator	1	51
Dome, Luggage Comp't.	3	63
Stop & Tail	21-3	1154
Rear License	3	63

MISC. ELECTRICAL

LIGHTING CIRCUIT BREAKER: Ford No. 11A-12250A Combined with Ignition Resistor on block on dash under cowl. Consists of two separate circuit breaker units (one unit protects headlight circuits, second unit protects other lighting circuits) of the thermostatic and wound-coil type. Contacts open with current of 50 amperes and vibrate rapidly to control current.

HORNS: Ford No. 91A-13832 (High Note), 91A-13833 (Low Note). Air electric type dual horns operated by horn relay.
Horn Current—24-28 amperes total.

Horn Relay: Ford No. 11A-13842D.
Contact Closing Voltage—3.5-4.5 volts.
Current Draw—Approximately ¾ ampere.

ENGINE

ENGINE SPECIFICATIONS: Own "100". Eight Cylinder, 90° Vee, "L" Head type. Cylinder banks and crankcase cast Enbloc.
Bore—3.187". **Strok**—3.75".
Displacement—239 cu. ins. **Rated H. P.** 32.5.
Developed Horsepower—100 at 3800 RPM.
Compression Ratio—6.75-1 Cast Iron Heads.
Compression Pressure & Vacuum Reading—*See Tune-up data.*

►**1946-47 ENGINE SERVICE NOTES: Cylinder Head.** New type, Part No. 59A-6050-A or -B, is interchangeable right-and-left. May be identified by figures "59A" or "59A-B" on top. Heads have greater valve clearance for new cylinder block (below) and larger water holes for improved cooling (¾" hole at top center and ⅝" hole at center between #2 and #3 cylinders).

►**Cylinder Head Gasket**—New type, Part No. 59A-6051, may be identified by 5/16" round hole instead of blunt cone shaped opening at lower edge between #2 and #3 cylinder bores. ***This gasket must be used with new 1946 type Cylinder Head (above).***

►**Cylinder Block**—New type, Part No. 59A-6010-C with valve ports located .09" farther from center line of block. May be identified by number or by oblong water passages just above valves (round on previous types).

►***CAUTION—If the earlier type Cylinder Heads (81A-, 81T-, 99T-, 29A-) used with this block, heads must be machined out for valve clearance, and water passages in head should be enlarged for improved cooling.***
See Ford Shop Notes for complete data.

OIL PAN REMOVAL: *See Ford Shop Notes.*

ENGINE REMOVAL: *See Ford Shop Notes.*

TIGHTENING TORQUES: *See Ford Shop Notes.*

CYLINDER HEAD: Tightening—*See Ford Shop Notes.*

CYLINDER SLEEVE: Cast iron, dry type cylinder sleeves may be used (engine may have mark "HS" on block beside inner front corner of left cyl. head).
Servicing—*See Ford Shop Notes.*

PISTONS: Steel or aluminum alloy, light weight, cam ground, dome head type. Pistons are new four-ring type. Recondition engines to take finished replacement pistons (if sleeves used, replace sleeves, install new std. size pistons).
Removal—Pistons and rods removed from above.
Clearance—See Fitting New Pistons.

Replacement Pistons: *See Ford Shop Notes.*

Fitting New Pistons: Use .50" wide feeler stock of correct thickness (see Table below) inserted between piston and cylinder wall at right angles to pin to check clearance. Pull required to withdraw feeler should be 6-10 lbs. (all types).

Engine With Sleeves	Steel Piston	Aluminum Piston
New Piston & Sleeve	.003"	.003"
New Piston—Worn Sleeve	.004"	.004"
Worn Piston & Sleeve	.005"	.005"
Engines Without Sleeves		
New Piston & Bore	.0025"	.002"
New Piston—Worn Bore	.004"	.004"
Worn Piston & Bore	.005"	.005"

PISTON RINGS: Two compression, two slotted oil rings per piston (lower oil ring below pin). Upper oil ring groove slotted, lower ring groove drilled for oil drainage.

Ring	Width	End Gap	Side Clearance
Compr. (#1)	.0915-.0920"	.012-.017"	.0015-.003"
Compr. (#2)	.0915-.0920"	.012-.017"	.001-.0025"
Oil (#3, 4)	.1540-.1550"	.012-.017"	.001-.0025"

Replacement Rings: *See Ford Shop Notes.*

PISTON PIN: Diameter .7501-.7504" **Length** 2.975" (with steel pistons), 2.850" (aluminum pistons). Floating type with locking ring in piston at each end. Pin hole in rod is bronze-bushed.
Pin Fit in Piston—.0001-.0002" clearance (aluminum pistons), .0003-.0009" clearance (steel pistons) or light hand push fit with piston at 70°F.
Pin Fit in Rod Bushing—.0002-.0005" clearance (pin should pass through bushing slowly of own weight).
See Ford Shop Notes for Pin Fitting directions.

Replacement Pins: *See Ford Shop Notes.*

CONNECTING ROD: Length 7.000". **Weight** 492 grams. **Crankpin Journal Diameter**—2.1390". Connecting rod bore diameter 2.360" (2.3597-2.3603").
Lower Bearing Type—Steel-backed, special alloy lined with bearing surface on both inner and uter face. Bearing floats in both rods (side-by-side mounting). **Bearing Dimensions**—Length 1.747", Thickness .1095".
Clearance—.0015-.0035" (see Bearing Adjustment).
Sideplay—.003-.007" (bearing endplay), .006-.014" (side clearance for both rods).

Bearing Adjustment: None (no shims). Do not file bearing caps. Replace bearings if less than .1085" thick, replace or hone rods for oversize bearings if worn more than .0015" over original size of 2.3597-2.3603". CAUTION—Both rods must be same size.

Replacement Bearings: *See Ford Shop Notes.*

Installing Rods: Marks on rods and bearing caps (R1, L1, etc.) must be together and installed in same numbered cylinder with marks pointing down toward oil pan.

CRANKSHAFT: Three bearing type with integral counter-weights.
Journal Diameters—2.4990" (all main bearings).
Bearing Type—Steel-backed, special alloy lined.
Clearance—.001-.003"

Bearing Adjustment: None (no shims). Replace bearings. Do not file bearing caps.

Replacement Bearings: *See Ford Shop Notes.*

End Thrust: Taken by rear main bearing flanges. Adjust by replacing bearing. **Endplay** .002-.006".

CAMSHAFT: Three bearing type. Helical gear drive.
Bearing Diameters—1.797" (all bearings).
Bearing Type—Steel-backed, babbitted bushings.
Clearance—.001-.002"
End Thrust: Taken by gear hub and thrust surface on inner face of cover plate. Adjusted by replacing cover plate. **Endplay**—.005-.015"

Timing Gears: Crankshaft Gear—Cast alloy iron. Camshaft Gear—Aluminum alloy bolted-on type.
Backlash—.004" maximum.
Replacement Gears—*See Ford Shop Notes for Gear Oversizes & installation instructions.*

Camshaft Setting: Mesh marked tooth of crankshaft gear in similarly marked space between teeth on camshaft gear.

VALVES:	Head Diameter	Stem Diameter	Length
All Valves	1.510"	.3095-.3105"	4.577"
	Seat Angle	**Lift**	**Stem Clearance**
Intake	45°	.292"	.0015-.0035"
Exhaust	45°	.292"	.0025-.0045"

NOTE—Service limit for valve stem diameter is .309" Intake, .3065" Exhaust. Valves interchangeable.
Valve Seat Inserts—Used on all valves.
For valve servicing data, see Ford Shop Notes.

Valve Guides: Split type retained by "C" washer and valve spring. NOTE—Replace both halves of all guides measuring less than .6665" (thickness of guide half and valve stem at top of guide with valve of .311" stem diameter in place in guide).
For valve servicing data, see Ford Shop Notes.

Valve Lifters: Barrel type operating in guide holes in cylinder block.
Diameter—.9995". Replace if worn to less than .998" in diameter or length less than 1.710" after any necessary resurfacing of ends (cast type can be resurfaced on both ends, pressed steel type on bottom end only).
Clearance—.0005-.0015". Lifter should slip into hole in block of own weight.

Valve Springs: Replace springs if pressure less than 30 lbs. when compressed to 2.125".

ENGINE

CONTINUED FROM PRECEDING PA E

	Spring Pressure	Length
Valve Closed	37-40 lbs.	2.13"
Valve Open	76-80 lbs.	1.84"

VALVE TIMING

Tappet Clearance: .010-.012" Intake, .014-.016" Exhaust, Cold. No adjustment.

Valve Timing: See Camshaft Setting above.
Intake Valves—Open AT TDC. Close 44° ALDC.
Exhaust Valves—Open 48° BLDC. Close 6° ATDC.
Valve Timing Check—No flywheel marks or other means provided to check timing. #1 intake valve should open with #1 piston on top dead center entering the intake stroke.

LUBRICATION

Engine Oiling System: Pressure to main bearings, connecting rod lower bearings, camshaft bearings, and timing gears. Oil pump mounted in crankcase at rear of engine.

Oil Pan Removal: *See Ford Shop Notes.*
Crankcase Capacity—5 quarts.
Normal Oil Pressure—30 lbs. at 2000 RPM.
Oil Pressure Regulator—Located under plug above front camshaft bearing (under manifold) and on oil pump housing (some models). Not adjustable.
NOTE—Check relief valve tension spring whenever engine overhauled. Replace the cylinder block relief valve spring if tension not within limits of 43-50 ozs. at 1.380" (engines without oil pump relief valve), or 78-80 ozs. at 1.380" (engines with oil pump relief valve). Replace oil pump relief valve spring tension not within 78-87 ozs. at 1.380".

Oil Pump: Gear type. In crankcase at rear of engine.
►NOTE—This new type pump, No. 41A-6600-A (for engines without oil pan baffles), has oil pressure regulator (relief valve) in pump body.
Oil Pump Servicing—*See Ford Shop Notes.*

Oil Filter: Replace cartridge at 5000 mile intervals (Ford No. 01A-18662-A Unit).

Oil Pressure Gauge: King-Seeley Electric. Ford Nos.
Dash Unit—No. 59A-9273 ('46), No. 6M-9273 ('47).
Engine Unit—No. 41A-9278 (80 lbs. type).
See Miscellaneous Section for complete data.

COOLING

Cooling System: Positive circulation with two water pumps at front of engine (pump for each bank).
Capacity—22 quarts.
Pressure Valve—In radiator filler cap. Opens at 3½-4½ lbs.

Water Pump: Packless, centrifugal type (2 used). Mounted on front of engine (pump housing integral with front engine mounting).
See Water Pump Section for complete data.
Removal—Drain cooling system, place support jack under engine (use wood block on jack to avoid damaging pan), remove bolt from front engine support, raise engine until no weight rests on front support. Loosen generator mounting bolt, remove drive belt. Disconnect and remove hose at pump. Remove four capscrews mounting pump on engine, lift pump out. CAUTION—One mounting screw located within water pump inlet connection (accessible with hose removed).
Belt Adjustment—*See Generator Belt Adjustment.*

Thermostat: In each cylinder head water outlet (two used). Start to open at 150-155°F. Fully open at 175-180°F.

Temperature Gauge: King-Seeley Electric Ford Nos.
Dash Unit—No. 59A-10883 ('46), No. 6M-10883 ('47).
Engine Unit—No. 01A-10990 (Temperature Gauge Switch—in left hand cylinder head), No. 99A-10884 (regular Engine Unit—in right cylinder head).
See Miscellaneous Section for complete data.

CLUTCH

Long Model 10CF-TI, Ford No. 19A-7563. Single plate, semi-centrifugal, dry disc type.
See Clutch Section for complete data.
Facings—Woven asbestos composition. I. D. 6¾". O.D. 10". Thickness ⅛".

Pedal Adjustment: Pedal free travel 1-1¼".To adjust, disconnect clevis at equalizer (throw-out) shaft end of pedal connector rod, turn clevis on rod.

Removal: Remove Transmission (see Transmission Removal below), install wooden wedges between each release lever and cover to hold the clutch in released position, take out six capscrews mounting cover assembly on flywheel, lift out cover assembly

TRANSMISSION

Own Make. Three-speed, all-helical gear type. Constant-mesh, synchro-mesh (Second & High), sliding gear (Low & Reverse).
See Transmission Section for complete data.

Transmission Control: Remote control type with gearshift lever on steering column.
See Transmission Section for complete data.

Removal: Remove Rear Axle (see Rear Axle Removal below), remove capscrews mounting front seat track on floor, move front seat back for necessary room. Take out mounting screws in front floor pan spacer, remove spacer. Disconnect gearshift connecting rods at transmission case, disconnect and remove equalizer (clutch release) shaft. Remove capscrew and washer on end of transmission shaft (in universal joint), remove universal joint. Remove nuts and washers on engine rear support bolts. Support engine by placing jack (use wood block on jack) under rear end and raise engine sufficiently so that rear support clears mounting bolts (NOTE—remove nuts holding lower half of engine rear support assembly and remove the assembly). Take out eight capscrews mounting transmission case on flywheel housing, pull transmission straight back

UNIVERSALS

Spicer Model 202-6X, Ford No. B-7090. Steel bushing type. Single joint in torque ball at transmission.
See Universals Section for complete data.

REAR AXLE

Own Make. ¾ Floating, Spiral Bevel Gear type with Torque Tube Drive.
See Rear Axle Section for complete data.
Ratio—3.54-1 Std., 3.78-1 & 4.11-1 Optl.
Backlash—.012" maximum.

Removal: Raise rear end of car. Disconnect track bar. Disconnect rear spring (use spring spreader if available) by placing block under each rear spring eye and lowering car so that weight keeps spring extended and then removing spring shackle bolts and bars. Take out pin in hand brake equalizer and disconnect hand brake cable. Disconnect hydraulic brake line at torque tube and rear shock absorber links at each wheel. Disconnect accelerator pedal, remove pedal pads, floor mat, beam control switch (take out two mounting screws), and floor pan. Disconnect speedometer cable at torque tube. Remove nuts on four universal joint ball housing bolts and two bolts holding ball cap halves together, remove ball cap. Pull rear axle back to disconnect torque tube from transmission and remove from beneath car.

SHOCK ABSORBERS

Houde. Double acting, hydraulic, adjustable type.
See Shock Absorber Section for complete data.

	Houde Model	Right — Ford No. — Left
Front	BBCN-3	51A-18045 — 51A-18046
Rear①	BBCZ-3	51A-18080A — 51A-18081A
Rear②	BBCZ-3	51A-18080B — 51A-18081B

①—Except Sedan Delivery and Station Wagon.
②—Sedan Delivery & Station Wagon only.

Adjustment: Standard setting marked by line on face of lever hub (pointer should be aligned with this mark). Adjustment can be varied by turning pointer clockwise (for more control) or counter-clockwise (for less control) not more than 1 or 2 serrations at a time. NOTE—Stops are provided to limit adjustment in either direction.

Refilling: Check every 5000 miles, fill to level of the filler plug hole. Use Ford No. M-4633-B fluid only (Houde L-1404) required for these new shock absorbers (identified by round top filler plug).

FRONT SUSPENSION

Front Axle: Conventional "I" beam section type with Reverse-Elliott ends and transverse spring. Axle positioned by radius rods.
Kingpin Inclination—8° crosswise.
Caster—3°. Axle may be bent cold for minor corrections providing correct tools used to prevent crushing of axle flange.
Camber—¾°. Adjust as for Caster (above).
Toe In—1/16". Adjust in usual manner by changing length of tie rod.

STEERING GEAR

Gemmer design (Model 305), Ford Make. Worm-&-Roller type with push-pull adjustments.
See Steering Gear Section for complete data.

BRAKES

Service: Lockheed Hydraulic, self-centering, double anchor type. Hand lever applies rear wheel brakes.
►**These brakes do not have anchor pin adjustments.**
See Brake Section for complete data.
Drums—Composite iron and steel. Diameter 12".
Clearance—Least possible amount without drag.
Lining—Width 1.75". Thickness .187". Length per shoe 13.12" (forward shoes), 10.08" (rear shoes).
Hand Brakes: See Service Brakes (above).

MISC. MECHANICAL

Power Operated Convertible Top: 2 types as follows:
1—Convertible—Auto-Lite electric type.
2—Sportsman Convertible—Hydro-Lectric type.
See Miscellaneous Section for complete data.

Power Window Regulators (Sportsman Convertible): Hydro-Lectric type.
See Miscellaneous Section for complete data.

HOOD LOCK: Pull T-handle under edge of instrument panel on left side, push back on safety catch under front edge of hood, raise hood.

MODEL IDENTIFICATION

VEHICLE NUMBER: Stamped on plate attached to engine side of dash and on top of right frame side rail to rear of front suspension upper control arm.

TUNE-UP

COMPRESSION PRESSURE: 115 lbs. at cranking speed. Maximum compression pressure 170 lbs.

VACUUM READING: Steady 18-21" idling at 500 RPM.

FIRING ORDER: 1-5-4-8-6-3-7-2. See diagram.

SPARK PLUG GAPS: .030" Limits .029-.032".

Plug Type—Champion H-10. 14 mm.

IGNITION: *See Coil, Condenser, and Distributor.*

Breaker Gap—.014-.016".
Cam Angle or Dwell—28-30° (closed).
Breaker Arm Spring Tension—17-20 ounces.
Advance Performance—*See Distributor.*

IGNITION TIMING: 2° BTDC.
Timing Procedure—*See Ignition Timing.*
Crankshaft Pulley Mark—Circular boss aligned with timing pin on right side of engine front cover.

CARBURETION: *See Carburetor & Carb. Equipment.*
Idle Setting—Approx. 1 turn open. Two screws—turning screws out gives richer mixture.
Idle Speed—Approximately 500 RPM.
Float Level—Fuel level ½" ± 1/32" below top edge of bowl. Use Fuel Level Gauge No. 9550-B.
Accelerating Pump—Center Hole average setting. Inner Hole for hot weather, Outer for cold weather.
Fuel Pump Pressure—3½-4½ lbs.

MANIFOLD HEAT CONTROL: Automatic. No adjustment. Valve located between right end of exhaust pipe cross over and right exhaust manifold.

VALVE TAPPET CLEARANCE: .010-.012" Intake valves, .014-.016" Exhaust, Cold. No adjustment.
Valve Timing Check—*See Valve Timing.*

STARTING: *See Battery, Starter, Generator, Regulator.*

IGNITION

IGNITION SWITCH: Mercury No. 6A-11572-A.
Ignition Lock—Mercury No. 8H-11582-A.

COIL: Mercury No. 7RA-12029-A. Can type.
Location—On front lower corner of right cyl. hd.
Ignition Current—Approx. 5.2-5.7 amperes at 6 volts, stopped. Primary cir. resistance 1.05-1.15 ohms 75°.

CONDENSER: Mercury No. 7RA-12300-B.
Capacity—.21-.25 microfarad.

DISTRIBUTOR: Mercury No. 7RA-12127-C (less Cap and Rotor). New "Pressure" Distributor with spark advance controlled by vacuum diaphragm moving breaker plate to advance spark against two breaker plate springs. Operating vacuum taken from 1 carburetor connection (2 passages inside carburetor, 1 at venturi, 1 at throttle valve). Full spark advance obtained at 18-35 MPH. with normal road load or for part throttle operation at any speed.

►*NOTE—Distributor is single contact type (no "coil loading" contacts are used).*
Breaker Gap—.014-.016".
Cam Angle—28-30° (closed).
Breaker Arm Spring Tension—17-20 ounces.
Rotation—Clockwise viewed from abov .

Advance Performance
►(at Wide Open Throttle).

Distributor			Engine		
Degrees	Vacuum	R.P.M.	Degrees	Vacuum	R.P.M.
0°.....	0"	200	0°.....	0"	400
1¼-2¼°.....	0.4".....	500	2½-4½°.....	0.4".....	1000
4¼-5¼°.....	1.7".....	1000	8½-10½°....	1.7".....	2000
6¼-7¼°.....	2.85".....	1500	12½-14½°....	2.85".....	3000
7½-8½°.....	3.7".....	2000	15-17°.....	3.7".....	4000

Distributor Removal: Mounted at front of engine on right side. To remove, disconnect vacuum line, take out hold down screw, lift off.

IGNITION TIMING

Std. Setting ..... 2° BTDC.
Crankshaft Pulley Mark—Circular boss on rear edge of pulley (timing pin above pulley on right side).
Timing—With #1 piston at firing position and timing mark on pulley aligned with timing pin on front of engine, loosen hold down screw on distributor, rotate distributor until contacts begin to open, tighten hold down screw. Check spark plug connections (see diagram), see that rotor at #1 in cap.

►**Timing (with Neon Timing Light)**—*CAUTION—Vacuum line must be disconnected to avoid vacuum advance operating.* Mark timing pin and pulley mark with white chalk. Connect timing light to #1 spark plug. Idle engine and adjust distributor (as directed above) until mark aligned with timing pin.

CARBURETOR

Holley-Ford. Mercury No. 8CM-9510-A. Dual concentric (double barrel) downdraft type with Automatic Choke.

See Carburetor Section for complete data.

►**New Float & Float Spring change for stabilizing float level**—*See 1949 Mercury in Carburetor Section.*

►**New Main Tubes and Main Jet change to correct flat spots or stumble on acceleration**—*See 1949 Mercury in Carburetor Section.*

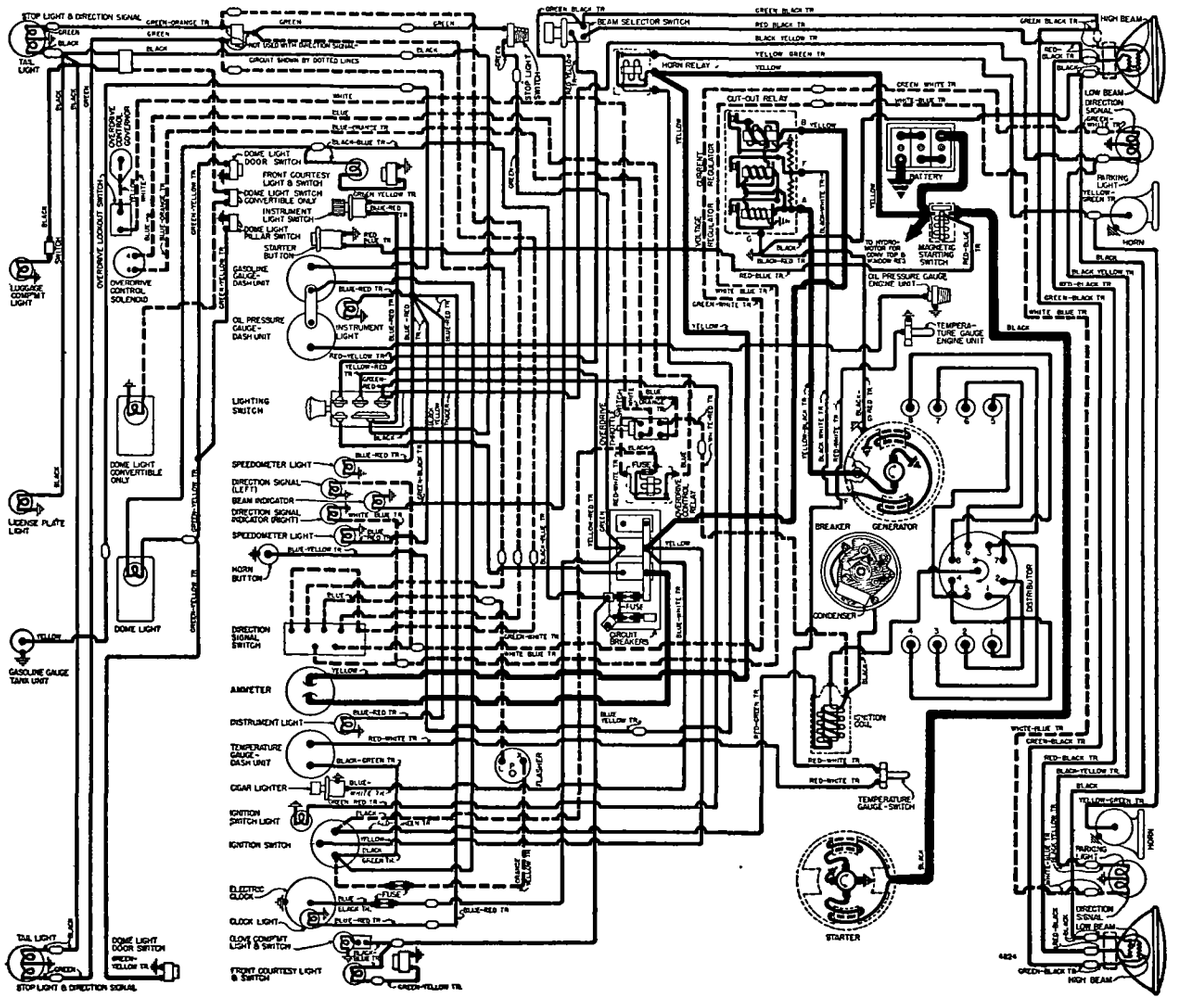

Settings (Idle Setting, Float Level, and Accelerating Pump): *See Tune-Up data.*
Metering Jets—See Holley-Ford Jet Specification Table in Carburetor Section.
Fast Idle: Holley-Ford Carburetor type.
See Carburetion Equipment Section for complete data.
Automatic Choke: Holley-Ford Carburetor type.
See Carburetion Equipment Section for complete data.

CARB. EQUIPMENT

Air Cleaner (Oil Bath): Mercury No. 8CM-9600-A.
Servicing (Oil Bath type)—Clean and re-fill sump (to level mark) with same grade oil used in crankcase at 2500 miles (when crankcase drained). Occasionally wash filter in cleaning fluid.
Fuel Pump (std.): Mercury No. 7RA-9350-C.
Optl. (Fuel-&-Vacuum)—Mercury No. 8CM-9350.
Pressure—3½-4½ lbs. (both types).
See Carburetion Equipment Section for complete data.
Gasoline Gauge: King-Seeley Electric.
Dash Unit—Mercury No. 8M-9280 (K-S #42180).
Tank Unit (All exc. Sta. Wagon)—Mercury No. 99A-9275-B (K-S No. 7540).
Tank Unit (Station Wagon)—Mercury No. 01A-9275-A, K-S No. 7748.
See Carburetion Equipment Section for complete data.

BATTERY

Mercury No. 8M-10655-A. 6 volt, 17 plate, 100 A. H. Zero Capacity—300 amperes for 3.3 minutes. Five Second Voltage—4.2 volts.
Grounded Terminal—Positive (+) terminal.
Location—On left side in engine compartment.
Dimensions—L. 10 9/16". W. 7¼". H. 8 1/16".

STARTER

Mercury No. 7RA-11002. Armature No. 18-11005.
Drive—Bendix No. A1472 (Mercury No. B-11350).
Rotation—Counter-clockwise at commutator end.
Brush Spring Tension—20-22 ounces.
Cranking Engine—100 RPM., 190-215 amperes.

Performance Data

Torque	R.P.M.	Volts	Amperes
4 ft. lbs.	1070	4.6	200
8 "	660	4.3	340
12 "	300	3.65	465
14 "	Lock	3.5	500

Starting Switch: Mercury No. 21A-11450 Magnetic Switch mounted on left front fender apron and controlled by panel pushbutton switch Mercury No. 6H-11500.
Removal: On right front face of flywheel housing cover. To remove, take off right engine splash pan (if used), free starter-to-oil pan bracket, take out 2 starter through bolts.

GENERATOR

Mercury No. 8BA-10002-A (less pulley & bracket).
Armature No.—Mercury No. 8BA-10005.
2 brush type with current and voltage regulation.
Charging Rate Adjustment—None. See Regulator.
Maximum Charging Rate—30 amperes, 7 volts, reached at approximately 18.5 MPH. Controlled by regulator and dependent on load and battery conditions.
To Check Generator Output—Connect ammeter in series with charging line at regulator "ARM" terminal, connect short insulated jumper between generator "A" and "F" terminals (to short out regulator). Run engine at approximately 1500 RPM. and note ammeter reading. If generator output equals or exceeds rate output (below) generator performance is satisfactory. Remove jumper.

►*CAUTION—Do not operate generator at higher speeds or in service with jumper connected between generator armature and field terminals. This jumper eliminates all regulator action.*

Performance Data

Amperes	Engine R.P.M.
30	1500

Rotation—Counter-clockwise at commutator end.
Brush Spring Tension—20-24 ozs.
Removal: On support secured to valve chamber cover by stud and nut, driven by belt in tandem with water pumps. To remove, loosen stud nut and disengage generator belt, take out capscrew in mounting strap, lift generator off support.
Generator Belt Adjustment: Loosen 2 bolts on fan mounting bracket, loosen generator support mounting stud nut, raise generator up until side movement on belt midway between generator and water pump pulley is ½" (thumb and finger pressure), tighten stud nut. Adjust fan belt in similar manner, tighten 2 fan bracket bolts.

REGULATOR

Mercury Numbers

Regulator	Generator	Amperes
51A-10505-A or C	8BA-10002-A (Std.)	30-33

Voltage-current 3-Unit types.
See Electrical Equipment Section for complete data.
NOTE—Separate ground wire extending to cowl must be in place when generator operated.

Cutout Relay

Cuts In—6.4-6.9 volts with engine at normal operating temperature.
Cuts Out—8 ampere discharge current (maximum).
Contact Gap—.010" (armature against upper stop).
Air Gap—.017" between armature and core with contacts open.

Voltage Regulator

Voltage Setting—7.0-7.5 volts with engine at normal operating temperature.
Checking & Adjustment—*See Electrical Equip. Section.*
Air Gap—.035" between armature and core with contacts just closed.

►*CAUTION—Make certain gauge contacts armature and not brass rivet on underside of armature.*
Contact Spring Tension—5 ounces minimum with contacts just opening.

Current Regulator

Current Setting—30-33 amperes with engine at normal operating temperature.
Checking & Adjustment—*See Electrical Equip. Section.*
Air Gap—.035" between armature and core with contacts just closed.
Contact Spring Tension—5 ounces minimum with contacts just opening.

LIGHTING

Headlamps: Ford "Sealed Beam" type.
See Electrical Equipment Section for complete data.
Adjustment—Aim upper beams straight ahead (hot spot centers 3" below lamp center height at 25 ft.).
Beam Indicator—Bulb between 50 and 60 on speedometer. Lighted with Upper Beam "on".
Direction Signal: Std. *See Electrical Equipment Section.*
Direction Indicators—Right and Left indicators on lower edge of speedometer.
Direction Signal Flasher—Mercury No. 8L-13350-B.

Switches

Lighting—Mercury No. 7RA-11654.
Beam Selector—Mercury No. 7RA-13532.
Instrument—Mercury No. 5EH-13740-B.
Glove Box—Mercury No. 8L-14413.
Dome Light—Mercury No. 8M-13752-A.
Dome Light (Convertible)—Mercury No. 8H-13754.
Dome Light (Sta. Wagon)—Mercury No. 5EH-13752-A.
Door Switches—Mercury No. 8M-13713.
Stop Light—Mercury No. 11A-13480.
Trunk (with wire assy.)—Mercury No. 8M-13546.
Direction Signal—Mercury No. 8L-13335 (for service use Part No. 8L-14486—includes wire assy.).

Bulb Specifications

Position	Candlepower	Mazda No.
Headlamps	Sealed Beam	4030
Parking (no Dir. Sig.)	3	63
Front Dir. Sig. & Park.	21-3	1154
All Instrument	1½	55
Beam & Dir. Sig. Indicators	1	51
①Stop & Tail	21-3	1154
Dome	15	88
Dome (Convertible), Trunk	6	81
Courtesy	6	82
Rear License	3	63

①—Rear Direction Signal flashes Stop Light.

MISC. ELECTRICAL

CIRCUIT BREAKERS: Mercury No. 8M-12258-A, No. 8H-12258-A (Convertible). Consists of the following separate circuit breakers mounted on bracket (together with 2 fuses) behind instrument panel on left side (see wiring diagram for positions on bracket):
Headlights—30 ampere.
Auxiliary Lights—15 ampere.
Hydraulic Window, Seat Regulator, and Convertible Top Switches—15 ampere.
FUSES: Courtesy, Dome, & Glove Box Lights—14 ampere. On circuit breaker bracket behind instrument panel (see wiring diagram).
Direction Signal—14 ampere. In feed from ignition switch to flasher.
Clock—2 ampere. In clock feed wire.
Overdrive—30 ampere. On ignition terminal of overdrive relay (on dash under hood).
Heater—20 ampere. In lead to heater switch.
HORNS: Mercury No. 51A-13832-A (High Pitch, Right Horn), No. 51A-13833-A (Low Pitch, Left Horn). Dual horns operated by relay.
Air Gap—.027-.029" for high pitch (right horn), .032-.034" for low pitch (left horn).
Horn Current—13 amperes (high pitch), 14 (low).
Horn Relay: Mercury No. 7RA-13853-A. On dash.
Contact Gap—.015-.025".
Contact Closing Voltage—4 volts max.

ENGINE

ENGINE SPECIFICATIONS: Own Make. Eight cylinder "L" head, 90° Vee type with both cylinder banks and crankcase cast Enbloc.
Bore—3 3/16". **Stroke**—4".
Displacement—255.4 cu. ins. **Rated HP**—32.5.
Developed Horsepower—110 at 3600 RPM.
Compression Ratio—6.8-1 cast-iron head.
Compression & Vacuum Reading—*See Tune-Up.*
TIGHTENING TORQUES: *See Mercury Shop Notes.*

CONTINUED ON NEXT PAGE

ENGINE

C NTINUED FR M PRECEDING PAGE

OIL PAN REMOVAL: *See Mercury Shop Notes.*
CYLINDER SLEEVES: Not used.
PISTONS: Aluminum alloy, steel strut, dome head, U-slot, cam ground type.
►***CAUTION—1949 Mercury and Ford Pistons or Rings are not interchangeable.***
Weight—370 grams. **Length**—2.89" (exclud. dome).
Removal—Pistons and rods removed from above.
Clearance—.0005-.001". See Fitting Pistons.
Cyl. Bore Wear Limits—Out-of-round .003", Taper .006".
Replacement Pistons: Std., .0025", .020", .030", .040" OS.
Fitting Pistons: Use ½" wide feeler inserted between piston and cylinder wall at right angles to pin. Feeler thickness .0015" for New Piston in New Bore, .003" for New Piston in Worn Bore or Worn Piston in New Bore, .004" for Worn Piston in Worn Bore. Pull to withdraw feeler 6 to 12 lbs.
PISTON RINGS: Two compression, two slotted oil rings per piston (lower oil ring below pin). Rings are taper faced. Upper oil ring groove slotted, lower ring groove drilled for oil drainage.
►***CAUTION—1949 Mercury and Ford Piston Rings are not interchangeable (heavier rings used on Mercury).***

Ring	Width	End Gap①	Side Clearance
Compr. #1	.154"	.012-.020"	.0015-.0030"②
Compr. #2	.154"	.012-.020"	.0010-.0025"③
Oil #3 & 4	.142"	.008-.020"	.0015-.0030"②

Worn Limit—①—.035", ②—.0040", ③—.0035".
Ring Thickness—Compression .0933", Oil .186".
Replacement Rings: Ring sets furnished standard size and .020", .030", .040" Oversize.
PISTON PIN: Diameter—.7503". **Length**—2.847". Floating type (lock ring in piston at each end). Pin hole in connecting rod bronze bushed.
Pin Fit in Piston and Rod Bushing—.0005" clearance (new), .0015" (worn limit).
Replacement Pins: Std. size & .001", .002" Oversize.
CONNECTING ROD: Length—7".
Weight—524 grams (less bearings).
Crankpin Journal Diameter—2.1385". Maximum wear limits—Out-of-round .0015", taper .001".
►**Lower Bearing**—***Locked in (not floating type as used on earlier engines)***, steel-backed, copper-lead alloy lined, replaceable shells. Upper and lower halves interchangeable.
Clearance—.0005-.003" (new), .005" (worn limit).
Sideplay—.006-.014" (new), .022" (worn limit).
►***NOTE—Replace bearing shells less than .0745" thick.***
Bearing Adjustment: None (no shims). Do not file caps. Replace bearings. Tang on bearing must engage groove in rod and cap.
►***PALNUT NOTE—Tighten finger tight plus 1/3 turn.***
Replacement Bearings: Standard size and .002", .010", .020", .030", .040" Undersize.
CRANKSHAFT: 3 bearing, 6 integral counterweights.
►***SLUDGE TRAPS—Crankpin throws equipped with sludge traps having removable plugs for cleaning.***
Journal Diameters—2.4990" (all main bearings).
Wear Limits: .0015" Out-of-round, .001" Taper.
Bearings—Steel-backed, copper-lead alloy lined, replaceable shells. Upper and lower halves alike.
Clearance—Zero-.0025" (selective fit, crankshaft to turn free). Worn limit .005" maximum.
►***NOTE—Replace main bearing shells less than .0835" thick.***
Bearing Adjustment: None (no shims). Do not file caps. Replace bearings. Tang on bearing must engage groove in block and cap.
Replacement Bearings: Standard size and .002", .010", .020", .030" Undersize. Rear mains also furnished .015" Oversize in Overall length for taking up endplay wear.
End Thrust: Taken by rear main bearing. Adjust by replacing bearing if endplay excessive.
Endplay—.002-.006" (new), .008" (worn).
CAMSHAFT: Three bearing. Helical gear drive. Distributor drive gear pressed on front end of shaft, oil pump drive gear on rear end.
►***CAMSHAFT PRODUCTION CHANGE VEHICLE NO. 9CM-826 UP—Change to REVERSE helix timing gears to give forward thrust at front end of camshaft (was to rear on early engines) providing one-way thrust to camshaft for silencing backlash. Oiling at front end of shaft modified (new front camshaft bearing position, new camshaft, and new cylinder block oil line plug). See Mercury Shop Notes for data.***
Bearing Diameter—1.7985" (replace bearing if diameter greater than worn limit of 1.8015").
Replacement Bearings: Standard size and .010", .015" Undersize. Undersize bearings require finish reaming.
End Thrust: Taken by front end of camshaft and thrust surface on inner face of cylinder front cover. Adjust by replacing cover. **Endplay**—.007-.016".
Timing Gears: Helical cast aluminum camshaft gear bolted on camshaft, cast alloy iron crankshaft gear.
►***CAUTION—Camshaft gear teeth REVERSE (L. H.) starting with Vehicle No. 9CM-826 (R. H. teeth used before this number).***
Replacement Camshaft Gears—Furnished standard size and in following Oversizes: .006" OS (L. H. and R. H. teeth), .010" (R. H. teeth), .012" (L. H. teeth).
Camshaft Setting: Mesh marked tooth of crankshaft gear with marked space on camshaft gear.

VALVES:	Head Diameter	Stem Diameter	Length
Intake	1.515"	.3410"①	4.8175"
Exhaust	1.515"	.3410"①	4.8140"

	Seat Angle	Lift	Stem Clearance
All Valves	45°	.338"	.0015-.0035"②

Wear Limit—①—.3375". ②—.005" Int., .006" Exh.
►***REPLACEMENT VALVES—Exhaust valves furnished for replacement to be used for ALL VALVES.***
Valve Seat Inserts—Used on all valves.
Valve Guides: One piece type positioned and retained by "C" washer. Inside diameter .344". Outside diameter 1.031". Distance from top of valve seat to upper end of guide 1.116".
Valve Lifters: Barrel type operating in guide holes in cylinder block.
Diameter—.9992" (replace if worn to less than .9977"). Length limit after resurfacing end 1.728".
Clearance—.0007-.0016" (new), .003" (worn limit).
Valve Springs: Coated springs used.
Spring Pressure—37-40 lbs. (closed), 76-80 (open).
Spring Test—37-40 lbs. at 2.125". Free length 2.41".

VALVE TIMING

Tappet Clearance: .010-.012" Intake, .014-.016" Exhaust, Cold. No adjustment.
Valve Timing: See Camshaft Setting above.
Intake Valves—Open 10° BTDC. Close 50° ALDC.
Exhaust Valves—Open 50° BLDC. Close 10° ATDC.
NOTE—Clearance for checking timing .015".
Valve Timing Check—Intake valve opens 10° BTDC. Valve timing mark location on crankshaft pulley.

LUBRICATION

Engine Oiling System: Pressure to main bearings, connecting rod lower bearings, camshaft bearings, timing gears and distributor drive gear. Piston pins and valve lifters lubricated by splash. Oil pump mounted in crankcase at rear of engine.
►***CAUTION—Vehicle No. 9CM-826 and Up use solid Cylinder Block Front Oil Line plug (plug with oil hole used on early engines). See CAMSHAFT PRODUCTION CHANGE in Mercury Shop Notes for complete data.***
Crankcase Capacity—5 quarts (refill).
Normal Oil Pressure—50 lbs. at 2000 RPM.
Oil Pressure Relief Valve: In oil pump body. Not adjustable.
Spring Tension—15 lbs. 2 ozs. to 15 lbs. 6 ozs. at 1.14".
NOTE—Cylinder block oil relief valve not used.
Oil Pump: Gear type (two types: spur gear or helical gear types). In crankcase at rear of engine.
Oil Filter: On left cylinder head. Replace cartridge each 5000 miles or more often if required.
Oil Filter Cartridge—Mercury No. 8CM-18662.
Oil Pressure Gauge: King-Seeley Electric.
Dash Unit—Mercury No. 8M-9273.
Engine Unit—Mercury No. 41A-9278.
See Miscellaneous Section for complete data.
Crankcase Ventilation: Filter element in oil filler breather cap (inlet), and in outlet pipe below fan.
Servicing—Wash screen in cleaning fluid and wet with engine oil when dry at oil change period (2500 miles).

COOLING

Cooling System: Pressure type with relief valve in filler cap and two belt-driven pumps (one for each bank) with re-circulating by-pass.
Capacity—22.25 quarts.
Pressure Valve—In radiator filler cap. Mercury No. 26H-8100-B (AC #846740). Opens at 3½-4½ lbs.
Water Pumps: Two used. Centrifugal, belt-driven packless type. Shaft mounted on pre-packed ball-bearing at front, and bushing next to seal. Oil cup provided for bushing lubrication.
See Water Pump Section for complete data.
►***CAUTION—WATER PUMP LUBRICATION: Oil cup provided on each pump which should be filled with SAE #20 engine oil when new and every 1000 miles. Use length of wire inserted in oil cup when oiling (ordinary oil can does not reach).***
Fan Belt Adjustment—Loosen 2 fan mounting bracket bolt nuts, raise fan up until side movement of belt midway between fan and crankshaft pulleys is ½".
Generator (& Water Pump) Belt Adjustment—*See GENERATOR.*
Thermostats: Two used (one in each cylinder head water outlet). Mercury No. 8RT-8575-A.
Setting—Starts to open 148-153°F. Fully open 168-173°F.
Temperature Gauge: King-Seeley Electric.
Dash Unit—Mercury No. 8M-10883.
Engine Unit—Mercury No. 8A-10990 (switch in right bank), No. 8A-10884 (reg. unit left bank).
See Miscellaneous Section for complete data.

CLUTCH

Borg & Beck Model 10A7, Mercury No. 8CM-7563. Single plate, dry disc type with Borglite driven member.

Cover Number—988 stamped on cover.

See Clutch Section for complete data.

Facings—Moulded. Inside diameter 6¾". Outside diameter 10". Thickness .125".

Pedal Adjustment: 1.00" pedal free travel.

Removal: Remove transmission (see TRANSMISSION Removal below). Take out cover mounting bolts, lift assembly out.

TRANSMISSION

Own Make. 3-speed, all helical gear type. Constant-mesh, synchro-mesh (Second & High), sliding gear (Low & Reverse).

See Transmission Section for complete data.

Transmission Control: Steering column mounted shift.

See Transmission Section for complete data.

Removal: Disconnect rear universal, slide propeller shaft out of transmission. Disconnect clutch, transmission and speedometer linkage. Support rear of engine and disconnect rear engine mounting from frame. Take out eight transmission-to-flywheel housing capscrews and remove transmission.

OVERDRIVE

Warner Model AS1-R10C (Overdrive only). Optl. equipment. Overdrive is solenoid operated type (no centrifugal pawls) with Governor Control and throttle operated "kick-down."

See Transmission Section for complete data.

Solenoid—Mercury No. 8M-6916.
Control Relay—Mercury No. 8M-6915. On engine side of dash. 30 ampere fuse on ignition terminal.
Lock-Out Switch—Mercury No. 8M-6917-A.
Throttle Kick-down Switch—Mercury No. 8A-6918.
Governor—Mercury No. 8M-6919.

Removal: Same as for Std. transmission (above) after disconnecting overdrive control cable and wiring.

UNIVERSALS

Mechanics Type 2CR. Needle bearing type. 2 used.

See Universals Section for complete data.

►*NOTE—Slip joint formed by splined yoke of front universal engaging transmission mainshaft (or overdrive shaft). One-piece propeller shaft used.*

REAR AXLE

Own Make. Semi-floating, hypoid gear type with Hotchkiss drive (**separate carrier not used**). Axle ends flanged (no separate hub). Wheel bearings are sealed-ball pre-lubricated (no lubrication required).

See Rear Axle Section for complete data.

Ratio—Standard: 3.9-1 (43-11). With Overdrive: 4.27-1 (47-11). Station Wagon: 4.55-1 (50-11).

Backlash—.003-.008". Shim adjustment.

Removal: Raise rear of car. Disconnect rear universal. Remove axle shafts (see instructions below). Disconnect brake line at "T" on left side of axle housing, and hand brake cable. Disconnect shock absorbers, spring U-bolts and shackles. Remove axle housing assembly from car.

Axle Shaft Removal: Remove wheel. Take out drum to hub capscrews, remove drum. Take out 4 axle retainer nuts (work through opening in axle shaft flange). Use Puller No. 4235 and pull shaft (do not disturb brake backing plate or damage wheel bearing oil seal). Replace one nut to secure backing plate.

SHOCK ABSORBERS

Std.—Mercury 8M-18045-A (front), 8M-18080-A (rear).

Heavy Duty (special equip.)—Mercury No. 8M-18045-B (front), 8M-18080-B (rear).

Direct acting, hydraulic types. Two makes are used and are interchangeable.

See Shock Absorber Section for complete data.

►*NOTE—Shock absorbers are permanently sealed and cannot be refilled or repaired.*

Rear Shock Absorber Installation—Lower tube has welded stone shield on lower end which must be installed toward front of car.

FRONT SUSPENSION

Front Suspension: Independent, linked parallelogram type with coil springs, direct acting shocks, and front stabilizer.

See Front Suspension Section for complete data.

►*CAUTION—Specifications listed below supersede earlier 1949 Mercury Front End Specifications.*

Kingpin Inclination—5° crosswise.
Caster—Pos. ½° to Neg. 1°. Threaded bushing adjustment at lower pivot pin.
Camber—0° to +¾°. Eccentric adjustment at upper pivot pin.
Toe In—3/32-5/32". Adjusting sleeve on outer end of each tie rod. Adjust equally.
Steering Geometry (toe out on turns)—Inner wheel turned 36°, outer wheel 26°5'.

STEERING GEAR

Gemmer Model 335. "3-tooth" Worm-and-roller type with "push-pull" adjustment.

See Steering Gear Section for complete data.

BRAKES

Service: Mercury-Bendix Hydraulic, Duo-Servo, Single Anchor type without ecentric adjustment. Hand lever applies rear wheel service brakes.

See Brake Section for complete data.

Wheel Cylinders—Diameter: Front wheel 1.128" (hone limit 1.132"). Rear wheel 1.003" (hone limit 1.005").
Drums—Diameter 11".
Lining—Molded or woven. Width 2" (front wheel), 1¾" (rear wheel). Thickness 3/16". Length per shoe 11 15/16".
Clearance—.010" at each end of secondary shoe with primary shoe forced out against drum (adjusting screw in each wheel backed off 14 notches or "clicks" from point where shoes drag on drum).
Braking Power—56% front wheels, 44% rear.

Hand Brake: See Service Brakes above.

MISC. MECHANICAL

Power Operated Convertible Tops, Windows, & Front Seat: Hydro-Lectric type (hydraulic actuation with motor-driven pump supplying oil under pressure for power cylinders).

See Miscellaneous Section for complete data.

HOOD ASSEMBLY

1940 MODELS

HOOD LOCK: Engine hood hinged at cowl and lifts from forward end. To raise hood, turn latch handle located on lower edge of radiator grille at center and release safety catch (under hood) at upper edge of grille.

1941-48 MODELS

HOOD LOCK: Alligator type hood hinged at cowl. Hood lock button located on left side under instrument panel. Removable hood side panels used.

FRONT END SHEET METAL

1940 MODELS

FRONT END ASSEMBLY REMOVAL: Radiator core, grille and front fenders can be removed as an assembly for work on front of engine, if necessary, by loosening fenders, core, and side shields.

CYLINDER HEAD

1948 & EARLIER MODELS

INSTALLING CYLINDER HEAD: Use a Torque Indicating Wrench to tighten cylinder head stud nuts, tighten in correct sequence as shown in the diagrams. Cast Iron heads sould be tightened cold and rechecked after the engine has been run and thoroughly warmed up.

Cylinder Head Gasket—Always use new gasket. Coat gasket with very light application of Perfect Seal Gasket Paste to insure tight seal between head and block.

NASH '600'

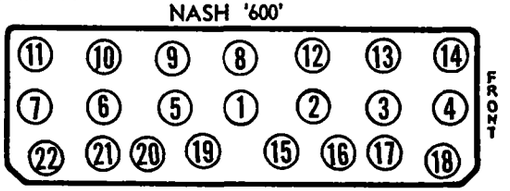

NASH 6

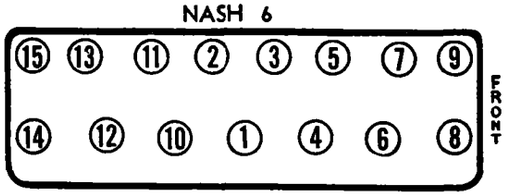

NASH 8

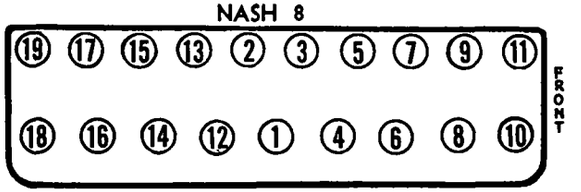

Tightening Torque—See Tightening (Torque Wrench) Specifications below.

1937-41 MODELS

REPLACEMENT CYLINDER HEADS FOR OLDER CAR MODELS: Cylinder heads as used on later cars are furnished for replacement on some earlier car models (with special attaching parts) as follows:

Series 3720 (1937): Use Service Part No. 3111950 with Part No. 3123400-A (includes 4760 Cylinder Head).

Series 38, 39, 4020 (1938-40): Use Service Assembly Part No. 3123400-A (includes 4760 Cylinder Head and attaching parts).

Series 38, 39, 40, 4180 (1938-41): Use 4280 Cylinder Head and gasket and install Washer WA-1035 under each rocker arm shaft stud spacer to maintain original angular movement of valve push rods.

TIGHTENING (TORQUE WRENCH) SPECIFICATIONS

1942-48 MODELS

Cylinder Head Stud Nuts:	Ft. Lbs.	In. Lbs.
'600'—Dry	61-64	732-768
'600'—Oiled	57-60	684-720
Amb. 6 & 8—Dry	65-70	780-840
Amb. 6 & 8—Oiled	60-65	720-780
Main Bearing Capscrews (Sixes)	66-70	792-840
Main Bearing Capscrews (Eight)	70-73	840-876
Connecting Rod Bolt Nuts ('600')	27-30	324-360
Con. Rod Bolt Nuts (Amb.)	50-55	600-660
Tappet Screw '600'	4 1/6	50 min.

1941 MODELS

	Ft. Lbs.	In. Lbs.
Cylinder Head Stud Nuts:		
'600' 4140—Dry	61-64	732-768
'600' 4140—Oiled	57-60	684-720
4160 & 4180—Dry	65-70	780-840
4160 & 4180—Oiled	60-65	720-780
Main Bearing Capscrews (Sixes)	66-70	792-840
Main Bearing Capscrews (Eight)	73-75	876-920
Connecting Rod Bolt Nuts ('600')	27-30	324-360
Connect. Rod Bolt Nuts (4160,80)	50-55	600-660
Tappet Screw '600'	4 1/6	50 min.

1940 & EARLIER MODELS

Cylinder Head Bolts	60-64	720-768
Main Bearing Capscrews (Sixes)	65-70	780-840
Main Bearing Capscrews (Eight)	70-75	840-900
Connecting Rod Bolts	50-55	600-660

ENGINE REMOVAL

1948 MODELS

ENGINE REMOVAL: Remove hood. Drain cooling system, remove radiator and hose connections from engine. Disconnect fuel line at fuel pump, and exhaust pipe at manifold flange. Disconnect throttle controls and remove linkage from engine. Disconnect oil pressure and temperature gauge lines at engine units. Disconnect wiring at ignition coil and generator. Remove crankcase ventilator. Take out front and rear engine mounting bolts. Disconnect clutch linkage (under car), disconnect transmission (see Transmission Removal on car model page for complete instructions). Lift engine out of car using care not to damage engine accessories.

ENGINE MOUNTINGS

1941-48 "600" MODELS

Front Engine Mounting: Consist of shackles insulated with rubber bushings (upper end attached to engine support plate by bushing welded to support, lower end attached to bracket bolted to front frame cross-member) with rubber bumper between frame bracket and bushing to limit movement of shackle mounting.

Installation & Adjustment—Tighten retaining nuts on shackle studs securely. NOTE—Studs provided with shoulders to limit compression of rubber bushings.

Rear Engine Mounting: Consists of rubber and steel support cushion (upper and lower channel sections with live rubber cushion vulcanized to both parts) bolted to transmission case (upper channel), and to body frame cross-member (lower channel). Oil shield is installed on top of support to protect support cushion. Clutch housing is also insulated from engine block (see Clutch Housing Insulator).

Installation—See that oil seal installed with depressed edge forward (to clear transmission case), tighten mounting bolts securely.

Clutch Housing Insulator: Consists of a live rubber pad installed between clutch housing and engine block (upper) and additional pad between engine block and adapter plate (lower). Upper mounting studs (3) provided with limiting sleeves to prevent excessive compression of the rubber pad. Tighten stud nuts securely and lock with palnuts. NOTE—No bolt used in hole on right hand side of housing just above dowel bolt (omitted to permit proper functioning of insulators).

1941-47 AMBASSADOR MODELS

REPLACEMENT (1948 TYPE) ENGINE NOTE: ***When installing 1948 engines in these models, see Replacement Engine Mounting data (following original mounting data).***

Front Engine Mounting (Original Type): Consists of rubber cushion in retainer mounted on frame cross-member by four studs and nuts. Cushion has steel insert (for engine support capscrew) and loose rubber insert plug in lower face of cushion to stabilize cushion action. Cushion block has rectangular projection to control engine torque which must be installed toward left side and square projection of steel insert must register with locating washer welded on front engine support.

Installation & Adjustment—See that loose rubber insert in place in cushion and that torque reaction projection on cushion toward left side, align square projection on steel insert with locating washer on engine support, install capscrew and lockwasher, shift retainer until it just contacts torque projection on cushion, tighten retainer stud nuts securely.

Rear Engine Mounting (Original Type): Consists of upper and lower rubber cushions assembled on stud welded to frame cross-member and support bracket bolted to flywheel housing at each side. Mounting stud has shoulder to limit compression of rubber cushions.

Installation & Adjustment—Install lower (larger) cushion on stud under engine support bracket with steel face down and upper end piloted in steel retainer on lower face of bracket, install upper cushion on stud above bracket with steel face up and small end seated in counterbore in bracket, install lockwasher and nut on stud, tighten nut securely (shoulder on stud limits compression of cushions).

1941-47 AMBASSADOR MODELS

REPLACEMENT ENGINE MOUNTINGS: When installing 1948 Series Engines in these cars, 1948 type engine mountings must be used (see 1948 Mounting data), and front support must be modified as follows:

Installing 1948 Mountings on 1941-47 Cars—Cut off two front original retainer mounting studs to height of 7/32" (to serve as alignment dowels) or install two No. 3125208 dowel studs in these holes. Install new Support Brackets (No. 3124614 L.H. & 3124615 R.H.), piloting bracket on dowel studs, using original rear mounting studs, or two No. SC-3430 capscrews in bracket rear holes. Weld bracket to front of frame cross-member across entire 2" front width (CAUTION—Rubber cushions must be removed from bracket to avoid damage from heat of welding). Lower engine until cushion studs project through slots in chain cover spacer, tighten cushion-to-bracket stud nuts securely, install reinforcing plates No. 3124598 on cushion studs, install lockwasher and nut, tighten nut securely.

1948 AMBASSADOR MODELS

Front Engine Mounting: New type cushion assembly consisting of outer "U" shaped steel section with integral stud (bolts to engine support plate), and inner plate with separate stud (bolts to bracket on cross-member) with rubber insulator bonded to both parts.

Installation & Adjustment—With cushion assembled on frame bracket, lower engine until cushion studs project through slots in engine support plate, tighten cushion-to-bracket stud nuts, then install reinforcing plates on cushion studs and tighten stud nuts.

Rear Engine Mounting: Consist of similar rubber cushions on angular brackets welded to frame cross-member and attached to clutch housing by bolts.

NOTE—1948 type engine has new clutch housing and frame cross-member for this new mounting.

ORIGINAL BORE & PISTONS

1939-48 MODELS

ORIGINAL BORE SIZE (ENGINE CODE) Engines factory equipped with .010" oversize bore (or undersize bearings) are marked with a three-letter code for identification. **Standard size engines do not have this code mark.**

Code Mark Location—Code mark consists of three letters stamped near water temperature gauge engine unit mounting ("600" Models), on engine number pad (Amb. Models).

Letter Position—Bore (and piston) size is indicated by first letter of the three-letter code.

Size Identification—Letters indicate following:
"A"—Standard size Bore and Pistons.
"C"—.010" Oversize Bore and Pistons.

NOTE—The other two letters of the three-letter code designate main and connecting rod journal and bearing sizes (see Original Bearing Sizes).

1942-48 MODELS

ORIGINAL BORE AND PISTON SIZES: Original cylinder bore and piston sizes (standard size and .010" Oversize) are graded in steps listed in table below and are marked by letters. **Bore and piston carry same mark.** Difference in diameter between piston and cylinder bore gives the desired .0003-.0009" clearance. Marks located as follows:

Piston Mark—Letter stamped on piston head.

Cylinder Bore Mark—Letter stamped on exhaust pipe bosses on side of block (#1, 3, and 5 ahead of stud hole in bosses, #2, 4, 6 to rear of stud hole).

Standard Size Bore & Piston		.010" Oversize Bore & Piston	
Mark	**Size**	**Mark**	**Size**
A	0—	CA	+10—
B	0	CB	+10
C	0+	CC	+10+
D	+1—	CD	+11—
E	+1	CE	+11
F	+1+	CF	+11+
G	+2—	CG	+12—
H	+2	CH	+12
I	+2+	CI	+12+

Model "600" Note—Cylinder Bore & Piston dimensions for standard 'B' and 'CB' sizes are as follows:
Piston Diam.—3.1244-3.1247" (B), 3.1344-3.1347" (CB).
Cylinder Bore—3.125-3.1253" (B), 3.135-3.1353" (CB).

PISTONS

1940 MODELS

REPLACEMENT PISTONS: Nash finished replacement pistons furnished in the following sizes:

Standard	.010" Oversize
.001" Oversize	.012" Oversize
.002" Oversize	.015" Oversize
.003" Oversize	.020" Oversize
.005" Oversize	

Semi-finished Pistons—Furnished in one size only —.050" Oversize. These pistons must be finished on suitable machine equipment.

Installation Note—Pistons must be installed with slot in skirt away from camshaft and trademark on inside of piston toward front of engine. Pin bosses in piston offset toward camshaft.

1941 MODELS

REPLACEMENT PISTONS: Finished autothermic type pistons on Models 4140 and 4160, invar-strut type pistons on Model 4180, furnished in the following sizes:

Standard size	.010" Oversize
.001" Oversize	.012" Oversize
.002" Oversize	.015" Oversize
.003" Oversize	.020" Oversize
.005" Oversize	.040" Oversize

Installation Note—Pistons on all models must be installed with Nash emblem inside skirt toward the front of the engine.

PISTON RINGS

1940 MODELS

REPLACEMENT PISTON RINGS: Nash replacement piston rings furnished in the following three sizes:
1—Standard. 2—.010" Oversize. 3—.020" Oversize.

Installation—Car manufacturer recommends that these Sealed Power Spring Type Rings be used as follows:

Standard—For standard up to and including .010" Oversize pistons.

.010" Oversize—For .011" Oversize up to and including .020" Oversize pistons.

.020" Oversize—For .021" Oversize up to and including .030" Oversize pistons.

NOTE—When installing rings, check to following specifications: End Gap—.010-.020" for compression rings; .010-.018" for oil control rings. Side Clearance in ring groove—#1 Compression .002-.0025", #2 Compression .0015-.003". #3 Oil Control .0015-.0025". #4 Oil Control .001-.0025".

1941 MODELS

PISTON RINGS: Installation—A plain top compression ring is used on all models and must be installed with bevel on upper inner edge toward top of the piston. A taper faced compression ring is used in second ring groove with a plain expander installed behind it. This ring should be installed with taper extending out toward the bottom. In #3 & 4 ring grooves (one oil control ring only used on '600') slotted type oil rings with a ventilated type expander installed behind ring is used. Ring fit correct with .010-.015" End Gap and .002-.004" Side Clearance. Stagger end gaps of rings and expanders on piston.

1941-48 MODELS

REPLACEMENT PISTON RINGS: Statite piston rings furnished by car manufacturer for service. These rings can be installed in cylinder bores up to .009" taper or .003" out-of-round for correction of excessive oil consumption using same pistons.

ORIGINAL BEARING SIZES

1936-48 MODELS

ORIGINAL BEARING SIZES (ENGINE CODE NOTE): —Engines factory-equipped with oversize bores or undersize main or connecting rod bearings carry a three letter code for identification. Standard engines carry no code mark.

Code Mark Location—Three letter code stamped on machined surface near water temperature gauge engine unit mounting ("600" Models), on engine number pad on upper right corner of engine block (Amb. Models).

Letter Position—Three letter code used. Position of letter indicates the following:
1st Letter—Original Bore Size.
2nd Letter—Main Bearing Journal Size.
3rd Letter—Crankpin Journal Size.

Size Identification—Letters indicate following:
'A'—Standard size (bore or bearing sizes).
'B'—.010" Undersize (main or con rod bearings).
'C'—.010" Oversize (bore size with .010" OS Pistons).

NOTE—.010" Undersize bearings fitted to .010" Undersize main bearing and crankpin journals. .010" Oversize pistons fitted to .010" oversize bores.

CONNECTING ROD & BEARINGS

1948 & EARLIER MODELS

PLASTIGAGE FOR CHECKING BEARING CLEARANCE: Consists of plastic rod material supplied in envelope marked with scale which gives bearing clearance in thousandths of an inch when used to measure flattened plastigage in bearing cap. Use Plastigage as follows:

Bearing Clearance Check—Remove bearing cap, wipe oil from bearing insert and journal (CAUTION —When checking main bearings, keep all other

CONTINUED ON NEXT PA E

C NTINUED FR M PRECEDING PA E

bearing caps tight so that crankshaft weight will not cause incorrect reading). Place piece of Plastigage rod across full width of bearing insert in cap, re-install bearing cap and tighten bolts to recommended torque (see Tightening Specifications). Remove cap, match widest width of flattened Plastigage with correct graduation of scale on envelope (marking of this graduation is clearance).

1940-48 MODELS

CONNECTING ROD: Bearing Removal & Installation. Removable bearing shells used. To remove bearings, take off bearing caps, remove bearings from rod and cap. Fit bearings as directed below. When installing bearings, oil hole in upper half should register with oil spit hole in rod. Tongue on each bearing should engage groove in rod and cap.

Replacement Bearings—Finished bearings furnished standard and .002", .010" undersize.

Fitting Bearings—To check bearing clearance, insert short piece of .002" feeler stock, ½" wide, lengthwise to crankpin between bearing and crankshaft, tighten cap. Bearing fit correct when a definite drag is felt when rotating the crankshaft. (CAUTION—Do not rotate crankshaft more than 1" in either direction). If no drag felt, replace bearings with proper size (see Replacement Bearings above) until bearing fit correct. Do not shim bearings or file bearing caps.

1941-48 MODELS

INSTALLING CONNECTING ROD PALNUTS: Palnuts used to lock connecting rod bolt nuts in place of cotter pin. Tighten bolt nuts to 27-30 ft. lbs. tension on '600', 50-55 ft. lbs. tension on Amb. 6 & 8, with a tension wrench. Lock bolt nuts in place by installing new palnuts. Install with smooth face toward nut, draw nut up tight but do not overtighten.

CRANKSHAFT & MAIN BEARINGS

1940-48 MODELS

MAIN BEARING REMOVAL & INSTALLING: Upper bearing halve may be 'rotated' out by inserting pin in oil hole in crankshaft and turning shaft in the direction of locating tongue on bearing. Bearings can be installed by reversing removal procedure

Replacement Bearings—Finished bearings which require no reaming or scraping are furnished standard size and .002", .010" undersize.

Fitting Bearings—To check bearing clearance, insert short piece of .002" feeler stock, ½" wide, lengthwise to crank pin between bearing and crankshaft, tighten cap. Bearing fit correct when a definite drag is felt when rotating crankshaft (CAUTION—Do not rotate crankshaft more than 1" in either direction). If no drag felt, replace bearings with proper undersize (as listed above) until bearing fit correct. Do not shim bearings or file caps. NOTE—If filing of caps necessary, car manufacturer recommends that this be done carefully without removing too much metal.

1940-48 MODELS

REPLACEMENT MAIN BEARING CAPS: In extreme emergencies, replacement main bearing caps can be installed if fitted as directed below. Bearing caps are line-bored in production and original bearing caps should be retained if possible.

Replacement Main Bearing Caps—On 6 cyl. engines replace caps as follows: Align bore in cap with bore in crankcase by filing sides of cap (caps fit in recess in block). To assure correct alignment, cap retaining screws should be tightened, then backed off slightly and crankshaft rotated allowing cap to be properly positioned, tighten retaining screws to 66-70 ft. lbs. tension with tension wrench.

Replacement Main Bearing Caps—On 8 cylinder, Install caps on engine, tighten retaining screws, back off screws slightly, line up dowel holes in cap and crankcase (original caps doweled in place when bearings line-bored) to align bore in cap with bore in crankcase, tighten screws to 70-73 ft. lbs.

1940-48 MODELS

CRANKSHAFT REAR OIL SEALS: Install new seals with rear main bearing cap off (and crankshaft out of engine when replacing upper half) as follows:

Rear Main Bearing Oil Seal ('600)—Hemp packing fitted in groove in crankcase and cap behind oil slinger on crankshaft. Cap sealed with rubber plugs in groove on each side where cap fitted in recess in block. Use Tool J-1610 to install packing in groove in cap and block. Place packing in groove (with bearing shell removed), place small diameter of tool over packing, hit end of tool with lead hammer to seat packing, cut ends of packing flush with bearing cap seat, remove tool. Repeat operation for groove in block. Install rubber seal plugs on each side of bearing cap (on 4840 with angle seal, make certain that seal also seated in horizontal groove in block).

Rear Main Bearing Oil Seal (Amb. 4860)—New type steel-backed, synthetic rubber seal. Install upper half in block, lower half in bearing cap, making certain that seal fits snugly over edge of rear bearing oil-return groove. See that surface on crankshaft to rear of oil slinger (on which seal bears) is clean and smooth. Install rubber seal key strips on either side of bearing cap (these strips overlap bearing cap and seal sides and mating surfaces of bearing cap in crankcase).

Rear Main Bearing Oil Seal (Ambassador 6, 1940-47)—Reverse threaded oil slinger formed on crankshaft rotates in line with cored groove in block and cap. No seal installed in this groove. Groove in cap provided with two 13/32" diameter oil return holes. Cap sealed with straight grain pine wood seal plugs installed in groove on each side of cap where cap fitted in recess in block. With bearing cap off, check clearance between oil slinger threads and bore in block and cap. Clearance must be .006-.008" uniformly around shaft to provide eccentric oil thread. If clearance too small, file crankshaft thread (CAUTION—Do not alter bore in block and cap for clearance adjustment). Clean seal plug grooves in cap to provide flat and smooth surfaces. After bearing cap installed, place gasket compound on inner end of plug, tap plug carefully in place in groove on each side of cap, cut off ends of plugs flush.

Rear Main Bearing Oil Seal (Ambassador 8, 1940-42)—Reverse threads cut on the crankshaft behind oil slinger. Slinger turns in line with cored groove in block and cap. No seal installed in this groove. Groove in cap provided with oil return holes. Clearance between threads (behind oil slinger) and bore in block (behind oil slinger groove) should be .006-.008". Check with cap off engine. If clearance too small file threads on crankshaft. Cap sealed to oil pan with cork gasket. Rear edge of cap sealed to flywheel housing pan by an additional cork gasket.

Crankshaft Sprocket Installation:—Sprocket should be heated for installation on crankshaft. When reassembling timing chain make certain that sprocket marks are adjacent and in line with a straightedge across the crankshaft and camshaft centers. NOTE—Sprocket should be heated to 212° F. (temperature of boiling water).

1941-48 "600" MODELS

CRANKSHAFT END THRUST PLATE ('600'): Crankshaft end thrust taken by flanged edges of front bearing. A steel thrust plate is assembled between rear face of timing chain sprocket and flanged face of front bearing. Plate keyed to shaft by woodruff key which also secures sprocket on shaft. When plate installed, chamfered edge on inner diameter should face toward the rear for tight fit against bearing journal. See Crankshaft Front Oil Seal and Vibration Dampener for assembling directions

Adjustment—If endplay not correct with all parts correctly assembled, replace front main bearings or thrust plate.

1941-48 MODELS

CRANKSHAFT FRONT OIL SEAL: "600" & Amb. 6. A felt seal is fitted in the timing chain cover which bears against vibration dampener hub. Seal seat in cover has inner edge turned up to form a shedder on inside of cover. An oil slinger is assembled behind vibration dampener hub which extends over outer edge of oil shedder. Use Tool J-1430 installed on end of crankshaft when tightening timing chain cover screws to align seal properly. NOTE—On '600' Model a cork seal and rubber seal ring is assembled behind vibration dampener to seal front end of crankshaft. See Vibration Dampener below for data.

Model 4180—Oil threads formed on rear of vibration dampener hub with an oil slinger assembled behind hub. A steel-bushing is assembled in opening in timing chain cover. Use Tool J-1430 installed on end of crankshaft when tightening timing chain cover screws to align steel bushing properly.

VIBRATION DAMPENER

1940 MODELS

VIBRATION DAMPENER: Rubber cushioned vibration dampener mounted on forward end of crankshaft. Dampener is drilled for lubrication. Car manufacturer recommends that 2 brass filler plugs in outside diameter of dampener flywheel be removed and filled with light engine oil at 3000 mile intervals.

1941-48 MODELS

VIBRATION DAMPENER: "600" & Amb. Six. Non-adjustable, rubber-cushioned vibration dampener mounted on forward end of crankshaft. Outer flywheel secured to dampener hub by rubber-cushioned bolts. On '600' Model, a cork seal and rubber seal ring installed between front end of crankshaft and hub retainer. Hub assembly installed as follows: Lock hub on shaft with woodruff key, install large lockwasher with notches on inner edge, cork seal, rubber seal ring and hub retainer in recess in hub, install hex head lock screw with helical

lockwasher under it in screw hole in end of crankshaft and tighten screw securely. On Amb. Six, dampener hub retained by a special nut with shakeproof lockwasher (no seals installed behind hub retainer as on '600'). On all models, rubber block retaining bolt nuts on front face of dampener hub must be drawn up tight. No adjustment provided.

IMPORTANT NOTE—When installing front flywheel on hub, timing marks must be in line with hub key-way and on the same side. Whenever new front flywheel installed, balance holes must be duplicated as to size and depth for proper balance.

Amb. Eight—Adjustable, rubber-cushioned vibration dampener mounted on forward end of crankshaft. Consists of hub retained on end of crankshaft by a special nut. Pulley secured to front face of hub by four screws. Two rubber cushions assembled on each screw, rear half installed with shoulder toward hub, front half with shoulder toward circular ring. This ring fits in recess on front face of pulley and screw holes are provided for assembling ring under screws. All four screws should be drawn down evenly and inner ends (on rear side of hub) should be peened to lock screws in place. Screw tension can be adjusted to eliminate knock caused by vibration dampener. Fan belt tension should be checked first since excessive belt tension will cause dampener to knock. Two oil wicks under brass plugs on outer edge of dampener should be oiled every 2000 miles. Remove plugs, saturate oil wicks with light engine oil.

CAUTION—See Important Note above.

CAMSHAFT & BEARINGS

1940 MODELS

CAMSHAFT REMOVAL: For camshaft removal or camshaft bearing replacement, remove as follows: Remove radiator, grille, and hood side panel for access to engine. Remove fan belt, vibration dampener, timing chain cover, timing chain, distributor and fuel pump. On Ambassador Eight, take off the oil pump and pump driveshaft. Remove front camshaft bearing (takes camshaft end thrust), raise valve lifters to clear camshaft journals and withdraw camshaft from front of engine. NOTE—When re-assembling oil pump and pump driveshaft on Ambassador Eight, slot in end of pump driveshaft (for distributor coupling) should be across the engine.

1941-48 MODELS

CAMSHAFT REMOVAL: Amb. "600". Special valve tappet retaining clips (supplied in sets of 16—Tool No. J-1612) available for camshaft removal without necessity of removing valves or cylinder head. Clips should be installed on upper ends of valve lifters and will hold lifters up out of the way while the camshaft is being withdrawn.

CAMSHAFT REMOVAL: Amb. Six. Remove pushrods. Remove valve cover on side of engine, lift up each valve lifter and use rubber band to hold lifters up out of the way while the camshaft is being withdrawn.

VALVE SYSTEM

1941-48 MODELS

SELF-LOCKING TAPPET SCREWS "600": No locknut used on tappet adjusting screw. Threaded bushing welded to top of tappet with threads out of index with threads in tappet which locks tappet screw in position. Screw tension should be 50 inch lbs. minimum to retain tappet adjustment. Check with tension wrench. Tappet screws supplied separately, however car manufacturer recommends replacement of complete tappet assembly.

OIL PAN REMOVAL

1941-42 MODELS

NASH "600": Disconnect both the front shock absorbers at upper end, remove nuts on upper ends of suspension units and lift off front suspension upper cross-rod (extending across engine directly above cylinder head), disconnect accelerator rod between carburetor and dash. Drain cooling system, disconnect upper radiator hose. Remove front four oil pan capscrews, install support jack under engine at front engine support (directly behind vibration dampener), disconnect front engine support by removing bolts in mounting shackle. Raise front end of engine approximately 4". Remove all oil pan capscrews, lower pan and remove from beneath car.

CAUTION—Check Front Suspension after oil pan replaced and front suspension upper cross-rod reinstalled. *See 1941-42 Nash "600" article in Front Suspension Section.*

OIL PUMP

1948 MODELS

OIL PUMP (AMB. SIX): Pump is mounted on center main bearing cap and must be dismantled for removal as follows:

Oil Pump Disassembly & Removal: Take out pump mounting screws, withdraw pump body and idler gear assembly (shaft will remain in engine). Withdraw shaft from below disengaging drive gear from splines on upper end of shaft as shaft is withdrawn. Gear is free fit on shaft splines and can be lifted out after it is freed from the shaft. Pump operates in thin wall bushing pressed in block (upper), in pump body (lower). Remove and replace bushing from below with pump and shaft out of engine. Ream bushing to diameter of .500" after installation.

CAUTION—Excessive clearance of shaft in bushing will result in low oil pressure (pump oil delivery is up along shaft to oil channel in block—upper bushing prevents oil leakage from channel).

Oil Pump Assembly & Installation: Make certain that loose thrust ball installed in pump body at lower end of pump shaft. Install pump in reverse order of disassembly and removal instructions (above).

LATE 1947 MODELS

►**OIL PUMP PRODUCTION CHANGE:** New larger capacity, higher-pressure pumps used beginning with late 1947 cars as follows: "600" Series 40—Serial No. K-182791, Eng. No. KE-34134 Up; Amb. Series 60—Serial No. R-457798, Eng. No. RE-20512 Up.

►***CAUTION—Pump parts not interchangeable (parts furnished for both early and later type pumps).***

Pump Identification—Pumps can be distinguished by length of pump gears as follows: First Type—1¼", Later Type—1⅜". Later type pump also has shaft undercut to provide for the greater oil delivery flow.

CLUTCH NOTES

1946 "600" STARTING SERVICE SERIAL NO. N6-125727
1947-48 "600" MODELS

CLUTCH LINKAGE ADJUSTMENT: Linkage consists of a clutch beam lever (Idler lever), pivoted in a channel-section clutch beam support, which transmits clutch pedal movement to clutch throw-out fork. Beam support is hooked over a beam support plate mounted on the engine (inner end), and rests on a beam fulcrum plate assembly mounted on the steering gear housing (outer end). Beam support is held in position by a beam anchor spring hooked in lug on fulcrum plate mounting stud. Beam fulcrum plate must be properly positioned or beam support will climb out of support plate hook and cause clutch chattering. Adjust as follows:

Beam Fulcrum Plate Adjustment—Install spacing washers, as required, between beam anchor spring plate and steering gear housing so that beam support is centered on its two support points. See that pull of beam anchor spring is parallel to beam fulcrum plate.

MODEL IDENTIFICATION

SERIAL NUMBER:—First No. (Model 3640) C-1001 (3640A) C-9501. On right frame side rail under engine hood and on Caution Plate on left front door corner plate.

ENGINE NUMBER:—Stamped on plate on right front of crankcase below valve cover plate.

TUNE-UP

COMPRESSION:—Ratio—5.58-1. No optional ratios.
Pressure—125 lbs. at 350 R.P.M.

VACUUM READING:—Gauge should show steady reading of 18-20" with engine idling.

FIRING ORDER: 1-5-3-6-2-4. See diagram.

SPARK PLUGS: AC Type G-8. 18 mm. Metric.
Gaps—.025" (.030" cars with radio). NOTE—In some cases performance has been improved by setting the gaps at .020" in the field.

IGNITION: See Coil, Condenser, and Distributor.
Breaker Gap—.020" (.018-.020") **Cam Angle** 38° closed
Automatic Advance—12° (distr.) maximum at 1000 Distributor RPM.

IGNITION TIMING: See Ignition Timing.
Std. Setting—10° BTDC (early cars), TDC (later cars). IGN mark on vibration dampener at front of engine. NOTE—Time cars with red plate on side of distributor housing reading "CAUTION—SET IGN. ON DC" as directed, regardless of IGN mark location.

CARBURETION: See Carburetor & Carb. Equipment.
Idle Setting—Idle speed 5-7 MPH. Adjust idle screw for smooth idle.
Float Level—Fuel level 5/8" below edge of bowl.
Accelerating Pump—2 or 3 holes. Inner (Summer), Outer (Winter).
Fuel Pump Pressure: 3½ lbs. maximum.

VALVES: See Valve Timing.
Tappet Clearance—.015" all valves with engine hot or cold.

STARTING: See Battery, Starter, and Generator.

IGNITION

Ignition Switch:—Mitchellock Model 24-B, Type 6708. Conected to coil by armored cable.
Ignition Lock—Briggs & Stratton Model 50184, Mitchell No. 6760.

COIL: Auto-Lite IG-4626 (Early), IG-4626-A (Later).
Ignition Current—2½ amperes idling, 4 stopped.

CONDENSER: Auto-Lite Part No. IGB-1025.
Capacity—.20-.25 microfarad.

DISTRIBUTOR: Auto-Lite Model IGB-4328A or IGB-4328B. Single breaker, 6 lobe cam, full automatic advance type.
Breaker Gap—Set at .020". Limits .018-.020".
Cam Angle or Dwell—38° closed, 22° open (distr.).
Breaker Arm Spring Tension—16-20 ounces.

Automatic Advance—IGB-4328-A and B

Distributor Degrees	R.P.M.	Engine Degrees	R.P.M.
Start	300	0	600
3	390	6	790
7	500	14	1000
10	800	20	1600
12	1000	24	2000

Removal:—Distributor mounted on right side of cylinder head. To remove, loosen locknut and take out mounting setscrew on side of cylinder head opposite distributor.

IGNITION TIMING

IGNITION TIMING:—

	Flywheel Degs.	Piston Pos.
First Cars (see note)	10° BTDC.	.0415" BTDC.
Later Cars	At TDC.	.0000" TDC.

NOTE—On all cars with a red plate reading "Caution—Set IGN. on DC." on the side of the distributor housing, the later ignition setting must be used regardless of the location of the 'IGN' line on the vibration dampener. On late cars the IGN. and DC. lines on the vibration dampener coincide.

Timing (first cars without 'Caution' Plate)—With #1 piston on compression, turn engine over until piston is 10° before top dead center, stop when 'IGN' line on vibration dampener at front of engine lines up with pointer on chain case cover. The 'IGN' mark is the first line, the second line indicates top dead center for pistons #1 and 6. Loosen locknut and setscrew on side of cylinder head, rotate distributor until contacts begin to open, tighten setscrew and locknut.

Timing (later cars with Caution Plate)—With #1 piston on compression, turn engine over until piston reaches top dead center, stop when 'DC' line on vibration dampener at front of engine lines up with pointer on chain case cover (if the dampener also marked 'IGN' at point 10° before 'DC' line, the 'IGN' line should be disregarded and the ignition set at the second or 'DC' line; on late cars the two lines coincide). Loosen locknut and set screw on side of cylinder head, rotate distributor until contacts begin to open, tighten setscrew and locknut.

CARBURETOR

Stromberg Model EX-22 (3640), AX-2 (3640A). Single barrel, downdraft types with manual choke control.
For complete data, refer to Carburetor Index.
NOTE—Do not adjust carburetor until engine is thoroughly warmed up and choke valve is wide open.

Idle Adjustment—Adjust throttle stopscrew so that idle speed is 5-7 M.P.H. Turn idle adjusting screw

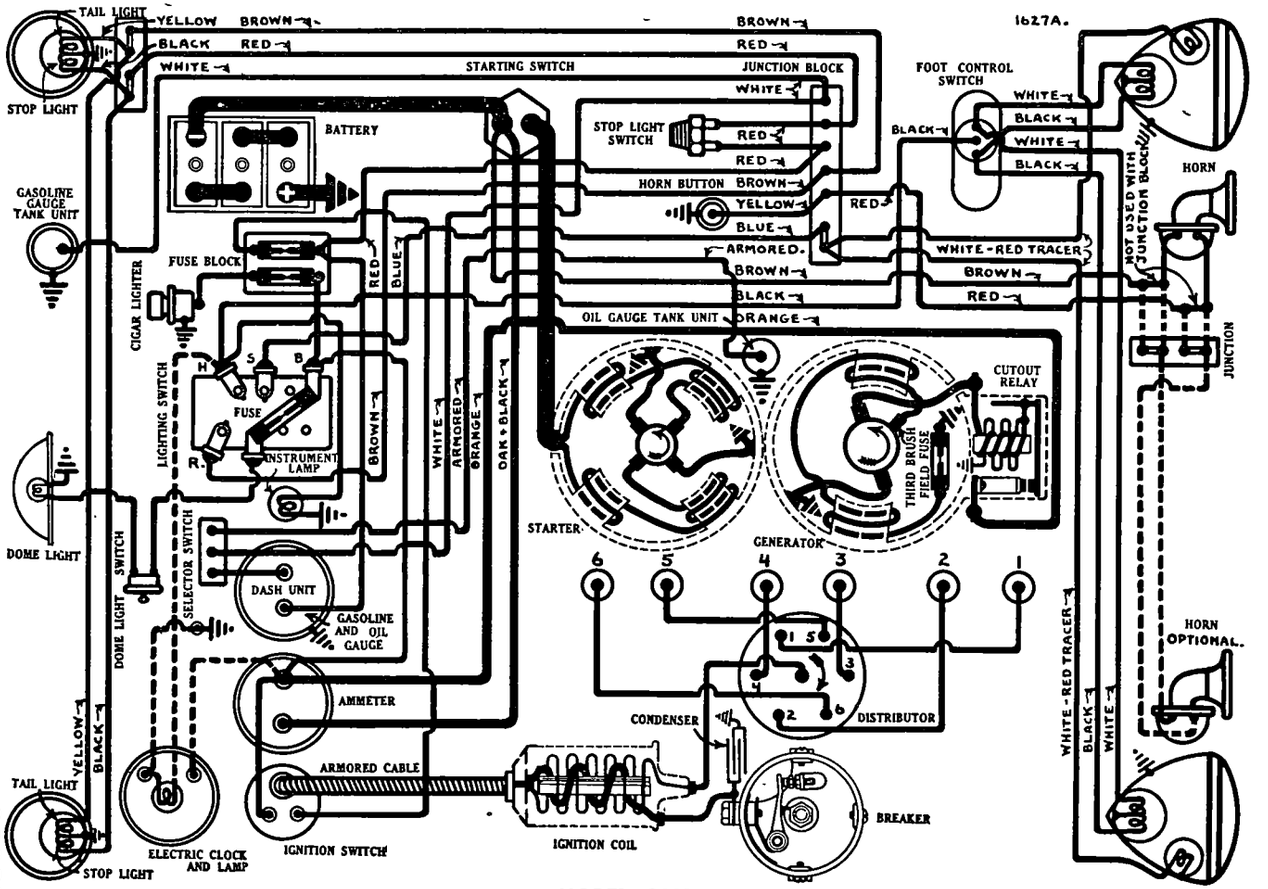

MODEL 3640

in until engine begins to hesitate or miss, then out until engine begins to roll, finally turn screw in slowly until engine fires smoothly. Readjust throttle stopscrew for correct idling speed.

Accelerating Pump Setting—Engage pump link in proper hole in throttle lever for seasonal requirements as follows:

#1—Inner hole (Min. stroke)—Extremely hot temperatures.

#2—Center hole (Med. stroke)—Normal summer temperatures.

#3—Outer hole (Max. stroke)—Winter temperatures.

CARB. EQUIPMENT

Air Cleaner:—AC. #152967 oil-wetted type standard. Heavy duty oil-bath type optional.

Fuel Pump:—AC type R #1521454 (3640), #1522133 (3640A RHD). Type W #1522152 (3640A LHD). *For complete data, refer to Carburetion Equip. Index.*

Gasoline Gauge:—Auto-Lite Electric Gasoline & Oil Level Gauge. No. NG-7822D (Dash Unit), NG-7441T (Gasoline Tank Unit), NG-7465 (Oil Level Engine Unit). *For data, refer to Carburetion Equip. Index.*

BATTERY

U. S. L. Type KW-13A (3640), Type KL-1-13 (3640A). 6 volt, 13 plate, 96 (KW-13A), 100 (KL-1-13) ampere hour capacity (20 hour rate).

Starting Capacity—106 amperes (KW-13A), 120 amperes (KL-1-13) for 20 minutes.

Grounded Terminal—Positive (+) terminal is grounded to frame and to transmission cover bolt.

Location—On left side under driver's seat.

STARTER

Auto-Lite Models MAB-4068 or Model MAB-4076. Armature No. MAB-2057.

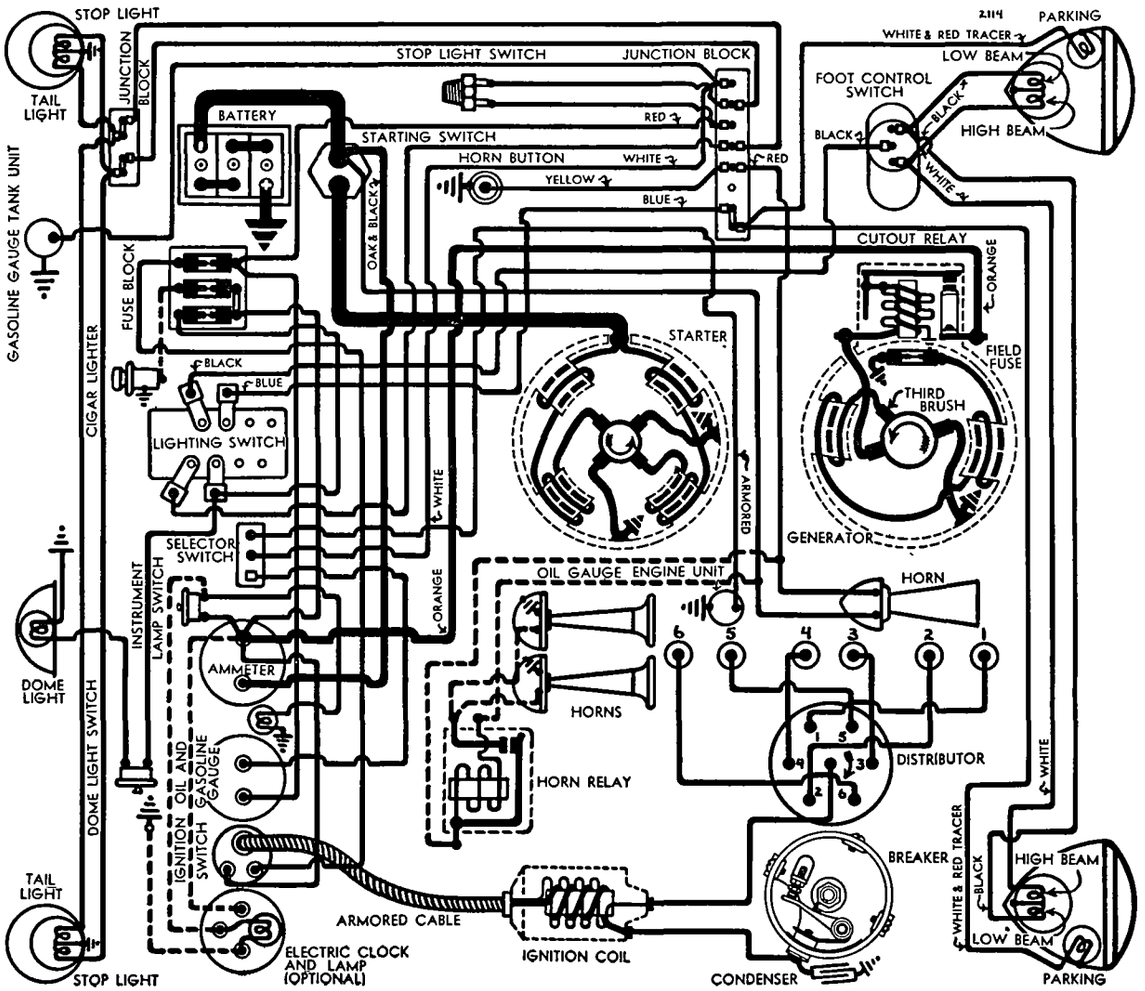

MODEL 3640A

Drive—Inboard Bendix Type LCD11FX-10.

Rotation—Counter-clockwise at commutator end.

Brush Spring Tension—42-53 ozs. (new brushes).

Performance Data

Torque	R.P.M.	Volts	Amperes
0 ft. lbs.	3700	5.5	60
.6 "	1910	5.0	100
3.4 "	1100	4.5	200
6.6 "	695	4.0	300
10.15 "	420	3.5	400
15.8 "	Lock	3.0	582
22.5 "	Lock	4.0	775

Starting Switch:—Model SW-4001 (MAB-4068), SW-4005 (MAB-4076). Mounted on left side of engine below clutch pedal. Operated by depressing clutch pedal fully. No adjustment required.

Removal:—Starter flange mounted on left front face of flywheel housing. To remove, take out two flange mounting capscrews.

GENERATOR

Auto-Lite Models GAR-4618-2, GAR-4601-5 or GAR-4634-2. Third brush control types.

Armature Nos. GAR-2155 (4618), GAR-2214 (others).

Charging Rate Adjustment—Take off commutator cover band, shift third brush by hand counter-clockwise to increase, or clockwise to decrease charging rate. Third brush held in position by friction.

Maximum Charging Rate—18 amperes (cold), 16 amperes (hot), 8.0 volts, 2300 R.P.M.

Performance Data—GAR-4618-2 and 4634-2

Cold			Hot		
Amps.	Volts	R.P.M.	Amps.	Volts	R.P.M.
0	6.4	800	0	6.4	800
4	6.8	940	4	6.85	960
8	7.15	1125	8	7.25	1160
12	7.5	1380	12	7.65	1500
16	7.85	1740	16	8.0	2300
18	8.0	2250			

Performance Data—GAR-4601-5

Cold			Hot		
Amperes	Volts	R.P.M.	Amperes	Volts	R.P.M.
0	6.4	720	0	6.4	760
4	6.8	860	4	6.8	925
8	7.25	1000	8	7.25	1125
12	7.7	1160	12	7.7	1350
16	8.1	1360	16	8.1	1680
20	8.5	1660	19.2	8.4	2600
22.4	8.8	2300			

Rotation—Counter-clockwise at commutator end.

Brush Spring Tension—50-60 ozs. max.

Field Current—3.7-4.1 amps. (GAR-4618 & 4634), 3.51-3.89 amperes (GAR-4601-5) at 6.0 volts.

Motoring Current—4.94-5.46 amps. (4618 & 4634), 5.07-5.57 amperes (GAR-4601-5) at 6.0 volts.

Field Fuse—5 ampere on generator frame.

Removal:—Generator cradle mounted at left front of engine with fan belt drive. Water pump impellor mounted on generator shaft. To remove, drain radiator, take out water pump mounting bolts or remove water pump cover screws. Slack off belt adjustment. Loosen mounting clamp band, lift out generator and water pump.

Belt Adjustment:—Adjust when slack or sideplay of belt midway between generator and fan pulleys exceeds 1½". To adjust, loosen two capscrews on fan bracket, lift bracket up (pivots on one screw) until sideplay is approximately 1", tighten capscrews.

CONTINUED ON NEXT PAGE

CONTINUED FROM PRECEDING PAGE

CUTOUT RELAY

Auto-Lite CB-4014. Mounted on generator.
For complete data, refer to Electrical Equipment Index.
Cuts In—6.5-7.25 volts, 800 R.P.M.
Cuts Out—.5-2.5 ampere discharge current.
Contact Gap—.015-.045".
Air Gap—.010-.030" with contacts closed.

LIGHTING

M DEL 3640

LIGHTING:—Soreng-Manegold Switch, Model 5820-A. R.B.M. Foot Control Switch. Foot operated control switch used to control headlamp upper and lower beams. Headlamp bulbs are pre-focused

Bulb Specifications

Position	Candlepower	Mazda No.
Headlamps	32-21	2320C
Parking, Instrument	3	63
Stop and Tail	21-3	1158
Dome	3	64 (DC.)

LIGHTING

MODEL 3640A

LIGHTING:—Headlamps—Corcoran-Brown, Pre-focused type. Foot selector switch controls upper and lower beams.

Switches

Lighting—Soreng-Manegold Model A-5820-A.
Foot Selector—H. A. Douglas.
Stop Light—Motometer Hydraulic #58012. Nash Part No. 47601.

Bulb Specifications

Position	Candlepower	Mazda No.
Headlamps	32-32	2331
Stop and Tail	21-3	1158
Parking, Instrument	3	63
Dome	6	81

MISC. ELECTRICAL

MODEL 3640

FUSES:—Lighting—20 ampere on back of switch.
Generator Field—5 ampere on generator frame.
Accessory—One or two 20-ampere fuses on fuse block mounted on steering column support in back of instrument panel.

MISC. ELECTRICAL

M DEL 3640A

FUSES:—Lighting—20 ampere on fuse block on back of instrument panel.
Stop Light and Gasoline Gauge—20 ampere on fuse block as above.
Generator Field—5 ampere on generator frame.

ENGINE

ENGINE SPECIFICATIONS:—Own 'Monitor Sealed Motor.' Six cylinder, 'L' head type. Cylinders cast enbloc. No intake manifold is used and intake passage is formed within the head and block castings.
Bore—3⅜". **Stroke**—4⅜".
Displacement—234 cubic inches.
Rated Horsepower—27.34 (SAE).
Developed Horsepower—90 at 3400 R.P.M.
Compression Rati and Pressure—5.58-1 std. cast-iron head. Presure—125 lbs. at 350 R.P.M.
Vacuum Reading—Gauge should show steady reading of 18-20" with engine idling at 5-7 M.P.H.

PISTONS:—Bohnalite, aluminum alloy, Invar strut, split skirt type.
Length—3⅞".
Weight—19⅛ ounces.
Removal—Pistons and rods removed from above.
Clearance—Skirt .002". See Fitting New Pistons.
Fitting New Pistons:—Use .002" feeler stock inserted between piston and cylinder wall on side opposite slot to check clearance.
Installing Pistons:—Slot should be toward left or away from camshaft.

PISTON RINGS:—Two compression rings, two oil control rings per piston, all above pin.

Ring	Width	End Gap
Comp. All	⅛"	.010-.025"
Oil Cont. (#3)	⅛"	.010-.025"
Oil Cont. (#4)	3/16"	.010-.025"

PISTON PIN:—Diameter—⅞". Pin floats in piston and rod. Pin hole in rod is bronze-bushed. Pins furnished for service standard, .001", .003", .005" oversize.
Pin Fit in Piston—Light push fit with piston heated.
Pin Fit in Rod Bushing—.0001" or light push fit with piston and rod cold.

CONNECTING ROD:—Length—8¾" (center-to-center).
Weight—36¼ ounces.
Upper Bearing (Piston Pin Bushing)—Bronze.
Crankpin Journal Diameter—2".
Lower Bearing—Interchangeable, steel-backed, babbitt or copper-lead lined type. Shims used.
Clearance—.002-.003". Sideplay .008-.012".
Bearing Adjustment:—Shims. Do not file rods or caps. Replace bearings when necessary.

CRANKSHAFT:—7 bearing. Integral counterweights.
Journal Diameters—2 31/64" all bearings.
Bearing Type—Interchangeable, steel-backed, babbitt or copper-lead lined. shims used.
Clearance—.002-.0025".
Bearing Adjustment:—Shims. Do not file caps. Replace bearings when necessary.
End Thrust:—Taken by center (#4) bearing. Endplay .004-.007".

CAMSHAFT:—6 bearing. Non-adjustable chain drive.
Journal Diameters—#1, 1⅞"; #2, 2 13/64"; #3, 2 11/64"; #4, 2 9/64"; #5 2 7/64; #6, 1¾".
End Thrust:—Taken by front bearing (shoulder formed on shaft behind bearing, and shoulder in front of bearing formed by sprocket hub when bolted on camshaft). Adjusted by replacing bearing.
Timing Chain:—Whitney. Double strand roller chain. Width 9/16". Pitch ⅜". Length 22½" or 60 links.
Camshaft Setting:—Sprockets are marked. Mesh chain with sprockets turned so that marks are adjacent and in line with a straightedge across the shaft centers. Install chain endless with camshaft sprocket off engine.

VALVES:—	Head Diam.	Stem Diam.	Seat Width
Intake	1 21/32"	.341"	1/16"
Exhaust	1 17/32"	.341"	1/16"

	Seat Angle	Lift	Stem Clearance
Intake	45°	5/16"	.002"
Exhaust	45°	5/16"	.002"

VALVE TIMING

Tappet Clearance:—.015" all valves with engine hot or cold.
Valve Timing:—See Camshaft Setting above.

LUBRICATION

LUBRICATION:—Pressure. Gear type oil pump located in crankcase.
Normal Oil Pressure:—25 lbs. (10 lbs. idling).
Oil Pressure Relief Valve:—Located on oil pump. Operates at 25 lbs. Adjustable by turning screw.
Crankcase Capacity:—7 qts. (refill).

CLUTCH

CLUTCH:—Borg & Beck Model 9A6. Single plate, dry disc type. See article in Clutch Section for relining and assembling directions.
See Clutch Section for complete data.
Facings—Woven (pressure plate side), molded (flywheel side), 2 required. Inside Diam 5⅝". Outside Diam. 9¼". Thickness .133".
Adjustment—Free movement of clutch pedal must be ½-1". Adjust whenever free movement is less than ½". To adjust, loosen transverse bolt at lower end of clutch pedal, shift pedal position, tighten bolt.
Removal—Disconnect driveshaft at rear of transmission, remove transmission, drop clutch housing underpan, take out capscrews mounting clutch on flywheel turning all screws out evenly to release spring pressure. Clutch assembly can then be removed from below without removing flywheel housing.

FRONT SUSPENSION

Front Suspension:—Conventional 'I' beam section front axle with Reverse-Elliott ends and semi-elliptic springs.
Kingpin Inclination—7° crosswise.
Camber—0-1½°. No adjustment.
Caster—0-1°. Adjust by inserting wedge shims between spring and spring pad on axle.
Toe In—0-⅛". Adjust by loosening clamp bolt at right end of tie rod and screwing tie rod in or out of end joint. Tighten clamp bolt.

STEERING GEAR

Steering Gear: Gemmer Worm-and-Roller type.
See Steering Gear Section for complete data.

BRAKES

BRAKES:—Service—Bendix Hydr., Duo-Servo, single anchor type. Hand lever applies rear service brakes.
See Brake Section for complete data.
Drum Diameter—10".
Lining—Moulded type. Width 2". Thickness 3/16". Length 22 1/16" per wheel.
Clearance—.010" between drum and lining.
Hand Brake Adjustment:—Should be adjusted whenever service brakes adjusted. Turn adjusting screw in wheel so that shoes are tight in drum. Loosen two bracket bolts, pull hand brake lever on three notches, pull bracket forward removing all slack in cables and tighten bolts. Then with lever in released position readjust shoes to give .010" clearance in drums by checking with feeler gauge through slot in drum.

MODEL IDENTIFICATION

SERIAL NUMBER:—First number—R-303301. On right hand frame side rail under engine hood.

ENGINE NUMBER:—On plate on right hand side of crankcase. Serial number (R-303301 up) on right hand frame side rail under engine hood.

TUNE-UP

COMPRESSION:—Ratio—5.25-1 Cast-iron head. Pressure—125 lbs. at 350 R.P.M.

VACUUM READING:—Gauge should show steady reading of 18-20" with engine idling.

FIRING ORDER: 1-5-3-6-2-4. See wiring diagram for spark plug cable connections on distributor cap.

SPARK PLUGS: AC Type K-12 or No. 47 (std.), Type K-7 or No. 45 (cars with Overdrive). 14 mm. Metric. Gaps—.025" (.030" cars with radio).

IGNITION: See Coil, Condenser, and Distributor.
Breaker Gap—.020". Limits .018-.020". (.020-.024" for first 1000 miles with new contacts).
Cam Angle—35° closed (for each set of contacts).
Synchronization—Set movable contacts to open simultaneously with stationary contacts.
Automatic Advance—9° max. at 680 RPM (IGE-4012A), 9° max. at 1000 RPM (IGE-4012B). Distr. ° and RPM.

IGNITION TIMING: See Ignition Timing.
Std. Setting—Stationary contacts open with 'IGN' mark (or first line) on vibration dampener aligned with pointer at front of engine. Both sets of contacts should open simultaneously.

CARBURETION: See Carburetor & Carb. Equipment.
Idle Setting—Set idle adjusting screw midway between "miss" and "roll" points. Idle speed 7-8 MPH.
Float Level—Fuel level 9/16" below edge of bowl.
Accelerating Pump—Inner hole (Summer), outer (winter).
Fuel Pump Pressure: 3½ lbs. maximum.

VALVES: See Valve Timing.
Tappet Clearance—.015" with engine hot. Set clearance with engine idling.

STARTING: See Battery, Starter, Generator, Regulator.

IGNITION

Ignition Switch:—Oakes Hershey type co-incidental ignition switch and steering post lock.

COIL: Auto-Lite Model CE-4402A (2 used). On dash
Ignition Current—2 amperes (running), 4 amperes (stopped) for each coil.

CONDENSER: Auto-Lite Part No. IG-2671 (2 used).
Capacity—.20-.25 microfarad.

DISTRIBUTOR: Auto-Lite IGE-4012A, IGE-4012B (after serial number R-303971 and R-303920 excepting cars R-303058 to 304077 inclusive). Double breaker, 6 lobe cam, full automatic advance type. Contacts open simultaneously to fire both spark plugs in each cylinder at the same instant. Each set of contacts controls one coil and fires one spark plug in each cylinder. Contacts must be synchronized—see Timing.

Breaker Gap—Set at .020". Limits .018-.020".

Cam Angles—Closed 35°. Open 25° (distributor). Each set operates independently and controls one coil.

Breaker Arm Spring Tension—16-20 ounces.

Automatic Advance—IGE-4012-A

Distributor Degrees	R.P.M.	Engine Degrees	R.P.M.
Start	200	0	400
3	360	6	720
6	520	12	1040
9	680	18	1360

Automatic Advance—IGE-4012-B

Start	200	0	400
3	475	6	950
6	740	12	1480
9	1000	18	2000

Distributor Removal:—Mounted on right side of crankcase. To remove, take out hold-down screw in advance arm.

IGNITION TIMING

IGNITION TIMING:—Stationary Contacts—With #1 piston on compression, turn engine over until 'IGN' mark on vibration dampener at front of engine lines up with pointer on chain case cover. The second line indicates top dead center. Loosen advance arm clamp bolt, rotate distributor until fixed contacts (mounted directly on breaker plate) begin to open, tighten clamp bolt. Then check synchronization of movable contacts.
Synchronization (Movable Contacts)—Movable contacts (mounted on sub-plate) should open at the same instant as the fixed set (see above). After timing stationary contacts, and without disturbing

CONTINUED ON NEXT PAGE

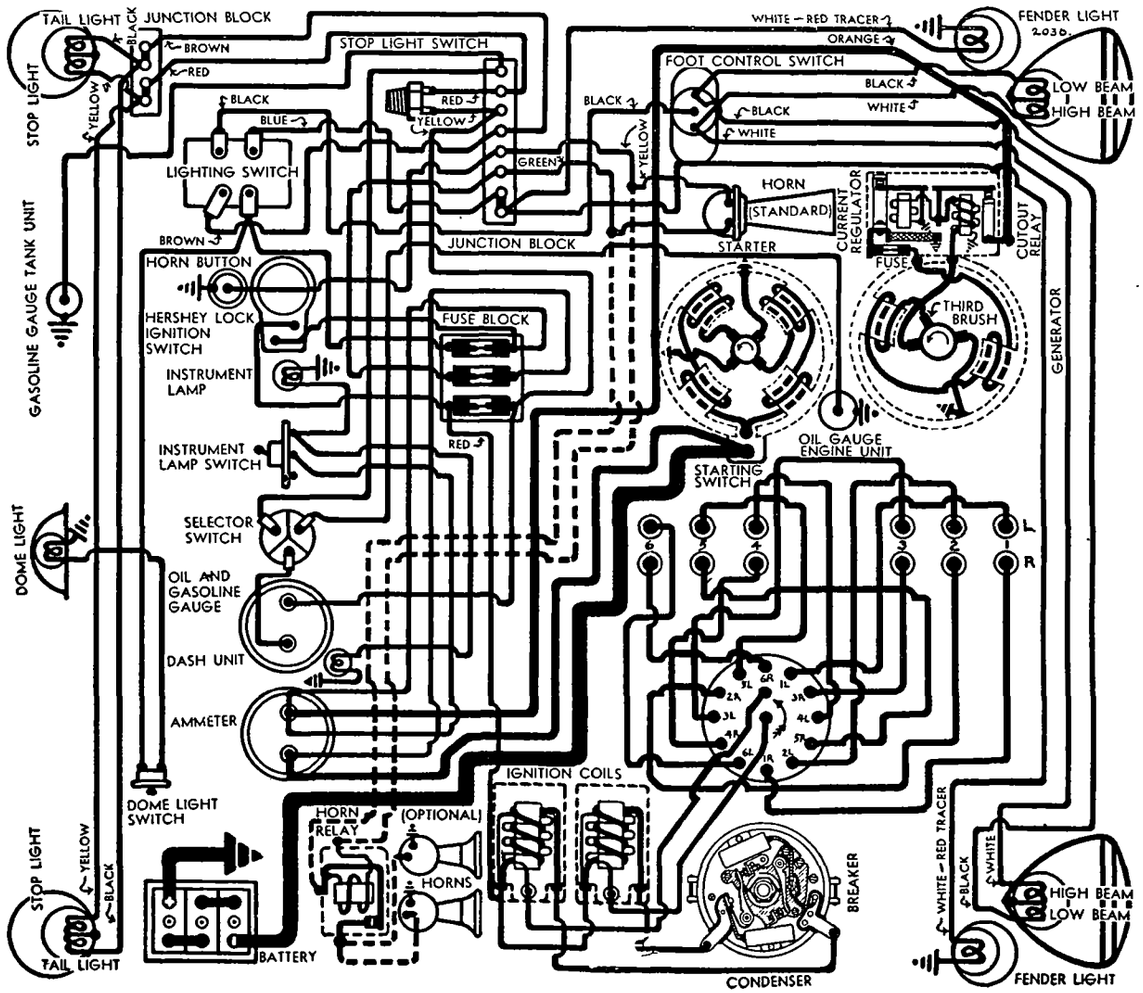

C NTINUED FR M PRECEDIN PAGE

position of crankshaft or distributor, loosen lockscrews on movable sub-plate carrying the second set of contacts, shift plate by prying with a screwdriver inserted in the slot in the edge of the plate until contacts begin to open, tighten lockscrews.

CARBURETOR

CARBURETION:—Carburetor—Stromberg Model EX-32, 1¼" downdraft type with manual choke control. See Carburetion Section for adjustment, overhaul and Jet Specifications.

For complete data, refer to Carburetor Index.

NOTE—Do not adjust carburetor until engine is warmed up so that choke valve is wide open and engine idling at hot or slow idling speed.

Idle Adjustment—With engine hot and choke valve fully released, set throttle stopscrew to idle engine at 5-7 M.P.H., turn idle adjusting screw in until engine begins to miss, then turn screw out until engine begins to roll, finally turn screw in slowly until engine fires smoothly. Readjust throttle stopscrew for correct idling speed if necessary.

Accelerating Pump Setting—Pump lever has two holes for pump link engagement. Change for seasonal requirements:

Outer Hole—(Max. stroke)—Winter temperatures.
Inner Hole—(Min. stroke)—Summer temperatures.

CARB. EQUIPMENT

Air Cleaner:—AC. #1525945 oil-wetted type standard, heavy duty oil-bath type optional.

Fuel Pump:—AC. Type W #1522153. Diaphragm type.

For complete data, refer to Carburetion Equip. Index.

Gasoline Gauge:—Stewart Electric type, combination il and gasoline gauge.

For complete data, refer to Carburetion Equip. Index.

BATTERY

U.S.L. Type KL-1-13. 6 volt, 13 plate, 100 amp. hour.
Starting Capacity—120 amperes for 20 minutes.
Zero Capacity—300 amperes for 3.1 minutes.
Grounded Terminal—Positive (+) terminal.
Location—Under right front seat.

STARTER

AutoLite Model MAB-4077. Armature MAB-2057.
Drive—Inboard Bendix Type LCD11FX-10.
Rotation—Counter-clockwise at commutator end.
Brush Spring Tension—42-53 ounces (new brushes).

Performance Data

Torque	R.P.M.	Volts	Amperes
0 ft. lbs.	3700	5.5	60
.6 "	1910	5.5	100
3.4 "	1100	5.0	200
6.6 "	695	4.5	300
10.15 "	420	4.0	400
15.8 "	Lock	3.0	582
22.5 "	Lock	4.0	775

NOTE—Lock torque figures correct without switch.

Removal:—Starter flange mounted on left front face of flywheel housing. To remove, take out two flange mounting screws.

Starting Switch:—Model VC-4002. Vacuum control type. Mounted on starter field frame and operated by clutch pedal. See article in Equipment Section for complete data.

For complete data, refer to Electrical Equipment Index.

Starting switch cable adjustment—Starting switch should make contact just after clutch is released. To check, engage transmission gears, depress clutch pedal, note when starter engages. If clutch is not completely released (car will tend to move) or if pedal travel is excessive, adjust by loosening two clamp bolts on clutch throwout shaft lever to which switch cable is attached and move clamp in (for later engagement) or out (for earlier engagement) of starter.

GENERATOR

EARLY CARS

Auto-Lite Model GAR-4601-5. Armature GAR-2214. Third brush control type used with Cutout Relay.
Charging Rate Adjustment—Take off commutator band. Shift third brush by hand counter-clockwise to increase or clockwise to decrease charging rate. Brush held in position by friction.
Standard Charging Rate Setting—20 amperes (cold), 16 amperes (hot), 2300 R.P.M.

Performance Data

Cold			Hot		
Amperes	Volts	R.P.M.	Amperes	Volts	R.P.M.
0	6.4	720	0	6.4	760
4	6.8	860	4	6.8	925
8	7.25	1000	8	7.25	1125
12	7.7	1160	12	7.7	1350
16	8.1	1360	16	8.1	1680
20	8.5	1660	19.2	8.4	2600
22.4	8.8	2300			

Rotation—Counter-clockwise at commutator end.
Brush Spring Tension—50-60 ozs. (new brushes).
Field Current—3.51-3.89 amperes at 6.0 volts.
Motoring Current—5.03-5.57 amperes at 6.0 volts.
Field Fuse—7½ amperes. Under cover on generator.

Removal:—Generator cradle mounted at left front of engine with fan belt drive. Water pump driven by extension of generator shaft. To remove, disconnect water pump drive coupling, slack off belt adjustment, loosen mounting clamp band, lift generator out.

Belt Adjustment:—Adjust belt when sideplay at point midway between generator and fan pulley exceeds 1½". To adjust, loosen two capscrews on fan bracket, raise bracket up (bracket pivots on one screw) until sideplay on belt is approximately 1", tighten screws.

GENERATOR

LATER CARS

Auto-Lite Model GBR-4602-4. Armature GAR-2214. Third brush control type used with "Two Charge" Regulator.
Charging Rate Adjustment—Use test meters to check generator output. Short out current regulator by conencting jumper wire from "F" terminal on generator to ground. Take off commutator band, shift third brush by hand counter-clockwise to increase or clockwise to decrease charging rate until output is 26 amperes at 8.0 volts with generator at room temperature. Third brush held in position by friction. Remove jumper.
Maximum Charging Rate—As given above. Do not exceed.

Performance Data

Cold — Regulator Inoperative — Hot

Amperes	Volts	R.P.M.	Amperes	Volts	R.P.M.
0	6.4	720	0	6.4	780
4	6.65	820	4	6.7	900
8	6.9	920	8	6.95	1060
12	7.1	1050	12	7.2	1250
16	7.4	1200	16	7.5	1440
20	7.6	1400	20	7.8	1840
26	8.0	2400	23	8.0	2800

Field Current—4.13-4.57 amperes at 6.0 volts.
Motoring Current—5.84-6.46 amperes at 6.0 volts.
Field Fuse—5 ampere in knurled cup on side of regulator case.
Rotation, Brush Spring Tension, Removal and Belt Adjustment same as for generator on first cars. See above.

CUTOUT RELAY

EARLY CARS

Auto-Lite Model CB-4014 (Used with the GAR-4601-5 generator). Mounted on generator. See article in Equipment Section for complete data.

For complete data, refer to Electrical Equipment Index.

Cuts In—6.5-7.25 volts, 750 R.P.M.
Cuts Out—.5-2.5 amperes discharge current.
Contact Gap—.015-.045".
Air Gap—.010-.030" with contacts closed.

REGULATOR

LATER CARS

Auto-Lite Model TC-4313A "Two-Charge" (for GBR-4602-4 generator). Mounted on generator. Consists of Cutout Relay and Current Regulator (two-rate charging control). See Equipment Section article for complete data.

For complete data, refer to Electrical Equipment Index.

Cutout Relay

Cuts In—6.5-7.25 volts, 750 R.P.M.
Cuts Out—.5-2.5 ampere discharge current.
Contact Gap—.015-.045" (with upper or ground contacts closed—ground contacts must be open with main contacts closed).
Air Gap—.010-.030" with contacts closed.

Current Regulator

Contacts Open—8.25-8.75 volts at 70° F.
Contacts Close—1.2-1.4 volts below opening point.
Contact Gap—.005" minimum.
Air Gap—.045" with contacts closed.

LIGHTING

LIGHTING:—Headlamps—Corcoran-Brown, Pre-focused type. Upper and lower beams controlled by foot selector switch.

Switches

Lighting—Soreng-Manegold Model A-5820-A.
Foot Selector—H. A. Douglas. Nash Part No. 46939.
Stop Light—Motometer Hydraulic #58012. Nash Part No. 47601.

Bulb Specifications

Position	Candlepower	Mazda No
Headlamps	32-32	2331
Stop and Tail	21-3	1158
Fender, Instrument	3	63
Dome	6	81

MISC. ELECTRICAL

FUSES:—Lighting—20 ampere on fuse block mounted on steering column brace in back of instrument panel.

Horn—20 (single horn), 30 ampere (dual horns) on fuse block as above.

Stop Light and Gasoline Gauge—20 ampere on fuse block as above.

Generator Field—7½ ampere on generator frame (GAR). 5 ampere in knurled cup on regulator case (GBR).

HORNS:—Sparton Model B-6366 Std. Single horn. Dual horns Nash Part Nos. 47607-A (long), 47608-A (short), operated by horn relay. All horns vibrator type.

Horn Relay:—R.B.M. Type 10072. Current draw .4-.55 amperes at 6.0 volts. Coil resistance 11-14 ohms. Contacts must close with 4 volts across winding with relay in inverted position.

ENGINE

ENGINE SPECIFICATIONS:—Type—6 cylinder, valve-in head, twin-ignition type.

Bore—3⅜". **Stroke**—4⅜".

Displacement—234 cubic inches.

Rated Horsepower—27.34 (SAE).

Developed Horsepower—93 at 3400 R.P.M.

Compression Ratio and Pressure—5.25-1 std. cast-iron hd., no optl. **Pressure**—125 lbs at 350 R.P.M.

Vacuum Reading—Gauge should show steady reading of 18-20" with engine idling at 5-7 M.P.H.

PISTONS:—Nelson Bohnalite, aluminum alloy, Invar strut, split skirt type.

Length—3⅞".

Weight—19⅛ ounces.

Removal—Pistons and rods removed from above.

Clearance—Skirt .002". See Fitting Pistons.

Fitting New Pistons:—Use .002" feeler stock inserted between piston and cylinder wall on side opposite slot to check clearance.

Installing Pistons:—Slot should be toward left hand side of engine r away from camshaft.

PISTON RINGS:—Two compression rings, two oil control rings per piston, all above pin.

Ring	Width	End Gap
Comp. All	⅛"	.010-.025"
Oil Cont. (3)	⅛"	.010-.025"
Oil Cont. (4)	3/16"	.010-.025"

PISTON PIN:—Diameter—⅞". **Length**—2 51/64". Pin floats in piston and rod. Pin hole in rod is bronze-bushed. Pins furnished for service standard, .001" .003", .005" oversize.

Pin Fit in Piston—Light push fit with piston heated.
Pin Fit in Rod Bushing—.0001" or light push fit with both parts at normal temperature.

CONNECTING ROD:—Length—8¾". **Weight**—36¼ ozs.
Upper Bearing (Piston Pin Bushing)—Bronze.
Crankpin Journal Diameter—2".
Lower Bearing—Interchangeable steel-backed, copper-lead lined type. Shims used.
Clearance—.002-.0025". Sideplay .006-.012".
Bearing Adjustment:—Shims. Do not file rods or caps. Replace bearings when necessary.

CRANKSHAFT:—7 bearing. Integral counterweights.
Journal Diameters—2 31/64" all bearings.
Bearing Type—Interchangeable steel-backed, copper-lead lined. Shims used.
Clearance—.002-.0025".

Bearing Adjustment:—Shims. Do not file caps. Replace bearings when necessary.

End Thrust:—Taken by center (#4) bearing. Endplay .004-.007".

CAMSHAFT:—Non-adjustable double-roller chain drive.
End Thrust:—Taken by front bearing. Adjusted by replacing bearing.
Timing Chain:—Diamond double roller chain. Width ⅞". Pitch ⅜". Length 22½" or 60 links.
Camshaft Setting:—Sprockets are marked. Mesh chain with sprockets turned so that marks are adjacent and in line with a straightedge across the shaft centers. Chain should be removed and installed endless. Use special pullers and pushers, keep sprockets lined up to avoid sidestrain on chain and sprockets.

VALVES:—	Head Diam.	Stem Diam.	Length
Intake	1¾"	.372"	5 17/32"
Exhaust	1 19/32"	.372"	5 17/32"

	Seat Angle	Lift	Stem Clearance
Intake	45°	11/32"	.002"
Exhaust	45°	11/32"	.002"

VALVE TIMING

Tappet Clearance:—.015" all valves with engine hot, running at idling speed.
Valve Timing:—See Camshaft Setting above.

LUBRICATION

LUBRICATION:—Pressure. Gear type oil pump located in crankcase.
Normal Oil Pressure:—25 pounds.
Oil Pressure Relief Valve:—Located on oil pump cover. Operates at 25 lbs. Adjustable by turning screw.
Crankcase Capacity:—7 qts. (refill).

CLUTCH

CLUTCH:—Borg & Beck Model 10A6. Single plate, dry disc type. See article in Clutch Section for relining and assembling directions.
See Clutch Section for complete data.

Facings—Moulded type, 2 required. Inside Diam. 6⅛". Outside Diam. 9⅞". Thickness ⅛".

Adjustment—Free movement of clutch pedal must be ½-1½". Adjust by loosening transverse bolt in link directly behind pedal and above clutch pedal shaft and shifting position of pedal. Setscrew on lever end of throw-out shaft at right of transmission must not contact stop on clutch housing. Check starting switch cable adjustment after adjusting clutch pedal.

Starting Switch Cable Adjustment—Starting switch should make contact just after clutch is released. To check, engage transmission gears, depress clutch pedal, note when starter engages. If clutch is not completely released (car will tend to move) or if pedal travel is excessive, adjust by loosening two clamp bolts on clutch throw-out shaft lever to which switch cable is attached and move cable clamp in (for later engagement) or out (for earlier engagement) of starter.

Removal—Disconnect driveshaft at rear of transmission, remove transmission, drop clutch housing underpan, take out capscrews mounting clutch on flywheel turning all screws out evenly to release spring pressure. Clutch assembly can then be removed from below without removing flywheel housing.

FRONT SUSPENSION

Front Suspension:—Conventional 'I' beam section front axle with Reverse-Elliott ends, or 'Articulated' type independent springing. Semi-elliptic springs used with both axles. Specifications for both types are the same.

Kingpin Inclination—7° crosswise.

Camber—0-1½°. No adjustment.

Caster—0-1½°. Adjusted by inserting wedge shims between spring and spring pad on axle.

Toe In—0-⅛". Adjust in usual manner by changing length of tie rod.

Tread—58" (front), 60" (rear).

STEERING GEAR

Steering Gear: Gemmer Worm-and-Roller type.
See Steering Gear Section for complete data.

BRAKES

BRAKES:—Service—Bendix Hydr., Duo-Servo, single anchor type. Hand lever applies rear service brakes.
See Brake Section for complete data.

Drum Diameter—11".

Lining—Moulded type. Width 1¾". Thickness 3/16". Length 23 13/16" per wheel.

Clearance—.010" between drum and lining.

Hand Brake Adjustment: See Service Brakes.

MODEL IDENTIFICATION

SERIAL NUMBER:—First number B-77325. On right front side rail under engine hood.
ENGINE NUMBER: On plate on right side of engine.

TUNE-UP

COMPRESSION PRESSURE: 110 lbs. at 350 RPM.
VACUUM READING: Steady 18-20" idling.
FIRING ORDER: 1-6-2-5-8-3-7-4. See wiring diagram
SPARK PLUGS: AC Type K-12 or No. 47 (std.), Type K-7 or No. 45 (cars with Overdrive). 14 mm. Metric. Gaps—.025" (.030" cars with radio).
IGNITION: See Coil, Condenser, and Distributor.
Breaker Gap—.017". Cam Angle—28° closed.
Synchronization—Set movable contacts to open simultaneously with stationary contacts.
Automatic Advance—15° max. at 1000 RPM (distr.).
IGNITION TIMING: See Ignition Timing.
Std. Setting—Stationary contacts open with 'IGN' mark (or first line) on vibration dampener aligned with pointer at front of engine. Both sets of contacts should open simultaneously.
CARBURETION: See Carburetor & Carb. Equipment.
Idle Setting—Set both screws midway between "miss" and "roll" points. Idle speed 5-7 MPH.
Float Level—Fuel level ½" below top edge of bowl.
Accelerating Pump—Inner hole (Summer), outer (winter).
Fuel Pump Pressure: 3½ lbs. maximum.
VALVES: See Valve Timing.
Tappet Clearance—.015" with engine hot.
STARTING: See Battery, Starter, Generator, Regulator.

IGNITION

Ignition Switch:—Oakes Hershey type co-incidental ignition switch and steering post lock.
COIL: Auto-Lite Model CE-4402A (2 used). On dash
Ignition Current—2 amperes idling, 4 stopped.
CONDENSER: Auto-Lite Part No. IG-2671 (2 used).
Capacity—.20-.25 microfarad.
DISTRIBUTOR: Auto-Lite IGK-4101. Double breaker, 8 lobe cam, full automatic advance. Contacts open simultaneously to fire both spark plugs in each cylinder at the same instant. Each set of contacts controls one coil and fires one spark plug in each cylinder. Contacts must be synchronized.
Breaker Gap—.017" and alike for both sets.
Cam Angle or Dwell—Closed 28°. Open 17° (distributor). Each set operates independently.
Breaker Arm Spring Tension—20 ounces.

Distr. Degrees	R.P.M.	Automatic Advance.... Eng. Degrees	R.P.M.
Start	200	0	400
3	360	6	720
6	520	12	1040
9	680	18	1360
12	840	24	1680
15	1000	30	2000

Distributor Removal:—Mounted on right side of crankcase. To remove, take out hold-down screw in advance arm.

IGNITION TIMING

IGNITION TIMING:—Stationary Contacts—With #1 piston on compression, turn engine over until first line on vibration dampener at front of engine lines up with pointer on chain case cover. This line is the 'IGN' mark and the second line indicates top dead center. Loosen advance arm clamp bolt, rotate distributor until stationary contacts (mounted directly on breaker plate) begin to open, tighten clamp bolt. Check synchronization of movable contacts.
Synchronization (Movable Contacts)—Movable contacts (mounted on sub-plate) should open at the same instant as the stationary set (see above). After timing stationary contacts, and without disturbing position of crankshaft or distributor, loosen lockscrews on sub-plate carrying the second set of contacts, shift plate by prying with a screwdriver inserted in the slot in the edge of the plate until contacts begin to open, tighten lockscrews.

CARBURETOR

CARBURETION:—Carburetor—Stromberg Model EE-1. 1" dual, downdraft type with manual choke control.
For complete data, refer to Carburetor Index.
Settings (Idle Setting, Float Level, and Accelerating Pump): *See Tune-Up.*

CARB. EQUIPMENT

Air Cleaner:—AC. #1525949 oil-wetted type standard.
Fuel Pump:—AC. Type W #1522154. Diaphragm type.
For complete data, refer to Carburetion Equip. Index.
Gasoline Gauge: Stewart Electric. Gas & Oil gauge.
For complete data, refer to Carburetion Equip. Index.

BATTERY

U.S.L. Type KW-15A. 6 volt, 15 plate, 115 amp. hr.
Starting Capacity—140 amperes for 20 minutes.
Zero Capacity—300 amperes for 4.0 minutes.
Grounded Terminal—Positive (+) to frame.
Location—Under right front seat.

STARTER

Auto-Lite Model MAB-4054 or MAB-4057 (Export).
Armature No. MAB-2047.
Drive—Inboard Bendix Type LCD11FX-10.
Rotation—Counter-clockwise at commutator end.
Brush Spring Tension—44-56 ozs. (new brushes).

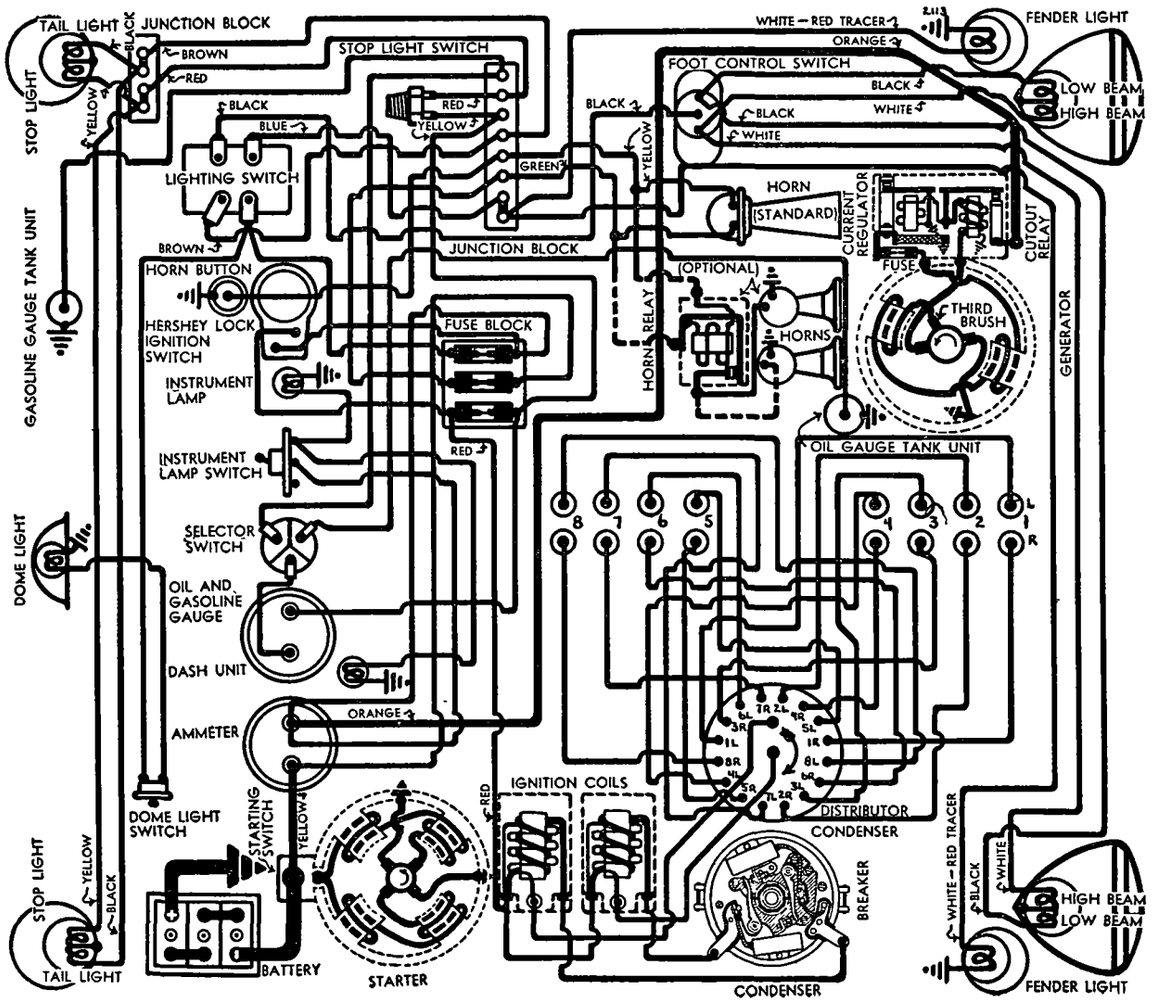

Performance Data

Torque	R.P.M.	Volts	Amperes
0 ft. lbs.	3700	5.5	60
.6 "	1910	5.5	100
3.4 "	1100	5.0	200
6.6 "	695	4.5	300
10.15 "	420	4.0	400
15.8 "	Lock	3.0	582
22.5 "	Lock	4.0	775

Removal:—Starter flange mounted on left front face of flywheel housing. To remove, take out two flange mounting screws.

Starting Switch: Auto-Lite VC-4003, 4002 (Export). Vacuum control, clutch pedal operated.

For complete data, refer to Electrical Equipment Index.

GENERATOR

Auto-Lite Model GBR-4602-4. Armature No. GAR-2214. 3rd brush with "Two-Charge" Regulator.

Charging Rate Adjustment—Use test meters to check generator output. Short out current regulator by connecting jumper wire from 'F' terminal on generator to ground. Take off commutator band, shift third brush by hand counter-clockwise to increase or clockwise to decrease charging rate until output is 26 amperes at 8.0 volts generator at 70°.

Maximum Charging Rate—As given above.

Performance Data

Cold — Regulator Inoperative — Hot

Amperes	Volts	R.P.M.	Amperes	Volts	R.P.M.
0	6.4	720	0	6.4	780
4	6.65	820	4	6.7	900
8	6.9	920	8	6.95	1060
12	7.1	1050	12	7.2	1250
16	7.4	1200	16	7.5	1440
20	7.6	1400	20	7.8	1840
26	8.0	2400	23	8.0	2800

Rotation—Counter-clockwise at commutator end.

Brush Spring Tension—50-60 ozs. (new brushes).

Field Current—4.13-4.57 amperes at 6.0 volts.

Motoring Current—5.84-6.46 amperes at 6.0 volts.

Field Fuse—5 ampere in cup on side of regulator

Removal: Disconnect water pump drive coupling, loosen belt and clamp band, lift off generator.

Belt Adjustment:—Adjust when sideplay at point midway between generator and fan pulley exceeds 1½". To adjust, loosen two capscrews on fan bracket, raise bracket up (bracket pivots on one screw) until sideplay on belt is approximately 1", tighten screws.

REGULATOR

Auto-Lite Model TC-4313A. "Two-Charge" Regulator. Mounted on generator. Consists of Cutout Relay and Current Regulator (two-rate charging control).

For complete data, refer to Electrical Equipment Index.

Cutout Relay

Cuts In—6.5-7.25 volts, 750 R.P.M.

Cuts Out—.5-2.5 ampere discharge current.

Contact Gap—.015-.045" (with upper or ground contacts closed—ground contacts must be open with main contacts closed).

Air Gap—.010-.030" with contacts closed.

Current Regulator

Contacts Open—8.25-8.75 volts at 70° F.

Contacts Close—1.2-1.4 volts below opening point.

Contact Gap—.005" minimum.

Air Gap—.045" with contacts closed.

LIGHTING

Headlamps—Corcoran-Brown, pre-focused type.

Switches

Lighting—Soreng-Manegold Model A-5820-A.

Foot Selector—H. A. Douglas.

Stop Light—Motometer Hydraulic #58012. Nash Part No. 47601.

MISC. ELECTRICAL

FUSES:—**Lighting**—20 ampere on fuse block mounted on steering col. brace back of instrument panel.

Horn—20 amp. (single), 30 (dual) on block.

Stop Light & Gas Gauge—20 amp. on fuse block.

Generator Field—5 ampere on side of regulator.

HORNS:—Single horn, Sparton, std. Dual horns optl.

Horn Relay:—R.B.M. Type 10072. Current draw .4-.55 amperes at 6.0 volts. Coil resistance 11-14 ohms. Contacts must close with 4 volts across winding with relay in inverted position.

ENGINE

ENGINE SPECIFICATIONS:—**Type**—8 cylinder, valve-in head, twin ignition type.

Bore—3⅛". **Stroke**—4¼".

Displacement—260.8 cu. ins. **Rated HP.**—31.25.

Developed Horsepower—102 at 3400 R.P.M.

Compression Ratio—5.25-1 std. cast-iron head.

Compression & Vacuum Reading—*See Tune-Up.*

PISTONS:—Nelson Bohnalite, aluminum alloy, Invar strut, split skirt. **Length** 3 11/16". **Weight** 19 ozs.

Removal—Pistons and rods removed from below.

Clearance—Skirt .002". See Fitting New Pistons.

Fitting New Pistons:—Use .002" feeler stock inserted between piston and cylinder wall on side opposite slot to check clearance.

Installing Pistons:—Slot should be toward left or away from camshaft.

PISTON RINGS:—Two compression rings, two oil control rings per piston, all above pin.

Ring	Width	End Gap
Comp. All	⅛"	.010-.025"
Oil Cont. (#3)	⅛"	.010-.025"
Oil Cont. (#4)	3/16"	.010-.025"

PISTON PIN:—**Diameter**—⅞". **Length**—2 9/16".

Pin floats in piston and rod. Pin hole is bronze-bushed. Pins furnished for service standard, .001", .003", .005" oversize.

Pin Fit in Piston—Light push fit with piston heated.

Pin Fit in Rod Bushing—.0001" or light push fit with both parts at normal temperature.

CONNECTING ROD:—**Length**—8¾". **Weight**—34 ozs.

Upper Bearing (Piston Pin Bushing)—Bronze.

Crankpin Journal Diameter—2".

Lower Bearing—Interchangeable steel-backed, copper-lead lined type. Shims used.

Clearance—.002-.0025". Sideplay .006-.012".

Bearing Adjustment:—Shims. Do not file rods or caps. Replace bearings when necessary.

CRANKSHAFT:—9 bearing. Integral counterweights.

Journal Diameters—2 31/64" all bearings.

Bearing Type—Interchangeable steel-backed, copper-lead lined. Shims used.

Clearance—.002-.0025".

Bearing Adjustment:—Shims. Do not file caps. Replace bearing when necessary.

End Thrust:—Taken by center (#5) bearing. Endplay .004-.007".

CAMSHAFT:—Non-adjustable roller chain drive.

Timing Chain:—Diamond double roller chain. Width 9/16". Pitch ⅜". Length 62 links or 23¼".

Camshaft Setting:—Sprockets are marked. Mesh chain with sprockets turned so that marks are adjacent and in line with a straightedge across the shaft centers.

VALVES:—	Head Diam.	Stem Diam.	Seat Width
Intake	1 21/32"	.372"	1/16"
Exhaust	1 15/32"	.372"	1/16"

	Seat Angle	Lift	Stem Clearance
Intake	45°	11/32"	.002"
Exhaust	45°	11/32"	.002"

VALVE TIMING

Tappet Clearance:—.015" all valves with engine hot,

Valve Timing:—See Camshaft Setting above.

LUBRICATION

LUBRICATION:—Pressure. Gear type oil pump located in crankcase.

Normal Oil Pressure:—25 pounds.

Oil Pressure Relief Valve:—Located on oil pump cover. Operates at 25 lbs. Adjustable by turning screw.

Crankcase Capacity:—7 quarts (refill).

CLUTCH

Borg & Beck Model 10A6. Single plate, dry disc.

See Clutch Section for complete data.

Facings—Moulded type, 2 required. **Inside Diam.** 6⅛". Outside Diam. 9⅞". Thickness ⅛".

Adjustment—Free movement of clutch pedal must be ½-1½". Adjust by loosening transverse bolt directly behind pedal and above clutch pedal shaft and shifting position of pedal. Setscrew on lever end of throw-out shaft at right of clutch housing must not contact stop on housing. Check starting switch

Removal—Disconnect driveshaft at rear of transmission, remove transmission, drop clutch housing underpan, take out clutch mounting capscrews.

FRONT SUSPENSION

Front Suspension:—Conventional 'I' beam section front axle with Reverse-Elliott ends, or 'Articulated' type independent springing. Semi-elliptic springs used on both axles. Specifications are alike.

Kingpin Inclination—7° crosswise.

Camber—0-1½°. No adjustment.

Caster—0-1½°. Adjust by inserting wedge shims between spring and spring pad on axle.

Toe In—0-⅛". Adjust in usual manner by changing length of tie rod.

STEERING GEAR

Steering Gear: Gemmer Worm-and-Roller type.

See Steering Gear Section for complete data.

BRAKES

BRAKES:—**Service**—Bendix Hydr., Duo-Servo, single anchor type. Hand lever applies rear service brakes.

See Brake Section for complete data.

Drum Diameter—11".

Lining—Moulded type. Width 2¼". Thickness 3/16". Length 23 13/16" per wheel.

Clearance—.010" between drum and lining.

Hand Brake Adjustment:—See Service Brakes.

MODEL IDENTIFICATION

SERIAL NUMBER:—First number—R-309311 (3720), R-324111 (3820). Stamped on plate on right frame side member under engine hood.

ENGINE NUMBER:—1st No.—RE-77104(3820). Stamped on plate on right hand side of engine block.

TUNE-UP

COMPRESSION: Ratio—5.67-1 (3720), 6.0-1 (3820). **Pressure**—Approx. 100-105 lbs. at cranking speed with all cylinders equal within 10 lbs.

VACUUM READING:—18-20" steady reading with engine idling at 7 MPH.

FIRING ORDER: 1-5-3-6-2-4. See diagram for spark plug cable connections in distributor cap.

SPARK PLUGS: AC Type 47 (standard 3720), Type 45 (standard 3820, with Overdrive 3720). 14 mm. **Gaps**—.025" (.030" cars with radio).

IGNITION: See Coil, Condenser, and Distributor. Breaker Gap—.020". **Cam Angle**—35° Closed. **Synchronization**—Set movable contacts to open simultaneously with stationary contacts. **Automatic Advance**—Max. advance at follows:

Distributor	Dist. Deg.	Dist. RPM
IGE-4012B	9°	1000
IGE-4012C & 4018	13°	1000

IGNITION TIMING: See Ignition Timing. Std. Setting—TDC (3720), 6° BTDC (3820). 'IGN.DC' mark (3720), 'IGN' mark (3820) on vibration dampener aligned with pointer at front of engine. Both sets of contacts should open simultaneously.

CARBURETION: See Carburetor & Carb. Equipment. Idle Setting—Screw midway between "miss" and "roll" points. Idle speed 5-7 MPH. **Float Level**—Fuel level ¾" (Stromberg), 19/32" (Marvel) below top edge of bowl. **Accelerating Pump**—Marvel—center hole. Stromberg—inner hole (Summer), outer (Winter). **Fuel Pump Pressure:** 3½ lbs. maximum.

VALVES: See Valve Timing. Tappet Clearance: .008" (Intake '37), .015" (Exhaust '37—All Valves '38), engine hot and idling. NOTE—On 3820 cars driven consistently at less than 50 MPH, intake valves can be set at .008".

STARTING: See Battery, Starter, Generator, Regulator.

IGNITION

Ignition Switch:—Oakes Steering Column and Ignition Lock No. 301630. Ignition Switch No. 301538. **Ignition Lock**—Briggs & Stratton No. 80207 (Lock cylinder). Key Series—5 digits. Groove—#1.

COIL: Two Used, Auto-Lite CE-4402-A. Service coil CE-4404. Coils mounted on dash. **Ignition Current**—2 amps. idling, 4 stopped.

CONDENSER: Auto-Lite Part No. IG-2671. Two used. **Capacity**—.20-.25 microfarad.

DISTRIBUTOR: Auto-Lite IGE-4012B or C (3720), Model IGE-4018 (for 3820). "Twin Ignition," Double breaker, 6 lobe cam, full automatic advance type. Contacts open simultaneously to fire both spark plugs in each cylinder at the same instant and must be synchronized (See Timing). **Breaker Gap**—Set at .020". **Cam Angle or Dwell**—35° Closed. 25° Open. For each set of contacts (operate independently). **Breaker Arm Spring Tension**—16-20 ounces. **Rotation**—Counter-clockwise viewed from the top.

Automatic Advance—IGE-4012-B

Distributor Degrees	Distributor R.P.M.	Engine Degrees	Engine R.P.M.
Start	200	0°	400
2°	380	4°	760
5°	650	10°	1300
7°	825	14°	1650
9°	1000	18°	2000

Automatic Advance—IGE-4012-C and 4018

Distributor Degrees	Distributor R.P.M.	Engine Degrees	Engine R.P.M.
Start	275	0	550
3	370	6	740
5	435	10	870
7	500	14	1000
9	670	18	1340
11	835	22	1670
13	1000	26	2000

Removal:—Distributor mounted on right hand side of crankcase. To remove, take out hold-down screw in advance arm.

IGNITION TIMING

IGNITION TIMING:—Setting for all engines as follows:

Model	Flywheel Degrees	Piston Position
3720	0° at TDC	.0000" TDC
3820	6° BTDC	.0150" BTDC

Timing (Stationary Contacts)—With #1 piston on compression, turn engine over until piston reaches firing position (see table above), stop when 'DC.IGN' mark (3720), 'IGN' mark (3820) on vibration dampener at front of engine lines up with pointer on chain case cover. Loosen advance arm clamp bolt, rotate distributor until stationary contacts (mounted directly on breaker plate) begin to open, tighten clamp bolt, then synchronize movable contacts.

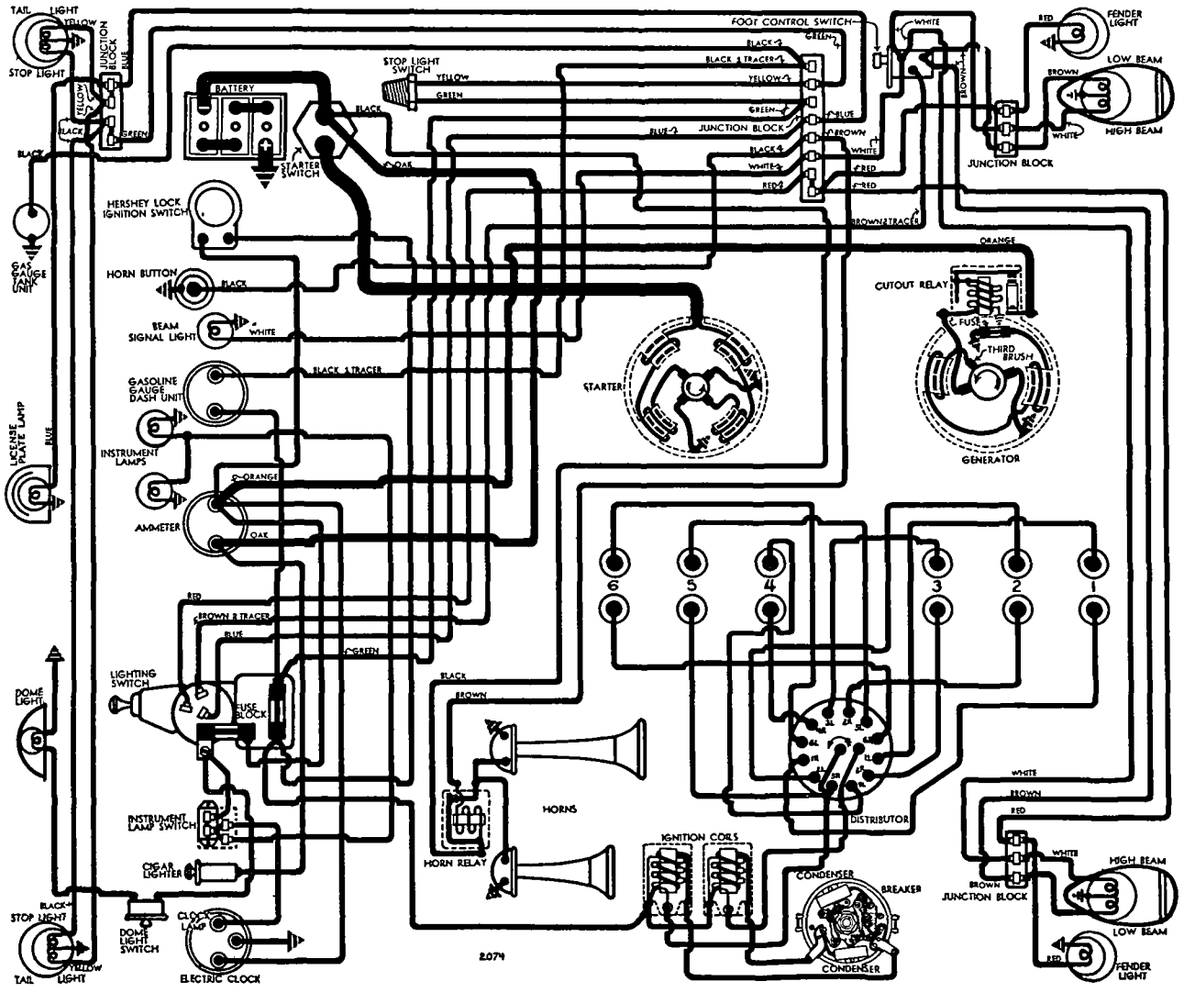

1937 MODELS

Synchronization (Timing Movable Contacts)—Without disturbing position of distributor or crankshaft, loosen lockscrews on movable sub-plate (carrying second set of contacts), shift plate by prying with screwdriver in notch on edge of plate until this set of contacts begin to open, tighten sub-plate lockscrews.

Synchronization (Other Methods)—Set contacts to open simultaneously at regular 60° (dist). intervals.

CARBURETOR

CARBURETION: Carburetor—Stromberg EX-32 (3720), Marvel Model C-2, No. 10-1802 (3820). 1¼" single barrel downdraft types with manual choke.
For complete data, refer to Carburetor Index.

Idle Adjustment—With engine warm and choke valve wide open, set throttle stopscrew so that engine idles at 5-7 M.P.H., turn idle adjusting screw in until engine begins to lag or miss, then turn screw out until engine begins to roll, finally turn screw in slowly just enough so that engine fires smoothly. Readjust throttle stopscrew for correct idling speed.

Accelerating Pump Adjustment—Three holes provided in throttle lever for pump link engagement. Adjust for seasonal requirements as follows:
No. 1 (inner) Hole—Extremely hot weather or high-test fuel.
No. 2 (center) Hole—Normal temperatures and fuel.
No. 3 (outer) Hole—Extremely cold weather or low grade fuel.
NOTE—Center hole not used on Stromberg EX-32.

See Electrical Equipment Section for Regulator internal wiring when two resistors used.

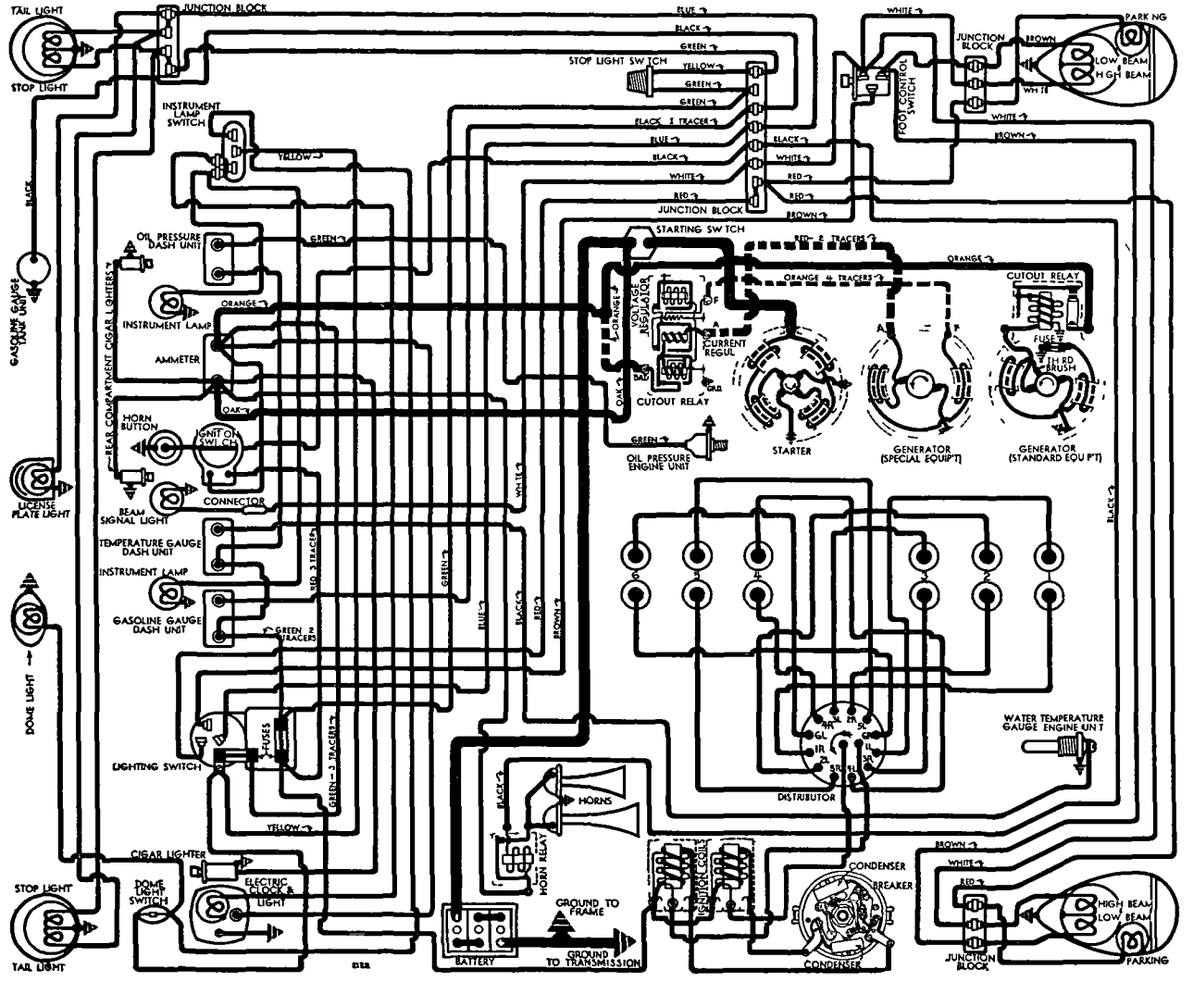

1938 MODELS

CARB. EQUIPMENT
M DEL 3720

Air Cleaner:—AC. #1528143 oil-wetted type standard, #1528278 Heavy Duty oil-bath type optional.
Fuel Pump:—AC. Type W #1523237 Diaphragm type Std., Type AD #1523238 combination fuel-and-vacuum type Optl.
For complete data, refer to Carburetion Equip. Index.
Gasoline Gauge:—Motometer (Auto-Lite) Electric. No. 8229-D (dash unit), NG-8230-T (tank unit).
For complete data, refer to Carburetion Equip. Index.

CARB. EQUIPMENT
MODEL 3820

Air Cleaner:—AC. #1528645 oil-wetted type std., #1528680 heavy duty oil-bath type optl.
Fuel Pump:—AC. Type W #1523642 Diaphragm type std., Type AD #1523643 combination fuel-and-vacuum pump optl.
For complete data, refer to Carburetion Equip. Index.
Gasoline Gauge:—King-Seeley Electric Type. K-8 No. 6730 (Dash unit—first cars—ball type pointer), 7070 (Dash unit—later cars—bar type pointer), No. 6732 (Tank unit—all cars).
For complete data, refer to Carburetion Equip. Index.

BATTERY
MODEL 3720

BATTERY:—U.S.L. Type KL-1-13. 6 volt, 13 plate, 100 ampere hour capacity (20 hour rate).
Starting Capacity—120 amperes for 20 minutes.
Zero Capacity—300 amperes for 3.1 minutes.
Grounded Terminal—Positive (+) terminal grounded to transmission cover bolt.
Location—On left side under drivers seat.

BATTERY
MODEL 3820

BATTERY:—U.S.L. Type HTL-1-15. 6 volt, 15 plate, 105 ampere hour capacity (20 hour rate).
Starting Capacity—133 amperes for 20 minutes.
Zero Capacity—300 amperes for 3.8 minutes.
Grounded Terminal—Positive (+) terminal grounded to frame and to transmission (1 cable).
Dimensions—Length 9 1/16". Width 7⅛". Height 9 1/16".
Location—Under right front seat.

STARTER

Auto-Lite Model MAB-4076. Armature MAB-2057.
Drive—Inboard Bendix Type LCD11FX-10.
Rotation—Counter-clockwise at commutator end.
Brush Spring Tension—42-53 ozs. (new brushes).
Cranking Engine—125 R.P.M., 150-160 amps., 5.2 v.

Performance Data

Torque	R.P.M.	Volts	Amperes
0 ft. lbs.	3700	5.5	60
.6 " "	1910	5.5	100
3.4 " "	1100	5.0	200
6.6 " "	695	4.5	300
10.15 " "	420	4.0	400
15.8 " "	Lock	3.	582
22 5 " "	Lock	4.	775

Removal:—Starter flange mounted on left front face of flywheel housing. To remove, take out flange mounting screws.
Starting Switch:—A-L Model SW-4005. Mounted on left side of engine below clutch pedal. Operated by depressing clutch pedal fully. No adjustment required.

CONTINUED ON NEXT PAGE

CONTINUED FROM PRECEDIN PA E

GENERATOR

STANDARD

Auto-Lite GCM-4803-4 or GCM-4803A-4 (3720), GCM-4803B-4 (3820). Armature GCJ-2030. Third brush control ventilated by fan.

Charging Rate Adjustment—Remove commutator cover band, shift third brush by hand counter-clockwise to increase, or clockwise to decrease, charging rate (brush held in position by friction).

NOTE—Standard setting of third brush (for maximum output as shown in table below) 2⅜-2⅝ commutator bars between third brush and insulated (nearest) main brush.

Maximum Charging Rate—22 amperes (cold), 18 amperes (hot), 8.0 volts, 2650 R.P.M. Use test ammeter connected in charging line at battery terminal of Cutout Relay to check generator output.

Performance Data

Cold			Hot		
Amperes	Volts	R.P.M.	Amperes	Volts	R.P.M.
0	6.4	775	0	6.4	830
4	6.7	900	4	6.75	985
8	7.0	1075	8	7.1	1190
12	7.3	1200	12	7.5	1480
16	7.6	1420	16	7.8	1970
20	7.85	1900	18	8.0	2700
22	8.0	2650			

Rotation—Counter-clockwise at commutator end.

Brush Spring Tension—53 ozs. max. (new brushes).

Field Current—3.50-3.89 at 6.0 volts.

Motoring Current—5.75-6.25 amperes at 6.0 volts.

Field Fuse—5 ampere capacity (under cover on generator frame).

Removal & Belt Adjustment: Same as given below.

GENERATOR

SPECIAL EQUIPMENT

Auto-Lite GCO-4802 or GCO-4802A (3720), GCO-4802C (3820). Armature GCO-2031F. Two brush types with external current and voltage regulation.

Charging Rate Adjustment—No adjustment at generator. Charging rate controlled by Voltage Regulator and maximum output controlled by Current Regulator.

Maximum Charging Rate—28 amperes, 8.0 volts, 1850 R.P.M. and above with load or discharged battery (Current Regulator setting). Actual charging rate controlled by Voltage Regulator and is dependent on battery condition.

Performance Data

Cold			Hot		
Amperes	Volts	R.P.M.	Amperes	Volts	R.P.M.
0	6.4	825	0	6.4	900
4	6.6	940	4	6.6	1025
8	6.85	1050	8	6.85	1160
12	7.1	1175	12	7.1	1310
16	7.3	1300	16	7.3	1475
20	7.55	1450	20	7.55	1660
24	7.8	1610	24	7.8	1880
28	8.0	1850	28	8.0	2200

NOTE—Current reg. limits output to 28 amperes.

Rotation—Counter-clockwise at commutator end.

Brush Spring Tension—53 ozs. max. (new brushes).

Field Current—1.47-1.63 amperes at 6.0 volts.

Motoring Current—3.94-4.36 amperes at 6.0 volts.

Removal (All models):—Generator cradle mounted at left side of engine with fan belt drive. Water pump driven by generator shaft extension. To remove, disconnect water pump, loosen fan belt, remove generator clamp band and lift generator off.

Belt Adjustment (All models):—Adjust whenever belt deflection is more than 1½" (when pressed lightly midway between generator and fan pulleys). To adjust, loosen two capscrews on fan bracket, lift fan up (one screw hole slotted) until belt deflection is approximately 1", tighten screws.

CUTOUT RELAY

STANDARD

Auto-Lite Model CB-4014 (Used with GCM Generators). Mounted on generator.

For complete data, refer to Electrical Equipment Index.

Cuts In—6.5-7.25 volts.

Cuts Out—.5-2.5 amperes discharge.

Contact Gap—.015-.045".

Air Gap—.010-.030" with contacts closed.

REGULATOR

SPECIAL EQUIPMENT

Auto-Lite VRB-4002D or VRB-4010A. Voltage-Current Type (used with GCO Generators). Consists of Cutout Relay, vibrating Voltage Regulator, and vibrating Current Regulator in case on dash.

NOTE—Regulator cover is sealed. Serviced on exchange basis if seals not broken. Unit can be checked without breaking seal but cover must be removed to make adjustments.

For complete data, refer to Electrical Equipment Index.

Cutout Relay

Cuts In—6.4-7.0 volts Cold.

Cuts Out—.5-3.0 amperes discharge current.

Air Gap—.034" min., .038" max. with contacts open. Measure at hinge end of core.

Voltage Regulator

Setting—7.3-7.6 volts at 70°F. (Regulator Serial No. 8R-000001 Up). **See Electrical Equipment Section for settings and changes on units before this serial no.**

To Check (Without Breaking Seals)—Connect ammeter in charging line at 'B' terminal on regulator, connect voltmeter between 'B' and 'GD' terminals. Operate generator, charging fully charged battery, at speed equivalent to 30 M.P.H. until voltage is steady. Voltmeter reading should be within limits of 7.3-7.6 volts (cold—70°F), 7.1-7.4 volts (hot—140°F.). See Regulator Setting above.

To Adjust (with cover removed)—Change armature spring tension slightly by bending lower spring hanger. See Electrical Equipment Section for complete directions.

Contact Gap—.010" Min., .020" Max. with armature against stop pin.

Air Gap—.0595-.0625" with contacts just opening.

Current Regulator

Setting—27-29 amperes (marked '28' on cover).

To Check (Without Breaking Seals)—Connect ammeter and voltmeter as directed for Voltage Regulator test. Operate generator at 30 M.P.H. car speed, add load (use bank of headlamp bulbs or turn on car lights and discharge battery) so that generator will charge at peak rate and bring Current Regulator into action. Charging current should not exceed 28 amperes. If more than slight excess is noted, Regulator is defective.

To Adjust (with cover removed)—Change regulator armature spring tension by bending lower spring hanger slightly. See Electrical Equipment Section for complete directions.

Contact Gap & Air Gap—As given above for Voltage Regulator.

LIGHTING

LIGHTING:—Headlamps—Corcoran-Brown, pre-focused type. Country driving and City beams controlled by foot dimmer switch on toeboard. City beam deflected to right (special type 2331 bulb).

Headlamp Adjustment—Aim headlamps straight ahead with top of beam at lamp center height at 25 feet, (upper beams—Country driving) lighted. Vertical adjustment controlled by mounting bolts horizontal by screw ahead of front mounting bolt.

Headlamp Beam Indicator—Red jewel light on instrument panel above speedometer dial. Lighted whenever Country driving (upper) beams lighted.

Switches

Lighting—Douglas.

Foot Dimmer—Douglas.

Bulb Specifications

Position	Candlepower	Mazda No.
Headlamps	32-32	2331
Park, Dash, License	3	63
Indicator	1	51
Stop-Tail	21-3	1158
Dome	6	63

MISC. ELECTRICAL

FUSES:—Lighting—20 amp. on back of lighting switch. **Accessory**—20 ampere on fuse block attached to light switch. Protects stop light and gas gauge. **Generator Field**—5 ampere (on GCM generators only). Located under cover on generator field frame.

HORNS:—Sparton—Vibrator type twin horns operated by R.B.M. horn relay.

Horn Relay:—R.B.M. Model 10072. Current draw .4-.55 amperes at 6.0 volts. Coil resistance 11-14 ohms. Contacts must close with 4 volts across windings when in inverted position.

ENGINE

ENGINE CODE NOTE:—Consists of three letters stamped on Engine Number Plate to indicate original size of Cylinder Bore (first letter), Main Bearings (second letter), Crankpin & connecting rod bearings (third letter) as follows: 'A'—Standard, 'B'—.010" Undersize, 'C'—.010" Oversize, 'D'—.015" Oversize, 'E' .020" Oversize.

ENGINE SPECIFICATIONS:—Type—6 cylinder, valve-in head. Twin Ignition type.

NOTE—3820 models use the 'Iso-thermal' fuel intake system (intake manifold cast in cylinder head and surrounded by cooling water for temp. control).

Bore—3⅜". **Stroke**—4⅜".

Displacement—234 cu. ins. **Rated HP.**—27.34.

Developed Horsepower—93 ('37), 105 ('38) at 3400

Compression Ratio—5.67-1 (3720). 6.0-1 (3820).

Compression & Vacuum Reading—*See Tune-Up.*

►**Later type Replacement Cylinder Heads:** *See "Cylinder Head" in Nash Shop Notes.*

PISTONS:—Nash, aluminum alloy, Invar strut, split skirt type. See Engine Code Note above for original bore and piston sizes. **Length**—3⅞".

Weight—19⅛ ounces.

Removal—Pistons and rods removed from above.

Clearance—.0015-.002". See Fitting New Pistons.

Replacement Pistons:—Finished pistons furnished Std. and .001", .002", .003", .005", .010", .012", .015", .020" oversize. Semi-finished pistons .050" oversize.

Fitting New Pistons:—Use .002" feeler stock inserted between piston and cylinder wall on side opposite slot to check clearance. Pull required to withdraw feeler should be 10 lbs.

ENGINE

CONTINUED FR M PRECEDING PAGE

Installing Pistons:—Piston pin offset toward camshaft side of engine and trademark (within piston) toward front.

PISTON RINGS:—Two compression rings, two oil control rings per piston, all above pin.

Ring	Width	End Gap
Compression (All)	1/8"	.010"
Oil Control (#3—1937)	1/8"	.010"
Oil Control (#4—1937)	3/16"	.010"
Oil Control (All—1938)	5/32"	.010"

Replacement Rings:—Furnished .010", .020" oversize.

PISTON PIN: —Diameter—⅞". Length—2 51/64". Pin floats in piston and rod, retained by locking rings. Pin hole in piston offset toward camshaft side of engine, pin hole in rod bronze-bushed.

Pin Fit in Piston—Light push fit with piston heated to 200°F.

Pin Fit in Rod Bushing—.0001" or light push fit with both parts at normal temperature.

Replacement Pins:—Furn. 001", .002", .005" oversize.

CONNECTING ROD:—Length—8¾". Weight—36¼ ozs.

Upper Bearing (Piston Pin Bushing)—Bronze.

Crankpin Journal Diameter—2".

Lower Bearing—Removable steel-backed, babbitt-lined type. No shims. See Engine Code Note (above) for original bearing sizes.

Clearance—.002". **Sideplay**—.004" Max.

Bearing Adjustment: None (no shims). Replace bearings. Do not file rods or caps.

Replacement Bearings: Furnished .010" undersize.

CRANKSHAFT: 7 bearing, integral counterweights.

Journal Diameters—2 31/64" all bearings.

Bearing Type—Interchangeable steel-backed, babbitt-lined type. No shims. See Engine Code Note (above) for original bearing sizes.

Clearance—.002".

Bearing Adjustment:—None (no shims). Replace bearings. Do not file bearing caps. Bearing upper halves can be 'rotated' out without removing crankshaft by using pin installed in oil hole in shaft and rotating shaft.

Replacement Bearings:—Furnished .010" undersize.

End Thrust:—Taken by center (#4) bearing. Endplay .004". No adjustment (replace bearing).

CAMSHAFT:—Non-adjustable double-roller chain drive.

End Thrust:—Taken by front bearing. Replace front bearing to take up excessive endplay.

Timing Chain:—Double-roller chain. Width 9/16". Pitch ⅜". Length (3720—22½" or 60 links 3820—23¼" or 62 links).

Camshaft Setting:—Sprockets are marked. Mesh chain with sprockets turned so that marks are adjacent and in line with a straightedge across the shaft centers. Chain should be removed and installed endless. Use special pullers and pushers, keep sprockets lined up to avoid sidestrain on chain and sprockets.

VALVES:—	Head Diameter	Seat Angle	Stem Clear.
Intake	1¾"	45°	.003"
Exhaust	1 19/32"	45°	.003"

VALVE TIMING

Tappet Clearance:—.008" (Intake '37), .015" (Exhaust '37—All valves '38), engine hot and idling. NOTE—On 1938 cars driven consistently at less than 50 M.P.H., intake valves can be set at .008".

Valve Timing:—See Camshaft Setting above.

LUBRICATION

LUBRICATION:—Pressure. Gear type oil pump located in crankcase.

Normal Oil Pressure:—25-35 lbs. at normal temp.

Oil Pressure Gauge:—King-Seeley Electric. K-S No. 6730 (dash unit, firt cars—ball type pointer), 7070 (dash unit, later cars—bar type pointer), No. 6125 (motor unit, all cars). This data for 3820 only.

See Miscellaneous Section for complete data.

Oil Pressure Relief Valve:—Located on oil pump cover. Operates at 30 lbs. Screw adjustment.

Crankcase Capacity:—7 quarts (refill).

COOLING

COOLING SYSTEM:—Water Pump. Centrifugal, adjustable packing. Driven by generator extension shaft.

See Water Pump Section for complete data.

Removal—Drain radiator, disconnect hose and drive coupling, take out mounting screws in pump flange.

Thermostat:—Dole. In water outlet on cyl. head.

Setting—Thermostat opens at 160°F.

Temperature Gauge ('38): King-Seeley Electric type.

Dash Unit—K-S No. 6730 (with Ball type pointer), No. 7070 (with Bar type pointer).

Engine Unit—K-S No. 5700.

NOTE—No. 5700 Engine Unit serviced by No. 7000 (new type) which must be used with new Dash Unit No. 7295. Service Kit No. 7643 contains both units.

See Miscellaneous Section for complete data.

Water Capacity:—17 qts. (3720), 16 qts. (3820).

Drain Valves:—One only—at bottom of radiator.

CLUTCH

CLUTCH:—Borg & Beck Mod. 10A7. Mod. #902 stamped on cover. Single plate, dry disc type.

See Clutch Section for complete data.

Facings (37)—Moulded type, 2 required. Inside Diam. 6⅛". Outside Diam. 9⅞". Thickness ⅛".

Facings (38)—Molded-woven, 2 required. Inside Diam. 6". Outside Diam. 10". Thickness ⅛".

Adjustment—Free movement of clutch pedal must be ½-1½". Adjust by loosening transverse bolt in link directly below clutch pedal shaft and positioning pedal in slot. Clearance between pedal and toeboard should be ⅜". On cars with 'NoRol,' check operation whenever clutch adjusted and, if necessary, adjust as follows:

NoRol Adjustment—Loosen locknut and turn adjusting nut at rear end of connecting rod (at NoRol lever) in for later brake release, out for earlier.

Removal:—Remove transmission (see Transmission Removal below), remove clutch housing underpan, take out clutch mounting bolts evenly, remove assembly from below.

TRANSMISSION

TRANSMISSION:—Own Make. Constant-mesh, synchro-mesh, helical gear (second and high), sliding helical gear (low and reverse).

See Transmission Section for complete data.

Vacuum Gear Shift (Transmission Control):—Evans Nash Vacuum type. Optional on Model 3820.

See Transmission Section for complete data.

Removal:—Disconnect driveshaft. Disconnect shift linkage (on cars with Vacuum Gear Shift). Take off nuts on transmission mounting bolts, pull transmission straight back.

OVERDRIVE

Cruising Gear (Overdrive):—Warner Model AS6-R6 optional. In separate case at rear of transmission.

See Transmission Section for complete data.

UNIVERSALS

UNIVERSAL JOINTS:—Mechanics—Model 2C. Roller bearing type. 2 used.

See Universals Section for complete data.

REAR AXLE

REAR AXLE:—Own—Semi-floating, spiral bevel gear type with Hotchkiss drive.

See Rear Axle Section for complete data.

Ratio—4 1/9 to 1 Std.

Removal:—Block up rear of car, remove wheels and axle shafts, disconnect brake lines and cables, shock absorber links, drive shaft at rear universal joint. Free axle from springs by disconnecting spring bolts, remove axle assembly from under car.

Axle Shaft Removal—Remove wheel, take out mounting screws in retainer, remove retainer, oil seal, brake backing plate, bearing adjusting shims. Use puller to remove shaft and bearing assembly.

Wheel Bearing Adjustment—Controlled by shims at flanged end of housing. To adjust, remove brake backing plate and add or remove shims. **Endplay**—.003-.006".

SHOCK ABSORBERS

SHOCK ABSORBERS:—Nash (Delco or Gabriel design), double acting (3720), direct acting (3820).

See Shock Absorber Section for complete data.

FRONT SUSPENSION

Front Suspension:—Conventional 'I' beam front axle with Reverse-Elliott ends and semi-elliptic springs.

Kingpin Inclination—7° crosswise.

Camber—½-1½°. No adjustment.

Caster—2½° ('37), 1½° ('38). Shim adjustment. Install shims between spring and spring pad on axle.

Toe In—0-1/16". Adjust by loosening clamp bolt at right hand end of tie rod and turning rod in or out of end fitting.

Steering Shock Eliminator—Consists of rubber bumper mounted on underside of left frame siderail just in front of left front spring rear shackle. Adjust to give 1/16" clearance between spring and bumper with normal load.

STEERING GEAR

Steering Gear: Gemmer Model 305 Worm-and-Roller type with "push-pull" adjustments.

See Steering Gear Section for complete data.

BRAKES

BRAKES:—Bendix Duo-Servo, Single Anchor type or Lockheed type hydraulic brakes. Hand lever applies rear wheel service brakes. NoRol optional (3820).

See Brake Section for complete data.

Drum Diameter—10" (3720). 10 1/16" (3820).

Lining—Woven (primary), moulded (secondary). Width 2" ('37), 2 1/16" ('38). Thickness 3/16". Length per wheel 22 1/16" ('37), 22" ('38).

Clearance (Bendix)—.010" at heel & toe (each shoe)

Clearance (Lockheed)—.005" heel, .010" toe (each shoe).

Braking Power—53% front, 47% rear.

Hand Brake:—See Service Brakes above.

NoRol:—Optional. Consists of a clutch pedal controlled valve in the brake line by which brakes held 'on' when car stopped on up-grade until clutch is engaged.

See Brake Section for complete data.

MODEL IDENTIFICATION

SERIAL NUMBER:—1st No. B-80031 ('37), B-86031 ('38). On plate on right frame side member under hood.

ENGINE NUMBER:—1st No. B-100640 ('38). Stamped on plate on right hand side of engine block.

TUNE-UP

COMPRESSION: Ratio 5.64-1 (3780), 6.0-1 (3880). **Pressure**—Approx. 90 lbs. (3780), 100-105 lbs. (3880) at cranking speed of 125 RPM.

VACUUM READING:—18-20" steady reading with engine idling at 7 M.P.H.

FIRING ORDER: 1-6-2-5-8-3-7-4. See diagram for spark plug cable connections in distributor cap.

SPARK PLUGS: AC Type 47 (standard 3780), Type 45 (standard 3880, with Overdrive 3780). 14 mm. **Gaps**—.025" (.030" cars with radio).

IGNITION: See Coil, Condenser, and Distributor. Breaker Gap—.017". **Cam Angle** 28° Closed. **Synchronization**—Set movable contacts to open simultaneously with stationary contacts. **Automatic Advance**—Max. Advance as follows:

Distributor	Distr. Deg.	Dist. RPM
IGK-4101	15°	1000
IGK-4101-A	9°	1000
IGK-4101-B & 4102	12°	1100

IGNITION TIMING: See Ignition Timing. Std. Setting—TDC (3780), 9° BTDC (3880). 'IGN.DC' mark (3780), 'IGN' mark (3880) on vibration dampener aligned with pointer at front of engine. Both sets of contacts should open simultaneously.

CARBURETION: See Carburetor & Carb. Equipment. Idle Setting—Screws midway between "miss" and "roll" points. Idle speed 7 MPH (or 9 MPH for stalling complaints if Overdrive used). **Float Level**—Fuel level ½" below top edge of bowl. **Accelerating Pump**—Inner hole (Summer), outer (Winter). **Fuel Pump Pressure:** 3½ lbs. maximum.

VALVES: See Valve Timing. Tappet Clearance: .008" (Intake '37), .015" (Exhaust '37—All Valves '38), engine hot and idling. NOTE—On 3880 cars driven consistently at less than 50 MPH, intake valves can be set at .008".

STARTING: See Battery, Starter, Generator, Regulator.

IGNITION

Ignition Switch:—Oakes Steering Column and Ignition Lock No. 301632. Ignition Switch No. 301538. **Ignition Lock**—Briggs & Stratton No. 80207 (Lock cylinder). Key Series—5 digits. Groove—#1.

COIL: Two Used, Auto-Lite CE-4402-A. Service coil CE-4404. Coils mounted on dash. **Ignition Current**—2 amps. idling, 4 stopped.

CONDENSER: Auto-Lite Part No. IG-2671. Two used. **Capacity**—.20-.25 microfarad.

DISTRIBUTOR: Auto-Lite No. IGK-4101, -A or -B (3780), IGK-4102 (3880). Twin Ignition Double breaker, 8 lobe cam, full automatic advance type. Contacts open simultaneously to fire both spark plugs in each cylinder at the same instant and must be synchronized (See Timing). **Breaker Gap**—Set at .017" (alike for both sets). **Cam Angle or Dwell**—28° Closed. 17° Open. For each set of contacts (operate independently). **Breaker Arm Spring Tension**—18-20 ounces. **Rotation**—Clockwise viewed from the top.

Automatic Advance—IGK-4101

Distributor Degrees	R.P.M.	Engine Degrees	R.P.M.
Start	200	0	400
3	360	6	720
6	515	12	1030
9	680	18	1360
12	840	24	1680
15	1000	30	2000

Automatic Advance—IGK-4101-A

Distributor Degrees	R.P.M.	Engine Degrees	R.P.M.
Start	200	0	400
3	475	6	950
6	740	12	1480
9	1000	18	2000

Automatic Advance—IGK-4101-B and 4102

Distributor Degrees	R.P.M.	Engine Degrees	R.P.M.
Start	275	0	550
4	400	8	800
8	750	16	1500
12	1100	24	2200

Removal:—Distributor mounted on right hand side of crankcase. To remove, take out hold-down screw in advance arm.

IGNITION TIMING

IGNITION TIMING:—Setting for all engines as follows:

Model	Flywheel Degrees	Piston Position
3780	0° at TDC	.000" TDC
3880	9° BTDC	.0313" BTDC

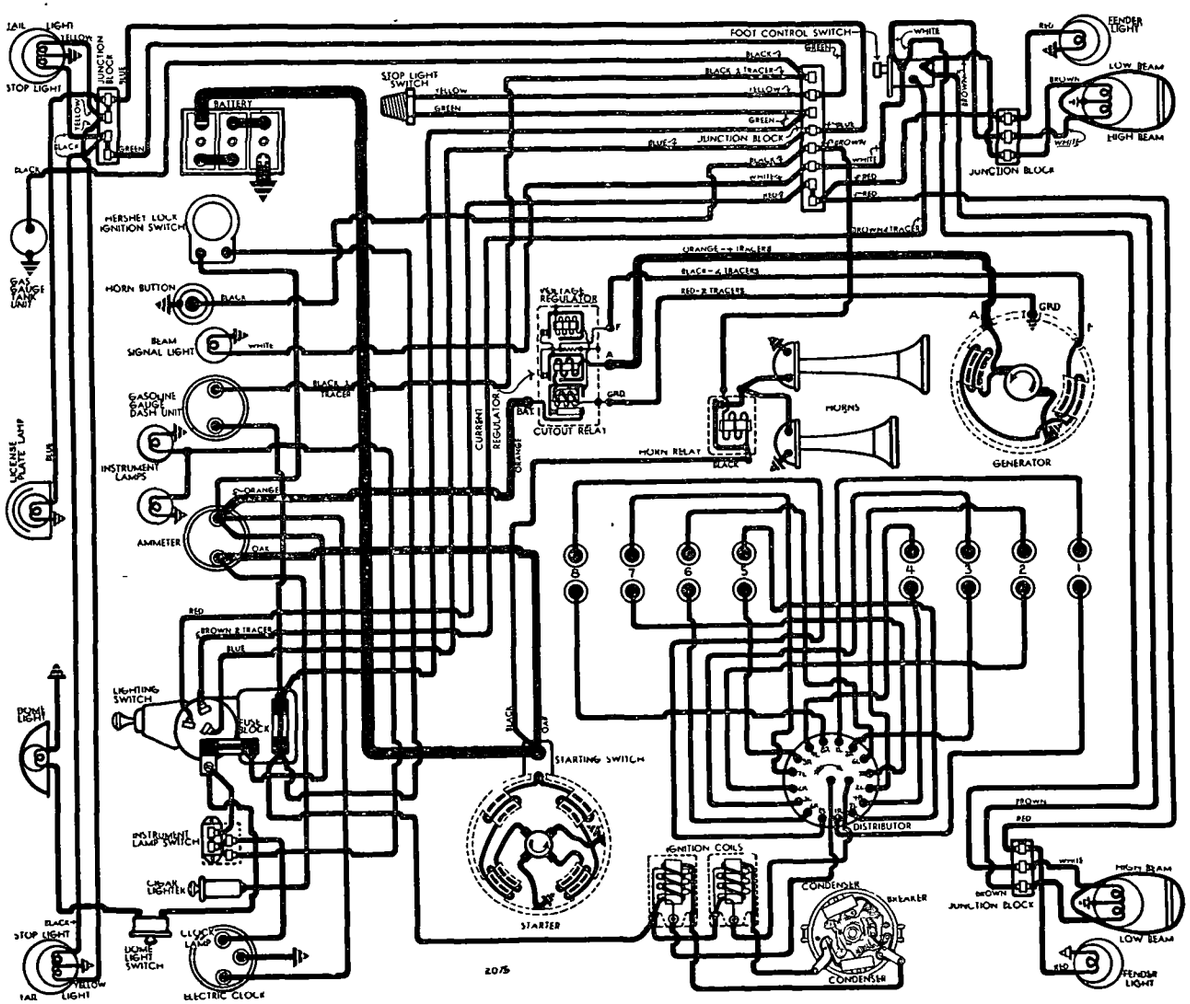

1937 MODELS

Timing (Stationary Contacts)—With #1 piston on compression, turn engine over until piston reaches firing position (see table above), stop when 'DC IGN' mark (3780), 'IGN' mark (3880) on vibration dampener at front of engine lines up with pointer on chain case cover. Loosen advance arm clamp bolt, rotate distributor until stationary contacts (mounted directly on breaker plate) begin to open, tighten clamp bolt, then synchronize movable points.

Synchronization (Timing Movable Contacts)—Without disturbing position of distributor or crankshaft, loosen lockscrews on movable sub-plate (carrying second set of contacts), shift plate by prying with screwdriver in notch on edge of plate until this set of contacts begin to open, tighten sub-plate lockscrews.

Synchronization (Other Methods)—Set contacts to open simultaneously at regular 45° (dist.) intervals.

CARBURETOR

CARBURETION:—Carburetor. Stromberg Model EE-1, 1" dual downdraft type.
For complete data, refer to Carburetor Index.

Idle Adjustment—With engine warm and choke valve wide open, set throttle stopscrew so that engine idles at 7 M.P.H., turn both idle adjusting screws (simultaneously and equally) in until engine begins to lag or miss, then out until engine begins to roll, finally turn both screws in slowly until engine fires smoothly. Readjust throttle stopscrew for correct idle speed. NOTE—On cars where Overdrive used continuously, throttle stopscrew may be set for 9 M.P.H. idle speed if engine tends to stall when coasting.

Accelerating Pump Adjustment—Two holes provided in throttle lever for accelerating pump rod connection. Adjust for seasonal requirements as follows:
Inner Hole (Min. stroke)—Summer temperatures.
Outer Hole (Max. stroke)—Winter temperatures.

See Electrical Equipment Section for Regulator internal wiring when two resistors used.

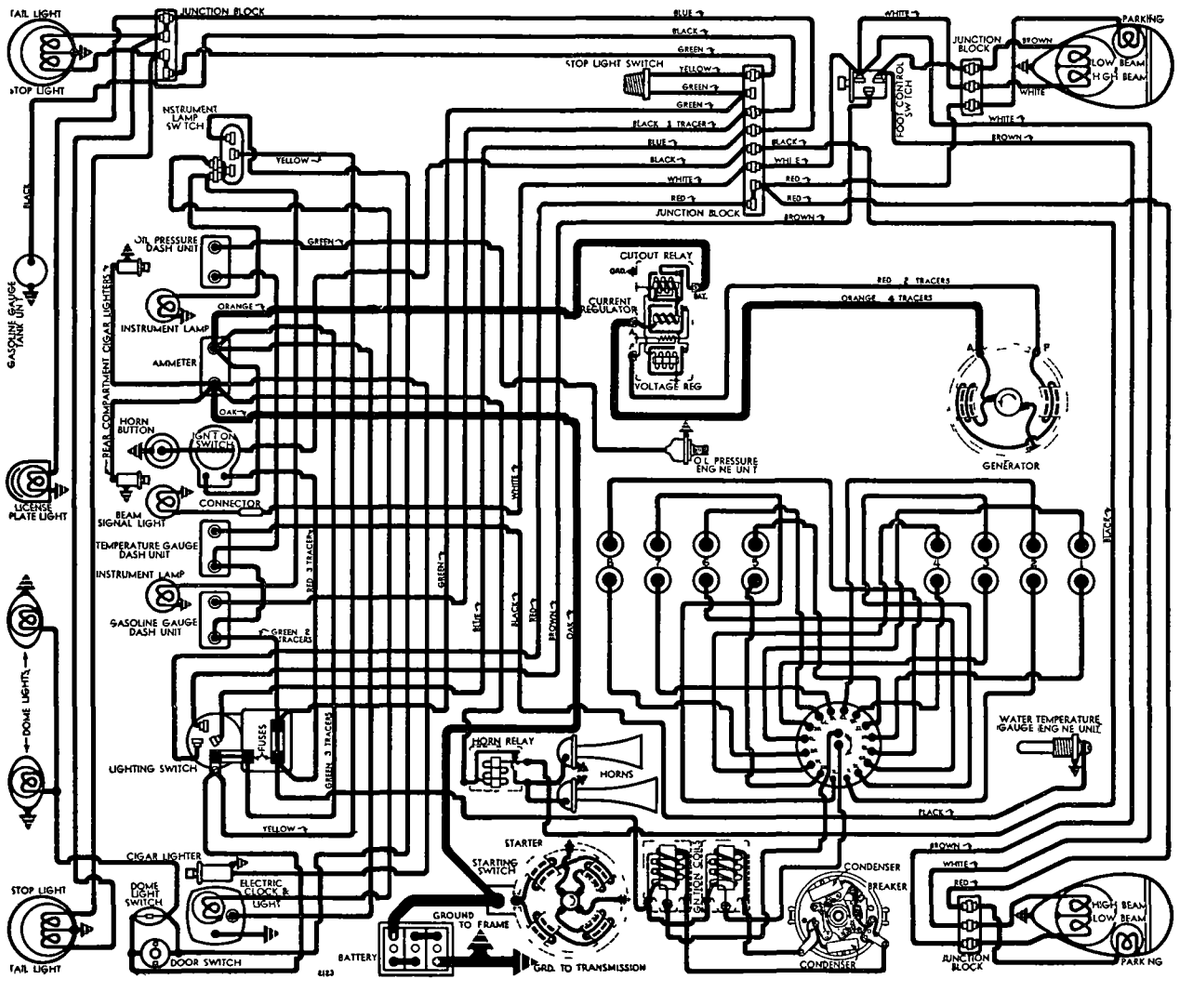

1938 MODELS

CARB. EQUIPMENT
MODEL 3780

Air Cleaner:—Burgess oil-wetted type standard, AC #1528280 Heavy Duty oil-bath type optional.
Fuel Pump:—AC. Type AD, #1523236 Diaphragm type, combination fuel-and vacuum pump.
For complete data, refer to Carburetion Equip. Index.
Gasoline Gauge:—Motometer (Auto-Lite) Electric. No. NG-8229-D (dash unit), NG-8230-T (tank unit).
For complete data, refer to Carburetion Equip. Index.

CARB. EQUIPMENT
MODEL 3880

Air Cleaner:—AC #1528644 oil-wetted type Std., #1528688 heavy duty oil-bath type optional.
Fuel Pump:—AC Type AD, #1523644 combination fuel-and-vacuum pump std.
For complete data, refer to Carburetion Equip. Index.
Gasoline Gauge:—King-Seeley Electric Type. K-S No. 6730 (Dash unit—first cars—ball type pointer), 7070 (Dash unit—later cars—bar type pointer), N . 6732 (Tank unit—all cars).
For complete data, refer to Carburetion Equip. Index.

BATTERY
MODEL 3780

BATTERY:—U.S.L. Type KW-15A. 6 volt, 15 plate, 116 ampere hour capacity (20 hour rate).
Starting Capacity—140 amperes for 20 minutes.
Zero Capacity—300 amperes for 4.0 minutes.
Grounded Terminal—Positive (+) terminal grounded to transmission cover bolt.
Location—On left side under drivers seat.

BATTERY
MODEL 3880

BATTERY:—U.S.L. Type HTL-2-17. 6 volt, 17 plate, 120 ampere hour capacity (20 hour rate).
Starting Capacity—152 amperes for 20 minutes.
Zero Capacity—300 amperes for 4 9 minutes.
Grounded Terminal—Positive (+) terminal. Grounded to frame and to transmission cover bolt (same cable).
Dimensions—Width 7⅛". Length 10 5/16". Height 9 1/16".
Location—In cradle under right front seat.

STARTER

Auto-Lite MAB-4054. Armature MAB-2057.
Drive—Inboard Bendix Type LCD11FX-10.
Rotation—Counter-clockwise at commutator end.
Brush Spring Tension—42-53 ozs. (new brushes).
Cranking Engine—125 R.P.M., 150-160 amperes, 5.15 volts.

Performance Data

Torque	R.P.M.	Volts	Amperes
0 ft. lbs.	3700	5.5	60
.6 " "	1910	5 5	100
3.4 " "	1100	5 0	200
6.6 " "	695	4.5	300
10.15 " "	420	4 0	400
15.8 " "	Lock	3.0	582
22.5 " "	Lock	4.0	775

Lock torque figures correct without switch.

CONTINUED N NEXT PAGE

CONTINUED FR M PRECEDIN PA E

Removal:—Starter flange mounted on right front face of flywheel housing. To remove, disconnect switch linkage, take out flange mounting screws, remove starter and switch as an assembly.

Starter Switch:—Model VC-4003. Vacuum control type mounted on starter field frame and operated by clutch pedal.

For complete data, refer to Electrical Equipment Index.

Adjustment—Check setting whenever clutch pedal is adjusted. Switch should make contact just after clutch is released. To check, engage transmission gears, depress clutch pedal (with engine not running), note pedal position when starter engages. If clutch not entirely disengaged so that car tends to move, or if pedal travel is excessive, adjust by loosening two clamp bolts on clutch throw-out shaft lever (at left side of clutch housing), move cable clamp in toward shaft for later engagement, or out for earlier engagement, tighten clamp bolts. Switch lever should have ⅛" free movement.

GENERATOR

Auto-Lite GCO-4802 or GCO-4802A (3780) GCO-4802C (3880). Armature No. GCO-2031F. Two brush types with external current & voltage regulator.

Charging Rate Adjustment—No adjustment at generator. Charging rate controlled by Voltage Regulator and maximum output controlled by Current Regulator.

Maximum Charging Rate—28 amperes, 8.0 volts, 1850 R.P.M. and above with load or discharged battery (Current Regulator setting). Actual charging rate controlled by Voltage Regulator and is dependent on battery condition.

Performance Data

Cold			Hot		
Amperes	Volts	R.P.M.	Amperes	Volts	R.P.M.
0	6.4	825	0	6.4	900
4	6.6	940	4	6.6	1025
8	6.85	1050	8	6.85	1160
12	7.1	1175	12	7.1	1310
16	7.3	1300	16	7.3	1475
20	7.55	1450	20	7.55	1660
24	7.8	1610	24	7.8	1880
28	8.0	1850	28	8.0	2200

NOTE—Current reg. limits output to 28 amperes.

Rotation—Counter-clockwise at commutator end.

Brush Spring Tension—53 ozs. max. (new brushes).

Field Current—1.47-1.63 amperes at 6.0 volts.

Motoring Current—3.94-4.36 amperes at 6.0 volts.

Removal:—Generator cradle mounted at left side of engine with fan belt drive. Water pump driven by generator shaft extension. To remove, disconnect water pump, loosen fan belt, remove generator clamp band and lift generator off.

Belt Adjustment:—Adjust whenever belt deflection is more than 1½" (when pressed lightly midway between generator and fan pulleys). To adjust, loosen two capscrews on fan bracket, lift fan up (one screw hole slotted) until belt deflection is approximately 1", tighten screws.

REGULATOR

Auto-Lite VRB-4002-D (3780), VRB-4010-A (3880). Current Voltage type in case on dash.

NOTE—Regulator cover is sealed. Serviced on exchange basis if seals not broken. Unit can be checked without breaking seal but cover must be removed to make adjustments.

For complete data, refer to Electrical Equipment Index.

Cutout Relay

Cuts In—6.4-7.0 volts Cold.

Cuts Out—.5-3.0 amperes discharge current.

Contact Gap—.015" minimum.

Air Gap—.034" min., .038" max. with contacts open. Measure at hinge end of core.

Voltage Regulator

Setting—7.3-7.6 volts at 70°F. (Regulator Serial No. 8R-000001 Up). **See Electrical Equipment Section for settings and changes on units before this serial no.**

To Check (Without Breaking Seals)—Connect ammeter in charging line at 'B' terminal on regulator, connect voltmeter between 'B' and 'GD' terminals. Operate generator, charging fully charged battery, at speed equivalent to 30 M.P.H. until voltage is steady. Voltage should be within limits of 7.3-7.6 volts (cold—70°F), 7.1-7.4 volts (hot—140°F). See Regulator Setting above.

To Adjust (with cover removed)—Change armature spring tension slightly by bending lower spring hanger. See Electrical Equipment Section for complete directions.

Contact Gap—.010" Min., .020" Max. with armature against stop pin.

Air Gap—.0595-.0625" with contacts just opening.

Current Regulator

Setting—27-29 amperes (marked '28' on cover).

To Check (Without Breaking Seals)—Connect ammeter and voltmeter as directed for Voltage Regulator test. Operate generator at 30 M.P.H. car speed, add load (use bank of headlamp bulbs or turn on car lights and discharge battery) so that generator will charge at peak rate and bring Current Regulator into action. Charging current should not exceed 28 amperes. If more than slight excess is noted, Regulator is defective.

To Adjust (with cover removed)—Change regulator armature spring tension by bending lower spring hanger slightly. See Electrical Equipment Section for complete directions.

Contact Gap & Air Gap—As given above for Voltage Regulator.

LIGHTING

LIGHTING:—Headlamps—Corcoran-Brown, pre-focused type. Country Driving and City Beams controlled by foot selector switch on toeboard. City Beam deflected slightly to right (special type 2331 lamp bulb).

Headlamp Adjustment—Aim headlamps straight ahead with top of beam at lamp center height at 25 feet, (upper beams—Country driving) lighted. Vertical adjustment controlled by mounting bolts —loosen bolts and shift lamp by hand. Horizontal adjustment controlled by screw (under hood just ahead of front mounting bolt).

Headlamp Beam Indicator—Red jewel light on instrument panel above speedometer dial. Lighted whenever Country driving (upper) beams lighted.

Switches

Lighting—Douglas.

Foot Dimmer—Douglas.

Bulb Specifications

Position	Candlepower	Mazda No.
Headlamps	32-32	2331
Park, Dash, License	3	63
Indicator	1	51
Stop-Tail	21-3	1158
Dome	6	63

MISC. ELECTRICAL

FUSES:—Lighting—20 amp. on back of lighting switch.

Accessory—20 ampere on fuse block attached to lighting switch. Protects stop light and gasoline gauge circuits.

HORNS:—Sparton—Vibrator type twin horns operated by R.B.M. horn relay.

Horn Relay:—R.B.M. Model 10072. Current draw .4-.55 amperes at 6.0 volts. Coil resistance 11-14 ohms. Contacts must close with 4 volts across windings when in inverted position.

ENGINE

ENGINE CODE NOTE:—Consists of three letters stamped above Engine Number Plate to indicate original size of Cylinder Bore (first letter), Main Bearings (second letter), Crankpin & connecting rod bearings (third letter) as follows: 'A'—Standard, 'B'—.010" Undersize, 'C'—.010" Oversize, 'D'—.015" Oversize, 'E'—.020" Oversize.

ENGINE SPECIFICATIONS:—8 cylinder, valve-in-head, Twin-ignition type.

NOTE—3880 models use 'Iso-thermal' fuel intake system (Intake manifold cast in cylinder head and surrounded by cooling water for temp. control).

Bore—3⅛". **Stroke**—4¼".

Displacement—260.8 cu. ins. **Rated HP.**—31.25.

Developed HP.—105 ('37), 115 ('38) @ 3400 RPM.

Compression Ratio—5.46-1 ('37). 6.0-1 ('38).

Compression Pressure—Approx. 90 lb. ('37), 100-105 lb. ('38) at cranking speed. All cyl. equal within 10 lb.

Vacuum Reading—Steady 18-20" idling at 7-9 MPH.

►**Later type Replacement Cylinder Heads:** *See "Cylinder Head" in Nash Shop Notes.*

PISTONS:—Nash, aluminum alloy, Invar strut, split skirt type. See Engine Code Note above for original bore and piston sizes.

Removal—Pistons and rods removed from below.

Clearance—.0015-.002". See Fitting New Pistons.

Replacement Pistons:—Finished pistons furnished Std. and .001", .002", .003", .005", .010", .012",. 015", .020" oversize. Semi-finished pistons .050" oversize.

Fitting New Pistons:—Use .002" feeler stock inserted between piston and cylinder wall on side opposite slot to check clearance. Pull required to withdraw feeler should be 10 lbs.

Installing Pistons:—Piston pins offset toward camshaft side of engine and trademark (within piston) toward front.

PISTON RINGS:—Two compression rings, two oil control rings per piston, all above pin.

Ring	Width	End Gap
Compression (All)	1/8"	.010"
Oil Control (#3—1937)	1/8"	.010"
Oil Control (#4—1937)	3/16"	.010"
Oil Control (All—1938)	5/32"	.010"

Replacement Rings:—Furnished .010",. 020" oversize.

ENGINE

C NTINUED FR M PRECEDIN PA E

PISTON PIN:—Diameter—⅞". Length—2 9/16". Pin floats in piston and rod, retained by locking rings. Pin hole in piston offset toward camshaft side of engine, pin hole in rod bronze-bushed.
Pin Fit in Piston—Light push fit (piston @ 200°F).
Pin Fit in Rod Bushing—.0001" or light push fit with both parts at normal temperature.
Replacement Pins:—Furn. .001", .002", .005" oversize.

CONNECTING ROD:—Length—8¾". Weight—34 ozs.
Upper Bearing (Piston Pin Bushing)—Bronze.
Crankpin Journal Diameter—2".
Lower Bearing—Removable steel-backed, babbitt-lined type. No shims. See Engine Code Note (above) for original bearing sizes.
Clearance—.002". **Sideplay** .004" Max.
Bearing Adjustment:—None (no shims). Replace bearings. Do not file rods or caps.
Replacement Bearings:—Furnished .010" undersize.

CRANKSHAFT:—9 bearing. Integral counterweights.
Journal Diameters—2 31/64" all bearings.
Bearing Type:—Interchangeable steel-backed, babbitt-lined type. No shims.
Clearance—.002".
Bearing Adjustment:—None (no shims). Replace bearings. Do not file bearing caps. Bearing upper halves can be 'rotated' out without removing crankshaft by using pin installed in oil hole in shaft and rotating shaft.
Replacement Bearings:—Furnished .010" undersize.
End Thrust:—Taken by center (#5) bearing. Endplay .004". No adjustment (replace bearing).

CAMSHAFT:—Non-adjustable roller chain drive.
Timing Chain:—Double-roller chain. Width 9/16". Pitch ⅜". Length 23¼" or 62 links.
Camshaft Setting:—Sprockets are marked. Mesh chain with sprockets turned so that marks are adjacent and in line with a straightedge across the shaft centers. Chain should be removed and installed endless. Use special pullers and pushers, keep sprockets lined up to avoid sidestrain on chain and sprockets.

VALVES:	Head Diam.	Seat Angle	Stem Clearance
Intake	1 21/32"	45°	.003"
Exhaust	1 15/32"	45°	.003"

VALVE TIMING

Tappet Clearance:—.008" (Intake '37), .015" (Exhaust '37—All valves '38), engine hot and idling. NOTE—On 1938 cars driven consistently at less than 50 M.P.H., intake valves can be set at .008".
Valve Timing:—See Camshaft Setting above.

LUBRICATION

LUBRICATION:—Pressure. Gear type oil pump located in crankcase.
Normal Oil Pressure:—25-35 lbs. at normal temp.
Oil Pressure Relief Valve:—Located on oil pump cover. Operates at 30 lbs. Adjustable by turning screw.
Crankcase Capacity:—7 quarts (refill).
Oil Pressure Gauge:—King-Seeley Electric. K-S No. 6730 (dash unit, first cars—ball type pointer), 7070 (dash unit, later cars—bar type pointer), N . 6125 (motor unit, all cars). This data for 3880 only.
See Miscellaneous Section for complete data.

COOLING

COOLING SYSTEM:—Water Pump:—Centrifugal type, driven through flexible coupling by extension of generator armature shaft.
See Water Pump Section for complete data.
Removal—Drain radiator, disconnect hose and drive coupling, take out mounting screws in pump flange.
Thermostat:—Dole. In water outlet on cyl. head.
Setting—Thermostat opens at 160°F.
Temperature Gauge ('38): King-Seeley Electric type.
Dash Unit—K-S No. 6730(with Ball type pointer), No. 7070 (with Bar type pointer).
Engine Unit—K-S No. 5700.
NOTE—No. 5700 Engine Unit serviced by No. 7000 (new type) which must be used with new Dash Unit No. 7295. Service Kit Not. 7643 contains both units.
See Miscellaneous Section for complete data.
Water Capacity:—18 qts (3780), 17 qts. (3880).
Drain Valves—At bottom of radiator. Drain plug also located at lower left rear corner of engine block.

CLUTCH

CLUTCH:—Borg & Beck Mod. 10A6. Mod. #883 stamped on cover. Single plate, dry disc type.
See Clutch Section for complete data.
Facings:—Moulded-woven type. 2 required. Inside Diam. 6". Outside Diam. 10". Thickness ⅛".
NOTE—Woven facings used on 3780.
Adjustment—Free movement of clutch pedal must be ½-1½". Adjust by loosening transverse bolt in link directly behind pedal and above clutch pedal shaft and positioning pedal in slot. Clearance between pedal and toeboard should be ⅜". Check Starting Switch adjustment and 'NoRol' setting whenever clutch adjusted and adjust if necessary.
NoRol Adjustment—Loosen locknut and turn adjusting nut at rear end of connecting rod (at NoRol lever) in for later brake release, out for earlier release. Brakes should release just as clutch engages.
Starting Switch Adjustment—Starting switch lever should have ⅛" free movement. Adjust by turning lever stopscrew on side of switch case. Switch should close just after clutch is completely disengaged. Adjust by loosening two clampscrews attaching switch cable to lever on right end of clutch throw-out shaft, move clamp toward shaft for later starter engagement, out for earlier.
Removal:—Remove transmission (see Transmission Removal below), remove clutch housing underpan, take out clutch mounting bolts evenly, remove assembly from below.

TRANSMISSION

TRANSMISSION:—Own Make. Constant-mesh, synchro-mesh, helical gear (second and high), sliding helical gear (low and reverse).
See Transmission Section for complete data.
Vacuum Gear Shift (Transmission Control):—Evans Nash vacuum type. Optl. on Model 3880 only.
See Transmission Section for complete data.
Removal:—Disconnect driveshaft. Disconnect shift linkage (on cars with Vacuum Gear Shift). Take off nuts on transmission mounting bolts, pull transmission straight back.

OVERDRIVE

Cruising Gear (Overdrive):—Warner Model AS7-R1 (3780), AS6-R6 (3880). Optional equipment.
See Transmission Section for complete data.

UNIVERSALS

UNIVERSAL JOINTS:—Mechanics Model 3C. Roller bearing type. Two used.
See Universals Section for complete data.

REAR AXLE

REAR AXLE:—Own—Semi-floating, spiral bevel gear type with Hotchkiss drive.
See Rear Axle Section for complete data.
Ratio—4.1-1 Std.
Removal:—With axle shafts removed, drop driveshaft, remove carrier mounting bolts and remove assembly from car without removing housing.
Axle Shaft Removal—Remove wheel, take out mounting screws in retainer, remove retainer, oil seal, brake backing plate, bearing adjusting shims. Use puller to remove shaft and bearing assembly.
Wheel Bearing Adjustment—Controlled by shims at flanged end of housing. To adjust, remove brake backing plate and add or remove shims.
Endplay—.003-.006".

SHOCK ABSORBERS

SHOCK ABSORBERS:—Nash (Delco or Gabriel design), double acting (3780), direct acting (3880).
See Shock Absorber Section for complete data.

FRONT SUSPENSION

Front Suspension:—Conventional 'I' beam front axle with Reverse-Elliott ends and semi-elliptic springs.
Kingpin Inclination—7° crosswise.
Camber—½-1½°. No adjustment.
Caster—2° ('37), 1½° ('38). Shim adjustment. Install shims between spring and spring pad on axle.
Toe In—0-1/16". Adjust by loosening clamp bolt at right hand end of tie rod and turning rod in or out of end fitting.
Steering Shock Eliminator—Consists of rubber bumper mounted on underside of left frame siderail just in front of left front spring rear shackle. Adjust to give 1/16" clearance between spring and bumper with normal load.

STEERING GEAR

Steering Gear: Gemmer Model 335 Worm-and-Roller type with "push-pull" adjustments.
See Steering Gear Section for complete data.

BRAKES

BRAKES:—Service. Bendix Duo-servo, Single Anchor type, or Lockheed type, Hydraulic brakes. Hand lever applies rear wheel service brakes. NoRol optional equipment on 3880 only.
See Brake Section for complete data.
Drum Diameter—11" ('37), 11 1/16" ('38).
Lining—Woven (prim. '38), Moulded (all '37—secondary '38). Width 2¼" ('37), 2 1/16" ('38). Thickness 3/16". Length per wheel 23 13/16" ('37).
Clearance (Bendix)—.010" at heel & toe (each shoe).
Clearance (Lockheed)—.005" heel, .010" toe (each shoe).
Braking Power—53% front, 47% rear.
NoRol:—Optional. Consists of a clutch pedal controlled valve in the brake line by which brakes held 'on' when car stopped on up-grade until clutch is engaged.
See Brake Section for complete data.
Hand Brake:—See Service Brakes above.

NOTE:—Engine hood hinged at cowl and lifts from forward end. Hood latch handle located at lower edge of radiator grille (safey catch at top of grille).

MODEL IDENTIFICATION

SERIAL NUMBER:—First number R-331400. Stamped on plate on right frame side rail under hood.

ENGINE NUMBER:—First number E-33900 (See Note). Stamped on boss on right front upper corner of engine block.

Engine No. Change Note—Beginning with Serial No. R-331967, engine numbering changed so that number is 500 less than serial number on same car (Serial No. R-331,967—Engine No. E-331467).

TUNE-UP

COMPRESSION:—Ratio—6.0-1 std. No optl. ratios.

Pressure—125 lbs. at 350 R.P.M. or approximately 100 lbs. at cranking speed of 125 R.P.M. Pressure must be equal for all cylinders within 10 lbs.

VACUUM READING:—18-20" steady reading with engine idling at 7-8 M.P.H.

FIRING ORDER: 1-5-3-6-2-4. See wiring diagram for sparkplug cable connections on distr. cap.

SPARK PLUGS: AC No. 45. 14 mm. Metric.

Gaps—Set at .025".

IGNITION: See Coil, Condenser, and Distributor.

Breaker Gap—.020". Cam Angle—35° Closed.

Synchronization—Movable contacts should be set to open simultaneously with stationary set.

Automatic Advance—11½° max. at 875 RPM (distr.).

IGNITION TIMING: See Ignition Timing.

Std. Setting—6° BTDC. Vibration dampener mark 'IGN' (23/64" before 'DC' mark) aligned with pointer on chain case cover at front of engine. Both sets of contacts should open simultaneously.

CARBURETION: See Carburetor & Carb. Equipment.

Idle Setting—Idle screw ¾-1½ turn open. Idle speed 7-8 MPH.

Float Level—⅜" from projection on cover to top of soldered seam at front end of float with needle valve seated (invert to check).

Accelerating Pump—Lower hole (Normal setting).

Fuel Pump Pressure: 3½ lbs. maximum.

VALVES: See Valve Timing.

Tappet Clearance—.008" Int., (.015" for high speed operation), .015" Exh. Set with engine warm and idling.

STARTING: See Battery, Starter, Generator, Regulator.

IGNITION

Ignition Switch:—Oakes Steering Column and Ignition Lock No. 301954. Ignition Switch No. 301538.

Ignition Lock—Briggs & Stratton No. 80207 (Lock cylinder). Key Series—5 digits. Groove—#1.

COIL: Two Used, Auto-Lite CE-4402-A. Service Coil CE-4404. Coils mounted on right side of engine.

Ignition Current—2 amps. idling, 4 stopped.

CONDENSER: Auto-Lite Part No. IG-2671. Two used. Capacity—.20-.25 microfarad.

DISTRIBUTOR: Auto-Lite IGE-4019A. Twin Ign. double breaker, 6 lobe cam, full automatic advance type. Contacts open simultaneously to fire both spark plugs in each cylinder at the same instant and must be synchronized (See Timing).

Breaker Gap—Set at .020".

Cam Angle or Dwell—35° Closed. 25° Open (distr.). For each set of contacts (operate independently).

Breaker Arm Spring Tension—16-20 ounces.

Rotation—Counter-clockwise viewed from the top.

Automatic Advance

Distributor Degrees	Distributor R.P.M.	Engine Degrees	Engine R.P.M.
Start	275	0	550
.8	300	1.6	600
3	375	6	750
5	435	10	870
7	500	14	1000
9	660	18	1320
11.5	875	23	1750

Removal:—Distributor mounted on right hand side of crankcase. To remove, take out hold-down screw in advance arm.

IGNITION TIMING

IGNITION TIMING:—Setting for all engines as follows:

Flywheel Degrees	Piston Position
6° BTDC.	.0150" BTDC.

Timing (Stationary Contacts)—With #1 piston on compression, turn engine over until piston is 6° or .015" before top dead center, stop when 'IGN' mark on vibration dampener at front of engine lines up with pointer on chain case cover (this mark is 6° or 23/64" before top dead center mark 'DC'). Loosen advance arm clamp bolt, rotate distributor until stationary contacts (mounted directly on breaker plate) begin to open, tighten clamp bolt, then synchronize movable contacts.

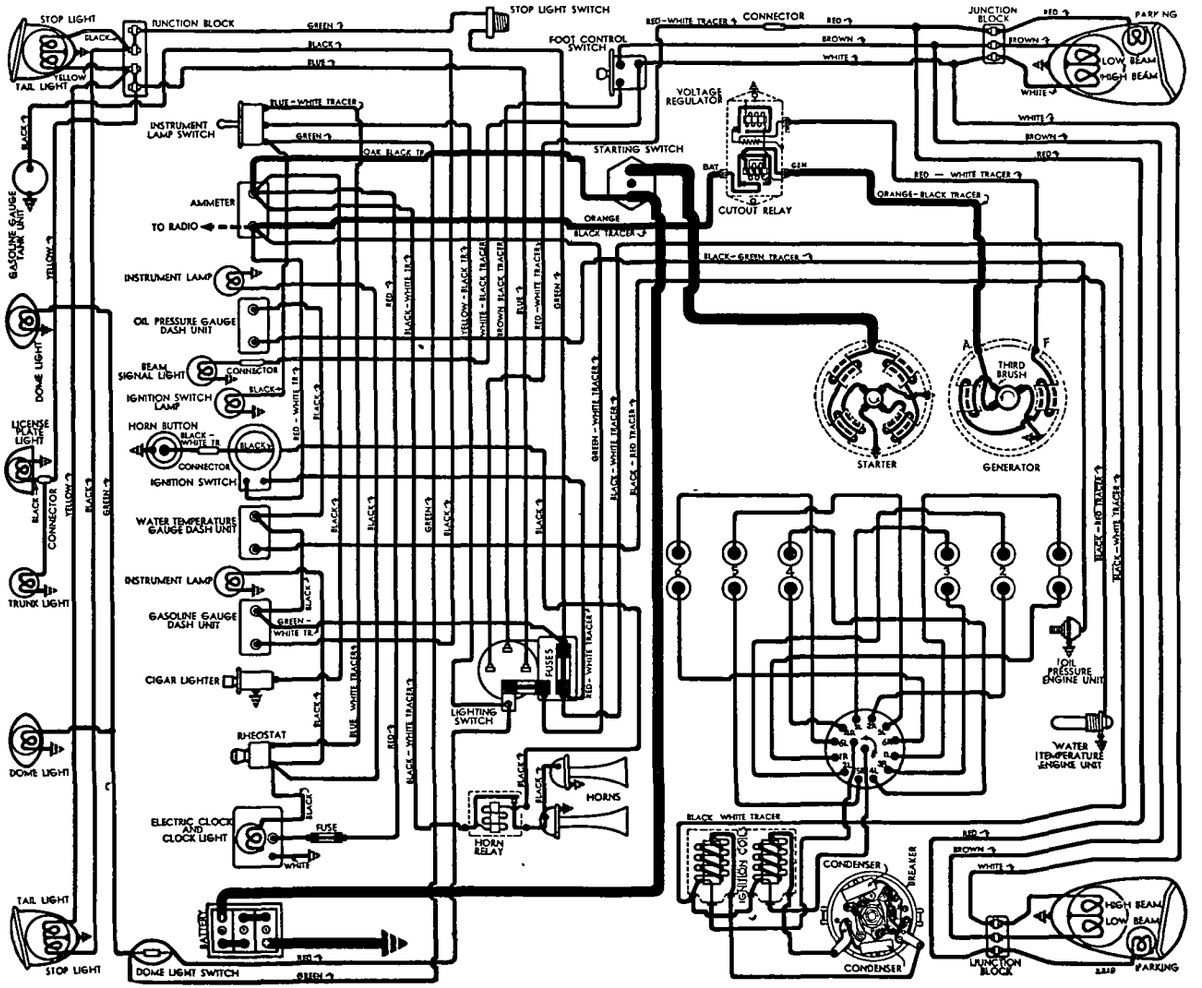

Synchronization (Timing Movable Contacts)—Without disturbing position of distributor or crankshaft, loosen lockscrews on movable sub-plate (carrying second set of contacts), shift plate by prying with screwdriver in notch on edge of plate until this set of contacts begin to open, tighten sub-plate lockscrews.

Synchronization (Other Methods)—Set contacts to open simultaneously at regular 60° (dist.) intervals.

CARBURETOR

CARBURETION:—Carburetor—Carter Model WA-1, Type 435-S. (#253 cast on face of flange). Single barrel, 1¼" downdraft type with Carter Climatic Control.

For complete data, refer to Carburetor Index.

Idle Adjustment—With engine warm (fast idle and automatic choke inoperative) adjust throttle stopscrew so that engine idles at 7-8 M.P.H. Turn idle adjusting screw in until engine begins to miss, then turn screw out until engine begins to roll, finally turn screw in slowly until engine fires smoothly. Final setting should be ¾-1½ turns open of screw from inner seated position. Readjust throttle stopscrew for correct 7-8 M.P.H. idling speed.

Accelerating Pump Adjustment—Pump arm under dust cover at top of carburetor has three holes for pump link engagement. Set as follows:
Upper Hole (max. stroke)—Cold weather.
Lower Hole (med. stroke)—Moderate weather.
Inner Hole (min. stroke)—Hot weather.

Fast Idle:—Carter Cam type.

For complete data, refer to Carburetion Equip. Index.

Setting—Turn throttle stopscrew until it just seats on cam (fast idle cam held in normal idle position). With throttle lever closed, pull cam back until stopscrew against first stop of fast idle cam. Check clearance between inside wall of air horn and lower edge of choke valve (Gauge T109-83). Should be ½".

Automatic Choke:—Carter Climatic Control. Built-in carburetor.

For complete data, refer to Carburetion Equip. Index.

Setting—Set coil housing one notch rich for average driving and climatic conditions.

CARB. EQUIPMENT

Air Cleaner:—AC. #1529112 oil-wetted type std. #1529115 heavy duty oil-bath type optional.

Fuel Pump:—AC. Type W #1523642 diaphragm type std. Type AD #1523643 combination fuel-and-vacuum pump optl. or on cars with Cruising Gear.

For complete data, refer to Carburetion Equip. Index.

Gasoline Gauge:—King-Seeley Electric type. K-S No. 7265 (dash unit), No. 6732 (tank unit).

For complete data, refer to Carburetion Equip. Index.

BATTERY

BATTERY:—U.S.L. Type HTL-1-15. 6 volt, 15 plate, 105 ampere hour capacity (20 hour rate).

Starting Capacity—133 amperes for 20 minutes.

Zero Capacity—300 amperes for 3.8 minutes.

Grounded Terminal—Positive (+) terminal grounded to frame and to transmission (1 cable).

Dimensions—Length & Height 9 1/16". Width 7⅛".

Location—Under right front seat.

STARTER

Auto-Lite Model MAB-4076. Armature MAB-2057.

Drive—Inboard Bendix Type LCD11FX-10.

Rotation—Counter-clockwise at commutator end.

Brush Spring Tension—42-53 ozs. (new brushes).

Cranking Engine—160 RPM., 150-160 amps., 5.2 v.

Performance Data

Torque		R.P.M.	Volts	Amperes
0	ft. lbs.	3700	5.5	60
.6	"	1910	5.5	100
3.4	"	1100	5.0	200
6.6	"	695	4.5	300
10.15	"	420	4.0	400
15.8	"	Lock	3.0	582
22.5	"	Lock	4.0	775

Removal:—Starter flange mounted on left front face of flywheel housing. To remove, take out flange mounting screws.

Starting Switch:—A-L Model SW-4005. Mounted on left side of engine below clutch pedal. Operated by depressing clutch pedal fully. No adjustment required.

GENERATOR

THIRD-BRUSH TYPES

Auto-Lite Model GDS-4802A. Armature No. GDF-2097. Third brush control type with external vibrating voltage regulation. Ventilated by fan on drive pulley.

Maximum Charging Rate—35 amperes (cold), 27.5 amperes (hot), at 8.0 volts, 24 M.P.H. Actual charging rate controlled by Voltage Regulator and dependent on battery condition.

Charging Rate Adjustment—Maximum output controlled by third brush. Do not adjust third brush for output greater than shown in table below (with field terminal grounded to render regulator inoperative). See Regulator Section (following).

NOTE—Third brush setting 1 bar minus 1 mica strip (minimum), 1 bar (maximum) from insulated main brush.

Performance Data

Cold			Hot		
Amperes	Volts	R.P.M.	Amperes	Volts	R.P.M.
0	6.4	920	0	6.4	960
4	6.6	1050	4	6.65	1120
8	6.8	1175	8	6.9	1280
12	7.0	1300	12	7.1	1430
16	7.2	1450	16	7.45	1640
20	7.4	1600	20	7.6	1900
24	7.6	1820	24	7.8	2320
28	7.8	2075	27.5	8.0	3200
33	8.0	2900			

Rotation—Counter-clockwise at commutator end.

Brush Spring Tension—53 ozs. max. (new brushes).

Field Current—1.65-1.82 amperes at 6.0 volts.

Motoring Current—5.10-5.45 amperes at 6.0 volts.

Removal:—Generator cradle mounted at left side f engine with fan belt drive. Water pump driven by generator shaft extension. To remove, disconnect water pump, loosen fan belt, remove generator clamp band and lift generator off.

Belt Adjustment:—Adjust whenever belt deflection is more than 1½" (when pressed lightly midway between generator and fan pulleys). To adjust, loosen two capscrews on fan bracket, lift fan up (one screw hole slotted) until belt deflection is approximately 1", tighten screws.

GENERATOR

TWO-BRUSH TYPES

Auto-Lite Model GCO-4802-C. Armature Number GCO-2031F. Shunt (two brush) type with external vibrating voltage and current regulation. *See preceding 3880 page for complete data.*

REGULATOR

FOR THIRD-BRUSH ENERAT R

Auto-Lite Model VRD-4010A. Voltage Type (used with GDS-4802A Generator). Consists of cutout relay and vibrating voltage regulator in a single case mounted on frame in engine compartment.

For complete data, refer to Electrical Equipment Index.

NOTE—Regulator cover sealed. Serviced on exchange basis if seals not broken.

Cutout Relay

Cuts In—6.4-7.0 volts Cold, 9 M.P.H.

Cuts Out—.5-3.0 amperes discharge current.

Contact Gap—.015" minimum.

Air Gap—.034-.038" Contacts open—measure at hinge end of core.

Voltage Regulator

Setting—7.3-7.6 volts at 70°F.

To Check (without breaking seals)—Connect ammeter in charging line at regulator 'B' terminal, voltmeter between 'B' and 'GD' terminals. Operate generator at speed equivalent to 30 M.P.H., charging battery, until voltage is steady. Voltage reading ing should be 7.3-7.6 volts (Cold—70°F), 7.1-7.4 volts (Hot—140°F).

To Adjust (with cover removed)—Change regulator armature spring tension by bending lower spring hanger. See Electrical Equipment Section for complete directions.

Contact Gap—.010-.020" (armature against stop pin).

Air Gap—.0595-.0625" with contacts just opening.

REGULATOR

FOR TWO-BRUSH ENERAT R

Auto-Lite Model VRB-4010-A. Voltage-Current Type (Used with GCO-4802C Generator). *See preceding 3880 page for complete data.*

LIGHTING

LIGHTING:—Headlamps—Corcoran-Brown, pre-focused type. Country driving and City beams controlled by selector switch on toeboard. City beam deflected slightly to right (special 2331 bulb).

Headlamp Adjustment—With car 25' from screen and Country Driving (upper beams) lighted, aim headlamps straight ahead with top of beam at lamp center height. Adjusting screws located under headlight door to left of lens. Upper screw controls horizontal movement, lower screw vertical movement.

C NTINUED ON NEXT PAGE

CONTINUED FR M PRECEDIN PAGE

Beam Indicator—Red dot above speedometer dial. Lighted when Country Driving (upper beams) in use.

Switches

Lighting—Douglas.

Beam Selector—Douglas.

Instrument—Douglas.

Bulb Specifications

Position	Candlepower	Mazda No.
Headlamps	32-32	2331
Park, Dash, License	3	63
Indicator	1	51
Stop-Tail	21-3	1158
Dome	6	81

MISC. ELECTRICAL

FUSES:—Lighting—20 ampere capacity fuse on lighting switch.

Accessory—20 ampere capacity fuse on fuse block on lighting switch. Protect stop light and gasoline gauge circuits.

HORNS:—Auto-Lite. Model HH-4003 (low pitch), HH-4004 (high pitch). Vibrator type, blended tone horns operated by relay.

Horn Relay:—R.B.M. Model 4755.

Contacts Close—3.5-4.5 volts.

Current Draw—¾ ampere.

ENGINE

NOTE:—Engine hood hinged at cowl and lifts from forward end. Hood latch handle located at lower edge of radiator grille (safety catch at top of grille).

ENGINE CODE NOTE:—Consists of three letters stamped on Engine Number Plate to indicate original size of Cylinder Bore (first letter), Main Bearings (second letter), Crankpin & connecting rod bearings (third letter) as follows: 'A'—Standard, 'B'—.010" Undersize, 'C'—.010" Oversize, 'D'—.015" Oversize, 'E' .020" Oversize.

ENGINE SPECIFICATIONS:—6 cylinder, valve-in-head, Twin Ignition type. NOTE—'Iso-thermal' fuel intake system used (intake manifold cast in cylinder head—water cooled for temp. control).

Bore—3⅜". Stroke—4⅜".

Displacement—234.8 cu. ins. **Rated HP.**—27.34.

Developed Horsepower—105 HP. at 3400 R.P.M.

Compression Ratio—6.0-1 cast-iron head.

Compression Pressure—125 lbs. @ 350 RPM. or approx. 100-105 lbs. at cranking speed (125 RPM).

Vacuum Reading—18-20" steady idling at 7-8 MPH.

►**Later type Replacement Cylinder Heads:** *See "Cylinder Head" in Nash Shop Notes.*

PISTONS:—Nelson-Bohnalite, aluminum alloy, Invar strut, tin plated, split skirt type. See Engine Code Note above for original bore and piston sizes.

Weight—19¼ ounces. **Length—3⅞".**

Removal—Pistons and rods removed from above.

Clearance—Top .027-.030". Skirt .001-.002".

Replacement Pistons:—Std. & .001", .002", .003", .005", .010", .012", .015", .020" O.S. Semi-finished .050" O.S.

Fitting New Pistons:—Insert .002" feeler between piston and cylinder wall on side opposite slot. Pull to withdraw feeler should be 10 lbs.

Installing Pistons:—Pin offset to camshaft side of engine. Trademark (within piston) to front.

PISTON RINGS:—Two compression rings, two oil control rings per piston, all above pin.

Ring	Width	End Gap	Wall Thickness
Compression	.123-.124"	.010-.020"	.150"
Oil Control	.1545-.1550"	.010-.018"	.150"

Replacement Rings:—Furnished .010", .020" oversize.

PISTON PIN:—Diameter .8745-.8748". **Length** 2.799-2.809". Floating type. Retained by locking rings. Pin hole in piston offset to camshaft.

Pin Fit in Piston—Light push fit (piston @ 200°F.)

Pin Fit in Rod Bushing—Select fit to .0001" or light push fit at normal temperature.

Replacement Pins:—Furn. .001", .002", .005" oversize.

CONNECTING ROD:—Length—8¾". Weight—36¼ ozs.

Upper Bearing (Piston Pin Bushing)—Bronze.

Crankpin Journal Diameter—2.0015-2.0025".

Lower Bearing—Removable steel-backed, babbitt-lined type. No shims. See Engine Code Note (above) for original bearing sizes.

Clearance—.0015-.0025". **Sideplay**—.008-.012".

Bearing Adjustment:—None (no shims). Replace bearings. Do not file rods or caps.

Replacement Bearings:—Furnished .010" undersize.

CRANKSHAFT:—7 bearing, 4 counterweights.

Journal Diameters—2 31/64" all bearings.

Bearing Type—Interchangeable steel-backed, babbitt-lined. No shims. See Engine Code Note (above) for original bearing sizes. **Clearance**—.002".

Bearing Adjustment:—None (no shims). Replace bearings. Do not file caps. Upper halves can be 'rotated' out without removing crankshaft by using pin in oil hole in shaft, turn shaft.

Replacement Bearings:—Furnished .010" undersize.

End Thrust:—At #4 bearing. **Endplay**—.004".

CAMSHAFT:—Non-adjustable double-roller chain drive.

End Thrust:—Taken by front bearing. Replace bearing to take up excessive endplay.

Timing Chain:—Whitney No. 49205. Width 9/16". Pitch ⅜". Length 60 links or 22½".

Camshaft Setting:—Sprockets marked. Mesh chain with sprocket marks adjacent and in line with a straightedge across the shaft centers.

VALVES:	Head Diameter	Stem Diameter	Length
Intake	1 3/4"	.3715-.3725"	5 17/32"
Exhaust	1 19/32"	.3715-.3725"	5 17/32"

	Seat Angle	Lift	Stem Clearance
All Valves	45°	11/32"	.002-.004"

Valve Guides:—Press fit in head.

Valve Springs:—Double springs on all valves. Spring free length 1 21/32" (inner), 2" (uter).

	Inner Spring Pressure	Inner Spring Length	Outer Spring Pressure	Outer Spring Length
Closed	19-23 lbs.	1 3/8"	35½-40½ lbs.	1 11/16"
Open	48-54 lbs.	1 1/32"	92-98 lbs.	1 11/32"

VALVE TIMING

Tappet Clearance:—.008" Int., (.015" for high speed operation), .015" Exh. Set with engine warm and idling.

Valve Timing:—See Camshaft Setting above.

Intake Valves—Open 24½° BTDC. Close 70½°ALDC.

Exhaust Valves—Open 49½° BLDC. Close 5° ATDC.

Valve Timing Check—With regular running tappet clearance of .015", Exhaust valve should close with piston 5° or .0104" after top dead center.

LUBRICATION

LUBRICATION:—Gear type pump in crankcase.

Normal Oil Pressure:—30 lbs. at 20 M.P.H.

Oil Pressure Relief Valve:—On oil pump cover. Opens at 30 lbs. Screw adjustment.

Oil Pressure Gauge:—King-Seeley Electric. K-S No. 7270 (dash unit), 6125 (engine unit).

See Miscellaneous Section for complete data.

Crankcase Capacity:—7 qts. (6 qts. refill).

COOLING

COOLING SYSTEM:—Capacity—16 quarts.

Water Pump:—Centrifugal, adjustable packing type. Driven by generator extension shaft.

See Water Pump Section for complete data.

Removal—Drain radiator, disconnect hose and drive coupling, take out mounting screws in pump flang .

Thermostat:—Dole. In water outlet on cyl. head.

Setting—Starts to open at 160°F.

Temperature Gauge:—King-Seeley Electric. K-S No. 7275 (dash unit), 7000 (engine unit).

See Miscellaneous Section for complete data.

NOTE—Gauge reads '212' with ignition 'Off'.

CLUTCH

CLUTCH:—Borg & Beck Model 10A7. #902 or #934 stamped on cover. Single plate, dry disc type.

See Clutch Section for complete data.

Facings—Woven, 2 required. Inside Diam. 6". Outside Diam. 10". Thickness .125".

Adjustment:—Pedal free movement ½-1¼" (loosen transverse bolt in link below pedal shaft, position pedal in slot). Pedal toeboard clearance ⅜". Check 'No-Rol' operation (if car so equipped).

Removal:—Remove transmission (see below), clutch housing underpan, clutch cover mounting bolts (release tension evenly), lower assembly out.

TRANSMISSION

TRANSMISSION:—Own Make. Constant-mesh (all speeds), synchro-mesh (second & high), all helical gear.

See Transmission Section for complete data.

Transmission Control:—Mechanical type steering column mounted gear shift, optional.
See Transmission Section for complete data.

Removal:—Disconnect driveshaft. Disconnect shift linkage (cars with steering column shift). Remove transmission mounting stud nuts and lift out.

OVERDRIVE

Cruising Gear (Overdrive):—Warner design type R6 optional. In separate case at rear of transmission.
See Transmission Section for complete data.

UNIVERSALS

UNIVERSAL JOINTS:—Mechanics. Type 2C. Roller bearing type. 2 used.
See Universals Section for complete data.

REAR AXLE

REAR AXLE:—Own Make. Semi-floating, hypoid gear type with Hotchkiss drive (spiral bevel on Coupe).
See Rear Axle Section for complete data.

Ratio—4.1-1 Std. 4 4/9-1 Optl.

Backlash—.005-.007". Shim adjustment.

Removal:—Block up rear of car, remove wheel and drum assemblies, axle shafts, disconnect brake lines and cables, shock absorbers, drive shaft at rear universal. Free axle from springs by disconnecting spring bolts, withdraw axle.

Axle Shaft Removal—Remove wheel and drum, take out retainer mounting bolt nuts, remove retainer, oil seal, brake backing plate, bearing adjusting shims. Pull shaft and bearing out.

Wheel Bearing Adjustment—Shims at flanged end of housing. To adjust, remove brake backing plate, add or remove shims. **Endplay**—.004-.006".

SHOCK ABSORBERS

SHOCK ABSORBERS:—Delco. Front 1112-P, Rear 1117-DD. Direct acting, hydraulic type. 1723-L, M, N, P (double acting) Export.
See Shock Absorber Section for complete data.

FRONT SUSPENSION

Front Suspension:—Conventional 'I' beam front axle with Reverse-Elliott end and semi-elliptic springs.

Kingpin Inclination—7° crosswise.

Camber—½-1½° and equal at both wheels.

Caster—1½°. Shim adjustment. Install shims (furnished in 1½° and 3° angles) between spring and spring pad on axle.

Toe In—0-1/16". Adjust by loosening clamp bolt at right end of tie rod and turning tie rod.

Steering Shock Eliminator—Consists of spring and rubber bumper bracket at rear of left front spring. Adjust lower nut to give ⅛" clearance between upper rubber cushion and frame. Adjust spring cushion (ahead of spring rear shackle) to 1/16" clearance between cushion and spring.

STEERING GEAR

Steering Gear: Gemmer Model 305 Worm-and-Roller type with "push-pull" adjustments.
See Steering Gear Section for complete data.

BRAKES

BRAKES:—Service. Bendix hydraulic, duo-servo, single anchor type with eccentric adjustment. Hand lever applies rear service brakes.
See Brake Section for complete data.

Drums—Cast-iron. Diameter 10 1/16".

Lining—Moulded. Width 2". Thickness 7/32". Length per wheel 22".

Clearance—.010" at heel and toe of each shoe.

Braking Power—53% front wheels, 47% rear.

Hand Brake:—See Service Brakes.

No-Rol: Optional equipment.
See Brake Section for complete data.

NOTE:—Engine hood hinged at cowl and lifts from forward end. Hood latch handle located at lower edge of radiator grille (safety catch at top of grille).

MODEL IDENTIFICATION

SERIAL NUMBER:—First number B-89000. Stamped on plate on right frame side rail under hood.

ENGINE NUMBER:—Stamped on boss on right front upper corner of engine block (see Note for numbering change).

Engine No. Change Note—Beginning with Serial No. B-103201, engine numbering changed so that number is 500 less than serial number on same car (Serial No. B-103201, Engine No. B-102701).

TUNE-UP

COMPRESSION:—Ratio—6.0-1 std. No optl. ratios.

Pressure—110 lbs. at 350 R.P.M. or approximately 100 lbs. at cranking speed of 125 R.P.M. Pressure must be equal for all cylinders within 10 lbs.

VACUUM READING:—18-20" steady reading with engine idling at 7-8 M.P.H.

FIRING ORDER: 1-6-2-5-8-3-7-4. See wiring diagram for spark plug cable connections in distr. cap.

SPARK PLUGS: AC No. 45. 14 mm. Metric.
Gaps—Set at .025".

IGNITION: See Coil, Condenser, and Distributor.
Breaker Gap—.017". **Cam Angle**—28° Closed.
Synchronization—Set movable contacts to open simultaneously with stationary contacts.
Automatic Advance—12° max. at 1100 RPM (distr.).

IGNITION TIMING: See Ignition Timing.
Std. Setting—9° BTDC. Vibration dampener mark 'IGN' (.725" before 'DC' mark) aligned with pointer on chain case cover at front of engine. Both sets of contacts should open simultaneously.

CARBURETION: See Carburetor & Carb. Equipment.
Idle Setting—Idle screws ¼-1 turn open. Idle speed 7-8 MPH.
Float Level—3/16" from top of float to machined surface of cover (remove gasket, invert to check).
Accelerating Pump—Lower Hole (Summer), upper (Winter).
Fuel Pump Pressure: 3½ lbs. maximum.

VALVES: See Valve Timing.
Tappet Clearance—.008" Int., (.015" for high speed operation), .015" Exh. Set with engine warm and idling.

STARTING: See Battery, Starter, Generator, Regulator.

IGNITION

Ignition Switch:—Oakes Steering Column and Ignition Lock No. 301955. Ignition Switch No. 301538.
Ignition Lock—Briggs & Stratton No. 80207 (Lock cylinder). Key Series—5 digits. Groove—#1.

COIL: Two Used, Auto-Lite CE-4402-A. Service Coil CE-4404. Coils mounted on right side of engine.
Ignition Current—2 amps. idling, 4 stopped.

CONDENSER: Auto-Lite Part No. IG-2671. Two used.
Capacity—.20-.25 microfarad.

DISTRIBUTOR: Auto-Lite IGK-4102. Twin ign. double breaker, 8 lobe cam, full automatic advance type. Contacts open simultaneously to fire both spark plugs in each cylinder at the same instant and must be synchronized (See Timing).
Breaker Gap—Set at .017" (alike for both sets).
Cam Angle or Dwell—28° Closed. 17° Open. For each set of contacts (operate independently).
Breaker Arm Spring Tension—18-20 ounces.
Rotation—Clockwise viewed from the top.

Automatic Advance

Distributor Degrees	Distributor R.P.M.	Engine Degrees	Engine R.P.M.
Start	275	0	550
2	335	4	670
4	400	8	800
6	570	12	1140
8	745	16	1490
10	925	20	1850
12	1100	24	2200

Removal:—Distributor mounted on right hand side of crankcase. To remove, take out hold-down screw in advance arm.

IGNITION TIMING

IGNITION TIMING:—Setting for all engines as follows:

Flywheel Degrees	Piston Position
9° BTDC	.0325" BTDC

Timing (Stationary Contacts)—With #1 piston on compression, turn engine over until piston is 9° or .0325" before top dead center, stop when 'IGN' mark on vibration dampener at front of engine lines up with pointer on chain case cover (this mark is 9° or .725" before top dead center mark 'DC'). Loosen advance arm clamp bolt, rotate distributor until stationary contacts (mounted directly on breaker plate) begin to open, tighten clamp bolt, then synchronize movable contacts.

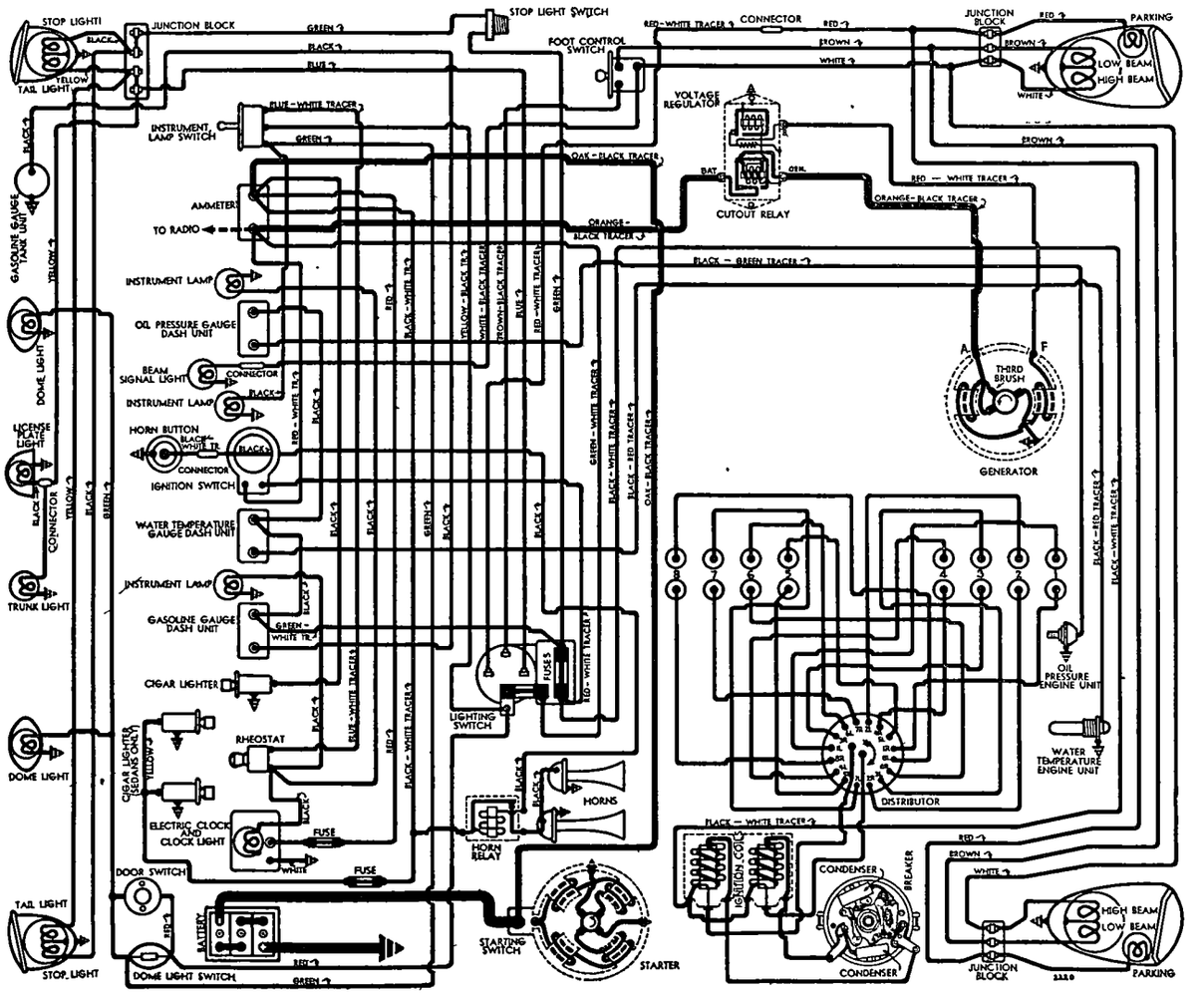

Synchronization (Timing Movable Contacts)—Without disturbing position of distributor or crankshaft, loosen lockscrews on movable sub-plate (carrying second set of contacts), shift plate by prying with screwdriver in notch on edge of plate until this set of contacts begin to open, tighten sub-plate lockscrews.

Synchronization (Other Methods)—Set contacts to open simultaneously at regular 45° (dist.) intervals.

CARBURETOR

CARBURETION:—Carburetor—Carter Model WDO Type 436-S (marked 255 on face of flange). 1" dual, downdraft type.
For complete data, refer to Carburetor Index.

Idle Adjustment—With engine warm so that Automatic Choke and Fast Idle inoperative, set throttle stopscrew for 7-8 M.P.H. idling speed. Turn each idle adjusting screw (one for each barrel) in until engine begins to miss, then turn screws out until engine begins to roll, finally turn screws in slowly until engine fires smoothly. Final setting should be ¼-1 turn open of screws from inner seated position. Reset throttle stopscrew for correct 7-8 M.P.H. idling speed.

Accelerating Pump Adjustment—Pump arm has two holes for pump link engagement. Set as follows:
Upper Hole (max. stroke)—Cold weather.
Lower Hole (min. stroke)—Hot weather.

Fast Idle:—Integral type (part of carburetor).
For complete data, refer to Carburetion Equip. Index.

Setting—Adjust fast idle screw for .015" throttle opening (measured with T109-44 gauge between throttle valve edge and wall on side opposite idle port) with choke valve tightly closed.

Automatic Choke:—Carter Climatic Control.
For complete data, refer to Carburetion Equip. Index.

Setting—Set coil housing one notch rich for average driving and climatic conditions.

CARB. EQUIPMENT

Air Cleaner:—AC. #1529113 oil-wetted type std. #1529116 heavy duty oil-bath type optional.

Fuel Pump:—AC. Type AD #1523644 combination fuel-and-vacuum pump standard.
For complete data, refer to Carburetion Equip. Index.

Gasoline Gauge:—King-Seeley Electric type. K-S No. 7265 (dash unit), No. 6732 (tank unit).
For complete data, refer to Carburetion Equip. Index.

BATTERY

BATTERY:—U.S.L. Type HTL-2-17. 6 volt, 17 plate, 120 ampere hour capacity (20 hour rate).

Starting Capacity—152 amperes for 20 minutes.

Zero Capacity—300 amperes for 4.9 minutes.

Grounded Terminal—Positive (+) terminal Grounded to frame and to transmission cover bolt (same cable).

Dimensions—Width 7⅛". Length 10 5/16". Height 9 1/16".

Location—In cradle under right front seat.

STARTER

Auto-Lite Model MAB-4054. Armature MAB-2057.
Drive—Inboard Bendix Type LCD11FX-10.
Rotation—Counter-clockwise at commutator end.
Brush Spring Tension—42-53 ozs. (new brushes).
Cranking Engine—160 R.P.M., 150-160 amperes, 5.15 volts.

Performance Data

Torque	R.P.M.	Volts	Amperes
0 ft. lbs.	3700	5.5	60
.6 " "	1910	5.5	100
3.4 " "	1100	5.0	200
6.6 " "	695	4.5	300
10.15 " "	420	4.0	400
15.8 " "	Lock	3.0	582
22.5 " "	Lock	4.0	775

Lock torque figures correct without switch.

Removal:—Starter flange mounted on right front face of flywheel housing. To remove, disconnect switch linkage, take out flange mounting screws, remove starter and switch as an assembly.

Starter Switch:—Model VC-4003. Vacuum control type mounted on starter field frame and operated by clutch pedal.
For complete data, refer to Electrical Equipment Index.

Adjustment—Check setting whenever clutch pedal is adjusted. Switch should make contact just after clutch is released. To check, engage transmission gears, depress clutch pedal (with engine not running), note pedal position when starter engages. If clutch not entirely disengaged so that car tends to move, or if pedal travel is excessive, adjust by loosening two clamp bolts on clutch throw-out shaft lever (at left side of clutch housing), move cable clamp in toward shaft for later engagement, or out for earlier engagement, tighten clamp bolts. Switch lever should have ⅛" free movement.

GENERATOR

Auto-Lite Model GDS-4802-B. Armature No. GDF-2097. Third brush control type with external vibrating voltage regulation. Ventilated by fan on drive pulley.

Maximum Charging Rate—35 amperes (cold), 27.5 amperes (hot), at 8.0 volts, 24 M.P.H. Actual charging rate controlled by Voltage Regulator and dependent on battery condition.

Charging Rate Adjustment—Maximum output controlled by third brush. Do not adjust third brush for output greater than shown in table below (with field terminal grounded to render regulator inoperative). See Regulator Section (following).

NOTE—Third brush setting 1 bar minus 1 mica strip (minimum), 1 bar (maximum) from insulated main brush.

Performance Data

Cold			Hot		
Amperes	Volts	R.P.M.	Amperes	Volts	R.P.M.
0	6.4	920	0	6.4	960
4	6.6	1050	4	6.65	1120
8	6.8	1175	8	6.9	1280
12	7.0	1300	12	7.1	1430
16	7.2	1450	16	7.45	1640
20	7.4	1600	20	7.6	1900
24	7.6	1820	24	7.8	2320
28	7.8	2075	27.5	8.0	3200
33	8.0	2900			

Rotation—Counter-clockwise at commutator end.
Brush Spring Tension—53 ozs. max. (new brushes).
Field Current—1.65-1.82 amperes at 6.0 volts.
Motoring Current—5.10-5.45 amperes at 6.0 volts.

Removal:—Generator cradle mounted at left side of engine with fan belt drive. Water pump driven by generator shaft extension. To remove, disconnect clamp band and lift generator off.

Belt Adjustment:—Adjust whenever belt deflection is more than 1½" (when pressed lightly midway between generator and fan pulleys). To adjust, loosen two capscrews on fan bracket, lift fan up (one screw hole slotted) until belt deflection is approximately 1", tighten screws.

REGULATOR

Auto-Lite Model VRD-4010A. Voltage Type. Consists of cutout relay and vibrating voltage regulator in a single case mounted on frame in engine compartment.
For complete data, refer to Electrical Equipment Index.
NOTE—Regulator cover sealed. Serviced n exchange basis if seals not broken.

Cutout Relay

Cuts In—6.4-7.0 volts Cold, 9 M.P.H.

Cuts Out—.5-3.0 amperes discharge current.

Contact Gap—.015" minimum.

Air Gap—.034-.038" Contacts open—measure at hinge end of core.

Voltage Regulator

Setting—7.3-7.6 volts at 70°F.

To Check (without breaking seals)—Connect ammeter in charging line at regulator 'B' terminal, voltmeter between 'B' and 'GD' terminals. Operate generator at speed equivalent to 30 M.P.H., charging battery, until voltage is steady. Voltage reading ing should be 7.3-7.6 volts (Cold—70°F), 7.1-7.4 volts (Hot—140°F).

To Adjust (with cover removed)—Change regulator armature spring tension by bending lower spring hanger. See Electrical Equipment Section for complete directions.

Contact Gap—.010-.020" (armature against stop pin).
Air Gap—.0595-.0625" with contacts just opening.

LIGHTING

LIGHTING:—Headlamps—Corcoran-Brown, pre-focused type. Country driving and City beams controlled by selector switch on toeboard. City beam deflected slightly to right (special 2331 bulb).

Headlamp Adjustment—With car 25' from screen and Country Driving (upper beams) lighted, aim headlamps straight ahead with top of beam at lamp center height. Adjusting screws located under headlight door to left of lens. Upper screw controls horizontal movement, lower screw vertical movement.

Beam Indicator—Red dot above speedometer dial. Lighted when Country Driving (upper geams) in use.

Switches

Lighting—Douglas.
Beam Selector—Douglas.
Instrument—Douglas.

CONTINUED ON NEXT PA E

C NTINUED FR M PRECEDING PA E

Bulb Specifications

Position	Candlepower	Mazda No.
Headlamps	32-32	2331
Park, Dash, License	3	63
Indicator	1	51
Stop-Tail	21-3	1158
Dome	6	81

MISC. ELECTRICAL

FUSES:—Lighting—20 ampere capacity fuse on lighting switch.

Accessory—20 ampere capacity fuse on fuse block n lighting switch. Protects stop light and gasoline gauge circuits.

HORNS:—Auto-Lite. Model HH-4003 (low pitch), HH-4004 (high pitch). Vibrator type, blended tone horns operated by relay.

H rn Relay:—R.B.M. Model 4755.

Contacts Close—3.5-4.5 volts.

Current Draw—¾ ampere.

ENGINE

NOTE:—Engine hood hinged at cowl and lifts from forward end. Hood latch handle located at lower edge of radiator grille (safety catch at top of grille).

ENGINE CODE NOTE:—Consists of three letters stamped on Engine Number Plate to indicate original size of Cylinder Bore (first letter), Main Bearings (second letter), Crankpin & connecting rod bearings (third letter) as follows: 'A'—Standard, 'B'—.010" Undersize, 'C'—.010" Oversize, 'D'—.015" Oversize, 'E' .020" Oversize.

ENGINE SPECIFICATIONS:—8 cylinder, valve-in-head, Twin Ignition type. NOTE—'Iso-thermal' fuel intake system used (intake manifold cast in cylinder head—water cooled for temp. control).

Bore—3⅛". **Stroke**—4¼".

Displacement—260.8 cu. ins. **Rated HP**—31.25.

Developed Horsepower—115 HP. at 3400 R.P.M.

Compression Ratio—6.0-1 cast-iron head.

Compression Pressure—110 lbs. at 350 RPM. or approx. 100 lbs. at cranking speed (125 RPM).

Vacuum Reading—Steady 18-20" idling at 7-8 MPH.

►**Later type Replacement Cylinder Heads:** *See "Cylinder Head" in Nash Shop Notes.*

PISTONS:—Nelson-Bohnalite, aluminum alloy, Invar strut, tin plated, split skirt type. See Engine Code Note above for original bore and piston sizes.

Weight—16 ounces. **Length**—3 11/16".

Removal—Pistons and rods remove from below.

Clearance—Top .018-.022". Skirt .001-.002".

Replacement Pistons:—Std. & .001", .002", .003", .005", .010", .012", .015", .020" O.S. Semi-finished .050" O.S.

Fitting New Pistons:—Insert .002" feeler between piston and cylinder wall on side opposite slot. Pull to withdraw feeler should be 10 lbs.

Installing Pistons:—Pin offset to camshaft side of engine. Trademark (within piston) to front.

PISTON RINGS:—Two compression rings, two oil control rings per piston, all above pin.

Ring	Width	End Gap	Wall Thickness
Compression	.1235-.124"	.010-.015"	.130"
Oil Cont. (#3)	.1235-.1240"	.010-.018"	.140"
Oil Cont. (#4)	.1860-.1865"	.010-.018"	.140"

Replacement Rings:—Furnished .010", .020" oversize.

PISTON PIN:—Diameter—.8745-.8748". **Length**—2.564-2.576". Floating type. Retained by locking rings. Pin hole in piston offset toward camshaft.
Pin Fit in Piston—Light push fit (piston @ 200°F.)
Pin Fit in Rod Bushing—Select fit to .0001" or light push fit at normal temperature.

Replacement Pins:—Furn. .001", .002", .005" oversize.

CONNECTING ROD:—Length—8¾". **Weight**—34 ozs.
Upper Bearing (Piston Pin Bushing)—Bronze.
Crankpin Journal Diameter—2.0015-2.0025".
Lower Bearing—Removable steel-backed, babbitt-lined type. No shims. See Engine Code Note (above) for original bearing sizes.
Clearance—.0015-.0025". **Sideplay**—.008-.012".

Bearing Adjustment:—None (no shims). Replace bearings. Do not file rods or caps.

Replacement Bearings:—Furnished .010" undersize.

CRANKSHAFT:—Nine bearing type.
Journal Diameters—2 31/64" all bearings.
Bearing Type—Interchangeable steel-backed, babbitt-lined. No shims. See Engine Code Note (above) for original bearing sizes. **Clearance**—.002".

Bearing Adjustment:—None (no shims). Replace bearings. Do not file caps. Upper halves can be 'rotated' out without removing crankshaft by using pin in oil hole in shaft, turn shaft.

Replacement Bearings:—Furnished .010" undersize.

End Thrust:—At #5 bearing. **Endplay**—.004".

CAMSHAFT:—Non-adjustable double-roller chain drive.

Timing Chain:—Diamond. Width 9/16". Pitch ⅜". Length 62 links or 23¼".

Camshaft Setting:—Sprockets marked. Mesh chain with sprocket marks adjacent and in line with a straightedge across the shaft centers.

VALVES:	Head Diameter	Stem Diameter	Length
Intake	1 21/32"	.3715-.3725"	5½"
Exhaust	1 15/32"	.3715-.3725"	5½"

	Seat Angle	Lift	Stem Clearance
All Valves	45°	11/32"	.002-.004"

Valve Guides:—Press fit in head.

Valve Springs:—Double springs on all valves. Spring free length 1 21/32" (inner), 2" (outer).

	Inner Spring		Outer Spring	
	Pressure	Length	Pressure	Length
Closed	19-23 lbs.	1 3/8"	35½-40½ lbs.	1 11/16"
Open	48-54 lbs.	1 1/32"	92-98 lbs.	1 11/32"

VALVE TIMING

Tappet Clearance:—.008" Int., (.015" for high speed operation), .015" Exh. Set with engine warm and idling.

Valve Timing:—See Camshaft Setting above.
Intake Valves—Open 20° BTDC. Close 74° ALDC.
Exhaust Valves—Open 45° BLDC. Close 10° ATDC.
Valve Timing Check—With regular running tappet clearance of .015", Exhaust valve should close with piston 10° or .0400" after top dead center.

LUBRICATION

LUBRICATION:—Gear type pump in crankcase.

Normal Oil Pressure:—30 lbs. at 20 M.P.H.

Oil Pressure Relief Valve:—On oil pump cover. Opens at 30 lbs. Screw adjustment.

Oil Pressure Gauge:—King-Seeley Electric. K-S No. 7270 (dash unit), 6125 (engine unit).
See Miscellaneous Section for complete data.

Crankcase Capacity:—7 qts. (dry or refill).

COOLING

COOLING SYSTEM:—Capacity—17 quarts.

Water Pump:—Centrifugal, adjustable packing type. Driven by generator extension shaft.
See Water Pump Section for complete data.
Removal—Drain radiator, disconnect hose and drive coupling, take out mounting screws in pump flange.

Thermostat:—Dole. In water outlet on cyl. head.
Setting—Starts to open at 160°F.

Temperature Gauge:—King-Seeley Electric. K-S No. 7275 (dash unit), 7000 (engine unit).
See Miscellaneous Section for complete data.
NOTE—Gauge reads '212' with ignition 'Off'.

CLUTCH

CLUTCH:—Borg & Beck Model 10A7. #919 stamped on cover. Single plate, dry disc type.
See Clutch Section for complete data.

Facings—Woven, 2 required. Inside Diam. 6". Outside Diam. 10". Thickness .125".

Adjustment:—Pedal free movement ½-1¼". (loosen transverse bolt in link below pedal shaft, position pedal in slot). Pedal toeboard clearance ⅜". Check Starting Switch adjustment (below) and 'No-Rol' (if car so equipped).

Starting Switch Adjustment—Starting switch lever should have ⅛" free movement. Adjust by turning lever stopscrew on side of switch case. Switch should close just after clutch is completely disengaged. Adjust by loosening two clampscrews attaching switch cable to lever on right end of clutch throw-out shaft, move clamp toward shaft for later starter engagement, out for earlier.

Removal:—Remove transmission (see below), clutch housing underpan, clutch cover mounting bolts (release tension evenly), lower assembly out.

TRANSMISSION

TRANSMISSION:—Own Make. Constant-mesh (all speeds), synchro-mesh (second & high), all helical gear.
See Transmission Section for complete data.

Transmission Control:—Mechanical type steering column mounted gear shift, optional.
See Transmission Section for complete data.

Removal:—Disconnect driveshaft. Disconnect shift linkage (cars with steering column shift). Remove transmission mounting stud nuts and lift out.

OVERDRIVE

Cruising Gear (Overdrive):—Warner design type R6 standard. In separate case at rear of transmission.
See Transmission Section for complete data.

UNIVERSALS

UNIVERSAL JOINTS:—Mechanics. Type 3C. Roller bearing type. 2 used.
See Universals Section for complete data.

REAR AXLE

REAR AXLE:—Own Make. Semi-floating, hypoid gear type with Hotchkiss drive (spiral bevel on Coupe).
See Rear Axle Section for complete data.
Ratio—4.1-1 standard
Backlash—.005-.007". Screw Adjustment.
Removal:—Block up rear of car, remove wheel and drum assemblies, axle shafts, disconnect brake lines and cables, shock absorbers, drive shaft at rear universal. Free axle from springs by disconnecting spring bolts, withdraw axle.
Axle Shaft Removal—Remove wheel and drum, take out retainer mounting bolt nuts, remove retainer, oil seal, brake backing plate, bearing adjusting shims. Pull shaft and bearing out.
Wheel Bearing Adjustment—Shims at flanged end of housing. To adjust, remove brake backing plate, add or remove shims. **Endplay**—.004-.006".

SHOCK ABSORBERS

SHOCK ABSORBERS:—Delco 1112-M (front), 1117-DD (rear). Direct acting, hydraulic type.
Export Note—Double acting 1723-L, M, N, P used.
See Shock Absorber Section for complete data.

FRONT SUSPENSION

Front Suspension:—Conventional 'I' beam front axle with Reverse-Elliott ends and semi-elliptic springs.
Kingpin Inclination—7° crosswise.
Camber—½-1½° and equal at both wheels.
Caster—1½°. Shim adjustment. Install shims (furnished in 1½° and 3° angles) between spring and spring pad on axle.
Toe In—0-1/16". Adjust by loosening clamp bolt at right end of tie rod and turning tie rod.
Steering Shock Eliminator—Consists of spring and rubber bumper bracket at rear of left front spring. Adjust lower nut to give ⅛" clearance between upper rubber cushion and frame. Adjust spring cushion (ahead of spring rear shackle) to 1/16" clearance between cushion and spring.

STEERING GEAR

Steering Gear: Gemmer Model 335 Worm-and-Roller type with "push-pull" adjustments.
See Steering Gear Section for complete data.

BRAKES

BRAKES:—Service. Bendix hydraulic, duo-servo, single anchor type with eccentric adjustment. Hand lever applies rear service brakes.
See Brake Section for complete data.
Drums—Cast-iron. Diameter 11 1/16".
Lining—Moulded. Width 2¼". Thickness 7/32". Length per wheel 24".
Clearance—.010" at heel and toe of each shoe.
Braking Power—53% front wheels, 47% rear.

Hand Brake:—See Service Brakes.

No-Rol: Optional equipment.
See Brake Section for complete data.

NOTE:—Engine hood hinged at cowl and lifts from forward end. Hood latch handle located at lower edge of radiator grille (safety catch at top of grille).

MODEL IDENTIFICATION

SERIAL NUMBER:—First number R-340000. Stamped on plate on right frame side member under hood.

SERVICE SERIAL NUMBER:—First number N6-31500. On 'Caution Plate' on left front door hinge post.

ENGINE NUMBER:—First number E-339500. On engine block on right side at front. NOTE—Engine Number is 500 less than Serial Number on same car.

TUNE-UP

COMPRESSION:—**Ratio**—6.0-1 std. cast-iron head.
Pressure—125 lbs. at 350 RPM or approx. 100 lbs. at cranking speed of 160 RPM.

VACUUM READING:—Steady 18-20" idling at 7-8 MPH.

FIRING ORDER: 1-5-3-6-2-4. See wiring diagram for spark plug cable connections at distributor cap.

SPARK PLUGS: AC No. 45. 14 mm. Metric.
Gaps—Set at .025".

IGNITION: See Coil, Condenser, and Distributor.
Breaker Gap—.020". **Cam Angle**—35° Closed.
Sychronization—Set movable contacts to open simultaneously with stationary contacts.
Automatic Advance—11½° max. at 875 RPM (distr.).

IGNITION TIMING: See Ignition Timing.
Std. Setting—6° BTDC. Vibration dampener mark 'IGN' (23/64" before 'DC' mark) aligned with pointer on chain case cover at front of engine. Both sets of contacts should open simultaneously. CAUTION—Torquematic Spark Control (see DISTRIBUTOR following for description) cable must be disconnected at dash before setting Ign. Timing.

CARBURETION: See Carburetor & Carb. Equipment.
Idle Setting—Idle screw ¾-1½ turns open. Idle speed 7-8 MPH.
Float Level—⅜" from projection on cover to top of soldered seam at front end of float with needle valve seated (invert to check).
Accelerating Pump—Lower hole (Normal Setting).
Fuel Pump Pressure: 3½ lbs. maximum.

VALVES: See Valve Timing.
Tappet Clearance:—.015" all valves—engine warm and idling. NOTE—For high speed driving, .018" maximum tappet clearance may be used.

STARTING: See Battery, Starter, Generator, Regulator.

IGNITION

Ignition Switch:—Oakes Steering Column and Ignition Lock No. 302074. Ignition Switch No. 301538.
Ignition Lock—Briggs & Stratton. B & S No. 80207. Key Digits—5 digits. Groove—No. 1.

COIL: Two Used, Auto-Lite CE-4025-A. Mounted on right side of engine.
Ignition Current—2 amps. idling, 4 stopped.

CONDENSER: Auto-Lite Part No. IG-2671. Two used.
Capacity—.20-.25 microfarad.

DISTRIBUTOR: Auto-Lite IGE-4019A. Twin Ign. double breaker, 6 lobe cam, full automatic advance type with Torquematic Spark Control. Contacts open simultaneously to fire both spark plugs in each cylinder at the same instant and must be synchronized (see Ignition Timing).
Breaker Gap—Set at .020".
Cam Angle or Dwell—35° closed, 25° open (distr.). For each set of contacts (operate independently).
Breaker Arm Spring Tension—17-20 ounces.
Rotation—Counter-clockwise viewed from above.

Automatic Advance

Distributor Degrees	R.P.M.	Engine Degrees	R.P.M.
Start	275	0	550
3	370	6	740
7	500	14	1000
9	665	18	1330
11.5	875	23	1750

Torquematic Spark Control—Consists of cable anchored at dash and connected to distributor body by a travel limiting spring. Retards distributor through engine movement caused by torque action. Maximum retard 2½° (engine movement in excess of of 2½° taken up by travel limiting spring). See Ignition Timing for setting.

Removal:—Mounted on right side of engine. To remove, take out hold-down screw in advance arm, disconnect torquematic control, lift distributor off.

IGNITION TIMING

IGNITION TIMING:—Setting for all engines as follows:

Flywheel Degrees	Piston Position
6° BTDC	.0150" BTDC

To Set Timing—Car manufacturer recommends use of Nash Timing Light SE-569. Synchronize breaker points (see Synchronization following). With Timing Light connected as for Synchronization (see be-

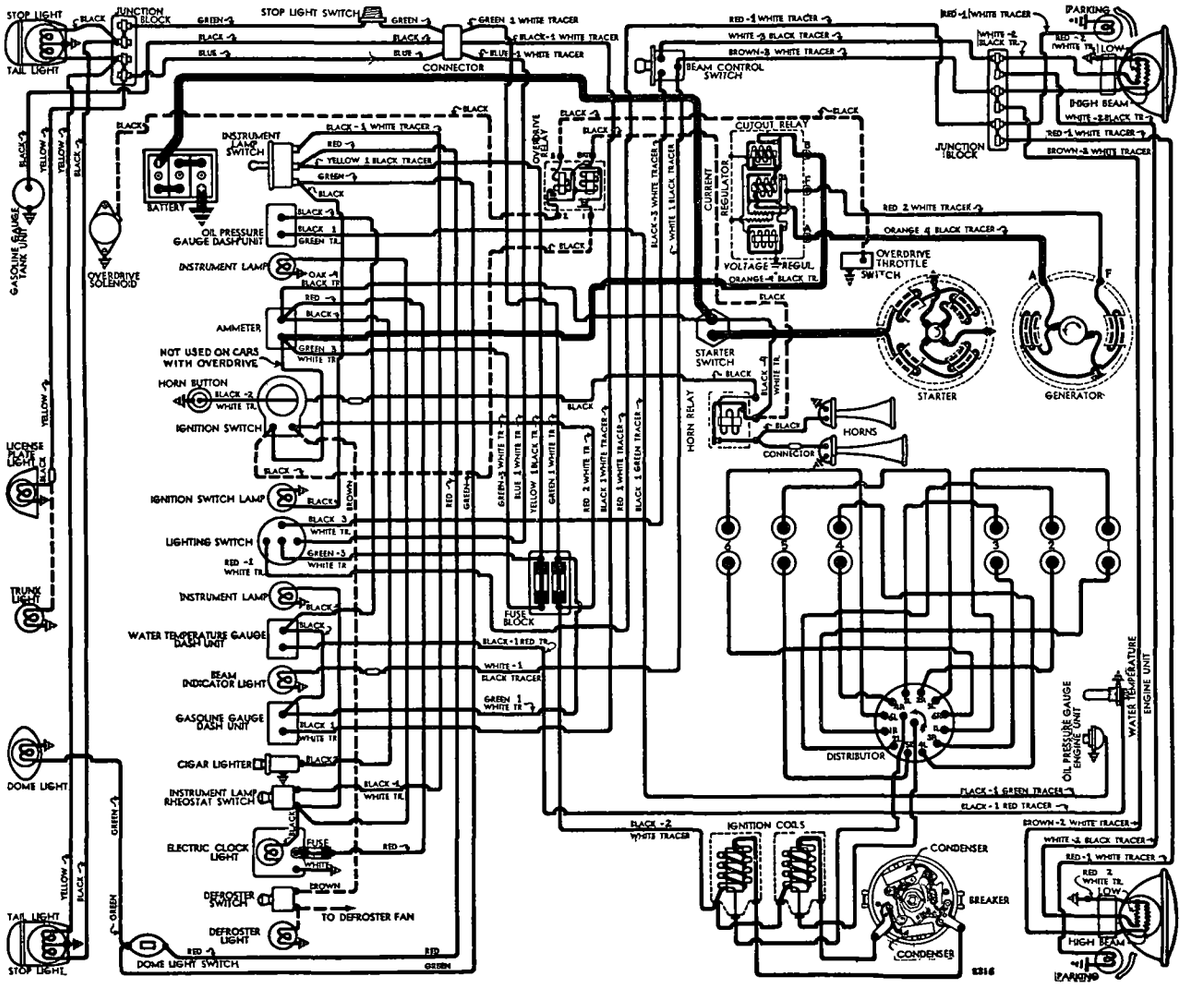

low), slacken torquematic cable by loosening locknuts on anchor bracket at dash. With #1 piston on compression, turn engine over until piston is 6° or .0150" BTDC, stop when 'IGN' mark on vibration dampener lines up with pointer on chain case cover (this mark is 6° or 23/64" before top dead center mark 'DC'). Loosen advance arm clamp bolt, rotate distributor until points just break (lights go on) with stop pin (hold-down bolt and nut) in advance position in slot in advance arm, tighten clamp bolt. Adjust cable locknuts at anchor bracket on dash to leave torquematic cable without slack or tension and stop pin in advance position in slot.

Synchronization—Use Nash Timing Light SE-569 (consists of two lights—one for each set of contacts) connected between each primary terminal and ground. Turn on ignition, turn engine over until fixed points just open (light for stationary contacts on). If both lights go on, synchronization correct. If not, loosen 3 lockscrews on movable subplate, shift plate by prying with screwdriver in notch on edge of plate until this set of contacts begin to open (both lights on), tighten sub-plate lockscrews, and set Ignition Timing as directed above. If other methods used, set contacts to open simultaneously at 60° (distributor) intervals.

Torquematic Spark Control Check—Distributor must be free in bracket and cable pulleys positioned to prevent cable interference with engine. Advance spring and cable take-up spring must be properly located and spring resistance centralized. Car manufacturer recommends use of Nash Synchro Light SE-417 to check torquematic retard by means of dead center mark on vibration dampener.

CARBURETOR

CARBURETION:—Carburetor—Carter Type WA-1, Model 435-S (#253 cast on face of flange). Single barrel, 1¼" downdraft type.

For complete data, refer to Carburetor Index.

Idle Adjustment—With engine warm and running at slow idle speed (choke valve wide open, fast idle inoperative), set throttle stopscrew for 7-8 MPH idle speed. Adjust idle adjusting screw until engine fires smoothly (¾-1½ turns open—turn screw in for leaner mixture). Readjust idle speed.

Accelerating Pump Setting—Pump arm under dust cover at top of carburetor has three holes for pump link engagement. Set as follows:

Upper Hole (max. stroke)—Cold weather.

Lower Hole (med. stroke)—Moderate weather.

Inner Hole (min. stroke)—Hot weather.

Float Level—⅜" from projection on cover to top of soldered seam at front end of float with needle valve seated (invert to check).

Fast Idle:—Integral type (built-in carburetor).

For complete data, refer to Carburetion Equip. Index.

Fast Idle Setting—Part of Climatic Control. Adjust by bending connecting link offset for ⅝" choke valve opening with stopscrew against (not on) first step of fast idle cam.

Automatic Choke:—Carter Climatic Control.

For complete data, refer to Carburetion Equip. Index.

Setting—Set coil housing 1 Notch Rich.

CARB. EQUIPMENT

Air Cleaner:—AC #1529112 oil-wetted type std.

Fuel Pump:—AC Type W #1523642 diaphragm type std. Type AD #1523643 combination fuel-and-vacuum pump optional.

For complete data, refer to Carburetion Equip. Index.

Gasoline Gauge:—King-Seeley Electric type. K-S No. 7680 (dash unit), No. 7780 (tank unit).

For complete data, refer to Carburetion Equip. Index.

BATTERY

BATTERY:—USL Type HTL-1-15 or Auto-Lite Type CTL-1-15. 6 volt, 15 plate, 105 ampere hour capacity (20 hour rate).

Starting Capacity—133 amperes for 20 minutes.

Zero Capacity—300 amperes for 3.8 minutes.

Grounded Terminal—Positive (+) grounded to transmission. Separate ground strap from transmission to frame.

Dimensions—Length & Height 9 1/16". Width 7⅛".

Location—Under front seat.

STARTER

Auto-Lite Model MAB-4076. Armature MAB-2057.

Drive—Inboard Bendix Type LCD11FX-10.

Rotation—Counter-clockwise at commutator end.

Brush Spring Tension—42-53 ozs. (new brushes).

Cranking Engine—160 RPM, 150-160 amps., 5.2 v.

Performance Data

Torque	R.P.M.	Volts	Amperes
0 ft. lbs.	3700	5.5	60
.6 " "	1910	5.5	100
3.4 " "	1100	5.0	200
6.6 " "	695	4.5	300
10.15 " "	420	4.0	400
15.8 " "	Lock	3.0	582
22.5 " "	Lock	4.0	775

Removal:—Starter flange mounted on left front face of flywheel housing. To remove, take out flange mounting screws.

Starting Switch:—A-L #SW-4005. Mounted on body floor below clutch pedal. Operated by depressing clutch pedal fully. No adjustment required.

GENERATOR

Auto-Lite Model GDZ-4803A. Armature No. GDZ-2079-F. Two brush type with current-voltage control.

Charging Rate Adjustment—None. See Regulator.

Maximum Charging Rate—35 amperes (hot or cold), 8.0 volts, 1900 RPM (generator) and above with load or discharged battery (Current Regulator setting). Actual charging rate controlled by Voltage Regulator and dependent on battery condition.

Performance Data

Cold			Hot		
Amperes	Volts	R.P.M.	Amperes	Volts	R.P.M.
0	6.4	925	0	6.4	1000
4	6.6	1035	4	6.6	1120
8	6.75	1140	8	6.75	1235
12	6.95	1250	12	6.95	1350
16	7.15	1370	16	7.15	1460
20	7.3	1480	20	7.3	1590
24	7.5	1590	24	7.5	1730
28	7.7	1710	28	7.7	1900
32	7.9	1820	32	7.9	2090
35	8.0	1900	35	8.0	2250

Rotation—Counter-clockwise at commutator end.

Brush Spring Tension—53 ozs. max. (new brushes).

Field Current—1.60-1.78 amperes at 6.0 volts.

Motoring Current—4.16-4.60 amperes at 6.0 volts.

Removal:—Generator cradle mounted at left side of engine with fan belt drive. Water pump driven by generator shaft extension. To remove, disconnect water pump, loosen fan belt, remove generator clamp band and lift generator off.

Belt Adjustment:—Adjust whenever belt deflection is over 1½" (when pressed lightly midway between generator-and fan pulleys). To adjust, loosen two capscrews on fan bracket, lift fan up (one screw hole slotted) for 1" belt deflection, tighten screws.

REGULATOR

Auto-Lite Model VRP-4004A. Current-Voltage Type. Mounted in single case on dash.

For complete data, refer to Electrical Equipment Index.

NOTE—Regulator case cover is sealed. Serviced on exchange basis if seals not broken.

Cutout Relay

Cuts In—6.4-6.6 volts.

Cuts Out—4.1-4.8 volts (approx. 4-6 amps. disch.).

Contact Gap—.015" minimum.

Air Gap—.031" min., .034" max. with contacts open. Measure at hinge end of core.

Voltage Regulator

Setting—7.2-7.5 volts at 70° F.

To Check (without breaking seals)—Connect ammeter in charging line at regulator 'B' terminal, voltmeter between 'B' terminal and ground. Operate generator at speed equivalent to 30 MPH, charging battery until voltage is steady. Voltage reading should be 7.2-7.5 volts at 70° F. See Electrical Equipment Section for voltages at other temperatures.

To Adjust (with cover removed)—Change regulator armature spring tension by bending lower spring hanger slightly. *See Electrical Equipment Section.*

Contact Gap—.012" Min. (armature against stop pin).

Air Gap—.048-.052" with contacts just opening.

Current Regulator

Setting—34-36 amperes (marked '35' on cover).

To Check (without breaking seals)—Connect test meters as for Voltage check (above). Operate generator at 30 MPH, charging battery, add load (use bank of headlamp bulbs, or turn on car lights and accessories and discharge battery) so that generator charges at peak rate and Current Regulator operates. Charging current should not exceed 34-36 amperes. If more than slight excess noted, regulator is defective.

Adjustment & Contact Gap—Same as for Voltage Regulator (above).

Air Gap—.034-.038" (before No. 5U-000001), .048-.052" (after above No.) with contacts just opening.

LIGHTING

LIGHTING:—Headlamps—General Electric 'Sealed Beam'.

For complete data, refer to Electrical Equipment Index.

Headlamp Adjustment—Aim upper beam for each lamp straight ahead with center of hot spot 3" below lamp center height.

Beam Indicator—Red light on speedometer face. Lighted whenever Country (upper) beam in use.

CONTINUED ON NEXT PAGE

CONTINUED FROM PRECEDIN PAGE

Switches

Lighting—Douglas No. 5754.

Beam Selector—Douglas No. 5733.

Instrument—Douglas No. 5653.

Bulb Specifications

Position	Candlepower	Mazda No.
Headlamps		Sealed Beam
Parking, Rear License	3	63
Instrum., Beam Indic.	1½	55
Stop & Tail	21-3	1154
Dome	6	81

MISC. ELECTRICAL

FUSES:—**Lighting**—30 ampere (SFE type) mounted on fuse block on back of instrument panel toward left.

Accessory—30 ampere (SFE type) on fuse block.

HORNS:—Delco-Remy. No. 1999565 (low note), No. 1999566 (high note). Vibrator type, blended tone, operated by horn relay.

Type	Current (at 6 volts)	Air Gap
1999565 (Low Note)	19-21 amperes	.047-.052"
1999566 (High Note)	18-20 amperes	.039-.044"

Horn Relay:—Delco-Remy Model 1116775.

Contact Gap—.020". **Air Gap**—.015" (closed).

Contacts Close—2.75-4.0 volts.

ENGINE

ENGINE CODE NOTE (ORIGINAL BORE & BEARING SIZES): *See Nash Shop Notes for complete data.*

ENGINE SPECIFICATIONS:—6 cylinder, valve-in-head, Twin Ignition type. NOTE—'Iso-thermal' fuel intake system used (intake manifold cast in cylinder head—water cooled for temperature control).

Bore—3⅜". **Stroke**—4⅜".

Displacement—234.8 cu. ins. **Rated HP**—27.34.

Developed Horsepower—105 at 3400 RPM.

Compression Ratio—6.0-1 cast-iron head.

Compression Pressure—125 lbs. at 350 RPM. or approx. 100-105 lbs. at cranking speed (160 RPM).

Vacuum Reading—18-20" steady idling at 7-8 MPH.

►**Later type Replacement Cylinder Heads:** *See "Cylinder Head" in Nash Shop Notes.*

PISTONS:—Nelson-Bohnalite, aluminum alloy, Invar strut, tin plated, split skirt type.

Original Bore Size:—*See Engine Code Note in Nash Shop Notes for complete data.*

Weight—19¼ ozs. (stripped). **Length**—3⅞".

Removal—Pistons and rods removed from above.

Clearance—Top .027-.030". Skirt .001-.002".

Replacement Pistons:—*See Nash Shop Notes for data.*

Fitting New Pistons:—Insert .002" feeler between piston and cylinder wall on side opposite slot. Pull to withdraw feeler should be 10 lbs.

Installing Pistons:—Pin offset toward camshaft. Slot toward left (trademark within piston toward front).

PISTON RINGS:—Two compression, two oil control rings per piston, all above pin. Oil ring grooves drilled for oil drain holes.

Ring	Width	End Gap	Side Clearance
Compr. #1	.124"	.010-.020"	.002-.0025"
Compr. #2	.124"	.010-.020"	.0015-.003"
Oil Contr. #3	.1550"	.010-.018"	.0015-.0025"
Oil Contr. #4	.1550"	.010-.018"	.001-.0025"

NOTE—Wall thickness .145" (for all rings).

Replacement Rings:—*See Nash Shop Notes for data.*

PISTON PIN:—**Diameter**—.8745". **Length**—2.804". Floating type. Pin retained by locking ring at each end. Pin hole in piston offset to camshaft.

Pin Fit in Piston—Light push fit (piston at 200°F.).

Pin Fit in Rod Bushing—Select fit to .0001" or light push fit at normal temperature.

Replacement Pins:—.001, .003", .005" oversize.

CONNECTING ROD:—**Length**—8¾". **Weight**—36¼ ozs.

Upper Bearing (Piston Pin Bushing)—Bronze.

Crankpin Journal Diameter—2.002".

Lower Bearing—Removable steel-backed, babbitt-lined type. No shims. *See Engine Code Note in Nash Shop Notes for original bearing sizes.*

Clearance—.0015-.0025". **Sideplay**—.008-.012".

Bearing Adjustment:—None (no shims). Replace bearings. Do not file rods or caps. Tangs on bearing shells should be installed on opposite sides of rod.

Replacement Bearings:—.002", .010" undersize.

Installing Rods:—Oil split hole toward camshaft.

CRANKSHAFT:—7 bearings, 4 counterweights. *See Nash Shop Notes for vibration dampener data.*

Journal Diameters—2 31/64" all bearings.

Bearings—Interchangeable steel-backed, babbitt-lined type. No shims. **Clearance**—.002". *See Engine Code Note in Nash Shop Notes for original main bearing sizes.*

Bearing Adjustment:—None (no shims). *See Nash Shop Notes for removing, installing and fitting bearings.*

Replacement Bearings:—.002", .010" Undersize.

End Thrust:—Center (#4) bearing. Replace bearing to take up excessive endplay. **Endplay**—.004".

CAMSHAFT:—Non-adjustable double-roller chain drive. *See Nash Shop Notes for camshaft removal.*

Bearings—Steel-backed, babbitt bushings.

Bearing Clearance—.002".

End Thrust:—Taken by front bearing. Replace bearing to take up excessive endplay.

Endplay—.003" (new), .005" max. (worn).

Timing Chain:—Whitney No. 49205 or Diamond. Width 9/16". Pitch ⅜". Length 60 links or 22½".

Camshaft Setting:—Sprockets marked. Mesh chain with sprocket marks adjacent and in line with a straightedge across the shaft centers.

VALVES:—	Head Diameter	Stem Diameter	Length
Intake	1¾"	.3725"	5 17/32"
Exhaust	1 19/32"	.3725"	5 17/32"

	Seat angle	Lift	Side Clearance
All Valves	45°	11/32"	.002-.004"

Valve Guides:—Press fit. Press in head to shoulder on guide and ream for correct clearance. Replacement guides furnished .002" undersize.

Valve Springs:—Double springs on all valves.

Free Length—1 21/32" (inner), 2" (outer).

	Inner Spring Pressure	Inner Spring Length	Outer Spring Pressure	Outer Spring Length
Closed	21 lbs.	1⅜"	38 lbs.	1 11/16"
Open	51 lbs.	1 1/32"	95 lbs.	1 11/32"

Valve Lifters:—Mushroom type. Lifter guide holes reamed in block. Remove from below (camshaft out).

VALVE TIMING

Tappet Clearance:—.015" all valves—engine warm and idling.

Valve Timing:—See Camshaft Setting above.

Intake Valves—Open 24½° BTDC. Close 70½° ALDC.

Exhaust Valves—Open 49½° BLDC. Close 5° ATDC.

Valve Timing Check—With regular tappet clearance of .015", exhaust valve should close with piston 5° or .0104" after top dead center.

LUBRICATION

LUBRICATION:—Pressure system (gear type oil pump in crankcase. NOTE—Install pump with distributor drive slot turned crosswise of car.

Normal Oil Pressure:—30 lbs. at 20 MPH.

Oil Pressure Relief Valve:—On oil pump cover. Opens at 30 lbs. Turn adjusting screw in to increase.

Oil Pressure Gauge:—King-Seeley Electric. K-S No. 7665 (dash unit), 6125 (engine unit). *See Miscellaneous Section for complete data.*

Crankcase Capacity:—6 qts. (dry or refill).

COOLING

COOLING SYSTEM:—**Cap.** 16 qts. (17 with heater).

Water Pump:—Centrifugal, adjustable packing type. *See Water Pump Section for complete data.*

Removal—Drain radiator, disconnect hose and drive coupling, take out mounting screws in pump flange.

Thermostat:—Dole. In water outlet on cyl. head. Setting—Starts to open at 160° F.

Temperature Gauge:—King-Seeley Electric. K-S No. 7670 (dash unit), 7000 (engine unit). NOTE—Gauge inoperative with ignition Off (reads '212'). *See Miscellaneous Section for complete data.*

CLUTCH

CLUTCH:—**Borg & Beck Model 10A7.** Single plate, dry disc type. **Production Change**—Clutch assembly changed from #934 (same as '39, used up to Service Serial No. N6-36493) to #950 with 'Borglite' driven member (N6-36494 and up). Serv. Serial No. on plate on left front door hinge post. Clutch assembly number stamped on clutch cover. *See Clutch Section for complete data.*

Facings—Spiral wound moulded woven, 2 used. Inside Diam. 6" (934), 7" (950). Outside Diam. 10". Thickness .125". NOTE—Install plate with mark 'flywheel side' forward (damper toward trans).

Pedal Adjustment:—Free travel ½-1" (adjusting nuts on lower end of pedal connector link). Check NoRol

Removal:—Remove transmission (see below). Disconnect clutch pedal linkage. Support engine at rear, disconnect rear engine mountings. Remove clutch housing and pan. Punch mark flywheel, cover, and pressure plate (re-assemble to these marks). Take out mounting screws in cover flange.

TRANSMISSION

TRANSMISSION:—**Own Make.** All helical gear, constant-mesh (all speeds), synchro-mesh (second & high) with remote type steering column shift. *See Transmission Section for complete data.*

Transmission Control:—Steering col. mechanical shift. *See Transmission Section for complete data.*

Removal:—Disconnect shift rods, speedometer cable, overdrive control and wires (if used), and driveshaft. Remove two upper mounting studs and install pilot studs (to support transmission and avoid bending clutch plate). Remove remaining mounting stud nuts, remove transmission from below. NOTE—When removing transmission from car, do not remove inspection hole plate in car floor.

OVERDRIVE

Cruising Gear (Overdrive):—Warner Model AS12-R6 with electrical 'kick-down' control optl.
See Transmission Section for complete data.

Overdrive Solenoid—Delco-Remy Model 1118004.

Throttle Switch—Adjust switch to close with throttle wide open and carburetor throttle shaft pulley spring just starting to compress.

Control Relay—Delco-Remy Model 1116798.

UNIVERSALS

UNIVERSAL JOINTS:—Mechanics Type 2C. Roller bearing type.
See Universals Section for complete data.

REAR AXLE

REAR AXLE:—Own Make. Semi-floating, hypoid gear with Hotchkiss drive.
See Rear Axle Section for complete data.

Ratio—4.1-1 Std., 4 4/9-1 Optl.
Backlash—.005-.007". Shim adjustment.

Removal:—Hoist rear of car, remove axle shafts (see below). Free axle from springs by disconnecting U-bolts and rear shackles and withdraw from car.

Axle Shaft Removal:—Remove wheel and drum. Disconnect brake line and cable. Remove backing plate mounting bolt nuts, oil seal retainer, brake backing plate, bearing adjusting shims and withdraw shaft and bearing (do not drag shaft on oil seal).
Wheel Bearing Adjustment—Shims at flanged end of housing. To adjust, remove backing plate, add or remove shims (equally at both ends of axle).
Endplay—.003-.006".

SHOCK ABSORBERS

SHOCK ABSORBERS:—**Delco. Front**—Model 1947-C, D. **Rear**—Model 1006-DD, 1006-EE (heavy springs), 1723-N, P (heavy springs—Export). Double acting, hydraulic. Direct acting on rear (except 1723).
See Shock Absorber Section for complete data.

FRONT SUSPENSION

Front Suspension:—Independent, linked parallelogram type with coil springs.
See Front Suspension Section for complete data.

IMPORTANT—Insert 2" blocks (Tool J886) between upper support arm and frame flange (at each side) to level frame when checking specifications.

Kingpin Inclination—4½° crosswise.
Caster—0° to Negative ½°. Adjustable.
Camber—Pos. ¼° to Pos. ¾°. Adjustable.
Toe In—1/32-3/32". Adjust tie rod tube for each wheel equally.
Steering Geometry (Toe-out on Turns)—Inner wheel turned 21½°, Outer wheel 20°.

STEERING GEAR

Steering Gear: Gemmer Model Number 305. Worm-and-Roller type with 'push-pull' adjustment. New type steering linkage with idler arm on right frame side member.
See Steering Gear Section for complete data.

BRAKES

BRAKES:—Service. Bendix hydraulic, duo-servo, single anchor type without eccentric adjustment. Hand lever applies rear wheel service brakes.
See Brake Section for complete data.
Drums—Cast-iron. Diameter—10".
Lining—Moulded. Width 2". Thickness 3/16". Length per wheel 22".
Clearance—.015" at each end of secondary shoe with primary shoe forced out against drum.
Braking Power—53% front wheels, 47% rear.

Hand Brake:—See Service Brakes above.

No-Rol: Optional equipment.
See Brake Section for complete data.

NOTE:—Engine hood hinged at cowl and lifts from forward end. Hood latch handle located at lower edge of radiator grille (safety catch at top of grille).

MODEL IDENTIFICATION

SERIAL NUMBER:—First number B-106300. Stamped on plate on right frame side rail under hood.

SERVICE SERIAL NUMBER:—First number N8-13500. On 'Caution Plate' on left front door hinge post.

ENGINE NUMBER:—First number B-105800. On engine block on right side at front. NOTE—Engine Number is 500 less than Serial Number on same car.

TUNE-UP

COMPRESSION:—**Ratio**—6.0-1 std. cast-iron head.
Pressure—110 lbs. at 350 RPM or approx. 100 lbs. at cranking speed of 160 RPM.

VACUUM READING:—Steady 18-20" idling at 7-8 MPH.

FIRING ORDER: 1-6-2-5-8-3-7-4. See wiring diagram for spark plug cable connections in distr. cap.

SPARK PLUGS: AC No. 45. 14 mm. Metric.
Gaps—Set at .025".

IGNITION: See Coil, Condenser, and Distributor.
Breaker Gap—.017". **Cam Angle**—28° closed.
Synchronization—Set movable contacts to open simultaneously with stationary contacts.
Automatic Advance—12° max. at 1100 RPM (distr.).

IGNITION TIMING: See Ignition Timing.
Std. Setting—9° BTDC. Vibration dampener mark 'IGN' (.725" before 'DC' mark) aligned with pointer on chain case cover at front of engine. Both sets of contacts should open simultaneously. CAUTION—Torquematic Spark Control (see DISTRIBUTOR following for description) cable must be disconnected at dash before setting Ignition Timing.

CARBURETION: See Carburetor & Carb. Equipment.
Idle Setting—Idle screws ½-1½ turns open. Idle speed 7-8 MPH.
Float Level—3/16" from top of float to gasket seat on cover with needle valve seated (invert to check).
Accelerating Pump—Lower hole (Summer), upper (Winter).
Fuel Pump Pressure: 3½ lbs. maximum.

VALVES: See Valve Timing.
Tappet Clearance:—.015" all valves—engine warm and idling. NOTE—For high speed driving, .018" maximum tappet clearance may be used.

STARTING: See Battery, Starter, Generator, Regulator.

IGNITION

Ignition Switch:—Oakes Steering Column and Ignition Lock No. 302076. Ignition Switch No. 301538.
Ignition Lock—Briggs & Stratton. B & S No. 80207. Key Series—5 digits. Groove—No. 1.

COIL: Two Used, Auto-Lite CE-4025-A. Mounted on right side of engine.
Ignition Current—2 amps. Idling, 4 Stopped.

CONDENSER: Auto-Lite Part No. IG-2671. Two used.
Capacity—.20-.25 microfarad.

DISTRIBUTOR: Auto-Lite IGK-4102. Twin Ign. double breaker, 8 lobe cam, full automatic advance type with Torquematic Spark Control. Contacts open simultaneously to fire both spark plugs in each cylinder at the same instant and must be synchronized (see Ignition Timing).
Breaker Gap—Set at .017" (alike for both sets).
Cam Angle or Dwell—28° closed, 17° open (distr.). For each set of contacts (operate independently).
Breaker Arm Spring Tension—17-20 ounces.
Rotation—Clockwise viewed from above.

Automatic Advance

Distributor Degrees	Distributor R.P.M.	Engine Degrees	Engine R.P.M.
Start	275	0	550
4	400	8	800
6	575	12	1150
9	840	18	1680
12	1100	24	2200

Torquematic Spark Control—Consists of cable anchored at dash and connected to distributor body by a travel limiting spring. Retards distributor through engine movement caused by torque action. Maximum retard 2½° (engine movement in excess of 2½° taken up by travel limiting spring). See Ignition Timing for setting.

Removal:—Mounted on right side of engine. To remove, take out hold-down screw in advance arm, disconnect torquematic control, lift distributor off.

IGNITION TIMING

IGNITION TIMING:—Setting for all engines as follows:

Flywheel Degrees	Piston Position
9° BTDC	.0325" BTDC

To Set Timing—Car manufacturer recommends use of Nash Timing Light SE-569. Synchronize breaker points (see Synchronization following). With Timing Light connected as for Synchronization (see

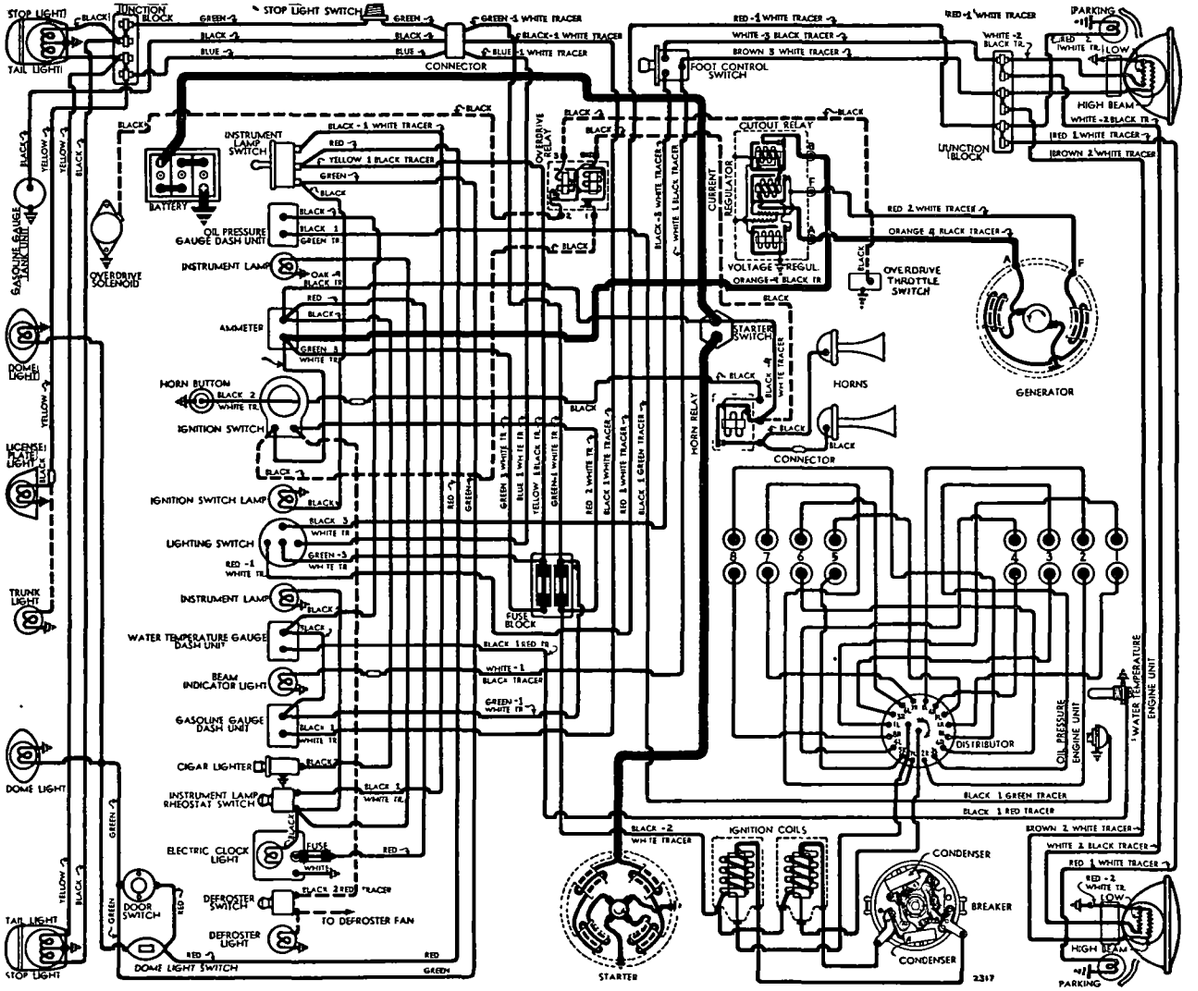

NOTE—On cars with Overdrive, line from ammeter to ignition switch (marked by arrow) not used.

below), slacken torquematic cable by loosening locknuts on anchor bracket at dash. With #1 piston on compression, turn engine over until piston is 9° or .0325" BTDC, stop when 'IGN' mark on vibration dampener lines up with pointer on chain case cover (this mark is 9° or .725" before top dead center mark 'DC'). Loosen advance arm clamp bolt, rotate distributor until points just break (lights go on) with stop-pin (hold-down bolt and nut) in advance position in slot in advance arm, tighten clamp bolt. Adjust cable locknuts at anchor bracket on dash to leave torquematic cable without slack or tension and stop-pin in advance position in slot.

Synchronization—Use Nash Timing Light SE-569 (consists of two lights—one for each set of contacts) connected between each primary terminal and ground. Turn on ignition, turn engine over until fixed points just open (light for stationary contacts on). If both lights go on synchronization correct. If not, loosen 3 lockscrews on movable subplate, shift plate by prying with screwdriver in notch on edge of plate until this set of contacts begin to open (both lights on), tighten sub-plate lockscrews and set Ignition Timing as directed above. If other methods used, set contacts to open simultaneously at 45° (distributor) intervals.

Torquematic Spark Control Check—Distributor must be free in bracket and cable pulleys positioned to prevent cable interference with engine. Advance spring and cable take-up spring must be properly located and spring resistance centralized. Car manufacturer recommends use of Nash Synchro Light SE-417 to check torquematic retard by means of dead center mark on vibration dampener.

CARBURETOR

CARBURETION:—Carburetor—Carter Type WDO, Model 465-S (#255 cast on face of flange). 1" dual downdraft type.
For complete data, refer to Carburetor Index.

Idle Adjustment—With engine warm and running at slow idle speed (choke valve wide open, fast idle inoperative), set throttle stopscrew for 7-8 MPH idle speed. Adjust idle adjusting screw for each barrel (in succession) until engine fires smoothly (½-1½ turns open for each screw—turn screws in for leaner mixture). Readjust idle speed.

Accelerating Pump Setting—Pump arm has 2 holes for pump link engagement. Set as follows:
Upper Hole (max. stroke)—Cold weather.
Lower Hole (min. stroke)—Hot weather.

Float Level—3/16" from top of float to gasket seat on cover with needle valve seated (invert to check).

Fast Idle:—Integral type (built-in carburetor).
For complete data, refer to Carburetion Equip. Index.
Fast Idle Setting—Adjust fast idle screw for .015" throttle opening with choke valve closed.

Automatic Choke:—Carter Climatic Control.
For complete data, refer to Carburetion Equip. Index.
Choke Setting—Set coil housing 1 Notch Rich.

CARB. EQUIPMENT

Air Cleaner:—AC #1529113 oil-wetted type std.

Fuel Pump:—AC Type AD #1523644 combination fuel-and-vacuum type standard.
For complete data, refer to Carburetion Equip. Index.

Gasoline Gauge:—King-Seeley Electric type. K-S No. 7680 (dash unit), No. 7780 (tank unit).
For complete data, refer to Carburetion Equip. Index.

BATTERY

BATTERY:—USL Type HTL-2-17 or Auto-Lite Type CTL-2-17. 6 volt, 17 plate, 120 ampere hour capacity (20 hour rate).

Starting Capacity—152 amperes for 20 minutes.

Zero Capacity—300 amperes for 4.9 minutes.

Grounded Terminal—Positive (+) grounded to transmission. Separate ground strap from transmission to frame.

Dimensions—Length 10 5/16". Width 7⅛". Height 9 1/16".

Location—Under front seat.

STARTER

Auto-Lite Model MAB-4104. Armature MAB-2057.
Drive—Inboard Bendix Type LCD11FX-10.
Rotation—Counter-clockwise at commutator end.
Brush Spring Tension—42-53 ozs. (new brushes).
Cranking Engine—160 RPM, 150-160 amps., 5.2 v.

Performance Data

Torque	R.P.M.	Volts	Amperes
0 ft. lbs.	3700	5.5	60
.6 " "	1910	5.5	100
3.4 " "	1100	5.0	200
6.6 " "	695	4.5	300
10.15 " "	420	4.0	400
15.8 " "	Lock	3.0	582
22.5 " "	Lock	4.0	775

Removal:—Starter flange mounted on right front face of flywheel housing. To remove, disconnect battery cable, take out flange mounting screws.

Starting Switch:—A-L #SW-4005. Mounted on body floor below clutch pedal. Operated by depressing clutch pedal fully. No adjustment required.

GENERATOR

Auto-Lite Model GDZ-4803-B. Armature No. GDZ-2079F. Two brush type with current-voltage control.

Charging Rate Adjustment—No adjustment at generator. Charging rate controlled by Voltage Regulator and maximum output by Current Regulator. *See Regulator data following.*

Maximum Charging Rate—35 amperes (hot or cold), 8.0 volts, 1900 RPM (generator) and above with load or discharged battery (Current Regulator setting). Actual charging rate controlled by Voltage Regulator and dependent on battery condition.

Performance Data

Cold			Hot		
Amperes	Volts	R.P.M.	Amperes	Volts	R.P.M.
0	6.4	925	0	6.4	1000
4	6.6	1035	4	6.6	1120
8	6.75	1140	8	6.75	1235
12	6.95	1250	12	6.95	1350
16	7.15	1370	16	7.15	1460
20	7.3	1480	20	7.3	1590
24	7.5	1590	24	7.5	1730
28	7.7	1710	28	7.7	1900
32	7.9	1820	32	7.9	2090
35	8.0	1900	35	8.0	2250

Rotation—Counter-clockwise at commutator end.
Brush Spring Tension—53 ozs. max. (new brushes).
Field Current—1.60-1.78 amperes at 6.0 volts.
Motoring Current—4.16-4.60 amperes at 6.0 volts.

Removal:—Generator cradle mounted at left side of engine with fan belt drive. Water pump driven by generator shaft extension. To remove, disconnect water pump, loosen fan belt, remove generator clamp band and lift generator off.

Belt Adjustment:—Adjust whenever belt deflection is over 1½" (when pressed lightly midway between generator and fan pulleys). To adjust, loosen two capscrews on fan bracket, lift fan up (one screw hole slotted) for 1" belt deflection, tighten screws.

REGULATOR

Auto-Lite Model VRP-4004-A. Current Voltage. Mounted in single case on dash.
For complete data, refer to Electrical Equipment Index.
NOTE—Regulator case cover is sealed. Serviced on exchange basis if seals not broken.

Cutout Relay

Cuts In—6.4-6.6 volts.
Cuts Out—4.1-4.8 volts (approx. 4-6 amps. disch.).
Contact Gap—.015" minimum.
Air Gap—.031" min., .034" max. with contacts open. Measure at hinge end of core.

Voltage Regulator

Setting—7.2-7.5 volts at 70° F.
To Check (without breaking seals)—Connect ammeter in charging line at regulator 'B' terminal, voltmeter between 'B' terminal and ground. Operate generator at speed equivalent to 30 MPH, charging battery until voltage is steady. Voltage reading should be 7.2-7.5 volts at 70° F. See Electrical Equipment Section for voltages at other temperatures.
To Adjust (with cover removed)—Change regulator armature spring tension by bending lower spring hanger slightly. *See Electrical Equipment Section.*
Contact Gap—.012" Min. (armature against stop pin).
Air Gap—.048-.052" with contacts just opening.

Current Regulator

Setting—34-36 amperes (marked '35' on cover).
To Check (without breaking seals)—Connect test meters as for Voltage check (above). Operate generator at 30 MPH, charging battery, add load (use bank of headlamp bulbs, or turn on car lights and accessories and discharge battery) so that generator charges at peak rate and Current Regulator operates. Charging current should not exceed 34-36 amperes. If more than slight excess noted, regulator is defective.
Adjustment & Contact Gap—Same as for Voltage Regulator (above).
Air Gap—.034-.038" (before No. 5U-000001), .048-.052" (after above No.) with contacts just opening.

LIGHTING

LIGHTING:—Headlamps—General Electric 'Sealed Beam'.
For complete data, refer to Electrical Equipment Index.
Headlamp Adjustment—Aim upper beam for each lamp straight ahead with center of hot spot 3" below lamp center height.
Beam Indicator—Red light on speedometer face. Lighted whenever Country (upper) beam in use.

CONTINUED ON NEXT PA E

CONTINUED FROM PRECEDING PAGE

Switches

Lighting—Douglas No. 5754.

Beam Selector—Douglas No. 5733.

Instrument—Douglas No. 5653.

Bulb Specifications

Position	Candlepower	Mazda No.
Headlamps		Sealed Beam
Parking, Rear License	3	63
Instrum., Beam Indic.	1½	55
Stop & Tail	21-3	1154
Dome	6	81

MISC. ELECTRICAL

FUSES:—Lighting—30 ampere (SFE type) mounted on fuse block on back of instrument panel toward left.

Accessory—30 ampere (SFE type) on fuse block.

HORNS:—Delco-Remy. No. 1999565 (low note), No. 1999566 (high note). Vibrator type, blended tone, operated by horn relay.

Type	Current (at 6 volts)	Air Gap
1999565 (Low Note)	19-21 amperes	.047-.052"
1999566 (High Note)	18-20 amperes	.039-.044"

Horn Relay:—Delco-Remy Model 1116775.

Contact Gap—.020". **Air Gap**—.015" (closed).

Contacts Close—2.75-4.0 volts.

ENGINE

ENGINE CODE NOTE (ORIGINAL BORE & BEARING SIZES): *See Nash Shop Notes for complete data.*

ENGINE SPECIFICATIONS:—8 cylinder, valve-in-head, Twin Ignition type. NOTE—'Iso-thermal' fuel intake system used (intake manifold cast in cylinder head—water cooled for temperature control).

Bore—3⅛". **Stroke**—4¼".

Displacement—260.8 cu. ins. **Rated HP**—31.25.

Developed Horsepower—115 at 3400 RPM.

Compression Ratio—6.0-1 cast-iron head.

Compression Pressure—110 lbs. at 350 RPM. or approx. 100 lbs. at cranking speed (160 RPM).

Vacuum Reading—18-20" steady idling at 7-8 MPH.

►Later type Replacement Cylinder Heads: *See "Cylinder Head" in Nash Shop Notes.*

PISTONS:—Nelson-Bohnalite, aluminum alloy, Invar strut, tin plated, split skirt type.

Original Bore Size:—*See Engine Code Note in Nash Shop Notes for complete data.*

Weight—16 ozs. (stripped). **Length**—3 11/16".

Removal—Pistons and rods removed from below.

Clearance—Top .018-.022". Skirt .001-.002".

Replacement Pistons:—*See Nash Shop Notes for data.*

Fitting New Pistons:—Insert .002" feeler between piston and cylinder wall on side opposite slot. Pull to withdraw feeler should be 10 lbs.

Installing Pistons:—Pin offset toward camshaft. Slot toward left (trademark within piston toward front).

PISTON RINGS:—Two compression, two oil control rings per piston, all above pin. Oil ring grooves drilled for oil drain holes.

Ring	Width	End Gap	Side Clearance
Compr. #1	.124"	.010-.020"	.002-.0025"
Compr. #2	.124"	.010-.020"	.0015-.003"
Oil Contr. #3	.1240"	.010-.018"	.0015-.0025"
Oil Contr. #4	.1865"	.010-.018"	.001-.0025"

NOTE—Wall thickness .130" compression, .140" oil ring.

Replacement Rings:—*See Nash Shop Notes for data.*

PISTON PIN:—Diameter—.8747". **Length**—2.574". Floating type. Pin retained by locking ring at each end. Pin hole in piston offset to camshaft.

Pin Fit in Piston—Light push fit (piston at 200°F.).

Pin Fit in Rod Bushing—Select fit to .0001" or light push fit at normal temperature.

Replacement Pins:—.001", .003", .005" oversize.

CONNECTING ROD:—Length—8¾". **Weight**—34 ozs.

Upper Bearing (Piston Pin Bushing)—Bronze.

Crankpin Journal Diameter—2.0015".

Lower Bearing—Removable steel-backed, babbitt-lined type. No shims. *See Engine Code Note in Nash Shop Notes for original bearing sizes.*

Clearance—.0015-.0025". **Sideplay**—.008-.012".

Bearing Adjustment:—None (no shims). Replace bearings. Do not file rods or caps. Tangs on bearing shells should be installed on opposite sides of rod.

Replacement Bearings:—.002", .010" undersize.

Installing Rods:—Oil split hole toward camshaft.

CRANKSHAFT:—9 bearing. No counterweights. *See Nash Shop Notes for vibration dampener data.*

Journal Diameters—2 31/64" all bearings.

Bearings—Interchangeable steel-backed, babbitt-lined type. No shims. **Clearance**—.002". *See Engine Code Note in Nash Shop Notes for original main bearing sizes.*

Bearing Adjustment:—None (no shims). *See Nash Shop Notes for removing, installing and fitting bearings.*

Replacement Bearings:—.002", .010" Undersize.

End Thrust:—Center (#5) bearing. Replace bearing to take up excessive endplay. **Endplay**—.004".

CAMSHAFT:—Non-adjustable double-roller chain drive. *See Nash Shop Notes for camshaft removal.*

Bearings—Steel-backed, babbitt bushings.

Bearing Clearance—.002".

End Thrust:—Taken by front bearing. Replace bearing to take up excessive endplay.

Endplay—.003" (new), .005" Max. (worn).

Timing Chain:—Diamond. **Width** 9/16". **Pitch** ⅜". Length 62 links or 23¼".

Camshaft Setting:—Sprockets marked. Mesh chain with sprocket marks adjacent and in line with a straightedge across the shaft centers.

VALVES:—	Head Diameter	Stem Diameter	Length
Intake	1 21/32"	.3725"	5½"
Exhaust	1 15/32"	.3725"	5½"

	Seat angle	Lift	Side Clearance
All Valves	45°	11/32"	.002-.004"

Valve Guides:—Press fit. Press in head to shoulder on guide and ream for correct clearance. Replacement guides furnished .002" undersize.

Valve Springs:—Double springs on all valves.

Free Length—1 21/32" (inner), 2" (outer).

	Inner Spring Pressure	Inner Spring Length	Outer Spring Pressure	Outer Spring Length
Closed	21 lbs.	1⅜"	38 lbs.	1 11/16"
Open	51 lbs.	1 1/32"	95 lbs.	1 11/32"

Valv Lifters:—Mushroom type. Lifter guide holes reamed in block. Remove from below (camshaft out).

VALVE TIMING

Tappet Clearance:—.015" all valves—engine warm and idling.

Valve Timing:—See Camshaft Setting above.

Intake Valves—Open 20° BTDC. Close 74° ALDC.

Exhaust Valves—Open 45° BLDC. Close 10° ATDC.

Valve Timing Check—With regular tappet clearance of .015" Exhaust valve should close with piston 10° or .0400" after top dead center.

LUBRICATION

LUBRICATION:—Pressure system (gear type oil pump in crankcase). NOTE—Slot in pump shaft should be assembled across engine when pump installed.

Normal Oil Pressure:—30 lbs. at 20 MPH.

Oil Pressure Relief Valve:—On oil pump cover. Opens at 30 lbs. Turn adjusting screw in to increase.

Oil Pressure Gauge:—King-Seeley Electric. K-S No. 7665 (dash unit), 6125 (engine unit). *See Miscellaneous Section for complete data.*

Crankcase Capacity:—7 qts. (dry or refill).

COOLING

COOLING SYSTEM:—Capacity. 17 qts. (add 1 qt. for heater).

Water Pump:—Centrifugal, adjustable packing type. *See Water Pump Section for complete data.*

Removal—Drain radiator, disconnect hose and drive coupling, take out mounting screws in pump flange.

Thermostat:—Dole. In water outlet on cyl. head. **Setting**—Starts to open at 160° F.

Temperature Gauge:—King-Seeley Electric. K-S No. 7670 (dash unit), 7000 (engine unit). NOTE—Gauge inoperative with ignition Off (reads '212'). *See Miscellaneous Section for complete data.*

CLUTCH

CLUTCH:—Borg & Beck Model 10A7. Single plate, dry disc type. See Production Change following.

►**Production Change**—Clutch assembly changed from #919 (same as 1939) to #949 (with 'Borglite' driven member) after Feb. 1, 1940. Assembly No. stamped on cover. *See Clutch Section for complete data.*

Facings—Spiral wound molded woven, 2 used. Inside Diam. 6" (919), 6½" (949). Outside Diam. 10". Thickness .125". NOTE—Install plate with mark 'flywheel side' forward (damper toward trans).

Pedal Adjustment:—Free travel ½-1" (adjusting nuts on lower end of pedal connector link). Check NoRol

Removal:—Remove transmission (see below). Disconnect clutch pedal linkage. Support engine at rear, disconnect rear engine mountings. Remove clutch housing and pan. Punch mark flywheel, cover, and pressure plate (re-assemble to these marks). Take out mounting screws in cover flange.

TRANSMISSION

TRANSMISSION:—Own Make. All helical gear, constant-mesh (all speeds), synchro-mesh (second & high) with remote type steering column shift. *See Transmission Section for complete data.*

Transmission Control:—Steering col. mechanical shift. *See Transmission Section for complete data.*

Removal:—Disconnect shift rods, speedometer cable, overdrive control and wires (if used), and driveshaft. Remove two upper mounting studs and install pilot studs (to support transmission and avoid bending clutch plate). Remove remaining mounting stud nuts, remove transmission from below. NOTE—When removing transmission from car, do not remove inspection hole plate in car floor.

OVERDRIVE

Cruising Gear (Overdrive):—Warner Model AS12-R6 with electrical 'kick-down' control optl.
See Transmission Section for complete data.

Overdrive Solenoid—Delco-Remy Model 1118004.

Throttle Switch—Adjust switch to close with throttle wide open and carburetor throttle shaft pulley spring just starting to compress.

Control Relay—Delco-Remy Model 1116798.

UNIVERSALS

UNIVERSAL JOINTS:—Mechanics Type 3C. Roller bearing type. 2 used.
See Universals Section for complete data.

REAR AXLE

REAR AXLE:—Own Make. Semi-floating, hypoid gear type with Hotchkiss drive.
See Rear Axle Section for complete data.

Ratio—4.1-1 Std., 4 4/9-1 Optl.
Backlash—.005-.007". Shim adjustment.

Removal:—Hoist rear of car, remove axle shafts (see below). Free axle from springs by disconnecting U-bolts and rear shackles and withdraw from car.

Axle Shaft Removal:—Remove wheel and drum. Disconnect brake line and cable. Remove backing plate mounting bolt nuts, oil seal retainer, brake backing plate, bearing adjusting shims and withdraw shaft and bearing (do not drag shaft on oil seal).
Wheel Bearing Adjustment—Shims at flanged end of housing. To adjust, remove backing plate, add or remove shims (equally at both ends of axle).
Endplay—.003-.006".

SHOCK ABSORBERS

SHOCK ABSORBERS:—**Delco. Front**—Model 1947-C, D. **Rear**—Model 1006-DD, 1006-EE (heavy springs), 1723-N, P (heavy springs—Export). Double acting, hydraulic. Direct acting on rear (except 1723).
See Shock Absorber Section for complete data.

FRONT SUSPENSION

Front Suspension:—Independent, linked parallelogram type with coil springs.
See Front Suspension Section for complete data.
IMPORTANT—Insert 2" blocks (Tool J886) between upper support arm and frame flange (at each side) to level frame when checking specifications.

Kingpin Inclination—4½° crosswise.
Caster—0° to Negative ½°. Adjustable.
Camber—Pos. ¼° to Pos. ¾°. Adjustable.
Toe In—1/32-3/32". Adjust tie rod tube for each wheel equally.
Steering Geometry (Toe-out on Turns)—Inner wheel turned 21½°, Outer wheel 20°.

STEERING GEAR

Steering Gear: Gemmer Model Number 335. Worm-and-Roller type with 'push-pull' adjustment. New type steering linkage with idler arm on right frame side member.
See Steering Gear Section for complete data.

BRAKES

BRAKES:—Service. Bendix hydraulic, duo-servo, single anchor type with eccentric adjustment. Hand lever applies rear wheel service brakes.
See Brake Section for complete data.
Drums—Cast-iron. Diameter 11 1/16".
Lining—Moulded. Width 2¼". Thickness 3/16". Length per wheel 24".
Clearance—.010" at heel and toe of each shoe.
Braking Power—53% front wheels, 47% rear.

Hand Brakes:—See Service Brakes above.

No-Rol: Optional equipment.
See Brake Section for complete data.

OIL PAN REMOVAL, AND ENGINE CODE NOTE DATA (ORIGINAL BORE & BEARING SIZES): *Refer to Nash Shop Notes for complete instructions.*

MODEL IDENTIFICATION

SERIAL NUMBER:—First No. K-5001. On plate on right side of cowl under engine hood.

Service Serial No. Note—Stamped on plate on left front door hinge pillar. First No. N4-5001.

ENGINE NUMBER:—Stamped on left side of engine block at front end. First No. 5001 (same as Serial #).

TUNE-UP

COMPRESSION:—Ratio—6.7-1 Std.

Pressure—120 lbs. at 350 RPM. cranking speed.

VACUUM READING:—Steady 18-20" idling at 6 MPH.

FIRING ORDER:—1-5-3-6-2-4. See diagram.

SPARK PLUGS:—Auto-Lite AN-7. 14 MM. Metric.

Gaps—.025".

IGNITION: See Coil, Condenser, and Distributor.

Breaker Gap—.020". **Cam Angle**—35° Closed.

Automatic Advance—10° max. at 1200 RPM (distr.).

Vacuum Advance—8½° (Distr.) with 14-17" vacuum.

IGNITION TIMING: See Ignition Timing.

Std. Setting—TDC. 'IGN/DC' vibration dampener mark aligned with pointer at front of engine.

CAUTION—Latch out vacuum advance when setting Ign. Timing (See IGNITION TIMING following).

CARBURETION: See Carburetor & Carb. Equipment.

Idle Setting—Idle screw ½-1¼ turns open. Idle speed 6 MPH.

Float Level—Top of float (not soldered seam) 5/64" below top edge of bowl with valve seated.

Accelerating Pump—Center Hole normal setting.

Fuel Pump Pressure: 3½ lbs. (4 lbs. fuel & vacuum).

VALVES: See Valve Timing.

Tappet Clearance:—.015" all valves. Engine Hot.

NOTE—May be set at .018" max. for sustained high speed driving. Self-locking tappet screws used.

STARTING: See Battery, Starter, Generator, Regulator.

IGNITION

Ignition Switch:—Delco-Remy No. 1116310. Connected to ignition coil by armored cable.

Ignition Lock—Briggs & Stratton No. 45792.

Key Series—N-1201 to N-1449. Groove—No. 15.

COIL: Delco-Remy 1115028 (Domestic), 1115030 (Exp.). Mounted on engine side of dash.

Ignition Current—2 amperes idling, 5 stopped.

CONDENSER: Delco-Remy Part No. 1869705.

Capacity—.18-.25 microfarad.

DISTRIBUTOR: Delco-Remy 1110512. Single breaker, 6 lobe cam, full automatic advance type with separate vacuum spark control and Octane Selector adjustment.

Breaker Gap—.020". Limits .018-.024".

Cam Angle or Dwell—35° closed, 25° open.

Breaker Arm Spring Tension—17-21 ozs.

Rotation—Counter-clockwise viewed from above.

Automatic Advance

Distributor		Engine	
Degrees	R.P.M.	Degrees	R.P.M.
Start	400	2	800
10	1200	20	2400

Vacuum Spark Control No. 1116029. Mounted on distributor mounting plate and linked to advance arm. Provides additional advance at speeds above idling except when engine accelerated or operated with wide open throttle when spark retarded by return spring within unit.

Plunger Travel—23/64" (total).

Vacuum Advance

Distr. Degrees	Eng. Degrees	Vacuum (" of HG)
Start	0°	3-5"
8½°	17°	14-17"

Removal:—Distributor mounted on left side of engine and driven by inclined shaft. To remove, loosen advance arm clamp bolt or disconnect vacuum line and take out hold-down screw in advance arm.

Installation Note—When installing distributor, crank engine to firing position for #1 cylinder (piston at TDC), see that oil pump drive gear meshed so that slot in shaft points across engine with wide half of shaft toward front (slot is offset), turn rotor to #1 segment in distributor cap, install distributor and check timing.

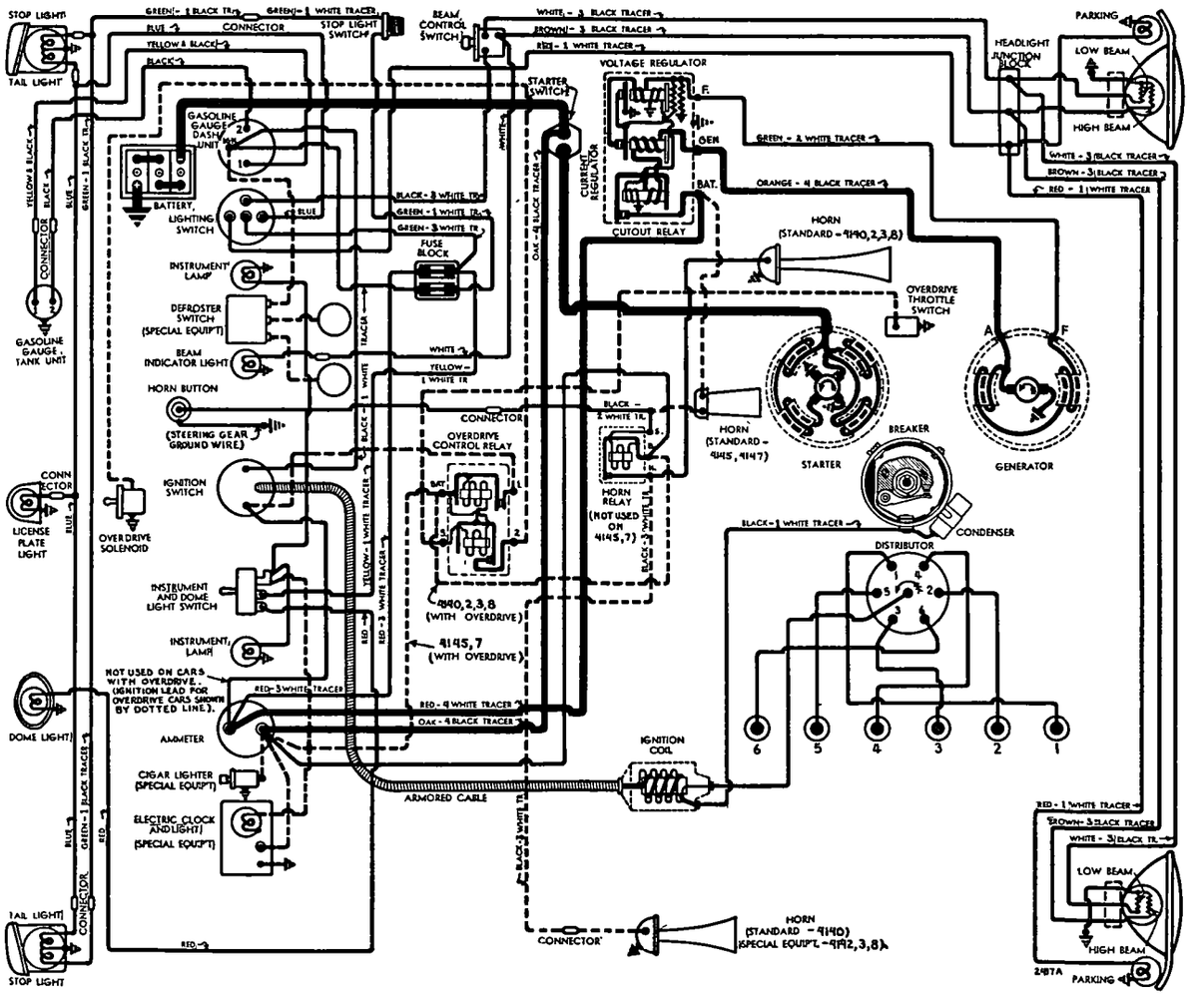

IGNITION TIMING

IGNITION TIMING:—Flywheel Degrees Piston Position

All Engines	At TDC	.000" TDC.

Timing Note—Vacuum advance must be latched out by aligning holes in advance arm and hold-down plate and inserting ⅛" pin through these holes while timing is being set.

To Set Timing—Turn engine over until #1 piston reaches top dead center on compression stroke with 'IGN/DC' mark on vibration dampener in line with pointer on chain case cover. Latch out vacuum control (see note above), loosen advance arm clamp bolt, rotate distributor until contacts begin to open, tighten clamp bolt, see that rotor at #1 segment in distributor cap, check Octane Selector setting.

Octane Selector Setting—Should be set for slight ping when accelerating with wide open throttle at speeds between 10-15 MPH. To adjust, loosen hold-down screw, rotate distributor one graduation at a time counter-clockwise (if ping too severe), clockwise (if no ping noted) until correct performance secured.

CARBURETOR

CARBURETION:—Carburetor—Carter (B & B) Model 513-S, 1¼" downdraft type with manual choke control.

For complete data, refer to Carburetor Index.

Idle Adjustment—With engine warm and choke valve wide open, set throttle stopscrew for 6 MPH. idle speed. Adjust idle adjusting screw for smooth idle (screw ½-1¼ turns open from inner seated position—turn screw in for leaner mixture), recheck idle speed.

Accelerating Pump Setting—Throttle lever has 3 holes for pump rod link engagement as follows:
Inner (Min. stroke)—Hot Summer weather.
Center (Med. stroke)—Normal temperatures.
Outer (Max. stroke)—Cold Winter weather.

Float Level—Top of float (not soldered seam) 5/64" (plus or minus 1/64") below top edge of bowl with valve seated.

Metering Jet—*See Carter (B&B) Jet Table in Carburetor Section for complete data.*

Fast Idle:—No adjustment provided (linked to choke valve so throttle opened to fast idle position when choke valve closed).

CARB. EQUIPMENT

Air Cleaner:—AC No. 1542037 oil-wetted type Std. Heavy duty oil-bath type Optl.

Fuel Pump:—AC Type W (Std.), Type AJ Fuel-&-Vacuum Pump (Cars with Overdrive). Pump Exchange Part No. 532.
For complete data, refer to Carburetion Equip. Index.
Pressure—3½ lbs. ('W'), 4 lbs. ('AJ').

Gasoline Gauge:—Auto-Lite Electric type. No. NG-9645D (Dash Unit), No. NG-9637T (Tank Unit).
For complete data, refer to Carburetion Equip. Index.

BATTERY

BATTERY:—Auto-Lite CTL-1-13. 6 volt, 13 plate, 90 Ampere Hour capacity (20 hour rate).
Zero Capacity—300 amperes for 3.0 minutes.
Grounded Terminal—Positive (+) terminal to body.
Engine Ground—Separate strap connector to body.
Location—Under left front seat.

STARTER

STARTER:—Delco-Remy 1109451. Armature No. 1882547.
Drive—Inboard Barrel Type Bendix No. A-2033.
Rotation—Counter-clockwise at commutator end.
Brush Spring Tension—24-28 ozs. each.

Performance Data

Torque	R.P.M.	Volts	Amperes
0 ft. lbs.	6000	5.7	60
11.5 "	Lock	3.3	540

Removal:—Starter flange mounted on left front face of flywheel housing. To remove, take out flange mounting screws.

Starting Switch:—Mounted on toeboard and operated by clutch pedal when clutch fully disengaged.

GENERATOR

GENERATOR:—Delco-Remy 1102684. Armature 1882588. Two brush (shunt) type with Current-voltage control.

Charging Rate Adjustment—None. Charging rate controlled by Voltage Regulator and maximum output controlled by Current Regulator. See Regulator data.

Maximum Charging Rate—32-34 amperes, 8 volts, hot. Actual charging rate controlled by voltage regulator and dependent on battery condition.

Performance Data

	Amperes	Volts	R.P.M.
Cold	30①	8.0	1750

①Not maximum output. See Current Regulator.

Rotation—Counter-clockwise at commutator end.
Brush Spring Tension—25 ozs. each.
Field Current—1.75-1.9 amperes at 6.0 volts.

Removal:—Generator cradle mounted at left side of engine with fan belt drive (water pump driven by extension of generator shaft). To remove, disconnect water pump, loosen fan belt, remove generator clamp band, lift generator out.

Belt Adjustment:—Adjust whenever belt deflection exceeds 1½" (light pressure midway between fan and generator pulley). To adjust, loosen fan mounting bracket capscrews, raise fan (pivots on one screw, other screw hole slotted) until belt deflection is ¾", tighten screws.

REGULATOR

REGULATOR:—Delco-Remy 1118202. Single Core Type. Vibrating Current & Voltage Regulator on dash.
For complete data, refer to Electrical Equipment Index.

CAUTION—Check generator for grounded field coils and leads before changing regulator settings to correct High Charging Rate or High Voltage.

Cutout Relay

Cuts In—6.2-6.7 volts hot.
Cuts Out—0-4.0 ampere discharge current.
Contact Gap—.020" (same for both sets).
Air Gap—.020" (with contacts just closed).

Voltage Regulator

Setting—7.2-7.4 volts hot (operating temperature). Regulator over-compensated for temperature. Should be checked with cover in place and hot.

To Check—Connect ammeter in charging line at regulator 'BAT' terminal, voltmeter between this terminal and ground. Operate generator at 2800 RPM., adjust charging rate to 8-10 amperes (use variable rheostat or AVR set). With regulator hot (150°F.), decrease generator speed until cutout relay contacts open, then increase speed to 2800 RPM. and check hot voltage setting (above).

To Adjust—Change regulator armature spring tension slightly by bending hanger at lower end of **one spring only.** If further adjustment required, see Single Core Regulator article in Electrical Equipment Section for adjustment directions for the other (second) spring.

Air Gap—.070" between center of core and armature with contacts just closing (press down on armature to open contacts, release pressure, check gap at point where contacts just close).

Current Regulator

Setting—34-36 amperes hot (at operating temp.).

To Check—Remove regulator cover, connect short jumper between Voltage Regulator frame and upper contact support bracket (to short out Voltage Regulator), connect ammeter in charging line at regulater 'BAT' terminal, turn on car lights and accessories. Operate generator and increase speed until output remains constant. With regulator hot (150°F), current reading should agree with setting (above).

To Adjust—Same as for Voltage Regulator (above).

Air Gap—.080" (check same as Voltage Regulator).

LIGHTING

LIGHTING:—Headlamps—Hall 'Sealed Beam' type.
For complete data, refer to Electrical Equipment Index.

Headlamp Adjustment—Aim upper beam straight ahead (hot spot center 3" below lamp center height).

Beam Indicator—In center of speedometer dial. Lighted when Country (upper) beams in use.

Switches

Lighting—Douglas. Nash No. 3107032.
Beam Selector—Douglas.
Instrument—Douglas.

Bulb Specifications

Position	Candlepower	Mazda No.
Headlamps		Sealed Beam
Parking	3	63
Instrument, Clock	1½	55
Beam Indicator	1½	55
Stop & Tail	21-3	1158
Rear License	3	63
Dome	6	81

C NTINUED ON NEXT PAGE

CONTINUED FROM PRECEDIN PAGE

MISC. ELECTRICAL

FUSES:—Lighting—30 ampere. On fuse block on left hand front face of dash.

Accessory—30 ampere. On fuse block.

HORNS:—Delco-Remy. No. 1999917 (Spec. 4145, 7), No. 1999565 (Deluxe 4142, 3, 8), No. 1999565 Low Note & 1999566 High Note Twin Horns (Deluxe Torpedo 4140). Deluxe Single Horn & Torpedo Deluxe Twin Horns operated by horn relay.

Deluxe 4142, 3, 8 Note—No. 1999566 High Note Horn Optl. with Std. 1999565 Low Note Horn as twin horn, blended tone equipment (Relay is Std.).

Type	Current (at 6 volts)	Air Gap
1999565 (Low Note)	19-21 amperes	.047-.052"
1999566 (High Note)	18-20 amperes	.039-.044"

Horn Relay:—Delco-Remy No. 1116775.

Contact Gap—.025". **Air Gap**—.015" (closed).

Contacts Close—2.75-4.0 volts.

ENGINE

OIL PAN REMOVAL AND ENGINE CODE NOTE DATA (ORIGINAL BORE & BEARING SIZES): *Refer to Nash Shop Notes for complete instructions.*

ENGINE SPECIFICATIONS:—6 cylinder, 'L' head type. Cylinders cast Enbloc with intake manifold cast in block (Iso-thermal fuel intake system).

Bore—3⅛". **Stroke**—3¾".

Displacement—172.6 cu. ins. **Rated HP**—23.44.

Developed Horsepower—75 at 3600 RPM.

Compression Ratio—6.7-1 Std. (cast-iron head).

Compression Pressure—120 lbs. at 350 RPM.

Vacuum Reading—18-20" idling at 6 MPH.

PISTONS:—Aluminum alloy, Autothermic, cam-ground, tin-plated type. **Length**—3⅜".

Original Bore Sizes:—*See Engine Code Note in Nash Shop Notes for data.*

Removal—Pistons and rods removed from above.

Clearance—See Fitting New Pistons.

Replacement Pistons:—Furnished std. and .001", .002", .003", .005", 010", .012", .015", .020", .040" oversize.

Fitting New Pistons:—Use .002" oiled feeler ½" wide between piston and wall at right angles to pin hole on side opposite slot. Pull to withdraw feeler must be within 12-18 lbs. with piston at room temperature.

Installing Pistons:—Slot to left side (trademark on piston toward the front).

PISTON RINGS:—Two compression, one oil ring per piston, all above pin. Oil ring groove drilled for oil drain.

Ring	Width	End Gap	Side Clearance
Compr.	.093"	.010-.015"	.002-.004"
Oil Contr.	.1865"	.010-.015"	.002-.004"

Replacement Rings & Installation Data:—*See Nash Shop Notes for complete data.*

PISTON PIN:—**Diameter**—.8120". **Length**—2.609". Floating type, retained by locking ring at each end.

Pin Fit in Piston—Light push fit (piston at 200° F.).

Pin Fit in Rod Bushing—Select fit for .0001" clearance or light push fit at normal temperature.

Replacement Pins:—Standard, .001, .003" oversize.

CONNECTING ROD:—**Length**—6¾". **Weight**—24 ozs.

Upper Bearing (Piston Pin Bushing)—Bronze.

Crankpin Journal Diameter 1.875". *See Engine Code Note in Nash Shop Notes for original bearing sizes.*

Lower Bearing—Removable steel-backed babbitt.

Clearance—.0015-.0025". **Sideplay**—.004-.008".

Bearing Adjustment:—None (no shims). Replace bearings. *See Nash Shop Notes for instructions.*

Replacement Bearings:—Std., .002", .010" undersize.

Installing Rods:—Mark rods and bearing caps before removal and install in same position. Oil hole in lower end of rod must be toward right of engine.

CRANKSHAFT:—Four bearing, counterweighted type. *See Nash Shop Notes for Vibration Dampener data.*

Journal Diameters—2 31/64" all bearings. *See Engine Code Note in Nash Shop Notes for Original bearing sizes.*

Bearings—Removable steel-backed babbitt type.

Clearance—.002".

Bearing Adjustment:—None (no shims). Replace bearings. *See Nash Shop Notes for bearing installation and fitting, replacement main bearing caps, and rear main bearing oil seal data.*

Replacement Bearings:—Std., .002". .010" undersize.

End Thrust:—Taken by #1 front bearing. *See Nash Shop Notes for thrust plate and oil seal data.*

Endplay—.004-.006".

CAMSHAFT:—4 bearing. Non-adjustable chain drive. *See Nash Shop Notes for Camshaft removal data.*

Bearing Type—Steel-backed, babbitt bushings.

Clearance—.002".

End Thrust:—Taken by front bearing and camshaft sprocket. **Endplay**—.004-.006".

Timing Chain:—Whitney No. 49205 roller chain. Width 9/16". Pitch ⅜". Length 22½" or 60 links.

Camshaft Setting:—Mesh chain with camshaft and crankshaft sprockets turned so that marked tooth on each gear is 45° past (to right—as viewed facing front of engine) top vertical position. With sprockets in this position there should be 9½ links between tooth marks.

VALVES:—	Head Diameter	Stem Diameter	Length
Intake	1 11/32"	.3412"	4¾"
Exhaust	1 9/32"	.3412"	4¾"

	Seat Angle	Lift	Stem Clearance
All Valves	45°	5/16"	.002-.003"

Valve Guides:—Press fit in block (press in place 1" below top of block, ream for valve stem clearance).

Valve Springs:—	Pressure	Length
All Valves	83 lbs.	1 7/16"

NOTE—Install springs with closed coils at top.

Valve Lifters:—Mushroom type in guide holes reamed in block. Removed from below. *See Nash Shop Notes for Camshaft Removal (necessary to remove lifters).*

VALVE TIMING

Tappet Clearance:—.015" all valves, engine hot and idling (.018" max. may be used for sustained high speed driving). *See Nash Shop Notes for Self-locking type tappet adjusting screw data.*

Valve Timing:—See Camshaft Setting above.

Intake Valves—Open 19° BTDC. Close 63° ALDC.

Exhaust Valves—Open 59° BLDC. Close 23° ATDC.

To Check Valve Timing—With .015" tappet clearance, #1 intake valve opens 19° BTDC with 'DC' mark on vibration dampener at front of engine 1 3/16" ahead of pointer on chain case cover. #1 exhaust valve closes 23° ATDC. with 'DC' mark 1 15/16" past the pointer.

LUBRICATION

LUBRICATION:—Pressure system. Gear type oil pump on right side of crankcase (driven by inclined shaft).

Normal Oil Pressure:—25-30 lbs. at 25 MPH (warm oil).

Oil Pressure Regulator:—Under plug on left side of crankcase behind pump. Opens at 25 lbs. Non-adj.

Crankcase Capacity:—5 quarts.

COOLING

COOLING SYSTEM:—**Capacity** 14 qts. (15 with heater). **Water Pump:**—Centrifugal, adjustable packing type. *See Water Pump Section for complete data.*

Removal—Drain radiator, disconnect hose and drive coupling, take out mounting screws in pump flange.

Thermostat:—Fulton or Dole. In cyl. head outlet. **Setting**—Starts to open at 160° F.

Temperature Gauge:—Auto-Lite (Motometer) Vapor Tension type. Auto-Lite No. H-9706. *See Miscellaneous Section for complete data.*

CLUTCH

CLUTCH:—**Borg & Beck Model 8A7.** Assembly No. 959. or No. 925. Single plate, dry disc type. *See Clutch Section for complete data.*

Facings—Molded metallic type, 2 required. Inside Diam. 5⅜". Outside Diam. 8". Thickness ⅛".

Pedal Adjustment:—Free travel ½-1". Adjust by loosening one nut, tightening opposite nut on connector rod at clutch fork (tighten nuts to apply slight tension to rubber cushions, lock each nut with 'Palnut'.

Removal:—Remove transmission (see below), disconnect clutch pedal linkage, remove clutch housing and pan, punchmark flywheel, clutch cover and pressure plate (reassemble to same marks), take out clutch fork and mounting screws in cover flange. Remove clutch assembly.

TRANSMISSION

TRANSMISSION:—**Warner Model AS3-T84G (Std.), AS4-T84G (with Overdrive).** All helical gear, constant-mesh, synchro-mesh (second & high), sliding gear (low and reverse). *See Transmission Section for complete data.*

Transmission Control:—Mech. steering column shift. *See Transmission Section for complete data.*

Removal:—Disconnect torque tube at trunnion bracket and remove Rear Axle (see below), disconnect shift rods and Overdrive control wires and cable, disconnect speedometer cable. Support engine at rear, remove rear engine mountings, take out transmission mounting bolts, pull transmission straight back and remove from below.

OVERDRIVE

Overdrive (Cruising Gear):—Warner Type R7C with electrical 'kick-down' control Optl.
See Transmission Section for complete data.

Overdrive Solenoid—Delco-Remy Model 1118004.

Throttle Switch—Adjust switch position on mounting bracket so that contacts close with throttle valve wide open and spring on carburetor throttle valve pulley just starting to compress.

Control Relay—Delco-Remy Model 1116798.

UNIVERSALS

UNIVERSAL JOINTS:—Mechanics No. 1½R. Needle bearing type, 1 used (in rear bearing bracket at rear of transmission). NOTE—Universal joint is free fit n rear end of transmission mainshaft and press fit on forward end of propeller shaft.
See Universals Section for complete data.

REAR AXLE

REAR AXLE:—Own Make. Semi-floating, hypoid gear type with Torque Tube Drive.
See Rear Axle Section for complete data.

Ratio—4.1-1 Std. 4.4-1 with Overdrive.

Backlash—.005-.007".

Removal:—Jack up rear end of car and support securely with body jacks placed on either side of frame at point 6" forward of front end of rear fender (CAUTION—car weight must not rest on body frame flange which projects below frame rail). Disconnect stabilizer bar and rear spring and shock absorber mounting brackets from axle, disconnect trunnion bracket at transmission rear bearing bracket by removing nuts on forward ends of trunnion bracket mounting studs, pull axle to rear to disengage propeller shaft and universal joint assembly from transmission mainshaft, remove axle and torque tube assembly from under car. *Refer to Rear Axle Section "1941 Nash '600' Axle" for Trunnion Bracket installation & adjustment, & shaft bearing data.*

Axle Shaft Removal: Remove wheel and drum, disconnect brake line and cable, remove backing plate mounting bolt nuts, oil seal retainer, backing plate, and bearing adjusting shims. Withdraw shaft and bearing, using care not to drag shaft on oil seal.

Wheel Bearing Adjustment—Shims located between backing plate and flanged end of housing. To adjust, remove wheel and backing plate (above), add or remove shims for endplay. **Endplay** .002-.004".

Rear Suspension:—Coil spring type with shock absorbers mounted within springs.
See Rear Axle Section for complete data.

SHOCK ABSORBERS

SHOCK ABSORBERS:— Delco Model 1026-N (front), 1023-BB (rear—4 dr.sedans), 1023-Z (rear—others). Direct acting, hydraulic type.
See Shock Absorber Section for complete data.

FRONT SUSPENSION

Front Suspension:—New enclosed type with knuckle support and coil spring on kingpin mounted on frame cross-member.
See Front Suspension Section for complete data.

Kingpin Inclination—5½° crosswise.

Caster—0° plus or minus ½°. Adjustable.

Camber—0° to ½° Pos. Adjustable.

Toe In—0-1/16" measured 10" up from floor. Adjusted by turning tube at outer end of each tie rod equally. CAUTION—Clamp bolts must be down toward ground to prevent interference with body during wheel movement.

Steering Geometry (Toe Out on Turns)—Inner wheel turned 21° plus ½°, Outer wheel 20°.

STEERING GEAR

Steering Gear: Gemmer Model 250 Worm-and-Roller.
See Steering Gear Section for complete data.

BRAKES

BRAKES:—Service—Lockheed hydraulic, double anchor type. Hand lever applies rear service brakes.
See Brake Section for complete data.

Drums—Cast iron. Diameter 9".

Lining—Moulded. Width 1¾". Thickness 3/16". Length 20½" per wheel.

Clearance—.008" toe, .004" heel for each shoe.

Hand Brake:—See Service Brakes above.

HOOD LOCK:—Alligator type hood. Lock button below instrument panel on left side. To raise hood, pull out on lock control button (hood will raise slightly), reach under front edge of hood and press up on safety catch tab to release safety catch, raise hood up.

MODEL IDENTIFICATION

SERIAL NUMBER:—First number R-353001. Stamped on plate on right frame side member under hood.

SERVICE SERIAL NUMBER:—First number N6-45001. On 'Caution Plate' on left front door hinge post.

ENGINE NUMBER:—First number R-353001. Stamped on right side of engine block at front.

TUNE-UP

COMPRESSION:—**Ratio**—6.3-1 std. cast-iron head. **Pressure**—125 lbs. at cranking speed of 350 RPM.

VACUUM READING:—Steady 18-20" idling at 7-8 MPH.

FIRING ORDER:—1-5-3-6-2-4. See diagram for spark plug cable connections on distributor cap. NOTE—Rotation now clockwise (reversed from previous models).

SPARK PLUGS:—AC No. 45. 14 MM. Metric.
Gaps—.025".

IGNITION: See Coil, Condenser, and Distributor.
Breaker Gap—.020". **Cam Angle** 35° Closed.
Synchronization—Set movable contacts to open simultaneously with stationary contacts.
Automatic Advance—11½° max. at 875 RPM(distr.).

IGNITION TIMING: See Ignition Timing.
Std. Setting—6° BTDC. Vibration dampener mark 'IGN' (23/64" before 'DC' mark) aligned with pointer on chain case cover at front of engine. Both sets of contacts should open simultaneously. CAUTION—Torquematic Spark Control (see DISTRIBUTOR following for description) cable must be disconnected at dash before setting Ignition Timing.

CARBURETION: See Carburetor & Carb. Equipment.
Idle Setting—Idle screw ¾-1½ turns open. Idle speed 7-8 MPH.
Float Level—⅜" from projection on cover to top of soldered seam at front end of float with needle valve seated (invert to check).
Accelerating Pump—Lower Hole (Normal setting).
Fuel Pump Pressure: 3½ lbs. maximum.

VALVES: See Valve Timing.
Tappet Clearance:—.015" all valves (see Adjustment Note following) with engine hot and idling (may be set .018" max. for sustained high speed driving). ADJUSTMENT NOTE—Due to redesigned cylinder head and increased angle of engine, a new oil plug (in drilled passage in cylinder head between lead from oil filter and lead to rocker arm shafts) is used and must be removed if valves adjusted with engine running (cutting off oil supply to rocker arm shafts). IMPORTANT—Replace plug after adjusting valves to provide proper lubrication for overhead mechanism after cover installed (if plug not replaced overhead valve mechanism will not be lubricated, oil will be by-passed in head).

STARTING: See Battery, Starter, Generator, Regulator.

IGNITION

Ignition Switch:—Oakes Steering Column and Ignition Lock No. 302382. Ignition Switch No. 302440.
Ignition Lock—Briggs & Stratton. B & S No. 85347.
Key Series—5 digits. **Groove**—No. 1.

COIL: Two Used, Auto-Lite CE-4025-A. Mounted on right side of engine.
Ignition Current—2 amperes idling, 5 stopped.

CONDENSER: Auto-Lite Part No. IG-2671. Two used.
Capacity—.20-.25 microfarad.

DISTRIBUTOR: Auto-Lite IGE-4024. Twin Ignition double breaker, 6 lobe cam, full automatic advance with Torquematic Spark Control. Contacts open simultaneously to fire both spark plugs in each cylinder at the same instant and must be synchronized (see Ignition Timing). NOTE—Distributor rotation reversed from previous models).

Breaker Gap—Set at .020".
Cam Angle or Dwell—35° closed, 25° open (distr.). For each set of contacts (operate independently).
Breaker Arm Spring Tension—17-20 ounces.
Rotation—Clockwise viewed from above. NOTE—Rotation reversed from previous models.

Automatic Advance

Distributor		Engine	
Degrees	R.P.M.	Degrees	R.P.M.
Start	275	0	550
3	370	6	740
7	500	14	1000
9	665	18	1330
11.5	875	23	1750

Torquematic Spark Control—Consists of cable anchored at dash and connected to distributor body by a travel limiting spring. Retards distributor through engine movement caused by torque action.

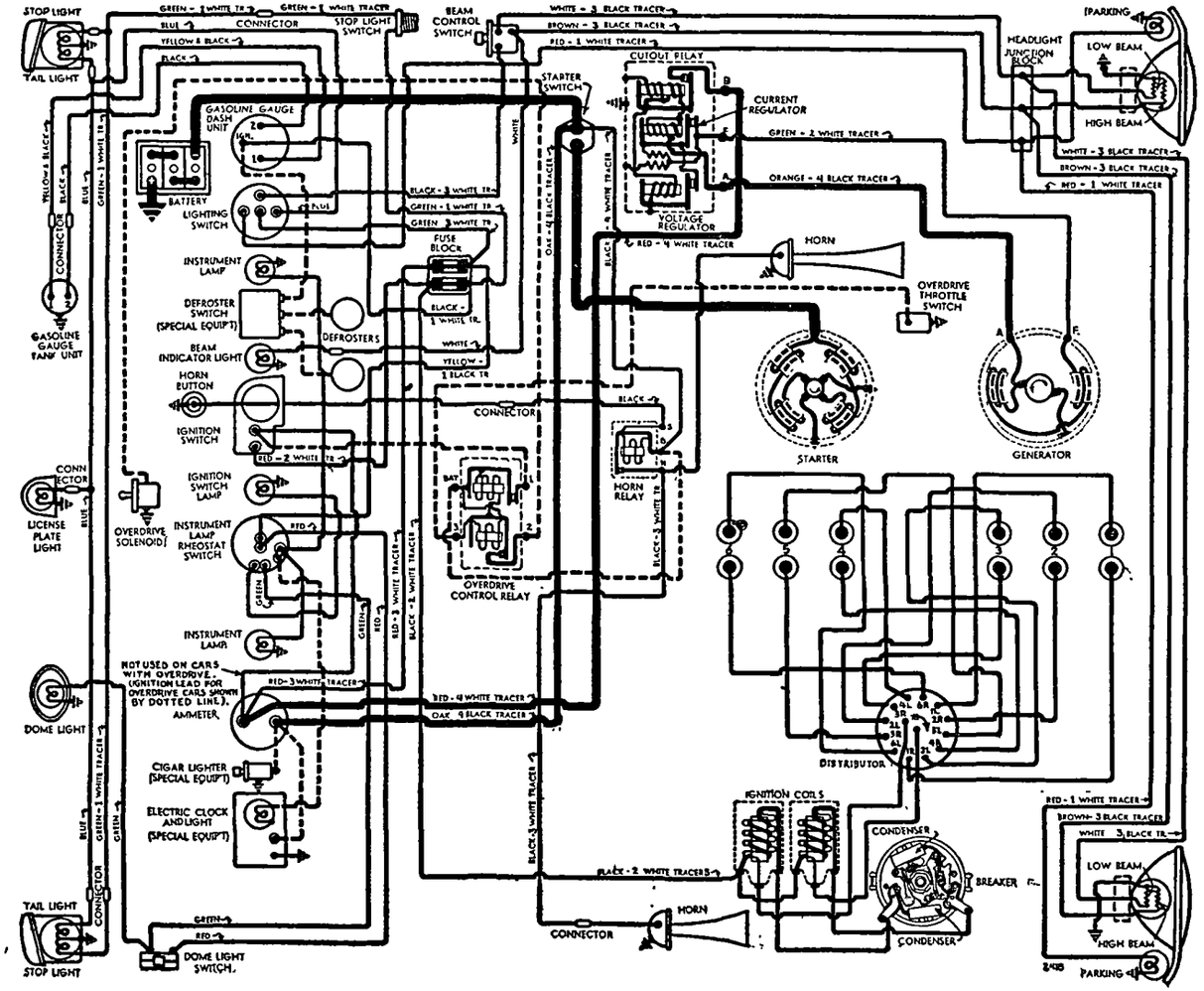

Maximum retard 2½° (engine movement in excess of 2½° taken up by travel limiting spring). See Ignition Timing for setting.

Removal:—Mounted on right side of engine. To remove, take out hold-down screw in advance arm, disconnect torquematic control, lift distributor off.

IGNITION TIMING

IGNITION TIMING:—Setting for all engines as follows:

Flywheel Degrees	Piston Position
6° BTDC	.0150" BTDC

To Set Timing—Car manufacturer recommends use of Nash Timing Light SE-569. Synchronize breaker points (see Synchronization following). With Timing Light connected as for Synchronization (see below), slacken torquematic cable by loosening locknuts on anchor bracket at dash. With #1 piston on compression, turn engine over until piston is 6° or .0150" BTDC, stop when 'IGN' mark on vibration dampener lines up with pointer on chain case cover (this mark is 6° or 23/64" before top dead center mark 'DC'). Loosen advance arm clamp bolt, rotate distributor until points just break (lights go on) with stop pin (hold-down bolt and nut) in advance position in slot in advance arm, tighten clamp bolt. Adjust cable locknuts at anchor bracket on dash to leave torquematic cable without slack or tension and stop pin in advance position in slot.

Synchronization—Use Nash Timing Light SE-569 (consists of two lights—one for each set of contacts) connected between each primary terminal and ground. Turn on ignition, turn engine over until fixed points just open (light for stationary contacts on). If both lights go on, synchronization correct. If not, loosen 3 lockscrews on movable subplate, shift plate by prying with screwdriver in notch on edge of plate until this set of contacts begin to open (both lights on), tighten sub-plate lockscrews, and set Ignition Timing as directed above. If other methods used, set contacts to open simultaneously at 60° (distributor) intervals.

Torquematic Spark Control Check—Distributor must be free in bracket and cable pulleys positioned to prevent cable interference with engine. Advance spring and cable take-up spring must be properly located and spring resistance centralized. Car manufacturer recommends use of Nash Synchro Light SE-417 to check torquematic retard by means of dead center mark on vibration dampener.

CARBURETOR

CARBURETION:—**Carburetor**—Carter Type WA-1, Model 435-S (#253 cast on face of flange). Single barrel, 1¼" downdraft type.
For complete data, refer to Carburetor Index.

Idle Adjustment—With engine warm and running at slow idle speed (choke valve wide open, fast idle inoperative), set throttle stopscrew for 7-8 MPH idle speed. Adjust idle adjusting screw until engine fires smoothly (¾-1½ turns open—turn screw in for leaner mixture). Readjust idle speed.

Accelerating Pump Setting—Pump arm under dust cover at top of carburetor has three holes for pump link engagement. Set as follows:
Upper Hole (max. stroke)—Cold weather.
Lower Hole (med. stroke)—Moderate weather.
Inner Hole (min. stroke)—Hot weather.

Float Level—⅜" from projection on cover to top of soldered seam at front end of float with needle valve seated (invert to check).

Metering Rods & Jets—***See Carter Jet Table in Carburetor Section for complete data.***

Fast Idle:—Integral type (built-in carburetor).
For complete data, refer to Carburetion Equip. Index.

Setting—Adjust by bending connecting link offset for ⅝" choke valve opening with stopscrew against (not on) first step of fast idle cam.

Automatic Choke:—Carter Climatic Control.
For complete data, refer to Carburetion Equip. Index.

Setting—1 Notch Rich (supersedes setting of 2 Notches Rich originally specified for this model).

CARB. EQUIPMENT

Air Cleaner:—AC #1529112 oil-wetted type standard. Heavy duty oil-bath type optional.

Fuel Pump:—AC Type W (Std.), Type AD Fuel-&-Vacuum Pump (Cars with Overdrive). Pump Exchange Part No. 533.
For complete data, refer to Carburetion Equip. Index.

Gasoline Gauge:—Auto-Lite electric. No. NG-9645D (dash unit), No. NG-9637T (tank unit).
For complete data, refer to Carburetion Equip. Index.

BATTERY

BATTERY:—**Auto-Lite Type CTL-1-15.** 6 volt, 15 plate, 105 ampere hour capacity (20 hour rate).
Starting Capacity—133 amperes for 20 minutes.
Zero Capacity—300 amperes for 3.5 minutes.
Grounded Terminal—Positive (+) grounded to body. Separate body to engine ground strap used.
Dimensions—Length & Height 9 1/16". Width 7⅛".
Location—Under front seat.

STARTER

STARTER:—**Auto-Lite MAB-4076. Armature MAB-2057.**
Drive—Inboard Bendix Type LCD11FX-10.
Rotation—Counter-clockwise at commutator end.
Brush Spring Tension—42-53 ozs. (new brushes).
Cranking Engine—160 RPM, 150-160 amps., 5.2 v.

Performance Data

Torque	R.P.M.	Volts	Amperes
0 ft. lbs.	3700	5.5	60
0.6 " "	1910	5.5	100
3.4 " "	1100	5.0	200
6.6 " "	695	4.5	300
10.15 " "	420	4.0	400
15.8 " "	Lock	3.0	582
22.5 " "	Lock	4.0	775

Removal:—Starter flange mounted on left front face of flywheel housing. To remove, take out flange mounting screws.

Starting Switch:—A-L #SW-4012. Mounted on body floor below clutch pedal. Operated by depressing clutch pedal fully. No adjustment required.

GENERATOR

GENERATOR:—**Auto-Lite GDZ-4806A. Armature GDZ-2079F.** 2 brush type with Current-Voltage control.
Charging Rate Adjustment—No adjustment at generator. Charging rate controlled by Voltage Regulator and maximum output by Current Regulator. ***See Regulator data following.***
Maximum Charging Rate—35 amperes (hot or cold), 8.0 volts, 1900 RPM (generator) and above with load or discharged battery (Current Regulator setting). Actual charging rate controlled by Voltage Regulator and dependent on battery condition.

Performance Data

Cold			Hot		
Amperes	Volts	R.P.M.	Amperes	Volts	R.P.M.
0	6.4	925	0	6.4	1000
4	6.6	1035	4	6.6	1120
8	6.75	1140	8	6.75	1235
12	6.95	1250	12	6.95	1350
16	7.15	1370	16	7.15	1460
20	7.3	1480	20	7.3	1590
24	7.5	1590	24	7.5	1730
28	7.7	1710	28	7.7	1900
32	7.9	1820	32	7.9	2090
35	8.0	1900	35	8.0	2250

Rotation—Counter-clockwise at commutator end.
Brush Spring Tension—53 ozs. max. (new brushes).
Field Current—1.60-1.78 amperes at 6.0 volts.
Motoring Current—4.16-4.60 amperes at 6.0 volts.

Removal:—Generator cradle mounted at left side of engine with fan belt drive. Water pump driven by generator shaft extension. To remove, disconnect water pump, loosen fan belt, remove generator clamp band and lift generator off.

Belt Adjustment:—Adjust whenever belt deflection is over 1½" (when pressed lightly midway between generator and fan pulleys). To adjust, loosen two capscrews on fan bracket, lift fan up (one screw hole slotted) for ¾" belt deflection, tighten screws.

REGULATOR

REGULATOR:—**Auto-Lite VRP-4004F or 4004F-1. Current Voltage Type.** On left side of engine dash.
For complete data, refer to Electrical Equipment Index.
NOTE—Regulator case cover sealed. Serviced on exchange basis if seals not broken (to remove cover).

Cutout Relay

Cuts In—6.4-6.6 volts.
Cuts Out—4.1-4.8 volts (approx. 4-6 amps. disch.).
Contact Gap—.015" minimum.
Air Gap—.031-.034" with contacts open (check at hinge end of core).

Voltage Regulator

Setting—7.2-7.5 volts at 70° F. See Electrical Equipment Section for settings at other temperatures.
To Check (without breaking seals)—Connect ammeter in charging line at regulator 'B' terminal (use short heavy leads), voltmeter between 'B' terminal and ground. Operate generator at speed equivalent to 30 MPH., charging fully charged battery, until voltage is steady. Voltage reading should agree with setting given above.
To Adjust (with cover removed)—Change regulator armature spring tension by bending lower spring hanger slightly. See Electrical Equipment Section.

CONTINUED ON NEXT PAGE

CONTINUED FROM PRECEDING PAGE

Contact Gap—.012" min. (armature against stop pin).
Air Gap—.048-.052" with contacts just opening.

Current Regulator

Setting—34-36 amperes (marked '35' on the cover).
To Check (without breaking seals)—Connect test meters as for voltage check (above). Operate generator at speed equivalent to 30 MPH. charging battery, turn on car lights and accessories or connect load (bank of headlamp bulbs etc.) between ammeter and battery so that generator charges at peak rate and Current Regulator operates. Current reading should agree with setting given above. If more than slight excess noted, regulator is defective.
To Adjust (with cover removed)—Same as for Voltage Regulator (above).
Contact Gap & Air Gap—Same as Voltage Regulator.

LIGHTING

LIGHTING:—Headlamps—Hall 'Sealed Beam' type.
For complete data, refer to Electrical Equipment Index.
Headlamp Adjustment—Aim upper beam straight ahead (hot spot center 3" below lamp center height).
Beam Indicator—In center of speedometer dial. Lighted whenever Country (upper) beams in use.

Switches

Lighting—Douglas. Nash No. 3107032.
Beam Selector—Douglas.
Instrument—Douglas.

Bulb Specifications

Position	Candlepower	Mazda No.
Headlamps		Sealed Beam
Parking	3	63
Instrument, Clock	1½	55
Beam Indicator	1½	55
Stop & Tail	21-3	1158
Rear License	3	63
Dome	6	81

MISC. ELECTRICAL

FUSES:—Lighting—30 ampere. On fuse block mounted on left hand side of engine dash.
Accessory—30 ampere. On fuse block.

HORNS:—Delco-Remy. No. 1999565 (left horn—low note), No. 1999566 (right horn—high note). Vibrator type, blended tone, operated by horn relay.

Type	Current (at 6 volts)	Air Gap
1999565 (Low Note)	19-21 amperes	.047-.052"
1999566 (High Note)	18-20 amperes	.039-.044"

Horn Relay:—Delco-Remy Model 1116775.
Contact Gap—.025". **Air Gap**—.015" (closed).
Contacts Close—2.75-4.0 volts.

ENGINE

ENGINE CODE NOTE (ORIGINAL BORE & BEARING SIZES): *See Nash Shop Notes for complete data.*

ENGINE SPECIFICATIONS:—6 cylinder, valve-in-head, Twin Ignition type with Iso-thermal fuel intake system (intake manifold cast in cylinder head—water jacketed for temperature control).
Bore—3⅜". **Stroke**—4⅜".
Displacement—234.8 cu. ins. **Rated HP**—27.34.
Developed Horsepower—105 at 3400 RPM.
Compression Ratio—6.3-1 Std. cast-iron head.
Compression Pressure—125 lbs at 350 RPM.
Vacuum Reading—Steady 18-20" idling at 7-8 MPH.

PISTONS:—Aluminum alloy, Autothermic, cam-ground, tin-plated type. **Length**—3⅞".
Removal—Pistons and rods removed from above.
Clearance—See Fitting New Pistons.
Original Bore Sizes:—*See Engine Code Note in Nash Shop Notes for data.*
Replacement Pistons:—Furnished std. and .001", .002", .003", .005", 010", .012", .015", .020", .040" oversize.
Fitting New Pistons:—Use .002" oiled feeler ½" wide between piston and wall on side opposite slot at right angles to pin hole. Pull to withdraw feeler must be 12-18 lbs. with piston at room temperature.
Installing Pistons:—Pin offset toward camshaft and slot toward left (trademark on piston toward front). NOTE—Piston pin offset 1/16".

PISTON RINGS:—Two compression, two oil control rings per piston, all above pin. Oil ring grooves drilled for oil drainage.

Ring	Width	End Gap	Side Clearance
Compr.	.124"	.010-.015"	.002-.004"
Oil Contr.	.155"	.010-.015"	.002-.004"

Replacement Rings:—*See Nash Shop Notes for data.*

PISTON PIN:—Diameter—.8745". **Length**—2.804".
Floating type, retained by locking ring at each end. Pin hole in piston offset toward camshaft.
Pin Fit in Piston—Light push fit (piston at 200° F.).
Pin Fit in Rod Bushing—Select pin for .0001" clearance or light push fit at normal temperature.
Replacement Pins:—Standard, .001" .003" oversize.

CONNECTING ROD:—Length—8¾". **Weight**—36¼ ozs.
Upper Bearing (Piston Pin Bushing)—Bronze.
Crankpin Journal Diameter—2.002". *See Engine Code Note in Nash Shop Notes for original bearing sizes.*
Lower Bearing—Removable, steel-backed babbitt.
Clearance—.0015-.0025". **Sideplay**—.008-.012".
Bearing Adjustment:—None (no shims). Replace bearings. Do not file rods or bearing caps. *See Nash Shop Notes for instructions and 'Palnut' data.*
Replacement Bearings:—Std. & .002", .010" undersize.
Installing Rods:—Mark rods and bearing caps before removal and install in same position. Oil hole in lower end of rod must be toward right of engine.

CRANKSHAFT:—7 bearing, counterweighted type.
See Nash Shop Notes for Vibration Dampener data.
Journal Diameters—2 31/64" all bearings. *See Engine Code Note in Nash Shop Notes for original bearing sizes.*
Bearings—Removable steel-backed, babbitt type.
Clearance—.002-.003".
Bearing Adjustment:—None (no shims). Replace bearings. *See Nash Shop Notes for bearing installation and fitting, replacement main bearing caps, and rear main bearing oil seal data.*
Replacement Bearings:—Std. & .002", .010" undersize.
End Thrust:—Taken by center bearing. Replace bearing to take up excessive endplay. **Endplay** .004-.006".

CAMSHAFT:—Non-adjustable roller-chain drive.
See Nash Shop Notes for Camshaft Removal directions.
Bearing Type—Steel-backed, babbitt bushings.
Clearance—.002".
End Thrust:—Taken by front bearing.
Endplay—.004-.006".
Timing Chain:—Whitney No. 49205 roller chain. Width 9/16". Pitch ⅜". Length 22½" or 60 links.
Camshaft Setting:—Mesh chain with camshaft and crankshaft sprockets turned so that marked tooth on each gear is 45° past (to right—as viewed facing front of engine) top vertical position. With sprockets in this position there should be 9½ links between tooth marks.

VALVES:—	Head Diameter	Stem Diameter	Length
Intake	1¾"	.3725"	5 17/32"
Exhaust	1 19/32"	.3725"	5 17/32"

	Seat Angle	Lift	Stem Clearance
All Valves	45°	11/32"	.002-.004"

Valve Guides:—Press fit in head (positioned by shoulder on guide). Ream new guides for clearance.
Valve Springs:—Double springs used on all valves. Free length 1 21/32" (inner), 2" (outer spring).

	Inner Spring Pressure	Inner Spring Length	Outer Spring Pressure	Outer Spring Length
Valve Closed	21 lbs.	1 3/8"	38 lbs.	1 11/16"
Valve Open	51 lbs.	1 1/32"	95 lbs.	1 11/32"

Valve Lifters:—Mushroom type. Lifter guide holes in block. Remove from below with camshaft out.

VALVE TIMING

Tappet Clearance:—.015" all valves, engine hot and idling (.018" max. may be used for sustained high speed driving. CAUTION—Oil plug in drilled passage in cylinder head (between oil filter pipe and lead to rocker arm shaft) must be removed to cut off oil to rocker arm shafts when valves adjusted with engine running. IMPORTANT—Plug must be replaced after adjustment completed (oil is bypassed in head with plug out and valve mechanism will not be oiled).
Valve Timing:—See Camshaft Setting above.
Intake Valves—Open 11.6° ATDC. Close 34.6° ALDC.
Exhaust Valves—Open 49.3° BLDC. Close 5° ATDC.
To Check Valve Timing—With .015" tappet clearance, #1 intake valve opens 11.6° ATDC. with 'DC' mark on vibration dampener at front of engine 23/32" after the indicator on the chain case cover. Exhaust valve closes with piston 5° or .0104" ATDC.

LUBRICATION

LUBRICATION:—Pressure system with gear type oil pump in crankcase (pump driven by separate gear from camshaft with oil delivery up along drive shaft to oil gallery in engine block).
Normal Oil Pressure:—25-30 lbs. at 25 MPH (warm oil).
Oil Pressure Regulator:—On oil pump cover. Opens at 30 lbs. Not adjustable.
Crankcase Capacity:—6 quarts.

COOLING

COOLING SYSTEM:—Capacity 17 qts. (18 with heater).
Water Pump:—Centrifugal, adjustable packing type.
See Water Pump Section for complete data.
Removal—Drain radiator, disconnect hose and drive coupling, take out mounting screws in pump flange.
Thermostat:—Fulton or Dole. In cyl. head outlet.
Setting—Starts to open at 160°F.
Temperature Gauge:—Auto-Lite (Motometer) Vapor Tension type. Auto-Lite No. H-9644.
See Miscellaneous Section for complete data.

CLUTCH

CLUTCH:—Borg & Beck Model 10A7. Assembly No. 950. Single plate, dry disc type.

See Clutch Section for complete data.

Facings—Moulded-woven type, 2 used. Inside Diam. 7". Outside Diam. 10". Thickness ⅛".

Pedal Adjustment & Over-center Spring Setting:—Pedal free travel ½-1". Adjusted in same manner as on the Nash 8 (see next page for instructions).

CAUTION—Over-center spring setting must be checked whenever clutch pedal is adjusted.

Removal:—Remove Transmission (see below). Disconnect clutch pedal linkage, support engine at rear and free rear engine mountings, remove clutch housing and pan. Punchmark flywheel, clutch cover and pressure plate (reassemble to same marks), remove clutch mounting screws and clutch.

TRANSMISSION

TRANSMISSION:—Own Make. New design, all helical gear, constant-mesh, synchro-mesh (second & high), sliding gear (low & reverse).

See Transmission Section for complete data.

Transmission Control:—Mech. steering column shift.

See Transmission Section for complete data.

Removal:—Disconnect shift rods, speedometer cable, overdrive control cable & wires (if used), and driveshaft. Remove two right transmission mounting studs and install pilot studs (to support transmission during removal), remove other mounting stud nuts, pull transmission straight back and remove

OVERDRIVE

Overdrive (Cruising Gear):—Warner Model AS1-R7C, Type R7C with electrical 'kick-down' control.

See Transmission Section for complete data.

Overdrive Solenoid—Delco-Remy Model 1118004.

Throttle Switch—Adjust switch position on mounting bracket so that contacts close with throttle valve wide open and spring on carburetor throttle valve pulley just starting to compress.

Control Relay—Delco-Remy Model 1116798.

UNIVERSALS

UNIVERSAL JOINTS:—Mechanics Type 2CR. New type roller bearing joint. Two used.

See Universals Section for complete data.

REAR AXLE

REAR AXLE:—Own Make. Semi-floating, hypoid gear type with Hotchkiss drive.

See Rear Axle Section for complete data.

Ratio—4.1-1 Std., 4.4-1 with Overdrive.

Backlash—.005-.007". Shim adjustment.

Removal:—Hoist rear end of car, disconnect shock absorbers, remove axle shafts (see below), free axle from springs by disconnecting U bolts and rear shackles, withdraw axle assembly from beneath car.

Axle Shaft Removal:—Remove wheel and drum, disconnect brake line and cable, remove backing plate mounting bolt nuts, oil seal retainer, backing plate, and bearing adjusting shims. Withdraw shaft and bearing, using care not to drag shaft on oil seal.

Wheel Bearing Adjustment—Shims located between backing plate and flanged end of housing. To adjust, remove wheel and backing plate (above), add or remove shims for endplay. **Endplay** .003-.006".

SHOCK ABSORBERS

SHOCK ABSORBERS:—Delco Model 1016-E (front), 1023-BB (rear). Direct acting, hydraulic type.

See Shock Absorber Section for complete data.

FRONT SUSPENSION

Front Suspension:—Independent, linked parallelogram type with coil springs.

See Front Suspension Section for complete data.

Kingpin Inclination—4½° crosswise.

Caster—0° to ½° Neg. Adjustable.

Camber—Pos. ¼° to ½°. Adjustable.

Toe In—1/32-3/32" measured 10" up from floor. Adjustable by loosening clamp bolts and turning adjusting tube at outer end of each tie rod equally.

Steering Geometry (Toe out on turns)—Inner wheel turned 21° plus ¾°, outer wheel exactly 20°.

STEERING GEAR

Steering Gear: Gemmer Model 305 Worm-and-Roller type with "push-pull" adjustments.

See Steering Gear Section for complete data.

BRAKES

BRAKES:—Service—Bendix hydraulic, duo-servo, single anchor type, without Eccentric Adjustment. Hand lever applies rear wheel service brakes.

See Brake Section for complete data.

Drums—Cast iron. Diameter 10".

Lining—Moulded type. Width 2." Thickness 3/16". Length 22" per wheel.

Clearance—.015" at each end of secondary shoes with primary shoes forced out against drum.

Braking Power—53% front, 47% rear wheels.

Hand Brakes:—See Service Brake above.

HOOD LOCK:—Alligator type hood. Lock button below instrument panel on left side. To raise hood, pull out on lock control button (hood will raise slightly), reach under front edge of hood and press up on safety catch tab to release safety catch, raise hood up.

MODEL IDENTIFICATION

SERIAL NUMBER:—First number B-110001. Stamped on plate on right frame side member under hood.

SERVICE SERIAL NUMBER:—First number N8-17001. On 'Caution Plate' on left front door hinge post.

ENGINE NUMBER:—First number B-110001. Stamped on right side of engine block at front.

TUNE-UP

COMPRESSION:—**Ratio**—6.3-1 std. cast-iron head.
Pressure—110 lbs. at cranking speed of 350 RPM.

VACUUM READING:—Steady 18-20" idling at 7-8 MPH.

FIRING ORDER:—1-6-2-5-8-3-7-4. See diagram for spark plug cable connections on distributor cap.

SPARK PLUGS:—AC No. 45. 14 MM. Metric.
Gaps—.025".

IGNITION: See Coil, Condenser, and Distributor.
Breaker Gap—.017". **Cam Angle**—28° closed.
Synchronization—Set movable contacts to open simultaneously with stationary contacts.
Automatic Advance—12° max. at 1100 RPM (distr.).

IGNITION TIMING: See Ignition Timing.
Std. Setting—9° BTDC. Vibration dampener mark 'IGN' (.725" before 'DC' mark) aligned with pointer on chain case cover at front of engine. Both sets of contacts should open simultaneously.
CAUTION—Torquematic Spark Control (see DISTRIBUTOR following for description) cable must be disconnected at dash before setting Ign. Timing.

CARBURETION: See Carburetor & Carb. Equipment.
Idle Setting—Idle screws ½-1½ turns open. Idle speed 7-8 MPH.
Float Level—3/16" from top of float to gasket seat on cover with needle valve seated (invert to check).
Accelerating Pump—Lower hole (summer), upper (winter).
Fuel Pump Pressure: 3½ lbs. maximum.

VALVES: See Valve Timing.
Tappet Clearance:—.015" all valves with engine hot and idling (may be set .018" max. for sustained high speed driving).

STARTING: See Battery, Starter, Generator, Regulator.

IGNITION

Ignition Switch:—Oakes Steering Column and Ignition Lock No. 302382. Ignition Switch No. 302440.
Ignition Lock—Briggs & Stratton. B & S No. 85347. **Key Series**—5 digits. **Groove**—No. 1.

COIL: Two Used, Auto-Lite CE-4025-A. Mounted on right side of engine.
Ignition Current—2 amperes idling, 5 stopped.

CONDENSER: Auto-Lite Part No. IG-2671. Two used. **Capacity**—.20-.25 microfarad.

DISTRIBUTOR: Auto-Lite IGK-4102. Twin Ignition double breaker, 8 lobe cam, full automatic advance type with Torquematic Spark Control. Contacts open simultaneously to fire both spark plugs in each cylinder at the same instant and must be synchronized (see Ignition Timing).
Breaker Gap—Set at .017" (alike for both sets).
Cam Angle or Dwell—28° closed, 17° open (distr.). For each set of contacts (operate independently).
Breaker Arm Spring Tension—17-20 ounces.
Rotation—Clockwise viewed from above.

Automatic Advance

Distributor Degrees	Distributor R.P.M.	Engine Degrees	Engine R.P.M.
Start	275	0	550
4	400	8	800
6	575	12	1150
9	840	18	1680
12	1100	24	2200

Torquematic Spark Control—Consists of cable anchored at dash and connected to distributor body by a travel limiting spring. Retards distributor through engine movement caused by torque action. Maximum retard 2½° (engine movement in excess of 2½° taken up by travel limiting spring). See Ignition Timing for setting.

Removal:—Mounted on right side of engine. To remove, take out hold-down screw in advance arm, disconnect torquematic control, lift distributor off.
Installation Note—When installing distributor, crank engine to firing position for #1 cylinder (piston 9° BTDC), see that oil pump and distributor drive gear meshed with camshaft gear so that oil pump drive pin (at lower end of distributor drive shaft) is crossways of the engine.

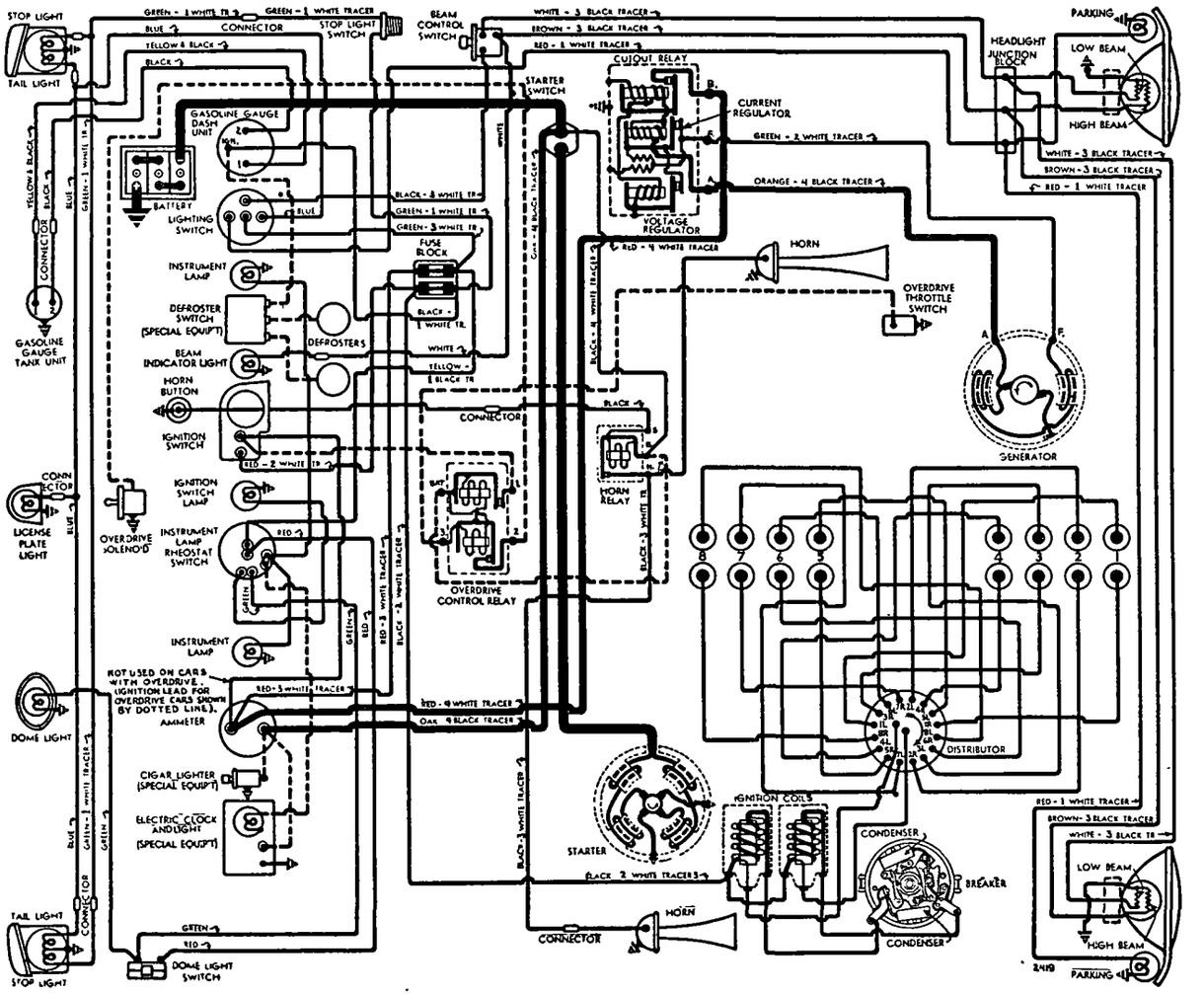

IGNITION TIMING

IGNITION TIMING:—Setting for all engines as follows:

Flywheel Degrees	Piston Position
9° BTDC	.0325" BTDC

To Set Timing—Car manufacturer recommends use of Nash Timing Light SE-569. Synchronize breaker points (see Synchronization following). With Timing Light connected as for Synchronization (see below), slacken torquematic cable by loosening locknuts on anchor bracket at dash. With #1 piston on compression, turn engine over until piston is 9° or .0325" BTDC, stop when 'IGN' mark on vibration dampener lines up with pointer on chain case cover (this mark is 9° or .725" before top dead center mark 'DC'). Loosen advance arm clamp bolt, rotate distributor until points just break (lights go on) with stop pin (hold-down bolt and nut) in advance position in slot in advance arm, tighten clamp bolt. Adjust cable locknuts at anchor bracket on dash to leave torquematic cable without slack or tension and stop pin in advance position in slot.

Synchronization—Use Nash Timing Light SE-569 (consists of two lights—one for each set of contacts) connected between each primary terminal and ground. Turn on ignition, turn engine over until fixed points just open (light for stationary contacts on). If both lights go on, synchronization correct. If not, loosen 3 lockscrews on movable subplate, shift plate by prying with screwdriver in notch on edge of plate until this set of contacts begin to open (both lights on), tighten sub-plate lockscrews, and set Ignition Timing as directed above. If other methods used, set contacts to open simultaneously at 45° (distributor) intervals.

Torquematic Spark Control Check—Distributor must be free in bracket and cable pulleys positioned to prevent cable interference with engine. Advance spring and cable take-up spring must be properly located and spring resistance centralized. Car manufacturer recommends use of Nash Synchro Light SE-417 to check torquematic retard by means of dead center mark on vibration dampener.

CARBURETOR

CARBURETION:—Carburetor—Carter Type WDO, Model 511-S (#360 cast on face of flange). 1" dual downdraft type.
For complete data, refer to Carburetor Index.

Idle Adjustment—With engine warm and running at slow idle speed (choke valve wide open, fast idle inoperative), set throttle stopscrew for 7-8 MPH idle speed. Adjust idle adjusting screw for each barrel (in sucession) until engine fires smoothly (½-1½ turns open for each screw—turn screws in for leaner mixture). Readjust idle speed.

Accelerating Pump—Pump arm under dust cover at top of carburetor has 2 holes for pump link engagement. Set as follows:
Upper Hole (max. stroke)—Cold weather.
Lower Hole (min. stroke)—Hot weather.

Float Level—3/16" from top of float to machined surface of bowl cover (remove gasket, invert to check).

Metering Rods & Jets—***See Carter Jet Table in Carburetor Section for complete data.***

Fast Idle:—Integral type (built-in carburetor).
For complete data, refer to Carburetion Equip. Index.
Setting—Adjust fast idle screw for .015" throttle opening with choke valve closed.

Automatic Choke:—Carter Climatic Control.
For complete data, refer to Carburetion Equip. Index.
Setting—Centered (at index mark). This setting supersedes 1 Notch Rich setting (original specification).

CARB. EQUIPMENT

Air Cleaner:—AC # 1529113 oil-wetted type standard. Heavy duty oil-bath type optional.

Fuel Pump:—AC Type W (Std.), Type AD Fuel-&-Vacuum Pump (Cars with Overdrive). Pump Exchange Part No. 534.
For complete data, refer to Carburetion Equip. Index.

Gasoline Gauge:—Auto-Lite electric. No. NG-9645D (dash unit), No. NG-9637T (tank unit).
For complete data, refer to Carburetion Equip. Index.

BATTERY

BATTERY:—Auto-Lite Type CTL-2-17. 6 volt, 17 plate, 120 ampere hour capacity (20 hour rate).
Starting Capacity—152 amperes for 20 minutes.
Zero Capacity—300 amperes for 4.5 minutes.
Grounded Terminal—Positive (+) grounded to body. Separate body to engine ground strap used.
Dimensions—Lgth. 10 5/16". Width 7⅛". Hgt. 9 1/16".
Location—Under front seat.

STARTER

STARTER:—Auto-Lite MAB-4104, Armature MAB-2057.
Drive—Inboard Bendix Type LCD11FX-10.
Rotation—Counter-clockwise at commutator end.
Brush Spring Tension—42-53 ozs. (new brushes).
Cranking Engine—160 RPM, 150-160 amps., 5.2 v.

Performance Data

Torque	R.P.M.	Volts	Amperes
0 ft. lbs.	3700	5.5	60
0.6 " "	1910	5.5	100
3.4 " "	1100	5.0	200
6.6 " "	695	4.5	300
10.15 " "	420	4.0	400
15.8 " "	Lock	3.0	582
22.5 " "	Lock	4.0	775

Removal:—Starter flange mounted on right front face of flywheel housing. To remove, disconnect battery cable, take out flange mounting screws.

Starting Switch:—A-L #SW-4012. Mounted on body floor below clutch pedal. Operated by depressing clutch pedal fully. No adjustment required.

GENERATOR

GENERATOR:—Auto-Lite GDZ-4803B, Armature GDZ-2079F. Two brush type with current-voltage control.
Charging Rate Adjustment—No adjustment at generator. Charging rate controlled by Voltage Regulator and maximum output by Current Regulator. ***See Regulator data following.***

Maximum Charging Rate—35 amperes (hot or cold), 8.0 volts, 1900 RPM (generator) and above with load or discharged battery (Current Regulator setting). Actual charging rate controlled by Voltage Regulator and dependent on battery condition.

Performance Data

Cold Amperes	Volts	R.P.M.	Hot Amperes	Volts	R.P.M.
0	6.4	925	0	6.4	1000
4	6.6	1035	4	6.6	1120
8	6.75	1140	8	6.75	1235
12	6.95	1250	12	6.95	1350
16	7.15	1370	16	7.15	1460
20	7.3	1480	20	7.3	1590
24	7.5	1590	24	7.5	1730
28	7.7	1710	28	7.7	1900
32	7.9	1820	32	7.9	2090
35	8.0	1900	35	8.0	2250

Rotation—Counter-clockwise at commutator end.
Brush Spring Tension—53 ozs. max. (new brushes).
Field Current—1.60-1.78 amperes at 6.0 volts.
Motoring Current—4.16-4.60 amperes at 6.0 volts.

Removal:—Generator cradle mounted at left side of engine with fan belt drive. Water pump driven by generator shaft extension. To remove, disconnect water pump, loosen fan belt, remove generator clamp band and lift generator off.

Belt Adjustment:—Adjust whenever belt deflection is over 1½" (when pressed lightly midway between generator and fan pulleys). To adjust, loosen two capscrews on fan bracket, lift fan up (one screw hole slotted) for ¾" belt deflection, tighten screws.

REGULATOR

REGULATOR:—Auto-Lite VRP-4004F or 4004F-1. Current Voltage Type. On left side of engine dash.
For complete data, refer to Electrical Equipment Index.
NOTE—Regulator case cover sealed. Serviced on exchange basis if seals not broken (to remove cover).

Cutout Relay

Cuts In—6.4-6.6 volts.
Cuts Out—4.1-4.8 volts (approx. 4-6 amps. disch.).
Contact Gap—.015" minimum.
Air Gap—.031-.034" with contacts open (check at hinge end of core).

Voltage Regulator

Setting—7.2-7.5 volts at 70° F. See Electrical Equipment Section for settings at other temperatures.
To Check (without breaking seals)—Connect ammeter in charging line at regulator 'B' terminal (use short heavy leads), voltmeter between 'B' terminal and ground. Operate generator at speed equivalent to 30 MPH., charging fully charged battery, until voltage is steady. Voltage reading should agree with setting given above.
To Adjust (with cover removed)—Change regulator armature spring tension by bending lower spring hanger slightly. See Electrical Equipment Section.
Contact Gap—.012" min. (armature against stop pin).
Air Gap—.048-.052" with contacts just opening.

Current Regulator

Setting—34-36 amperes (marked '35' on the cover).
To Check (without breaking seals)—Connect test meters as for voltage check (above). Operate generator at speed equivalent to 30 MPH. charging battery, turn on car lights and accessories or connect load (bank of headlamp bulbs etc.) between ammeter and battery so that generator charges at peak rate and Current Regulator operates. Current reading should agree with setting given above. If more than slight excess noted, regulator is defective.
To Adjust (with cover removed)—Same as for Voltage Regulator (above).
Contact Gap & Air Gap—Same as Voltage Regulator.

CONTINUED ON NEXT PAGE

CONTINUED FROM PRECEDING PAGE

LIGHTING

LIGHTING:—Headlamps—Hall 'Sealed Beam' type. *For complete data, refer to Electrical Equipment Index.*
Headlamp Adjustment—Aim upper beam straight ahead (hot spot center 3" below lamp center height).
Beam Indicator—In center of speedometer dial. Lighted whenever Country (upper) beams in use.

Switches

Lighting—Douglas. Nash No. 3107032.
Beam Selector—Douglas.
Instrument—Douglas.

Bulb Specifications

Position	Candlepower	Mazda No.
Headlamps		Sealed Beam
Parking	3	63
Instrument, Clock	1½	55
Beam Indicator	1½	55
Stop & Tail	21-3	1158
Rear License	3	63
Dome	6	81

MISC. ELECTRICAL

FUSES:—Lighting—30 ampere. On fuse block mounted on left hand side of engine dash.
Accessory—30 ampere. On fuse block.

HORNS:—Delco-Remy. No. 1999565 (left horn—low note), No. 1999566 (right horn—high note). Vibrator type, blended tone, operated by horn relay.

Type	Current (at 6 volts)	Air Gap
1999565 (Low Note)	19-21 amperes	.047-.052"
1999566 (High Note)	18-20 amperes	.039-.044"

Horn Relay:—Delco-Remy Model 1116775.
Contact Gap—.025". **Air Gap**—.015" (closed).
Contacts Close—2.75-4.0 volts.

ENGINE

ENGINE CODE NOTE (ORIGINAL BORE & BEARING SIZES): *See Nash Shop Notes for complete data.*

ENGINE SPECIFICATIONS:—8 cylinder, valve-in-head, Twin Ignition type with Iso-thermal fuel intake system (intake manifold cast in cylinder head—water jacketed for temperature control).
Bore—3⅛". **Stroke**—4¼".
Displacement—260.8 cu. ins. **Rated HP**—31.25.
Developed Horsepower—115 at 3400 RPM.
Compression Ratio—6.3-1 Std. cast iron head.
Compression & Vacuum Reading—*See Tune-Up.*

►Later type Replacement Cylinder Heads: *See "Cylinder Head" in Nash Shop Notes.*

PISTONS:—Nelson Bohnalite, aluminum alloy, Invar strut, tin-plated, split skirt type.
Weight—16 ozs. (stripped). **Length**—3 11/16".
Removal—Pistons and rods removed from below.
Clearance—See Fitting New Pistons.

Original Bore Sizes:—*See Engine Code Note in Nash Shop Notes for data.*

Replacement Pistons:—Furnished std. and .001", .002", .003", .005", 010", .012", .015", .020", .040" oversize.

Fitting New Pistons:—Use .0025" dry (not oiled) feeler between piston and wall on side opposite slot at right angles to pin hole. Pull to withdraw feeler 8-15 lbs. with piston at room temperatur .

Installing Pistons:—Pin offet toward camshaft. Slot toward left (trademark in piston toward front).

PISTON RINGS:—Two compression, two oil control rings per piston, all above pin. Oil ring grooves drilled for oil drainage.

Ring	Width	End Gap	Side Clearance
Compr. (both)	.124"	.010-.015"	.002-.004"
Oil Cont. (Upper)	.124"	.010-.015"	.002-.004"
Oil Cont. (Lower)	.1865"	.010-.015"	.002-.004"

Replacement Rings:—*See Nash Shop Notes for data.*

PISTON PIN:—Diameter—.8747". **Length**—2.574". Floating type, retained by locking ring at each end. Pin hole in piston offset toward camshaft.
Pin Fit in Piston—Light push fit (piston at 200°F).
Pin Fit in Rod Bushing—Select pin for .0001" clearance or light push fit at normal temperature.
Replacement Pins:—Std., .001", .003", .005" oversize.

CONNECTING ROD:—Length—8¾". **Weight**—34 ozs.
Upper Bearing (Piston Pin Bushing)—Bronze.
Crankpin Journal Diameter—2.002". *See Engine Code Note in Nash Shop Notes for original bearing sizes.*
Lower Bearing—Removable steel-backed, babbitt.
Clearance—.0015-.0025". **Sideplay**—.008-.012".
Bearing Adjustment:—None (no shims). Replace bearings. Do not file rods or bearing caps. *See Nash Shop Notes for instructions and 'Palnut' data.*
Replacement Bearings:—Std. & .002", .010" undersize.
Installing Rods:—Mark rods and bearing caps before removal and install in same positions. Oil hole in lower end of rod must be toward right of engine.

CRANKSHAFT:—Nine bearing. No counterweights. *See Nash Shop Notes for Vibration Dampener data.*
Journal Diameters—2 31/64" all bearings. *See Engine Code in Nash Shop Notes for original bearing sizes.*
Bearings—Removable steel-backed, babbitt type.
Clearance—.002-.003".
Bearing Adjustment:—None (no shims). Replace bearings. *See Nash Shop Notes for bearing installation and fitting, replacement main bearing caps, and rear main bearing oil seal data.*
Replacement Bearings:—Std. & .002", .010" undersize.
End Thrust:—Center (#5) bearing. Replace bearing to take up excessive endplay. **Endplay**—.004-.006."

CAMSHAFT:—Non-adjustable roller chain drive. *See Nash Shop Notes for Camshaft Removal directions.*
Bearings—Steel-backed, babbitt bushings.
Clearance—.002".
End Thrust:—Taken by front bearing. **Endplay** .004-.006".
Timing Chain:—Diamond double roller type. Width 9/16". Pitch ⅜". Length 23¼" or 62 links.
Camshaft Setting:—Mesh chain with camshaft and crankshaft sprockets turned so that marked tooth on each gear is 45° past (to right—as viewed facing front of engine) top vertical position. With sprockets in this posiiton there should be 10 links between tooth marks.

VALVES:—

	Head Diameter	Stem Diameter	Length
Intake	1 21/32"	.3725"	5½"
Exhaust	1 15/32"	.3725"	5½"

	Seat Angle	Lift	Stem Clearance
All Valves	45°	11/32"	.002-.004"

Valve Guides:—Press fit in head (positioned by shoulder on guide). Ream new guides for correct clearance.

Valve Springs:—Double springs used on all valves. Free length 1 21/32" (inner), 2" (outer spring).

	Inner Spring Pressure	Inner Spring Length	Outer Spring Pressure	Outer Spring Length
Valve Closed	21 lbs.	1 3/8"	38 lbs.	1 11/16"
Valve Open	51 lbs.	1 1/32"	95 lbs.	1 11/32"

Valve Lifters:—Mushroom type. Lifter guide holes reamed in block. Remove from below (camshaft out).

VALVE TIMING

Tappet Clearance:—.015" all valves, engine hot and idling. NOTE—.018" maximum may be used for sustained high speed driving.
Valve Timing:—See Camshaft Setting above.
Intake Valves—Open 16° ATDC. Close 38° ALDC.
Exhaust Valves—Open 45° BLDC. Close 10° ATDC.
To Check Valve Timing—With .015" tappet clearance, #1 intake valve opens 16° ATDC with 'DC' mark on vibration dampener at front of engine 1 5/16" after the indicator on the chain case cover. Exhaust valve closes with piston 10° or .0400" ATDC.

LUBRICATION

LUBRICATION:—Pressure system. Gear type oil pump in crankcase. NOTE—When pump installed, slot in shaft should be across engine with #1 piston in firing position.
Normal Oil Pressure:—25-30 lbs. at 25 MPH (warm oil).
Oil Pressure Regulator:—On oil pump cover. Opens at 30 lbs. Not adjustable.
Crankcase Capacity:—7 quarts.

COOLING

COOLING SYSTEM:—Capacity 16 qts. (17 with heater).
Water Pump:—Centrifugal, adjustable packing type. *See Water Pump Section for complete data.*
Removal—Drain radiator, disconnect hose and drive coupling, take out mounting screws in pump flange.
Thermostat:—Fulton or Dole. In cyl. head outlet.
Setting—Starts to open at 160°F.
Temperature Gauge:—Auto-Lite (Motometer) Vapor Tension type. Auto-Lite No. H-9644.
See Miscellaneous Section for complete data.

CLUTCH

CLUTCH:—Borg & Beck Model 10A7. Assembly No. 950. Single plate, dry disc type.
See Clutch Section for complete data.
Facings—Moulded-woven type, 2 used. Inside Diam. 7". Outside Diam. 10". Thickness ⅛".
Pedal Adjustment:—Pedal free travel ½-1". To adjust, loosen one nut and tighten opposite nut on connector link at throw-out shaft lever. Both nuts must be tightened securely and locked with 'Palnuts'.
Over-center Spring Adjustment—Check when clutch pedal adjusted. Loosen nut in lever on end of clutch throw-out shaft, position lever so that spring hole in lever not more than ⅛" above line from lever screw hole to other spring hole in engine bracket.
Removal:—Remove Transmission (see below). Disconnect clutch pedal linkage, support engine at rear and free rear engine mountings, remove clutch housing and pan. Punchmark flywheel, clutch cover and pressure plate (reassemble to same marks), remove clutch mounting screws and clutch.

TRANSMISSION

TRANSMISSION:—Own Make. New design, all helical gear, constant-mesh, synchro-mesh (second & high), sliding gear (low & reverse).
See Transmission Section for complete data.
Transmission Control:—Mech. steering column shift.
See Transmission Section for complete data.
Removal:—Disconnect shift rods, speedometer cable, overdrive control cable & wires (if used), and driveshaft. Remove two right transmission mounting studs and install pilot studs (to support transmission during removal), remove other mounting stud nuts, pull transmission straight back and remove

OVERDRIVE

Overdrive (Cruising Gear):—Warner Model AS1-R7C, Type R7C with electrical 'kick-down' control.
See Transmission Section for complete data.
Overdrive Solenoid—Delco-Remy Model 1118004.
Throttle Switch—Adjust switch position on mounting bracket so that contacts close with throttle valve wide open and spring on carburetor throttle valve pulley just starting to compress.
Control Relay—Delco-Remy Model 1116798.

UNIVERSALS

UNIVERSAL JOINTS:—Mechanics Type 3CR. New type roller bearing joint. Two used.
See Universals Section for complete data.

REAR AXLE

REAR AXLE:—Own Make. Semi-floating, hypoid gear type with Hotchkiss drive.
See Rear Axle Section for complete data.
Ratio—4.1-1 Std., 4.4-1 with Overdrive.
Backlash—.005-.007". Shim adjustment.
Removal:—Hoist rear end of car, disconnect shock absorbers, remove axle shafts (see below), free axle from springs by disconnecting U bolts and rear shackles, withdraw axle assembly from beneath car.
Axle Shaft Removal:—Remove wheel and drum, disconnect brake line and cable, remove backing plate mounting bolt nuts, oil seal retainer, backing plate, and bearing adjusting shims. Withdraw shaft and bearing, using care not to drag shaft on oil seal.
Wheel Bearing Adjustment—Shims located between backing plate and flanged end of housing. To adjust, remove wheel and backing plate (above), add or remove shims for endplay. **Endplay** .003-.006"

SHOCK ABSORBERS

SHOCK ABSORBERS:—Delco Model 1016-E (front), 1023-BB (rear). Direct acting, hydraulic type.
See Shock Absorber Section for complete data.

FRONT SUSPENSION

Front Suspension:—Independent, linked parallelogram type with coil springs.
See Front Suspension Section for complete data.
Kingpin Inclination—4½° crosswise.
Caster—0° to ½° Neg. Adjustable.
Camber—Pos. ¼° to ½°. Adjustable.
Toe In—1/32"-3/32" measured 10" up from floor. Adjustable by loosening clamp bolts and turning adjusting tube at outer end of each tie rod equally.
Steering Geometry (Toe out on turns)—Inner wheel turned 21° plus ¾°, outer wheel exactly 20°.

STEERING GEAR

Steering Gear: Gemmer Model 335 Worm-and-Roller type with "push-pull" adjustments.
See Steering Gear Section for complete data.

BRAKES

BRAKES:—Service—Bendix hydraulic, duo-servo, single anchor type, without Eccentric Adjustment. Hand lever applies rear wheel service brakes.
See Brake Section for complete data.
Drums—Cast iron. Diameter 10".
Lining—Moulded type. Width 2." Thickness 3/16". Length 22" per wheel.
Clearance—.015" at each end of secondary shoes with primary shoes forced out against drum.
Braking Power—53% front, 47% rear wheels.
Hand Brakes:—See Service Brake above.

OIL PAN REMOVAL, AND ENGINE CODE NOTE DATA (ORIGINAL BORE & BEARING SIZES): *Refer to Nash Shop Notes for complete instructions.*

MODEL IDENTIFICATION

SERIAL NUMBER:—First No. K-56001. On plate on right side of cowl under engine hood.

Service Serial No. Note—Stamped on plate on left front door hinge pillar. First No. N4-55501.

ENGINE NUMBER:—Stamped on left side of engine block at front end. First No. same as Serial No.

TUNE-UP

COMPRESSION:—Ratio 6.87-1 cast-iron head standard.

Pressure—120 lbs. at 350 RPM. cranking speed.

VACUUM READING:—Steady 18-20" idling at 6 MPH.

FIRING ORDER:—1-5-3-6-2-4. See diagram.

SPARK PLUGS:—Auto-Lite AN-7. 14 MM. Metric.

Gaps—.025".

IGNITION: See Coil, Condenser, and Distributor.

Breaker Gap—.020". **Cam Angle**—35° Closed.

Automatic Advance—10° max. at 1200 RPM (distr.).

Vacuum Advance—8½° (Distr.) with 14-17" vacuum.

IGNITION TIMING: See Ignition Timing.

Std. Setting—TDC. 'IGN/DC' vibration dampener mark aligned with pointer at front of engine.

CAUTION—Latch out vacuum advance when setting Ign. Timing (See IGNITION TIMING following).

CARBURETION: See Carburetor & Carb. Equipment.

Idle Setting—Idle screw ½-1¼ turns open. Idle speed 6 MPH.

Float Level—Top of float (not soldered seam) 5/64" below top edge of bowl with valve seated.

Accelerating Pump—Center Hole normal setting.

Fuel Pump Pressure: 3½ lbs. (4 lbs. fuel & vacuum).

VALVES: See Valve Timing.

Tappet Clearance:—.015" all valves with engine Hot. NOTE—May be set at .018" max. for sustained high speed driving. Self-locking tappet screws used.

STARTING: See Battery, Starter, Generator, Regulator.

IGNITION

Ignition Switch:—Delco-Remy No. 1116335. Connected to ignition coil by armored cable.

Ignition Lock—Briggs & Stratton No. 45792.

Key Series—N-1201 to N-1449. Groove—No. 15.

COIL: Delco-Remy 1115028 (Domestic), 1115030 (Exp.). Mounted on engine side of dash.

Ignition Current—2 amperes idling, 5 stopped.

CONDENSER: Delco-Remy Part No. 1869705.

Capacity—.18-.25 microfarad.

DISTRIBUTOR: Delco-Remy 1110512. Single breaker, 6 lobe cam, full automatic advance type with separate vacuum spark control and Octane Selector adjustment.

Breaker Gap—.020". Limits .018-.024".

Cam Angle or Dwell—35° closed, 25° open.

Breaker Arm Spring Tension—17-21 ozs.

Rotation—Counter-clockwise viewed from above.

Automatic Advance

Distributor		Engine	
Degrees	R.P.M.	Degrees	R.P.M.
Start	400	2	800
10	1200	20	2400

Vacuum Spark Control No. 1116029. Mounted on distributor mounting plate and linked to advance arm. Provides additional advance at speeds above idling except when engine accelerated or operated with wide open throttle when spark retarded by return spring within unit.

Plunger Travel—23/64" (total).

Vacuum Advance

Distr. Degrees	Eng. Degrees	Vacuum (" of HG)
Start	0°	3-5"
8½°	17°	14-17"

Removal:—Distributor mounted on left side of engine and driven by inclined shaft. To remove, loosen advance arm clamp bolt or disconnect vacuum line and take out hold down screw in advance arm.

Installation Note—When installing distributor, crank engine to firing position for #1 cylinder (piston at TDC), see that oil pump drive gear meshed so that slot in shaft points across engine with wide half of shaft toward front (slot is offset), turn rotor to #1 segment in distributor cap, install distributor and check timing.

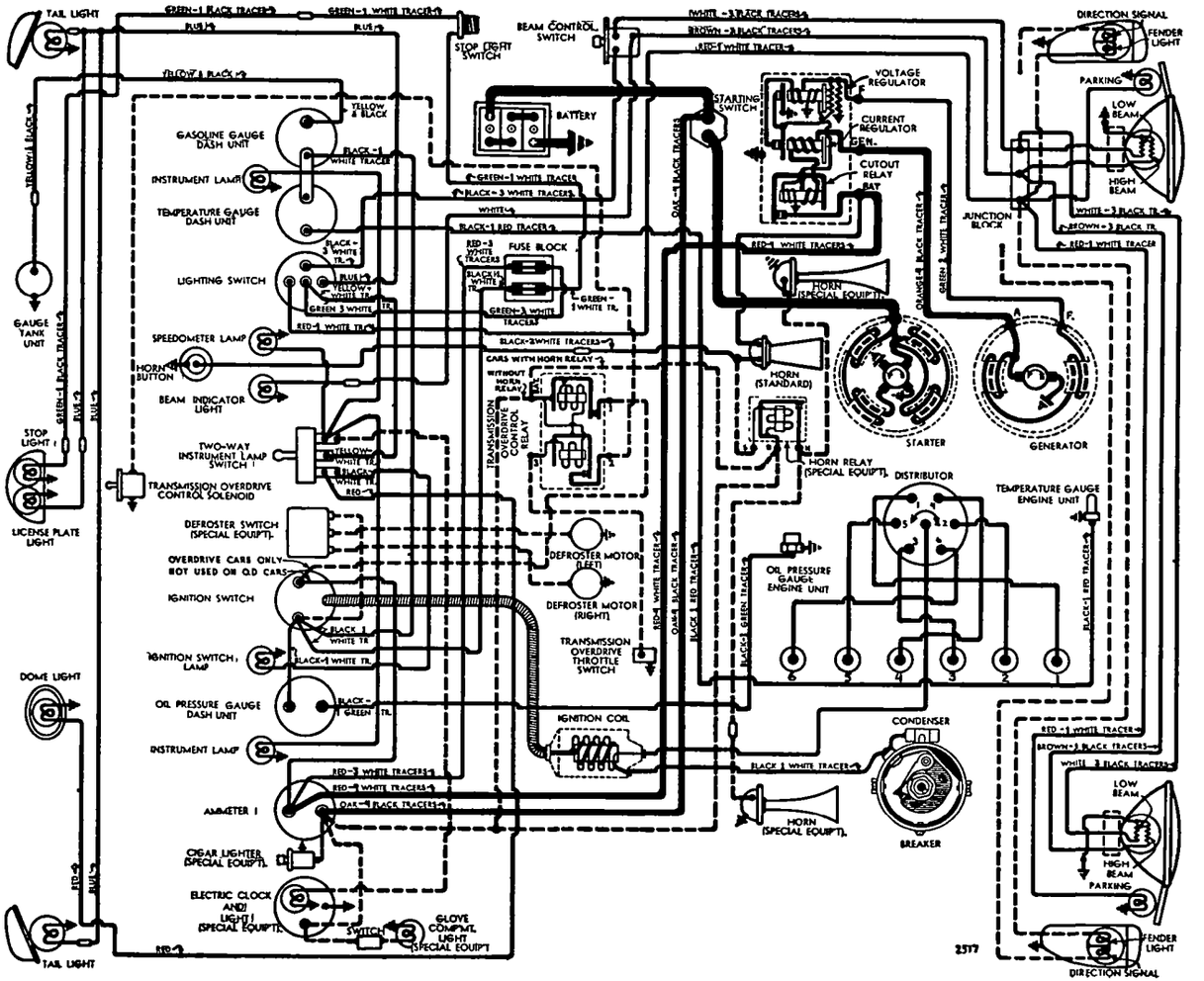

IGNITION TIMING

IGNITION TIMING:—Flywheel Degrees Piston Position
All Engines ..... At TDC ..... .000" TDC.

Timing Note—Vacuum advance must be latched out by aligning holes in advance arm and hold-down plate and inserting ⅛" pin through these holes while timing is being set.

To Set Timing—Turn engine over until #1 piston reaches top dead center on compression stroke with 'IGN/DC' mark on vibration dampener in line with pointer on chain case cover. Latch out vacuum control (see note above), loosen advance arm clamp bolt, rotate distributor until contacts begin to open, tighten clamp bolt, see that rotor at #1 segment in distributor cap, check Octane Selector setting.

Octane Selector Setting—Should be set for slight ping when accelerating with wide open throttle at speeds between 10-15 MPH. To adjust, loosen hold-down screw, rotate distributor one graduation at a time counter-clockwise (if ping too severe), clockwise (if no ping noted) until correct performance secured.

CARBURETOR

CARBURETION:—Carburetor—Carter (B & B) Model 513-S, 1¼" downdraft type with manual choke control.

For complete data, refer to Carburetor Index.

Idle Adjustment—With engine warm and choke valve wide open, set throttle stopscrew for 6 MPH. idle speed. Adjust idle adjusting screw for smooth idle (screw ½-1¼ turns open from inner seated position—turn screw in for leaner mixture), recheck idle speed.

Accelerating Pump Setting—Throttle lever has 3 holes for pump rod link engagement as follows:
Inner (Min. stroke)—Hot Summer weather.
Center (Med. stroke)—Normal temperatures.
Outer (Max. stroke)—Cold Winter weather.

Float Level—Top of float (not soldered seam) 5/64" (plus or minus 1/64") below top edge of bowl with valve seated.

Metering Jets—*Refer to Carburetor Index for Carter (B&B) Downdraft Carburetor Jet Specification Table.*

Fast Idle:—No adjustment provided (linked to choke valve so throttle opened to fast idle position when choke valve closed).

CARB. EQUIPMENT

Air Cleaner:—AC No. 1542037 oil-wetted type Std. No. 1542033 heavy duty oil-bath type optional. Use Replacement Filter Element Assembly Type #1 (for 1542037), Type #8 (for 1542033).

Fuel Pump:—AC Type 'W' #1537398, 1537529 (RHD)—Exch. No. 532. Diaphragm type fuel pump (Std.). AC Type 'AJ' #1537406 combination fuel-&-vacuum pump (cars with Overdrive).

For complete data, refer to Carburetion Equip. Index.

Pressure—3½ lbs. ('W'), 4 lbs. ('AJ').

Gasoline Gauge:—King-Seeley Electric type. K-S No. 40152 (dash unit), 40170 (tank unit).

For complete data, refer to Carburetion Equip. Index.

BATTERY

BATTERY:—Auto-Lite CTL-1-13. 6 volt, 13 plate, 90 Ampere Hour capacity (20 hour rate).

Zero Capacity—300 amperes for 3.0 minutes. Five second voltage 4.10 volts.

Grounded Terminal—Positive (+) terminal to body.

Engine Ground—Separate strap connector to body.

Location—Under left front seat.

STARTER

STARTER:—Delco-Remy 1109451. Armature No. 1882547.

Drive—Inboard Barrel Type Bendix No. A-2033.

Rotation—Counter-clockwise at commutator end.

Brush Spring Tension—24-28 ozs. each.

Performance Data

Torque	R.P.M.	Volts	Amperes
0 ft. lbs.	6000	5.7	60
11.5 "	Lock	3.3	540

Removal:—Starter flange mounted on left front face of flywheel housing. To remove, take out flange mounting screws.

Starting Switch:—Mounted on toeboard and operated by clutch pedal. Auto-Lite No. SW-4012.

GENERATOR

GENERATOR:—Delco-Remy 1102684. Armature 1882588. Two brush type with Current-Voltage control.

Charging Rate Adjustment—None. Charging rate controlled by Voltage Regulator and maximum output controlled by Current Regulator. See Regulator data.

Maximum Charging Rate—32-34 amperes, 8 volts, hot. Actual charging rate controlled by voltage regulator and dependent on battery condition.

Performance Data

	Amperes	Volts	R.P.M.
Cold	30①	8.0	1750

①—Not maximum output. See Current Regulator.

Rotation—Counter-clockwise at commutator end.

Brush Spring Tension—25 ozs. each.

Field Current—1.75-1.9 amperes at 6.0 volts.

Removal:—Generator cradle mounted at left side of engine with fan belt drive (water pump driven by extension of generator shaft). To remove, disconnect water pump, loosen fan belt, remove generator clamp band, lift generator out.

Belt Adjustment:—Adjust whenever belt deflection exceeds 1½" (light pressure midway between fan and generator pulley). To adjust, loosen fan mounting bracket capscrews, raise fan (pivots on one screw, other screw hole slotted) until belt deflection is ¾", tighten screws.

REGULATOR

REGULATOR:—Delco-Remy 1118202. Single Core Type. Vibrating Current & Voltage Regulator on dash.

For complete data, refer to Electrical Equipment Index.

CAUTION—Check generator for grounded field coils and leads before changing regulator settings to correct High Charging Rate or High Voltage.

Cutout Relay

Cuts In—6.2-6.7 volts hot.

Cuts Out—0-4.0 ampere discharge current.

Contact Gap—.020" (same for both sets).

Air Gap—.020" (with contacts just closed).

Voltage Regulator

Setting—7.2-7.4 volts hot (operating temperature). Regulator over-compensated for temperature. Should be checked with cover in place and hot.

To Check—Connect ammeter in charging line at regulator 'BAT' terminal, voltmeter between this terminal and ground. Operate generator at 2800 RPM., adjust charging rate to 8-10 amperes (use variable rheostat or AVR set). With regulator hot (150° F), decrease generator speed until cutout relay contacts open, then increase speed to 2800 RPM. and check hot voltage setting (above).

To Adjust—Change regulator armature spring tension slightly by bending hanger at lower end of **one spring only.** If further adjustment required, see Single Core Regulator article in Electrical Equipment Section for adjustment directions for the other (second) spring.

Air Gap—.070" between center of core and armature with contacts just closing (press down on armature to open contacts, release pressure, check gap at point where contacts just close).

Current Regulator

Setting—34-36 amperes hot (at operating temp.).

To Check—Remove regulator cover, connect short jumper between Voltage Regulator frame and upper contact support bracket (to short out Voltage Regulator), connect ammeter in charging line at regulator 'BAT' terminal, turn on car lights and accessories. Operate generator and increase speed until output remains constant. With regulator hot (150°F), current reading should agree with setting (above).

To Adjust—Same as for Voltage Regulator (above).

Air Gap—.080" (check same as Voltage Regulator).

LIGHTING

LIGHTING:—Headlamps—Hall 'Sealed Beam' type.

For complete data, refer to Electrical Equipment Index.

Headlamp Adjustment—Aim upper beam straight ahead (hot spot center 3" below lamp center height).

Beam Indicator—In center of speedometer dial. Lighted when Country (upper) beams in use.

Switches

Lighting—Douglas. Nash No. 3107032.

Beam Selector—Douglas.

Instrument—Douglas.

Bulb Specifications

Position	Candlepower	Mazda No.
Headlamps		Sealed Beam
Parking, Speedometer	1½	55
Instrument, Clock	1	51
Beam Indicator	1½	55
Stop	21	1129
Rear License, Tail	3	63
Dome	6	81

CONTINUED ON NEXT PAGE

C NTINUED FR M PRECEDIN PAGE

MISC. ELECTRICAL

FUSES:—Lighting—30 ampere. On fuse block on left hand front face of dash.

Accessory—30 ampere. On fuse block.

HORNS:—Delco-Remy. No. 1999917 (4245, 46, 47), No. 1999565 Low Note & 1999566 High Note Twin Horns (All Others), operated by horn relay.

Type	Current (at 6 volts)	Air Gap
1999565 (Low Note)	19-21 amperes	.047-.052"
1999566 (High Note)	18-20 amperes	.039-.044"

Horn Relay:—Delco-Remy No. 1116775.
Contact Gap—.025". **Air Gap**—.015" (closed).
Contacts Close—2.75-4.0 volts.

ENGINE

OIL PAN REMOVAL AND ENGINE CODE NOTE DATA (ORIGINAL BORE & BEARING SIZES): *Refer to Nash Shop Notes for complete instructions.*

ENGINE SPECIFICATIONS:—6 cylinder, 'L' head type. Cylinders cast Enbloc with intake manifold cast in block (Iso-thermal fuel intake system).
Bore—3⅛". **Stroke**—3¾".
Displacement—172.6 cubic ins. **Rated HP**—23.44.
Developed Horsepower—76 at 3600 RPM.
Compression Ratio—6.87-1 cast-iron head.
Compression Pressure—120 lbs. at 350 RPM.
Vacuum Reading—18-20" idling at 6 MPH.

PISTONS:—Tin-plated, cam-ground, lightweight type.
Removal—Pistons and rods removed from above.
Clearance—.0003-.0009". See Fitting New Pistons.

Original Bore & Pistons Sizes:—*See Engine Code Note in Nash Shop Notes for sizes and markings.*

Replacement Pistons:—Furnished std. and .001", .002", .003", .005", .010", .012", .015", .020", .040" oversize.

Fitting New Pistons:—Fit piston by feel. Piston should hold own weight in normal running position ⅓ down in cylinder but should be free when worked by hand (piston and bore must be clean and free from oil when checking fit).

PISTON RINGS:—#1 Compr. (inner edge tapered at top), #2 Compr. (outer edge tapers out at bottom with plain expander behind ring), #3 oil (slotted type with ventilated expander behind ring), all above pin. Oil ring groove drilled for oil drain holes.

Ring	Width	End Gap	Side Clearance
Compression	.093"	.010-.015"	.002-.004"
Oil Control	.1865"	.010-.015"	.002-.004"

Replacement Rings:—*See Nash Shop Notes for data.*

PISTON PIN:—**Diameter**—.8120". **Length**—2.609". Floating type, retained by locking ring at each end.
Pin Fit in Piston—Light push fit.
Pin Fit in Rod Bushing—Select fit for .0001" clearance or light push fit at normal temperature.

Replacement Pins:—Standard, .001", .003" oversize.

CONNECTING ROD:—**Length**—6¾". **Weight**—24 ozs.
Upper Bearing (Piston Pin Bushing)—Bronze.
Crankpin Journal Diameter 1.875". *See Engine Code Note in Nash Shop Notes for original bearing sizes.*
Lower Bearing—Removable steel-backed babbitt.
Clearance—.0015-.0025". **Sideplay**—.004-.008".

Bearing Adjustment:—None (no shims). Replace bearings. *See Nash Shop Notes for instructions.*

Replacement Bearings:—Std., .002", .010" undersize.

Installing Rods:—Mark rods and bearing caps before removal and install in same position. Oil hole in lower end of rod must be toward right of engine.

CRANKSHAFT:—Four bearing, counterweighted type. *See Nash Shop Notes for Vibration Dampener data.*

Journal Diameters—2 31/64" all bearings. *See Engine Code Note in Nash Shop Notes for Original bearing sizes.*

Bearings—Removable steel-backed babbitt type.
Clearance—.002".

Bearing Adjustment:—None (no shims). Replace bearings. *Refer to Nash Shop Notes for bearing installation and fitting, replacement main bearing caps, and rear main bearing oil seal data.*

Replacement Bearings:—Std., .002", .010" undersize.

End Thrust:—Taken by No. 1 (front) bearing. *See Nash Shop Notes for thrust plate and oil seal data.*
Endplay—.004-.006".

CAMSHAFT:—4 bearing. Non-adjustable chain drive. *See Nash Shop Notes for Camshaft Removal data.*

Bearing Type—Steel-backed, babbitt bushings.
Clearance—.002".

End Thrust:—Thrust plate assembled on front face of engine block. **Endplay**—.004-.006".

Timing Chain:—Whitney No. 49205, Type 35D-60. Duplex type roller chain. Pitch ⅜". Length 60 links.

Camshaft Setting:—Mesh chain with camshaft and crankshaft sprockets turned so that marked tooth on each gear is 45° past (to right—as viewed facing front of engine) top vertical position. With sprockets in this position there should be 9½ links or 19 pins between tooth marks.

VALVES:—	Head Diameter	Stem Diameter	Length
Intake	1 11/32"	3412"	4¾"
Exhaust	1 9/32"	3412"	4¾"

	Seat Angle	Lift	Stem Clearance
All Valves	45°	5/16"	.002-.003"

Valve Guides:—Press fit in block (press in place 1" below top of block, ream for valve stem clearance).

Valve Springs:—	Pressure	Length
Valve Open	83 lbs.	1 7/16"

NOTE—Install springs with closed coils at top.

Valve Lifters:—Mushroom type operating in reamed holes in block. Lifters must be removed from below. *See Nash Shop Notes for Camshaft Removal data.*

VALVE TIMING

Tappet Clearance:—.015" all valves, engine hot and idling (.018" max. may be used for sustained high speed driving). *Refer to Nash Shop Notes for Self-locking type tappet adjusting screw data.*

Valve Timing:—See Camshaft Setting above.

Intake Valves—Open 19° BTDC. Close 63° ALDC.

Exhaust Valves—Open 59° BLDC. Close 23° ATDC.

To Check Valve Timing—With .015" tappet clearance, #1 intake valve opens 19° BTDC with 'DC' mark on vibration dampener at front of engine 1 3/16" ahead of pointer on chain case cover. No. 1 exhaust valve closes 23° ATDC. with 'DC' mark 1 15/16" past the pointer.

LUBRICATION

LUBRICATION:—Pressure system. Gear type oil pump on right side of crankcase (driven by inclined shaft).

Normal Oil Pressure:—35 lbs. at 20 MPH.

Oil Pressure Regulator:—Under plug on left side of crankcase behind pump. Opens at 25 lbs. Non-adj.

Oil Pressure Gauge:—King-Seeley Electric. K-S Nos. 40161 (Dash Unit), No. 6125 (Engine Unit).
See Miscellaneous Section for complete data.

Crankcase Capacity:—5 quarts.

COOLING

COOLING SYSTEM:—**Capacity** 14 qts. (15 with heater).

Water Pump:—Centrifugal, adjustable packing type.
See Water Pump Section for complete data.

Thermostat:—Fulton or Dole. In cyl. head outlet.
Setting—Starts to open at 160°F.

Temperature Gauge:—King-Seeley Electric. K-S Nos. 40154 (Dash Unit), No. 7000 (Engine Unit).
See Miscellaneous Section for complete data.

CLUTCH

CLUTCH:—**Borg & Beck Model 8A7.** Assembly No. 959. or No. 925. Single plate, dry disc type.
See Clutch Section for complete data.
Facings—Molded metallic type, 2 required. Inside Diam. 5⅜". Outside Diam. 8". Thickness ⅛".
Pedal Adjustment—¾" min. pedal free travel. Adjust by loosening locknut and turning adjusting nut on connector link **at clutch fork.**
CAUTION—Adjusting clevis on rod linking idler lever and pedal is pedal adjustment. Turn clevis so that inner idler lever is slightly ahead of perpendicular with pedal against floor board.

Removal:—Remove transmission (see below), disconnect clutch pedal linkage, remove clutch housing and pan, punchmark flywheel, clutch cover and pressure plate (reassemble to same marks), take out clutch fork and mounting screws in cover flange. Remove clutch assembly.

TRANSMISSION

TRANSMISSION:—**Warner Model AS3-T84G (std.), AS4-T84G (with Overdrive).** All helical gear, constant-mesh, synchro-mesh (second & high), sliding gear (low and reverse).
See Transmission Section for complete data.

Transmission Control:—Mech. steering column shift
See Transmission Section for complete data.

Removal:—Remove Rear Axle (see below), disconnect shift rods, speedometer cable, and Overdrive control wires and cable (if used). Support engine at rear, free rear engine mounting, take out transmission mounting bolts, pull transmission straight back and remove from below.

OVERDRIVE

Overdrive (Cruising Gear):—Warner Type R7C with electrical 'kick-down' control Optl.
See Transmission Section for complete data.

Overdrive Solenoid—Delco-Remy Model 1118004.

Throttle Switch—Adjust switch position on mounting bracket so that contacts close with throttle valve wide open and spring on carburetor throttle valve pulley just starting to compress.

Control Relay—Delco-Remy Model 1116798.

UNIVERSALS

UNIVERSAL JOINT:—Mechanics No. 1½R. Needle bearing type, 1 used (in torque tube at rear of transmission). Tapered coil spring is installed ahead of joint to properly locate joint on drive shaft. NOTE—Universal is slip fit on transmission end and slight press fit on propeller shaft.
See Universals Section for complete data.

REAR AXLE

REAR AXLE:—Own Make. Semi-floating, hypoid gear type with Torque Tube Drive.
See Rear Axle Section for complete data.
Ratio—4.1-1 Std. 4.4-1 with Overdrive.
Backlash—.005-.007". Shim adjustment.

Removal:—Raise rear end of car and support car at body frame (not frame flange) or at bumper brackets. Disconnect brake cables at equalizer and remove brake tube connections. Disconnect stabilizer bar and rear spring and shock absorber mounting brackets from axle (allow springs and shock absorbers to hang from body—do not bend shock absorber rod or bayonet). Disconnect torque tube by removing nuts on forward ends of trunnion bracket mounting studs, move tube and axle back to clear studs, pry universal joint off drive shaft, pull axle assembly out from car. *Refer to Rear Axle Section for "1942 Nash '600' Axle" article for data n Trunnion Bracket installation and adjustment, and shaft bearing data.*

Axle Shaft Removal: Remove wheel and drum, disconnect brake line and cable, remove backing plate mounting bolt nuts, oil seal retainer, backing plate, and bearing adjusting shims. Withdraw shaft and bearing, using care not to drag shaft on oil seal.

Wheel Bearing Adjustment—Shims located between backing plate and flanged end of housing. To adjust, remove wheel and backing plate (above), add or remove shims for endplay. **Endplay** .002-.004".

Rear Suspension:—Coil spring type.
See Rear Axle Section for complete data.

SHOCK ABSORBERS

SHOCK ABSORBERS:—Delco Model 1026-N (front), 1022-BB (rear—4D Sedans), 1022-Z (rear—others). Direct acting, hydraulic types.
See Shock Absorber Section for complete data.

FRONT SUSPENSION

Front Suspension:—Enclosed type with knuckle support and coil spring on kingpin mounted on frame cross-member.
See Front Suspension Section for complete data.

Kingpin Inclination—5½° crosswise.

Caster—0° plus or minus ¼°. Adjustable.

Camber—0° to ½° Positive. Adjustable.

Toe In—0-1/16" measured 10" up from floor. Adjust by turning tube at outer end of each tie rod equally. CAUTION—Tie rod clamp bolts must be down toward ground when adjustment completed to avoid interference with body when wheel raised.

Steering Geometry (Toe Out on Turns)—Inner wheel turned 21° plus ½°, Outer wheel 20°.

STEERING GEAR

Steering Gear: Gemmer Model 250 Worm-and-Roller.
See Steering Gear Section for complete data.

BRAKES

BRAKES:—Service. Lockheed hydraulic, double anchor type. Hand lever applies rear wheel service brakes.
See Brake Section for complete data.

Drums—Cast iron. Diameter 9".

Lining—Molded. Width 1¾". 3/16" thick. Length 20½".

Clearance—.008" toe, .004" heel, for each shoe.

Hand Brake:—See Service brakes above.

HOOD LOCK:—Alligator type hood. Lock button below instrument panel on left side. To raise hood, pull out on lock button (hood will raise slightly), reach under front edge of hood and release safety catch, raise hood.

MODEL IDENTIFICATION

SERIAL NUMBER:—First No. R-384001. Stamped on plate on right frame siderail under engine hood.
Service Serial Number—First number N6-76001. On Caution Plate on left front door hinge pillar post.

ENGINE NUMBER:—Stamped on right side of engine block at front end. First No. same as Serial No.

TUNE-UP

COMPRESSION:—**Ratio**—6.5-1 cast-iron head.
Pressure—125 lbs. at 350 RPM cranking speed.

VACUUM READING:—Steady 18-20" idling at 7 MPH.

FIRING ORDER:—1-5-3-6-2-4. See diagram.

SPARK PLUGS:—AC No. 45. 14 MM. Metric type.
Gaps—.025".
NOTE—Six spark plugs only are used (not Twin Ignition type).

IGNITION: See Coil, Condenser, and Distributor.
Breaker Gap—.020". **Cam Angle**—38° Closed.
Automatic Advance—9° max. at 900 RPM (distr.).
Vacuum Advance—6° (distr.) with 15" vacuum.

IGNITION TIMING: See Ignition Timing.
Std. Setting—4° BTDC. Front flywheel 'IGN' mark aligned with pointer on chain case cover.

CARBURETION: See Carburetor & Carb. Equipment.
Idle Setting—Idle screw ½-1½ turns open. Idle speed 7 MPH.
Float Level—⅜" from edge of cover casting to top of seam on free end of float (invert to check).
Accelerating Pump—Lower hole (Normal setting).
Fuel Pump Pressure: 3½ lbs. maximum.

VALVES: See Valve Timing.
Tappet Clearance:—.015" for all valves with engine hot and idling (may be set .018" max. for sustained high speed driving). NOTE—Cylinder head oil plug not used on 1942 models.

STARTING: See Battery, Starter, Generator, Regulator.

IGNITION

IGNITION SWITCH: Auto-Lite Lock Switch and Cable Assembly No. CE-2260BGS.
Ignition Lock—Briggs & Stratton. B & S No. 45792.
Key Series—N1201 to N1449. **Groove**—No. 15.

COIL: Auto-Lite CE-4662. Service Winding(less switch and cable) CE-3224JS. On dash.
NOTE—One coil only used (not Twin Ignition type).
Ignition Current—2.0 amperes idling, 5 stopped.

CONDENSER: Auto-Lite Part No. IG-2671F. One used.
Capacity—.20-.25 microfarad.

DISTRIBUTOR: Auto-Lite IGS-4205. Single breaker, 6 lobe cam, full automatic advance with auxiliary vacuum spark control. NOTE—No synchronization required (not Twin Ignition system).

Breaker Plate Identification—Maximum vacuum advance limited by slot and marked by number (#6) on breaker plate.
Breaker Gap—Set at .020".
Cam Angle or Dwell—38° closed, 22° open (distr. °).
Breaker Arm Spring Tension—17-20 ounces.
Rotation—Clockwise viewed from above.

Automatic Advance

Distributor Degrees	R.P.M.	Engine Degrees	R.P.M.
Start	275	0	550
2	340	4	680
4	400	8	800
6	600	12	1200
9	900	18	1800

Vacuum Spark Control—Integral type (on distributor, linked directly to breaker plate). Provides additional advance at speeds above idling except when engine accelerated or operated with wide open throttle (spark retarded by return spring in unit).

Vacuum Advance

Distr. Degrees	Eng. Degrees	Vacuum (" of HG)
Start	0°	5"
1°	2°	6⅝"
3°	6°	10"
5°	10°	13⅜"
6°	12°	15"

Removal:—Mounted on right side of engine. To remove, disconnect vacuum line, take out mounting screw, lift distributor assembly off engine.

IGNITION TIMING

IGNITION TIMING:—Setting for all engines as follows:

Flywheel Degrees	Piston Position
4° BTDC.	.0067" BTDC.

To Set Timing—With #1 piston on compression, turn engine over until piston is 4° or .0067" before top dead center, stop when 'IGN' mark on vibration dampener (front flywheel) lines up with pointer on timing chain cover. Loosen advance arm clamp bolt, rotate distributor until points just break, tighten clamp bolt.

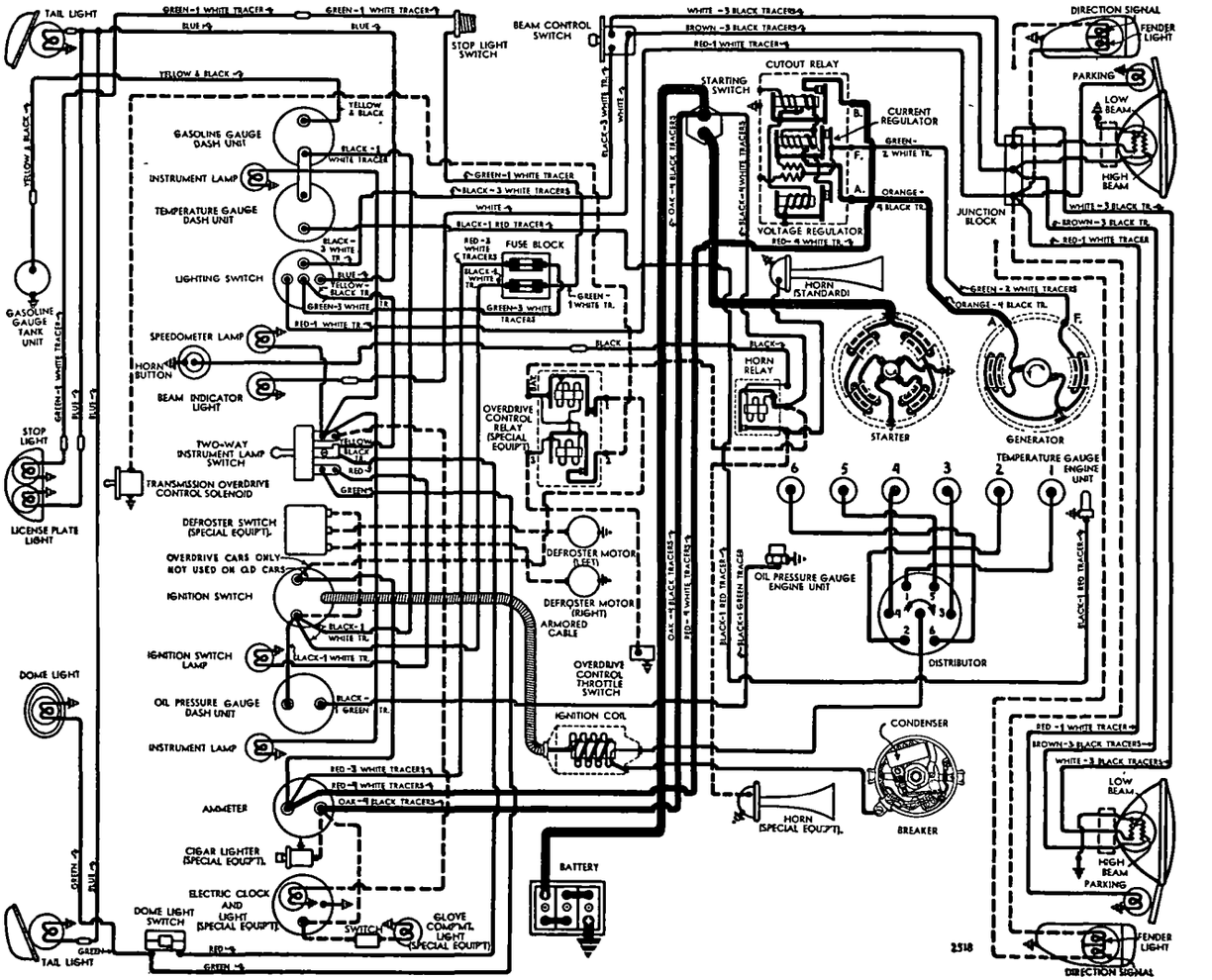

CARBURETOR

CARBURETION:—Carburetor. Carter Type WA-1, Model 464-S (#290 cast on face of flange). Single barrel, 1¼" downdraft type with Carter Climatic Control.

For complete data, refer to Carburetor Index.

Idle Adjustment—With engine warm and running at slow idle speed (choke valve wide open, fast idle inoperative), set throttle stopscrew for 7 MPH idle speed. Turn idle adjusting screw in until engine begins to miss, then turn screw out until engine begins to roll, finally turn screw in until engine fires smoothly. Final setting should be ½-1½ turns open from inner seated position (turning screw in gives leaner mixture). Readjust idle speed.

Accelerator Pump Setting—Pump arm under dust cover at top of carburetor has three holes for pump link engagement. Set as follows:
Upper Hole (maximum stroke)—Cold weather.
Lower Hole (medium stroke)—Moderate weather.
Inner Hole (minimum stroke)—Hot weather.

Float Level—⅜" from edge of cover casting to top of seam on free end of float (invert to check).

Metering Rods & Jets—*Refer to Carburetor Index for Carter Downdraft Carburetor Jet Specification Table.*

Fast Idle:—Integral type (built-in carburetor).
For complete data, refer to Carburetion Equip. Index.

Setting—⅝" clearance between choke valve and air horn (gauge T109-85) with throttle stopscrew against (not on) first step of fast idle cam. Adjust by bending fast idle link offset (Tool T109-41).

Automatic Choke:—Carter Climatic Control.
For complete data, refer to Carburetion Equip. Index.
Setting—Coil housing centered (at index mark).

CARB. EQUIPMENT

Air Cleaner:—AC #1529112 oil-wetted type standard. #1529115 heavy duty oil-bath type optional. Use Replacement Filter Element Assembly: Type #2 (for #1529112), #1542245 (for #1529115).

Fuel Pump:—AC 'W' No. 1537389—Exchange No. 533 diaphragm type fuel pump standard. 'AD' #1535390 fuel-and-vacuum pump optional (std. on cars with Cruising Gear).
For complete data, refer to Carburetion Equip. Index.
Pressure—3½ lbs. maximum (Type 'W').

Gasoline Gauge:—King-Seeley Electric type. K-S No. 40152 (dash unit), 40170 (tank unit).
For complete data, refer to Carburetion Equip. Index.

BATTERY

BATTERY:—Auto-Lite CTL-1-15. 6 volt, 15 plate, 105 ampere hour capacity (20 hour rate).

Starting Capacity—133 amperes for 20 minutes.

Zero Capacity—300 amperes for 3.5 minutes. Five second voltage 4.2 volts.

Grounded Terminal—Positive (+) terminal grounded to body. A separate ground strap is used from the body to the engine.

Dimensions—Length 9 1/16". Height 9". Width 7 1/16".

Location—On right side under front seat.

STARTER

STARTER:—Auto-Lite MAB-4076. Armature MAB-2057.
Drive—Inboard Bendix Type LCD11FX-10.
Rotation—Counter-clockwise at commutator end.
Brush Spring Tension—42-53 ozs. (new brushes).
Cranking Engine—160 RPM, 150-160 amps., 5.2 v.

Performance Data

Torque	R.P.M.	Volts	Amperes
0 ft. lbs.	3700	5.5	60
0.6 "	1910	5.5	100
3.4 "	1100	5.0	200
6.6 "	695	4.5	300
10.15 "	420	4.0	400
15.8 "	Lock	3.0	582
22.5 "	Lock	4.0	775

Removal:—Starter flange mounted on left front face of flywheel housing. To remove, take out flange mounting screws.

Starting Switch:—A-L #SW-4012. Mounted on body floor below clutch pedal. Operated by depressing clutch pedal fully. No adjustment required.

GENERATOR

GENERATOR:—Auto-Lite GDZ-4806A. Armature GDZ-2079F. 2 brush type with Current-Voltage control.

Charging Rate Adjustment—No adjustment at generator. Charging rate controlled by Voltage Regulator and maximum output by Current Regulator. *See Regulator data following.*

Maximum Charging Rate—35 amperes (hot or cold), 8.0 volts, 1900 RPM (generator) and above with load or discharged battery (Current Regulator setting). Actual charging rate controlled by Voltage Regulator and dependent on battery condition.

Performance Data

Cold Amperes	Volts	R.P.M.	Hot Amperes	Volts	R.P.M.
0	6.4	925	0	6.4	1000
4	6.6	1035	4	6.6	1120
8	6.75	1140	8	6.75	1235
12	6.95	1250	12	6.95	1350
16	7.15	1370	16	7.15	1460
20	7.3	1480	20	7.3	1590
24	7.5	1590	24	7.5	1730
28	7.7	1710	28	7.7	1900
32	7.9	1820	32	7.9	2090
35	8.0	1900	35	8.0	2250

Rotation—Counter-clockwise at commutator end.
Brush Spring Tension—53 ozs. max. (new brushes).
Field Current—1.60-1.78 amperes at 6.0 volts.
Motoring Current—4.16-4.60 amperes at 6.0 volts.

Removal:—Generator cradle mounted at left side of engine with fan belt drive. Water pump driven by generator shaft extension. To remove, disconnect water pump, loosen fan belt, remove generator clamp band and lift generator off.

Belt Adjustment:—Adjust whenever belt deflection is over 1½" (when pressed lightly midway between generator and fan pulleys). To adjust, loosen two capscrews on fan bracket, lift fan up (one screw hole slotted) for ¾" belt deflection, tighten screws.

REGULATOR

REGULATOR:—Auto-Lite VRP-4004F-1. Current-Voltage type. Consists of Cutout Relay, vibrating Voltage Regulator, and vibrating Current Regulator in a single case mounted on left side of dash in engine compartment.
For complete data, refer to Electrical Equipment Index.
NOTE—Regulator case cover is sealed. Serviced on exchange basis if seals not broken (to remove cover).

Cutout Relay

Cuts In—6.4-6.6 volts.
Cuts Out—4.1-4.8 volts (approx. 4-6 amps. disch.).
Contact Gap—.015" minimum.
Air Gap—.031-.034" with contacts open (check at hinge end of core).

Voltage Regulator

Setting—7.2-7.5 volts at 70°F. See Electrical Equipment Section for settings at other temperatures.
To Check (without breaking seals)—Connect ammeter in charging line at regulator 'B' terminal (use short heavy leads), voltmeter between 'B' terminal and ground. Operate generator at speed equivalent to 30 MPH., charging fully charged battery, until voltage is steady. Voltage reading should agree with setting given above.
To Adjust (with cover removed)—Change regulator armature spring tension by bending lower spring hanger slightly. See Electrical Equipment Section.
Contact Gap—.012" min. (armature against stop pin).
Air Gap—.048-.052" with contacts just opening.

Current Regulator

Setting—34-36 amperes (marked '35' on the cover).
To Check (without breaking seals)—Connect test meters as for voltage check (above). Operate generator at speed equivalent to 30 MPH. charging battery, turn on car lights and accessories or connect load (bank of headlamp bulbs, etc.) between ammeter and battery so that generator charges at peak rate and Current Regulator operates. Current reading should agree with setting given above. If more than slight excess noted, regulator is defective.
To Adjust (with cover removed)—Same as for Volt-Regulator (above).
Contact Gap & Air Gap—Same as Voltage Regulator.

LIGHTING

LIGHTING:—Headlamps—Hall 'Sealed Beam' type.
For complete data, refer to Electrical Equipment Index.
Headlamp Adjustment—Aim upper beam of each headlamp straight ahead with hot spot centered 3" below lamp center height.
Beam Indicator—Red dot in lower portion f speedometer. Lighted whenever Country (upper) beam in use.

Switches

Lighting—Douglas.
Beam Selector—Douglas.
Instrument—Douglas.

Bulb Specifications

Position	Candlepower	Mazda No.
Headlamps	Sealed Beam	
Parking	1½	55
Instrument	1	51
Beam Indicator	1	51
Speedometer	1½	55
Stop Light	21	1129
Tail	1½	55
Rear License	3	63
Dome	6	81

CONTINUED N NEXT PA E

C NTINUED FR M PRECEDING PA E

MISC. ELECTRICAL

FUSES:—Lighting—30 ampere. On fuse block mounted on left hand side of engine dash.
Accessory—30 ampere. On fuse block.

HORNS:—Delco-Remy Klaxon. Model 1999565 (left horn—low note), Model 1999566 (right horn—high note). Vibrator type, blended tone, operated by horn relay.
NOTE—Single horn with horn relay is standard equipment. For dual horn installation, one horn is added to assembly on car.

Type	Current (at 6 volts)	Air Gap
1999565 (Low Note)	19-21 amperes	.047-.052"
1999566 (High Note)	18-20 amperes	.039-.044"

Horn Relay:—Delco-Remy Model 1116775.
Contact Gap:—.025".
Air Gap—.015" (closed).
Contacts Open—2.75-4.0 volts.

ENGINE

ENGINE CODE NOTE (ORIGINAL BORE, PISTON, & BEARING SIZES):—*See Nash Shop Notes for data.*

ENGINE SPECIFICATIONS:—6 cylinder, valve-in-head type with Iso-thermal fuel intake system (intake manifold cast in cylinder head—water jacketed for temperature control).
Bore—3⅜". Stroke—4⅜".
Displacement—234.8 cubic ins. Rated HP—27.34.
Developed Horsepower—105 at 3400 RPM.
Compression Ratio—6.5-1 cast-iron head.
Compression Pressure—125 lbs. at 350 RPM.
Vacuum Reading—Steady 18-20" idling at 7 MPH.

PISTONS:—Tin-plated, cam-ground, lightweight type.
Removal—Pistons and rods removed from above.
Clearance—.0003-.0009". See Fitting New Pistons.
Original Bore & Piston Sizes:—*See Engine Code Note in Nash Shop Notes for sizes and markings.*
Replacement Pistons:—Furnished std. and .001", .002", .003", .005", .010", .012", .015", .020", .040" oversize.
Fitting New Pistons:—Fit piston by feel. Piston should hold own weight in normal running position ⅓ down in cylinder but should be free when worked by hand (piston and bore must be clean and free from oil when checking fit).
Installing Pistons:—Pin offset 1/16" toward camshaft.

PISTON RINGS:—#1 Compr. (inner edge tapered at top), #2 Compr. (outer edge tapers out at bottom with plain expander installed behind ring), #3 and #4 oil (slotted type with ventilated expander behind ring), all above pin. Drilled oil drain holes in oil ring grooves.

Ring	Width	End Gap	Side Clearance
Compr.	.124"	.010-.015"	.002-.004"
Oil Contr.	.155"	.010-.015"	.002-.004"

Replacement Rings:—*See Nash Shop Notes for data.*

PISTON PIN:—Diameter—.8745". Length—2.804".
Floating type, retained by locking ring at each end.
Pin hole in piston offset toward camshaft.
Pin Fit in Piston—Light push fit.
Pin Fit in Rod Bushing—Select pin for .0001" clearance or light push fit at normal temperature.
Replacement Pins:—Standard, .001", .003" oversize.

CONNECTING ROD:—Length—8¾". Weight—36¼ ozs.
Upper Bearing (Piston Pin Bushing)—Bronze.
Crankpin Journal Diameter—2.002". *See Engine Code Note in Nash Shop Notes for original bearing sizes.*
Lower Bearing—Removable, steel-backed babbitt.
Clearance—.0015-.0025". Sideplay—.008-.012".
Bearing Adjustment:—None (no shims). Replace bearings. Do not file rods or bearing caps. *Refer to Nash Shop Notes for instructions and 'Palnut' data.*
Replacement Bearings:—Std. & .002", .010" undersize.
Installing Rods:—Mark rods and bearing caps before removal and install in same position. Oil hole in lower end of rod must be toward right of engine.

CRANKSHAFT:—7 bearing, counterweighted type. *See Nash Shop Notes for Vibration Dampener data.*
Journal Diameters—2 31/64" all bearings. *See Engine Code Note in Nash Shop Notes for original bearing sizes.*
Bearings—Removable steel-backed, babbitt type.
Clearance—.002-.003".
Bearing Adjustment:—None (no shims). Replace bearings. *Refer to Nash Shop Notes for bearing installation and fitting, replacement main bearing caps, and rear main bearing oil seal data.*
Replacement Bearings:—Std. & .002", .010" undersize.
End Thrust:—Taken by center bearing. Replace bearing to take up excessive endplay. Endplay .004-.006".

CAMSHAFT:—Non-adjustable roller chain drive.
See Nash Shop Notes for Camshaft Removal data.
Bearing Type—Steel-backed, babbitt bushings.
Clearance—.002".
End Thrust:—Taken by front bearing.
Endplay—.004-.006".
Timing Chain:—Whitney No. 49205, Type 35D-60. Duplex type roller chain. Pitch ⅜". Length 60 links.
Camshaft Setting:—Mesh chain with camshaft and crankshaft sprockets turned so that marked tooth on each gear is 45° past (to right—as viewed facing front of engine) top vertical position. With sprockets in this position there should be 9½ links or 19 pins between tooth marks.

VALVES:—	Head Diameter	Stem Diameter	Length
Intake	1¾"	.3725"	5 17/32"
Exhaust	1 19/32"	.3725"	5 17/32"

	Seat Angle	Lift	Stem Clearance
All Valves	45°	11/32"	.002-.004"

Valve Guides:—Press fit in head (positioned by shoulder on guide). Ream new guides for clearance.
Valve Springs:—Double springs used on all valves. Free length 1 21/32" (inner), 2" (outer spring).

	Inner Spring		Outer Spring	
	Pressure	Length	Pressure	Length
Valve Closed	21 lbs.	1 3/8"	38 lbs.	1 11/16"
Valve Open	51 lbs.	1 1/32"	95 lbs.	1 11/32"

Valve Lifters:—Mushroom type. Lifter guide holes in block. Remove from below with camshaft out.

VALVE TIMING

Tappet Clearance:—.015" all valves, engine hot and idling (may be increased to .018" max. for continuous high speed driving). NOTE—Cylinder head oil plug not used on 1942 models.
Valve Timing:—See Camshaft Setting above.
Intake Valves—Open 14° BTDC. Close 60° ALDC.
Exhaust Valves—Open 75° BLDC. Close 31° ATDC.
To Check Valve Timing—With .015" tappet clearance, #1 intake valve opens 14° BTDC with 'DC' mark on vibration dampener at front of engine ⅞" ahead of pointer on chain case cover.

LUBRICATION

LUBRICATION:—Pressure system with gear type oil pump in crankcase (pump driven by separate gear from camshaft with oil delivery up along drive shaft to oil gallery in engine block).
Normal Oil Pressure:—20 lbs. at 20 MPH.
Oil Pressure Regulator:—On oil pump cover. Opens at 30 lbs. Not adjustable.
Oil Pressure Gauge:—King-Seeley Electric. K-S No. 40161 (Dash Unit), No. 6125 (Engine Unit).
See Miscellaneous Section for complete data.
Crankcase Capacity:—6 quarts.

COOLING

COOLING SYSTEM:—Capacity 17 qts. (18 with heater).
Water Pump:—Centrifugal, adjustable packing type.
See Water Pump Section for complete data.
Thermostat:—Fulton or Dole. In cyl. head outlet.
Setting—Starts to open at 160° F.
Temperature Gauge:—King Seeley Electric. K-S No. 40154 (Dash Unit), No. 7000 (Engine Unit).
See Miscellaneous Section for complete data.

CLUTCH

CLUTCH:—Borg & Beck Model 10A7. Assembly No. 950 stamped on cover. Single plate, dry disc type.
See Clutch Section for complete data.
Facings—Spiral-woven type, 2 used. Inside Diameter 7". Outside Diameter 10". Thickness ⅛".
Pedal Adjustment—Pedal travel must be ½". To adjust, install Aligning Pin J-1390 in end of helper spring lever (right end of clutch release shaft), loosen helper spring lever screw on end of clutch release shaft. Loosen locknut and adjust nut on clutch release shaft end of pedal connector link for correct ½" pedal free travel. Use pipe wrench or pliers to turn clutch release shaft to rear to take up all play, see that aligning pin in helper spring lever is against pivot bracket at rear of engine, tighten helper spring lever screw securely.
CAUTION—Pedal adjustment must be made exactly as outlined above to insure correct pedal travel and helper spring operation.
Removal:—Remove transmission (see below). Disconnect clutch pedal linkage, support engine at rear and free rear engine mountings, remove clutch housing and pan. Punchmark flywheel, clutch cover and pressure plate (reassemble to same marks), remove clutch mounting screws, take out clutch.

TRANSMISSION

TRANSMISSION:—Own Make. All helical gear, constant-mesh, synchro-mesh (second & high), sliding gear (low & reverse) with remote shift.
See Transmission Section for complete data.
Transmission Control:—Mechanical steering col. shift.
See Transmission Section for complete data.
Removal:—Disconnect shift rods, speedometer cable, overdrive control cable & wires (if used), and front universal. Remove 2 right transmission mounting screws and install pilot studs (to support transmission during removal), remove remaining mounting screws, pull transmission straight back and remove.

OVERDRIVE

Overdrive (Cruising Gear):—Warner Model AS1-R7C, Type R7C with electrical 'kick-down' control.
See Transmission Section for complete data.

Overdrive Solenoid—Delco-Remy Model 1118004.

Throttle Switch Setting—Adjust switch position on mounting bracket so that contacts just close with throttle wide open when spring on carburetor throttle shaft pulley begins to compress.

Control Relay—Delco-Remy Model 1116798.

UNIVERSALS

UNIVERSAL JOINTS:—Mechanics Type 2CR. Roller bearing type. 2 used.
See Universals Section for complete data.

REAR AXLE

REAR AXLE:—Own Make. Semi-floating, hypoid gear type with Hotchkiss drive.
See Rear Axle Section for complete data.

Ratio—4.1-1 Standard, 4.4-1 with Overdrive.
Backlash—.005-.007". Shim adjustment.

Removal:—Hoist rear end of car, disconnect brake cables at rear clevises. Remove brake tubes. Disconnect rear universal. Remove rear spring U-bolts and withdraw axle from car.

Axle Shaft Removal:—Remove wheel and drum, disconnect brake line and cable, remove backing plate mounting bolt nuts, oil seal retainer, backing plate, and bearing adjusting shims. Withdraw shaft and bearing, using care not to drag shaft on oil seal.

Wheel Bearing Adjustment—Shims located between backing plate and flanged end of housing. To adjust, remove wheel and backing plate (above), add or remove shims for endplay. **Endplay** .002-.004".

SHOCK ABSORBERS

SHOCK ABSORBERS:—Delco Model 1016-E (front), 1023-BB (rear). Direct acting, hydraulic type.
See Shock Absorber Section for complete data.

FRONT SUSPENSION

Front Suspension:—Independent, linked parallelogram type with coil springs.
See Front Suspension Section for complete data.

Kingpin Inclination—4½° crosswise.
Caster—0° to ½° Negative. 'C' washer adjustment.
Camber—Pos. ¼° to ½°. 'C' washer adjustment.
Toe In—1/32-3/32" measured 10" up from floor.
Steering Geometry (Toe out on turns)—Inner wheel turned 21° plus ¾°, outer wheel exactly 20°.

STEERING GEAR

Steering Gear: Gemmer Model 305 Worm-and-Roller type with "push-pull" adjustments.
See Steering Gear Section for complete data.

BRAKES

BRAKES:—Service—Bendix hydraulic, duo-servo, single anchor type, without Eccentric Adjustment. Hand lever applies rear wheel service brakes.
See Brake Section for complete data.

Drums—Cast iron. Diameter 10".
Lining—Moulded type. Width 2". Thickness 3/16". Length 22" per wheel.
Clearance—.015" at each end of secondary (rear) shoes with primary shoes forced out against drum.

Hand Brakes:—See Service Brakes above.

HOOD LOCK:—Alligator type hood. Lock button below instrument panel on left side. To raise hood, pull out on lock button (hood will raise slightly), reach under front edge of hood and release safety catch, raise hood.

MODEL IDENTIFICATION

SERIAL NUMBER:—First No. B-114001. Stamped on plate on right frame siderail under engine hood. **Service Serial Number**—First number N8-21001. On Caution Plate on left front door hinge pillar post.

ENGINE NUMBER:—Stamped on right side of engine block at front end. First No. same as Serial No.

TUNE-UP

COMPRESSION:—**Ratio**—6.6-1 cast-iron head.
Pressure—125 lbs. at 350 RPM. cranking speed.

VACUUM READING:—Steady 18-20" idling at 7 MPH.

FIRING ORDER:—1-6-2-5-8-3-7-4. See diagram.

SPARK PLUGS:—AC No. 45. 14 MM. Metric type.
Gaps—.025".
NOTE—Eight spark plugs only are used (not Twin Ignition type).

IGNITION: See Coil, Condenser, and Distributor.
Breaker Gap—.017". **Cam Angle**—27° Closed.
Automatic Advance—12½°max.at 1900 RPM(distr.).
Vacuum Advance—6° (distr.) with 17½" vacuum.

IGNITION TIMING: See Ignition Timing.
Std. Setting—7° BTDC. Vibration dampener mark 'IGN' aligned with pointer on chain case cover.

CARBURETION: See Carburetor & Carb. Equipment.
Idle Setting—Idle screws ¼-1¼ turns open. Idle speed 7 MPH.
Float Level—3/16" from top of float to machined surface of cover (remove gasket, invert to check).
Accelerating Pump—Lower hole (Summer), upper (Winter).
Fuel Pump Pressure: 3½ lbs. maximum.

VALVES: See Valve Timing.
Tappet Clearance:—.015" for all valves with engine hot and idling (may be set .018" max. for sustained high speed driving).

STARTING: See Battery, Starter, Generator, Regulator.

IGNITION

IGNITION SWITCH: Auto-Lite Lock Switch and Cable Assembly No. CE-2260BGS.
Ignition Lock—Briggs & Stratton. B & S No. 45792.
Key Series—N1201 to N1449. **Groove**—No. 15.

COIL: Auto-Lite CE-4662. Service winding (less switch & cable) CE-3224JS. On engine dash.
NOTE—One coil only used (not Twin Ignition type).
Ignition Current—2 amperes idling, 5 stopped.

CONDENSER: Auto-Lite Part No. IG-2671G. One used.
Capacity—.20-.25 microfarad.

DISTRIBUTOR: Auto-Lite IGT-4202. Single breaker, 8 lobe cam, full automatic advance with auxiliary vacuum spark control. NOTE—No synchronization required (not Twin Ignition system).

Breaker Plate Identification—Maximum vacuum advance limited by slot and marked by number (#6) on breaker plate.
Breaker Gap—Set at .017".
Cam Angle or Dwell—27° closed, 18° open (distr. °).
Breaker Arm Spring Tension—17-20 ounces.
Rotation—Clockwise viewed from the top.

Automatic Advance

Distributor Degrees	R.P.M.	Engine Degrees	R.P.M.
Start	250	0	500
2	310	4	620
5	400	10	800
9	1200	18	2400
12.5	1900	25	2800

Vacuum Spark Control—Integral type (on distributor, linked directly to breaker plate). Provides additional advance at speeds above idling except when engine accelerated or operated with wide open throttle (spark retarded by return spring in unit).

Vacuum Advance

Distr. Degrees	Eng. Degrees	Vacuum (" of HG)
Start	0°	14"
1°	2°	14⅝"
3°	6°	15¾"
5°	10°	16⅞"
6°	12°	17½"

Removal:—Mounted on right side of engine. To remove, disconnect vacum line, take out mounting screw, lift distributor assembly off engine.

Installation Note—When installing distributor, crank engine to firing position for #1 cylinder (piston 7° BTDC—'IGN' mark on vibration dampener in line with pointer on timing chain case cover), see that oil pump and distributor drive gear meshed with camshaft gear so that oil pump drive pin (at lower end of distributor drive shaft) is crossways of the engine.

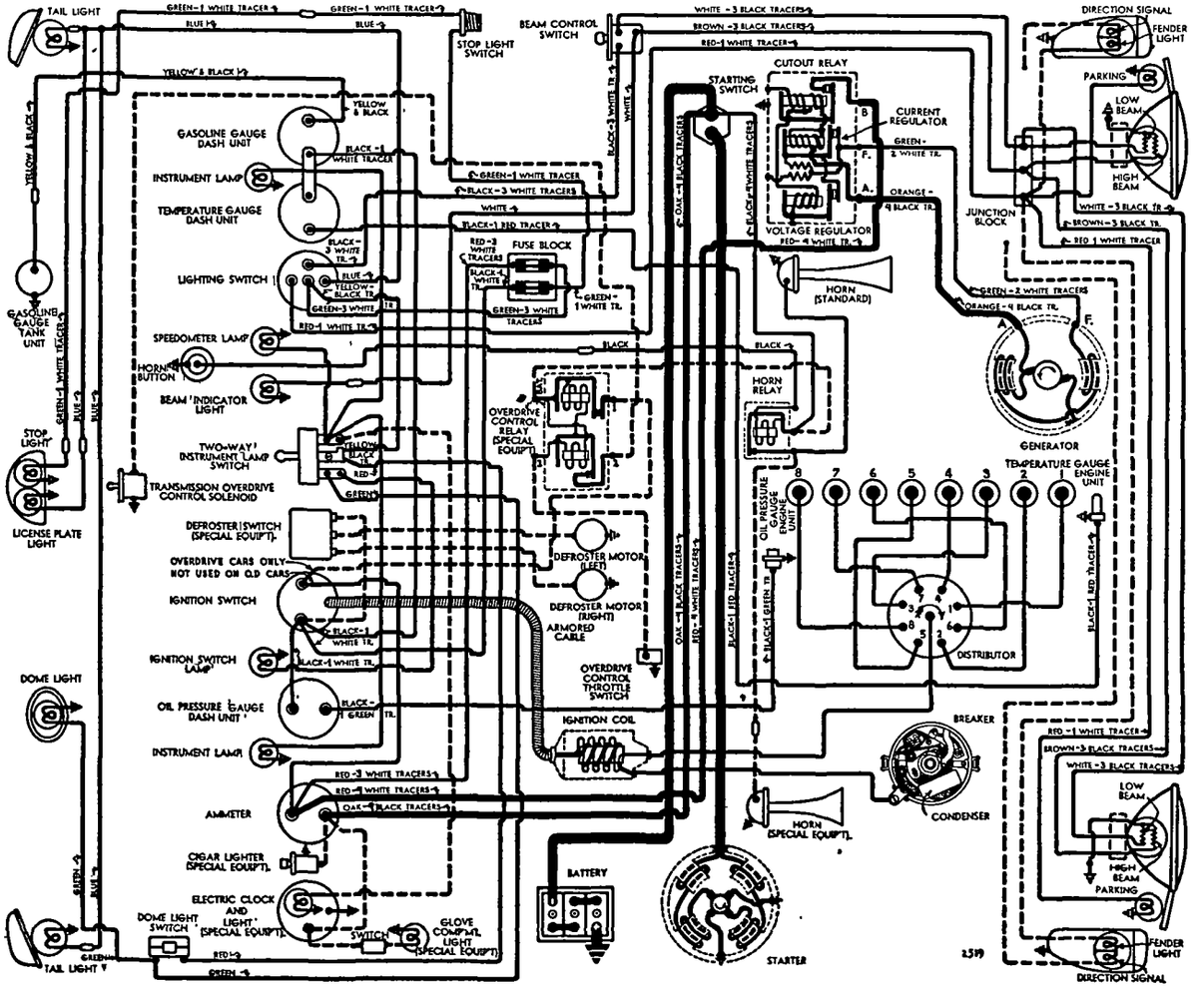

IGNITION TIMING

IGNITION TIMING:—Setting for all engines as follows:

Flywheel Degrees	Piston Position
7° BTDC.	.0197" BTDC.

To Set Timing—With #1 piston on compression, turn engine over until piston is 7° or .0197" before top dead center, stop when 'IGN' mark on vibration dampener (front flywheel) lines up with pointer on timing chain cover. Loosen advance arm clamp bolt, rotate distributor until points just break, tighten clamp bolt.

CARBURETOR

CARBURETION:—**Carburetor.** Carter Type WDO, Model 538-S (#397 cast on face of flange). 1" dual downdraft type with Carter Climatic Control.

For complete data, refer to Carburetor Index.

Idle Adjustment—With engine warm and running at slow idle speed (choke valve wide open, fast idle inoperative), set throttle stopscrew for 7 MPH idle speed. Turn each idle adjusting screw (in succession) in until engine begins to miss, then turn screws out until engine begins to roll, finally turn screws in until engine fires smoothly. Final setting for each screw should be ¼-1¼ turns open from inner seated position (turning screws in gives leaner mixture). Readjust idle speed.

Accelerating Pump—Pump arm under dust cover at top of carburetor has two holes for pump link engagement. Set as follows:
Upper Hole (maximum stroke)—Cold weather.
Lower Hole (minimum stroke)—Hot weather.

Float Level—3/16" from top of float to machined surface of bowl cover (remove gasket and invert cover to check).

Metering Rods & Jets—***Refer to Carburetor Index for Carter Downdraft Carburetor Jet Specification Table.***

Fast Idle:—Integral type (built-in carburetor).

For complete data, refer to Carburetion Equip. Index.

Setting—.015" throttle opening (gauge T109-44) with choke valve closed and fast idle screw turned in to contact high step of fast idle cam.

Automatic Choke:—Carter Climatic Control.

For complete data, refer to Carburetion Equip. Index.

Setting—Coil housing centered (at index mark).

CARB. EQUIPMENT

Air Cleaner:—AC #1529113 oil-wetted type standard. #1542034 heavy duty oil-bath type optional. Use Replacement Filter Element Assembly: Type #5 (for #1529113), #1542245 (for #1542034).

Fuel Pump:—AC 'W' No. 1537413—Exchange No. 534 diaphragm type fuel pump standard. 'AD' #1523644 Exchange No. 500, fuel-and-vacuum pump optl. (std. on cars with Cruising Gear).

For complete data, refer to Carburetion Equip. Index.

Pressure—3½ lbs. maximum (Type 'W').

Gasoline Gauge:—King-Seeley Electric type. K-S No. 40152 (dash unit), 40170 (tank unit).

For complete data, refer to Carburetion Equip. Index.

BATTERY

BATTERY:—**Auto-Lite CTL-2-17.** 6 volt, 17 plate, 120 ampere hour capacity (20 hour rate).

Starting Capacity—152 amperes for 20 minutes.

Zero Capacity—300 amperes for 4.5 minutes. Five second voltage 4.4 volts.

Grounded Terminal—Positive (+) terminal grounded to body. A separate ground strap is used from the body to the engine.

Dimensions—Length 10 5/16". Width 7 1/16". Height 9".

Location—On right side under front seat.

STARTER

STARTER:—**Auto-Lite MAB-4104. Armature MAB-2057.**

Drive—Inboard Bendix Type LCD11FX-10.

Rotation—Counter-clockwise at commutator end.

Brush Spring Tension—42-53 ozs. (new brushes).

Cranking Engine—160 RPM, 150-160 amps., 5.2 v.

Performance Data

Torque	R.P.M.	Volts	Amperes
0 ft. lbs.	3700	5.5	60
0.6 "	1910	5.5	100
3.4 "	1100	5.0	200
6.6 "	695	4.5	300
10.15 "	420	4.0	400
15.8 "	Lock	3.0	582
22.5 "	Lock	4.0	775

Removal:—Starter flange mounted on right front face of flywheel housing. To remove, take out flange mounting screws.

Starting Switch:—A-L #SW-4012. Mounted on body floor below clutch pedal. Operated by depressing clutch pedal fully. No adjustment required.

GENERATOR

GENERATOR:—**Auto-Lite GDZ-4803B. Armature GDZ-2079F.** 2 brush type with Current-Voltage control.

Charging Rate Adjustment—No adjustment at generator. Charging rate controlled by Voltage Regulator and maximum output by Current Regulator. ***See Regulator data following.***

Maximum Charging Rate—35 amperes (hot or cold), 8.0 volts, 1900 RPM (generator) and above with load or discharged battery (Current Regulator setting). Actual charging rate controlled by Voltage Regulator and dependent on battery condition.

Performance Data

Cold			Hot		
Amperes	Volts	R.P.M.	Amperes	Volts	R.P.M.
0	6.4	925	0	6.4	1000
4	6.6	1035	4	6.6	1120
8	6.75	1140	8	6.75	1235
12	6.95	1250	12	6.95	1350
16	7.15	1370	16	7.15	1460
20	7.3	1480	20	7.3	1590
24	7.5	1590	24	7.5	1730
28	7.7	1710	28	7.7	1900
32	7.9	1820	32	7.9	2090
35	8.0	1900	35	8.0	2250

Rotation—Counter-clockwise at commutator end.

Brush Spring Tension—53 ozs. max. (new brushes).

Field Current—1.60-1.78 amperes at 6.0 volts.

Motoring Current—4.16-4.60 amperes at 6.0 volts.

Removal:—Generator cradle mounted at left side of engine with fan belt drive. Water pump driven by generator shaft extension. To remove, disconnect water pump, loosen fan belt, remove generator clamp band and lift generator off.

Belt Adjustment:—Adjust whenever belt deflection is over 1½" (when pressed lightly midway between generator and fan pulleys). To adjust, loosen two capscrews on fan bracket, lift fan up (one screw hole slotted) for ¾" belt deflection, tighten screws.

REGULATOR

REGULATOR:—**Auto-Lite VRP-4004F-1. Current-Voltage type.** Consists of Cutout Relay, vibrating Voltage Regulator, and vibrating Current Regulator in a single case mounted on left side of dash in engine compartment.

For complete data, refer to Electrical Equipment Index.

NOTE—Regulator case cover is sealed. Serviced on exchange basis if seals not broken (to remove cover).

Cutout Relay

Cuts In—6.4-6.6 volts.

Cuts Out—4.1-4.8 volts (approx. 4-6 amps. disch.).

Contact Gap—.015" minimum.

Air Gap—.031-.034" with contacts open (check at hinge end of core).

Voltage Regulator

Setting—7.2-7.5 volts at 70°F. See Electrical Equipment Section for settings at other temperatures.

To Check (without breaking seals)—Connect ammeter in charging line at regulator 'B' terminal (use short heavy leads), voltmeter between 'B' terminal and ground. Operate generator at speed equivalent to 30 MPH., charging fully charged battery, until voltage is steady. Voltage reading should agree with setting given above.

To Adjust (with cover removed)—Change regulator armature spring tension by bending lower spring hanger slightly. See Electrical Equipment Section.

Contact Gap—.012" min. (armature against stop pin).

Air Gap—.048-.052" with contacts just opening.

Current Regulator

Setting—34-36 amperes (marked '35' on the cover).

To Check (without breaking seals)—Connect test meters as for voltage check (above). Operate generator at speed equivalent to 30 MPH. charging battery, turn on car lights and accessories or connect load (bank of headlamp bulbs, etc.) between ammeter and battery so that generator charges at peak rate and Current Regulator operates. Current reading should agree with setting given above. If more than slight excess noted, regulator is defective.

To Adjust (with cover removed)—Same as for Volt-Regulator (above).

Contact Gap & Air Gap—Same as Voltage Regulator.

CONTINUED ON NEXT PAGE

C NTINUED FROM PRECEDIN PAGE

LIGHTING

LIGHTING:—Headlamps—Hall 'Sealed Beam' type. *For complete data, refer to Electrical Equipment Index.*

Headlamp Adjustment—Aim upper beam of each headlamp straight ahead with hot spot centered 3" below lamp center height.

Beam Indicator—Red dot in lower portion of speedometer. Lighted whenever Country (upper) beam in use.

Switches

Lighting—Douglas.
Beam Selector—Douglas.
Instrument—Douglas.

Bulb Specifications

Position	Candlepower	Mazda No.
Headlamps	Sealed Beam	
Parking	1½	55
Instrument	1	51
Beam Indicator	1	51
Speedometer	1½	55
Stop Light	21	1129
Tail	1½	55
Rear License	3	63
Dome	6	81

MISC. ELECTRICAL

FUSES:—Lighting—30 ampere. On fuse block mounted on left hand side of engine dash.

Accessory—30 ampere. On fuse block.

HORNS:—Delco-Remy Klaxon. Model 1999565 (left horn—low note), Model 1999566 (right horn—high note). Vibrator type, blended tone, operated by horn relay.

NOTE—Single horn with horn relay is standard equipment. For dual horn installation, one horn is added to assembly on car.

Type	Current (at 6 volts)	Air Gap
1999565 (Low Note)	19-21 amperes	.047-.052"
1999566 (High Note)	18-20 amperes	.039-.044"

Horn Relay:—Delco-Remy Model 1116775.
Contact Gap:—.025".
Air Gap—.015" (closed).
Contacts Open—2.75-4.0 volts.

ENGINE

ENGINE CODE NOTE (ORIGINAL BORE, PISTON, & BEARING SIZES):—*See Nash Shop Notes for data.*

ENGINE SPECIFICATIONS:—8 cylinder, valve-in-head type with Iso-thermal fuel intake system (intake manifold cast in cylinder head—water jacketed for temperature control).
Bore—3⅛". **Stroke**—4¼".
Displacement—260.8 cubic ins. **Rated HP**—31.25.
Developed Horsepower—115 at 3400 RPM.
Compression Ratio—6.6-1 cast-iron head.
Compression Pressure—125 lbs. at 350 RPM.
Vacuum Reading—Steady 18-20" idling at 7 MPH.

PISTONS:—Nelson Bohnalite, aluminum alloy, Invar strut, tin-plated, split skirt type.
Weight—16 ozs. (stripped). **Length**—3 11/16".
Removal—Pistons and rods removed from below.
Clearance—Approximately .002".

Original Bore & Piston Sizes:—*See Engine Code Note in Nash Shop Notes for sizes and markings.*

Replacement Pistons:—Furnished std. and .001", .002", .003", .005", .010", .012", .015", .020", .040" oversize.

Fitting New Pistons:—Use .0025" dry (not oiled) feeler between piston and wall on side opposite slot at right angles to pin hole. Pull to withdraw feeler 8-15 lbs. with piston at room temperature.

Installing Pistons:—Pin offset toward camshaft. Slot toward left (trademark in piston toward front).

PISTON RINGS:—#1 Compr. (inner edge tapered at top), #2 Compr. (outer edge tapers out at bottom with plain expander installed behind ring), #3 and #4 oil (slotted type with ventilated expander behind ring), all above pin. Drilled oil drain holes in oil ring grooves.

Ring	Width	End Gap	Side Clearance
Compr. (both)	.124"	.010-.015"	.002-.004"
Oil Cont. (Upper)	.124"	.010-.015"	.002-.004"
Oil Cont. (Lower)	.1865"	.010-.015"	.002-.004"

Replacement Rings:—*See Nash Shop Notes for data.*

PISTON PIN:—Diameter—.8747". **Length**—2.574". Floating type, retained by locking ring at each end. Pin hole in piston offset toward camshaft.
Pin Fit in Piston—Light push fit (piston at 200°F.).
Pin Fit in Rod Bushing—Select pin for .0001" clearance or light push fit at normal temperature.

Replacement Pins:—Standard, .001", .003" oversize.

CONNECTING ROD:—Length—8¾". **Weight**—34 ozs.
Upper Bearing (Piston Pin Bushing)—Bronze.
Crankpin Journal Diameter—2.002". *See Engine Code Note in Nash Shop Notes for original bearing sizes.*
Lower Bearing—Removable, steel-backed babbitt.
Clearance—.0015-.0025". **Sideplay**—.008-.012".

Bearing Adjustment:—None (no shims). Replace bearings. Do not file rods or bearing caps. *Refer to Nash Shop Notes for instructions and 'Palnut' data.*

Replacement Bearings:—Std. & .002", .010" undersize.

Installing Rods:—Mark rods and bearing caps before removal and install in same position. Oil hole in lower end of rod must be toward right of engine.

CRANKSHAFT:—Nine bearing. No counterweights. *See Nash Shop Notes for Vibration Dampener data.*
Journal Diameters—2 31/64" all bearings. *See Engine Code Note in Nash Shop Notes for original bearing sizes.*
Bearings—Removable steel-backed, babbitt type.
Clearance—.002-.003".

Bearing Adjustment:—None (no shims). Replace bearings. *Refer to Nash Shop Notes for bearing installation and fitting, replacement main bearing caps, and rear main bearing oil seal data.*

Replacement Bearings:—Std. & .002", .010" undersize.

End Thrust:—Taken by center bearing. Replace bearing to take up excessive endplay. **Endplay** .004-.006".

CAMSHAFT:—Non-adjustable roller chain drive. *See Nash Shop Notes for Camshaft Removal data.*
Bearing Type—Steel-backed, babbitt bushings.
Clearance—.002".

End Thrust:—Taken by front bearing.
Endplay—.004-.006".

Timing Chain:—Diamond double roller type. Width 9/16". Pitch ⅜". Length 23¼" or 62 links.

Camshaft Setting:—Mesh chain with camshaft and crankshaft sprockets turned so that marked tooth on each gear is 45° past (to right—as viewed facing front of engine) top vertical position. With sprockets in this position there should be 10 links or 20 pins between tooth marks.

VALVES:—	Head Diameter	Stem Diameter	Length
Intake	1 21/32"	.3725"	5½"
Exhaust	1 15/32"	.3725"	5½"

	Seat Angle	Lift	Stem Clearance
All Valves	45°	11/32"	.002-.004"

Valve Guides:—Press fit in head (positioned by shoulder on guide). Ream new guides for clearance.

Valve Springs:—Double springs used on all valves. Free length 1 21/32" (inner), 2" (outer spring).

	Inner Spring Pressure	Inner Spring Length	Outer Spring Pressure	Outer Spring Length
Valve Closed	21 lbs.	1 3/8"	38 lbs.	1 11/16"
Valve Open	51 lbs.	1 1/32"	95 lbs.	1 11/32"

Valve Lifters:—Mushroom type. Lifter guide holes in block. Remove from below with camshaft out.

VALVE TIMING

Tappet Clearance:—.015" all valves, engine hot and idling (may be increased to .018" max. for continuous high speed driving).

Valve Timing:—See Camshaft Setting above.
Intake Valves—Open 10½° BTDC. Close 63½° ALDC.
Exhaust Valves—Open 69½° BLDC. Close 35½° ATDC.
To Check Valve Timing—With .015" tappet clearance, #1 intake valve opens 10½° BTDC with 'DC' mark on vibration dampener at front of engine 7/16" ahead of pointer on chain case cover.

LUBRICATION

LUBRICATION:—Pressure system. Gear type oil pump in crankcase.

Normal Oil Pressure:—20 lbs. at 20 MPH.

Oil Pressure Regulator:—On oil pump cover. Opens at 30 lbs. Not adjustable.

Oil Pressure Gauge:—King-Seeley Electric. K-S No. 40161 (Dash Unit), No. 6125 (Engine Unit). *See Miscellaneous Section for complete data.*

Crankcase Capacity:—7 quarts.

COOLING

COOLING SYSTEM:—Capacity 16 qts. (17 with heater).

Water Pump:—Centrifugal, adjustable packing type. *See Water Pump Section for complete data.*

Thermostat:—Fulton or Dole. In cyl. head outlet.
Setting—Starts to open at 160° F.

Temperature Gauge:—King Seeley Electric. K-S No. 40154 (Dash Unit), No. 7000 (Engine Unit). *See Miscellaneous Section for complete data.*

CLUTCH

CLUTCH:—Borg & Beck Model 10A7. Assembly No. 950 stamped on cover. Single plate, dry disc type. *See Clutch Section for complete data.*

Facings—Spiral-woven type, 2 used. Inside Diameter 7". Outside Diameter 10". Thickness ⅛".

Pedal Adjustment—Pedal travel must b ½". To adjust, install Aligning Pin J-1390 in end of helper spring lever (right end of clutch release shaft), loosen helper spring lever screw on end of clutch

release shaft. Loosen locknut and adjust nut on clutch release shaft end of pedal connector link for correct ½" pedal free travel. Use pipe wrench or pliers to turn clutch release shaft to rear to take up all play, see that aligning pin in helper spring lever is against pivot bracket at rear of engine, tighten helper spring lever screw securely.
CAUTION—Pedal adjustment must be made exactly as outlined above to insure correct pedal travel and helper spring operation.

Removal:—Remove transmission (see below). Disconnect clutch pedal linkage, support engine at rear and free rear engine mountings, remove clutch housing and pan. Punchmark flywheel, clutch cover and pressure plate (reassemble to same marks), remove clutch mounting screws, take out clutch.

TRANSMISSION

TRANSMISSION:—Own Make. All helical gear, constant-mesh, synchro-mesh (second & high), sliding gear (low & reverse) with remote shift.
See Transmission Section for complete data.

Transmission Control:—Mechanical steering col. shift.
See Transmission Section for complete data.

Removal:—Disconnect shift rods, speedometer cable, overdrive control cable & wires (if used), and front universal. Remove 2 right transmission mounting screws and install pilot studs (to support transmission during removal), remove remaining mounting screws, pull transmission straight back and remove.

OVERDRIVE

Overdrive (Cruising Gear):—Warner Model AS1-R7C, Type R7C with electrical 'kick-down' control.
See Transmission Section for complete data.

Overdrive Solenoid—Delco-Remy Model 1118004.

Throttle Switch Setting—Adjust switch position on mounting bracket so that contacts just close with throttle wide open when spring on carburetor throttle shaft pulley begins to compress.

Control Relay—Delco-Remy Model 1116798.

UNIVERSALS

UNIVERSAL JOINTS:—Mechanics Type 2CR. Roller bearing type. 2 used.
See Universals Section for complete data.

REAR AXLE

REAR AXLE:—Own Make. Semi-floating, hypoid gear type with Hotchkiss drive.
See Rear Axle Section for complete data.

Ratio—4.1-1 Standard, 4.4-1 with Overdrive.

Backlash—.005-.007". Shim adjustment.

Removal:—Hoist rear end of car, disconnect brake cables at rear clevises. Remove brake tubes. Disconnect rear universal. Remove rear spring U-bolts and withdraw axle from car.

Axle Shaft Removal:—Remove wheel and drum, disconnect brake line and cable, remove backing plate mounting bolt nuts, oil seal retainer, backing plate, and bearing adjusting shims. Withdraw shaft and bearing, using care not to drag shaft on oil seal.

Wheel Bearing Adjustment—Shims located between backing plate and flanged end of housing. To adjust, remove wheel and backing plate (above), add or remove shims for endplay. Endplay .002-.004".

SHOCK ABSORBERS

SHOCK ABSORBERS:—Delco Model 1016-E (front), 1023-BB (rear). Direct acting, hydraulic type.
See Shock Absorber Section for complete data.

FRONT SUSPENSION

Front Suspension:—Independent, linked parallelogram type with coil springs.
See Front Suspension Section for complete data.

Kingpin Inclination—4½° crosswise.

Caster—0° to ½° Negative. 'C' washer adjustment.

Camber—Pos. ¼° to ½°. 'C' washer adjustment.

Toe In—1/32-3/32" measured 10" up from floor.

Steering Geometry (Toe out on turns)—Inner wheel turned 21° plus ¾°, outer wheel exactly 20°.

STEERING GEAR

Steering Gear: Gemmer Model 335 Worm-and-Roller type with "push-pull" adjustments.
See Steering Gear Section for complete data.

BRAKES

BRAKES:—Service—Bendix hydraulic, duo-servo, single anchor type, without Eccentric Adjustment. Hand lever applies rear wheel service brakes.
See Brake Section for complete data.

Drums—Cast iron. Diameter 10".

Lining—Moulded type. Width 2". Thickness 3/16". Length 22" per wheel.

Clearance—.015" at each end of secondary (rear) shoes with primary shoes forced out against drum.

Hand Brakes:—See Service Brakes above.

►**1948 ELECTRICAL EQUIPMENT NOTE:** Both Auto-Lite and Delco-Remy electrical units are used.

HOOD LOCK: Alligator hood. Release instrument panel button and safety catch under hood nose.

MODEL IDENTIFICATION

SERIAL NUMBER: On plate on right body sill brace under engine hood.
1946 Numbers—K-77701 Up.
1947 Numbers—K-136001 Up.
1948 Numbers—K-196901 Up.

Service Serial Number (4640 only): N4-78001 Up. On plate on left front door hinge pillar post.

ENGINE NUMBER: Stamped on left side of engine block at front end.
1947 Numbers—KE-136001 Up.
1948 Numbers—KE-55001 Up.

TUNE-UP

COMPRESSION PRESSURE: 120 lbs. at 350 RPM.

VACUUM READING: Steady 18-21" idling at 7 to 9 MPH. or 400-500 RPM.

FIRING ORDER: 1-5-3-6-2-4.

SPARK PLUG GAPS: .025".
Plug Type—Auto-Lite Type A5. 14 mm. Metric.

IGNITION: ***See Coil, Condenser, and Distributor.***
Breaker Gap—.020" Limits .018-.022" (Auto-Lite), .018-.024" (Delco-Remy).
Cam Angle or Dwell—35° Closed, 25° Open (Auto-Lite & Delco-Remy).
Breaker Arm Spring Tension—17-20 ozs. (Auto-Lite), 17-21 ozs. (Delco-Remy).
Automatic & Vacuum Advance—***See Distributor.***

IGNITION TIMING: TDC. (At top dead center).
Timing Procedure—***See Ignition Timing.***
Timing Mark—"IGN/DC" mark on vibration dampener in line with pointer screw on timing case cover.
Octane Selector—Set to give slight ping when accelerating with wide open throttle at 10-15 MPH.

CARBURETION: ***See Carburetor & Carb. Equipment.***
Idle Setting—Idle screw ('46-47) 1¼-2¼, ('48) ¾-1¾ turns open. One screw—turning screw out gives richer mixture.
Idle Speed—7-10 MPH.
Float Level—½" from top of projection on underside of bowl cover to top of seam on free end of float (invert bowl cover and float to check level).
Accelerating Pump—('46-47) No seasonal adjus'mt. ('48) Medium stroke (lower, outer hole) Normal.
Fuel Pump Pressure—3½ lbs. maximum.

VALVE TAPPET CLEARANCE: .015" All Valves, Hot.
NOTE—Tappet adjusting screws self-locking type.
Valve Timing Check—See Valve Timing.

STARTING: ***See Battery, Starter, Generator, Regulator.***

IGNITION
DELCO-REMY

IGNITION SWITCH: Delco-Remy No. 1116460. No armored cable.
Ignition Lock—Briggs & Stratton No. 85853.
Key Series—5 digits. **Groove**—No. 1.

COIL: Delco-Remy No. 1115328. Mounted on engine.
Ignition Current—2 amperes idling, 5 stopped.

CONDENSER: Delco-Remy Part No. 1869704.
Capacity—.18-.23 microfarad.

DISTRIBUTOR: Delco-Remy No. 1112351. Full automatic advance type with separate vacuum spark control and octane selector adjustment.
Breaker Gap—.020". Limits .018-.024".
Cam Angle—35° closed, 25° open.
Breaker Arm Spring Tension—17-21 ounces.
Rotation—Counter-clockwise viewed from above.

Automatic Advance (Delco-Remy)

Degress Distr.	R.P.M.	Degress Eng.	R.P.M.
Start	300	2	600
5½	400	11	800
12	1400	24	2800

Vacuum Spark Control: Delco-Remy No. 1116045. Separate unit mounted on hold-down plate and linked to advance arm. Provides additional advance at speeds above idling except when engine accelerated or operated with wide open throttle when spark retarded by return spring within unit. Plunger Travel 23/64".

Vacuum Advance (Delco-Remy)

Distr. Degrees	Eng. Degrees	Vacuum (" of HG)
Start	0°	3-5"
8½°	17°	13-17"

Distributor Removal: ***See Auto-Lite Distr. (following).***

IGNITION
AUT -LITE

IGNITION SWITCH: Mitchellock Type 24-B, No. E-10230. Connected to coil by armored cable.

COIL: 1946-47 Auto-Lite No. IG-4677. Service Coil (less switch & cable) IG-3224JS. On dash.
1948—Auto-Lite No. CE-6001. Mounted on engine.
Ignition Current—2 amperes idling, 5 stopped.

CONDENSER: Auto-Lite (1946-47) IGB-1025J (IGW distr.). (1948) IG-2671 (IGC distributor).
Capacity—.20-.25 microfarad.

DISTRIBUTOR: 1946-47 Auto-Lite IGW-4184 or 4184A, 1948 Auto-Lite IGC-4512. Full automatic advance type with vacuum spark control and octane selector adjustment.
Breaker Gap—.020". Limits .018-.022".
Cam Angle or Dwell—35° closed, 25° open.
Breaker Arm Spring Tension—17-20 ounces.
Rotation—Counter-clockwise viewed from above.

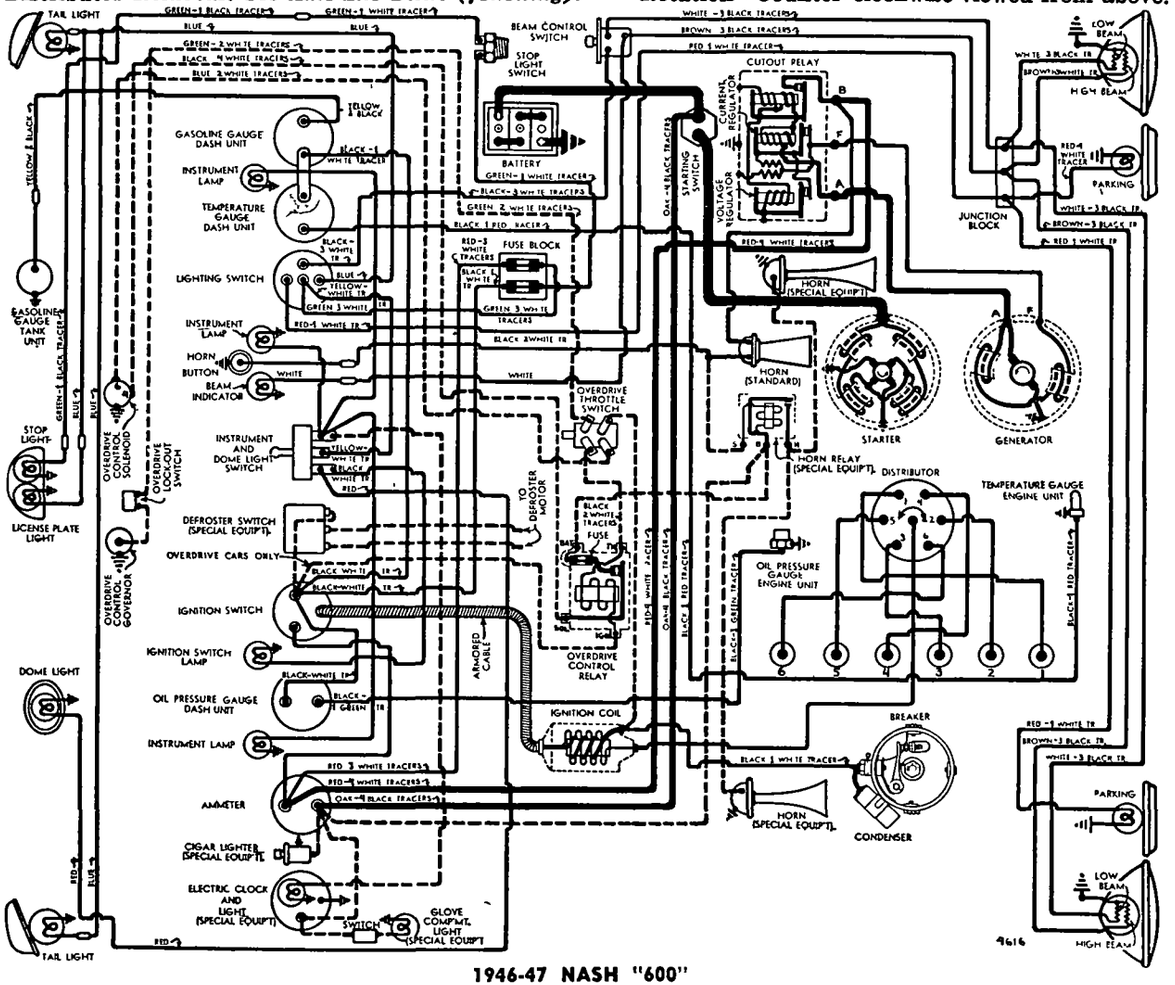

1946-47 NASH "600"

Automatic Advance (Auto-Lite IGW-4184, A)

Distributor Degrees	R.P.M.	Engine Degrees	R.P.M.
Start	275	0	550
2	330	4	660
4.5	400	9	800
8	940	16	1880
11	1400	22	2800

Automatic Advance (Auto-Lite IGC-4512)

Degrees Distr.	R.P.M.	Degrees Eng.	R.P.M.
Start	300	0	600
1	325	2	650
4	410	8	820
10	1290	20	2580
11	1450	22	2900

Octane Selector—Hold-down plate marked with scale for timing variation dependent on fuel regularly used.

Vacuum Spark Control: A-L No. VC-4015. Separate unit mounted on hold-down plate and linked to advance arm. Provides additional advance at speeds above idling except when engine accelerated or operated with wide open throttle when spark retarded by spring within unit.

Vacuum Advance (Auto-Lite)

Distr. Degrees	Eng. Degrees	Vacuum (" of HG)
Start	0°	4"
2°	4°	6⅛"
4.5°	9°	9"
6°	12°	12"
7.5°	15°	15"

Distributor Removal: On left side of engine. To remove, disconnect vacuum line, take out hold-down screw, lift distributor off.

Installation Note—When installing distributor, crank engine to firing position for #1 cylinder (piston at TDC), see that oil pump drive gear meshed with shaft tongue on **1946-47 in vertical** or straight-across-engine position, or on **1948 two teeth forward** of vertical position, and on all engines wide half of shaft should be toward rear (offset shaft), turn distributor to #1 segment in distributor cap, install distributor, check timing.

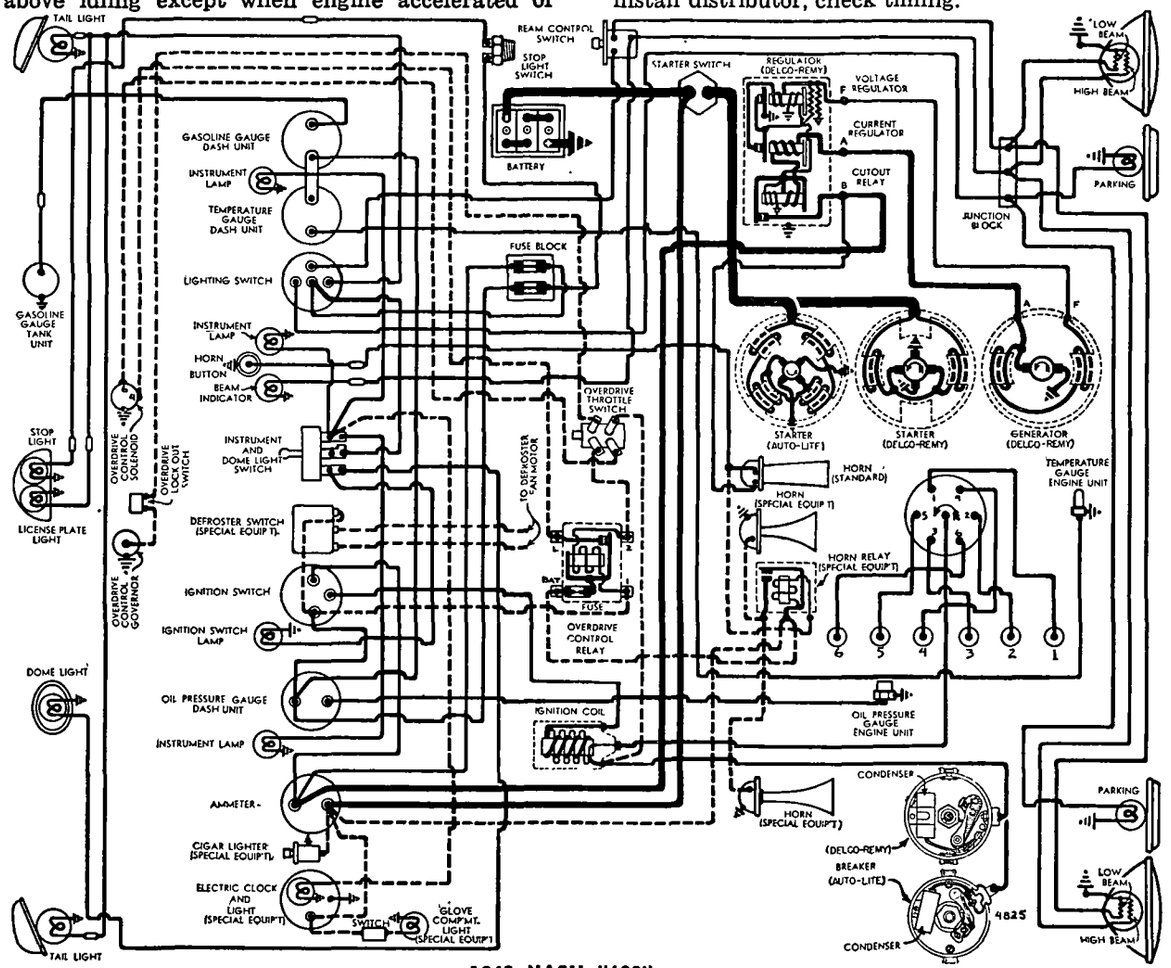

1948 NASH "600"

IGNITION TIMING

Std. Setting ..... At TDC.

NOTE—Car manufacturer recommends using Synchroscope or Timing Light to set Ignition Timing.

Timing (Using Synchroscope)—Loosen distributor hold-down screw, center octane selector scale, tighten screw. Fill in "IGN/DC" mark on vibration dampener with chalk. Clip synchroscope to #1 spark plug, direct light on vibration dampener at timing case cover pointer. Idle engine at 400-500 RPM., loosen advance arm clamp bolt, rotate distributor until "IGN/DC" vibration dampener mark aligned with pointer, tighten clamp bolt, check Octane Selector Setting given below.

Timing (Using Timing Light)—Connect timing light, adjust distributor as directed above. Crank engine by placing in high gear and moving car ahead slowly.

Octane Selector Setting—Loosen hold-down screw in distributor, adjust scale so that slight ping secured when accelerating with wide open throttle at 10-15 MPH.

CARBURETOR

Carter WA1, No. 611S (1946-47), 662S (Early 1948), 662SA (Late 1948). 1¼" Single Barrel downdraft type with Carter Climatic Control.
See Carburetor Section for complete data.

Settings (Idle Setting, Float Level, and Accelerating Pump Setting): ***See Tune-Up data.***
Metering Rods & Jets—***See Carter Jet Table in the Carburetor Section.***

Fast Idle: Carter Single Barrel Carburetor type.
See Carburetion Equipment Section for complete data.
Setting—⅝" clearance between choke valve and air horn (Gauge T109-85) with throttle valve closed and stopscrew against (not on) first step of fast idle cam. Adjust by bending connector link at lower offset (Tool T109-41).

Automatic Choke: Carter Climatic Control (Single Barrel Carburetor).
See Carburetion Equipment Section for complete data.

►**Setting**—***CAUTION—Two settings used.***
(611S, 662S) 2 points Lean, (662SA) Centered.

CARB. EQUIPMENT

Air Cleaner: AC No. 1542037 Oil-wetted type (Std.), Filter Element AC #1. Oil-bath Cleaner Optl.
Servicing Oil-wetted type)—Wash filter element and re-oil with heavy engine oil every 2000 miles.
Servicing (Oil-bath type)—Wash filter element, clean out and refill oil reservoir with 1 pint SAE No. 50 engine oil (summer), No. 20 (winter) every 5000 miles.

Fuel Pump (Std.): AC Type W, No. 1537398.
(Optl. & Overdrive Cars)—AC Type AJ, No. 1537406 combination fuel-and-vacuum pump.
Replacement Pumps—AC 532 (for W), 7406 (for AJ).
►***CAUTION—Install pumps with rocker arm ABOVE (W), or UNDER (AJ) eccentric on camshaft.***
See Carburetion Equipment Section for complete data.
Pressure—3½ lbs. max. ("W"), 4 lbs. ("AJ").

Gasoline Gauge: King-Seeley electric type. **K-S Nos.** 40152 (dash unit), 40170 (tank unit).
See Carburetion Equipment Section for complete data.

CONTINUED ON NEXT PA E

C NTINUED FR M PRECEDING PAGE

BATTERY

Auto-Lite Type 1H-90 (old CT-1-13). 6 volt, 13 plate, 90 Ampere Hour capacity (20 hour rate).
Starting Capacity—114 amperes for 20 minutes.
Zero Capacity—300 amperes for 3.0 minutes. Five second voltage—4.10 volts.
Dimensions—Lght. 9 1/16". W. 7 1/16". Hght. 9".
Grounded Terminal—Positive (+) to body floor to rear of battery. Engine ground from right rear side of engine flywheel housing to rear engine support.
Location—Left side under front seat.

STARTER

DELCO-REMY

Delco-Remy Model 1109451. Armature No. 1882547.
Drive—Barrel type Bendix Drive No. A-2033.
Rotation—Counter-clockwise at commutator end.
Brush Spring Tension—24-28 ounces.

Performance Data

Torque	R.P.M.	Volts	Amperes
0 ft. lbs.	6000	5.7	60
11.5 "	Lock	3.3	540

Starting Switch: Delco-Remy No. 1996478. Mounted on toeboard, actuated by fully depressing clutch pedal.
Removal: *See Auto-Lite Starter (following).*

STARTER

AUTO-LITE

Auto-Lite Model MZ-4103. Armature No. MZ-2154.
Drive—Barrel type Bendix No. A-2033.
Rotation—Counter-clockwise at commutator end.
Brush Spring Tension—42-53 ozs. (new brushes).
Cranking Engine—150-175 amperes, 5 volts min.

Performance Data

Torque	R.P.M.	Volts	Amperes
0 ft. lbs.	4300	5.5	70
.65 "	2500	5.5	100
2.55 "	1325	5.0	200
4.95 "	750	4.5	300
7.65 "	220	4.0	400
7.8 "	Lock	3.0	420
11.8 "	Lock	4.0	560

Starting Switch: Auto-Lite No. SW-4012. Mounted on toeboard and operated by fully depressing clutch pedal.
Removal: Flange mounted on left front face of flywheel housing. To remove, disconnect cable, take out flange mounting screws.

GENERATOR

DELC -REMY

Delco-Remy Model 1102702. Armature No. 1911454. Two-brush with voltage and current regulation.
Maximum Charging Rate—30 amperes, 8.0 volts.
Charging Rate Adjustment—None (see Regulator).

Performance Data

	Amperes	Volts	R.P.M.
Cold	30①	8.0	1750

①—Not maximum output. See Current Regulator.
Rotation—Counter-clockwise at commutator end.
Brush Spring Tension—25 ounces.
Field Current—1.75-1.9 amperes at 6.0 volts.
Removal & Belt Adjustment: *See Auto-Lite Generator (following).*

GENERATOR

AUT -LITE

Auto-Lite Model GDZ-4806A. Armature GDZ-2079F. Two brush (shunt) type with voltage and current regulation. Ventilated.
Maximum Charging Rate—35 amperes, 8.0 volts, 1900 RPM.
Charging Rate Adjustment—None (see Regulator).

Performance Data

Cold Amperes	Volts	R.P.M.	Hot Amperes	Volts	R.P.M.
0	6.4	925	0	6.4	1000
5	6.65	1060	5	6.65	1150
10	6.85	1200	10	6.85	1290
15	7.05	1340	15	7.05	1430
20	7.3	1480	20	7.3	1590
25	7.55	1620	25	7.55	1750
30	7.8	1760	30	7.8	1980
35①	8.0	1900	35	8.0	2250

①—Current regulator setting. See Regulator data.
Rotation—Counter-clockwise at commutator end.
Brush Spring Tension—35-53 ozs. (new brushes).
Field Current—1.60-1.78 amperes at 6.0 volts.
Motoring Current—4.16-4.60 amperes at 6.0 volts.
Removal: Generator cradle mounted at left side of engine with fan belt drive (water pump driven by flexible coupling from generator). To remove, disconnect water pump, loosen fan belt, remove generator clamp band, lift out generator.
Belt Adjustment: Adjust whenever belt deflection exceeds ½" either way between the fan and generator shaft pulleys. To adjust, loosen fan mounting bracket screws (pivots on one screw, other screw hole slotted), raise fan, tighten screws. Belt misalignment can be corrected by installing shims behind fan bracket.

REGULATOR

DELCO-REMY

Delco-Remy Model 1118202. Single Core Type. Voltage and current regulator on left sill brace under hood.
See Electrical Equipment Section for complete data.
CAUTION—Check generator for grounded field coils and leads before changing regulator settings to correct High Charging Rate or High Voltage.

Cutout Relay

Cuts In—6.2-6.7 volts hot (operating temperature).
Cuts Out—0-4.0 amperes discharge current.
Contact Gap—.020" (same for both sets).
Air Gap—.020" (with contacts just closed).

Voltage Regulator

Setting—7.2-7.4 volts Hot (operating temperature). Regulator over-compensated for temperature. Check with cover in place and at operating temp.
Checking & Adjustment—*See Electrical Equipment Section.*
Air Gap—.070" between center of core and armature with contacts just closing.

Current Regulator

Setting—34-36 amps hot (operating temperature).
Checking & Adjustment—*See Electrical Equipment Section.*
Air Gap—.080" between center of core and armature with contacts just closing.

REGULATOR

AUT -LITE

Auto-Lite Model VRP-4004-F. Vibrating type voltage and current regulators (with cutout relay) in case on left body sill brace under hood.
See Electrical Equipment Section for complete data.
NOTE—Regulator cover sealed. Warranty void if seals broken.

Cutout Relay

Cuts In—6.4-7.0 volts (set to 6.4-6.6 volts).
Cuts Out—4.1-4.8 volts (approx. 4-6 amps. disch.).
Contact Gap—.015" minimum.
Air Gap—.031-.034" with contacts open (check at hinge end of core).

Voltage Regulator

Setting—7.2-7.5 volts at 70°F. See Electrical Equipment Section for settings at other temperatures.
Checking (without breaking seal) & Adjustment—*See Electrical Equipment Section.*
Contact Gap—.012" min. (armature against stop pin).
Air Gap—.048-.052" with contacts just opening.

Current Regulator

Setting—34-36 amperes (marked '35' on the cover).
Checking (without breaking seal) & Adjustment—*See Electrical Equipment Section.*
Contact Gap—.012" min. (armature against stop pin).
Air Gap—.048-.052" with contacts just opening.

LIGHTING

Headlamps: Hall "Sealed Beam" type. Upper and lower beams controlled by beam selector switch on toeboard.
See Electrical Equipment Section for complete data.
Adjustment—Aim upper beam straight ahead (hot spot center 3" below lamp center height at 25 ft.).
Beam Indicator—Red jewel above speedometer dial. Lighted when upper (country beam) in use.

Switches

Lighting—Douglas.
Beam Selector—Douglas.
Instrument—Douglas.

Bulb Specifications

Position	Candlepower	Mazda No.
Headlamps	Sealed Beam	4030
Parking, Speedometer	1½	55
Dash Instruments	1	51
Stop	21	1129
Rear License, Tail	3	63
Dome	6	81

MISC. ELECTRICAL

FUSES: Lighting—30 ampere. On fuse block on left body sill brace under hood.
Accessory—30 ampere. On fuse block.
Overdrive (Warner R10B)—20 amp. On overdrive relay.
HORNS: Auto-Lite. Model HT-4009 (low note), HT-4010 (high note). Twin horns.
Horn Current—14-16 amperes (each).
Horn Relay: Auto-Lite Model HRC-4001.
Contact Gap—.026".
Air Gap—.016-.020" with contacts closed but not sealed. .015-.018" air gap between armature leg and yoke with armature sealed to core.
Contacts Close—1.5-3.0 volts. Armature seals to core at 4.0 volts maximum.
Contacts Open—.5 volt minimum (open from seal).

ENGINE

ENGINE SPECIFICATIONS: 6 cylinder, "L" head type. Cylinders cast Enbloc with intake manifold cast in block (Iso-thermal fuel intake system).
Bore—3⅛". Stroke—3¾".

ENGINE

C NTINUED FR M PRECEDIN PA E

Displacement—172.6 cu. ins. **Rated H.P.**—23.44.

Developed Horsepower—82 at 3800 RPM.

Compression Ratio—7.0-1 Std. cast iron head. 7.5-1 ratio optional.

Compression & Vacuum Reading—*See Tune-up data.*

ORIGINAL BORE & BEARING SIZES: *See "Original Bore & Pistons" and "Original Bearing Sizes" in Nash Shop Notes.*

TIGHTENING TORQUES: *See Nash Shop Notes.*

CYLINDER HEAD INSTALLATION: *See Nash Shop Notes*

ENGINE REMOVAL (For Servicing): *See Nash Shop Notes.*

PISTONS: Aluminum alloy, split skirt, strut, oval, tin-plated type. **Length**—3⅜".

NOTE—Cylinder out-of-round limits .003" (in service), .0005" (when reconditioned). Taper limits .009" (in service).

Clearance—.001-.002". See Fitting New Pistons.

NOTE—Piston out-of-round and taper limits .004" in service.

Removal—Pistons and rods removed from above.

Fitting New Pistons: Do not use feeler gauge. New pistons should hold own weight approximately ⅓ down from top of bore but must be free enough to work up and down by hand (bore clean and free from oil).

Replacement Pistons: Furnished std. and .001", .002". .003", .005", .010", .012", .015", .020", .040" oversize.

Installing Pistons: Piston slot toward left side (opposite side from oil squirt hole in rod).

PISTON RINGS: 2 compression, 1 oil ring per piston, all above pin. Drilled oil drain holes in oil ring groove.

Ring	Width	End Gap	Side Clearance
Compression	.0932"	.010-.015"	.002-.004"
Oil Control	.1862"	.010-.015"	.002-.004"

Replacement Rings: *See "Piston Rings" in Nash Shop Notes.*

PISTON PIN: Diameter .812". **Length** 2.632". Floating type with lock ring at each end.

Pin Fit in Piston—Palm push fit with piston heated (heat piston in boiling water).

Pin Fit in Rod Bushing—Light thumb push fit at room temperature.

Replacement Pins: Standard, .001", .003" oversize.

CONNECTING ROD: Length—6¾". **Weight**—24 ozs.

NOTE—Pin hole in rod bronze bushed.

Crankpin Journal Diameter—1.875". *See "Original Bearing Sizes" in Nash Shop Notes.*

Lower Bearing—Removable steel-backed, babbitt lined type. No shims.

Clearance—.0015-.002". **Sideplay**—.006-012".

Nash Plastigage Note—*Can be used to check bearing clearance. See Plastigage data under "Crankshaft & Main Bearings" in Nash Shop Notes.*

Bearing Adjustment: None. Replace bearings. *See "Connecting Rods & Bearings" in Nash Shop Notes.*

NOTE—Tangs on bearing shells must engage slots in rod and cap. Palnuts used on rod bolt nuts.

Replacement Bearings: Std., .002", .010" Undersize.

Installing Rods: Oil squirt hole in lower end of rod toward right (camshaft side) of engine.

NOTE—Rods and bearing caps should be marked before removal and replaced in same cylinder and in same relative positions.

CRANKSHAFT: Four bearing, counterweighted type with vibration dampener mounted on front end.

Vibration Dampener Servicing—*See Nash Shop Notes.*

Journal Diameters—2 31/64". *See "Original Bearing Sizes" in Nash Shop Notes.*

►**Bearings**—*CAUTION—Bearings changed, two types used as follows:*

Before Serial No. K-196901, Eng. No. KE-55001. Replaceable precision, steel-backed, thin babbitt lined. No shims. Used with first type oil pump.

Beginning Serial No. K-196901, Eng. No. KE-55001. Bearings have 360° oil groove. Used with later type larger-capacity, higher-pressure oil pump.

CAUTION—These 360° oil groove bearings used only when new larger capacity oil pump used. See Oil Pump.

Clearance—.002".

Nash Plastigage Note—*Can be used to check bearing clearance. See Plastigage data under "Crankshaft & Main Bearings" in Nash Shop Notes.*

Bearing Adjustment: None (no shims). Replace bearings. *See "Crankshaft & Main Bearings" in Nash Shop Notes.*

Replacement Bearings: Standard, .002", .010" undersize.

Crankshaft Oil Seal: *See "Crankshaft & Main Bearings" in Nash Shop Notes.*

End Thrust: Taken by front (#1) bearing (thrust plate on shaft ahead of flanged bearing).

Endplay Adjustment—*See "Crankshaft & Main Bearings" in Nash Shop Notes.*

Endplay—.006-.008".

CAMSHAFT: 4 bearing. Non-adjustable chain drive.

Camshaft Removal—*See Nash Shop Notes.*

Bearings—Steel-backed, babbitted bushings.

Clearance—.002".

End Thrust: Thrust plate assembled on front face of engine between #1 bearing and camshaft sprocket. Endplay controlled by position of timing chain sprocket (press fit on shaft).

Endplay—.004-.006".

CAUTION—Thrust plate has long oil groove on rear face which provides valve tappet lubrication from #1 camshaft bearing. Short groove on front face of plate lubricates timing chain and sprockets.

Timing Chain: Non-adjustable type. Width 9/16". Pitch ⅜". Length 22½" or 60 links.

Camshaft Setting: Mesh chain with camshaft and crankshaft sprockets turned so that marked tooth on each gear is 45° past (to right—as viewed facing front of engine) top vertical position. With sprockets in this position there should be 9½ links or 19 pins between tooth marks.

VALVES:

	Head Diameter	Stem Diameter	Length
Intake	1 15/32"	.3412"	4 25/32"
Exhaust	1 9/32"	.3412"	4 25/32"

	Seat Angle	Lift	Stem Clearance
All Valves	45°	5/16"	.002-.003"

NOTE—Valve face angle 44°.

Valve Guides: Top of guides 27/32" below top face of block. Press guides in place and ream for correct stem clearance.

Valve Springs: Install springs with closed-coil end up against cylinder block and seated in counterbore in block. Spring free length 2 3/32".

►*CAUTION—Excessive wear of valve stems and guides will result if springs not properly seated in counterbore.*

	Spring Pressure	Length
Valve Closed	37-41 lbs.	1 3/4"
Valve Open	80-86 lbs.	1 7/16"

Valve Lifters: Mushroom type operating in reamed holes in block. Lifters removed from below with camshaft out of engine. *See "Camshaft & Bearings" in Nash Shop Notes for Camshaft Removal.*

VALVE TIMING

Tappet Clearance: .015" Hot, running clearance. Tappet adjusting screws self-locking (no locknuts). NOTE—Replace lifter and adjusting screw assembly if torque required to turn screw less than 50 in. lbs.

Valve Timing: See Camshaft Setting above.

Intake Valves—Open 6° BTDC. Close 50° ALDC.

Exhaust Valves—Open 46° BLDC. Close 10° ATDC.

Valve Timing Check—With tappet clearance set at .019", #1 exhaust valve should close with piston 10° after top dead center and "DC" mark on vibration dampener ⅝" past pointer on timing chain cover. Reset tappet clearance at .015" Hot.

LUBRICATION

Engine Oiling System: Pressure to main, connecting rod, and camshaft bearings, piston pins, valve tappets, and timing chain. Oil pump mounted on right side of crankcase.

Crankcase Capacity—5 quarts.

Normal Oil Pressure—30 lbs. at 20 MPH.

Oil Pressure Regulator—Spring-loaded release valve under plug to rear of oil pump on lower edge of crankcase. Non-adjustable. Opens at 30 lbs. (first type spring—before Eng. No. KE-18015), 50-58 lbs. (later type spring—after Eng. No. KE-18015).

►**Oil Pump:** *CAUTION—Pump changed, two types used:*

Oil Pump (Before Serial No. K-182791, Eng. No. KE-34134)—Gear type with gears 1¼" long. Pump parts not interchangeable with later type.

Oil Pump (Beginning Serial No. K-182791, Eng. No. KE-34134)—Gear type with longer 1⅜" gears. Has increased volume and pressure. Parts not interchangeable with first type pump.

►*CAUTION—This larger capacity pump must be used when new 360° oil groove main bearings used (see Crankshaft Bearings).*

Oil Pump Installation—*See Distributor Removal Installation Note for correct meshing of oil pump gears.*

Oil Filter: Optional. Replace cartridge at 8000 mile intervals or more often if necessary.

Oil Pressure Gauge: King-Seeley Electric. K-S Nos. 40161 (dash unit), No. 40790 (engine unit). *See Miscellaneous Section for complete data.*

C NTINUED N NEXT PA E

C NTINUED FR M PRECEDING PAGE

COOLING

Cooling System: Pressure type with pressure valve in filler cap, and positive circulation with water pump
Capacity—14 quarts (15 with heater).
Pressure Valve—AC #850501 Filler Cap. Opens 4 lbs.

Water Pump: Centrifugal, adjustable packing type with oiler for bearing lubrication. Driven by flexible coupling from generator.
See Water Pump Section for complete data.
Belt Adjustment—*See Generator Belt Adjustment.*
Pressure Valve—AC No. 850501 (Filler Cap). Opens at 4 lbs.
Removal—Drain cooling system, disconnect pump drive coupling (remove rear bolt), disconnect inlet hose, remove two pump mounting capscrews.

Thermostat: Fulton. In cylinder head water outlet.
Setting—Starts to open 157-162°F. and should be fully open 20° above starting point.

Temperature Gauge: King-Seeley Electric. K-S Nos. 40154 (dash unit), No. 41085 (engine unit).
See Miscellaneous Section for complete data.

CLUTCH

Borg & Beck Model 8A7. Single plate, dry disc type.

►**Clutch Assembly Change**—No. 975 through July 1947, No. 360987 starting August 1947.

►*CAUTION—Driven members are NOT INTERCHANGEABLE.*
See Clutch Section for complete data.
Facings—Woven (flywheel side). Moulded (pressure plate side). I.D. 5⅜". O.D. 8". Thickness ⅛".

Adjustment: Pedal free travel ½-¾". Adjust by loosening locknut and turning adjusting nut on connector link at clutch fork.

►*CAUTION—Do not disturb adjustment of clutch beam lever-to-pedal rod.*

►**Clutch Linkage Change**—Beam type linkage used starting 1946 Service Serial No. N4-125727. *For linkage adjustment, see "Clutch Notes" in Nash Shop Notes.*

Removal:—Remove transmission (see below), disconnect clutch pedal linkage, remove clutch housing and pan, punchmark flywheel, clutch cover and pressure plate (reassemble to same marks), take out clutch fork and mounting screws in cover flange. Remove clutch assembly.

TRANSMISSION

Own Make. Constant-mesh, synchro-mesh (second & high), sliding gear (low & reverse), all helical gear.
See Transmission Section for complete data.

►**1946-47 Transmission Shifter Shaft & Fork Change to correct Gear Disengagement**—*See 1946-47 Nash "600" in Transmission Section.*

Transmission Control: Mech. steering column shift.
See Transmission Section for complete data.

Removal: Remove Rear Axle (see REAR AXLE below), disconnect transmission shift rods at levers on left side of case and speedometer cable. Support engine at rear, free rear engine mounting, take out transmission upper mounting bolts, install special guide bolts, J-1434, in these holes, remove lower mounting bolts, slide transmission back on guide bolts, remove from below.

OVERDRIVE

Warner Type AS1-R10B. Optional. New governor controlled type with electrical solenoid operation and throttle operated "kick-down" switch.
See Transmission Section for complete data.
Overdrive Solenoid—Nash No. 3123433. Warner Part No. 3AR-10B-62.
Control Governor—Auto-Lite Model TGE-4005.
Control Relay—Auto-Lite Model HRT-4101.

Removal: Remove as a unit with transmission after disconnecting control cable and all wiring on overdrive case. See Transmission Removal (above).

UNIVERSALS

Mechanics 1½CR. Needle bearing, 1 used (in torque tube adapter at rear of transmission). Tapered coil spring is installed ahead of joint to properly locate joint on driveshaft. NOTE—Universal is slip fit on transmission end, slight press fit on driveshaft.
See Universals Section for complete data.

Propeller Shaft: One piece. Universal joint is light press fit on forward end, pinion coupling tight press fit on rear end.
See Nash "600" Rear Axle data in Rear Axle Section for complete data.

►**1946 Propeller Shaft Coupling Change to correct Coupling Failure**—*See 1946 Nash "600" in Rear Axle Section.*

►*CAUTION—Coupling nut must be properly tightened to prevent coupling failure in service. Align both shafts (support propeller shaft along entire length) while tightening nut.*

REAR AXLE

Own Make. Semi-floating, hypoid gear type with Torque Tube Drive.
See Rear Axle Section for complete data.
Ratio (No Overdrive)—Std. ('46-47) 4.1-1, ('48) 4.4-1. Optional ('46-47) 4.4-1, ('48) 4.9-1.
(With Overdrive)—Std. ('48) 4.9-1.
NOTE—Tag stamped with ratio attached by cover bolt.
Backlash—.004-.006". Shim adjustment.

Removal:—Raise rear end of car and support car at body frame (not frame flange) or at bumper brackets. Disconnect brake cables at equalizer and remove brake tube connections. Disconnect stabilizer bar and rear springs and shock absorber mounting brackets from axle (allow springs and shock absorber to hang from body—do not bend shock absorber rod or bayonet). Disconnect torque tube by removing nuts on forward ends of trunnion bracket mounting studs, move tube and axle back to clear studs, pry universal joint off drive shaft, pull axle assembly out of car. *See "Nash '600' Rear Axle Article" in Rear Axle Section for Trunnion Bracket installation and adjustment, and shaft bearing data.*
Axle Shaft Removal—Remove wheel & drum, disconnect brake line and cable, remove backing plate mounting bolt nuts, oil seal retainer, backing plate, and bearing adjusting shims. Withdraw shaft and bearing, using care not to drag shaft on oil seal.

Wheel Bearing Adjustment—Shims located between backing plate and flanged end of housing. To adjust, remove wheel and backing plate (above), add or remove shims for endplay. **Endplay .002-.004".**

Rear Suspension: Coil spring type with conventional rear axle.
See Rear Axle Section for complete data.

SHOCK ABSORBERS

Delco. Model 1018-E (Front), 1029-CC (Rear). Direct acting, hydraulic type.
See Shock Absorber Section for complete data.

FRONT SUSPENSION

Front Suspension: New design, parallelogram type with coil springs and direct acting shock absorbers.
NOTE—Entire assembly mounted on box-section pressed steel cross-member attached to frame and body through 4 rubber-bushed bolts.
See Front Suspension Section for complete data.
Kingpin Inclination—7½° crosswise.
Caster—¼° to ¾°. Shims as for Camber.
Camber—¼° to ¾°. Shim adjustment at upper control arm shaft mounting.
Toe In—1/8-3/16". Adjust tubes at inner end of each tie rod. Clamp bolts must be on front end of rod and vertical to ground when tightened.

STEERING GEAR

Gemmer Model 305. Worm-and-Roller type with "push-pull" adjustments.
See Steering Gear Section for complete data.

BRAKES

1946-47 "600" 4640, 4740 SERIES

Service Brakes: Lockheed hydraulic, double anchor type. Hand lever applies rear wheel service brakes.
See Brake Section for complete data.
Drums—Cast-iron. Diameter 9".
Lining—Moulded type. Width 1¾". Thickness 3/16". Length per wheel 20½".
Clearance—.010" toe, .004" heel, for each shoe.

Hand Brake: See Service Brake data (above).
Adjustment—Same as for 1948 given below.

BRAKES

1948 "600" 4840 SERIES

Service Brakes: Lockheed Hydraulic "Floating Shoe" (self-centralizing) type. Hand lever applies rear wheel service brakes. NOTE—No anchor pin adjustment required.
See Brake Section for complete data.
Drums—Cast iron. Diameter 9".

►**Lining**—*CAUTION—Different width and length used on each shoe in each wheel as follows:*

1948 Brake Lining Specifications

Brake Shoe	Width	Length	Thickness
Forward (Primary)	2"	10"	3/16"
Rear (Secondary)	1¾"	7½"	3/16"

Lining is moulded type.
Clearance—.010" at toe & heel of each shoe.

Hand Brake: See Service Brakes (above).
Adjustment—Pull hand lever "on" two notches. Loosen locknut at wheel cable equalizer under car, remove all slack from cables, tighten locknut. Release hand lever, check rear brakes for drag.

►**1948 ELECTRICAL EQUIPMENT NOTE:** Both Auto-Lite and Delco-Remy electrical units are used.

HOOD LOCK: Alligator hood. To raise hood, pull out on lock button under left side of instrument panel, reach under front edge of hood and release safety catch, raise hood.

MODEL IDENTIFICATION

SERIAL NUMBER: On plate attached to top right frame side rail to rear of front shock absorber.
1946 Numbers—R-393101 Up.
1947 Numbers—R-429201 Up.
1948 Numbers—R-468501 Up.

Service Serial Number (4660 only): N6-86001 Up. On plate on left front door hinge pillar post.

ENGINE NUMBER: Stamped on pad on right side of engine block at upper front corner.

TUNE-UP

COMPRESSION PRESSURE: 125 lbs. at 350 RPM. for Std. 7.02-1 Head.

VACUUM READING: Steady 18-20" idling at 7 MPH.

FIRING ORDER: 1-5-3-6-2-4.

SPARK PLUG GAPS: .025".
Plug Type—AC No. 45. 14 mm. Metric type.

IGNITION: *See Coil, Condenser, and Distributor.*
Breaker Gap—.020" Limits .018-.022" (Auto-Lite), .018-.024" (Delco-Remy).
Cam Angle or Dwell (A-L)—38° Closed, 22° Open.
Cam Angle or Dwell (D-R)—35° Closed, 25° Open.
Breaker Arm Spring Tension—17-20 ozs. (Auto-Lite), 17-21 ozs. (Delco-Remy).
Automatic & Vacuum Advance—*See Distributor.*

IGNITION TIMING: 4° BTDC ('46), TDC ('47-48).
Timing Procedure—*See Ignition Timing.*
Timing Mark—"IGN" ('46), "IGN/DC" ('47-48) dampener mark in line with pointer on timing chain cover.

CARBURETION: *See Carburetor & Carb. Equipment.*
Idle Setting—Set idle adjusting screw ½-1½ turns open. Adjust for smooth idle. Idle speed 7 MPH.
Float Level—⅜" from top of projection on underside of bowl cover to top of seam on free end of float (invert bowl cover and float to check level).
Accelerating Pump—Inner Hole (med. stroke) Normal, Lower hole (max.) winter, Upper (min.) Summer.

Fuel Pump Pressure: 3½ lbs. maximum.

VALVE TAPPET CLEARANCE: .015" All Valves, Hot.
Valve Timing Check—*See Valve Timing.*
►*CAUTION—Valve timing changed during 1946 production. See Valve Timing.*

STARTING: *See Battery, Starter, Generator, Regulator.*

IGNITION
DELCO-REMY

IGNITION SWITCH: Delco-Remy No. 1116460. No armored cable.
Ignition Lock—Briggs & Stratton No. 85853.
Key Series—5 digits. **Groove**—No. 1.

COIL: Delco-Remy No. 1115380. Mounted on engine.
Ignition Current—2 amperes idling, 5 stopped.

CONDENSER: Delco-Remy Part No. 1869704.
Capacity—.18-.25 microfarad.

DISTRIBUTOR: Delco-Remy No. 1110216. Full automatic advance type with auxiliary vacuum spark control.
Breaker Gap—.020". Limits .018-.024".
Cam Angle—35° Closed, 25° Open.
Breaker Arm Spring Tension—17-21 ozs.
Rotation—Clockwise viewed from above.

Automatic Advance (Delco-Remy)

Degress	Distr. R.P.M.	Degress	Eng. R.P.M.
Start	300	2	600
8	650	16	1300
15	1350	30	2700

Vacuum Spark Control: Delco-Remy (integral type). Linked directly to breaker plate. Provides additional advance at speeds above idling except when engine accelerated or operated with wide open throttle when spark retarded by return spring within unit. Total plunger travel 7/64".

Vacuum Advance (Delco-Remy)

Distr. Degrees	Eng. Degrees	Vacuum (" of HG)
Start	0°	4-6"
6°	12°	14-16"

Distributor Removal: *See Auto-Lite Distr. (following).*

IGNITION
AUTO-LITE

IGNITION SWITCH: Mitchellock Type 24-B, No. E-10231. Connected to coil by armored cable.

COIL: 1946-47 Auto-Lite CE-4662. Service Coil (less switch & cable) CE-3224JS. On dash.

CONTINUED N NEXT PAGE

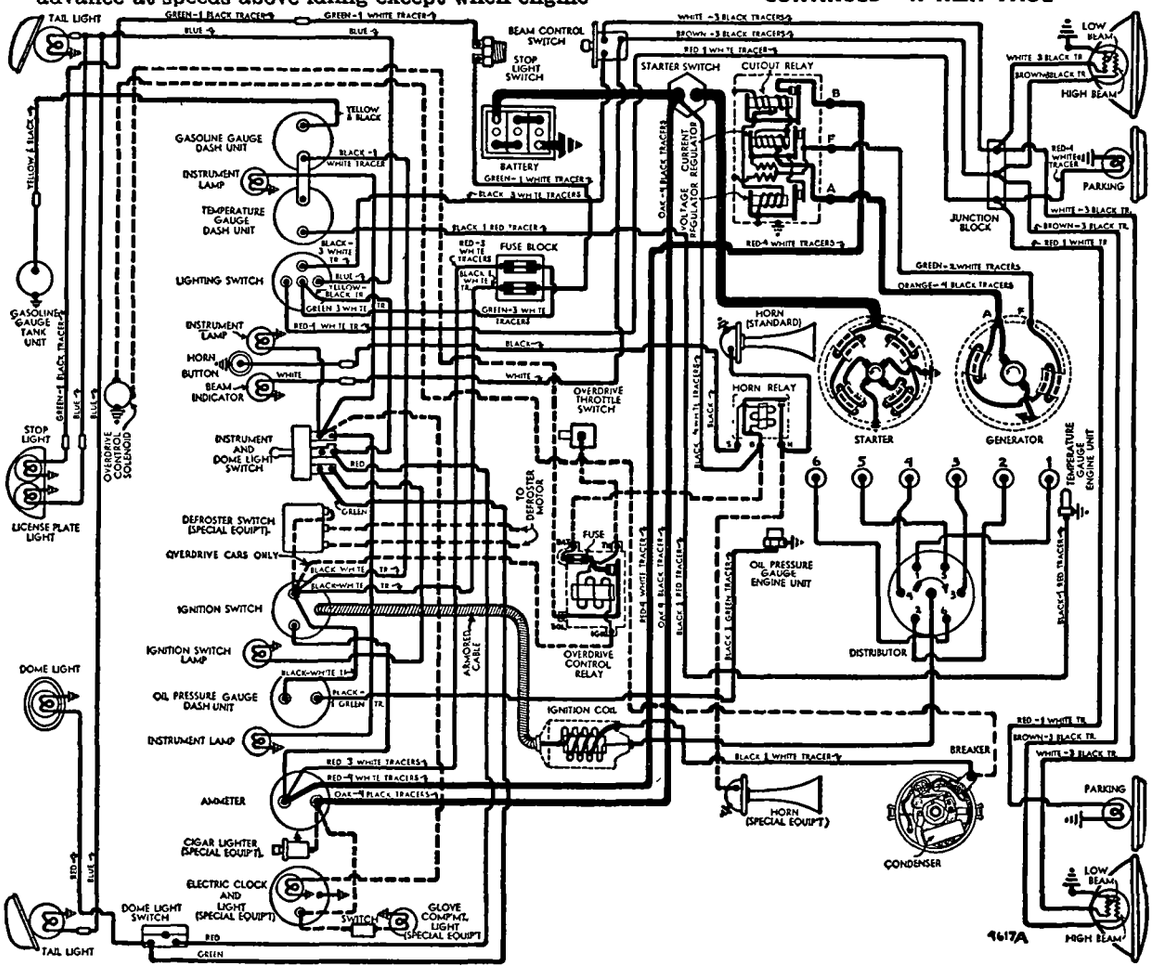

1946-47 NASH AMBASSAD R SIX
►R7 VERDRIVE CIRCUIT WITH AUT -LITE CONTROLS SHOWN ABOVE
►FOR R7 OVERDRIVE WITH DELCO-REMY C NTROLS, SEE 1942 DIAGRAM
►F R R10 G VERN R C NTR LLED VERDRIVE, SEE 1948 DIAGRAM

CONTINUED FROM PRECEDING PA E

1948—Auto-Lite IG-6001. Mounted on engine.
Ignition Current—2 amperes idling, 5 stopped.

CONDENSER: Auto-Lite Part No. IG-2671F.
Capacity—.20-.25 microfarad.

DISTRIBUTOR: 4660 below Service Serial No. N6-115-794 Auto-Lite IGS-4205A. 4660 starting Service Serial No. N6-115794 and 4760, 4860—Auto-Lite IGS-4502B. Full automatic advance types with auxiliary vacuum spark control.

Breaker Plate Identification—Maximum vacuum advance limited by slot. Plate marked #6.

Breaker Gap—.020" (.018-.022").

Cam Angle or Dwell—38° Closed, 22° Open.

Breaker Arm Spring Tension—17-20 ounces.

Rotation—Clockwise viewed from above.

Automatic Advance (Auto-Lite IGS-4205A)

Distributor Degrees	R.P.M.	Engine Degrees	R.P.M.
Start	350	0	700
1	385	2	770
3	450	6	900
7	850	14	1700
12	1350	24	2700

Automatic Advance (Auto-Lite IGS-4205B)

Start	300	0	600
3	450	6	900
7	650	14	1300
10	950	20	1900
14	1350	28	2700

Vacuum Spark Control: Auto-Lite (integral type). Linked directly to breaker plate. Provides additional advance at speeds above idling except when engine accelerated or operated with wide open throttle when spark retarded by return spring in unit.

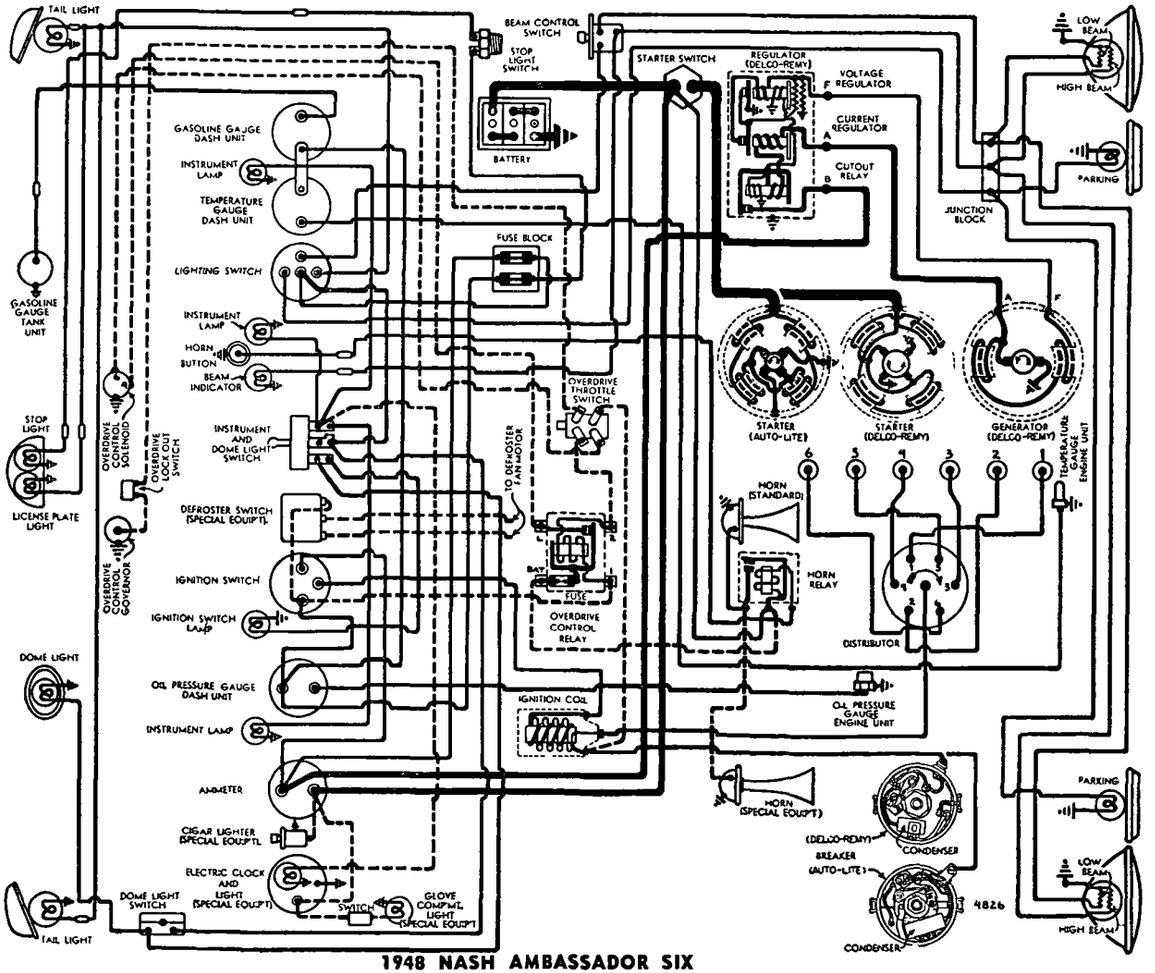

1948 NASH AMBASSADOR SIX

►FOR AUTO-LITE GENERATOR & REGULATOR CIRCUITS, SEE 1946-47 DIAGRAM

Vacuum Advance (Auto-Lite)

Distr. Degrees	Eng. Degrees	Vacuum (" of HG)
Start	0°	5"
1°	2°	6⅝"
3°	6°	10"
5°	10°	13⅜"
6°	12°	15"

Distributor Removal: On right side of engine. To remove, disconnect vacuum line, take out hold-down screw, lift distributor off engine.

IGNITION TIMING

4660 ..... **4° BTDC.**
4760, 4860 ..... **At TDC.**
NOTE—Car manufacturer recommends using Synchroscope or Timing Light to set Ignition Timing.
Timing (Using Synchroscope)—Clip synchroscope to #1 spark plug, fill in vibration dampener "IGN" mark with white chalk, direct light on vibration dampener at timing case cover pointer. Idle engine at 400-500 RPM., loosen advance arm clamp bolt, rotate distributor until "IGN" vibration dampener mark aligned with pointer, tighten clamp bolt.
Timing (Using Timing Light)—Connect timing light, adjust distributor as directed above. Crank engine by placing in high gear and moving car ahead slowly.

CARBURETOR

Carter Type WA-1, Model 464-S. 1¼" Single Barrel, downdraft type with Fast Idle and Climatic Control.
NOTE—Carries Casting No. 290 on face of flange.
See Carburetor Section for complete data.

Settings (Idle Setting, Float Level, and Accelerating Pump): ***See Tune-Up data.***
Metering Rods & Jets—***See Carter Jet Table in the Carburetor Section.***

Fast Idle: Carter Single Barrel Carburetor type.
See Carburetion Equipment Section for complete data.
Setting—⅝" clearance between choke valve and air horn (Gauge T109-85) with throttle valve closed and stopscrew against (not on) first step of fast idle cam. Adjust by bending connector link at lower offset (Tool T109-41).

Automatic Choke: Carter Climatic Control (Single Barrel Carburetor).
See Carburetion Equipment Section for complete data.
Setting—Centered (coil housing at index).

CARB. EQUIPMENT

Air Cleaner: AC No. 1529112 Oil-wetted type (Std.), Filter Element AC 1528179. Oil-bath Cleaner Optl.
Servicing (Oil-wetted type)—Wash filter element and re-oil with heavy engine oil every 2000 miles.
Servicing (Oil-bath type)—Wash filter element, clean out and refill oil reservoir with 1 pint SAE No. 50 engine oil (summer), No. 20 (winter) every 5000 miles.

Fuel Pump (Std.): AC Type W, No. 1537389.
(Optl. & Overdrive Cars)—AC Type AD, No. 1539216 combination fuel-and-vacuum pump.
Replacement Pump—AC No. 533 (for W), 585 (for AD).
See Carburetion Equipment Section for complete data.
Pressure—3½ lbs. max. ("W"), 4 lbs. (No. 8780).

Gasoline Gauge: King-Seeley electric type. K-S Nos. 40152 (dash unit), No. 40170 (tank unit).
See Carburetion Equipment Section for complete data.

BATTERY

Auto-Lite Type 1H-105 (old CT-1-15). 6 volt, 15 Plate, 105 Ampere Hour Capacity (20 hour rate).
Starting Capacity—133 amperes for 20 minutes.
Zero Capacity—300 amperes for 3.5 minutes. Five second voltage—4.2 volts.
Dimensions—L. 9 1/16". W. 7 1/16". H. 9 1/16".
Grounded Terminal—Positive (+) to body floor to rear of battery. Separate engine to frame ground.
Location—Right side under front seat.

STARTER
DELCO-REMY

Delco-Remy No. 1107949. Armature No. 1911763.
Drive—Inboard Bendix No. A-1584.
Rotation—Counter-clockwise at commutator end.
Brush Spring Tension—24-28 ozs.

Performance Data (Delco-Remy)

Torque	R.P.M.	Volts	Amperes
0 ft. lbs.	6000	5.0	60
16 "	Lock	3.0	600

Starting Switch: Delco-Remy No. 1996478. Mounted on toeboard, actuated by fully depressing clutch pedal.
Removal: *See Auto-Lite Starter (following).*

STARTER
AUTO-LITE

4660, 4760.....**Auto-Lite MAB-4076. Arm. MAB-2057**
4860.....**Auto-Lite MCL-6008. Arm. MCH-2038**
Drive—Inboard Bendix No. A-1660.
Rotation—Counter-clockwise at commutator end.
Brush Spring Tension—42-53 ozs. (new brushes).
Cranking Engine—160 RPM, 150-160 amps., 5.2 v.

Performance Data (Auto-Lite MAB-4076)

Torque	R.P.M.	Volts	Amperes
0 ft. lbs.	3700	5.5	60
0.6 "	1910	5.5	100
3.4 "	1100	5.0	200
6.6 "	695	4.5	300
10.15 "	420	4.0	400
15.8 "	Lock	3.0	582
22.5 "	Lock	4.0	775

Performance Data (Auto-Lite MCL-6008)

Torque	R.P.M.	Volts	Amperes
0 ft. lbs.	5300	5.5	65
8 "	Lock	2.0	410

Removal: Flange mounted on left front face of flywheel housing. To remove, disconnect cable, take out flange mounting screws.
Starting Switch: Auto-Lite No. SW-4012. Mounted on toeboard and operated by fully depressing clutch pedal.

GENERATOR
DELCO-REMY

Delco-Remy Model 1102702. Armature No. 1911454. Two-brush with voltage and current regulation.
Maximum Charging Rate—30 amperes, 8.0 volts.
Charging Rate Adjustment—None (see Regulator).

Performance Data (Delco-Remy)

	Amperes	Volts	R.P.M.
Cold	30①	8.0	1750

①—Not maximum output. See Current Regulator.
Rotation—Counter-clockwise at commutator end.
Brush Spring Tension—25 ounces.
Field Current—1.75-1.9 amperes at 6.0 volts.
Removal & Belt Adjustment: *See Auto-Lite Generator (following).*

GENERATOR
AUTO-LITE

Auto-Lite Model GDZ-4806A. Armature GDZ-2079F. Two brush (shunt) type with voltage and current regulation. Ventilated.
Maximum Charging Rate—35 amperes, 8.0 volts, 1900 RPM.
Charging Rate Adjustment—None (see Regulator).

Performance Data (Auto-Lite)

Cold			Hot		
Amperes	Volts	R.P.M.	Amperes	Volts	R.P.M.
0	6.4	925	0	6.4	1000
5	6.65	1060	5	6.65	1150
10	6.85	1200	10	6.85	1290
15	7.05	1340	15	7.05	1430
20	7.3	1480	20	7.3	1590
25	7.55	1620	25	7.55	1750
30	7.8	1760	30	7.8	1980
35①	8.0	1900	35	8.0	2250

①—Current regulator setting. See Regulator data.
Rotation—Counter-clockwise at commutator end.
Brush Spring Tension—35-53 ozs. (new brushes).
Field Current—1.60-1.78 amperes at 6.0 volts.
Motoring Current—4.16-4.60 amperes at 6.0 volts.

Removal: Generator cradle mounted at left side of engine with fan belt drive (water pump driven by flexible coupling from generator). To remove, disconnect water pump, loosen fan belt, remove generator clamp band, lift out generator.
Belt Adjustment: Adjust whenever belt deflection exceeds ½" either way between the fan and generator shaft pulleys. To adjust, loosen fan mounting bracket screws (pivots on one screw, other screw hole slotted), raise fan, tighten screws. Belt misalignment can be corrected by installing shims behind fan bracket.

REGULATOR
DELCO-REMY

Delco-Remy Model 1118202. Single Core Type. Voltage and current regulator on left sill brace under hood.
See Electrical Equipment Section for complete data.
CAUTION—Check generator for grounded field coils and leads before changing regulator settings to correct High Charging Rate or High Voltage.

Cutout Relay
Cuts In—6.2-6.7 volts hot (operating temperature).
Cuts Out—0-4.0 amperes discharge current.
Contact Gap—.020" (same for both sets).
Air Gap—.020" (with contacts just closed).

Voltage Regulator
Setting—7.2-7.4 volts Hot (operating temperature). Regulator over-compensated for temperature. Check with cover in place and at operating temp.
Checking & Adjustment—*See Electrical Equipment Section.*
Air Gap—.070" between center of core and armature with contacts just closing.

Current Regulator
Setting—34-36 amps hot (operating temperature).
Checking & Adjustment—*See Electrical Equipment Section.*
Air Gap—.080" between center of core and armature with contacts just closing.

REGULATOR
AUTO-LITE

Auto-Lite Model VRP-4004-F. Vibrating type voltage and current regulators (with cutout relay) in case on left body sill brace under hood.
See Electrical Equipment Section for complete data.
NOTE—Regulator cover sealed. Warranty void if seals broken.

Cutout Relay
Cuts In—6.4-7.0 volts (set to 6.4-6.6 volts).
Cuts Out—4.1-4.8 volts (approx. 4-6 amps. disch.).
Contact Gap—.015" minimum.
Air Gap—.031-.034" with contacts open (check at hinge end of core).

Voltage Regulator
Setting—7.2-7.5 volts at 70°F. See Electrical Equipment Section for settings at other temperatures.
Checking (without breaking seal) & Adjustment—*See Electrical Equipment Section.*
Contact Gap—.012" min. (armature against stop pin).
Air Gap—.048-.052" with contacts just opening.

Current Regulator
Setting—34-36 amperes (marked '35' on the cover).
Checking (without breaking seal) & Adjustment—*See Electrical Equipment Section.*
Contact Gap—.012" min. (armature against stop pin).
Air Gap—.048-.052" with contacts just opening.

LIGHTING

Headlamps: Hall "Sealed Beam" type. Upper and lower beams controlled by beam selector switch on toeboard.
See Electrical Equipment Section for complete data.
Adjustment—Aim upper beam straight ahead (hot spot center 3" below lamp center height at 25 ft.).
Beam Indicator—Red jewel above speedometer dial. Lighted when upper (country beam) in use.

Switches
Lighting—Douglas.
Beam Selector—Douglas.
Instrument—Douglas.

Bulb Specifications

Position	Candlepower	Mazda No.
Headlamps	Sealed Beam	4030
Parking, Speedometer	1½	55
Dash Instruments	1	51
Stop	21	1129
Rear License, Tail	3	63
Dome	6	81

MISC. ELECTRICAL

FUSES: Lighting—30 ampere. On fuse block on left body sill brace under hood.
Accessory—30 ampere. On fuse block.
Overdrive (Auto-Lite Relays only)—20 ampere.

HORNS: Auto-Lite. Model HT-4009 (low note), HT-4010 (high note). Twin horns operated by relay.
NOTE—Single horn with relay standard.
Horn Current—14-16 amperes (each).

C NTINUED N NEXT PAGE

CONTINUED FROM PRECEDIN PA E

Horn Relay: Auto-Lite Model HRC-4001.

Contact Gap—.026".

Air Gap—.016-.020" with contacts closed but not sealed. .015-.018" air gap between armature leg and yoke with armature sealed to core.

Contacts Close—1.5-3.0 volts. Armature seals to core at 4.0 volts maximum.

Contacts Open—.5 volt minimum (open from seal).

ENGINE

ENGINE SPECIFICATIONS: 6 cylinder, valve-in-head type. Cylinders cast Enbloc with intake manifold cast in block. (Iso-thermal fuel intake system).

Bore—3⅜". Stroke—4⅜".

Displacement—234.8 cu. ins. Rated H.P.—27.34.

Developed Horsepower—112 at 3400 RPM.

Compression Ratio—7.02-1 Std. cast-iron head. 7.52-1 ratio optional.

Compression & Vacuum Reading—*See Tune-up data.*

►**1948 ENGINE NEW PARTS:** ***New Cylinder Block, Crankshaft, & Rear Bearing used—not interchangeable with previous parts except as complete assembly due to new type Rear Oil Seal—See Crankshaft Oil Seals.***

ENGINE MOUNTS (1948 Type Installation on Previous Car Models): ***See Nash Shop Notes.***

ORIGINAL BORE & BEARING SIZES: ***See "Original Bore & Pistons" and "Original Bearing Sizes" in Nash Shop Notes.***

TIGHTENING TORQUES: ***See Nash Shop Notes.***

CYLINDER HEAD INSTALLATION: ***See Nash Shop Notes***

ENGINE REMOVAL (For Servicing): ***See Nash Shop Notes.***

PISTONS: Aluminum alloy, split skirt, strut, oval, tin-plated type. **Length—3⅞".**

NOTE—Cylinder out-of-round limits .003" (in service), .0005" (when reconditioned). Taper limits .009" (in service).

Clearance—.001-.002". See Fitting New Pistons.

NOTE—Piston out-of-round and taper limits .004" in service.

Removal—Pistons and rods removed from above.

Fitting New Pistons: Do not use feeler gauge. New pistons should hold own weight approximately ⅓ down from top of bore but must be free enough to work up and down by hand (bore clean and free from oil).

Replacement Pistons: Furnished std. and .001", .002", .003", .005", .010", .012", .015", .020", .040" oversize.

Installing Pistons: Piston slot toward left side (opposite side from oil squirt hole in rod).

PISTON RINGS: 2 compression, 2 oil rings per piston, all above pin. Drilled oil drain holes in oil ring grooves.

Ring	Width	End Gap	Side Clearance
Compression	.0932"	.010-.015"	.002-.004"
Oil Control	.1547"	.010-.015"	.002-.004"

Replacement Rings: ***See "Piston Rings" in Nash Shop Notes.***

PISTON PIN: Diameter—.8746". Length—2.824". Floating type, with lock ring at each end.

NOTE—Pin hole in piston offset toward camshaft.

Pin Fit in Piston—Palm push fit with piston heated (heat piston in boiling water).

Pin Fit in Rod Bushing—Light thumb push fit at room temperature.

Replacement Pins: Standard, .001", .003" oversize.

CONNECTING ROD: Length—8¾". Weight—36¼ ozs.

NOTE—Pin hole in rod bronze-bushed.

Crankpin Journal Diameter—2.00". ***See "Original Bearing Sizes" in Nash Shop Notes.***

Lower Bearing—Removable steel-backed, babbitt lined type. No shims.

Clearance—.0015-.0025". **Sideplay**—.006-.014".

Nash Plastigage Note—***Can be used to check bearing clearance. See Plastigage data under "Crankshaft & Main Bearings" in Nash Shop Notes.***

Bearing Adjustment: None. Replace bearings. ***See "Connecting Rods & Bearings" in Nash Shop Notes.***

Installing Rods: Oil spray hole in lower end of rod must be toward camshaft (right) side of engine.

NOTE—Rods and bearing caps should be marked before removal and replaced in same cylinder and in same relative position.

CRANKSHAFT: Seven bearing, counterweighted type with vibration dampener mounted on front end.

Vibration Dampener Servicing—***See Nash Shop Notes.***

Journal Diameters—2 31/64". ***See "Original Bearing Sizes" in Nash Shop Notes.***

►**Bearings**—***CAUTION—Bearings changed, two types used as follows:***

Before Serial No. R-459542, Eng. No. RE-022227. Replaceable precision, steel-backed, thin babbitt lined. No shims. Used with first type oil pump.

Beginning Serial No. R-459542, Eng. No. RE-022227. Bearings have 360° oil groove. Used with later type larger-capacity, higher-pressure oil pump.

►***CAUTION—These 360° oil groove bearings used only when new larger capacity oil pump used. See Oil Pump.***

Clearance—.0015-.0025".

Nash Plastigage Note—***Can be used to check bearing clearance. See Plastigage data under "Crankshaft & Main Bearings" in Nash Shop Notes.***

Bearing Adjustment: None (no shims). Replace bearings. ***See "Crankshaft & Main Bearings" in Nash Shop Notes.***

Replacement Bearings: Standard .002", .010" undersize.

Crankshaft Oil Seal: Rear oil seal new type steel-backed synthetic rubber seal fitted in crankcase and rear bearing cap. Bears directly on crankshaft.

►***CAUTION—This type oil seal used only with 1948 Cylinder Block and Crankshaft (no oil return threads).***

Oil Seal Servicing—***See "Crankshaft & Main Bearings" in Nash Shop Notes.***

End Thrust: Taken by Center (#4) bearing.

Endplay—.006-.008".

CAMSHAFT: Non-adjustable 2 sprocket chain drive.

Camshaft Removal—***See Nash Shop Notes.***

Bearings—Steel-backed, babbitted bushings.

Clearance—.002".

End Thrust: Taken by front bearing, controlled by position of timing chain sprocket (press fit on shaft).

Endplay—.004-.006".

Timing Chain: Non-adjustable type. Width 9/16". Pitch ⅜". Length 22½" or 60 links.

Camshaft Setting: Mesh chain with camshaft and crankshaft sprockets turned so that marked tooth on each gear is at 45° past (to right—as viewed facing front of engine) top vertical position. With sprockets in this position there should be 9½ links or 19 pins between tooth marks.

VALVES:	Head Diameter	Stem Diameter	Length
Intake	1 3/4"	.3725"	5 17/32"
Exhaust	1 15/32"	.3725"	5 17/32"

	Seat Angle	Lift	Side Clearance
All Valves	45°	11/32"	.002-.004"

NOTE—Valve face angle 44°.

Valve Guides: Press fit in head (positioned by shoulder on guide). Tops of guides should be ⅞" from face of cylinder head. Ream new guides for correct stem clearance.

Valve Springs: Free length 2 3/32". NOTE—Single spring now used (double springs formerly used).

	Spring Pressure	Length
Valve Closed	53 lbs.	1 11/16"
Valve Open	146 lbs.	1 11/32"

Valve Lifters: Mushroom type. Lifter guide holes in block. Remove from below with camshaft out.

VALVE TIMING

Tappet Clearance: .015" All Valves, Hot.

Valve Timing: See Camshaft Setting above.

►***CAUTION—Valve Timing changed during 1946.***

Exhaust Valve Closing Point

Early 4660—6° ATDC.

Late 4660, 4760 & 4860—16° ATDC.

Valve Timing Check—With .0225" tappet clearance, #1 exhaust valve should close with piston on Early 4660 6° after top dead center, or on Late 4660 and 4760, 4860 16° after top dead center, and "DC" mark on vibration dampener 3/8" (Early 4660), 1" (Late 4660, 4760 & 4860) past pointer on timing chain cover. Reset tappet clearance at .015" Hot.

LUBRICATION

Engine Oiling System: Pressure to main, connecting rod, and camshaft bearings, piston pins, valve tappets, and timing chain. Oil pump mounted on center (#4) main bearing cap in crankcase.

Crankcase Capacity—6 quarts.

Normal Oil Pressure—30 lbs. at 20 MPH.

Oil Pressure Regulator—On oil pump cover. Opens at 30 lbs. (first type spring—before Eng. No. 11514), 50-58 lbs. (later type spring—Beginning Eng. No. RE-11514). Not adjustable.

►**Oil Pump:** *CAUTION—Pump changed—two types used.*

Oil Pump (Before Serial No. R-457798, Eng. No. RE-20512)—Gear type with gears 1¼" long. Pump parts not interchangeable with later type.

Oil Pump (Beginning Serial No. R-457798, Eng. No. RE-20512)—Gear type with longer 1⅜" gears and undercut shaft to provide additional oil flow. Parts not interchangeable with first type pump.

►*CAUTION—This larger capacity pump must be used when new 360° oil groove main bearings used (see Crankshaft Bearings).*

Oil Pump Servicing—*See Nash Shop Notes.*

Cylinder Cover Vent: Vent located on front of cover just behind water outlet elbow to allow escape of vapors inside cover. Turn to open position at all times, especially winter, except for hot dusty driving.

Oil Filter: Replace cartridge at 8000 mile intervals or more often if necessary.

Oil Pressure Gauge: King-Seeley Electric. K-S Nos. 40161 (dash unit), No. 40790 (engine unit).
See Miscellaneous Section for complete data.

COOLING

Cooling System: Pressure type with pressure valve in filler cap, and positive circulation with water pump on left side of engine with thermostat control.

Capacity—17 quarts (18 with heater).

Pressure Valve—AC 850501 (Filler Cap). Opens at 4 lbs.

Water Pump: Centrifugal, adjustable packing type with oiler for bearing lubrication. Driven by flexible coupling from generator.
See Water Pump Section for complete data.

Removal—Drain cooling system, disconnect pump drive coupling (remove rear bolt), disconnect inlet hose, remove pump mounting capscrews.

Belt Adjustment—*See Generator Belt Adjustment.*

Thermostat: Fulton. In water outlet on cylinder head.

Setting—Starts to open at 157-162°F. and should be fully open 20° above starting point.

Temperature Gauge: King-Seeley Electric. K-S Nos. 40154 (dash unit), No. 41085 (engine unit).
See Miscellaneous Section for complete data.

CLUTCH

Borg & Beck Model 10A7. Assembly No. 950 stamped on cover. Single plate, dry disc type.
See Clutch Section for complete data.

Facings—Woven type, 2 used. Inside Diameter 7". Outside Diameter 10". Thickness ⅛".

Adjustment: Pedal free travel setting must be ½". To adjust, install Aligning Pin J-1390 in end of helper spring lever (right end of clutch release shaft), loosen helper spring lever screw on end of clutch release shaft. Loosen locknut and adjust nut on clutch release shaft end of pedal connector link for correct ½" pedal free travel. Use pipe wrench or pliers to turn clutch release shaft to rear to take up all play, see that aligning pin in helper spring lever is against pivot bracket at rear of engine, tighten helper spring lever screw securely.

CAUTION—Pedal adjustment must be made exactly as outlined above to insure correct pedal travel and helper spring operation.

Removal:—Remove transmission (see below). Disconnect clutch pedal linkage, support engine at rear and free rear engine mounting, remove clutch housing and pan. Punchmark flywheel, clutch cover and pressure plate (reassemble to same marks), remove clutch mounting screws, take out clutch.

TRANSMISSION

Own Make. Constant-mesh, synchro-mesh (second & high), sliding gear (low & reverse), all helical gear.
See Transmission Section for complete data.

►**1947 Transmission Shifter Shaft & Fork Change and 1946-47 Replacement Shifter Shaft & Fork Assemblies**—*See 1946-47 Nash Ambassador Six in Transmission Section.*

Transmission Control: Mechanical steering col. shift.
See Transmission Section for complete data.

Removal:—Disconnect shift rods, speedometer cable, and front universal. Remove 2 upper transmission mounting screws and install pilot studs (to support transmission during removal), remove remaining mounting screws, pull transmission straight back and remove.

OVERDRIVE

►**4660 TO SERVICE SERIAL NO. N6-95333 "R7" WITH DELCO-REMY RELAY & SOLENOID**

Warner Type R7C (Warner No. AS1-R7C) with Delco-Remy Relay and Solenoid. Centrifugal pawl type with throttle controlled "kick-down". Optl. equipment.

►**Delco-Remy Solenoid has one-terminal only.**
See Transmission Section for complete data.

Overdrive Solenoid—Delco-Remy No. 1118004.

Overdrive Relay—Delco-Remy No. 1116798.

Removal: Same as for R10 type below.

►**4660 SERVICE SER. NO. N6-95333 TO 120026 "R7" WITH AUTO-LITE RELAY & SOLENOID**

Warner Type R7C (Warner No. AS1-R7C) with Auto-Lite Relay and Solenoid. Centrifugal pawl type with throttle controlled "kick-down". Optl. equip.

►**Auto-Lite Solenoid has two terminals.**
See Transmission Section for complete data.

Overdrive Solenoid—Auto-Lite No. SSB-4002.

Overdrive Relay—Auto-Lite No. HRT-4001.

Fuse—20 ampere. On O. D. Relay under hood.

Removal: Same as for R10 type below.

►**STARTING 4660 SERVICE SERIAL NO. N6-120026 "R10" GOVERNOR CONTROLLED OVERDRIVE**

Warner Type R10B (Warner Number AS2-R10B) Governor controlled. Electric solenoid operation and throttle controlled "kick-down". Optl. equipment.
See Transmission Section for complete data.

Overdrive Solenoid—Nash No. 3123433, Warner Part No. 3AR10B-62.

Control Governor—Auto-Lite Model TGE-4001.

Control Relay—Auto-Lite Model HRT-4101.

Throttle Kickdown Switch—Nash No. 3122959.

Lockout Switch—Nash No. 3123432.

Fuse—20 ampere. On Control Relay under hood.

Removal: Same as for Std. Transmission (above) except that overdrive control cable and wires must first be removed. Then remove overdrive as a unit with transmission.

UNIVERSALS

Mechanics Type 2CR. Roller bearing type, 2 used.
See Universals Section for complete data.

REAR AXLE

Own Make. Semi-floating, hypoid gear type with Hotchkiss drive.
See Rear Axle Section for complete data.

Ratio—4.1-1 Standard. 4.4-1 with Overdrive.

Backlash—.004-.006". Shim adjustment.

Removal:—Hoist rear end of car, disconnect brake cables at rear clevises. Remove brake tubes. Disconnect rear universal. Remove rear spring U-bolts and withdraw axle from car.

Axle Shaft Removal—Remove wheel & drum, disconnect brake line and cable, remove backing plate mounting bolt nuts, oil seal retainer, backing plate, and bearing adjusting shims. Withdraw shaft and bearing, using care not to drag shaft on oil seal.

Wheel Bearing Adjustment—Shims located between backing plate and flanged end of housing. To adjust, remove wheel and backing plate (above), add or remove shims for endplay. **Endplay .002-.004".**

SHOCK ABSORBERS

Monroe Model K-11431 (Front), K-11432 (Rear). Direct acting, hydraulic type.
NOTE—Shock absorbers are sealed (non-refillable).
See Shock Absorber Section for complete data.

FRONT SUSPENSION

Front Suspension: Independent, linked parallelogram type with coil springs and direct acting shock absorbers.
See Front Suspension Section for complete data.

Kingpin Inclination—4½°.

Caster—0° to Negative ½°. "C" washer adjustment.

Camber—Pos. ¼° to ¾°. "C" washer adjustment.

Toe In—1/16-3/16".

STEERING GEAR

Gemmer Model 305. Worm-and-roller type with "push-pull" adjustments.
See Steering Gear Section for complete data.

BRAKES

Service Brakes: Bendix hydraulic, duo-servo, single anchor type without Eccentric Adjustment. Hand lever applies rear wheel service brakes.
See Brake Section for complete data.
Drums—Cast-iron. Diameter 10".
Lining—Moulded type. Width 2". Thickness 3/16". Length 22" per wheel.
Clearance—.015" at each end of secondary (rear) shoes with primary shoes forced out against drum.

Hand Brakes: See Service Brake data above.

Adjustment—With hand lever set two notches 'on', loosen two clamp bolts at wheel cable equalizer under car, remove all cable slack, tighten clamp bolts. See that wheels free of drag with lever 'off'.

MODEL IDENTIFICATION

SERIAL NUMBER:—On right frame side member under engine hood. First Number L-23,101.

ENGINE NUMBER:—On plate on right side of crankcase at front of engine below valve cover plate.

TUNE-UP

COMPRESSION:—Ratio 5.54-1 Std. cast-iron head, Pressure—125 lbs. at 350 RPM.

VACUUM READING:—Gauge should show steady reading of 18-20" with engine idling at 5 M.P.H.

FIRING ORDER: 1-5-3-6-2-4. See wiring diagram.

SPARK PLUGS: Champion Type 7. 18 mm. Metric. Gaps—.025" (.030" cars with radio).

IGNITION: See Coil, Condenser, and Distributor. Breaker Gap—.020". Cam Angle—38° Closed. Automatic Advance—Max. advance as follows:

Distributor	Distr. Deg.	Distr. RPM
IGB-4317	10°	1300
IGB-4317-A	5°	1050
IGB-4317-B	10°	1300

IGNITION TIMING: See Ignition Timing. Std. Setting—At TDC. with vibration dampener mark "DC/IGN" aligned with pointer on chain case cover.

CARBURETION: See Carburetor & Carb. Equipment. Idle Setting—Screw midway between "miss" and "roll" points. Idle speed 5-7 MPH. Float Level—1⅜" from cover to bottom of float with gasket off and cover inverted (Marvel), Fuel level ⅝" below top edge of bowl (Stromberg). Accelerating Pump—Normal setting 2nd or 3rd hole (Marvel), Center hole (Stromberg).

Fuel Pump Pressure: 3½ lbs. maximum.

VALVES: See Valve Timing. Tappet Clearance—.015" all valves—hot or cold.

STARTING: See Battery, Starter, and Generator.

IGNITION

Ignition Switch: Mitchellock Model 24B, Type 6708. Ignition Lock—Briggs & Stratton #50184, Mitchell #6760.

COIL: Auto-Lite Model IG-4626 or IG-4626A. Service Coil (less switch & cable) IG-3224-DS. Ignition Current—2.5 amperes idling, 4 stopped.

CONDENSER: Auto-Lite Part No. IGB-1025. Capacity—.20-.25 microfarad.

DISTRIBUTOR: Auto-Lite IGB-4317, IGB-4317-A or IGB-4317-B. Single breaker, 6 lobe cam, full automatic advance type. Breaker Gap—Set at .020". Limits .018-.020". Cam Angle or Dwell—Closed 38°, open 22° (distr.). Breaker Arm Spring Tension—16-20 ounces.

Automatic Advance—IGB-4317

Distributor Degrees	R.P.M.	Engine Degrees	R.P.M.
Start	300	0	600
2	500	4	1000
4	700	8	1400
6	900	12	1800
8	1100	16	2200
10	1300	20	2600

Automatic Advance—IGB-4317-A.

Distributor Degrees	R.P.M.	Engine Degrees	R.P.M.
Start	300	0	600
2	600	4	1200
4	900	8	1800
5	1050	10	2100

Automatic Advance—IGB-4317-B

Start	300	0	600
2	500	4	1000
4	700	8	1400
6	900	12	1800
8	1100	16	2200
10	1300	20	2600

Distributor Removal:—Mounted on right side of cylinder head. To remove, loosen locknut and take out mounting screw on side of cylinder head.

IGNITION TIMING

IGN. TIMING (1936):— Flywheel Deg. Piston Position

All engines ..... at TDC ..... .0000" TDC

Timing—With #1 piston on compression, turn engine over until 'DC/IGN' mark on vibration dampener at front of engine lines up with pointer on chain case cover, loosen locknut and mounting setscrew on side of cylinder head, rotate distributor until contacts begin to open, tighten setscrew and locknut. See that rotor is opposite #1 segment in distributor cap and check spark plug connections (see diagram).

CARBURETOR

CARBURETION:—Carburetors—Marvel Model B-2 10-1603 (Early cars)., 1¼" downdraft type. Stromberg

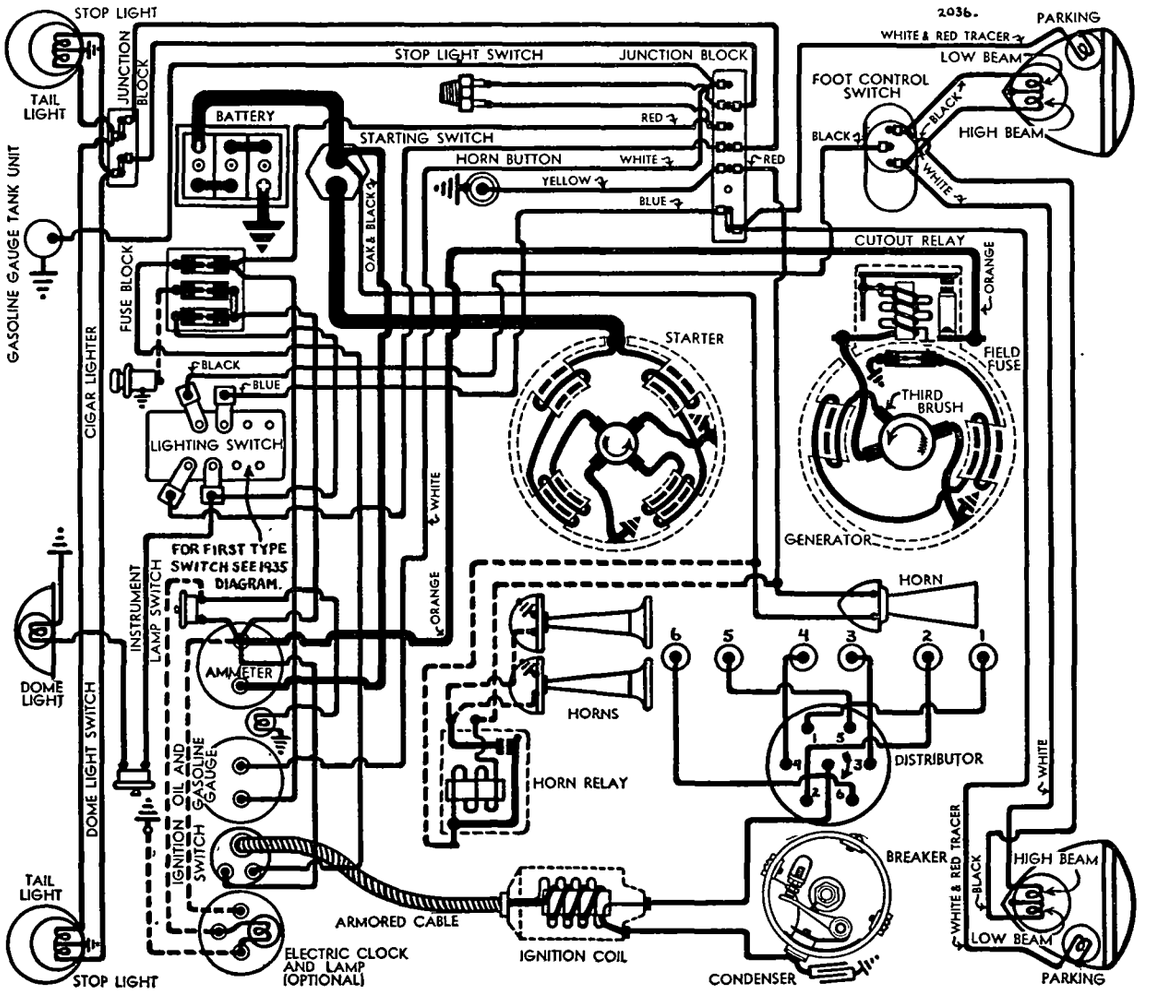

Model AX-2 (Later cars), downdraft type.
For complete data, refer to Carburetor Index.

NOTE—Do not adjust carburetor until engine is thoroughly warmed up and choke valve is wide open.

Idle Adjustment—Adjust throttle stopscrew so that idle speed is 5-7 M.P.H. Turn idle adjusting screw in until engine begins to hesitate or miss, then out until engine begins to roll, finally turn screw in slowly until engine fires smoothly. Readjust throttle stopscrew for correct idling speed.

Accelerating Pump Setting—Engage pump link in proper hole in throttle lever for seasonal requirements as follows:

#1 Inner Hole (Min. stroke)—Extremely hot weather.

#2 Normal summer driving.

#3 Normal winter driving.

#4 (Marvel only)—Extremely cold weather.

CARB. EQUIPMENT

Air Cleaner:—AC. #1525967 oil-wetted type standard. Heavy duty oil-bath type optional.

Fuel Pump:—AC. Type W #1522152. Type R #1522133 used on RHD. cars. Diaphragm type fuel pump.
For complete data, refer to Carburetion Equip. Index.

Gasoline Gauge: Auto-Lite (Motometer) Electric type. No. NG-7623D (Dash Unit), NG-7441T (Tank Unit).
For complete data, refer to Carburetion Equip. Index.

BATTERY

BATTERY (1936):—U.S.L. KL-1-13. 6 volt, 13 plate, 100 A.H. capacity (20 hour rate).
Starting Capacity—120 amperes for 20 minutes.
Zero Capacity—300 amperes for 3.1 minutes.
Grounded Terminal—Positive (+) terminal.
Location—On left side under driver's seat.

STARTER

Auto-Lite MAB-4068 (first cars), MAB-4076 (later cars). Armature MAB-2057.
Drive—Inboard Bendix Type LCD11FX-10.
Rotation—Counter-clockwise at commutator end.
Brush Spring Tension—42-53 ounces (new brushes).

Performance Data

Torque	R.P.M.	Volts	Amperes
0 ft. lbs.	3700	5.5	60
.6 "	1910	5.5	100
3.4 "	1100	5.0	200
6.6 "	695	4.5	300
10.15 "	420	4.0	400
15.8 "	Lock	3.0	582
22.5 "	Lock	4.0	775

Removal:—Starter flange mounted on left front face of flywheel housing. To remove, take out two flange mounting capscrews.

Starting Switch:—Type SW-4005. Mounted at left of engine at lower end of steering column. Operated by depressing clutch pedal.

GENERATOR

Auto-Lite Model GAR-4601-3 (first), GAR-4601-5 (later). Armature No. GAR-2214. Air-cooled, third brush control type.
Charging Rate Adjustment—Take off commutator cover band, shift third brush by hand counter-clockwise to increase, or clockwise to decrease charging rate. Third brush held in position by friction.
Standard Charging Rate Setting—20 amperes (cold), 16 amperes (hot), 2300 R.P.M.

Performance Data—GAR-4601-3

Cold			Hot		
Amps.	Volts	R.P.M.	Amps.	Volts	R.P.M.
0	6.4	760	0	6.4	800
4	6.75	920	4	6.8	950
8	7.05	1100	8	7.15	1140
12	7.35	1300	12	7.5	1400
16	7.7	1560	16	7.85	1840
20	8.0	2300	18	8.0	2400

Performance Data—GAR-4601-5

Cold			Hot		
Amperes	Volts	R.P.M.	Amperes	Volts	R.P.M.
0	6.4	720	0	6.4	760
4	6.8	860	4	6.8	925
8	7.25	1000	8	7.25	1125
12	7.7	1160	12	7.7	1350
16	8.1	1360	16	8.1	1680
20	8.5	1660	19.2	8.4	2600
22.4	8.8	2300			

Rotation—Counter-clockwise at commutator end.
Field Current—3.70-4.10 amperes (GAR-4601-3), 3.51-3.89 amperes (GAR-4601-5) at 6.0 volts.
Motoring Current—4.65-5.15 amperes (GAR-4601-3), 5.03-5.57 amperes (GAR-4601-5) at 6.0 volts.
Brush Spring Tension—50-60 ozs. (new brushes).
Field Fuse—7½ amperes. Under cover on generator.

Removal:—Cradle mounted at left front of engine with fan belt drive. Water pump driven by generator shaft extension. To remove, disconnect water pump drive coupling, slack off belt adjustment, loosen mounting clamp band, lift generator out.

Belt Adjustment:—Adjust when belt sideplay exceeds 1½" midway between generator and fan pulleys. To adjust, loosen two capscrews on fan bracket, raise bracket up (bracket pivots on one screw) until belt sideplay is approximately 1", tighten mounting screws.

CUTOUT RELAY

Auto-Lite Model CB-4014. Mounted on generator.
For complete data, refer to Electrical Equipment Index.
Cuts In—6.5-7.25 volts, 750 R.P.M.
Cuts Out—.5-2.5 amperes discharge current.
Contact Gap—.015-.045".
Air Gap—.010-.030" with contacts closed.

LIGHTING

LIGHTING:—Headlamps—Corcoran-Brown, Pre-focused type. Upper and lower beams controlled by foot selector switch.

Switches

Lighting—Soreng-Manegold Model 5820-A (early cars), Model A-5820-A (later cars).
Foot Selector—H. A. Douglas.
Stop Light—Hydraulic type.

Bulb Specifications

Position	Candlepower	Mazda No.
Headlamps	32-32	2331
Stop and Tail	21-3	1158
Parking, Instrument	3	63
Dome	6	81

MISC. ELECTRICAL

FUSES:—**Lighting**—20 ampere capacity on lighting switch (early cars), on fuse block (later cars).

Generator Field—7½ ampere on generator.

Accessory—One or two 20 ampere fuses on fuse block on steering column brace behind instrument panel.

HORNS:—Auto-Lite Model HA-4014, Std. single horn. Dual horns optl. operated by horn relay.

Horn Relay:—R.B.M. Type 10072. Current draw .4-.55 amperes at 6.0 volts. Coil resistance 11-14 ohms. Contacts must close with 4 volts across winding with relay in inverted position.

ENGINE

ENGINE SPECIFICATIONS:—**Type**—6 cyl., 'L' head.

Bore—3¼". **Stroke**—4⅜".

Displacement—217.7 cubic inches.

Rated Horsepower—25.35 (SAE).

Developed Horsepower—80 (3510), 83 (3610) at 3200 RPM.

Compression Ratio and Pressure—5.54-1 std. cast-iron head. Pressure—125 lbs. at 350 R.P.M.

Vacuum Reading—Gauge should show steady reading of 18-20" with engine idling at 5-7 M.P.H.

PISTONS:—Nelson Bohnalite, aluminum alloy, Invar strut, split skirt type.

Length—3⅞".

Weight—18¼ ounces.

Removal—Pistons and rods removed from above.

Clearance—Skirt .002". See Fitting New Pistons.

Fitting New Pistons:—Use .002" feeler stock inserted between piston and cylinder wall on side opposite slot to check clearance.

Installing Pistons:—Slot should be toward left or away from camshaft.

PISTON RINGS:—Two compression rings, two oil control rings per piston, all above pin.

C NTINUED N NEXT PAGE

ENGINE

CONTINUED FR M PRECEDIN PA E

Ring	Width	End Gap
Comp. All	1/8"	.010-.025"
Oil Cont. (#3)	1/8"	.010-.025"
Oil Cont. (#4)	3/16"	.010-.025"

PISTON PIN:—Diameter—7/8". Pin floats in piston and rod. Pin hole in rod is bronze bushed. Pins furnished for service standard, .001", .003", .005" oversize.

Pin Fit in Piston—Light push fit with piston heated.

Pin Fit in Rod Bushing—.0001" or light push fit with both parts at normal temperature.

CONNECTING ROD:—Length—8 3/4".

Weight—36 1/4 ounces.

Upper Bearing (Piston Pin Bushing)—Bronze.

Crankpin Journal Diameter—2".

Lower Bearing—Interchangeable steel-backed, copper-lead lined type. Shim adjustment.

Clearance—.001-.003". Sideplay .008-.012".

Bearing Adjustment:—Shims. Do not file rods or caps. Replace bearings when necessary.

CRANKSHAFT:—7 bearing. Integral counterweights.

Journal Diameters—2 31/64" all bearings.

Bearing Type—Interchangeable, steel-backed, copper-lead lined type. Shim adjustment.

Clearance—.002-.0025".

Bearing Adjustment:—Shims. Do not file caps. Replace bearings when necessary. Bearing upper halves can be removed without removing crankshaft.

End Thrust:—Taken by center bearing. Endplay .004-.007".

CAMSHAFT:—6 bearing. Non-adjustable chain drive.

Bearings—Removable, steel-backed, babbitt-lined.

Timing Chain:—Diamond 'double strand' roller chain. Width 9/16". Pitch 3/8". Length 22 1/2" or 60 links.

Camshaft Setting:—Sprockets are marked. Mesh chain with sprockets turned so that marks are adjacent and in line with a straightedge across the shaft centers. Remove and install chain 'endless.' Use special gear pullers and pushers, keep sprockets lined up so as to avoid sidestrain on chain or sprockets

VALVES:—	Head Diam.	Stem Diam.	Seat Width
Intake	1 21/32"	.341"	1/16"
Exhaust	1 17/32"	.341"	1/16"

	Seat Angle	Lift	Stem Clearance
Intake	45°	5/16"	.002"
Exhaust	45°	5/16"	.002"

VALVE TIMING

Tappet Clearance—.015" all valves—engine hot or cold.

Valve Timing:—See Camshaft Setting Above.

LUBRICATION

LUBRICATION:—Pressure. Gear type oil pump located in crankcase.

Normal Oil Presure:—25 lbs., 10 lbs. idling.

Oil Pressure Relief Valve:—Located on oil pump. Operates at 25 lbs. Adjustable by turning screw.

Crankcase Capacity:—7 quarts (full).

CLUTCH

CLUTCH:—Borg & Beck Model 9A6. Single plate, dry disc type. No adjustment required for wear.
See Clutch Section for complete data.

Facings—Moulded type, 2 required. Inside Diam. 6 1/8". Outside Diameter 9 1/8". Thickness 1/8".

Adjustment—Free movement of clutch pedal must be 1/2-1". Adjust whenever free movement is less than 1/2". To adjust, loosen nut on lower end of clutch pedal. Setscrew on throwout shaft at right end of clutch housing should not contact stop on case.

Removal—Disconnect driveshaft at rear of transmission, remove transmission, drop clutch housing underpan, take out capscrews mounting clutch on flywheel turning all screws out evenly to release spring pressure. Clutch assembly can then be removed from below without removing flywheel housing.

FRONT SUSPENSION

Front Suspension:—Conventional 'I' beam front axle with Reverse-Elliott ends and semi-elliptic springs.

Kingpin Inclination—7° crosswise.

Caster—2-4°. Adjust by inserting wedge shims between spring and spring pad on axle.

Camber—0-1 1/2°. No adjustment.

Toe In—0-1/8". To adjust, loosen clamp at right end of tie rod, turn tie rod in or out of this end joint, tighten clamp.

STEERING GEAR

Steering Gear: Gemmer Worm-and-Roller type.
See Steering Gear Section for complete data.

BRAKES

BRAKES (3610):—Service—Bendix hydraulic, duo-servo, single anchor type. Hand lever applies rear service brakes.
See Brake Section for complete data.

Drum Diameter—10".

Lining—Moulded type. Width 2". Thickness 3/16". Length 22 1/16" per wheel.

Clearance—.010" between drum and lining.

Hand Brake Adjustment:—Should be adjusted whenever service brakes adjusted. Turn adjusting screw in wheel so that shoes are tight in drum. Loosen 2 bracket bolts, pull hand brake lever 'on' three notches, pull bracket forward removing all slack in cables and tighten bolts. Then with lever in released position readjust shoes to give .010" clearance in drums by checking with feeler gauge through slot in drum.

MODEL IDENTIFICATION

SERIAL NUMBER:—First number H-1001 & L-50781 ('37), H-10501 & L-106281 ('38). Stamped on plate on right frame side member under engine hood.

ENGINE NUMBER:—1st number—('38) HE-10510 & LE-107912. Stamped on plate on right hand side of engine block.

TUNE-UP

COMPRESSION: Ratio—5.61-1 (3710), 5.83-1 (3810). **Pressure**—Approx. 100 lbs. at cranking speed.

VACUUM READING: 18-20" steady idling at 7 MPH.

FIRING ORDER: 1-5-3-6-2-4. See wiring diagram.

SPARK PLUGS: AC Type 85 (3710), Auto-Lite Type B-7 (3810). Both are 18 mm. Metric.
Gaps—.025" (.030" cars with radio).

IGNITION: See Coil, Condenser, and Distributor.
Breaker Gap—.020". **Cam Angle**—Closed: 35° (IGW-4010), 40° (IGC-4276), 38° (IGC-4415).
Automatic Advance—12° max. at 1000 RPM (distr.).

IGNITION TIMING: See Ignition Timing.
Std. Setting—TDC (3710), 4° ATDC (3810). Vibration dampener mark 'DC.IGN' (3710), 'IGN' (3810) aligned with pointer on chain case cover.

CARBURETION: See Carburetor & Carb. Equipment.
Idle Setting—Set idle screw midway between "miss" and "roll" points. Idle speed 7MPH (or 9 MPH to overcome stalling complaints if Overdrive used).
Float Level—Fuel level 5/8" below top edge of bowl.
Accelerating Pump—Inner hole (Summer temperatures), Outer hole (Winter temperatures).
Fuel Pump Pressure: 3½ lbs. maximum.

VALVES: See Valve Timing.
Tappet Clearance—.015" all valves, hot or cold.

STARTING: See Battery, Starter, Generator, Regulator.

IGNITION

Ignition Switch:—Oakes Steering Column and Ignition Lock No. 301630. Ignition Switch No. 301538.
Ignition Lock—Briggs & Stratton No. 80207 (Lock cylinder). Key Series—5 digits. Groove—#1.

COIL: Auto-Lite IG-4407 (3710), IG-4095 (3810). Mounted on dash.
Ignition Current—2.0 amperes idling, 5.0 stopped.

CONDENSER: Auto-Lite No. IGB-1025 (IGW), IG-2671 (IGC).
Capacity—.20-.25 microfarad.

DISTRIBUTOR: Auto-Lite Model IGW-4010 (for 3710), IGC-4276 (3810), IGC-4415 (3810 with oil-bath air cleaner). Single breaker, 6 lobe cam, full automatic advance type.
Breaker Gap—Set at .020".
Cam Angle: IGW-4010—35° Closed, 25° Open.
IGC-4276 40° Closed, 20° Open.
IGC-4415 38° Closed, 22° Open.
Breaker Arm Spring Tension—16-20 ounces.
Rotation—Clockwise viewed from top.

Automatic Advance

Distributor Degrees	R.P.M.	Engine Degrees	R.P.M.
Start	275	0	550
3	360	6	720
6.5	450	13	900
9	700	18	1400
11	900	22	1800
12	1000	24	2000

Removal:—Distributor mounted on cylinder head on right side. To remove, loosen locknut and take out setscrew on side of cylinder head opposite distributor shaft.

IGNITION TIMING

Model	Flywheel Degrees	Piston Position
3710	0° at TDC.	.0000" TDC.
3810	4° ATDC.	.0065" ATDC.

To Set Timing—With #1 piston on compression, turn engine over until piston reaches firing position (see table above), stop when "DC.IGN" mark (for 3710), 'IGN' mark (for 3810), on the vibration dampener at front of engine is directly under pointer. Loosen locknut and back off setscrew on side of cylinder head slightly, rotate distributor until contacts begin to open, tighten setscrew and locknut. NOTE—Car manufacturer recommends use of timing light for accurate ignition setting.

CARBURETOR

CARBURETION:—**Carburetor**—Stromberg Model AX-2. 1¼" downdraft type.
For complete data, refer to Carburetor Index.
Idle Adjustment—With engine warm, choke valve wide open, set throttle stopscrew so that engine idles at 7 MPH. (NOTE—On cars with cruising gear

CONTINUED N NEXT PAGE

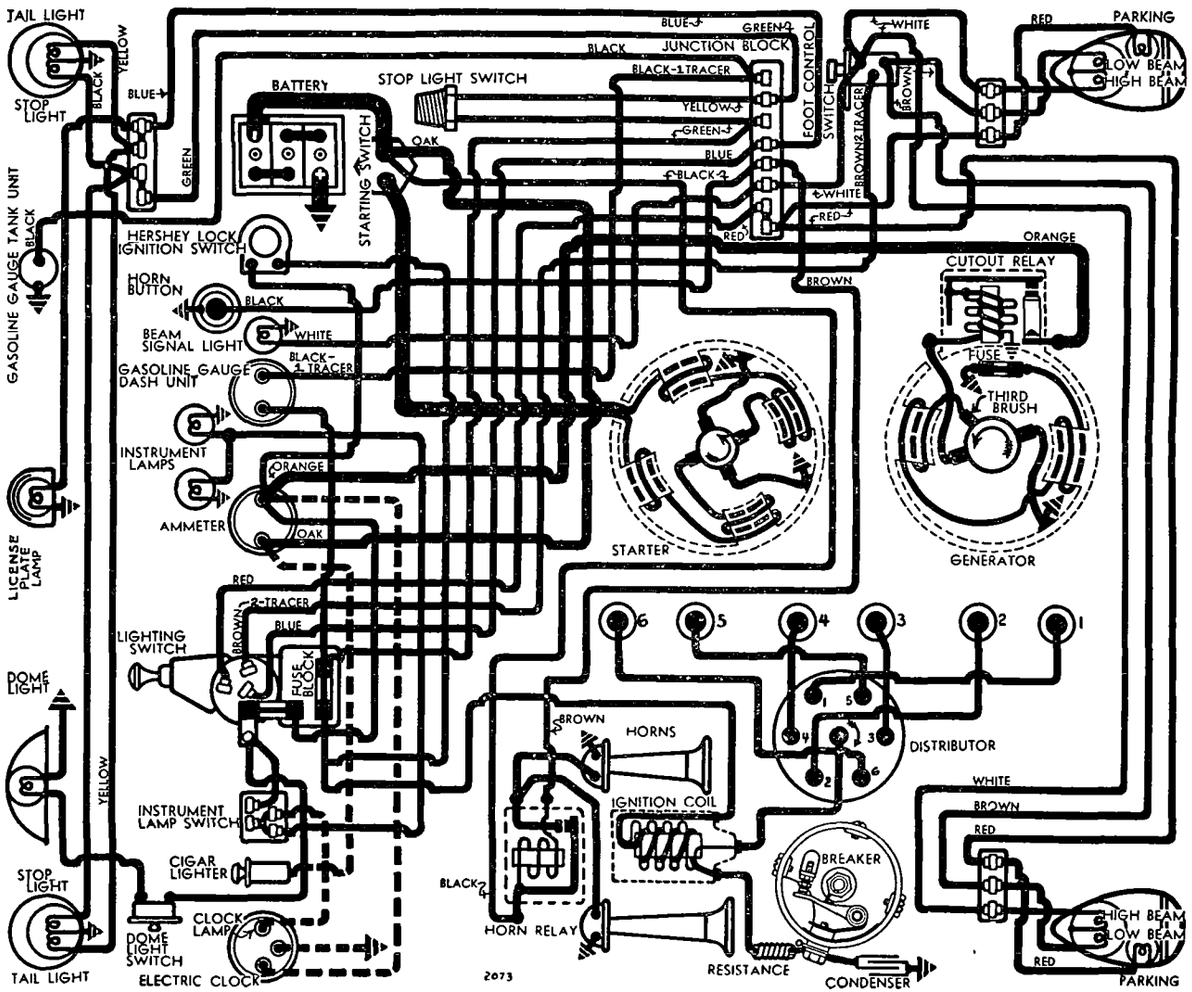

1937 MODELS

C NTINUED FR M PRECEDING PAGE

idle may be set at high as 9 MPH. to obtain satisfactory idle). Turn idle adjusting screw in until engine begins to miss, then turn screw out until engine begins to roll, finally turn screw in slowly until engine fires smoothly. Readjust throttle stop-screw for correct idle speed.

Accelerating Pump Setting—Throttle lever has two holes for pump link engagement. Change for seasonal requirements as follows:
Inner Hole (short stroke)—Summer temperatures.
Outer Hole (long stroke)—Winter temperatures.

CARB. EQUIPMENT

M DEL 3710

Air Cleaner:—Burgess oil-wetted type standard, AC #1528279 Heavy Duty Oil-bath type optional.

Fuel Pump:—AC Type W #1523233 Diaphragm type std., Type AD #1523234 combination fuel-and-vacuum type optl.

For complete data, refer to Carburetion Equip. Index.

Gasoline Gauge:—Motometer Electric. Dash unit No. NG-8241D. Tank unit NG-8230T.

For complete data, refer to Carburetion Equip. Index.

CARB. EQUIPMENT

MODEL 3810

Air Cleaner:—AC #1528643 oil-wetted type Std., #1528679 heavy duty oil-bath type Optl.

Fuel Pump:—AC. Type W #1523640 diaphragm type. Type AD #1523641 combination fuel-and-vacuum pump optional.

For complete data, refer to Carburetion Equip. Index.

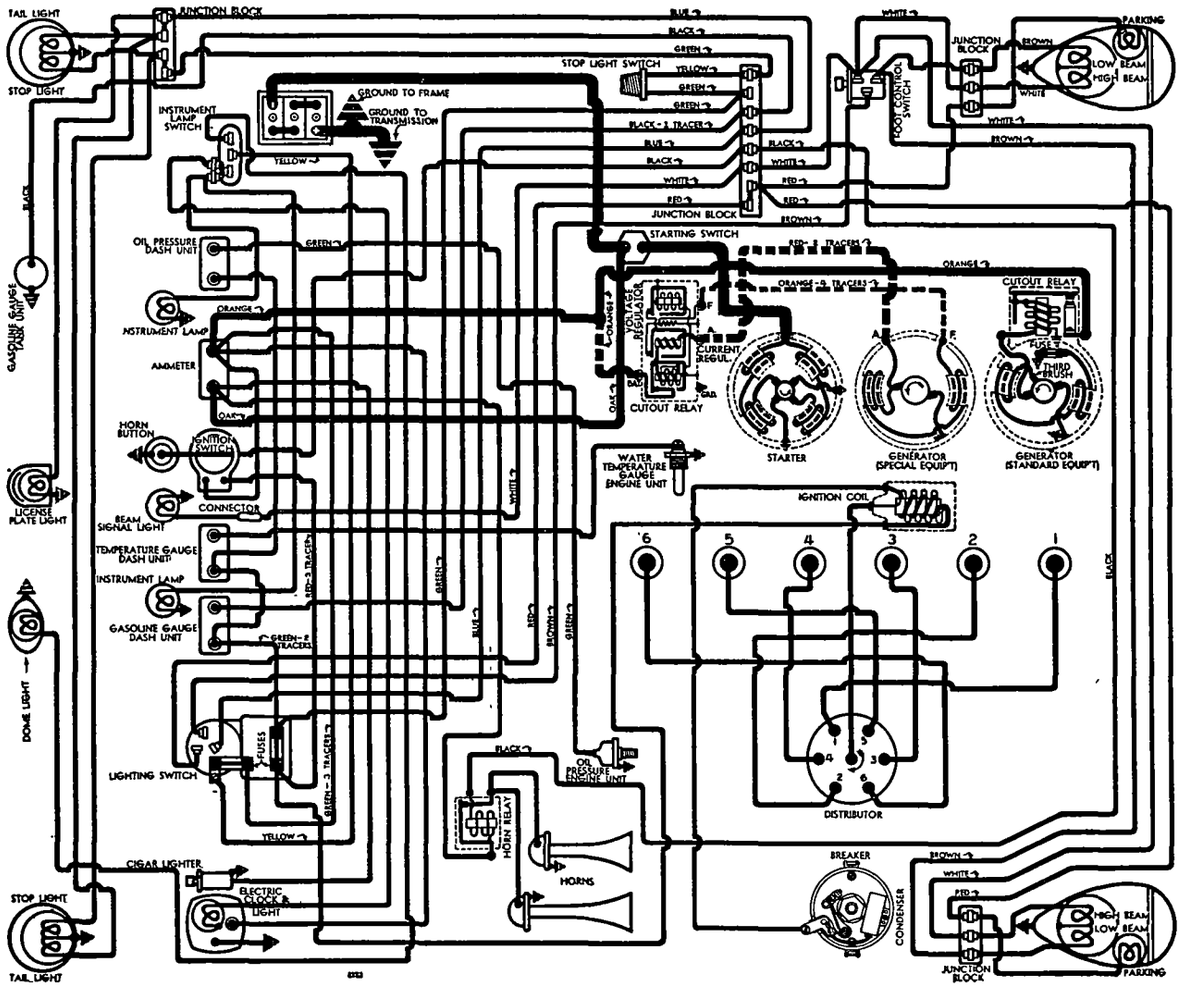

1938 MODELS

See Electrical Equipment Section for Regulator internal wiring when two resistors used.

Gasoline Gauge:—King-Seeley electric type. K-S No. 6730 (dash unit—first cars—ball type pointer), 7070 (dash unit—later cars—bar type pointer), No. 6732 (tank unit—all cars).

For complete data, refer to Carburetion Equip. Index.

BATTERY

MODEL 3710

BATTERY:—U.S.L. Type KL-1-13. 6 volt, 13 plate, 100 ampere hour capacity (20 hour rate).
Starting Capacity—120 amperes for 20 minutes.
Zero Capacity—300 amperes for 3.1 minutes.
Grounded Terminal—Positive (+) term. grounded to transmission cover bolt.
Location—On left side under drivers seat.

BATTERY

MODEL 3810

BATTERY:—U.S.L. Type HTL-1-15. 6 volt, 15 plate, 105 ampere hour capacity (20 hour rate).
Starting Capacity—133 amperes for 20 minutes.
Zero Capacity—300 amperes for 3.8 minutes.
Grounded Terminal—Positive (+) terminal grounded to frame and to transmission (1 cable).
Location—Under front seat on left hand side.
Dimensions—Length 9 1/16". Width 7⅛". Height 9 1/16".

STARTER

Auto-Lite Model MAB-4076. Armature MAB-2057.
Drive—Inboard Bendix Type LCD11FX-10.
Rotation—Counter-clockwise at commutator end.
Brush Spring Tension—42-53 ozs. (new brushes).
Cranking Engine—125 R.P.M., 150-160 amps., 5.2 v.

Performance Data

Torque		R.P.M.	Volts	Amperes
0	ft. lbs.	3700	5.5	60
.6	"	1910	5.5	100
3.4	"	1100	5.0	200
6.6	"	695	4.5	300
10.15	"	420	4.0	400
15.8	"	Lock	3.	582
22.5	"	Lock	4.	775

Removal:—Starter flange mounted on left front face of flywheel housing. To remove, take out flange mounting screws.

Starting Switch:—A-L Model SW-4005. Mounted on left side of engine below clutch pedal. Operated by depressing clutch pedal fully. No adjustment required.

GENERATOR

THIRD-BRUSH TYPES

Auto-Lite Model GCM-4803-4, GCM-4803A-4, or GCM-4803B-4. Armature GCJ-2030. Third brush control type with Cutout Relay on generator.

Charging Rate Adjustment—Make tests at generator. Remove comutator cover band, shift third brush counter-clockwise to increase, clockwise to decrease charging rate. Do not exceed maximum charging rate as given below. Third brush held in position by friction.
NOTE—Standard setting of third brush is 2⅜-2⅝ commutator bars from nearest main brush.

Maximum Charging Rate—22 amperes (cold), 18 amperes (hot), 8.0 volts, 2650 R.P.M.

Performance Data

Cold			Hot		
Amperes	Volts	R.P.M.	Amperes	Volts	R.P.M.
0	6.4	775	0	6.4	830
4	6.7	900	4	6.75	985
8	7.0	1075	8	7.1	1190
12	7.3	1200	12	7.5	1480
16	7.6	1420	16	7.8	1970
20	7.85	1900	18	8.0	2700
22	8.0	2650			

Rotation—Counter-clockwise at commutator end.
Brush Spring Tension—53 ozs. max. (new brushes).
Field Current—3.50-3.89 at 6.0 volts.
Motoring Current—5.75-6.25 amperes at 6.0 volts.
Field Fuse—5 ampere capacity (under cover on generator frame).
Removal & Belt Adjustment: Same as given below.

GENERATOR

TWO-BRUSH TYPES

Auto-Lite Model GCO-4802, GCO-4802A or GCO-4802C. Armature No. GCO-2031F. Two brush type with Current-Voltage Regulator for radio-equipped cars.

Charging Rate Adjustment—No adjustment at generator. Charging rate controlled by Current Regulator.

Maximum Charging Rate—28 amperes, 8.0 volts, 1850 R.P.M. and above with load or discharged battery (Current Regulator setting). Actual charging rate controlled by Voltage Regulator and is dependent on battery condition.

Performance Data

Cold			Hot		
Amperes	Volts	R.P.M.	Amperes	Volts	R.P.M.
0	6.4	825	0	6.4	900
4	6.6	940	4	6.6	1025
8	6.85	1050	8	6.85	1160
12	7.1	1175	12	7.1	1310
16	7.3	1300	16	7.3	1475
20	7.55	1450	20	7.55	1660
24	7.8	1610	24	7.8	1880
28	8.0	1850	28	8.0	2200

NOTE—Current reg. limits output to 28 amperes.
Rotation—Counter clockwise at commutator end.
Brush Spring Tension—53 ozs. max. (new brushes).
Field Current—1.47-1.63 amperes at 6.0 volts.
Motoring Current—3.94-4.36 amperes at 6.0 volts.

Removal (All Models):—Generator cradle mounted at left side of engine with fan belt drive. Water pump driven by generator shaft extension. To remove, disconnect water pump, loosen fan belt, remove generator clamp band and lift generator off.

Belt Adjustment (All Models):—Adjust whenever belt deflection is more than 1½" (when pressed lightly midway between generator and fan pulleys). To adjust, loosen two capscrews on fan bracket, lift fan up (one screw hole slotted) until belt deflection is approximately 1", tighten screws.

CUTOUT RELAY

FOR THIRD-BRUSH GENERATOR

Auto-Lite Model CB-4014 (for GCM Generators). Mounted on generator.
For complete data, refer to Electrical Equipment Index.
Cuts In—6.5-7.25 volts.
Cuts Out—.5-2.5 amperes discharge.
Contact Gap—.015-.045".
Air Gap—.010-.030" with contacts closed.

REGULATOR

FOR TW -BRUSH GENERAT R

Auto-Lite VRB-4002D or VRB-4010A. Current-Voltage Types(used with GCO Generators). Consists of Cutout Relay, vibrating Voltage Regulator, and vibrating Current Regulator in case on dash.
For complete data, refer to Electrical Equipment Index.
NOTE—Regulator cover is sealed. Serviced on exchange basis if seals not broken. Unit can be checked without breaking seal but cover must be removed to make adjustments.

Cutout Relay

Cuts In—6.4-7.0 volts Cold.
Cuts Out—.5-3.0 amperes discharge current.
Contact Gap—.015" minimum.
Air Gap—.034" min., .038" max. with contacts open. Measure at hinge end of core.

Voltage Regulator

Setting—7.3-7.6 volts at 70°F. (Regulator Serial No. 8R-000001 Up). **See Electrical Equipment Section for settings and changes on units before this serial no.**
To Check (Without Breaking Seals)—Connect ammeter in charging line at 'B' terminal on regulator, connect voltmeter between 'B' and 'GD' terminals. Operate generator, charging fully charged battery, at speed equivalent to 30 M.P.H until voltage is steady. Voltage should be within limits of 7.3-7.6 volts (cold—70°F), 7.1-7.4 volts (hot—140°F). See Regulator Setting above.
To Adjust (with cover removed)—Change armature spring tension slightly by bending lower spring hanger. See Electrical Equipment Section for complete directions.
Contact Gap—.010" Min., .020" Max. with armature against stop pin.
Air Gap—.0595-.0625" with contacts just opening.

Current Regulator

Setting—27-29 amperes (marked '28' on cover).
To Check (Without Breaking Seals)—Connect ammeter and voltmeter as directed for Voltage Regulator test. Operate generator at 30 M.P.H. car speed, add load (use bank of headlamp bulbs or turn on car lights and discharge battery) so that generator will charge at peak rate and bring Current Regulator into action. Charging current should not exceed 28 amperes. If more than slight excess is noted, Regulator is defective.
To Adjust (with cover removed)—Change regulator armature spring tension by bending lower spring hanger slightly. See Electrical Equipment Section for complete directions.
Contact Gap & Air Gap—As given above for Voltage Regulator.

LIGHTING

LIGHTING:—**Headlamps**—Corcoran-Brown, prefocused type. Country driving and City beams controlled by foot dimmer switch on toeboard. City beam deflected to right (special type 2331 lamp bulb).

Headlamp Adjustment—Aim headlamps straight ahead with top of beam at lamp center height at 25 feet, (upper beams—Country driving) lighted. Vertical adjustment controlled by mounting bolts—loosen bolts and shift lamp by hand. Horizontal adjustment controlled by screw (under hood just ahead of front mounting bolt.

Headlamp Beam Indicator—Red jewel light on instrument panel above speedometer dial. Lighted whenever Country driving (upper) beams lighted.

Switches

Lighting—Douglas.
Foot Dimmer—Douglas.

Bulb Specifications

Position	Candlepower	Mazda No.
Headlamps	32-32	2331
Park, Dash, License	3	81
Indicator	1	51
Stop-Tail	21-3	1158
Dome	6	63

MISC. ELECTRICAL

FUSES:—Lighting—20 amp. on back of lighting switch.
Accessory—20 ampere on fuse block attached to lighting switch. Protects stop light and gasoline gauge circuits.
Generator—5 ampere (on GCM-4803B-4 generator only). Located under cover on generator field frame.

HORNS:—**Sparton**—Vibrator type twin horns operated by R.B.M. horn relay.
Horn Relay:—R.B.M. Model 10072. Current draw .4-.55 amperes at 6.0 volts. Coil resistance 11-14 ohms. Contacts must close with 4 volts across windings when in inverted position.

ENGINE

ENGINE CODE NOTE:—Consists of three letters stamped on Engine Number Plate to indicate original size of Cylinder Bore (first letter), Main Bearings (second letter), Crankpin & Connecting Rod Bearings (third letter) as follows: 'A'—Standard, 'B'—.010" Undersize, 'C' .010" Oversize, 'D'—.015" Oversize, 'E'—.020" Oversize.

ENGINE SPECIFICATIONS:—Own 'Monitor Sealed' motor. Six cylinder, 'L' head. Cylinders cast enbloc. No intake manifold used, intake passage formed within head and block castings.
Bore—3⅜". Stroke—4⅜".
Displacement—234.8 cubic inches.
Rated Horsepower—27.34 (SAE).
Developed HP.—90 ('37), 95 ('38) @ 3400 RPM.
Compression Ratio—5.61-1 ('37). 5.83-1 ('38).
Compression Pressure—Approximately 100 lbs. at cranking speed. Cylinders equal within 10 lbs.
Vacuum Reading—Steady 18-20" idling at 7 MPH.

PISTONS:—Nash, aluminum alloy, Invar strut, split skirt type. See Engine Code Note above for original bore and piston sizes.
Removal—Pistons and rods removed from above.
Clearance—.0015-.002". See Fitting New Pistons.
Replacement Pistons:—Finished pistons furnished Std. and .001", .002", .003", .005", .010", .012", .015", .020" oversize. Semi-finished pistons .050" oversize.
Fitting New Pistons:—Use .002" feeler stock inserted between piston and cylinder wall on side opposite slot to check clearance. Pull required to withdraw feeler should be 10 lbs.

CONTINUED N NEXT PAGE

ENGINE

C NTINUED FR M PRECEDING PAGE

Installing Pistons:—Piston pin offset toward camshaft side of engine and trademark (within piston) toward front.

PISTON RINGS:—Two compression rings, two oil control rings per piston, all above pin.

Ring	Width	End Gap
Compression (All)	1/8"	.010"
Oil Control (#3—3710)	3/16"	.010"
Oil Control (#4—3710)	5/32"	.010"
Oil Control (All—3810)	5/32"	.010"

Replacement Rings: .010" and .020" oversize.

PISTON PIN:—Diameter—⅞". Pin floats in piston and rod, retained by locking rings. Pin hole in piston offset toward camshaft side of engine, pin hole in rod bronze-bushed.

Pin Fit in Piston—Light push fit (piston at 200°).

Pin Fit in Rod Bushing—.0001" or light push fit with piston and rod cold.

Replacement Pins: .001", .002", .005" oversize.

CONNECTING ROD:—Length—8¾" (center-to-center).

Upper Bearing (Piston Pin Bushing)—Bronze.

Crankpin Journal Diameter—2".

Lower Bearing—Removable, steel-backed, babbitt-lined type. No shims. See Engine Code Note (above) for original bearing sizes.

Clearance—.002". **Sideplay**—.004" max.

Bearing Adjustment:—None (no shims). Replace bearings. Do not file rods or caps.

Replacement Bearings:—Furnished .010" undersize.

CRANKSHAFT:—7 bearing. Integral counterweights.

Journal Diameters—2 31/64" all bearings.

Bearing Type—Interchangeable steel-backed, babbitt-lined type. No shims.

Clearance—.002".

Bearing Adjustment:—None (no shims). Replace bearings. Do not file bearing caps. Bearing upper halves can be 'rotated' out without removing crankshaft by using pin installed in oil hole in shaft and rotating shaft.

Replacement Bearings:—Furnished .010" undersize.

End Thrust:—Taken by center (#4) bearing. Endplay .004". No adjustment (replace bearing).

CAMSHAFT:—6 bearing. Non-adjustable chain drive.

End Thrust:—Taken by front bearing (shoulder formed on shaft behind bearing, and shoulder in front of bearing formed by sprocket hub when bolted on camshaft). Adjusted by replacing bearing.

Timing Chain:—Double-roller chain. Width 9/16". Pitch ¼". Length (3710—22½" or 60 links, 3810—23¼" or 62 links).

Camshaft Setting:—Sprockets are marked. Mesh chain with sprockets turned so that marks are adjacent and in line with a straightedge across the shaft centers. Install chain endless with camshaft sprocket off engine.

VALVES:—	Head Diameter	Seat Angle	Stem Clear.
Intake	1 21/32"	45°	.003"
Exhaust	1 17/32"	45°	.003"

VALVE TIMING

Tappet Clearance—.015" all valves with engine hot or cold.

Valve Timing:—See Camshaft Setting above.

LUBRICATION

LUBRICATION:—Pressure. Gear type oil pump located in crankcase.

Normal Oil Pressure:—25-35 lbs. at normal temp.

Oil Pressure Relief Valve:—Located on il pump. Operates at 30 lbs. Adjustable by turning screw.

Crankcase Capacity—6 qts. (refill).

Oil Pressure Gauge:—King-Seeley Electric. K-S No. 6730 (dash unit, first cars—ball type pointer), 7070 (dash unit, later cars—bar type pointer), No. 6125 (motor unit). This gauge used on Model 3810 only.

See Miscellaneous Section for complete data.

COOLING

COOLING SYSTEM:—Water Pump. Centrifugal type with adjustable packing. Impeller driven through flexible coupling by extension of generator shaft.

See Water Pump Section for complete data.

Removal—Drain radiator, disconnect hose and drive coupling, take out mounting screws in pump flange.

Thermostat:—Dole. Located in water outlet elbow on cylinder head.

Setting—Thermostat opens at 160°F.

Temperature Gauge ('38): King-Seeley Electric type.

Dash Unit—K-S No. 6730(with Ball type pointer), No. 7070 (with Bar type pointer).

Engine Unit—K-S No. 5700.

NOTE—No. 5700 Engine Unit serviced by No. 7000 (new type) which must be used with new Dash Unit No. 7295. Service Kit No. 7643 contains both units.

See Miscellaneous Section for complete data.

Water Capacity: 20 quarts.

CLUTCH

CLUTCH:—Borg & Beck Model 9A6. Model No. 906 stamped on cover. Single plate, dry disc type.

See Clutch Section for complete data.

Facings—Moulded-Woven type, 2 required. Inside Diam. 5⅝". Outside Diam. 9¼". Thickness ⅛".

NOTE—Woven facings used on Model 3710.

Adjustment—Free movement of clutch pedal must be ½-1½". Adjust by loosening transverse bolt in slot below clutch pedal shaft and positioning pedal in slot. Clearance between pedal and toeboard should be ⅜". Check 'NoRol' setting whenever clutch adjusted and adjust if necessary.

NoRol Adjustment—Loosen locknut and turn adjusting nut at rear end of connecting rod (at NoRol lever) in for later brake release, out for earlier release. Brakes should release just as clutch engages.

Removal:—Remove transmission (see Transmission Removal below), remove clutch housing underpan, take out clutch mounting bolts evenly, remove assembly from below.

TRANSMISSION

TRANSMISSION:—Own Make. Constant-mesh, synchro-mesh, helical gear (second and high), sliding helical gear (low and reverse).

See Transmission Section for complete data.

Vacuum Gear Shift (Transmission Control):—Evans Nash vacuum type. Optional on Model 3810.

See Transmission Section for complete data.

Removal:—Disconnect drive shaft. Disconnect shift linkage (on cars with Vacuum Gear Shift). Take off nuts on transmission mounting bolts, pull transmission straight back.

OVERDRIVE

Cruising Gear (Overdrive):—Warner Model AS2-R6 (3710), AS6-R6 (3810) optional.

See Transmission Section for complete data.

UNIVERSALS

UNIVERSAL JOINTS:—Mechanics—Model 2C. Roller bearing type. 2 used.

See Universals Section for complete data.

REAR AXLE

REAR AXLE:—Own—Semi-floating, spiral bevel gear type with Hotchkiss drive.

See Rear Axle Section for complete data.

Ratio—4 1/9-1 Standard.

Removal:—Block up rear of car, remove wheels and axle shafts, disconnect brake lines and cables, shock absorber links, drive shaft at rear universal joint. Free axle from springs by disconnecting spring bolts, remove axle assembly from under car.

Axle Shaft Removal—Remove wheels, take out mounting screws in retainer, remove retainer, oil seal, brake backing plate, bearing adjusting shims. Use puller to remove shaft and bearing assembly.

Wheel Bearing Adjustment—Controlled by shims at flanged end of housing. To adjust, remove brake backing plate and add or remove shims.

Endplay—.003-.006".

SHOCK ABSORBERS

SHOCK ABSORBERS:—Nash (Delco or Gabriel design), double acting (3710), direct acting (3810).

See Shock Absorber Section for complete data.

FRONT SUSPENSION

Front Suspension:—Conventional 'I' beam front axle with Reverse-Elliott ends and semi-elliptic springs.

Kingpin Inclination—7° crosswise.

Camber—½-1½°. No adjustment.

Caster—2½° ('37), 1½° ('38). Shim adjustment. Install shims between spring and spring pad on axle.

Toe In—0-1/16". Adjust by loosening clamp bolt at right hand end of tie rod and turning rod in or out of end fitting.

Steering Shock Eliminator—Consists of rubber bumper mounted on underside of left frame siderail just in front of left front spring shackle. Adjust to give 1/16" clearance between spring and bumper with normal load.

STEERING GEAR

Steering Gear: Gemmer Model 305 Worm-and-Roller type with "push-pull" adjustments.

See Steering Gear Section for complete data.

BRAKES

BRAKES:—Service. Bendix Duo-Servo, Single Anchor type, or Lockheed type, Hydraulic brakes. Hand lever applies rear wheel service brakes. NoRol optl

See Brake Section for complete data.

Drum Diameter—10" ('37), 10 1/16" ('38).

Lining—Woven (primary '38), Moulded (all '37—secondary '38). Width 2". Thickness 3/16". Length per wheel 22 1/16" ('37).

Clearance (Bendix)—.010" at heel & toe (each shoe).

(Lockheed)—.005" heel, .010" toe (each shoe).

Hand Brake: See Service Brakes above.

NoRol: Optional equipment.

See Brake Section for complete data.

NOTE:—Engine hood hinged at cowl and lifts from forward end. Hood latch handle located at lower edge of radiator grille (safety catch at top of grille).

MODEL IDENTIFICATION

SERIAL NUMBER:—First number H-19450. Stamped on plate on right frame side rail under engine hood.

ENGINE NUMBER:—First number HE-18950. Stamped on boss on upper left hand side of engine block above front water jacket cover plate. NOTE—Engine No. for each car is 500 less than serial number.

TUNE-UP

COMPRESSION:—Ratio—6.30-1 std. cast-iron head. Pressure—110 lbs. at 160 R.P.M. (cranking speed). Pressure should be equal for all cylinders within 10 lbs.

VACUUM READING:—Gauge should show steady reading of 18-20" with engine dling at 7-8 M.P.H.

FIRING ORDER: 1-5-3-6-2-4. See wiring diagram.

SPARK PLUGS: Auto-Lite B7 or AC G-9. 18 mm. Gaps—Set at .025".

IGNITION: See Coil, Condenser, and Distributor.
Breaker Gap—.020" Cam Angle—38° Closed.
Automatic Advance—5° max. at 850 RPM. (distr.).
Vacuum Advance—5½° (distr.) with 12" vacuum.

IGNITION TIMING: See Ignition Timing.
Std. Setting—TDC. Vibration dampener mark 'IGN. DC' aligned with pointer on chain case cover.

CARBURETION: See Carburetor & Carb. Equipment.
Idle Setting—Screws midway between 'miss' and 'roll' points. Idle speed 7-8 MPH.
Float Level—Fuel level 15/32" below edge of bowl.
Accelerating Pump—Inner Hole (Summer), outer (Winter).
Fuel Pump Pressure: 3½ lbs maximum.

VALVES: See Valve Timing.
Tappet Clearance—.015" all valves, hot or cold.

STARTING: See Battery, Starter, Generator, Regulator.

IGNITION

Ignition Switch:—Oakes Steering Column and Ignition Lock No. 302000. Ignition Switch No. 301538.
Ignition Lock—Briggs & Stratton No. 80207 (Lock cylinder). Key Series—5 digets. Groove—#1.

COIL: Auto-Lite IG-4095. Mounted on dash.
Ignition Current—2.0 amperes idling, 5.0 stopped.

CONDENSER: Auto-Lite Part No. IG-2671-F.
Capacity—.20-.25 microfarad.

DISTRIBUTOR: Auto-Lite IGS-4104 (Std.), IGS-4104X (With Oil Bath Air Cleaner). Single breaker, 6 lobe cam, full automatic advance type with auxiliary vacuum spark control. NOTE—Models IGS-4104X distributor is side-outlet type (see diagram).
Breaker Plate Identification—Maximum vacuum advance limited by slot and marked by number (#6) stamped on plate.
Cam Angle or Dwell—38° closed, 22° open (distr.).
Breaker Gap—Set at .020".
Breaker Arm Spring Tension—16-20 ounces.
Rotation—Clockwise viewed from top.

Automatic Advance

Distributor Degrees	Distributor R P.M.	Engine Degrees	Engine R.P M.
Start	250	0	500
1	300	2	600
2	440	4	880
4	710	8	1420
5	850	10	1700

Vacuum Spark Control—Integral with distributor. Mounted on distributor housing and linked directly to breaker plate. Provides additional advance for speeds above idling except when engine accelerated or operated with wide open throttle when spark is retarded by return spring within unit.

Vacuum Spark Advance

Distr. Degrees	Eng. Degrees	Vacuum (" of HG)
Start	0°	6"
.9°	1.8°	7"
3°	6°	9-10"
5 5°	11°	12"

Removal:—Distributor mounted on cylinder head on right side. To remove, disconnect vacuum line, loosen locknut and take out setscrew on side of cylinder head opposite distributor shaft.

IGNITION TIMING

IGNITION TIMING:—Setting for all engines as f llows:

Flywheel Degrees	Piston Position
0° At TDC	.0000" TDC

To Set Timing—With #1 piston on compression, turn engine over until the piston reaches top dead center, stop when 'IGN' mark on vibration dampener at front of engine is directly under pointer. Loosen locknut and back off setscrew on side of cylinder head slightly, rotate distributor until contacts begin to open, tighten setscrew and locknut.
NOTE—Car manufacturer recommends use of timing light for accurate ignition setting.

CONTINUED ON NEXT PA E

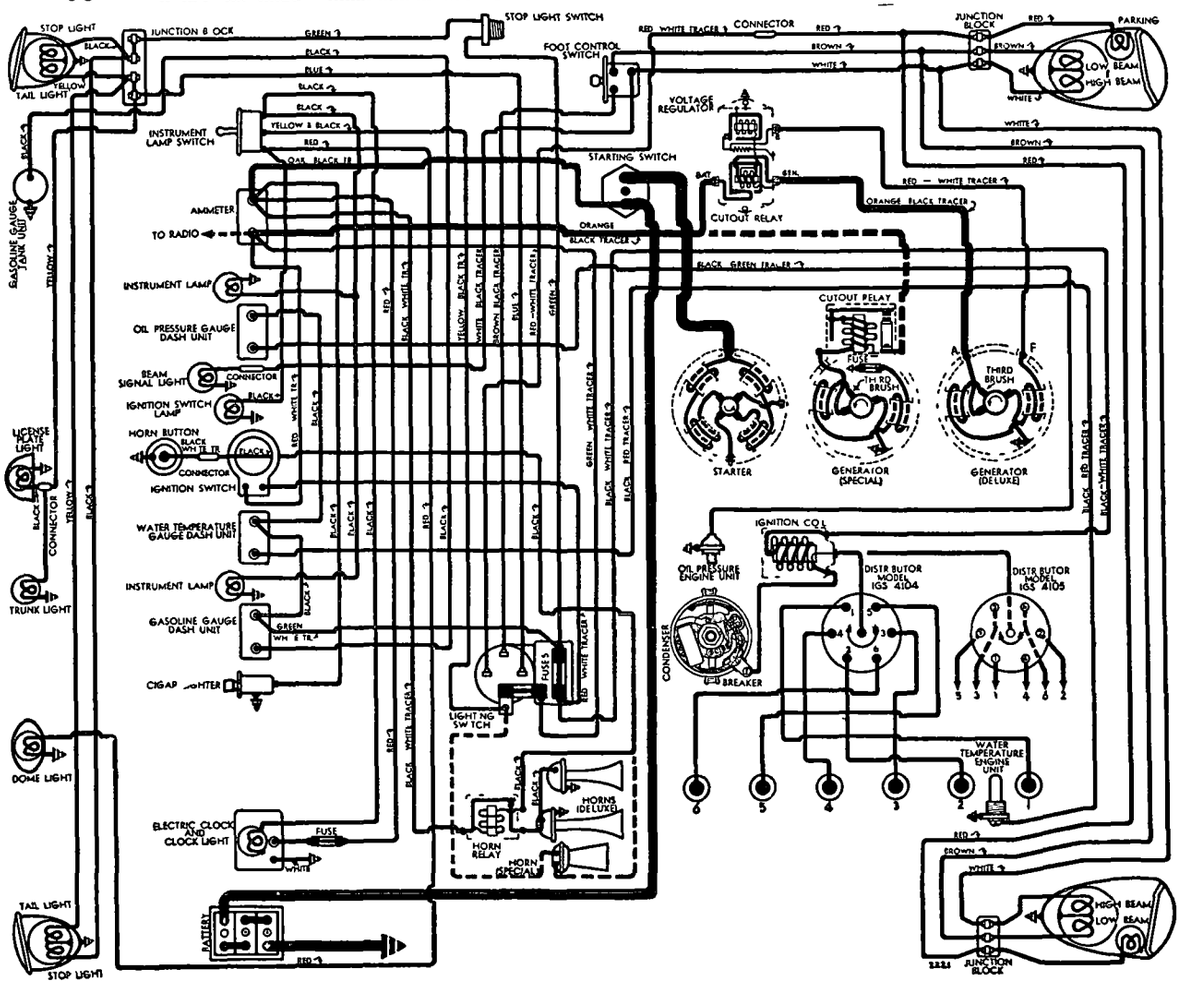

C NTINUED FROM PRECEDING PAGE

CARBURETOR

CARBURETION:—Carburetor—Stromberg Model EE-1. 1" dual downdraft type.
For complete data, refer to Carburetor Index.

Idle Adjustment—With engine warm, throttle stopscrew on slow idle and choke valve wide open, set throttle stopscrew so that engine idles at 7-8 M.P.H. Turn one idle adjusting screw in until engine begins to lag or miss, then turn screw out until engine begins to roll, finally turn screw in slowly until engine fires smoothly. Repeat adjustment for second idle adjusting screw. Readjust throttle stopscrew for correct idle speed.
Accelerating Pump Adjustment—Throttle lever has two holes for pump link engagement. Set for seasonal requirements as follows:
Inner Hole (Min. stroke)—Summer temperatures.
Outer Hole (Max. stroke)—Winter temperatures.

CARB. EQUIPMENT

Air Cleaner:—AC. #1528643 (with #1529117 silencer adapter) used on early cars, #1529111 later cars, oil-wetted type standard. #1529114 heavy duty oil-bath type optional.

Fuel Pump:—AC. Type W #1523640 diaphragm type standard. Type AD #1523641 combination fuel-and-vacuum pump optional or used on cars with Overdrive.
For complete data, refer to Carburetion Equip. Index.

Gasoline Gauge:—King-Seeley Electric type. Dash unit—K-S No. 7070 (Special), 7265 (Deluxe). Tank unit—K-S No. 6732 (all cars).
For complete data, refer to Carburetion Equip. Index.

BATTERY

BATTERY:—U.S.L. Type RN-15. 6 volt, 15 plate, 95 Ampere Hour capacity (20 hour rate).
Starting Capacity—117 amperes for 20 minutes.
Zero Capacity—300 amperes for 3.1 minutes.
Grounded Terminal—Positive (+) grounded to fram .
Location—Under front seat on left hand side.
Dimensions—Length 8⅞". Width 7". Height 8⅝".

STARTER

Auto-Lite Model MAB-4076. Armature MAB-2057.
Drive—Inboard Bendix Type LCD11FX-10.
Rotation—Counter-clockwise at commutator end.
Brush Spring Tension—42-53 ozs. (new brushes).
Cranking Engine—125 R.P.M., 150-160 amps., 5.2 v.

Performance Data

Torque		R.P.M.	Volts	Amperes
0	ft. lbs.	3700	5.5	60
.6	"	1910	5.5	100
3.4	"	1100	5.0	200
6.6	"	695	4.5	300
10.15	"	420	4.0	400
15.8	"	Lock	3.0	582
22.5	"	Lock	4.0	775

Removal:—Starter flange mounted on left front face of flywheel housing. To remove, take out flange mounting screws.

Starting Switch:—A-L Model SW-4005. Mounted on left sid of engine below clutch pedal. Operated by depressing clutch pedal fully. No adjustment required.

GENERATOR
SPECIAL M DEL

Auto-Lite Model GCM-4825A. Armature GCJ-2097. Third brush control type with Cutout Relay mounted on generator.

Charging Rate Adjustment—Make tests at generator. Remove commutator cover band, shift third brush counter-clockwise to increase, clockwise to decrease charging rate. Do not exceed maximum charging rate as given below. Third brush held in position by friction.
NOTE—Standard setting of third brush is 2⅜-2⅝ commutator bars from nearest main brush.
Maximum Charging Rate—21 amperes (cold), 18 amperes (hot), 8.0 volts, 2650 R.P.M. or 24 M.P.H.

Performance Data

Cold			Hot		
Amperes	Volts	R.P.M.	Amperes	Volts	R.P.M.
0	6.4	775	0	6.4	830
4	6.7	900	4	6.75	985
8	7.0	1075	8	7.1	1190
12	7.3	1200	12	7.5	1480
16	7.6	1420	16	7.8	1970
20	7.85	1900	18	8.0	2700
22	8.0	2650			

Rotation—Counter-clockwise at commutator end.
Brush Spring Tension—53 ozs. max. (new brushes).
Amperes Field Current—3.50-3.89 at 6.0 volts.
Motoring Current—5.75-6.25 amperes at 6.0 volts.
Field Fuse—5 ampere capacity (under cover on generator frame).

Removal and Belt Adjustment:—Same as for Deluxe generator following.

GENERATOR
DELUXE MODEL

Auto-Lite Model GDS-4802A. Armature GDF-2097. Third brush control type with external Voltage Regulator mounted on car frame. NOTE—This generator optional equipment on Special Models.
Maximum Charging Rate—35 amperes (cold), 27.5 amperes (hot), at 8.0 volts, 24 M.P.H. Actual charging rate controlled by Voltage Regulator and dependent on battery condition.
Charging Rate Adjustment—Maximum output controlled by third brush. Do not adjust third brush for output greater than shown in table below (with field terminal grounded to render regulator inoperative). See Regulator Section (following).
NOTE—Third brush setting 1 bar minus 1 mica strip (minimum), 1 bar (maximum) from insulated main brush.

Performance Data

Cold			Hot		
Amperes	Volts	R.P.M.	Amperes	Volts	R.P.M.
0	6.4	920	0	6.4	960
4	6.6	1050	4	6.65	1120
8	6.8	1175	8	6.9	1280
12	7.0	1300	12	7.1	1430
16	7.2	1450	16	7.45	1640
20	7.4	1600	20	7.6	1900
24	7.6	1820	24	7.8	2320
28	7.8	2075	27.5	8.0	3200
33	8.0	2900			

Rotation—Counter-clockwise at commutator end.
Brush Spring Tension—53 ozs. max. (new brushes).
Field Current—1.65-1.82 amperes at 6.0 volts.
Motoring Current—5.10-5.45 amperes at 6.0 volts.

Removal (All Models):—Generator cradle mounted at left side of engine with fan belt drive. Water pump driven by generator shaft extension. To remove, disconnect water pump, loosen fan belt, remove generator clamp band and lift generator off.

Belt Adjustment (All Models):—Adjust whenever belt deflection is more than 1½" (when pressed lightly midway between generator and fan pulleys). To adjust, loosen two capscrews on fan bracket, lift fan up (one screw hole slotted) until belt deflection is approximately 1", tighten screws.

GENERATOR
SPECIAL EQUIPMENT

Auto-Lite Model GCO-4802C. Armature GCO-2031F. Two brush type with external Current-Voltage Regulator. Optional on All Models. *See preceding Nash-Lafayette 3710 & 3810 pages for complete data.*

CUTOUT RELAY
SPECIAL MODEL

Auto-Lite Model CB-4014 (for cars with GCM-4825A Generator):—Mounted on generator.
For complete data, refer to Electrical Equipment Index.
Cuts In—6.5-7.25 volts, 9 M.P.H.
Cuts Out—.5-2.5 amperes discharge.
Contact Gap—.015-.045".
Air Gap—.010-.030" with contacts closed.

REGULATOR
DELUXE MODEL

Auto-Lite Model VRD-4010A. Voltage Type (Used with GDS-4802A generator). Consists of cutout relay and vibrating voltage regulator in a single case mounted on frame in engine compartment.
For complete data, refer to Electrical Equipment Index.
NOTE—Regulator cover sealed. Serviced on exchange basis if seals not broken.

Cutout Relay

Cuts In—6.4-7.0 volts Cold, 9 M.P.H.
Cuts Out—.5-3.0 amperes discharge current.
Contact Gap—.015" minimum.
Air Gap—.034-.038" Contacts open—measure at hinge end of core.

Voltage Regulator

Setting—7.3-7.6 volts at 70°F.
To Check (without breaking seals)—Connect ammeter in charging line at regulator 'B' terminal, voltmeter between 'B' and 'GD' terminals. Operate generator at speed equivalent to 30 M.P.H., charging battery, until voltage is steady. Voltage reading ing should be 7.3-7.6 volts (Cold—70°F), 7.1-7.4 volts (Hot—140°F).
To Adjust (with cover removed)—Change regulator armature spring tension by bending lower spring hanger. See Electrical Equipment Section for complete directions.
Contact Gap—.010-.020" (armature against stop pin).
Air Gap—.0595-.0625" with contacts just opening.

REGULATOR
SPECIAL EQUIPMENT

Auto-Lite Model VRB-4010A. Current-Voltage Type (Used with GCO-4802C Generator). *See preceding 3810 page for complete data.*

LIGHTING

LIGHTING:—Headlamps—Corcoran-Brown, pre-focused type. Country driving and City beams controlled by selector switch on toeboard. City beam deflected slightly to right (special 2331 bulb).

Headlamp Adjustment—With car 25' from screen and Country Driving (upper beams) lighted, aim headlamps straight ahead with top of beam at lamp center height. Adjusting screws located under headlight door to left of lens. Upper screw controls horizontal movement, lower screw vertical movement.

Beam Indicator—Red dot above speedometer dial. Lighted when County Driving (upper beams) in use.

Switches

Lighting—Douglas.

Beam Selector—Douglas.

Instrument—Douglas.

Bulb Specifications

Position	Candlepower	Mazda No.
Headlamps	32-32	2331
Park, Dash, License	3	63
Indicator	1	51
Stop-Tail	21-3	1158
Dome	6	81

MISC. ELECTRICAL

FUSES:—Lighting—20 amp. on back of lighting switch.

Accessory—20 ampere on fuse block attached to lighting switch. Protects stop light and gasoline gauge circuits.

Generator—5 ampere (on GCM-4825A) generator only). Located under cover on generator field frame.

HORNS:—Single—Sparton vibrator type. Standard on Special Series.

Dual—Auto-Lite Model HH-4003 (low pitch), HH-4004 (high pitch). Vibrator type, blended tone operated by horn relay. Standard on Deluxe Series, optional on Special Series.

Horn Relay:—R.B.M. Model 4755.

Contacts Close—3.5-4.5 volts.

Current Draw—¾ ampere.

ENGINE

ENGINE CODE NOTE:—Consists of three letters stamped on Engine Number Plate to indicate original size of Cylinder Bore (first letter), Main Bearings (second letter), Crankpin & Connecting rod bearings (third letter) as follows: 'A'—Standard, 'B'—.010" Undersize, 'C'—.010" Oversize, 'D'—.015" Oversize, 'E' .020" Oversize.

ENGINE SPECIFICATIONS:—Own Make. 6 cylinder, 'L' head type. Cylinders cast enbloc. No intake manifold used, intake passage formed within head and block castings.

Bore—3⅜". Stroke—4⅜".

Displacement—234.8 cu ins. **Rated HP.**—27.34.

Developed Horsepower—99 HP. at 3400 R.P.M.

Compression Ratio—6.3-1 cast-iron head.

Compression Pressure—110 lbs. at cranking speed (160 R.P.M.).

Vacuum Reading—18-20" steady idling at 7-8 MPH.

PISTONS:—Nelson-Bohnalite, aluminum alloy, Invar strut, tin plated, split skirt type. See Engine Code Note above for original bore and piston sizes. **Weight**—19¼ ounces. **Length**—3⅞". **Removal**—Pistons and rods removed from above. **Clearance**—Top .027-.030". Skirt .001-.002".

Replacement Pistons:—Std. & .001", .002", .003", .005", .010", .012", .015", .020" O.S. Semi-finished .050" O.S.

Fitting New Pistons:—Insert .002" feeler between piston and cylinder wall on side opposite slot. Pull to withdraw feeler should be 10 lbs.

Installing Pistons:—Pin offset to camshaft side of engine. Trademark (within piston) to front.

PISTON RINGS:—Two compression rings, two oil control rings per piston, all above pin.

Ring	Width	End Gap	Wall Thickness
Compression	.123-.124"	.010-.020"	.150"
Oil Control	.1545-.1550"	.010-.018"	.150"

Replacement Rings:—Furnished .010", .020" oversize.

PISTON PIN:—Diameter .8745-.8748". **Length** 2.799-2.809". Floating type. Retained by locking rings. Pin hole in piston offset to camshaft. **Pin Fit in Piston**—Light push fit (piston at 200°F). **Pin Fit in Rod Bushing**—Select fit to .0001" or light push fit at normal temperature.

Replacement Pins:—Furn. 001", .002", .005" oversize.

CONNECTING ROD:—Length—8¾". **Weight**—36¼ ozs. **Upper Bearing (Piston Pin Bushing)**—Bronze. **Crankpin Journal Diameter**—2.0015-2.0025". **Lower Bearing**—Removable steel-backed, babbitt-lined type. No shims. See Engine Code Note (above) for original bearing sizes. **Clearance**—.0015-.0025". **Sideplay**—.008-.012".

Bearing Adjustment:—None (no shims). Replace bearings. Do not file rods or caps.

Replacement Bearings:—Furnished .010" undersize.

CRANKSHAFT:—7 bearing, 4 counterweights. **Journal Diameters**—2 31/64" all bearings. **Bearing Type**—Interchangeable steel-backed, babbitt-lined. No shims. See Engine Code Note (above) for original bearing sizes. **Clearance**—.002".

Bearing Adjustment:—None (no shims). Replace bearings. Do not file caps. Upper halves can be 'rotated' out without removing crankshaft by using pin in oil hole in shaft, turn shaft.

Replacement Bearings:—Furnished .010" undersize.

End Thrust:—At #4 bearing. **Endplay**—.004".

CAMSHAFT:—6 bearing. Non-adjustable chain drive.

End Thrust:—Taken by front bearing. Replace bearing to take up excessive endplay.

Timing Chain:—Whitney No. 49205. Width 9/16". Pitch ⅜". Length 60 links or 22½".

Camshaft Setting:—Sprockets marked. Mesh chain with sprocket marks adjacent and in line with a straightedge across the shaft centers.

VALVES:—	Head Diameter	Stem Diameter	Length
Intake	1 21/32"	.3402-.3412"	5 55/64"
Exhaust	1 17/32"	.3402-.4312"	5 55/64"

	Seat Angle	Lift	Stem Clearance
All Valves	45°	5/16"	.002-.004"

Valve Guides:—Press fit in block.

Valve Springs:—Free length 2½".

	Spring Pressure	Spring Length
Valve Closed	65-70 lbs.	2"
Valve Open	111-118 lbs.	1 11/16"

VALVE TIMING

Tappet Clearance:—.015" all valves, hot or cold.

Valve Timing:—See Camshaft Setting above. **Intake Valves**—Open 21½° BTDC. Close 71° ALDC. **Exhaust Valves**—Open 71° BLDC. Close 36½° ATDC. **Valve Timing Check**—With regular running tappet clearance of .015", Intake valve should open with piston 21½° or .1891" BTDC., and Exhaust valve close with piston 36½° or .5118" ATDC.

LUBRICATION

LUBRICATION:—Gear type pump in crankcase.

Normal Oil Pressure:—30 lbs. at 20 M.P.H.

Oil Pressure Relief Valve:—On oil pump cover. Opens at 30 lbs. Screw adjustment.

Crankcase Capacity:—6 qts.

Oil Pressure Gauge:—King-Seeley Electric. K-S No. 7270 (dash—Deluxe), 7070 (dash—Special), 6125 (engine unit—all models).

See Miscellaneous Section for complete data.

COOLING

COOLING SYSTEM:—Capacity—20 quarts.

Water Pump:—Centrifugal, adjustable packing type. Driven by generator extension shaft.

See Water Pump Section for complete data.

Removal—Drain radiator, disconnect hose and drive coupling, take out mounting screws in pump flange.

Thermostat:—Dole. In water outlet on cyl. head. **Setting**—Starts to open at 160°F.

Temperature Gauge:—King-Seeley Electric. K-S No. 7275 (dash—Deluxe), 7295 (dash—Special), 7000 (engine unit—all models).

See Miscellaneous Section for complete data.

NOTE—Gauge reads '212' with ignition 'Off'.

CLUTCH

CLUTCH:—Borg & Beck Model 9A6. #932 stamped on cover. Single plate, dry disc type.

See Clutch Section for complete data.

Facings—Woven. 2 required. Inside Diam. 5⅜". Outside Diam. 9¼". Thickness .125".

Adjustment:—Pedal free movement ½-1¼" (loosen transverse bolt in link below pedal shaft, position pedal in slot). Pedal toeboard clearance ⅜". Check No-Rol' operation (if car so equipped.)

Removal:—Remove transmission (see below), clutch housing underpan, clutch cover mounting bolts (release tension evenly), lower assembly out.

TRANSMISSION

TRANSMISSION:—Own Make. Constant-mesh (all speeds), syncro-mesh (second & high), all helical gear.

See Transmission Section for complete data.

Transmission Control:—Mechanical type steering column mounted gear shift, optional.

See Transmission Section for complete data.

Removal:—Disconnect driveshaft. Disconnect shift linkage (cars with steering column shift). Remove transmission mounting stud nuts and lift out.

OVERDRIVE

Cruising Gear (Overdrive):—Warner design type R6 optional. In separate case at rear of transmission.

See Transmission Section for complete data.

CONTINUED N NEXT PAGE

CONTINUED FROM PRECEDING PAGE

UNIVERSALS

UNIVERSAL JOINTS:—Mechanics. Type 2C. Roller bearing type. 2 used.

See Universals Section for complete data.

REAR AXLE

REAR AXLE:—Own Make. Semi-floating, hypoid gear type with Hotchkiss drive (spiral bevel on Coupe).

See Rear Axle Section for complete data.

Ratio—4.1-1 Std. 4 4/9-1 Optl.

Backlash—.005-.007". Shim adjustment.

Removal:—Block up rear of car, remove wheel and drum assemblies, axle shafts, disconnect brake lines and cables, shock absorbers, drive shaft at rear universal. Free axle from springs by disconnecting spring bolts, withdraw axle.

Axle Shaft Removal—Remove wheel and drum, take out retainer mounting bolt nuts, remove retainer, oil seal, brake backing plate, bearing adjusting shims. Pull shaft and bearing out.

Wheel Bearing Adjustment—Shims at flanged end of housing. To adjust, remove brake backing plate, add or remove shims. **Endplay**—.004-.006".

SHOCK ABSORBERS

SHOCK ABSORBERS:—Delco. Front 1112-N (Special), Q (Deluxe). Rear 1117-DD. Direct acting, hydraulic type, 1723-L, M, N, P (double acting) Export.

See Shock Absorber Section for complete data.

FRONT SUSPENSION

Front Suspension:—Conventional 'I' beam front axle with Reverse-Elliott ends and semi-elliptic springs.

Kingpin Inclination—7° crosswise.

Camber—½-1½° and equal for both wheels.

Caster—1½°. Shim adjustment. Install shims (furnished in 1½° and 3° angles) between spring and spring pad on axle.

Toe In—0-1/16". Adjust by loosening clamp bolt at right end of tie rod and turning tie rod.

Steering Shock Eliminator—Consists of spring and rubber bumper bracket at rear of left front spring. Adjust lower nut to give ⅛" clearance between upper rubber cushion and frame. Adjust spring cushion (ahead of spring rear shackle) to 1/16" clearance between cushion and spring.

STEERING GEAR

Steering Gear: Gemmer Model 305 Worm-and-Roller type with "push-pull" adjustments.

See Steering Gear Section for complete data.

BRAKES

BRAKES:—Service—Lockheed hydraulic, double anchor type. Hand lever applies rear service brakes.

See Brake Section for complete data.

Drums—Cast-iron. Diameter 10 1/16".

Lining—Moulded. Width 2". Thickness 7/32". Length per wheel 21".

Clearance—.010" at heel and toe of each shoe.

Braking Power—53% front wheels, 47% rear.

Hand Brake:—See Service Brakes.

No-Rol: Optional equipment.

See Brake Section for complete data.

NOTE:—Engine hood hinged at cowl and lifts from forward end. Hood latch handle located at lower edge of radiator grille (safety catch at top of grille).

MODEL IDENTIFICATION

SERIAL NUMBER:—First number H-57000. Stamped on plate on right frame side member under hood.

SERVICE SERIAL NUMBER:—First number LH-57000. On upper left hand side of engine above front 'Caution Plate' on left front door hinge post.

ENGINE NUMBER:—First number HE-56500. On boss on upper left hand side of engine above front water jacket cover plate. NOTE—Engine No. is 500 less than Serial Number on same car.

TUNE-UP

COMPRESSION:—Ratio—6.3-1 std. cast-iron head. **Pressure**—110 lbs. at cranking speed of 160 RPM.

VACUUM READING:—Steady 18-20" idling at 7-8 MPH.

FIRING ORDER: 1-5-3-6-2-4. See wiring diagram.

SPARK PLUGS: Auto-Lite Type B-7. 18 mm. Metric. **Gaps**—Set at .025".

IGNITION: See Coil, Condenser, and Distributor.
Breaker Gap—.020". **Cam Angle**—38° Closed.
Automatic Advance—5° max. at 850 RPM (distr.).
Vacuum Advance—5½° (distr.) with 12" vacuum.

IGNITION TIMING: See Ignition Timing.
Std. Setting—TDC. Vibration dampener mark 'IGN.DC' aligned with pointer on chain case cover.

CARBURETION: See Carburetor & Carb. Equipment.
Idle Setting—Screws ¼-1¼ turns open (midway between 'miss' and 'roll' points. Idle speed 7-8 MPH.
Float Level—3/16" from top of float to gasket seat on cover with needle valve seated (invert to check).
Accelerating Pump—Inner Hole (Summer), outer (Winter).

Fuel Pump Pressure: 3½ lbs. maximum.

VALVES: See Valve Timing.
Tappet Clearance:—.015" all valves—engine warm and idling. NOTE—For high speed driving .018" max. setting may be used. Remove right front fender dust shield for access to valve covers.

STARTING: See Battery, Starter, Generator, Regulator.

IGNITION

Ignition Switch:—Oakes Steering Column and Ignition Lock No. 302072. Ignition Switch No. 301538.
Ignition Lock—Briggs & Stratton. B & S No. 80207. Key Series—5 digits. Groove—No. 1.

COIL: Auto-Lite Model IG-4095 (up to Serial #H-60253), Model IG-4096 (after this number). On dash.
Ignition Current—2½ amperes idling, 4 stopped.

CONDENSER: Auto-Lite Part No. IG-2671-F.
Capacity—.20-.25 microfarad.

DISTRIBUTOR: Auto-Lite IGS-4104 or IGS-4104X (side outlet type—used with Oil Bath Air Cleaner). Single breaker, 6 lobe cam, full automatic advance type with auxiliary vacuum spark control.
Breaker Plate Identification—Maximum vacuum advance limited by slot and marked by number (#6) stamped on plate.
Breaker Gap—Set at .020".
Cam Angle or Dwell—38° closed, 22° open (distr.).
Breaker Arm Spring Tension—17-20 ounces.
Rotation—Clockwise viewed from above.

Automatic Advance

Distributor Degrees	R.P.M.	Engine Degrees	R.P.M.
Start	250	0	500
1	300	2	600
2	440	4	880
4	710	8	1420
5	850	10	1700

Vacuum Spark Control—Integral with distributor. Mounted on distributor housing and linked directly to breaker plate. Provides additional advance at speeds above idling except when engine accelerated or operated with wide open throttle when spark is retarded by return spring within unit.

Vacuum Advance

Distr. Degrees	Eng. Degrees	Vacuum (" of HG)
Start	0°	6"
1°	2°	7"
3°	6°	9¼"
4°	8°	10⅜"
5.5°	11°	12"

Removal:—Distributor mounted on cylinder head on right side. To remove, disconnect vacuum line, loosen advance arm clamp bolt.

IGNITION TIMING

IGNITION TIMING:—Setting for all engines as follows:

Flywheel Degrees	Piston Position
0° at TDC	.0000" TDC.

To Set Timing—With #1 piston on compression, turn engine over until the piston reaches top dead center, stop when 'IGN-DC' mark on vibration dampener on front of engine is directly under pointer on chain case cover. Loosen advance arm clamp bolt, rotate distributor until contacts begin to open, tighten clamp bolt. NOTE—Manufacturer recommends use of timing light for accurate ignition setting.

CONTINUED N NEXT PA E

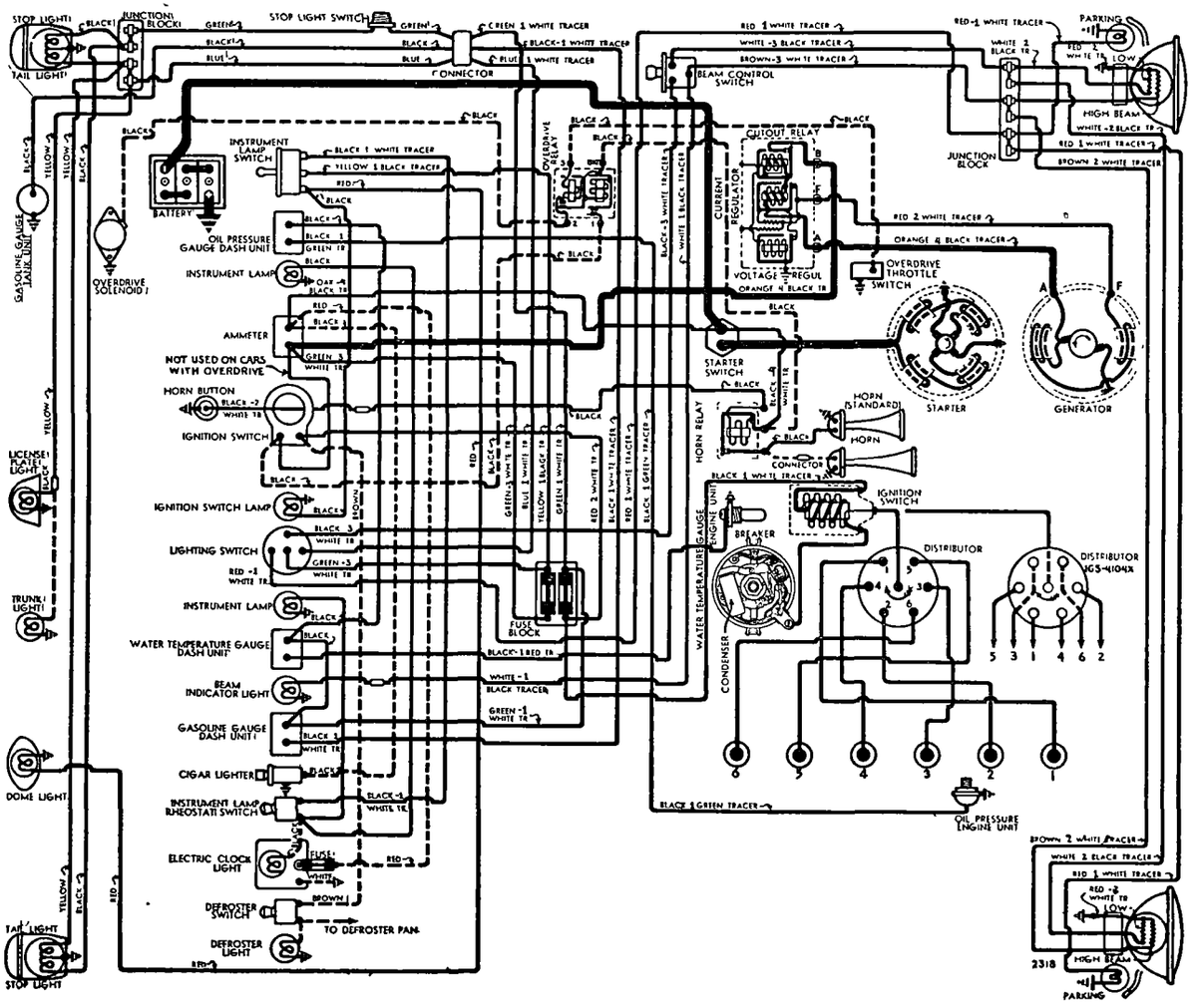

CONTINUED FR M PRECEDING PA E

CARBURETOR

CARBURETION:—**Carburetor**—Carter Type WDO, Model 458-S (#295 cast on face of flange). 1" dual downdraft type.

NOTE—New Air horn, Climatic Control assembly, and Thermostatic Coil & Housing assembly should be installed on first cars to correct warming up complaints.

For complete data, refer to Carburetor Index.

Idle Adjustment—With engine warm and running at slow idle speed (choke valve wide open, fast idle inoperative), set throttle stopscrew for 7-8 MPH idle speed. Adjust idle screw for each barrel (in succession) until engine fires smoothly (¼-1¼ turns open for each screw—turn screws in for leaner mixture). Readjust idle speed.

Accelerating Pump Setting—Pump arm has 2 holes for pump link engagement. Set as follows:

Inner Hole (min. stroke)—Hot weather.

Outer Hole (max. stroke)—Cold weather.

Float Level—3/16" from top of float to gasket seat on cover with needle valve seated (invert to check).

Fast Idle:—Integral type (built-in carburetor).

For complete data, refer to Carburetion Equip. Index.

Fast Idle Setting—Adjust fast idle screw for .026" throttle opening with choke valve closed.

Automatic Choke:—Carter Climatic Control.

For complete data, refer to Carburetion Equip. Index.

Choke Setting—1 Notch Rich (with first 170B64S Thermostatic Coil & Housing Assembly), centered (with later 170K64S Thermostatic Coil & Housing

CARB. EQUIPMENT

Air Cleaner:—AC #1529419 oil-wetted type std.

Fuel Pump:—AC Type W #1523640 diaphragm type Standard. Type AD #1523641 combination fuel-and-vacuum pump optional.

For complete data, refer to Carburetion Equip. Index.

Gasoline Gauge:—King-Seeley Electric type. K-S No. 7680 (dash unit), No. 7780 (tank unit).

For complete data, refer to Carburetion Equip. Index.

BATTERY

BATTERY:—**USL Type RN-15 or Auto-Lite Type PN-15.** 6 volt, 15 plate, 95 AH. capacity (20 hr. rate).

Starting Capacity—117 amperes for 20 minutes.

Zero Capacity—300 amperes for 3.1 minutes.

Grounded Terminal—Positive (+) grounded to transmission. Separate ground strap from transmission to frame.

Dimensions—Length 8⅞". Width 7". Height 8⅝".

Location—Under front seat.

STARTER

Auto-Lite Model MAB-4076. Armature MAB-2057.

Drive—Inboard Bendix Type LCD11FX-10.

Rotation—Counter-clockwise at commutator end.

Brush Spring Tension—42-53 ozs. (new brushes).

Cranking Engine—160 RPM, 150-160 amps., 5.2 v.

Performance Data

Torque	R.P.M.	Volts	Amperes
0 ft. lbs.	3700	5.5	60
.6 " "	1910	5.5	100
3.4 " "	1100	5.0	200
6.6 " "	695	4.5	300
10.15 " "	420	4.0	400
15.8 " "	Lock	3.0	582
22.5 " "	Lock	4.0	775

Removal:—Starter flange mounted on left front face of flywheel housing. To remove, take out flange mounting screws.

Starting Switch:—A-L #SW-4005. Mounted on body floor below clutch pedal. Operated by depressing clutch pedal fully. No adjustment required.

GENERATOR

Auto-Lite Model GDZ-4803-A. Armature No. GDZ-2079F. Two brush type with current-voltage control.

Charging Rate Adjustment—None. See Regulator.

Maximum Charging Rate—35 amperes (hot or cold), 8.0 volts, 1900 RPM (generator) and above with load or discharged battery (Current Regulator setting). Actual charging rate controlled by Voltage Regulator and dependent on battery condition.

Cold Performance Data			Hot Performance Data		
Amperes	Volts	R.P.M.	Amperes	Volts	R.P.M.
0	6.4	925	0	6.4	1000
4	6.6	1035	4	6.6	1120
8	6.75	1140	8	6.75	1235
12	6.95	1250	12	6.95	1350
16	7.15	1370	16	7.15	1460
20	7.3	1480	20	7.3	1590
24	7.5	1590	24	7.5	1730
28	7.7	1710	28	7.7	1900
32	7.9	1820	32	7.9	2090
35	8.0	1900	35	8.0	2250

Rotation—Counter-clockwise at commutator end.

Brush Spring Tension—53 ozs. max. (new brushes).

Field Current—1.60-1.78 amperes at 6.0 volts.

Motoring Current—4.16-4.60 amperes at 6.0 volts.

Removal:—Generator cradle mounted at left side of engine with fan belt drive. Water pump driven by generator shaft extension. To remove, disconnect water pump, loosen fan belt, remove generator clamp band and lift generator off.

Belt Adjustment:—Adjust whenever belt deflection is over 1½" (when pressed lightly midway between generator and fan pulleys). To adjust, loosen two capscrews on fan bracket, lift fan up (one screw hole slotted) for 1" belt deflection, tighten screws.

REGULATOR

Auto-Lite Model VRP-4004A. Current-Voltage type. Mounted in single case on dash.

For complete data, refer to Electrical Equipment Index.

NOTE—Regulator case cover is sealed. Serviced on exchange basis if seals not broken.

Cutout Relay

Cuts In—6.4-6.6 volts.

Cuts Out—4.1-4.8 volts (approx. 4-6 amps. disch.).

Contact Gap—.015" minimum.

Air Gap—.031" min., .034" max. with contacts open. Measure at hinge end of core.

Voltage Regulator

Setting—7.2-7.5 volts at 70° F.

To Check (without breaking seals)—Connect ammeter in charging line at regulator 'B' terminal, voltmeter between 'B' terminal and ground. Operate generator at speed equivalent to 30 MPH, charging battery until voltage is steady. Voltage reading should be 7.2-7.5 volts at 70° F. See Electrical Equipment Section for voltages at other temperatures.

To Adjust (with cover removed)—Change regulator armature spring tension by bending lower spring hanger slightly. ***See Electrical Equipment Section.***

Contact Gap—.012" Min. (armature against stop pin).

Air Gap—.048-.052" with contacts just opening.

Current Regulator

Setting—34-36 amperes (marked '35' on cover).

To Check (without breaking seals)—Connect test meters as for Voltage check (above). Operate generator at 30 MPH, charging battery, add load (use bank of headlamp bulbs, or turn on car lights and accessories and discharge battery) so that generator charges at peak rate and Current Regulator operates. Charging current should not exceed 34-36 amperes. If more than slight excess noted, regulator is defective.

Adjustment & Contact Gap—Same as for Voltage Regulator (above).

Air Gap—.034-.038" (before No. 5U-000001), .048-.052" (after above No.) with contacts just opening.

LIGHTING

Headlamps—General Electric "Sealed Beam" type.

For complete data, refer to Electrical Equipment Index.

Headlamp Adjustment—Aim upper beam for each lamp straight ahead with center of hot spot 3" below lamp center height.

Beam Indicator—Red light on speedometer face. Lighted whenever Country (upper) beam in use.

Switches

Lighting—Douglas No. 5754.

Beam Selector—Douglas No. 5733.

Instrument—Douglas No. 5653.

Bulb Specifications

Position	Candlepower	Mazda No.
Headlamps		Sealed Beam
Parking, Rear License	3	63
Instrum., Beam Indic.	1½	55
Stop & Tail	21-3	1154
Dome	6	81

MISC. ELECTRICAL

FUSES:—**Lighting**—30 ampere (SFE type) mounted on fuse block on back of instrument panel toward left. **Accessory**—30 ampere (SFE type) on fuse block.

HORNS:—**Delco-Remy. No. 1999565 (low note), No. 1999566 (high note).** Vibrator type, blended tone, operated by horn relay.

Type	Current (at 6 volts)	Air Gap
1999565 (Low Note)	19-21 amperes	.047-.052"
1999566 (High Note)	18-20 amperes	.039-.044"

Horn Relay:—Delco-Remy Model 1116775.

Contact Gap—.020". **Air Gap**—.015" (closed).

Contacts Close—2.75-4.0 volts.

ENGINE

ENGINE CODE NOTE (ORIGINAL BORE & BEARING SIZES): ***See Nash Shop Notes for complete data.***

ENGINE SPECIFICATIONS:—6 cylinder, 'L' head type. Cylinders cast Enbloc. NOTE—'Iso-thermal' fuel intake system used (intake manifold cast in block water cooled for temperature control).

Bore—3⅜". **Stroke**—4⅜".

Displacement—234.8 cu. ins. **Rated HP**—27.34.

Developed Horsepower—99 at 3400 RPM.

Compression Ratio—6.3-1 cast-iron head.

Compression & Vacuum Reading—***See Tune-up data.***

PISTONS:—Nelson-Bohnalite, aluminum alloy, Invar strut, tin plated, split skirt type.

Original Bore Size:—***See Engine Code Note in Nash Shop Notes for complete data.***

Weight—19¼ ozs. (stripped). **Length**—3⅞".

Removal—Pistons and rods removed from above.

Clearance—Top .027-.030". Skirt .001-.002".

Replacement Pistons:—***See Nash Shop Notes for data.***

Fitting New Pistons:—Insert .002" feeler between piston and cylinder wall on side opposite slot. Pull to withdraw feeler should be 10 lbs.

Installing Pistons:—Pin offset toward camshaft. Slot toward left (trademark within piston toward front).

ENGINE

C NTINUED FR M PRECEDIN PAGE

PISTON RINGS:—Two compression, two oil control rings per piston, all above pin. Oil ring grooves drilled for oil drain holes.

Ring	Width	End Gap	Side Clearance
Compr. #1	.124"	.010-.020"	.002-.0025"
Compr. #2	.124"	.010-.020"	.0015-.003"
Oil Contr. #3	.1550"	.010-.018"	.0015-.0025"
Oil Contr. #4	.1550"	.010-.018"	.001-.0025"

Replacement Rings:—*See Nash Shop Notes for data.*

PISTON PIN:—**Diameter**—.8745". **Length**—2.804". Floating type. Pin retained by locking ring at each end. Pin hole in piston offset to camshaft.
Pin Fit in Piston—Light push fit (piston at 200°F.).
Pin Fit in Rod Bushing—Select fit to .0001" or light push fit at normal temperature.
Replacement Pins:—.001, .003", .005" oversize.

CONNECTING ROD:—**Length**—8¾". **Weight**—36¼ ozs.
Upper Bearing (Piston Pin Bushing)—Bronze.
Crankpin Journal Diameter—2.002".
Lower Bearing—Removable steel-backed, babbitt-lined type. No shims. *See Engine Code Note in Nash Shop Notes for original bearing sizes.*
Clearance—.0015-.0025". **Sideplay**—.008-.012".
Bearing Adjustment:—None (no shims). Replace bearings. Do not file rods or caps. Tangs on bearing shells should be installed on opposite sides of rod.
Replacement Bearings:—.002", .010" undersize.
Installing Rods:—Oil split hole toward camshaft.

CRANKSHAFT:—7 bearings, 4 counterweights.
See Nash Shop Notes for vibration dampener data.
Journal Diameters—2 31/64" all bearings.
Bearings—Interchangeable steel-backed, babbitt-lined type. No shims. **Clearance**—.002".
See Engine Code Note in Nash Shop Notes for original main bearing sizes.
Bearing Adjustment:—None (no shims). *See Nash Shop Notes for removing, installing and fitting bearings.*
Replacement Bearings:—.002", .010" Undersize.
End Thrust:—Center (#4) bearing. Replace bearing to take up excessive endplay. **Endplay**—.004".

CAMSHAFT:—6 bearing. Non-adjustable chain drive.
See Nash Shop Notes for camshaft removal.
Bearings—Steel-backed, babbitt bushings.
Bearing Clearance—.002".
End Thrust:—Taken by front bearing. Replace bearing to take up excessive endplay.
Endplay—.003" (new), .005" Max. (worn).
Timing Chain:—Whitney No. 49205 or Diamond. Pitch ⅜". Width 9/16". Length 60 links or 22½".
Camshaft Setting:—Sprockets marked. Mesh chain with sprocket marks adjacent and in line with a straightedge across the shaft centers.

VALVES:—

	Head Diameter	Stem Diameter	Length
Intake	1 21/32"	.3407"	5 55/64"
Exhaust	1 17/32"	.3407"	5 55/64"

	Seat Angle	Lift	Stem Clearance
All Valves	45°	5/16"	.002-.004"

Valve Guides:—Press fit in block. Press guides in place 1¼"(intake), ¾"(exhaust) below top of block. Ream to correct clearance. Replacement guides furnished .002" undersize.
Valve Springs:—Free length 2½".

	Spring Pressure	Spring Length
Valve Closed	70 lbs.	2"
Valve Open	115 lbs.	1 11/16"

Valve Lifters:—Mushroom type. Lifter guide holes reamed in block. Remove from below (camshaft out).

VALVE TIMING

Tappet Clearance:—.015" all valves—engine warm and idling. NOTE—For high speed driving .018" max. setting may be used. Remove right front fender shield for access to valve covers.
Valve Timing:—See Camshaft Setting above.
Intake Valves—Open 21½° BTDC. Close 71° ALDC.
Exhaust Valves—Open 71° BLDC. Close 36½° ATDC.
Valve Timing Check—With regular tappet clearance of .015", Intake valve should open with piston 21½° or .1891" BTDC., and Exhaust valve close with piston 36½° or .5118" ATDC.

LUBRICATION

LUBRICATION:—Pressure system (gear type oil pump in crankcase).
Normal Oil Pressure:—30 lbs. at 20 MPH.
Oil Pressure Relief Valve:—On oil pump cover. Opens at 30 lbs. Turn adjusting screw in to increase.
Oil Pressure Gauge:—King-Seeley Electric. K-S No. 7665 (dash unit), 6125 (engine unit).
See Miscellaneous Section for complete data.
Crankcase Capacity:—6 qts. (dry or refill).

COOLING

COOLING SYSTEM:—**Cap.** 18 qts. (19 with heater).
Water Pump:—Centrifugal, adjustable packing type.
See Water Pump Section for complete data.
Removal—Drain radiator, disconnect hose and drive coupling, take out mounting screws in pump flange.
Thermostat:—Dole. In water outlet on cyl. head.
Setting—Starts to open at 160° F.
Temperature Gauge:—King-Seeley Electric. K-S No. 7670 (dash unit), 7000 (engine unit). NOTE—Gauge inoperative with ignition Off (reads '212').
See Miscellaneous Section for complete data.

CLUTCH

CLUTCH:—**Borg & Beck Model 9A6 (early), 9A7 (later).** Single plate, dry disc type.
Production Change—9A6 (#932) used on first cars, 9A7 (#937 & #951 with 'Borglite' driven member) used after Dec. 15, 1939. Assembly No. stamped on cover.
See Clutch Section for complete data.
Facings—Spiral wound molded woven, 2 used. Inside Diam. 5⅝" (932), 6" (951). Outside Diam. 9¼". Thickness .125". NOTE—Install plate with mark 'flywheel side' forward (damper toward trans).
Pedal Adjustment:—Free travel ½-1" (adjusting nuts on lower end of pedal connector link). Check NoRol
Removal:—Remove transmission (see below). Disconnect clutch pedal linkage. Support engine at rear, disconnect rear engine mountings. Remove clutch housing and pan. Punch mark flywheel, cover, and pressure plate (re-assemble to these marks). Take out mounting screws in cover flange.

TRANSMISSION

TRANSMISSION:—**Own Make.** All helical gear, constant-mesh (all speeds), synchro-mesh (second & high) with remote type steering column shift.
See Transmission Section for complete data.
Transmission Control:—Steering col. mechanical shift.
See Transmission Section for complete data.
Removal:—Disconnect shift rods, speedometer cable, overdrive control and wires (if used), and drive-shaft. Remove two upper mounting studs and install pilot studs (to support transmission and avoid bending clutch plate). Remove remaining mounting stud nuts, remove transmission from below. NOTE—Do not remove inspection hole cover in floor.

OVERDRIVE

Cruising Gear (Overdrive):—Warner Model AS12-R6 with electrical 'kick-down' control optl.
See Transmission Section for complete data.
Overdrive Solenoid—Delco-Remy Model 1118004.
Throttle Switch—Adjust switch to close with throttle wide open and carburetor throttle shaft pulley spring just starting to compress.
Control Relay—Delco-Remy Model 1116798.

UNIVERSALS

UNIVERSAL JOINTS:—**Mechanics Type 2C.** Roller bearing type. 2 used.
See Universals Section for complete data.

REAR AXLE

REAR AXLE:—**Own Make.** Semi-floating, hypoid gear type with Hotchkiss drive.
See Rear Axle Section for complete data.
Ratio—4.1-1 Std., 4 4/9-1 Optl.
Backlash—.005-.007". Shim adjustment.
Removal:—Hoist rear of car, remove axle shafts (see below). Free axle from springs by disconnecting U-bolts and rear shackles and withdraw from car.
Axle Shaft Removal:—Remove wheel and drum. Disconnect brake line and cable. Remove backing plate mounting bolt nuts, oil seal retainer, brake backing plate, bearing adjusting shims and withdraw shaft and bearing (do not drag shaft on oil seal).
Wheel Bearing Adjustment—Shims at flanged end of housing. To adjust, remove backing plate, add or remove shims (equally at both ends of axle).
Endplay—.003-.006".

SHOCK ABSORBERS

SHOCK ABSORBERS:—**Delco. Front**—Model 1947-C, D. **Rear**—Model 1006-DD, 1006-EE (heavy springs), 1723-N, P (heavy springs—Export). Double acting, hydraulic. Direct acting on rear (except 1723).
See Shock Absorber Section for complete data.

FRONT SUSPENSION

Front Suspension:—Independent, linked parallelogram type with coil springs.
See Front Suspension Section for complete data.
IMPORTANT—Insert 2" blocks (Tool J886) between upper support arm and frame flange (at each side) to level frame when checking specifications.
Kingpin Inclination—4½° crosswise.
Caster—0° to Negative ½°. Adjustable.
Camber—Pos. ¼° to Pos. ¾°. Adjustable.
Toe In—1/32-3/32". Adjust tie rod tube for each wheel equally.
Steering Geometry—Inner wheel 21½°, Outer 20°.

STEERING GEAR

Steering Gear: Gemmer Model Number 305. Worm-and-Roller type with 'push-pull' adjustment. New type steering linkage with idler arm on right frame side member. *See Steering Gear Section for data.*

BRAKES

BRAKES:—**Service.** Bendix hydraulic, duo-servo, single anchor type without eccentric adjustment. Hand lever applies rear wheel service brakes.
See Brake Section for complete data.
Drums—Cast-iron. Diameter—10".
Lining—Moulded. Width 2". Thickness 3/16". Length per wheel 22".
Clearance—.015" at each end of secondary shoe with primary shoe forced out against drum.
Braking Power—53% front wheels, 47% rear.
Hand Brake:—See Service Brakes above.
NoRol: Optl. *See Brake Section for complete data.*

HOOD ASSEMBLY

1940 MODELS

HOOD LOCK USED ON 1940 SIX & EIGHT CARS: Alligator type hood with instrument panel lock. To raise hood, pull out on control knob at left of steering wheel (hood will raise 1½"), press up on safety catch tab under front edge of hood at center. When installing hood, engage front latch, adjust rear edge to secure ⅛" uniform clearance between rear edge of hood and cowl before installing and tightening hinge bracket bolts. Adjust hinges as required for alignment and smooth operation. Hood latch pilot bolt is also adjustable. Side panels are integral with front fenders.

1941 MODELS

HOOD LOCK: Hood lock controlled by "Push-Pull" control knob to left of steering column on lower flange of instrument panel. To raise hood, pull control knob out to release hood latch (hood will raise 1½"), press up on tab of 'Safety Hook' under center of hood at front.

1941-47 MODELS
1948 DYNAMIC MODELS

HOOD REMOVAL: Hood panel can be removed as follows: Remove hood hinge-to-cowl bolts (mark hinge location on cowl to facilitate installation). Remove hood hinge brace-to-tie bar bolts, lift off hood.

Hood Alignment—Hood to dash clearance should be 3/16" '41, ¼" '42-48. Must be even across rear edge of hood. Hood can be adjusted as follows: Hood can be adjusted for up and down and forward movement by means of enlarged holes in cowl at hood hinges. Hood fit along top of grille and fenders adjustable by moving rubber bumpers on hood at each side of aligning bolt at front end up or down. Aligning bolt can also be adjusted. Adjustable support in middle of tie bar between hood hinges should be adjusted to contact hood panel with tension, but not enough tension to move panel away from cowl. Prevents hood distortion (does not affect hood fit).

1937 MODELS

HOOD SIDE PANEL REMOVAL: Disconnect 3 headlamp wires from junction block on hood side panel bracket to rear of radiator. Remove three cap screws on top side of panel (two at rear on cowl, one at radiator harness), one nut from through bolt at rear of headlamp.

1938 MODELS

RIGHT FRONT FENDER FILLER PLATE REMOVAL: Remove headlamp wiring junction block, six (on Six), eight (on Eight) bolts along upper edge of plate, capscrews (one at rear, two at front) at ends of plate, lift off.

1940 MODELS

FENDER PLATE REMOVAL: For access to side engine compartments (for valve adjustment, etc.) remove fender plate as follows: Disconnect wires at junction block and remove from plate, remove 4 ('F' & 'G'), 6 ('L') hex head screws at top edge of plate, 2 screws at radiator tie rod bracket-to-fender and core support, 3 hex head cap screws under fender at front edge of plate, 1 ('G'), 2 ('F' & 'L') hex head self tapping screws at frame at lower rear edge. Slide plate to rear (from under fender) to clear radiator core support. Tip top of plate in until free from fender, raise over shock absorber and slide out to rear and down.

FRONT END SHEET METAL

1937-38 MODELS

FRONT END DISMANTLING FOR TIMING CHAIN REMOVAL:—1937. To dismantle front end proceed as follows: Drain cooling system, remove Hood Side Panels (see directions above), remove one bolt at each end of hood center hinge and bolt for each hood holder on rear of hood, lift hood off. Remove 4 bolts on underside of fender at rear, remove 2 bolts body-to-fender brace (in line with front of dash), remove radiator center anchor bolt nut (under car), remove front bumper. Disconnect radiator hoses. Slide entire assembly to front and remove. Then remove 2 nuts from top of front engine mounting and remove oil pan. Jack up front end of engine until timing chain cover clears frame

1938. To dismantle front end assembly proceed as follows: Remove Front End Sheet Metal Assembly by removing hood, draining cooling system, removing 5 capscrews at rear of fender (1 to filler plate, 4 to body), disconnect wiring harness from junction block and free from 4 clips (on each filler plate), disconnect radiator hoses, remove center radiator anchor bolt nut (under car), radiator brace rods at cowl, slide entire assembly to front and remove. Then remove 2 nuts from top of front engine mounting and remove oil pan. Jack up front end of engine until chain cover clears frame member.

1939 MODELS

FRONT END SHEET METAL ASSEMBLY REMOVAL: May be removed to facilitate work on front of engine as follows: Drain radiator, disconnect radiator hose, disconnect wires at headlamp junction block, free wiring harness from clips on radiator core and along side panel. Take out capscrew in hood ledge filler plate on top of frame (each side), hood ledge filler plate-to-body capscrews (4—Sixes, 5—Eight, on each side), disconnect fender to frame brace at fender, remove nut from center radiator support, bumper, sheet metal and radiator core assembly.

1940 MODELS

FRONT END SHEET METAL ASSEMBLY REMOVAL: May be removed to facilitate work on front of engine as follows: drain radiator, disconnect radiator hose, disconnect wires at junction block on fender plate (each side), free wiring harness from clips on radiator top tank and on left fender plate. Disconnect hood latch cable at front and pull back through core support. Remove 2 screws at radiator tie rod bracket between fender and core support, fender to hood hinge hex head bolt and washers (at upper rear edge of fender), frame to fender plate hex head self tapping screws (2 on 'F' & 'L', 1 on 'G') at each side at lower rear end of plate. Disconnect rear of fender from frame brace, running board and body rocker panel ('L' only). On 'G' and 'L' remove lower body to fender capscrew from under car. Remove front bumper assembly and nut from radiator support at center of frame front cross member. On 'L', free fabric splash apron at snap-in fasteners at front cross member. Remove cowl kick pads (inside car) at each side and 3 body-to-fender capscrews. Lift front end assembly clear of center support stud and pull forward. Replace assembly in same manner.

1941 MODELS

FRONT END SHEET METAL ASSEMBLY REMOVAL: Front fender, radiator grille, and radiator core can be removed as an assembly without removing hood as follows: Drain cooling system. Disconnect radiator upper and lower hoses, headlight wires and wiring harness at junction block, horn, and hood latch operating cable from latch plate at radiator grille. Remove cowl kick pads from inside car and remove 4 fender-to-cowl bolts (3 at rear edge of fender, 1 at cowl just to rear of hood hinge). Disconnect radiator brace rods at cowl. Jack up front end of car. Remove 2 fender-to-rocker panel bolts (at lower rear corner of fender) and 3 fender-to-frame bolts behind fender skirt (below front edge of engine dash). Remove bumper primary bar from secondary bar and nut and washer from radiator support-to-frame front cross-member bolt (on underside of cross-member). Free snap-in fasteners from splash guard at front cross-member. Move front end assembly forward (center bolt hole in support plate slotted) and remove from car.

Alignment—When assembly installed, adjust fender to door clearance as described below. Check hood fit (see Hood Alignment above).

Front Fender Alignment—When fender installed on car, it must be properly aligned and clearance at door must be adjusted as follows: Fender bolt holes at cowl and body are enlarged to permit fitting fender. Install fender bolts just tight enough to allow shifting fender for alignment. Fit fender to door in such a manner as to just allow door to open. Gap between rear edge of fender and door should be ⅛" plus 1/32" minus 0" and be equal for both sides of car. After fender fitted, tighten bolts.

1942-47 MODELS
1948 DYNAMIC MODELS

FRONT END SHEET METAL ASSEMBLY REMOVAL: Front fenders, radiator grille, and radiator core can be removed as an assembly without removing hood as follows: Drain cooling system. Disconnect radiator upper and lower hoses, wiring harness at junction block, unclip harness from radiator core and filler plate, hood latch cable from latch plate at grille and unclip from filler plate. On 90 model, free flexible ventilating air hose from connection at engine dash. Free snap-in fasteners from splash guard at front cross-member. On 60 & 70 models, remove lower fender molding. Remove bolts and screws from each side of car as follows: bumper bolts (one in top support bar at front, 2 in lower support bar, one at rear end of bar at frame), 3 rear baffle-to-shroud plate screws (vertically along rear end of fender), 2 rear bottom baffle-to-rocker extension panel bolts (lower rear corner of fender), fender-to-fender brace bolt (behind lower edge of skirt at center), filler plate-to-frame screw (behind skirt), radiator brace rod-to-fender bracket bolt (on 8 cyl., remove radiator tie rod-to-core support bolts at this same point). Then remove radiator core support-to-frame nut and washer from below car just behind grille, and core support-to-front frame cross-member bolt (just below radiator core). Remove side seal baffle clips at each side of core. Remove screws at upper rear corner of each fender (one screw on 90, two on others). Front end assembly can then be lifted off car.

FRONT FENDERS

1942-47 MODELS
1948 DYNAMIC MODELS

FENDER CAP REMOVAL: Fender cap on each front door can be removed as follows: Car manufacturer recommends that door be masked to prevent damag-

ing finish when cap removed. With door wide open, take out attaching screws and bolts from under cap as follows: One screw at upper front corner of cap, one bolt at lower front edge, one bolt on lower edge at rear bracket on 60, 70 models, on rear lower edge of flange on 90 model. Loosen three screws at clips along upper edge of cap, slide cap back until free of clips and lift cap off (on 70 model, springing lower edge of cap out will facilitate loosening of screws at clips).

Front Door Fender Cap Alignment—Adjustment of cap can be made by loosening three screws at clips along upper rear edge of cap. With these screws loosened, up and down adjustment can be made at screw at upper front corner of cap, in and out adjustment can be made at bolt at lower front corner of cap. Clearances betwen cap and rear edge of fender with door closed should be 3/16" at upper end, ⅛" along vertical portion of fender with ¼" of bevel edge of door cap exposed.

Rear Door Fender Cap Removal (Model 90 Sedans):—With door masked to protect finish, remove 4 screws from rear door flange, slide cap to front and up freeing front of cap from 3 attaching clips, lift cap off.

CYLINDER HEAD

1938-48 MODELS

CYLINDER HEAD SERVICING: Steel-asbestos cylinder head gasket used. **This gasket cannot be reused.** When installing new gasket, coat both sides with thin coat of P.O.B. Perfect Gasket Seal at room temperature (approx. 70°F.). Edges at cylinder bore holes must be wiped clean of all sealer. To prevent leakage, a plain washer is used under bolt heads.

1941-47 Note. Install gasket with 3/16" flange next to cyl. block (flange on upper side 3/32" wide).

1939-41 8 cyl. Engine Note—Install new neoprene grommet in pump by-pass hole on front of head.

INSTALLING CYLINDER HEAD: Use a Torque Indicating Wrench to tighten cylinder head capscrews, tighten in correct sequence as shown in the diagram. Cast Iron heads should be tightened cold and rechecked after engine has been run sufficiently to bring all parts to normal operating temperature.

OLDSMOBILE 6

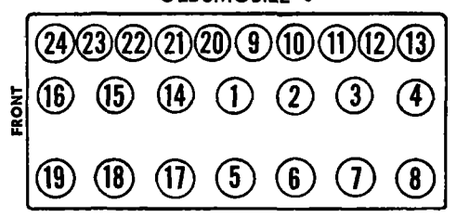

OLDSMOBILE 8

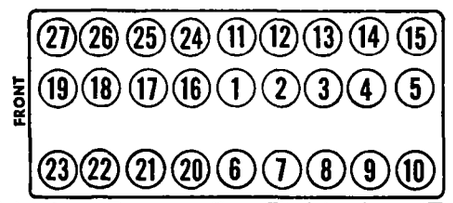

Tightening Torque—See Tightening (Torque Wrench) Specifications below.

TIGHTENING (TORQUE WRENCH) SPECIFICATIONS

1941-48 MODELS

	Ft. Lbs.	In. Lbs.
Spark Plugs (14 MM. Type)	28-35	336-420
Cylinder Head Capscrews	60-70	720-840
Main Bearing Bolts:		
All (except Rear)	100	1200
Rear Only	140	1680
Connect. Rod Nuts (slotted lock)	50-55	600-660
Piston Pin Lockscrews	9-11	108-132
Flywheel to Crankshaft Bolts	55-60	660-720
" " " (Hydra-Matic)	60	720
Front Engine Mounting to Frame	25-30	300-360
Rear Eng. Mtg. to Clutch Hous'g	45-50	540-600
Exh. to Int. Manifold Bolts	22-26	264-312
Manifold to Block Nuts	11-14	132-168
Crankshaft Front End Bolt	130-140	1560-1680
Clutch Cover Mounting Bolts	22-26	264-312
Transmission to Housing	60-70	720-840
Differential to Axle Housing	30-35	360-420
Wheel Nuts	65-70	780-840
Steering Gear to Frame Bolts	25-30	300-360
Steering Wheel Nut	15-20	180-240
Pitman Arm Nut	100-110	1200-1320
Front Shock Abs. to Frame	55-60	660-720
Lower Control Arm to Frame	55-60	660-720
Body Bolts	25-30	300-360

1940 & PREVIOUS MODELS

Cylinder Head Capscrews	60-70	....	720-840
Piston Pin Lockscrews	9-11	....	108-132
Main Bearing Bolts:			
#2 and #3	120	....	1440
#1 and #4 (#5 on Eight)	140	....	1680
Spark Plugs (14 MM. Type)	28-35	....	336-420
Con Rod Nuts (regular type)	30-35	....	360-420
" " " (self-locking type)	50-55	....	600-660

PISTON PINS

1936-48 MODELS

FOR ALUMINUM PISTONS

PISTON PINS:—Servicing—Standard size pins only furnished for service. Pin bosses in pistons electrolited and must not be reamed. Replacement pistons (standard and oversize) furnished with pins fitted.

Removal:—To remove pin, take out lockscrew, place assembly in boiling water for one minute. With Tool HM-535 push pin out through plain boss end. NOTE—Piston Heater and Pin Assembly Fixture No. J-849 consisting of piston and pin heater compartments and piston holder available.

Fitting:—Pin fit in piston .0001" loose to .0002" tight (plain boss), .0002-.0005" tight (lock screw boss). Pin fit in rod bushing .0003-.0006". If rod bushing worn, press new bushing in place (align oil hole in bushing and rod), burnish with Tool HM-587E and line ream with Reamer HM-586 to .8558-.8562".

Installing:—To install pin, heat piston and pin (as for Removal above), dip pin in hot light engine oil, start pin through plain boss end of piston and through rod (make sure lock screw hole in pin and boss will be aligned), then with Tool HM-535 lightly push pin in place until hole in pin and boss aligned (use punch in hole to correct slight mis-alignment).

IMPORTANT—Pin must not be forced (if heavy push required, indicates piston has cooled, disassemble and reheat piston and pin). After pin in place, coat lock screw with graphite and tighten to 9-11 lbs. ft. tension with a torque wrench.

1942 MODELS

FOR CAST-IRON OR ARMASTEEL PISTONS

PISTON PINS: *Servicing*—Pins furnished standard size, .001" and .003" oversize. All pins are high limit size. Select size pin required and ream pin bosses if necessary as directed below.

Removal—Use Tool 535 to tap pin out of piston from split end while holding piston in the hand (prevents destroying piston out-of-round, do not support piston on bench or other rigid support when removing pin).

Fitting—If pin bosses to be reamed, use Tool 536 and line-ream carefully (finish honing not required if line-reaming accurate). Clearances should be .0003-.0006" in lockscrew boss, .0000-.0002" in plain boss. Check fit as follows: pin should be 'very tight wring fit' in piston (just possible to turn pin with 6" drift in pin lockscrew hole with pin and piston bosses clean and free from oil and solid section of pin in boss with split end entirely through boss). If pin bushing in rod worn, use Remover and Replacer Tool J-1674 together with Support Block Tool J-1649 to press new bushing in place (with oil hole in bushing and rod aligned). Use HM-536 reamer and line-ream bushing for .0003-.0006" clearance on pin. Pin should be a 'suck fit' (pin should hold in rod of own weight but can be pushed through rod with slight thumb pressure).

Installing—Heat piston (not pin) in boiling water, apply graphite grease to inside of pin bosses, insert split end of pin in piston and press in piston and rod by hand as far as possible, then use Tool HM-535 to lightly tap pin in place. Install piston pin lockscrew and tighten to 9-11 lbs. ft. NOTE—Mark 'V-S' on piston head and oil spit hole in rod must be on same side and installed in engine toward valves.

CONNECTING ROD & BEARINGS

1940 MODELS

CONNECTING ROD BOLT NUT CHANGE: Later production cars equipped with self tightening (Marsden) type nuts (no cotter key used). May be identified by increased slot length on each face of nut (extends half way up face). These self locking nuts should be tightened to 50-55 lbs. ft. Early cars use conventional castellated nut and cotter key. Tighten conventional type nuts to 30-35 lbs. ft. with Tool J-1264.

CONTINUED N NEXT PAGE

CONTINUED FROM PRECEDING PAGE

CRANKSHAFT & MAIN BEARINGS

1936-48 MODELS

MAIN BEARING UPPER HALVES: Removal—May be removed without removing crankshaft by removing bearing cap and inserting pin (Tool HM-J-173) in oil hole in shaft. With tang on pin engaging plain end of bearing shell, rotate shaft in usual direction and turn shell out.

1939-40 8 Cyl. Note—Front of engine must be raised to permit removal of upper half of front bearing.

Installation—Remove sharp edge from plain end of bearing, insert this end at indented side of support and rotate in place using pin in oil hole in shaft.

1942-48 MODELS

MAIN BEARING CAPS (EIGHT CYL.): New "snap-in" type on all bearings except #1 which is doweled type. 'Snap-in' caps are ¼" heavier and have machined edges which must not be filed and must be pressed in block with slight pressure. Caps bored 1/16" offset and must be installed with notch in cap (for bearing tongue) on the same side and next to notch in block.

1939-40 MODELS

CRANKSHAFT END THRUST: Taken by front #1 bearing. A bronze r steel-backed bronze thrust washer plate (.1205-.1245" thick) is doweled to each face of bearing cap. A steel thrust collar is assembled between front thrust plate and crankshaft gear. IMPORTANT—If steel-backed thrust plates used (use 2 plates of same type), assemble with steel side against bearing cap face.

1941-48 MODELS

CRANKSHAFT END THRUST: Taken through front (#1) main bearing. Two bronze thrust plates doweled to bearing cap, one to front face of cap and one to rear face. A steel thrust collar is assembled between front bronze plate & crankshaft sprocket.

Hydra-Matic Cars—Steel thrust collar (Part No. 414229) has a more highly polished finish than that used on synchro-mesh transmission equipped cars. Can be identified by finish and part no. which is etched on collar. This collar only furnished for service (can be used to service synchro-mesh transmission equipped cars also). Front bronze thrust washer has eight grooves in face of plate and must be assembled with these grooves next to steel thrust collar. A plain bronze thrust washer is used at rear.

1937-38-39 MODELS

REAR MAIN BEARING OIL SEAL: Consists of oil slinger on crankshaft to rear of bearing with asbestos covered wiper seal held by retainer fitted in groove (forms channel for oil slinger). Wiper seal must be renewed whenever crankshaft removed.

1939 Six—Seal held in separate groove at rear.

Installation—With crankshaft out of engine and bearing cap off, crowd seal in bearing support in rear groove (F,G-39), to rear of retainer (others) by hand. Then using seal compressor tool J-955 over seal, tap tool 3 or 4 times to seat seal. With tool resting on seal, cut ends flush at each end. Repeat operation for bearing cap. Seal must entirely fill groove and be trimmed flush to prevent oil leaks.

1940-48 MODELS

REAR MAIN BEARING OIL SEAL: Consists of oil slinger on crankshaft to rear of bearing with asbestos covered wiper seal in groove in bearing support and bearing cap. Cork strips used to seal vertical joints between bearing support and cap.

Installation—With crankshaft out of engine and bearing cap and shells off, crowd seal in rear groove of bearing support by hand. Use seal compressor Tool J-955 over seal and tap tool 3 or 4 times to seat seal. With tool resting on seal, cut ends flush at each end. Repeat operation for bearing cap. Seal must entirely fill groove and be trimmed flush to prevent oil leaks. Install cork seals in vertical grooves when installing cap.

CAMSHAFT & BEARINGS

1941 MODELS

CAMSHAFT END THRUST: Forward thrust now taken by semi-circular flange around camshaft opening in front engine support plate. Backward thrust taken by flange ahead of front camshaft bearing journal and front face of cylinder block (same as 1940). IMPORTANT NOTE—Camshaft on 1941 Engines recessed at front end for spring-loaded thrust button (formerly used to take forward thrust). Spring-loaded button should not be assembled to camshaft on 1941 engines (see above). 1941 timing chain cover equipped with camshaft thrust plate so that this cover may be used in service for earlier cars. Thrust plate does not function on 1941 engines.

OIL PUMP

1939-47 MODELS

OIL PUMP: Gear type pump. Six and Eight pump identical except for gear faces which are ¼" wider on Eight. When assembling pump gear on shaft, press shaft on gear flush with outer end of gear (Six), with gear extending ¼" beyond end of shaft (Eight—Use Tool J-954 which properly positions gear on shaft). Pump drive gear must be assembled with Feeler Gauge J-954-1 between inner face of gear hub and pump body to give proper end clearance for pump shaft. Use new pump body gasket.

Installation—Set engine in firing position for #1 cylinder with rotor opposite #1 segment in distributor cap. Note position of distributor shaft tongue for proper oil pump drive gear mesh, then raise distributor and mesh pump drive gear with camshaft gear. Replace distributor in position and reset ignition timing.

1939 8 Cyl. Note—Ignition timed with #6 cylinder. Set rotor opposite #6 segment in distributor cap with #6 cylinder in firing position.

OIL PAN REMOVAL

1939-41 MODELS

OIL PAN REMOVAL: Pan can be removed as follows: Disconnect idler arm support from right frame side member, drop steering relay rod assembly. Remove pan bolts (openings provided in front frame cross member for access to front pan bolts), turn crankshaft so pan clears counterweights, remove pan.

1939 Note—Car manufacturer recommends that 5 capscrews at front of pan be removed from above with box socket wrench.

1940 8 Cyl. Note—Car manufacturer recommends that front end of engine be raised for access to extreme front end pan bolts. To raise engine, remove 2 front engine mounting capscrews, engine side filler plates, and flexible feed line at fuel pump.

1941 Note—For access to front oil pan bolts, unhook fasteners of splash guard between radiator lower baffle and frame cross member. On 8 cylinder engines, remove flywheel lower pan. Remove one or the other of the engine filler plates as required.

1942-47 MODELS
1948 DYNAMIC MODELS

OIL PAN REMOVAL: Oil pan can be removed as follows: Disconnect idler arm support from frame dropping steering relay rod assembly. On 8 cylinder only, remove flywheel lower pan. For access to bolts at front end of pan, unhook splash guard fasteners and work through openings in front frame crossmember. Third bolt from front on each side requires use of end wrench to clear front suspension crossmember. Remove right and left filler plates (rotate left plate out). With all pan bolts removed, turn crankshaft to place counterweights up out of the way, take off pan.

Installation—Use new gaskets and allow them to dry before installing so as to prevent gasket moving when pan installed on engine.

RADIATOR

1941 MODELS

RADIATOR CORE REMOVAL: Radiator core can be removed as follows: Raise hood. Disconnect hood latch operating cable at latch, pull cable back free of core support flange. Remove 4 radiator core-to-lower support bolts at each side. Core on Six cylinder engines can then be removed by rotating fan as required while lifting core out of car. On Eight cylinder engines, remov 2 upper core support (U-shaped channel behind core)-to-fender and lower

support bolts at each side. Core can then be removed by rotating upper support toward engine as required, turning fan as necessary, and lifting out.

1942-48 MODELS

RADIATOR CORE REMOVAL: To remove radiator core, raise hood, drain cooling system, detach upper and lower radiator hoses, take out four radiator core-to-core support bolts at each side, lift out core (rotate fan as required).

COOLING SYSTEM

1946-47 EIGHT CYLINDER MODELS

RADIATOR SHROUD #555107 FOR 1946-47 EIGHT CYLINDER: This assembly used on 1948 Eight Cylinder Series 68 and 78 to maintain proper water temperatures for high altitude and extremely high outside temperatures. This shroud can be installed on 1946-47 Eight Cylinder Series 68, 78, and 98.

Radiator Shroud Installation on 1946-47 Eight Cylinder Series 68, 78, and 98—Drain radiator just enough to permit disconnecting upper end of top hose. Remove radiator baffle cover and take off hood latch as an assembly. Remove radiator baffle. Disconnect radiator support from radiator by taking out 1 bolt and 3 screws on each side. Free wiring harness from clips at upper radiator tank. Loosen upper end of top radiator hose. Pull radiator forward just enough to slide shroud in place between core and support. Re-assemble all parts and fill radiator.

CLUTCH NOTES

1939-48 MODELS

CLUTCH RELEASE BEARING WITH LUBRICATION FITTING:—Production Change on 1940 Models—Beginning with '40 Eng. No. G-190392 (6 Cyl.), L-365742 (8 Cyl.), new type release bearing which has pressure gun fitting used so that bearing can be lubricated in service. Fitting extends down at angle toward left side and is accessible by removing lower clutch cover pan. Lubricate at 5000 mile intervals for extreme service (taxi, etc.) using petrolatum (or white or amber vaseline). CAUTION—Bearing wear will be increased if other than recommended lubricant used. Fill bearing using a small high pressure hand gun until petrolatum appears at small vent hole at top of bearing.

IMPORTANT REPLACEMENT NOTE—This new type bearing with grease fitting can be installed on early 1940 cars and 1939 models to correct complaints of dry or noisy release bearings.

1939-48 MODELS

CLUTCH HOUSING REINFORCING PLATE: Used on all 8 cylinder cars with conventional transmission. Consists of 3/16" steel plate bolted between clutch housing and underpan (replaces conventional gasket). Plate is secured to housing by 2 screws. 12 screws used to bolt underpan (through plate) to housing. Coat both sides of plate with Permatex.

1939 Note—Used on all 'G' and 'L' models.

1940 Note—Used on first 6488 'G' (six cyl.) cars with 15" rear transmission extension housing.

PROPELLER SHAFT

1937-38-39 MODELS

PROPELLER SHAFT CENTER BEARING: Removal—Split both propeller shafts at front companion flanges, remove 4 bolts (at frame) freeing intermediate bearing support and remove front propeller shaft. Place shaft in vise and remove cap screw from rear of shaft. Remove companion flange from shaft with arbor press. Take off slinger, pull bearing support housing and bearing assembly from rear of shaft, slide rubber retainer from bearing support. Wash all parts (except bearing and rubber retainer) in kerosene, wipe bearing and retainer clean (shielded type bearing used).

1939 Note—Used only on 'G' and 'L' models with Self-Shifting transmission.

Installation—With rubber retainer on bearing, install bearing on shaft (lip of retainer to rear), install bearing support over retainer (coat with soap to allow support sliding in place) with flat portion of housing to front, put slinger in place with flange over lip of retainer, press companion flange on shaft with slinger clamped tight against bearing inner race, install cap screw (use both plain washer and lock washer in place under screw). Bolt intermediate bearing support to frame and attach shafts in place at front companion flanges.

M DEL IDENTIFICATION

SERIAL NUMBER:—First number—F200,001. On left hand frame side member.

ENGINE NUMBER:—First number—F506,001. Stamped on ledge on top of block beside head at left front corner.

TUNE-UP

COMPRESSION:—Ratio 6.0-1. Pressure 146 lbs. at 1000 R.P.M. or 106-116 lbs. at cranking speed of 100 R.P.M.

VACUUM READING:—Gauge should show steady reading of 17" of HG. minimum with engine idling at 350 R.P.M. or 6 M.P.H.

FIRING ORDER: 1-5-3-6-2-4. See wiring diagram.

SPARK PLUGS: AC Type G-9. 18 mm. Metric.
Gaps—.030-.033".

IGNITION: See Coil, Condenser, and Distributor.
Breaker Gap—.020". Cam Angle—35° Closed.
Automatic Advance—13° max. at 1450 RPM (distr.).
Vacuum Advance—7½° (distr.) with 15½-18½" vacuum.

IGNITION TIMING: See Ignition Timing.
Std. Setting—TDC. Flywheel mark (steel ball) aligned with insp. hole cover screw (left side of housing).

CARBURETION: See Carburetor & Carb. Equipment.
Idle Setting—Idle screw ¾-1¼ turns open.
Idle speed 350 RPM or 6 MPH.
Float Level—½" (327-S), ⅜" (339-S, 342-S) from top of float to gasket seat (gasket removed).
Accelerating Pump—Outer Hole—Normal setting.
Fuel Pump Pressure: 3½ lbs. ('T'), 4½ lbs. ('AA' comb.).

VALVES: See Valve Timing.
Tappet Clearance—.008" Intake, .010" Exh., hot.

STARTING: See Battery, Starter, Generator, Regulator.

IGNITION

Ignition Switch:—Delco-Remy Model 435-B—Switch and cable assembly connected to coil by armored cable.
Ignition Lock—Briggs & Stratton.

COIL: Delco-Remy Model 536-E. On dash.
Ignition Current—2.0 amperes idling, 4.5 stopped.

CONDENSER: Delco-Remy Part No. 1858571.
Capacity—.20-.25 microfarad.

DISTRIBUTOR: Delco-Remy Model 647-C. Single breaker, 6 lobe cam, full automatic advance with auxiliary vacuum spark control.
Breaker Gap—.020". Limits .018-.024".
Cam Angle or Dwell—Closed 35° Open 25° (distr.).
Breaker Arm Spring Tension—17-21 ozs.

Automatic Advance

Distributor Degrees	R.P.M.	Engine Degrees	R.P.M.
Start	250	2.0	500
3.75	400	7.5	800
13.0	1450	26.0	2900

Vacuum Spark Control 681-A:—On distributor. Mounted on distributor housing and linked directly to breaker plate. Provides additional advance at speeds above idling (vacuum port in carburetor above throttle) except when engine is accelerated or operated with wide open throttle when spark is retarded by return spring within unit.

Vacuum Advance

Distr. Degrees	Eng. Degrees	Vacuum (" of HG)
Start	0°	5-7"
7.5°	15°	15.5-18.5"

Distributor Removal:—Mounted on left side of crankcase. To remove, take out hold-down screw in advance arm.

IGNITION TIMING

IGNITION TIMING:—For all engines as follows:

Flywheel Degrees	Piston Position
0° at TDC	.000" TDC.

Timing (Using Synchroscope)—This method recommended. Clip Synchroscope lead to #1 spark plug, direct light on flywheel through inspection hole in left front face of housing. Idle engine at 350 R.P.M. or 6-7 M.P.H. Loosen hold-down screw in advance arm, center pointer on scale (arrow at 'O' mark), tighten hold-down screw, loosen advance arm clamp bolt, rotate distributor until timing mark (steel ball insert) on flywheel lines up with pointed end of inspection hole cover screw, tighten clamp bolt.

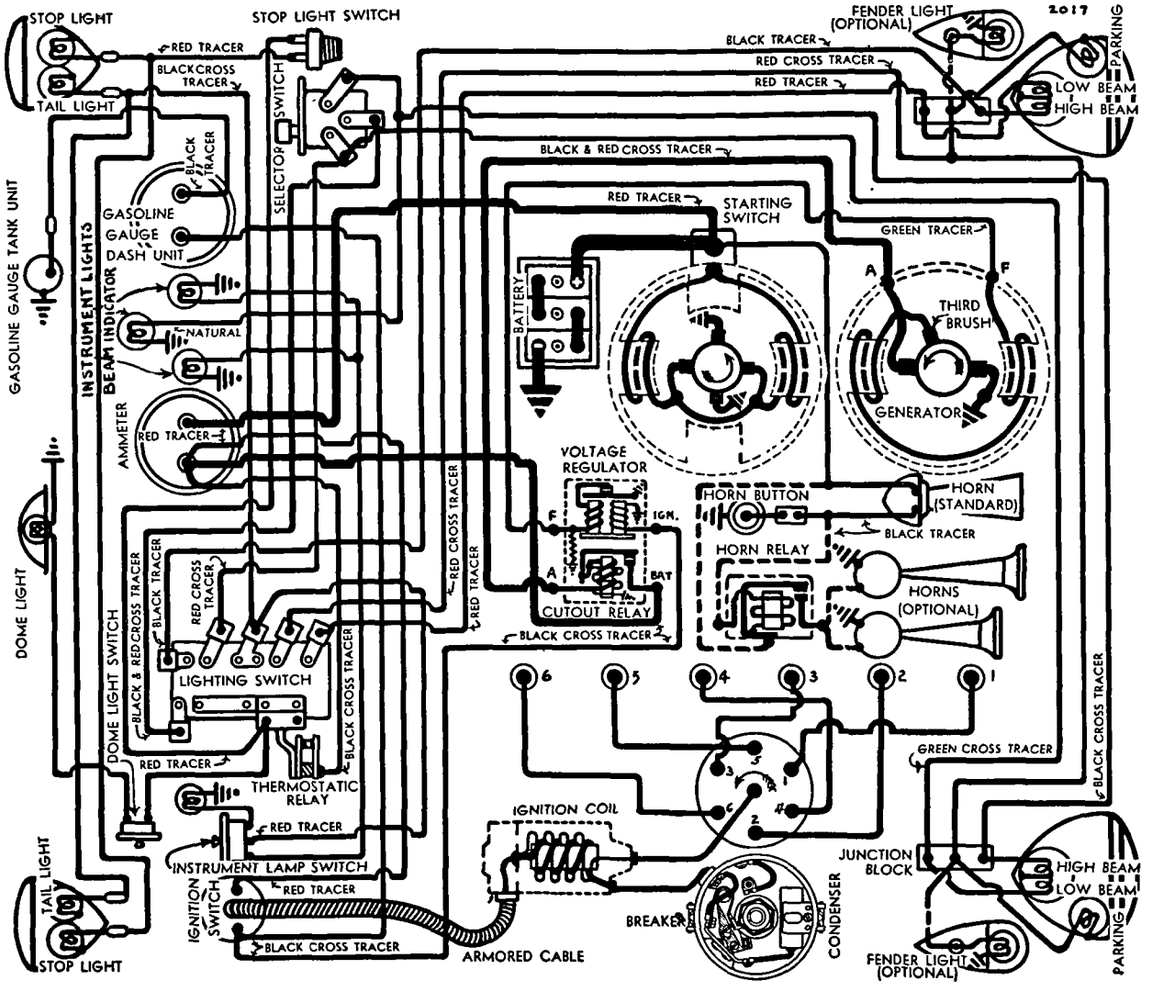

Timing (Without Synchroscope)—Use timing light connected between distributor terminal and ground, turn on ignition to check contact opening. With #1 piston on compression, turn engine over until piston reaches top dead center, stop when steel ball insert on flywheel lines up with pointed end of inspection hole cover screw in left front face of housing. Loosen hold-down screw in advance arm, center pointer on scale (arrow at 'O' mark), tighten hold-down screw, loosen advance arm clamp bolt, rotate distributor until timing lamp lights (contacts opening), tighten clamp bolt.

CARBURETOR

CARBURETION:—Carburetor—Carter Model 327-S (Before F-217-745), 339-S (F-217,746 to F-274,031 and F-275,111 up), 342-S (F-274-032 to F-275,110). 1¼" downdraft type. See Carburetion Section for complete adjustment, overhaul, and Jet Specifications.

For complete data, refer to Carburetor Index.

NOTE—Do not adjust carburetor until engine is warmed up so that choke valve is wide open and engine idles at hot or slow idle speed.

Idle Adjustment—Adjust throttle stopscrew so that idling speed is 350 R.P.M. or 6 M.P.H. Turn idle adjusting screw in until engine begins to miss, then turn screw out until engine begins to roll, finally turn screw in slowly until engine fires smoothly. Final setting should be ¾-1¼ turn open of the screw from the seated position. Readjust throttle stopscrew for correct idling speed.

Accelerating Pump Setting—Pump lever under dust cover at top of engine has three holes for pump link engagement. Change for seasonal requirements:
Outer Hole—Normal temperature ranges.
Inner Hole (Min. stroke)—Extremely hot weather.
Upper hole (Max. stroke)—Extremely cold weather.

Fast Idle:—Integral with carburetor. No adjustment.

For complete data, refer to Carburetion Equip. Index.

Accelerator Linkage Adjustment:—Must be maintained to provide correct 'throttle cracking' action for starting. To adjust, remove starting cable at starting switch to prevent cranking, place .090" feeler between throttle stopscrew and carburetor casting, fully depress starting pedal, loosen adjusting screw on throttle cross shaft lever and adjust cross shaft so that lever contacts pin on starter shift lever.

Automatic Choke:—Carter Climatic Control. See article in Carburetor Section for servicing directions.

For complete data, refer to Carburetion Equip. Index.

CARB. EQUIPMENT

Air Cleaner:—AC. #1525989 oil-wetted type standard, #1525991 heavy duty oil-bath type optional.

Fuel Pump:—AC. Type T #1522189 standard. Combination fuel-and-vacuum Type AA #1522249 optional. See articles in Carburetion Section.

For complete data, refer to Carburetion Equip. Index.

Gasoline Gauge:—AC. Electric. #1515313 (dash unit), #1515428 (tank unit). See article in Carburetion Section.

For complete data, refer to Carburetion Equip. Index.

BATTERY

BATTERY:—Delco, Type 15-T. 6 volt, 15 plate, 94 ampere hour capacity (20 hour rate).
Starting Capacity—115 amperes for 20 minutes.
Zero Capacity—300 amperes for 3.3 minutes.
Grounded Terminal—Negative (—) terminal.
Location—Left side under drivers seat.

Police Battery—Delco Type 17-J. 6 volt, 17 plate, 125 Ampere Hour Capacity (20 hour rate).
Starting Capacity—149 amperes for 20 minutes.
Grounded Ter. & Location—Same as 15-T (above).

STARTER

Delco-Remy Model 738-S. Armature No. 823881.
Drive—Overrunning clutch and manual pinion shift operated by starting pedal.
Cranking Engine—100 R.P.M., 190 amperes at 5 volts.
Rotation—Counter-clockwise at commutator end.
Brush Spring Tension—24-28 ozs. each.

Performance Data

Torque	R.P.M.	Volts	Amperes
0 ft. lbs.	5000	5.0	65
12 ft. lbs.	Lock	3.37	525

Removal:—Starter flange mounted on left front face of flywheel housing. To remove, take out flange capscrews.

Starting Switch:—Part No. 820052. Mounted on starter. Operated by starting pedal.

GENERATOR

STANDARD

Delco-Remy Model 936-T. Armature No. 1854856. Fixed third brush control type with external vibrating voltage regulator. Ventilated by fan on drive pulley.

NOTE—Third brush is clamped in position for maximum safe output and must not be disturbed.

Charging Rate Adjustment—Adjusted by changing setting of voltage regulator. See Regulator data below and special article in Equipment Section for procedure and settings. Do not operate generator on open-circuit.

Maximum Charging Rate—As given in table below. Reached at car speed of 34-36 M.P.H. To check charging rate, connect test ammeter in line at 'BAT' terminal of regulator, voltmeter between 'GEN' terminal and ground, ground 'F' terminal to eliminate regulator action.

Performance Data

	Amperes	Volts	R.P.M.
Cold	23-27	8.8-9.0	3000
Hot	18-23	8.2-8.7	3200

Rotation—Counter-clockwise at commutator end.

Brush Spring Tension—22-26 ozs. (main), 16-20 ozs. (third brush).

Field Current—2.3-2.6 amperes at 6.0 volts.

Removal:—Generator pivot mounted on left front of engine. To remove, take out two pivot bolts and clamp bolt.

Belt Adjustment:—Loosen clamp bolts and pivot bolt, swing generator out until deflection of belt is ¾" midway between generator and fan pulleys when pressed lightly.

GENERATOR

SPECIAL EQUIPMENT

Delco-Remy Model 934-F (for City Police Cars), 1102657 (State Police). Two brush types used with Regulator Model 5599 (934-F), 5872 (1102657). ***Refer to 1937-38 Oldsmobile Eight pages for complete data on these Generators and Regulators.***

REGULATOR

Delco-Remy Model 5588. 'Double Core' Voltage Regulator (With 'IGN' Terminal). Cutout Relay and vibrating type Voltage Regulator in single case on left side of engine dash.

For complete data, refer to Electrical Equipment Index.

Cutout Relay

Cuts In—6.9-7.6 volts, 838 R.P.M., 9½ M.P.H.

Cuts Out—3 amperes max. at 6.3 volts.

Contact Gap—.018-.025".

Air Gap—.018-.022" with contacts closed.

Voltage Regulator

Setting—7.55-7.85 volts at 70° F., 7.45-7.55 volts at 150° F. Regulator is over-compensated for temperature and must be checked at these points.

Adjustment—Disconnect lead on 'IGN' terminal of regulator, connect jumper between 'IGN' and 'BAT' terminals, connect test ammeter in charging line at 'BAT' terminal, connect voltmeter between 'IGN' terminal and ground. Operate generator at 2800-3000 R.P.M., adjust charging rate to 8-10 amperes, change regulator armature spring tension by bending spring hanger at lower end of spring slightly until setting is as given above.

NOTE—Regulator cover must be in place when tests are made. Do not operate generator on open-circuit.

Contact Gap—.015-.025".

Contact Spring Tension—2.7-3.5 ounces.

Air Gap—.060-.070" between armature and center of core with armature down and fibre bumper touching stop; .008-.013" between fibre bumper and stop with armature up.

LIGHTING

LIGHTING:—Headlamps—Guide Multi-beam, pre-focused, cross-beam type with special non-interchangeable lenses. Headlamps aimed straight ahead with lenses removed. Special asymetrical 'Passing' beam (upper beam left hand headlamp, lower beam right hand headlamp) controlled by foot selector switch with lighting switch in driving or third position.

Headlamp Beam Indicator—Located at top of speedometer dial. Lighted whenever driving or upper headlamp beams are lighted.

Switches

Lighting—Delco-Remy Model 479-K, 479-H Export.
Foot Beam Selector—D-R Model 471-T,Z(optl.Can.).
Instrument Lamp—Delco-Remy Model 1404.
Stop Lamp—Hydraulic type on brake master cylinder.

CONTINUED N NEXT PAGE

CONTINUED FR M PRECEDIN PAGE

Bulb Specifications

Position	Candlepower	Mazda No.
Headlamps	32-21	T-2320-L
Parking	1½	55.
Instrument, Tail	3	63.
Beam Indicator; Frt. Compt...	1	51.
Stop	15	87.
Dome	6	81.

NOTE—Headlamps are Pre-focused 'Long-Life' type.

MISC. ELECTRICAL

THERMOSTATIC RELAY:—Mounted on lighting switch (part of assembly). Non-adjustable. Operates with load of 24-27 amperes limiting current to 18 amps.

HORNS:—Klaxon Model K-26-L Type 1602 Std., Model K-33-D, Type 1951 (low note), 1952 (high note) blended tone twin horns operated by horn relay Optl. All horns are vibrator type.

Horn Type	Current at 6 Volts	Air Gap
K-26-L, 1602	6.5-8.5	.025-.029"
K-33-D, 1951	12-14	.045-.050"
K-33-D, 1952	11-13	.036-.040"

NOTE—Twin horns are stamped 'L' (low note—long horn), 'S' (high note—short horn), on motor shell.

Horn Relay:—Model 268-L. Requires .25 amperes at 2 volts minimum to close contacts. Current draw .8 amperes.

Contact Gap—.015-.025". **Spring Tension**—6-8 ozs.

Air Gap—.012-.017" with contacts closed.

ENGINE

ENGINE SPECIFICATIONS:—**Type**—6 cyl. 'L' Head.
Bore—3 5/16". **Stroke**—4⅛".
Displacement—213.3 cubic inches.
Rated Horsepower—26.3 (SAE).
Developed Horsepower—90 at 3400 R.P.M.
Compression Ratio & Pressure—6.0-1 Std. cast-iron head. No optl. ratios. Pressure 106-116 lbs. at cranking speed of 100 R.P.M.
Vacuum Reading—Gauge should show steady reading of 17" of HG. minimum with engine idling at 350 R.P.M. or 6 M.P.H.

PISTONS:—Aluminum alloy, 'T' slot, Cam Ground type with Electrolite (hard oxide) bearing surface. Skirt is elliptical with .007-009" greater diameter at right angles to pin bosses. Pistons cannot be ground. Use finished replacement pistons.
Weight—15.4 ozs. (stripped). **Length**—3 5/16".
Removal—Pistons and rods removed from above.
Clearance—.0013-.0018" measured ⅜" up on skirt and ⅜" below lower ring groove at right angles to pin holes for new pistons. See Fitting new Pistons.

Replacement Pistons:—Finished pistons with pins fitted furnished in .003", .005", 010", .015" and .030" over size. Oversize pistons held to same weight as standard.

Fitting New Pistons:—With pin removed, check clearance by inserting .002" feeler ½" wide between piston and cylinder wall on pressure or camshaft side at right angles to pin hole. Piston should be inverted with slot away from camshaft. Pressure to withdraw feeler must be 4-11 lbs. with piston and block at 70° F.

Installing Pistons:—Mark 'V-S' on piston head must be toward valves (slot on side away from valves). Pin hole in piston offset 3/32" toward left (slotted side).

PISTON RINGS:—Two compression, two oil control rings per piston, all above pin. Both oil ring grooves drilled radially with oil drain holes. Piston rings furnished in .010", .020", .030" oversizes.

Ring	Width	End Gap	Side Clearance
Comp.	⅛"	.007-.012"	.0015-.003"
Oil Cont.	3/16"	.007-.015"	.001 -.0025"

NOTE—Install compression rings with groove or step downward.

PISTON PIN:—**Diameter**—.8554-.8557". **Length**—3 1/32". Pin is locked in piston by lock screw in one boss. Opposite end slotted to allow boss to slide freely on pin.
Pin Fit in Piston—.0001" loose to .0002" tight in plain boss end, .0002-.0005" tight in lock boss end.
Pin Fit in Rod Bushing—Clearance .0002"-.0005". Pins selected to give this clearance. New rod bushings are burnished and reamed to inside diameter of .8557-.8561".
NOTE—Replacement pistons furnished with pins fitted. Pin bosses in piston are Electrolited and cannot be reamed. Pins not furnished oversize.
Fitting Pins—Place piston and pin in boiling water for one minute. With special tool HM-535 insert pin in plain boss end and push lightly until lockscrew hole in pin and boss are aligned. Install lockscrew. Skirt taper with pin installed must not exceed .0005".

CONNECTING ROD:—**Weight**—29½ozs.
Length—7 13/16".
Crankpin Journal Diameter—2".
Lower Bearing—Steel-backed, babbitt-lined, interchangeable type.
Clearance—.001-.003". Sideplay .0055-.0105".

Bearing Adjustment:—None (no shims). Replace bearing shells. Do not file rod or cap faces. Bearings assembled with slight projection above faces to insure contact.

Installing Rods:—Oil spit hole in lower bearing upper half must be toward camshaft. Grooves in rod and cap bolt boss must be on same side as part number. NOTE—Ground bolts used for cap and rod assembly. Common bolts must not be used.

CRANKSHAFT:—Four bearings. Integral count'rw'ghts.
Journal Diameters—#1, 2.478-2.479"; #2, 2.5405-2.5415"; #3, 2.6655-2.6665"; #4, 2.728-2.729".
Bearing Type—Interchangeable steel-backed, babbitt-lined. Bearing halves interchangeable (upper and lower) except #4 (rear).
Clearance—.001-.003".

Bearing Adjustment:—None (no shims). Replace bearings. Do not file bearing caps. Bearing upper halves can be removed without removing crankshaft by using tool HM-J-173. This is a flat headed plug which is slipped into oil hole in crankshaft. The head engages the edge of the bearing and turns it out as crankshaft is rotated. Install bearings in same manner (insert plain edge of bearing on indented side of upper bearing support).

End Thrust:—Taken by #1 (front) bearing. Endplay .004-.008". A bronze thrust plate .1205-.1235" thick is assembled at each end of front main bearing and is dowelled to bearing cap. There is a steel thrust collar on the crankshaft behind the crankshaft gear.

CAMSHAFT:—Four bearing. Non-adjustable chain drive.
Journal Diameters—#1, 1.9970-1.9975"; #2, 1.9345-1.9350; #3, 1.8720-1.8725"; #4, 1.8095-1.8100".
Bearing Type—Metal-backed, babbitt-lined.
Clearance—.002-.004".

End Thrust:—Taken by spring-loaded plunger in forward end of camshaft and thrust plate on chain case cover.

Timing Chain:—Whitney. Width—1¼". Pitch—.500". Length 47 links or 23½".

Camshaft Setting:—Sprockets are marked. Mesh chain with sprockets turned so that marks are adjacent and in line with a straightedge across the shaft centers. Use Sprocket Guage HM-408-0.

VALVES:	Head Diameter	Stem Diameter	Length
Intake	1 9/16"	3415-.3425"	5 51/64"
Exhaust	1 27/64"	3405-.3415"	5 51/64"

	Seat Angle	Lift	Stem Clearance
Intake	30°	.300"	.00125-.00325"
Exhaust	45°	.300"	.00225-.00425"

Valve Guides:—Cast-iron. Install with turned portion below and finish ream to .34375-.34475" (inside diameter) after assembly. Guide must be 15/16" below top of block.

Valve Springs:—Free length 2 9/16". Install springs with three close-coils at top. No spring cages used.

	Spring Pressure	Spring Length
Valve Closed	43 lbs.	2 9/32"
Valve Open	116 lbs.	1 15/16"

NOTE—Springs are interchangeable (intake and exhaust and for either six or eight engines).

Valve Lifters:—Single piece cast-iron with core openings in side wall. Operate directly in reamed holes in block. Clearance .0008". Serviced by reaming out holes and installing new lifters furnished standard, .002", .005" oversize.

VALVE TIMING

Tappet Clearance—.008" Int., .010" Exh., warm.

Valve Timing:—See Camshaft Setting above.
Intake Valves—Open 5° BTDC. Close 45° ALDC.
Exhaust Valves—Open 45° BLDC. Close 5° ATDC.
To Check Valve Timing—Check tappet clearance #1 intake valve. This valve should open with piston 5° or .0163" before top dead center when point on flywheel approximately 2 teeth before top dead center mark (steel ball insert) on flywheel lines up with pointed end of inspection hole cover screw in left front face of housing.

LUBRICATION

LUBRICATION:—Pressure type. Gear type oil pump located on right side of crankcase.
NOTE—Use new gasket whenever oil pump taken off engine. See that holes in gasket line up with oil leads in block.
Normal Oil Pressure:—25-30 lbs.
Oil Pressure Regulator:—On oil pump cover. Operates at 27 lbs. Not adjustable.
Crankcase Capacity:—6 qts. refill.

CLUTCH

CLUTCH:—Borg & Beck Model 9A6. Single plate, dry disc type. See article in Clutch Section for relining and assembling directions.
See Clutch Section for complete data.

Facings—Woven type, 2 required. Inside Diam. 5⅝". Outside Diam. 9". Thickness .133".

Adjustment—Free movement of clutch pedal must be 1-1½". To adjust, loosen locknut and turn adjusting screw at lower end of inner lever on clutch throwout auxiliary shaft in front of clutch pedal.

Removal—Disconnect propeller shaft, remove transmission, take off clutch housing pan, take out six capscrews mounting clutch on flywheel turning all screws out evenly to release spring pressure. Clutch can be removed from below without removing flywheel housing.

NOTE—A locating dowel is mounted on the flywheel and the second clutch mounting screw hole on each side is counterbored deeper than the remaining holes. When mounting clutch, use the two screws with short thread and longer shank in these holes.

FRONT SUSPENSION

Front Suspension:—Independent, linked parallelogram type with coil springs.
See Front Suspension Section for complete data.

NOTE—Before checking front end, check tire inflation, front wheel balance, front wheel and tire runout (not to exceed ⅛"), bounce car up and down several times to allow frame to assume normal height.

King Pin Inclination—5°51' crosswise.

Caster—1½-2¼°. Adjustable. Caster affected by camber adjustment but not outside limits as given.

Camber—⅛-1°. Adjustable.

Toe In—⅛-3/16". Adjustable. Both tie rods must be turned equally.

Steering Geometry—Inner wheel turned 23° 10', outer wheel 20°.

STEERING GEAR

Steering Gear: Saginaw Worm-and-Roller type with center steering.
See Steering Gear Section for complete data.

BRAKES

BRAKES:—Service—Bendix Hydraulic, Duo-Servo, Single anchor type. Hand lever applies rear brakes.
See Brake Section for complete data.

Brake Drum Diameter—11 1/16".

Brake Lining—Moulded and woven type. Width 2". Thickness 3/16". Length 23.7" per wheel.

Brake Clearance—.008" toe, .010" heel on each shoe.

Hand Brake Adjustment:—See Service Brakes.

MODEL IDENTIFICATION

SERIAL NUMBER:—First number—L100,001. On left hand frame side member.

ENGINE NUMBER—First number—L202,001. Stamped on ledge on top of block beside head at left front corner.

TUNE-UP

COMPRESSION:—Ratio 6.2-1. Pressure 152 lbs. at 1000 R.P.M. or 116-126 lbs. at cranking speed of 100 R.P.M.

VACUUM READING:—Gauge should show steady reading of 17" of HG. minimum with engine idling at 300 R.P.M. or 6 M.P.H.

FIRING ORDER: 1-6-2-5-8-3-7-4. See diagram.

SPARK PLUGS: AC Type G-9. 18 mm. Metric. Gaps—.030-.033".

IGNITION: See Coil, Condenser, and Distributor.
Breaker Gap—.015". Cam Angle—31° Closed.
Automatic Advance—15° max. at 1900 RPM (distr.).
Vacuum Advance—5° (distr.) with 13-16" vacuum.

IGNITION TIMING: See Ignition Timing.
Std. Setting—2° BTDC. Flywheel mark (steel ball) aligned with insp. hole cover screw (left side of housing).
CAUTION—Time #6 cylinder on this engine.

CARBURETION: See Carburetor & Carb. Equipment.
Idle Setting—Set idle screws ¾-1¼ turns open. Idle speed 300 RPM or 6-7 MPH.
Float Level—3/16" top of float to cover with needle valve seated.
Accelerating Pump—Inner Hole (Summer), outer (Winter).
Fuel Pump Pressure: 3½ lbs.("T"), 4½ lbs.('AA' comb.).

VALVES: See Valve Timing.
Tappet Clearance—.008" Intake, .010" Exh., hot.

STARTING: See Battery, Starter, Generator, Regulator.

IGNITION

Ignition Switch Delco-Remy Model 435-B:—Switch and cable assembly connected to coil by armored cable.
Ignition Lock—Briggs & Stratton.

COIL: Delc -Remy Model 536-E. On dash.
Ignition Current—2.0 amperes idling, 4.5 stopped.

CONDENSER: Delco-Remy Part No. 1837231.
Capacity—.20-.25 microfarad.

DISTRIBUTOR: Delco-Remy Model 663-K. Single breaker, 8 lobe cam, full automatic advance type with vacuum spark control.
Breaker Gap—.015". Limits .0125-.0175".
Cam Angle or Dwell—31° (closed), 14° (open).
Breaker Arm Spring Tension—19-23 ounces.

Automatic Advance

Distributor Degrees	R.P.M.	Engine Degrees	R.P.M.
Start	300	4.5	600
4	400	8	800
15	1900	30	3800

Vacuum Spark Control 681-B:—On distributor. Mounted on distributor housing and linked directly to breaker plate. Provides additional advance at speeds above idling (vacuum port in carburetor above throttle) except when engine is accelerated or operated with wide open throttle when spark is retarded by return spring within unit.

Vacuum Advance

Distr. Degrees	Eng. Degrees	Vacuum (" of HG)
Start	0°	5-7"
5°	10°	13-16"

Distributor Removal:—Mounted on top of engine. To remove, take out hold-down screw in advance arm.

IGNITION TIMING

IGNITION TIMING:—For all engines as follows:

Flywheel Degrees	Piston Position
2° BTDC.	.002" BTDC.

Timing (Using Synchroscope)—This method recommended. Clip Synchroscope lead to #6 spark plug, direct light on flywheel through inspection hole in left front face of housing. Idle engine at 300 R.P.M. or 6-7 M.P.H. Loosen hold-down screw in advance arm, center pointer on scale (arrow at '0' mark), tighten hold-down screw, loosen advance arm clamp bolt, rotate distributor until timing mark (steel ball) on flywheel lines up with pointed end of inspection hole cover screw, tighten clamp bolt.

Timing (Without Synchroscope)—Use timing light connected btween distributor terminal and ground, turn on ignition to check contact opening. With #6 piston on compression, turn engine over until piston reaches 2° before top dead center, stop when steel ball on flywheel lines up with pointed end of inspection hole cover screw in left front face of housing. Loosen hold-down screw in advance arm, center pointer on scale (arrow at '0' mark), tighten hold-

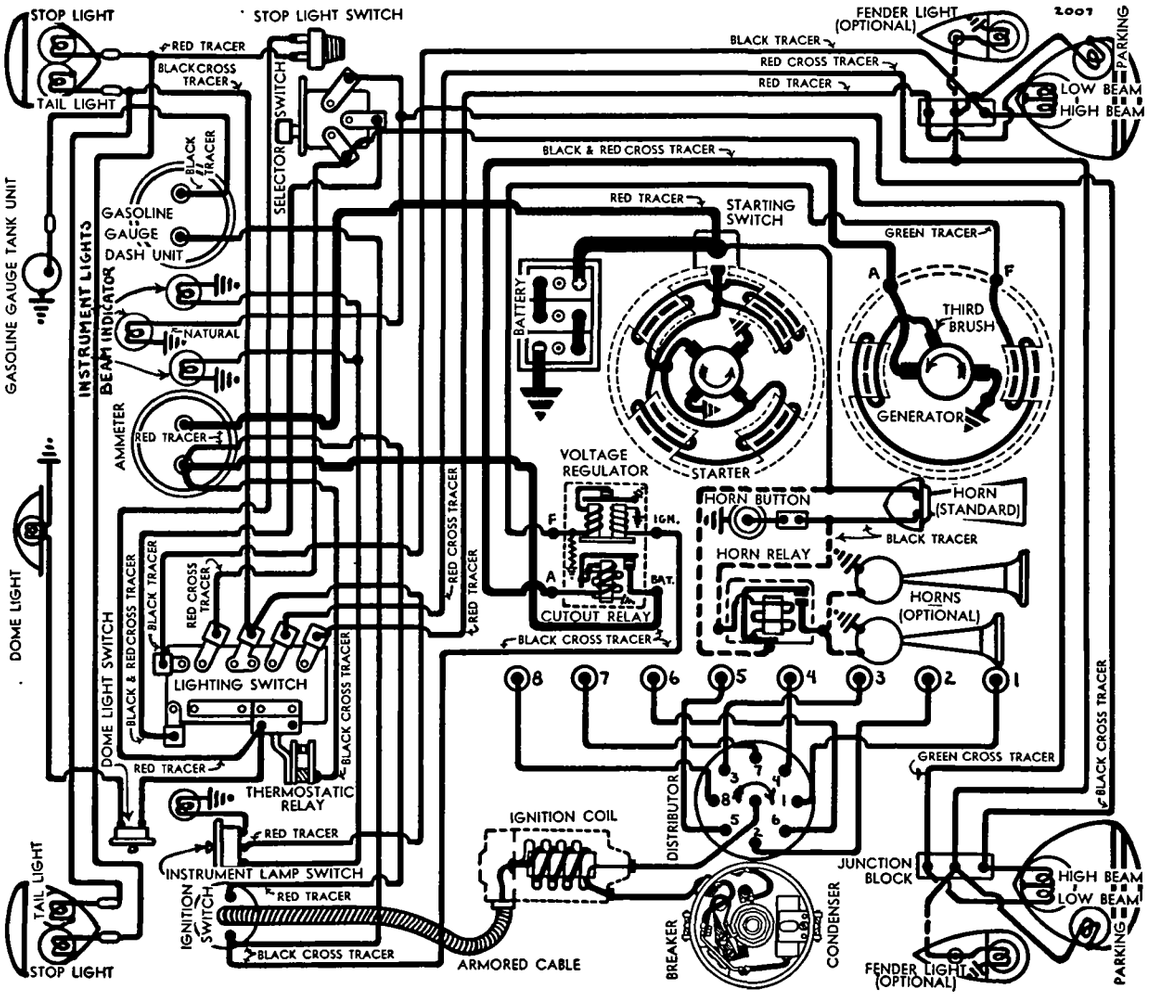

down screw, loosen advance arm clamp bolt, rotate distributor until timing lamp lights (contacts opening), tighten clamp bolt.

CARBURETOR

CARBURETION:—Carburetor—Carter Models 328-S (before Serial No. L-127334) 341-S (after Serial No. L-127335). Dual downdraft type. See Carburetion Section for complete adjustment, overhaul, and Jet Specifications.

For complete data, refer to Carburetor Index.

NOTE—Do not adjust carburetor until engine is warmed up so that choke valve is wide open and engine idles at hot or slow idle speed.

Idle Adjustment—Adjust throttle stopscrew so that engine idles at 300 R.P.M. or 6 M.P.H. Turn idle adjusting screw for each carburetor barrel (in succession) in until engine begins to lag or miss, then turn screw out until engine begins to roll, finally turn screw in until engine fires smoothly. Readjust throttle stopscrew for correct idling speed.

Accelerating Pump Setting—Pump lever under dust cover at top of carburetor has two holes for pump link engagement. Change for seasonal requirements:
Outer Hole (Max. stroke)—Cold weather.
Inner Hole (Min. stroke)—Hot weather.

Fast Idle:—Integral with carburetor. Adjustable.

For complete data, refer to Carburetion Equip. Index.

Adjustment—With fast idle screw resting against high lobe of fast idle cam (choke valve closed) and with correct slow idle setting (see above), adjust fast idle screw to give .030" clearance between throttle stopscrew and carburetor body.

Accelerator Linkage Adjustment:—Must be maintained to provide correct 'throttle cracking' action for starting. To adjust, remove starting cable at starting switch to prevent cranking, place .090" feeler between throttle stopscrew and carburetor casting, fully depress starting pedal, loosen adjusting screw on throttle cross shaft lever and adjust cross shaft so that lever contacts pin on starter shift lever.

Automatic Choke:—Carter Climatic Control. See article in Carburetion Section for servicing directions.

For complete data, refer to Carburetion Equip. Index.

CARB. EQUIPMENT

Air Cleaner:—AC. #1525990 standard oil-wetted type, #1525992 heavy duty oil-bath type optional.

Fuel Pump:—AC. Type T #1522188 standard, Combination fuel-and-vacuum Type AA #1522250 optional. See articles in Carburetion Section.

For complete data, refer to Carburetion Equip. Index.

Gasoline Gauge:—AC. Electric. #1515313 (dash unit), #1515428 (tank unit). See article in Carburetion Section.

For complete data, refer to Carburetion Equip. Index.

BATTERY

BATTERY:—Delco, Type 17-K. 6 volt, 17 plate, 110 ampere hour capacity (20 hour rate).
Starting Capacity—131 amperes for 20 minutes.
0° F. Capacity—300 amperes for 4.4 minutes.

Delco, Type 17-J (Special Equipment). 6 volt, 17 plate, 125 ampere hours (20 hour rate).
Grounded Terminal—Negative (—) terminal.
Location—Left side under drivers seat.

STARTER

Delc -Remy Model 727-Z. Armature No. 823881.
Drive—Overrunning clutch and manual pinion shift operated by starting pedal.
Cranking Engine—100 R.P.M., 200 amps at 5 volts.
Rotation—Counter-clockwise at commutator end.
Brush Spring Tension—24-28 ozs. each.

Performance Data

Torque	R.P.M.	Volts	Amperes
0 ft. lbs.	6000	5.0	60
15 ft. lbs.	Lock	3.0	600

Removal—Starter flange mounted on left front face of flywheel housing. To remove, take out flange screws.

Starting Switch:—Part No. 820052. Mounted on starter. Operated by starting pedal.

GENERATOR
STANDARD

Delco-Remy Model 936-T. Armature No. 1854856. Fixed third brush control type with external vibrating voltage regulator. Ventilated by fan on drive pulley.

NOTE—Third brush is clamped in position for maximum safe output and must not be disturbed.

Charging Rate Adjustment—Adjusted by changing setting of voltage regulator. See Regulator data below and special article in Equipment Section for procedure and settings. Do not operate generator on open-circuit.

Maximum Charging Rate—As given in table below. Reached at car speed of 34-36 M.P.H. To check charging rate, connect test ammeter in line at 'BAT' terminal of regulator, voltmeter between 'GEN' terminal and ground, ground 'F' terminal to eliminate regulator action.

Performance Data

	Amperes	Volts	R.P.M.
Cold	23-27	8.8-9.0	3000
Hot	18-23	8.2-8.7	3200

Rotation—Counter-clockwise at commutator end.

Brush Spring Tension—22-26 ozs. (main), 16-20 ozs. (third).

Field Current—2.3-2.6 amperes at 6.0 volts.

Removal:—Generator pivot mounted at left front of engine. To remove, take out two pivot bolts and clamp bolt.

Belt Adjustment:—Loosen clamp bolts and pivot bolt, swing generator out until deflection of belt is 1" midway between generator and fan pulleys when pressed lightly.

GENERATOR
SPECIAL EQUIPMENT

Delco-Remy Model 934-F (for City Police Cars), 1102657 (State Police). Two brush types used with Regulator Model 5599 (934-F), 5872 (1102657). *Refer to 1937-38 Oldsmobile Eight pages for complete data on these Generators and Regulators.*

REGULATOR

Delco-Remy Model 5588. 'Double Core' Voltage Regulator (With 'IGN' Terminal). Cutout Relay and vibrating type Voltage Regulator in single case on left side of engine dash.

For complete data, refer to Electrical Equipment Index.

Cutout Relay

Cuts In—6.9-7.6 volts. 800 R.P.M., 9½ M.P.H.

Cuts Out—3 amperes max. at 6.3 volts.

Contact Gap—.018-.025".

Air Gap—.018-.022" with contacts closed.

Voltage Regulator

Setting—7.55-7.85 volts at 70° F., 7.45-7.55 volts at 150° F. Regulator is over-compensated for temperature and must be checked at these points.

Adjustment—Disconnect lead on 'IGN' terminal of regulator, connect jumper between 'IGN' and 'BAT' terminals, connect test ammeter in charging line at 'BAT' terminal, connect voltmeter between 'IGN' terminal and ground. Operate generator at 2800-3000 R.P.M., adjust charging rate to 8-10 amperes, change regulator armature spring tension by bending spring hanger at lower end of spring slightly until setting is as given above.

NOTE—Regulator cover must be in place when tests are made. Do not operate generator on open-circuit.

Contact Gap—.015-.025".

Contact Spring Tension—2.7-3.5 ounces.

Air Gap—.060-.070" between armature and center of core with armature down and fibre bumper touching stop; .008-.013" between fibre bumper and stop with armature up.

LIGHTING

LIGHTING:—Headlamps—Guide Multi-beam, pre-focused, cross-beam type with special non-interchangeable lenses. Headlamps aimed straight ahead with lenses removed. Special asymetrical 'Passing' beam (upper beam left hand headlamp, lower beam right hand headlamp) controlled by foot selector switch with lighting switch in driving or third position.

Headlamp Beam Indicator—Located at top of speedometer dial. Lighted whenever driving or upper headlamp beams are lighted.

Switches

Lighting—Delco-Remy Model 479-K, 479-H Export.

Foot Beam Selector—D-R Model 471-T,Z (optl.Can.).

Instrument Lamp—Delco-Remy Model 1404.

Stop Lamp—Hydraulic type on brake master cyl.

Bulb Specifications

Position	Candlepower	Mazda No.
Headlamps	32-21	T-2320-L
Parking, Ins't., Tail	3	63
Beam Indicator, Front Comp.	1	51
Stop	15	87
Dome	6	81

NOTE—Headlamps are Pre-focused 'Long-Life' type.

MISC. ELECTRICAL

THERMOSTATIC RELAY:—Mounted on lighting switch (part of assembly. Non-adjustable. Operates with load of 24-27 amperes limiting current to 18 amps.

HORNS:—Klaxon Model K-26-L Type 1602 Std., Model K-33-D, Type 1951 (low note), 1952 (high note) blended tone twin horns operated by horn relay Optl. All horns are vibrator type.

C NTINUED N NEXT PAGE

CONTINUED FROM PRECEDING PAGE

Horn Type	Current at 6 V lts	Air Gap
K-26-L, 1602	6.5-8.5	.025-.029"
K-33-D, 1951	12-14	.045-.050"
K-33-D, 1952	11-13	.036-.040"

NOTE—Twin horns are stamped 'L' (low note—long horn), 'S' (high note—short horn), on motor shell.

Horn Relay:—Model 268-L. Requires .25 amperes at 2 volts minimum to close contacts. Current draw .8 amperes.

Contact Gap—.015-.025". **Spring Tension**—6-8 ozs.

Air Gap—.012-.017" with contacts closed.

ENGINE

ENGINE SPECIFICATIONS:—Type—8 cyl., 'L' head.

Bore—3". **Stroke**—4¼".

Displacement—240.3 cubic inches.

Rated Horsepower—28.8 (SAE).

Developed Horsepower—100 at 3400 R.P.M.

Compression Rati & Pressure—6.2-1 Std. cast-iron head. Pressure 116-126 lbs. at cranking speed of 100 R.P.M.

Vacuum Reading—Gauge should show steady reading of 17" f HG. minimum with engine idling at 300 R.P.M. or 6 M.P.H.

PISTONS:—Aluminum alloy, 'T' slot, Cam Ground type with Electrolite (hard oxide) bearing surface. Skirt is elliptical with .006-.008" greater diameter at right angles to pin bosses. Pistons cannot be ground. Use finished replacement pistons.

Weight—12.8 ozs. (stripped). **Length**—3¾".

Removal—Pistons and rods removed from below. Rotate crankshaft so that counterweights are crosswise and on opposite side from camshaft.

Clearance—.0013-.0018" measured ⅜" up on skirt and ⅜" below lower ring groove at right angles to pin hole for new pistons. See Fitting New Pistons.

Replacement Pistons:—Finished pistons with pins fitted furnished in .003", .005", .010", .015", .030" oversizes. Oversize pistons held to same weight as standard.

Fitting New Pistons:—With pin removed, check clearance by inserting .002" feeler ½" wide between piston and cylinder wall on pressure or camshaft side at right angles to pin hole. Piston should be inverted with slot away from camshaft. Pressure to withdraw feeler must be 4-11 lbs. with piston and block at 70° F.

Installing Pistons:—Mark 'V-S' on piston head must be toward valves (slot away from valves). Pin hole in piston offset 3/32" toward left (slotted side).

PISTON RINGS:—Two compression, two oil control rings per piston, all above the pin. Both oil ring grooves drilled radially with oil drain holes. Piston rings furnished in .010", .020", .030" oversizes.

Ring	Width	End Gap	Side Clearance
Comp.	⅛"	.007-.012"	.0015-.003"
Oil Cont.	3/16"	.007-.015"	.001-.0025"

NOTE—Install compression rings with groove or step downward.

PISTON PIN:—Diameter .8554-.8557". Length 2 23/32". Pin is locked in piston by lockscrew in one boss. Opposite end slotted to allow boss to slide freely on pin.

Pin Fit in Piston—.0001" loose to .0002" tight in plain boss end, .0002-.0005" tight in lock boss end.

Pin Fit in Rod Bushing—Clearance .0002-.0005". Pins selected to give this clearance. New rod bushings burnished and reamed to inside diameter of .8557-.8561".

Fitting Pins—Place piston and pin in boiling water for 1 minute. With special tool HM-535 insert pin in plain boss end and push lightly until lockscrew hole in pin and boss are aligned. Install lockscrew. Skirt taper with pin installed must not exceed .0005".

NOTE—Replacement pistons furnished with pins fitted. Pin bosses in piston are Electrolited and cannot be reamed. Pins not furnished oversize.

CONNECTING ROD:—Weight 33 ozs. Length 9".

Crankpin Journal Diameter—2¼".

Lower Bearing—Steel-backed, babbitt-lined, interchangeable type.

Clearance—.001-.003". Sideplay—.0055-.0105".

Bearing Adjustment:—None (no shims). Replace bearing shells. Do not file rod or cap faces. Bearings assembled with slight projection above faces to insure contact.

Installing Rods:—Oil spit hole in lower bearing upper half must be toward camshaft. Grooves in rod and cap bolt boss must be on same side as part number

NOTE—Ground bolts used for cap and rod assembly. Common bolts must not be used.

CRANKSHAFT:—Five bearing. Integral counterweights.

Journal Diameters—#1, 2.373-2.374"; #2, 2.5605-2.5615"; #3, 2.623-2.624; #4, 2.6855-2.6865; #5, 2.748-2.749".

Bearing Type—Interchangeable steel-backed, babbitt-lined. Upper and lower halves not interchangeable.

Clearance—.001-.003".

Bearing Adjustment:—None (no shims). Replace bearings. Do not file bearing caps. Bearing upper halves can be removed without removing crankshaft by using tool HM-J-173. This is a flat headed plug which is slipped into oil hole in crankshaft. The head engages the edge of the bearing and turns it out as crankshaft is rotated. Install bearings in same manner (insert plain edge of bearing on indented side of upper bearing support).

End Thrust:—Taken by #1 (front) bearing. Endplay .004-.008". A bronze thrust plate .1205-.1235" thick is assembled at each end of front main bearing and is dowelled to bearing cap. There is a steel thrust collar on the crankshaft behind the crankshaft gear.

NOTE—In removing fan drive pulley sheet metal rim on hub must not be damaged.

CAMSHAFT:—Six bearings. Non-adjustable chain drive.

Journal Diameters—#1, 2.3095-2.3100"; #2, 2.2470-2.2475"; #3, 2.1845-2.1850"; #4, 2.1220-2.1225; #5, 2.0595-2.0600"; #6, 1.8095-1.8100".

Bearing Type—Metal-backed, babbitt-lined.

Clearance—.002-.004".

End Thrust:—Taken by spring-loaded plunger in forward end of camshaft and thrust plate on chain case cover.

Timing Chain:—Whitney. Width 1¼". Pitch .500". Length 46 links or 23".

Camshaft Setting:—Sprockets are marked. Mesh chain with sprockets turned so that marks are adjacent and in line with a straigtedge across the shaft centers. Use Sprocket Gauge HM-408-0.

VALVES:	Head Diameter	Stem Diameter	Length
Intake	1 9/16"	.3415-.3425"	5 9/32"
Exhaust	1 27/64"	.3405-.3415"	5 9/32"

	Seat Angle	Lift	Stem Clearance
Intake	30°	.300"	.00125-.00325"
Exhaust	45°	.300"	.00225-.00425"

Valve Guides:—Cast-iron. Install with turned portion below and finish ream to .34375-.34475" (inside diameter) after assembly. Guide must be 15/16" below top of block.

Valve Springs:—Free length 2 9/16". Install springs with three close-coils at top. No spring cages used.

	Spring Pressure	Spring Length
Valve Closed	43 lbs.	2 9/32"
Valve Open	116 lbs.	1 15/16"

NOTE—Springs are interchangeable (intake and exhaust and for either six or eight engines).

Valve Lifters:—Single piece cast-iron with core openings in sidewalls. Operate in removable guides in block. Clearance .0008". Serviced by renewing guides and installing standard lifters.

VALVE TIMING

Tappet Clearance—.008" Int., .010" Exh., warm.

Valve Timing:—See Camshaft Setting above.

Intake Valves—Open at TDC. Close 42° ALDC.

Exhaust Valves—Open 40° BLDC. Close 10° ATDC.

To Check Valve Timing—Check tappet clearance #6 intake valve. This valve should open with piston on top dead center when flywheel mark "TDC/" lines up with pointed end of inspection hole cover screw in left front face of housing.

NOTE—Steel ball insert in flywheel does not indicate top dead center point as on the six cylinder engine.

LUBRICATION

LUBRICATION:—Pressure. Gear type oil pump located in crankcase. Ignition timing not disturbed by removal of oil pump.

Normal Oil Pressure—25-30 lbs.

Oil Pressure Regulator—Mounted on oil pump. Operates at 27 lbs. Not adjustable.

Crankcase Capacity—7 qts. refill.

CLUTCH

CLUTCH:—Borg & Beck Model 10A4. Single plate, dry disc type. See article in Clutch Section for relining and assembling directions.

See Clutch Section for complete data.

Facings—Woven type, 2 required. Inside Diam. 6⅛". Outside Diam. 9⅞". Thickness .125".

Adjustment—Free movement of clutch pedal must be 1-1½". To adjust, loosen locknut and turn adjusting screw at lower end of inner lever on clutch throwout auxiliary shaft in front of clutch pedal.

Removal—Disconnect propeller shaft, remove transmission, take off clutch housing pan, take out six capscrews mounting clutch on flywheel turning all screws out evenly to release spring pressure. Clutch can be removed from below without removing flywheel housing.

NOTE—A locating dowel is mounted on the flywheel and the second clutch mounting screw hole on each side is counterbored deeper than the remaining holes. When mounting clutch, use the two screws with short thread and longer shank in these holes.

FRONT SUSPENSION

Front Suspension:—Independent, linked parallelogram type with coil springs.

See Front Suspension Section for complete data.

NOTE—Before checking front end, check tire inflation, front wheel balance, front wheel and tire runout (not to exceed ⅛"), bounce car up and down several times to allow frame to assume normal height.

King Pin Inclination—5°51' crosswise.

Caster—1½-2¼°. Adjustable. Caster affected by camber adjustment but not outside limits as given.

Camber—⅛-1°. Adjustable.

Toe In—⅛-3/16". Adjustable. Both tie rods must be turned equally.

Steering Geometry—Inner wheel turned 23°, outer wheel 20°.

STEERING GEAR

Steering Gear: Saginaw Worm-and-Roller type with center steering.

See Steering Gear Section for complete data.

BRAKES

BRAKES:—Service—Bendix Hydraulic, Duo-Servo, Single anchor type. Hand lever applies rear wheel brakes. See article in Brake Section for complete data.

See Brake Section for complete data.

Brake Drum Diameter—12".

Brake Lining—Molded & woven type. Width 2". Thickness 3/16". Length 25.9" per wheel.

Brake Clearance—.008" toe, 010" heel, each shoe.

Hand Brake Adjustment:—See Service Brake Adjustment.

1938 RIGHT FRONT FENDER FILLER PLATE:—This plate may be removed for work on valves, fuel pump, etc. To remove, proceed as follows: Remove headlamp wiring junction block, six bolts along upper edge of plate, capscrews (one at rear, two at front) at ends of plate, lift off.

MODEL IDENTIFICATION

SERIAL NUMBER:—On left frame side member under hood. First number F-372,001 (1937) and numbers for each plant for 1938 models as follows:
Lansing, Michigan .....F-600,001 and up
South Gate, California.....CF-504,001 to CF-540,000
Linden, New Jersey .....LF-545,001 to LF-600,000

ENGINE NUMBER:—First number F-670,001 ('37), F-828,001 ('38). On boss on left side of engine behind water pump. '38 motors with Auto. Transmission carry prefix 'FA'.

TUNE-UP

COMPRESSION:—Ratio—6.1-1 cast-iron head.
Pressure—146 lbs. at 1000 R.P.M. or 102-112 lbs. at cranking speed of 320 R.P.M.

VACUUM READING:—Steady reading of 17" minimum with engine idling at 6 MPH. or 400 R.P.M.

FIRING ORDER: 1-5-3-6-2-4. See wiring diagram.

SPARK PLUGS: AC Type K-9 ('37), 46 ('38). 14 mm. Gaps—.040".

IGNITION: See Coil, Condenser, and Distributor.
Breaker Gap—.020". Cam Angle—35° Closed.
Automatic Advance—Starts at 250 RPM. Maximum 14° at 1850 RPM. (Distr. degrees & RPM).
Vacuum Advance—10° (distr.) 15½-18½" vacuum.

IGNITION TIMING: See Ignition Timing.
Std. Setting—TDC. Flywheel mark (steel ball) aligned with insp. hole cover screw (left side of housing).

CARBURETION: See Carburetor & Carb. Equipment.
Idle Setting—Set idle screw ¾-1¼ (351-S), 1-1½ (385-S), ½-1 (388-S) turn open. Idle speed 350 RPM (6 MPH).
Float Level—⅜" from top of float to gasket seat.
Accelerating Pump—Outer Hole—Normal Setting.
Fuel Pump Pressure: 3¾ lbs. ('AH'), 4 lbs. ('AJ' Comb.)

MANIFOLD HEAT CONTROL:—Thermostatic Spring type. When installing thermostatic coil, wind coil up 125° (1/3 revolution approx.) at room temperature. See that valve operates freely.

VALVES: See Valve Timing.
Tappet Clearance—.008" Intake, .011" Exh., hot.

STARTING: See Battery, Starter, Generator, Regulator.

IGNITION

IGNITION SWITCH: Delco-Remy 435-M (1937), 1116252 (1938), 1116258 ('38 RHD). Switch and cable assembly. Coil connection armored.
Ignition Lock—Briggs & Stratton No. 45792 (Lock cylinder). Key Series—8000 to 9499. Groove—#15.

COIL: Delco-Remy Model 540-P ('37), 539-P ('38). M unted on dash.
Ignition Current—2.0 amperes idling, 4.5 stopped.

CONDENSER: Delco-Remy Part No. 1865972.
Capacity—.20-.25 microfarad.

DISTRIBUTOR: Delco-Remy Model 647-F. Single breaker, 6 lobe cam, full automatic advance type with auxiliary vacuum spark control.
Breaker Gap—.020". Limits .018-.024".
Cam Angle or Dwell—35° (closed), 25° (open.)
Breaker Arm Spring Tension—20 ounces.
Rotation—Counter-clockwise viewed from the top.

Automatic Advance

Distributor		Engine	
Degrees	R.P.M.	Degrees	R.P.M.
Start	250	3	500
3	450	6	900
14	1850	28	3700

Vacuum Spark Control Model 681-P—Integral with distributor. Mounted on distributor housing and linked directly to breaker plate. Provides additional advance at speeds above idling (vacuum port in carburetor above throttle) except when engine is accelerated or operated with wide open throttle when spark is retarded by return spring within unit.

Vacuum Advance

Dist. Degrees	Eng. Degrees	Vacuum (" of HG.)
Start	0°	5-7"
10° Max.	20°	15.5-18.5"

Distributor Removal: Mounted on left side of engine. To remove, disconnect vacuum line, take out hold-down screw in advance arm.

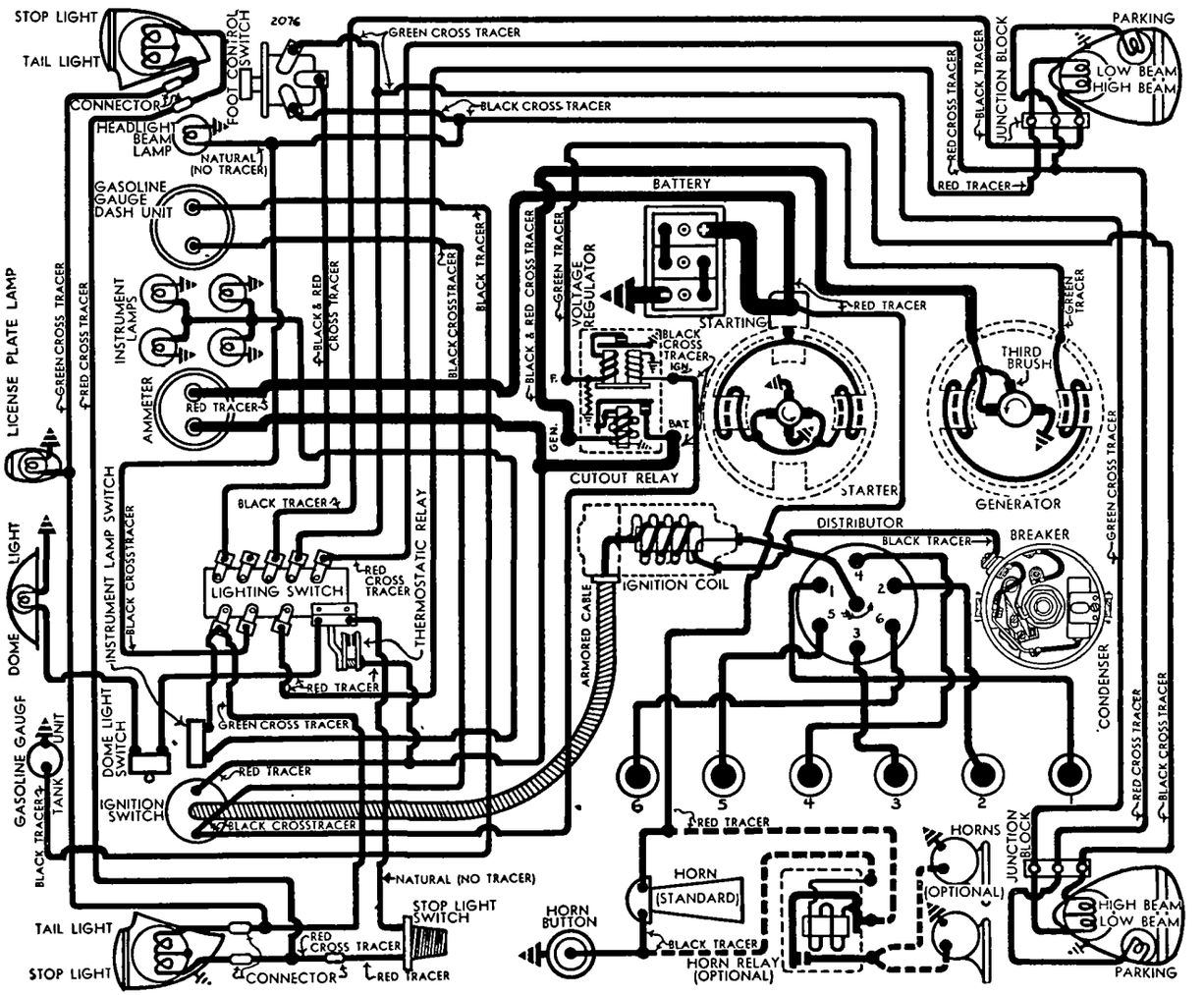

1937 M DELS

IGNITION TIMING

IGNITION TIMING:—Standard setting as follows:

	Flywheel Degrees	Piston Position
All Engines	0° TDC	.000" TDC.

Timing (Using Synchroscope)—This method recommended by car manufacturer. Using Synchroscope (Tool J-696), clip lead to #1 spark plug, direct light on flywheel through inspection hole in left front face of housing. Idle engine at 6-7 MPH. or 400 R.P.M. Loosen hold-down screw in advance arm (back of distributor), center pointer on scale (arrow at '0' mark), tighten hold-down screw, loosen distributor clamp bolt, rotate distributor until timing mark (steel ball insert) on flywheel appears to be directly in line with pointer on housing, tighten clamp bolt.

Timing (Using Timing Light)—Use timing light connected between distributor terminal and ground, turn on ignition to check contact opening. With #1 piston on compression, turn engine over until piston reaches top dead center, stop when flywheel mark (steel ball insert) lines up with pointer in left front face of housing. Loosen hold-down screw in advance arm (back of distributor), center pointer on scale (arrow at '0' mark), tighten hold-down screw, loosen distributor clamp bolt, rotate distributor until timing lamp lights (contacts opening), tighten clamp bolt.

CARBURETOR

Carter Models 351-S (Early 1937), 385-S (1937 Serial No. F-459103 and up, 1938 with Standard Transmission), 388-S (1938 with Self-Shifting Transmission). 1¼" downdraft types (385-S Vacumeter type) *For complete data, refer to Carburetor Index.*

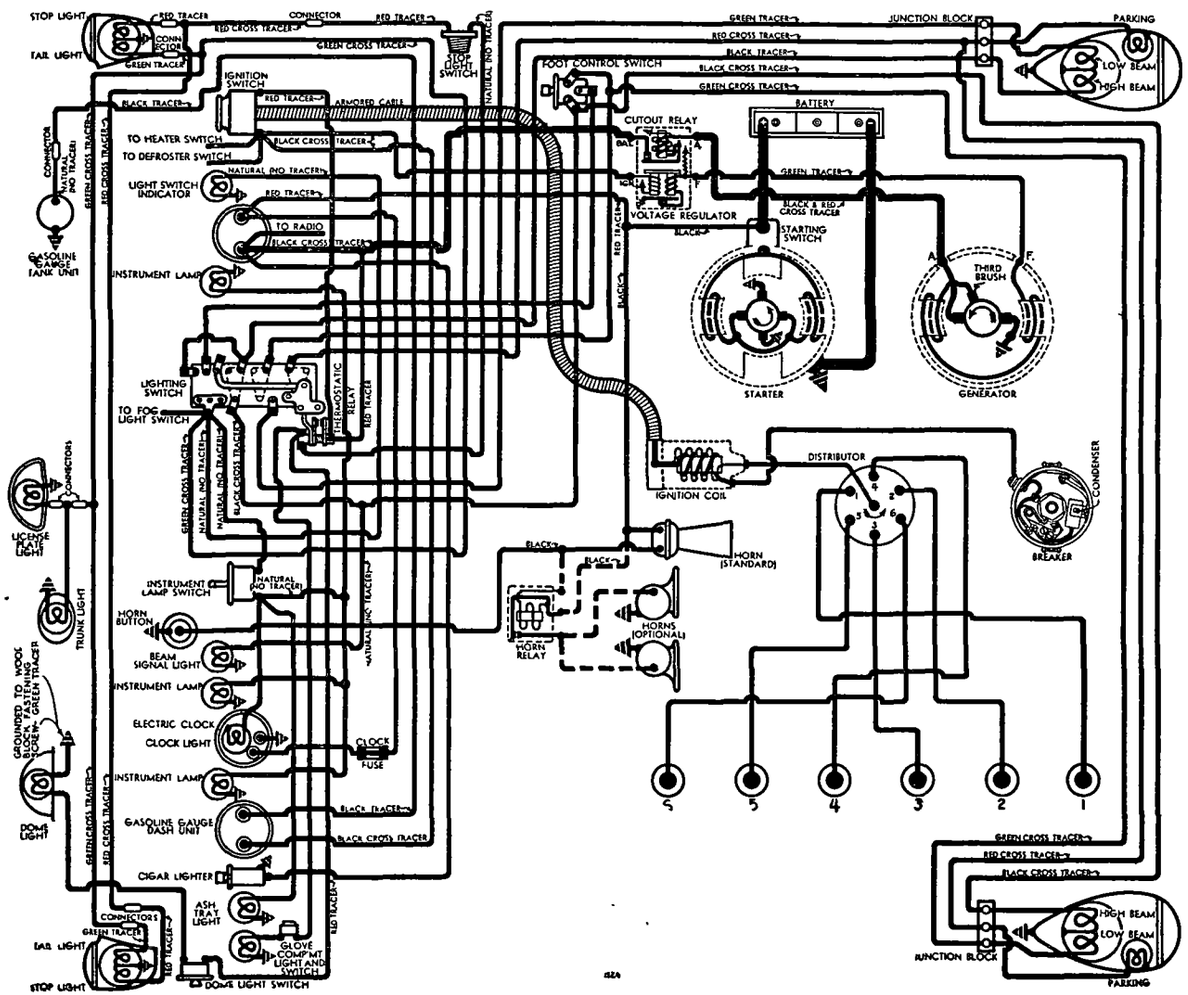

1938 MODELS

IMPORTANT—Cars with Self-shifting Transmission):—Transmission throttle control lever setting must be checked whenever carburetor throttle linkage disconnected or disturbed. *See Oldsmobile Self-Shifting Transmission data in Transmission Section.*

Idle Adjustment—Engine must be warm with automatic choke and fast idle inoperative. Adjust throttle stopscrew so that idling speed is approximately 6 M.P.H. Turn idle adjusting screw in until engine begins to miss, then turn screw out until engine begins to roll, finally turn screw in slowly until engine fires smoothly. Final setting ¾-1¼ (351-S), 1-1½ (385-S), ½-1 (388-S) turns open of the screw from the seated position. Readjust throttle stopscrew for correct idling speed.

Accelerating Pump Setting—Pump lever under dust cover at top of carburetor has three holes for pump link engagement. Set as follows:
Outer Hole—Normal temperatures or std. gas.
Inner Hole—High temperatures or hi-test gas.
Upper Hole—Low temperatures or low-test gas.
NOTE—388-S accelerating pump not adjustable.

Fast Idle:—Adjustable cam type.
For complete data, refer to Carburetion Equip. Index.

Accelerator Linkage Adjustment:—Must be maintained to provide correct 'throttle cracking' action for starting. To adjust, remove starting cable at starting switch (to prevent cranking), fully depress starting shift lever, loosen locknut on eccentric adjusting pin on starter shift lever, with offset screwdriver adjust pin to give .030" clearance between throttle adjusting screw and fast idle cam (with cam in fast idle position), tighten locknut.

Automatic Choke:—Carter Climatic Control.
For complete data, refer to Carburetion Equip. Index.

CARB. EQUIPMENT

Air Cleaner: AC #1528162 (1937 oil-wetted type), #1528096 (1937 oil bath type Optl.), #1528559 (1938 oil bath type standard).

Fuel Pump:—AC. Type AH #1523228 standard. Combination fuel-and-vacuum Type AJ #1523227 optl.
For complete data, refer to Carburetion Equip. Index.

Gasoline Gauge: AC Electric Type. Dash Unit: AC Nos. #1515323 (1937), 1515340 (1938-With Ivory Figures), 1515350 ('38-Brown fig.), Tank: 1515451 ('37), 1515471 ('38).
For complete data, refer to Carburetion Equip. Index.

BATTERY

Delco Type 15-T (1937), 15E-1 (1938). 6 volt, 15 plate, 100 AH. capacity (20 hour rate).

Starting Capacity—115 amperes for 20 minutes.

Zero Capacity—300 amperes for 3.3 minutes. Five second voltage—4.25 volts.

Grounded Terminal—Negative (—) terminal. Grounded to starter on 1938 cars.

Location—On left, under seat ('37), hood ('38).

Police Battery—Delco Type 17-J ('37), 19E-1 ('38). 6 volt; 17 (17-J), 19 (19E-1) plate, 125 AH. (17-J), 130 AH. (19E-1) capacity—20 hour rate.

Grounded Terminal & Location—Same as above.

C NTINUED N NEXT PA E

CONTINUED FR M PRECEDING PAGE

STARTER

Delco-Remy Model 739-G. Armature No. 823881.

Drive—Overrunning clutch and manual pinion shift operated by starter pedal.

Rotation—Counter-clockwise at commutator end.

Cranking Engine—125-135 amps., 5 volts (summer).

Brush Spring Tension—24-28 ounces each.

Performance Data

Torque	R.P.M.	Volts	Amperes
0 ft. lbs.	5000	5.0	65
12 ft. lbs.	Lock	3.37	525

Removal:—Starter flange mounted on left front face of flywheel housing. To remove, take out flange capscrews.

Starting Switch:—Part No. 820052. Mounted on starter. Operated by starting pedal.

GENERATOR

STANDARD

Delco-Remy 936-T (Early '37). Armature 1854856. 1100002 (Late '37, All '38). Arm. 1866789. Fixed third brush control type with external vibrating type voltage regulation. Ventilated by fan on drive pulley. NOTE—Third brush is clamped in position for maximum safe output and must not be disturbed.

Charging Rate Adjustment—Adjusted by changing setting of voltage regulator. See Regulator data below.

NOTE—Do not operate generator on open circuit.

Maximum Charging Rate—As given in table below. Reached at car speed of 30-35 M.P.H. To check charging rate, connect test ammeter in line at 'BAT' terminal of regulator, voltmeter between 'GEN' terminal and ground, ground 'F' terminal to eliminate regulator action.

Performance Data—936-T

	Amperes	Volts	R.P.M.
Cold	23-27	8.8-9.0	3000
Hot	18-23	8.2-8.7	3200

Performance Data—1100002

	Amperes	Volts	R.P.M.
Cold	26-30	8.0	3400
Hot	25-28	8.0	3600

Rotation—Counter-clockwise at commutator end.

Brush Spring Tension—22-26 ounces (main), 16-20 ounces (third).

Field Current—2.3-2.6 amperes at 6 volts.

Removal:—Generator pivot mounted on left front of engine. To remove, take out two pivot bolts and clamp bolt.

Belt Adjustment:—Loosen clamp bolt and pivot bolts, swing generator out until deflection of belt is ¾" midway between generator and fan pulleys when pressed lightly.

GENERATOR

SPECIAL EQUIPMENT

Delco-Remy Model 934-F (for City Police Cars), 1102657, 1105851 or 1105856 (State Police). *Refer to 1938 Oldsmobile Eight page (following) for complete data.*

REGULATOR

Delco-Remy Model 5814. "Double Core" Voltage Regulator (With 'IGN' Terminal). Cutout Relay and vibrating type Voltage Regulator in single case on on left side of engine dash.

For complete data, refer to Electrical Equipment Index.

Cutout Relay

Cuts In—6.9-7.6 volts, 838 RPM., 9.8 MPH.
Cuts Out—0-3.0 amperes.
Air Gap & Contact Gap—.020".

Voltage Regulator

Setting—7.5-7.9 volts at 70° F., 7.4-7.6 volts at 150°F. Regulator is over-compensated for temperature and must be checked at these points.

Adjustment—Disconnect lead on 'IGN' terminal of regulator, connect jumper between 'IGN' and 'BAT' terminals, connect test ammeter in charging line at 'BAT' terminal, connect voltmeter between 'IGN' terminal and ground. Operate generator at 2800-3000 R.P.M., adjust charging rate to 8-10 amperes, change regulator armature spring tension by bending spring hanger at lower end of spring slightly until setting is as given above.

NOTE—Regulator cover must be in place when tests are made. Do not operate generator on open-circuit.

Contact Gap—.020".

Contact Spring Tension—2.7-3.5 ounces.

Air Gap—.063" between armature and center of core with armature down and fiber bumper touching stop; .010" between fiber bumper and stop with armature up.

LIGHTING

LIGHTING:—**Headlamps**—Guide Multi-beam, pre-focused, cross-beam type with special non-changeable lenses. Special asymetrical 'Passing' beam (upper beam left hand headlamp, lower beam right hand headlamp) controlled by dimmer switch with lighting switch in 'country' or third position.

Headlamp Adjustment—With driving beam (lower filaments both lamps) lighted and lenses in place, aim left hand headlamp so that upper edge of hot spot is at lamp center height (or specified height below this mark if state law requires loading allowance) and left edge is at vertical line for lamp center (entire hot spot to right of this center line) at 25 feet. Aim right hand headlamp for same height but center hot spot on lamp-center vertical line (right cut-off of hot spot about 8" to right of center-line). Up and down movement controlled by adjusting screw in bottom of lamp body near front. Side movement screw under snap-on button on side of lamp body towards front.

Headlamp Beam Indicator—Located above speedometer dial. Lighted whenever driving or upper headlamp beams lighted.

Switches—1937 Models

Lighting—Delco-Remy Model 480-P, 479-H Export.
Foot Beam Selector—471-T, M (Exp.).
Dash Lamp—1416.
Stop Lamp—Hydraulic type on brake master cyl.

Switches—1938 Models

Lighting—D-R Model 1994503, 1995003 (Exp.).
Dimmer—Olds Part No. 1861899. D-R Model 471-T (Can.).
Instrument—D-R Model 1416.
Stop Light—D-R Model 476-U.
Radio Air Switch—D-R Model 1997704.

Bulb Specifications

Position	Candlepower	Mazda No.
Headlamps	32-21	2320-L
Parking	1½	55
Stop-Tail	21-3	1154
Dome	6	81
Rear License	3	63
Instrument Panel, Glove Comp't	1	51
Light Sw. & Beam Indicators	1	51

MISC. ELECTRICAL

THERMOSTATIC RELAY: Delco-Remy 1866467. On lighting switch by 3 screws (may be serviced separately). Non-adjustable. Contacts open within 1 minute (with 38 amp. load @ 70°F.). Close at 25 amps @ 70°F.

FUSES:—**Clock**—2 ampere on back of clock.
Radio—10 ampere.

HORNS:—**Klaxon Model K-26-H. Type 2251 or 2253.** Optional dual horns K-33-S, Type 2067 (low), 2068 (high) blended tone with horn relay.

Horn Type	Current at 6 Volts	Air Gap
K-26-H, 2251,53	6.5-8.5	.025-.029"
K-33-S, 2067	11-13	.042-.046"
K-33-S, 2068	10-12	.032-.036"

Horn Relay:—Delco-Remy Model 271-A. Points close at 2.7-4.0 volts.
Contact Gap—.020". **Air Gap**—.015".

ENGINE

ENGINE SPECIFICATIONS:—6 cylinder, 'L' head.
Bore—3 7/16". **Stroke**—4⅛".
Displacement—229.7 cu. ins. **Rated HP.**—28.4.
Developed Horsepower—95 at 3400 R.P.M.
Compression Ratio—6.1-1 Std. cast-iron head.
Compression Pressure—146 lbs. at 1000 RPM. or 102-112 lbs. at 320 RPM. (cranking speed).
NOTE—New steel-asbestos cyl. head gasket used. Cannot be re-used. Use new gasket.
Vacuum Reading—17" min. @ 400 RPM. or 6 MPH.

PISTONS:—Aluminum alloy, 'T' slot, Cam Ground type with Electrolite (hard oxide) bearing surface.
Weight—17.35 ozs. (stripped). **Length**—4 1/32".
Removal—Pistons and rods removed from above.
Clearance—Skirt .0013-.0018".

Replacement Pistons:—Finished pistons (with fitted pins) furnished .003", .005", .010", .015", .030" oversize.

Fitting New Pistons:—With pin removed, check clearance by inserting .002" feeler ½" wide between piston and cylinder wall on camshaft side at right angles to pin hole. Invert piston with slot away from camshaft 4-11 lbs. pull required to withdraw feeler with piston and block at 70° F.

Installing Pistons:—Mark 'V-S' on head toward valves (slot away from valves). Pin hole offset 3/32" to left.

PISTON RINGS:—Two compression, two oil control rings per piston above pin. Oil ring grooves drilled with eighteen 5/32" oil drain holes. Ring oversizes—.010", .020", .030".

Ring	Width	End Gap	Side Clearance
Comp.	.1235-.1240"	.009-.014"	.002-.0035"
Oil	.1860-.1865"	.009-.014"	.0025"

NOTE—Install comp. rings with groove down.

ENGINE

C NTINUED FROM PRECEDIN PAGE

PISTON PIN:—Diameter—.8554-.8557". Length—3 5/32". Pin locked in piston boss by lockscrew. Free end slotted to allow boss to slide freely in pin.
Pin Fit in Piston—.0001" loose to .0002" tight in plain boss end, .0002-.0005" tight in lock boss end.
Pin Fit in Rod Bushing—Clearance .0003-.0006". New rod bushings burnished and reamed to inside diameter of .8558-.8562".
Fitting Pins—*See Oldsmobile Shop Notes.*

CONNECTING ROD:—Weight 26.17 oz. Length 7 13/16". NOTE—8 cylinder rods furnished in service for six. Select rod to weight within ¼ oz. of other rods.
Crankpin Journal Diameter—2.123-2.124".
Lower Bearing—Removable steel-backed, babbitt.
Clearance—.001-.003" ('37), .0005-.002" ('38).
Sideplay—.0055-.0105".

Bearing Adjustment:—None. Replace bearings. Do not file rods or cap faces.

Installing Rods:—Oil spit hole in lower bearing upper half must be toward camshaft. Grooves in rod and cap bolt boss must be on same side as part number. NOTE—Ground bolts used for rod and cap assembly.

CRANKSHAFT:—4 bearing, integral counterweights.
Journal Diameters—#1, 2.478-2.479"; #2, 2.5405-2.5415"; #3, 2.6655-2.6665"; #4, 2.6855-2.6865.
Bearing Type—Interchangeable steel-backed, babbitt-lined. Bearing halves interchangeable (upper and lower) except #1 (front).
Clearance—.001-.003" ('37), .0005-.002" ('38).

Bearing Adjustment:—None (no shims). Replace bearings. Do not file caps. ***See Oldsmobile Shop Notes for main bearing and oil seal data.***

End Thrust:—Taken by #1 (front) bearing. A bronze thrust plate .1205-.1245" thick is assembled at each end of bearing and is dowelled to bearing cap. Steel thrust collar between front bronze thrust plate and crankshaft gear. **Endplay—.004-.008".**

CAMSHAFT:—4 bearing, non-adjustable chain drive.
Journal Diameters—#1, 1.9975-1.9970"; #2, 1.9350-1.9345"; #3, 1.8725-1.8720"; #4, 1.8100-1.8095".
Bearing Type—Bronze bushings.
Clearance—.002-.004".

End Thrust:—Spring and plunger in front end of camshaft and steel plate on chain case cover.

Timing Chain:—Whitney. Width 1". Pitch .500". Length 23½" or 47 links.
See Oldsmobile Shop Notes for front end assembly dismantling for timing chain removal.

Camshaft Setting:—Sprockets are marked. Mesh chain with sprockets turned so that marks are adjacent and in line with a straightedge across the shaft centers. Use Sprocket Gauge HM-408-0.

VALVES:—	Head Diameter	Stem Diameter	Length
Intake	1 9/16"	.3415-.3425"	5 51/64"
Exhaust	1 27/64"	.3410-.3418"	5 51/64"

	Seat Angle	Lift	Stem Clearance
Intake	30°	.300"	.0012-.0032"
Exhaust	45°	.300"	.00245-.00425"

Valve Guides:—Cast-iron. Exhaust guide taper counterbored on inside diameter for ⅜" at top. Install ⅝" below top of block. Ream inside diam. to .34375-.34475" ('37), .34425-.34525" ('38). Lgth. 3 15/32".
NOTE—1939 type valve guides (¼" shorter) can be used. Use 1939 installation data if these guides used.
See 1939 Oldsmobile 6 or 8 pages following for data.

Valve Springs:—Free length 2⅜". Interchangeable for either valve and on 6 & 8. Spring dampers used inside of spring at top. **Pressure & Length as follows:**

	Valve Closed	Valve Open
1937	46 lbs. at 2 9/32"	94 lbs. at 1 31/32"
1938	50½ lbs. at 2 1/4 "	95½ lbs. at 1 15/16"

Valve Lifters:—Mushroom type. Length 2½". Head Diam. 1¼". Body Diam. .6235-.6240". Clearance .0003-.0007". Furnished std., .002", .005" oversize.

VALVE TIMING

Tappet Clearance—.008" Int., .011" Exh., warm.
See Oldsmobile Shop Notes for Hood Side Panel Removal (1937), Fender Plate Removal (1938).

Valve Timing: See Camshaft Setting above.
Intake Valves—Open 5° BTDC. Close 45° ALDC.
Exhaust Valves—Open 45° BLDC. Close 5° ATDC.

To Check Valve Timing:—Check tappet clearance #1 intake valve. This valve should open with piston 5° or .0163" before top dead center when a point on the flywheel approximately 2 teeth before top dead center mark (steel ball insert) lines up with pointer in inspection hole in left front face of housing.

LUBRICATION

LUBRICATION:—Pressure type. Gear type oil pump located on right side of crankcase.
NOTE—New gasket aligned with oil holes in block must be used when oil pump assembled to engine.

Normal Oil Pressure:—25-30 lbs. ('37), 28-33 lbs. ('38).

Oil Pressure Regulator:—On oil pump cover. Operates at 27 lbs. Not adjustable.

Crankcase Capacity:—6 quarts, refill.

COOLING

COOLING SYSTEM:—Water Pump. Centrifugal, belt-driven, packless type.
See Water Pump Section for complete data.
Removal—Remove fan belt, three pump mounting capscrews, lift fan and pump assembly off.

Thermostat:—Harrison. In cyl. hd. water outlet.
Setting—Start to open 145°F. ('37), 152°F. ('38).

Water Capacity:—16 qts. ('37), 17 qts. ('38).

CLUTCH

CLUTCH:—Borg & Beck Model 9A6. Single plate, dry disc type. Model No. 895 stamped on clutch cover.
See Clutch Section for complete data.
Facings—Molded-woven, 2 required. Inside Diam. 5⅝". Outside Diam. 9¼". Thickness ⅛".
NOTE—Special spiral-grooved facings used with Self-Shifting Transmission (not interchangeable).
Pedal Adjustment—Free travel ¾-1". Free adjustable link at release lever end. Loosen locknut, adjust lever length.
Removal—Remove transmission (see Transmission Removal below), take off clutch underpan, take out six clutch cover mounting screws evenly, remove assembly from below.
NOTE—When mounting clutch, use two screws with short thread and longer shanks in second hole on either side of locating dowel.

TRANSMISSION

TRANSMISSION:—Own—Helical gear type with Synchro Mesh on second and high gears.
See Transmission Section for complete data.

Removal:—Disconnect front propeller shaft at transmission, remove 4 bolts at bearing support, slide bearing assembly to left, take off clutch underpan, remove mounting bolts, withdraw transmission.

SELF-SHIFTING TRANSMISSION

SELF-SHIFTING TRANSMISSION:—Optl. on F-38.
See Transmission Section for complete data.

UNIVERSALS

UNIVERSAL JOINTS:—Mechanics—Model 2C, roller bearing type, three used.
See Universals Section for complete data.

Propeller Shaft Center Bearing:—See Oldsmobile Shop Notes for servicing data.

REAR AXLE

REAR AXLE:—Own make. Semi-floating, spiral bevel gear type with Hotchkiss drive.
See Rear Axle Section for complete data.
Ratio—4.37-1 or 4.33-1 Std. '37. 4.37-1 Std. '38. 3.55-1 Auto. Transmission. 4.62-1 Optional (all).
Backlash—.004-.008". Screw adjustment.

Removal:—Remove wheel, drum, free backing plate (4 nuts), static collector, pull bearing retainer away from backing plate without disturbing plate, pull shaft and bearing (Tool J-942), secure plate with one nut. Disconnect rear universal joint remove ten capscrews freeing carrier from housing, lift carrier out. NOTE—Left wheel nuts front and rear have left hand threads.
Wheel Bearing Adjustment—None (shielded type).

SHOCK ABSORBERS

SHOCK ABSORBERS:—Delco. Model 1947A, B (front), 1713-E-F (rear). Double acting, piston type.
See Shock Absorber Section for complete data.

FRONT SUSPENSION

Front Suspension:—Independent, linked parallelogram type with coil springs.
See Front Suspension Section for complete data.
NOTE—Level frame by inserting 2" blocks between upper support arm and frame. Check following:
Kingpin Inclination—4° 51' 10" crosswise.
Caster—¼-1° pos. ('37). 0-¾° reverse ('38).
Camber—⅛-1°. Adjustable. Set Caster first.
Toe In—⅛-3/16". Adjust length of tie rods.
Steering Geometry—Inner w. 22½-23½°. Outer 20°

STEERING GEAR

Steering Gear: Saginaw Worm-and-Roller type with center steering.
See Steering Gear Section for complete data.

BRAKES

BRAKES:—Service—Bendix Hydraulic, Duo-Servo, single anchor type. Hand lever applies rear brakes.
See Brake Section for complete data.
Drum—Cast-iron. Diameter—11".
NOTE—Drum turn down limit .030" cut.

Lining—Prim.-molded.Sec.-woven&compressed.Width 1¾". Thick 3/16". Length (P) 9 11/32", (S) 11 31/32"
Clearance—.010" at heel and toe of each shoe.

Hand Brake Adjustment:—See Service Brake above.

1938 RIGHT FRONT FENDER FILLER PLATE:—This plate may be removed for work on valves, fuel pump, etc. To remove, proceed as follows: Remove headlamp wiring junction block, eight bolts along upper edge of plate, capscrews (one at rear, two at front) at ends of plate, lift off.

MODEL IDENTIFICATION

SERIAL NUMBER:—On left frame side member under hood. First number L-146,001 (1937) and numbers for each plant for 1938 models as follows:
Lansing, Michigan ..... L-212,001 and up
South Gate, California ..... CL-187,001 to CL-195,000
Linden, New Jersey ..... LL-197,001 to LL-212,000

ENGINE NUMBER:—First number L-250,001 ('37), L-296,001 ('38). On boss on left side of engine behind water pump. '38 motors built with Auto. Transmission carry prefix 'LA'.

TUNE-UP

COMPRESSION:—Ratio—6.2-1 cast-iron head. Pressure—152 lbs. at 1000 R.P.M. or 104-114 lbs. at cranking speed of 310 R.P.M.

VACUUM READING:—Steady reading of 17" minimum with engine idling at 6 MPH. or 300 R.P.M.

FIRING ORDER: 1-6-2-5-8-3-7-4. See diagram.

SPARK PLUGS: AC Type K-9 ('37), 46 ('38). 14 mm. Gaps—.030".

IGNITION: See Coil, Condenser, and Distributor.
Breaker Gap—.015". Cam Angle—31° Closed.
Automatic Advance—15° max. at 2000 RPM (distr.).
Vacuum Advance—7½° (distr.) with 14-17" vacuum.

IGNITION TIMING: See Ignition Timing.
Std. Setting—2° BTDC. Flywheel mark (steel ball) aligned with insp. hole cover screw (left side of housing).
CAUTION—Time #6 cylinder on this engine.

CARBURETION: See Carburetor & Carb. Equipment.
Idle Setting—Set idle screws ¾-1¼ (exc. 389-S), ½-1¼ (389-S) turns open. Idle speed 6 MPH.
Float Level—9/64" (exc. 389-S), ⅜" (389-S), top of float to cover (needle valve seated).
Accelerating Pump—Upper Hole (Winter), Lower Hole (Summer) on 345-S & 367-S Carbs. only.
Fuel Pump Pressure: 3¾ lbs. ('AH'), 4 lbs. ('AJ'Comb.).

MANIFOLD HEAT CONTROL:—Thermostatic coil type. Thermostatic coil assembled on forward end of heat control valve shaft (counterweight at rear).
Setting—When installing thermostatic coil, wind up free end 170° (approximately ½ revolution) and engage end on stop pin (spring cold—70°F).

VALVES: See Valve Timing.
Tappet Clearance .008" Intake, .011" Exhaust, hot.

STARTING: See Battery, Starter, Generator, Regulator.

IGNITION

IGNITION SWITCH: Delco-Remy 435-M (1937), 1116252 (1938), 1116258 ('38 RHD). Switch and cable assembly. Coil connection armored.
Ignition Lock—Briggs & Stratton No. 45792 (Lock cylinder). Key Series—8000 to 9499. Groove—#15.

COIL: Delco-Remy Model 539-P. Mounted on dash.
Ignition Current—2.0 amperes idling, 4.5 stopped.

CONDENSER: Delco-Remy Part No. 1865972 (663-W), 1869704 (1110802).
Capacity—.18-.25 microfarad.

DISTRIBUTOR: Delco-Remy Model 663-W (All 1937 and first 1500 Engines 1938), Model 1110802 (Later '38). Single breaker, 8 lobe cam, full automatic advance type with auxiliary vacuum spark control.

CAUTION—1110802 Distr. fits larger bore in cylinder block and distributors not interchangeable. Check first engines and make certain that correct distributor installed (first engines with smaller distributor bore must use 663-W distributor).
Breaker Gap—Set at .015". Limits .0125-.0175".
Cam Angle or Dwell—31° (Closed), 14° (Open).
Breaker Arm Spring Tension—22 ounces.
Rotation—Counter-clockwise viewed from top.

Automatic Advance

Distributor		Engine	
Degrees	R.P.M.	Degrees	R.P.M.
Start	300	2.5	600
3.5	500	7.0	1000
15.0	2000	30.0	4000

Vacuum Spark Control Model 681-R—Integral with distributor. Mounted on distributor housing and linked directly to breaker plate. Provides additional advance at speeds above idling (vacuum port in carburetor above throttle) except when engine is accelerated or operated with wide open throttle when spark is retarded by return spring within unit. Total plunger travel 11/64".

Vacuum Advance

Distr Degrees	Eng. Degrees	Vacuum (" of HG.)
Start	0°	5-7"
7.5° Max.	15°	14-17"

Distributor Removal:—Mounted on left side of engine. To remove, disconnect vacuum line, take out hold-down screw in advance arm.

IGNITION TIMING

IGNITION TIMING:—Standard setting as follows:

	Flywheel Degrees	Piston Position
All engines	2° BTDC	.002" BTDC.

Timing (Using Synchroscope)—This method recommended by car manufacturer. Using Synchroscope (Tool J-696), clip lead to #6 spark plug, direct light

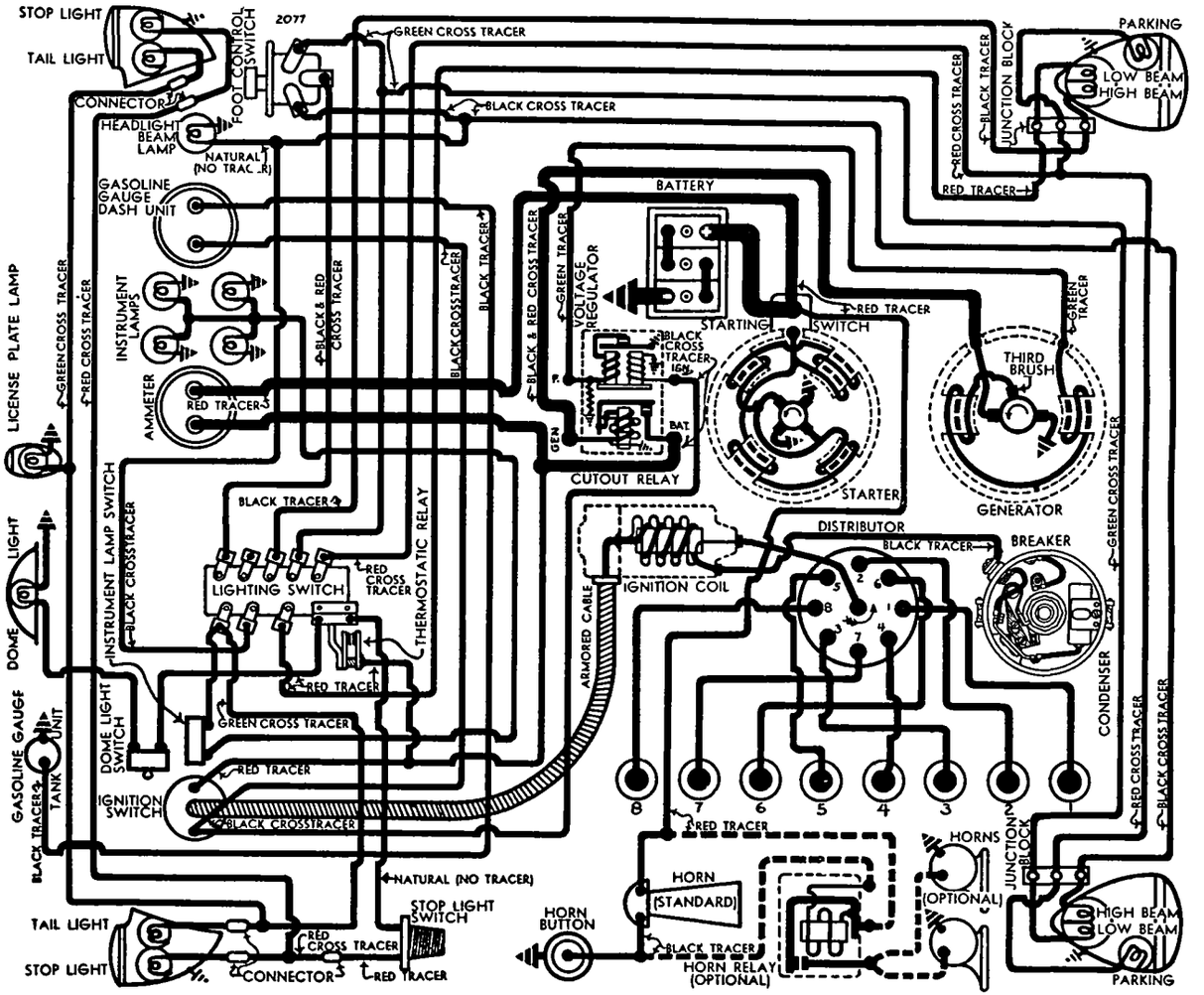

1937 MODELS

on flywheel through inspection hole in left front face of housing. Idle engine at 6-7 MPH. or 300 R.P.M. Loosen hold-down screw in advance arm (back of distributor), center pointer on scale (arrow at '0' mark), tighten hold-down screw, loosen distributor clamp bolt, rotate distributor until timing mark (steel ball insert) on flywheel appears to be in line with housing pointer, tighten clampbolt.

Timing (Using Timing Light)—Use timing light connected between distributor terminal and ground, turn on ignition to check contact opening. With #6 piston on compression, turn engine over until piston reaches 2° (.002") before top dead center, stop when flywheel mark (steel ball insert) lines up with pointer in left front face of housing. Loosen hold-down screw in advance arm (back of distributor), center pointer on scale (arrow at '0' mark), tighten hold-down screw, loosen distributor clamp bolt, rotate distributor until timing lamp lights (contacts opening), tighten clamp bolt.

CARBURETOR

Carter WDO Types—Used as follows:

Model	Serial Numbers
345-S or 367-S	Early 1937
①386-S	All Cars L-178934 and Up
①386-S	'37 Self-Shift. Trans. L-175021 and Up
②389-S	'37 Self-Shift. Trans. L-180969 and Up
②389-S	'38 No. L-217505 and Up (All CL & LL Nos.

Carb. Body Casting Nos.: ① #153, ② #192.
For complete data, refer to Carburetor Index.

IMPORTANT—Cars with Self-shifting Transmission):—Transmission throttle control lever setting must be checked whenever carburetor throttle linkage disconnected or disturbed. *See Oldsmobile Self-Shifting Transmission data in Transmission Section.*

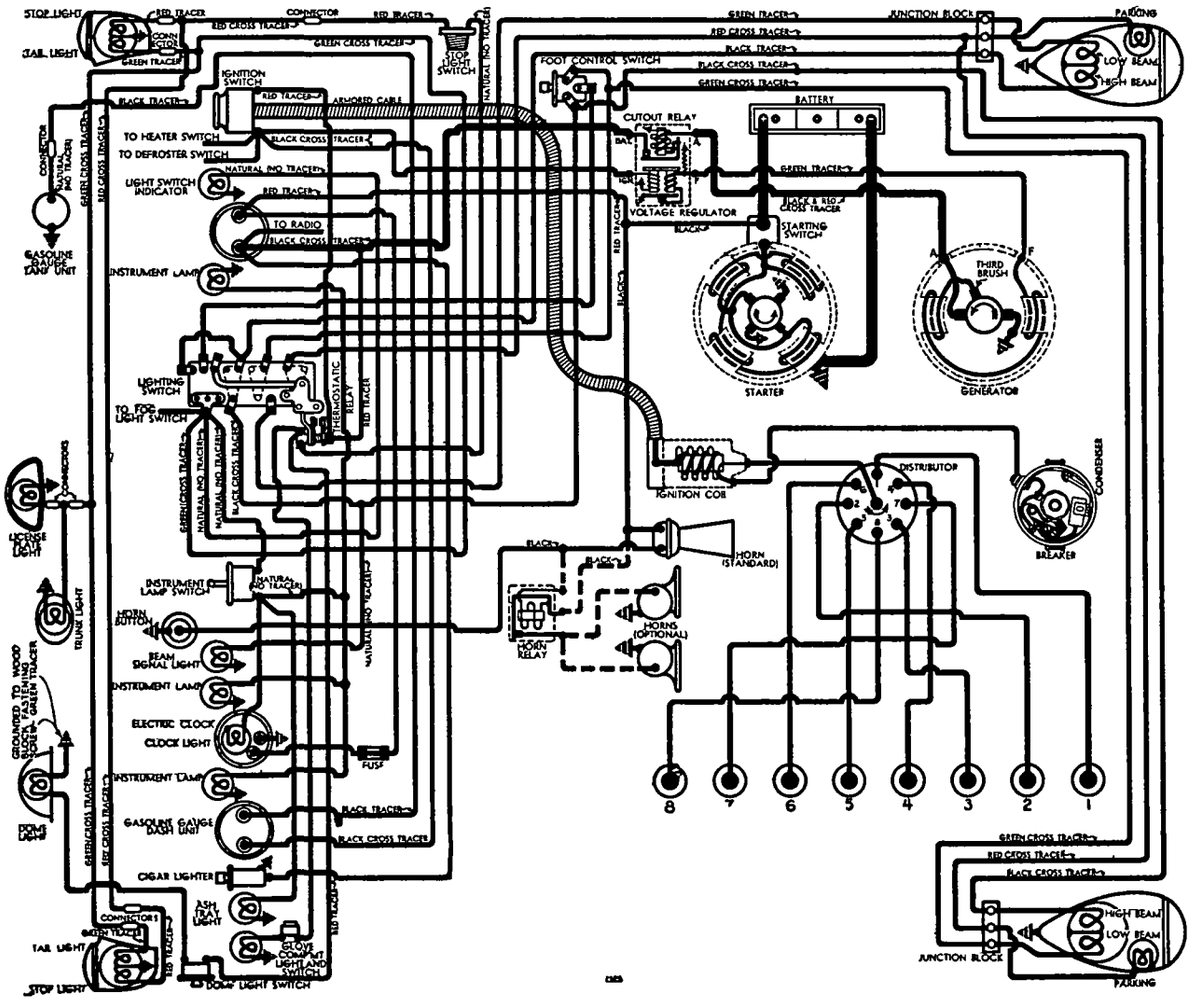

1938 M DELS

Idle Adjustment—Engine must be warm with automatic choke and fast idle inoperative. Adjust throttle stopscrew so that idling speed is approximately 6 M.P.H. Turn each idle adjusting screw in (in succession) until engine begins to miss, then turn screws out until engine begins to roll, finally turn screws in slowly until engine fires smoothly. Final setting ¾-1¼ (except 389-S), ½-1¼ (389-S) turns open of the screws from the seated position. Readjust throttle stopscrew for correct idling speed.
Accelerating Pump Setting—Pump lever under cover (integral with air horn—see article in Carburetion Section for dismantling instructions) has two holes for pump link engagement. Change for seasonal requirements as follows:
Upper Hole (Max. stroke)—Cold weather.
Lower Hole (Min. stroke)—Hot weather.
NOTE—386-S and 389-S are not adjustable.
Fast Idle:—Carter Dual Carburetor Type.
For complete data, refer to Carburetion Equip. Index.
Accelerator Linkage Adjustment:—Must be maintained to provide correct 'throttle cracking' action for starting. To adjust, remove starting cable at starting switch (to prevent cranking), fully depress starting shift lever, loosen locknut on eccentric adjusting pin on starter shift lever, with offset screwdriver adjust pin to give .070" clearance (Tool J-668 gauge) between throttle stopscrew and carburetor casting (with fast idle adjusting screw seated on highest portion of cam), tighten locknut. NOTE—Throttle stopscrew should be set for 6 M.P.H. idle before this adjustment is made.
Automatic Choke:—Carter Climatic Control.
For complete data, refer to Carburetion Equip. Index.

CARB. EQUIPMENT

Air Cleaner: AC #1528262 oil-wetted, #1528156 oil bath types, for all carbs. exc. 389-S. #1528560 oil bath type for 389-S carburetor.
Fuel Pump:—AC. Type AH #1523228 standard. Combination fuel-and-vacuum Type AJ #1523227 optl.
For complete data, refer to Carburetion Equip. Index.
Gasoline Gauge: AC Electric Type. Dash Unit: AC Nos. #1515323 (1937), 1515340 (1938-With Ivory Figures), 1515350 ('38-Brown fig.), Tank: 1515451 ('37), 1515471 ('38).
For complete data, refer to Carburetion Equip. Index.

BATTERY

BATTERY: Delco Type 17-K ('37), 17E-1 ('38). 6 volt, 17 plate, 100 AH (17-K), 115 AH (17E-1) capacity.
Starting Capacity—137 amperes for 20 minutes.
Zero Capacity—300 amperes for 4.3 minutes. Five second voltage—4.4 volts.
Grounded Terminal—Negative (—) terminal. Grounded to starter on 1938 cars.
Location—On left, under seat ('37), hood ('38).
Police Battery—Delco Type 17-J ('37), 19E-1 ('38). 6 volt; 17 (17-J), 19 (19E-1) plate, 125 AH. (17-J), 130 AH. (19E-1) capacity—20 hour rate.
Grounded Terminal & Location—Same as above.

STARTER

Delco-Remy Model 729-J. Armature No. 823881.
Drive—Overrunning clutch and manual pinion shift operated by starter pedal.
Rotation—Counter-clockwise at commutator end.
Cranking Engine—140-150 amps., 5 volts (summer).
Brush Spring Tension—24-28 ounces each.

C NTINUED ON NEXT PAGE

C NTINUED FROM PRECEDING PA E

Performance Data

Torque	R.P.M.	Volts	Amperes
0 ft. lbs	6000	5.0	60
15 ft. lbs	Lock	3.0	600

Removal:—Starter flange mounted on left front face of flywheel housing. To remove, take out flange capscrews.

Starting Switch:—Part No. 820052. Mounted on starter. Operated by starting pedal.

GENERATOR

STANDARD

Delco-Remy 936-T (Early '37). Armature 1854856. 1100002 (Late '37, All '38). Arm. 1866789. Fixed third brush control type with external vibrating type voltage regulation. Ventilated by fan on drive pulley.

NOTE—Third brush is clamped in position for maximum safe output and must not be disturbed.

Charging Rate Adjustment—Adjusted by changing setting of voltage regulator. See Regulator data below.

NOTE—Do not operate generator on open circuit.

Maximum Charging Rate—As given in table below. Reached at car speed of 30-35 M.P.H. To check charging rate, connect test ammeter in line at 'BAT' terminal of regulator, voltmeter between 'GEN' terminal and ground, ground 'F' terminal to eliminate regulator action.

Performance Data—936-T

	Amperes	Volts	R.P.M.
Cold	23-27	8.8-9.0	3000
Hot	18-23	8.2-8.7	3200

Performance Data—1100002

	Amperes	Volts	R.P.M.
Cold	26-30	8.0	3400
Hot	25-28	8.0	3600

Rotation—Counter-clockwise at commutator end.

Brush Spring Tension—22-26 ounces (main), 16-20 ounces (third).

Field Current—2.3-2.6 amperes at 6 volts.

Removal:—Generator pivot mounted on left front of engine. To remove, take out mounting bolts.

Belt Adjustment:—Loosen clamp bolt and pivot bolts, swing generator out until deflection of belt is ¾" midway between generator and fan pulleys when pressed lightly.

GENERATOR

SPECIAL EQUIPMENT

Delco-Remy Model 934-F (for City Police Cars), 1102657, 1105851 or 1105856 (State Police). Two brush (shunt) types with voltage and current regulation. Ventilated by fan on drive pulley.

Charging Rate Adjustment—None. See Regulator.

Maximum Charging Rate—As follows:

Performance Data—Cold

	①Amperes	Volts	R.P.M.
934-F	26	8.1-8.3	1325
1102657	30	8.0	1825
1105851, 6	40	8.0	1850

①—Current Regulator setting. See Regulator.

Rotation—Counter-clockwise at commutator end.

Brush Spring Tension—25 ozs. each.

Field Current—1.7-2.0 amperes (934-F), 1.67-1.82 amperes (1102657), 1.82-1.94 amperes (1105851, 6) at 6.0 volts.

Removal & Belt Adjustment:—See Std. Gen. above.

REGULATOR

STANDARD

Delco-Remy Model 5814. "Double Core" Voltage Regulator (With 'IGN' Terminal). Cutout Relay and vibrating type Voltage Regulator in case on dash. *For complete data, refer to Electrical Equipment Index.*

Cutout Relay

Cuts In—6.9-7.6 volts, 838 R.P.M., 9.8 M.P.H.

Cuts Out—0-4.0 amperes discharge current.

Contact Gap—.020". **Air Gap**—.020" (closed).

Voltage Regulator

Setting—7.5-7.9 volts at 70°F., 7.4-7.6 volts at 150°F. Regulator is over-compensated for temperature and must be checked at these points.

Adjustment—Disconnect lead on 'IGN' terminal of regulator, connect jumper between 'IGN' and 'BAT' terminals, connect test ammeter in charging line at 'BAT' terminal, connect voltmeter between 'IGN' terminal and ground. Operate generator at 2800-3000 R.P.M., adjust charging rate to 8-10 amperes, (use variable rheostat or AVR set), adjust regulator by bending spring hanger at lower end slightly.

NOTE—Regulator cover must be in place when tests are made. Do not operate generator on open-circuit.

Contact Gap—.020". **Contact Sp. Tension**—2.7-3.5 oz.

Air Gap—.063" between armature and center of core with armature down. .010" between fibre bumper and stop with armature up.

REGULATOR

SPECIAL EQUIPMENT

For Police Generator: Delco-Remy 5599 (934-F Gen.), 5872 (1102657 Gen.), 1118237 (1105851, 6 Gen.—See Note). Double Core Type Voltage & Current Regulator (with 'IGN' Terminal). Vibrating type voltage and current regulators with Cutout Relay in case on dash.

Model 1118237 Regulator Note—This model is new Single Core Type. *Refer to 1940 Oldsmobile Eight pages for all data on this model.*

Cutout Relay & Voltage Regulator

All specifications and Checking & Adjusting directions same as for Std. Model 5814 Voltage Regulator (above) except as follows:

Cutout Relay Cuts In—6.9-7.6 volts (5599), 6.3-6.9 volts (5872).

Voltage Regulator Setting (5599, 5872)—7.0-7.4 volts Cold (70°F), 6.95-7.15 volts Hot (150°F).

Current Regulator

Setting—26-28 amperes (5599), 32-34 amperes (5872).

Checking & Adjusting—Connect ammeter in charging line at regulator 'BAT' terminal, disconnect lead at regulator 'IGN' terminal (to eliminate voltage regulator action). Operate generator at speed for maximum output and note ammeter reading (should agree with setting above). Adjust by bending spring hanger at lower end of armature spring slightly.

Contact Gap .020". **Contact Spring Tension** 3.5 ozs.

Air Gap—.075" between armature and center of core with armature down so fibre bumper just touches the stop, .010" between the fibre bumper and stop with armature up.

LIGHTING

LIGHTING:—Headlamps & Headlamp Adjustment—Same as for Oldsmobile Six Cylinder models. *Refer to 1938 Oldsmobile Six page (preceding) for data.*

Headlamp Beam Indicator—Located above speedometer dial. Lighted whenever driving or upper headlamp beams lighted.

Switches—1937 Models

Lighting—Delco-Remy Model 480-P, 479-H Export.

Foot Beam Selector—471-T, M (Exp.).

Dash Lamp—1416.

Stop Lamp—Hydraulic type on brake master cyl.

Switches—1938 Models

Lighting—D-R Model 1994503, 1995003 (Exp.).

Dimmer—Olds Part No. 1861899. Delco-Remy Model 471-T (Can.).

Instrument—D-R Model 1416.

Stop Light—D-R Model 476-U.

Radio Air Switch—D-R Model 1997704.

Bulb Specifications

Position	Candlepower	Mazda No.
Headlamps	32-21	2320-L
Parking	1½	55
Stop-Tail	21-3	1154
Dome	6	81
Rear License	3	63
Instrument Panel, Glove Comp't	1	51
Light Sw. & Beam Indicators	1	51

MISC. ELECTRICAL

THERMOSTATIC RELAY: Delco-Remy 1866467. On lighting switch by 3 screws (may be serviced separately). Non-adjustable. Contacts open within 1 minute (with 38 amp. load @ 70°F.). Close at 25 amps. @ 70°F.

FUSES:—Clock—2 ampere capacity on back of clock.
Radio—10 ampere capacity.

HORNS:—Klaxon Model K-26-H. Type 2251 or 2253. Optional dual horns K-33-S, Type 2067 (low), 2068 (high) blended tone with horn relay.

Horn Type	Current at 6 Volts	Air Gap
K-26-H, 2251, 53	6.5-8.5	.025-.029"
K-33-S, 2067	11-13	.042-.046"
K-33-S, 2068	10-12	.032-.036"

Horn Relay:—Delco-Remy Model 271-A.
Points Close—2.7-4.0 volts.
Contact Gap—.020". **Air Gap**—.015" (closed).

ENGINE

ENGINE SPECIFICATIONS:—8 cylinder, 'L' head.
Bore—3¼". **Stroke**—3⅞".
Displacement—257.1 cubic inches.
Rated Horsepower—33.8 (S.A.E.)
Developed Horsepower—110 HP. at 3600 RPM.
Compression Ratio—6.2-1 Std. cast-iron head.
Compression Pressure—152 lbs. at 1000 RPM. or 104-114 lbs. at 310 RPM. (cranking speed).
NOTE—New steel-asbestos cyl. head gasket used. Cannot be re-used. Use new gasket.
Vacuum Reading—17" min. at 6 MPH.

PISTONS:—Aluminum alloy, 'T' slot, Cam Ground type with Electrolite (hard oxide) bearing surface.
Weight—15.75 ozs. (stripped). **Length**—3 15/16".
Removal—Pistons and rods removed from above.
Clearance—.0013-.0018" at skirt.
Replacement Pistons:—Finished pistons (with fitted pins) furnished .003", .005", .010", .015", .030" oversize.
Fitting New Pistons:—With pin removed, check clearance by inserting .002" feeler ½" wide between piston and cylinder wall on camshaft side at right angles to pin hole. Invert piston with slot away from camshaft. 4-11 lbs. pull required to withdraw feeler with piston and block at 70° F.
Installing Pistons:—Mark 'V-S' on head toward valves (slot away from valves). Pin hole offset 3/32" to left.

ENGINE

C NTINUED FR M PRECEDING PA E

PISTON RINGS:—Two compression, two oil control rings per piston above pin. Oil ring grooves drilled with eighteen 5/32" oil drain holes. Ring oversizes —.010", .020", .030".

Ring	Width	End Gap	Side Clearance
Comp. ('37)	.1235-.1240"	.009-.014"	.002-.0035"
Comp. ('38)	.0930-.0935"	.009-.014"	.002-.0035"
Oil (all)	.1860-.1865"	.009-.014"	.001-.0025"

NOTE—Install '37 comp. ring with groove down. '38 comp. ring taper faced (greater diameter at bottom). Install '38 comp. ring with TOP mark up.

PISTON PIN:—Diameter—.8554-.8557". **Lgth**—2 31/32". Pin locked in piston boss by lockscrew. Free end slotted to allow boss to slide freely on pin.
Pin Fit in Piston—.0001" loose to .0002" tight in plain boss end, .0002-.0005" tight in lock boss end.
Pin Fit in Rod Bushing—Clearance .0003-.0006". New rod bushings burnished and reamed to inside diameter of .8558-.8562".
Fitting Pins—*See Oldsmobile Shop Notes.*

CONNECTING ROD:—Weight 26.17 oz. **Length** 7 13/16".
Crankpin Journal Diameter—2.123-2.124".
Lower Bearing—Removable steel-backed, babbitt.
Clearance—.001-.003" ('37), .0005-.002" ('38).
Sideplay—.0055-.0105".
Bearing Adjustment:—None. Replace bearings.
Installing Rods:—Oil spit hole in lower bearing upper half must be toward camshaft. Grooves in rod and cap bolt boss must be on same side as part number. NOTE—Ground bolts used for rod & cap assembly.

CRANKSHAFT:—5 bearing, integral counterweights.
Journal Diameters—#1, 2.478-2.479"; #2, 2.5405-2.5415"; #3, 2.603-2.604"; #4, 2.6655-2.6665"; #5, 2.6855-2.6865".
Bearing Type—Interchangeable steel-backed, babbitt-lined. Bearing halves interchangeable (upper and lower).
Clearance—.001-.003" ('37), .0005-.002" ('38).
Bearing Adjustment:—None (no shims). Replace bearings. Do not file caps. *See Oldsmobile Shop Notes for main bearing and oil seal data.*
End Thrust:—Taken by #1 (front) bearing. A bronze thrust plate .1205-.1245" thick is assembled at each end of bearing and is dowelled to bearing cap. Steel thrust collar between front bronze thrust plate and crankshaft gear. **Endplay**—.004-.008".

CAMSHAFT:—5 bearing, non-adjustable chain drive.
Journal Diameters—#1, 2.0600-2.0595"; #2, 1.9975-1.9970"; #3, 1.9350-1.9345"; #4, 1.8725-1.8720"; #5, 1.8100-1.8095".
Bearing—Bronze bushings. **Clearance**—.002-.004".
End Thrust:—Spring and plunger in front end of camshaft and steel plate on chain case cover.
Timing Chain:—Link-Belt. Width 1". Pitch .500" Length 23½" or 47 links.
See Oldsmobile Shop Notes for front end assembly dismantling for timing chain removal.
Camshaft Setting:—Sprockets are marked. Mesh chain with sprockets turned so that marks are adjacent and in line with a straightedge across the shaft centers. Use Sprocket Gauge HM-408-0.

VALVES:—	Head Diameter	Stem Diameter	Length
Intake	1 9/16"	.3415-.3425"	5 51/64"
Exhaust	1 27/64"	.3410-.3418"	5 51/64"

	Seat Angle	Lift	Stem Clearance
Intake	30°	.300"	.0012-.0032"
Exhaust	45°	.300"	.00225-.00425"

Valve Guides:—Cast-iron. Exhaust guide taper counterbored on inside diameter for ⅜" at top. Install ⅝" below top of block. Ream inside diam. to .34375-.34475" ('37), .34425-.34525" ('38). Lgth. 3 15/32".
NOTE—1939 type valve guides (¼" shorter) can be used. Use 1939 installation data if these guides used. *See 1939 Oldsmobile 6 or 8 pages following for data.*

Valve Springs:—Free length 2⅝". Interchangeable for either valve and on 6 and 8. Spring dampers used inside of spring at top.

	Valve Closed	Valve Open
1937	46 lbs. at 2 9/32"	94 lbs. at 1 31/32"
1938	50½ lbs. at 2 1/4 "	95½ lbs. at 1 15/16"

Valve Lifters:—Mushroom type. Length 2½". Head diam. 1¼". Body diam. .6235-.6240". Clearance .0003-.0007". Furnished std.. .002". .005" oversize.

VALVE TIMING

Tappet Clearance—.008" Int., .011" Exh., warm.
See Oldsmobile Shop Notes for Hood Side Panel Removal (1937), Fender Plate Removal (1938).

Valve Timing: See Camshaft Setting above.
Intake Valves—Open TDC. Close 35° ALDC.
Exhaust Valves—Open 45° BLDC. Close 10° ATDC.

To Check Timing:—Check tappet clearance #1 intake valve. This valve should open with piston on top dead center (.000"), when flywheel mark 'TDC/' (NOT steel ball insert) lines up with pointed end of the inspection hole cover screw (left side).

LUBRICATION

LUBRICATION:—Pressure type. Gear type oil pump located on right side of crankcase.
NOTE—New gasket aligned with oil holes in block must be used when oil pump assembled to engine.
Normal Oil Pressure:—25-30 lbs. ('37), 28-33 lbs. ('38).
Oil Pressure Regulator:—On oil pump cover. Operates at 27 lbs. Not adjustable.
Crankcase Capacity:—7 quarts, refill.

COOLING

COOLING SYSTEM:—Water Pump. Centrifugal, belt-driven, packless type.
See Water Pump Section for complete data.
Removal—Remove fan belt, three pump mounting capscrews, lift fan and pump assembly off.
Thermostat:—Harrison. In cyl. hd. water outlet.
Setting—Start to open 145°F. ('37), 152°F. ('38).
Water Capacity:—20 qts. ('37), 21 qts. ('38).

CLUTCH

CLUTCH:—Borg & Beck Model 10A7. Single plate, dry disc type. Model No. 897 stamped on Clutch Cover.
See Clutch Section for complete data.
Facings—Molded-woven, 2 required. Inside Diam. 6". Outside Diam. 10". Thickness ⅛".
NOTE—Special spiral-grooved facings used with Self-Shifting Transmission (not interchangeable).
Pedal Adjustment—Free travel ¾-1". Free adjustable link at release lever end. Loosen locknut, adjust lever length.
Removal—Remove transmission (see Transmission Removal below), take off clutch underpan, take out clutch cover mounting screws evenly, remove assembly from below.
NOTE—When mounting clutch, use two screws with short thread and longer shanks in second hole on either side of locating dowel.

TRANSMISSION

TRANSMISSION:—Own—Helical gear type with Synchro Mesh on second and high gears.
See Transmission Section for complete data.
Removal:—Disconnect front propeller shaft at transmission, remove 4 bolts at bearing support, slide bearing assembly to left, take off clutch underpan, remove mounting bolts, withdraw transmission.

SELF-SHIFTING TRANSMISSION

SELF-SHIFTING TRANSMISSION:—Optl. (all models).
See Transmission Section for complete data.

UNIVERSALS

UNIVERSAL JOINTS:—Mechanics—Model 2C, roller bearing type, three used.
See Universals Section for complete data.
Propeller Shaft Center Bearing:—See Oldsmobile Shop Notes for servicing data.

REAR AXLE

REAR AXLE:—Own make. Semi-floating, spiral bevel gear type with Hotchkiss drive.
See Rear Axle Section for complete data.
Ratio—4.37-1 or 4.33-1 Std. '37. 4.37-1 Std. '38. 3.55-1 Auto. Transmission. 4.62-1 Optional (all).
Backlash—.004-.008". Screw adjustment.
Removal:—Remove wheel, drum, free backing plate (4 nuts), static collector, pull bearing retainer away from backing plate without disturbing plate, pull shaft and bearing (Tool J-942), secure plate with one nut. Disconnect rear universal joint, remove ten capscrews freeing carrier from housing, lift carrier out. NOTE—Left wheel studs have reverse threads.
Wheel Bearing Adjustment—None (shielded type).

SHOCK ABSORBERS

SHOCK ABSORBERS:—Delco—Model 1947-A, B (front) 1713-E, F (rear). Double acting, piston type.
See Shock Absorber Section for complete data.

FRONT SUSPENSION

Front Suspension:—Independent, linked parallelogram type with coil springs.
See Front Suspension Section for complete data.
NOTE—Level frame by inserting 2" blocks between upper support arm and frame. Check following:
Kingpin Inclination—4° 51' 10" crosswise.
Caster—¼-1° pos. ('37). 0-¾° reverse ('38).
Camber—⅛-1°. Adjustable. Set Caster first.
Toe In—⅛-3/16". Adjust length of tie rods.
Steering Geometry—Inner w. 22½-23½°. Outer 20°.

STEERING GEAR

Steering Gear: Saginaw Worm-and-Roller type with center steering.
See Steering Gear Section for complete data.

BRAKES

BRAKES:—Service—Bendix Hydraulic, Duo-Servo, single anchor type. Hand lever applies rear brakes.
See Brake Section for complete data.
Wheel Cylinders—Diam. Front 1 3/32", Rear 1".
Drum—Cast-iron. Diameter—12".
NOTE—Drum turn down limit .030" cut.
Lining—Prim.-molded.Sec.-woven&compressed.Width 1¾. Thick 3/16". Length (P) 10 3/32". (S) 12 61/64"
Clearance—.010" at heel and toe of each shoe.
Hand Brake Adjustment:—See Service Brakes.

ENGINE HOOD NOTE:—To raise hood, turn latch handle at bottom of grille, raise hood slightly, release safety catch.

FRONT END SHEET METAL ASSEMBLY REMOVAL:—May be removed as a unit to facilitate work on valves as follows: Drain radiator, disconnect radiatore hose, disconnect wires at headlamp junction block, free wiring harness from clips on radiator core and along side panel. Take out capscrew in hood ledge filler plate on top of frame (each side), 4 hood ledge filler plate-to-body capscrews (each side), disconnect fender to frame brace at fender, remove nut from center radiator support, remove bumper, remove sheet metal and radiator core assembly. Replace in same manner.

MODEL IDENTIFICATION

SERIAL NUMBER:—On left hand frame side member under hood. For each model and plant as follows:

Model 'F' 60

Lansing, Mich. ..... F-663001 Up
South Gate, Calif. ..... CF-511001 to CF-540000
Linden, N. J. ..... LF-551301 to LF-600000

Model 'G' 70

Lansing, Mich. ..... G-300001 Up
South Gate, Calif. ..... CG-10001 to CG-100000
Linden, N. J. ..... LG-100001 to LG-300000

ENGINE NUMBER:—First number (F-60) F-905501, (G-70) G-10001. On boss on left side of cylinder block behind water pump.

Self-shifting Transmission Cars—On these cars, engine number prefix is FA (F-60), GA (G-70) instead of F or G.

TUNE-UP

COMPRESSION:—Ratio—6.2-1 (Std. F-60), 6.1-1 (Std. G-70), 5.67-1 (Optl. F-60), 5.61-1 (Optl. G-70). Pressure—151 lbs. (F-60 Std. Hd.), 146 lbs. (G-70 Std. Hd.), 120 lbs. (All—Optl. LC. Hd.) at 1000 RPM. or approximately 102-112 lbs. at cranking speed for Std. heads.

VACUUM READING:—Steady 17" min. at 6 MPH idling speed.

FIRING ORDER: 1-5-3-6-2-4. See wiring diagram.

SPARK PLUGS: AC Type 45. 14 mm. Metric. Gaps—.040".

IGNITION: See Coil, Condenser, and Distributor. Breaker Gap—.020". Cam Angle—35° Closed. Automatic Advance—Starts at 250 RPM. Maximum 14° at 1850 RPM. (Distr. degrees & RPM). Vacuum Advance—10° (distr.) 15½-18½" vacuum.

IGNITION TIMING: See Ignition Timing. Std. Setting—TDC. Flywheel mark (steel ball) aligned with insp. hole pointer (left side housing).

CARBURETION: See Carburetor & Carb. Equipment. Idle Setting—Idle screw ½-1½ turns open. Idle speed 6 MPH (or 3rd gear with Self-Shift. Trans.). Float Level—⅜" from projection on cover to top of soldered seam at front end of float with needle valve seated (invert to check). Accelerating Pump—Lower Hole (Normal Setting). Fuel Pump Pressure: 3¾ lbs.('AH'), 4 lbs.('AJ' Comb.).

MANIFOLD HEAT CONTROL:—Automatic thermostatic coil type. See that valve operates freely. When installing thermostatic coil, wind coil up 105° (approx. ⅓ revolution) at room temperature.

VALVES: See Valve Timing. Tappet Clearance .008" Intake, .011" Exhaust, hot.

STARTING: See Battery, Starter, Generator, Regulator.

IGNITION

Ignition Switch:—Delco-Remy No. 1116266 (F-60), 1116267 (G-70). Switch connected to coil by armored cable.

Ignition Lock—Briggs & Stratton No. 45792. Key Series 8000 to 9499. Groove—No. 15.

COIL: Delco-Remy Model 1115129. On dash.

Ignition Current—2.0 amperes idling, 4.5 stopped.

CONDENSER: Delco-Remy Part No. 1865972.

Capacity—.18-.25 microfarad.

DISTRIBUTOR: Delco-Remy 647-F. Single breaker 6 lobe cam, full automatic advance & auxiliary vac. spark control and Octane Selector adjustment.

Breaker Gap—.020". Limits .018-.024".

Cam Angle or Dwell—35° closed, 25° open (distr.).

Breaker Arm Spring Tension—20 ounces.

Rotation—Counter-clockwise viewed from the top.

Automatic Advance

Distributor Degrees	R.P.M.	Engine Degrees	R.P.M.
Start	250	3	500
3	450	6	900
14	1850	28	3700

Vacuum Spark Control Model 681-P—Integral type (mounted on distributor cup, linked to breaker plate). Provides additional advance at speeds above idling except when engine accelerated or operated with wide open throttle when spark retarded by return spring in unit. Plunger travel 3/16" total.

Vacuum Advance

Distr. Degrees	Eng. Degrees	Vacuum (" of HG)
Start	0	5-7"
10	20	15.5-18.5"

Octane Selector—Adjustment at distributor permits 10° advance or retard from center '0' position. See Ignition Timing for adjustment directions.

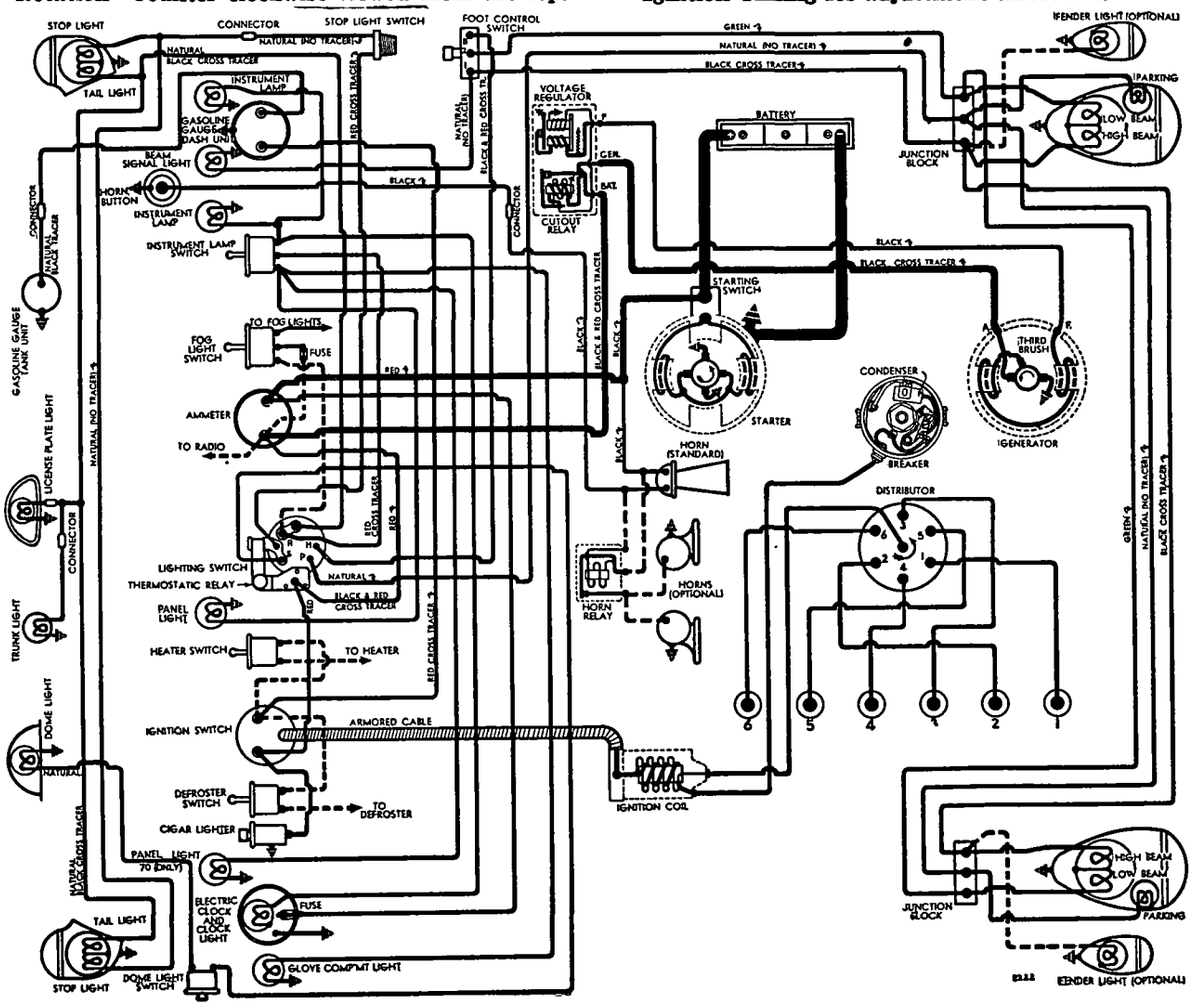

Removal:—Distributor mounted on left side of engine. To remove, disconnect vacuum line, take out holddown screw in advance arm.

IGNITION TIMING

IGNITION TIMING:—Standard Setting as follows. See Octane Selector for correction dependent on fuel used.

	Flywheel Degrees	Piston Position
All Engines	0° At TDC	.0000" TDC.

Timing (Using Synchroscope)—This method recommended by manufacturer. Clip synchroscope lead to #1 spark plug, direct light on flywheel through inspection hole in left front face of flywheel housing beside starter. Idle engine, loosen hold-down screw, center pointer on scale, tighten hold-down screw. Loosen advance arm clamp bolt, rotate distributor until timing mark (steel ball insert in flywheel) appears in line with pointer in inspection hole, tighten clamp bolt. Check Octane Selector setting.

Timing (Without Synchroscope)—Turn engine over to firing position for #1 piston with steel ball insert in flywheel in line with pointer in inspection hole in left front face of flywheel housing. Loosen hold-down screw in advance arm, center pointer on scale, tighten hold-down screw. Loosen advance arm clamp bolt, rotate distributor until contacts begin to open (use timing light connected between ignition terminal and ground and turn on ignition, light will go on as contacts open), tighten clamp bolt. Check Octane Selector setting.

Octane Selector—Should be set for slight ping when accelerating engine with wide open throttle at speeds below 15 MPH. To adjust, loosen distributor hold-down screw, rotate distributor clockwise toward 'Adv' end of scale (if no ping noted), counter-clockwise toward 'Ret' end of scale (if ping too severe). Check performance after making adjustment.

CARBURETOR

CARBURETION:—Carburetor—Carter Model WA-1 Type 426-S (Std.), 425-S (With Self-shifting Transmission). 1¼", single barrel, downdraft type.

For complete data, refer to Carburetor Index.

Important—Cars with Self-shifting Transmission—Transmission throttle control lever setting must be checked and adjusted whenever carburetor throttle linkage disconnected or disturbed. ***See Oldsmobile Self-Shifting Transmission article in the Transmission Section.***

Idle Adjustment—With engine warmed up so that Automatic Choke and Fast Idle inoperative, set throttle lever stopscrew for 6 M.P.H. idle speed. Turn idle adjusting screw in until engine begins to miss, then turn screw out until engine begins to roll, finally turn screw in slowly until engine fires smoothly. Final setting should be ½-1½ turns of screw out from inner seated position. Readjust throttle stopscrew for correct idle speed.

Accelerating Pump Setting—Pump lever (under dust cover) has three holes for pump link engagement as follows:

Inner (Min.)—Normal temperatures and Std. fuel.

Outer (Med.)—Winter temperatures.

Upper (Max.)—Extreme cold weather or l w-test fuel.

Fast Idle:—Integral type. Built-in carburetor.

For complete data, refer to Carburetion Equip. Index.

Setting—Bend fast idle link so that choke valve opening is ⅝" with throttle valve closed and stopscrew turned in to contact lowest step of fast idle cam (cam revolved so stopscrew against but not on first step of cam).

Accelerator Linkage Adjustment:—Must be set for correct 'throttle-cracking' action for starting. To adjust, disconnect starter cable (to prevent cranking), fully depress starting switch pedal, loosen locknut on eccentric pin on starter shift lever, use offset screwdriver and adjust pin to give .030" clearance between throttle stopscrew and fast idle cam (cam in fast idle position), tighten locknut.

Automatic Choke:—Carter Climatic Control.

For complete data, refer to Carburetion Equip. Index.

Setting—Notch on thermostatic coil housing should be two notches Rich (clockwise) from reference mark on housing.

CARB. EQUIPMENT

Air Cleaner:—AC #1528602 oil-wetted type Std., #1528970 heavy duty oil-bath type Optl.

Fuel Pump:—AC Type AH #1523844 Std., Type AJ #1523825 combination fuel-and-vacuum type Optl. ***For complete data, refer to Carburetion Equip. Index.***

Gasoline Gauge:—AC Electric type. #1515358 (dash unit), #1515492 (tank unit).

For complete data, refer to Carburetion Equip. Index.

BATTERY

BATTERY:—Delco Model 15E-1. 6 volt, 15 plate, 100 ampere hour capacity (20 hour rate).

Starting Capacity—115 amperes for 20 minutes.

Zero Capacity—300 amperes for 3.3 minutes. Five second voltage—4.25 volts.

Grounded Terminal—Negative (—) grounded to starter frame. When radio installed, install ground straps as follows: Transmission to frame. Engine to body at dash. Muffler to frame.

Dimensions—Length 19 5/16". Width 4". Height 9".

Location—Left side under engine hood.

Special (Police)—Delco Model 19E-1. 6 volt, 19 plate, 125 A.H. Capacity. (20 hr. rate).

Starting Capacity—150 amperes for 20 minutes.

Zero Capacity—300 amperes for 5.3 minutes. Five second voltage 4.55 volts.

Grounded Ter. & Location—Same as 15E-1 above.

STARTER

Delco-Remy Model 1107007. Armature No. 1867897.

Drive—Manual pinion shift and overrunning clutch.

Rotation—Counter-clockwise at commutator end.

Brush Spring Tension—24-28 ounces.

Cranking Engine—125-135 amperes, 5 volts (summer).

Performance Data

Torque	R.P.M.	Volts	Amperes
0 ft. lbs.	5000	5.0	65
12 "	Lock	3.37	525

Removal:—Flange mounted on left front face f flywheel housing. To remove take out flange mounting screws.

Starting Switch:—No. 820052. Mounted on starter. Operated by pedal-operated pinion shift lever.

GENERATOR

STANDARD

Delco-Remy Model 1100009. Armature No. 1866789. Fixed third brush control with external vibrating voltage regulator. Ventilated by fan on drive pulley.

Charging Rate Adjustment—See Regulator data below.

NOTE—Third brush fixed in place for maximum output and should not be disturbed.

Maximum Charging Rate—As given in table below. To check charging rate, connect test ammeter in charging line at regulator 'BAT' terminal, voltmeter between 'BAT' terminal and ground, ground 'F' terminal to eliminate regulator action.

Performance Data

	Amperes	Volts	R.P.M.
Cold	26-30	8.0	3400
Hot	25-28	8.0	3600

Rotation—Counter-clockwise at commutator end.

Brush Spring Tension—25 ozs. (main), 17 ozs. (third brush).

Field Current—2.3-2.6 amperes at 6.0 volts.

Removal:—Pivot mounted at left front of engine. To remove, take out pivot bolts and clamp bolt.

Belt Adjustment:—Swing generator out until belt deflection midway between generator and fan pulley is ¾" with light pressure.

GENERATOR

SPECIAL EQUIPMENT

Delco-Remy Model 934-F (for City Police Cars), 1102657 (State Police). Used with Double Core Type Voltage and Current Regulators 5599 (934-F), 5872 (1102657). ***Refer to 1938 Oldsmobile Eight L-38 pages for complete data on these Generators and Regulators.***

Other Types—Models 1105851 or 1105856 (State Police). Used with new type Single Core Voltage & Current Regulator. ***Refer to 1940 Oldsmobile Eight pages for data on these Generators and Regulators.***

REGULATOR

Delco-Remy Model 5858. "Doubl Core" Voltage Regulator (No 'IGN' Terminal). Cutout Relay and vibrating type Voltage Regulator in case on engine side of dash.

For complete data, refer to Electrical Equipment Index.

Cutout Relay

Cuts In—6.3-6.9 volts, 825 R.P.M. (generator).

Cuts Out—0-4.0 amperes discharge current.

Contact Gap—.020". **Air Gap**—.020" (closed).

NOTE—Relay compensated for temperature. Closing voltage same hot and cold.

Voltage Regulator

Setting—7.5-7.9 volts (70°F), 7.4-7.6 volts (150°). Regulator over-compensated for temperature and must be checked at these points.

Adjustment—Connect ammeter in charging line at regulator 'BAT' terminal, voltmeter between 'BAT' terminal and ground. Operate generator at 2800-3000 R.P.M., adjust charging current to 8-10 amperes (use variable rheostat or AVR set), adjust regulator by bending spring hanger at lower end of armature spring slightly for setting shown above.

CAUTION—Regulator cover must be in place when tests made. Do not operate generator on open-circuit.

CONTINUED ON NEXT PAGE

CONTINUED FROM PRECEDING PA E

Contact Gap—.020". Contact Spring Tension—3.5 ozs.
Air Gap—.063" between armature and center of core with armature down so fibre bumper just touches stop, .010". between fibre bumper and stop with armature up.

LIGHTING

LIGHTING:—Headlamps—Guide Multi-beam, pre-focused type with upper and lower beams controlled by selector switch on toeboard.
Headlamp Adjustment—With upper beams lighted, aim each headlamp so that hot spot centered on horizontal line drawn 3" below lamp-center height, and on vertical line directly ahead of the lamp-center. Adjusting screw for vertical movement located at bottom of lamp body to rear of lense retainer, screw for sidewise motion under plug on side of lamp body toward engine.
Beam Indicator—At top of speedometer dial. Lighted whenever upper or driving beams in use.

Switches

Lighting—D-R. No. 1994006.
Beam Selector—D-R. No. 1997002.
Stop Light—D-R. No. 476-U.

Bulb Specifications

Position	Candlepower	Mazda No.
Headlamps	32-21	2320
Parking, Instrument	1½	55
Glove Compt., Indicator	1	51
License Plate	3	63
Stop & Tail	21-3	1154
Dom	6	81

MISC. ELECTRICAL

THERMOSTATIC RELAY:—On lighting switch (part of switch assembly). Remains closed with 25 amperes. Opens within 2 minutes with 38 amperes (70° F.).

HORNS:—Klaxon. Model K26-H Type 2253 Single horn Std. Model K33-H Type No. 1999503 (low note). 1999504 (high note) blended tone, twin horns Optl. Twin horns operated by relay.

Horn Type	Current (at 6 volts)	Air Gap
2253	6.5-8.5 amperes	.025-.029"
1999503 (low note)	10-12 amperes	.044-.048"
1999504 (high note)	9-12 amperes	.036-.039"

Horn Relay:—D-R. Model 271-A, 1116775.
Contact Gap—.020". Air Gap—.015" (closed).
Closing Voltage—2.3-3.5 volts.

ENGINE

F-39 '60' & G-39 '70' ENGINE NOTE:—Some parts on these engines are not identical and must not be interchanged (though similar in appearance), other parts are identical for both engines as follows:

Identical Parts:—Following parts same for F and G engines: Cylinder Blocks, Flywheel, Main Bearings, Pistons, Timing Chain and Sprockets, Valve Springs, Valve Guides, Valve Lifters, Oil Pump, Water Pump, Water Thermostat, and Carburetor.

Dissimilar Parts:—Following parts are not identical and must not be interchanged:
Cylinder Head—Marked by numeral cast in head: '216'—F-39, '230'—G-39 (early G-39 heads unmarked). Heads must not be interchanged.
Crankshaft—Marked by letter cast on largest counterweight: 'F'—F-39, 'G'—G-39. Throw greater on G-39.
Camshaft—Letter 'F' cast in shaft near GM trademark for F-39 camshaft only. G-39 shaft longer and unmarked.
Connecting Rod—Round Boss in center of rod I-beam section on F-39 rod only. G-39 connecting rod ⅛" shorter and unmarked (serviced by 'L' rods).

ENGINE HOOD NOTE:—To raise hood, turn latch handle at bottom of grille, raise hood slightly and release safety catch.

OIL PAN REMOVAL: *See Oldsmobile Shop Notes.*

ENGINE SPECIFICATIONS:—6 cylinder, 'L' head.
Bore—3 7/16". Stroke—3⅞" (F-60). **4⅛"** (G-70).
Displacement—216 cu. ins. (F-60), 229.7 (G-70).
Rated Horsepower—28.4
Developed Horsepower—90 (F-60 Std. Hd), 85 (F-60 LC), 95 (G-70 Std.), 90 (G-70 LC) at 3400 RPM.
Compression Ratio—6.2-1 (Std. F-60), 6.1-1 (Std. G-70), 5.67-1 (Optl. F-60), 5.61-1 (Optl. G-70).
Compression Pressure—151 lbs. (F-60 Std. Hd.), 146 lbs. (G-70 Std. Hd.), 120 lbs. (All—Optl. LC. Hd.) at 1000 RPM. or approx. 102-112 lbs. at cranking speed. *See Oldsmobile Shop Notes for Cylinder Head Servicing.*
Vacuum Reading—Steady 17" min. at 6 MPH.

PISTONS:—Aluminum alloy, 'T' slot, cam ground type with hard oxide bearing surface.
Weight—17.75 ozs. (stripped). **Length—4 1/32".**
Removal—Pistons and rods removed from above.
Clearance—Top .026". Skirt .0013-.0018".
Replacement Pistons:—Finished pistons (pins fitted) .003", .005", .010", .015", .030" oversize (Std. Weight).
Fitting New Pistons:—Insert .002"x½" feeler between piston and cylinder wall on valve side with piston (pin out) inverted and 'T' slot on opposite side from feeler. Pull to withdraw feeler must be 4-11 lbs. (at 70° F., low lbs. pull below 70°, high above 70°).
Installing Pistons:—Mark 'V-S' on head toward valves (slot away from valves). Pin hole offset 3/32" to left.

PISTON RINGS:—2 compression (tapered, O.D. .001" larger at bottom), 2 oil control rings per piston, all above pin. All rings are coated.

Ring	Width	End Gap	Side Clearance
Compr.	.0925-.0935"	.007-.012"	.001-.003"
Oil	.1860-.1865"	.007-.015"	.001-.0025"

Replacement Rings:—.010", .020", .030" oversize.

PISTON PIN:—Diameter—.8554-.8557". **Length—3 5/32".** Pin locked in one piston boss by lockscrew (opposite end slotted). Pin bosses are plated.
Pin Fit in Piston—.0001" loose to .0002" tight (plain boss end), .0002-.0005" tight (lock boss end).
Pin Fit in Rod Bushing—.0003-.0006" clearance. *See Oldsmobile Shop Notes for Pin Fitting directions.*

CONNECTING ROD:—Weight—27.9 ozs. (F-60), 28.0 ozs. (G-70) complete except for bearing insert.
Length—7 15/16" (F-60), 7 13/16" (G-70).
Crankpin Journal Diameter—2.123-2.124".
Lower Bearing—Removable, steel-backed, babbitt.
Clearance—.0005-.0025". **Sideplay**—.0055-.0105".
Bearing Adjustment:—None. Replace bearings.
Installing Rods:—Oil spit hole at lower end toward valves and grooves on rod and cap bolt bosses (part number side) matched. Special ground bolts used.

CRANKSHAFT:—4 bearing. 7 integral counterweights.
Journal Diameters—#1, 2.478-2.479"; #2, 2.5405-2.5415"; #3, 2.6655-2.6665"; #4, 2.6855-2.6865".
Bearings—Removable, steel-backed, babbitt. Upper and lower halves interchangeable except #1 (front).
Clearance—.0005-.002" (rear), .001-.003" (all others).
Bearing Adjustment:—None (no shims). Replace bearings. Do not file caps. Tighten bolts to 135-145 ft.lbs. with J-1264 torque wrench. **Endplay .004-.008."** *See Oldsmobile Shop Notes for main bearing removal, end thrust and oil seal data.*

CAMSHAFT:—4 bearing. Non-adjustable chain drive.
Journal Diameters—#1, 1.9970-1.9975"; #2, 1.9345-1.9350"; #3, 1.8720-1.8725"; #4, 1.8095-1.8100".
Bearings—Bronze bushings. **Clearance .0015-.0035".**
End Thrust:—Spring-loaded steel plunger in front of camshaft bearing against steel plate on chain cover.
Timing Chain:—Whitney #4112239. Width 1". Pitch .500". Length 47 links or 23½". *See Oldsmobile Shop Notes for Front End Sheet Metal Assembly Removal.*
Camshaft Setting:—Mesh chain with sprocket marks adjacent and in line with a straightedge across the shaft centers (Gauge J-1248, F-60; HM-408-0, G-70).

VALVES:—

	Head Diameter	Stem Diameter	Length
Intake	1 9/16"	.3415-.3425"	5 51/64"
Exhaust	1 27/64"	.3410-.3418"	5 51/64"

	Seat Angle	Lift: (F-60)	(G-70)	Stem Clearance
Intake	30°	.286"	.303"	.00175-.00375"
Exhaust	45°	.313"	.298"	.00245-.00425"

Valve Guides:—Length 3 7/32" (¼" shorter at top over '38. May be used on '37 and '38 models). Press guides in so top end ⅞" below top of block (Tool J-1042). Ream to .34425-.34525".

Valve Springs:—Free Length 2⅝". Damper used in top of each spring.

	Spring Pressure	Length
Valve Closed	50½ lbs.	2¼"
Valve Open	95½ lbs.	1 15/16"

Valve Lifters:—Mushroom type. Body Diam. .6235-.6240". Serviced by installing lifters furnished .001", .0015", .002", .005", .010" O.S. Clearance .0005-.0008".
NOTE—Lifter holes have bearing-ized finish. Fit lifters without reaming holes wherever possible.

VALVE TIMING

Tappet Clearance:—.008" Intake, .011" Exh. hot.
Valve Timing:—See Camshaft Setting above.

F-60

Intake Valves—Open 5° BTDC. Close 30° ALDC.
Exhaust Valves—Open 50° BLDC. Close 5° ATDC.

G-70

Intake Valves—Open 5° BTDC. Close 45° ALDC.
Exhaust Valves—Open 45° BLDC. Close 5° ATDC.
Valve Timing Check—Set tappet clearance #1 intake valve at .0124". This valve should open with piston 5° or .0074" (F-60), .0163" (G-70) before top dead center when a point on the flywheel approximately 2 teeth before TDC mark (steel ball insert) lines up with pointer (inspection hole left front face of housing). Reset tappet clearance at .008" hot.

LUBRICATION

LUBRICATION:—Pressure. Gear type oil pump on right side of crankcase. *See Oldsmobile Shop Notes for data.*
Normal Oil Pressure—28-33 lbs. **Regulator** On pump cover. Opens at 27 lbs. Not adjustable.
Crankcas Capacity—5 quarts.

COOLING

COOLING SYSTEM:—Capacity—17 quarts.
Water Pump:—Packless, sealed bearing type.
See Water Pump Section for complete data.
Thermostat:—Harrison. In cylinder head outlet.
Setting—Starts to open at 152° F. Fully open 173° F.
Temperature Gauge:—AC#1510796 Std.#1510830 RHD.
See Miscellaneous Section for complete data.

CLUTCH

CLUTCH:—Borg & Beck Model 9A6 (G-39 '70' up to Eng. No. G-15957), Model 9A7 (All F-39 '60', G-39 '70' after Eng. No. G-15957). Single plate, dry disc type. Assembly No. 895 (9A6), #924 (9A7) stamped on cover.
See Clutch Section for complete data.
See Oldsmobile Shop Notes for data on late 1940 type Clutch Release Bearing with Lubrication Fitting.
Facings—Molded-woven, 2 required. Inside Diam. 5⅝" (First G-70), 6" (Later G-70, F-60 with S-S Trans.), 6¼" (F-60 Std. Trans.). Outside Diam. 9" (F-60 Std. Trans.), 9¼" (all others). Thickness .125"
Adjustment:—Pedal free movement 1-1½" (adjusting clevis and locknut on link at clutch fork).
NOTE—Arm on auxiliary shaft has 2 holes for pedal pushrod link. Use rear hole only.
Removal:—Remove transmission (see data below), mark clutch and flywheel, take out six mounting screws in clutch cover flange. NOTE—Install two mounting screws with long shank in second hole on each side of locating dowel when installing clutch.

TRANSMISSION

TRANSMISSION:—Own Make. All helical gear, constant-mesh, synchro-mesh (second & high), sliding gear (low & reverse) with new remote shift control.
See Transmission Section for complete data.
Transmission Control:—Oldsmobile 'Handi-shift' type.
See Transmission Section for complete data.
Removal:—Disconnect lower control rod at transmission, disconnect selector cable from cable anchor bracket, unscrew cable from shaft, remove selector shaft lever (with helper springs) and speedometer cable. Remove propeller shaft (disconnect rear U-joint, pull shaft out), remove clutch housing underpan (and reinforcing plate on G-39) for access to 2 lower transmission mounting bolts and nuts.
See Oldsmobile Shop Notes for re-inforcing plate data.

SELF-SHIFTING TRANSMISSION

SELF-SHIFTING TRANSMISSION:—Optl. (all models).
See Transmission Section for complete data.

UNIVERSALS

UNIVERSAL JOINTS:—Mechanics Type 2C. Roller bearing type, 2 used (3 on G-70 with Optl. S-S Trans.).
See Universals Section for complete data.
Propeller Shaft Center Bearing:—On G-70 with Optl. S-S Trans. only. *See Oldsmobile Shop Notes.*

REAR AXLE

REAR AXLE:—Own Make. Semi-floating, hypoid gear type with torque taken through 2 support arms.
See Rear Axle Section for complete data.
Ratio—4.3-1 Std. 3.636-1 Self-Shift Tr. 4.55-1 Mt.
Backlash—.004-.008". Screw adjustment.
Removal:—Disconnect drive shaft at rear universal, (do not disengage spline joint at transmission), remove axle shafts (see below), remove capscrews on carrier flange, pull carrier assembly out.
Axle Shaft Removal—Remove wheel, brake drum, backing plate mounting nuts, static collector, loosen bearing retainer (do not allow backing plate to shift to damage brake line). Pull shaft and bearing with puller J-942 (do not allow shaft to drag on oil seal), replace one backing plate nut.
Wheel Bearing Adjustment—None (sealed type).
Rear Suspension:—Quadri-coil type (support arms).
See Rear Axle Section for complete data.

SHOCK ABSORBERS

SHOCK ABSORBERS:—Delco. Front—Model 1947-C (right), 1947-D (left). Rear—1751-U (right), 1751-T (left). Double acting, hydraulic type.
See Shock Absorber Section for complete data.

FRONT SUSPENSION

Front Suspension:—Independent, linked parallelogram type with coil springs.
See Front Suspension Section for complete data.
Kingpin Inclination—4°51'10".
Caster—0-¾° reverse.
Camber—⅛° to 1°. Adjustable.
Toe In—⅛-3/16". Adjust each end tie rod.
Steering Geometry (Toe out on turns)—Inner wheel turned 23° plus or minus ½°. Outer wheel 20°.

STEERING GEAR

Steering Gear: Saginaw Worm-and-Roller type with steering linkage with idler arm on right frame rail.
See Steering Gear Section for complete data.

BRAKES

BRAKES:—Service. Bendix hydraulic, duo-servo, single anchor type without eccentric adjustment. Hand lever applies rear service brakes.
See Brake Section for complete data.
Drums—Cast-iron. Diameter 11".
Lining—Molded. Width 1¾". Thickness 3/16".
Length—Primary Shoe 9 11/32". Secondary 11 31/32".
Clearance—.015" both ends of secondary shoe.
Hand Brake:—See Service Brakes above.

ENGINE HOOD NOTE:—To raise hood, turn latch handle at bottom of grille, raise hood slightly, release safety catch.

FRONT END SHEET METAL ASSEMBLY REMOVAL:—May be removed as a unit to facilitate work on valves as follows: Drain radiator, disconnect radiator hose, disconnect wires at headlamp junction block, free wiring harness from clips on radiator core and along side panel. Take out capscrew in hood ledge filler plate on top of frame (each side), 4 hood ledge filler plate-to-body capscrews (each side), disconnect fender to frame brace at fender, remove nut from center radiator support, remove bumper, remove sheet metal and radiator core assembly. Replace in same manner.

MODEL IDENTIFICATION

SERIAL NUMBER:—For each plant as follows: L-228201 Up (Lansing, Mich.), CL-189001 to CL-195000 (South Gate, Calif.), LL-199001 to LL-212000 (Linden, N.J.). Stamped on left hand frame side member under hood.

ENGINE NUMBER:—First number L-316001 (cars with Self-shifting transmission have prefix 'LA' instead of 'L'). Stamped on boss on left side of cylinder block behind water pump.

TUNE-UP

COMPRESSION:—Ratio—6.2-1 Std., 5.8-1 Optl.
Pressure—152 lbs. (Std Hd.), 125 lbs. (Optl. LC. Hd.) at 1000 R.P.M. or approximately 104-114 lbs. at cranking speed for Std. head.

VACUUM READING:—Steady 17" min. at 6 MPH. idling speed.

FIRING ORDER: 1-6-2-5-8-3-7-4. See diagram.

SPARK PLUGS: AC Type 45. 14 mm. Metric.
Gaps—.030".

IGNITION: See Coil, Condenser, and Distributor.
Breaker Gap—.015". **Cam Angle**—31° Closed.
Automatic Advance—15° max. at 2000 RPM (distr.).
Vacuum Advance—7½° (distr.) with 14-17"vacuum.

IGNITION TIMING: See Ignition Timing.
Std. Setting—2° BTDC. Flywheel mark (steel ball) aligned with insp. hole pointer (left side housing). CAUTION—Time #6 cylinder on this engine.

CARBURETION: See Carburetor & Carb. Equipment.
Idle Setting—Set idle screws ½-1¼ turns open. Idle speed 6 MPH (or 3rd gear Self-Shift. Trans.).
Float Level—⅜" from top of float to cover with needle valve seated.
Accelerating Pump—Not adjustable.
Fuel Pump Pressure: 4 lbs. maximum.

MANIFOLD HEAT CONTROL:—Automatic thermostatic coil type. See that valve operates freely. When installing thermostatic coil, wind coil up 160° or slightly less than ½ revolution at room temperature.

VALVES: See Valve Timing.
Tappet Clearance .008" Intake, .011" Exhaust, hot.

STARTING: See Battery, Starter, Generator, Regulator.

IGNITION

Ignition Switch:—Delco-Remy No. 1116267. Connected to coil by armored cable.
Ignition Lock—Briggs & Stratton No. 45792. Key Series—8000 to 9499. Groove—No. 15.

COIL: Delco-Remy Model 1115129. On dash.
Ignition Current—2.0 amperes idling, 4.5 stopped.

CONDENSER: Delco-Remy No. 1869704.
Capacity—.18-.25 microfarad.

DISTRIBUTOR: Delco-Remy 1110803. Single breaker, 8 lobe cam, full automatic advance with auxiliary vacuum spark control and Octane Selector adjustment.
Breaker Gap—.015". Limits .0125-.0175".
Cam Angle or Dwell—31° closed, 14° open (distr.).
Breaker Arm Spring Tension—22 ounces.
Rotation—Counter-clockwise viewed from the top.

Automatic Advance

Distributor Degrees	Distributor R.P.M.	Engine Degrees	Engine R.P.M.
Start	300	2.5	600
3.5	500	7	1000
15	2000	30	4000

Vacuum Spark Control Model 681-R—Integral type (mounted on distributor cup, linked to breaker plate). Provides additional advance at speeds above idling except when engine accelerated or operated with wide open throttle when spark retarded by return spring in unit. Plunger travel 11/64" total.

Vacuum Advance

Distr. Degrees	Eng. Degrees	Vacuum (" of HG).
Start	0	5-7"
7.5	15	14-17"

Octane Selector—Adjustment at distributor. Permits 10° advance or retard from center '0' position. See Ignition Timing for adjustment directions.

Removal:—Distributor mounted on left side of engine. To remove, disconnect vacuum line, take out hold-down screw in advance arm.

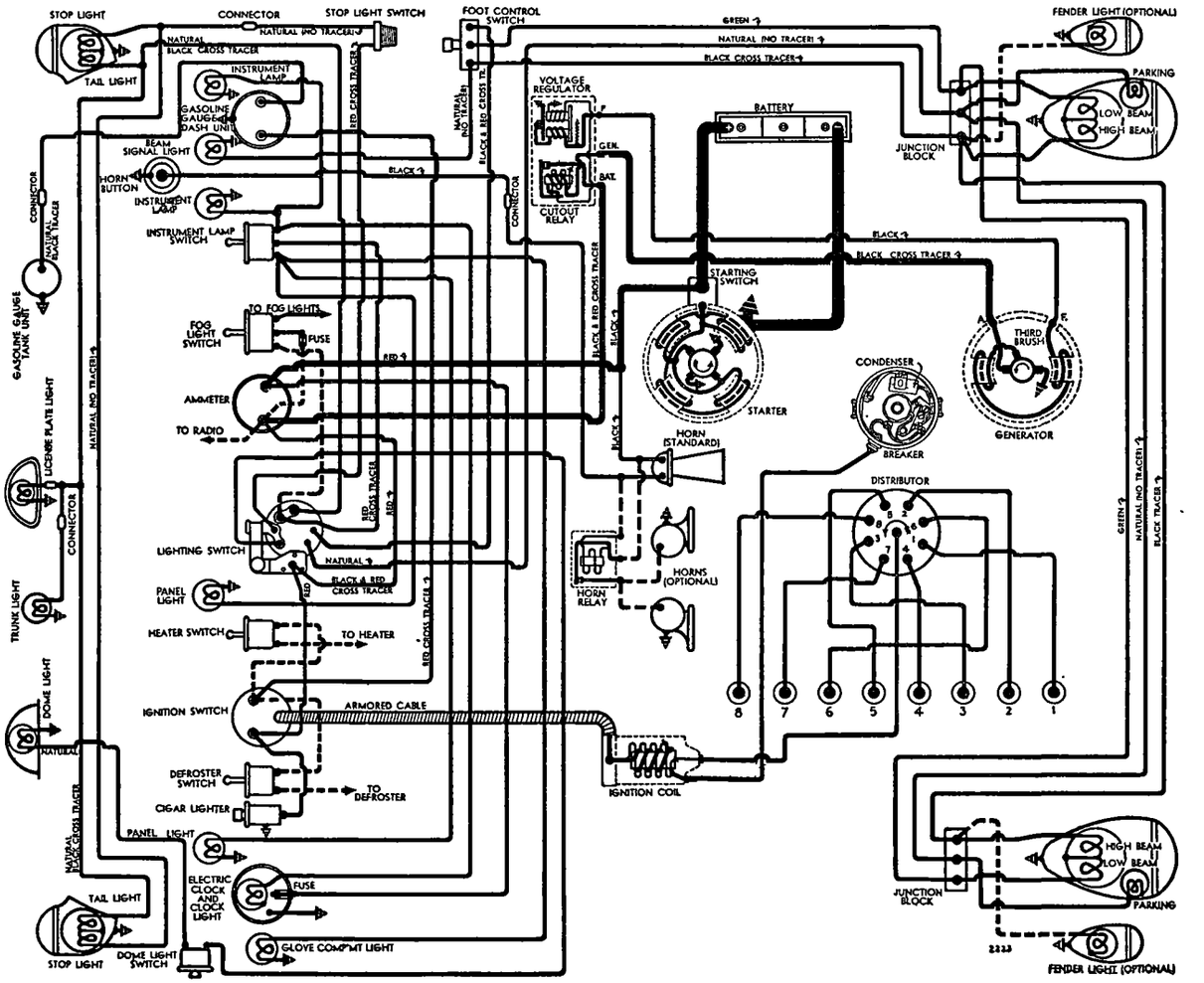

IGNITION TIMING

IGNITION TIMING:—Standard setting as follows. See Octane Selector for correction dependent on fuel used.

	Flywheel Degrees	Piston Position
All Engines	2° BTDC	.002" BTDC

NOTE—Flywheel timing mark (steel ball insert) is for #6 cylinder (#1 cylinder not used or marked).

Timing (Using Synchroscope)—This method recommended by manufacturer. Clip synchroscope lead to #6 spark plug, direct light on flywheel through inspection hole in left front face of flywheel housing beside starter. Idle engine, loosen hold-down screw, center pointer on scale, tighten hold-down screw. Loosen advance arm clamp bolt, rotate distributor until timing mark (steel ball insert in flywheel) appears in line with pointer in inspection hole, tighten clamp bolt. Check Octane Selector setting.

Timing (Without Synchroscope)—Turn engine over to firing position for #6 piston with steel ball insert in flywheel in line with pointer in inspection hole in left front face of flywheel housing. Loosen hold-down screw in advance arm, center pointer on scale, tighten hold-down screw. Loosen advance arm clamp bolt, rotate distributor until contacts begin to open (using timing light connected between ignition terminal and ground and turn on ignition, light will go on as contacts open), tighten clamp bolt. Check Octane Selector setting.

Octane Selector—Should be set for slight ping when accelerating engine with wide open throttle at speeds below 15 MPH. To adjust, loosen distributor hold-down screw, rotate distributor clockwise toward 'Adv' end of scale (if no ping noted), counter-clockwise toward 'Ret' end of scale (if ping too severe). Check performance after making adjustment.

CARBURETOR

CARBURETION:—**Carburetor**—Carter WDO Type 389-S, 1¼" dual, downdraft, Vacumeter type.

For complete data, refer to Carburetor Index.

Important—Cars with Self-shifting Transmission—Transmission throttle control lever setting must be checked and adjusted whenever carburetor throttle linkage disconnected or disturbed. ***See Oldsmobile Self-Shifting Transmission article in the Transmission Section.***

Idle Adjustment—With engine warmed up so that Automatic Choke and Fast Idle inoperative, set throttle lever stopscrew for 6 MPH. idle speed (high gear—std. transmission, 3rd. gear—self-shifting transmission). Turn idle adjusting screw for each barrel (two screws—adjust in succession) in until engine begins to miss, then turn screw out until engine begins to roll, finally turn screw in slowly until engine fires smoothly. Final setting should be ½-1¼ turns of the screw out from the inner seated position. Readjust throttle stopscrew for correct idling speed.

Accelerating Pump Setting—Not adjustable.

Fast Idle:—Integral type. Built-in carburetor.

For complete data, refer to Carburetion Equip. Index.

Setting—Turn fast idle screw in until .030" throttle opening secured with choke valve closed and screw contacting highest step of fast idle cam (with throttle stopscrew set for 6 MPH. hot or slow idle speed, clearance between end of screw and stop on carburetor body should be .030").

Accelerator Linkage Adjustment:—Must be set for correct 'throttle-cracking' action for starting. To adjust, disconnect starter cable (to prevent cranking), fully depress starting switch pedal, loosen locknut on eccentric pin on starter shift lever, use offset screwdriver and adjust pin to give .070" clearance between throttle lever stopscrew and stop on carburetor body (with fast idle screw contacting highest step of fast idle cam in fast idle position), tighten locknut.

Automatic Choke:—Carter Climatic Control.

For complete data, refer to Carburetion Equip. Index.

Choke Setting—Set at center index mark.

CARB. EQUIPMENT

Air Cleaner:—AC #1528974 oil-wetted type Std. Heavy duty oil-bath type Optl.

Fuel Pump:—AC Type AJ #1523895 Combination fuel-and-vacuum pump mounted on special adapter, AC #1523903, which has additional operating linkage.

For complete data, refer to Carburetion Equip. Index.

Gasoline Gauge:—AC Electric type. #1515358 (dash unit), #1515492 (tank unit).

For complete data, refer to Carburetion Equip. Index.

BATTERY

BATTERY:—**Delco Model 17E-1.** 6 volt, 17 plate, 115 ampere hour capacity (20 hour rate).
Starting Capacity—137 amperes for 20 minutes.
Zero Capacity—300 amperes for 4.3 minutes. Five second voltage—4.4 volts.
Grounded Terminal—Negative (—) grounded to starter frame. When radio installed, install ground straps as follows: Transmission to frame. Engine to body at dash. Muffler to frame.
Dimensions—Length 19 5/16". Width 4". Height 9".
Location—Left side under engine hood.

Police Battery—Delco Model 19E-1. 6 volt, 19 plate, 125 Ampere Hour Capacity (20 hour rate).
Starting Capacity—150 amperes for 20 minutes.
Grounded Ter. & Location—Same as 17E-1 above.

STARTER

Delco-Remy Model 1107907. Armature No. 1867897.
Drive—Manual pinion shift and overrunning clutch.
Rotation—Counter-clockwise at commutator end.
Brush Spring Tension—24-28 ounces.
Cranking Engine—140-150 amperes, 5 v. (summer).

Performance Data

Torque	R.P.M.	Volts	Amperes
0 ft. lbs.	6000	5.0	60
15 "	Lock	3.0	600

Removal:—Flange mounted on left front face of flywheel housing. To remove take on flange mounting screws.

Starting Switch:—No. 820052. Mounted on starter. Operated by pedal-operated pinion shift lever.

GENERATOR

STANDARD

Delco-Remy Model 1100009. Armature No. 1866789. Fixed third brush control with external vibrating voltage regulator. Ventilated by fan on drive pulley.
Charging Rate Adjustment—See Regulator data.
NOTE—Third brush fixed in place for maximum output and should not be disturbed.
Maximum Charging Rate—As given in table below. To check charging rate, connect test ammeter in charging line at regulator 'BAT' terminal, voltmeter between 'BAT' terminal and ground, ground 'F' terminal to eliminate regulator action.

Performance Data

	Amperes	Volts	R.P.M.
Cold	26-30	8.0	3400
Hot	25-28	8.0	3600

Rotation—Counter-clockwise at commutator end.
Brush Spring Tension—25 oz.(main), 17(3rd brush).
Field Current—2.3-2.6 amperes at 6.0 volts.

Removal:—Pivot mounted at left front of engine. To remove, take out pivot bolts and clamp bolt.

Belt Adjustment:—Swing generator out until belt deflection midway between generator and fan pulleys is ¾" with light pressure.

GENERATOR

SPECIAL EQUIPMENT

Delco-Remy Model 934-F (for City Police Cars), 1102657 (State Police). Used with Double Core Type Voltage and Current Regulators 5599 (934-F), 5872 (1102657). ***Refer to 1938 Oldsmobile Eight L-38 pages for complete data on these Generators and Regulators.***

Other Types—Models 1105851 or 1105856 (State Police). Used with new type Single Core Voltage & Current Regulator. ***Refer to 1940 Oldsmobile Eight pages for data on these Generators and Regulators.***

REGULATOR

Delco-Remy Model 5858. "Double Core" Voltage Regulator (No 'IGN' Terminal). Cutout Relay and vibrating type Voltage Regulator in case on engine side of dash.

For complete data, refer to Electrical Equipment Index.

Cutout Relay

Cuts In—6.3-6.9 volts, 825 R.P.M. (generator).
Cuts Out—0-4.0 amperes discharge current.
Contact Gap—.020" **Air Gap**—.020" (closed).

NOTE—Relay compensated for temperature. Closing voltage same hot and cold.

Voltage Regulator

Setting—7.5-7.9 volts (70°F), 7.4-7.6 volts (150°). Regulator over-compensated for temperature and must be checked at these points.

Adjustment—Connect ammeter in charging line at regulator 'BAT' terminal, voltmeter between 'BAT' terminal and ground. Operate generator at 2800-3000 R.P.M., adjust charging current to 8-10 amperes (use variable rheostat or AVR set), adjust regulator by bending spring hanger at lower end of armature spring slightly for setting shown above. CAUTION—Regulator cover must be in place when tests made. Do not operate generator on open-circuit.

Contact Gap—.020". **Contact Spring Tension**—3.5 oz.

Air Gap—.063" between armature and center of core with armature down so fibre bumper just touches stop, .010" between fibre bumper and stop with armature up.

LIGHTING

LIGHTING:—**Headlamps**—Guide Multi-beam, pre-focused type with upper and lower beams controlled by selector switch on toeboard.

C NTINUED ON NEXT PA E

CONTINUED FR M PRECEDING PAGE

Headlamp Adjustment—With upper beams lighted, aim each headlamp so that hot spot centered on horizontal line drawn 3" below lamp-center height, and on vertical line directly ahead of the lamp-center. Adjusting screw for vertical movement located at bottom of lamp body to rear of lense retainer, screw for sidewise motion under plug on side of lamp body toward engine.

Beam Indicator—At top of speedometer dial. Lighted whenever upper or driving beams in use.

Switches

Lighting—D-R. No. 1994006.
Beam Selector—D-R. No. 1997002.
Stop Light—D-R. No. 476-U.

Bulb Specifications

Position	Candlepower	Mazda No.
Headlamps	32-21	2320
Parking, Instrument	1½	55
Glove Compt., Indicator	1	51
License Plate	3	63
Stop & Tail	21-3	1154
Dome	6	81

MISC. ELECTRICAL

THERMOSTATIC RELAY:—On lighting switch (part of switch assembly. Remains closed with current of 25 amperes but opens within 2 minutes with current of 38 amperes at 70° F. Not adjustable.

HORNS:—Klaxon. Model K26-H Type 2253 Single horn Std., Model K33-H No. 1999503 (low note), 1999504 (high note) blended tone, twin horns Optl. Twin horns operated by relay.

Horn Type	Current (at 6 volts)	Air Gap
2253	6.5-8.5 amperes	.025-.029"
1999503 (l w note)	10-12 amperes	.044-.048"
1999504 (high note)	9-12 amperes	.035-.039"

Horn Relay:—D-R. Model 271-A, 1116775.
Contact Gap—.020". **Air Gap**—.015" (closed).
Closing Voltage—2.3-3.5 volts.

ENGINE

ENGINE HOOD NOTE:—To raise hood, turn handle at bottom of grille, raise hood slightly and release safety catch.

OIL PAN REMOVAL: *See Oldsmobile Shop Notes.*

ENGINE SPECIFICATIONS:—8 cylinder, 'L' head.
Bore—3¼". **Stroke**—3⅞".
Displacement—257.1 cu. ins. **Rated HP**—33.8.
Developed Horsepower—110 HP. (Std. Hd.), 105 HP. (Optl. LC. Hd.) at 3600 R.P.M.
Compression Ratio—6.2-1 Std., 5.8-1 Optl.
Compression Pressure—152 lbs. (Std. Hd.), 125 lbs. (Optl. Hd) at 1000 R.P.M. or approximately 104-114 lbs. at cranking speed for Std. head.
See Oldsmobile Shop Notes for cylinder head servicing.
Vacuum Reading—Steady 17" min. at 6 MPH.

PISTONS:—Aluminum alloy, 'T' slot, cam ground type with hard oxide bearing surface.
Weight—15.75 ozs. (stripped). **Length**—3 15/16".
Removal—Pistons and rods removed from above.
Clearance—Top .026". Skirt .0013-.0018".
Replacement Pistons:—Finished pistons (pins fitted) .003", .005", .010", .015", .030" oversize. Same wt. as std.
Fitting New Pistons:—Insert .002" x ½" x 12" feeler between piston and cylinder wall on valve side with piston (pin out) inverted and 'T' slot on opposite side from feeler. Pull to withdraw feeler must be 4-11 lbs. (piston and block at 70°F.—low lbs. pull below 70°, high lbs. above 70°).
Installing Pistons:—Mark 'V-S' on head to valves (slot away from valves). Pin hole offset 3/32" to left.

PISTON RINGS:—2 compression (tapered. O.D. .001" larger at bottom), 2 oil control rings per piston, all above pin.
NOTE—Install comp. rings with mark TOP to top.

Ring	Width	End Gap	Side Clearance
Compr.	.0925-.0935"	.009-.014"	.001-.003"
Oil	.1860-.1865"	.009-.014"	.001-.0025"

Replacement Rings:—.010", .020", .030" oversize.

PISTON PIN:—**Diameter**—.8554-.8557". **Length** 2 31/32". Pin locked in 1 piston boss by lockscrew. Free end slotted (allows boss to slide on pin). Bosses plated.
Pin Fit in Piston—.0001" loose to .0002" tight in plain boss end, .0002-.0005" tight in lock boss end.
Pin Fit in Rod Bushing—Clearance .0003-.0006".
Fitting Pins—*See Oldsmobile Shop Notes.*

CONNECTING ROD:—**Length** 7 13/16". **Weight** 28.0 ozs. (complete except less bearing inserts).
Crankpin Journal Diameter—2.123-2.124".
Lower Bearing—Removable steel-backed, babbitt.
Clearance—.0005-.0025". **Sideplay**—.0055-.0105".
Bearing Adjustment:—None. Replace bearings.
Installing Rods:—Oil spit hole in lower bearing upper half to valves. Grooves in rod and cap bolt boss on part number side must be matched. Ground bolts used (tighten to 30-35 ft. lbs. with J-1264 torque wrench).

CRANKSHAFT:—5 bearing. 8 integral counterweights.
Journal Diameters—#1, 2.478-2.479"; #2, 2.5405-2.5415"; #3, 2.603-2.604"; #4, 2.6655-2.6665"; #5, 2.6855-2.6865".
Bearings—Removable steel-backed, babbitt-lined. Upper and lower halves interchangeable.
Clearance—.001-.003" (#1, 2, 3, 4), .0005-.002" (#5).
Bearing Adjustment:—None (no shims). Replace bearings. Do not file caps. Tighten bolts to 135-145 ft. lbs. with J-1264 torque wrench. **Endplay**—.004-.008". *See Oldsmobile Shop Notes for main bearing removal, end thrust and oil seal data.*

CAMSHAFT:—5 bearing. Non-adjustable chain drive.
Journal Diameters—#1, 2.0600-2.0595"; #2, 1.9975-1.9970"; #3, 1.9350-1.9345"; #4, 1.8725-1.8720"; #5, 1.8100-1.8095".
Bearings—Bronze bushings. **Clearance** .0015-.0035".
End Thrust:—Spring-loaded steel plunger in front of camshaft bearing against steel plate on chain cover.
Timing Chain:—Link-Belt #365. Width 1". Pitch .500". Length 47 links or 23½". *See Oldsmobile Shop Notes for front end sheet metal assembly removal.*
Camshaft Setting:—Mesh chain with sprocket marks adjacent and in line with a straightedge across the shaft centers (or use Gauge HM-408-0).

VALVES:—

	Head Diameter	Stem Diameter	Length
Intake	1 9/16"	.3415-.3425"	5 51/64"
Exhaust	1 27/64"	.3410-.3418"	5 51/64"

	Seat Angl	Lift	Stem Clearance
Intake	30°	.286"	.00175-.00375"
Exhaust	45°	.313"	.00245-.00425"

Valve Guides:—Length 3 7/32" (¼" shorter at top over '38. May be used on '37 and '38 models). Press guides in so top end ⅞" below top of block (Tool J-1042). Ream to .34425-.34525".

Valve Springs:—Free length 2⅝". Damper used in top of each spring.

	Spring Pressure	Length
Valve Closed	50½ lbs.	2 1/4"
Valve Open	95½ lbs.	1 15/16"

Valve Lifters:—Mushroom type. Body Diam. .6235-.6240". Serviced by installing lifters furnished .001", .0015", .002", .005", .010" O,S. **Clearance** .0003-.0007".
NOTE—Lifter holes have bearing-ized finish. Fit lifters without reaming hole wherever possible.

VALVE TIMING

Tappet Clearance:—.008" Intake, .011" Exh. hot.
Valve Timing:—See Camshaft Setting above.
Intake Valves—Open at TDC. Close 35° ALDC.
Exhaust Valves—Open 45° BLDC. Close 10° ATDC.
These figures correct with tappet clearance of .0124" Intake and .0155" Exhaust.
Valve Timing Check—Set tappet clearance #1 intake valve at .0124". This valve should open with piston on top dead center (.000") when flywheel mark 'TDC/' (NOT steel ball insert) lines up with pointed end of the inspection hole cover screw in left front face of flywheel housing.

LUBRICATION

LUBRICATION:—Pressure (gear type oil pump on right of engine). *See Oldsmobile Shop Notes for pump data.*
Normal Oil Pressure:—28-33 lbs.
Oil Pressure Regulator:—On pump. Opens at 27 lbs. Non-adjustable type.
Crankcase Capacity:—6 quarts.

COOLING

COOLING SYSTEM:—**Capacity**—24 quarts.
Water Pump:—Packless, sealed bearing type.
See Water Pump Section for complete data.
Thermostat:—Harrison. In cylinder head outlet.
Setting—Starts to open 152° F. Fully open 173° F.
Temperature Gauge:—AC #1510796, 1510830 RHD.
See Miscellaneous Section for complete data.

CLUTCH

CLUTCH:—Borg & Beck Model 10A7. Cover Assembly No. 897 (up to Eng. No. 318499), #927 (after Eng. No. 318499). Single plate, dry disc type.
See Clutch Section for complete data.
See Oldsmobile Shop Notes for data on late 1940 type Clutch Release Bearing with Lubrication Fitting.
Facings—Moulded-woven, 2 required. Inside Diameter 6" (897), 7" (927), Outside Diameter 10" (all), Thickness .125" (all).
Adjustment:—Pedal free movement 1-1½" (adjusting clevis and locknut on link at clutch fork).
NOTE—Arm on auxiliary shaft has 2 holes for pedal push rod link. Use front hole only.
Removal:—Remove transmission (see data below) mark clutch and flywheel, take out six mounting screws in cover flange. NOTE—Install two mounting screws with long shank in second hole on each side of locating dowel when installing clutch.

TRANSMISSION

TRANSMISSION:—Own make. All helical gear, constant-mesh, synchro-mesh (second & high), sliding gear (low & reverse) with new remote shift control. *See Transmission Section for complete data.*

Transmission Control:—Oldsmobile 'Handi-shift' type. *See Transmission Section for complete data.*

Removal:—Disconnect lower control rod at transmission and selector cable from cable anchor bracket, unscrew cable from shaft, remove selector shaft lever (with helper springs) and speedometer cable. Remove propeller shaft (disconnect rear U-joint pull shaft out), remove clutch housing underpan & reinforcing plate for access to 2 lower transmission mounting bolts & nuts, remove 2 mtg. screws at top. *See Oldsmobile Shop Notes for re-inforcing plate data.*

SELF-SHIFTING TRANSMISSION

SELF-SHIFTING TRANSMISSION:—Optional. *See Transmission Section for complete data.*

UNIVERSALS

UNIVERSAL JOINTS:—Mechanics Type 2C. Roller bearing type. 2 used (3 with Self-Shift Trans.). *See Universals Section for complete data.*

Propeller Shaft Center Bearing:—On cars with Self-Shift trans. *See Oldsmobile Shop Notes for data.*

REAR AXLE

REAR AXLE:—Own make. Semi-floating, hypoid gear type with torque taken through 2 support arms. *See Rear Axle Section for complete data.*

Ratio—4.3-1 Std. 3.636-1 Self-Shift Tr. 4.55-1 Mt.

Backlash—.004-.008". Screw adjustment.

Removal:—Disconnect drive shaft at rear universal, (do not disengage spline joint at transmission), remove axle shafts (see below), remove capscrews on carrier flange, pull carrier assembly out.

Axle Shaft Removal—Hoist rear of car, remove wheel, brake drum and 4 nuts securing backing plate, remove static collector, and loosen bearing retainer (avoid shifting backing plate so as not to damage brake line). Pull shaft (Puller J-942).

Do not drag shaft on seal. Secure backing plate with one nut. **Wheel Bearing Adjustment**—None.

Rear Suspension:—Coil springs with 2 support arms. *See Rear Axle Section for complete data.*

SHOCK ABSORBERS

SHOCK ABSORBERS:—Delco. Front—Model 1947-C (right), 1947-D (left). Rear—1751-U (right), 1751-T (left). Double acting, hydraulic type. *See Shock Absorber Section for complete data.*

FRONT SUSPENSION

Front Suspension:—Independent, linked parallelogram type with coil springs. *See Front Suspension Section for complete data.*
Kingpin Inclination—4°51'10".
Caster—0-¾° reverse.
Camber—⅛-1°. Adjustable.
Toe In—⅛-3/16". Adjust each tie rod.
Steering Geometry (Toe-out on Turns)—Inner wheel turned 23° plus or minus ½°. Outer wheel 20°.

STEERING GEAR

Steering Gear: Saginaw Worm-and-Roller type with steering linkage with idler arm on right frame rail. *See Steering Gear Section for complete data.*

BRAKES

BRAKES:—Service. Bendix hydraulic, duo-servo, single anchor type with eccentric adjustment. Hand lever applies rear service brakes. *See Brake Section for complete data.*
Drums—Cast-iron. Diameter 12".
NOTE—Drum turn down limit .030" cut.
Lining—Primary—molded. Secondary—woven and compressed. Width 1¾". Thickness 3/16". Length—Primary 8 27/32" (front), 10 3/32" (rear); Secondary 12 61/64" (all).
Clearance—.010. at heel and toe of each shoe.
Hand Brake:—See Service Brakes above.

HOOD LOCK, FRONT END SHEET METAL ASSEMBLY & OIL PAN REMOVAL:—*See Oldsmobile Shop Notes.*

MODEL IDENTIFICATION

SERIAL NUMBER:—On left frame side member under hood. 1st No. as follows:

	F-40	G-40
Lansing, Mich.	F-703001	G-355001
Linden, N. J.	LF-556001	LG-108001
South Gate, Calif.	CF-515001	CG- 16001

ENGINE NUMBER:—First number G-79001 (F & G-40), GR-3001 (RHD). On boss on left side of cylinder block behind water pump. NOTE—Cars with Hydra-matic drive carry prefix 'GA' instead of 'G'.

TUNE-UP

COMPRESSION:—**Ratio**—6.1-1 Std. 5.61-1 Optl. **Pressure**—146 lbs. (Std. Hd.), 120 lbs. (Optl. LC. Hd.) at 1000 RPM. or approximately 102-112 lbs. at cranking speed (100 RPM Summer) for Std. head.

VACUUM READING:—Steady 17" min. at 6 MPH.

FIRING ORDER: 1-5-3-6-2-4. See diagram.

SPARK PLUGS: AC Type 45. 14 mm. Metric. **Gaps**—.040".

IGNITION: See Coil, Condenser, and Distributor. Breaker Gap—.020". **Cam Angle**—35° Closed. **Automatic Advance**—Starts at 250 RPM. Maximum 14° at 1850 RPM. (Distr. degrees & RPM). **Vacuum Advance**—10° (distr.) with 15½-18½" vac.

IGNITION TIMING: See Ignition Timing. Std. Setting—TDC. Flywheel mark (steel ball) aligned with insp. hole pointer (left side housing).

CARBURETION: See Carburetor & Carb. Equipment. Idle Setting—Idle screw ½-1½ turns open. Idle speed 6 MPH (425 RPM Std. trans., 375 RPM Hydra-Matic).

Float Level—⅜" from projection on cover to top of soldered seam at front end of float with needle valve seated (invert to check).

Accelerating Pump—Lower Hole (Normal Setting).

Fuel Pump Pressure: 4 lbs. maximum.

MANIFOLD HEAT CONTROL:—Automatic thermostatic coil type. See that valve operates freely. When installing thermostatic coil, wind coil up 105° (approx. 1/3 revolution) at room temperature.

VALVES: See Valve Timing. Tappet Clearance—.008" Int., .011" Exh. warm.

STARTING: See Battery, Starter, Generator, Regulator.

IGNITION

Ignition Switch:—Delco-Remy No. 1116290 (F-40), 1116273 (G-40), 1116289 (G-40 RHD). Switch connected to coil by armored cable. ***Ignition Lock***—Briggs & Stratton. B & S No. 85208. Key Series—8000 to 9499. Groove—No. 15.

COIL: Delco-Remy Model 1115129. On dash. **Ignition Current**—2.0 amperes idling, 4.5 stopped.

CONDENSER: Delco-Remy Part No. 1865972. Capacity—.18-.25 microfarad.

DISTRIBUTOR: Delco-Remy 647-F. Single breaker 6 lobe cam, full automatic advance with auxiliary vacuum spark control and Octane Selector.

NOTE—Ground lead #1879140 now used between breaker point plate and housing.

Breaker Gap—.020". Limits .018-.024".

Cam Angle or Dwell—35° closed, 25° open (distr.).

Breaker Arm Spring Tension—17-21 ounces.

Rotation—Counter-clockwise viewed from above.

Automatic Advance

Distributor Degrees	R.P.M.	Engine Degrees	R.P.M.
Start	250	3	500
3	450	6	900
14	1850	28	3700

Vacuum Spark Control Model 681-P—Integral type (mounted on distributor cup, linked to breaker plate). Provides additional advance at speeds above idling except when engine accelerated or operated with wide open throttle when spark retarded by return spring in unit. Plunger travel 3/16" total.

Vacuum Advance

Distr. Degrees	Eng. Degrees	Vacuum (" of HG)
Start	0	5-7"
10	20	15.5-18.5"

Octane Selector—Adjustment at distributor permits 10° advance or retard from center '0' position. See Ignition Timing for adjustment directions.

Removal:—Distributor mounted on left side of engine. To remove, disconnect vacuum line, take out hold-down screw in advance arm.

IGNITION TIMING

IGNITION TIMING:—Standard Setting as follows. See Octane Selector for correction dependent on fuel used.

	Flywheel Degrees	Piston Position
All Engines	0° At TDC	.0000" TDC.

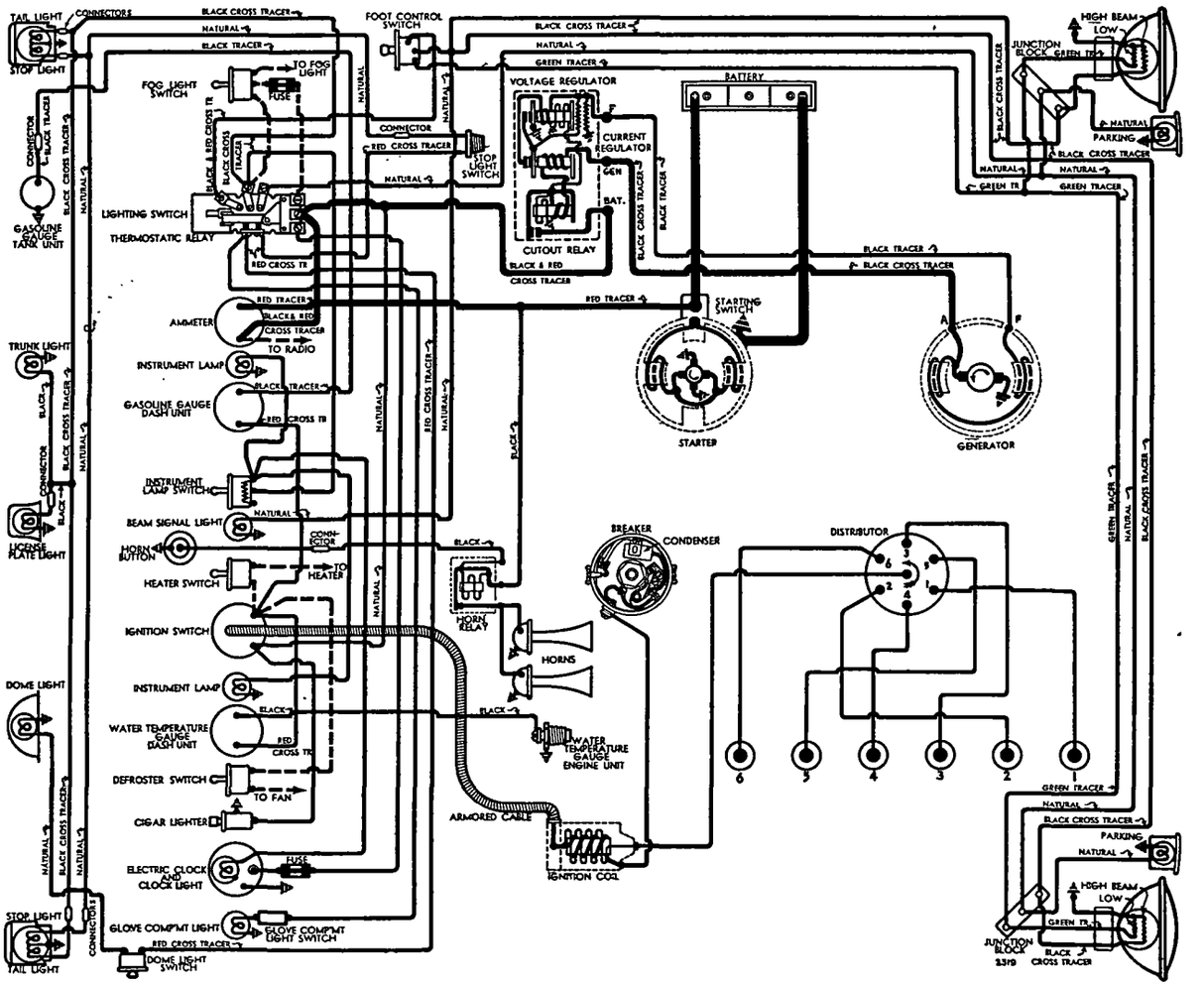

Timing (Using Synchroscope)—This method recommended by manufacturer. Clip synchroscope lead to #1 spark plug, direct light on flywheel through inspection hole in left front face of flywheel housing beside starter. Idle engine, loosen hold-down screw, center pointer on scale, tighten hold-down screw. Loosen advance arm clamp bolt, rotate distributor until timing mark (steel ball insert in flywheel) appears in line with pointer in inspection hole, tighten clamp bolt. Check Octane Selector setting.

Timing (Without Synchroscope)—Turn engine over to firing position for #1 piston with steel ball insert in flywheel in line with pointer in inspection hole in left front face of flywheel housing. Loosen hold-down screw in advance arm, center pointer on scale, tighten hold-down screw. Loosen advance arm clamp bolt, rotate distributor until contacts begin to open (use timing light connected between ignition terminal and ground and turn on ignition, light will go on as contacts open), tighten clamp bolt. Check Octane Selector setting.

Octane Selector Setting—Set for slight ping when accelerating engine with wide open throttle at speeds below 15 MPH. To adjust, loosen distributor hold-down screw, rotate distributor clockwise toward 'Adv.' end of scale (if no ping noted), counter-clockwise toward 'Ret' end of scale (if ping too severe). Check performance after making adjustment.

CARBURETOR

CARBURETION:—Carburetor—Carter Type WA-1, Models 466-S (Std.), 467-S (with Hydra-matic drive). 1¼" single barrel, downdraft type. #194 cast on face of flange.

For complete data, refer to Carburetor Index.

Hydra-matic Drive Car Note—Throttle linkage must be adjusted for correct transmission performance.

See Hydra-Matic Transmission article in Transmission Section for Throttle Linkage Adjustment procedure.

Idle Adjustment—With engine warm and running at slow idle speed (choke valve wide open, fast idle inoperative), set throttle stopscrew for 6 MPH idle speed (high gear—Conv. Trans.), 375 Engine R.P.M. Hydra-matic drive). Adjust idle adjusting screw until engine fires smoothly (½-1½ turns open—turn screw in for leaner mixture). Readjust idle speed.

Accelerator Pump Setting—Pump arm (under dust cover) has three holes for pump connector link engagement. Set as follows:

Lower (med. stroke)—Normal setting.
Inner (short stroke)—Hot temperature or premium fuels.
Outer (max. stroke)—Cold temperature or low-test fuels.

Float Level—⅜" from projection on cover to top of soldered seam at front end of float with needle valve seated (invert to check).

Fast Idle:—Integral type (built-in carburetor).

For complete data, refer to Carburetion Equip. Index.

Fast Idle Setting—Part of Climatic Control. Adjust by bending connecting link offset for ⅝" choke valve opening with stopscrew against (not on) first step of fast idle cam.

Accelerator Linkage Adjustment:—Must be set for correct 'throttle cracking' action for starting. To adjust, disconnect starter cable (to prevent cranking), fully depress starter switch pedal, loosen eccentric pin locknut, adjust pin to give .030" clearance between throttle stopscrew and high point of fast idle cam, tighten locknut.

Automatic Choke:—Carter Climatic Control.

For complete data, refer to Carburetion Equip. Index.

Choke Setting—Set coil housing 2 notches rich (466-S), center on index mark (467-S). Choke setting may be varied 2 notches.

CARB. EQUIPMENT

Air Cleaner:—AC #1528602 oil wetted type std.

Fuel Pump:—AC Type AJ #1537094 diaphragm type combination fuel-and-vacuum pump.

For complete data, refer to Carburetion Equip. Index.

Gasoline Gauge:—AC Electric type. #1515372 (dash unit), #1516206 (tank unit).

For complete data, refer to Carburetion Equip. Index.

BATTERY

BATTERY:—Delco Model 15E-1 or 15E-2. 6 volt, 15 plate, 100 ampere hour capacity (20 hour rate).

Starting Capacity—120 amperes for 20 minutes.

Zero Capacity—300 amperes for 3.5 minutes. Five second voltage—4.25 volts.

Dimensions—Length 19 5/16". Width 4". Height 9".

Grounded Terminal—Negative (—) grounded to starter motor housing.

Location—On left side under hood.

Police Battery:—Delco Model 19E-1. 6 volt. 19 plate, 130 ampere hour capacity (20 hour rate).

Starting Capacity—150 amperes for 20 minutes.

Zero Capacity—300 amperes for 5.3 minutes. Five second voltage—4.55 volts.

All other data as given above for 15E-1.

STARTER

Delco-Remy Model 1107007 (Std.), 1107034 (Cars with Hydra-matic Drive), 1107019 (RHD. Cars).
NOTE—Model 1107034 starter has provision for Hydra-matic Drive Interlock mounting. *See Oldsmobile Hydra-matic Drive article in Transmission Section for Starter Interlock Adjustment.*
Armature Number—1867897 (1107007 & 1107034), 810601 (1107019 RHD. starter).
See Electrical Equipment Section for recommended correction for burning of starter commutators.
Drive—Overrunning clutch (manual shift on 1107-007 & 1107034), Solenoid pinion shift (1107019).
Rotation—Counter-clockwise at commutator end.
Cranking Engine—125-135 amperes, 5 volts at 100 RPM (summer temperatures) for 1107007.
Brush Spring Tension—24-28 ounces.

Performance Data

Torque	R.P.M.	Volts	Amperes
0 ft. lbs	5000	5.0	65
12 "	Lock	3.37	525

Removal:—Mounted on left front face of flywheel housing. To remove, take out mounting screws.
Starting Switch (1107007 & 1107034):—No. 820052. Mounted on starter and operated by starting pedal.
Starting Switch (1107019):—Solenoid Switch type 1546 operated by pushbutton switch 1996008.
For complete data, refer to Electrical Equipment Index.

GENERATOR

Delco-Remy Model 1102664. Armature No. 1879002. (Std.), 1106403 (City Police), 1105851 or 1105856 (State Police). Two brush (shunt) type with voltage and current regulation.
Charging Rate Adjustment—No adjustment at generator. Charging rate controlled by Voltage Regulator and maximum output by Current Regulator.
See Regulator data following.
Maximum Charging Rate—33 amperes min. (hot or cold), 8.0 volts, 2400 RPM or approx. 20 MPH and above with load or discharged battery (Current Regulator setting). Actual charging rate controlled by Voltage Regulator and dependent on battery condition.

Performance Data Cold

	*Amperes	Volts	R.P.M.
1102664	30	8.0	1750
1106403	35	8.0	1040
1105851, 6	40	8.0	1850

*—Not maximum output—See Current Regulator.

Rotation—Counter-clockwise at commutator end.
Brush Spring Tension—25 ounces each.
Field Current—1.75-1.9 amperes (1102664), 1.77-2.0 amperes (1106403), 1.62-1.82 amperes (1105851, 6) at 6.0 volts.

Removal:—Pivot mounted at left front of engine. To remove, take out clamp and pivot bolts.
Belt Adjustment:—Swing generator out until belt deflection midway between generator and fan pulley is ¾" with light pressure on belt.

REGULATOR

Delco-Remy Model 1118201 (for 1102664 Generator), 1118229 (1106403 Gen.), 1118237 (1105851,6 Gen.). Single Core Type. Vibrating type voltage and current regulators in single case with Cutout Relay.
CAUTION—Check generator for grounded fields before changing regulator settings.
For complete data, refer to Electrical Equipment Index.

Cutout Relay

Cuts In—6.2-6.7 volts (hot), 600 Gen. RPM.
Cuts Out—0-4.0 amperes discharge current.
Contact Gap—.020" (same for both sides).
Air Gap—.020" (with points just closed).

Voltage Regulator

Setting—7.2-7.4 volts hot (1118201), 7.0-7.2 volts hot (1118229 & 1118237) at operating temperature
To Check—Connect ammeter in charging line at 'BAT' regulator terminal, voltmeter between 'BAT' terminal and ground. Operate generator at approx. 3000 RPM, adjust charging rate to 8-10 amperes (use variable rheostat or 'AVR' set). With regulator hot, retard generator speed until cut-out relay points open, then increase speed to approx. 3000 RPM and check hot voltage setting (above) with cover in place.
To Adjust—Change regulator armature spring tension slightly by bending lower spring hanger for light (left) spring (or one spring if both alike) only. If further adjustment required, see Single Core Regulator article in Electrical Equipment Section for Heavy (or other spring) adjustment.
Air Gap—.070" between center of core and armature with contacts just closed.

CONTINUED N NEXT PAGE

CONTINUED FR M PRECEDIN PA E

Current Regulator

Setting—34-36 amperes (1118201, 1118229), 38-40 amperes (1118237) hot (at operating temperature).

To Check—Remove cover, connect short jumper from voltage regulator frame to upper contact support bracket (shorting out Voltage Regulator). Connect ammeter in charging line at 'BAT' regulator terminal. Turn on lights and accessories, operate generator and increase speed until output remains stationary (run until hot). Check setting with regulator at hot operating temperature.

To Adjust—Change regulator armature spring tension slightly by bending lower spring hanger for one spring. If further adjustment required see Single Core Regulator article in Electrical Equipment Section for adjustment of other spring.

Air Gap—.080" (check same as Voltage Regulator).

LIGHTING

LIGHTING:—Headlamps—Guide 'Sealed Beam' type.

For complete data, refer to Electrical Equipment Index.

Headlamps Adjustment—Aim upper beam straight ahead with center of hot spot 3" below lamp center height.

Beam Indicator—Red light on speedometer face. Lighted whenever Country (upper) beam in use.

Switches

Lighting—Delco-Remy 1995009.

Beam Selector—Delco-Remy 1997002,1997004 (RHD).

Stop Light—Delco-Remy 1997725.

Bulb Specifications

Position	Candlepower	Mazda No.
Headlamps	Sealed	Beam
Parking, Instrument	1½	55
Glove Comp't., Beam Indic.	1	51
License Plate	3	63
Stop & Tail	21-3	1154
Dome	6	81

MISC. ELECTRICAL

THERMOSTATIC RELAY:—Delco-Remy. On lighting switch. Contacts remain closed with 30 amperes, open in 3 minutes with 42 amps. at 70°. Not adj.

HORNS:—Delco-Remy Model K-33-H. No. 1999561 (low note), 1999562 (high note). Vibrator type, blended tone, operated by horn relay.

Type	Current (at 6 volts)	Air Gap
1999561 (Low Note)	19-21 amperes	.047-.052"
1999562 (High Note)	18-20 amperes	.039-.044"

Horn Relay:—Delco-Remy Model 1116775.

Contact Gap—.020". **Air Gap**—.015" (closed).

Contacts Close—2.75-4.0 volts.

ENGINE

ENGINE SPECIFICATIONS:—6 cylinder, 'L' head.

Bore—3 7/16". **Stroke**—4⅛".

Displacement—229.7 cu. ins. **Rated HP**—28.4.

Developed Horsepower—95 HP (Std. hd.), 90 HP (Optl. LC. hd.) at 3300 RPM.

Compression Ratio—6.1-1 Std., 5.61-1 Optl. LC hd.

Compression Pressure—146 lbs. (Std. hd.), 120 lbs. (Optl. LC. hd.) at 1000 RPM or approximately 102-112 lbs. at cranking speed.

Vacuum Reading—Steady 17" min. at 6 MPH.

See Oldsmobile Shop Notes for Cylinder Head Servicing.

PISTONS:—Aluminum alloy, T-slot, cam ground type with hard oxide bearing surface.

Weight—17.44 ozs. (stripped). **Length**—4 1/32".

Removal—Pistons and rods removed from above.

Clearance—Top .026". Skirt .0013-.0018".

Replacement Pistons:—Finished pistons (pins fitted) .003", .005", .010", .015", .030" oversize. Same wt.as std.

Fitting New Pistons:—Check piston for size with micrometer (pin removed) 90° from pin bosses ⅜" below lower ring groove and ⅜" from bottom of skirt. Insert .002" X ½" feeler between piston (pin removed) and cylinder wall on valve side with piston inverted and T-slot on opposite side from feeler. Pull to withdraw feeler must be 4 to 11 lbs. (piston & block at 70°—low limit below 70°, high above).

Installing Pistons:—Mark 'V-S' on head toward valves (slot away from valves). Pin hole offset 3/32" to left.

PISTON RINGS:—2 compression (tapered, O.D. .001" larger at bottom), 2 oil control rings per piston, all above pin. All rings are coated type.

NOTE—Install compr. rings with mark TOP up.

Ring	Width	End Gap	Side Clearance
Compr.	.0925-.0935"	.008-.018"	.001-.003"
Oil Cont.	.1860-.1865"	.007-.015"	.001-.0025"

Replacement Rings:—.010", .020", .030" oversize.

PISTON PIN:—Diameter—.8554-.8557". **Length**—3 5/32". Pin locked in one piston boss by lockscrew (opposite end slotted). Pin bosses are plated and must not be reamed. Standard size pins only serviced.

Pin Fit in Piston—.0001" loose to .0002" tight (plain boss end), .0002-.0005" tight (lock boss end).

Pin Fit in Rod Bushing—.0003-.0006" clearance.

See Oldsmobile Shop Notes for Pin Fitting directions.

CONNECTING ROD:—Length—7 13/16". **Weight**—28.0 ozs. (complete except less bearing inserts).

Crankpin Journal Diameter—2.123-2.124".

Lower Bearing—Removable steel-backed, babbitt. **Clearance**—.0005-.0025". **Sideplay**—.0055-.0105".

Bearing Adjustment:—None. Replace bearings.

Installing Rods:—Oil spit hole at lower end toward valves and grooves on rod and cap bolt bosses (part number side) matched. Special ground bolts used.

See Oldsmobile Shop Notes for Connecting Rod Bolt Nut change and installation data.

CRANKSHAFT:—4 bearing, 7 integral counterweights.

Journal Diameters—#1, 2.478-2.479"; #2, 2.5405-2.5415"; #3, 2.6655-2.6665"; #4, 2.6855-2.6865".

Bearings—Removable, steel-backed, babbitt. Upper and lower halves interchangeable except #1 (front). **Clearance**—.0005-.002" (rear), .001-.003" (all others).

Bearing Adjustment:—None (no shims). Replace bearings. Do not file caps. **Endplay**—.004-.008".

NOTE—Undercut bearing cap bolts (#412550) used at No. 3 cap for improved holding capacity. Always install these special cap bolts at #3 bearing.

See Oldsmobile Shop Notes for Main Bearing Removal, End Thrust and Oil Seal data.

CAMSHAFT:—4 bearing. Non-adjustable chain drive.

Journal Diameters—#1, 1.9970-1.9975"; #2, 1.9345-1.9350"; #3, 1.8720-1.8725"; #4, 1.8095-1.8100".

Bearings—Bronze bushings. **Clearance** .0015-.0035".

End Thrust:—Spring-loaded steel plunger in front end of camshaft bears against steel plate on chain cover.

Timing Chain:—Whitney No. 411239. Width 1". Pitch .500" (½"). Length 47 links or 23½".

Camshaft Setting:—Mesh chain with sprocket marks adjacent and in line with a straightedge across the shaft centers (or use Tool HM-408-0).

VALVES:—	Head Diameter	Stem Diameter	Length
Intake	1 9/16"	.3415-.3425"	5 51/64"
Exhaust	1 27/64"	.3410-.3418"	5 51/64"

	Seat Angle	Lift	Stem Clearance
Intake	30°	.303"	.00175-.00375"
Exhaust	45°	.298"	.00245-.00425"

Valve Guides:—Intake and exhaust guides same. Press guides in so top end ⅞" below top of block (Tool J-1042 positions guide correctly in block). Ream to .34425-.34525" inside diam. (no taper).

Valve Springs:—Same spring used on both valves and on Six and Eight engines. Damper used in top of each spring.

	Spring Pressure	Spring Length
Valve Closed	50½ lbs.	2¼"
Valve Open	95½ lbs.	1 15/16"

Valve Lifters:—Mushroom type. Lifter holes in block. Body Diam. .6235-.6240". Furnished .001", .0015", .002", .005",. 010" oversize. **Clearance**—.0005-.0008".

NOTE—Lifter holes have bearing-ized finish. Fit lifters without reaming holes wherever possible.

VALVE TIMING

Tappet Clearance:—.008"Int., .011"Exh. Engine warm.

NOTE—Self-locking tappet screws are used.

See Oldsmobile Shop Notes for Fender Plate removal.

Valve Timing:—See Camshaft Setting above.

Intake Valves—Open 5° BTDC. Close 45° ALDC.

Exhaust Valves—Open 45° BLDC. Close 5° ATDC.

Valve Timing Check—With .0124" tappet clearance, #1 intake valve should open with piston 5° (.0163") before top dead center when a point on the flywheel approximately 2 teeth before TDC mark (steel ball insert) lines up with pointer (inspection hole on left face of housing). Reset tappet clear. .008" hot.

LUBRICATION

LUBRICATION:—Pressure (gear type pump on right of engine). ***See Oldsmobile Shop Notes for Oil Pump data.***

Normal Oil Pressure:—28-33 lbs.

Oil Pressure Regulator:—On pump, opens at 27 lbs. Non-adjustable type.

Crankcase Capacity—5 quarts.

COOLING

COOLING SYSTEM:—Capacity—18 quarts.

Water Pump:—Packless, sealed ball-bearing type.

See Water Pump Section for complete data.

Thermostat:—Harrison. In cylinder head outlet.

Setting—Starts to open at 152°F. Fully open 173°.

Temperature Gauge:—AC Electric #1510918 (dash), #1510772 (engine unit).

See Miscellaneous Section for complete data.

CLUTCH

CLUTCH (STD. TRANS.):—Borg & Beck Model 9A7 with 'Borglite' driven member. Marked #924 on cover. Single plate, dry disc type. New steel and asbestos composition pressure plate baffle used.

See Clutch Section for complete data.

See Oldsmobile Shop Notes for data on late 1940 type Clutch Release Bearing with Lubrication Fitting.

G-40 Note—Steel reinforcing plate (same as 1939)

between clutch housing and underpan used on first 6488 cars. Must be removed to take out clutch.
Facings—Spiral wound (spirally grooved) molded woven, 2 used. Inside Diam. 6". O.D. 9¼". ⅛" thick.

Pedal Adjustment:—Free travel 1-1½" (adjusting clevis and locknut on link at clutch fork).

Removal:—Remove transmission (see data below), mark clutch and flywheel, take out six mounting screws in cover flange. NOTE—Install two mounting screws with long shank in second hole on each side of locating dowel when installing clutch.

TRANSMISSION

TRANSMISSION (STD.):—Own Make. All helical gear, constant-mesh, synchro-mesh (second & high), sliding gear (low & reverse) with new remote shift. **G-40 Note**—First 6488 cars use 15" transmission extension (same as '39), later cars 11" extension.
See Transmission Section for complete data.

Transmission Control:—Oldsmobile 'Handi-shift' type.
See Transmission Section for complete data.

Removal:—Disconnect shift and selector rods and speedometer cable at transmission, remove propeller shaft (disconnect rear U-joint pull shaft out), remove clutch housing underpan (and reinforcing plate if used) for access to 2 lower transmission mounting bolts & nuts, remove 2 mtg. screws at top.
See Oldsmobile Shop Notes for re-inforcing plate data.

HYDRA-MATIC DRIVE

HYDRA-MATIC DRIVE (OPTL.):—Own Make—Consists of fluid coupling & automatic transmission.
See Transmission Section for complete data.

UNIVERSALS

UNIVERSAL JOINTS:—Mechanics 2C. Roller bearing.
See Universals Section for complete data.

NOTE—Slip joint formed at rear of transmission ahead of front U-joint (driveshaft 1 piece type).

REAR AXLE

REAR AXLE:—Own Make. Semi-floating, hypoid gear type with torque taken through 2 support arms.
See Rear Axle Section for complete data.

Ratio—4.1-1 (F40), 4.3-1 (G40), 4.55-1 (Optl). Ring gear ratio stamped on top side of carrier.

Backlash—.004-.008". Screw adjustment.

Removal:—Disconnect drive shaft at rear universal, (do not disengage spline joint at transmission), remove axle shafts (see below), remove capscrews on carrier flange, pull carrier assembly out.

Axle Shaft Removal:—Hoist rear end, remove wheel, brake drum, backing plate mounting nuts, static collector and loosen bearing retainer (do not allow backing plate to shift to damage brake line). Pull shaft and bearing with puller J-942 (do not allow shaft to drag on oil seal), replace one backing plate nut. **Wheel Bearing Adjustment**—None.

Rear Suspension:—Quadri-coil type (support arms).
See Rear Axle Section for complete data.

SHOCK ABSORBERS

SHOCK ABSORBERS:—Delco. Front—Model 1947-C (right), 1947-D (left). **Rear**—1754-L (right), 1754-M (left). Double acting, hydraulic types.
See Shock Absorber Section for complete data.

FRONT SUSPENSION

Front Suspension:—Independent, linked parallelogram type with coil springs.
See Front Suspension Section for complete data.

Kingpin Inclination—4°51'10".

Caster—0-¾° negative. Adjustable.

Camber—Negative ¼° to Pos. ¾°. Adjustable.

Toe In—1/16-⅛". Adjust each tie rod.

Steering Geometry (Toe-out on Turns)—Inner wheel turned 23° ± ½°. Outer wheel 20°.

STEERING GEAR

Steering Gear: Saginaw Worm-and-Roller type with steering linkage with idler arm on right frame rail.
See Steering Gear Section for complete data.

BRAKES

BRAKES:—Service. Bendix hydraulic, duo-servo, single anchor type without eccentric adjustment. Hand lever applies rear wheel service brakes.
See Brake Section for complete data.

Wheel Cylinder Bore—Front wheel 1 3/32". Rear 1".

Drums—Cast-iron. Diameter—11".

Lining—Molded. Width 1¾". Thickness 3/16".

Length—Primary Shoe 9 11/32", Secondary 11 31/32".

Clearance—.015" both ends of secondary shoe (with primary shoe forced out against drum).

Hand Brake:—See Service Brakes above.

MISC. MECHANICAL

Power Operated Convertible Top: Vacuum Power type.
See Miscellaneous Section for complete data.

HOOD LOCK, FRONT END SHEET METAL ASSEMBLY AND OIL PAN REMOVAL:—*See Oldsmobile Shop Notes.*

MODEL IDENTIFICATION

SERIAL NUMBER:—On left frame side member under hood near generator. First number L-242001 (Lansing), CL-190501 (Calif.), LL-202001 (Linden, N.J.).

ENGINE NUMBER:—On boss on left side of cylinder block behind water pump. First number L-334001, LR-1801 (RHD). NOTE—Cars with Hydramatic Drive carry prefix 'LA' instead of 'L'.

TUNE-UP

COMPRESSION:—Ratio—6.2-1 Std. 5.8-1 Optl. Pressure—152 lbs. (Std. Hd.), 125 lbs. (Optl. LC. Hd.) at 1000 RPM. or approx. 104-114 lbs. at cranking spd. of 100 R.P.M. (summer temperatures).

VACUUM READING:—Steady 17" min. at 6 MPH.

FIRING ORDER: 1-6-2-5-8-3-7-4. See diagram.

SPARK PLUGS: AC Type 45. 14 mm. Metric. Gaps—.030".

IGNITION: See Coil, Condenser, and Distributor. Breaker Gap—.015". Cam Angle—31° Closed. Automatic Advance—15° max. at 2000 RPM (distr.). Vacuum Advance—7½° (distr.) with 14-17"vacuum.

IGNITION TIMING: See Ignition Timing. Std. Setting—2° BTDC. Flywheel mark (steel ball) aligned with insp. hole pointer (left side housing). CAUTION—Time #1 cylinder on this engine.

CARBURETION: See Carburetor & Carb. Equipment. Idle Setting—Set idle screws ½-1¼ turns open. Idle speed 6 MPH (or 3rd gear Hydra-Matic Trans.). Float Level—⅜" from top of float to cover with needle valve seated. Accelerating Pump—Not adjustable. Fuel Pump Pressure: 4 lbs. maximum.

MANIFOLD HEAT CONTROL:—Automatic thermostatic coil type. See that valve operates freely. When installing thermostatic coil, wind coil up 105° (approx. 1/3 revolution) at room temperature.

VALVES: See Valve Timing. Tappet Clearance .008" Intake, .011" Exhaust, hot.

STARTING: See Battery, Starter, Generator, Regulator.

IGNITION

Ignition Switch:—Delco-Remy No. 1116273, 1116289 (RHD). Connected to coil by armored cable. Ignition Lock—Briggs & Stratton, B & S No. 85208. Key Series—8000 to 9499. Groove—No. 15.

COIL: Delco-Remy Model 1115129. On dash. Ignition Current—2.0 amperes idling, 4.5 stopped.

CONDENSER: Delco-Remy No. 1869704. Capacity—.18-.25 microfarad.

DISTRIBUTOR: Delco-Remy 1110802. Single breaker, 8 lobe cam, full automatic advance with auxiliary spark control and Octane Selector adjustment.

NOTE—New ground lead #1879140 used between breaker point plate and housing after first 1250 distributors. This lead cannot be used on earlier cars. For first 1250 distributors and earlier models use longer ground lead #1858574.

Breaker Gap—.015". Limits .0125-.0175".
Cam Angle or Dwell—31° closed, 14° open (distr.).
Breaker Arm Spring Tension—19-23 unces.
Rotation—Counter-clockwise viewed from above.

Automatic Advance

Distributor Degrees	Distributor R.P.M.	Engine Degrees	Engine R.P.M.
Start	300	2.5	600
3.5	500	7	1000
15	2000	30	4000

Vacuum Spark Control Model 681-R—Integral type (mounted on distributor cup, linked to breaker plate). Provides additional advance at speeds above idling except when engine accelerated or operated with wide open throttle when spark retarded by return spring in unit. Plunger travel 11/64" total.

Vacuum Advance

Distr. Degrees	Eng. Degrees	Vacuum (" of HG)
Start	0	5-7"
7.5	15	14-17"

Octane Selector—Adjustment at distributor. Permits 10° advance or retard from center '0' position. See Ignition Timing for adjustment directions.

Removal:—Distributor mounted on left side of engine. To remove, disconnect vacuum line, take out hold-down screw in advance arm.

IGNITION TIMING

IGNITION TIMING:—Standard setting as follows. See Octane Selector for correction dependent on fuel used.

	Flywheel Degrees	Piston Position
All Engines	2° BTDC	.002" BTDC.

IMPORTANT—Timing mark for #1 cylinder, not #6 cylinder as on previous models.

Timing (Using Synchroscope)—This method recommended by manufacturer. Clip synchroscope lead to #1 spark plug, direct light on flywheel through inspection hole in left front face of flywheel housing beside starter. Idle engine, loosen hold-down screw, center pointer on scale, tighten hold-down screw. Loosen advance arm clamp bolt, rotate distributor until timing mark (steel ball insert in flywheel) ap-

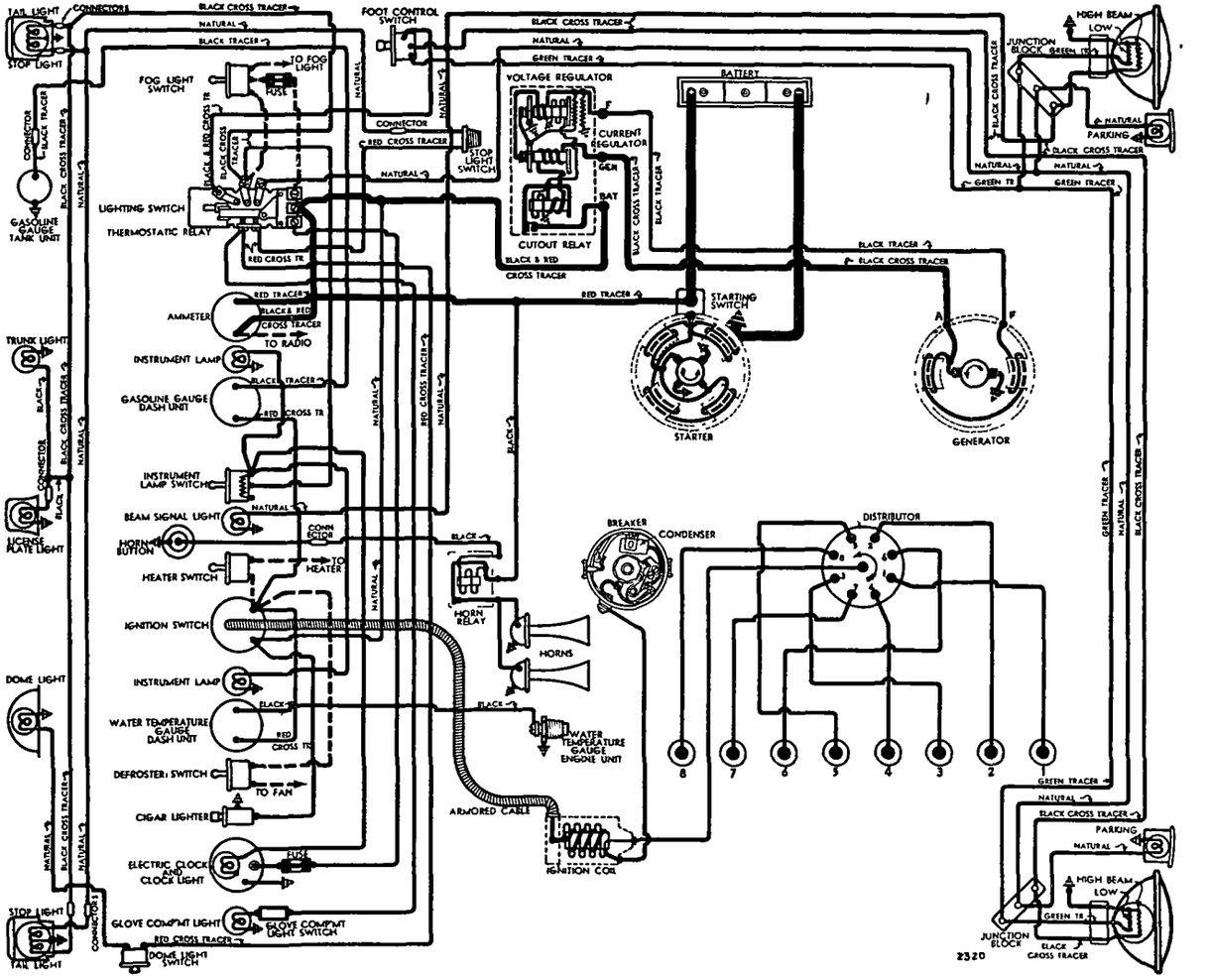

pears in line with pointer in inspection hole, tighten clamp bolt. Check Octane Selector setting.

Timing (Without Synchroscope)—Turn engine over to firing position for #1 piston with steel ball insert in flywheel in line with pointer in inspection hole in left front face of flywheel housing. Loosen hold-down screw in advance arm, center pointer on scale, tighten hold-down screw. Loosen advance arm clamp bolt, rotate distributor until contacts begin to open (using timing light connected between ignition terminal and ground and turn on ignition, light will go on as contacts open), tighten clamp bolt. Check Octane Selector setting.

Octane Selector Setting—Set for slight ping when accelerating engine with wide open throttle at speeds below 15 MPH. To adjust, loosen distributor hold-down screw, rotate distributor clockwise toward 'Adv' end of scale (if no ping noted), counter-clockwise toward 'Ret' end of scale (if ping too severe). Check performance after making adjustment.

CARBURETOR

CARBURETION:—Carburetor—Carter Type WDO, Model 389-S (Conventional transmission), Model 471-S (with Hydra-matic drive). 1¼" dual downdraft type. #192 cast on face of flange.

For complete data, refer to Carburetor Index.

Hydra-matic Drive Car Note—Throttle linkage must be adjusted for correct transmission performance.

See Hydra-Matic Transmission article in Transmission Section for Throttle Linkage Adjustment procedure.

Idle Adjustment—With engine warm and running at slow idle speed (choke valve wide open, fast idle inoperative), set throttle stopscrew for 6 MPH idle speed (high gear—Conv. Trans.), 375 Engine R.P.M. Hydra-matic drive). Adjust idle adjusting screw for each barrel (in succession) until engine fires smoothly (½-1¼ turns open—turn screws in for leaner mixture). Readjust idle speed.

Float Level—⅜" from top of float to gasket seat on cover with needle valve seated (invert to check).

NOTE—This setting supersedes former setting of 9/32" (also 13/32" setting to correct hard starting).

Accelerator Pump Setting—Not adjustable.

Fast Idle—Integral type (built-in carburetor).

For complete data, refer to Carburetion Equip. Index.

Fast Idle Setting—Adjust fast idle screw to give .030" clearance between throttle stopscrew and stop (choke valve closed, stopscrew set for 6 MPH idle). NOTE—On cars with Hydra-matic drive, setting should be .025".

Accelerator Linkage Adjustment:—Must be set for correct 'throttle cracking' action for starting. To adjust, disconnect starter cable (to prevent cranking), fully depress starter switch pedal, loosen eccentric pin locknut, adjust pin to give .070" clearance between throttle lever stopscrew and stop on carburetor body (with fast idle screw contacting highest step of fast idle cam—fast idle position), tighten lockscrew.

Automatic Choke:—Carter Climatic Control.

For complete data, refer to Carburetion Equip. Index.

Choke Setting—Set at center index mark.

CARB. EQUIPMENT

Air Cleaner:—AC #1528974 oil wetted type std.

Fuel Pump:—AC Type AJ #1523895 combination fuel-and-vacuum pump mounted on special adapter, AC #1523903, which has additional operating linkage.

For complete data, refer to Carburetion Equip. Index.

Gasoline Gauge:—AC Electric type. #1515372 (dash unit), #1516206 (tank unit).

For complete data, refer to Carburetion Equip. Index.

BATTERY

BATTERY:—Delco Model 17E-1. 6 volt, 17 plate, 115 amperes hour capacity (20 hour rate).

Starting Capacity—137 amperes for 20 minutes.

Zero Capacity—300 amperes for 4.3 minutes. Five second voltage—4.40 volts.

Grounded Terminal—Negative (—) terminal grounded to starter motor housing.

Dimensions—Length 19 5/16". Width 4". Height 9".

Location—Left side under engine hood.

Police Battery:—Delco Model 19E-1. 6 volt, 19 plate, 130 amperes hour capacity (20 hr. rate).

Starting Capacity—150 amperes for 20 minutes.

Zero Capacity—300 amperes for 5.3 minutes. Five second voltage—4.55 volts.

All other data as given above for 17E-1.

STARTER

Delco-Remy Model 1107907 (Std.), 1107922 (With Hydra-matic Drive). Armature No. 1867897 (All).

See Electrical Equipment Section for recommended correction for burning of starter commutators.

NOTE—Model 1107922 has provision for Hydra-matic Drive Interlock mounting. ***See Oldsmobile Hydra-matic Drive article in Transmission Section for Starter Interlock Adjustment.***

Drive—Overrunning clutch (manual pinion shift).

Rotation—Counter-clockwise at commutator end.

Brush Spring Tension—24-28 ounces each.

Cranking Engine—140-150 amperes, 5 volts, 100 RPM (summer temperatures).

Performance Data

Torque	R.P.M.	Volts	Amperes
0 ft. lbs.	6000	5.0	60
15 "	Lock	3.0	600

Removal:—Mounted on left front face of flywheel housing. To remove, take out mounting screws.

Starting Switch—No. 820052. Mounted on starter. Operated by starting pedal.

GENERATOR

Delco-Remy Model 1102664. Armature No. 1879002. (Std.), 1106403 (City Police), 1105851 or 1105856 (State Police). Two brush (shunt) type with voltage and current regulation.

Charging Rate Adjustment—No adjustment at generator. Charging rate controlled by Voltage Regulator and maximum output by Current Regulator. ***See Regulator data following.***

Maximum Charging Rate—33 amperes min. (hot or cold), 8.0 volts, 2400 RPM or approx. 20 MPH and above with load or discharged battery (Current Regulator setting). Actual charging rate controlled by Voltage Regulator and dependent on battery condition.

Performance Data Cold

	*Amperes	Volts	R.P.M.
1102664	30	8.0	1750
1106403	35	8.0	1040
1105851, 6	40	8.0	1850

*—Not maximum output—See Current Regulator.

Rotation—Counter-clockwise at commutator end.

Brush Spring Tension—25 ounces each.

Field Current—1.75-1.9 amperes (1102664), 1.77-2.0 amperes (1106403), 1.62-1.82 amperes (1105851, 6) at 6.0 volts.

Removal:—Pivot mounted at left front of engine. To remove, take out clamp and pivot bolts.

Belt Adjustment:—Swing generator out until belt deflection midway between generator and fan pulley is ¾" with light pressure on belt.

REGULATOR

Delco-Remy Model 1118201 (for 1102664 Generator), 1118229 (1106403 Gen.), 1118237 (1105851, 6 Gen.), 'Single Core' Type. Vibrating type voltage and current regulators in a single case.

CAUTION—Check generator for grounded fields before changing regulator settings.

For complete data, refer to Electrical Equipment Index.

Cutout Relay

Cuts In—6.2-6.7 volts (hot), 600 Gen. RPM.

Cuts Out—0-4.0 amperes discharge current.

Contact Gap—.020" (same for both sides).

Air Gap—.020" (with points just closed).

Voltage Regulator

Setting—7.2-7.4 volts hot (1118201), 7.0-7.2 volts hot (1118229 & 1118237) at operating temperature

To Check—Connect ammeter in charging line at 'BAT' regulator terminal, voltmeter between 'BAT' terminal and ground. Operate generator at approx. 3000 RPM, adjust charging rate to 8-10 amperes (use variable rheostat or 'AVR' set). With regulator hot, retard generator speed until cut-out relay points open, then increase speed to approx. 3000 RPM and check hot voltage setting (above) with cover in place.

To Adjust—Change regulator armature spring tension slightly by bending lower spring hanger for light (left) spring (or one spring if both alike) only.

If further adjustment required, see Single Core Regulator article in Electrical Equipment Section for Heavy (or other spring) adjustment.

Air Gap—.070" between center of core and armature with contacts just closed.

Current Regulator

Setting—34-36 amperes (1118201, 1118229), 38-40 amperes (1118237) hot (at operating temperature).

To Check—Remove cover, connect short jumper from voltage regulator frame to upper contact support bracket (shorting out Voltage Regulator). Connect ammeter in charging line at 'BAT' regulator terminal. Turn on lights and accessories, operate generator and increase speed until output remains stationary (run until hot). Check setting with regulator at hot operating temperature.

CONTINUED ON NEXT PAGE

CONTINUED FROM PRECEDING PAGE

To Adjust—Change regulator armature spring tension slightly by bending lower spring hanger for one spring. If further adjustment required see Single Core Regulator article in Electrical Equipment Section for adjustment of other spring.

Air Gap—.080" (check same as Voltage Regulator).

LIGHTING

LIGHTING:—Headlamps—Guide 'Sealed Beam' type. *For complete data, refer to Electrical Equipment Index.*

Headlamps Adjustment—Aim upper beam straight ahead with center of hot spot 3" below lamp center height.

Beam Indicator—Red light on speedometer face. Lighted whenever Country (upper) beam in use.

Switches

Lighting—Delco-Remy 1995009.

Beam Selector—Delco-Remy 1997002,1997004 (RHD).

Stop Light—Delco-Remy 1997725.

Bulb Specifications

Position	Candlepower	Mazda No.
Headlamps	Sealed Beam	
Parking, Instrument	1½	55
Glove Comp't., Beam Indic.	1	51
License Plate	3	63
Stop & Tail	21-3	1154
Dome	6	81

MISC. ELECTRICAL

THERMOSTATIC RELAY:—Delco-Remy. On lighting switch. Contacts remain closed with 30 amperes, but open in 3 minutes with load of 42 amperes at 70°F. Not adjustable.

HORNS:—Delco-Remy Model K-33-H. No. 1999561 (low note), 1999562 (high note). Vibrator type, blended tone, operated by horn relay.

Type	Current (at 6 volts)	Air Gap
1999561 (Low Note)	19-21 amperes	.047-.052"
1999562 (High Note)	18-20 amperes	.039-.044"

Horn Relay:—Delco-Remy Model 1116775.

Contact Gap—.020". **Air Gap**—.015" (closed).

Contacts Close—2.75-4.0 volts.

ENGINE

ENGINE SPECIFICATIONS:—8 cylinder, 'L' head.

Bore—3¼". **Stroke**—3⅞".

Displacement—257.1 cu. ins. **Rated HP**—33.8.

Developed Horsepower—110 HP (Std. Hd.), 105 HP (Optl. LC Hd.) at 3600 RPM.

Compression Ratio—6.2-1 Std. 5.8-1 Optl. LC Hd.

Compression Pressure—152 lbs. (Std. Hd.), 125 lbs. (Optl. LC Hd.) at 1000 RPM or approximately 104-114 lbs. at cranking speed for Std. head.

Vacuum Reading—Steady 17" min. at 6 MPH. *See Oldsmobile Shop Notes for Cylinder Head servicing.*

PISTONS:—Aluminum alloy, T-slot, cam ground type with hard oxide bearing surface.

Weight—16 ozs. (stripped). **Length**—3 15/16". **Removal**—Pistons and rods removed from above. **Clearance**—Top .026". Skirt .0013-.0018".

Replacement Pistons:—Finished pistons (pins fitted) .003", .005", .010", .015", .030" oversize. Same wt.as std.

Fitting New Pistons:—Check piston for size with micrometer (pin removed) 90° from pin bosses ⅜" below lower ring groove and ⅜" from bottom of skirt. Insert .002" X ½" feeler between piston (pin removed) and cylinder wall on valve side with piston inverted and T-slot on opposite side from feeler. Pull to withdraw feeler must be 4 to 11 lbs. (piston and block at 70°F.—low lbs. pull below 70°, high lbs. above).

Installing Pistons:—Mark 'V-S' on head toward valves (slot away from valves). Pin hole offset 3/32" to left.

PISTON RINGS:—2 compression (tapered, O.D. .001" larger at bottom), 2 oil control rings per piston, all above pin. Both oil ring grooves drilled for oil drains. All rings are coated.

NOTE—Install compr. rings with mark TOP up.

Ring	Width	End Gap	Side Clearance
Compr.	.0925-.0935"	.009-.014"	.001-.003"
Oil Cont.	.1860-.1865"	.009-.014"	.001-.0025"

Replacement Rings:—.010", .020", .030" oversize.

PISTON PIN:—Diameter—.8554-.8557". **Length** 2 31/32". Pin locked in one piston boss by lockscrew (opposite end slotted). Pin bosses are plated and must not be reamed. Standard size pins only serviced.

Pin Fit in Piston—.0001" loose to .0002" tight (plain boss end), .0002-.0005" tight (lock boss end).

Pin Fit in Rod Bushing—.0003-.0006" clearance. *See Oldsmobile Shop Notes for Pin Fitting directions.*

CONNECTING ROD:—Length—7 13/16". **Weight**—28.0 ozs. (complete except less bearing inserts).

Crankpin Journal Diameter—2.123-2.124".

Lower Bearing—Removable steel-backed, babbitt. Tangs on shells seat in notches on rod and cap.

Clearance—.0005-.0025". **Sideplay**—.0055-.0105".

Bearing Adjustment:—None. Replace bearings.

Installing Rods:—Oil spit hole at lower end toward valves and grooves on rod and cap bolt bosses (part number side) matched. Special ground bolts used. *See Oldsmobile Shop Notes for Connecting Rod Bolt Nut change and installation data.*

CRANKSHAFT:—5 bearing, 8 integral counterweights.

Journal Diameters:—#1, 2.478-2.479"; #2, 2.5405-2.5415"; #3, 2.603-2.604"; #4, 2.6655-2.6665"; #5, 2.6855-2.6865".

Bearings—Removable, steel-backed, babbitt. Upper and lower halves interchangeable except #1 (front).

Clearance—.0005-.002" (rear), .001-.003" (all others).

Bearing Adjustment:—None (no shims). Replace bearings. Do not file caps. **Endplay**—.004-.008". *See Oldsmobile Shop Notes for Main Bearing Removal, End Thrust and Oil Seal data.*

CAMSHAFT:—5 bearing. Non-adjustable chain drive.

Journal Diameters—#1, 2.0600-2.0595"; #2, 1.9975-1.9970"; #3, 1.9350-1.9345"; #4, 1.8725-1.8720"; #5, 1.8100-1.8095".

Bearings—Bronze bushings. **Clearance** .0015-.0035".

End Thrust:—Spring-loaded steel plunger in front end of camshaft bears against steel plate on chain cover.

Camshaft Setting:—Mesh chain with sprocket marks adjacent and in line with a straightedge across the shaft centers (or use Tool HM-408-0).

Timing Chain:—Link Belt No. 365. Width 1". Pitch .500". Length 47 links or 23½".

VALVES:—	Head Diameter	Stem Diameter	Length
Intake	1 9/16"	.3415-.3425"	.5 51/64"
Exhaust	1 27/64"	.3410-.3418"	.5 51/64"

	Seat Angle	Lift	Stem Clearance
Intake	30°	.286"	.00175-.00375"
Exhaust	45°	.313"	.00245-.00425"

Valve Guides:—Intake and exhaust guides same. Press guides in so top end ⅞" below top of block (Tool J-1042 positions guide correctly in block). Ream to .34425-.34525" inside diam. (no taper).

Valve Springs:—Same spring used on both valves and on Six and Eight engines. Damper used in top of each spring.

	Spring Pressure	Spring Length
Valve Closed	50½ lbs.	2¼"
Valve Open	95½ lbs.	1 15/16"

Valve Lifters:—Mushroom type. Lifter holes in block. Body Diam. .6235-.6240". Furnished .001", .0015", .002", .005", .010" oversize. **Clearance**—.0003-.0007".

NOTE—Lifter holes have bearing-ized finish. Fit lifters without reaming holes wherever possible.

VALVE TIMING

Tappet Clearance:—.008"Int., .011"Exh. Engine warm.

NOTE—Self-locking tappet screws are used. *See Oldsmobile Shop Notes for Fender Plate removal.*

Valve Timing:—See Camshaft Setting above.

Intake Valves—Open at TDC. Close 35° ALDC.

Exhaust Valves—Open 45° BLDC. Close 10° ATDC.

Valve Timing Check—With .0124" tappet clearance #1 intake valve should open with piston at top dead center (.000") when flywheel mark 'TDC/' (NOT steel ball insert) lines up with pointer (inspection left face of housing). Reset tappet clear. .008" hot.

LUBRICATION

LUBRICATION:—Pressure (gear type pump on right f engine). *See Oldsmobile Shop Notes for Oil Pump data.*

Normal Oil Pressure:—28-33 lbs.

Oil Pressure Regulator:—On pump, opens at 27 lbs. Non-adjustable type.

Crankcase Capacity:—6 quarts.

COOLING

COOLING SYSTEM:—Capacity—21 quarts.

Water Pump:—Packless, sealed ball-bearing type. *See Water Pump Section for complete data.*

Removal—Remove fan belt, 3 pump mounting capscrews, and lower radiator hose. Lift pump out.

Thermostat:—Harrison. In cylinder head outlet.

Setting—Starts to open at 152°F. Fully open 173°.

Temperature Gauge:—AC Electric #1510918 (dash), #1510772 (engine unit). *See Miscellaneous Section for complete data.*

CLUTCH

CLUTCH (STD. TRANS.):—Borg & Beck 10A7 with 'Borglite' driven member. Marked #927 on cover. Single plate, dry disc type with sheet metal pressure plate baffle. *See Clutch Section for complete data.*

See Oldsmobile Shop Notes for data on late 1940 type Clutch Release Bearing with Lubrication Fitting.

Facings—Spiral wound (spirally grooved) molded woven, 2 used. Inside Diam. 7". O. D. 10". ⅛" thick.

Pedal Adjustment:—Free travel 1-1½" (adjusting clevis and locknut on link at clutch fork).

Removal:—Remove transmission (see data below), mark clutch and flywheel, take out six mounting screws in cover flange. NOTE—Install two mounting screws with long shank in second hole on each side of locating dowel when installing clutch.

TRANSMISSION

TRANSMISSION (STD.):—Own Make. All helical gear, constant-mesh, synchro-mesh (second & high), sliding gear (low & reverse) with new remote shift.
See Transmission Section for complete data.

Transmission Control:—Oldsmobile 'Handi-shift' type.
See Transmission Section for complete data.

Removal:—Disconnect shift and selector rods and speedometer cable at transmission, remove propeller shaft (disconnect rear U-joint pull shaft out), remove clutch housing underpan (and reinforcing plate if used) for access to 2 lower transmission mounting bolts & nuts, remove 2 mtg. screws at top.
See Oldsmobile Shop Notes for re-inforcing plate data.

HYDRA-MATIC DRIVE

HYDRA-MATIC DRIVE (OPTL.):—Own Make—Consists of fluid coupling & automatic transmission.
See Transmission Section for complete data.

UNIVERSALS

UNIVERSAL JOINTS:—Mechanics 2C. Roller bearing.
See Universals Section for complete data.

NOTE—Slip joint formed at rear of transmission ahead of front U-joint (driveshaft 1 piece type).

REAR AXLE

REAR AXLE:—Own Make. Semi-floating, hypoid gear type with torque taken through 2 support arms.
See Rear Axle Section for complete data.

Ratio—4.3-1 Std. 4.55-1 Optl. Ring and pinion gear ratio stamped on upper outside of carrier.

Backlash—.004-.008". Screw adjustment.

Removal:—Disconnect drive shaft at rear universal, (do not disengage spline joint at transmission), remove axle shafts (see below), remove capscrews on carrier flange, pull carrier assembly out.

Axle Shaft Removal:—Hoist rear end, remove wheel, brake drum, backing plate mounting nuts, static collector and loosen bearing retainer (do not allow backing plate to shift to damage brake line). Pull shaft and bearing with puller J-942 (do not allow shaft to drag on oil seal), replace one backing plate nut. **Wheel Bearing Adjustment**—None.

Rear Suspension:—Quadri-coil type (support arms).
See Rear Axle Section for complete data.

SHOCK ABSORBERS

SHOCK ABSORBERS:—Delco. Front—Model 1947-C (right), 1947-D (left). **Rear**—1754-L (right), 1754-M (left). Double acting, hydraulic types.
See Shock Absorber Section for complete data.

FRONT SUSPENSION

Front Suspension:—Independent, linked parallelogram type with coil springs.
See Front Suspension Section for complete data.

Kingpin Inclination—4°51'10".

Caster—0-¾° negative. Adjustable.

Camber—Negative ¼° to Pos. ¾°. Adjustable.

Toe In—1/16-⅛". Adjust each tie rod.

Steering Geometry (Toe-out on Turns)—Inner wheel turned 23° ± ½°. Outer wheel 20°.

STEERING GEAR

Steering Gear: Saginaw Worm-and-Roller type with steering linkage with idler arm on right frame rail.
See Steering Gear Section for complete data.

BRAKES

BRAKES:—Service. Bendix hydraulic, duo-servo, single anchor type without eccentric adjustment. Hand lever applies rear wheel service brakes.
See Brake Section for complete data.

Wheel Cylinder Bore—Front wheel 1 3/32". Rear 1".

Drums—Cast-iron. Diameter—11".

NOTE—Drum turn down limit .030" cut.

Lining—Molded type. Width 2". Thickness 3/16". Length—Primary Shoe 9 11/32", Secondary 11 31/32".

Clearance—.015" both ends of secondary shoe (with primary shoe forced out against drum).

Braking Power—54½% front, 45½% rear.

Hand Brake:—See Service Brakes above.

MISC. MECHANICAL

Power Operated Convertible Top: Vacuum Power type.
See Miscellaneous Section for complete data.

HOOD, FRONT END SHEET METAL ASSEMBLY, FENDER CAP, & OIL PAN REMOVAL:—*Refer to Oldsmobile Shop Notes for removal procedure.*

MODEL IDENTIFICATION

Model Name	Model 1941	1942	Car Series
Special Six	F-41	F-42	66
Dynamic Cruiser Six	G-41	G-42	76
Custom Cruiser Six	H-41		96

SERIAL NUMBER:—On plate on upper left corner of dash in engine compartment. First Nos.

1941 Starting Serial Numbers

Series	Lansing	Linden, N. J.	California
66	66-1001	66L1001	66C1001
76	76-1001	76L1001	76C1001
96	96-1001	96L1001	96C1001

1942 Starting Serial Numbers

Series	Lansing	Linden, N.J.	California
66	66-86001	66L12001	66C9001
76	76-75001	76L11001	76C7001

ENGINE NUMBER: Top left side behind water pump. First number G-225001 ('41), G-424001 ('42). **Hydra-Matic Cars**—Carry number prefix 'GA'.

TUNE-UP

COMPRESSION: Ratio and pressure as follows:

Ratio	Pressure at 1000 RPM	At 100 RPM
1941—6.1-1	138 lbs.	115 ± 10 lbs.
1942—6.5-1	150 ± 5 lbs.	102 ± 10 lbs.

1941 Export Head—Ratio 5.74-1.

VACUUM READING:—Steady 17" min. at idling speed.

FIRING ORDER:—1-5-3-6-2-4. See diagram.

SPARK PLUGS:—AC No. 44. 14 MM. Metric. **Gaps**—.040".

IGNITION: See Coil, Condenser, and Distributor. Breaker Gap—.020". **Cam Angle**—35° Closed. **Automatic Advance**—Starts at 250 RPM. Maximum 14° at 1850 RPM. (647-F), 12° at 1600 RPM. (1110213). Distributor degrees and RPM.

Vacuum Advance—Max. advance as follows:

Distributor	Vacuum Unit	Distr. ° & Vacuum
647-F	681-P	10° at 15.5-18.5"
1110213	1116035	6° at 14-16.8"

IGNITION TIMING: See Ignition Timing. Std. Setting—TDC. Flywheel mark (steel ball) aligned with housing insp. hole pointer (left side). **Hydra-Matic Cars**—Set distributor so contacts open with piston .001" before top dead center.

CARBURETION: See Carburetor & Carb. Equipment. Idle Setting—Idle screw ½-1½ turns open. Idle speed 425 RPM (Std.), 375 RPM (Hydra-matic Drive).

Float Level—(504-S, 481-S). ½" from projection on underside of bowl cover to top of seam on free end of float (invert to check).
(523-S) 9/16" from top of float at free end to lower face of bowl cover.
Accelerating Pump—Lower Hole—Normal Setting.
NOTE—No seasonal adjustment on 1942 523-S.
Fuel Pump Pressure: 4 lbs. maximum.

MANIFOLD HEAT CONTROL:—Thermostatic coil type. See that valve operates freely.
Setting—Coil wind-up should be 125° (approx. ⅓ turn) at room temperature. NOTE—To check valve for correct position on shaft, use feeler gauge in slot on rear end of valve shaft. With valve closed, gauge should contact stop pin (slot 6° to left or toward engine from up-and-down position) with ⅛" clearance between valve tip and manifold.

VALVES: See Valve Timing.
Tappet Clearance .008" Intake, .011" Exhaust, hot.

STARTING: See Battery, Starter, Generator, Regulator.

IGNITION

Ignition Switch: Delco-Remy 1116305 (F-41, H-41), 1116311 (G-41), 1116330 (F-42), 1116331 (G-42). Connected to coil by armored cable.
Ignition Lock—Briggs & Stratton No. 45792.
Key Series—8000 to 9499. Groove—No. 15.

COIL: Delco-Remy Model 1115129. On dash.
Ignition Current—2.0 amperes idling, 4.5 stopped.

CONDENSER: Delco-Remy Part No. 1869704.
Capacity—.18-.25 microfarad.

DISTRIBUTOR: Delco-Remy Model 647-F (for 1941 Cars), Model 1110213 (for 1942 Cars). Single breaker, 6 lobe cam, full automatic advance type with auxiliary vacuum spark control and Octane Selector
Breaker Gap—.020". Limits .018-.024".
Cam Angle or Dwell—35° closed, 25° open.
Breaker Arm Spring Tension—17-21 ozs.
Rotation—Counter-clockwise viewed from above.

Automatic Advance—647-F

Distributor Degrees	R.P.M.	Engine Degrees	R.P.M.
Start	250	3	500
3	450	6	900
14	1850	28	3700

Automatic Advance—1110213

Degrees	R.P.M.	Degrees	R.P.M.
Start	250	3	500
3	450	6	900
12	1600	24	3200

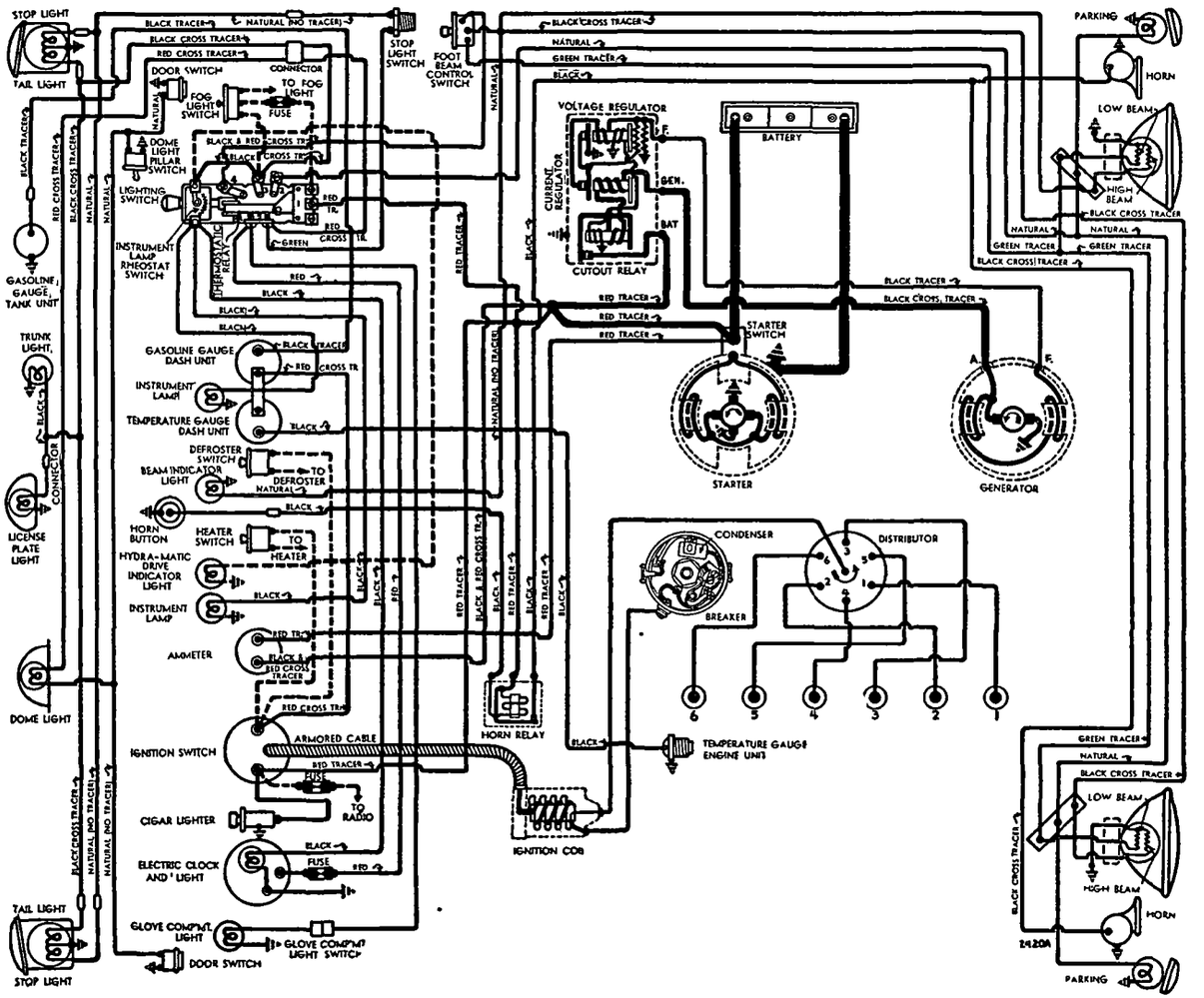

1941 M DELS

Vacuum Spark Control Model 681-P (for 1941 Cars), Model 1116035 (for 1942 Car Models). On distributor (integral type linked directly to breaker plate). Provides additional advance at speeds above idling except when engine accelerated or operated with wide open throttle when spark retarded by return spring within unit.

Plunger Travel—3/16" (681-P), 1/8" (1116035).

Vacuum Advance—681-P

Distr. Degrees	Eng. Degrees	Vacuum (" of HG)
Start	0°	5-7"
10°	20°	15.5-18.5"

Vacuum Advance—1116035

Distr. Degrees	Eng. Degrees	Vacuum (" of HG)
Start	0°	7.5-9.5"
6°	12°	14.6-16.6"①

①—At .103" travel.

Octane Selector—Adjustment permits 10° advance or retard from center '0' position. See Ignition Timing for adjustment directions.

Removal:—Distributor mounted on left side of engine. To remove, disconnect vacuum line, take out hold-down screw in advance arm.

IGNITION TIMING

IGNITION TIMING:—See Octane Selector Setting for correction dependent on fuel used.

	Flywheel Degrees Piston Position
Std. Trans. Cars	At TDC .000" TDC.
Hydra-Matic Trans.	.001" BTDC.

Timing (With Synchroscope)—Recommended method. Loosen hold-down screw in advance arm, center Octane Selector scale ('0' at indicator line), tighten hold-down screw. Clip synchroscope lead to #1 spark plug, direct synchroscope light on flywheel through inspection hole in left front face of housing above starter. Idle engine, loosen advance arm clamp bolt, rotate distributor until ignition mark (steel ball insert) on flywheel lines up with indicator on housing, tighten clamp bolt, check Octane Selector setting (below).

NOTE—On cars with Hydra-Matic drive, use dial indicator and set distributor so contacts open with piston .001" before top dead center.

Timing (Without Synchroscope)—Turn engine over to firing position for #1 piston with steel ball insert in flywheel at indicator in inspection hole in left front face of flywheel housing (or with piston .001" BTDC. on cars with Hydra-Matic drive). Loosen hold-down screw in advance arm, center pointer on scale ('0' mark at indicator), tighten hold-down screw. Loosen advance arm clamp bolt, rotate distributor until contacts begin to open, tighten clamp bolt and check Octane Selector setting.

Octane Selector Setting—Set for slight ping when accelerating engine with wide open throttle at speeds below 15 MPH. To adjust, loosen distributor hold-down screw, rotate distributor clockwise toward 'Adv' end of scale (if no ping noted), counter-clockwise toward 'Ret' end of scale (if ping too severe) one graduation at a time until correct performance secured.

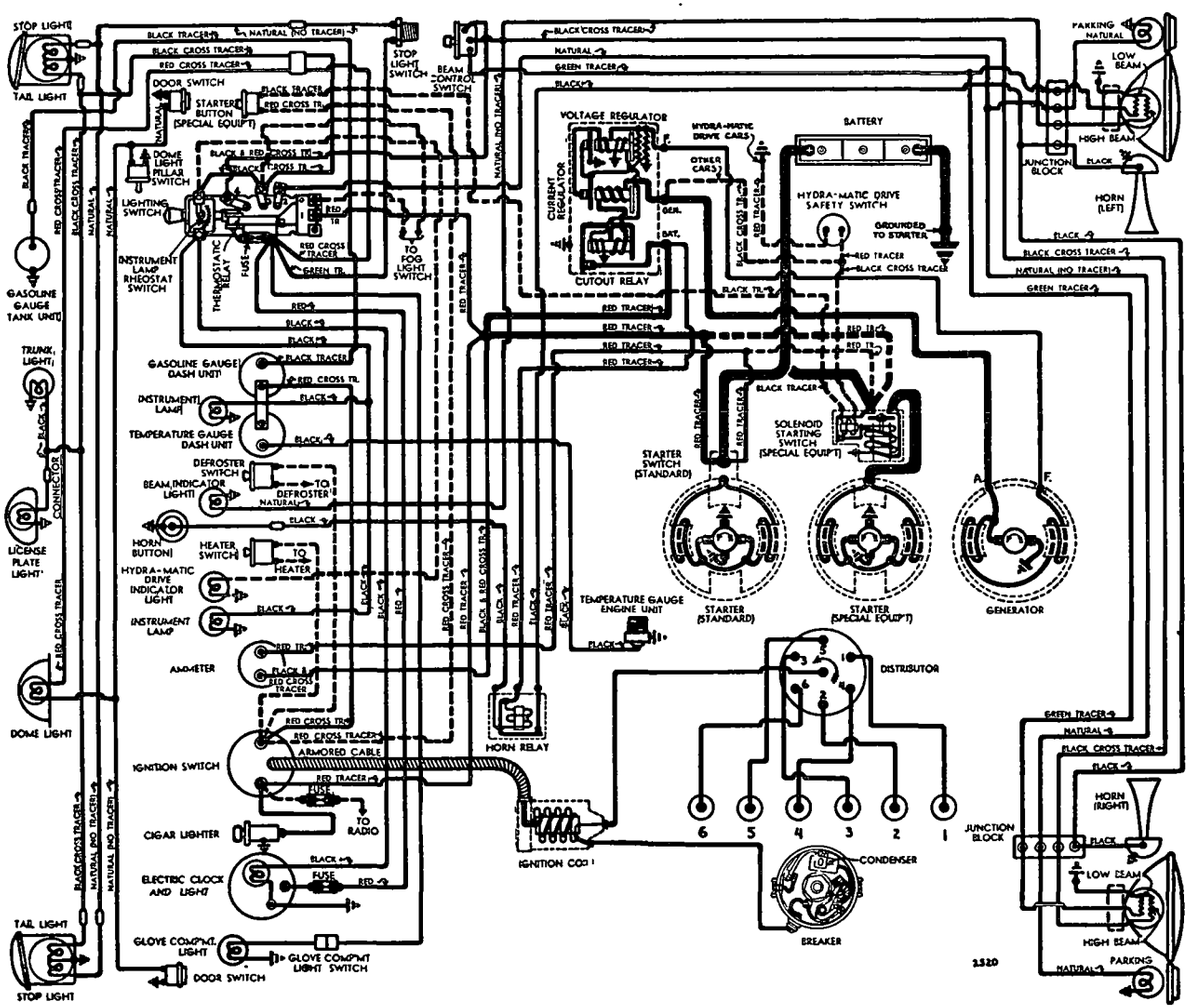

1942 MODELS

CARBURETOR

Model	Type	Size	Car Model
504-S	WA-1	1½"	1941 Conv. Trans.
481-S	WA-1	1½"	'41-42 Hydra-Matic
523-S	W1 Cast-iron	1½"	1942 Conv. Trans.

For complete data, refer to Carburetor Index.

Idle Adjustment—With engine warm so that choke valve wide open and fast idle inoperative, set throttle stopscrew for idle speed of 425 RPM. (Std), 375 RPM. (Hydra-Matic Drive cars). Adjust idle adjusting screw for smooth idle (screw should be ½-1½ turns open from inner seated position—turn screw in for leaner mixture). Recheck idle speed. ***See Hydra-Matic Transmission article in Transmission Section for Throttle Linkage Adjustment procedure.***

Accelerating Pump Setting—Pump arm (under dust cover) has three holes for pump connector link engagement (481-S, 504-S only). Set as follows:
Lower (Med. Stroke)—Normal all-year setting.
Inner (Min. Stroke)—Hot weather or High Alt.
Outer (Max. Stroke)—Cold weather, low-test fuel.

Float Level—(504-S, 481-S). ½" from projection on underside of bowl cover to top of seam on free end of float (invert to check).
(523-S) 9/16" from top of float at free nd to lower face of bowl cover.

Metering Rods & Jets—***See Carter Jet Table in Carburetor Section for complete data.***

Throttle Cracker Adjustment:—Must be set for correct throttle opening for starting. To adjust, disconnect starter cable at starter switch (for foot operated starters), disconnect coil lead to distributor (for solenoid operated starters), depress starter pedal or pushbutton to full down position (engine will be turning over on solenoid starter cars) to fully mesh starter pinion, loosen locknut and turn adjusting screw on accelerator bell-crank (screw contacts lug on lever linked to starter pinion shift lever) so that clearance between throttle stopscrew and highest step of fast idle cam is .0625-.0825"

Fast Idle:—Integral (built-in each carburetor).
For complete data, refer to Carburetion Equip. Index.

Setting (523-S)—Hold choke valve wide open and allow fast idle cam to drop free. Back off throttle stop screw until throttle valve closed and screw just clears low step of fast idle cam. Hold throttle valve closed, release chok valve. Choke will move fast idle cam until stopscrew rests against second position of cam. Bend offset portion of fast idle link (do not disturb cam) s choke valve opening is 5/8".

CONTINUED ON NEXT PA E

C NTINUED FR M PRECEDING PAGE

(481-S, 504-S)—With fast idle cam in slow idle position, close choke valve until throttle stopscrew is against (not on) first step of cam, bend connector rod offset so choke valve opening is 5/8".

Automatic Choke:—Carter Climatic Control. *For complete data, refer to Carburetion Equip. Index.*

Setting—Set coil housing at index mark.

CARB. EQUIPMENT

Air Cleaner:—AC No. 1529861 oil-wetted type. Std. 1529899 H.D. oil-bath Opti. Replacement Filter Element Type #3 (1529861), #8 (1529899).

Fuel Pump:—AC 'AJ' No. 1537358—Exch. No. 536. Fuel & Vacuum Type. **Pressure**—4 lbs. maximum. *For complete data, refer to Carburetion Equip. Index.*

Gasoline Gauge: AC Electric Type. Dash Unit Nos.: 1516298 ('41), 1516410 ('42). Tank Unit: 1516285. *For complete data, refer to Carburetion Equip. Index.*

BATTERY

BATTERY:—Delco Model 15E-2. 6 volt, 15 plate, 100 Ampere Hour Capacity (20 hour rate).

Starting Capacity—120 amperes for 20 minutes.

Zero Capacity—300 amperes for 3.5 minutes. Five second voltage 4.25 volts.

Grounded Terminal—Negative (—) to Starter.

Location—On left side in engine compartment.

Police Battery Delco Model 19E-1 or 19E-3. 6 volt, 19 plate, 130 Ampere Hour Capacity (20 hour rate).

Starting Capacity—150 amperes for 20 minutes.

Grounded Terminal and Location—Same as above.

STARTER

Delco-Remy Model	Armature Number	Switch Type	Used On:
1107034	1867897	Manual	'41-42 LHD.
1107050	1867897	Solenoid	'42 LHD & RHD
1107019	810601	Solenoid	'41 RHD

NOTE—All 1107034 (foot operated) starters provided with mounting holes for Hydra-Matic Drive Interlock mounting (holes plugged when Hydra-Matic Drive not used). On 1107050 (solenoid operated) starters, a Neutral Safety Switch is used on cars with Hydra-Matic Drive (starter operative only with Selector Lever in neutral position.

See Transmission Section for Oldsmobile Hydra-Matic Drive article for Interlock or Neutral Switch adjustm'ts.

Drive—Over-running clutch with manual pinion shift (1107034), solenoid pinion shift (1107019, 50).

Rotation—Counter-clockwise at commutator end.

Brush Spring Tension—24-28 ounces each.

Cranking Engine—100 RPM., 125-135 amperes, 5 volts (Summer Temperature) for LHD. starter.

Performance Data

Torque	R.P.M.	Volts	Amperes
0 ft. lbs	5000	5.0	65
12 "	Lock	3.37	525

Removal:—Flange mounted on left front face of flywheel housing. To remove, take out mounting screws.

Starting Switch (1107034):—No. 820052. Mounted on starter. Operated by pinion shift lever.

(1107050)—Solenoid Switch 1118021. Mounted on starter and controlled by Pushbutton Switch 1996009 on instrument panel and Neutral Safety Switch 1997761 (on cars with Hydra-Matic Drive).

(1107019)—Solenoid Switch No. 1546. Mounted on starter. Operated through relay (in switch case) by Pushbutton Switch No. 1996008 on instrument panel. *For complete data, refer to Electrical Equipment Index.*

GENERATOR

Delco-Remy Model 1102664. Armature No. 1879002. (Std.), 1102680 (Hydra-Matic Drive Cars), 1106403 (City Police), 1105851 or 1105856 (State Police). Two brush type with Voltage and Current regulation.

Pulley Note—Cars with Std. Trans. (1102664 Gen.) have regular 3 9/16" pulley. Hydra-Matic Drive cars (1102680 Gen.) have smaller 3 1/16" pulley to compensate for lower engine speed (max. output reached At approx. 110 Eng. RPM. less). NOTE—This pulley can be installed on cars with 3.9-1 Axle ratio for special service if output inadequate.

Charging Rate Adjustment—None. Charging rate controlled by Voltage Regulator, maximum output by Current Regulator. See Regulator data below.

Maximum Charging Rate—33 amperes, 8.0 volts, 2400 RPM. (hot) or 23 MPH. (66), 21 MPH. (76,96) and above (Current Regulator setting) with load or discharged battery. Actual charging rate controlled by Voltage Regulator and dependent on battery condition.

Performance Data—Cold

	Amperes①	Volts	R.P.M.
1102664, 80	30	8.0	1750
1106403	35	8.0	1040
1105851, 6	40	8.0	1850

①—Not maximum output. See Current Regulator.

Rotation—Counter-clockwise at commutator end.

Brush Spring Tension—25 ozs. each.

Field Current—1.75-1.9 amperes (1102664, 80), 1.77-2.0 amperes (1106403), 1.62-1.82 amperes (1105851, 6) at 6.0 volts.

Removal:—Pivot mounted at left front of engine. To remove, take out pivot and clamp bolts.

Belt Adjustment:—Check with straightedge across pulleys. Belt deflection should be 3/4" inward from straightedge with light pressure at point midway between generator and fan pulleys.

REGULATOR

Delco-Remy Model 1118201 or 1118242 (for 1102664 1102680 Gen.), 1118229 (1106403 Gen.), 1118237 (1105851, 6 Gen.). Single Core Types. Voltage and Current regulators in single case with Cutout Relay. *For complete data, refer to Electrical Equipment Index.*

CAUTION—Check generator for grounded field coils and leads before changing regulator settings to correct High Charging Rate or High Voltage.

Cutout Relay

Cuts In—6.2-6.7 volts hot.

Cuts Out—0-4.0 ampere discharge current.

Contact Gap—.020" (same for both sets).

Air Gap—.020" (with contacts just closed).

Voltage Regulator

Setting—7.2-7.4 volts (1118201,242), 7.0-7.2 volts (1118229, 1118237) Hot (at operating temperature).

To Check—Connect ammeter in charging line at regulator 'BAT' terminal, voltmeter between this terminal and ground. Operate generator at 2800 RPM., adjust charging rate to 8-10 amperes (use variable rheostat or AVR set). With regulator hot (150°F.), decrease generator speed until cutout relay contacts open, then increase speed to 2800 RPM. and check hot voltage setting (above).

To Adjust—Change regulator armature spring tension slightly by bending hanger at lower end of **one spring only.** If further adjustment required, see Single Core Regulator article in Electrical Equipment Section for other (2nd.) spring adjustment.

Air Gap—.070" between center of core and armature with contacts just closing (press down on armature to open contacts, release pressure, check gap at point where contacts just close).

Current Regulator

Setting—34-36 amperes (1118201, 1118229, 1118242), 38-40 amperes (1118237) hot (at operating temp.).

To Check—Remove regulator cover, connect short jumper between Voltage Regulator frame and upper contact support bracket (to short out Voltage Regulator), connect ammeter in charging line at regulater 'BAT' terminal, turn on car lights and accessories. Operate generator and increase speed until output remains constant. With regulator hot (150°F), current reading should agree with setting (above).

To Adjust—Same as for Voltage Regulator (above).

Air Gap—.080" (check same as Voltage Regulator).

LIGHTING

LIGHTING:—**Headlamps**—Guide 'Sealed Beam' type. *For complete data, refer to Electrical Equipment Index.*

Headlamp Adjustment—Aim upper beam straight ahead (hot spot center 3" below lamp center height).

Beam Indicator—Small red indicator in upper edge of speedometer. Lighted when Upper Beams in use.

Direction Signal—*Refer to Electrical Equip. Index.*

Switches

Lighting (1941—No Fuse)—Delco-Remy No. 1995017 (LHD cars), 1995020 (RHD cars).

Lighting (1942—with Fuse)—Delco-Remy No. 1995026 (LHD cars), 1995027 (RHD cars).

NOTE—All switches have instrument light rheostat controlled by Lighting Switch handle.

Beam Selector—Delco-Remy No. 1997002.

Stop Light—Delco-Remy No. 1997725.

Bulb Specifications

Position	Candlepower	Mazda No.
Headlamps	Sealed Beam	
Parking	3	63
Instrument, Clock	1½	55
Beam Ind., Glove Compt.	1	51
Stop & Tail	21-3	1154
Rear License Plate	3	63
Dome	6	82

MISC. ELECTRICAL

THERMOSTATIC RELAY:—On lighting switch. Contacts remain closed with 30 ampere current, open in 3 minutes with current of 42 amperes at 70° F. Limits current to 18 amperes with dead short-circuit. Not adjustable.

FUSES:—**Clock**—2 ampere. In clock lead connector.

Stop Light (1942)—9 amperes. On lighting switch.

Convertible Top—9 ampere. In switch feed line.

HORNS:

Delco-Remy Numbers	Current (at 6 Volts)	Air Gap
①1999535 (low note)	19-21 amperes	.044-.049"
①1999536 (high note)	18-20 amperes	.034-.039"
②1999843 (low note)	7-11 amperes	.032-.038"
②1999844 (high note)	6-10 amperes	.021-.025"
③1999573 (low note)	19-21 amperes	.047-.052"
③1999574 (high note)	18-20 amperes	.039-.044"

①—1941 Models. Twin horns operated by relay.

②—1941 Models. Penetone horns with relay, used on F-41 after Ser. No. 66-62790, G-41 No. 76-55579.

③—1942 Models. Twin horns operated by relay.

Horn Relay:—Delco-Remy No. 1116775.

Contact Gap—.025". **Air Gap**—.015" (closed).

Contacts Close—2.75-4.0 volts.

ENGINE

ENGINE SPECIFICATIONS:—6 cylinder, 'L' head.

Bore—3½". **Stroke**—4⅛".

Displacement—238.1 cu. ins. **Rated HP**—29.4.

Developed Horsepower—100 at 3400 RPM (Std. hd.).

Compression Ratio and Pressure—*As follows:*

Ratio	Pressure at 1000 RPM	At 100 RPM
1941—6.1-1	138 lbs.	115 ± 10 lbs.
1942—6.5-1	150 ± 5 lbs.	102 ± 10 lbs.

Vacuum Reading—Steady 17" min. at idling speed.

See Oldsmobile Shop Notes for Cylinder Head Servicing.

PISTONS (1941): Aluminum alloy, T-slot, cam ground with electro-hardened oxide bearing surface.

Weight—17.37 ozs. (stripped). **Length**—4 1/32".

Removal—Pistons and rods removed from above.

Clearance—Top .023-.028". Skirt .0005-.0010".

NOTE—Piston skirt taper inward from bottom to top should be .0015-.002". Differs from Eight.

Replacement Pistons:—Finished pistons (pins fitted) .003", .005", .010", .015", .030" oversize. Same wt. as std.

Fitting New Pistons:—Check piston for size with micrometers (pin removed) 90° from pin bosses ⅜" below lower ring groove and ⅜" from bottom of skirt. Insert .002" x ½" feeler between piston (pin removed) and cylinder wall on valve side with piston inverted and T-slot on opposite side from feeler. Pull to withdraw feeler must be 4 to 11 lbs. (piston and block at 70°—low limit below 70°, high above).

Installing pistons:—Mark 'V-S' on head toward valves (slot away from valves). Pin hole offset 3/32" to left.

PISTONS (1942): Cast-iron (before Eng. G-441345), Armasteel type (Eng. No. G-441345 and above).

Weight—27 ozs. (stripped). **Length**—3¾".

Removal—Pistons and rods removed from above.

Clearance—Top land .023-.030". Skirt .00125-.00175".

IMPORTANT—Cast-iron pistons are 3 ring type with groove on skirt, Armasteel are 4 ring type. Pistons interchangeable in sets only.

Replacement Pistons:—Finished pistons (with fitted pins) furnished .003", .005", .010", .015", .030" oversize.

Fitting New Pistons:—Check piston for size with micrometers (pin removed) 90° from pin bosses ⅜" below lower ring groove and ⅜" from bottom of skirt. Insert .0015"x½"x12" feeler between piston (pin removed) and cylinder wall with piston inverted and feeler 90° from pin. Pull to withdraw feeler 7-20 lbs.

Installing Pistons:—Mark 'V-S' on head toward valves.

NOTE—Pin holes in piston offset 3/32".

PISTON RINGS (1941): 2 coated compression (install with mark TOP up), 2 oil control, all above pin.

Ring	Width	End Gap	Side Clearance
Compr.	.0925-.0935"	.008-.018"	.001-.003"
Oil Contr.	.1860-.1865"	.007-.015"	.001-.0025"

Replacement Rings:—.010", .020", .030" oversize.

PISTON RINGS (1942): 3 rings (Cast-iron), 4 (Armasteel), per piston, all above pin. NOTE—Install Compression ring with side marked TOP up.

Ring	Width	End Gap	Side Clearance
Compr.	.0925-.0935"	.008-.018"	.001-.003"
Oil Contr.	.1860-.1865"	.007-.015"	.001-.0025"

Replacement Rings:—.010", .020", .030" oversize.

PISTON PIN (1941): Diam. .8554-.8557" Length 3 5/32". Pin locked in one piston boss by lockscrew (opposite end slotted). Pin bosses are plated and must not be reamed. Standard size pins only serviced.

Pin Fit in Piston—.0001" loose to .0002" tight (plain boss end), .0002-.0005" tight (lock boss end).

Pin Fit in Rod Bushing—.0003-.0006" clearance.

See Oldsmobile Shop Notes for Pin Fitting directions.

PISTON PIN (1942): Diam. .8554-.8557" Length 3 5/32". Pin locked by screw in one boss. Ream piston bosses for oversize pins (.001" & .003" OS.).

Pin Fit in Piston—.0000-.0002" (plain boss end), .0003-.0006" (piston lockscrew boss).

Pin Fit in Rod Bushing—.0003-.0006".

See Oldsmobile Shop Notes for Piston Pin fitting data.

CONNECTING ROD (1941): Lgth. 7 13/16" Wt. 28.0 ounces (complete except for bearing inserts).

NOTE—Six and Eight rods not interchangeable.

Crankpin Journal Diameter—2.123-2.124".

Lower Bearing—Removable steel-backed, babbitt.

Clearance—.0005-.0025". **Sideplay**—.0055-.0105".

Bearing Adjustment:—None. Replace bearings.

Installing Rods:—Oil spit hole at lower end toward valves and grooves on rod and cap bolt boss (part number side) matched. Special ground cap bolts with self-locking nuts used and should be tightened with torque wrench to 50-55 lbs. ft. tension.

CONNECTING ROD (1942): Lgth. 7 13/16" Wt. 28.4 ozs

NOTE—1942 eight cyl. rods can be used in 1942 six cyl. (and 1941 six cyl. engines after G-378163).

Crankpin Journal Diameter—2.123-2.124".

Lower Bearing—Removable steel-backed, Durex-babbitt overlay bearing shells.

Clearance—.0005-.0025". **Sideplay**—.0055-.0105".

Bearing Adjustment:—None. Replace bearings.

Installing Rods:—Oil spit hole at lower end toward valves and grooves on rod and cap bolt boss (part number side) matched. Special ground cap bolts with self-locking nuts used. Tighten to 50-55 lbs. ft.

CRANKSHAFT:—4 bearings, integral counterweights.

Journal Diameters—#1, 2.478-2.479"; #2, 2.5405-2.5415"; #3, 2.6655-2.6665"; #4, 2.6855-2.6865".

Bearings (1941)—Removable, steel-backed, babbitt. **(1942)**—New type removable steel-backed, Durex-babbitt overlay bearing shells. CANNOT BE USED ON PREVIOUS MODELS. All front bearings have oil groove to front for thrust plate lubrication.

Clearance—.0005-.002" (rear), .001-.003" (all others).

Bearing Adjustment:—*None (no shims).* Replace bearings. Do not file caps. **Endplay**—.004-.008".

NOTE—9/16" cap bolts on rear bearing, ½" others.

See Oldsmobile Shop Notes for Main Bearing Removal, Crankshaft End Thrust and Oil Seal data.

CAMSHAFT:—4 bearing. Non-adjustable chain drive.

Journal Diam. ('41)—#1, 1.9970-1.9975"; #2, 1.9345-1.9350"; #3, 1.8720-1.8725"; #4, 1.8095-1.8100".

Journal Diam ('42)—#1, 1.9975-1.9980"; #2, 1.9350-1.9355"; #3, 1.8725-1.8730"; #4, 1.8100-1.8105".

Bearings—Bronze bushings. **Clearance** .0015-.0035".

End Thrust:—Forward end thrust now taken by front engine support plate. ***See Oldsmobile Shop Notes.***

Timing Chain:—Whitney No. 411239. Width 1". Pitch .500" (½"). Length 47 links or 23½".

Camshaft Setting:—Mesh chain with sprocket marks adjacent and in line with a straightedge across the shaft centers (or use Tool HM-408-0).

VALVES:

	Head Diameter	Stem Diameter	Length
Intake	1 9/16"	.3415-.3425"	5 51/64"
Exhaust	1 27/64"	.3410-.3418"	5 51/64"

	Seat Angle	Lift	Stem Clearance
Intake	30°	.303"	.00175-.00375"
Exhaust	45°	.298"	.00245-.00425"

Valve Guides:—Intake and exhaust guides same. Press guides in so top end ⅞" below top of block. (Tool J-1042 positions guide correctly in block). Ream to .34425-.34525" inside diam. (not tapered).

Valve Springs:—Same spring used on both valves and on 6&8 engines. Damper on top of each spring. Free length 2 19/32".

	Spring Pressure	Spring Length
Valve Closed	50½ lbs	2¼"
Valve Open	95½ lbs	1 15/16"

Valve Lifters:—Mushroom type (same on 6 & 8). Holes reamed in block have bearing-ized finish (if worn, fit oversize lifter without reaming hole) Body Diam. .6235-.6240". Furn .001", .002", .005", .010", OS. **Clearance**—.0005-.0008". NOTE— 1⅛" diameter face lifter only should be used on 1941-42 models.

VALVE TIMING

Tappet Clearance:—.008" Int., .011" Exh. Hot & idling.

NOTE—Self-locking tappet screws used. Remove right fender filler plate for access to valves.

Valve Timing:—See Camshaft Setting above.

Intake Valves—Open 5° BTDC. Close 45° ALDC.

Exhaust Valves—Open 45° BLDC. Close 5° ATDC.

Valve Timing Check—With .0124" tappet clearance, #1 intake valve should open with piston 5° (.0163") BTDC with flywheel TDC mark (steel ball insert) approx. 2 teeth before indicator (hole on left front face of housing). Reset tappet clearance at .008" hot.

LUBRICATION

LUBRICATION:—Pressure (gear type pump on right of engine). ***See Oldsmobile Shop Notes for Oil Pump data.***

Normal Oil Pressure:—28-33 lbs.

Oil Pressure Regulator:—On pump, opens at 30 lbs. Non-adjustable type.

Crankcase Capacity:—5 quarts.

CONTINUED N NEXT PAGE

CONTINUED FROM PRECEDING PAGE

COOLING

COOLING SYSTEM: Capacity 17¾ qts. ('41), 18½ ('42). *See Oldsmobile Shop Notes for Radiator Core Removal.*

Water Pump:—Packless, sealed ball-bearing type. *See Water Pump Section for complete data.*

Thermostat:—Harrison. In cylinder head outlet.

Setting—Starts to open 152°F. Fully open 173°F.

Temperature Gauge: AC Electric. Dash Unit Nos.: 1511043 ('41), 1511209 ('42). Engine: 1510772. *See Miscellaneous Section for complete data.*

CLUTCH

CLUTCH (STD. TRANS.):—Borg & Beck Model 9A7 with 'Borglite' driven member. Marked #924 on cover. Single plate, dry disc type with steel and asbestos composition pressure plate oil baffle and clutch release bearing lubrication fitting. *See Clutch Section for complete data.*

Facings—Spiral wound (spirally grooved) molded woven, 2 used. Inside Diam. 6", O.D. 9¼". ⅛" thick.

Pedal Adjustment:—Free travel 1-1½". Turn link at fork in or out of clevis on auxiliary shaft.

Removal:—Remove transmission (see data below), clutch underpan and take out 6 mounting screws in clutch cover (when installing, use 2 long shank mounting screws in 2nd hole on each side of locating dowel), lower clutch assembly out.

TRANSMISSION

TRANSMISSION (STD.):—Own Make. All helical gear, constant-mesh, synchro-mesh (second & high), sliding gear (low & reverse) with remote shift. *See Transmission Section for complete data.*

Transmission Control:—Oldsmobile 'Handi-shift' type. *See Transmission Section for complete data.*

Removal:—Disconnect shift and selector rods from levers at transmission, speedometer cable, rear universal and slide slip yoke and propeller shaft to rear. Remove four transmission mounting capscrews, pull transmission straight back and remove.

HYDRA-MATIC DRIVE

HYDRA-MATIC DRIVE (OPTL.):—Own Make—Consists of fluid coupling & automatic transmission. *See Transmission Section for complete data.*

UNIVERSALS

UNIVERSAL JOINTS:—Mechanics 2C or 2CR (new type). Roller bearing types. Two used. *See Universals Section for complete data.*

NOTE—Slip joint formed at rear of transmission ahead of front U-joint (driveshaft 1 piece type).

REAR AXLE

REAR AXLE:—Own Make. Semi-floating, hypoid gear type with torque taken through 2 support arms. *See Rear Axle Section for complete data.*

Ratio—4.1-1 Std. 66. **4.3-1** Std. 76 & 96, Mountain ratio 66. **3.42-1** Hydra-Matic 66. **3.63-1** Hydra-Matic 76 & 96. **4.55-1** Mountain 76 & 96. **3.9-1** Plains ratio.

NOTE—Ring and pinion gear ratio (41-10, etc.) stamped on top side of differential carrier.

Backlash—.004-.008". Screw adjustment.

Removal:—Disconnect drive shaft at rear universal (do not disengage spline joint at transmission), remove axle shafts and carrier flange capscrews.

Axle Shaft Removal:—Hoist rear end, remove wheel, brake drum, backing plate mounting nuts, static collector and loosen bearing retainer (do not move backing plate or brake line may be damaged). Pull shaft and bearing with puller J-942 (do not allow shaft to drag on oil seal), replace 1 backing plate nut.

Wheel Bearing Adjustment—None.

Rear Suspension:—Quadri-coil type (support arms). *See Rear Axle Section for complete data.*

SHOCK ABSORBERS

SHOCK ABSORBERS:—Delco. FRONT—Model 1947-C (right), D (left). RIGHT REAR—2105-E (76, 96), G (66). LEFT REAR—2105-F (76, 96), H (66). Double acting (parallel cylinder type rear), hydraulic. *See Shock Absorber Section for complete data.*

FRONT SUSPENSION

Front Suspension:—Independent, linked parallelogram type with coil springs. *See Front Suspension Section for complete data.*

Kingpin Inclination—4°51'10".

Caster—0-¾° Negative. Adjustable.

Camber—Negative ¼° to Positive ¾°. Adjustable.

Toe In—1/16-⅛". Adjust each tie rod equally.

Steering Geometry—Inner wh'l 23° ± ½°. Outer 20°.

STEERING GEAR

Steering Gear: Saginaw Worm-and-Roller type with steering linkage with idler arm on right frame rail. *See Steering Gear Section for complete data.*

BRAKES

BRAKES:—Service. Bendix hydraulic, duo-servo, single anchor type without eccentric adjustment. Hand lever applies rear wheel service brakes. *See Brake Section for complete data.*

Wheel Cylinder Bore—Front Wheel 1 3/32" (1941), 1⅛" (1942). Rear Wheel 1" (1941-42).

Lining (1941)—Molded. Width 1¾" (66), 2" (76, 96). Thickness 3/16". Length per shoe: 9 11/32" (Primary), 11 31/32" (Secondary Shoe).

Lining (1942)—Molded. Width 2" (Front Wheel), 1¾" (Rear Wheel). Thickness 3/16". Length per shoe: 9 11/32" (Primary), 11 31/32" (Secondary).

Clearance—.015" at both ends of secondary shoe with primary shoe forced out against drum.

Hand Brake:—See Service Brakes above.

MISC. MECHANICAL

Power Operated Conv. Top: (1941) Vacuum Power. (1942)—Electric type. *See Miscellaneous Section for complete data.*

HOOD, FRONT END SHEET METAL ASSEMBLY, FENDER CAP, & OIL PAN REMOVAL:—*Refer to Oldsmobile Shop Notes for removal procedure.*

MODEL IDENTIFICATION

Model Name	Model 1941	Model 1942	Car Series
Special Eight	E-41	E-42	68
Dynamic Cruiser Eight	J-41	J-42	78
Custom Cruiser Eight	L-41	L-42	98

SERIAL NUMBER:—On plate on upper left corner of dash in engine compartment. First Nos.

1941 Starting Serial Numbers

Series	Lansing	Linden, N. J.	California
68	68-1001	68L1001	68C1001
78	78-1001	78L1001	78C1001
98	98-1001	98L1001	98C1001

1942 Starting Serial Numbers

Series	Lansing	Linden, N.J.	California
68	68- 9001	68L3001	68C3001
78	78-26001	78L4001	78C4001
98	98-25001	98L6001	98C4001

ENGINE NUMBER: Top left side behind water pump. First number L-379001 ('41), L-450001 ('42). **Hydra-Matic Cars**—Carry number prefix 'LA'.

TUNE-UP

COMPRESSION: Ratio and Pressure as follows:

Ratio	Pressure at 1000 RPM	At 100 RPM
1941—6.3-1	160 lbs.	105 ± 10 lbs.
1942—6.5-1	155 ± 5 lbs.	105 ± 10 lbs.

1941 Export Head—Ratio 5.7-1

FIRING ORDER:—1-6-2-5-8-3-7-4. See diagram.

SPARKS PLUGS:—AC No. 44. 14 MM. Metric. Gaps—.030".

VACUUM READING:—Steady 17" min. at idling speed.

IGNITION: See Coil, Condenser, and Distributor.
Breaker Gap—.015". **Cam Angle**—31° Closed.
Automatic Advance—Max. advance as follows:

Distributor	Distr. Deg.	Distr. RPM
1110802	15°	2000
1110808	12°	1600

Vacuum Advance—Maximum advance as follows:

Distributor	Vacuum Unit	Distr. ° & Vacuum
1110802	681-R	7½° at 14-17"
1110808	1116036	6° at 14.6-16.6"

IGNITION TIMING: See Ignition Timing.
Std. Setting—2° BTDC. Flywheel mark (steel ball) aligned with insp. hole pointer (left side housing). **Hydra-Matic Cars**—Set distributor so contacts open with piston .001" before top dead center.

CARBURETION: See Carburetor & Carb. Equipment.
Idle Setting—Idle screws ½-2¼ turns open. Idle speed 425 RPM (Std.), 375 RPM (Hydra-Matic).
Float Level—3/16" from top of float to machined surface of bowl cover with needle valve seated.
Accelerating Pump—No seasonal adjustment.
Fuel Pump Pressure: 4 lbs. maximum.

MANIFOLD HEAT CONTROL:—Thermostatic coil type. See that valve operates freely.
Setting—Coil wind-up should be 160° (approx. ½ turn) at room temperature. NOTE—To check valve for correct position on shaft, use feeler gauge in slot on rear end of valve shaft. With valve closed, gauge should contact stop pin (slot 6° to left or toward engine from up-and-down position) with ⅛" clearance between valve tip and manifold.

VALVES: See Valve Timing.
Tappet Clearance .008" Intake, .011" Exhaust, hot.

STARTING: See Battery, Starter, Generator, Regulator.

IGNITION

Ignition Switch: Delco-Remy 1116305 (E-41, L-41), 1116311 (J-41), 1116330 (E-42), 1116331 (J-42), 1116334 (L-42). Coil connection armored.
Ignition Lock—Briggs & Stratton No. 45792.
Key Series—8000 to 9499. Groove—No. 15.

COIL: Delco-Remy Model 1115129. On dash.
Ignition Current—2.0 amperes idling, 4.5 stopped.

CONDENSER: Delco-Remy Part No. 1869704.
Capacity—.18-.25 microfarad.

DISTRIBUTOR: Delco-Remy Model 1110802 (for 1941 Cars), Model 1110808 (for 1942 Cars). Single breaker 8 lobe cam, full automatic advance type with auxiliary vacuum spark control and Octane Selector
Breaker Gap—.015". Limits .0125-.0175".
Cam Angle or Dwell—31° closed, 14° open.
Breaker Arm Spring Tension—19-23 ozs.
Rotation—Counter-clockwise viewed from above.

Automatic Advance—1110802

Distributor Degrees	Distributor R.P.M.	Engine Degrees	Engine R.P.M.
Start	300	2.5	600
3.5	500	7	1000
15	2000	30	4000

Automatic Advance—1110808

Start	250	3	500
3.5	500	7	1000
12	1600	24	3200

Vacuum Spark Control 681-R (for 1941 Cars), Model 1116036 (for 1942 Car Models). On distributor (integral type linked directly to breaker plate). Provides additional advance at speeds above idling except when engine accelerated or operated with wide open throttle when spark retarded by return spring within unit.

CONTINUED ON NEXT PAGE

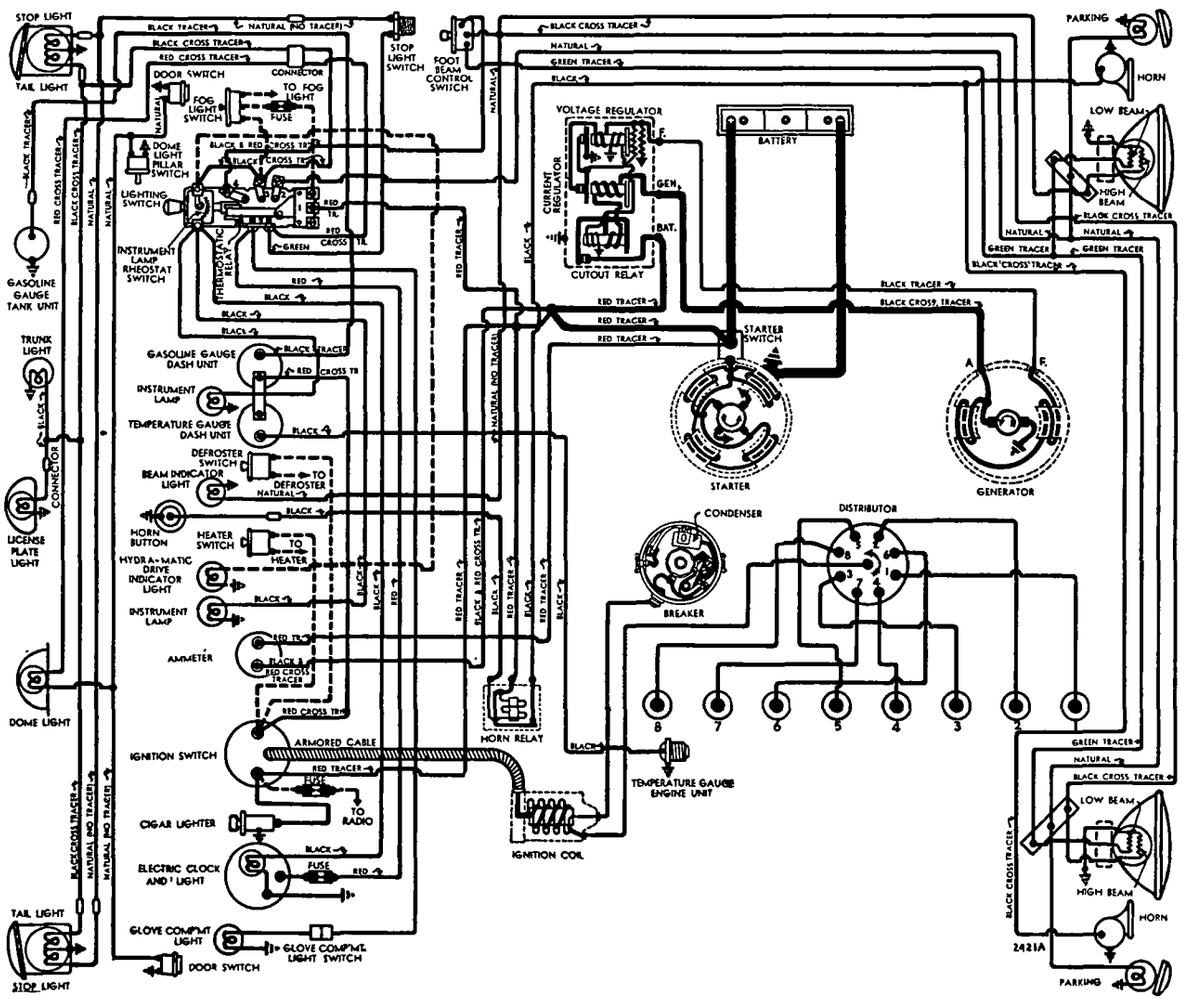

1941 M DELS

CONTINUED FROM PRECEDING PAGE

Plunger Travel—11/64" (681-R), 9/64" (1116036).

Vacuum Advance—681-R

Distr. Degrees	Eng. Degrees	Vacuum (" of HG)
Start	0°	5-7"
7.5°	15°	14-17"

Vacuum Advance—1116036

Distr. Degrees	Eng. Degrees	Vacuum (" of HG)
Start	0°	6.5-8.5"
6°	12°	14-16.8"①

①—At .125" travel.

Octane Selector—Adjustment permits 10° advance or retard from center '0' position. See Ignition Timing for adjustment directions.

Removal:—Distributor mounted on left side of engine. To remove, disconnect vacuum line, take out hold-down screw in advance arm.

IGNITION TIMING

IGNITION TIMING:—See Octane Selector Setting for correction dependent on fuel used.

	Flywheel Degrees	Piston Position
Std. Trans. Cars	2° BTDC	.002" BTDC.
Hydra-Matic Trans.		.001" BTDC.

Timing (With Synchroscope)—Recommended method. Loosen hold-down screw in advance arm, center Octane Selector scale ('0' at indicator line), tighten hold-down screw. Clip synchroscope lead to #1 spark plug, direct synchroscope light on flywheel through inspection hole in left front face of housing above starter. Idle engine, loosen advance arm clamp bolt, rotate distributor until ignition mark (steel ball insert) on flywheel lines up with indicator on housing, tighten clamp bolt, check Octane Selector setting (below).

NOTE—On cars with Hydra-Matic drive, use dial indicator and set distributor so contacts open with piston .001" before top dead center.

Timing (Without Synchroscope)—Turn engine over to firing position for #1 piston with steel ball insert in flywheel at indicator in inspection hole in left front face of flywheel housing (or with piston .001" BTDC. on cars with Hydra-Matic drive). Loosen hold-down screw in advance arm, center pointer on scale ('0' mark at indicator), tighten hold-down screw. Loosen advance arm clamp bolt, rotate distributor until contacts begin to open, tighten clamp bolt and check Octane Selector setting.

Octane Selector Setting—Set for slight ping when accelerating engine with wide open throttle at speeds below 15 MPH. To adjust, loosen distributor hold-down screw, rotate distributor clockwise toward 'Adv' end of scale (if no ping noted), counter-clockwise toward 'Ret' end of scale (if ping too severe) one graduation at a time until correct performance secured.

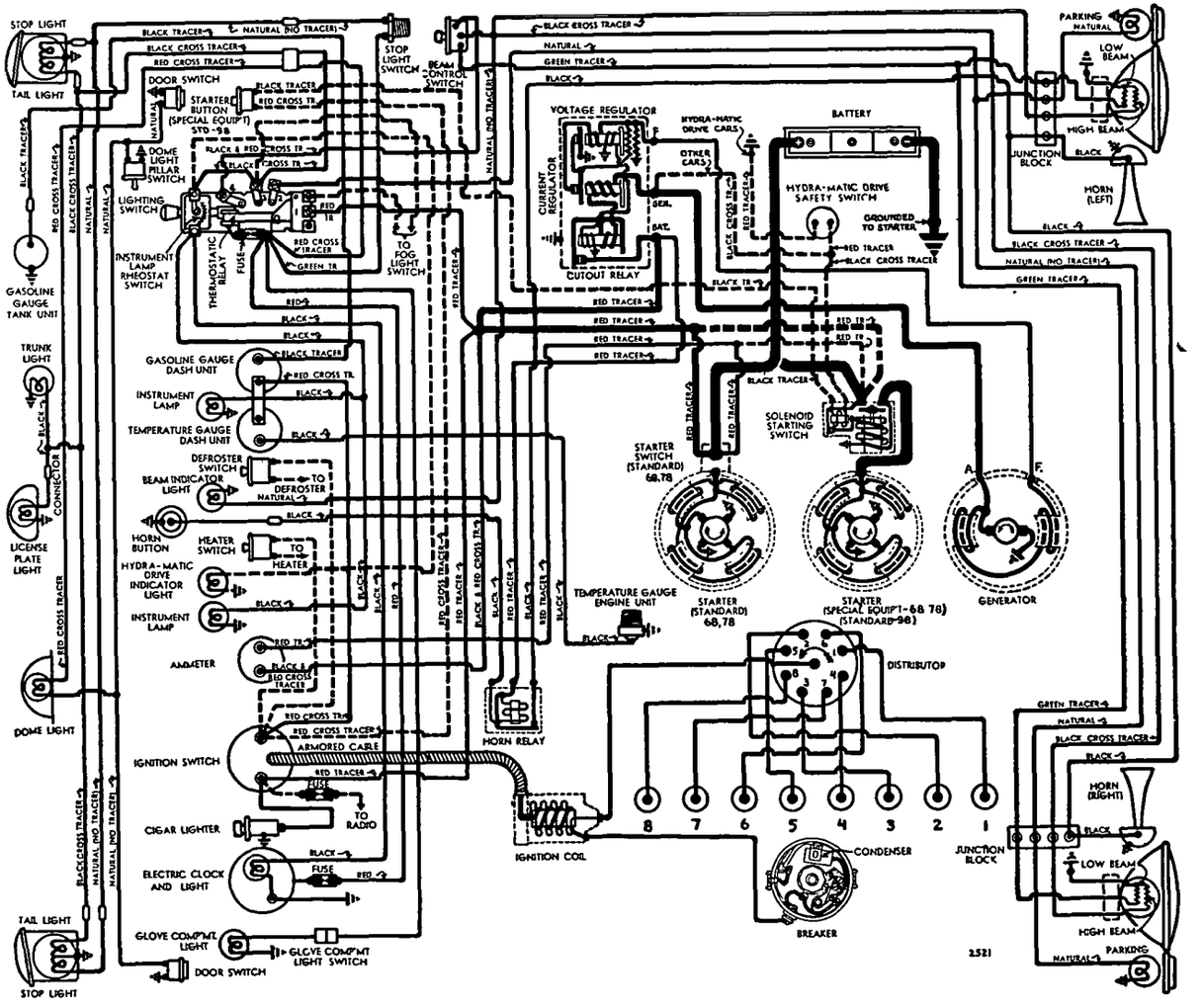

1942 MODELS

CARBURETOR

CARBURETION:—**Carburetor**—Carter WDO Model 503-S (Std. Trans.), 480-S (Hydra-Matic Drive). 1¼" dual downdraft type with Climatic Control. ***For complete data, refer to Carburetor Index.***

Idle Adjustment—With engine warm so that choke valve wide open and fast idle inoperative, set throttle stopscrew for idle speed of 425 RPM. (Std), 375 RPM. (Hydra-Matic Drive cars). Adjust both idle adjusting screws (one for each barrel, set screws alike) for smooth idle. Screws should be ½-2¼ turns open from inner seated position (turn screws in for leaner mixture). Recheck idle speed.

See Hydra-Matic Transmission article in Transmission Section for Throttle Linkage Adjustment procedure.

Accelerating Pump Setting—Not adjustable.

Float Level—3/16" from top of float to machined surface of bowl cover with valve seated (remove gasket, invert cover, use gauge T109-28 to check).

Metering Rods & Jets—***See Carter Jet Table in Carburetor Section for complete data.***

Throttle Cracker Adjustment:—Must be set for correct throttle opening for starting. To adjust, disconnect starter cable at starter switch (for foot operated starters), disconnect coil lead to distributor (for solenoid operated starters), depress starter pedal or pushbutton to full down position (engine will be turning over on solenoid starter cars) to fully mesh starter pinion, loosen locknut and turn adjusting screw on accelerator bell-crank (screw contacts lug on lever linked to starter pinion shift lever) so that clearance between throttle stopscrew and highest step of fast idle cam is .105-.125" (⅛").

Fast Idle:—Integral (built-in each carburetor). ***For complete data, refer to Carburetion Equip. Index.***

Setting—With choke valve closed, adjust fast idle screw for .015" throttle valve opening or for clearance of .030" (503-S), .025" (480-S) between throttle lever stopscrew and stop on carburetor casting with stopscrew set for correct hot or slow idle speed.

Automatic Choke:—Carter Climatic Control. ***For complete data, refer to Carburetion Equip. Index.***

Setting—Mark on thermostat case centered on housing scale (503-S), 2 Notches Rich (480-S).

CARB. EQUIPMENT

Air Cleaner:—AC No. 1542252 oil-wetted type Std. #1529360 (78, 98), #1542251 (68), heavy duty oil bath type Optl. Use Replacement Filter Element Type #6 (for 1542252), 1542335 (for oil bath type).

Fuel Pump:—AC 'AJ' No. 1537330—Exch. No. 535. Fuel & Vacuum Pump. Pressure—4 lbs. maximum.

For complete data, refer to Carburetion Equip. Index.

Gasoline Gauge: AC Electric Type. Dash Unit Nos.: 1516298 ('41), 1516410 ('42). Tank Unit: 1516285.

For complete data, refer to Carburetion Equip. Index.

BATTERY

BATTERY:—Delco Model 17E-2. 6 volt, 17 plate, 120 Ampere Hour Capacity (20 hour rate).

Starting Capacity—140 amperes for 20 minutes.

Zero Capacity—300 amperes for 4.5 minutes. Five second voltage 4.4 volts.

Grounded Terminal—Negative (—) to Starter.

Location—On left side in engine compartment.

Police Battery Delco Model 19E-1 or 19E-3. 6 volt, 19 plate, 130 Ampere Hour Capacity (20 hour rate).

Starting Capacity—150 amperes for 20 minutes.

Grounded Terminal and Location—Same as above.

STARTER

Delco-Remy Model 1107922 (All '41; 68, 78 '42), 1107930 (Std. 98, Optl. 68, 78 '42), 1107924 (RHD '41).

Armature Number—No. 1867897 (for all models).

NOTE—All 1107922 (foot operated) starters provided with mounting holes for Hydra-Matic Drive Interlock mounting (holes plugged when Hydra-Matic Drive not used). On 1107930 (solenoid operated) starters, a Neutral Safety Switch is used on cars with Hydra-Matic Drive (starter operative only with Selector Lever in neutral position.

See Transmission Section for Oldsmobile Hydra-Matic Drive article for Interlock or Neutral Switch adjustm'ts.

Drive—Over-running clutch with manual pinion shift (1107922), solenoid pinion shift (1107924, 30).

Rotation—Counter-clockwise at commutator end.

Brush Spring Tension—24-28 ounces each.

Cranking Engine—100 RPM., 140-150 amperes, 5 volts (Summer Temperatures) for LHD. starter.

Performance Data—1107922

Torque	R.P.M.	Volts	Amperes
0 ft. lbs	6000	5.0	60
15 "	Lock	3.0	600

Performance Data—1107924 & 1107930

0 ft. lbs	5500	5.0	65
15 "	Lock	3.0	600

Removal:—Flange mounted on left front face of flywheel housing. To remove, take out mounting screws.

Starting Switch (1107922):—No. 820052. Mounted on starter. Operated by pinion shift lever.

(1107924)—Solenoid Switch No. 1546. Mounted on starter. Operated through relay (in switch case) by Pushbutton Switch No. 1996008 on instrument panel.

For complete data, refer to Electrical Equipment Index.

(1107930)—Solenoid Switch No. 1118021. Mounted on starter and controlled by Pushbutton Switch 1996009 on instrument panel and Neutral Safety Switch 1997761 (on cars with Hydra-Matic Drive).

For complete data, refer to Electrical Equipment Index.

GENERATOR

Delco-Remy Model 1102664. Armature No. 1879002. (Std.), 1102680 (Hydra-Matic Drive Cars), 1106403 (City Police), 1105851 or 1105856 (State Police). Two brush type with Voltage and Current regulation.

Pulley Note—Cars with Std. Trans. (1102664 Gen.) have regular 3 9/16" pulley. Hydra-Matic Drive cars (1102680 Gen.) have smaller 3 1/16" pulley to compensate for lower engine speed (max. output reached At approx. 110 Eng. RPM. less). NOTE—This pulley can be installed on cars with 3.9-1 Axle ratio for special service if output inadequate.

Charging Rate Adjustment—None. See Regulator.

Maximum Charging Rate—33 amperes, 8.0 volts, 2400 RPM. (hot) or 23 MPH. (68), 21 MPH. (78, 98) and above (Current Regulator setting) with load or discharged battery. Actual charging rate controlled by Voltage Regulator and dependent on battery condition.

Performance Data—Cold

	Amperes①	Volts	R.P.M.
1102664, 80	30	8.0	1750
1106403	35	8.0	1040
1105851, 6	40	8.0	1850

①—Not maximum output. See Current Regulator.

Rotation—Counter-clockwise at commutator end.

Brush Spring Tension—25 ozs. each.

Field Current—1.75-1.9 amperes (1102664, 80), 1.77-2.0 amperes (1106403), 1.62-1.82 amperes (1105851, 6) at 6.0 volts.

Removal:—Pivot mounted at left front of engine. To remove, take out pivot and clamp bolts.

Belt Adjustment:—Check with straightedge across pulleys. Belt deflection should be ¾" inward from straightedge with light pressure at point midway between generator and fan pulleys.

REGULATOR

Delco-Remy Model 1118201 or 1118242 (for 1102664 1102680 Gen.), 1118229 (1106403 Gen.), 1118237 (1105851, 6 Gen.). Single Core Types. Voltage and Current regulators in single case with Cutout Relay.

For complete data, refer to Electrical Equipment Index.

CAUTION—Check generator for grounded field coils and leads before changing regulator settings to correct High Charging Rate or High Voltage.

Cutout Relay

Cuts In—6.2-6.7 volts hot.

Cuts Out—0-4.0 ampere discharge current.

Contact Gap—.020" (same for both sets).

Air Gap—.020" (with contacts just closed).

Voltage Regulator

Setting—7.2-7.4 volts (1118201,242), 7.0-7.2 volts (1118229, 1118237) Hot (at operating temperature).

To Check—Connect ammeter in charging line at regulator 'BAT' terminal, voltmeter between this terminal and ground. Operate generator at 2800 RPM., adjust charging rate to 8-10 amperes (use variable rheostat or AVR set). With regulator hot (150°F.), decrease generator speed until cutout relay contacts open, then increase speed to 2800 RPM. and check hot voltage setting (above).

To Adjust—Change regulator armature spring tension slightly by bending hanger at lower end of one spring only. If further adjustment required, see Single Core Regulator article in Electrical Equipment Section for other (2nd.) spring adjustment.

Air Gap—.070" between center of core and armature with contacts just closing (press down on armature to open contacts, release pressure, check gap at point where contacts just close).

Current Regulator

Setting—34-36 amperes (1118201, 1118229, 1118242), 38-40 amperes (1118237) hot (at operating temp.).

To Check—Remove regulator cover, connect short jumper between Voltage Regulator frame and upper contact support bracket (to short out Voltage Regulator), connect ammeter in charging line at regulater 'BAT' terminal, turn on car lights and accessories. Operate generator and increase speed until output remains constant. With regulator hot (150°F), current reading should agree with setting (above).

To Adjust—Same as for Voltage Regulator (above).

Air Gap—.080" (check same as Voltage Regulator).

LIGHTING

LIGHTING:—Headlamps—Guide 'Sealed Beam' type.

For complete data, refer to Electrical Equipment Index.

Headlamp Adjustment—Aim upper beam straight ahead (hot spot center 3" below lamp center height).

Beam Indicator—Small red indicator in upper edge of speedometer dial. Lighted when Country (upper) Beam in use.

Direction Signal—***Refer to Electrical Equip. Index.***

Switches

Lighting (1941—No Fuse)—Delco-Remy No. 1995017 (LHD cars), 1995020 (RHD cars).

Lighting (1942—with Fuse)—Delco-Remy No. 1995026 (LHD cars), 1995027 (RHD cars).

NOTE—All switches have instrument light rheostat controlled by Lighting Switch handle.

Beam Selector—Delco-Remy No. 1997002.

Stop Light—Delco-Remy No. 1997725.

Bulb Specifications

Position	Candlepower	Mazda No.
Headlamps	Sealed Beam	
Parking	3	63
Instrument, Clock	1½	55
Beam Ind., Glove Compt.	1	51
Stop & Tail	21-3	1154
Rear License Plate	3	63
Dome	6	82

MISC. ELECTRICAL

THERMOSTATIC RELAY:—On lighting switch. Contacts remain closed with 30 ampere current, open in 3 minutes with current of 42 amperes at 70° F. Limits current to 18 amperes with dead short-circuit. Not adjustable.

FUSES:—Clock—2 ampere. In clock lead connector.

Stop Light (1942)—9 amperes. On lighting switch.

Convertible Top—9 ampere. In switch feed line.

HORNS: Delco-Remy Numbers	Current (at 6 Volts)	Air Gap
①1999535 (low note)	19-21 amperes	.044-.049"
①1999536 (high note)	18-20 amperes	.034-.039"
②1999843 (low note)	7-11 amperes	.032-.038"
②1999844 (high note)	6-10 amperes	.021-.025"
③1999573 (low note)	19-21 amperes	.047-.052"
③1999574 (high note)	18-20 amperes	.039-.044"

①—1941 Models. Twin horns operated by relay.

②—1941 Models. Penetone horns with relay, used on E-41 after Serial No. 68-7686.

③—1942 Models. Twin horns operated by relay.

Horn Relay:—Delco-Remy No. 1116775.

Contact Gap—.025". **Air Gap**—.015" (closed).

Contacts Close—2.75-4.0 volts.

CONTINUED ON NEXT PAGE

CONTINUED FR M PRECEDING PAGE

ENGINE

ENGINE SPECIFICATIONS:—8 cylinder, 'L' head. **Bore**—3¼". **Stroke**—3⅞". **Displacement**—257.1 cu. ins. **Rated HP**—33.8. **Developed Horsepower**—110 at 3600 RPM (Std. hd.). **Compression Ratio**—6.3-1('41), 6.5-1('42), 5.7-1 Exp. **Compression Pressure**—105 lbs. ± 10 lbs. at cranking speed of 100 RPM (Std. head). **Vacuum Reading**—Steady 17" min. at idling speed. *See Oldsmobile Shop Notes for Cylinder Head Servicing.*

PISTONS (1941): Aluminum alloy, T-slot, cam ground with electro-hardened oxide bearing surface. **Weight**—16 ozs. (stripped). **Length**—3 15/16". **Removal**—Pistons and rods removed from above. **Clearance**—Top .023-.028". Skirt .0013-.0018". NOTE—Piston skirt taper inward from bottom to top should be .00025-.00075". Differs from Six.

Replacement Pistons:—Finished pistons (pins fitted) .003", .005", .010", .015", .030" oversize. Same wt. as std.

Fitting New Pistons:—Check piston for size with micrometers (pin removed) 90° from pin bosses ⅜" below lower ring groove and ⅜" from bottom of skirt. Insert .002" x ½" feeler between piston (pin removed) and cylinder wall on valve side with piston inverted and T-slot on opposite side from feeler. Pull to withdraw feeler must be 4 to 11 lbs. (piston and block at 70°—low limit below 70°, high above).

Installing pistons:—Mark 'V-S' on head toward valves (slot away from valves). Pin hole offset 3/32" to left.

PISTONS (1942): Armasteel, tin-plated type. **Weight**—24 ozs. (stripped). **Length**—3⅞". **Removal**—Pistons and rods removed from above. **Clearance**—Top .022-.029". Skirt .00125-.00175".

Replacement Pistons:—Finished pistons (with fitted pins) furnished .003", .005", .010", .015", .030" oversize.

Fitting New Pistons:—Check piston for size with micrometers (pin removed) 90° from pin bosses ⅜" below lower ring groove and ⅜" from bottom of skirt. Insert .0015"x½"x12" feeler between piston (pin removed) and cylinder wall with piston inverted and feeler 90° from pin bosses. Pull to withdraw feeler 7-20 lbs. with piston and block at room temperature.

Installing Pistons:—Mark 'V-S' on head toward valves. NOTE—Pin holes in piston offset 3/32".

PISTON RINGS:—2 compression (coated type—install with mark TOP up), 2 oil control, all above pin.

Ring	Width	End Gap	Side Clearance
Compr.	.0925-.0935"	.009-.014"	.001-.0025"
Oil Cont.	.1860-.1865"	.009-.014"	.001-.0025"

Replacement Rings:—.010", .020", .030" oversize.

PISTON PIN (1941): Diam. .8554-.8557". Lgth. 2 31/32". Pin locked in one piston boss by lockscrew (opposite end slotted). Pin bosses are plated and must not be reamed. Standard size pins only serviced. **Pin Fit in Piston**—.0001" loose to .0002" tight (plain boss end), .0002-.0005" tight (lock boss end). **Pin Fit in Rod Bushing**—.0003-.0006" clearance. *See Oldsmobile Shop Notes for Pin Fitting directions.*

PISTON PIN (1942): Diam. .8554-.8557". Lgth. 2 31/32". Pin locked by screw in one boss. Ream piston bosses for oversize pins (.001" & .003" OS.). **Pin Fit in Piston**—.0000-.0002" (plain boss end), .0003-.0006" (piston lockscrew boss). **Pin Fit in Rod Bushing**—.0003-.0006". *See Oldsmobile Shop Notes for Piston Pin fitting data.*

CONNECTING ROD (1941): Lgth. 7 13/16" Wt. 28.0 ounces (complete except for bearing inserts). NOTE—Six and Eight rods not interchangeable. **Crankpin Journal Diameter**—2.123-2.124". **Lower Bearing**—Removable steel-backed, babbitt. **Clearance**—.0005-.0025". **Sideplay**—.0055-.0105". **Bearing Adjustment:**—None. Replace bearings. **Installing Rods:**—Oil spit hole at lower end toward valves and grooves on rod and cap bolt boss (part number side) matched. Special ground cap bolts with self-locking nuts used and should be tightened with torque wrench to 50-55 lbs. ft. tension.

CONNECTING ROD (1942): Lgth. 7 13/16" Wt. 28.4 ozs NOTE—1942 eight cyl. rods can be used in 1942 six cyl. (and 1941 six cyl. engines after G-378163). **Crankpin Journal Diameter**—2.123-2.124". **Lower Bearing**—Removable steel-backed, Durex-babbitt overlay bearing shells. **Clearance**—.0005-.0025". **Sideplay**—.0055-.0105". **Bearing Adjustment:**—None. Replace bearings. **Installing Rods:**—Oil spit hole at lower end toward valves and grooves on rod and cap bolt boss (part number side) matched. Special ground cap bolts with self-locking nuts used. Tighten to 50-55 lbs. ft.

CRANKSHAFT:—5 bearing, 8 integral counterweights. 1942 NOTE—New crankshaft used with heavier cheeks and counterweights. 1942 shaft equipped with new snap-in type bearing caps (except #1). *Refer to Oldsmobile Shop Notes for complete data on these bearing caps used on 1942 Oldsmobile 8.* **Journal Diameters**—#1, 2.478-2.479"; #2, 2.5405-2.5415"; #3, 2.603-2.604"; #4, 2.6655-2.6665"; #5, 2.6855-2.6865". **Bearings (1941)**—Removable, steel-backed, babbitt. **(1942)**—New type removable steel-backed, Durex-babbitt overlay bearing shells. CANNOT BE USED ON PREVIOUS MODELS. All front bearings have oil groove to front for thrust plate lubrication. **Clearance**—.0005-.002" (rear), .001-.003" (all others). **Bearing Adjustment:**—None (no shims). Replace bearings. Do not file caps. **Endplay**—.004-.008". NOTE—9/16" cap bolts on rear bearing, ½" others. *See Oldsmobile Shop Notes for Main Bearing Removal, Crankshaft End Thrust and Oil Seal data.*

CAMSHAFT:—5 bearing. Non-adjustable chain drive. **Journal Diam. ('41)**—#1, 2.0600-2.0595"; #2, 1.9975-1.9970"; #3, 1.9350-1.9345"; #4, 1.8725-1.8720"; #5, 1.8100-1.8095". **Journal Diam. ('42)**—#1, 2.0600-2.0605"; #2, 1.9975-1.9980"; #3, 1.9350-1.9355"; #4, 1.8725-1.8730"; #5, 1.8100-1.8105". **Bearings**—Bronze bushings. **Clearance** .0015-.0035". **End Thrust:**—Forward end thrust now taken by front engine support plate. *See Oldsmobile Shop Notes.* **Timing Chain:**—Link-Belt. Width 1" (up to Engine No. L-389201), 11/16" (after Engine No. L-389201). Pitch .500". Length 47 links or 23½". **Camshaft Setting:**—Mesh chain with sprocket marks adjacent and in line with a straightedge across the shaft centers (or use Tool HM-408-0).

VALVES:—

	Head Diameter	Stem Diameter	Length
Intake	1 9/16"	.3415-.3425"	5 51/64"
Exhaust	1 27/64"	.3410-.3418"	5 51/64"

	Seat Angle	Lift	Stem Clearance
Intak	30°	.286"	.00175-.00375"
Exhaust	45°	.314"	.00245-.00425"

Valve Guides:—Intake and exhaust guides same. Press guides in so top end ⅞" below top of block. (Tool J-1042 positions guide correctly in block). Ream to .34425-.34525" inside diam. (not tapered).

Valve Springs:—Same spring used on both valves and on 6&8 engines. Damper on top of each spring. Free length 2 19/32".

	Spring Pressure	Spring Length
Valve Closed	50½ lbs.	2¼"
Valve Open	95½ lbs.	1 15/16"

Valve Lifters:—Mushroom type (same on 6 & 8). Holes reamed in block have bearing-ized finish (if worn, fit oversize lifter without reaming hole) Body Diam. .6235-.6240". Furn .001", .002", .005", .010", OS. **Clearance**—.0005-.0008". NOTE— 1⅛" diameter face lifter only should be used on 1941-42 models.

VALVE TIMING

Tappet Clearance:—.008" Int., .011" Exh. Hot & idling. NOTE—Self-locking tappet screws used. Remove right fender filler plate for access to valves.

Valve Timing:—See Camshaft Setting above. **Intake Valves**—Open at TDC. Close 35° ALDC. **Exhaust Valves**—Open 45° BLDC. Close 10° ATDC. **Valve Timing Check**—With .0124" tappet clearance #1 intake valve should open with piston at top dead center (flywheel mark 'TDC/'—NOT STEEL BALL INSERT) aligned with pointer in left front face on flywheel hous'g. Reset tappet clear. .008" hot & idl'g.

LUBRICATION

LUBRICATION:—Pressure (gear type pump on right of engine). *See Oldsmobile Shop Notes for Oil Pump data.* **Normal Oil Pressure:**—28-33 lbs. **Oil Pressure Regulator:**—On pump, opens at 30 lbs. Non-adjustable type. **Crankcase Capacity:**—6 quarts.

COOLING

COOLING SYSTEM: Capacity 21½ qts. ('41), 20½ ('42). *See Oldsmobile Shop Notes for Radiator Core Removal.* **Water Pump:**—Packless, sealed ball-bearing type. *See Water Pump Section for complete data.* **Thermostat:**—Harrison. In cylinder head outlet. **Setting**—Starts to open 152°F. Fully open 173°F. **Temperature Gauge:** AC Electric. Dash Unit Nos.: 1511043 ('41), 1511209 ('42). Engine: 1510772. *See Miscellaneous Section for complete data.*

CLUTCH

CLUTCH (STD. TRANS.):—Borg & Beck Model 10A7 with 'Borglite' driven member. Marked #927 on cover. Single plate, dry disc type with sheet metal pressure plate oil baffle and release bearing lubrication fitting. *See Clutch Section for complete data.* **Facings**—Spiral wound (spirally grooved) molded woven, 2 used. Inside Diam. 7". O.D. 10". ⅛" thick. **Pedal Adjustment:**—Free travel 1-1½". Turn link at fork in or out of clevis on auxiliary shaft. **Removal:**—Remove transmission (see data below), clutch underpan and reinforcing plate. Take out

6 mounting screws in clutch cover (when installing, use 2 long shank mounting screws in 2nd hole on each side of locating dowel), remove clutch. *See Oldsmobile Shop Notes for Clutch Housing Reinforcing Plate data.*

TRANSMISSION

TRANSMISSION (STD.):—Own Make. All helical gear, constant-mesh, synchro-mesh (second & high), sliding gear (low & reverse) with remote shift.

See Transmission Section for complete data.

Transmission Control:—Oldsmobile 'Handi-shift' type.

See Transmission Section for complete data.

Removal:—Disconnect shift and selector rods from levers at transmission, speedometer cable, rear universal and slide slip yoke and propeller shaft to rear. Remove four transmission mounting capscrews, pull transmission straight back and remove.

HYDRA-MATIC DRIVE

HYDRA-MATIC DRIVE (OPTL.):—Own Make—Consists of fluid coupling & automatic transmission.

See Transmission Section for complete data.

UNIVERSALS

UNIVERSAL JOINTS:—Mechanics 2C or 2CR (new type). Roller bearing types. Two used.

See Universals Section for complete data.

NOTE—Slip joint formed at rear of transmission ahead of front U-joint (driveshaft 1 piece type).

REAR AXLE

REAR AXLE:—Own Make. Semi-floating, hypoid gear type with torque taken through 2 support arms.

See Rear Axle Section for complete data.

Ratios—	Std. Transmission Std.	Mountain	Plains	Hydra-Matic Std.	Mount.
1941 Models				**1941**	
68	4.1-1	4.3-1	3.9-1	3.42-1	
78	4.3-1	4.55-1	3.9-1	3.42-1	
98	4.3-1	4.55-1	3.9-1	3.42-1	
1942 Models				**1942**	
68	3.9-1	4.3-1	3.6-1	3.42-1	
78	4.3-1	4.55-1	3.9-1	3.42-1	3.9-1
98	4.3-1	4.55-1	3.9-1	3.6-1	3.9-1
Sta. Wag.	4.3-1			3.9-1	

NOTE—Ring and pinion gear ratio (41-10, etc.) stamped on top side of differential carrier.

Backlash—.004-.008". Screw adjustment.

Removal:—Disconnect drive shaft at rear universal (do not disengage spline joint at transmission), remove axle shafts (see below), remove capscrews on carrier flange, pull carrier assembly out.

Axle Shaft Removal:—Hoist rear end, remove wheel, brake drum, backing plate mounting nuts, static collector and loosen bearing retainer (do not move backing plate or brake line may be damaged). Pull shaft and bearing with puller J-942 (do not allow shaft to drag on oil seal), replace 1 backing plate nut.

Wheel Bearing Adjustment—None.

Rear Suspension:—Quadri-coil type (support arms).

See Rear Axle Section for complete data.

SHOCK ABSORBERS

SHOCK ABSORBERS:—Delco. FRONT—Model 1947-C (right), D (left). RIGHT REAR—2105-E (78, 98), G (68). LEFT REAR—2105-F (78, 98), H (68). Double acting (parallel cylinder type rear), hydraulic.

See Shock Absorber Section for complete data.

FRONT SUSPENSION

Front Suspension:—Independent, linked parallelogram type with coil springs.

See Front Suspension Section for complete data.

Kingpin Inclination—4°51'10".

Caster—0-¾° Negative. Adjustable.

Camber—Negative ¼° to Positive ¾°. Adjustable.

Toe In—1/16-⅛". Adjust each tie rod equally.

Steering Geometry—Inner wh'l 23° ± ½°. Outer 20°.

STEERING GEAR

Steering Gear: Saginaw Worm-and-Roller type with steering linkage with idler arm on right frame rail.

See Steering Gear Section for complete data.

BRAKES

BRAKES:—Service. Bendix hydraulic, duo-servo, single anchor type without eccentric adjustment. Hand lever applies rear wheel service brakes.

See Brake Section for complete data.

Wheel Cylinder Bore—Front Wheel 1 3/32" (1941) 1⅛" (1942). Rear Wheel 1" (1941-42).

Lining (1941)—Molded. Width 1¾" (68), 2" (78, 98). Thickness 3/16". Length per shoe: 9 11/32" (Primary), 11 31/32" (Secondary Shoe).

Lining (1942)—Molded. Width: Front wheel 2" (68), 2¼" (78, 98). Rear Wheel 1¾" (68), 2" (78 & 98). Thickness 3/16". Length per shoe: 9 11/32" (Primary), 11 31/32" (Secondary Shoe).

Clearance—.015" at both ends of secondary shoe with primary shoe forced out against drum.

Hand Brake:—See Service Brakes above.

MISC. MECHANICAL

Power Operated Conv. Top: (1941) Vacuum Power. (1942)—Electric type.

See Miscellaneous Section for complete data.

HOOD LOCK: Alligator type hood. To raise hood, pull out on control knob on instrument panel (hood will raise slightly), push up on 'Safety Hook' tab under front end of hood at center, lift hood up.

FRONT SHEET METAL ASSEMBLY REMOVAL, HOOD ADJUSTMENT & REMOVAL, FENDER CAP ALIGNMENT: *See Oldsmobile Shop Notes.*

MODEL IDENTIFICATION

SERIAL NUMBER: On plate ('46-47) on upper left front corner of dash under hood, (1948) on left front door hinge post.

1946-47-48 Numbers—First numbers as follows:

Series	Lansing Mich.	Linden N. J.	South Gate, Cal.	Wilmington, Del.
66 ('46)	66-112001	66L-14001	66C-12001	
66 ('47)	66-132001	66L-19001	66C-15001	66W-1001
66 ('48)	66-165001	66L31001	66C21001	66W3001
76 ('46)	76- 92001	76L-13001	76C- 9001	
76 ('47)	76-134001	76L-20001	76C-13001	76W-1001
76 ('48)	76-164001	76L31001	76C18001	76W3001

	Atlanta, Ga.	Framingham, Mass.	Kansas City, Kans.
66 ('47)	66A-1001	66B-1001	66K-1001
66 ('48)	66A2001	66B1001	66K9001
76 ('47)	76A-1001	76B-1001	76K-1001
76 ('48)	76A2001	76B1001	76K9001

ENGINE NUMBER: Stamped on pad on front left top corner of cylinder block above generator.
1946 Numbers—6-1001 Up (LHD), 6R-1001 (RHD).
1948 Numbers—6-18801 Up (LHD), 6R7001 (RHD).
Hydra-Matic Cars—Engine Number marked with letter "H" following number: 6-1001H.

TUNE-UP

COMPRESSION: Pressure—112 lbs. at cranking speed of 100 RPM.

VACUUM READING: Steady 17" min. at idling speed.

FIRING ORDER: 1-5-3-6-2-4. See diagram.

SPARK PLUG GAPS: .040".
Plug Type—AC No. 45. 14 mm.

IGNITION: *See Coil, Condenser, and Distributor.*
Breaker Gap—.020".
Cam Angle or Dwell—35° Closed, 25° Open.
Breaker Arm Spring Tension—17-21 ounces.
Automatic & Vacuum Advance—*See Distributor.*

IGNITION TIMING: Synchro-Mesh Trans.....TDC.
Hydra-Matic Drive Cars..... .001" BTDC.
Timing Procedure—*See Ignition Timing.*
Timing Mark—Steel ball insert in flywheel lined up with pointer in inspection hole in left front face of flywheel housing beside starter.
Octane Selector—Set to give slight ping accelerating with wide open throttle below 15 MPH.

CARBURETION: *See Carburetor & Carb. Equipment.*
Idle Setting—½-1½ turns open. One screw—turn screw out for richer mixture.
Idle Speed (Standard)—425 RPM. or 6 MPH.
Idle Speed (Hydra-Matic)—375 RPM.
Float Level—½" from machined projection on cover to top of soldered seam at free end (invert to check).
Accelerating Pump—Lower hole Normal setting. Upper hole (max.) winter. Inner hole (min.) summer.

Fuel Pump Pressure: 5 lbs. maximum.

MANIFOLD HEAT CONTROL: Thermostatic coil type. Setting—Coil wind-up should be 125° (approx. ⅓ turn) at room temperature. NOTE—To check valve for correct position on shaft, use feeler gauge in slot on rear end of valve shaft. With valve closed, gauge should contact stop pin (slot 6° to left or toward engine from up-and-down position) with ⅛" clearance between valve tip and manifold. Valve welded to shaft in this position.

VALVE TAPPET CLEARANCE: .008" Int., .011" Exh. Hot.
Valve Timing Check—*See Valve Timing.*

STARTING: *See Battery, Starter, Generator, Regulator.*

IGNITION

IGNITION SWITCHES: Delco-Remy Nos. as follows:
1946-47—1116353 (66), 1116351 (76), 1116331 (76 RHD). These are used with armored cable.
1948—1116458 (66, 76), 1116459 (76 RHD). Armored cable not used.

Ignition Lock Cylinder: Briggs and Stratton Numbers ('46-47) 45792, ('48) 85373.
Key Series—8000 to 9499. Groove—No. 15.

COIL: Delco-Remy ('46-47) 1115126 or 1115129, (1948) 1115380. ('46-47) on dash, ('48) on engine.
Ignition Current—2.0 amperes idling, 4.5 stopped.

CONDENSER: Delco-Remy 1869704.
Capacity—.18-.25 microfarad.

DISTRIBUTOR: Delco-Remy Model No. ('46) 1110213, ('47-48) 1110214. Automatic advance with Vacuum Spark Control and Octane Selector.
Breaker Gap—.020". Limits .018-.024".
Cam Angle or Dwell—35° closed, 25° open.
Breaker Arm Spring Tension—17-21 ounces.
Rotation—Counter-clockwise viewed from above.

Automatic Advance—1110213

Distributor Degrees	R.P.M.	Engine Degrees	R.P.M.
Start	250	3.0	500
3.0	450	6.0	900
12.0	1600	24.0	3200

Automatic Advance—1110214

Start	250	3.25	500
13.0	1300	26.0	2600

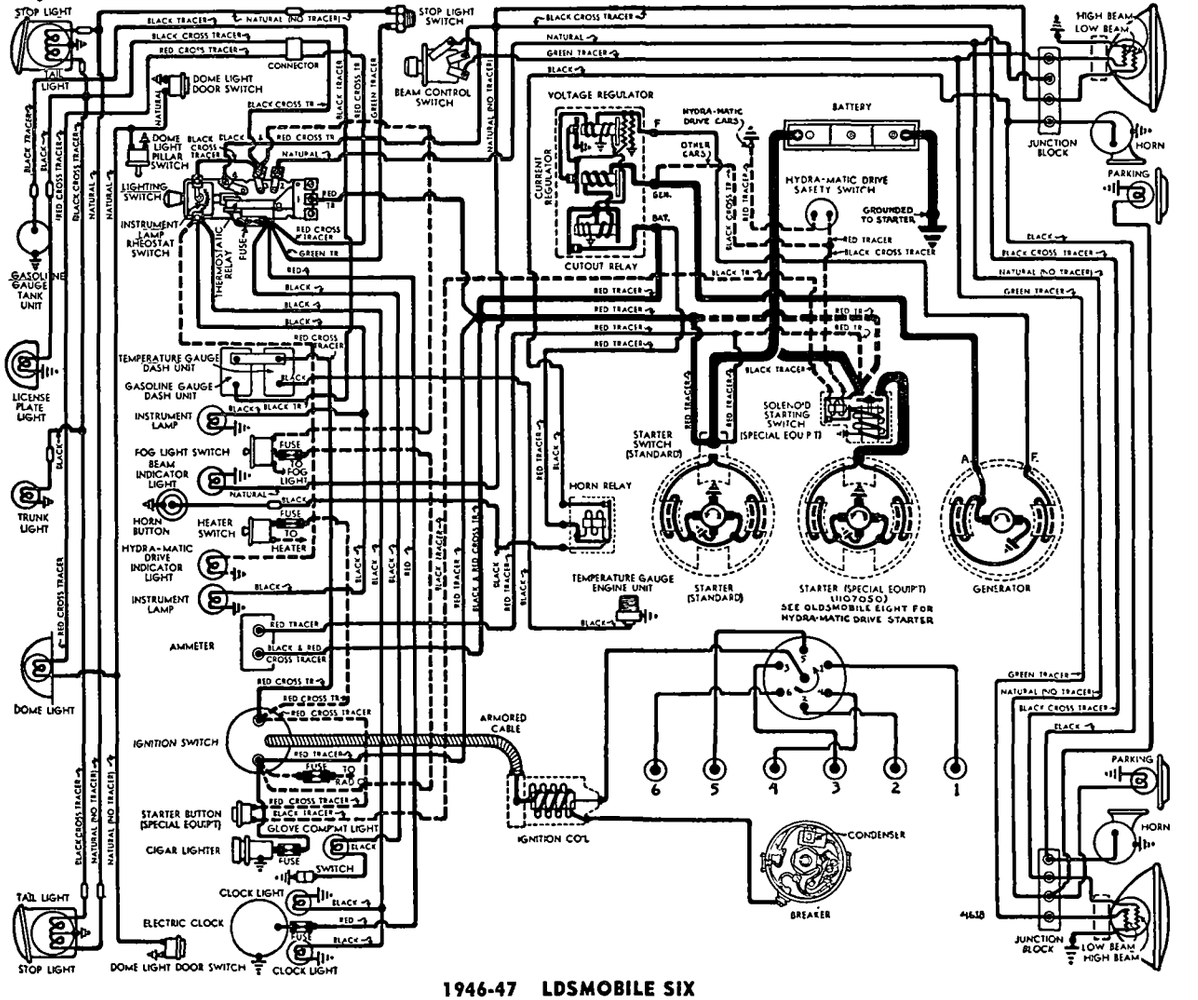

1946-47 LDSMOBILE SIX

Vacuum Spark Control: Delco-Remy No. 1116035—Integral type linked directly to breaker plate). Provides additional advance at speeds above idling except when engine accelerated or operated with wide open throttle when spark retarded by return spring within unit. **Plunger Travel—7/64".**

Vacuum Advance

Distr. Degrees	Eng. Degrees	Vacuum (" of HG)
Start	0°	7.5-9.5"
6°	12°	14.6-16.6"①

①—At .103" travel.

Octane Selector—Adjustment permits 10° advance or retard from center '0' position. See Ign. Timing.

Removal:—Distributor mounted on left side of engine. To remove, disconnect vacuum line, take out hold-down screw in advance arm.

IGNITION TIMING

Std. Setting — **Piston Position**

Synchro-Mesh Transmission ..... TDC.

Hydra-Matic Drive ..... .001" BTDC.

NOTE—Modify this setting for special fuel and altitude conditions. See Octane Selector Setting.

Flywheel Mark—Steel ball on flywheel (#1 and #6 piston top dead center position). Inspection hole in left front face of flywheel housing above starter.

Timing (With Synchroscope)—Recommended method. Loosen hold-down screw in advance arm, center Octane Selector scale ('0' at indicator line), tighten hold-down screw. Clip synchroscope lead to #1 spark plug, direct synchroscope light on flywheel through inspection hole in left front face of housing above starter. Idle engine, loosen advance arm clamp bolt, rotate distributor until ignition mark (steel ball insert) on flywheel lines up with indicator on housing, tighten clamp bolt, check Octane Selector setting (below).

Hydra-Matic Drive Car Note—Set distributor so contacts open with piston .001" before top dead center.

Timing (Without Synchroscope)—Turn engine over to firing position for #1 piston with steel ball insert in flywheel at indicator in inspection hole in left front face of flywheel housing (or with piston .001" BTDC. on cars with Hydra-Matic drive). Loosen hold-down screw in advance arm, center pointer on scale ('0' mark at indicator), tighten hold-down screw. Loosen advance arm clamp bolt, rotate distributor until contacts begin to open, tighten clamp bolt and check Octane Selector setting.

Octane Selector Setting: Set for a slight ping when accelerating engine with wide open throttle at speeds below 15 MPH. To adjust, loosen distributor hold-down screw, rotate distributor clockwise toward 'Adv' end of scale (if no ping noted), counter-clockwise toward 'Ret' end of scale (if ping too severe) by steps until performance correct.

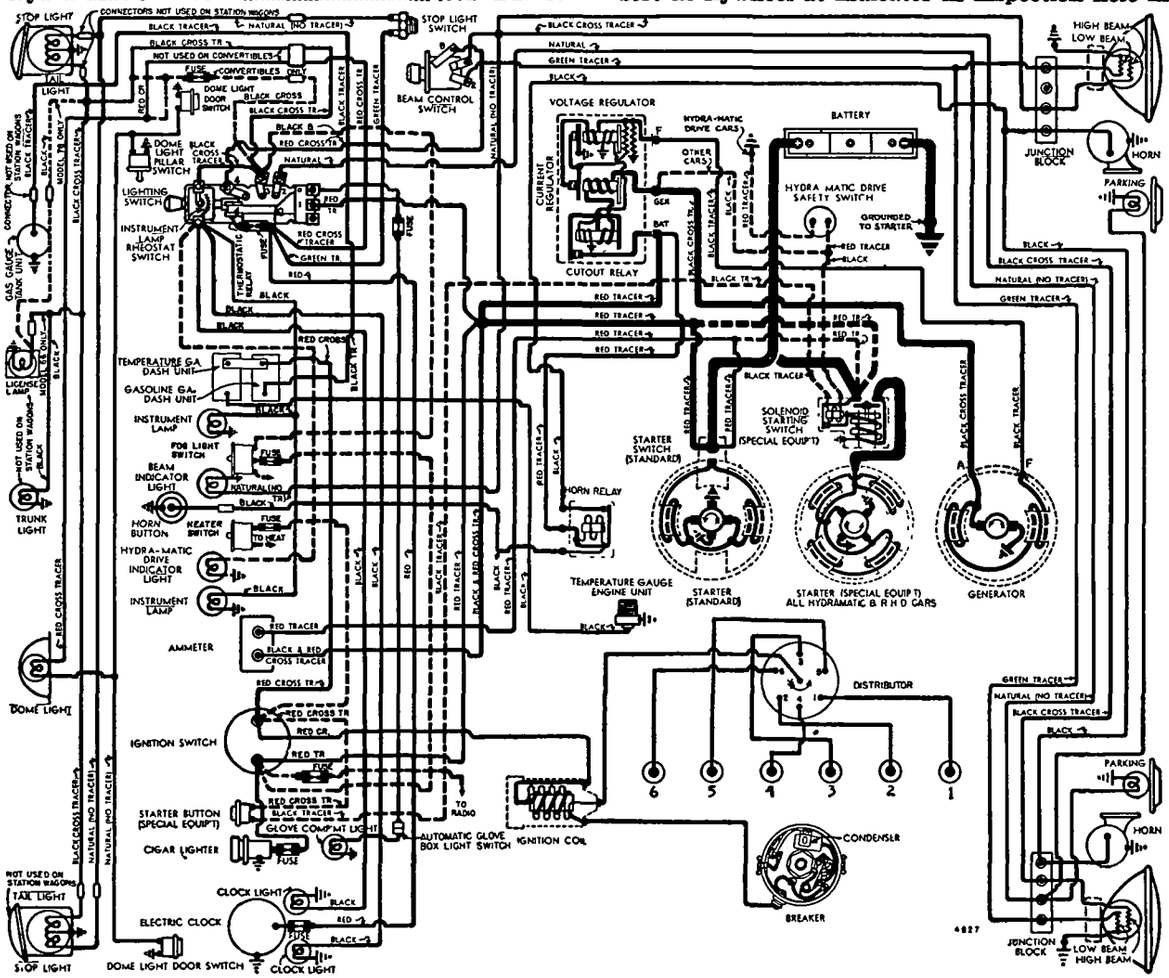

1948 LDSM BILE SIX

CARBURETOR

1946-47-48 Synchro-Mesh Tr...Carter WA-1, No. 504S
1946-47 Hydra-Matic .....Carter WA-1, No. 481S
1948 Hydra-Matic..... Carter WA-1, No. 651S
1½" single barrel downdraft with Carter Climatic Control.

Casting No. on Flange—(481S, 504S) 340, (651S) 538.
See Carburetor Section for complete data.

Settings (Idle Setting, Float Level, and Accelerating Pump): ***See Tune-Up data.***
Metering Rods & Jets—***See Carter Downdraft Jet Specification Table in Carburetor Section.***

Hydra-Matic Throttle Adjustment: ***See Hydra-Matic Drive article in Transmission Section.***

Throttle Cracker Adjustment: .0625" to .0851" (1/16") clearance between throttle stopscrew and highest step of fast idle cam with starting pedal fully depressed (starter pinion fully meshed). Adjust by loosening locknut and turning adjusting screw on accelerator bellcrank (screw contacts lug on lever linked to starter pinion shift lever).
CAUTION—Engine will not start properly if this adjustment not correctly made.

Fast Idle: Carter Single Barrel Carburetor type.
See Carburetion Equipment Section for complete data.
Setting—⅝" clearance between choke valve and air horn (Gauge T109-85) with throttle valve closed and stopscrew against (not on) first step of fast idle cam. Adjust by bending connector link at lower offset (T109-41).

Automatic Choke: Carter Climatic Control (single carbs.).
See Carburetion Equipment Section for complete data.
Setting—Centered (coil housing at index mark).

CARB. EQUIPMENT

Air Cleaner: AC No. 1529861 Oil-wetted type Std.
Filter Element AC 1528064. Oil-bath Cleaner Optl.
Servicing—Wash and re-oil oil-wetted type every 2000 miles (500 to 1000 miles for dusty conditions). For Oil bath types, wash element and re-fill with 1 pint S.A.E. 50 oil (S.A.E. 40 for winter temperatures) every 5000 miles (2500 miles or oftener as required by local conditions in dusty areas).

Fuel Pump: AC Type "AJ" No. 1537358. AC Replacement Exchange No. 536. Fuel-and-vacuum type.
See Carburetion Equipment Section for complete data.
Pressure—5 lbs. maximum.

Gasoline Gauge: AC Electric type.
Dash Unit—AC No. ('46-47) 1516809, ('48) 1517091.
Tank Unit—AC No. ('46-47) 1516285, ('48) 1517068.
See Carburetion Equipment Section for complete data.

CONTINUED ON NEXT PAGE

C NTINUED FR M PRECEDIN PA E

BATTERY

Delco Type 15E-2. 6 Volt, 15 Plate, 100 Ampere Hour Capacity (20 hour rate).

Starting Capacity—120 amperes for 20 minutes.

Zero Capacity—300 amperes for 3.5 minutes. Five second voltage 4.25 volts.

Grounded Terminal—Negative (—) to Starter.

Location—On left side in engine compartment.

Police Battery Delco Model 19E-1. 6 volt, 19 plate, 130 Ampere Hour Capacity (20 hour rate).
Grounded Terminal and Location—Same as above.

STARTER

Delco-Remy Nos.	Type
1107034 ('46), 1107066 ('47-48)	Foot Operated
1107930 (Hydra-Matic & RHD Cars)	Pushbutton
1107050 ('46-47 Optional)	Pushbutton

Armature No.—Delco-Remy No. 1867897 (all mod.).

Drive—Overrunning clutch type, with pinion shift, manual (1107034, 66), solenoid (1107050, 930).

Rotation—Counter-clockwise at commutator end.

Brush Spring Tension—24-28 ounces each.

Cranking Engine—100 RPM., 125-135 amperes, 5 volts (for Summer Temperatures).

Performance Data—1107034, 50, 66

Torque	R.P.M.	Volts	Amperes
0 ft. lbs.	5000	5.0	65
12 "	Lock	3.37	525

Performance Data—1107930

0	ft. lbs.	6000	5.0	60
15	"	Lock	3.0	600

Removal:—Flange mounted on left front face of flywheel housing. To remove, take out mounting screws.

Starting Switch (1107034, 66): Delco-Remy No. 820052. On starter. Operated by pedal pionion shift lever. (1107050, 1107930)—Delco-Remy Solenoid Switch No. 1118021. On starter. Controlled by Pushbutton Switch No. 1996009 on instrument panel (and Neutral Safety Switch No. 1997761 on Hydra-Matic Cars).
See Electrical Equipment Section for complete data.
Safety Switch Adjustment—Place Selector Lever in "N" (neutral) position, loosen safety switch bracket locking screw, adjust switch so clearance between lever and stop is 1/16-3/32".

GENERATOR

Delco-Remy 1102664 (Std.), 1102680 (Hydra-Matic). Armature No. 1879002. Two brush (shunt) types with voltage and current regulation. Ventilated by fan.

Pulley Note—Cars with Std. Trans. (1102664 Gen.) have regular 3 9/16" pulley. Hydra-Matic Drive cars (1102680 Gen.) have smaller 3 1/16" pulley to compensate for lower engine speed (max. output reached at approx. 110 Eng. RPM. less). NOTE—This pulley can be installed on cars with 3.9-1 Axle ratio

Charging Rate Adjustment—None. Charging rate controlled by Voltage Regulator, maximum output by Current Regulator. See Regulator data below.

Maximum Charging Rate—33 amperes, 7¾ volts, 2400 RPM (hot operating tem.) at 21 MPH car speed and above (Current Regulator setting) with load or discharged battery. Actual charging rate controlled by Voltage Regulator (dependent on battery).

Performance Data—Cold

	Amperes①	Volts	R.P.M.
1102664, 80	30	8.0	1750

①—Not maximum output. See Current Regulator.

Rotation—Counter-clockwise at commutator end.

Brush Spring Tension—25 ozs. each.

Field Current—1.75-1.9 amperes at 6.0 volts.

Removal:—Pivot mounted at left front of engine. To remove, take out pivot and clamp bolts.

Belt Adjustment:—Check with straightedge across pulleys. Belt deflection should be ¾" inward.

REGULATOR

Delco-Remy Model 1118242. Single Core Type. Vibrating type Voltage and Current Regulators in a single case with Cutout Relay.
See Electrical Equipment Section for complete data.
CAUTION—Check generator for grounded field coils and leads before changing regulator settings

Cutout Relay

Cuts In—6.2-6.7 volts hot.
Cuts Out—0-4.0 ampere discharge current.
Contact Gap—.020" (same for both sets).
Air Gap—.020" (with contacts just closed).

Voltage Regulator

Setting—7.2-7.4 volts hot (at operating temp.). Regulator over-compensated for temperature. Should be checked with cover in place and hot.
Checking & Adjusting—*See Electrical Equip. Section.*
Air Gap—.070" between center of core and armature with contacts just closing (press down on armature to open contacts, release pressure, check gap at point where contacts just close).

Current Regulator

Setting—34-36 amperes hot (at operating temp.).
Checking & Adjusting—*See Electrical Equip. Section.*
Air Gap—.080" (check same as Voltage Regulator).

LIGHTING

Headlamps: Guide "Sealed Beam" type.
See Electrical Equipment Section for complete data.
Headlamp Adjustment—Aim upper beam straight ahead (hot spot center 3" below lamp center height).
Beam Indicator—Small red indicator in upper edge of speedometer. Lighted when Upper Beams in use.

Direction Signal: *See Electrical Equipment Section.*

Switches

Lighting—(1946—66, 1946-47—76) Delco-Remy Nos. 1995026 (1995027 for RHD cars).
(1947—66) Delco-Remy 1995033 (1995034 for RHD).
(1948—66) Delco-Remy 1995036 (1995037 for RHD).
(1948—76) Delco-Remy 1995038 (1995039 for RHD).

Instrument—Part of Lighting Switch. Rheostat operated by turning lighting switch knob.
Beam Selector—Delco-Remy No. 1997008.
Stop Light—Delco-Remy No. 1997725.

Bulb Specifications

Position	Candlepower	Mazda No.
Headlamps	Sealed Beam	4030
Parking, Rear License	3	63
Dir. Signal & Parking	21-3	1154
All Indicators	1	51
Instrument, Glove C., Clock	1½	55
Stop & Tail	21-3	1154
Dome (exc. Sta. Wg. & Conv.)	15	88
Dome (Station Wagon)	6	81
Dome (Convertible)	1½	55
Trunk & Under-hood	6	81
Back-up	32	1133L

MISC. ELECTRICAL

THERMOSTATIC RELAY: On lighting switch. Contacts remain closed with 30 ampere current, open in 3 minutes with 42 amps. current@70°F. Limits current to 18 amps. with dead short-circuit. Not adj

FUSES: Dome & Stop Lights—On lighting switch. ('46-47) SFE 9 ampere. ('48) SFE 14 ampere.
Dome & Tail (1948 Convertible)—3AG 20 ampere. In body feed wire to tail and dome lights.
Glove Box & Under-hood light—1AG 5 ampere.
Direction Signal—SFE 9 ampere. In Flasher to Ignition Switch wire.
Electric Clock—1AG 2 ampere. In feed wire.
Cigar Lighter—1AG 30 and 3AG 30 ampere.
Radio—3AG 15 ampere.
Back Up Light—SFE 9 ampere.

HORNS: Delco-Remy No. Low Note: (1946-47) 1999607, (1948) 1999617, High Note: (1946-47) 1999608, (1948) 1999618. Vibrator type operated by relay.

Type	Current (at 6 volts)	Air Gap
1999607, 617 (Low)	19-21 amperes	.047-.052"
1999608, 618 (High)	18-20 amperes	.039-.044"

Horn Relay:—Delco-Remy No. 1116775.
Contact Gap—.025". **Air Gap**—.015" (closed).
Contacts Close—2.75-4.0 volts.

ENGINE

ENGINE SPECIFICATIONS: 6 cylinder, "L" head type.
Bore—3½". **Stroke**—4⅛".
Displacement—238.1 cubic ins. **Rated HP**—29.4.
Developed Horsepower—100 at 3400 RPM.
Compression Ratio—6.5-1 cast-iron head.
Compression & Vacuum Reading—*See Tune-up data.*

OIL PAN REMOVAL: *See Oldsmobile Shop Notes.*

TIGHTENING TORQUES (Torque Indicating Wrench Data)—*See Oldsmobile Shop Notes.*

CYLINDER HEAD: Tightening Torque & Cylinder Head Diagram—*See Oldsmobile Shop Notes.*

PISTONS: Aluminum alloy, T-slot, cam ground, electro-plated type.
Weight—17.37 ozs. **Length**—4 1/32".
Removal—Pistons and rods removed from above.
Clearance—Top land .023-.028". Skirt clearance Top .0025", Bottom .00075". Fitted for .0005-.0010" clearance on thrust surface. See Fitting New Pistons.

Replacement Pistons: Finished pistons (pins fitted) .003", .005", .010", .015", .030" oversize.

Fitting New Pistons: Check piston for size with micrometer (pin removed) 90° from pin bosses ⅜" below lower ring groove and ⅜" from bottom of skirt. Insert .002" x ½" feeler between piston (pin removed) and cylinder wall on valve side with piston inverted and T-slot on opposite side from feeler. Pull to withdraw feeler must be 4 to 11 lbs. (piston and block at 70°—low limit below 70°, high above).

Installing Pistons: Mark "V-S" on head toward valves (slot away from valves). Pin hole offset 3/32" to left.

PISTON RINGS: 2 coated compression (install with mark TOP up), 2 oil control rings, all above pin.

Ring	Width	End Gap	Side Clearance
Compr.	.0925-.0935"	.008-.018"	.001-.003"
Oil Contr.	.1860-.1865"	.007-.015"	.001-.0025"

Replacement Rings: .010", .020", .030" oversize.

ENGINE

C NTINUED FR M PRECEDING PAGE

PISTON PIN: Diameter—.8554-.8557". **Lgth.**—3 5/32". Pin locked in one piston boss by lockscrew (opposite end slotted). Pin bosses are plated and must not be reamed. Standard size pins only serviced.
Pin Fit in Piston—.0001" tight to .0002" loose (plain boss end), .0003-.0006" tight (lock boss end).
Pin Fit in Rod Bushing—.0003-.0006" clearance.
Pin Fitting, Removal, and Installation—*See "Piston Pins" in Oldsmobile Shop Notes.*

CONNECTING ROD: Length 7 13/16". Weight 29 ozs.
Crankpin Journal Diameter—2.123-2.124".
Lower Bearing Diameter—2.1245-2.1255".
Lower Bearing—Removable steel-backed, Durex-babbitt overlay bearing shells.
Clearance—.0005-.0025". **Sideplay**—.0055-.0105".

Bearing Adjustment: None (no shims). Replace bearings.

Installing Rods: Oil spit hole at lower end toward valves and grooves on rod and cap bolt boss (part number side) matched. Special ground cap bolts with self-locking nuts used. Tighten to 45-50 ft. lbs.

CRANKSHAFT: 4 bearing, 7 integral counterweights.
Journal Diameters—#1, 2.478-2.479"; #2, 2.5405-2.5415"; #3, 2.6655-2.6665"; #4, 2.6855-2.6865".
Bearings—Removable steel-backed, Durex-babbitt overlay bearing shells. Front bearing has oil groove (to front) for thrust plate lubrication.
Clearance—.0005-.002" (rear), .001-.003" (all others).

Bearing Adjustment:—None (no shims). Replace bearings. Do not file caps. NOTE—9/16" cap bolts used on rear bearing, ½" on others (heads alike).
Bearing Removal—*See "Crankshaft & Main Bearings" in Oldsmobile Shop Notes.*

End Thrust:—At #1 bearing. **Endplay**—.004-.008". *See "Crankshaft & Main Bearings" in Oldsmobile Shop Notes.*

Rear Main Bearing Oil Seal Installation: *See "Crankshaft & Main Bearings" in Oldsmobile Shop Notes.*

CAMSHAFT: 4 bearing. Non-adjustable chain drive.
Journal Diameters—#1, 1.9975-1.9980"; #2, 1.9350-1.9355"; #3, 1.8725-1.8730"; #4, 1.8100-1.8105".
Reamed Bushing Diameters—#1, 1.9995-2.001", #2, 1.937-1.9385"; #3, 1.8745-1.876"; #4, 1.812-1.8135".
Bearings—Bronze bushings. **Clearance** .0015-.0035".

End Thrust:—Forward thrust taken by flange on front engine support plate, rear thrust by flange on shaft bearing against front of engine block.

Timing Chain: Link-Belt. Width 1". Pitch .500". Length 47 links or 23½".
Width 1". Pitch .500". Length 47 links or 23½".

Camshaft Setting—Mesh chain with sprocket marks adjacent and in line with a straightedge across the shaft centers (or use Tool HM-408-0).

VALVES:	Head Diameter	Stem Diameter	Length
Intake	1 9/16"	.3415-.3425"	5 51/64"
Exhaust	1 27/64"	.3410-.3418"	5 51/64"

	Seat Angle	Lift	Stem Clearance
Intake	30°	.303"	.00175-.00375"
Exhaust	45°	.298"	.00245-.00425"

Valve Guides:—Intake and exhaust guides same. Press guides in so top end ⅞" below top of block. (Tool J-1042 positions guide correctly in block). Ream to .34425-.34525" inside diam. (not tapered). **Length**—3 7/32".

Valve Springs:—Same spring used on both valves and on 6&8 engines. Damper on top of each spring. Free length 2⅝".

	Spring Pressure	Spring Length
Valve Closed	55 lbs.	2¼"
Valve Open	100 lbs.	1 15/16"

Valve Lifters:—Mushroom type. Diam. .6235-.6240". Lifter holes in block have bearing-ized finish (if worn, fit oversize lifter without reaming hole when possible, to preserve finish). Furn. .001", .002", .005", .010" OS. **Clearance** .0005-.0008". NOTE—Use only 1⅛" diam. face lifter (to clear fuel pump eccentric).

VALVE TIMING

Tappet Clearance:—.008" Int., .011" Exh. Hot & idling. NOTE—Self-locking tappet screws used.

Valve Timing:—See Camshaft Setting above.
Intake Valves—Open 5° BTDC. Close 45° ALDC.
Exhaust Valves—Open 45° BLDC. Close 5° ATDC.
Valve Timing Check—With .0124" tappet clearance, #1 intake valve should open with piston 5° (.0163") BTDC with flywheel TDC mark (steel ball insert) approx. 2 teeth before indicator (hole on left front face of housing). Reset tappet clearance at .008" hot.

LUBRICATION

Engine Oiling System: Pressure to main, connecting rod, and camshaft bearings, piston pins, and timing chain. Oil pump mounted externally on right side of engine.
Crankcase Capacity—5 quarts.
Normal Oil Pressure—30 lbs.
Oil Pressure Regulator—On oil pump. Opens at 30 lbs. Non-adjustable type.

Oil Pump: Gear type on right side of crankcase.
Oil Pump Assembly & Installation—*See "Oil Pump" in Oldsmobile Shop Notes.*

Oil Pressure Gauge: AC No. ('46-47) 1506797, ('48) 1507034.

Crankcase Ventilation: Filter element in oil filler cap (inlet breather). Outlet pipe on right side of engine.
Servicing—Wash and re-oil filter element every 2000 miles or oftener as required in dusty areas.

COOLING

Cooling System: Positive circulation with water pump on front of engine and water distributing tube in cylinder block. Pressure valve (relief valve) used in filler cap on 1947-48.
Capacity—18½ quarts.
Pressure Valve—AC No. 850501. Filler Cap Opens at 4 lbs. (3¼-4¼ lbs.).

Radiator Core Removal: *See Oldsmobile Shop Notes.*

Water Pump: Packless, sealed ball-bearing shaft. *See Water Pump Section for complete data.*

Thermostat:—Harrison. In cylinder head outlet.
Setting—Starts to open 152°F. Fully open 173°F.

Temperature Gauge: AC Electric type.
Dash Unit—('46-47) 1511652, ('48) 1512059.
Engine Unit—('46-47) 1510772, ('48) 1512015.
See Miscellaneous Section for complete data.

CLUTCH

Borg & Beck Model 9A7 with Borglite driven member. Single plate, dry disc type with steel and asbestos composition pressure plate oil baffle and clutch release bearing lubrication fitting. **Cover No. 924.** *See Clutch Section for complete data.*
Facings—Spiral wound (spirally grooved) molded woven, 2 used. Inside Diam. 6", O.D. 9¼". ⅛" thick.

Pedal Adjustment:—Free travel 1-1¼". Turn link at fork in or out of clevis on auxiliary shaft.

Removal:—Remove transmission (see data below), clutch underpan and take out 6 mounting screws in clutch cover (when installing, use 2 long shank mounting screws in 2nd hole on each side of locating dowel), lower clutch assembly out.

TRANSMISSION

STANDARD

Own Make. All helical gear. Constant-mesh, synchro-mesh (second & high), sliding gear (low & reverse).
See Transmission Section for complete data.

Transmission Control:—Oldsmobile 'Handi-shift' type.
See Transmission Section for complete data.

Removal:—Disconnect shift and selector rods from levers at transmission, speedometer cable, rear universal and slide slip yoke and propeller shaft to rear. Remove four transmission mounting capscrews, pull transmission straight back and remove.

HYDRA-MATIC DRIVE

OPTIONAL EQUIPMENT

Own Make. Consists of fluid coupling and 4 speed automatic transmission.
See Transmission Section for complete data.
Lubrication—Check fluid level in transmission at each 1000 mile lubrication period or every 2000 miles. Drain and refill every 15000 miles. Use only Oldsmobile Hydra-Matic Drive Fluid.
Capacity—11 qts. (when drained and refilled with unit in car). **Approximately 12 qts.** (when refilling after the unit has been removed and completely rebuilt).
Checking Fluid Level—Engine must be running at slow idle. Raise floor mat, take off cover in floor above transmission, lift out combination filler cap and dip stick. Add fluid until level is at "FULL" mark with engine idling.
►*CAUTION—Engine must be running at slow idle speed when checking Hydra-Matic Drive Fluid Level.*
Hydra-Matic Linkage Adjustment—*See Hydra-Matic Drive article in Transmission Section.*

Removal: *See Hydra-Matic Drive article in Transmission Section.*

UNIVERSALS

Mechanics 2C or 2CR types. Roller bearing types.
See Universals Section for complete data.
NOTE—Slip joint formed at rear of transmission ahead of front U-joint (driveshaft 1 piece type).
►**1947-48 CAUTION**—Rear universal companion nut controls rear axle pinion bearing "pre-load" (must be adjusted whenever nut is loosened). *See 1947-48 Oldsmobile in Rear Axle Section.*

REAR AXLE

1946 Type—Same as 1942. Hypoid gear, semi-floating type. This type axle has three setscrews equally spaced around pinion housing.
See Rear Axle Section for complete data.
1947-48—New hypoid gear, semi-floating type. Design similar to 1946 type except that pinion is mounted on two taper roller bearings and com-

C NTINUED N NEXT PA E

C NTINUED FR M PRECEDIN PA E

panion flange nut controls pinion bearing "pre-load." No setscrews are used.
See Rear Axle Section for complete data.

1946-47 Rear Axle Ratios

Std.: (66) 4.1-1, (76 '46) 4.3-1, (76 '47) 4.55-1.
Hydra-Matic— (66) 3.42-1, (Std. 76, Optl. 66) 3.9-1.
Optional: 3.9-1 or 4.55-1.

1948 Standard Ratios

66—43:10 (4.3).
76 (& 66 Station Wagon)—41:9 (4.55).
66 Convertible (Optl. Hilly Ratio)—41:9 (4.55).

1948 Hydra-Matic Ratios

66—40:11 (3.64).
76 (& 66 Sta. Wag. & Convertible)—39:10 (3.9).
66 (Optional Hilly Ratio)—39:10 (3.9).
All Export (Optl. Ratio)—41:10 (4.1).

►**Rear Axle Ratio Marking**—Ring and pinion gear ratio (43:10, etc.) and date, stamped on underside of carrier casting, right horizontal rib.
Backlash—('46) .004-.008", ('47-48) .004-.006". Screw adjustment.

Removal:—Disconnect drive shaft at rear universal (do not disengage spline joint at transmission), remove axle shafts and carrier flange capscrews.

►**1947-48 CAUTION**—Rear universal companion flange nut controls pinion bearing "pre-load" (must be adjusted whenever nut is loosened).

Axle Shaft Removal: Hoist rear end, remove wheel, brake drum, backing plate mounting nuts, static collector and loosen bearing retainer (do not move backing plate or brake line may be damaged). Pull shaft and bearing with puller J-942 (do not allow shaft to drag on oil seal), replace 1 backing plate nut.
Wheel Bearing Adjustment—None.

Rear Suspension: Coil spring type with support arms.
See Rear Axle Section for complete data.

SHOCK ABSORBERS

Delco. Two types are used. FRONT—Model 1947-C (right), D (left). RIGHT REAR—2105-E (76), G (66). LEFT REAR—2105-F (76), H (66). Double acting (parallel cylinder type rear), hydraulic.
See Shock Absorber Section for complete data.

FRONT SUSPENSION

Front Suspension:—Independent, linked parallelogram type with coil springs.
See Front Suspension Section for complete data.
Kingpin Inclination—4° 51' 10".
Caster—0-¾° Negative. Adjustable.
Camber—Negative ¼° to Positive ¾°. Adjustable.
Toe In—1/16-⅛". Adjust each tie rod equally.
Steering Geometry—Inner wh'l 23°±½°. Outer 20°.

STEERING GEAR

Steering Gear—Saginaw Worm-and-Roller type.
See Steering Gear Section for complete data.

BRAKES

Service Brakes: Bendix Hydraulic, duo-servo, single anchor type without eccentric adjustment. Hand lever applies rear wheel service brakes.
See Brake Section for complete data.
Wheel Cylinder Bore—Front wheel 1⅛". Rear 1".
Drums—Cast-iron lined steel. Diameter 11".
Lining—Moulded. Width 2" (front wheels), 1¾" (rear). Thickness 3/16". Length per shoe: 9 11/32" (primary), 11 31/32" (secondary).
Clearance—.015" at both ends of secondary (rear) shoe with primary shoe forced out against drum.
Braking Power—56% front wheels, 44% rear.

Hand Brake:—See Service Brakes above.

MISC. MECHANICAL

Convertible Top Control: Hydro-lectric type (hydraulic actuation with motor-driven pump supplying oil under pressure for power cylinders).
See Miscellaneous Section for complete data.

HOOD LOCK: Alligator type hood. To raise hood, pull out on control knob on instrument panel (hood will raise slightly), push up on 'Safety Hook' tab

FRONT SHEET METAL ASSEMBLY REMOVAL, HOOD ADJUSTMENT & REMOVAL, FENDER CAP ALIGNMENT: *See Oldsmobile Shop Notes.*

MODEL IDENTIFICATION

SERIAL NUMBER: On plate ('46-47) on upper left front corner of dash under hood, (1948) on left front door hinge post.

1946-47-48 Numbers—First numbers as follows:

Series	Lansing Mich.	Linden N. J.	South Gate, Cal.	Wilmington, Del.
68 ('47)	68-13001	68L- 4001	68C-4001	68W-1001
68 ('48)	68-25001	68L8001	68C6001	68W2001
78 ('46)	78-33001	78L- 5001	78C-5001	
78 ('47)	78-50001	78L- 8001	78C-7001	78W-1001
78 ('48)	78-72001	78L16001	78C11001	78W2001
98 ('46)	98-32001	98L- 7001	98C-5001	
98 ('47)	98-43001	98L-10001	98C-7001	98W-1001
98 ('48)	98-65001	98L20001	98C11001	98W1001

	Atlanta Ga.	Framingham Mass.	Kansas City Kans.
68 ('47)	68A-1001	68B-1001	68K-1001
68 ('48)	68A2001	68B1001	68K3001
78 ('47)	78A-1001	78B-1001	78K-3001
78 ('48)	78A2001	78B1001	78K7001
98 ('47)	98A-1001	98B-1001	98K-2001
98 ('48)	98A1001	98B1001	98K6001

ENGINE NUMBER: Stamped on pad on front left top corner of cylinder block above generator.
1946 Numbers—8-1001 Up.
1948 Numbers—Models 68 & 78. 8-127001 Up.
1948 Numbers—Model 98 First No. 9-1001 (LHD).
Hydra-Matic Cars—Engine Number marked with letter "H" following number: 8-1001H.

TUNE-UP

COMPRESSION: Pressure—115 lbs. at cranking speed of 100 RPM. (All Exc. Futuramic), 182 lbs. at 1000 RPM. (Futuramic 98 1948).

VACUUM READING: Steady 17" min. at idling speed.

FIRING ORDER: 1-6-2-5-8-3-7-4. See diagram.

SPARK PLUG GAPS: .030".
Plug Type—AC No. 45, 14 mm.

IGNITION—*See Coil, Condenser, and Distributor.*
Breaker Gap—.015".
Cam Angle or Dwell—31° Closed, 14° Open.
Breaker Arm Spring Tension—19-23 ounces.
Automatic & Vacuum Advance—*See Distributor.*

IGNITION TIMING: Synchro-Mesh Trans.....2° BTDC
Hydra-Matic Drive Cars .....001" BTDC
Timing Procedure—*See Ignition Timing.*
Timing Mark—Steel ball insert (2° BTDC.) in flywheel lined up with pointer in inspection hole in left front face of flywheel housing beside starter.
Octane Selector—Set to give slight ping accelerating wide open throttle, high gear, below 15 MPH.

CARBURETION: *See Carburetor & Carb. Equipment.*
Idle Setting—(480S, SA; 503S, SA) ½-2¼, (665S) ¾-1¾, (650S, SA) ½-1½ turns open. Two screws—turning screws out gives richer mixture.
Idle Speed (Standard)—425 RPM. or 6 MPH.
Idle Speed (Hydra-Matic)—375 RPM.
Float Level (WDO Carburetors)—3/16" ("S" carburetors with 25-100S Needle & Seat Assembly), 15/64" ("SA" carburetors with later 25-164S Needle & Seat Assembly) from top of float to machined surface of cover (remove gasket and invert to check).
Float Level (WCD 665S carburetor)—3/16" from top of float to gasket seat on bowl cover (Gauge T109-162). Sides of floats should barely touch vertical uprights on gauge (to prevent floats binding on sides of bowl).
Accelerating Pump—Seasonal adjustment on WCD 665S only: Top hole (max.) normal, Lower hole if less charge required.

Fuel Pump Pressure: 5 lbs. maximum.

MANIFOLD HEAT CONTROL: Thermostatic coil type.
Setting—Coil wind-up should be 160° (approx. ½ turn) at room temperature. NOTE—To check valve for correct position on shaft, use feeler gauge in slot on rear end of valve shaft. With valve closed, gauge should contact stop pin (slot 6° to left or toward engine from up-and-down position) with ⅛" clearance between valve tip and manifold.

VALVE TAPPET CLEARANCE: .008" Int., .011" Exh. hot. **Valve Timing Check**—*See Valve Timing.*

STARTING: *See Battery, Starter, Generator, Regulator.*

IGNITION

IGNITION SWITCHES: Delco-Remy Nos. as follows:
1946-47—1116351 (78), 1116353 (98). These are used with armored cable.
1948—1116458 (68, 78), 1116453 (98). Armored cable not used.

Ignition Lock Cylinder: Briggs and Stratton Numbers ('46-47) 45792, ('48) 85373.
Key Series—8000 to 9499. Groove—No. 15.

COIL: Delco-Remy ('46-47) 1115126 or 1115129, (1948) 1115380. ('46-47) on dash, ('48) on engine.
Ignition Current—2.0 amperes idling, 4.5 stopped.

CONDENSER: Delco-Remy No. 1968704.
Capacity—.18-.25 microfarad.

DISTRIBUTOR: Delco-Remy 1110808 with Vacuum Control 1116036. Single breaker, 8 lobe cam, full automatic advance type with Octane Selector.
Breaker Gap—.015". Limits .0125-.0175".
Cam Angle or Dwell—31° closed, 14° open.
Breaker Arm Spring Tension—19-23 ounces.

CONTINUED ON NEXT PAGE

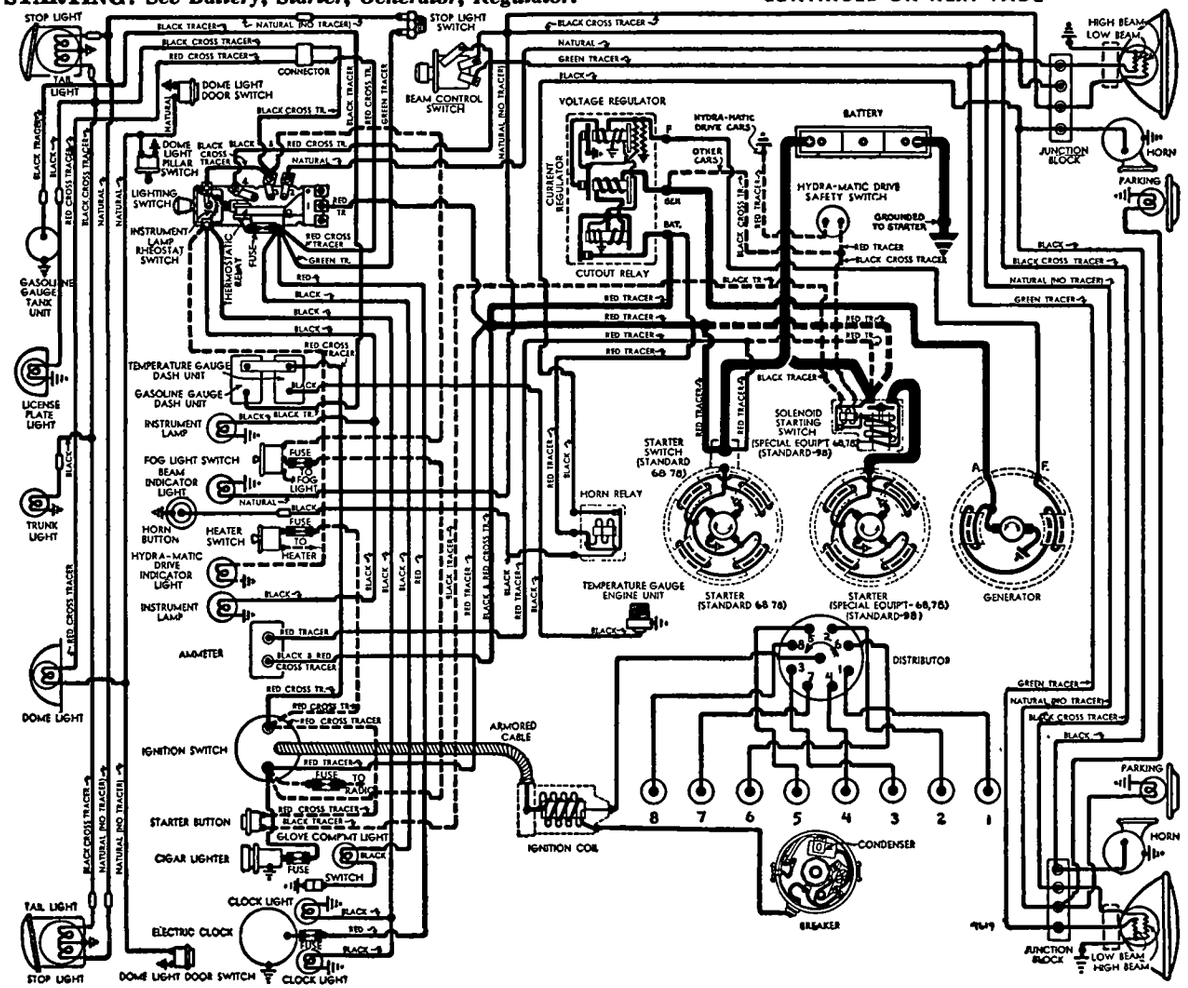

1946-47 OLDSM BILE EIGHT

C NTINUED FR M PRECEDING PA E

Rotation—Counter-clockwise viewed from above.

Distr. Degrees	Distr. R.P.M.	Automatic Advance Eng. Degrees	Eng. R.P.M.
Start	250	3.0	500
3.5	500	7.0	1000
12.0	1600	24.0	3200

Vacuum Spark Control: Delco-Remy No. 1116036—Integral type linked directly to breaker plate). Provides additional advance at speeds above idling except when engine accelerated or operated with wide pen throttle when spark retarded by return spring within unit. **Plunger Travel—9/64".**

Vacuum Advance

Distr. Degrees	Eng. Degrees	Vacuum (" of HG)
Start	0°	6.5-8.5"
6°	12°	14.0-16"①

①—At .125" travel.

Octane Selector—Adjustment permits 10° advance r retard from center '0' position. See Ign. Timing.

Removal:—Distributor mounted on left side of engine. To remove, disconnect vacuum line, take out hold-down screw in advance arm.

IGNITION TIMING

Std. Setting	Flywheel Degrees	Piston Position
Std. Trans. Cars	2° BTDC	.002" BTDC.
Hydra-Matic Trans.		.001" BTDC.

NOTE—Modify this setting for special fuel and altitude conditions. See Octane Selector Setting.

Timing (With Synchroscope)—Recommended method. Loosen hold-down screw in advance arm, center Octane Selector scale ('0' at indicator line), tighten hold-down screw. Clip synchroscope lead to #1 spark plug, direct synschroscope light on flywheel through inspection hole in left front face of housing above starter. Idle engine, loosen advance arm clamp bolt, rotate distributor until ignition mark (steel ball insert) on flywheel lines up with indicator on housing, tighten clamp bolt, check Octane Selector setting (below).

NOTE—On cars with Hydra-Matic drive, use dial indicator and set distributor so contacts open with piston .001" before top dead center.

Timing (Without Synchroscope)—Turn engine over to firing position for #1 piston with steel ball insert in flywheel at indicator in inspection hole in left front face of flywheel housing (or with piston .001" BTDC. on cars with Hydra-Matic drive). Loosen hold-down screw in advance arm, center pointer on scale ('0' mark at indicator), tighten hold-down screw. Loosen advance arm clamp bolt, rotate distributor until contacts begin to open, tighten clamp bolt and check Octane Selector setting.

Octane Selector Setting: Set for a slight ping when accelerating engine with wide open throttle at speeds below 15 MPH. To adjust, loosen distributor hold-down screw, rotate distributor clockwise toward 'Adv' end of scale (if no ping noted), counter-clockwise toward 'Ret' end of scale (if ping too severe) by steps until performance correct.

CARBURETOR

CARTER WDO

Car Model	Carter WDO No.
'46-48 Synchro-Mesh Tr.	503S, SA
'46-Part '47 Hydra-Matic	480S, SA
'48 Hydra-Matic	650S, SA

1⅛" Dual barrel downdraft type with Carter Climatic Control.

Casting No. on Flange—(480S, SA; 503S, SA) 342, (650S, SA) 540.

See Carburetor Section for complete data.

►**480S, 503S, 650S Carburetor Change to improve Warm Engine Starting**—*See 1946-47-48 Oldsmobile Eight (Carter WDO carburetors) in Carburetor Section.*

Settings (Idle Setting, Float Level, and Accelerating Pump): *See Tune-Up data.*

Metering Rods & Jets—*See Carter Downdraft Jet Specification Table in Carburetor Section.*

Hydra-Matic Throttle Adjustment: *See Hydra-Matic Drive article in Transmission Section.*

Throttle Cracker Adjustment: Must be set for correct throttle opening for starting. To adjust, disconnect starter cable at starter switch (for foot operated starters), disconnect coil lead to distributor (for solenoid operated starters), depress starter pedal or pushbutton to full down position (engine will be turning over on solenoid starter cars) to fully mesh starter pinion, loosen locknut and turn adjusting screw on accelerator bell-crank (screw contacts lug on lever linked to starter pinion shift lever) so that clearance between throttle stopscrew and highest step of fast idle cam is .105-.125" (⅛").

Fast Idle: Carter Dual (WDO) Carburetor type.

See Carburetion Equipment Section for complete data.

Setting—.015" opening between edge of throttle valve and bore of carburetor (side opposite port) with choke valve tightly closed.

Automatic Choke: Carter Climatic Control (Dual carbs.).

See Carburetion Equipment Section for complete data.

Setting—Mark on thermostat case centered on housing scale (503S, SA), 2 Notches Rich (480S, SA; 650S, SA).

CARBURETOR

CARTER WCD

►PART PRODUCTION 1947 HYDRA-MATIC

Carter WCD, No. 665S. 1¼" dual barrel downdraft type with Carter Climatic Control.

See Carburetor Section for complete data.

Settings (Idle Setting, Float Level, and Accelerating Pump): *See Tune-Up data.*

Metering Rods & Jets—*See Carter Downdraft Jet Specification Table in Carburetor Section.*

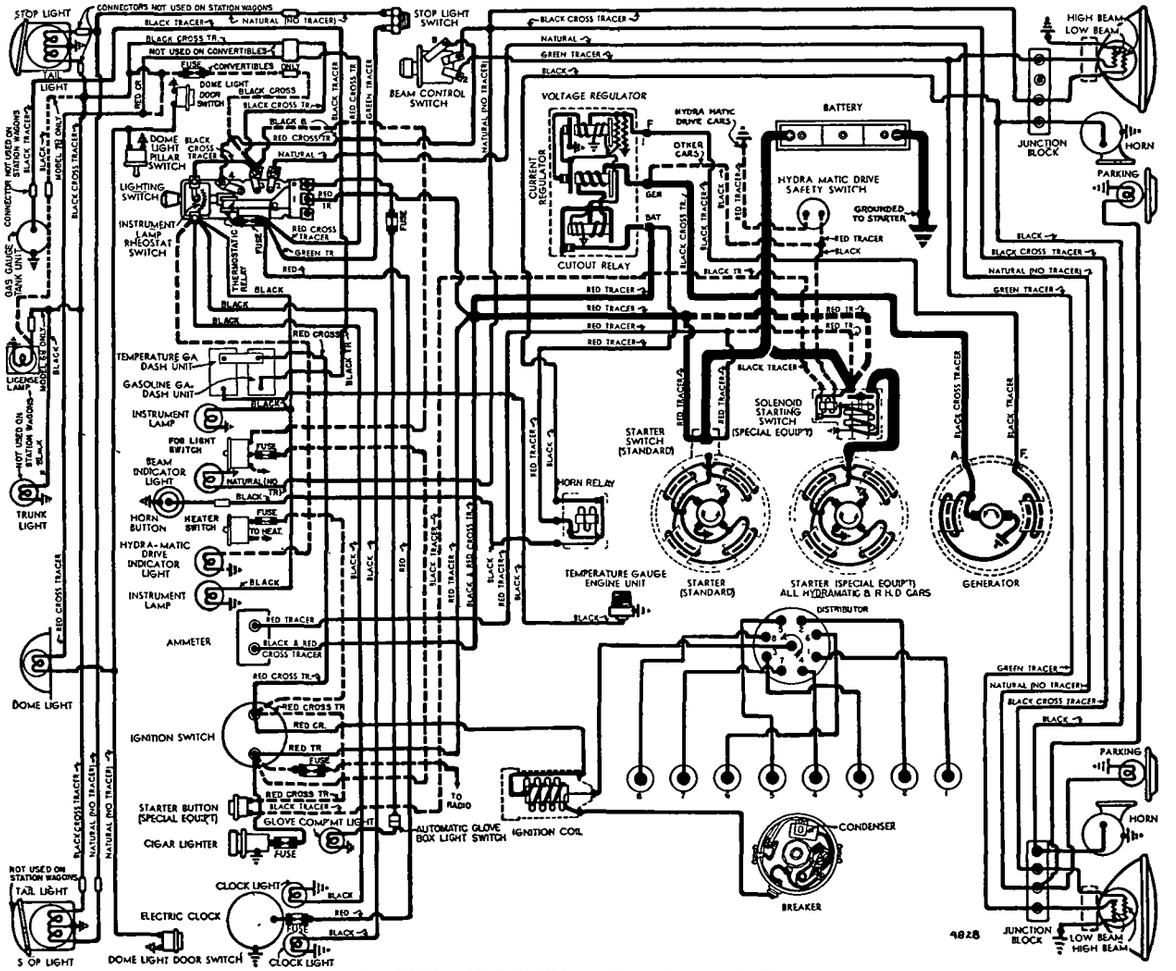

Hydra-Matic Throttle Adjustment: *See Hydra-Matic Drive article in Transmission Section.*

Fast Idle: Carter Dual (WCD) Carburetor type.
See Carburetion Equipment Section for complete data.
Setting—With choke valve tightly closed, and fast idle adjusting screw on highest step of fast idle cam, adjust fast idle screw for .018" throttle opening (use Gauge T109-44 between edge of throttle valve and carburetor wall on side opposite idle ports).

Automatic Choke: Carter Climatic Control (dual carburetor type).
See Carburetion Equipment Section for complete data.
Setting—One point Rich.

CARB. EQUIPMENT

Air Cleaner: AC No. 1544128 Oil-wetted type Std. Filter Element AC #6. Oil-bath Cleaner Optl.
Servicing—Wash and re-oil oil-wetted type every 2000 miles (500 to 1000 miles for dusty conditions). For Oil bath types, wash element and re-fill with 1 pint S.A.E. 50 oil (S.A.E. 40 for winter temperatures every 5000 miles (more often if necessary).

Fuel Pump: AC Type "AJ" No. 1537330. AC Replacement Exchange No. 535. Fuel-and-vacuum type.
See Carburetion Equipment Section for complete data.
Pressure—5 lbs. maximum.

Gasoline Gauge: AC Electric type.
Dash Unit (1946-47)—AC No. 1516809.
Dash Unit ('48)—AC (68, 78) 1517091, (98) 1517011.
Tank Unit—AC No. ('46-47) 1516285, ('48) 1517068.
See Carburetion Equipment Section for complete data.

BATTERY

1946-47: Delco 17E-2. 6 Volt, 17 Plate, 100 Ampere Hr. Capacity (20 hour rate).
Starting Capacity—140 amperes for 20 minutes.
Zero Capacity—300 amperes for 4.5 minutes. Five second voltage 4.4 volts.
Grounded Terminal & Location—Same as for 1948
1948: Delco 15E-2. 6 Volt, 15 Plate, 100 Ampere Hour Capacity (20 hour rate).
Starting Capacity—120 amperes for 20 minutes.
Zero Capacity—300 amperes for 3.5 minutes. Five second voltage—4.25 volts.

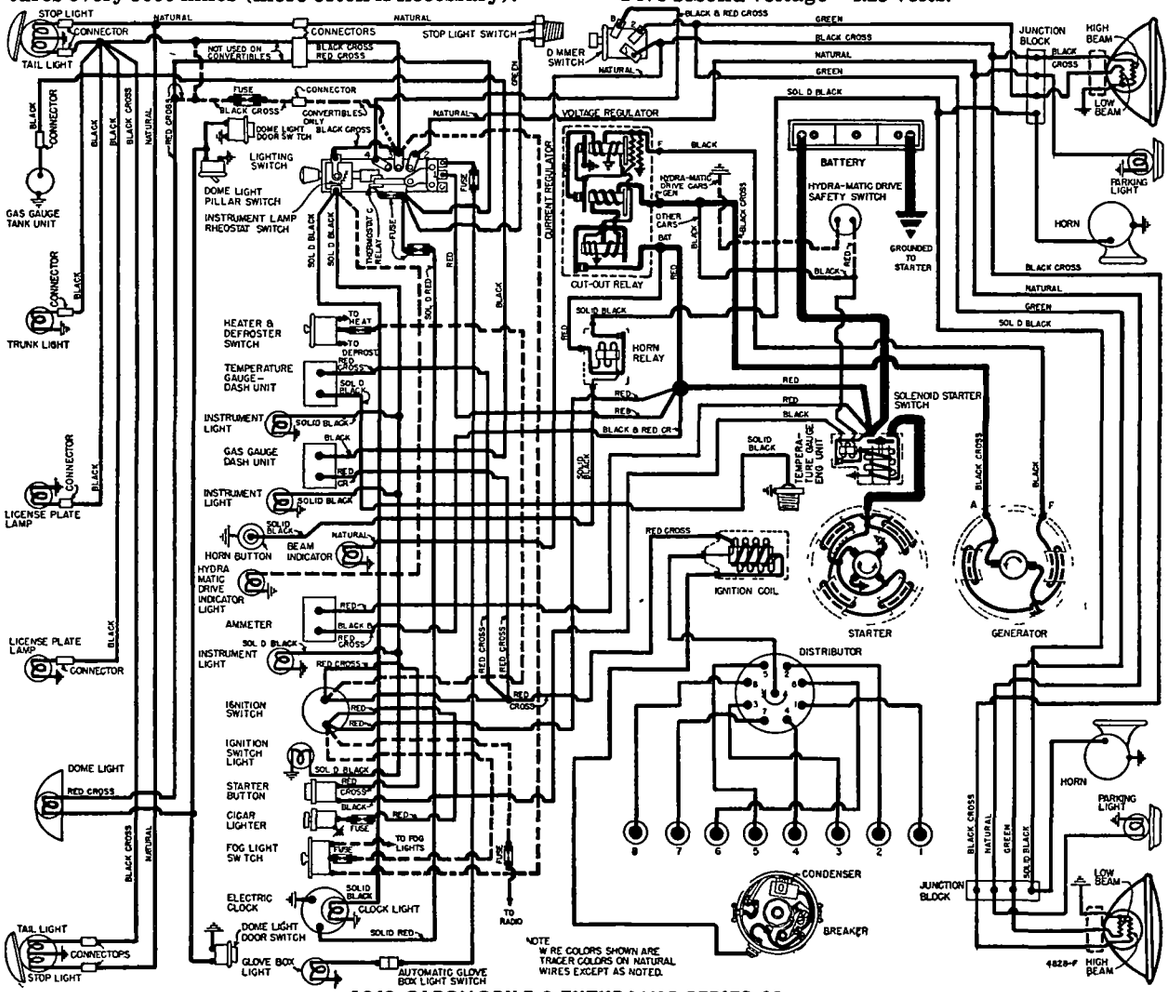

1948 OLDSMOBILE 8 FUTURAMIC SERIES 98

Grounded Terminal—Negative (—) to Starter.
Location—On left side in engine compartment.
Police Battery Delco Model 19E-1. 6 volt, 19 plate, 130 Ampere Hour Capacity (20 hour rate).
Grounded Terminal and Location—Same as above.

STARTER

Delco-Remy Nos.	Type
1107922 ('46), 1107941 ('46-48)	Foot Operated
1107930 (Hydra-Matic & RHD)	Push button

Armature No.—Delco-Remy No. 1867897 (all mods.).
Drive—Overrunning clutch type with pinion shift, manual (1107922, 41), solenoid (1107930).
Rotation—Counter-clockwise at commutator end.
Brush Spring Tension—24-28 ounces each.
Cranking Engine—100 RPM. 140-150 amperes, 5 volts (for Summer Temperatures).

Performance Data

Torque	R.P.M.	Volts	Amperes
0 ft. lbs.	6000	5.0	60
15 "	Lock	3.0	600

Removal:—Flange mounted on left front face of flywheel housing. To remove, take out mounting screws.
Starting Switch (1107922, 41): Delco-Remy No. 820052. On starter. Operated by pedal shift lever. **(1107930)**—Solenoid Switch D-R No. 1118021. On starter. Controlled by Pushbutton Switch No. 1996033 (Futuramic), 1996009 (Others) on the instr. panel (and Neutral Safety Switch No. 1997761 on Hydra-Matic Drive Cars).
See Electrical Equipment Section for complete data.
Safety Switch Adjustment—Place Selector Lever in "N" (neutral) position, loosen safety switch bracket locking screw, adjust switch so clearance between lever and stop is 1/16-3/32", tighten lock screw.

GENERATOR

Delco-Remy 1102664 (Std.), 1102680 (Hydra-Matic).
Armature No. 1879002. Two brush (shunt) types with voltage and current regulation. Ventilated by fan.
Pulley Note—*See Oldsmobile 6 page for standard and optional pulley data.*
Charging Rate Adjustment—None. Charging rate controlled by Voltage Regulator, maximum output by Current Regulator. See Regulator data below.
Maximum Charging Rate—33 amperes, 7¾ volts, 2400 RPM (hot operating tem.) at 21 MPH car speed

Performance Data—Cold

	Amperes①	Volts	R.P.M.
1102664, 80	30	8.0	1750

①—Not maximum output. See Current Regulator.
Rotation—Counter-clockwise at commutator end.
Brush Spring Tension—25 ozs. each.
Field Current—1.75-1.9 amperes at 6.0 volts.
Removal:—Pivot mounted at left front of engine. To remove, take out pivot and clamp bolts.
Belt Adjustment:—Check with straightedge across pulleys. Belt deflection should be ¾" inward.

REGULATOR

Delco-Remy Model 1118242. Single Core Type. Vibrating type Voltage and Current Regulators in a single case with Cutout Relay.
See Electrical Equipment Section for complete data.
CAUTION—Check generator for grounded field coils and leads before changing regulator settings

Cutout Relay

Cuts In—6.2-6.7 volts hot.
Cuts Out—0-4.0 ampere discharge current.
Contact Gap—.020" (same for both sets).
Air Gap—.020" (with contacts just closed).

C NTINUED ON NEXT PA E

CONTINUED FR M PRECEDING PAGE

Voltage Regulator

Setting—7.2-7.4 volts hot (at operating temp.). Regulator over-compensated for temperature. Should be checked with cover in place and hot.

Checking & Adjustment—*See Electrical Equipment Section.*

Air Gap—.070" between center of core and armature with contacts just closing (press down on armature to open contacts, release pressure, check gap at point where contacts just close).

Current Regulator

Setting—34-36 amperes hot (at operating temp.).

Checking & Adjustment—*See Electrical Equipment Section.*

Air Gap—.080" (check same as Voltage Regulator).

LIGHTING

Headlamps: Guide "Sealed Beam" type.

See Electrical Equipment Section for complete data.

Headlamp Adjustment—Aim upper beam straight ahead (hot spot center 3" below lamp center height).

Beam Indicator—Small red indicator in upper edge of speedometer. Lighted when Upper Beams in use.

Direction Signal: *See Electrical Equipment Section.*

Switches

Lighting—(1946-47—68, 78) D-R No. 1995026.
(1946-47—98) Delco-Remy No. 1995025.
(1948—68, 78) Delco-Remy No. 1995036.
(1948—98) Delco-Remy No. 1995030.

Instrument—Part of Lighting Switch. Rheostat operated by turning Lighting Switch Knob.

Beam Selector—Delco-Remy No. 1997008.

Bulb Specifications

Position	Candlepower	Mazda No.
Headlamps	Sealed Beam	4030
Parking, Rear License	3	63
Dir. Signal & Parking	21-3	1154
All Indicators	1	51
Instrument (Dynamic)	1½	55
Instrument (Futuramic)	1	51
Ign. Key (Futuramic Conv.)	1	51
Glove Compt., Clock	1½	55
Stop & Tail	21-3	1154
Dome (exc. Sta. Wg. & Conv.)	15	88
Dome (Station Wagon)	6	81
Dome (Convertible)	1½	55
Trunk & Under-hood	6	81
Back-Up	32	1133L

MISC. ELECTRICAL

THERMOSTATIC RELAY: On lighting switch. Contacts remain closed with 30 ampere current, open in 3 minutes with 42 amps. current@70°F. Limits current to 18 amps. with dead short-circuit. Not adj

FUSES: Dome & Stop Lights—On lighting switch. ('46-47) SFE 9 ampere. ('48) SFE 14 ampere.
Dome & Tail (1948 Convertible)—3AG 20 ampere. In body feed wire to tail and dome lights.
Glove Box & Under-hood Light—1AG 5 ampere.
Direction Signal—SFE 9 ampere. In Flasher to Ignition Switch wire.
Electric Clock—1AG 2 ampere. In feed wire.
Cigar Lighter—1AG 30 and 3AG 30 ampere.

HORNS: Delco-Remy No. Low Note: (1946-47) 1999607, (1948) 1999617, High Note: (1946-47) 1999608, (1948) 1999618. Vibrator type operated by relay.

Type	Current (at 6 volts)	Air Gap
1999607, 617 (Low)	19-21 amperes	.047-.052"
1999608, 618 (High)	18-20 amperes	.039-.044"

Horn Relay:—Delco-Remy No. 1116775.
Contact Gap—.025". **Air Gap**—.015" (closed).
Contacts Close—2.75-4.0 volts.

ENGINE

ENGINE SPECIFICATIONS: 8 cylinder, "L" head type.
Bore—3¼". **Stroke**—3⅞".
Displacement—257.1 cubic ins. **Rated HP**—33.8.
Developed Horsepower—(Dynamic) 110 at 3600 RPM. (Futuramic)—115 at 3600 RPM.
Compression Ratio—(Dynamic) 6.5-1, (Futuramic) 7.0-1. Std. Cast iron heads.
Compression & Vacuum Reading—*See Tune-up data.*

OIL PAN REMOVAL: *See Oldsmobile Shop Notes.*

TIGHTENING TORQUES: *See Oldsmobile Shop Notes.*

CYLINDER HEAD: Tightening Torque & Cylinder Head Diagram—*See Oldsmobile Shop Notes.*

PISTONS: Aluminum alloy, T-slot, cam ground, electro-plated type.
Weight—16 ozs. (stripped). **Length**—3 15/16".
Removal—Pistons and rods removed from above.
Clearance—Top land .023-.028". Skirt clearance Top .00205", Bottom .00155". Fitted for .0013-.0018" clearance on thrust surface. See Fitting New Pistons.

Replacement Pistons: Finished pistons (pins fitted) .003", .005", .010", .015", .030" oversize.

Fitting New Pistons: Check piston for size with micrometer (pin removed) 90° from pin bosses ⅜" below lower ring groove and ⅜" from bottom of skirt. Insert .002" x ½" feeler between piston (pin removed) and cylinder wall on valve side with piston inverted and T-slot on opposite side from feeler. Pull to withdraw feeler must be 4 to 11 lbs. (piston and block at 70°—low limit below 70°, high above).

Installing Pistons: Mark "V-S" on head toward valves (slot away from valves). Pin hole offset 3/32" to left.

PISTON RINGS: 2 compression (coated type—install with mark TOP up), 2 oil control, all above pin.

Ring	Width	End Gap	Side Clearance
Compr.	.0925-.0935"	.009-.014"	.001-.0025"
Oil Contr.	.1860-.1865"	.009-.014"	.001-.0025"

Replacement Rings:—.010", .020", .030" oversize.

PISTON PIN: Diameter—.8554-.8557". **Lgth.**—2 31/32". Pin locked in one piston boss by lockscrew (opposite end slotted). Pin bosses are plated and must not be reamed. Standard size pins only serviced.
Pin Fit in Piston—.0001" tight to .0002" loose (plain boss end), .0003-.0006" tight (lock boss end).
Pin Fit in Rod Bushing—.0003-.0006" clearance.
Pin Fitting, Removal and Installation—*See "Piston Pins" in Oldsmobile Shop Notes.*

CONNECTING ROD: Length 7 13/16". Weight 28 ozs.
Crankpin Journal Diameter—2.123-2.124".
Lower Bearing Diameter—2.1245-2.1255".
Lower Bearing—Removable steel-backed, Durex-babbitt overlay bearing shells.
Clearance—.0005-.0025". **Sideplay**—.0055-.0105".

Bearing Adjustment: None (no shims). Replace bearings.

Installing Rods: Oil spit hole at lower end toward valves and grooves on rod and cap bolt boss (part number side) matched. Special ground cap bolts with self-locking nuts used. Tighten to 45-50 ft. lbs.

CRANKSHAFT: 5 bearing, 8 integral counterweights.
Journal Diameters—#1, 2.478-2.479"; #2, 2.5405-2.5415"; #3, 2.603-2.604"; #4, 2.6655-2.6665"; #5, 2.6855-2.6865".
Bearings—Removable steel-backed, Durex-babbitt overlay bearing shells. Front bearing has oil groove (to front) for thrust plate lubrication.
Clearance—.0005-.002" (rear), .001-.003" (all others).

Bearing Adjustment:—None (no shims). Replace bearings. Do not file caps. NOTE—9/16" cap bolts used on rear bearing, ½" on others (heads alike).
Bearing Removal—*See "Crankshaft & Main Bearings" in Oldsmobile Shop Notes.*

End Thrust:—At #1 bearing. **Endplay**—.004-.008". *See "Crankshaft & Main Bearings" in Oldsmobile Shop Notes.*

Rear Main Bearing Oil Seal Installation: *See "Crankshaft & Main Bearings" in Oldsmobile Shop Notes.*

CAMSHAFT: 5 bearing. Non-adjustable chain drive.
Journal Diameters—#1, 2.0600-2.0605"; #2, 1.9975-1.9980"; #3, 1.9350-1.9355"; #4, 1.8725-1.8730"; #5, 1.8100-1.8105".
Reamed Bushing Diameters—#1, 2.0620-2.0635"; #2, 1.9995-2.001"; #3, 1.9370-1.9385; #4, 1.8745-1.876"; #5, 1.812-1.8135".
Bearings—Bronze bushings. **Clearance** .0015-.0035".

End Thrust:—Forward thrust taken by flange on front engine support plate, rear thrust by flange on shaft bearing against front of engine block.

Timing Chain:—Link-Belt. Width 11/16". Pitch .500". Length 47 links or 23½".

Camshaft Setting—Mesh chain with sprocket marks adjacent and in line with a straightedge across the shaft centers (or use Tool HM-408-0).

VALVES:	Head Diameter	Stem Diameter	Length
Intake	1 9/16"	.3415-.3425"	5 51/64"
Exhaust	1 27/64"	.3410-.3418"	5 51/64"

	Seat Angle	Lift	Stem Clearance
Intake	30°	.286"	.00175-.00375"
Exhaust	45°	.314"	.00245-.00425"

Valve Guides:—Intake and exhaust guides same. Press guides in so top end ⅞" below top of block. (Tool J-1042 positions guide correctly in block). Ream to .34425-.34525" inside diam. (not tapered).

Valve Springs:—Same spring used on both valves and on 6&8 engines. Damper on top of each spring. Free length 2⅝".

	Spring Pressure	Spring Length
Valve Closed	55 lbs.	2¼"
Valve Open	100 lbs.	1 15/16"

Valve Lifters:—Mushroom type. Diam. .6235-.6240". Lifter holes in block have bearing-ized finish (if worn, fit oversize lifter without reaming hole when possible, to preserve finish). Furn. .001", .002", .005", .010" OS. **Clearance** .0005-.0008". NOTE—Use only 1⅛" diam. face lifter (to clear fuel pump eccentric).

VALVE TIMING

Tappet Clearance:—.008" Int., .011" Exh. Hot & idling. NOTE—Self-locking tappet screws used.

Valve Timing:—See Camshaft Setting above.
Intake Valves—Open at TDC. Close 35° ALDC.
Exhaust Valves—Open 45° BLDC. Close 10° ATDC.
Valve Timing Check—With .0124" tappet clearance #1 intake valve should open with piston at top dead center (flywheel mark 'TDC/'—NOT STEEL BALL INSERT) aligned with pointer in housing above starter. Reset tappet cl. at .008" hot & idling.

LUBRICATION

Engine Oiling System: Pressure to main, connecting rod, and camshaft bearings, piston pins, and timing chain. Oil pump mounted externally on right side
Crankcase Capacity—6 quarts.
Normal Oil Pressure—30 lbs.
Oil Pressure Regulator—On oil pump. Opens at 30 lbs. Non-adjustable type.

Oil Pump: Gear type on right side of crankcase.
Oil Pump Assembly & Installation—*See "Oil Pump" in Oldsmobile Shop Notes.*

Oil Pressure Gauge: (1946-47) AC No. 1506797.
(1948)—AC No. 1507304 (68, 78), 1507124 (98).

Crankcase Ventilation: Filter element in oil filler cap (inlet breather). Outlet pipe on right side of engine.

COOLING

Cooling System: Positive circulation with water pump on front of engine and water distributing tube in cylinder block and ('47-48) pressure valve in filler cap.

►**1948 Radiator Shroud**—Used on all Eight cylinder models to maintain proper water temperature for high altitude and extreme hot weather driving.

►**Radiator Shroud #555107 for Installation on the 1946-47 Eights**—This 1948 68 & 78 type shroud can be installed. *See "Cooling System" in Oldsmobile Shop Notes.*
Capacity—20½ quarts.
Pressure Valve—AC No. 850501. Radiator filler cap. Opens at 4 lbs. (3¼-4¼ lbs.).

Radiator Core Removal: *See Oldsmobile Shop Notes.*

Water Pump: Packless, sealed ball-bearing shaft.
See Water Pump Section for complete data.
Futuramic Note—Water pump on these engines has been lowered.

Thermostat:—Harrison. In cylinder head outlet.
Setting—Starts to open 152°F. Fully open 173°F.

Temperature Gauge: AC Electric type.
Dash Unit—(1946-47) AC No. 1511652.
(1948) AC No. 1512059 (68, 78), 1511943 (98).
Engine Unit—AC ('46-47) 1510772, ('48) 1512015.
See Miscellaneous Section for complete data.

CLUTCH

Borg & Beck Model 10A7 with Borglite driven member. Cover marked #927. Single plate, dry disc type
See Clutch Section for complete data.
Facings—Spiral wound (spirally grooved) molded woven, 2 used. Inside Diam. 7". O.D. 10". ⅛" thick.
P dal Adjustment:—Free travel 1-1¼". Turn link at fork in or out of clevis on auxiliary shaft.
Removal:—Remove transmission (see below), clutch underpan and reinforcing plate. Take out 6 mounting screws in clutch cover (when installing, use 2 long shank mounting screws in 2nd hole on each side of locating dowel), remove clutch. *For Clutch Housing Re-inforcing Plate data refer Olds Shop Notes.*

TRANSMISSION

STANDARD

Own Make. All helical gear. Constant-mesh, synchro-mesh (second & high), sliding gear (low & reverse).
See Transmission Section for complete data.
Transmission Control:—Oldsmobile 'Handi-shift' type.
See Transmission Section for complete data.
Removal: Disconnect shift and selector rods from levers at transmission, speedometer cable, rear universal and slide slip yoke and propeller shaft to rear. Remove four transmission mounting capscrews, pull transmission straight back and remove.

HYDRA-MATIC DRIVE

OPTIONAL EQUIPMENT

Own Make. Consists of fluid coupling and 4 speed automatic transmission.
See Transmission Section for complete data.
Lubrication—Check fluid level in transmission at each 1000 mile lubrication period or every 2000 miles. Drain and refill every 15000 miles. Use only Oldsmobile Hydra-Matic Drive Fluid.
Capacity—11qts. (when drained and refilled with unit in car). **Approximately 12 qts.** (when refilling after unit removed and completely rebuilt.
Checking Fluid Level—Engine must be running at slow idle. Raise floor mat, take off cover in floor above transmission, lift out combination filler cap & stick, fill to "FULL" mark (engine idling).
►*CAUTION—Engine must be running at slow idle speed when checking Hydra-Matic Drive Fluid Level.*
Hydra-Matic Linkage Adjustment—*See Hydra-Matic Drive article in Transmission Section.*
Removal: *See Hydra-Matic Drive article in Transmission Section.*

UNIVERSALS

Mechanics 2C or 2CR types. Roller bearing types.
See Universals Section for complete data.
NOTE—Slip joint formed at rear of transmission ahead of front U-joint (driveshaft 1 piece type).
►**1947-48 CAUTION**—Rear universal companion nut controls rear axle pinion bearing "pre-load" (must be adjusted whenever nut is loosened). *See 1947-48 Oldsmobile in Rear Axle Section.*

REAR AXLE

1946 Type—Same as 1942. Hypoid gear, semi-floating type. This type axle has three setscrews equally spaced around pinion housing.
See Rear Axle Section for complete data.
1947-48—New hypoid gear, semi-floating type. Design similar to 1946 type except that pinion is mounted on two taper roller bearings and companion flange nut controls pinion bearing "preload." No setscrews are used.
See Rear Axle Section for complete data.

1946-47 Rear Axle Ratios

Ratio—Std.: 4.55-1 (98), 4.3-1 (for 68 and 78).
Hydra-Matic: 3.42-1 (68), 3.63-1 (78), 3.9-1 (98).
Optional: 3.9-1 or 4.55-1.

1948 Rear Axle Ratios

Ratios (Std. Trans.)—(68, 78, 98) 43:10 (4.3-1), (68 Sta. Wgn & Optl. on 68 Conv.) 41:9 (4.55-1).
Ratios (With Hydra-Matic Drive)—(68, 78) 40:11 (3.64-1), (98) 39:10 (3.9-1), (68 Sta. Wgn & Conv. & Optl. on 68, 78) 39:10 (3.9-1).

►**Rear Axle Ratio Marking**—Ratio (43:10 etc.) and date stamped on right lower side of carrier.
Backlash—('46) .004-.008", ('47-48) .004-.006". Screw adjustment.

Removal: Disconnect drive shaft at rear universal (do not disengage spline joint at transmission), remove axle shafts and carrier flange capscrews.

►**1947-48 CAUTION**—Rear universal companion flange nut controls pinion bearing "pre-load" (must be adjusted whenever nut is loosened).

Axle Shaft Removal: Hoist rear end, remove wheel, brake drum, backing plate mounting nuts, static collector and loosen bearing retainer (do not move backing plate or brake line may be damaged). Pull shaft and bearing with puller J-942 (do not allow shaft to drag on oil seal), replace 1 backing plate nut.
Wheel Bearing Adjustment—None.

Rear Suspension: Coil spring type with support arms.
See Rear Axle Section for complete data.

SHOCK ABSORBERS

Delco. Two types are used. FRONT—Model 1947-C (right), D (left). RIGHT REAR—2105-E (78, 98), G (68). LEFT REAR—2105-F (78, 98), H (68). Double acting (parallel cylinder type rear), hydraulic.
See Shock Absorber Section for complete data.

FRONT SUSPENSION

Front Suspension:—Independent, linked parallelogram type with coil springs.
See Front Suspension Section for complete data.
Kingpin Inclination—4° 51' 10".
Caster—0-¾° Negative. Adjustable.
Camber—Negative ¼° to Positive ¾°. Adjustable.
Toe In—1/16-⅛". Adjust each tie rod equally.
Steering Geometry—Inner wh'l 23°±½°. Outer 20°.

STEERING GEAR

Steering Gear—Saginaw Worm-and-Roller type.
See Steering Gear Section for complete data.

BRAKES

Service Brakes: Bendix Hydraulic, duo-servo, single anchor type without eccentric adjustment. Hand lever applies rear wheel service brakes.
See Brake Section for complete data.
Wheel Cylinder Bore—Front wheel 1⅛". Rear 1".
Drums—Cast-iron lined steel. Diameter 11".
Lining—Molded. Width: Front wheel 2" (68), 2¼" (78, 98). Rear 1¾" (68), 2" (78, 98). Thick. 3/16". Length 9 11/32" (primary), 11 31/32" (secondary).
Clearance—.015" at both ends of secondary (rear) shoe with primary shoe forced out against drum.

Hand Brake:—See Service Brakes above.

MISC. MECHANICAL

Power Operated Convertible Tops, Windows, & Front Seat: Hydro-Lectric type (motor driven pump).
Futuramic Note—Power operated windows and front seat adjustment optional on 2-Door & 4-Door
See Miscellaneous Section for complete data.

HOOD ASSEMBLY

1942 MODELS

HOOD LOCK: Clipper. One piece, side hinge type hood with remote control levers at each side of front compartment under instrument panel. To raise hood, push remote control down to unlocked position on side to be raised, raise hood about 1", release safety catch (push in on small rod approx. 2 feet ahead of rear edge of hood), lift hood up. Hood can be held in open position by prop which is pivoted on front of dash.

Other Models—Conventional center hinge hood. Hood lock release incorporated in trim strip on side panel and can be released by inserting finger in notch and pulling lever out toward the front.

FRONT END SHEET METAL

1937-42 MODELS

FRONT END REMOVAL: To work on front of engine, remove radiator and fender assembly as a unit as follows: drain cooling system, remove fender-to-body bolts, fender-to-running board bolts, fender to brace bolts, disconnect radiator hoses, free radiator tie rods, free radiator anchor bolt on frame remove running board molding from fender and lift entire assembly off. NOTE—Above data applies to all cars except Clipper models.

CYLINDER HEAD

1938-41 MODELS

CYLINDER HEADS (EXCEPT TWELVE CYLINDER): —Aluminum heads used on 1938 Eight and Super 8, and Six (High Compression head only). Cast iron heads used on all other models. Each head carries a part number on the front end (as listed in table below). High compression heads carry additional marking 'HC'.

Car	Standard	High Compression
Six (1600 '38)	324285	335664
Six (1700 '39)	324285	317725
Six (1800 '40)	354122	354675
Six (1900 '41)	354122	354675
Eight (1601,1A,2 '38)	327564	317737
Eight (1701,1A,2 '39)	330812	341344
Eight (1801,1A,2 '40)	348200	351243
Eight (1901,1A,2 '41)	348200	351243
Clipper Eight (1951 '41)	351243	
Super 8 (1603,4,5 '38)	221400 or 237994	239001
①Super 8 (1703,3A,5 '39)	242511	335618
Super 8 (1803-8 '40)	341586	351254
Super 8 (1903-8 '41)	341586	351254

①—Low compression cast iron head marked 338960.

Replacement Note—Cast iron heads only available for replacement. Car manufacturer recommends copper ferruled cylinder head gaskets be used with cast iron heads, terne ferruled gaskets with aluminum heads.

1937-38-39 MODELS

CYLINDER HEADS (12 CYL.): Heads are aluminum Standard compression head unmarked, Low Compression head marked 'L.C.', High Compression head marked 'H.C.' on top of head at rear end.

1942-47 MODELS

CYLINDER HEADS (ALL MODELS): Cast Iron heads are used on all models. Heads are marked by Part Number on front end as follows:

Model	Part Number
Six Cylinder Models	367634
Eight Cylinder Models	367636
Super Eight Models	351254

1938-47 MODELS

CYLINDER HEAD GASKETS: Car manufacturer recommends that a new gasket be used whenever the cylinder head is removed. Packard service gaskets are furnished with a special coating (transparent sealing compound) and no gasket compound or sealer is required. Check water passage openings in gasket to make certain that they are not closed by the sealing coating.

NOTE—If these coated gaskets not used, both sides of the head gasket should be coated with a good grade of gasket paste.

1948 & EARLIER MODELS

CYLINDER HEAD INSTALLATION: Use Torque Indicating Wrench to tighten cylinder head stud nuts, tighten in correct sequence as shown in the diagrams. Procedure for tightening Cast Iron and Aluminum heads is as follows:

Cast Iron Heads—With engine cold, tighten all nuts evenly to correct tension. Then run engine until it is thoroughly warmed up and recheck all nuts (additional tightening may be necessary for correct tension).

Aluminum Heads—With the engine cold, tighten all nuts to correct tension. Run engine until thoroughly warm, allow engine to cool off, and then recheck all nuts. Do not tighten aluminum heads when warm.

1947 & EARLIER MODELS

PACKARD 6

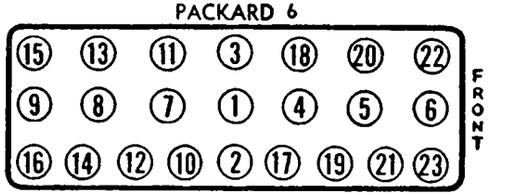

PACKARD 8

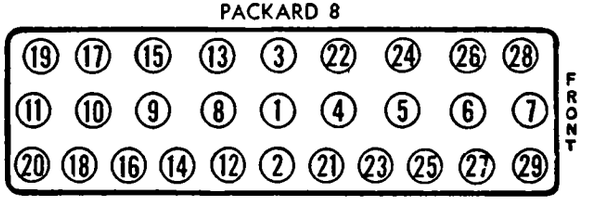

PACKARD SUPER 8

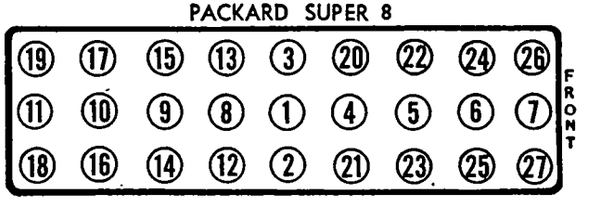

1948 MODELS

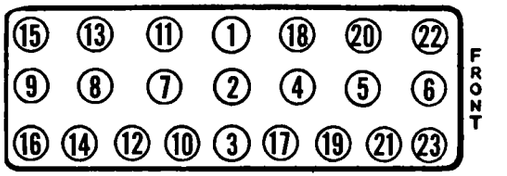

Tightening Torque—See Tightening (Torque Wrench) Specifications below.

TIGHTENING (TORQUE WRENCH) SPECIFICATIONS

1942-48 MODELS

	Ft. Lbs.	In. Lbs.
Spark Plugs (10 MM. Type)	4	50 Max.
Cylinder Head	60-62	720-744
Main Bearing Caps	90-95	1080-1140
Connecting Rod Caps	60-65	720-780
Connecting Rod Palnuts	1/3 turn tight	
Flywheel to Crankshaft	65-70	780-840
Intake & Exhaust Manifold	25-30	300-360
Timing Chain Cover	11-14	132-168
Oil Pan Drain Plug	20-25	240-300
Oil Pan to Crankcase	9-11	108-132

1941 & PREVIOUS MODELS

Cylinder Head Nuts:		
6, 8, Super 8 '40, 12	61⅔-63⅓	740-760
Super 8 before 1940	58⅓-60	700-720
Spark Plugs (10 MM. Type)	4	50
Main Bearing Nuts (6 & 8)	81⅔-85	980-1020
Connecting Rod Nuts (6 & 8)	59½-60½	715-725
Tappet Lock Nuts (6 & 8)	23⅓-25	280-300

ENGINE NUMBER CODE

1948 MODELS

ENGINE NUMBER CODE: Code marks following engine number indicate changes or differences over unmarked engines as follows:

22nd SERIES—EIGHT & SUPER EIGHT

★—Engine bore .020" Oversize.
"A"—Oversize Valve Guides used.
"C"—Late type Pistons and Rings used.
"CD"—Same as "C" and "D".
"CE"—Same as "C" and "E".
"D"—7 Quart Oil Pan (6 quart on unmarked engines). See 7 Quart Oil Pan (following) for parts changes required with this change.
"E"—Late type Camshaft (see Camshaft Change data following) and 7 Quart Oil Pan used.

22nd SERIES—CUSTOM EIGHT

★—Engine bore .020" Oversize.
"C"—Late type Pistons and Rings used.

ENGINE REMOVAL

1937-38-39 MODELS

CYLINDER BLOCK REMOVAL (SUPER EIGHT: Remove head, remove valves 1, 8, 9, 16 (for access to crankcase stud nuts), remove nuts on all crankcase studs. NOTE—Block may be re-installed with pistons and rods installed in cylinder bores by pulling pistons up until pins exposed and passing a length of rod or wire through all pins.

ORIGINAL BORE & PISTONS

1938-48 MODELS

ORIGINAL BORE & PISTON SIZES: Piston size indicated by mark stamped on head of each piston. Cylinder bore size indicated by mark stamped on the top left face of the cylinder block at Cylinder #4 (Six), #8 (Eight & '48 Super 8), #1 (Super 8 before '48 & '48 Custom 8), #1 of Right Hand Bank (Twelve).

NOTE—Marks should correspond (AA piston in AA bore, etc.) as shown below:

ALUMINUM PISTONS
6 CYL. (1937-47), SUPER 8 (1940-47)
ALL ENGINES (1948)

Mark	Piston Size	Cylinder Size
AA	3.49825-3.49850"	3.49950-3.49975"
A	3.49850-3.49875"	3.49975-3.50000"
BB	3.49875-3.49900"	3.50000-3.50025"
B	3.49900-3.49925"	3.50025-3.50050"
CC	3.49925-3.49950"	3.50050-3.50075"
C	3.49950-3.49975"	3.50075-3.50100"
DD	3.49975-3.50000"	3.50100-3.50125"
D	3.50000-3.50025"	3.50125-3.50150"

'120' EIGHT

Mark	Piston Size	Cylinder Size
AA	3.24825-3.24850"	3.24950-3.24975"
A	3.24850-3.24875"	3.24975-3.25000"
BB	3.24875-3.24900"	3.25000-3.25025"
B	3.24900-3.24925"	3.25025-3.25050"
CC	3.24925-3.24950"	3.25050-3.25075"
C	3.24950-3.24975"	3.25075-3.25100"
DD	3.24975-3.25000"	3.25100-3.25125"
D	3.25000-3.25025"	3.25125-3.25150"

SUPER EIGHT (1938 & 1939)

Mark	Piston Size	Cylinder Size
AA	3.18575-3.18600"	3.18700-3.18725"
A	3.18600-3.18625"	3.18725-3.18750"
BB	3.18625-3.18650"	3.18750-3.18775"
B	3.18650-3.18675"	3.18775-3.18800"
CC	3.18675-3.18700"	3.18800-3.18825"
C	3.18700-3.18725"	3.18825-3.18850"
DD	3.18725-3.18750"	3.18850-3.18875"
D	3.18750-3.18775"	3.18875-3.18900"

TWELVE

Mark	Piston Size	Cylinder Size
AA	3.43575-3.43600"	3.43700-3.43725"
A	3.43600-3.43625"	3.43725-3.43750"
BB	3.43625-3.43650"	3.43750-3.43775"
B	3.43650-3.43675"	3.43775-3.43800"
CC	3.43675-3.43700"	3.43800-3.43825"
C	3.43700-3.43725"	3.43825-3.43850"
DD	3.43725-3.43750"	3.43850-3.43875"
D	3.43750-3.43775"	3.43875-3.43900"

CAST-IRON PISTONS FOR 3¼" BORE

Mark	Piston Size	Cylinder Size
AA	3.2480-3.2482"	3.24950-3.24975"
A	3.2482-3.2485"	3.24975-3.25000"
BB	3.2485-3.2487"	3.25000-3.25025"
B	3.2487-3.2490"	3.25025-3.25050"
CC	3.2490-3.2492"	3.25050-3.25075"
C	3.2492-3.2495"	3.25075-3.25100"
DD	3.2495-3.2497"	3.25100-3.25125"
D	3.2497-3.2500"	3.25125-3.25150"

CAST-IRON PISTONS FOR 3½" BORE

Mark	Piston Size	Cylinder Size
AA	3.4980-3.4982"	3.49950-3.49975"
A	3.4982-3.4985"	3.49975-3.50000"
BB	3.4985-3.4987"	3.50000-3.50025"
B	3.4987-3.4990"	3.50025-3.50050"
CC	3.4990-3.4992"	3.50050-3.50075"
C	3.4992-3.4995"	3.50075-3.50100"
DD	3.4995-3.4997"	3.50100-3.50125"
D	3.4997-3.500"	3.50125-3.50150"

PISTONS

1937-48 MODELS

REPLACEMENT ALUMINUM ALLOY & CAST IRON PISTONS:—Finished aluminum alloy or cast-iron replacement pistons are stamped on head with decimal figure (.005, .010, etc.) indicating nominal oversize and one or two letters (AA, A, BB, B, CC, C, DD, D) which indicates the actual size variation (in .00025" steps) of the piston from indicated nominal oversize. See oversizes listed below and size variations for each letter (in table).

NOTE—This system of marking makes it possible to order a finished piston (using number and letter) for any particular bore size within these limits.

Piston Oversizes (Figures Stamped on Piston Head) Furnished for all engines as follows:

Super Eight (1937-38-39)—Standard size and .003", .005", .010", .015", .020", .025", .030", .035", and .045" oversize. NOTE—Factory reground cylinder blocks with Pistons, Pins, and Rings fitted available for replacement service.

Twelve—Standard size and .003", .005", .010", .015", .020", .030", and .045" oversize.

All Other Engines—Standard size and .005", .020", .030", .040" oversize.

PISTON MARKING (FOR SIZE VARIATION)
(Letters Stamped on Piston Head)
For All Models and Piston Oversizes

AA—.00025" Under marked size.
A—Same as marked size.
BB—.00025" Over marked size.
B—.0005" Over marked size.
CC—.00075" Over marked size.
C—.001" Over marked size.
DD—.00125" Over marked size.
D—.0015" Over marked size.

PISTON RINGS

1937-38-39 MODELS

SPECIAL RING INSTALLATION: To correct piston slap and excessive oil consumption on engines with some service, manufacturer recommends that special Perfect Circle piston ring combination be installed as follows (piston ring grooves numbered from head toward skirt):

Six & Eight

#1—P.C. #200 (when piston expanders used) or
#1—P.C. #70 (when piston expanders not used).
#2—P.C. #X-90 Compression Ring.
#3—P.C. #X-90 Oil Ring.

NOTE—#200 ring must be installed with groove on inner edge toward top of piston.

Super Eight

#1—P.C. #70.
#2—P.C. #X-90 Compression Ring.
#3 & 4—P.C. #X-90 Oil Rings.

1940-48 MODELS

TRIPLE ACTION PISTON RING SETS: Service Sets.—These rings furnished in packaged sets for all models and should be installed on aluminum pistons only as directed below. CAUTION—Do not use these rings with Cast Iron pistons.

Oil Ring—Spring expander type oil ring used consisting of top and bottom rails with a spring assembled between two rails. Two tabs in each rail engage a loop in spring expander when assembly installed in ring groove. Install ring on piston as follows: Place lower rail with locking tabs up (45° to right of thrust face or left side of piston) on piston slightly below lower ring groove. Insert spring expander in oil ring groove with end gap centered on thrust or left side of piston. Install upper rail in ring groove with locking tabs down so as to engage first loop in spring to left of spring end gap. Move lower rail up into ring groove with tabs in rail engaging first loop in spring expander to right of spring end gap. Press upper and lower rails down firmly on spring so that rails are properly seated on spring and are free in groove.

#2 Compression Ring—Assemble ring in #2 ring groove with groove on outer edge down.

Top Compression Ring—Assemble ring in top ring groove with groove on inner edge up.

PISTON PINS

SIX & EIGHT CYLINDER (1937-48)
SUPER & CUSTOM EIGHT (1940-48)

PISTON PIN BUSHING: Split type pin bushing is used in connecting rod. Each half of bushing installed on opposite side of rod with an opening formed between inner ends which opens into rifle-drilled oil passage in rod. Bushing must be expanded to tight fit in rod with a burnishing tool and then reamed to size for correct fit (see car page for fitting data). Car manufacturer recommends use of ST-5008 burnisher and ST-5008 reamer tools. CAUTION—Bushing halves must be installed in rod so that oil hole for pin lubrication opens into oil groove formed between bushings (bushing must not extend over oil passage in rod or piston pin will not be properly lubricated).

NOTE—Check diameter of pilot end of Burnisher & Reamer Tool ST-5008 (should be .861" for 1939 & later type bushings—if necessary, grind pilot end to this specification).

CRANKSHAFT & MAIN BEARINGS

ALL MODELS

PLASTIGAGE FOR CHECKING BEARING CLEARANCE: Consists of plastic rod material supplied in envelope marked with scale which gives bearing clearance in thousandths of an inch when used to measure flattened plastigage in bearing cap. Use Plastigage as follows:

Bearing Clearance Check—Remove bearing cap, wipe oil from bearing insert and journal (CAUTION—When checking main bearings, keep all other bearing caps tight so that crankshaft weight will not cause incorrect reading). Place piece of Plastigage rod across full width of bearing insert in cap, re-install bearing cap and tighten bolts to recommended torque (see Tightening Specifications). Re-

C NTINUED N NEXT PA E

CONTINUED FR M PRECEDING PAGE

move cap, match widest width of flattened Plastigage with correct graduation of scale on envelope (marking of this graduation is bearing clearance).

CONNECTING ROD & BEARINGS

1939-47 "110" 6 & "120" 8 MODELS

CONNECTING ROD PALNUTS: Special patented self-locking locknuts used on connecting rod bolt nuts in place of cotter pins. To install, turn regular connecting rod bolt nut and tighten to desired tension (refer to th Tightening Specifications—Torque Wrench data—on preceding page). Turn 'palnut' on bolt with smooth face toward regular nut until it contacts nut, then tighten 'palnut' ¼-1/3 additional turn to lock it in place.

CAMSHAFT & BEARINGS

1938 MODELS

CAMSHAFT & OIL PUMP GEAR CHANGE (SIX & '120' 8):—Late cars with suffix letter 'B' following engine number have forged steel camshaft (first cars with suffix letter 'A' had cast alloy iron type camshaft same as 1937 cars). Oil pump drive gear must b same material as Camshaft. Both type gears furnished for service. Note engine suffix letter when replacing oil pump drive gear.

1948 EIGHT & SUPER EIGHT

CAMSHAFT CHANGE (PART NO. 412581): This late type camshaft used on engines marked with letters "E" or "CE" following engine number. Only change over earlier shaft is in cam lobe contour resulting in reduced tappet noise.

►*CAUTION—Tappet clearance for this camshaft is .007" Intake, .010" Exhaust, Hot.*

TAPPET CLEARANCE

1948 EIGHT & SUPER EIGHT

TAPPET CLEARANCE (FOR EARLY CAMSHAFT): .006" Intake, .008" Exhaust, Hot. *For engines WITHOUT code letters "CE" or "E" following Engine Number.* This setting reduced from production setting of .007" Intake and .010" Exhaust to reduce tappet noise. This setting does not affect operating performance of engine.

TAPPET CLEARANCE (FOR LATE CAMSHAFT PART NO. 412581): .007" Intake, .010" Exhaust, Hot. *For engines WITH code letters "CE" or "E" following engine Number.* This camshaft has redesigned cam contours which hold tappet noise to a minimum and do not require reduced clearances recommended for early type camshaft.

VALVE SYSTEM

1938 MODELS

EXHAUST VALVE GUIDE CHANGE TO PREVENT STICKING (SIX & '120' 8):—Late 1938 cars have shorter exhaust valve guide (top of guide 31/32" below top of valve seat with top of guide counterbored ¼" deep to diameter of ⅜"). All cars with longer first type guide (top of guide 23/32" below valve seat) should be re-worked with special Counterbore-and-Cutoff Tool SE-5123 to the same dimensions as the later type guide. If this tool not available, counterbore exhaust valve guides adjacent to dash to depth of ½" without cutting off top of guide.

1938 MODELS

VALVE LIFTERS (SIX & "120" 8): First cars with suffix letter 'A' following engine number have cast alloy iron camshaft and use steel valve lifters. Late cars with suffix letter 'B' have forged steel camshaft and chilled iron lifters. Never use steel lifters with steel camshaft. Either type lifter can be used on cast- alloy iron camshafts. Note engine suffix letter when replacing valve lifters.

1940-47 SUPER 8 MODELS
1948 CUSTOM EIGHT

VALVE LIFTER CHECK: Clearance check after Grinding Valves. Hydraulic valve lifters should be checked for proper clearance (take-up reserve) as part of valve grinding operation. Check clearance as follows: Empty oil out of hydraulic unit and tappet body, bottom plunger using a screwdriver or valve gauge Tool ST-2031, clearance between end of valve stem and end of hydraulic plunger with valve seated should be .030-.070" (Go-No-Go gauge Tool ST-2032 may be used to check clearance). If clearance less than .030", grind off end of valve stem until proper clearance is secured. *Refer to the Wilcox-Rich "Zero-Lash" Hydraulic Valve Lifter article in the Miscellaneous Section for Valve Lifter Servicing.*

OIL PAN

1948 EIGHT & SUPER EIGHT

7 QUART OIL PAN: Engines with this pan marked "CD", "CE", "D", or "E" following Engine Number. This pan has 1 quart greater capacity (6 quart pan used on unmarked engines). This pan is deeper and required following different parts:

412640—Oil Pan Assembly.
412643—Oil Strainer Bearing and Bracket Assembly.
412642—Oil Strainer Bracket.
412641—Oil Strainer Suction Tube.
412644—Oil Level Indicator Assembly (has "7 Qt." mark on dip stick).

OIL PUMP

SIX & EIGHT CYLINDER (1937-48)
SUPER & CUSTOM EIGHT (1940-48)

OIL PUMP INSTALLATION: Install pump so driving slot as near parallel as possible to center-line of camshaft with distributor rotor in line with #1 segment in cap. Punch mark on pump gear should be at the bottom ('110' Six), at the top ('120' Eight, and for '160' and '180' Super Eight Models). Check ignition timing after pump installed on car.

RADIATOR

CLIPPER MODELS

RADIATOR CORE REMOVAL: The radiator core can be removed without removal of Front End Assembly as follows: Remove pan from between Radiator Core and Radiator Grille, loosen radiator core mounting bolts, lift core out of car. CAUTION—Do not damage fan blades when lifting core out of car.

CLUTCH NOTES

1939-40 MODELS

CLUTCH LINKAGE SERVICING (MODELS 1700, 1; 1800,1):—Clutch pedal linkage on these models allows pedal to move downward as wear develops and clearance at ends of rods increases. Pedal position must be checked to see that pedal travel sufficient to allow complete clutch disengagement. Note that this condition is just the reverse of pedal tending to come up due to lining wear on clutch plate.

Clutch Linkage Replacement—New 1941 design clutch pedal linkage can be installed on these cars. Car manufacturer recommends that 1941 design linkage be installed where linkage requires repair or replacement. Available under following part number: Clutch Relay Equipment Part No. 377473 (1700, 1800), 277494 (1701, 1801). NOTE—1941 design linkage installation same as for 1939 and 1940 models. A flat washer Pc. No. 24595 (included with above equipment) must be installed between face of pedal extension and shoulder on stud to prevent stud being drawn into chamfered hole. This hole in pedal extension was chamfered on 1939 and 1940 models on both sides.

MODEL IDENTIFICATION

SERIAL NUMBER: On left side of cowl (use Eng. No.).

ENGINE NUMBER: On upper left corner of block. First number X-27900.

TUNE-UP

COMPRESSION: Ratio—6.5-1 aluminum head. 7.0-1 head optional.
Pressure—110 lbs. at 125 RPM.

VACUUM READING: 18-20" steady idling at 6 MPH.

FIRING ORDER: 1-6-2-5-8-3-7-4. See diagram.

SPARK PLUGS: AC Type K-7, or Champ. J-8. 14 mm. Gaps—.028". Limits .028-030".

IGNITION: See Coil, Condenser, and Distributor.
Breaker Gap—.020". Cam Angle—36° Closed.
Synchronization—Set movable contacts to open 45° after stationary contacts.
Automatic Advance—10° max. at 2200 RPM (distr.).

IGNITION TIMING: See Ignition Timing.
Std. Setting—7° BTDC. Flywheel mark (white mark ahead of #1UP.DC) aligned with inspection hole pointer (left side of housing). Set movable contacts to open 45° after stationary contacts.

CARBURETION: See Carburetor & Carb. Equipment.
Idle Setting—Set idle adjusting screws midway between "miss" and "roll" points. Idle speed 6 MPH.
Float Level—Fuel level 15/32" below edge of bowl.
Fuel Pump Pressure: 3½ lbs. maximum.

VALVES: See Valve Timing.
Tappet Clearance—.007" Intake, .010" Exhaust, hot. NOTE—Splasher in right front fender should be removed when valve adjustments are made.

STARTING: See Battery, Starter, Generator, Regulator.

IGNITION

IGNITION SWITCH: Mitchellock Model 24-B, Type 6513 (6514 for RHD). Armored cable to coil.
Ignition Lock—Briggs & Stratton Model 50184, Mitchell No. 6760.

COIL: Auto-Lite Model CE-4614 (CE-4615 for RHD). On left side of engine.

CONDENSER: Auto-Lite Part No. IGB-1025C.
Capacity—.20-.25 microfarad.

DISTRIBUTOR: Auto-Lite Model No. IGH-4026 (early), Model IGH-4026-A (late). Double breaker, 4 lobe cam, full automatic advance type with 'Fuel Compensator' or manual adjustment at distributor. Contacts open alternately at 45° intervals corresponding to 90° firing interval of engine and must be synchronized. See Ignition Timing.
Breaker Gap—Set at .020". Limits .018-.022".
Cam Angle or Dwell—Closed 36°, Open 9° (distr.). Both sets together when properly synchronized.
Breaker Arm Spring Tension—16-20 ounces.

Automatic Advance—IGH-4026

Distributor Degrees	R.P.M.	Engine Degrees	R.P.M.
Start	300	0	600
3	640	6	1280
5	950	10	1900
8	1660	16	3320
10	2200	20	4400

Automatic Advance—IGH-4026-A

Degrees	R.P.M.	Degrees	R.P.M.
Start	300	0	600
2	660	4	1320
4	1100	8	2200
6	1460	12	2920
8	1830	16	3660
10	2200	20	4400

Fuel Compensator—Manual adjustment at distributor providing 10° maximum advance and retard from center 'O' position. See Ignition Timing for setting.

Distributor Removal:—Mounted at left side of crankcase. To remove, take out hold-down screw in advance arm.

IGNITION TIMING

IGNITION TIMING:—Standard Setting as shown. See Fuel Compensator Setting below.

	Flywheel Degrees	Piston Position
'36 Engines	7° BTDC	.0202" BTDC

NOTE—On cars with Startix, wire on 'IGN' terminal must be disconnected and taped to prevent automatic starting.

Timing (Stationary Contacts)—Remove cover ver timing inspection hole in left front face of flywheel housing under starter. Loosen thumbnut and set Fuel Compensator at 'O'. With #1 piston on compression turn engine over (engage gears and roll car) until piston reaches firing position, stop when white mark (midpoint between third and fourth graduations to right of line marked '#1 UP D.C.') on flywheel lines up with pointer on housing. Loosen advance arm clamp bolt, rotate distributor until contacts just open, tighten clamp bolt. Then synchronize movable contacts.

Timing (With Neon Timing Light)—This method

CONTINUED ON NEXT PAGE

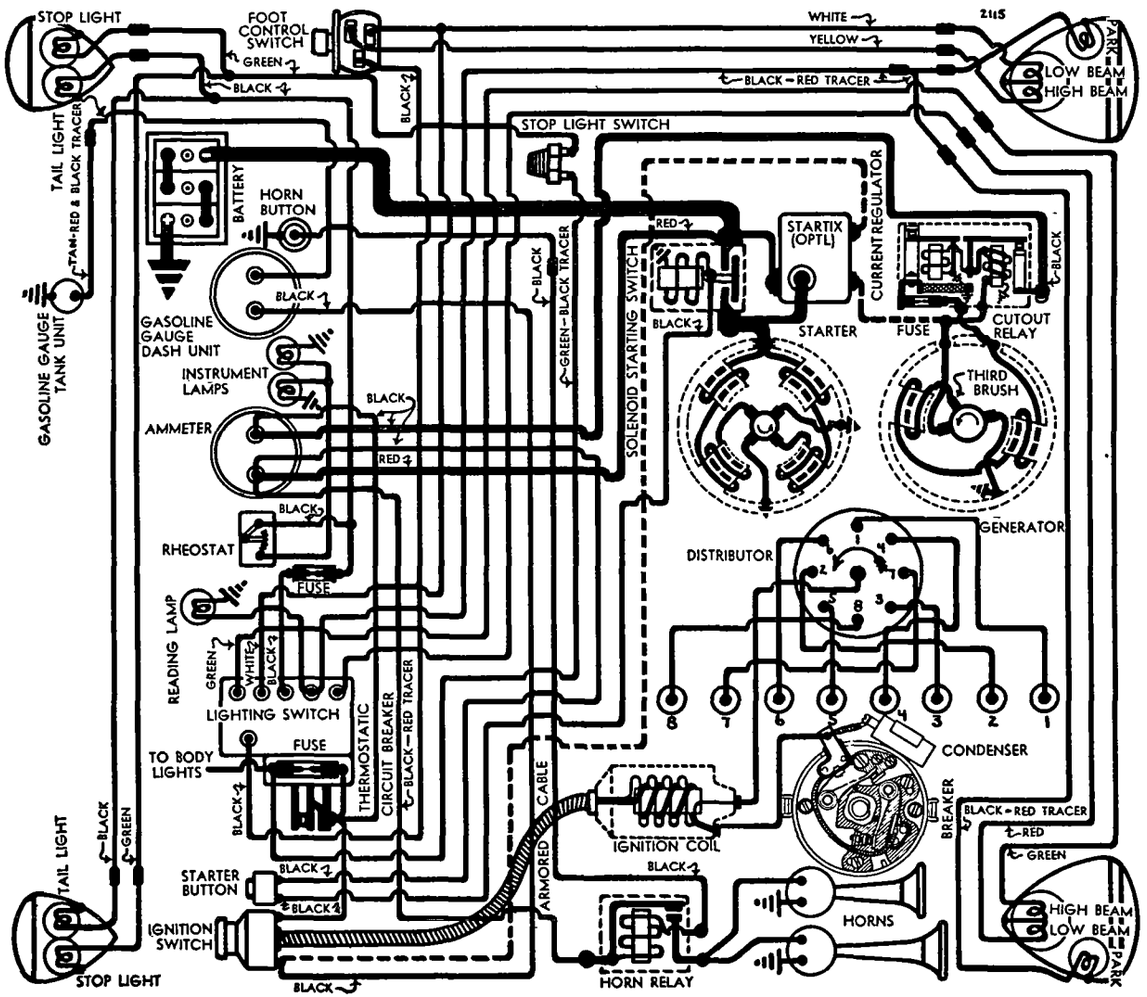

C NTINUED FR M PRECEDING PAGE

recommended by manufacturer. Connect lead to #1 spark plug wire. With engine idling, adjust distributor so that timing mark (as indicated above) lines up with pointer on housing.

Synchronizing (Movable Contacts)—Synchronization may be checked with the Neon Timing Light. Connect lead to #6 spark plug wire, remove cover over timing inspection hole as directed above and direct light at flywheel. White mark on flywheel (to right of line '#6 UP D.C.') should line up with pointer on housing, with engine idling. Engine must be stopped to set synchronization. To adjust, place #6 piston in firing position (turn engine over by rolling car with gears engaged), loosen lockscrews on movable sub-plate carrying second set of contacts, shift plate until contacts begin to open, tighten lockscrews.

Synchronization (Other Methods)—See Equipment Section for directions on synchronization using indicator and synchronizing marks on rotor fantail. If other methods are used, firing intervals should be regular 45-45-45 distributor degrees.

NOTE—Manufacturer recommends use of Winn Synchrometer ST-913 to synchronize contacts.

Fuel Compensator—Should be set at 'O' for fuel of 68-70 octane rating and advanced or retarded for fuel of higher or lower rating to secure slight 'ping' pulling heavy load.

CARBURETOR

CARBURETION:—Carburetor—Stromberg Mod. EE-14. 1" dual downdraft type. See Carburetion Section for adjustments, overhaul and Jet Specifications.

For complete data, refer to Carburetor Index.

NOTE—Do not adjust carburetor until engine is warmed up so that choke valve is wide open and engine idling at slow or hot idling speed.

Idle Adjustment—Set throttle stopscrew so that engine idles at 300 R.P.M. or 6 M.P.H. Turn inner idling adjusting screw in until engine begins to lag or miss, then turn screw out until engine begins to roll, finally turn screw in slowly until engine fires smoothly. Repeat with outer idling adjusting screw. Readjust throttle stopscrew for correct idling speed.

Accelerating Pump—Non-adjustable.

Fast Idle:—Stromberg type. No adjustment required.

Automatic Choke:—See separate article in Carburetion Section for complete data.

For complete data, refer to Carburetion Equip. Index.

CARB. EQUIPMENT

Air Cleaner:—AC. #1525940 oil-wetted type standard, #1526714 heavy duty oil bath optional.

Fuel Pump: AC Type X, #1521808 fuel-&-vacuum.

For complete data, refer to Carburetion Equip. Index.

Gasoline Gauge:—AC. Electric #1515200 (dash unit—early cars) #1515315 (dash unit—later cars), #1515149 (tank unit on all cars). See article in Carburetion Section.

For complete data, refer to Carburetion Equip. Index.

BATTERY

Prest-O-Lite HP2-17. 6 Volt, 17 Plate, 114 Ampere Hour Capacity (20 hour rate).

Starting Capacity—133 amperes for 20 minutes.

Zero Capacity—300 amperes for 3.5 minutes.

Grounded Terminal—Positive (+) terminal.

Location—On left side under driver's seat.

STARTER

Auto-Lite MAX-4006. Armature No. MAW-2006.

Drive—Outboard barrel type Bendix A-1729.

Cranking Engine—125 R.P.M., 200 amps. at 5.0 volts.

Rotation—Counter-clockwise at commutator end.

Brush Spring Tension—42-53 ozs. (new brushes).

NOTE—See Electrical Equipment Section for 'Field Equalizer' installation on these starters.

Performance Data

Torque	R.P.M.	Volts	Amperes
0 ft. lbs.	5300	5.5	65
2.75 "	1630	5.0	200
5.5 "	970	4.5	300
8.7 "	600	4.0	400
12.0 "	300	3.5	500
16.5 "	Lock	3.0	640
25.0 "	Lock	4.0	880

Removal:—Flange mounted on left front face of flywheel housing. To remove, take out two flange capscrews.

Starting Switch:—Auto-Lite Solenoid Type SS-4001. Delco-Remy Control Switch Type 1400. Solenoid switch mounted on starter and controlled by switch on instrument panel. See Equipment Section for complete data.

For complete data, refer to Electrical Equipment Index.

Solenoid Switch

Closes with terminal voltage of 4 volts or less and will remain closed until voltage drops to .75-2.0 volts. Current draw 3 amperes at 6 volts.

NOTE—Startix Type 'D' optional. Type 'F' must not be used on these cars. See article in Equip. Section.

For complete data, refer to Electrical Equipment Index.

GENERATOR

Auto-Lite GAR-4611A-5 or GBR-4601-5. Armature GAR-2116. Third brush control in conjunction with Current Regulator (two-rate charging control). Ventilated by fan on drive pulley.

NOTE—Early 1936 cars with 'GAR' generators equipped with large pulleys. These should be checked and replaced with pulley (Part No. SP-185) which has a 2" diameter measured at bottom of belt groove or 3½" at top of groove. This pulley increases generator output at lower car speeds.

Charging Rate Adjustment—Use test meters to check generator output. Short out current regulator by connecting jumper wire from 'F' terminal on generator to ground. Take off commutator cover band, shift third brush by hand counter-clockwise to increase, or clockwise to decrease charging rate. Third brush held in position by friction. Remove jumper wire.

Maximum Charging Rate—22 amperes at 8.8 volts (GAR), 22 amps. at 8.0 volts (GBR). Do not exceed.

Performance Data—GAR-4611A-5

Cold Regulator Contacts Closed			Hot		
Amperes	Volts	R.P.M.	Amperes	Volts	R.P.M.
0	6.4	720	0	6.4	760
4	6.8	860	4	6.8	925
8	7.25	1000	8	7.25	1125
12	7.7	1160	12	7.7	1350
16	8.1	1360	16	8.1	1680
22.4	8.8	2400	19.2	8.4	2600

Performance Data—GBR-4601-5

Cold			Hot		
Amperes	Volts	RPM.	Amperes	Volts	RPM.
0	6.4	720	0	6.4	760
4	6.7	810	4	6.75	880
8	7.0	950	8	7.1	1030
12	7.3	1080	12	7.4	1460
16	7.6	1500	16	7.8	1660
22	8.0	2700	19.4	8.0	2800

Rotation—Counter-clockwise at commutator end.

Brush Spring Tension—50-60 ozs. max. (new brushes).

Field Current—(GAR) 3.51-3.89 amperes at 6 volts, (GBR) 4.18-4.62 amperes at 6.0 volts.

Field Fuse—5 ampere in plug on regulator case.

Motoring Current—(GAR) 5.03-5.57 amperes at 6.0 volts. (GBR) 5.60-6.20 amperes at 6.0 volts.

Removal:—Pivot mounted at left front of engine. To remove, take out two pivot bolts, one clamp bolt and one lock bolt.

Belt Adjustment:—Loosen pivot bolts, clamp bolt and lock bolt on link, pull generator away from engine by spring scale looped on generator lug parallel to link until scale reading is 25 lbs.

REGULATOR

Auto-Lite 'Two-Charge' Regulator Model TC-4302A or Model No. TC-4302B. Consists of a Cutout Relay and Current Regulator (two-rate charging control). Mounted on generator.

For complete data, refer to Electrical Equipment Index.

Cutout Relay

Cuts In—6.5-7.25 volts.

Cuts Out—.5-2.5 ampere discharge current.

Contact Gap—.015-.045".

Air Gap—.010-.030" with contacts closed.

Current Regulator

Contacts Open—8.25-8.75 volts at 70° F.

Contacts Close—1.2-1.4 volts below opening point.

Contact Gap—.005" minimum.

Air Gap—.045" with contacts closed.

LIGHTING

LIGHTING:—Headlamps—Hall, Pre-focused type with special non-interchangeable lenses. Left headlamp aimed straight ahead, right headlamp deflected slightly to right (upper beam with lenses in place).

Switches

Lighting—Delco-Remy 480-Y with relay.

Foot Selector—Delco-Remy Model 471-T, 471-U, or R.B.M. Model 1050-A.

Instrument Light Rheostat—Soreng-Manegold N . I-2060-A.

Stop Light—Hydraulic type mounted on brake master cylinder.

Bulb Specifications

Position	Candlepower	Mazda No.
Headlamps	32-32	2330-C
Parking	1	51
Instrument, Tail	3	63
Stop	15	87
Dome	6	81

MISC. ELECTRICAL

THERMOSTATIC RELAY (1936): On lighting switch (part of assembly). Non-adjustable. Contacts will remain closed with current of 25 amperes but will open in one minute with current of 38 amperes at temperature of 70-80° F.

FUSES: Body & Stop Light—20 amperes on switch.
Tail Lamp ('36)—20 amp. in connector near switch.
Generator Field—5 amperes on regulator case.

HORNS:—Sparton. Vibrator type. One horn standard. twin horns optl. Operated by horn relay.

Horn Relay: R.B.M. Model 10072.
Closing Voltage—2.75-4.0 volts.
Contact Gap—.015-.025".
Air Gap—.010-.020".

ENGINE

ENGINE SPECIFICATIONS:—8 cylinder, 'L' head.
Bore—3¼". **Stroke**—4¼".
Displacement—282.04 cu. ins. **Rated HP**—33.8.
Developed Horsepower—120 at 3800 RPM.
Compression Ratio—6.5-1 alum. hd., 7.0-1 optl.
Compression Pressure—110 lbs. at 125 RPM.
Vacuum Reading—18-20" steady idling at 6 MPH.

PISTONS:—Nelson Bohnalite, aluminum alloy, Invar Strut, split skirt type. Recondition cylinders to take finished replacement pistons.
Weight—17.5 ozs. (stripped), 23 ozs. (with rings and pin).
Removal—Pistons and rods removed from above.
Clearance—Skirt .0015". See Fitting New Pistons.
Replacement Pistons—*See Packard Shop Notes.*

Fitting New Pistons:—Use feeler gauge .0015" thick ½" wide to check clearance. Pull required to withdraw feeler from between piston and cylinder wall on side opposite slot must be within 5-7 lbs.

Installing Pistons:—Slot toward left or away from valves.

PISTON RINGS:—Two compression, one oil ring per piston above pin. Lower ring groove drilled with twelve 5/32" oil drain holes.

Ring	Width	End Gap	Side Clearance
Comp. (top)	⅛"	.007-.012"	.002"
Comp. (2nd)	⅛"	.007-.012"	.0015"
Oil (1936)	3/16"	.007-.015"	.0015"

NOTE—Ring tension when compressed to cylinder size with .007" minimum gap must be 6¼ lbs. (compression), 4½-7½ lbs. (oil ring).

PISTON PIN:—Diameter—⅞". Length—2 51/64".
Pin floats in piston and rod. Held by retaining ring at each end. Pin hole in connecting rod is bronze-bushed. Pins furnished .003", .006" oversize.
Pin Fit in Piston—Palm push fit with piston at 160°
Pin Fit in Rod Bushing—.00025" clearance or thumb push fit with both parts at room temperature (70° F.). See Connecting Rod Upper Bearing.
NOTE—Finish ream bushings to .87515-.87485".

CONNECTING ROD: Weight—32½ ounces.
Length—7 11/16".
Upper Bearing (Piston Pin Bushing)—Formed by two bushings pressed in rod from opposite sides so as to form oil groove in center. Rifle-drilled oil passage in rod must open into this groove.
See Packard Shop Notes for Bushing Installation.
Crankpin Journal Diameter—2 3/32".
Lower Bearing—Interchangeable steel-backed, babbitt-lined type. No shims.
Clearance—.0005-.0025". **Sideplay .003-.006".**

Bearing Adjustment:—None (no shims). Replace bearings. Do not file rods or caps.

Installing Rods:—Identification mark on side of rod should be toward front of engine with il bleed hole in lower bearing toward camshaft side.

CRANKSHAFT:—Five bearing Integral counterweights.
Journal Diameter—2.746" all bearings.
Bearing Type—Interchangeable steel-backed, babbitt-lined type. No shims.
Clearance—.001-.003".

Bearing Adjustment:—None (no shims). Replace bearings. Do not file bearing caps.

End Thrust—Taken by center (#3) bearing. Endplay .003-.008". Adjusted by replacing or building up bearing.

CAMSHAFT:—5 bearing. Non-adjustable chain drive.
Journal Diameters—#1, 2"; #2, 1 31/32"; #3, 1 15/16"; #4, 1 29/32"; #5, 1⅞".
Bearing Type—Steel-backed, babbitt-lined.
Clearance—.001-.003".

End Thrust:—Taken by thrust plate in back of camshaft sprocket. Endplay .002-.004".

Timing Chain: Morse #1866 RX. Width 1". Pitch .375". Length 21¾" or 58 links.

Camshaft Setting:—With #1 piston on top dead center (when center line above mark '#1 UP D.C.' lines up with indicator in inspection hole in left front face of flywheel housing under starter) and #1 exhaust valve just closing, mesh chain with sprockets turned so that 'O' marks are adjacent and in line with a straightedge across the shaft centers.
NOTE—Radiator and front assembly must be removed as a unit when work is done on front of engine and engine must be supported at front end and front engine support removed for work on timing chain, camshaft or sprockets. To remove front assembly, take out bolts to body (3 each side), bolts to running board (3 each side), fender brace bolts (1 each side), radiator tie rod nuts, center bolt in front cross-member, and running board moulding clips (4 each side).

VALVES:

	Head Diameter	Stem Diameter	Length
Intake	1 17/32"	11/32"	5⅝"
Exhaust	1 13/32"	11/32"	5⅝"

	Seat Angle	Lift	Stem Clearance
Intake	30°	.300"	.0005-.00175"
Exhaust	45°	.300"	.0005-.00175"

NOTE—Stem clear'ce in guides measured at bottom.

Valve Guides:—Cast-iron, one piece, removable with exhaust longer than intake. New guides are finish reamed with a taper reamer after installation with .0035" greater clearance at top. Exhaust valve guides are counterbored ⅜" deep at top to provide .015" greater clearance.

Valve Springs:—Intake and exhaust springs are interchangeable.

	Spring Pressure	Length
Valve Closed	40 lbs.	1⅝"
Valve Open	110 lbs.	1 5/16" approx.

Valve Lifters—Single piece barrel-type with openings in side walls.

VALVE TIMING

Tappet Clearance:—.007" Int., .010" Exh., hot.
NOTE—Splasher in right front fender should be removed when valve adjustments are made.

Valve Timing:—See Camshaft Setting above.
Intake Valves—Open 5° BTDC. Close 39° ALDC.
Exhaust Valves—Open 45° BLDC. Close 5° ATDC.
To Check Valve Timing—Set tappet clearance #1 exhaust valve at .013". This valve should close with piston 5° or .0103" past top dead center and point on flywheel 2½ graduations past #1 UP.DC. mark (top dead center mark) lines up with pointer in inspection hole in left front face of flywheel housing under starter. Reset tappet clearance at .010" with engine warm.

LUBRICATION

LUBRICATION:—Pressure. Gear type oil pump mounted on right side of crankcase.
NOTE—Whenever oil pump is to be removed turn engine over until distributor rotor in #1 position (#1 piston 7° BTDC.). When installing pump turn oil pump shaft so that tongue-and-groove connection to distributor shaft meshes. Recheck ignition timing.

Normal Oil Pressure:—35 lbs. at 1000 R.P.M.

Oil Pressure Relief Valve:—Located on pump cover. Not adjustable. Replace relief valve spring if defective. Tension 6 lbs. compressed to 2".

Crankcase Capacity:—7 qts. (full).

CLUTCH

Long Model 10CF-CI. Semicentrifugal, dry disc type.
See Clutch Section for complete data.
Facings—Woven type, 2 required. Inside Diam. 6". Outside Diam. 10". Thickness .140".
Adjustment—Clearance between clutch pedal and toeboard must be ½" with clutch engaged. Free movement of clutch pedal must be 1½". To adjust, loosen locknut and turn adjusting nut on clutch pedal-to-lever connecting rod.
Removal—Remove floor boards and front seat, disconnect front universal joint, support engine at rear and remove rear engine mountings, remove transmission, remove clutch housing bottom cover, and clutch pedal linkage. Loosen capscrews mounting clutch cover on flywheel turning all screws out evenly to release springs. Remove clutch from below without removing housing.

FRONT SUSPENSION

Front Suspension:—Independent 'Safe-T-Flex' type with Coil springs. All specifications below apply with car weight on wheels.
See Front Suspension Section for complete data.
King Pin Inclination—1°30' crosswise.
Camber—1° plus or minus ¼°. Adjustable.
Caster—2° plus or minus ½°. Adjustable.
Toe In—1/16-⅛". Adjustable by turning tie rods equally (check for equal lengths after adjustment).
Steering Geometry—Inner wheel turned 23°, outer wheel turned 20°. Check tie rod ends and kingpin for looseness.

STEERING GEAR

Steering Gear: Gemmer Worm-and-Roller type.
See Steering Gear Section for complete data.

BRAKES

BRAKES:—Service—Bendix Hydr'lic, Duo-Servo, Single anchor type. Hand lever applies rear wheel brakes.
See Brake Section for complete data.
Drum Diameter—12".
Lining—Primary U.S. Asbestos 714, Secondary U.S. Asbestos 589. Width 1¾". Thickness 3/16". Length per wheel 26".
Clearance—.010" at heel and toe of each shoe.
Spring Pressure—63 lbs. on primary return spring (No. 303837-red), 70 lbs. on secondary return spring (No. 303836-yellow).
Hand Brake:—See Service Brakes (above).

MODEL IDENTIFICATION

SERIAL NUMBER: On left side of cowl (use Eng. No.).

ENGINE NUMBER: On left side of block at front. First number 390000 (Eight), 757000 (Super 8).

TUNE-UP

COMPRESSION PRESSURE: 110 lbs. at 125 RPM.

VACUUM READING: Steady 18-19" at 350 RPM.

FIRING ORDER: 1-6-2-5-8-3-7-4. See diagram.

SPARK PLUGS: AC Type K-7 or Champ. J-8, 14 mm. Gaps—.028-.030".

IGNITION: See Coil, Condenser, and Distributor.
Breaker Gap—.020". **Cam Angle**—33° Closed.
Synchronization—Set movable contacts to open 45° after stationary contacts.
Automatic Advance—10° max. at 1800 RPM (distr.).

IGNITION TIMING: See Ignition Timing.
Std. Setting—6° BTDC. (Std. hd.), 4° BTDC (HC hd.), 8° BTDC (Low Comp. hd.). Vibration dampener mark (correct degree mark ahead of 'DC/1-8') aligned with pointer at front of engine. Movable contacts should open 45° after this point.

CARBURETION: See Carburetor & Carb. Equipment.
Idle Setting—Set idle adjusting screws midway between "miss" and "roll" points. Idle speed 7 MPH.
Float Level—Fuel level 5/8" below edge of bowl.
Accelerating Pump—Inner hole (Summer), outer (winter).
Fuel Pump Pressure: 4½ lbs. maximum.

VALVES: See Valve Timing.
Tappet Clearance—.004" Int., .006" Exh. warm.

STARTING: See Battery, Starter, Generator, Regulator.

IGNITION

Ignition Switch:—Model 430-L. Connected to coil by armored cable. Switch has two 'on' positions (key turned to right or left). On cars with Startix, right hand 'on' position is regular running position with Startix operative. Left hand 'on' position is used to secure gasoline gauge reading or to run engine with automatic starting inoperative.

COIL: Delco-Remy Model 539-K. On engine.
Ignition Current—2.2 amperes idling, 4.4 stopped.

CONDENSER: Delco-Remy No. 829092.
Capacity—.20-.25 microfarad.

DISTRIBUTOR: Delco-Remy 662-T. Double breaker, full automatic advance type with manual control. Contacts open alternately at regular 45° intervals corresponding to 90° firing interval of engine and must be synchronized. (See Ignition Timing).
Breaker Gap—Set at .020". Limits .018-.022".
Cam Angle or Dwell—Closed 33°. Open 12° (distr.). Both sets together when properly synchronized.
Breaker Arm Spring Tension—19-23 ounces.

Automatic Advance

Distributor		Engine	
Degrees	R.P.M.	Degrees	R.P.M.
Start	300	1	600
10	1800	20	3600

Fuel Compensator—Manual adjustment at distributor providing 12° maximum advance and retard from center 'O' position. See Ignition Timing for setting.

Distributor Removal:—Mounted on left side of cylinder head. To remove, take out hold-down screw in advance arm.

IGNITION TIMING

IGNITION TIMING:—Initial settings as shown. See Fuel Compensator Setting below.

	Flywheel Degrees	Piston Position
All Models (Std. Hd.)	6° BTDC	.0168" BTDC
All Models (6.0-1 Hd.)	8° BTDC	.0299" BTDC
All Models (7.0-1 Hd.)	4° BTDC	.0075" BTDC

Timing (Stationary Contacts)—Loosen thumbnut and set Fuel Compensator at 'O'. With #1 piston on compression, turn engine over until piston reaches firing position, stop when correct graduation on vibration dampener at front of engine lines up with pointer on chain case cover (vibration dampener has fifteen 1° graduations before the dead center mark 'DC/1-8'—see table above for setting for each type engine). Loosen advance arm clamp bolt, rotate distributor until stationary contacts (mounted directly on breaker plate) begin to open, tighten clamp bolt. Then synchronize movable contacts.

Timing (With Neon Timing Light)—This method recommended by manufacturer. Connect lead to #1 spark plug wire. With engine idling, adjust distributor so that timing mark (as indicated above) lines with pointer on chain case cover.

Synchronization (Movable Contacts)—Synchronization may be checked with the Neon Timing Light. Connect lead to #6 spark plug wire and direct light at pointer on chain case. With correct line before mark 'DC/2-6' marked in chalk for better visibility (see table above), idle engine. This line should line up with pointer on chain case cover. Engine must be stopped to set synchronization. To adjust, turn engine over to #6 firing position, loosen lockscrews on sub-plate carrying movable contacts, turn eccentric adjusting screw until contacts begin to open, tighten lockscrews.

Synchronization (Other Methods)—See Equipment Section for directions on synchronization using Delco-Remy synchronizing tool #1838182. If distributor synchronized by using other types of equipment, set firing intervals at regular 45-45-45 (distributor degrees).

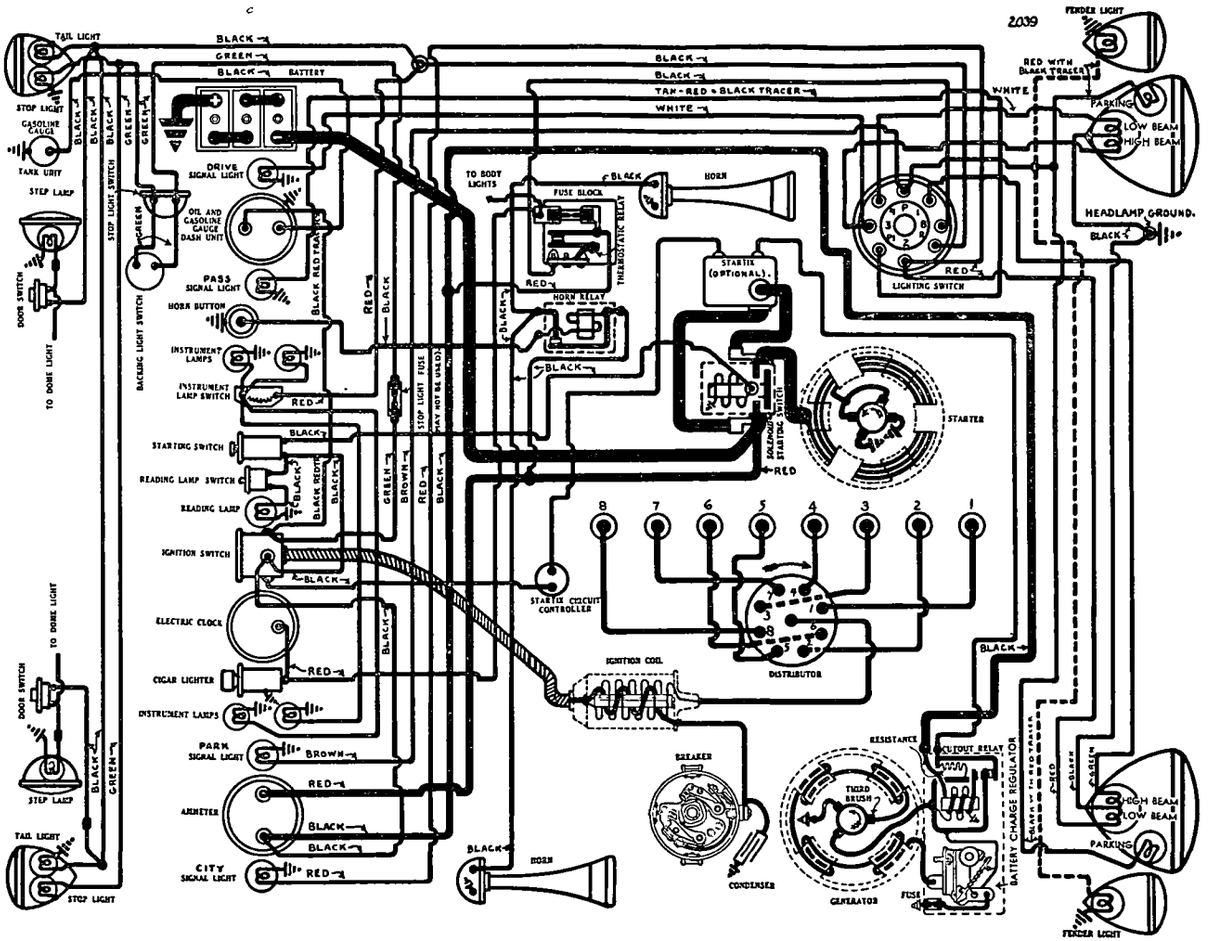

NOTE—Manufacturer recommends use of Winn Synchrometer (Packard Tool #ST-913) to synchronize contacts.

Fuel Compensator Setting—Provides manual adjustment at distributor for octane rating of fuel used. After ignition set as above, road test car to give a slight 'ping' pulling heavy load. Adjusted by loosening thumbnut and advancing or retarding pointer on scale. Adjustment permits 12° advance or retard from center 'O' position.

CARBURETOR

CARBURETION:—Carburetor—Stromberg Model EE-23. 1¼" dual downdraft type with integral automatic choke. See Carburetion Section for adjustments, overhaul and Jet Specifications.
For complete data, refer to Carburetor Index.

NOTE—Do not adjust carubretor until engine is warmed up so that choke valve is wide open and engine idling at slow or hot idling speed.

Idle Adjustment—Set throttle stopscrew so that engine idles at 350 R.P.M. or 7 M.P.H. Turn inner idling adjusting screw in until engine begins to lag or miss, then turn screw out until engine begins to roll, finally turn screw in slowly until engine fires smoothly. Repeat with outer idling adjusting screw. Readjust throttle stopscrew for correct idling speed.

Accelerating Pump Setting—Adjusted by changing position of pump link rod in throttle valve lever. Inner Hole (Min. stroke)—Summer temperatures. Outer Hole (Max. stroke)—Winter temperatures.

Fast Idle:—Integral with carburetor. For complete data see article on Stromberg Automatic Choke on EE-23 Carburetors.
For complete data, refer to Carburetion Equip. Index.
Adjustment—With engine cold, open and close the throttle allowing choke to close; if engine hot, choke must be held in closed position manually. With fast idle adjusting screw backed away from fast idle cam, turn screw in until it just contacts cam, then turn screw in 2½-3 turns.

Automatic Choke:—With integral Fast Idle. See separate article (Stromberg EE-23) in Carburetion Section for complete data.
For complete data, refer to Carburetion Equip. Index.

CARB. EQUIPMENT

Air Cleaner:—AC. #1525441 oil-wetted type standard, #1525905 heavy duty oil bath type optional.

Fuel Pump: AC Type F. fuel-&-vacuum pump.
Pressure—4½ lbs. max.
For complete data, refer to Carburetion Equip. Index.

Gasoline Gauge:—AC. Electric #1515310 (dash unit), #1515400 (tank unit—except sedan), #1515401 (tank unit—sedan only).
For complete data, refer to Carburetion Equip. Index.

BATTERY

1936—Prest-O-Lite, Type H4-21. 6 volt, 21 plate, 150 ampere hour capacity (20 hour rate).
Starting Capacity—175 amperes for 20 minutes.
Zero Capacity—300 amperes for 6.3 minutes.
Grounded Terminal—Positive (+) terminal.
Location—On left side under rear compartment floor boards.

STARTER

EIGHT

Auto-Lite Model MAX-4014. Armature MAW-2090.
Drive—Outboard Barrel Type Bendix Model A-1729.
Cranking Engine—125 R.P.M., 160 amperes, 5.2 volts.
Rotation—Counter-clockwise at commutator end.
Brush Spring Tension—42-53 ozs. (new brushes).

Performance Data—Auto-Lite MAX-4014

Torque	R.P.M.	Volts	Amperes
0 ft. lbs.	5300	5.5	65
.65 "	3300	5.5	100
2.75 "	1630	5.0	200
5.5 "	970	4.5	300
8.7 "	600	4.0	400
12.0 "	300	3.5	500
16.5 "	Lock	3.0	640
25.0 "	Lock	4.0	880

All Other Data same as given for Super 8 below.

STARTER

SUPER EIGHT

Owen-Dyneto Model DN-1298. Armature No. 13409.
①—**Startix Type 'F' optional on all models.**
Starter Drive—Outboard Bendix Type RCD10FXTD.
Rotation—Counter-clockwise at commutator end.
Brush Spring Tension—56-60 ozs. (new brushes).
Cranking Engine—125 R.P.M., 140 amperes at 5.5 volts (Eight), 125 amperes at 5.5 volts (Super 8).

Performance Data—Owen-Dyneto DN-1298

Torque	R.P.M.	Volts	Amperes
0 ft. lbs.	3000	6.0	50
2 "	1600	5.6	120
3.3 "	1200	5.45	150
6.3 "	800	5.2	210
15.0 "	400	4.65	360
35 "	Lock	3.5	650
39.0 "	Lock	3.6	810

Removal:—Starter sleeve mounted in left front face of flywheel housing. To remove, take out pilot mounting screw in flywheel housing.

Starting Switch: Auto-Lite Magnetic Switch SS-4001.
For complete data, refer to Electrical Equipment Index.
Startix (optional)—Type 'F' automatic starting switch and Startix circuit controller (anti-backfire unit), controlled by ignition switch. See article in Electrical Equipment Section for complete data.
For complete data, refer to Electrical Equipment Index.
NOTE—Control Unit (Relay Regulator) has extra terminal and resistance coil which are used with Startix Type 'F.'

GENERATOR

1936—Owen-Dyneto CO-1300. Armature 23865.
Air-cooled type. Third brush control in conjunction with Battery Charge Regulator. See Equipment Section for complete data on Regulator.
Charging Rate Adjustment—Third brush shifted through rack-and-pinion control by slotted adjusting screw on commutator end plate. Turn adjusting screw to right or clockwise to increase, and to left or counter-clockwise to decrease
Maximum Charging Rate—30-33 amperes (cold), 24-27 amperes (hot) at 8.0 volts.

Performance Data—CO-1300

Cold — Regulator Inoperative			Hot —		
Amps.	Volts	R.P.M.	Amps.	Volts	R.P.M.
0	7.0	580	0	7.3	625
5	7.2	630	5	7.5	700
10	7.5	700	10	7.7	800
15	7.7	790	15	7.9	930
20	7.9	910	20	8.0	1100
25	8.0	1080	25	8.0	1380
30	8.0	1380	28	8.0	2000
32	8.0	1900			

Rotation—Counter-clockwise at commutator end.
Brush Spring Tension—20-22 ozs. (all brushes).
Field Current—3.5-3.7 amperes at 6.0 volts.
Motoring Current—16.7-18 amperes at 6.0 volts (½ ampere more if relay and regulator in circuit).
Field Fuse—5 ampere capacity in knurled plug in side of regulator case.

Removal:—Generator flange mounted on right rear face of timing chain case. To remove, take out three mounting screws, pull generator to rear to disengage drive coupling, lift out. Do not disturb intermediate flange carrying drive sprocket.

Chain Adjustment:—Loosen generator flange mounting screw, pull generator out or away from engine until sideplay as measured at chain case is ¼", tighten mounting screws. Adjust chain whenever sideplay exceeds ½".

REGULATOR

Owen-Dyneto Battery Charge Regulator 40210. Consists of Cutout Relay (No. 40203) with auxiliary contacts and resistance coil (for use with Startix Type 'F') and Battery Charge Regulator.
For complete data, refer to Electrical Equipment Index.

Cutout Relay

Cuts In—6.8-7.2 volts, 600 R.P.M.
Cuts Out—0-2.5 amperes discharge current.
Contact Gap—.030-.032".
Air Gap—.020-.025" with contacts closed.
Auxiliary Contacts—Should open when main contacts close, close when main contacts open.

Battery Charge Regulator

Setting—8.2 volts (cold), 7.8 volts (hot)—contact opening point. **Regulator Resistance**—1.85 ohms.

LIGHTING

LIGHTING:—Headlamps—Hall, Pre-focused Flex-beam type with special non-interchangeable lenses. Headlamps aimed straight ahead with lighting switch in 'Country Driving' (upper beam) position. 'Country Passing' beam (upper beam right hand headlamp, lower beam left hand headlamp) controlled by lighting switch.
Headlamp Beam Indicator—Separate beam indicator for each position of lighting switch (1—Parking, 2—City Driving, 3—Country Driving, 4—Country Passing), located on instrument panel.

Switches

Lighting—R.B.M. Model 1400.
Instrument Lamp Rheostat—Soreng-Manegold No. J2060A. **Stop Light**—Auto-Lite No. 58012-B

Bulb Specifications

Position	Candlepower	Mazda No.
Headlamps	32-32	2330
Parking or Fender	3	63
Instr., Tail, Courtesy	3	63
Stop	15	87
Dome	6	81
Indicators	1	51

C NTINUED ON NEXT PAGE

CONTINUED FR M PRECEDIN PA E

MISC. ELECTRICAL

THERMOSTATIC RELAY:—(On Delco-Remy Model 1050-W Fuse Block). Thermostatic arm type current limit relay (no winding). Connected in lighting circuits. Contacts open with current load of 38 amperes

FUSES:—Body Lights—20 ampere on fuse block (see above).

Generator Field—5 amperes in knurled plug on side of regulator case.

HORNS:—Sparton Twin Horns. Vibrator type. Operated by horn relay.

Horn Relay:—R.B.M. Model 10072. Current draw .4-.55 amperes at 6.0 volts. Coil resistance 11-14 ohms. Contacts must close with relay in inverted position.

ENGINE

ENGINE SPECIFICATIONS:—Type—8 cylinder In Line, 'L' head type.

Bore—3 3/16" (Eight), 3½" (Super 8).

Stroke—5" (All Models).

Displacement—320 (Eight), 384.4 (Super 8) cu. ins.

Rated Horsepower—32.5 (Eight), 39.2 (Super 8).

Developed Horsepower—130 at 3200 RPM (Eight), 150 at 3200 RPM (Super 8).

Compression Ratio—Std. 6.5-1 (Eight), 6.3-1 (Super 8). Optl. 6.0-1 Low Comp. or 7.0-1 High Comp. (both engines).

Compression pressure—110 lbs. at cranking speed of 125 R.P.M. (std. head—both models).

Vacuum Readng—Gauge should show steady reading of 18-19" with engine idling at 350 R.P.M.

PISTONS:—Nelson Bohnalite, aluminaum alloy, Invar Strut, split skirt type. Recondition cylinders to take finished replacement pistons.

Weight—18.7 ozs. (Eight), 21.9 ozs. (Super 8).

Removal—Pistons removed from top, rods from bottom on Eight Engines (push the piston up until piston pin is exposed, remove locking ring and push out pin, remove piston, lower rod and remove from below. Use new locking rings when replacing pistons). Pistons and rods removed from above on Super Eight Engines.

Clearance—Skirt .0015". See Fitting New Pistons.

Replacement Pistons:—Finished replacement pistons furnished in standard size and .003", .005", .010", .015", .020", .025", .030", .035", .045" oversize

Fitting New Pistons:—Use .0015" feeler stock ½" wide to check clearance. Pull required to withdraw feeler from between piston and cylinder wall on side opposite slot should be 3-5 lbs.

Installing Pistons:—Slot should be on valve side of engine.

PISTON RINGS:—Three compression, one oil control ring per piston, all above pin. Lower ring groove drilled with twelve ⅛" oil drain holes.

Ring	Width	End Gap	Side Clearance
Comp (Top)	⅛"	.007-.012"	.002"
Comp (2nd)	⅛"	.007-.012"	.0015"
Oil	5/32"	.007-.015"	.0015"

PISTON PIN: Diameter ⅞". **Length** 2 47/64" (Eight), 3 3/64" (Super 8). Pin floats in piston and rod. Held by locking ring at each end. Pin hole in rod is bronze-bushed. Pins furnished for service .003", .006" oversize.

Pin Fit in Piston—Palm push fit with piston heated to 160° F. Pin holes in piston finished to inside diameter of .87515-.87485".

Pin Fit in Rod Bushing—.0002" clearance or thumb push fit with both parts at room temperature (70°F)

CONNECTING ROD: Weight—40 1/16 ounces (Eight), 47¾ ozs. (Super 8). **Length**—10⅞".

Crankpin Journal Diameter—2.1875".

Lower Bearing—Removable, steel backed, babbitt lined. Furnished .001", .002", .003", .015" undersize.

Clearance—.0005-.002". Sideplay .003-.006".

Bearing Adjustment:—None (no shims). Replace bearings. Do not file rods or bearing caps.

Installing Rods:—Install with oil hole toward camshaft.

CRANKSHAFT:—9 bearing. Integral counterweights.

Journal Diameter—2.625".

Bearing Type—Removable steel-backed, babbitt-lined type. No shims.

Clearance—.001-.002".

Bearing Adjustment:—None (no shims). Replace bearings. Do not file bearing caps.

End Thrust:—Taken by #7 bearing. Endplay .003-.005"

CAMSHAFT:—8 bearing. Adjustable chain drive.

Bearing Type—Steel-backed, babbitt-lined.

Clearance—.001-.003".

Endplay—.001-.004".

Timing Chain:—Morse #1866. Width 1½". Pitch .500". Length 32" or 64 links.

Chain Adjustment—Loosen generator flange mounting screws, pull generator out or away from engine until sideplay as measured at chain inspection plug hole in top face of chain case is ¼", tighten mounting screws. Adjust chain whenever sideplay exceeds ½".

Camshaft Setting:—Sprockets are marked Mesh chain with sprockets turned so that 'OO' marks are adjacent and are centered on a straitedge across the shaft centers.

VALVES:—

	Head Diam.	Stem. Diam.	Length
Intake (Eight)	1 21/32"	.3405"	7 13/32"
Exhaust (Eight)	1 15/32"	.3405"	7 13/32"
Intake (Super 8)	1 13/16"	.3405"	7 13/32"
Exhaust (Super 8)	1 11/16"	.3405"	7 13/32"

	Seat Angle	Lift	Stem Clear.
Intake	45°	.358"	.0025" min.
Exhaust	45°	.358"	.004" min.

Valve Guides:—Pressed in block. Reamed to size for correct stem clearance (see table above).

Valve Rocker Arms:—Consist of pivoted arms mounted on bracket on crankcase which transmit motion from cam to valve pushrod (valve lifter).

Removal—Remove screws in bracket on right side of crankcase, withdraw bracket and pushrod assembly.

Valve Springs:—Double springs used on all valves.

	Spring Pressure	Spring Length
Valve Closed	73 lbs.	3 1/16"

VALVE TIMING

Tappet Clearance—.004" Int., .006" Exh., eng. warm.

Valve Timing:—See Camshaft Setting above.

Intake Valves—Open 30° BTDC. Close 65° ALDC.

Exhaust Valves—Open 65° BLDC. Close 30° ATDC.

To Check Valve Timing—Check tappet clearance #1 intake valve. This valve should open with piston 30° or .4070" before top dead center when flywheel mark 'INT' (visible through starter mounting hole in flywheel housing with starter removed) lines up with indicator on housing within case.

LUBRICATION

LUBRICATION:—Pressure type. Gear type oil pump mounted in crankcase. Oil temperature regulator mounted on left side of engine.

Normal Oil Pressure—35 lbs. at 1000 R.P.M.

Oil Pressure Regulator—Located under plug on left side of crankcase. Operates at 35 lbs. Adjustable by turning adjusting screw.

Capacity—8 qts. (Eight), 9½ qts. (Super 8).

CLUTCH

Long Model 12CB-CL. Single plate, dry disc type.
See Clutch Section for complete data.

Facings—Moulded type, 2 required. **Inside Diam** 7". Outside Diam. 12". Thickness .140".

Adjustment—Clearance between pedal and toeboard should be ½-1". Free movement of pedal should be 1½". Adjust by turning turnbuckle on connecting rod at lower end of pedal.

Removal—Disconnect drive shaft at front universal, remove transmission and bell housing, take ut screws mounting clutch on flywheel turning all screws out evenly to release clutch spring pressure.

FRONT SUSPENSION

Front Suspension:—Conventional 'I' beam section front axle with Reverse-Elliott ends and semi-elliptic springs.

King Pin Inclination—9° crosswise.

Camber—1°.

Caster—2½°. Adjustable by installing wedge shims between spring and spring pad on axle.

Toe In—1/16-⅛" at rim. Adjustable in usual manner by changing length of tie rod.

Steering Geometry—Inner wheel turned 22½°-23°, outer wheel turned 20°. Check tie rod ends and king pins for looseness.

STEERING GEAR

Steering Gear: Gemmer Worm-and-Roller type.
See Steering Gear Section for complete data.

BRAKES

BRAKES:—Bendix Duo-Servo, Single Anchor, mechanically operated, vacuum power brakes. Hand lever applies all four service brakes.
See Brake Section for complete data.

Drum Diameter—14".

Lining—Primary (Raybestos 451), Secondary (Hyco DV 1391). Width 2¼" (except left front which is 1¾"). Thickness ¼". Length 30¼".

Clearance—Free—at heel and toe of each shoe.

Hand Brake Adjustment:—With hand brake lever fully released and cross shaft against stop, remove all slack in cable by adjusting clevis position at cross shaft end of cable until clevis pin can just be inserted in cross lever. Check brakes making sure they are fully released with hand brake in off position. Adjustment for wheel equalization should be made after drum lining has been worn in.

NOTE—By removing glove compartment and changing brake latch piece (#228705) operating position of hand brake lever may be moved 2" to the rear.

Power Unit:—Bendix plain type vacuum cylinder mounted on frame and linked to cross shaft lever. C ntrolled by valve built in brake pedal mechanism.
See Brake Section for complete data.

MODEL IDENTIFICATION

SERIAL NUMBER: On left side of cowl (use Eng. No.).

ENGINE NUMBER: On left cylinder block at front below cylinder head. First number 904000.

TUNE-UP

COMPRESSION PRESSURE: 110 lbs. at 125 RPM.

VACUUM READING: Steady 18-19" at 375 RPM.

FIRING ORDER: 1R-6L-5R-2L-3R-4L-6R-1L-2R-5L-4R-3L with cylinders numbered as shown on diagram (cylinder banks right 'R' and 'L' left as viewed from driver's seat, #1 cylinder at front.

SPARK PLUGS: AC Type K-7 or Champ. J-8, 14 mm. Gaps—.028-.030".

IGNITION: See Coil, Condenser, and Distributor.

Breaker Gap—.020". Cam Angle—40° Closed.

Synchronization—Set movable contacts to open 33½° after stationary contacts.

Automatic Advance—8° max. at 1200 RPM (distr.).

IGNITION TIMING: See Ignition Timing.

Std. Setting—6° BTDC (Std. hd.), 4° BTDC (HC hd.), 8° BTDC (Low Comp. hd.), Vibration dampener mark (correct degree mark ahead of '1R-UDC') aligned with pointer at front of engine. Movable contacts should open 33½° after this point.

CARBURETION: See Carburetor & Carb. Equipment.

Idle Setting—Set idle adjusting screws midway between "miss" and "roll" points. Idle speed 8 MPH.

Float Level—Fuel level 9/16" below edge of bowl.

Accelerating Pump—Inner Hole (Summer), outer (Winter).

Fuel Pump Pressure: 4½ lbs. maximum.

VALVES: See Valve Timing.

Tappet Clearance None in service, hydraul. take-up.

STARTING: See Battery, Starter, Generator, Regulator.

IGNITION

Ignition Switch:—Delco-Remy, Type 430-M. Connected to coil unit by armored cable. Switch has two "on" positions (to left for gauge readings).

COIL: Auto-Lite CE-4022 (1407), 4023 (1408) or D-R 539K Mounted at front of engine. Auto-Lite two-coil units have Service Coil CE-3186FS.

Ignition Current—6 amperes idling, 10 amperes stopped (total for both coils).

CONDENSER: Auto-Lite No. IG-2671-E, IG-2671-A (one of each used). **Capacity**—.20-.25 microfarad.

DISTRIBUTOR: Auto-Lite IGO-4002-A. Double breaker, 6 lobe cam, full automatic advance & Fuel Compensator' or manual adjustment at distributor. Contacts open alternately at 33½ and 26½ degree intervals corresponding to unequal 67 and 53 degree firing intervals of engine (caused by 67° included angle between banks) and must be synchronized **Breaker Gap**—Set at .020". Limits .018-.022".

Cam Angle or Dwell—Closed 40°. Open 20° distributor. Eeach set operates separately and controls ne coil.

Breaker Arm Spring Tension—20 ozs. at tip of arm.

Automatic Advance

Distributor Degrees	R.P.M.	Engine Degrees	R.P.M.
Start	300	0	600
2	525	4	1050
4	750	8	1500
6	975	12	1950
8	1200	16	2400

Fuel Compensator—Manual adjustment at distributor providing 10° maximum advance and retard from center 'O' position. See Ignition Timing for setting.

Distributor Removal:—Distributor mounted on bracket between cylinder banks at front of engine. To remove, take out screws in bracket.

IGNITION TIMING

IGNITION TIMING:—Initial setting as shown. See Fuel Compensator Setting below.

	Flywheel Degrees	Piston Pos.
6.4-1 Std. Comp.	6° BTDC	.0145" BTDC.
7.0-1 High Comp.	4° BTDC	.0063" BTDC.
6.0-1 Low Comp.	8° BTDC	.0255" BTDC.

Timing (Stationary Contacts):—Loosen thumbnut and set Fuel Compensator at 'O'. With #1R piston (front piston—right bank) on compression, turn engine over until piston reaches firing position, stop when correct graduation on vibration dampener at front of engine lines up with pointer on chain case cover (vibration dampener has fifteen 1° graduations before the dead center mark '1R-UDC' see table above for correct setting). Loosen clamp screw on mounting bracket, rotate distributor until stationary contacts (mounted directly on breaker plate) begin to open, tighten clamp screw. Then synchronize movable contacts.

Timing (With Neon Timing Light)—This method recommended by manufacturer. Connect lead to #1 spark plug wire. With engine idling, adjust distributor so that timing mark (as indicated above) lines up with pointer on chain case cover. Mark should be painted white for better visibility.

Synchronization (Movable Contacts):—Synchronization may be checked with Neon Timing Light. Connect lead to #6L spark plug wire and direct light at

CONTINUED ON NEXT PAGE

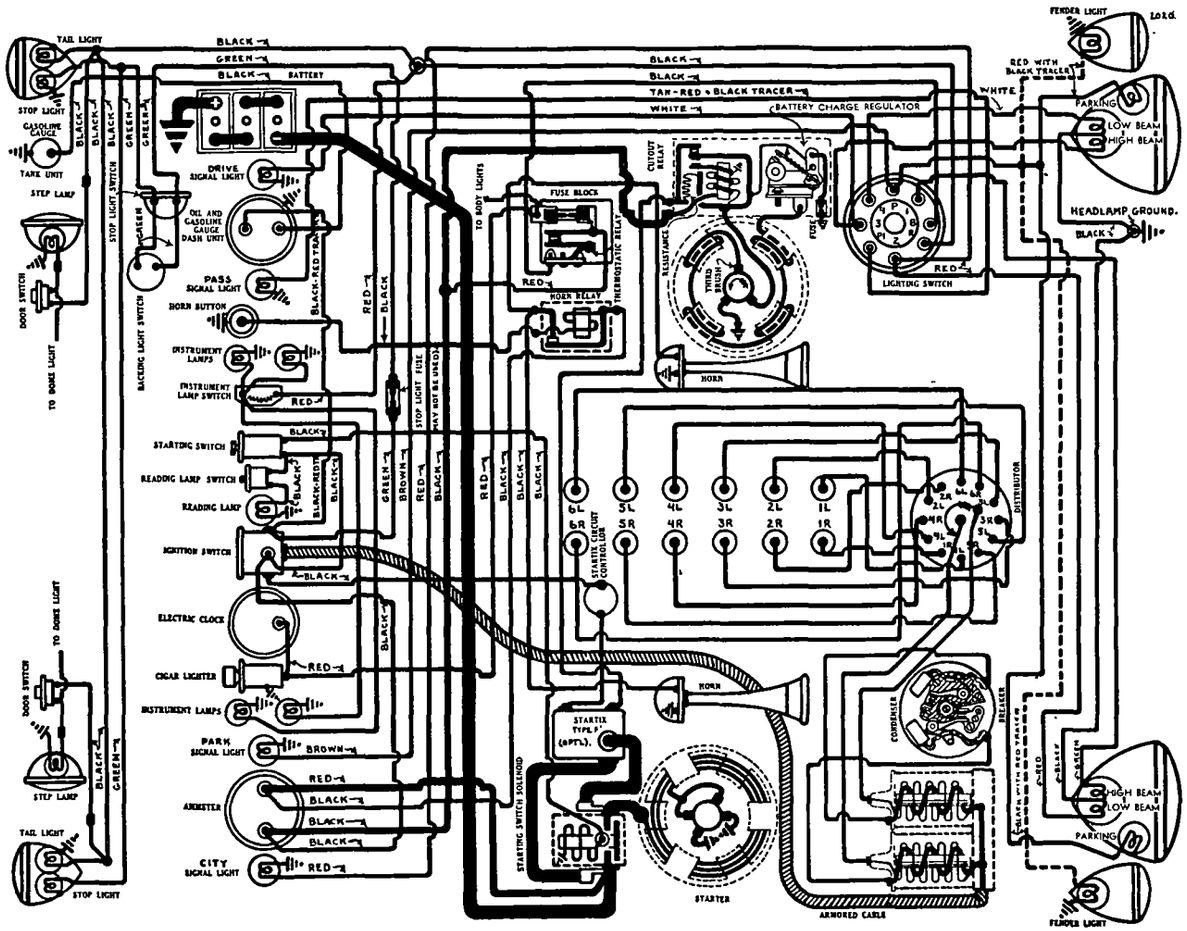

C NTINUED FROM PRECEDING PA E

pointer on chain case. With correct line before mark '6L-UDC' (see table above) marked in chalk for better visibility, idle engine. This line should line up with pointer on chain case cover. Engine must be stopped to set synchronization. To adjust, turn engine over to #6L firing position, loosen lockscrews on movable sub-plate, shift plate by turning eccentric adjusting screw until movable contacts begin to open, tighten lockscrews.

Synchronization (Other Methods)—If distributor synchronized by other methods, set movable points to open 33½° after fixed points. Distributor firing intervals are unequal 33½-26½-33½ distributor degrees.

NOTE—Manufacturer recommends use of Winn Synchrometer (Packard Tool #ST-913) to synchronize contacts.

Fuel Compensator Setting:—Should be set to provide best performance with a slight ping pulling heavy load. Adjusted by loosening thumbnut and moving pointer to left or right from center 'O' position.

CARBURETOR

CARBURETION—Carburetor—Stromberg Model EE-3, 1½" dual downdraft type with Stromberg type 'C' automatic choke.

For complete data, refer to Carburetor Index.

Idle Note—See article in Carburetor Section for shim installation to improve idle operation.

Settings (Idle Setting, Float Level, and Accelerating Pump): *See Tune-Up.*

Fast Idle:—To adjust with engine cold, open and close throttle allowing choke to close (if engine hot hold fast idle stopweight down with fast idle adjusting screw resting on ear of fast idle stopweight). Loosen locknut on adjusting screw, back off screw until it is free of stop, turn screw in until it just contacts stop, then turn screw in 2-2½ turns, finally tighten locknut on adjusting screw.

For complete data, refer to Carburetion Equip. Index.

Automatic Choke: Stromberg Type 'C'.

For complete data, refer to Carburetion Equip. Index.

CARB. EQUIPMENT

Air Cleaner:—AC. #1525442 oil-wetted type standard, #1525902 heavy duty oil bath type optional.

Fuel Pump:—AC. Type I. #1521778. Combination fuel-and-vacuum pump.

For complete data, refer to Carburetion Equip. Index.

Gasoline Gauge:—AC. Electric #1515309 (dash unit), #1515400 (tank unit—except sedan), #1515401 (tank unit—sedan only).

For complete data, refer to Carburetion Equip. Index.

BATTERY

1936—Prest-O-Lite, Type H4-21. 6 volt, 21 plate, 150 ampere hour capacity (20 hour rate).

Starting Capacity—175 amperes for 20 minutes.

Zero Capacity—300 amperes for 6.3 minutes.

Grounded Terminal—Positive (+) terminal.

Location—On left side under rear compartment floor boards.

STARTER

1936—Owen-Dyneto DN-1299, Armature 13409.

Drive—Outboard Bendix Type RCD10FXTD.

Cranking Engine—125 R.P.M., 130 amps. at 5.6 volts.

Rotation—Counter-clockwise at commutator end.

Brush Spring Tension—56-60 ounces each.

Performance Data

Torque	R.P.M.	Volts	Amperes
0 ft. lbs.	3000	6.0	50
2 "	1600	5.6	120
3.3 "	1200	5.45	150
6.3 "	800	5.2	210
15.0 "	400	4.65	360
35.0 "	Lock	3.5	650
39.0 "	Lock	3.6	810

Removal:—Starter sleeve mounted on right front face of flywheel housing. To remove, take out pilot mounting screw in flywheel housing.

Starting Switch: Auto-Lite Magnetic Switch SS-4001.

For complete data, refer to Electrical Equipment Index.

Startix (Optional)—Type 'F' automatic starting switch and Startix Circuit Controller (back-fire unit), controlled by ignition switch.

For complete data, refer to Electrical Equipment Index.

NOTE—Control unit (Cutout Relay) has extra terminal and resistance coil which are used with Startix Type F.

GENERATOR

1936—Owen-Dyneto CO-1304. Armature 23691.

Air cooled by air horn on generator field frame. Third brush control in conjunction with Battery Charge Regulator (two-step charging control).

Charging Rate Adjustment—Third brush shifted through rack-and-pinion control by slotted screw on commutator end plate. Turn adjusting screw to right or clockwise to increase, and to left or counter-clockwise to decrease charging rate.

Maximum Charging Rate—30-33 amperes (cold), 24-27 amperes (hot) at 8.0 volts.

Performance Data—CO-1304

Cold			Hot		
Amps.	Volts	R.P.M.	Amps.	Volts	R.P.M.
0	7.0	580	0	7.3	625
5	7.2	630	5	7.5	700
10	7.5	700	10	7.7	800
15	7.7	790	15	7.9	930
20	7.9	910	20	8.0	1100
25	8.0	1080	25	8.0	1380
30	8.0	1380	28	8.0	2000
32	8.0	1900			

Rotation—Counter-clockwise at commutator end.

Brush Spring Tension—20-22 ozs. (all brushes).

Field Current—3.5-3.7 amperes at 6.0 volts.

Motoring Current—16.7-18 amperes at 6.0 volts (½ ampere more if relay and regulator in circuit).

Field Fuse—5 ampere capacity in knurled plug in side of regulator case.

Removal:—Generator mounted on special pivot bracket at left front of engine with fan belt drive. To remove, take out clamp bolt at top of generator and pivot bolt at bottom.

Belt Adjustment:—Loosen clamp bolt above generator, swing generator away from engine until reading on scale attached to field frame is 180 lbs.

REGULATOR

Owen-Dyneto Battery Charge Regulator 40210. Consists of Type 40203 Cutout Relay with auxiliary contacts and resistance coil (for use with Type 'F' Startix) and Battery Charge Regulator in case on generator. See Equipment Section for data on these units.

For complete data, refer to Electrical Equipment Index.

Cutout Relay

Cuts In—6.8-7.2 volts, 600 R.P.M.

Cuts Out—0-2.5 amperes discharge current.

Contact Gap—.030-.032".

Air Gap—.020-.025" with contacts closed.

Auxiliary Contacts—Should open when main contacts close, close when main contacts open.

Battery Charge Regulator

Setting—8.2 volts (cold), 7.8 volts (hot)—contact opening point.

Regulator Resistance—1.85 ohms.

LIGHTING

LIGHTING:—**Headlamps**—Hall, Pre-focused Flex-beam type with special non-interchangeable lenses. Head lamps aimed straight ahead with lighting switch in 'Country Driving' (upper beam) position. 'Country Passing' beam (upper beam right hand headlamp, lower beam left hand headlamp) controlled by lighting switch.

Headlamp Beam Indicator—Separate beam indicator for each position of lighting switch (1—Parking, 2—City Driving, 3—Country Driving, 4—Country Passing), located on instrument panel.

Switches

Lighting—R.B.M. Model 1400.

Instrument Lamp Rheostat—Soreng-Manegold No. J2060A.

Stop Light—Auto-Lite No. 58012-B hydraulic type.

Bulb Specifications

Position	Candlepower	Mazda No.
Headlamps	32-32	2330
Parking or Fender	3	63
Instrument, Tail, Courtesy	3	63
Stop	15	87
Dome	6	81
Indicators	1	51

MISC. ELECTRICAL

THERMOSTATIC RELAY:—**(On Delco-Remy Model 1050-W Fuse Block).** Thermostatic arm type current limit relay (no winding). Connected in lighting circuits. Contacts open with current load of 38 amperes at 70° F.

FUSES:—**Body Lights**—20 ampere on fuse block (see above).

Generator Field—5 amperes in knurled plug on side of regulator case.

HORNS:—**Sparton Twin Horns.** Vibrator type. Operated by horn relay.

Horn Relay:—R.B.M. Model 10072. Current draw .4-.55 amperes at 6.0 volts. Coil resistance 11-14 ohms. Contacts must close with relay in inverted position.

ENGINE

ENGINE SPECIFICATIONS:—Type—12 cyl. 67° Vee, modified 'L' head. Both blocks and upper crankcase cast enbloc.

Bore—3 7/16". Stroke—4¼".

Displacement—473 cubic inches.

Rated Horsepower—56.7 (AMA).

Developed Horsepower—175 at 3200 R.P.M. Std. 6.4-1 head.

Compression Ratio & Pressure—6.4-1 Std. head, 6.0-1 Optl. low comp. head, 7.0-1 Optl. high comp. head. Pressure 110 lbs. at cranking speed of 125 R.P.M. Std. 6.4-1 head.

Vacuum Reading—Gauge should show steady reading of 18-19" with engine idling at 375 R.P.M. or 8 M.P.H.

PISTONS:—Nelson Bohnalite, aluminum alloy, Invar Strut, split skirt type. Recondition cylinders to take finished replacement pistons.

Weight—21.7 ounces.

Removal—Pistons removed through top, rods thru bottom of engine (push pistons up until piston pin is exposed, take out locking rings, push out pin, lift out piston, lower rod and remove from below). Use new locking rings when installing pistons.

Clearance—Skirt .0015". See Fitting New Pistons.

Replacement Pistons:—Furnished in standard size and .003", .005", .010", .015", .020", .030", .045" oversize.

Fitting New Pistons:—Use .0015" feeler stock ½" wide to check clearance. Pull required to withdraw feeler from between piston and cylinder wall on side opposite slot should be 3-5 lbs.

Installing Pistons:—Slot should be toward camshaft on all pistons.

PISTON RINGS:—Three compression, one oil control ring per piston, all above pin. Lower ring groove drilled radially with twelve ⅛ oil drain holes.

Ring	Width	End Gap	Side Clear.
Comp. (Top)	⅛"	.007-.012"	.002"
Comp. (2nd)	⅛"	.007-.012"	.0015"
Oil	5/32"	.007-.015"	.0015"

NOTE—Ring tension when compressed to cylinder size with .007" minimum gap should be 6½ lbs. (compression), 4½-7½ lbs. (oil ring).

PISTON PIN:—Diameter ⅞". Length 2 63/64".

Pin floats in piston and rod. Held by locking ring at each end. Pin hole in rod is bronze-bushed. Pins furnished for service .003", .006" oversize.

Pin Fit in Piston—Palm bush fit with piston heated to 160° F. Pin holes in piston finished to inside diameter of .87515-.87485".

Pin Fit in Rod Bushing—.0002" clearance or thumb push fit with both parts at room temp. (70° F.).

CONNECTING ROD:—Weight 40⅝ ozs. Length 9".

Crankpin Journal Diameter—2½".

Lower Bearing—Removable, steel-backed, copper-lead alloy lined (1935), babbitt-lined (1936). Furnished .001", .002", .003", .015" undersize.

Clearance—.0005-.002". Sideplay .005-.013".

Bearing Adjustment:—None (no shims). Replace bearings. Do not file rod or caps.

Installing Rods:—Install all rods with oil bleed hole in lower bearing toward right r starter side f engine.

CRANKSHAFT: 4 bearing. Integral counterweights.

Journal Diameters—2¾" all bearings.

Bearing Type—Removable, steel-backed babbitt-lined. No shims.

Clearance—.001-.002".

Bearing Adjustment:—None (no shims). Replace bearings. Do not file bearing caps.

End Thrust:—Taken by #1 front bearing. Endplay .003-.005".

CAMSHAFT:—Four bearing. Mounted between cylinder banks directly above crankshaft. Non-adjustable chain drive.

Bearing Type—Steel-backed, babbitt-lined.

Clearance—.001-.003".

Endplay—.002-.006".

Timing Chain:—Morse #1866. Width 1¾". Pitch .500". Length 28" or 56 links.

NOTE—Engine must be supported at front end and engine front casting (engine support, timing chain cover, generator and water pump mounting) removed for work on timing chain, sprockets, or camshaft.

Camshaft Setting:—Sprockets are marked. Mesh chain with sprockets turned so that '00' marks are adjacent and in line with a straightedge across the shaft centers (vertical).

VALVES:—	Head Diameter	Stem Diameter	Length
Intake	1 21/32"	.3405"	6 35/64"
Exhaust	1 21/32"	.338"	6 35/64"

	Seat Angle	Lift	Stem Clearance
Intake	45°	5/16"	.0025"
Exhaust	45°	5/16"	.005"

Automatic Tappet Take-up (Valve Silencer):—Consists of eccentric take-up on rocker arm shaft. Rocker arms contact valve stem ends and cams directly and are mounted on roller bearings.

See Miscellaneous Section for complete data.

NOTE—Initial clearance of take-up mechanism must be checked when valves are installed and take-up must be bled when valves are ground.

See Miscellaneous Section for complete data.

Valve Springs:—Install springs with japanned end down and close-spaced first coil up.

	Spring Pressure	Length
Valve Closed	70 lbs	2 7/32"

VALVE TIMING

Tappet Clearance—None (automatic take up).

Valve Timing:—See Camshaft Setting above.

Intake Valves—Open at TDC. Close 45° ALDC.

Exhaust Valves—Open 35° BLDC. Close 10° ATDC.

To Check Valve Timing—Intake valve in #1 cylinder of right hand bank (1R) should begin to open with piston No. 6R on top dead center entering power stroke when mark '1R-UDC' n vibration dampener at front of engine lines up with pointer on chain case cover.

LUBRICATION

LUBRICATION:—Pressure system. Gear type oil pump located in crankcase. Oil temperature regulator mounted on right side of crankcase.

Normal Oil Pressure—35 lbs. at 1000 R.P.M.

Oil Pressure Regulator—Under plug on right hand side of crankcase. Adjustable by turning adjusting screw.

Crankcase Capacity—10 qts.

CLUTCH

Long Model 12CB-CL. Single plate, dry disc type.

See Clutch Section for complete data.

Facings—Moulded type, 2 required. Inside Diam. 7". Outside Diam. 12". Thickness .137".

Adjustment—Clearance between pedal and toeboard should be ½-1". Free movement of pedal should be 1½". To adjust, turn turnbuckle on connecting rod at lower end of clutch pedal.

Removal—Disconnect drive shaft at front universal, remove transmission and bell housing, take out screws mounting clutch cover on flywheel, turning all screws out evenly to release clutch spring tension.

FRONT SUSPENSION

Front Suspension:—Conventional 'I' beam section front axle with Reverse-Elliot ends and semi-elliptic springs.

King Pin Inclination—9° crosswise.

Camber—1°.

Caster—1½°. Adjustable by installing wedge shims between spring and spring pad on axle.

Toe In—1/16-⅛" at rim. Adjustable in usual manner by changing length of tie rod.

Tread—60".

Steering Geometry—Inner wheel turned 22½°, outer wheel turned 20°. Check tie rod ends and king pins for looseness.

STEERING GEAR

Steering Gear: Gemmer Worm-and-Roller type.

See Steering Gear Section for complete data.

BRAKES

BRAKES:—Service—Bendix Duo-Servo, Single anchor, mechanically operated, vacuum power brakes. Hand lever applies all four brakes. See article in Brake Section for complete adjustment procedure.

See Brake Section for complete data.

Drum Diameter—15".

Lining—Primary (Raybestos 451), Secondary (Hyco DV 1391). Width 2½" (except left front which is 1⅞"). Thickness ¼". Length 32¼".

Clearance—Free—at heel and toe of each shoe.

Hand Brake Adjustment:—With hand brake lever fully released and cross shaft against stop, remove all slack in cable by adjusting clevis position at cross shaft end of cable until clevis pin can just be inserted in cross lever. Check brakes making sure they are fully released with hand brake in off position. Adjustment for wheel equalization should be made after lining has been worn in.

NOTE—By removing glove compartment and changing brake latch piece (#228705) operating position of hand brake lever may be moved 2" to the rear.

Power Unit:—Bendix plain type vacuum cylinder mounted on frame and linked to cross shaft lever. Controlled by valve in brake rod between brake pedal and cross shaft. See Brake Section for complete data.

See Brake Section for complete data.

ELECTRICAL EQUIPMENT NOTE: Both Auto-Lite and Delco-Remy equipment used during production.

MODEL IDENTIFICATION

SERIAL NUMBER:—Stamped on plate on front of dash.

ENGINE NUMBER:—First number T-1526. Stamped on boss on left side of engine block near distributor.

TUNE-UP

COMPRESSION:—**Ratio**—6.3-1 Std., 6.75-1 Optl. **Pressures**—105 lbs. (Std. 6.3-1 cast-iron head), 115 lbs. (Optl. 6.75-1 aluminum head) at cranking speed of 125 R.P.M.

VACUUM READING:—18-20" steady reading with engine idling at 6-8 M.P.H.

FIRING ORDER: 1-5-3-6-2-4. See wiring diagram.

SPARK PLUGS: AC No. 103S or Champion Y-4. 10 mm. Gaps—.026-.030".
NOTE—Do not tighten these small plugs excessively. Tightening tension 50 inch lbs. maximum.

IGNITION: See Coil, Condenser, and Distributor.
Breaker Gap—.020".
Cam Angle—Closed 38° (Auto-Lite), 35° (Delco-Remy).
Automatic Advance—Auto-Lite: 10° at 2000 RPM (distr.). Delco-Remy: 10¾° at 2000 RPM (distr.).
Vacuum Advance—7½° (distr.) with 17" vacuum.

IGNITION TIMING: See Ignition Timing.
Std. Setting—2½-4° BTDC (Std. cast-iron head), 4-6° BTDC (Optl. HC. AL. head). Flywheel mark (correct degree mark ahead of #1UP.DC) aligned with inspection hole pointer (on housing below starter).

CARBURETION: See Carburetor & Carb. Equipment.
Idle Setting—Set idle adjusting screw midway between "miss" and "roll" points. Idle speed 8 MPH.
Float Level—Fuel level 17/32" below edge of bowl.
Accelerating Pump—Center Hole—Normal Setting.
Fuel Pump Pressure: 4 lbs. maximum.

VALVES: See Valve Timing.
Tappet Clearance—.007" Intake, .010" Exhaust, hot.
NOTE—Remove right front fender apron for access

STARTING: See Battery, Starter, Generator, Regulator.

IGNITION

AUTO-LITE

Ignition Switch:—Mitchellock Model 24-B. Connected to coil by armored cable.

Ignition Lock—Briggs & Stratton No. 50184 (cylinder). Key Series—P1251-P1500.

COIL: Auto-Lite Model CE-4627. Service Coil Model CE-3224-ES. On left side of engine.
Ignition Current—½ ampere idling, 2½ stopped.

CONDENSER: Auto-Lite Part No. IG-2671K.
Capacity—.20-.25 microfarad.

DISTRIBUTOR: Auto-Lite IGS-4011. Single breaker, 6 lobe cam, full automatic advance with auxiliary vacuum spark control.

See Electrical Equipment Section for special servicing directions on these distributors.
For complete data, refer to Electrical Equipment Index.

Breaker Gap—Set at .020".
Cam Angle or Dwell—38° closed, 22° open (distr.).
Breaker Arm Spring Tension—18-20 ozs. (special).

Automatic Advance—Auto-Lite

Distributor Degrees	R.P.M.	Engine Degrees	R.P.M.
Start	300	0	600
.8	400	1.6	800
2	560	4	1120
4	880	8	1760
6	1240	12	2480
8	1620	16	3240
10	2000	20	4000

Vacuum Spark Control—Integral with distributor. Mounted on distributor housing and linked directly to breaker plate. Provides additional advance at speeds above idling (vacuum port in carburetor above throttle) except when engine accelerated or operated with wide open throttle when spark is retarded by return spring within unit.

Vacuum Advance—Auto-Lite

Distr. Degrees	Eng. Degrees	Vacuum (" of HG)
Start	0°	6"
2½°	5°	9.5"
5°	10°	12.4"
7½°	15°	17"

Fuel Compensator—Manual adjustment at distributor providing 10° maximum advance or retard from center '0' position. See Ignition Timing for setting.

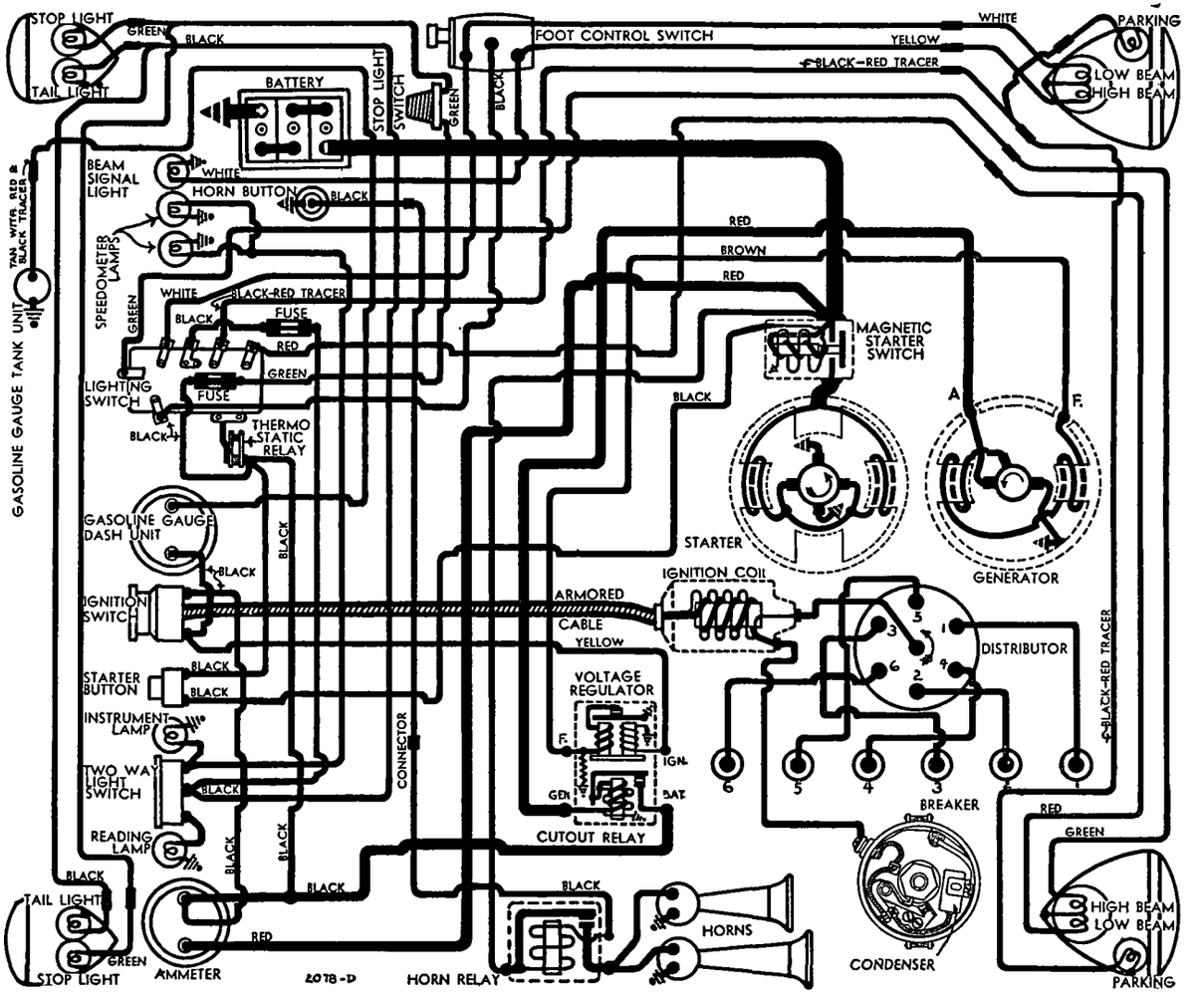

DELCO-REMY EQUIPMENT

See 1937 '120' Eight Diagram for Auto-Lite internal circuits

IGNITION

DELC -REMY

Ignition Switch:—Delco-Remy Model 435-L. Switch and cable assembly. Connected to coil by armored cable.

Ignition Lock—Briggs & Stratton No. 50184 (Lock cylinder). Key series—P1251-P1500.

COIL: Delco-Remy Model 539-N. On left side of engine.

Ignition Current—½ ampere idling, 2½ stopped.

CONDENSER: Delco-Remy Part No. 1865972.

Capacity—.18-.25 microfarad.

DISTRIBUTOR: Delco-Remy 647-E. Single breaker, 6 lobe cam, full automatic advance type with auxiliary vacuum spark control.

Breaker Gap—Set at .020". Limits .018-.024".

Cam Angle or Dwell—35° (closed), 25° (open).

Breaker Arm Spring Tension—19-23 ounces.

Automatic Advance—Delco-Remy

Distributor Degrees	R.P.M.	Engine Degrees	R.P.M.
Start	300	1.5	600
3.25	600	6.5	1200
10.75	2000	21.5	4000

Vacuum Spark Control—Integral with distributor. Mounted on distributor housing and linked directly to breaker plate. Provides additional advance at speeds above idling (vacuum port in carburetor above throttle) except when engine is accelerated or operated with wide open throttle when spark is retarded by return spring within unit.

Vacuum Advance—Delco-Remy

Distr. Degrees	Eng. Degrees	Vacuum (" of HG)
Start	0°	5-7"
7.5°	15°	15-19"

Fuel Compensator—Manual adjustment at distributor providing 10° maximum advance and retard from center '0' position. See Ignition Timing for setting.

Distributor Removal:—Mounted on left side of engine. To remove, take out hold-down screw in advance arm.

IGNITION TIMING

IGNITION TIMING:—For all engines as follows:

	Flywheel Degrees	Piston Position
Std. 6.3-1 head	2½-4° BTDC	.0026-.0066" BTDC.
Optl. 6.75-1 hd	4-6° BTDC	.0066-.0149" BTDC.

To Set Timing—Remove cover over inspection hole in left front face of flywheel housing under starter. Loosen thumbnut and set Fuel Compensator at '0', tighten thumbnut. With #1 piston on compression, turn engine over until piston reaches firing position, stop when correct graduation on flywheel before dead center mark #1UP D.C. lines up with pointer in inspection hole, loosen advance arm clamp bolt, rotate distributor until contacts begin to open, tighten clamp bolt, see that rotor opposite #1 segment in distributor cap.

Timing (Neon Timing Light)—White mark provided on flywheel at firing point for std. 6.3-1 engine. Mark flywheel similarly at correct firing point when timing Optl. 6.75-1 engines.

CARBURETOR

Holley (Chandler-Groves) Model No. A0C-2. 1¼" single barrel downdraft type.

NOTE—Carburetor changes made during production. For complete data, refer to Carburetor Index.

Idle Adjustment—With engine warmed up so that Automatic Choke and Fast Idle inoperative, adjust throttle stopscrew so that engine idles at 8 M.P.H. Turn idle adjusting screw in until engine begins to miss, then out until engine rolls, finally turn screw in slowly until engine fires smoothly. Readjust stopscrew for correct idle speed.

Accelerating Pump Setting—Throttle lever has 3 holes for pump link connection. Set as follows: Inner Hole (Min. Stroke)—Hi-test fuel, high temps. Center Hole—Normal temperatures. Outer Hole (Max. stroke)—Low-test fuel or low temperatures.

Fast Idle:—Integral with carburetor.

For complete data, refer to Carburetion Equip. Index.

Automatic Choke:—Integral with carburetor.

For complete data, refer to Carburetion Equip. Index.

CARB. EQUIPMENT

Air Cleaner:—AC. #1528085 Heavy duty oil-bath type

Fuel Pump:—AC. Type AJ #1523202. Diaphragm type combination fuel-and-vacuum pump.

For complete data, refer to Carburetion Equip. Index.

Gasoline Gauge:—AC. Electric. #1515328 (dash unit), #1515447 (tank unit).

For complete data, refer to Carburetion Equip. Index.

BATTERY

BATTERY:—Willard, Type WT-1-95. 6 volt, 15 plate, 95 ampere hour capacity (20 hour rate).

Starting Capacity—117 amperes for 20 minutes.

Zero Capacity—300 amperes for 3.1 minutes.

Grounded Terminal—Positive (+) terminal.

Location—Under left front seat.

STARTER

AUTO-LITE

Auto-Lite Model MAX-4006. Armature MAW-2006.

Drive—Outboard Barrel Type Bendix No. A-1729.

Rotation—Counter-clockwise at commutator end.

Brush Spring Tension—42-53 ozs. (new brushes).

Cranking Engine—125 RPM., 200 amperes, 5 volts.

Performance Data—Auto-Lite

Torque	R.P.M.	Volts	Amperes
0 ft. lbs.	5300	5.5	65
0.65 "	3300	5.5	100
2.75 "	1630	5.0	200
5.5 "	970	4.5	300
8.7 "	600	4.0	400
12.0 "	300	3.5	500
16.5 "	Lock	3.	640
25.0 "	Lock	4.	880

Removal:—Starter flange mounted on left front face of flywheel housing. To remove, take out flange mounting screws.

Starting Switch: Auto-Lite Magnetic SS-4001 on starter controlled by panel pushbutton switch.

For complete data, refer to Electrical Equipment Index.

STARTER

DELCO-REMY

Delco-Remy Model 739-F. Armature No. 1866105.

Drive—Outboard barrel type Bendix A-1718.

Cranking Engine—125 R.P.M., 200 amps., 5 volts.

Rotation—Counter-clockwise at commutator end.

Brush Spring Tension—24-28 ozs. each.

Performance Data

Torque	R.P.M.	Volts	Amperes
0 ft. lbs.	5000	5.0	65
12 ft. lbs.	Lock	3.37	525

Removal—Starter flange mounted on left front face of flywheel housing. To remove, take out flange screws.

Starting Switch: Delco-Remy 1539 Magnetic type. Delco-Remy 1417 pushbutton panel switch.

GENERATOR

AUTO-LITE

Auto-Lite Model No. GCJ-4801A. Armature No. GCJ-2006. Third brush control type with external voltage regulation. Ventilated by fan on drive pulley.

Maximum Charging Rate—25 amperes (cold), 22 amperes (hot), 8.0 volts, 2500 RPM. Actual charging rate controlled by Voltage Regulator and dependent on battery condition.

Charging Rate Adjustment—Maximum output controlled by third brush. Do not adjust third brush for output greater than shown in table below (with field terminal grounded to render regulator inoperative). See Regulator Section following.

NOTE—Third brush setting 2 commuator bars minus 2 mica strips (minimum), 2 commutator bars minus 1 mica strip (max.) from nearest main brush.

Performance Data—Auto-Lite

Cold Amperes	Volts	RPM	Hot Amperes	Volts	RPM
0	6.4	760	0	6.4	850
4	6.65	920	4	6.7	1020
8	6.9	1080	8	7.0	1240
12	7.2	1240	12	7.3	1400
16	7.45	1400	16	7.6	1650
20	7.7	1580	20	7.9	2100
25	8.0	2500	22	8.0	2700

Rotation—Counter-clockwise at commutator end.

Brush Spring Tension—53 ozs. max. (new brushes).

Field Current—1.9-2.1 amperes at 6.0 volts.

Motoring Current—4.0-4.4 amperes at 6.0 volts.

Removal:—Pivot mounted at left front of engine. To remove, take out pivot and clamp bolts.

Belt Adjustment: See Delco-Remy (following).

GENERATOR

DELCO-REMY

Delco-Remy Model 948-U. Armature No. 1854856. Fixed third brush type with Voltage Regulator.

NOTE—Third brush is clamped in position for maximum safe output and should not be disturbed.

Charging Rate Adjustment—Adjusted by changing setting of voltage regulator. See Regulator Data.

Maximum Charging Rate—As given in table below. Reached at car speed of approx. 30 M.P.H. To check charging rate, connect test ammeter in line at 'BAT' terminal of regulator, voltmeter between 'BAT' terminal and ground, ground 'F' terminal to eliminate regulator action.

Performance Data

	Amperes	Volts	R.P.M.
Cold	23-27	8.8-9.0	3000
Hot	18-23	8.2-8.7	3200

Rotation—Counter-clockwise at commutator end.

Brush Spring Tension—22-26 ozs. (main), 16-20 ozs. (third).

Field Current—2.3-2.6 amperes at 6 volts.

Removal:—Generator pivot mounted on left front of engine. To remove, take out pivot and clamp bolts.

Belt Adjustment:—With bolts loose, swing generator away to give 25 lbs. reading on scale attached to clamp bolt, or ½" thumb deflection on belt midway between generator and fan pulleys.

GENERATOR

SPECIAL EQUIPMENT

SPECIAL GENERATOR:—Delco-Remy Model 961-M. Two brush (shunt) type with vibrating voltage and current regulation.

Charging Rate Adjustment—None. See Regulator.

C NTINUED N NEXT PAGE

C NTINUED FR M PRECEDIN PA E

Performance Data

	Amperes	Volts	R.P.M.
Cold	25①	8.0	1650

①—Current Regulator setting. See Regulator.
Rotation—Counter-clockwise at commutator end.
Brush Spring Tension—25 ounces each.
Field Current—2.0-2.2 amperes at 6.0 volts.
Removal & Belt Adjustment:—See Std. Gen. above.

REGULATOR

AUTO-LITE

Auto-Lite Model VRD-4001-A. Voltage Regulator. Mounted on dash.
For complete data, refer to Electrical Equipment Index.
NOTE—Regulator case cover is sealed. Serviced on exchange basis if seals not broken. Cover must be removed to make adjustments.

Cutout Relay

Cuts In—6.4-7.0 volts.
Cuts Out—.5 ampere Min., 3.0 amperes Max. Cold.
Contact Gap—.015" minimum.
Air Gap—.034-.038" at hinge end of core with contacts open. Measure at hinge end of core.

Voltage Regulator

Setting—7.5-7.8 volts at 70°F (Before Serial No. 8R-000001), 7.3-7.6 volts at 70°F (After 8R-000001.) **See Electrical Equipment Section for complete settings and changes.**
To Check (without breaking seals)—Connect ammeter in charging line at regulator 'B' terminal, voltmeter between 'B' and 'GD' terminals. Operate generator, charging fully charged battery, at speed equivalent to 30 MPH. car speed until voltage is steady. Voltmeter reading should be within limits of 7.4-7.9 volts (before 8R-000001), 7.21-7.83 volts (after 8R-000001). See Setting above.
To Adjust (with cover removed)—Change regulator armature spring tension by bending spring hanger at lower end of spring slightly. ***See Electrical Equipment Section for complete directions.***
Contact Gap—.010-.020" (armature against stop pin).
Air Gap—.0595-.0625" with contacts just opening.

REGULATOR

DELCO-REMY

Delco-Remy Model 5812 or Delco-Remy Model 5827. Double Core Type Voltage Regulator (with 'IGN' Terminal). Consists of Cutout Relay and vibrating type Voltage Regulator in case on dash.
For complete data, refer to Electrical Equipment Index.

Cutout Relay—Delco-Remy

Cuts In—6.9-7.6 volts.
Cuts Out— 0-4.0 amperes discharge current.
Contact Gap—.018-.025".
Air Gap—.018-.022" with contacts closed.

Voltage Regulator—Delco-Remy

Setting—7.5-7.9 volts Cold (70°), 7.4-7.6 volts Hot 150° F. Regulator over-compensated for temperature and must be checked at these points.
Adjustment—Disconnect lead on 'IGN' terminal of regulator, connect jumper between 'IGN' and 'BAT' terminals, connect test ammeter in charging line at 'BAT' terminal, connect voltmeter between 'IGN' terminal and ground. Operate generator at 2800-3000 R.P.M., adjust charging rate to 8-10 amperes, change regulator spring tension by bending spring hanger at lower end of armature spring slightly until performance is as given above.
NOTE—Regulator cover must be in place when tests are made. Do not operate generator on open-circuit.
Contact Gap—.015-.025".
Contact Spring Tension—2.7-3.5 ounces.
Air Gap—.060-.070" between armature and center of core with armature down so that fibre bumper just touches stop, .008-.013" between fibre bumper and stop with armature up.

REGULATOR

SPECIAL EQUIPMENT

For 961-M Generator: Delco-Remy 5813 Double Core Type Voltage & Current Regulator (with 'IGN' Terminal). Same design as Std. 5812, 5827 models (above) with additional Current Regulator unit.
For complete data, refer to Electrical Equip. Index.

Cutout Relay & Voltage Regulator

All specifications and Checking & Adjustment data same as Std. Models 5812, 27 except as follows:
Cutout Relay Cut In Voltage—6.7-7.6 volts.
Voltage Regulator Setting—7.5-7.95 volts Cold (70°), 7.4-7.6 volts Hot (150°).

Current Regulator

Setting—24-26 amperes.
Checking & Adjustment—Connect test ammeter in charging line at regulator 'BAT' terminal, disconnect lead at regulator 'IGN' terminal (to eliminate voltage regulator action). Operate generator and increase speed until Current Regulator operates, note ammeter reading which should equal Setting above. Adjust by bending spring hanger at lower end of armature spring slightly.

LIGHTING

LIGHTING:—Headlamps—Hall 'Flex-Beam' Pre-focused type with special non-interchangeable lenses marked Right and Left. Passing beam (upper beam right hand headlamp, lower beam left hand headlamp) obtained by foot selector switch.
Beam Indicator—On face of speedometer dial. Lighted with upper beam (Country Driving) in use.

Switches

Lighting—Delco-Remy Model 480-L, Y.
Foot Selector—Delco-Remy Model 471-T.

Bulb Specifications

Position	Candlepower	Mazda No.
Headlamps	32-32	2330
Parking, Fender, Clock	1½	55
Instr., Reading, Spdmtr.	1½	55
Stop	15	87
Tail	3	63
Indicators	1	51
Dome	6	81
Fog Light	32	1321

MISC. ELECTRICAL

FUSES:—Accessory—20 amp. on back of lighting switch.
Tail Light—20 amp. in lamp lead near light switch.
THERMOSTATIC RELAY:—Thermostatic arm type current limit relay. Mounted on light switch, protects headlamp circuits. Not adjustable. Contacts open with current load of 38 amperes at 70° F.
HORNS:—Sparton Model 1-E-30. Vibrator type, Air tone, twin horns operated by horn relay.
Air Gap—.032-.035" (low note—long air column), .026-.030" (high note—short air column).
Horn Current—22-25 amperes (total).
Horn Relay:—R.B.M. Model 10072. Current draw .4-.55 amperes at 6.0 volts. Coil resistance 11-14 ohms.
Closing Voltage—2.75-4.0 volts.
Contact Gap—.015-.025". **Air Gap .010-.020" (closed).**

ENGINE

ENGINE SPECIFICATIONS:—6 cylinder, 'L' head.
Bore—3 7/16". **Stroke**—4¼".
Displacement—237 cubic inches.
Rated Horsepower—28.4 (AMA).
Developed Horsepower—100 HP. (Std. 6.3-1 head), 103 HP, (Optl. 6.75-1 head) at 3600 R.P.M.
Compression Ratio & Pressure—As follows:
6.3-1 Std. cast-iron hd. 105 lbs. at 125 R.P.M.
6.75-1 Optl. aluminum hd. 115 lbs. at 125 R.P.M.
Vacuum Reading—Gauge should show steady reading of 18-20" with engine idling at 6 M.P.H.

PISTONS:—Nelson Bohnalite, aluminum alloy, autothermic strut type, tin plated, cam ground.
Weight—19.0 ozs. (stripped), 25.4 ozs. (with rings and pin). **Length**—3⅞".
Removal—Pistons and rods removed from above.
Clearance—Skirt .0015". See Fitting New Pistons.
Replacement Pistons:—***See Packard Shop Notes for data.***
Fitting New Pistons:—.0015" x ½" feeler inserted between piston and cylinder wall on side opposite slot should require 12-18 lbs. pressure to withdraw.
Installing Pistons:—Slot toward valves.

PISTON RINGS:—Two compression, one oil control ring per piston, above pin. Lower ring groove drilled with twelve 5/32" oil drain holes. Rings furnished .005", .010", .020", .030", .040" oversize.

Ring	Width	End Gap	Side Clearance
Compr.	⅛"	.007-.012"	.0025-.003"
Oil Cont.	3/16"	.007-.015"	.0015-.002"

NOTE—Install #1 and #3 ring with gap away from valves, #2 compression ring gap toward valves.

PISTON PIN:—Diameter—⅞". **Length**—2 63/64".
Floating type. Furnished .003" and .006" oversize. See Connecting Rod Upper Bearing below.
Pin Fit in Piston—Finger push fit with piston heated to 160° F.
Pin Fit in Rod Bushing—Finger push fit at 70° F.
NOTE—Finish ream bushings to .87515-.87485".

CONNECTING ROD:—Weight 33⅝ ozs. **Length** 7 11/16".
Upper Bearing (Piston Pin Bushing)—Split type bushings used. Expand to tight fit and ream. Oil passage in rod must open to groove between bushings.
See Packard Shop Notes for Bushing installation.
Crankpin Journal Diameter—2 3/32".
Lower Bearing—Interchangeable steel-backed, babbitt-lined type. No shims. Bearings furnished .001", .002", .003", .015" undersize.
Clearance—.0005-.0025". **Sideplay**—.004-.010".
Bearing Adjustment:—None. Replace bearings.
Installing Rods:—Oil squirt hole to camshaft.

CRANKSHAFT:—4 bearing. Integral counterweights.
Journal Diameters—2¾" all bearings.
Bearing Type—Interchangeable steel-backed, babbitt-lined type. No. shims. Bearings furnished .001", .002" undersize.
Clearance—.001-.003".
Bearing Adjustment:—None. Replace bearings. Upper halves may be rotated in place.
End Thrust:—Taken by #1 bearing.
Endplay—.003-.008".

CAMSHAFT:—4 bearing. Non-adjustable chain drive.
Bearing Type—Steel-backed, babbitt-lined.
Clearance—.001-.003".
End Thrust:—Taken by thrust plate in back of camshaft sprocket. **Endplay**—.002-.004".
Timing Chain:—Morse 1866 RX. **Width** 1¼". **Pitch** .375". **Length** 21¾" or 58 links.

ENGINE

CONTINUED FROM PRECEDING PAGE

Camshaft Setting:—Install chain and sprockets together with marks on sprockets adjacent and in line with a straightedge across the shaft centers with #1 piston at top dead center.

See Packard Shop Notes for Front Assembly and Radiator removal.

VALVES:—	Head Diameter	Stem Diameter	Length
Intake	1.575"	.340"	5⅝"
Exhaust	1.406"	.340"	5⅝"

	Seat Angle	Lift	Stem Clearance
Intake	30°	.300"	.0005-.00175"
Exhaust	45°	.300"	.0005-.00175"

NOTE—.0005" min. clearance at bottom of guide.

Valve Guides:—Guides taper reamed. Install from above with smallest diameter at bottom.

Valve Springs:—Int. & Exh. springs interchangeable. 1938 springs only furnished for replacement.

	Spring Pressure	Spring Length
Valve Closed	36-44 lbs.	1⅝"
Valve Open	105-113 lbs.	1 5/16"

Valve Lifters:—Single piece, barrel type. Remove from above. Ream lifter holes from above working thru stem guide with Packard Tool #S.T.-5065. Camshaft need not be removed. Oversize lifters furnished .001", .002", .005".

VALVE TIMING

Tappet Clearance:—.007" Int., .010" Exh., eng. warm.

NOTE—Remove plate in right fender for valve adj.

Valve Timing:—See Camshaft Setting above.

Intake Valves—Open 5° BTDC. Close 39° ALDC.

Exhaust Valves—Open 45° BLDC. Close 5° ATDC.

T Check Timing:—Set tappet clearance #1 exhaust valve at .013". This valve should close with piston 5° or .0103" past top dead center when point on flywheel 2½ graduations past #1 UP.DC (top dead center mark) lines up with pointer in inspection hole in left front face of flywheel housing under starter. Reset tappet clearance at .010" with engine hot.

LUBRICATION

LUBRICATION:—Pressure. Gear type pump on right side of engine.

NOTE—Install oil pump with driving slot parallel with center line of camshaft with distributor rotor opposite #1 terminal in cap.

Normal Oil Pressure:—35 lbs. at 30 M.P.H. Warm oil.

Oil Pressure Relief Valve:—On pump cover. Not adjustable. Replace spring if pressure less than 5-8 lbs. at 2".

Crankcase Capacity:—7 quarts (dry).

CLUTCH

CLUTCH:—Long Model 9½ CF-CS. Semi-centrifugal, single plate, dry disc type.

See Clutch Section for complete data.

Facings—Woven, 2 required. I.D. 6". O.D. 9½". Thickness .125".

Adjustment:—Pedal free travel 1½-2". Adjusting nut on connector link at clutch fork.

Removal:—With clutch pedal depressed, insert wedge (ST-879) between each throwout finger and cover (assembly can only be removed from below when in partially released position). Remove transmission (see Transmision Removal below), clutch shifter bearing, pedal rod, and cover capscrews evenly, then remove assembly from below.

TRANSMISSION

TRANSMISSION:—Own—Helical gear type with synchronizing shift on second and high gears.

See Transmission Section for complete data.

Removal:—Remove floorboards, speed. cable, ground strap, propeller shaft, housing lower cover, shifter bearing spring, engine stabilizer (frame to trans.). Remove 2 bolts at trans. end of left support, remove frame bolts in right support with jack supporting rear of engine, 4 trans.-to-housing bolts, and withdraw transmission.

NOTE—Keep engine to right when installing.

UNIVERSALS

UNIVERSAL JOINTS:—Mechanics—Model 2-C. Roller bearing. 2 used.

See Universals Section for complete data.

REAR AXLE

REAR AXLE:—Own—Semi-floating, hypoid gear type with Hotchkiss drive. Welded cover used.

See Rear Axle Section for complete data.

Ratio—4.36-1 (std.). 4.54-1, 4.09-1 (optl.).

Backlash—.003-.005". Screw adjustment for ring gear mesh in pinion. Pinion stationary.

Removal:—With wheel, hub and brake assembly removed, axle shafts can be withdrawn from housing. Differential carrier can then be removed from housing (on car) by disconnecting rear universal joint at flange, removing housing bolt nuts (below) and screw with locknut (at top). Assembly can then be removed from below.

Wheel Bearing Adjustment—None.

NOTE—Whenever wheel bearing replaced be sure that spring washer between inner bearing race and hub installed.

SHOCK ABSORBERS

SHOCK ABSORBERS:—Delco—Mod. 1960-C, D (front), 1717-A, B (rear). Double acting, piston type.

See Shock Absorber Section for complete data.

FRONT SUSPENSION

Front Suspension:—Independent 'Safe-T-Flex' type with coil springs.

See Front Suspension Section for complete data.

NOTE—Data below applies with car on level floor, tires properly inflated and car weighted as follows: 5 pass. (375 lbs. rear seat, 300 lbs. front), 2-4 pass. (150 lbs. frt. seat, 225 lbs. rear comp't.).

Front Suspension Height—Distance from floor to top of frame side rail at spring should be 17⅝".

Kingpin Inclination—1½° crosswise.

Camber—1° plus or minus ¼°. Adjustable.

Caster—2½° plus or minus ½°. Shim adjustment.

Toe In—1/32-1/16". Adjust by turning tie rods equally (check for equal lengths after adjustment).

STEERING GEAR

Steering Gear: Packard (Gemmer design Model 330) Worm-and-Roller type with center steering. Refer to Gemmer Model 330 article.

See Steering Gear Section for complete data.

BRAKES

BRAKES:—Service—Bendix hydraul., duo-servo, single anchor type. Hand lever applies rear service brakes.

See Brake Section for complete data.

Wheel Cylinders—Diameter 1 1/16" front wheel, 15/16" rear wheel.

Drum Diameter—11".

Lining—Marshall #1915 (primary), S.R.-600 (secondary). Width 1¾". Thickness 3/16". Length per shoe 12".

Clearance—.010" at heel and toe of each shoe.

Hand Brake Adjustment—See Service Brakes.

MODEL IDENTIFICATION

SERIAL NUMBER: On left side of cowl (use Eng. No.).

ENGINE NUMBER: First number X-100001. Stamped on boss on left side of engine near distributor.

TUNE-UP

COMPRESSION:—Ratios and pressure as follows:

Head	Pressure at 125 R.P.M.
Std. 6.43-1	110 lbs.
Optl. 7.0-1	118 lbs.

NOTE—Cylinder heads listed above are original aluminum heads. Cast-iron heads only available for replacement.

VACUUM READING:—18-20" steady reading with engine idling at 6 M.P.H.

FIRING ORDER: 1-6-2-5-8-3-7-4. See diagram.

SPARK PLUGS: AC No. 103S or Champion Y-4. 10 mm. Gaps—.026-.030".
NOTE—Do not tighten these small plugs excessively. Tightening tension 50 inch lbs. maximum.

IGNITION: See Coil, Condenser, and Distributor.
Breaker Gap—.015". Cam Angle—27° closed.
Automatic Advance—10° max' at 2200 RPM (distr.).
Vacuum Advance—7½° max. with 17" vacuum.

IGNITION TIMING See Ignition Timing.
Std. Setting—6-8° BTDC (Std. AL head), 2½-4° BTDC (Optl. HC. AL head), 8-9½° BTDC (Repl. iron heads). Flywheel mark (correct degree mark ahead of #1UP.DC) aligned with insp. hole pointer (below starter).

CARBURETION: See Carburetor & Carb. Equipment.
Idle Setting—Set idle adjusting screws midway between 'miss' and 'roll' points (½-1¼ turns open on Carter carburetors). Idle speed 6 MPH or 300 RPM.
Float Level (Stromberg)—Fuel level 15/32" below top edge of bowl. (Carter)—⅛" from top of float to underside of cover (gasket removed, valve seated).
Fuel Pump Pressure: 4 lbs. maximum.

VALVES: See Valve Timing.
Tappet Clearance—.007" Intake, .010" Exhaust, hot.
NOTE—Remove right front fender plate for adj.

STARTING: See Battery, Starter, Generator, Regulator.

IGNITION

Ignition Switch:—Mitchellock Model 24-B. Type 7065. Connected to coil by armored cable.
Ignition Lock—Briggs & Stratton. Mitchell No. 6760. B. & S. #50184 (cylinder). Key Series—P1251-P1500.

COIL: Auto-Lite Model CE-4623. Service Coil (less switch & cable) CE-3224-ES. On engine near distributor.
Ignition Current—½ ampere idling, 2½ stopped.

CONDENSER: Auto-Lite Part No. IG-2671J.
Capacity—.20-.25 microfarad.

DISTRIBUTOR: Auto-Lite IGT-4004. Single breaker, 8 lobe cam, full automatic advance with Vacuum Spark Control and Fuel Compensator or manual adjustment at distributor.
See Electrical Equipment Section for special servicing directions on these distributors.
For complete data, refer to Electrical Equipment Index.
Breaker Gap—Set at .015". Limits .0125-.0175".
Cam Angle or Dwell—27° closed, 17° open with .017" gap.
Breaker Arm Spring Tension—18-20 ounces.

Automatic Advanc

Distributor Degrees	Distributor R.P.M.	Engine Degrees	Engine R.P.M.
Start	300	0	600
2	660	4	1320
4	1050	8	2100
6	1430	12	2860
8	1820	16	3640
10	2200	20	4400

NOTE—Heavier advance weight spring must be mounted on spring lug which has flat auxiliary spring behind it.

Vacuum Spark Control—Vacuum unit mounted on side of distributor housing and linked directly to breaker plate. Provides additional advance for all speeds above idling except when engine is accelerated or operated with wide open throttle when spark is retarded by spring within unit.

Vacuum Spark Advance

Distr. Degrees	Eng. Degrees	Vacuum (" of HG)
Start	0°	6"
2½°	5°	9.5"
5°	10°	12.4"
7½°	15°	17"

Fuel Compensator—Manual adjustment at distributor providing advance or retard adjustment from center '0' point on scale. See Ignition Timing for setting.

Removal:—Distributor mounted on left hand side f crankcase. To remove, disconnect vacuum line, take out hold-down screw in advance arm.

IGNITION TIMING

IGNITION TIMING:—For all engines as follows:

Head	Flywheel Degrees	Piston Position
Std. 6.4-1 Al. hd.	6-8° BTDC	.0149-.0262" BTDC.
Opl. 7.0-1 Al. hd.	2½-4° BTDC	.0026-.0066" BTDC.
Replmt. Iron hds.	8-9½° BTDC	.0262-.0371" BTDC.

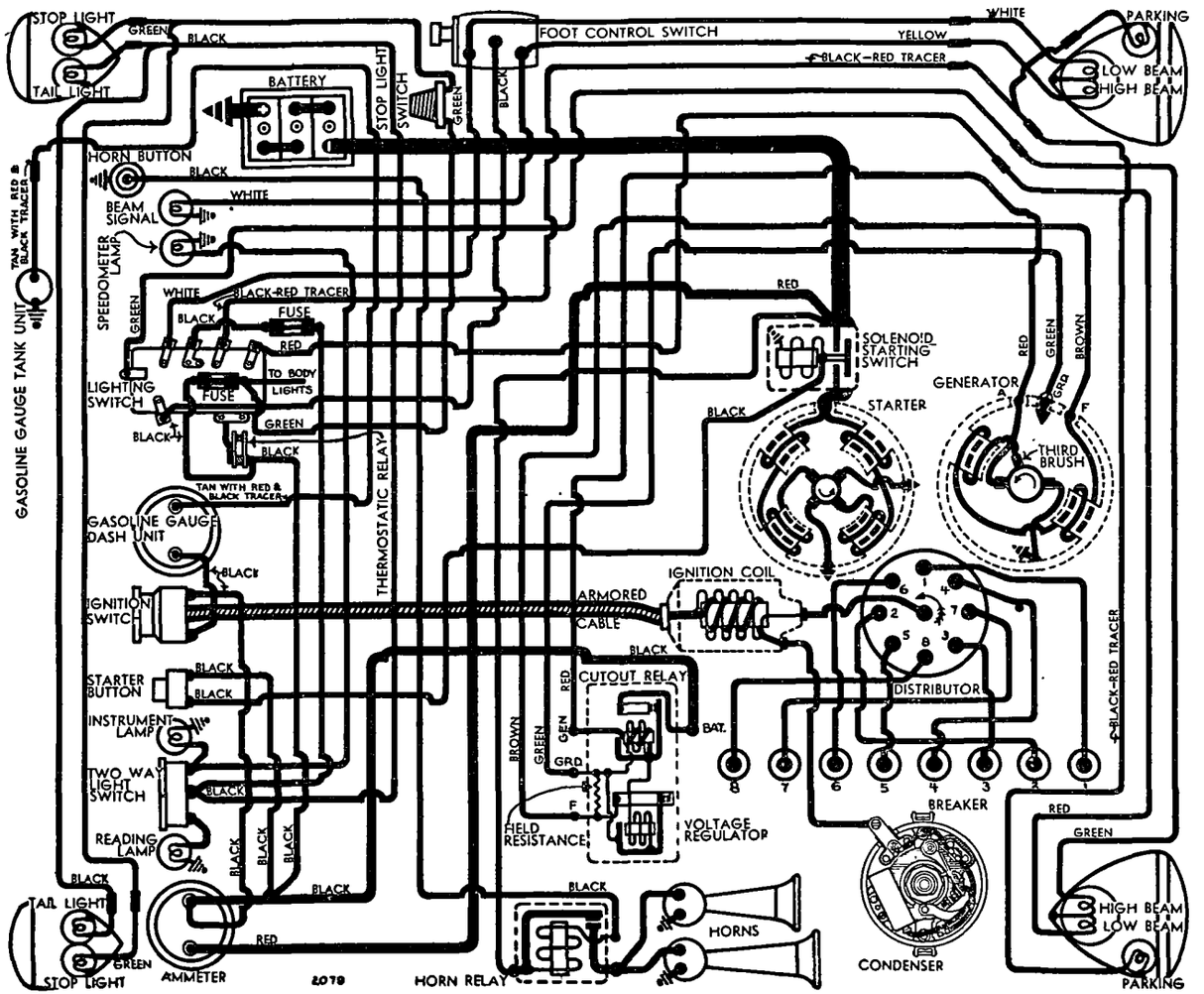

Timing—Remove cover over timing inspection hole in left front face of flywheel housing under starter. Loosen thumbnut and set Fuel Compensator at '0', tighten thumbnut. With #1 piston on compression, turn engine over until piston reaches firing position, stop when proper graduation on flywheel before dead center mark '#1 UP DC' (see table above —each graduation on flywheel equals 2°) lines up with pointer. Loosen advance arm clamp bolt, rotate distributor until contacts begin to open, tighten clamp bolt.

NOTE—No synchronization required for this distributor.

Timing (Neon Timing Light)—White mark provided on flywheel at 7° point. Mark flywheel similarly at 4° point for high compression engines. See Electrical Equipment Section for complete instructions.

CARBURETOR

CARBURETION:—Carburetor—Stromberg Model EE-14 (first cars), Carter Model WDO Type 366-S (later cars). 1" Duplex or double barrel downdraft type.

NOTE—Stromberg carburetor carries code mark 10-29 on air horn.

For complete data, refer to Carburetor Index.

Idle Adjustment (All Models)—Warm up engine so that Automatic Choke and Fast Idle are inoperative. Set throttle lever stopscrew so that engine idles at 300 R.P.M. or 6 M.P.H. Turn inner idle adjusting screw in until engine begins to miss, then out until engine begins to roll, finally turn screw in slowly until engine fires smoothly. Readjust throttle stopscrew for correct idling speed.

Accelerating Pump Setting—Not adjustable on either carburetor model.

Fast Idle:—Integral with carburetor. Stromberg type not adjustable. On Carter models, hold choke valve tightly closed, adjust fast idle lever screw so that throttle opening is .018" as measured on side opposite idle ports.

For complete data, refer to Carburetion Equip. Index.

Automatic Choke:—Stromberg type integral with Carburetor. Carter Climatic Control mounted on carburetor.

For complete data, refer to Carburetion Equip. Index.

CARB. EQUIPMENT

Air Cleaner:—AC. #1526714 Heavy Duty oil-bath type standard.

Fuel Pump:—AC. Type AJ #1523202 combination fuel-and-vacuum pump.

For complete data, refer to Carburetion Equip. Index.

Gasoline Gauge:—AC. Electric type. No. 1515326 (dash unit), 1515443 (tank unit).

For complete data, refer to Carburetion Equip. Index.

BATTERY

BATTERY:—Prest-O-Lite, Hi-Level Type HR2-17. 6 volt, 17 plate, 144 ampere hour capacity (20 hour rate).

Starting Capacity—133 amperes for 20 minutes.
Zero Capacity—300 amperes for 3.5 minutes.
Grounded Terminal—Positive (+) terminal.
Location—Under front seat n left side.

Delco Battery Type 17-K. 6 volt, 17 plate, 110 ampere hour capacity (20 hour rate).

Starting Capacity—131 amperes for 20 minutes.
Zero Capacity—300 amperes for 4.4 minutes.

STARTER

Auto-Lite Model MAX-4006. Armature MAW-2006.
Drive—Outboard Barrel Type Bendix No. A-1729.
Rotation—Counter-clockwise at commutator end.
Brush Spring Tension—42-53 ozs. (new brushes).
Cranking Engine—125 R.P.M., 200 amperes, 5 volts.

Performance Data

Torque	R.P.M.	Volts	Amperes
0 ft. lbs.	5300	5.5	65
2.75 "	1630	5.0	200
5.5 "	970	4.5	300
8.7 "	600	4.0	400
12.0 "	300	3.5	500
16.5 "	Lock	3.0	640
25.0 "	Lock	4.0	880

Removal:—Starter flange mounted on left front face of flywheel housing. To remove, take out flange mounting screws.

Starting Switch: Auto-Lite SS-4001 Magnetic type. Mounted on starter and controlled by pushbutton on instrument panel. See article in Electrical Equipment Section.

For complete data, refer to Electrical Equipment Index.

Switch Specifications

Closes with terminal voltage of 4 volts or less. Remains closed until voltage drops to .75-2.0 volts. Current draw, 3 amperes at 6.0 volts.

GENERATOR

STANDARD

Auto-Lite Model GCJ-4801-A. Armature No. GCJ-2006. Third brush control type with external voltage regulation. Ventilated by fan on drive pulley.

Maximum Charging Rate—25 amperes (cold), 22 amperes (hot), 8.0 volts, 2500 R.P.M. Actual charging rate controlled by Voltage Regulator and dependent on battery condition.

Charging Rate Adjustment—Maximum charging rate controlled by third brush. To check charging rate, disconnect regulator 'F' lead, ground field terminal 'F' on generator. Shift third brush counter clockwise to increase, or clockwise to decrease charging rate. Setting must not exceed maximum given above which is equivalent to clearance of not less than 2 commutator bars and one mica strip between third brush and nearest main brush. Remove the field ground and re-connect the regulator. See Regulator Section below for Regulator setting.

Performance Data

Cold			Hot		
Amps.	Volts	R.P.M.	Amps.	Volts	R.P.M.
0	6.4	760	0	6.4	850
4	6.65	920	4	6.65	1020
8	6.9	1080	8	6.9	1240
12	7.2	1240	12	7.2	1400
16	7.45	1400	16	7.45	1650
20	7.7	1580	20	7.7	2100
25	8.0	2500	22	8.0	2700

Rotation—Counter-clockwise at commutator end.
Brush Spring Tension—53 ozs. max. (new brushes).
Field Current—1.9-2.1 amperes at 6.0 volts.
Motoring Current—4.0-4.4 amperes at 6.0 volts.

Removal:—Generator pivot mounted at left front of engine with fan belt drive. To remove, take out pivot bolts and clamp bolt.

Belt Adjustment:—Swing generator away from engine until reading on scale attached to clamp bolt lug is 25 lbs. or belt deflection midway between fan and generator pulleys is ½" with thumb pressure.

GENERATOR

SPECIAL EQUIPMENT

Delco-Remy Model 961-M with Regulator Mod. 5813.

Refer to 1937 Packard 115-C Six pages preceding for all data on these Delco-Remy units.

REGULATOR

Auto-Lite Model VRD-4001-A Voltage Regulator. Mounted on dash. Consists of Cutout Relay and Vibrating Voltage Regulator in single case.

For complete data, refer to Electrical Equipment Index.

NOTE—Regulator cover is sealed. Serviced on exchange basis if seals not broken. Cover must be removed to make adjustments.

Cutout Relay

Cuts In—6.4-7.0 volts Cold.

Cuts Out—.5 ampere Min., 3.0 amperes Max. Cold.

Contact Gap—.015" minimum.

Air Gap—.034" Min., .038" Max. with contacts open. Measure at hinge end of core.

Voltage Regulator

Setting—7.5-7.8 volts at 70°F. (Before Serial No. 8R-000001), 7.3-7.6 volts at 70°F. (After 8R-000001).

See Electrical Equipment Section for complete settings and changes.

To Check—Connect ammeter in charging line at 'B' terminal on regulator (use short heavy leads), connect voltmeter between regulator 'B' and 'GD' terminals. Operate generator, charging fully charged battery, at speed equivalent to 30 M.P.H. car speed until voltage is steady. Voltmeter reading should be within limits of 7.4-7.9 volts (Before No. 8R-000001), 7.21-7.83 volts (after 8R-000001). **See Setting (above).**

To Adjust—Change regulator armature spring tension by bending lower spring hanger. See Electrical Equipment Section for complete instructions.

Contact Gap—.010" Min., .020" Max. with armature against stop pin.

Air Gap—.0595-.0625" with contacts just opening.

LIGHTING

LIGHTING:—Headlamps—Hall 'Flex-Beam' Pre-focused type with special non-interchangeable lenses marked Right and Left. Passing beam (upper beam right hand headlamp, lower beam left hand headlamp) obtained by foot selector switch.

Beam Indicator—On face of speedometer dial. Lighted with upper beam (Country Driving) in use.

Switches

Lighting—Delco-Remy Model 480-L, Y.
Foot Selector—Delco-Remy Model 471-T.

CONTINUED ON NEXT PAGE

CONTINUED FR M PRECEDING PAGE

Bulb Specifications

Position	Candlepower	Mazda No.
Headlamps	32-32	2330-L
Parking, Fender, Clock	1½	55
Instrument, Reading, Spdmtr.	1½	55
Indicator, Radio	1	51
Stop	15	87
Tail	3	B63

MISC. ELECTRICAL

FUSES:—Accessory—20 ampere on back of lighting switch.

Tail Light—20 ampere in lamp lead near light switch.

Radio—15 ampere in feed wire.

Clock—1 ampere (Western).

THERMOSTATIC RELAY:—Thermostatic arm type current limit relay. Mounted on light switch, protects headlamp circuits. Not adjustable. Contacts open with current load of 38 amperes at 70°F.

HORNS:—Sparton Model 1-E-30. Vibrator type, Air tone, twin horns operated by horn relay.

Air Gap—.032-.035" (low note—long air column), .026-.030" (high note—short air column).

Horn Current—22-25 amperes (total).

NOTE—Klaxon horns also used.

Horn Relay:—R.B.M. Model 10072. Current draw .4-.55 amperes at 6.0 volts. Coil resistance 11-14 ohms.

Closing Voltage—2.75-4.0 volts.

Contact Gap—.015-.025". **Air Gap** .010-.020" (closed).

ENGINE

ENGINE SPECIFICATIONS:—8 cylinder, 'L' head.

Bore—3¼". **Stroke**—4¼".

Displacement—282.04 cubic inches.

Rated Horsepower—33.8 (AMA).

Developed Horsepower—120 HP. at 3800 with std. 6.43-1 aluminum head.

Compression Ratio & Pressure—As follows:
6.43-1 Std. aluminum hd. 110 lbs. at 125 R.P.M.
7.0-1 Optl. aluminum hd. 118 lbs. at 125 R.P.M.

Vacuum Reading—Gauge should show steady reading of 18-20" with engine idling at 6 M.P.H.

PISTONS:—Nelson Bohnalite, aluminum alloy, strut type (split skirt), tin plated (early cars not plated).

Weight—17.6 ozs. (stripped), 23 ozs. (with rings and pin). **Length**—3⅞".

Removal—Pistons and rods removed from above.

Clearance—Skirt .0015". See Fitting New Pistons.

Replacement Pistons:—*See Packard Shop Notes for data.*

Fitting New Pistons:—.0015"x½" feeler inserted between piston and cylinder wall on side opposite slot should require 12-18 lbs. to withdraw.

Installing Pistons:—Slot toward valves.

PISTON RINGS:—Two compression, one oil control ring per piston, all above pin. Lower ring groove drilled with twelve 5/32" oil drain holes. Rings furnished .005", .010", .020", .030", .040" oversize.

Ring	Width	End Gap	Side Clearance
Comp.	⅛"	.007-.012"	.0025-.003"
Oil Cont.	3/16"	.007-.015"	.0015-.002"

NOTE—Install #1 and #3 ring with gap away from valves, #2 compression ring gap toward valves.

PISTON PIN:—Diameter—⅞". **Length**—2 51/64". Floating pin type. Furnished .003" and .006" oversize. See Connecting Rod Upper Bearing below.
Pin Fit in Piston—Finger push fit with piston heated to 160° F.
Pin Fit in Rod Bushing—Finger push fit at 70° F.
NOTE—Finish ream bushings to .87515-.87485".

CONNECTING ROD:—Weight 33⅝ ozs. **Length** 7 11/16". **Upper Bearing (Piston Pin Bushing)**—Split type bushings used. Expand to tight fit and ream. Oil passage in rod must be open to groove bet. bushings.
See Packard Shop Notes for bushing installation.

Crankpin Journal Diameter—2 3/32".

Lower Bearing—Interchangeable steel-backed, babbitt-lined type. No shims. Bearings furnished .001", .002", .003", .015" undersize.

Clearance—.0005-.0025". **Sideplay**—.004-.010".

Bearing Adjustment:—None. Replace bearings.

Installing Rods:—*Oil squirt hole to camshaft.*

CRANKSHAFT:—5 bearing. Integral counterweights.

Journal Diameters—2¾" all bearings.

Bearing Type—Interchangeable steel-backed, babbitt-lined type. No shims. Bearings furnished .001", .002" undersize.

Clearance—.001-.003".

Bearing Adjustment:—None. Replace bearings. Upper halves may be rotated in place.

End Thrust:—Taken by #3 bearing.

Endplay—.003-.008".

CAMSHAFT:—5 bearing. Non-adjustable chain drive.

Bearing Type—Steel-backed, babbitt-lined.

Clearance—.001-.003".

End Thrust:—Taken by thrust plate in back of camshaft sprocket. **Endplay**—.002-.004".

Timing Chain:—Morse 1866 RX. Width 1¼". Pitch .375". Length 21¾" or 58 links.

Camshaft Setting:—Install chain and sprockets together with marks on sprockets adjacent and in line with a straightedge across the shaft centers with #1 piston at top dead center.
See Packard Shop Notes for Front Assembly and Radiator Removal.

VALVES—	Head Diameter	Stem Diameter	Length
Intake	1 17/32"	.340"	5⅝"
Exhaust	1 13/32"	.340"	5⅝"

	Seat Angle	Lift	Stem Clearance
Intake	30°	.300"	.0005-.00175"
Exhaust	45°	.300"	.0005-.00175"

NOTE—.0005" min. clearance at bottom of guide.

Valve Guides:—Guides taper reamed. Install from above with smallest diameter at bottom.

Valve Springs:—Int. & Exh. springs interchangeable. 1938 springs only furnished for replacement.

	Spring Pressure	Spring Length
Valve Closed	36-44 lbs.	1⅝"
Valve Open	105-113 lbs.	1 5/16"

Valve Lifters:—Single piece, barrel type. Remove from above. Ream lifter holes from above working through stem guide with Packard Tool #S.T.-5065. Camshaft need not be removed. Oversize lifters furnished .001", .002", .005".

VALVE TIMING

Tappet Clearance:—.007" Int., .010" Exh. Warm.

NOTE—Remove plate in right fender for valve adj.

Valve Timing:—See Camshaft Setting above.
Intake Valves—Open 5° BTDC. Close 39° ALDC.
Exhaust Valves—Open 45° BLDC. Close 5° ATDC.

To Check Timing:—Set tappet clearance #1 exhaust valve at .013". This valve should close with piston 5° or .0103" past top dead center when point on flywheel 2½ graduations past #1 UP.DC (top dead center mark) lines up with pointer in inspection hole in left front face of flywheel housing under starter. Reset tappet clearance at .010" with engine hot.

LUBRICATION

LUBRICATION:—Pressure. Gear type pump on right side of engine.

NOTE—Install oil pump with driving slot parallel with center line of camshaft with distributor rotor opposite #1 terminal in cap.

Normal Oil Pressure:—35 lbs. at 30 M.P.H. Warm oil.

Oil Pressure Relief Valve:—On pump cover. Not adjustable. Replace spring if pressure less than 5-8 lbs. at 2".

Crankcase Capacity:—7 quarts (dry).

CLUTCH

CLUTCH:—Long Model 10CF-CL Semi-centrifugal, single plate, dry disc type.
See Clutch Section for complete data.

Facings—Woven, 2 required. I.D. 6". O.D. 10". Thickness .137".

Adjustment:—Pedal free travel 1½-2". Adjusting nut on connector link at clutch fork.

Removal:—With clutch pedal depressed, insert wedge (ST-879) between each throwout finger and cover (assembly can only be removed from below when in partially released position). Remove transmission (see Transmission Removal below), clutch shifter bearing, pedal rod, and cover capscrews evenly, then remove assembly from below.

TRANSMISSION

TRANSMISSION:—Own—Helical gear type with synchronizing shift on second and high gears.
See Transmission Section for complete data.

Removal:—Remove floorboards, speedometer cable, ground strap, propeller shaft, housing lower cover, shifter bearing spring, engine stabilizer (frame to transmission). Remove 2 bolts at transmission end of left support, remove frame bolts in right support with jack supporting rear of engine, 4 transmission-to-housing bolts, and withdraw transmission.

NOTE—Keep engine to right when installing.

UNIVERSALS

UNIVERSAL JOINTS:—Mechanics—Model 3-C. Roller bearing. 2 used.

See Universals Section for complete data.

REAR AXLE

REAR AXLE:—Own—Semi-floating, 'Angle Set', hypoid gear type with Hotchkiss drive. Welded cover used.

See Rear Axle Section for complete data.

Ratio—4.09-1 (std. pass., optl. hearse), 4.54-1 (std. hearse, optl pass.), 4.36-1 (optl), 4.7-1 (optl hearse).

Backlash—.003-.005". Screw adjustment for ring gear mesh in pinion. Pinion stationary.

Removal:—With wheel, hub and brake assembly removed, axle shafts can be withdrawn from housing. Differential carrier can then be removed from housing (on car) by disconnecting rear universal joint at flange, removing housing bolt nuts (below) and screw with locknut (at top). Assembly can then be removed from below.

Wheel Bearing Adjustment—None.

NOTE—Whenever wheel bearing replaced be sure that spring washed between inner bearing race and hub installed.

SHOCK ABSORBERS

SHOCK ABSORBERS:—Delco—Mod. 1960-C, D (front), 1717-A, B (rear). Double acting, piston type.

See Shock Absorber Section for complete data.

FRONT SUSPENSION

Front Suspension:—Independent 'Safe-T-Flex' type with coil springs.

See Front Suspension Section for complete data.

NOTE—Data below applies with car on level floor, tires properly inflated and car weighted as follows: 5 pass (375 lbs. rear seat, 300 lbs. front), 2-4 pass. (300 lbs. frt. seat, 225 lbs. rear comp't.).

Front Suspension Height—Distance from floor to top of frame side rail at spring should be 18".

Kingpin Inclination—1½° crosswise.

Camber—1° plus or minus ¼°. Adjustable.

Caster—2½° plus or minus ½°. Shim adjustment.

Toe In—1/32-1/16". Adjust by turning tie rods equally (check for equal lengths after adjustment).

STEERING GEAR

Steering Gear: Packard (Gemmer design Model 330) Worm-and-Roller type with center steering. Refer to Gemmer Model 330 article.

See Steering Gear Section for complete data.

BRAKES

BRAKES:—Service—Bendix hydraul., duo-servo, single anchor type. Hand lever applies rear service brakes.

See Brake Section for complete data.

Wheel Cylinders—Diameter 1 1/16" front wheel, 15/16" rear wheel.

Drum Diameter—12".

Lining—Primary: Raybestos #451. Secondary: U.S. #589. Width 1¾". 3/16" thick. Length per shoe 13".

Clearance—.010" at heel and toe of each shoe.

Hand Brake Adjustment—See Service Brakes.

ELECTRICAL EQUIPMENT NOTE: Both Auto-Lite and Delco-Remy equipment used during production.

MODEL IDENTIFICATION

SERIAL NUMBER:—Stamped on plate on front of dash.

ENGINE NUMBER:—First number 395501. Stamped on left side of engine near starter.

TUNE-UP

COMPRESSION:—Ratio and pressure as follows:

Head	Pressure at 125 R.P.M.
Std. 6.4-1	108 lbs.
Optl. 7.0-1	119 lbs.

VACUUM READING:—Gauge should show steady reading of 18-20" with engine idling at 350 R.P.M. or 7 M.P.H.

FIRING ORDER: 1-6-2-5-8-3-7-4. See diagram.

SPARK PLUGS: AC No. 103S or Champion Y-4. 10 mm. Gaps—.026-.030".

NOTE—Do not tighten these small plugs excessively. Tightening tension 50 inch lbs. maximum.

IGNITION: See Coil, Condenser, and Distributor.
Breaker Gap—.015". Limits .0125-.0175".
Cam Angle—Closed 27° (Auto-Lite), 31 (Delco-Ry.).
Automatic Advance—Auto-Lite: 9° max. at 1800 RPM. Delco-Remy: 9¾° max. at 2000 RPM. Distr. ° and RPM.
Vacuum Advance—5½° (distr.) with 16" vacuum. NOTE—Max. vacuum advance on early units, 7½°.

IGNITION TIMING: See Ignition Timing.
Std. Setting—6-8° BTDC (Std. hd.), 4-5½° BTDC (HC hd.). Vibration dampener mark (correct degree mark ahead of #1UP.DC) aligned with pointer on front of engine.

CARBURETION: See Carburetor & Carb. Equipment.
Idle Setting—Set idle adjusting screws midway between "miss" and "roll" points. Idle speed 7 MPH.
Float Level—Fuel level ⅝" below top edge of bowl.
Accelerating Pump—Inner Hole (Summer), outer (Winter).
Fuel Pump Pressure: 4½ lbs. maximum.

MANIFOLD HEAT CONTROL:—Thermostatic coil type. No adjustment required. See that heat control valve and shaft turn freely by hand.

VALVES: See Valve Timing.
Tappet Clearance—.006" Intake, .008" Exhaust, hot.

STARTING: See Battery, Starter, Generator, Regulator.

IGNITION

AUTO-LITE

Ignition Switch: Mitchellock 16-S, Type 7210. Connected to coil by armored cable.
Ignition Lock—Briggs & Stratton #50184 (Lock cylinder). Key Series—P1251-P1500. Groove—#2.

COIL: Auto-Lite Model CE-4026. Service Coil (less switch & cable) CE-3186KS. On cylinder head.
Ignition Current—½ ampere idling, 2½ stopped.

CONDENSER: Auto-Lite Part No. IG-2671-G.
Capacity—.20-.25 microfarad.

DISTRIBUTOR: Auto-Lite Model IGT-4005. Single breaker, 8 lobe cam, full automatic advance type with vacuum spark control and Fuel Compensator. ***Refer to Electrical Equipment Index for Auto-Lite Distributor article covering special servicing data on these units.***

Breaker Gap—Set at .015". Limits .0125-.0175".
Cam Angle or Dwell—27°closed, 18°open (.017" gap).
Breaker Arm Spring Tension—18-20 ounces.
Rotation—Clockwise viewed from top.

Automatic Advance—Auto-Lite

Distributor Degrees	Distributor R.P.M.	Engine Degrees	Engine R.P.M.
Start	300	0	600
3	800	6	1600
6	1300	12	2600
9	1800	18	3600

Vacuum Spark Control—Integral with distributor. Mounted on distributor housing and linked directly to breaker plate. Provides additional advance at speeds above idling (vacuum port in carburetor above throttle) except when engine is accelerated or operated with wide open throttle when spark is retarded by return spring within unit.

Vacuum Advance—Auto-Lite

Distr. Degrees	Eng. Degrees	Vacuum (" of HG)
Start	0°	7"
1°	2°	8⅝"
3°	6°	12"
4°	8°	13½"
5.5°	11°	16"

NOTE—Max. vacuum advance 7½° on early IGT-4005. Replacement units all 5½° (as above).

Fuel Compensator—Manual adjustment at distributor provides 10° maximum advance or retard from center 'O' position. See Ignition Timing for setting.

Distributor Removal:—Mounted on cylinder head. To remove, disconnect vacuum line connection, take out hold-down screw in advance arm.

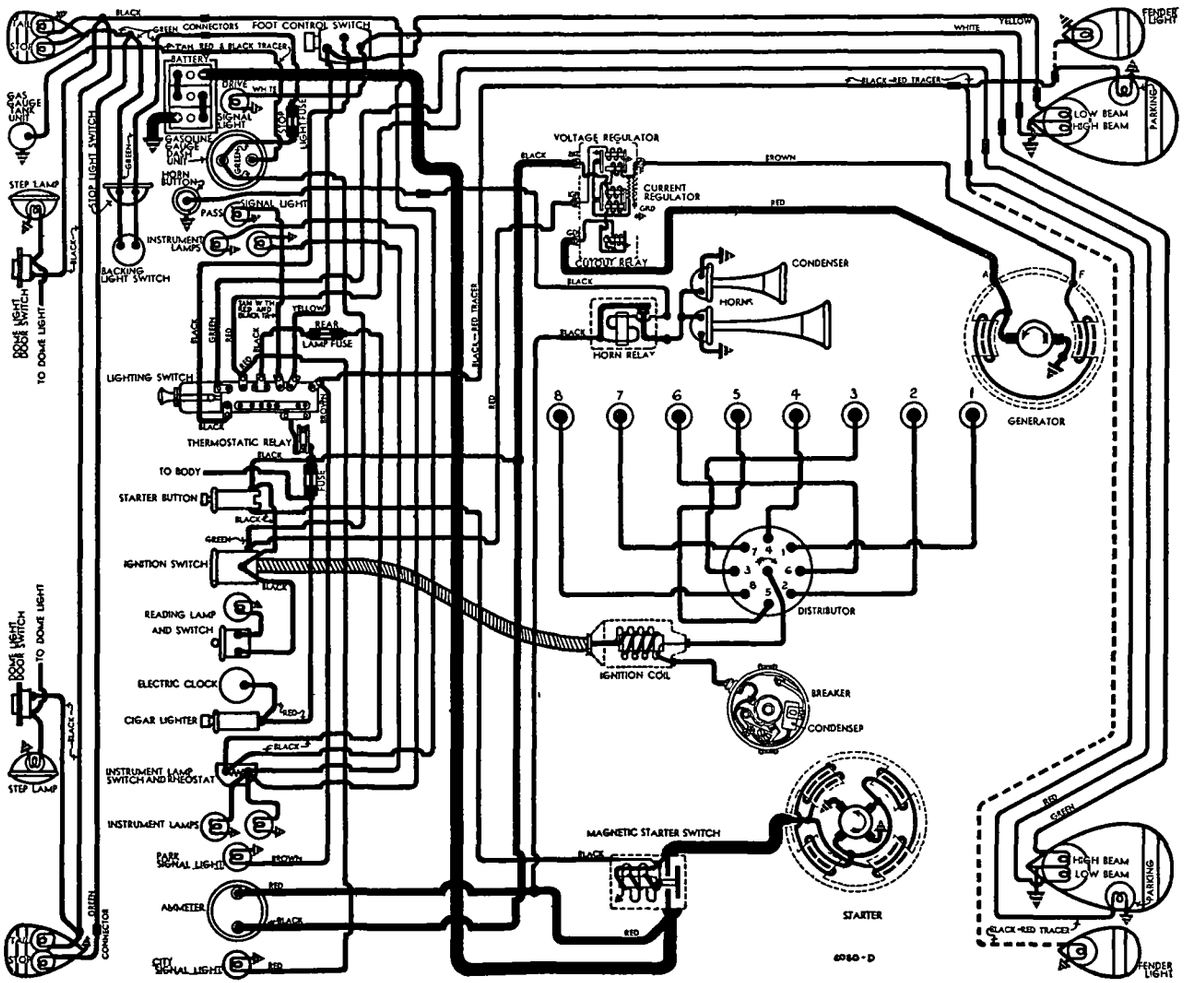

1937 DIA RAM—DELCO-REMY EQUIPMENT
See 1938 Diagram for Auto-Lite internal circuits

IGNITION

DELCO-REMY

Ignition Switch:—D-R Model 430-L. Connected to coil by armored cable.

COIL: Delco-Remy Model 539-K. On cyl. head.
Ignition Current—½ ampere idling, 2½ stopped.

CONDENSER: Delco-Remy Part No. 1866049.
Capacity—.18-.25 microfarad.

DISTRIBUTOR: Delco-Remy Model 663-L. Single breaker, 8 lobe cam, full automatic advance type with Vacuum Spark control and Fuel Compensator.

Breaker Gap—.015". Limits .0125-.0175".

Cam Angle or Dwell—31° (closed), **14°** (open).

Breaker Arm Spring Tension—19-23 ounces.

Automatic Advance—Delco-Remy

Distributor		Engine	
Degrees	R.P.M.	Degrees	R.P.M.
Start	300	1.5	600
9.75	2000	19.5	4000

Vacuum Spark Delco-Remy 681-L—Integral type. Mounted on distributor housing and linked directly to breaker plate. Provides additional advance at speeds above idling (vacuum port in carburetor above throttle) except when engine is accelerated or operated with wide open throttle when spark is retarded by return spring within unit.

Vacuum Advance—Delco-Remy

Distr. Degrees	Eng. Degrees	Vacuum (" of HG)
Start	0°	6-8"
5.5°	11°	14-18"

NOTE—Early type vacuum advance max. was 7½°.

Fuel Compensator—Manual adjustment at distributor provides 12° maximum advance or retard from center 'O' position. See Ignition Timing for setting.

Removal:—Distributor mounted on cylinder head. To remove, disconnect vacuum line, take out hold-down screw in advance arm.

IGNITION TIMING

IGNITION TIMING:—For all engines as follows:

	Flywheel Degrees	Piston Position
Std. 6.4-1 head	6-8° BTDC	.0168-.0299" BTDC
Optl. 7.0-1 head	4-5½° BTDC	.0075-.0141" BTDC

NOTE—Vibration damper at front of engine marked #1 UP.DC (top dead center) with 15 one degree graduations before this point.

To Set Timing—Loosen thumbnut, set Fuel Compensator at 'O'. With #1 piston on compression, turn engine over until it reaches firing position (see table above), stop when correct line on vibration damper at front of engine lines up with pointer. Loosen advance arm clamp bolt, rotate distributor until contacts begin to open, tighten clamp bolt, see that rotor is opposite #1 segment in distributor cap.

NOTE—If neon timing light used, idle engine below 500 R.P.M.

Fuel Compensator Setting—Provides manual adjustment at distributor for octane rating of fuel used. After ignition set as above, road test car to give a slight 'ping' pulling heavy load. Adjusted by loosening thumbnut and advancing or retarding pointer on scale. Adjustment permits 12° advance or retard from Center 'O' position.

CARBURETOR

CARBURETION:—Carburetor—Stromberg Model EE-23. 1¼" dual downdraft type with integral automatic choke and fast idle.

For complete data, refer to Carburetor Index.

NOTE—Carburetor carries code mark 10-28 on air horn.

Idle Adjustment—With engine warm, choke valve wide open, engine idling at hot or slow idling speed, set throttle stopscrew so that engine idles at 350 R.P.M. or 7 M.P.H. Turn inner idling adjusting screw in until engine begins to lag or miss, then turn screw out until engine begins to roll, finally turn screw in slowly until engine fires smoothly. Repeat with outer idling adjusting screw. Readjust throttle stopscrew for correct idling speed.

Accelerating Pump Setting—Adjusted by changing position of pump link rod in throttle valve lever. Inner Hole (Min. stroke)—Summer temperatures. Outer Hole (Max. stroke)—Winter temperatures.

Fast Idle & Automatic Choke:—Integral with carburetor.

For complete data, refer to Carburetion Equip. Index.

CARB. EQUIPMENT

Air Cleaner:—AC. #1528086 oil bath type.

Fuel Pump:—AC. Type F #1523196. Combination fuel-and-vacuum pump.

For complete data, refer to Carburetion Equip. Index.

Gasoline Gauge:—AC. Electric. Dash unit (#1515330-U. S.; #1515332-Canada). Tank unit (#1515448—all).

For complete data, refer to Carburetion Equip. Index.

BATTERY

BATTERY:—Prest-O-Lite, Hi-Level, Type HR4-21. 6 volt, 21 plate, 150 ampere hour capacity (20 hour rate).

NOTE—Specific gravity reading for fully charged Hi-Level battery is 1.250.

Starting Capacity—175 amperes for 20 minutes.
Zero Capacity—300 amperes for 6.3 minutes.
Grounded Terminal—Positive (+) terminal.
Location—Under front seat on left side.

Export—Willard RH-5-19:—6 volt, 19 plate, 153 ampere hour capacity (20 hour rate).
Starting Capacity—180 amperes for 20 minutes.
Zero Capacity—300 amperes for 6.6 minutes. Five second voltage—4.51 volts.
Grounded Terminal & Location—As given above.

STARTER

AUTO-LITE

Auto-Lite Model MAX-4014. Armature MAW-2090.
Drive—Outboard Barrel Type Bendix Model A-1729.
Rotation—Counter-clockwise at commutator end.
Brush Spring Tension—42-53 ozs. (new brushes).
Cranking Engine—125 RPM., 160 amperes, 5.2 volts.

Performance Data

Torque	R.P.M.	Volts	Amperes
0 ft. lbs.	5300	5.5	65
.65 "	3300	5.5	100
2.75 "	1630	5.0	200
5.5 "	970	4.5	300
8.7 "	600	4.0	400
12.0 "	300	3.5	500
16.5 "	Lock	3.0	640
25.0 "	Lock	4.0	880

Removal:—Starter sleeve mounted n left front face of flywheel housing. To remove, take out pilot mounting screw in flywheel housing.

Starting Switch: Auto-Lite SS-4001. Magnetic type. Mounted on starter, controlled by pushbutton on instrument panel.

For complete data, refer to Electrical Equipment Index.

STARTER

DELCO-REMY

Delco-Remy Model 729-H. Armature No. 1866105.
Drive—Outboard barrel type Bendix A-1729.
Cranking Engine—125 R.P.M., 175 amperes, 5.1 volt.
Rotation—Counter-clockwise at commutator end.
Brush Spring Tension—24-28 ozs. (each).

Performance Data

Torque	R.P.M.	Volts	Amperes
0 ft. lbs.	6000	5	60
16 ft. lbs.	Lock	3.0	600

Removal:—Starter sleeve mounted on left front face of flywheel housing. To remove, take out pilot mounting screw in flywheel housing.

Starting Switch: Delco-Remy 1540 Magnetic switch mounted on starter controlled by separate push button switch on instrument panel.

For complete data, refer to Electrical Equipment Index.

Delco-Remy 1540 Switch Specifications

Contacts close with current draw of 3.1-3.7 amperes at 4.0 volts. Remain closed with current draw of .54-.65 amperes at .7 volt.

NOTE—Plunger in end of magnetic switch can be used for starting engine at starter.

GENERATOR

AUTO-LITE

Auto-Lite Model GCO-4803-A. Armature No. GCO-2006F. Two brush, straight shunt type with external voltage and current regulation. Ventilated by fan on drive pulley.

Maximum Charging Rate—28 amperes (cold), 8.0 volts, 1850 R.P.M. and above with load or discharged battery (Current Regulator setting). Actual charging rate controlled by Voltage Regulator and is dependent on battery condition.

Charging Rate Adjustment—No adjustment on generator. See Regulator data (following).

Performance Data—Auto-Lite

Cold			Hot		
Amperes	Volts	R.P.M.	Amperes	Volts	R.P.M.
0	6.4	825	0	6.4	900
4	6.6	940	4	6.6	1025
8	6.85	1050	8	6.85	1160
12	7.1	1175	12	7.1	1310
16	7.3	1300	16	7.3	1475
20	7.55	1450	20	7.55	1660
24	7.8	1610	24	7.8	1880
28	8.0	1850	28	8.0	2200

NOTE—Current reg. limits output to 28 amperes.

Rotation—Counter-clockwise at commutator end.
Brush Spring Tension—53 ozs. max. (new brushes).
Field Current—1.47-1.63 amperes at 6.0 volts.
Motoring Current—3.94-4.36 amperes at 6.0 volts.

Removal & Belt Adjustment: Same as given below

C NTINUED N NEXT PAGE

C NTINUED FR M PRECEDING PA E

GENERATOR

DELCO-REMY

Delco-Remy Model 961-J. Armature No. 1857866. Straight shunt (two brush) type with external current and voltage regulation. Ventilated by fan on drive pulley.

Charging Rate Adjustment—No adjustment at generator. Charging rate controlled by Voltage Regulator and maximum output controlled by Current Regulator. See Control Unit section below.

Maximum Charging Rate—25 amperes (cold) with discharged battery as indicated on test ammeter connected in line at 'BAT' terminal on Control Unit. Decreases as battery comes up on charge. Generator output constant at all speeds above 1650 R.P.M. or approx. 25 M.P.H.

Performance Data—Delco-Remy
Generator Cold

Amperes	Volts	R.P.M.
25	8.0	1650

Rotation—Counter-clockwise at commutator end.

Brush Spring Tension—22-26 ounces.

Field Current—2.0-2.2 amperes at 6 volts.

Motoring Current—3.75 amps @ 6 volts, 450 R.P.M.

Removal:—Generator pivot mounted at left front of engine. To remove, take out mounting bolts.

Belt Adjustment:—With bolts loose, swing generator away to give 30 lbs. reading on scale attached to clamp bolt, or ½-¾" thumb deflection on belt midway between generator and fan pulleys.

REGULATOR

AUTO-LITE

Auto-Lite VRB-4002-D Current-Voltage Regulator. Consists of Cutout Relay, vibrating Voltage and Current Regulator in single case on dash.

NOTE—Regulator case cover is sealed. Serviced on exchange basis if seals not broken.

For complete data, refer to Electrical Equipment Index.

Cutout Relay—Auto-Lite

Cuts In—6.4-7.0 volts Cold.

Cuts Out—.5 ampere Min., 3.0 amperes Max. Cold.

Contact Gap—.015" minimum.

Air Gap—.034" Min., .038" Max. with contacts open. Measure at hinge end of core.

Voltage Regulator—Auto-Lite

Setting—7.5-7.8 volts at 70°F. (Before Serial No. 8R-000001), 7.3-7.6 volts at 70°F. (After 8R-000001). ***See Electrical Equipment Section for complete settings and changes.***

To Check (Without Breaking Seals)—Connect ammeter in charging line at 'B' terminal on regulator. Connect voltmeter between 'B' and 'GD' terminals. Operate generator, charging fully charged battery, at speed equivalent to 30 MPH. car speed. Voltage should be within limits of 7.4-7.8 volts (Before #8R-000001), 7.21-7.83 volts (after). See Setting above.

To Adjust (with cover removed)—Change armature spring tension slightly by bending lower spring hanger. See Electrical Equipment Section for data.

Contact Gap—.010" Min., .020" Max. with armature against stop pin.

Air Gap—.0595-.0625" with contacts just opening.

Current Regulator—Auto-Lite

Setting—27-29 amperes (marked '28' on cover).

To Check (Without Breaking Seals)—Connect meters as for Voltage Regulator test. Operate generator at 30 MPH. car speed, add load (use bank of headlamp bulbs or turn on car lights and discharge battery) so that generator will charge at peak rate and bring Current Regulator into action. Charging current should not exceed 28 amperes. If more than slight excess noted, Current Regulator is defective.

Adjustment, Contact Gap, Air Gap—Same as for Voltage Regulator (above).

REGULATOR

DELCO-REMY

Delco-Remy Model 5813. Double Core Type Voltage & Current Regulator (With 'IGN' Terminal). Cutout Relay and vibrating type Voltage & Current Regulators in a single case on the dash.

For complete data, refer to Electrical Equipment Index.

NOTE—Cover of case is sealed. Units can be checked without breaking seal. To adjust, seal must be broken.

Cutout Relay—Delco-Remy

Cuts In—6.7-7.6 volts.

Cuts Out—3 ampere max. discharge at 6.3 volts.

Contact Gap—.018-.025".

Air Gap—.018-.022" with contacts closed.

Voltage Regulator—Delco-Remy

Setting—7.55-7.85 volts at 72° F., 7.45-7.55 volts at 150° F. Regulator is over-compensated for temperature and must be checked at these points.

Checking—To check without breaking seal, disconnect lead at 'IGN' terminal on case, connect jumper between 'IGN' and 'BAT' terminals, connect test ammeter in charging line at 'BAT' terminal, connect voltmeter between 'IGN' terminal and ground. Operate generator at 2800-3400 R.P.M. Check with setting as above (with 8-10 amps. charging rate).

To Adjust—This requires breaking of seal in order to remove cover. With voltmeter and ammeter connected (as above), set regulator by bending spring hanger at lower end of armature spring until performance is as shown above. Remove jumper and restore original connections.

NOTE—Voltage Regulator readings must be taken with cover on unit and setting should be checked by decreasing speed until Cutout Relay contacts open, and then increasing speed to original point.

Contact Gap—.015-.025".

Contact Spring Tension—3.5 ozs. minimum.

Air Gap—.060-.070" between armature and core with armature down so that fibre bumper just touches stop, .008-.013" between fibre bumper and stop with armature up.

Current Regulator—Delco-Remy

Setting—24-26 amperes.

Checking—To check without breaking seal, disconnect 'IGN' and 'BAT' leads, connect ammeter with one lead to 'BAT' terminal and other to 'BAT' lead. Operate generator and check setting.

To Adjust—This requires breaking of seal. Proceed as outlined above and set regulator by bending spring hanger at lower end of armature spring until maximum output is as given.

NOTE—Generator voltage must not be allowed to exceed 8.5 volts with Voltage Regulator shorted out.

Contact Gap—.015-.025".

Contact Spring Tension—3.5 ozs. minimum.

Air Gap—.070-.080" between armature and core with armature down so that fibre bumper just touches stop, .008-.013" between fibre bumper and stop with armature up.

NOTE—To repolarize generator whenever Control Unit is disconnected or removed, connect jumper between 'GEN' and 'BAT' terminals momentarily (after all leads connected). Do not run engine.

LIGHTING

LIGHTING:—**Headlamps**—Hall, Flex beam, pre-focused type with special non-interchangeable lenses marked 'Left' and 'Right'. 'Passing' beam (upper beam right hand headlamp, lower beam left hand headlamp) obtained with Foot Selector switch with Lighting Switch in 'Country Driving' (upper beams, both lamps) position.

Headlamp Beam Indicator—Separate beam indicator for each beam position (1—Park, 2—City, 3—Drive, 4—Pass), located on instrument panel (Drive and Pass in Gasoline gauge group, City and Park in Ammeter group).

Switches

Lighting—Delco-Remy Model 480-M.

Foot Selector—D-R Models 471-T, U (RHD).

Bulb Specifications

Position	Candlepower	Mazda No.
Headlamp—Right	32-32	2330
Headlamp—Left	32-21	1104
Parking, Fender	1½	55
Instrument, Panel, Tail	3	63
Stop	15	87
Indicator, Radio	1	51
Dome	6	81

MISC. ELECTRICAL

THERMOSTATIC RELAY:—Thermostatic arm type current limit relay. Mounted on lighting switch. Not adjustable. Contacts open with current load of 38 amperes at 70°F.

FUSES:—**Accessory**—20 ampere, on lighting switch.

Tail Lamp—20 amperes, in connector near lighting switch.

Stop Lamp—20 amperes, in connector near gasoline gauge dash unit.

Radio—15 ampere, in feed wire.

HORNS:—**Sparton Model 5-D-30.** Vibrator typ , Air tone, twin horns operated by horn relay.

Air Gap—.032-.035" (low note—long air column), .026-.030" (high note—short air column).

Horn Current—22-25 amperes (total).

Horn Relay:—R.B.M. Model 10072. Current draw .4-.55 amperes at 6.0 volts. Coil resistance 11-14 ohms. Contacts must close with relay in inverted position.

Closing Voltage—2.75-4.0 volts.

Contact Gap—.015-.025". **Air Gap .010-.020" (closed).**

ENGINE

ENGINE SPECIFICATIONS:—8 cylinder, 'L' head.

Bore—3 3/16". **Stroke**—5".

Displacement—320 cubic inches.

Rated Horsepower—32.5 (AMA).

Developed Horsepower—130 HP. (std. 6.4-1 head), 135 HP. (optl. 7.0-1 head) at 3200 R.P.M.

Compression Ratio and Pressure—As follows:
6.4-1 Std. aluminum head. 108 lbs. at 125 R.P.M.
7.0-1 Optl. aluminum head. 119 lbs. at 125 R.P.M.

Vacuum Reading—Gauge should show steady reading of 18-19", engine idling at 350 R.P.M. or 7 M.P.H. ***See Packard Shop Notes for Cylinder Block Removal instructions.***

PISTONS:—Nelson Bohnalite, aluminum alloy, strut type, tin-plated (early cars not plated).

Weight—18.7 ozs. (stripped). 24.1 ozs. (with rings

ENGINE

CONTINUED FROM PRECEDING PAGE

and pin). **Length—4¼".**

Removal—Pistons removed from above, rods from below (push assembly up to expose pin, remove pin, lift piston out, remove rod from below with engine warm).

Clearance—Skirt .0015". See Fitting New Pistons.

Replacement Pistons:—*See Packard Shop Notes for data.*

Fitting New Pistons:—.0015" x ½" feeler inserted between piston and cylinder wall on side opposite slot should require 12-14 lbs. to withdraw.

Installing Pistons:—Slot toward valves.

PISTON RINGS:—Two compression, two oil control rings per piston, all above pin. Each oil ring groove drilled with ten ⅛" oil drain holes. Rings furnished .005", .010", .020", .030", .040" oversize.

Ring	Width	End Gap	Side Clearance
Comp. (top)	⅛"	.007-.012"	.002-.0025"
Comp. (#70)	⅛"	.007-.012"	.0025"
Oil (top #85)	5/32"	.007-.015"	.0015"
Oil (X90-85)	5/32"	.007-.015"	.0015"

NOTE—Install #1 and 3 rings with gap toward valves, #2 & 4 with gap away from valves.

PISTON PIN:—Diameter—⅞". Length—2 47/64". Floating type. Furnished .003" and .006" oversize. Pin hole in rod bronze-bushed.

Pin Fit in Piston—Finger push fit with piston heated to 160° F.

Pin Fit in Rod Bushing—Finger push fit at 70° F.

NOTE—Finish ream bushings to .87515-.87485".

CONNECTING ROD:—Weight—403⅜ ozs. Length—10⅞".

Crankpin Journal Diameter—2 3/16".

Lower Bearing—Copper lead alloy, interchangeable type. Furnished .001", .002", .003", .015" undersize.

Clearance—.001-.0015". **Sideplay**—.006". **Limits**—.005-.008".

Bearing Adjustment:—None (no shims). Replace bearings. Do not file rods or caps.

Installing Rods:—Oil squirt hole to camshaft.

CRANKSHAFT:—9 bearing. Bolted-on counterweights.

Journal Diameters—2⅝".

Bearings—Removable steel-backed, babbitt-lined, shimless type. Bearing shells doweled in block and cap. Dowel in cap is flanged (seats between bearing and cap) and hollow (for bearing lubrication).

Clearance—.001-.002".

Bearing Adjustment:—None (no shims). Replace bearings (requires removal of crankshaft).

End Thrust:—Taken by #7 bear. Endplay—.003-.005".

CAMSHAFT:—8 bearing. Non-adjustable chain drive.

Bearing Type—Steel-backed, babbitt-lined.

Clearance—.0015-.0035".

End Thrust:—Taken by thrust plate in back of camshaft sprocket. **Endplay**—.001-.004".

Timing Chain:—Morse 3682-KX. Width 1½". Pitch .375". Length 70 links or 26¼".

Camshaft Setting:—Install chain and sprockets together with marks adjacent and in line with a straightedge across the shaft centers.

NOTE—Front end disassembly as follows: remove bumper, center bolt at bottom of radiator, trim strips on running board, fender-to-board and frame bolts. Fender and radiator can then be removed as an assembly.

VALVES:—	Head Diameter	Stem Diameter	Length
Intake	1 21/32"	.3405"	7 13/32"
Exhaust	1 15/32"	.3405"	7 13/32"

	Seat Angle	Lift	Stem Clearance
Intake	45°	.358"	.0025" min.
Exhaust	45°	.358"	.004" min.

Valve Guides:—Pressed in block from above. Reamed to size for correct stem clearance (see table above).

Valve Rocker Arms:—Consist of pivoted arms mounted on bracket on crankcase which transmit motion from cam to valve pushrod (valve lifter).

Removal—Remove screws in bracket on right side of crankcase, withdraw bracket and pushrod assembly.

Pushrods (Valve Lifters):—Mounted on guides seated in crankcase and held down by block which engages guide flange.

Valve Springs:—	Spring Pressure	Length
Valve Closed	68-78 lbs.	3 1/16"
Valve Open	154-164 lbs.	2 45/64"

VALVE TIMING

Tappet Clearance:—.006" Int., .008" Exh. hot.

Valve Timing:—See Camshaft Setting above.

Intake Valves—Open 30° BTDC. Close 65° ALDC.

Exhaust Valves—Open 65° BLDC. Close 30° ATDC.

To Check Timing:—Set tappet clearance #1 exhaust valve at .005" (or .010", then insert .005" feeler). Turn engine over until pointer over damper (at front of engine) lines up with a point 1 1/16" (plus or minus 11/32") past '1-UPDC' mark (feeler should withdraw with finger pull). Valve closes 30° or .4070" ATDC. Reset tappet clearance at .008" hot.

LUBRICATION

LUBRICATION:—Pressure type. Gear type oil pump mounted in crankcase.

Crankcase Capacity—8 quarts (dry).

Normal Oil Pressure:—55 lbs. max., 5 lbs. min. with SAE #20 oil.

Oil Pressure Relief Valve:—Located under plug on left side of crankcase. Remove acorn nut and adjust by turning screw.

CLUTCH

CLUTCH:—Long Model 12CB-CL. Single plate, dry disc type.

See Clutch Section for complete data.

Facings—Woven (Raybestos #250). 2 required. I.D. 7". O.D. 12". Thickness .137".

Adjustment—Adjust nut on pedal rod to give 1½" of free travel.

Removal:—Remove transmission (see Transmission Removal below), take out cover mounting screws evenly. Align '0' marks on flywheel and cover at reassembling.

TRANSMISSION

TRANSMISSION:—Own—Helical gear type with synchronizing shift on second and high gears.

See Transmission Section for complete data.

Removal:—Remove ground strap, propeller shaft, light switch, hand brake cable (at equalizer), two stud nuts (case bracket to rubber support) on either side, stabilizer link (left side), clutch pedal pull rod and spring, place jack under rear of engine. Remove pedal shaft inner bracket, loosen brace rod on right at rear end only, lower cross member, take out bell housing nuts and capscrews, raise rear of engine, remove 2 frame-to-vertical support members on either side and remove. Transmission can now be removed.

UNIVERSALS

UNIVERSAL JOINTS:—'Detroit Universal'. Series 5350. Cross type with roller bearings. 2 used.

See Universals Section for complete data.

REAR AXLE

REAR AXLE:—Own—Semi-floating, hypoid gear type with Hotchkiss drive.

See Rear Axle Section for complete data.

Ratio—4.69-1 (std.), 4.36-1, 4.9-1 (optl.).

Backlash—.003-.005". Screw adjustment (back off one nut, tighten other nut equal amount with bearings correctly adjusted). Pinion setting controlled by shims furnished .005", .008", .015" thick.

Removal:—With wheel, hub and brake assembly removed, axle shafts may be withdrawn from housing. Differential carrier can then be removed from housing (on car) by disconnecting rear universal joint at flange, removing housing bolt nuts (below) and locknut on screw (at top). Assembly can then be removed from below.

Wheel Bearing Adjustment—Controlled by shims between outer race of inner bearing and shoulder in housing. Remove hub asembly, backing plate, axle shaft, and inner bearing outer race. Add or remove shims to give proper clearance.

Endplay—.003" (at each wheel).

SHOCK ABSORBERS

SHOCK ABSORBERS:—Delco—Model 1960 C, D (front), 1717 C and D (rear). Double acting, piston type.

See Shock Absorber Section for complete data.

FRONT SUSPENSION

Front Suspension:—Packard Safe-T-Flex, independent type.

See Front Suspension Section for complete data.

NOTE—Data below applies with car on level floor and car loaded with 300 lbs. (frt.—all), 225 lbs. (rear—Coupe), 375 lbs. (rear—5 Pass.), 675 lbs. (rear—7 & 8 Pass.).

Front Suspension Height—Distance from floor to top of frame side rail at spring should be 20⅛".

Kingpin Inclination—1½° crosswise.

Camber—1° plus or minus ¼°. Adjustable.

Caster—2½° plus or minus ½°. Shim adjustment.

Toe In—1/32-⅛". Adjusted by turning tie rods equally (check for equal lengths after adjustment).

STEERING GEAR

Steering Gear: Packard (Gemmer design Model 375) Worm-and-Roller type with push-pull adjustments and center steering. See Gemmer Model 375 article.

See Steering Gear Section for complete data.

BRAKES

BRAKES:—Service—Bendix hydraul., duo-servo, single anchor type. Hand lever applies rear service brakes.

See Brake Section for complete data.

Wheel Cylinders—Diameters—Front wheel 1¼", rear 1⅛".

Drum Diameter—13".

Lining—Primary: Marshall Asb. #1035, Secondary: #600. Width 2½". 3/16" thick. Length per shoe 13".

Clearance—.010" at heel and toe of each shoe.

Hand Brake Adjustment:—See Service Brakes.

ELECTRICAL EQUIPMENT NOTE: Both Auto-Lite and Delco-Remy Starters & Generators used during production on these cars.

MODEL IDENTIFICATION

SERIAL NUMBER:—Stamped on plate on front of dash.

ENGINE NUMBER:—First number 905501. Stamped on left side of engine block below head.

TUNE-UP

COMPRESSION:—Ratio and pressure as follows:

Head	Pressure at 125 R.P.M.
Std. 6.4-1	110 lbs.
Optl. 7.0-1	119 lbs.

VACUUM READING:—Steady reading at 18-20" with engine idling at 375 R.P.M. or 8 M.P.H.

FIRING ORDER: 1R-6L-5R-2L-3R-4L-6R-1L-2R-5L-4R-3L with cylinders numbered as shown on diagram (cylinder banks right 'R' and 'L' left as viewed from driver's seat, #1 cylinder at front.

SPARK PLUGS: AC No. 103S or Champion Y-4. 10 mm. Gaps—.026-.030".
NOTE—Do not tighten these small plugs excessively. Tightening tension 50 inch lbs. maximum.

IGNITION: See Coil, Condenser, and Distributor.
Breaker Gap—.020". **Cam Angle**—40° Closed.
Synchronization—Set movable contacts to open 33½° after stationary contacts.
Automatic Advance—10° max. at 1400 RPM (for IGO-4001A Distr., 8° max. at 1200 RPM (IGO-4002A).

IGNITION TIMING: See Ignition Timing.
Std. Setting—6-8° BTDC (for standard cyl. head), 4-5½° BTDC (for HC hd.). Vibration dampener mark (correct graduation ahead of #1R-UDC) aligned with pointer at front of engine. Movable contacts should open 33½° after this point.

CARBURETION: See Carburetor & Carb. Equipment.
Idle Setting—Set idle adjusting screws midway between "miss" and "roll" points. Idle speed 8 MPH.
Float Level—Fuel level 9/16" below edge of bowl.
Accelerating Pump—Inner Hole (Summer), Outer Hole (Winter temperatures).
Fuel Pump Pressure: 4½ lbs. maximum.

VALVES: See Valve Timing.
Tappet Clearance None in service, hydraul. take-up.

STARTING: See Battery, Starter, Generator, Regulator.

IGNITION

Ignition Switch:—Delco-Remy Model 430-M (switch and cable assembly). Connected to coil unit by armored cable.
Ignition Lock—Briggs & Stratton No. 50184 (Lock cylinder). Key Series—P1251-P1500. Groove—#2.

COIL: Auto-Lite Model CE-1203. Two Coil unit. Service Coil (less switch & cable) CE-3186FS. Mounted at front of engine.
Ignition Current—½ ampere idling, 2½ amperes stopped, for each coil.

CONDENSER: Auto-Lite No. IG-2671-E, IG-2671-A (one of each used). **Capacity**—.20-.25 microfarad.

DISTRIBUTOR: Auto-Lite Model IGO-4002A (Std. hd.), IGO-4001A (HC head). Double breaker, 6 lobe cam, full automatic advance type. Breaker contacts open alternately at 33½° and 26½° intervals corresponding to unequal 67° and 53° firing intervals of the engine (caused by 67° included angle between cylinder banks) and must be synchronized. See Timing.
Breaker Gap—Set at .020".
Cam Angle or Dwell—40° (closed), 20° (open) for each set (operate independently).
Breaker Arm Spring Tension—16-20 ounces.

Automatic Advance—IGO-4001-A

Distributor Degrees	R.P.M.	Engine Degrees	R.P.M.
Start	300	0	600
2	515	4	1030
4	730	8	1460
6	950	12	1900
8	1175	16	2350
10	1400	20	2800

Automatic Advance—IGO-4002-A

Start	300	0	600
2	525	4	1050
4	750	8	1500
6	975	12	1950
8	1200	16	2400

Removal:—Distributor mounted between cylinder banks at front of engine. To remove, take off distributor cap and cable conduit assembly, take out screws in mounting bracket.

IGNITION TIMING

IGNITION TIMING:—Settings for all engs. as follows:

Engine	Fly wheel Degrees	Piston Position
Std. 6.4-1 Head	6-8° BTDC	.0145-.0255" BTDC
Optl. 7.0-1 Head	4-5½° BTDC	.0063-.0121" BTDC

NOTE—Vibration dampener at front of engine marked '#1R-UDC' (top dead center for #1 in right cylinder bank) and '#6L-UDC' (top dead center

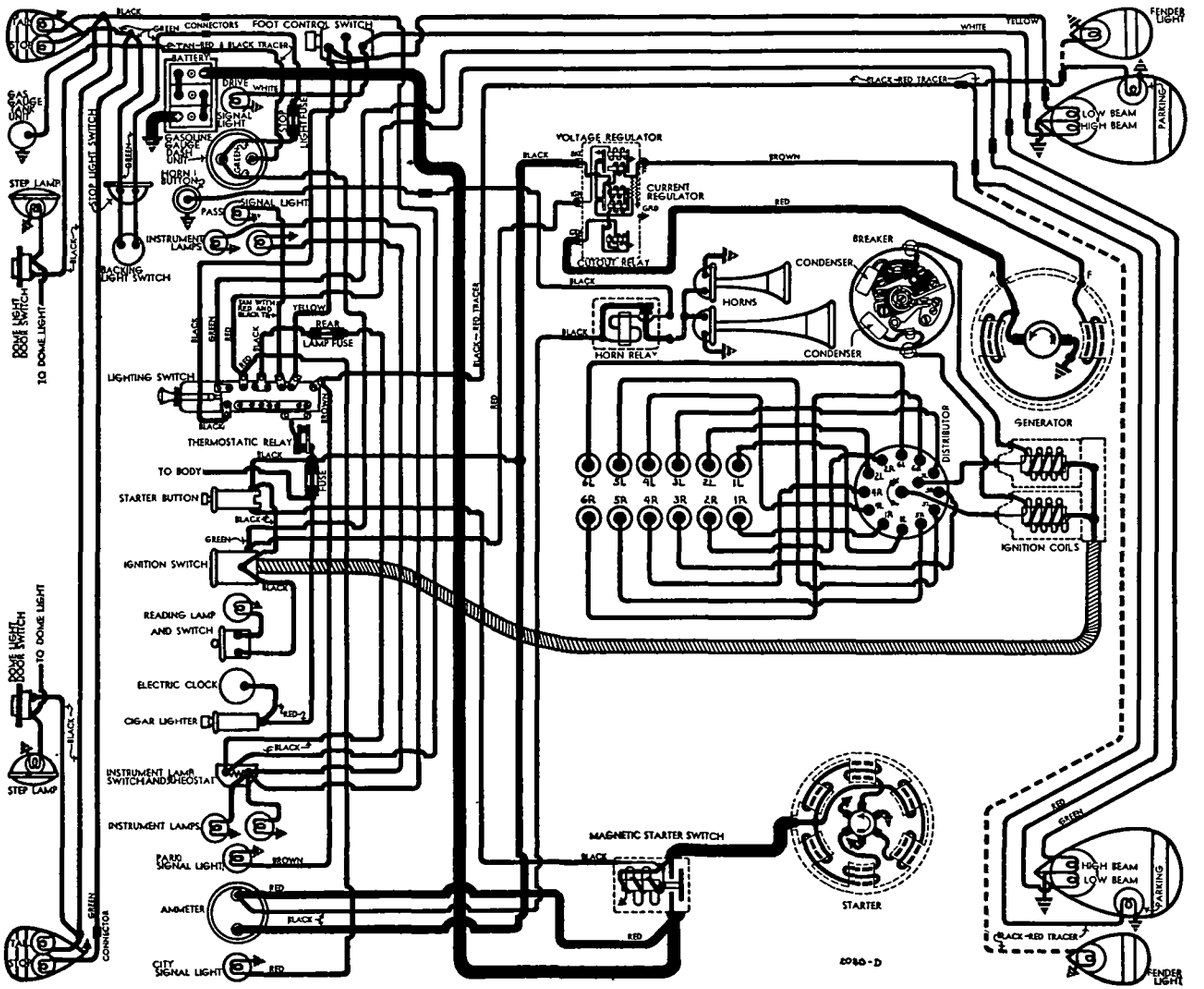

1937 DIA RAM—DELCO-REMY STARTER, GENERATOR, REGULATOR

See 1938 Diagram for internal circuits on Auto-Lite Starter, Generator, Regulator

for #6 in left cylinder bank) with fifteen 1° graduations before each of these marks. Time stationary contacts which fire plugs in right hand bank first.

Timing (Stationary Contacts)—With #1R piston (front cylinder, right bank) on compression, turn engine over until piston reaches firing position, stop when correct graduation preceding '#1R-UDC' mark on vibration dampener lines up with pointer on chain case cover (see settings above). Loosen clampscrew on mounting bracket, rotate distributor until stationary contacts (mounted directly on breaker plate) begin to open, tighten clampscrew. Then synchronize movable contacts.

Synchronization (Movable Contacts)—Turn engine over exactly 67° to firing position for #6L (rear piston, left bank), stop when correct graduation preceding '#6L-UDC' mark lines up with pointer, loosen lockscrews on sub-plate carrying second or movable contacts, shift plate until contacts begin to open, tighten lockscrews.

Synchronization (other methods)—Set movable contacts to open exactly 33½° after fixed contacts. Firing intervals are unequal 33½-26½-33½ distributor degrees.

CARBURETOR

CARBURETION:—Carburetor—Stromberg Model EE-3, 1½" Dual, Downdraft type.

For complete data, refer to Carburetor Index.

Idle Note—See article in Carburetor Section for shim installation to improve idle operation.

Idle Adjustment—Do not adjust until engine warmed up so that Automatic Choke and Fast Idle are inoperative. Set throttle stopscrew so that engine idles at 375 R.P.M. or 8 M.P.H. Turn inner idle adjusting screw in until engine begins to lag, then out until engine begins to roll, finally turn screw in slowly until engine fires smoothly. Adjust outer idle adjusting screw in the same manner. Readjust throttle stopscrew for correct idling speed.

Accelerating Pump Setting—Adjusted by changing pump link rod engagement in throttle lever as follows:
Inner Hole (Min. stroke)—Summer temperatures.
Outer Hole (Max. stroke)—Winter temperatures.

Fast Idle:—Mounted on carburetor. To adjust, stop engine, hold throttle valve and choke valve closed, turn fast idle adjusting screw in until it contacts ear on fast idle cam, then turn screw in additional 6-7 turns.

For complete data, refer to Carburetion Equip. Index.

Automatic Choke:—Stromberg Model C. Early cars carry 10-9 assembly, later cars 10-9A assembly.
NOTE—Car manufacturer recommends that 10-9 assemblies be replaced with 10-9A assembly for improved choke action.

For complete data, refer to Carburetion Equip. Index.

Setting—28 notches rich (10-9), 16 notches rich (10-9A).

CARB. EQUIPMENT

Air Cleaner:—AC. #1525442. Oil-wetted type.

Fuel Pump:—AC Type 'I' #1521778 combination fuel-and-vacuum pump. Diaphragm type.

For complete data, refer to Carburetion Equip. Index.

Gasoline Gauge:—AC Electric Type. #1515334 (dash unit), 1515449 (tank unit).

For complete data, refer to Carburetion Equip. Index.

BATTERY

BATTERY:—Prest-O-Lite, Hi-Level, Type HRD-21. 6 volt, 21 plate, 150 ampere hour capacity (20 hour rate.

NOTE—Specific gravity reading for fully charged Hi-Level battery is 1.250.

Starting Capacity—175 amperes for 20 minutes.

Zero Capacity—300 amperes for 6.3 minutes.

Grounded Terminal—Positive (+) terminal.

Location—Under front seat on left side.

Export—Willard RH-5-19:—6 volt, 19 plate, 153 ampere hour capacity (20 hour rate).

Starting Capacity—180 amperes for 20 minutes.

Zero Capacity—300 amperes for 6.6 minutes. Five second voltage—4.51 volts.

Grounded Terminal & Location—As given above.

STARTER
OWEN-DYNETO

Owen-Dyneto Model DN-1389. Armature No. 13409.

Drive—Outboard Bendix Type RCD10FXTD.

Rotation—Counter-clockwise at commutator end.

Brush Spring Tension—56-60 ounces each.

Cranking Engine—125 R.P.M., 130 amps. 5.6 volts.

Performance Data—Owen-Dyneto

Torque	R.P.M.	Volts	Amperes
0 ft. lbs.	3000	6.0	50
5.8 "	850	5.2	200
11.4 "	520	4.8	300
17.0 "	340	4.5	400
23.0 "	220	4.2	500
26.6 "	140	4.0	600
29.0 "	Lock	3.6	810

Removal:—Starter sleeve mounted on right front face of flywheel housing. To remove, take out pilot mounting screw in flywheel housing.

Starting Switch: Auto-Lite SS-4001. Magnetic type. Mounted on starter, controlled by pushbutton on instrument panel.

For complete data, refer to Electrical Equipment Index.

STARTER
DELCO-REMY

Delco-Remy Model 664. Armature No. 1866090.
Drive—Outboard Bendix Type RCD10FXTD.
Rotation—Counter-clockwise at commutator end.
Brush Spring Tension—36-40 ounces.
Cranking Engine—125 R.P.M., 240 amps. 4.75 volts.

Performance Data—Delco-Remy

Torque	R.P.M.	Volts	Amperes
0 ft. lbs.	3000	5.0	70
19 "	Lock	3.0	500

Removal:—Starter sleeve mounted in right front face of flywheel housing. To remove, take out pilot mounting screw in flywheel housing.

Starting Switch: Delco-Remy No. 1541. Magnetic type on starter field frame. Controlled by pushbutton on instrument panel.

For complete data, refer to Electrical Equipment Index.

Delco-Remy 1541 Switch Specifications

Contacts close with current draw of 3.1-3.7 amperes at 4.0 volts. Remain closed with current draw of .54-.65 amperes at .7 volt.

GENERATOR
AUT -LITE

Auto-Lite Model GCE-4803A. Armature No. GBX-2035F. Two brush, straight shunt type with external voltage and current regulation. Ventilated by fan on drive pulley.

Maximum Charging Rate—30 amperes (cold), 8.0 volts, 1500 R.P.M. and above with load or discharged battery (Current Regulator setting). Actual charging rate controlled by Voltage Regulator and is dependent on battery condition.

Charging Rate Adjustment—No adjustment on generator. See Regulator Section below for settings.

Performance Data—Auto-Lite

Cold			Hot		
Amps.	Volts	R.P.M.	Amps.	Volts	R.P.M.
0	6.4	740	0	6.4	785
4	6.6	830	4	6.6	880
8	6.8	920	8	6.8	975
12	7.05	1015	12	7.05	1070
16	7.25	1100	16	7.25	1165
20	7.5	1190	20	7.5	1275
24	7.7	1280	24	7.7	1385
30	8.0	1400	30	8.0	1580

NOTE—Current reg. limits output to 30 amperes.

Rotation—Counter-clockwise at commutator end.

Brush Spring Tension—64-68 ozs. (new brushes).

Field Current—1.66-1.84 amperes at 6.0 volts.

Motoring Current—5.03-5.57 amperes at 6.0 volts.

Removal & Belt Adjustment: Same as given below.

GENERATOR
DELCO-REMY

Delco-Remy Model 930-F. Armature No. 1866069. Straight shunt, two brush type with external voltage and current regulation. Ventilated by fan on drive pulley.

Maximum Charging Rate—30 amperes at 1650 RPM. Actual charging rate controlled by regulator and dependent on battery condition.

Charging Rate Adjustment—No adjustment at generator. Charging rate controlled by Voltage Regulator and maximum output controlled by Current Regulator. See Control Unit Section below.

Performance Data—Delco-Remy

Generator Cold		
Amperes	Volts	R.P.M.
28	8.0	1450

Rotation—Counter-clockwise at commutator end.
Brush Spring Tension—22-26 ounces.
Field Current—1.8-2.3 amperes at 6.0 volts.
Motoring Current—500 R.P.M., 4.25 amps., 6 volts.

Removal:—Generator mounted on special pivot bracket at left front of engine with fan belt driv . To remove, take out clamp bolt and pivot bolts.

Belt Adjustment:—Attach spring scale by wire looped over generator field frame, loosen pivot bolts and clamp bolt, pull generator away from engine until scale reading is 70-80 lbs.
NOTE—Replace drive belts in matched pairs only

REGULATOR
AUT -LITE

Auto-Lite Model VRP-4008-AP. Current-Voltage Type. Consists of Cutout Relay, Vibrating Voltage and Current Regulator in case on dash.

C NTINUED ON NEXT PAGE

C NTINUED FR M PRECEDING PAGE

NOTE—Regulator case cover is sealed. Serviced on exchange basis if seals not broken.
For complete data, refer to Electrical Equipment Index.

Cutout Relay—Auto-Lite

Cuts In—6.4-7.0 volts Cold.
Cuts Out—.5 ampere Min., 3.0 amperes Max. Cold.
Contact Gap—.015" minimum.
Air Gap—.034" Min., .038" Max. with contacts open. Measure at hinge end of core.

Voltage Regulator—Auto-Lite

Setting—7.5-7.8 volts at 70°F. (Before Serial No. 8R-000001), 7.3-7.6 volts at 70°F. (After No. 8R-000001). **See Electrical Equipment Section for complete settings and changes.**

To Check (Without Breaking Seals)—Connect ammeter in charging line at 'B' terminal on regulator, connect voltmeter between 'B' & 'GD' terminals. Operate generator, charging fully charged battery, at speed equivalent to 30 M.P.H. car speed. Voltage should be within limits of 7.4-7.8 volts (Before No. 8R-000001), 7.21-7.83 (after). **See Setting above.**

T Adjust (with cover removed)—Change armature spring tension slightly by bending lower spring hanger. See Electrical Equipment Section for data.

Contact Gap—.010" Min., .020" Max. with armature against stop pin.

Air Gap—.0595-.0625" with contacts just opening.

Current Regulator—Auto-Lite

Setting—29-31 amperes (marked '30' on cover).

To Check (Without Breaking Seals)—Connect meters as for Voltage Regulator test. Operate generator at 30 M.P.H. car speed, add load (use bank of headlamp bulbs or turn on lights and discharge battery) so that generator will charge at peak rate and bring Current Regulator into action. Charging current should not exceed 30 amperes. If more than slight excess noted, Current Regulator is defective.

Adjustment, Contact Gap, Air Gap—Same as for Voltage Regulator (above).

REGULATOR

DELC -REMY

Delco-Remy Model 5811, Double Core Type Voltage & Current Regulator (With 'IGN' Terminal). Cutout Relay and vibrating type Voltage & Current Regulators in a single case on the dash.
For complete data, refer to Electrical Equipment Index.
NOTE—Cover of regulator case is sealed. Units can be checked without breaking seal. Seal must be broken to make adjustments (voids warranty).

Cutout Relay—Delco-Remy

Cuts In—6.9-7.6 volts.
Cuts Out—4 ampere maximum discharge current.
Contact Gap—.018-.025".
Air Gap—.018-.022" with contacts closed.

Voltage Regulator—Delco-Remy

Setting—7.55-7.85 volts at 70° F., 7.45-7.55 volts at 150° F. Regulator is over-compensated for temperature and must be checked at these points.
Checking—To check without breaking seal, disconnect lead at 'IGN' terminal on case, connect jumper between 'IGN' and 'BAT' terminals, connect ammeter in charging line at 'BAT' terminal, connect voltmeter between 'IGN' terminal and ground. Operate generator at 2800-3400 R.P.M., adjust charging rate to 8-10 amperes, check voltage.
To Adjust—Remove cover (seal must be broken). Set regulator by bending spring hanger at lower end of armature spring until performance is as shown above (replace cover to check performance).
NOTE—All voltage regulator readings must be taken with cover in place. Cycle generator before taking readings by decreasing speed until Cutout Relay Contacts open and then increasing speed to original point.
Contact Gap—.015-.025".
Contact Spring Tension—3.5 ozs. minimum.
Air Gap—.060-.070" between armature and core with armature down so that fiber bumper just touches stop, .008-.013" between fibre bumper and stop with armature up.

Current Regulator—Delco-Remy

Setting—28-30 amperes.
Checking—To check without breaking seal, disconnect 'IGN' lead at regulator case, connect test ammeter in charging line at 'BAT' terminal. Operate generator and increase speed until output is constant. Must not exceed setting as given above.
NOTE—Do not allow voltage to exceed 8.5 volts with regulator inoperative.
To Adjust—Remove cover (seal must be broken). Set regulator by bending spring hanger at lower end of armature spring until correct setting is secured (replace cover to check performance).
Contact Gap—.015-.025".
Contact Spring Tension—3.5 ozs. minimum.
Air Gap—.070-.080" between armature and core with armature down so that fiber bumper just touches stop. .008-.013" between fibre bumper and stop with armature up.
NOTE—Repolarize generator whenever Control Unit is disconnected or removed by connecting jumper between 'GEN' and 'BAT' terminals momentarily after all leads have been connected.

LIGHTING

LIGHTING:—Headlamps—Hall, Flex beam, pre-focused type with special non-interchangeable lenses marked 'Left' and 'Right'. 'Passing' beam (upper beam right hand headlamp, lower beam left hand headlamp) obtained with Foot Selector switch with Lighting Switch in 'Country Driving' (upper beams both lamps) position.
Headlamp Beam Indicator—Separate beam indicator for each beam position (1-Park, 2-City, 3-Drive, 4-Pass), located on instrument panel. (Drive and Pass in Gasoline gauge group, City and Park in Ammeter group).

Switches

Lighting—Delco-Remy Model 480-M.
Foot Selector—D-R Model 471-T, U (RHD).

Bulb Specifications

Position	Candlepower	Mazda No.
Headlamp—Right	32-32	2330
Headlamp—Left	32-21	1104
Parking, Fender	1½	55
Instrument, Panel, Tail	3	63
Stop	15	87
Indicator, Radio	1	51

MISC. ELECTRICAL

THERMOSTATIC RELAY:—Thermostatic arm type current limit relay. Mounted on lighting switch. Not adjustable. Contacts open with current load of 38 amperes at 70° F.

FUSES:—Accessory—20 ampere on lighting switch.
Tail Lamp—20 amp. in connector by lighting switch.
Stop Lamp—20 amps. in connector near gasoline gauge dash unit.
Radio—15 ampere, in feed wire.

HORNS:—Sparton Model 6-D-30. Vibrator type, Air tone, twin horns operated by horn relay.
Air Gap—.032-.035" (low note—long air column), .026-.030" (high note—short air column).
Horn Current—22-25 amperes (total).

Horn Relay:—R.B.M. Model 10072. Current draw .4-.55 amperes at 6.0 volts. Coil resistance 11-14 ohms. Contacts must close with relay in inverted position.
Closing Voltage—2.75-4.0 volts.
Contact Gap—.015-.025". **Air Gap** .010-.020" (closed).

ENGINE

ENGINE SPECIFICATIONS:—Type—Own make. 12 cylinder, 67° Vee, modified 'L' head. Both blocks and upper crankcase cast Enbloc.
Bore—3 7/16". **Stroke**—4¼".
Displacement—473 cu. ins. **Rated HP.**—56.7.
Developed Horsepower—175 HP. (Std. 6.4 head), 180 HP. (Optl. 7.0-1 head) at 3200 R.P.M.
Compression Ratio & Pressure—All cylinder heads aluminum. Ratios and pressure at 125 RPM. (cranking speed) as follows:

	Ratio	Pressure
Standard	6.4-1	110 lbs.
Optional	7.0-1	119 lbs.

See Packard Shop Notes for Cylinder Head data.
Vacuum Reading—18-20" at 375 R.P.M. or 8 M.P.H.

PISTONS:—Nelson Bohnlite, aluminum alloy, Invar strut, split skirt type, tin-plated. Recondition cylinders to take finished replacement pistons.
Weight—22 ozs. (stripped), 28.7 ozs. (with rings and pin). **Length**—4.318" (2.336" pin center-line to top.)
Removal—Pistons removed through top of engine, rods from below (push pistons up until pin is exposed, remove locking ring, push out pin, lift pistons out, lower rods and remove from below. Removal will be easier if engine is warm.
Clearance—Skirt .0015". See Fitting New Pistons.
Replacement Pistons:—*See Packard Shop Notes for data.*
Fitting New Pistons:—Use .0015" feeler, ½" wide, inserted between piston and cylinder wall on side opposite slot. Pull to withdraw feeler 12-18 lbs.
Installing Pistons:—Slot toward valves (all pistons).

PISTON RINGS:—Three compression, one oil control ring per piston, all above pin. Oil ring groove drilled with twelve ⅛" oil drain holes.

Ring	Width	End Gap	Side Clearance
Comp. (1 & 2)	⅛"	.007-.012"	.0025-.003"
Comp. (#3)	⅛"	.007-.012"	.0015-.002"
Oil (X90-85)	5/32"	.007-.015"	.0015-.002"

NOTE—On right bank, install #1 and 3 rings with gap toward camshaft, #2 and 4 away from camshaft. Reverse order on left hand bank.

PISTON PIN:—Diameter ⅞". Length—2 63/64".
Pin floats in piston and rod. Held by locking ring at each end. Pin hole in rod bronze-bushed.
Pin Fit in Piston—Finger push fit with piston heated to 160°F.
Pin Fit in Rod Bushing—.0002" clearance or thumb push fit with both parts at room temp. (70°F).

ENGINE

CONTINUED FROM PRECEDING PAGE

CONNECTING ROD:—**Weight 38¼ ozs. Length 9".**
Crankpin Journal Diameter—2½".
Lower Bearing—Removable steel-backed, copper-lead alloy lined type. No shims. Bearings furnished std., and .001", .002", .003", .005" undersize.
Clearance—.001-.0015". **Sideplay**—.008-.010".

Bearing Adjustment:—None (no shims). Replace bearings. Do not file rods or caps.

Installing Rods:—Install all rods with oil squirt hole toward right or starter side of engine.

CRANKSHAFT:—Four bearing. Bolted counterweights.
Journal Diameters—2¾" all bearings.
Bearing Type—Removable steel-backed, babbitt-lined. No shims.
Clearance—.001-.002".

Bearing Adjustment:—None (no shims). Replace bearings (upper halves can be rotated in place). Do not file bearing caps.

End Thrust:—Taken by #1 front bearing. Endplay .003-.005".

CAMSHAFT:—Four bearing. Between banks directly above crankshaft. Non-adjustable chain drive.
Bearing Type—Steel-backed, babbitt-lined.
Clearance—.001-.0015". (#1, 4), .002-.0025" (#2, 3).
Endplay—.002-.006".

Timing Chain:—Morse, No. 1866. Width 1¾". Pitch .500". Length 28" or 56 links.
NOTE—Engine must be supported at front end and front casting (engine support, chain case cover, generator and water pump mounting) removed for work on chain or sprockets. Remove fenders and radiator as an assmbly.

Camshaft Setting—Sprockets marked. Mesh chain with sprockets turned so that marks are adjacent and in line with straightedge across shaft centers. Install chain endless with both sprockets off engine.

VALVES:—	Head Diam.	Stem. Diam.	Length
Intake	1 41/64"	.3405"	6.550"
Exhaust	1 21/32"	.338"	6.550"

	Seat Angle	Lift	Stem Clearance
Intake	45°	.3125"	.0025"
Exhaust	45°	.3125"	.005"

Automatic Tappet Take-up:—Must be bled and blocked open when valves are ground and initial clearance must be checked afterward. Clearance must be .030-.045".
See Miscellaneous Section for complete data.

Valve Springs—Install springs with painted end down and close-spaced first coil toward valve head. Special 1/32" higher stem keeper furnished to compensate for loss of pressure caused by valve reseat'g.

	Spring Pressure	Length
Valve Closed	70 lbs.	2 7/32"
Valve Open	140 lbs.	1 29/32"

VALVE TIMING

Tappet Clearance—None (automatic take-up).

Valve Timing:—See camshaft setting above.
Intake Valves—Open at TDC. Close 45° ALDC.
Exhause Valves—Open 35° BLDC. Close 10° ATDC.
To Check Valve Timing—Intake valve for #1 (front cylinder, right bank) begins to open with piston on top dead center when '#1R-UDC' mark on dampener lines up with pointer on chain case cover. Removal of right cylinder head and dial indicator mounted over valve recommended to check opening.

LUBRICATION

LUBRICATION:—Pressure type. Gear type oil pump mounted in crankcase. Oil filter and temperature regulator mounted at right of engine.
Normal Oil Pressure—5 lbs. idling, 55 lbs. max.

Oil Pressure Regulator—Under acorn nut on right side of crankcase below filter.
Adjustment—Remove acorn nut, turn slotted screw in to increase pressure.

Crankcase Capacity—10 quarts.

CLUTCH

CLUTCH:—Long Model 12CB-CL. Single plate, dry disc type with Bendix Vacuum Power operation.
See Clutch Section for complete data.

Facings—Hyco DV-3903PDX, 2 required. Inside Diameter 7". Outside Diameter 12". Thickness .137".

Pedal & Vacuum Booster Adjustment—Free movement of pedal should be 1-1½". To adjust, remove floor boards, operate clutch 10 times, see that pedal is against toeboard spring when engaged. Loosen lockscrew at lower end of pedal in front of shaft, pull forward on front lever and rearward on middle lever until all clearance is at front of connecting pin at lower end of levers, tighten lockscrew. Depress clutch pedal exactly 1 13/16" and hold in this position, loosen locknut on clutch rod at clutch fork end, turn adjusting nut until throw-out bearing just contacts clutch release levers, tighten locknut.

Removal:—Remove transmission (see Transmission Removal below), take out clutch cover mounting screws.

TRANSMISSION

TRANSMISSION:—Own—Constant mesh helical gears (all forward speeds), Synchronized shift (second and high).
See Transmission Section for complete data.

Removal:—Remove ground cable, speedometer cable, propeller shaft, light switch, two stud nuts (case bracket to rubber support) at each side, hand brake cable at equalizer, left stabilizer link, clutch pedal pull-rod, and pedal spring. Support engine at rear. Remove right brace rod (rear only), lower crossmember, and bell housing nuts and capscrews. Jack up rear of engine, remove two bolts on each side (holding vertical support members to frame), remove support members, pull transmission back and remove.

UNIVERSALS

UNIVERSAL JOINTS:—Spicer. Roller bearing type. 2 used.
See Universals Section for complete data.

REAR AXLE

REAR AXLE:—Own make. Semi-floating, 'Angle-set' hypoid gear type with Hotchkiss drive.
See Rear Axle Section for complete data.

Ratio—4.41-1 Std., 4.06-1 and 4.69-1 Optl.

Backlash—.003-.005". Screw adjustment (back off one nut, tighten other nut equal amount with bearings correctly adjusted). Pinion setting controlled by shims furnished .005", .008", .015" thick.

Removal:—Disconnect drive shaft at rear universal, remove wheels and hubs, backing plate (disconnect brake line), axle shafts. Take off differential carrier bolt nuts on flange and stud nuts at top (at rear of housing), remove differential carrier without disturbing housing.

Wheel Bearing Adjustment:—Remove wheel and hub asembly, backing plate (disconnect brake line), pull axle and bearing assembly, add or remove shims behind inner bearing race, use gasket paste on inner face of bearing cap when replacing.
Endplay—.003" plus or minus .001" and equal for both wheels.

SHOCK ABSORBERS

SHOCK ABSORBERS:—Delco, Model 1952-A, B (front), 2006-G, H (rear). Double acting, hydraulic type.
See Shock Absorber Section for complete data.

FRONT SUSPENSION

Front Suspension:—Packard Safe-T-Flex, independent type.
See Front Suspension Section for complete data.

NOTE—Data below applies with car on level floor and car loaded to 300 lbs. (front seat—all models), 225 lbs. (rear—Coupe), 375 lbs. (rear—5 Passenger), 675 lbs. (rear—7 & 8 Passenger Models).

Front Suspension Height—20 7/16" plus or minus ¼" from top of cross-member to floor at spring.

Kingpin Inclination—1°30' crosswise.

Camber—1° plus or minus ¼°. Adjustable

Caster—0° plus 0 or minus ½°. Adjustable.

Toe In—1/16" plus or minus 1/16". Adjustable.

STEERING GEAR

Steering Gear: Packard (Gemmer design Model 375) Worm-and-Roller type with push-pull adjustments and center steering. See Gemmer Model 375 article.
See Steering Gear Section for complete data.

BRAKES

BRAKES:—Service—Bendix hydraulic duo-servo, single anchor type with Vacuum Power operation. Hand lever applies rear service brakes.
See Brake Section for complete data.

Wheel Cylinders—1¼" Diam. (front), 1⅛" (rear).

Drum Diameter—14". Centrifuse drums.

Lining—U. S. Asbestos #714 or Raybestos #451 (primary), U. S. Asbestos #589 (secondary). Width 2¾". Thickness ¼". Length 15" per shoe.

Clearance—.010" at heel and toe of each shoe.

NOTE—Heavier (yellow) retracting spring must be attached to primary, lighter (blue) spring to secondary shoe.

Hand Brake:—See Service Brakes above.

Vacuum Power Unit:—Bendix internal valve type Vacuum Cylinder linked to brake pedal lever.
See Brake Section for complete data.

MODEL IDENTIFICATION

SERIAL NUMBER:—On front of dash (use engine number).

ENGINE NUMBER:—First number A-1336. Stamped on boss on left side of engine block at upper rear end.

TUNE-UP

COMPRESSION:—Ratio—6.52-1 Std. 7.05-1 Optl.
Pressure—110 lbs. (Std. 6.52-1 hd.), 120 lbs. (Optl. 7.05-1 hd.) at 125 RPM. cranking speed.

VACUUM READING:—18-20" steady reading with engine idling at 6-8 MPH.

FIRING ORDER: 1-5-3-6-2-4. See diagram.

SPARK PLUGS: AC No. 104 or Champion Y-4. 10 mm.
Gaps—.028". Limits .0255-.0305".
Use AC No. 103S or early Y-4 where slightly colder plug required (new Y-4 has longer center electrode).
NOTE—These are 10 MM. Metric plugs. When installing plugs, use only 50 inch pound pressure (10 lb. pull on 5½" wrench).

IGNITION: See Coil, Condenser, and Distributor.
Breaker Gap—.020". **Cam Angle**—35° Closed.
Automatic Advance—9½° at 2000 RPM (distr.).
Vacuum Advance—7½° (distr.) with 15-19" vacuum.

IGNITION TIMING: See Ignition Timing.
Std. Setting—4-6° BTDC (aluminum heads), 5-6½° BTDC (Optl. HC iron head). Flywheel mark (correct degree mark ahead of #1UP.DC) aligned with inspection hole pointer (on left side under starter).

CARBURETION: See Carburetor & Carb. Equipment.
Idle Setting—Set idle adjusting screw midway between "miss" and "roll" points. Idle speed 8 MPH.
Float Level—Fuel level 17/32" below edge of bowl.
Accelerating Pump—Center Hole—Normal Setting.
Fuel Pump Pressure: 4 lbs. maximum.

MANIFOLD HEAT CONTROL:—Thermostatic coil type. Make certain that valve operates freely with thermostatic coil resistance only. Do not oil this control.

VALVES: See Valve Timing.
Tappet Clearance—.007" Int., .010" Exh. (hot).

STARTING: See Battery, Starter, Generator, Regulator.

IGNITION

IGNITION SWITCH: Delco-Remy No. 1116254. Connected to coil by armored cable.
Ignition Lock—Briggs & Stratton No. 50184 (Lock Cylinder). **Key Series**—P1251-P1500. **Groove**—#2.

COIL: Delco-Remy Model 539-N. On left side of block.
Ignition Current—½ ampere idling, 2½ stopped.

CONDENSER: Delco-Remy No. 1869704.
Capacity—.20-.25 microfarad.

DISTRIBUTOR: Delco-Remy 1110203. Single breaker, 6 lobe cam, full automatic advance with vacuum spark control and Fuel Compensator adjustment.
Breaker Gap—.020". Limits .018-.024".
Cam Angle or Dwell—35° (closed), 25° (open).
Breaker Arm Spring Tension—20 ounces.
Rotation—Counter-clockwise viewed from top.

Automatic Advance

Distributor Degrees	Distributor R.P.M.	Engine Degrees	Engine R.P.M.
Start	300	1.5	600
4.75	800	9.5	1600
9.5	2000	19	4000

Vacuum Spark Control D-R 681-K. Integral with distributor. Mounted on housing and linked directly to breaker plate. Provides additional advance at speeds above idling (vacuum port in carburetor above throttle) except when engine accelerated or operated with wide open throttle when spark is retarded by return spring within unit. Total plunger travel 9/64".

Vacuum Advance

Distr. Degrees	Eng. Degrees	Vacuum (" of HG)
Start	0°	5-7"
7.5°	15°	15-19"

Fuel Compensator. Manual adjustment at distributor providing 10° advance or retard from center '0' position. See Ignition Timing for setting.

Distributor Removal:—Mounted on left side of engine at center. To remove, disconnect vacuum line, take out hold-down screw in advance arm.

IGNITION TIMING

IGNITION TIMING:—Standard setting for all engines as follows (see Fuel Compensator setting below).

	Flywheel Degrees	Piston Position
All heads	4-6° BTDC	.0064-.0149" BTDC.
Replmt. HC head	.5-6½° BTDC	.0103-.0174" BTDC.

Replacement HC heads—Cast-iron heads only available for replacement (original HC heads are aluminum).

To Set Timing—Remove inspection hole cover on left front face of flywheel housing below starter. Loosen thumbnut and set Fuel Compensator pointer at zero (center graduation) on scale, tighten thumbnut. With #1 piston on compression, turn engine over until correct graduation on flywheel before top dead center mark '#1 UP D.C.' lines up with

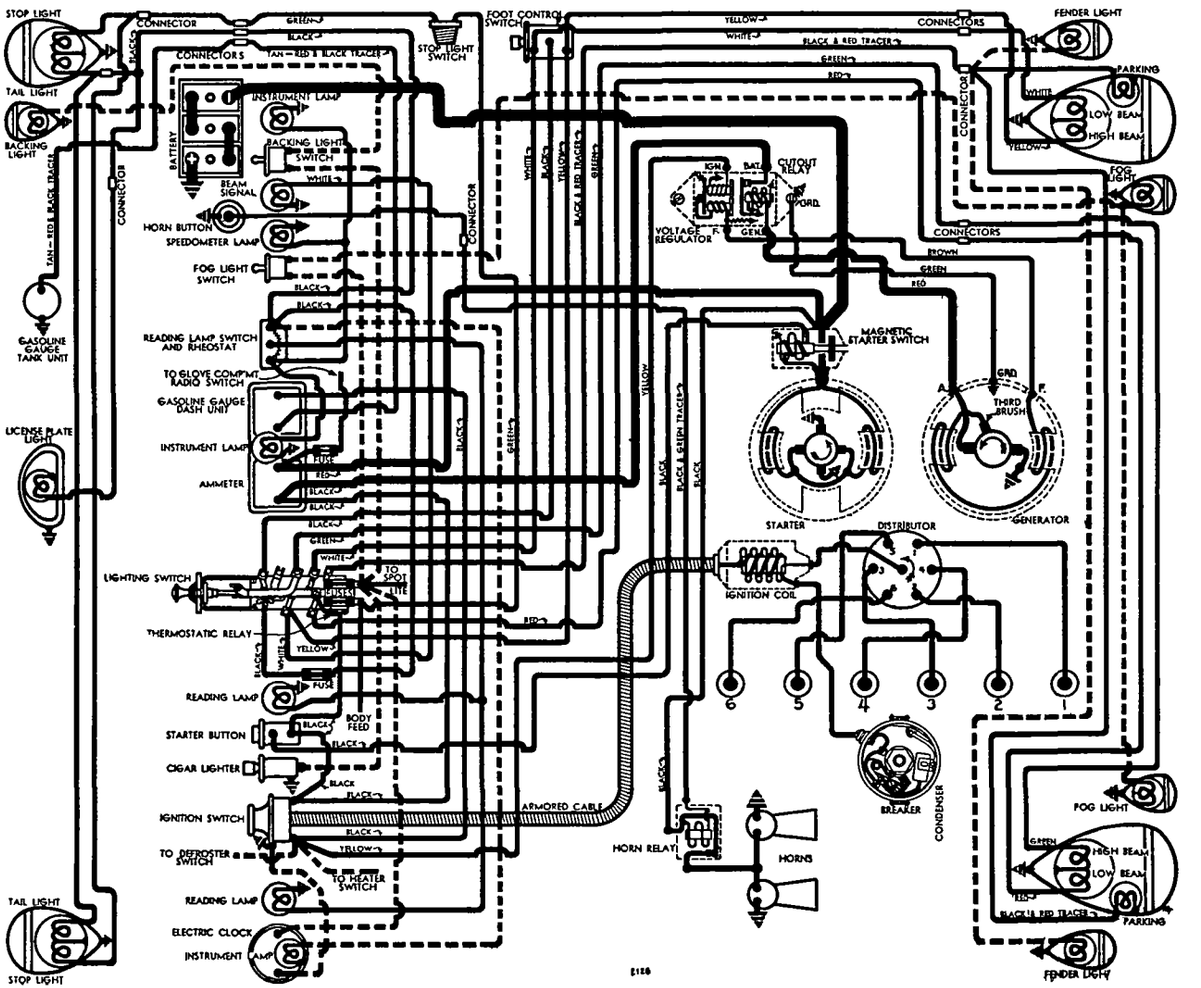

pointer n housing. Loosen advance arm clamp bolt, rotate distributor until contacts begin to open, tighten clamp bolt, see that rotor opposite #1 segment in distributor cap, adjust Fuel Compensator if required by grade of fuel used.

Timing (Neon Timing Light)—White mark provided on flywheel to indicate timing range for standard head (4½-6° BTDC.—leading edge of mark is 6° BTDC.). Mark flywheel similarly for optional high compression head when used.
NOTE—Flywheel marked '#1 UP D.C.' at top dead center position with five 2° graduations before and after this point.

Fuel Compensator—Should be adjusted to eliminate excessive 'ping' caused by use of low-octane fuels. To adjust, loosen thumbnut, rotate distributor and pointer counter-clockwise toward 'low' end of scale to retard spark, clockwise toward 'high' end of scale to advance spark. Tighten thumbnut after adjusting.

CARBURETOR

Holley (Chandler-Groves) Model A0C-2 (Early '38), Model AOC-25 (for Late 1938 Cars). 1¼" single barrel, downdraft type with Automatic Choke.
Code Mark Identification—AOC-2 marked 1-AD or 1-BA on spacer above idle needle. AOC-25 marked 119-1, 119-3, or 119-4 on die cast metal directly over idle adjusting needle.
IMPORTANT—Car manufacturer recommends that code 119-1 ('38) carburetors be re-worked. *Refer to Carburetor Index for carburetor article covering these carburetors.*
Idle Adjustment—With engine warmed up so that Automatic Choke and Fast Idle inoperative, set throttle stopscrew so that engine idles at 8 MPH., turn idle adjusting screw out until engine begins to roll, then turn screw in slowly until engine fires smoothly. Readjust stopscrew for correct idling speed.
Accelerating Pump Setting—Three holes in throttle lever for pump link engagement as follows:
Inner (Min. Stroke)—High-test gas, hot weather.
Center Hole—Normal temperatures and fuel.
Outer (Max. Stroke)—Low-test gas, cold weather.
Fast Idle:—Part of carburetor assembly.
For complete data, refer to Carburetion Equip. Index.
Automatic Choke:—Part of carburetor assembly.
For complete data, refer to Carburetion Equip. Index.

CARB. EQUIPMENT

Air Cleaner:—AC #1528585 heavy duty oil-bath type.
NOTE—AC #844751 oil-wetted type air cleaner used on oil filler (crankcase breather).
Gasoline Gauge:—Stewart (Stewart-Warner) Electric S-W No. 96381 (dash unit), 96466 (tank unit).
For complete data, refer to Carburetion Equip. Index.
Fuel Pump:—AC Type AJ #1523629 combination fuel-and-vacuum pump standard.
For complete data, refer to Carburetion Equip. Index.

BATTERY

BATTERY:—Willard, Type WT-1-95. 6 volt, 15 plate, 95 ampere hour capacity (20 hour rate).
Starting Capacity—117 amperes for 20 minutes.
Zero Capacity—300 amperes for 3.1 minutes. Five second voltage—4.17 volts.
Grounded Terminal—Positive (+) terminal grounded to frame 'X' member. **Engine Ground**—Strap connector from left rear transmission cover bolt to frame 'X' member.
Dimensions—Width 7 1/16". Length 8 15/16". Height 8 13/16".
Location—On left side under front seat.

STARTER

Delco-Remy Model 739-F. Armature No. 1866105.
Drive—Outboard Barrel type Bendix No. A-1718.
Rotation—Counter-clockwise at commutator end.
Brush Spring Tension—24-28 ounces each.
Cranking Engine—125 RPM., 150 amperes, 5 volts.

Performance Data

Torque	R.P.M.	Volts	Amperes
0 ft. lbs.	5000	5.0	65
12 ft. lbs.	Lock	3.37	525

Removal:—Flange mounted on left front face of flywheel housing. To remove, take out flange mounting screws, lift out starter and switch assembly.
Starting Switch: Delco-Remy 1539 Magnetic switch on starter, and controlled by pushbutton on dash.
For complete data, refer to Electrical Equipment Index.

Delco-Remy 1539 Starter Switch Specifications
Contacts close with current draw of 3.1-3.7 amperes at 4.0 volts. Remain closed with current of .54-.65 amperes at .7 volt.

GENERATOR

Delco-Remy Model 1100005. Armature No. 1866789. Fixed third brush control type with external vibrating voltage regulator. Ventilated by fan on drive pulley.
NOTE—Third brush is clamped in position for maximum safe output and must not be disturbed.
Charging Rate Adjustment—Adjusted by changing setting of regulator. See Regulator data below.
Maximum Charging Rate—As given in table below. To check charging rate, connect test ammeter in line at 'BAT' terminal on regulator, connect voltmeter between 'GEN' terminal and ground, ground 'F' terminal to eliminate regulator action.
NOTE—Do not operate generator on open-circuit.

Performance Data

	Amperes	Volts	R.P.M.
Cold	26-30	8.0	3400
Hot	25-28	8.0	3600

Rotation—Counter-clockwise at commutator end.
Brush Spring Tension—22-26 ounces (main brushes), 16-20 ounces (third brush).
Field Current—2.3-2.6 amperes at 6.0 volts.
Motoring Current—4.5 amperes at 6.0 volts.
Removal:—Pivot mounted at left front of engine. To remove, take out pivot and clamp bolts.
Belt Adjustment:—Loosen clamp bolt and pivot bolts, pull generator out from engine (use spring scale hooked to clamp bolt in top lug of generator) until reading of 25 lbs. secured.

REGULATOR

Delco-Remy Model 5827. Double Core Type Voltage Regulator (With 'IGN' Terminal). Cutout Relay and vibrating type Voltage Regulator in single case on on left side of engine dash.
REPLACEMENT NOTE—Delco-Remy Model 5860 Voltage Regulator (no IGN terminal) used for service.
For complete data, refer to Electrical Equipment Index.

Cutout Relay
Cuts In—6.9-7.6 volts, 850 Generator RPM.
Cuts Out—3 amperes max. at 6.3 volts.
Contact Gap—.020". **Air Gap**—.020" (closed).

Voltage Regulator
Setting—7.5-7.9 volts at 70°F., 7.4-7.6 volts at 150° F. Regulator is over-compensated for temperature and must be checked at these points.
Adjustment—Disconnect lead on 'IGN' terminal of regulator, connect jumper between 'IGN' and 'BAT' terminals, connect test ammeter in charging line at 'BAT' terminal, connect voltmeter between 'IGN' terminal and ground. Operate generator at 2800-3000 R.P.M., adjust charging rate to 8-10 amperes, change regulator armature spring tension by bending spring hanger at lower end of spring slightly until setting is as given above.
NOTE—Regulator cover must be in place when tests are made. Do not operate generator on open-circuit.
Contact Gap—.020".
Contact Spring Tension—2.7-3.5 ounces.
Air Gap—.063" between the armature and center of core with armature down and fibre bumper touching stop; .010" between the fibre bumper and stop with armature up.

LIGHTING

LIGHTING:—Headlamps—Hall 'Flex-beam', pre-focused type with special non-interchangeable lenses (marked Right and Left). Asymetrical Passing Beam (lower beam left hand headlamp, upper beam right hand headlamp) controlled by foot selector switch.
Headlamp Adjustment—With car fully loaded, tires properly inflated, on level floor 25' from screen, and upper beams lighted (switch in 'Country Driving' position), aim left hand headlamp so that hot spot is centered on vertical lamp-center-line with top cut-off at lamp center height horizontal line. Aim right hand headlamp for same height but with left edge of hot spot at vertical lamp-center-line (entire hot spot to right of this line). Right hand headlamp may be turned slightly more toward right if this setting provides a passing beam which is too blinding. Headlamps adjusted by loosening nut on mounting bracket under lamp.
Beam Indicator—Located on face of speedometer dial. Lighted whenever upper beam (Country Driving) in use.

Switches
Lighting—Delco-Remy No. 1994504.
Foot Selector—Delco-Remy No. 1997001.

Bulb Specifications

Position	Candlepower	Mazda No.
Headlamps	32-32	2330
Parking, Fender, Instrument	1½	55
Beam & Heater Indicator	1	51
Stop & Tail	21-3	1158
License	3	63
Dome	6	81
Fog Light	32	1321

NOTE—Cars with trunk rack use separate stop and tail light bulbs as follows: Stop Light 15 cp. Mazda #87, Tail Light 3 cp. Mazda #63.

CONTINUED ON NEXT PAGE

CONTINUED FROM PRECEDING PAGE

MISC. ELECTRICAL

THERMOSTATIC RELAY:—Mounted on lighting switch (part of switch assembly). Contacts remain closed with 25 ampere current but open within one minute with 38 ampere current (70°F). Non-adjustable (adjustment is sealed).

FUSES:—Fuse Block No. 1868292. Mounted on lighting switch. Two 20 ampere fuses. Protects following circuits:

Right Hand Fuse—Stop light & Body lights.
Left Hand Fuse—Accessories (Cigar Lighter, Heater, Defroster, Fog Light, etc.).

Instrument & Tail Lamp—20 ampere fuse in connector in instrument switch lead near lighting switch.

Radio—15 ampere in feed wire.

Clock—2 ampere (Borg), 1 ampere (Western).

HORNS:—Sparton Model 1-E-30. Vibrator type, Air tone ,twin horns operated by horn relay.

Air Gap—.032-.035" (low note—long air column), .026-.030" (high note—short air column).

Horn Current—22-25 amperes (total).

NOTE—Klaxon horns also used.

Horn Relay:—R.B.M. Model 790.

Closing Voltage—2.75-4.0 volts.

Contact Gap—.015-.025". **Air Gap** .010-.020" (closed).

NOTE—Late type relays have cover welded in place and are not adjustable.

ENGINE

ENGINE SPECIFICATIONS:—6 cylinder, 'L' head.
Bore—3½". **Stroke**—4¼".
Displacement—245.3 cu. ins. **Rated HP.**—29.4.
Developed Horsepower—100 HP. (Std. 6.52-1 head), 103-105 HP. (Optl. 7.05-1 head) at 3600 R.P.M.
Compression Ratio and Pressure—As follows:
6.52-1 Std. cast-iron hd. 110 lbs. at 125 R.P.M.
7.05-1 Optl. aluminum hd. 120 lbs. at 125 R.P.M.
Vacuum Reading—18-20" idling at 6 M.P.H.
See Packard Shop Notes for Cylinder Head data.

PISTONS:—Nelson Bohnalite, aluminum alloy, autothermic, strut type, tin plated, cam ground.
Weight—19.5 ozs. (stripped), 26 ozs. (with rings and pin). **Length**—3⅞".
Removal—Pistons and rods removed from above.
Clearance—Skirt .0015". See Fitting New Pistons.

Original Bore & Piston Size, Replacement Pistons:—***See Packard Shop Notes for complete data.***

Fitting New Pistons:—Insert .0015" feeler ½" wide between piston and cylinder wall on side opposite slot. Pull to withdraw feeler 12-18 lbs.

Installing Pistons:—Slot toward valves.

PISTON RINGS:—Two compression (Perfect Circle #70), one oil control (#X-90-85) per piston, above pin. Lower ring groove drilled with twelve 5/32" oil drain holes. Rings furnished standard and .005", .010", .020", .030" and .040" oversize.

Ring	Width	End Gap	Side Clearance
Compr.	.1235-.1240"	.007-.015"	.0025-.003"
Oil Cont.	.1860-.1865"	.007-.015"	.0015"

NOTE—Install #1 and #3 ring with gap away from valves, #2 compression ring gap toward valves.

PISTON PIN:—Diameter—⅞". Length—3 1/64".
Pin floats in piston and rod, held by locking rings. Furnished std. and .003", .006" oversize. See Connecting Rod Upper Bearing below.

Pin Fit in Piston—Finger push fit with piston heated to 160°F.

Pin Fit in Rod Bushing—Finger push fit at 70°F. Finish ream pin hole to .87485-.87515".

CONNECTING ROD:—Weight 31.6 oz. **Length** 7 11/16".
Upper Bearing (Piston Pin Bushing)—Split type. ***See Packard Shop Notes for bushing installation.***
Crankpin Journal Diameter—2 3/32".
Lower Bearing—Interchangeable steel-backed, babbitt-lined type. Bearings furnished std. and .001", .002", .003", .015" undersize (marked with size).
Clearance—.0005-.0015". **Sideplay**—.004-.010".

Bearing Adjustment:—None. Replace bearings.

Installing Rods:—Oil squirt hole to camshaft.

CRANKSHAFT:—4 bearing, integral counterweights with rubber friction disc vibration damper mounted on forward end.
Journal Diameters—2¾".
Bearing Type—Interchangeable babbitt-lined steel shell type. Bearings furnished standard and .001" and .002" undersize.
Clearance—.001-.003".

Bearing Adjustment:—None (no shims). Replace bearings. Upper halves may be rotated in place.

End Thrust:—Taken by #1 bearing.
Endplay—.003-.008".

CAMSHAFT:—4 bearing. Non-adjustable chain drive.
IMPORTANT NOTE—2 types of camshafts used:
1938—Cast Alloy Iron on engines with letter "A" following engine number. Use only cast alloy oil pump drive gear with this camshaft.
1938—Forged Steel on engines with letter "B" following engine number. Use only chilled iron valve lifters (DO NOT USE STEEL LIFTERS). Oil pump drive gear must be of same material as shaft.

Bearing Type—Steel-backed, babbitt-lined.
Clearance—.001-.003".

End Thrust:—Taken by thrust plate in back of camshaft sprocket. **Endplay**—.002-.004".

Timing Chain:—Morse 1866 RX. Width 1¼". Pitch .375". Length 21¾" or 58 links.

Camshaft Setting:—Install chain and sprockets together with '0' marks on sprockets adjacent and in line with a straightedge across shaft centers with #1 piston on top dead center.
See Packard Shop Notes for Fender & Radiator Assembly removal for work on front of engine.

VALVES:

	Head Diameter	Stem Diameter	Length
Intake	1.575"	.34025"	5⅝"
Exhaust	1 13/32"	.34025"	5⅝"

	Seat Angle	Lift	Stem Clearance
Intake	30°	.3175"	.002"
Exhaust	45°	.318"	.004"

Valve Guides:—***See Packard Shop Notes for guide change on first cars to correct valve sticking.***

Valve Springs:—Intake and exhaust springs interchangeable. 1937 type springs used on first cars (1938 type only for replacement).

	Spring Pressure	Spring Length
Valve Closed	47-52 lbs.	1⅝"
Valve Open	114-124 lbs.	1 5/16"

NOTE—Serrated washer on top of each spring.

Valve Lifters:—New mushroom type. Remove from below with camshaft out. Ream lifter holes through stem guide. Lifters furnished standard and .001", .002", .005" oversize.

NOTE—Chilled-iron or Steel valve lifters furnished for service. ***Refer to Packard Shop Notes for Valve Lifter Note for proper type to use with 1938 Camshafts.***

VALVE TIMING

Tappet Clearance:—.007" Int., .010" Exh. engine warm.

NOTE—Remove plate in right front fender for valve adjustment.

Valve Timing:—See Camshaft Setting above.

Intake Valves—Open 1° BTDC. Close 39° ALDC.

Exhaust Valves—Open 45° BLDC. Close 5° ATDC.

To Check Timing—Set tappet clearance #1 exhaust valve at .015". This valve should close with piston 5° or .0103" past top dead center when 5° point on flywheel (midpoint between second and third graduations after top dead center mark '#1 UP DC.') lines up with pointer on housing in inspection hole in left front face of flywheel housing below starter. Reset tappet clearance at .010" hot.

LUBRICATION

LUBRICATION:—Pressure system with gear type oil pump mounted on right side of engine.
See Packard Shop Notes for Oil Pump Installation and Oil Pump Drive Gear Type for use with 1938 Camshafts.

Normal Oil Pressure:—35 lbs. at 30 M.P.H. (warm oil)

Oil Pressure Relief Valve:—Mounted on pump cover Not adjustable. Replace spring if pressure less than 5 to 8 lbs at 2".

Crankcase Capacity:—6 quarts (refill).

COOLING

COOLING SYSTEM:—Water Pump. Centrifugal, belt-driven, packless type.
See Water Pump Section for complete data.

Removal—Remove fan belt, disconnect pump hose, remove pump mounting capscrews, lift off pump assembly.

Thermostat: Sylphon inside top radiator tank (part of shutter thermostat assembly). Assembly changed during 1938, first type 165° used on early '38 cars, 150° type on late '38 cars.

HEATER NOTE—Cylinder head thermostat available for cars with water heater. Use only on cars with 150° shutter assembly. Remove thermostat in summer.

Setting (with Cover Mark '165')—Starts to open 150°. Fully open 160-165°. Sylphon marked 13680.

Setting (with Cover Mark '150')—Starts to open 135°. Fully open 150°. Sylphon marked 14480.

Setting (Heater—Cyl. head outlet type)—Marked 162° on strap. Starts to open 160-165°. Fully open 185°

Water Capacity:—15 quarts.

CLUTCH

CLUTCH:—Long Model 9½ CF-CS. Semi-centrifugal, single plate, dry disc type.
See Clutch Section for complete data.

Facings—Woven (U. S. Asbestos No. 733), 2 required. I.D. 6". O.D. 9½". Thickness .125".

Adjustment—Adjust nut on inner pedal rod to give **1½" free travel** (pedal pad to floor board).

Removal:—Remove transmission (see Transmission Removal following). With clutch pedal depressed, insert wedge (ST-879) between each throwout finger and cover (assembly can only be removed when in partially released position). Remove clutch shifter bearing, pedal rod, and cover capscrews (release evenly), then remove assembly from below.

TRANSMISSION

TRANSMISSION:—Own make. Helical gear type with synchronizer for second and high speeds.
See Transmission Section for complete data.

Removal:—Remove floorboards, speedometer cable, ground strap and accelerator pedal. Disconnect propeller shaft at front universal, block shaft up against floor board. Support rear end of engine with jack, unbolt cross-member from frame, disconnect hand brake cable at equalizer, remove flywheel housing lower cover and clutch retracting spring, take out 4 capscrews in transmission mounting flange, pull transmission back and remove.

UNIVERSALS

UNIVERSAL JOINTS:—Mechanics. Model 2C. Needle bearing type. Two used.
See Universals Section for complete data.

REAR AXLE

REAR AXLE:—Own make. Semi-floating, hypoid gear type with Hotchkiss drive. Rear face of differential carrier now vertical (supersedes angular type used previously).
See Rear Axle Section for complete data.

Ratios—4.54-1 Std. 4.36-1, 4.7-1 Optional.

Backlash—.003-.005". Screw adjustment.

Removal:—Remove wheel, hub, and brake backing plate assembly. Withdraw axle shafts. Disconnect rear universal joint and drop drive shaft. Remove nuts on carrier-to-housing bolts and withdraw carrier assembly from housing.

Wheel Bearing Adjustment—Endplay controlled by shims between flanged end of housing and brake backing plate. Adjust by removing backing plate disconnect brake tube clips on housing. Add shims at one wheel only if endplay .050" or below, at both wheels equally if above. Measure with dial indicator against end of shaft. **Endplay**—.002-.005".

SHOCK ABSORBERS

SHOCK ABSORBERS:—Delco. Model 1966-A, B (front), 1751-L, M (rear). Hydraulic, double acting type.
See Shock Absorber Section for complete data.

FRONT SUSPENSION

Front Suspension:—Independent 'Safe-T-fleX' type with coil springs.
See Front Suspension Section for complete data.

NOTE—Data below applies with car on level floor, tires properly inflated and car weighted as follows: 300 lbs. front seat, 375 lbs. (rear—5 pass. bodies), 225 lbs (rear—auxiliary seat coupes).

Front Suspension Height—Distance from floor to top side of frame siderail at spring should be 18¾" plus or minus ¼".

Kingpin Inclination—1°54' crosswise.

Camber—½° plus or minus ½°. Adjustable.

Caster—1½° plus or minus ½°. Shim adjustment.

Toe In—1/32-1/16" measured at hub height. Adjust tie rods equally (rod lengths must be equal after adjustment).

STEERING GEAR

Steering Gear: Packard (Gemmer design Model 330) Worm-and-Roller type with center steering. Refer to Gemmer Model 330 article.
See Steering Gear Section for complete data.

BRAKES

BRAKES:—Service—Bendix, hydraulic, duo-servo, single anchor type. Hand lever applies rear service brakes.
See Brake Section for complete data.

Drum—Centrifuse. Diameter—11".

Lining—Marshall #1915 (primary, SR-600 (secondary) or Marshall #2201 (all). Width 1¾". Thickness 3/16". Length per shoe 12".

Clearance—.010" at heel and toe of each shoe.

Hand Brake Adjustment:—See Service Brakes.

MODEL IDENTIFICATION

SERIAL NUMBER:—On plate on front of dash (use engine number)

ENGINE NUMBER:—First number A-300001. Stamped on left side of crankcase near distributor.

TUNE-UP

COMPRESSION:—Ratio—6.6-1 Std., 7.05-1 Optl. Pressure—110 lbs. at cranking speed of 125 R.P.M. for Std. 6.6-1 head.

VACUUM READING: Steady 18-21" idling at 6 MPH.

FIRING ORDER: 1-6-2-5-8-3-7-4. See diagram.

SPARK PLUGS: AC No. 104 or Champion Y-4. 10 mm. Gaps—.028". Limits .0255-.0305".
Use AC 103S or early Y-4 where slightly colder plug required (new Y-4 has longer center electrode).
NOTE—When installing plugs, use only 50 inch pound pressure (10 lb. pull on 5" wrench.)

IGNITION: See Coil, Condenser, and Distributor.
Breaker Gap—.015". Limit .017" maximum.
Cam Angle—27° Closed with .017" Breaker Gap.
Automatic Advance—8¾° max. at 2000 RPM(distr.).
Vacuum Advance—7½° (IGT-4007), 6° (IGT-4007A) with 17" of vacuum.

IGNITION TIMING: See Ignition Timing.
Std. Setting—6-8° BTDC. (std. aluminum head), 2½-4° BTDC. (Optl. HC aluminum hd.), 8-9½° BTDC. (for replacement iron hds.). Flywheel mark (correct degree mark ahead of #1UP.DC) aligned with inspection hole pointer on left side below starter.

CARBURETION: See Carburetor & Carb. Equipment.
Idle Setting—Set idle adjusting screws midway between "miss" and "roll" points. Idle speed 6 MPH.
Float Level—Fuel level 15/32" below edge of bowl.
Accelerating Pump—No seasonal adjustment.
Fuel Pump Pressure: 4 lbs. maximum.

MANIFOLD HEAT CONTROL:—Thermostatic coil type. Thermostatic coil mounted on forward end of heat valve shaft with counterweight at rear end. No adjustment required. See that valve operates freely when turned by hand. Do not oil heat control.

VALVES: See Valve Timing.
Tappet Clearance—.007" Intake, .010" Exh. (Hot).

STARTING: See Battery, Starter, Generator, Regulator.

IGNITION

Ignition Switch:—Mitchellock Model 24-B, Type 7646. Connected to coil by armored cable.
Ignition Lock—Briggs & Stratton No. 50184 (Lock cylinder). Key Series—P1251-P1500. Groove—#2.

COIL: Auto-Lite Model CE-4628. Service Coil (less switch & cable) CE-3224-ES. On engine near distributor.
Ignition Current—½ ampere idling, 2½ stopped.

CONDENSER: Auto-Lite Part No. IG-2671J.
Capacity—.20-.25 microfarad.

DISTRIBUTOR: Auto-Lite IGT-4007 or IGT-4007-A. Single breaker, 8 lobe cam, full automatic advance with Vacuum Spark Control and Fuel Compensator.
See Electrical Equipment Section for special Distributor Servicing data.
For complete data, refer to Electrical Equipment Index.

Breaker Gap—.015". Limit .017" Maximum.
Cam Angle or Dwell—27° closed, 18° open (.017" gap).
Breaker Arm Spring Tension—18-20 ozs.
Rotation—Counter-clockwise viewed from the top.

Automatic Advance

Distributor Degrees	R.P.M.	Engine Degrees	R.P.M.
Start	300	0	600
.8	400	1.6	800
2	550	4	1100
4	800	8	1600
6	1300	12	2600
8.75	2000	17.5	4000

Vacuum Spark Control—Integral with distributor. Mounted on distributor cup and linked directly to breaker plate. Provides additional advance at speeds above idling (vacuum port in carburetor above throttle valve) except when engine accelerated or operated with wide open throttle when spark retarded by return spring in unit.

Vacuum Advance—IGT-4007

Distr. Degrees	Eng. Degrees	Vacuum (" of HG.)
Start	0	6"
2	4	8.8"
4	8	11.8"
6	12	14.8"
7.5	15	17"

Vacuum Advance—IGT-4007A

Start	0	10"
2	4	12.25"
4	8	14.6"
6	12	17"

Fuel Compensator—Manual adjustment at distributor providing 10° maximum advance or retard from center '0' point on scale. See Ignition Timing for setting.

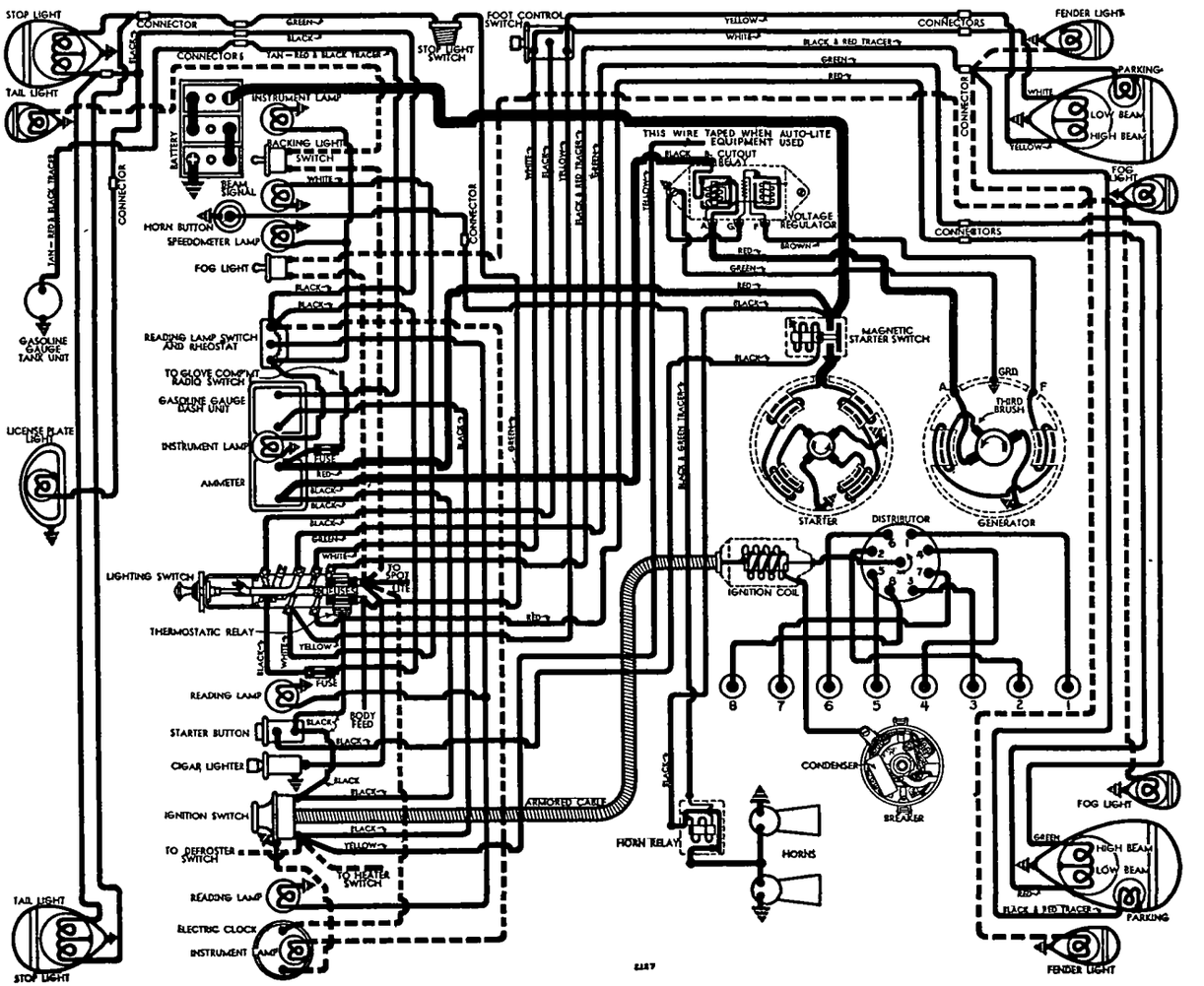

Distributor Removal:—Mounted on left hand side of crankcase. To remove, disconnect vacuum line connection, take out hold-down screw in advance arm.

IGNITION TIMING

IGNITION TIMING:—Standard settings as follows (see Fuel Compensator setting also).

	Flywheel Degrees	Piston Position
Std. al. head	6-8° BTDC	.0149-.0262" BTDC.
Optl. HC al. hd.	2½-4° BTDC	.0026-.0066" BTDC.
All iron hds.	8-9½° BTDC	.0262-.0371" BTDC.

NOTE—Flywheel is marked #1 UP.DC. (top dead center for #1 piston) with five 2° graduations before and after this point.

To Set Timing—Loosen thumbnut on Fuel Compensator pointer, center pointer on scale, tighten thumbnut. With #1 piston on compression, turn engine over until piston reaches firing position when correct graduation on scale on flywheel (visible through inspection hole in left front face of flywheel housing below starter) lines up with pointer on housing. Loosen advance arm clamp bolt, rotate distributor until contacts begin to open, tighten clamp bolt, check Fuel Compensator setting.

Timing (Neon Timing Light)—White mark provided on flywheel to indicate timing range for standard head (6½-8°—leading edge of mark is 8° BTDC). Mark flywheel similarly for optional high compression heads. Idle engine and adjust distributor as directed above.

Fuel Compensator—Should be adjusted to eliminate excessive 'ping' caused by use of low-octane fuels. To adjust, loosen thumbnut, rotate distributor and pointer counter-clockwise toward 'low' end of scale to retard spark, clockwise toward 'high' end of scale to advance spark. Tighten thumbnut after adjusting.

CARBURETOR

CARBURETION:—Carburetor—Stromberg Model EE-14, 1" Duplex or Dual Downdraft type with integral Automatic Choke and Fast Idle.

Code Mark Identification—EE-14 marked 10-30, 10-30&, 10-30A or 10-30B. Early codes (before 10-30B) can be re-worked to incorporate latest changes on 10-30B.

For complete data, refer to Carburetor Index.

Idle Adjustment—With engine warm and idling at hot or slow idling speed and Automatic Choke and Fast Idle inoperative, set throttle stopscrew so that idling speed is 6 M.P.H., turn one idling adjusting screw in until engine begins to miss or lag, then turn screw out until engine begins to roll, finally turn screw in slowly until engine fires smoothly. Repeat adjustment with other idle adjusting screw. Readjust throttle stopscrew for correct idling speed. **Accelerating Pump Setting**—Not adjustable.

Fast Idle:—Integral with carburetor (throttle by-pass type). No adjustment required.

For complete data, refer to Carburetion Equip. Index.

Automatic Choke:—Integral with carburetor. See article in Carburetion Equipment Section.

For complete data, refer to Carburetion Equip. Index.

NOTE—If mixture is too rich, or too lean, during warming up period, automatic choke setting can be varied not more than 5 graduations in either direction from standard setting of 11 Notches Rich. See Carburetion Equipment Section article for directions.

CARB. EQUIPMENT

Air Cleaner:—AC #1528585 heavy duty oil-bath type NOTE—AC #844751 oil-wetted type air cleaner is used on crankcase vent (in oil filler cap).

Fuel Pump:—AC Type AJ #1523629 Inverted type (vacuum unit at top) combination fuel-and-vacuum pump.

For complete data, refer to Carburetion Equip. Index.

Gasoline Gauge:—Stewart-Warner Electric type. S-W No. 96381 (dash unit), 96466 (tank unit).

For complete data, refer to Carburetion Equip. Index.

BATTERY

BATTERY:—Prest-O-Lite Hi-Level, Type HP2-17. 6 volt, 17 plate, 114 ampere hour cap. (20 hour rate). NOTE—Specific gravity reading for fully charged Hi-Level battery is 1.250.

Starting Capacity—133 amperes for 20 minutes.

Zero Capacity—300 amperes for 3.5 minutes.

Grounded Terminal—Positive (+) terminal grounded to left rear leg of frame 'X' member. **Engine Ground**—Left rear transmission cover bolt grounded to left front leg of frame 'X' member by strap.

Dimensions—Width 7". Length 10 5/16". H'gt 8¾".

Location—In cradle under left front seat.

STARTER

Auto-Lite Model MAX-4006. Armature MAW-2006.

Drive—Outboard Barrel Type Bendix No. A-1729.

Rotation—Counter-clockwise at commutator end.

Brush Spring Tension—42-53 ozs. (new brushes).

Cranking Engine—125 R.P.M., 175 amperes, 5 volts.

Performance Data

Torque	R.P.M.	Volts	Amperes
0 ft. lbs.	5300	5.5	65
2.75 "	1630	5.0	200
5.5 "	970	4.5	300
8.7 "	600	4.0	400
12.0 "	300	3.5	500
16.5 "	Lock	3.0	640
25.0 "	Lock	4.0	880

Removal:—Starter flange mounted on left front face of flywheel housing. To remove, take out flange mounting screws.

Starting Switch:—Model SS-4001. Magnetic type. Mounted on starter and controlled by pushbutton on instrument panel.

For complete data, refer to Electrical Equipment Index.

Switch Specifications

Closes with terminal voltage of 4 volts or less. Remains closed until voltage drops to .75-2.0 volts. Current draw, 3 amperes at 6.0 volts.

GENERATOR

Auto-Lite Model GCJ-4807A-2. Armature GCJ-2006. Third brush control type with external vibrating voltage regulation. Ventilated by fan.

Maximum Charging Rate—30.5 amperes (cold), 25.5 amperes (hot), 8.0 volts, 3200 R.P.M. To check charging rate, disconnect regulator 'F' lead, ground generator 'F' terminal, connect test ammeter in charging line at regulator 'B' terminal. Operate generator charging battery.

Charging Rate Adjustment—Third brush set for maximum output (1 commutator bar min., 1 commutator bar plus 1 mica strip max. between third brush and insulated or nearest main brush) and this setting must not be exceeded. Actual charging rate controlled by voltage regulator setting. See Regulator data below.

Performance Data

Cold Amperes	Cold Volts	Cold R.P.M.	Hot Amperes	Hot Volts	Hot R.P.M.
0	6.4	800	0	6.4	840
4	6.6	900	4	6.65	960
8	6.85	1025	8	6.9	1100
12	7.05	1160	12	7.15	1270
16	7.25	1330	16	7.4	1520
20	7.5	1560	20	7.65	1860
24	7.7	1900	24	7.9	2460
28	7.9	2400	26	8.0	3600
30	8.0	3200			

Rotation—Counter-clockwise at commutator end.

Brush Spring Tension—53 ozs. Max. (new brushes).

Field Current—1.9-2.1 amperes at 6.0 volts.

Motoring Current—4.0-4.4 amperes at 6.0 volts.

Removal:—Generator pivot mounted at left front of engine with fan belt drive. To remove, take out pivot and clamp bolts.

Belt Adjustment:—Swing generator away from engine until reading on spring scale attached to clamp bolt lug and parallel to clamp link is 25 lbs. or until belt deflection between generator and water pump pulleys is ½" with thumb pressure.

REGULATOR

Auto-Lite Model VRD-4005A (first 5650 1938), Model VRD-4001B (later cars). Consists of Cutout Relay and vibrating type Voltage Regulator in case.

NOTE—VRD-4005A serviced by Model VRD-4001B.

For complete data, refer to Electrical Equipment Index.

NOTE—Regulator cover is sealed. Serviced on exchange basis if seals not broken. Cover must be removed to make adjustments.

Cutout Relay

Cuts In—6.4-7.0 volts Cold.

Cuts Out—.5 ampere Min., 3.0 amperes Max. (Cold).

Contact Gap—.015" Minimum.

Air Gap—.034" Min., .038" Max. with contacts open. Measure at hinge end of core.

Voltage Regulator

Setting—7.3-7.6 volts at 70°F. (Regulator Serial No. 8R-000001 Up). **See Electrical Equipment Section for settings and changes on units before this serial no.**

To Check (without breaking seal)—Connect ammeter in charging line at regulator 'B' terminal, connect voltmeter between 'B' and 'GD' terminals. Operate generator at speed equivalent to 30 M.P.H. charging battery until voltage is steady. Voltmeter reading should be within limits of 7.21-7.83 volts. **See Regulator Setting above.**

To Adjust (with cover removed)—Change regulator armature spring tension by bending lower spring hanger. See Electrical Equipment Section for complete instructions.

Contact Gap—.010" Min., .020" Max. with armature against stop pin.

Air Gap—.0595-.0625" with contacts just opening.

LIGHTING

LIGHTING:—Headlamps—Hall 'Flex-beam', pre-focused type with special non-interchangeable lenses (marked Right and Left). Asymetrical Passing Beam (lower beam left hand headlamp, upper beam right hand headlamp) controlled by foot selector switch. **Headlamp Adjustment**—With car fully loaded, tires

C NTINUED ON NEXT PAGE

CONTINUED FROM PRECEDING PAGE

properly inflated, on level floor 25' from screen, and upper beams lighted (switch in 'Country Driving' position), aim left hand headlamp so that hot spot is centered on vertical lamp-center-line with top cut-off at lamp center height horizontal line. Aim right hand headlamp for same height but with left edge of hot spot at vertical lamp-center-line (entire hot spot to right of this line). Right hand headlamp may be turned slightly more toward right if this setting provides a passing beam which is too blinding. Headlamps adjusted by loosening nut on mounting bracket under lamp.

Beam Indicator—Located on face of speedometer dial. Lighted whenever upper beam (Country Driving) in use.

Switches

Lighting—Delco-Remy No. 1994504.
Foot Selector—Delco-Remy No. 1997001.

Bulb Specifications

Position	Candlepower	Mazda No.
Headlamps	32-32	2330
Parking, Fender, Instrument	1½	55
Beam & Heater Indicators	1	51
Stop & Tail	21-3	1158
License	3	63
Dome	6	81
Fog Light	32	1321

NOTE—Cars with trunk rack use separate stop and tail light bulbs as follows: Stop Light 15 cp. Mazda #87, Tail Light 3 cp. Mazda #63.

MISC. ELECTRICAL

THERMOSTATIC RELAY:—Mounted on lighting switch (part of switch assembly). Contacts remain closed with 25 ampere current but open within one minute with 38 ampere current (70°F). Non-adjustable (adjustment is sealed).

FUSES:—**Fuse Block No. 1868292.** Mounted on lighting switch. Two 20 ampere fuses. Protects following circuits:
Right Hand Fuse—Stop light Body lights.
Left Hand Fuse—Accessories (Cigar Lighter, Heater, Defroster, Fog Light, etc.)
Instrument & Tail Lamp—20 ampere fuse in connector in switch lead near lighting switch.
Radio—15 ampere in feed wire.
Clock—2 ampere (Borg), 1 ampere (Western).

HORNS:—**Sparton Model 1-E-30.** Vibrator type, Air tone, twin horns operated by horn relay.
Air Gap—.032-.035" (low note—long air column), .026-.030" (high note—short air column).
Horn Current—22-25 amperes (total).
NOTE—Klaxon horns and relay also used.
Horn Relay:—R.B.M. Model 790.
Closing Voltage—2.75-4.0 volts.
Contact Gap—.015-.025". **Air Gap** .010-.020" (closed).
NOTE—Late type relays not adjustable (cover welded).

ENGINE

ENGINE SPECIFICATIONS:—8 cylinder, 'L' head.
Bore—3¼". **Stroke**—4¼".
Displacement—282.4 cu. ins. **Rated HP.**—33.8.
Developed Horsepower—120 HP. (std. 6.6-1 al. hd.), 123-125 HP. (optl. 7.05-1 al. hd.) at 3800 R.P.M.
Compression Ratio and Pressure—As follows:
6.6-1 Std. aluminum head (110 lbs. at 125 R.P.M.).
7.05-1 Optional aluminum head.
Vacuum Reading—18-21" idling at 6 M.P.H.
See Packard Shop Notes for Cylinder Head data.

PISTONS:—Nelson Bohnalite, aluminum alloy, autothermic, strut type, tin plated, cam ground.
Weight—16⅞ ozs. (stripped), 22¾ ozs. (with rings and pin). **Length**—3⅞".
Removal—Pistons and rods removed from above.
Clearance—Skirt .0015". See Fitting New Pistons.

Original Bore & Piston Size, Replacement Pistons:—*See Packard Shop Notes for complete data.*

Fitting New Pistons:—Insert .0015" feeler ½" wide between piston and cylinder wall on side opposite slot. Pull to withdraw feeler should be 12-18 lbs.

Installing Pistons:—Slot toward valves.

PISTON RINGS:—Two compression (Perfect Circle #70), one oil control (#X-90-85) per piston, above pin. Lower ring groove drilled with twelve 5/32" oil drain holes. Rings furnished standard and .005", .010", .020", .030" and .040" oversize.

Ring	Width	End Gap	Side Clearance
Compr.	.1235-.1240"	.007-.015"	.0025-.003"
Oil Cont.	.1860-.1865"	.007-.015"	.0015"

NOTE—Install #1 and #3 ring with gap away from valves, #2 compression ring gap toward valves.

PISTON PIN:—Diameter—⅞". Length—2 51/64".
Pin floats in piston and rod, held by locking rings. Furnished standard and .003", .006" oversize.
Pin Fit in Piston—Finger push fit with piston heated to 160°F.
Pin Fit in Rod Bushing—Finger push fit at 70°F. Finish ream pin hole to .87485-.87515".

CONNECTING ROD:—Weight 31.6 ozs. Length 7 11/16".
Upper Bearing (Piston Pin Bushing)—Split type.
See Packard Shop Notes for bushing installation.
Crankpin Journal Diameter—2 3/32".
Lower Bearing—Interchangeable steel-backed, babbit-lined type. Bearings furnished std. and .001", .002", .003", .015" undersize (marked with size).
Clearance—.0005-.0015". **Sideplay**—.004-.010".

Bearing Adjustment:—None. Replace bearings.

Installing Rods:—Oil squirt hole to camshaft.

CRANKSHAFT:—5 bearing, integral counterweights with rubber friction disc vibration damper mounted on forward end.
Journal Diameters—2¾".
Bearing Type—Interchangeable babbitt-lined steel shell type. Bearings furnished standard and .001" and .002" undersize.
Clearance—.001-.003".

Bearing Adjustment:—None (no shims). Replace bearings. Upper halves may be rotated in place.

End Thrust:—Taken by #3 bearing.
Endplay—.003-.008".

CAMSHAFT:—5 bearing. Non-adjustable chain drive.
IMPORTANT NOTE—2 types of camshafts used:
1938—Cast Alloy Iron on engines with letter "A" following engine number. Use only cast alloy oil pump drive gear with this camshaft.
1938—Forged Steel on engines with letter "B" following engine number. Use only chilled iron valve lifters (DO NOT USE STEEL LIFTERS). Oil pump drive gear must be of same material as shaft.
Bearing Type—Steel-backed, babbitt-lined.
Clearance—.001-.003".

End Thrust:—Taken by thrust plate in back of camshaft sprocket. **Endplay**—.002-.004".

Timing Chain:—Morse 1866 RX. Width 1¼". Pitch .375". Length 21¾" or 58 links.

Camshaft Setting:—Install chain and sprockets together with '0' marks on sprockets adjacent and in line with a straightedge across the shaft centers with #1 piston on top dead center.
See Packard Shop Notes for Fender & Radiator Assembly removal for work on front of engine.

VALVES:—Exhaust valves interchangeable with Six.

	Head Diameter	Stem Diameter	Length
Intake	1 17/32"	.34025"	5⅝"
Exhaust	1 13/32"	.34025"	5⅝"

	Seat Angle	Lift	Stem Clearance
Intake	30°	.3175"	.002"
Exhaust	45°	.318"	.004"

Valve Guides:—*See Packard Shop Notes for guide change on first cars to correct valve sticking.*

Valve Springs:—Intake and exhaust springs interchangeable. 1937 type springs used on first cars (1938 type only for replacement).

	Spring Pressure	Spring Length
Valve Closed	47-52 lbs.	1⅝"
Valve Open	114-124 lbs.	1 5/16"

NOTE—Serrated washer on top of each spring.

Valve Lifters:—New mushroom type. Remove from below with camshaft removed. Ream lifter holes through stem guide. Lifters furnished std. and .001", .002", .005" oversize.
NOTE—Chilled-iron or Steel valve lifters furnished for service. *Refer to Packard Shop Notes for Valve Lifter Note for proper type to use with 1938 Camshafts.*

VALVE TIMING

Tappet Clearance:—.007" Int., .010" Exh., engine warm.
NOTE—Remove plate in right front fender for valve adjustment.

Valve Timing:—See Camshaft Setting.
Intake Valves—Open 1° BTDC. Close 39° ALDC
Exhaust Valves—Open 45° BLDC. Close 5° ATDC.
To Check Timing—Set tappet clearance #1 exhaust valve at .015". This valve should close with piston 5° or .0103" past top dead center when 5° point on flywheel (midway between second and third graduations after dead center mark #1 UP.DC.) lines up with pointer in inspection hole in left front face of housing. Reset tappet clearance at .010" (hot).

LUBRICATION

LUBRICATION:—Pressure system with gear type oil pump mounted on right side of engine.
See Packard Shop Notes for Oil Pump Installation and Oil Pump Drive Gear Type for use with 1938 Camshafts.
Normal Oil Pressure:—35 lbs. at 30 M.P.H.
Oil Pressure Relief Valve:—Mounted on pump cover. Not adjustable. Replace spring if pressure less than 5 to 8 lbs. at 2".
Crankcase Capacity:—6 quarts (refill).

COOLING

COOLING SYSTEM:—**Water Pump.** Centrifugal, belt-driven, packless type.
See Water Pump Section for complete data.
Removal—With water drained and fan belt removed, disconnect pump hose, remove pump mounting capscrews, and lift pump assembly off.
Thermostat: Sylphon inside top radiator tank (part of shutter thermostat assembly). Assembly changed

during 1938, first type 165° used on early '38 cars, 150° type on late '38 cars.

HEATER NOTE—Cylinder head thermostat available for cars with water heater. Use only on cars with 150° shutter assembly. Remove thermostat in summer.

Setting (with Cover Mark '165')—Starts to open 150°. Fully open 160-165°. Sylphon marked 13680.

Setting (with Cover Mark '150')—Starts to open 135°. Fully open 150°. Sylphon marked 14480.

Setting (Heater—Cyl. head outlet type)—Marked 162° on strap. Starts to open 160-165°. Fully open 185°

Water Capacity:—16 quarts.

CLUTCH

CLUTCH:—Long Model 10 CF-CI. Semi-centrifugal, single plate, dry disc type.

See Clutch Section for complete data.

Facings—Woven-joined, 2 required. Inside Diam. 6". Outside Diam. 10". Thickness .137".

Adjustment—Adjust nut on inner pedal rod to give 1½" free travel (pedal to toeboard), secure locknut.

Removal:—Remove transmission (see Transmission Removal following). With clutch pedal depressed, insert wedge (ST-879) between each throwout finger and cover (assembly can only be removed when in partially released position). Remove clutch shifter bearing, pedal rod and cover capscrews (remove assembly from below).

TRANSMISSION

TRANSMISSION:—Own make. Helical gear type with synchronizer for second and high speeds.

See Transmission Section for complete data.

Removal:—Remove floorboards, speedometer cable, ground strap and accelerator pedal. Disconnect propeller shaft at front universal, block shaft up against floor board. Support rear end of engine with jack, unbolt cross-member from frame, disconnect hand brake cable at equalizer, remove flywheel housing lower cover and clutch retracting spring, take out 4 capscrews in transmission mounting flange, pull transmission back and remove.

UNIVERSALS

UNIVERSAL JOINTS:—Detroit. Series 5150. Cross type with roller bearings. Two used.

See Universals Section for complete data.

NOTE—On 1602, Intermediate self-aligning bearing used on drive shaft.

REAR AXLE

REAR AXLE:—Own make. Semi-floating, hypoid gear type with Hotchkiss drive. Rear face of differential carrier now vertical.

See Rear Axle Section for complete data.

Ratios—4.36-1 (1601), 4.7-1 (1601A, 2), 4.09-1, 4.54-1 optional.

Backlash—.003-.005". Screw adjustment.

Removal:—Remove wheel, hub, and brake backing plate assembly. Withdraw axle shafts. Disconnect rear universal joint and drop drive shaft. Remove nuts on carrier-to-housing bolts and withdraw carrier assembly from housing.

Wheel Bearing Adjustment—Endplay controlled by shims between flanged end of housing and brake backing plate. Adjust by removing backing plate and disconnect brake tube clips on housing. Add shims at one wheel only if endplay .050" or below, at both wheels equally if above. Measure with dial indicator against end of shaft. **Endplay**—.002-.005".

SHOCK ABSORBERS

SHOCK ABSORBERS:—Houdaille. Model OBBDI (front), OBBCP (rear). Double acting, hydr. type.

See Shock Absorber Section for complete data.

FRONT SUSPENSION

Front Suspension:—Independent 'Safe-T-flex' type with coil springs.

See Front Suspension Section for complete data.

NOTE—Data below applies with car on level floor, tires properly inflated and car weighted as follows: 300 lbs. front seat, 375 lbs. (rear—5 pass. bodies), 225 lbs. (rear—Coupe), 675 lbs. (rear—7 Pass.).

Front Suspension Height—Distance from floor to top side of frame siderail at spring should be 19¼" plus or minus ¼".

Kingpin Inclination—1°54' crosswise.

Camber—½° plus or minus ½°. Adjustable.

Caster—1½° plus or minus ½°. Shim adjustment.

Toe In—1/32-1/16" measured at hub height. Adjust tie rods equally (rod lengths must be equal after adjustment).

STEERING GEAR

Steering Gear: Packard (Gemmer design Model 330) Worm-and-Roller type with center steering. Refer to Gemmer Model 330 article.

See Steering Gear Section for complete data.

BRAKES

BRAKES:—Service—Bendix hydraulic, duo-servo, single anchor type. Hand lever applies rear service brakes.

See Brake Section for complete data.

Drum—Centrifuse. Diameter—12".

Lining—Primary (Raybestos No. 451). Secondary (U. S. Asbestos No. 589-F). Width 1¾" (1601), 2¼" (1601A, 2). Thickness 3/16". Length 13" per shoe.

Clearance—.010" at heel and toe of each shoe.

Hand Brake Adjustment:—See Service Brakes above.

MODEL IDENTIFICATION

SERIAL NUMBER:—Stamped on plate on front of dash.

ENGINE NUMBER:—First number A-500001. Stamped on upper center left side of crankcase.

TUNE-UP

COMPRESSION:—Ratio and pressure as follows:

Head	Pressure at 125 R.P.M.
Std. 6.5-1 (1603, 4,5)	110 lbs.
Optl. 7.05-1 (All)	119 lbs.

VACUUM READING:—Steady 18-19" idling at 7 MPH.

FIRING ORDER: 1-6-2-5-8-3-7-4. See diagram.

SPARK PLUGS: AC No. 104 or Champion Y-4. 10 mm. Gaps—.028". Limits .0255-.0305".
Use AC 103S or early Y-4 where slightly colder plug required (new Y-4 has longer center electrode).
NOTE—When installing plugs, use only 50 inch pound pressure (10 lb. pull on 5" wrench).

IGNITION: See Coil, Condenser, and Distributor.
Breaker Gap—.015". Limit .017" maximum.
Cam Angle—27° Closed with .017" Breaker Gap.
Automatic Advance—9° at 1800 RPM. Distr.°&RPM.
Vacuum Advance—5½° (distr.) with 16" vacuum.

IGNITION TIMING: See Ignition Timing.
Std. Setting—6-8° BTDC. (Std. aluminum head). Vibration dampener mark (correct degree mark ahead of #1UP.DC) aligned with pointer at front of engine.
See Ignition Timing for Settings on engines with High Compression or Replacement Heads.

CARBURETION: See Carburetor & Carb. Equipment.
Idle Setting—Set idle adjusting screws midway between "miss" and "roll" points. Idling speed should be 350 RPM or 7 MPH.
Float Level—Fuel level ⅝" below top edge of bowl.
Accelerating Pump—Inner Hole (Summer temperatures), Outer Hole (Winter temperatures).

Fuel Pump Pressure: 4½ lbs. maximum.

MANIFOLD HEAT CONTROL:—Thermostatic coil type. Make certain that valve operates freely (valve must not bind or stick). Do not oil control.

VALVES: See Valve Timing.
Tappet Clearance—.006" Intake, .008" Exhaust, (hot).

STARTING: See Battery, Starter, Generator, Regulator.

IGNITION

IGNITION SWITCH: Mitchellock Model 24B. No. 7650.
Ignition Lock—Briggs & Stratton. B & S No. 50184.
Key Series—P1251 to P1500. **Groove**—No. 2.

COIL: Auto-Lite Model CE-4026. Service coil (less switch & cable) CE-3186KS. On cylinder head.
Ignition Current—½ ampere idling, 2½ stopped.

CONDENSER: Auto-Lite Part No. IG-2671G.
Capacity—.20-.25 microfarad.

DISTRIBUTOR: Auto-Lite Model IGT-4006. Single breaker, 8 lobe cam, full automatic advance type with Vacuum Spark Control and Fuel Compensator.
Refer to Electrical Equipment Index for Auto-Lite Distributor article covering special servicing data on these units.
Breaker Plate Identification—Maximum vacuum advance limited by slot, marked #5½ on plate.
Breaker Gap—.015". Limits .0125-.0175".
Cam Angle or Dwell——27° closed, 18° open (.017" gap).
Breaker Arm Spring Tension—18-20 ounces.

Rotation—Clockwise viewed from the top.

Automatic Advance

Degrees	R.P.M.	Degrees	R.P.M.
Start	300	0	600
3	800	6	1600
6	1300	12	2600
9	1800	18	3600

Vacuum Spark Control—Integral type. Mounted on distributor cup and linked to breaker plate. Provides additional advance at all speeds above idling except when engine accelerated or operated with wide open throttle (return spring retards spark).

Vacuum Advance

Distr. Degrees	Eng. Degrees	Vacuum (" of HG)
Start	0°	7"
2°	4°	10¼"
4°	8°	13½"
5½°	11°	16"

Fuel Compensator—Manual adjustment at distributor providing 10° advance or retard from center '0' position. See Ignition Timing (below) for setting.

Distributor Removal: Mounted on cylinder head. To remove, disconnect vacuum line connection, take out hold-down screw in advance arm.

IGNITION TIMING

IGNITION TIMING:—Standard setting (for 76 Octane fuel) as follows. See Fuel Compensator Setting.

Cyl. Head	Flywheel Degrees	Piston Position
Std. aluminum	6-8° BTDC	.0168-.0299" BTDC.
Optl. HC alum.	4-5½° BTDC	.0075-.0141" BTDC.
*Std. Iron	8½-10° BTDC	.0338-.0466" BTDC.
*Optl. HC Iron	6½-8° BTDC	.0199-.0299" BTDC.

*—These are replacement heads. Use settings for 1939 models if IGT-4006A distributor used.

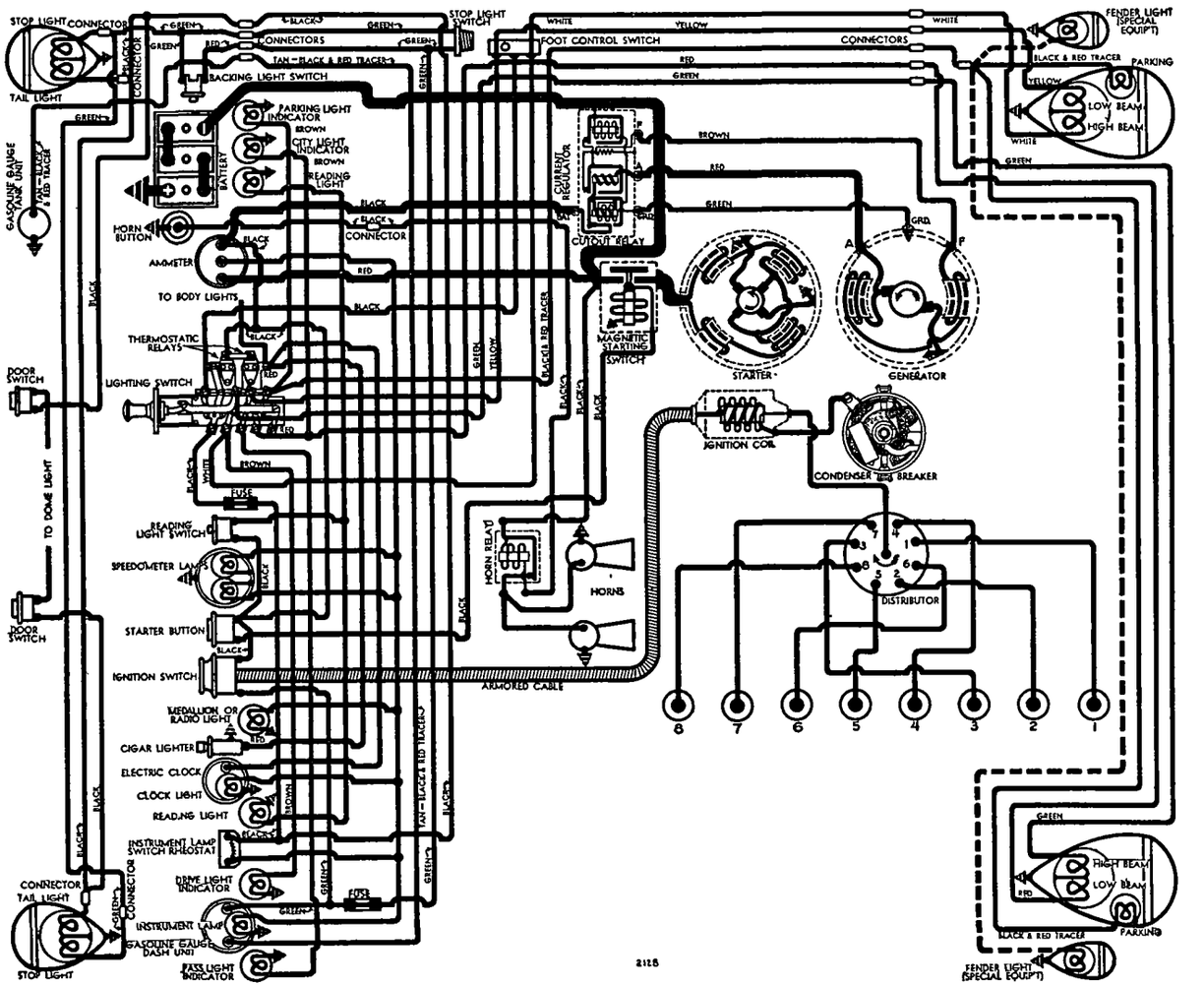

See Electrical Equipment Section f r Regulator internal wiring when two resistors used.

NOTE—Vibration dampener marked #1 UP D.C. at #1 TDC point with 15-1° graduations each side.

To Set Timing—Loosen thumbnut, set Fuel Compensator at 'O'. With #1 piston on compression, turn engine over until it reaches firing position (see table above), stop when correct line on vibration damper at front of engine lines up with pointer. Loosen advance arm clamp bolt, rotate distributor until contacts begin to open, tighten clamp bolt, see that rotor is opposite #1 segment in distributor cap.

NOTE—If neon timing light used, idle engine below 500 R.P.M.

Fuel Compensator Setting—Provides manual adjustment at distributor for octane rating of fuel used. After ignition set as above, road test car to give a slight 'ping' pulling heavy load. Adjusted by loosening thumbnut and advancing or retarding pointer on scale. Adjustment permits 10° advance or retard from center '0' position.

CARBURETOR

CARBURETION:—Carburetor—Stromberg Model EE-23. 1¼" dual downdraft type with integral automatic choke and fast idle. Marked 10-28.
For complete data, refer to Carburetor Index.

Idle Adjustment—With engine warm, choke valve wide open, engine idling at hot or slow idling speed, set throttle stopscrew so that engine idles at 350 R.P.M. or 7 M.P.H. Turn inner idling adjusting screw in until engine begins to lag or miss, then turn screw out until engine begins to roll, finally turn screw in slowly until engine fires smoothly. Repeat with outer idling adjusting screw. Readjust throttle stopscrew for correct idling speed.

Accelerating Pump Setting—Adjusted by changing position of pump link rod in throttle valve lever. Inner Hole (Min. stroke)—Summer temperatures. Outer Hole (Max. stroke)—Winter temperatures.

Fast Idle & Automatic Choke:—Integral type.
For complete data, refer to Carburetion Equip. Index.

CARB. EQUIPMENT

Air Cleaner: AC #1528584 oil bath type.
NOTE—#1528066 oil vent cleaner (in oil filler cap).

Fuel Pump:—AC. Type F #1523196. Combination fuel-and-vacuum pump.
For complete data, refer to Carburetion Equip. Index.

Gasoline Gauge: Auto-Lite (Motometer design) Electric NG-8673-D (dash unit), 8647-T (tank).
For complete data, refer to Carburetion Equip. Index.

BATTERY

BATTERY:—Prest-O-Lite, Hi-Level, Type HR4-21. 6 volt, 21 plate, 150 AH. capacity (20 hr. rate).
Starting Capacity—175 amperes for 20 minutes.
Zero Capacity—300 amperes for 6.3 minutes.
Grounded Terminal—Positive (+) terminal. Grounded to left rear leg of frame 'X' member. Motor ground on rear motor support.
Dimensions—Length 13", Width 7". Height 9⅛".
Location—Under front seat on left side.

STARTER

Auto-Lite Model MAX-4014. Armature MAW-2090.
Drive—Outboard Barrel Type Bendix Model A-1729.
Rotation—Counter-clockwise at commutator end.
Brush Spring Tension—42-53 ozs. (new brushes).
Cranking Engine—125 RPM., 160 amperes, 5.2 volts.

Performance Data

Torque	R.P.M.	Volts	Amperes
0 ft. lbs.	5300 Min.	5.5	65
2.75 "	1630	5.0	200
5.5 "	970	4.5	300
8.7 "	600	4.0	400
12.0 "	300	3.5	500
16.5 "	Lock	3.0	640
25.0 "	Lock	4.0	880

Removal:—Starter sleeve mounted in left front face of flywheel housing. To remove, take out pilot mounting screw in flywheel housing.

Starting Switch: Auto-Lite SS-4001. Magnetic type, on starter controlled by switch on instrument panel.
For complete data, refer to Electrical Equipment Index.

Auto-Lite SS-4001 Specifications

Closes with terminal voltage of 4 volts or less and will remain closed until voltage drops to .75-2.0 volts. Current draw 3 amperes at 6.0 volts.

GENERATOR

Auto-Lite Model GCO-4803A. Armature GCO-2006F. Two brush (shunt) type with external current and voltage regulat'n. Ventilated by fan on drive pulley.

Maximum Charging Rate—28 amperes (cold), 8.0 volt, 1850 R.P.M., and above, with load or discharged battery (Current Regulator Setting). Actual charging rate controlled by Voltage Regulator and dependent on battery condition.

Charging Rate Adjustment—No adjustment on generator. See Regulator Section below for Voltage and Current Regulator settings.

Performance Data

Cold			Hot		
Amps.	Volts	R.P.M.	Amps.	Volts	R.P.M.
0	6.4	825	0	6.4	900
4	6.6	940	4	6.6	1025
8	6.85	1050	8	6.85	1160
12	7.1	1175	12	7.1	1310
16	7.3	1300	16	7.3	1475
20	7.55	1450	20	7.55	1660
24	7.8	1610	24	7.8	1880
28	8.0	1850	28	8.0	2200

Rotation—Counter-clockwise at commutator end.

Brush Spring Tension—53 ozs. max. (new brushes).

Field Current—1.47-1.63 amperes at 6.0 volts.

Motoring Current—3.94-4.36 amperes at 6.0 volts.

Removal:—Generator pivot mounted at left front of engine. To remove, take out clamp and pivot bolts.

Belt Adjustment:—With mounting bolts loose, swing generator away from engine until reading on scale attached to clamp bolt is 40 lbs., or belt deflection (thumb pressure) midway between fan and generator pulleys is ½-¾".

REGULATOR

Auto-Lite Model VRB-4008-C. Voltage-Current Type. Consists of Cutout Relay, vibrating Voltage Regulator and vibrating Current Regulator in case on dash.
NOTE—Regulator cover is sealed. Serviced on exchange basis if seals not broken. Cover must be removed to make adjustments.
For complete data, refer to Electrical Equipment Index.

Cutout Relay

Cuts In—6.4-7.0 volts Cold.
Cuts Out—.5 ampere Min., 3.0 amperes Max. Cold.
Contact Gap—.015" minimum.
Air Gap—.034" Min., .038" Max. with contacts open. Measure at hinge end of core.

Voltage Regulator

Setting—7.5-7.8 volts at 70°F (Before Serial No. 8R-000001), 7.3-7.6 volts at 70°F (After 8R-000001). See Electrical Equipment Section for complete settings and changes.

To Check—Connect ammeter in charging line at 'B' terminal on regulator (use short heavy leads). Connect voltmeter between 'B' and 'GD' terminals. Operate generator, charging fully charged battery, at speed equivalent to 30 M.P.H. car speed until voltage is constant. Voltage should then be within limits of 7.4-7.8 volts (units before 8R-000001), 7.21-7.83 volts (after #8R-000001). See Setting above.

To Adjust—Change regulator armature spring tension by bending lower spring hanger. See Electrical Equipment Section for complete instructions.

Contact Gap—.010" Min., .020" Max. with armature against stop pin.

Air Gap—.0595-.0625" with contacts just opening.

Current Regulator

Setting—27-29 amperes (marked '28' on cover).

To Check—Connect ammeter and voltmeter as directed for Voltage Regulator test. Operate generator at 30 M.P.H. car speed, add load (use bank of headlamp bulbs or turn on car lights and discharge battery) so that generator will charge at peak rate and bring Current Regulator into action. Charging current should not exceed 28 amperes. If more than slight excess is noted, Regulator is defective.

To Adjust—Change regulator armature spring tension by bending lower spring hanger. See Electrical Equipment Section for complete instructions.

Contact Gap & Air Gap—Same as for Voltage Regulator.

LIGHTING

LIGHTING:—Headlamps—Hall, Flex beam, pre-focused type with special non-interchangeable lenses marked 'Left' and 'Right.' 'Passing' beam (upper beam right hand headlamp, lower beam left hand headlamp). Foot control switch gives 'Country Driving' beam with lighting switch in second (City) position, and 'Passing' beam with lighting switch in third (Country Driving) position.

Headlamp Adjustment—With car fully loaded, tires properly inflated, on level floor 25' from screen, and upper beams lighted (switch in 'Country Driving' position), aim left headlamp so that hot spot is centered on vertical lamp-center-line with top cut-off at lamp center height horizontal line. Aim right headlamp for same height but with left edge of hot spot at vertical lamp-center-line (entire hot spot to right of this line). Right headlamp may be turned slightly more toward right if this setting provides a passing beam which is too blinding. Adjust by loosening nut on mounting bracket under lamp.

Headlamp Beam Indicator—Separate beam indicator for each beam position (1—Park, 2—City, 3—Drive, 4—Pass), located on instrument panel.

Switches

Lighting—Delco-Remy Model 1994505.
Foot Selector—Delco-Remy Model 1997001.

CONTINUED ON NEXT PAGE

C NTINUED FR M PRECEDIN PAGE

Bulb Specifications

Position	Candlepower	Mazda No.
Headlamp—Right	32-32	2330
Headlamp—Left	32-21	1104
Tail	3	63
Stop	15	87
Parking, Fender, Reading	1½	55
Instrument, Clock, Radio	1½	55
Indicators, Defros., Heat	1	51
Dome, Rear Courtesy	6	81

MISC. ELECTRICAL

THERMOSTATIC RELAY: Delco-Remy No. 1868301. Mounted on lighting switch (front—protects dome light, cigar lighter and body wiring; rear—protects headlamp circuit).

Specifications

Contacts remain closed with 25 ampere current but open within 1 minute with 38 ampere current (70°F). Non-adjustable.

FUSES:—Instrument and Tail Lamp—20 ampere capacity in connector near light switch.
Stop Light—20 ampere capacity in connector near gasoline gauge dash unit.
Radio—15 ampere in feed wire.
Clock—1 ampere (Western), 2 ampere (Borg).
NOTE—New long type SFE fuses used on 1603, 4, 5.

HORNS:—Sparton Model 1-E-30. Vibrator type, Air tone, twin horns operated by horn relay.
Air Gap—.032-.035" (low note—long air column), .026-.030" (high note—short air column).
Horn Current—22-25 amperes (total).
NOTE—Klaxon horns and relay also used.

Horn Relay:—R.B.M. Model 10072 or 790.
Closing Voltage—2.75-4.0 volts.
Contact Gap—.015-.025". **Air Gap** .010-.020" (closed).
NOTE—Late type relay not adjustable (cover welded).

ENGINE

ENGINE SPECIFICATIONS:—8 cylinder, 'L' head.
Bore—3 3/16". **Stroke**—5".
Displacement—320 cubic inches.
Rated Horsepower—32.5 (A.M.A.)
Developed Horsepower—130 HP. (Std. 6.5-1 hd.), 133-135 HP. (optl. 7.05-1 hd.) at 3200 RPM.
Compression Ratio and Pressure—As follows: 6.5-1 std. aluminum head, 110 lbs. at 125 R.P.M. 7.05-1 optl. aluminum head, 119 lbs. at 125 R.P.M.
Vacuum Reading—18-19" idling at 7 M.P.H.
See Packard Shop Notes for Cylinder Head data and Block Removal directions.

PISTONS:—Nelson Bohnalite, aluminum alloy, autothermic, strut type, tin plated, cam ground.
Weight—17¾ oz. (stripped), 24 oz. (with rings and pin). **Length**—4¼".
Removal—Pistons above, rods below (push piston up to expose pin, remove locking rings, push pin out, lift piston out, lower rod and remove from below). Remove with engine warm.
Clearance—Skirt .0015". See Fitting New Pistons.

Original Bore & Piston Sizes, Replacement Pistons:—***See Packard Shop Notes for complete data.***

Fitting New Pistons:—Insert .0015" feeler ½" wide between piston and cylinder wall on side opposite slot. Pull to withdraw feeler should be 12-14 lbs.

Installing Pistons:—Slot toward valves.

PISTON RINGS:—#1 compression (plain), #2 compression (#70 Perfect Circle), #3 oil (P-C #85), #4 oil (P-C #X90-85) rings per piston, all above pin. Each oil ring groove drilled with ten ⅛" oil drain holes. Rings furnished standard and .003", .005", .010", .015", .020", .025", .030", .035" and .045" oversize.
NOTE—P-C#200 ring used in #1 groove on early production.

Ring	Width	End Gap	Side Clearance
Compr.	.1225-1230"	.007-.015"	.003"
Oil Cont.	.1545-.1550"	.007-.015"	.0015"

NOTE—Install #1 & 3 rings with slot toward camshaft, #2 & 4 with slot away from camshaft.

PISTON PIN:—Diameter—⅞. **Length**—2 47/64". Pin floats in piston and rod, held by locking rings. Furnished std. and .003", .006" oversize.
Pin Fit in Piston—Finger push fit with piston heated to 160°F.
Pin Fit in Rod Bushing—Finger push fit at 70°F. Finish ream pin hole to .87485-.87515".

CONNECTING ROD:—Weight—40.3 oz. **Length**—10⅞". **Crankpin Journal Diameter**—2 3/16".
Lower Bearing—Copper lead alloy, interchangeable type. Furnished .001", .002", .003", .015" undersize.
NOTE—Babbitt type for replacement furnished std. and .002", .005", and .015", undersize.
Clearance—.001-.0015". **Sideplay**—.005-.008".

Bearing Adjustment:—None (no shims). Replace bearings. Do not file rods or caps.

Installing Rods:—Oil hole toward camshaft.

CRANKSHAFT:—9 bearing, 8 bolted counterweights with rubber friction disc vibration damper mounted on forward end.
Journal Diameters—2⅝".
Bearings—Removable steel-backed, babbitt-lined, shimless type. Bearing shells doweled in block and cap. Dowel in cap is flanged (seats between bearing and cap) and hollow (for bearing lubrication).
Clearance—.001-.002".

Bearing Adjustment:—None (no shims). Replace bearings (requires removal of crankshaft).

End Thrust:—Taken by #7 bearing.
Endplay—.003-.005".

CAMSHAFT:—8 bearing. Non-adjustable chain drive.
Bearing Type—Steel-backed, babbitt-lined.
Clearance—.0015-.0035".

End Thrust:—Taken by thrust plate assembled in back of camshaft sprocket. **Endplay**—.001-.004".

Timing Chain:—Morse 3682-RX. Width 1½". Pitch .375". Length 70 links or 26¼".

Camshaft Setting:—Install chain and sprockets together with marks adjacent and in line with a straightedge across the shaft centers.
See Packard Shop Notes for Fender and Radiator Assembly removal for work on front of engine.

VALVES:	Head Diameter	Stem Diameter	Length
Intake	1 21/32"	.3405"	7 13/32"
Exhaust	1 15/32"	.3405"	7 13/32"

	Seat Angle	Lift	Stem Clearance
Intake	45°	.354"	.003"
Exhaust	45°	.354"	.0045"

Valve Guides:—Pressed in b) ck from above. Ream to size for correct stem clea' ance (see above).

Valve Rocker Arms:—Consist of pivoted arms mounted on bracket on crankcase which transmit motion from cam to valve pushrod (valve lifter).
Removal—Take out screws in bracket on right side of crankcase, withdraw bracket and pushrod assembly.

Pushrods (Valve Lifters):—Mounted on guides seated in crankcase and held down by engine block which engages guide flange.

Valve Springs:	Spring Pressure	Spring Length
Valve Closed	68-78 lbs.	3 1/16"
Valve Open	154-164 lbs.	2 45/64"

NOTE—Serrated washer on top of each spring.

VALVE TIMING

Tappet Clearance:—Intake .006", Exhaust .008", hot.

Valve Timing:—See Camshaft Setting (above).
Intake Valves—Open 30° BTDC. Close 65° ALDC.
Exhaust Valves—Open 65° BLDC. Close 30° ATDC.
To Check Timing—Set tappet clearance #1 exhaust valve at .005" (or .010", then insert .005" feeler). Turn engine over until pointer over damper (at front of engine) lines up with a point 1 1/16" (plus or minus 11/32") past '1-UPDC' mark (feeler should withdraw with finger pull). Valve closes 30° or .4070" ATDC. Reset tappet clearance at .008" (hot).

LUBRICATION

LUBRICATION:—Pressure system with gear type oil pump mounted in crankcase.
Normal Oil Pressure:—55 lbs. (max.), 5 lbs. (min.).
Oil Pressure Relief Valve:—Located under plug on left side of crankcase. Remove acorn nut and adjust by turning slotted screw.
Crankcase Capacity:—8 quarts.

COOLING

COOLING SYSTEM:—Water Pump. Centrifugal, belt-driven, with adjustable type packing.
See Water Pump Section for complete data.
Removal—With water drained and fan belt removed, disconnect pump hose, remove nuts on pump mounting studs and lift off fan and pump assembly.
Thermostat: Sylphon inside top radiator tank (part of shutter thermostat assembly). Assembly changed during 1938, first type 165° used on early '38 cars, 150° type on late '38 cars.
HEATER NOTE—Cylinder head thermostat available for cars with water heater. Use only on cars with 150° shutter assembly. Remove thermostat in summer.
Setting (with Cover Mark '165')—Starts to open 150°. Fully open 160-165°. Sylphon marked 13680.
Setting (with Cover Mark '150')—Starts to open 135°. Fully open 150°. Sylphon marked 14480.
Setting (Heater—Cyl. head outlet type)—Marked 162° on strap. Starts to open 160-165°. Fully open 185°
Water Capacity:—20 quarts.

CLUTCH

CLUTCH:—Long Model 12CB-CL. Single plate, dry disc type.
See Clutch Section for complete data.
Facings—Moulded (Raybestos No. 250), 2 required. Inside Diam. 7". Outside Diam. 12". Thickness .137".
Adjustment—Adjust nut on pedal rod to give 1-1½" free travel (pedal pad to toe board).
Removal:—Remove transmission (see Transmission Removal following), take out cover mounting screws (release pressure evenly), lift assembly out. Align '0' marks on flywheel and cover when reassembling.

TRANSMISSION

TRANSMISSION:—Own make. Helical gear type with synchronizer for second and high speeds.
See Transmission Section for complete data.

Removal:—Remove floor boards, speedometer cable, ground strap, drop drive shaft at front universal joint. Remove light switch, two stud nuts (case bracket to rubber support) on each side, hand brake cable (at equalizer), stabilizer link (left side), clutch pedal pull rod and spring, place jack under rear of engine. Remove pedal shaft inner bracket, loosen brace rod on right side at rear only, lower cross member, take out bell housing nuts and cap-screws, jack up rear of engine, remove 2 frame-to-vertical support member bolts on each side, remove support members. Remove transmission.

UNIVERSALS

UNIVERSAL JOINTS:—Detroit. Series 5350. Cross type with roller bearings. Two used.
See Universals Section for complete data.

REAR AXLE

REAR AXLE:—Own make. 'Angle-Set', semi-floating, hypoid gear type with Hotchkiss drive.
See Rear Axle Section for complete data.

Ratio—4.69-1 (std.), 4.36-1, 4.09-1 (optl.).
Backlash—.003-.005". Screw adjustment.

Removal:—Remove wheel, hub, brake assembly, wheel bearing and axle shaft. Disconnect rear universal joint at flange, drop drive shaft, remove differential housing by removing housing bolt nuts (below), and locknut on stud (at top). Remove carrier.
Wheel Bearing Adjustment—Controlled by shims between outer race of inner bearing and shoulder in housing. Remove wheel, hub, brake assembly, wheel bearing and axle shaft. Add or remove shims Adjust each wheel independently.
Endplay .003" (plus or minus .001") at each wheel.

SHOCK ABSORBERS

SHOCK ABSORBERS:—Delco. Model 1966-A, B (front), 1751-J, K (rear). Hydraulic, double acting type.
See Shock Absorber Section for complete data.

FRONT SUSPENSION

Front Suspension:—Packard Safe-T-fleX type with coil springs.
See Front Suspension Section for complete data.

NOTE—Data below applies with car on level floor tires properly inflated and car loaded with 300 lbs. (frt.—all), 375 lbs. (rear—5 Pass.), 225 lbs. (rear—Coupe), 675 lbs. (rear—7 & 8 Pass.).
Front Suspension Height—Distance from floor to top of frame siderail at spring should be 20⅛" plus or minus ¼".
Kingpin Inclination—1½° crosswise.
Camber—½° (plus ¾°). Adjustable.
Caster—2½° plus or minus ½°. Shim adjustment.
Toe In—1/32-⅛". Adjust by turning tie rods equally (check for equal lengths after adjustment).

STEERING GEAR

Steering Gear: Packard (Gemmer design Model 375) Worm-and-Roller type with push-pull adjustments and center steering. See Gemmer Model 375 article.
See Steering Gear Section for complete data.

BRAKES

BRAKES:—Service—Bendix hydraulic, duo-servo, single anchor type. Hand lever applies rear service brakes.
See Brake Section for complete data.

Drum—Centrifuse. Diameter—12".

Lining—Primary (Marshall #1035), Secondary (#600). Width 2½". Thickness 3/16". Length 13".
Clearance—.010" at heel and toe of each shoe.

Hand Brake Adjustment:—See Service Brakes.

MODEL IDENTIFICATION

SERIAL NUMBER:—On front of dash (use Engine No.).

ENGINE NUMBER: On block left side below distributor. First number A-600001 ('38), B-600001 ('39).

TUNE-UP

COMPRESSION: Ratio—6.4-1 Std. '38. 6.3-1 Std. '39. High Compression 7.0-1 and Low Compression 6.0-1 heads optional. Carry 'HC' or 'LC' marks on head. **Pressure—110 lbs. (Std.), 119 (HC) at 125 RPM.**

VACUUM READING:—Steady 18-20" at 8 MPH.

FIRING ORDER: 1R-6L-5R-2L-3R-4L-6R-1L-2R-5L-4R-3L with cylinder banks right (R) and left (L) as viewed from driver's seat and #1 cylinder nearest radiator. Spark plugs not connected in this order on distributor cap (see diagram).

SPARK PLUGS: AC No. 104 or Champion Y-4. 10 mm. **Gaps**—.028". Limits .026-.030".
NOTE—If colder plug required use AC No. 103S or Champion Early Y-4. Do not tighten these small plugs excessively. Tightening tension 50 in. lbs.

IGNITION: See Coil, Condenser, and Distributor.
Breaker Gap—.020". **Cam Angle**—40° Closed.
Synchronization—Set movable contacts to open 33½° after stationary contacts.
Automatic Advance—10° max. at 1400 RPM (for IGO-4001A Distr., 8° max. at 1200 RPM (IGO-4002A).

IGNITION TIMING: See Ignition Timing.
Std. Setting—6-8° BTDC (for standard cyl. head), 4-6° BTDC (for HC hd.). Vibration dampener mark (correct graduation ahead of #1R-UDC) aligned with pointer at front of engine. Movable contacts should open 33½° after this point.

CARBURETION: See Carburetor & Carb. Equipment.
Idle Setting—Set idle adjusting screws midway between "miss" and "roll" points. Idle speed 8 MPH.
Float Level—Fuel level 9/16" below edge of bowl.
Fuel Pump Pressure: 4½ lbs. maximum.

VALVES: See Valve Timing.
Tappet Clearance None in service, hydraul. take-up.

STARTING: See Battery, Starter, Generator, Regulator.

IGNITION

Ignition Switch:—Mitchellock Model 24-B, No. 7648.
Ignition Lock—Briggs & Stratton. Mitchell #6760.

COIL: Auto-Lite Model CE-1203. Two Coil Unit. Service Coil (less switch & cable) CE-3186FS. Mounted at front of the engine.
Ignition Current—½ ampere idling, 2½ amperes stopped for each coil.

CONDENSER: Auto-Lite No. IG-2671-E, IG-2671-A (one of each used). **Capacity**—.20-.25 microfarad.

DISTRIBUTOR: Auto-Lite Model IGO-4002A (Std. hd.), IGO-4001A (HC head). Double breaker, 6 lobe cam, full automatic advance type.
Firing Interval—Movable contacts open 33½° after fixed set (firing interval 33½-26½-33½ distributor degrees caused by 67° included angle between banks.
Breaker Gap—.020". Limits .018-.022".
Cam Angle or Dwell—40° closed, 20° for each set of contacts (operate independently).
Breaker Arm Spring Tension—16-20 ozs.
Rotation—Counter-clockwise viewed from the top.

Automatic Advance—IGO-4002A

Distributor Degrees	Distributor R.P.M.	Engine Degrees	Engine R.P.M.
Start	300	0	600
2	525	4	1050
4	750	8	1500
6	975	12	1950
8	1200	16	2400

Automatic Advance—IGO-4001A

Start	300	0	600
2	515	4	1030
4	730	8	1460
6	950	12	1900
8	1175	16	2350
10	1400	20	2800

Removal:—Distributor mounted between cylinder banks at front of engine. To remove, take off distributor cap and cable conduit assembly, take out screws in mounting bracket.

IGNITION TIMING

IGNITION TIMING:—Settings for all engines as follows:

	Flywheel Degrees	Piston Position
Std. & LC hds	6-8° BTDC	.0145-.0255" BTDC
High Comp. hd	4-6° BTDC	.0063-.0145" BTDC

NOTE—Vibration dampener at front of engine marked '#1R-UDC' (top dead center #1 piston, right hand bank), '#6L-UDC' (top dead center #6 piston, left hand bank), with fifteen 1° graduations before each of these marks.

Timing (Stationary Contacts)—With #1R piston (front cylinder, right bank) on compression, turn engine over until piston reaches firing position (see table above), stop when correct graduation on vibration dampener at front of engine lines up with pointer on chain case cover. Loosen clampscrew on mounting bracket, rotate distributor until stationary contacts (mounted directly on breaker plate)

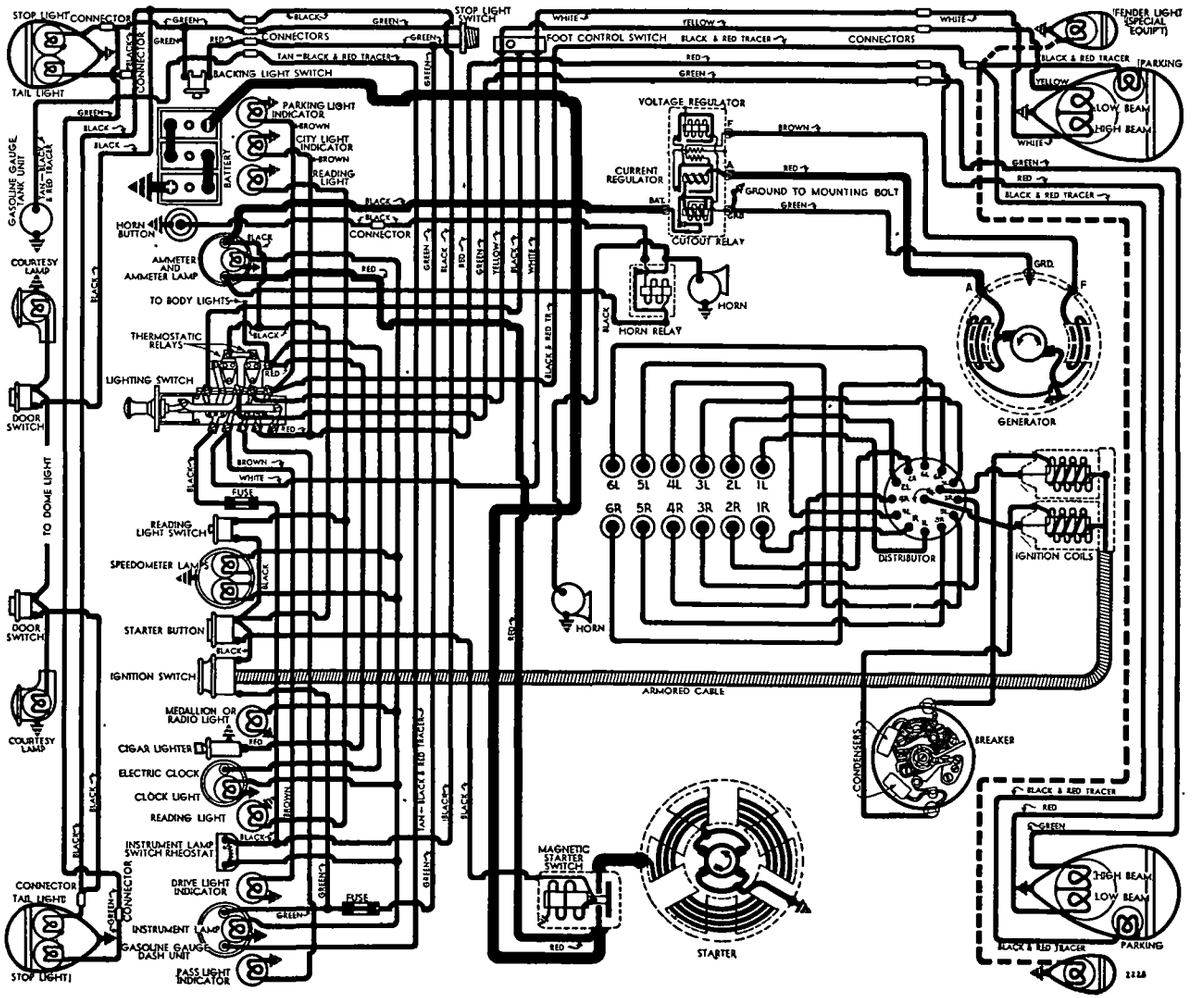

begin to open, tighten clampscrew. Then synchronize movable contacts.

Synchronization of Movable Contacts (On Engine)—Turn engine over exactly 67° to firing position of piston #6L (rear piston, left bank), stop when correct graduation on vibration dampener lines up with pointer. Loosen lockscrews on movable subplate (on which second set of contacts mounted), shift plate until contacts begin to open, tighten lockscrews.

Synchronization (Other Methods)—Set movable contacts to open exactly 33½° after fixed set. Firing intervals are irregular 33½-26½-33½ distributor degrees.

CARBURETOR

CARBURETION:—Carburetor—Stromberg Model EE-3. 1½" Duplex or double barrel type.

For complete data, refer to Carburetor Index.

Idle Adjustment—With engine warmed up so that Automatic Choke and Fast Idle inoperative, set throttle lever stopscrew so that engine idles at 6 MPH., turn idle adjusting screw for each barrel (in succession) out until engine begins to roll, then turn screw in slowly until engine fires smoothly. Final setting should be approximately 1-1⅛ turns of screw out from inner seated position. Readjust throttle stopscrew for correct idle speed.

Accelerating Pump—Two holes provided in throttle lever for pump link engagement as follows:
Outer Hole (Max.)—Normal weather and fuel.
Inner Hole (Min.)—Hot weather, high-test fuel.

Fast Idle:—Integral (built-in carburetor).

For complete data, refer to Carburetion Equip. Index.

Setting—With choke valve closed, turn fast idle adjusting screw in until it contacts fast idle cam lug, then turn screw in additional 6¾ turns.

Automatic Choke:—Stromberg Model C (separate unit).

For complete data, refer to Carburetion Equip. Index.

Setting—Pointer should line up with punchmark on thermostatic coil case (16 notches rich from '0' mark). NOTE—Setting may be varied 4 graduations either way for best performance.

CARB. EQUIPMENT

Air Cleaner:—AC #1528519 oil-wetted type Std.

Fuel Pump:—AC Type I #1521778 combination fuel-and-vacuum pump. Diaphragm type.

For complete data, refer to Carburetion Equip. Index.

Gasoline Gauge:—Motometer (Auto-Lite) Electric. Dash Unit: NG-8673D (1938), NG-9045D (for 1939). Tank Unit: NG-8648T (1938 and 1939).

For complete data, refer to Carburetion Equip. Index.

BATTERY

Prest-O-Lite Hi-Level Type Model HR4-21. 6 volt, 21 plate, 150 A.H. capacity (20 hr. rate).

Starting Capacity—175 amperes for 20 minutes.

Zero Capacity—300 amperes for 6.3 minutes.

Grounded Terminal—Positive (+) grounded to frame 'X' member. **Engine Ground**—Strap connector at right hand rear engine mounting.

Dimensions—Length 13". Width 7". Height 9⅛".

Location—Under left front seat.

Export Battery—Willard Type SR-5-153. 6 volt, 19 plate, 153 A.H. capacity (20 hr. rate).

Starting Capacity—180 amperes for 20 minutes.
Zero Capacity—300 amperes for 6.6 minutes. Five second voltage 4.5 volts.
Dimensions—Length 13". Width 7 1/16". Height 9 5/16".

STARTER

Owen-Dyneto Model DN-1389. Armature No. 13409.
Drive—Outboard Bendix Model RCD-10FXTD.
Rotation—Counter-clockwise at commutator end.
Brush Spring Tension—56-60 ozs. (new brushes).
Cranking Engine—125 RPM., 130 amperes, 5.6 volts.

Performance Data

Torque	R.P.M.	Volts	Amperes
0 ft. lbs.	3000	6.0	50
5.8 "	850	5.2	200
11.4 "	520	4.8	300
17.0 "	340	4.5	400
23.0 "	220	4.2	500
26.6 "	140	4.0	600
39.0 "	Lock	3.6	810

Removal:—Sleeve mounted on right front face of flywheel housing. To remove, take out pilot mounting screw in housing.

Starting Switch: Auto-Lite SS-4001. Magnetic type. Mounted on starter, controlled by switch on instrument panel.

For complete data, refer to Electrical Equipment Index.

GENERATOR

Auto-Lite Model GCE-4803A. Armature No. GBX-2035F. Two brush, straight shunt type with vibrating voltage and current regulation. Ventilated by fan on drive pulley.

Maximum Charging Rate—30 amperes (cold), 8.0 volts, 1400 RPM. and above (with discharged battery or load). Actual charging rate controlled by regulator and dependent on battery condition.

Charging Rate Adjustment—No adjustment at generator. See Regulator data below.

Performance Data

Cold			Hot		
Amperes	Volts	R.P.M.	Amperes	Volts	R.P.M.
0	6.4	740	0	6.4	785
4	6.6	830	4	6.6	880
8	6.8	920	8	6.8	975
12	7.05	1015	12	7.05	1070
16	7.25	1100	16	7.25	1165
20	7.5	1190	20	7.5	1275
24	7.7	1280	24	7.7	1385
30	8.0	1400	30	8.0	1580

NOTE—30 amperes is Current Regulator setting.

Rotation—Counter-clockwise at commutator end.

Brush Spring Tension—64-68 ozs. (new brushes).

Field Current—1.66-1.84 amperes at 6.0 volts.

Motoring Current—5.03-5.57 amperes at 6.0 volts.

Removal:—Special pivot mounting at left front of engine. To remove, take out pivot and clamp bolts.

Belt Adjustment:—Swing generator out until 70-80 lb. reading secured n spring scale hooked to clamp bolt lug parallel to slot or until deflection midway between generator and water pump pulleys is ½-¾" with thumb pressure. NOTE—Replace both drive belts together as a matched set.

REGULATOR

Auto-Lite Model VRB-4008AP. Consists of Cutout Relay, vibrating Voltage Regulator and Current Regulator in case on dash.

For complete data, refer to Electrical Equipment Index.

NOTE—Regulator cover sealed. Serviced on exchange basis if seals not broken.

Cutout Relay

Cuts In—6.4-7.0 volts, 700 R.P.M. Cold.

Cuts Out—.5-3.0 amperes discharge current.

Contact Gap—.015" Minimum.

Air Gap—.034-.038" with contacts open, measured at hinge end of core.

Voltage Regulator

Setting—7.3-7.6 volts at 70°F. (Regulator Serial No. 8R-000001 Up). ***See Electrical Equipment Section for settings and changes on units before this Serial Number.***

To Check (without breaking seals)—Connect ammeter in charging line at regulator 'B' terminal, voltmeter between 'B' and 'GD' terminals. Operate generator, charging fully charged battery, at speed equivalent to 30 M.P.H. until voltage is steady. Voltage should be within limits of 7.21-7.83 volts.

To adjust (with cover removed)—Change armature spring tension by bending lower spring hanger slightly. See Electrical Equipment Section for complete adjustment directions.

Contact Gap—.010-.020" (armature against stop pin).

Air Gap—.0595-.0625" with contacts just opening.

Current Regulator

Setting—29-31 amperes (marked '30' on cover).

To Check (without breaking seals)—Connect test meters as for voltage test (above). Operate generator at 30 M.P.H., add load (use bank of headlamp bulbs or turn on car lights and discharge battery) so that generator charges at peak rate and Current Regulator operates. Charging current should not exceed 30 amperes (if more than slight excess noted, regulator is defective).

Adjustment, Contact Gap, Air Gap—Same as for Voltage Regulator (above).

LIGHTING

LIGHTING:—Headlamps—Hall Flex-beam type with pre-focused bulbs. Asymetrical passing beam (lower beam left hand headlamp, upper beam right hand headlamp) controlled by Beam Selector Switch on toeboard.

Headlamp Adjustment—With tires properly inflated, car loaded to rated capacity, 25' from screen with upper beams lighted, aim left hand headlamp so that hot spot centered on lamp vertical centerline and upper edge at horizontal line at lamp center height. Aim right hand headlamp for same height but with left edge of hot spot at lamp vertical center-line (entire hot spot to right of this line).

Beam Indicators—Four used (1 & 2 in Water Temperature gauge dial, 3 & 4 in Oil Pressure gauge dial). Lighted when following lights in use:
1. **Park**—Parking or Fender lights.
2. **City**—Headlamp lower beam.
3. **Drive**—Headlamp upper beam.
4. **Pass**—Headlamp asymetrical passing beam.

C NTINUED N NEXT PAGE

CONTINUED FROM PRECEDIN PAGE

Switches

Lighting—Delco-Remy No. 1994505.

Beam Selector—Delco-Remy No. 1997001.

Bulb Specifications

Position	Candlepower	Mazda No.
Headlamp—Right Hand	32-32	2330
Headlamp—Left Hand	32-21	1104
Parking, Fender, Instrm.	1½	55
Reading, Clock, Glove Compt.	1½	55
Indicators (all)	1	51
Stop	15	87
Tail, Courtesy, Quarter	3	63
Dome	6	81
Fog light	32	1321
Spotlight	32	1323

MISC. ELECTRICAL

THERMOSTATIC RELAY:—Two used. Mounted on lighting switch, protect lighting circuits. Remain closed with 25 amperes but opens in 2 minutes with 38 amperes. Not adjustable.

FUSES:—**Instrument & Tail Lights**—20 ampere. In connector in switch lead near lighting switch.
Stop Light—20 ampere. In lead near switch.
Clock—2 ampere. On back of clock.

HORNS:—**Sparton Model 6D30.** Vibrator type, Air tone, Twin horns operated by horn relay.
Air Gap—.032-.035" (low note—long horn), .026-.030" (high note—short horn).
Horn Current—22-25 amperes (total).

Horn Relay: RBM Model 10072 or 790 ('38), 4757 ('39).
Closing Voltage—2.75-4.0 volts.
Contact Gap—.015-.025". **Air Gap** .010-.020" (closed).
NOTE—Late type relay not adjustable (cover welded).

ENGINE

ENGINE SPECIFICATIONS:—12 cyl., modified 'L' head, 67° Vee. Blocks and upper crankcase cast Enbloc.
Bore—3 7/16". **Stroke**—4¼".
Displacement—473 cu. ins. **Rated HP.**—56.7.
Developed Horsepower—175 HP (standard head), 180 HP (High Compression head) at 3200 RPM.
Compression Ratio—6.4-1 Std. '38. 6.3-1 Std. '39. High Compression 7.0-1 and Low Compression 6.0-1 heads optional. Carry 'HC' or 'LC' marks on head.
Compression Pressure—110 lbs. (for standard hd.), 119 lbs. (for High Compression head) at 125 RPM.
Vacuum Reading—18-20" at 375 R.P.M. or 8 M.P.H.
See Packard Shop Notes for Cylinder Head data.

PISTONS:—Nelson Bohnalite, aluminum alloy, autothermic strut type, tin plated, cam ground.
Weight—20 ozs. (stripped), 26¾ ozs. (with rings and pin). **Length**—4.318".
Removal—Pistons removed from above, rods from below. Warm engine facilitates removal.
Clearance—.0005-.001". See Fitting Pistons.

Original Bore & Pistons Sizes, Replacement Pistons:—*See Packard Shop Notes for complete data.*

Fitting New Pistons:—Insert .0015" feeler ½" wide between piston and cylinder wall on side opposite slot. Pull to withdraw feeler should be 12-18 lbs.

Installing Pistons:—Slot toward valves (all pistons).

PISTON RINGS:—Four rings per piston, #1 Comp. (plain), #2 & 3 Comp. (Perfect Circle #70), #4 Oil Contr. (#X-90), all above pin. Oil ring groove drilled with twelve #30 oil drain holes.

1938 Piston Ring Specifications

Ring	Width	End Gap	Side Clearance
Compr.	.1225-.1230"	.007-.015"	.0025-.003"
Oil Contr.	.1545-.1550"	.007-.015"	.0015-.002"

1939 Piston Ring Specifications

Ring	Width	End Gap	Side Clearance
Comp. (#1, 2)	.123-.1240"	.007-.017"	.0025-.003"
Comp. (#3)	.123-.1240"	.007-.015"	.0015-.002"
Oil Contr.	.186-.1865"	.007-.015"	.0015-.002"

NOTE—On left bank, ring gap #1 and #3 away from camshaft, #2 and #4 toward camshaft. Reverse procedure for right hand bank.
Replacement Rings:—Std. and .003", .005", .010", .015", .020", .030", .045" oversize.

PISTON PIN:—**Diameter**—⅞". **Length**—2 63/64".
Pin floats in piston and rod, held by locking rings. Furnished std. and .003", .006" oversize.
Pin Fit in Piston—Finger push fit with piston heated to 160° F.
Pin Fit in Rod Bushing—Finger push fit at 70° F. Finish ream pin hole to .87485-.87515".

CONNECTING ROD:—**Weight**—36 ozs. **Length**—9".
Crankpin Journal Diameter—2½".
Lower Bearing—Copper lead alloy, interchangeable type. Furnished std. and .001", .002", .003", and .015" undersize.
Clearance—.001-.0015". **Sideplay**—.008-.010".
Bearing Adjustment:—None (no shims). Replace bearings. Do not file rods or caps.
Installing Rods:—Oil hole toward starter.

CRANKSHAFT:—4 bearing, 6 bolted counterweights with rubber friction disc vibration damper mounted on forward end. **Journal Diameters**—2¾".
Bearing Type—Interchangeable steel-backed, babbitt-lined type. **Clearance**—.001-.002".
Bearing Adjustment:—None (no shims). Replace bearings. Upper halve may be rotated in place.
End Thrust:—By #1 bearing. **Endplay**—.003-.005".

CAMSHAFT:—Four bearing. Between banks directly above crankshaft. Non-adjustable chain drive.
Bearing Type—Steel backed, babbitt-lined.
Clearance—.001-.0015" (#1, 4). .002-.0025" (#2, 3).
End Thrust:—Taken at front bearing.
Endplay—.002-.006".
Timing Chain:—Morse No. 1866-N. Width 1¾". Pitch .500". Length 28" or 56 links.
Camshaft Setting:—Install chain and sprockets together with marks adjacent and in line with a straightedge across the shaft centers.
See Packard Shop Notes for Radiator & Fender (unit) removal for work on front end of engine.

VALVES:—	Head Diameter	Stem Diameter	Length
Intake	1 41/64"	.3405"	6 35/64"
Exhaust	1 21/32"	.338"	6 35/64"

	Seat Angle	Lift	Stem Clearance
Intake	45°	.3125"	.002-.0025"
Exhaust	45°	.3125"	.0045-.005"

Automatic Tappet Take-up:—Hydraulic type (using engine oil pressure). Must be checked when valves ground.
See Miscellaneous Section for complete data.

Valve Springs:—Install springs with painted end down and close-spaced first coil toward valve head. Special 1/32" higher stem keeper furnished (compensating for low pressure due to reseating valves).

	Spring Pressure	Spring Length
Valve Closed	65-75 lbs.	2 7/32"
Valve Open	140-150 lbs.	1 29/32"

NOTE—Serrated washer on top of spring to prevent rotation.

VALVE TIMING

Tappet Clearance: None (automatic take-up).
Valve Timing:—See Camshaft Setting above.
Intake Valves—Open at TDC. Close 45° ALDC.
Exhaust Valves—Open 35° BLDC. Close 10° ATDC.
To Check Timing—Intake valve for #1 (front cylinder, right bank) begins to open with piston on top dead center when '#1R-UDC' mark on dampener lines up with pointer on chain case cover. (permissable variation 9/16" either side of mark). Removal of right cylinder head and dial indicator mounted over valve recommended to check opening.

LUBRICATION

LUBRICATION:—Pressure system with gear type oil pump mounted in crankcase. Oil filter and temperature regulator mounted on right side of engine.
Normal Oil Pressure:—55-60 lbs. max., 5 lbs. min. idling (SAE #20 oil, engine warm or 150° F.).
Oil Pressure Regulator:—Located under plug on right side of crankcase below filter. Remove acorn nut and adjust by turning slotted screw.
Pressure Relief Valves—Non-adjustable relief valve in regulator housing opens at 17 lbs. back-pressure in filter and cooler and by-passes oil directly to manifold. By-pass valve in filter opens at 7-8 lbs.
Valve Silencer Metering Valve—Spring loaded type in pump body, exposed by removing pump cover.
Crankcase Capacity:—10 quarts.

COOLING

COOLING SYSTEM:—**Water Capacity**—40 quarts.
Water Pump:—Adjustable packing type, mounted n ball bearings, driven by twin Vee belts.
See Water Pump Section for complete data.
Removal—With water drained and fan belts removed, disconnect pump hose, remove pump mounting bolts, lift fan and pump assembly off.
Thermostat:—In top radiator tank. Operates shutters.
Setting—Starts 135° F. Fully open 150° (no load). Cover stamped 150°. NOTE—Special thermostat (for heater use with permanent anti-freeze) starts to open at 160°, fully open 170-175°. Marked 175°.
Adjustment—At room temperature with thermostat sylphon closed, pull back on shutter pullrod to close shutters, tighten nut to remove all slack in rod, then tighten one turn additional for pre-load.
Temperature Gauge: Auto-Lite (Motometer) Numbers H-8674 (for 1938), H-9044 (for 1939).
See Miscellaneous Section for complete data.

CLUTCH

CLUTCH:—**Long Model 12CB-CL.** Single plate, dry disc type with Bendix Vacuum Power operation.
See Clutch Section for complete data.
Facings—Endless-compressed (Hyco DV 3903 PDX), 2 required. I.D. 7". O.D. 12". Thickness .137".
Pedal Adjustment:—Vacuum Power unit must be adjusted whenever pedal free travel insufficient (should be 1" to 1 13/16"). *Refer to Clutch Section article for adjustment directions on this unit.*

Removal:—Remove transmission (see Transmission Removal following), take out cover mounting screws (release pressure evenly), lift assembly out. Align '0' marks on flywheel and cover when reassembling.

TRANSMISSION

TRANSMISSION:—Own Make. Helical gear type with synchronizer for second and high speeds.
See Transmission Section for complete data.

Transmission Control (1939): Own Steering Col. Shift.
See Transmission Section for complete data.

Removal:—Remove ground cable, speedometer cable, propeller shaft, light switch, two stud nuts (case bracket to rubber support) at each side, hand brake cable at equalizer, left stabilizer link, clutch pedal pull-rod, and pedal spring. Support engine at rear. Remove right brace rod (rear only), lower cross-member, and bell housing nuts and capscrews. Jack up rear of engine, remove two bolts on each side (holding vertical support members to frame), remove support members, pull transmission back.

UNIVERSALS

UNIVERSAL JOINTS:—Spicer Model 1351-10X (front), 1358-18X (rear). Needle bearing type, 2 used.
See Universals Section for complete data.

REAR AXLE

REAR AXLE:—Own Make. 'Angle-Set', semi-floating, hypoid gear type with Hotchkiss drive.
See Rear Axle Section for complete data.

Ratio—4.41-1 (std.), 4.69-1, 4.06-1 (optl.).

Backlash—.003-.005". Screw adjustment.

Removal:—Remove wheel, hub, brake assembly, wheel bearing and axle shaft. Disconnect rear universal joint at flange, drop drive shaft, remove differential from housing by removing housing bolt nuts (below), and locknut on stud (at top). Remove carrier.

Wheel Bearing Adjustment—Controlled by shims between outer race of inner bearing and shoulder in housing. Remove wheel, hub and brake assembly, wheel bearing and axle shaft. Add or remove shims adjust each wheel independently.

Endplay—.003" (plus or minus .001") at each wheel.

SHOCK ABSORBERS

SHOCK ABSORBERS: Delco Double Acting Types. Models 1952-A (right front), 1952-B (left front), 2006-G (right rear), 2006-H (left rear).
See Shock Absorber Section for complete data.

FRONT SUSPENSION

Front Suspension:—Packard Safe-T-fleX type with coil springs.
See Front Suspension Section for complete data.

NOTE—Frame Height must be set first before checking Caster and Camber.

Frame Height—With car on level floor, distance from floor to top of frame side rail at front wheel center-line 20½" (load car for correct figure).

Kingpin Inclination—1½° crosswise.

Camber—1° plus or minus ¼°. Adjustable.

Caster—0° (½° reverse max.). Shim adjustment.

Toe In—1/32-⅛". Adjust by turning tie rods equally (check for equal lengths after adjustment).

STEERING GEAR

Steering Gear: Packard (Gemmer design Model 375) Worm-and-Roller type with push-pull adjustments and center steering. See Gemmer Model 375 article.
See Steering Gear Section for complete data.

BRAKES

BRAKES:—Service—Bendix hydraulic, duo-servo, single anchor type with Vacuum Power operation. Hand lever applies rear service brakes.
See Brake Section for complete data.

Drum—Centrifuse. Diameter—14".

Lining—Primary (Raybestos No. 451). Secondary (U.S. Asbestos No. 589). Width 2¾". Thickness ¼". Length 15" per shoe.

Clearance—.010" at heel and toe of each shoe.

Hand Brake:—See Service Brakes.

Vacuum Power Unit:—Bendix internal valve type.
See Brake Section for complete data.

ELECTRICAL EQUIPMENT NOTE: These cars have either Auto-Lite or Delco-Remy Electrical Units.

MODEL IDENTIFICATION

SERIAL NUMBER:—On front of dash (Use Engine No.).

ENGINE NUMBER:—First number B-1501. Stamped on boss on upper left hand side of cylinder block.

TUNE-UP

COMPRESSION:—**Ratio**—6.52-1 Std., 6.85-1 Optl.
NOTE—These ratios decreased to 6.39-1 & 6.71-1 in production by increasing head gasket thickness to .070". **Head Identification**—Heads marked with Part No. 324285 (6.52-1), 335664 (6.85-1).
Pressure—110 lbs. (Std. 6.52-1 hd.), 118 lbs. (Optl. 6.85-1 hd.) at 125 RPM. cranking speed.

VACUUM READING:—Steady 18-20" idling at 6 MPH.

FIRING ORDER: 1-5-3-6-2-4. See wiring diagram.

SPARK PLUGS: AC No. 104 or Champion Y-4. 10 mm.
Gaps—.028". Limits .026-.030".
NOTE—If colder plug required use AC No. 103S or Champion Early Y-4. Do not tighten these small plugs excessively. Tightening tension 50 in. lbs.

IGNITION: See Coil, Condenser, and Distributor.
Breaker Gap—.020".
Cam Angle—Closed 38° (Auto-Lite), 35° (Delco-Remy).
Automatic Advance—Auto-Lite: 8¾° at 2000 RPM, Delco-Remy: 9½° at 2000 RPM. Distrib. ° & RPM.
Vacuum Advance—7½° (distr.) with 17" vacuum.

IGNITION TIMING: See Ignition Timing.
Std. Setting—6-7½° BTDC (Std. hd.), 5-6½° BTDC (Optl. 6.85-1 iron head). Flywheel mark (correct degree mark ahead of #1UP.DC) aligned with inspection hole pointer (on left side under starter).

CARBURETION: See Carburetor & Carb. Equipment.
Idle Setting—Set idle adjusting screw midway between "miss" and "roll" points. Idle speed 6 MPH.
Float Level—Fuel level 17/32" below edge of bowl.
Accelerating Pump—Center Hole—Normal Setting.
Fuel Pump Pressure: 4 lbs. maximum.

MANIFOLD HEAT CONTROL:—Thermostatic coil type. Make certain that valve operates freely (valve must not bind or stick). Do not oil control.

VALVES: See Valve Timing.
Tappet Clearance .007" Intake, .010" Exhaust, hot.

STARTING: See Battery, Starter, Generator, Regulator.

IGNITION

AUTO-LITE

Ignition Switch:—Mitchellock Model 24-B, No. 8058.
Ignition Lock—Briggs & Stratton. Mitchell #6760.

COIL: Auto-Lite Model CE-4632. Service Coil (less switch & cable) CE-3224ES. On left side of engine.
Ignition Current—½ ampere idling, 2½ stopped.

CONDENSER: Auto-Lite Part No. IG-2671K.
Capacity—.20-.25 microfarad.

DISTRIBUTOR: Auto-Lite Model IGS-4013 (Early 1939 cars), IGS-4201 (Later 1939 cars). Single breaker, 6 lobe cam, full automatic advance with Vacuum Spark control and Fuel Compensator adjustment.
NOTE—These distributors are interchangeable.
Breaker Plate Identification Note—Number stamped on plate (7½) indicates vacuum advance slot limits.
Breaker Gap—Set at .020".
Cam Angle r Dwell—38° closed, 22° open.

Breaker Arm Spring Tension—16-20 ounces.
Rotation—Counter-clockwise viewed from the top.

Automatic Advance—Auto-Lite

Distributor Degrees	Distributor R.P.M.	Engine Degrees	Engine R.P.M.
Start	300	0	600
.8	400	1.6	800
2	550	4	1100
4	800	8	1600
6	1300	12	2600
8.75	2000	17.5	4000

Vacuum Spark Control—Integral type, mounted on distributor cap and linked to breaker plate. Provides additional advance at all speeds above idling except when engine accelerated or operated with wide open throttle when spark retarded by return spring within unit.

Vacuum Advance—Auto-Lite

Distr. Degrees	Eng. Degrees	Vacuum (" of HG)
Start	0	6"
3	6	10.4"
7.5	15	17"

Fuel Compensator—Manual adjustment at distributor provides 10° advance or retard from center '0' position. See Ignition Timing for setting.

Distributor Removal:—Mounted on left hand side of crankcase. To remove, disconnect vacuum line, take out hold-down screw in advance arm.

IGNITION

DELCO-REMY

Ignition Switch:—Delco-Remy No. 1116254. Connected to coil by armored cable.
Ignition Lock—Briggs & Stratton No. 50184 (Lock cylinder). Key Series—P1251-P1500. Groove—#2.

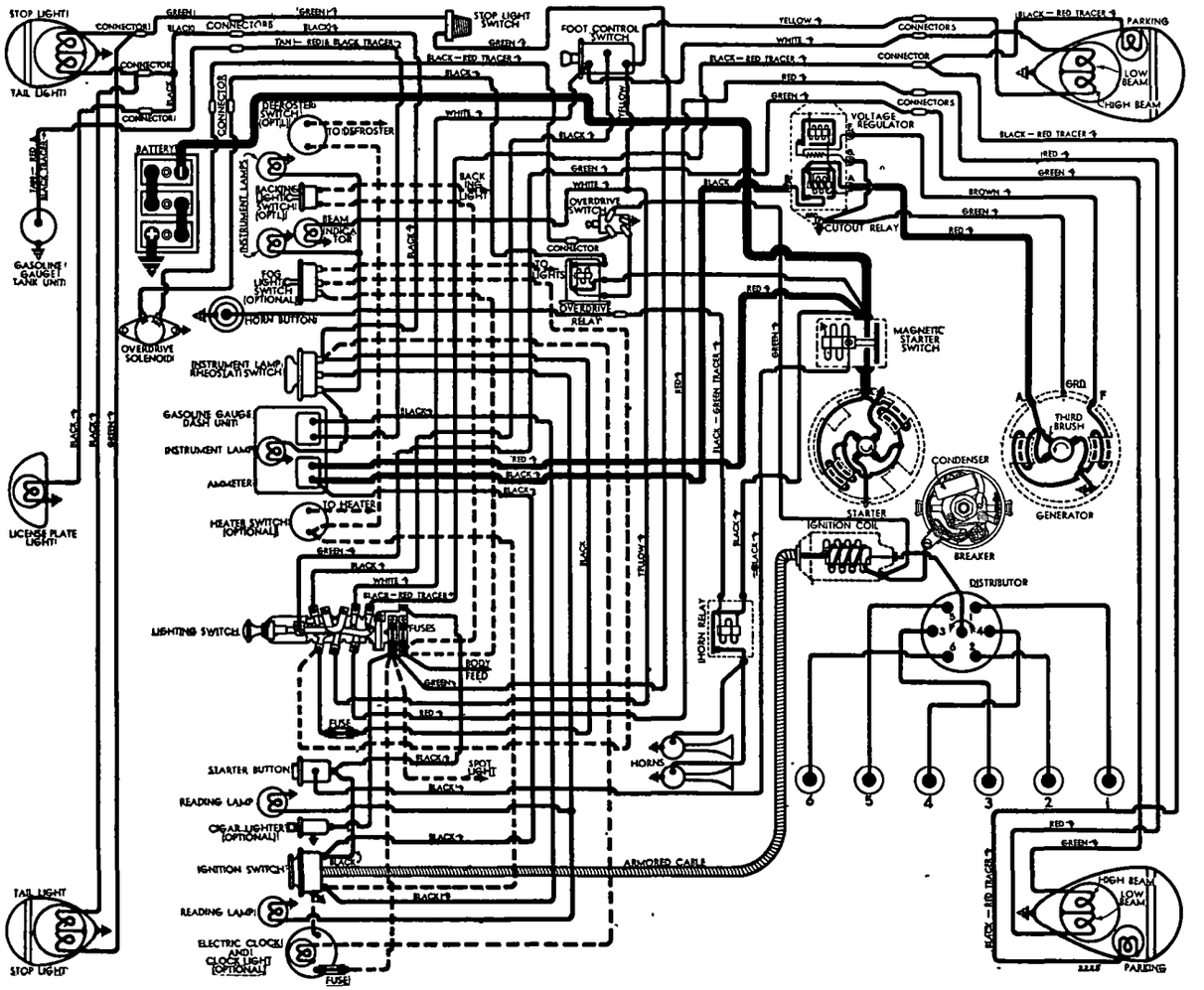

DELC -REMY EQUIPMENT

See 1939 '120' Eight Diagram for Auto-Lite internal circuits
See Transmission Section for late 1939 type Overdrive Control Wiring

COIL: Delco-Remy Model 539-N. On left side of block.
Ignition Current—½ ampere idling, 2½ stopped.

CONDENSER: Delco-Remy Part No. 1869704.
Capacity—.20-.25 microfarad.

DISTRIBUTOR: Delco-Remy Model 1110203. Single breaker, 6 lobe cam, full automatic advance type with vacuum spark control and Fuel Compensator.
Breaker Gap—Set at .020". Limits .018-.024".
Cam Angle or Dwell—35° (closed), 25° (open).
Breaker Arm Spring Tension—20 ounces.
Rotation—Counter-clockwise viewed from the top.

Automatic Advance—Delco-Remy

Distributor Degrees	R.P.M.	Engine Degrees	R.P.M.
Start	300	1.5	600
4.75	800	9.5	1600
9.5	2000	19	4000

Vacuum Spark Control Delco-Remy Model 681-K. Integral type. Mounted on side of distributor and linked directly to breaker plate. Provides additional advance at speeds above idling except when engine accelerated or operated with wide open throttle when spark is retarded by return spring within unit. Plunger travel 9/64" maximum.

Vacuum Advance—Delco-Remy

Distr. Degrees	Eng. Degrees	Vacuum (" of HG)
Start	0	5-7"
7.5°	15°	15-19"

Fuel Compensator & Distributor Removal—Similar to Auto-Lite. See data given above for Auto-Lite.

IGNITION TIMING

IGNITION TIMING: Standard setting for all engines as follows: (see Fuel Compensator Setting below).

	Flywheel Degrees	Piston Position
Std. Iron hd. '39	6-7½° BTDC	.0149-.0231" BTDC
HC Iron hd. '39	5-6½° BTDC	.0103-.0174" BTDC

NOTE—Flywheel marked #1 UP D.C. with five 2° graduations before and after this point.

Timing—Remove inspection hole cover (left front face of flywheel housing below starter). Loosen thumbnut, set Fuel Compensator pointer at '0' (center graduation on scale), tighten thumbnut. With #1 piston on compression, turn engine over until piston reaches firing position (see table above), stop when correct graduation on flywheel lines up with pointer. Loosen advance arm clamp bolt, rotate distributor until contacts begin to open, tighten clamp bolt, see that rotor opposite #1 segment in distributor cap, check Fuel Compensator setting.

Timing (Neon Timing Light)—White mark provided on flywheel to indicate timing range (leading edge of mark 6°BTDC). Idle engine and adjust distributor as directed above.

Fuel Compensator Setting—Should be set for slight ping when accelerating with wide open throttle. To adjust, loosen thumbnut, rotate distributor counter-clockwise toward low end of scale (if ping too severe), clockwise toward high end of scale (if no ping noted), tighten thumbnut and recheck performance.

CARBURETOR

Holley (Chandler-Groves) Model A0C-25, No. 119-4A.
1¼" single barrel downdraft type.
See Carburetor Section for complete data.
Idle Adjustment—With engine warmed up so that Automatic Choke and Fast Idle inoperative, set throttle lever stopscrew so that engine idles at 6 MPH., turn idle adjusting screw out until engine begins to roll, then turn screw in slowly until engine fires smoothly. Setting should be ½-1½ turns of the screw out from the inner seated position. Readjust throttle stopscrew for correct idle speed.

Accelerating Pump Setting—Three holes provided in throttle lever for pump link engagement as follows:
Inner (Min. stroke)—Hot weather or high-test fuel.
Center Hole—Normal temperatures and fuel.
Outer (Max. stroke)—Cold weather or low test fuel.

Fast Idle:—Integral type, operated by choke linkage.
For complete data, refer to Carburetion Equip. Index.

Automatic Choke:—Integral type (on carburetor).
For complete data, refer to Carburetion Equip. Index.

Setting—Punchmark on thermostat plate lined up with mark on housing. NOTE—Setting may be varied 3 graduations either way from regular setting, if required.

Throttle Guard (Cars with Overdrive):—Vacuum operated throttle kicker to prevent engine stalling when free-wheeling below 20 MPH.
For complete data, refer to Carburetion Equip. Index.

CARB. EQUIPMENT

Air Cleaner:—AC oil-wetted type Std., Heavy Duty oil-bath type #1528585 (first 3523 cars), #1529026 (after 3523 cars) Optl. NOTE—#844751 oil-wetted type crankcase breather (oil filler) cleaner used.

Fuel Pump:—AC Type AJ #1523867 combination fuel-and-vacuum pump.
For complete data, refer to Carburetion Equip. Index.

Gasoline Gauge:—Stewart (Stewart-Warner) Electric. S-W No. 99255 (dash unit), 96466 (tank unit).
For complete data, refer to Carburetion Equip. Index.

BATTERY

BATTERY:—Willard Type SW-1-95 Std., SR-1-95 Exp. 6 volt, 15 plate, 95 A. H. capacity (20 hr. rate).

Starting Capacity—117 amperes for 20 minutes.

Zero Capacity—300 amperes for 3.1 minutes. Five second voltage 4.2 volts.

Grounded Terminal—Positive (+) grounded to frame 'X' member. **Engine Ground**—Strap connector between transmission cover bolt and frame.

Dimensions—Length 9". Width 7". Height 8 13/16".
Location—Under left front seat.

STARTER
AUTO-LITE

Auto-Lite Model MAW-4018. Armature MAW-2006.
Drive—Outboard Barrel Type Bendix No. A-1718.
Rotation—Counter-clockwise at commutator end.
Brush Spring Tension—42-53 ozs. (new brushes).
Cranking Engine—125 RPM., 175 amperes, 5.1 volts.

Performance Data—Auto-Lite

Torque	R.P.M.	Volts	Amperes
0 ft. lbs.	4900	5.5	65
.6 " "	3300	5.5	100
2.75 " "	1480	5.0	200
5.45 " "	820	4.5	300
8.50 " "	400	4.0	400
11.55 " "	110	3.5	500
11.5 " "	Lock	3.0	505
18.0 " "	Lock	4.0	670

Removal:—Flange mounted on left front face of flywheel housing. To remove, take out flange mounting screws, lift out starter and switch assembly.
Starting Switch: Auto-Lite SS-4001 Magnetic type. Mounted on starter, controlled by switch on instrument panel.
For complete data, refer to Electrical Equipment Index.

STARTER
DELCO-REMY

Delco-Remy Model 739-F. Armature No. 1866105.
Drive—Outboard Barrel Type Bendix No. A-1718.
Rotation—Counter-clockwise at commutator end.
Brush Spring Tension—24-28 ounces each.
Cranking Engine—125 RPM., 150 amperes, 5 volts.

Performance Data—Delco-Remy

Torque	R.P.M.	Volts	Amperes
0 ft. lbs.	5000	5.0	65
12 ft. lbs.	Lock	3.37	525

Removal: Same as for Auto-Lite above.
Starting Switch: Delco-Remy 1539 magnetic switch mounted on starter and controlled by pushbutton on dash.
For complete data, refer to Electrical Equipment Index.

Delco-Remy 1539 Switch Specifications
Contacts close with current draw of 3.1-3.7 amperes at 4.0 volts. Remain closed with current of .54-.65 amperes at .7 volt.

GENERATOR
AUTO-LITE

Auto-Lite Model GCJ-4807A-2 Std., GCJ-4810A-2 with Tachometer Drive. Third brush control type with external vibrating Voltage regulation. Ventilated by fan on drive pulley.

Armature—GCJ-2006 (GCJ-4807A-2) GCJ-2092 (GCJ-4810A-2).

Maximum Charging Rate—30.5 amperes (cold), 25.5 (hot), 8.0 volts. To check generator output, connect ammeter in charging line at regulator 'B' terminal, ground 'F' terminal to eliminate regulator action. Operate generator charging battery (do not run on open-circuit).

Charging Rate Adjustment—Third brush set for maximum output (1 comm. bar min., 1 comm. bar plus 1 mica strip max. from nearest or insulated main brush) and setting should not be exceeded. Actual charging rate regulated by Voltage Regulator. See Regulator data below.

Performance Data—Auto-Lite

Cold Amperes	Volts	R.P.M.	Hot Amperes	Volts	R.P.M
0	6.4	800	0	6.4	840
4	6.6	900	4	6.65	960
8	6.85	1025	8	6.9	1100
12	7.05	1160	12	7.15	1270
16	7.25	1330	16	7.4	1520
20	7.5	1560	20	7.65	1860
24	7.7	1900	24	7.9	2460
28	7.9	2400	26	8.0	3600
30	8.0	3200			

Rotation—Counter-clockwise at commutator end.
Brush Spring Tension—53 ozs. max. (new brushes).
Field Current—1.9-2.1 amperes at 6.0 volts.
Motoring Current—4.0-4.4 amperes at 6.0 volts.
Removal:—Pivot mounted on left front of engine. To remove, take out pivot and clamp bolts.

C NTINUED ON NEXT PAGE

CONTINUED FR M PRECEDIN PA E

Belt Adjustment:—Swing generator out until 25 lb. reading secured on scale hooked to clamp bolt lug parallel to clamp link or until belt deflection midway between generator and pump pulley is ½" with thumb pressure.

GENERATOR

DELCO-REMY

Delc -Remy Model 1100005. Armature No. 1866789. Fixed third brush with external vibrating voltage regulator. Air-cooled by fan on drive pulley.
NOTE—Third brush is clamped in position for maximum safe output and should not be disturbed.

Charging Rate Adjustment—Adjusted by changing Voltage Regulator setting. See Regulator data.

Maximum Charging Rate—As shown in table below. To check charging rate, connect test ammeter in line at 'BAT' terminal on regulator, connect voltmeter between 'GEN' terminal and ground, ground 'F' terminal to eliminate regulator action.
NOTE—Do not operate generator on open-circuit.

Performance Data—Delco-Remy

	Amperes	Volts	R.P.M.
Cold	26-30	8.0	3400
Hot	25-28	8.0	3600

Rotation—Counter-clockwise at commutator end.
Brush Spring Tension—22-26 ounces (main), 16-20 ounces (third brush).
Field Current—2.3-2.6 amperes at 6.0 volts.
Motoring Current—4.5 amperes at 6.0 volts.

Removal & Belt Adjustment: Same as for Auto-Lite above.

REGULATOR

AUTO-LITE

Auto-Lite Model VRD-4001-B. Consists of Cutout Relay and Voltage Regulator in case on dash.
For complete data, refer to Electrical Equipment Index.
NOTE—Regulator cover sealed. Serviced on exchange basis if seals not broken.

Cutout Relay—Auto-Lite

Cuts In—6.4-7.0 volts Cold, 710 RPM (Gen.).
Cuts Out—.5-3.0 amperes discharge.
Contact Gap—.015" minimum.
Air Gap—.034-.038" (contacts open). Measure at hinge end of core.

Voltage Regulator—Auto-Lite

Setting—7.3-7.6 volts at 70° F.

To Check (without breaking seal)—Connect ammeter in charging line at regulator 'B' terminal, voltmeter between 'B' and 'GD' terminals. Operate generator at speed equivalent to 30 MPH. charging battery until voltage is steady. Voltmeter reading should be between limits of 7.21-7.83 volts.

To Adjust (with cover removed)—Change regulator armature spring tension by bending lower spring hanger slightly. See Electrical Equiment Section.

Contact Gap—.010-.020" (armature against stop pin).

Air Gap—.0595-.0625" with contacts just opening.

REGULATOR

DELCO-REMY

Delco-Remy Model 5827. Double Core Type Voltage Regulator (With 'IGN' Terminal). Cutout Relay and vibrating type Voltage Regulator in single case.
NOTE—Model 5860 (no 'IGN' terminal) used for replacement.
For complete data, refer to Electrical Equipment Index.

Cutout Relay—Delco-Remy

Cuts In—6.9-7.6 volts, 850 R.P.M. (Gen).
Cuts Out—0-3 ampere discharge.
Contact Gap—.020". **Air Gap**—.020" (closed).

Voltage Regulator—Delco-Remy

Setting—7.5-7.9 volts at 70°F., 7.4-7.6 volts at 150°F. Regulator over-compensated for temperature and must be checked at these points.

Adjustment—Disconnect lead on 'IGN' terminal of regulator, connect jumper between this terminal and 'BAT' terminal, connect test ammeter in charging line at 'BAT' terminal, connect voltmeter between 'IGN' terminal and ground. Operate generator at 2800-3000 R.P.M., adjust charging rate to 8-10 amperes (use variable rheostat or AVR set), adjust regulator by bending spring hanger at lower end of armature spring slightly to secure setting given above.

Contact Gap—.020". **Contact Spr. Tension**—2.7-3.5 oz.

Air Gap—.063" between armature and center of core with armature down. .010" between fiber bumper and stop with armature up.

LIGHTING

LIGHTING:—**Headlamps.** Hall Flex-beam type with pre-focused bulbs. Asymetrical passing beam (lower beam left hand headlamp, upper beam right hand headlamp) controlled by beam selector switch on toeboard.

Headlamp Adjustment—With tires properly inflated, car loaded to rated capacity, 25' from screen, aim left hand headlamp so hot spot centered on lamp vertical center-line with upper edge at horizontal lamp center-line. Aim right hand headlamp for same height but with left edge of hot spot at lamp vertical center-line (entire hot spot to right of center-line).

Beam Indicator—In upper edge of speedometer dial. Lighted when upper beams (Country Driving) lighted.

Switches

Lighting—Delco-Remy No. 1994507.
Beam Selector—Delco-Remy No. 1997002.

Bulb Specifications

Position	Candlepower	Mazda No.
Headlamps	32-32	2330
Headlamps (Export)	32-21	1104
Parking, Fender, Radio	1½	55
Instr., Clock, Reading	1½	55
Beam & Heater Indicators	1	51
Stop & Tail	21-3	1158
Stop (Trunk Rack Equip.)	15	87
Tail (Trunk Rack Equip.)	3	63
License Plate	3	63
Dome	6	81
Fog Light	32	1321
Spotlight	32	1323

MISC. ELECTRICAL

THERMOSTATIC RELAY:—On lighting switch, protects lighting circuits. Remains closed with 25 amperes but opens in 2 minutes with 38 amperes. Not adjustable.

FUSES:—**Dome, Stop Light and Accessories**—Two 20 ampere. On back of lighting switch.
Instrument and Tail Light—20 ampere. In connector in switch lead near lighting switch.
Clock—2 ampere (Borg), 1 ampere (Western).

HORNS:—**Sparton Model H-32.** Vibrator type, Air tone, Twin horns operated by horn relay.
Air Gap—.032-.035" (low note—long horn), .026-.030" (high note—short horn).
Horn Current—22-25 amperes (total).
Horn Relay:—R-B-M Model 4760. NOTE—Relay not adjustable (cover welded on).
Closing Voltage—3.5-4.5 volts.

ENGINE

ENGINE SPECIFICATIONS:—6 cylinder, 'L' head.
Bore—3½". **Stroke**—4¼".
Displacement—245.3 cu. ins. **Rated HP.**—29.4.
Developed Horsepower—100 HP. (Std. 6.52-1 head), 103-105 HP. (Optl. 6.85-1 head) at 3600 R.P.M.
Compression Ratio and Pressure—As follows:
6.52-1 Std. cast-iron hd.—110 lbs. at 125 R.P.M.
6.85-1 Optl. H.C. head—118 lbs at 125 RP.M.
NOTE—On later cars with .070" thick head gasket, these ratios reduced to 6.39-1 Std., 6.71-1 Optl.
See Packard Shop Notes for Cylinder Head Identification, Replacement, and Installation data.
Vacuum Reading—Steady 18-20" idling at 6 M.P.H.

PISTONS:—Nelson Bohnalite, aluminum alloy, autothermic, strut type, tin plated, cam ground..
Weight—19.5 ozs. (stripped), 26 ozs. (with rings and pin) and equal within 4 grams. **Length**—3⅞".
Removal—Piston and rods removed from above.
Clearance—.0005-.001" skirt. See Fitting Pistons.
Original Bore & Piston Sizes, Replacement Pistons:—*See Packard Shop Notes for complete data.*
Fitting New Pistons:—Insert .0015" feeler ½" wide between piston and cylinder wall on side opposite slot. Pull to withdraw feeler should be 12-18 lbs.
Installing Pistons:—Slot toward valves.

PISTON RINGS:—2 compression (Perfect Circle #70), one oil control (X-90) per piston, all above pin.

Ring	Width	End Gap	Side Clearance
Comp. #1	.123-.1240"	.007-.017"	.0025-.003"
Comp. #2	.123-.1240"	.007-.017"	.0025-.003"
Oil Contr.	.186-.1865"	.007-.015"	.0015"

Replacement Rings:—Furnished standard and .005", .010", .020", .030", and .040" oversize.

PISTON PIN:—**Diameter**—⅞". **Length**—3 1/64"
Pin floats in piston and rod, held by locking rings. Furnished Std. and .003", .006" oversize.
Pin Fit in Piston—Finger push fit with piston heated to 160° F.
Pin Fit in Rod Bushing—Finger push fit at 70° F.

CONNECTING ROD:—**Length**—7 11/16". **Weight**—33 ozs.
1939 CHANGE—After Eng. No. B-4607, bearings are .010" thicker and rod holes .020" larger diameter. Rods with large hole marked '330613' on web at lower end. Use only thicker bearing shells (marked by inked star) in these rods.
Upper Bearing (Piston Pin Bushing)—Split type.
See Packard Shop Notes for complete data.
Crankpin Journal Diameter—2 3/32".
Lower Bearing—Interchangeable steel-backed; babbitt-lined type. Bearings furnished std. and .001", .002", .003", .015" undersize. NOTE—Bearing shells marked with inked star, must be used with new rods marked '330613' on web at lower end.
Clearance—.0005-.0015". **Sideplay**—.004-.010".

ENGINE

CONTINUED FROM PRECEDIN PA E

Bearing Adjustment:—None (no shims). Replace bearings. Do not file rods or caps. Tighten bolt nuts to 715-725 in. lbs. *See Packard Shop Notes for 'Palnut' installation data on 1939 engines.*

Installing Rods:—Oil squirt hole to camshaft.

CRANKSHAFT:—4 bearing, integral counterweights with rubber friction disc vibration damper
Journal Diameters—2¾".
Bearing Type—Interchangeable babbitt-lined steel shell type. Bearings furnished standard and .001" and .002" undersize.
Clearance—.001-.003".

Bearing Adjustment:—None (no shims). Replace bearings (upper half can be 'rotated' in place). Do not file caps. Tighten bolt nuts to 980-1020 in. lbs.

End Thrust:—Taken by #1 bearing.
Endplay—.003-.008".

CAMSHAFT:—4 bearing. Non-adjustable chain drive.
Bearing Type—Steel-backed, babbitt-lined.
Clearance—.001-.003".

End Thrust:—Taken by thrust plate in back of camshaft sprocket. **Endplay**—.002-.004".

Timing Chain:—Morse No. 3682-R. Width 1¼". Pitch .375". Length 21¾" or 58 links.

Camshaft Setting:—Install chain and sprockets together with '0' marks on sprockets adjacent and in line with a straightedge across the shaft centers. *See Packard Shop Notes for Radiator & Fender (unit) removal for work on front end of engine.*

VALVES:—	Head Diameter	Stem Diameter	Length
Intake	1.575"	.34025"	5⅝"
Exhaust	1 13/32"	.34025"	5⅝"

	Seat Angle	Lift	Stem Clearance
Intake	30°	.317-.319"	.001-.003"
Exhaust	45°	.3165-.3185"	.003-.005"

Valve Guides:—New type. Press in block so upper end 31/32" below valve seat and finish-ream to size.

Valve Springs:—Intake and exhaust springs interchangeable.

	Spring Pressure	Length
Valve Closed	47-52 lbs.	1⅝"
Valve Open	114-124 lbs.	1 5/16"

NOTE—Serrated washer installed on top of spring.

Valve Lifters:—Mushroom type. Remove from below with camshaft out. Service by reaming (work through valve guide) and installing oversize lifter. Furnished .001", .002", .005" oversize.

VALVE TIMING

Tappet Clearance:—.007" Intake, .010" Exh. (hot). NOTE—Remove right front fender plate for adj. to valves.

Valve Timing:—See Camshaft Setting above.

Intake Valves—Open 1° BTDC. Close 39° ALDC.

Exhaust Valves—Open 45° BLDC. Close 5° ATDC.

To Check Timing—Set tappet clearance #1 exhaust valve at .015". This valve should close with piston 5° or .0103" past top dead center when 5° point on flywheel (midpoint between second and third graduations after top dead center mark '#1 UP DC.') lines up with pointer on housing in inspection hole in left front face of flywheel housing below starter. Permissable variation 3 graduations either side of mark. Reset tappet clearance at .010" warm.

LUBRICATION

LUBRICATION:—Gear type pump (right of engine). *See Packard Shop Notes for Oil Pump Installation.*

Crankcase Capacity—6 qts. (dry), 5 qts. (refill).

Normal Oil Pressure:—35 lbs. at 30 M.P.H. (warm oil).

Oil Pressure Regulator:—Mounted on pump cover. Not adjustable. Replace spring if pressure less than 5 to 8 lbs. at 2".

COOLING

COOLING SYSTEM:—Capacity—15.2 quarts.
Water Pump:—Packless type with ball-bearing shaft. *See Water Pump Section for complete data.*

Thermostat:—In top radiator tank. Operates shutters.

Setting—Starts to open 135° F. Fully open 150°.

Install 162° thermostat in cylinder head for use with heaters (remove in summer).

Adjustment—Pull back on shutter pullrod to close shutters, tighten nut on rod to remove all slack, then tighten 1 turn additional for pre-load.

CLUTCH

CLUTCH:—**Long Model 9½ CF-CS.** Semi-centrifugal, single plate, dry disc type. *See Clutch Section for complete data.*

Facings—Woven (US Asbestos 1133G), 2 required. Inside Diam. 6". Outside Diam. 9½". Thickness .125".

Adjustment—Adjust nut on pedal rod (at clutch fork) for 1½-2" pedal free movement. *See Packard Shop Notes for 1941 design clutch linkage which may be installed on these cars to correct wear.*

Removal:—Remove Transmission (see Transmission Removal following). Disconnect and remove pedal rod, clutch throw-out bearing. Remove clutch cover capscrews, remove clutch from below.

TRANSMISSION

TRANSMISSION:—Own Make. New type with constant-mesh, helical, ball-bearing mounted low speed gear (sliding spur gear for reverse). Synchro-mesh (second and high). *See Transmission Section for complete data.*

Transmission Control:—Own Remote Control type. *See Transmission Section for complete data.*

Removal:—Disconnect shifter rods, speedometer cable, ground strap at transmission case. Disconnect drive shaft at front universal and block shaft up against floorpan. Support rear end of engine, unbolt cross-member from frame (on cars with Econo-Drive remove cross-member at rear with stabilizer, disconnect wires at solenoid). Disconnect hand brake cable at equalizer, remove flywheel housing lower cover, clutch throwout retracting spring. Take out transmission-to-bell housing mounting screws and remove assembly.

OVERDRIVE

OVERDRIVE (ECONO-DRIVE) 1939: Warner Model AS9-R6 overdrive unit with electrical control. *See Transmission Section for complete data.*

►Overdrive Change—New Reverse Switch added on later cars (should be installed on early cars): *See Warner R6 Overdrive Control in Transmission Section.*

Overdrive Solenoid—Delco-Remy Model 1569.

Throttle Switch—R-B-M. Adjust for .046" clearance between switch plunger and accelerator pedal tappet screw with throttle valve wide open (see that pedal has sufficient over-travel to close switch).
Control Relay—R-B-M Model 4780. No fuse used.

UNIVERSALS

UNIVERSAL JOINT:—Mechanics. Model 2C (Std.), 3C (With Econo-Drive). Needle bearing type. 2 used. *See Universals Section for complete data.*
CAUTION—Do not loosen universal flange nut on first '39 cars (nut controls overdrive rear bearing pre-load). On later '39 cars (with 'M' stamped on flange), bearing pre-load controlled by spring washer and nut should be kept tight.

REAR AXLE

REAR AXLE:—Own Make. Semi-floating, hypoid gear type with Hotchkiss drive.
See Rear Axle Section for complete data.
Ratio—4.54-1 Std., 4.7-1 with Econo-Drive trans'm. Optl. ratios 4.36-1, 4.54-1, 4.7-1.
Backlash—.003-.005". Screw adjustment.

Removal:—Remove wheel, hub, and brake backing plate assembly. Withdraw axle shafts. Disconnect rear universal joint and drop drive shaft. Remove carrier-to-housing bolt nuts, withdraw carrier.

Wheel Bearing Adjustment—Endplay controlled by shims between flanged end of housing and brake backing plate. **Endplay**—.004-.007".

SHOCK ABSORBERS

SHOCK ABSORBERS:—Delco. Model 1966-D (right frt.), 1966-C (left frt.), 1751-Z (right rear), 1751-M (left rear). Double acting, hydraulic type.
See Shock Absorber Section for complete data.

Fifth Shock Absorber (Stabilizer):—Houdaille Model NFT. Double acting, hydraulic, adjustable type.
See Shock Absorber Section for complete data.

FRONT SUSPENSION

Front Suspension:—Independent 'Safe-T-fleX' type
See Front Suspension Section for complete data.

NOTE—Frame height must be set first.

Frame Height—With car on level floor, distance from floor to top of frame side rail at front wheel center-line 18¾" (load car until figure correct).

Kingpin Inclination—1°54' crosswise.

Camber—½° (plus ¾°, minus 0°). Adjustable.

Caster—1½° plus or minus ½°. Shim adjustment.

Toe In—1/32-1/16" at hub height. Adjust both tie rods equally (must be equal after adjustment).

STEERING GEAR

Steering Gear: Packard (Gemmer design Model 330) Worm-and-Roller type with center steering. Refer to Gemmer Model 330 article.
See Steering Gear Section for complete data.

BRAKES

BRAKES:—Service. Bendix hydraulic, duo-servo, single anchor type with eccentric adjustment. Hand lever applies rear service brakes.
See Brake Section for complete data.

Drums—Centrifuse. Diameter—11".
Lining—Marshall #2201 (all shoes). Width 1¾". Thickness 3/16". Length 12" per shoe.
Clearance—.010" at heel and toe of each shoe.

Hand Brake:—See Service Brakes (above).

MODEL IDENTIFICATION

SERIAL NUMBER:—On front of dash (Use Engine No.).

ENGINE NUMBER:—First number B-300001. Stamped on boss on upper left hand side of cylinder block.

TUNE-UP

COMPRESSION:—Ratio—6.41-1 Std., 6.85-1 Optl.
NOTE—Heads marked by number 330812 (6.41-1), 341344 (6.85-1) cast in top surface of head.
Pressure—110 lbs. (Std. 6.41-1 head), 118 lbs. (Optl. 6.85-1 head) at 125 RPM.

VACUUM READING:—Steady 18-21" idling at 6 MPH.

FIRING ORDER: 1-6-2-5-8-3-7-4. See diagram.

SPARK PLUGS: AC No. 104 or Champion Y-4. 10 mm.
Gaps—.028". Limits .026-.030".
NOTE—If colder plug required use AC No. 103S or Champion Early Y-4. Do not tighten these small plugs excessively. Tightening tension 50 in. lbs.

IGNITION: See Coil, Condenser, and Distributor.
Breaker Gap—.015". Limit .017" maximum.
Cam Angle—27° Closed with .017" Breaker Gap.
Automatic Advance—8¾° max. at 2000 RPM(distr.).
Vacuum Advance—6° (distr.) with 17" of vacuum.

IGNITION TIMING: See Ignition Timing.
Std. Setting—8-9½° BTDC. (All heads). Flywheel mark (correct degree mark ahead of #1UP.DC) aligned with inspection hole pointer below starter.

CARBURETION: See Carburetor & Carb. Equipment.
Idle Setting—Set idle adjusting screws midway between "miss" and "roll" points. Idle speed 6 MPH.
Float Level—Fuel level 15/32" below edge of bowl.
Accelerating Pump—No seasonal adjustment.
Fuel Pump Pressure: 4 lbs. maximum.

MANIFOLD HEAT CONTROL:—Thermostatic coil type. Make certain that valve operates freely (valve must not bind or stick). Do not oil control.

VALVES: See Valve Timing.
Tappet Clearance .007" Intake, .010" Exhaust, hot.

STARTING: See Battery, Starter, Generator, Regulator.

IGNITION

Ignition Switch:—Mitchellock Model 24-B, No. 8058.
Ignition Lock—Briggs & Stratton. Mitchell #6760.

COIL: Auto-Lite Model No. CE-4632. Service Coil (less switch & cable) CE-3224ES. On left side of block.
Ignition Current—½ ampere idling, 2½ stopped.

CONDENSER: Auto-Lite Part No. IG-2671-J.
Capacity—.20-.25 microfarad.

DISTRIBUTOR: Auto-Lite IGT-4007-A. Single breaker, 8 lobe cam, full automatic advance type with Vacuum Spark Control and Fuel Compensator. ***Refer to Electrical Equipment Index for Auto-Lite Distributor servicing article covering these distributors.***
Breaker Plate Identification—Maximum vacuum advance limited by slot and marked by number (#6) on plate.
Contact Gap—.015" Limit .017" Max.
Cam Angle or Dwell—27° clsd., 17° open (.017" gap).
Breaker Arm Spring Tension—18-20 ozs.
Rotation—Counter-clockwise viewed from the top.

Automatic Advance

Distributor Degrees	Distributor R.P.M.	Engine Degrees	Engine R.P.M.
Start	300	0	600
.8	400	1.6	800
2	550	4	1100
4	800	8	1600
6	1300	12	2600
8.75	2000	17.5	4000

Vacuum Spark Control—Integral type. Mounted on distributor cup and linked to breaker plate. Provides additional advance at speeds above idling except when engine accelerated or operated with wide open throttle when spark retarded by return spring within unit.

Vacuum Advance

Distr. Degrees	Eng. Degrees	Vacuum (" of HG)
Start	0	10.0"
2	4	12.25"
4	8	14.6"
6	12	17.0"

Fuel Compensator—Manual adjustment at distributor providing 10° advance or retard from center 'O' point. See Ignition Timing for setting.
Distributor Removal:—Mounted on left hand side of crankcase. To remove, disconnect vacuum line and take out hold-down screw in advance arm.

IGNITION TIMING

IGNITION TIMING:—Standard Setting as follows (see Fuel Compensator Setting below):

	Flywheel Degrees	Piston Position
All Engines	8-9½° BTDC.	.0262-.0371" BTDC

(Correct for both 6.41-1 & 6.85-1 Engines).

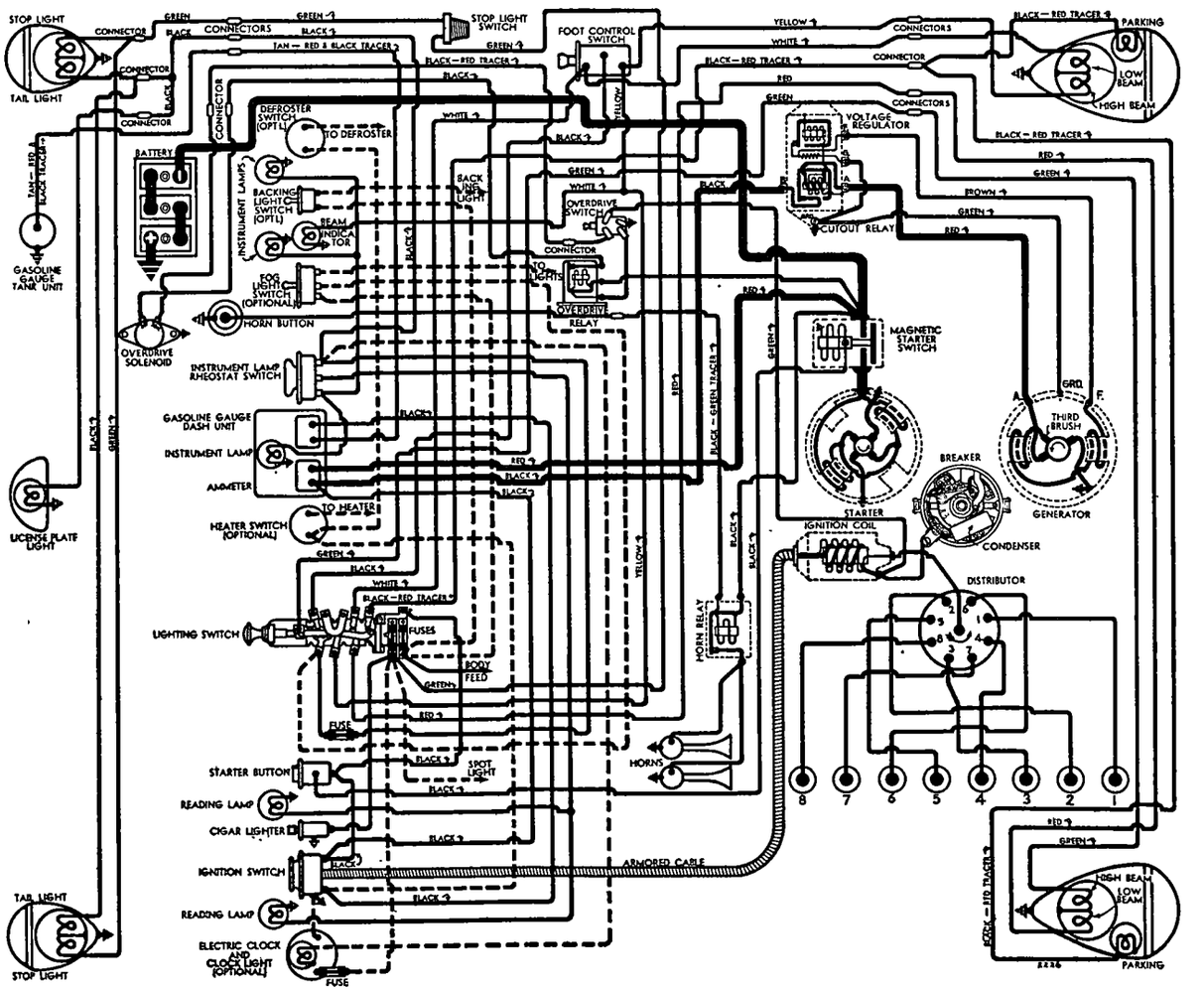

See Transmission Section for late 1939 type Overdrive Control Wiring

NOTE—Flywheel marked #1 UP D.C. with five 2° graduations before and after this point.
Timing—Remove inspection hole cover (left front face of flywheel housing below starter). Loosen thumbnut, set Fuel Compensator pointer at '0' (center graduation on scale), tighten thumbnut. With #1 piston on compression, turn engine over until correct graduation on flywheel before top dead center mark '#1 UP D.C.' line up with pointer on housing. Loosen advance arm clamp bolt, rotate distributor until contacts begin to open, tighten clamp bolt, see that rotor opposite #1 segment in distributor cap, check Fuel Compensator setting (below).

Timing (Neon Timing Light)—White mark provided on flywheel to indicate timing range (leading edge of mark is 8° BTDC). Idle engine and adjust distributor.

Fuel Compensator Setting—Should be set for slight ping when accelerating with wide open throttle. To adjust, loosen thumbnut, rotate distributor counter-clockwise toward low end of scale (if ping too severe), clockwise toward high end of scale (if no ping noted), recheck performance.

CARBURETOR

CARBURETION:—Carburetor—Stromberg EE-16 No. A-18341 (code marked 10-33 on upper main body flange or float bowl cover). 1" Duplex double barrel type.

For complete data, refer to Carburetor Index.

Idle Adjustment—With engine warmed up so that Automatic Choke and Fast Idle inoperative, set throttle lever stopscrew so that engine idles at 6 MPH., turn idle adjusting screw (for each barrel in succession) out until engine begins to roll, then turn screw in slowly until engine fires smoothly. Readjust throttle stopscrew for correct idle speed.

Accelerating Pump—No seasonal adjustment.

Fast Idle:—Integral type (built-in carburetor).
For complete data, refer to Carburetion Equip. Index.
Setting—Turn fast idle adjusting screw in to contact lowest step of fast idle cam, then back screw off ½ turn.

Automatic Choke:—Integral (built-in carburetor).
For complete data, refer to Carburetion Equip. Index.
Setting—Inverted 'V' mark on cover scale to line up with reference mark on housing. NOTE—Setting may be varied 2 graduations either way, if required, for satisfactory warming up performance.

Throttle Guard (Cars with Overdrive):—Vacuum operated throttle-kicker to prevent engine stalling when free-wheeling below 20 M.P.H.
For complete data, refer to Carburetion Equip. Index.

CARB. EQUIPMENT

Air Cleaner:—AC #1529027 heavy-duty type oil-bath air cleaner Std. NOTE—#844751 oil-wetted type crankcase breather (oil filler) cleaner used.

Fuel Pump:—AC Type AJ #1523867 combination fuel-and-vacuum pump. Diaphragm type.
For complete data, refer to Carburetion Equip. Index.

Gasoline Gauge:—Stewart (Stewart-Warner) Electric. S-W No. 99255 (Dash unit), 98259 (tank unit).
For complete data, refer to Carburetion Equip. Index.

BATTERY

BATTERY:—Prest-O-Lite, Type HP2-17. 6 volt, 17 plate, 114 Ampere Hour Capacity (20 hour rate).

Starting Capacity—133 amperes for 20 minutes.

Zero Capacity—300 amperes for 3.5 minutes.

Grounded Terminal—Positive (+) grounded to frame 'X' member. **Engine Ground**—Strap Connector between transmission cover bolt and frame.

Dimensions—Length 10 5/16". Width 7". Height 8¾". **Location**—Under left front seat.

Export Battery—Willard Type HR-2-120, 6 volt, 17 plate, 120 A.H. Capacity (20 hr. rate).

Starting Capacity—152 amperes for 20 minutes.

Zero Capacity—300 amperes for 5.0 minutes. Five second voltage 4.4 volts.

Dimensions—Length 10¼". Width 7". Height 9".

STARTER

Auto-Lite Model MAW-4018. Armature MAW-2006.

Drive—Outboard Barrel Type Bendix No. A-1718.

Rotation—Counter-clockwise at commutator end.

Brush Spring Tension—42-53 ozs. (new brushes).

Cranking Engine—125 RPM., 175 amperes, 5.1 volts.

Performance Data

Torque	R.P.M.	Volts	Amperes
0 ft. lbs.	4900	5.5	65
.6 "	3300	5.5	100
2.75 "	1480	5.0	200
5.45 "	820	4.5	300
8.50 "	400	4.0	400
11.55 "	110	3.5	500
11.5 "	Lock	3.0	505
18.0 "	Lock	4.0	670

Removal:—Flange mounted on left front face of flywheel housing. To remove, take out flange mounting screws, lift out starter and switch assembly.

Starting Switch:—Model SS-4001. Magnetic type. Mounted on starter, controlled by switch on instrument panel.
For complete data, refer to Electrical Equipment Index.

GENERATOR

Auto-Lite Model GCJ-4807A-2 Std., GCJ-4810A-2 with Tachometer Drive. Third brush control type with external vibrating Voltage regulation. Ventilated by fan on drive pulley.

Armature—GCJ-2006 (GCJ-4807A-2), GCJ-2092 (GCJ-4810A-2).

Maximum Charging Rate—30.5 amperes (cold), 25.5 (hot), 8.0 volts. To check generator output, connect ammeter in charging line at regulator 'B' terminal, ground 'F' terminal to eliminate regulator action. Operate generator charging battery (do not run on open-circuit).

Charging Rate Adjustment—Third brush set for maximum output (1 comm. bar min., 1 comm. bar plus 1 mica strip max. from nearest or insulated main brush) and setting should not be exceeded. Actual charging rate regulated by Voltage Regulator. See Regulator data below.

Performance Data

Cold			Hot		
Amperes	Volts	R.P.M.	Amperes	Volts	R.P.M.
0	6.4	800	0	6.4	840
4	6.6	900	4	6.65	960
8	6.85	1025	8	6.9	1100
12	7.05	1160	12	7.15	1270
16	7.25	1330	16	7.4	1520
20	7.5	1560	20	7.65	1860
24	7.7	1900	24	7.9	2460
28	7.9	2400	26	8.0	3600
30	8.0	3200			

Rotation—Counter-clockwise at commutator end.
Brush Spring Tension—53 ozs. max. (new brushes).
Field Current—1.9-2.1 amperes at 6.0 volts.
Motoring Current—4.0-4.4 amperes at 6.0 volts.

Removal:—Pivot mounted at left front of engine. To remove, take out pivot and clamp bolts.

Belt Adjustment:—Swing generator out until 25 lb. reading secured on scale hooked to clamp bolt lug parallel to clamp link or until belt deflection midway between generator and pump pulley is ½" with thumb pressure.

REGULATOR

Auto-Lite Model VRD-4001B. Consists of Cutout Relay and Voltage Regulator in case on dash.
For complete data, refer to Electrical Equipment Index.
NOTE—Regulator cover sealed. Serviced on exchange basis if seals not broken.

Cutout Relay

Cuts In—6.4-7.0 volts Cold, 710 RPM (Gen.).
Cuts Out—.5-3.0 amperes discharge.
Contact Gap—.015" Minimum.
Air Gap—.034-.038" (contacts open). Measure at hinge end of core.

Voltage Regulator

Setting—7.3-7.6 volts at 70°F.
To Check (without breaking seal)—Connect ammeter in charging line at regulator 'B' terminal, voltmeter between 'B' and 'GD' terminals. Operate generator at speed equivalent to 30 MPH. charging battery until voltage is steady. Voltmeter reading should be between limits of 7.21-7.83 volts.
To Adjust (with cover removed)—Change regulator armature spring tension by bending lower spring hanger slightly. See Electrical Equipment Section.
Contact Gap—.010-.020" (armature against stop pin).
Air Gap—.0595-.0625" with contacts just opening.

LIGHTING

LIGHTING:—Headlamps. Hall Flex-beam type with pre-focused bulbs. Asymetrical passing beam (lower beam left hand headlamp, upper beam right hand headlamp) controlled by beam selector switch on toeboard.

Headlamp Adjustment—With tires properly inflated, car loaded to rated capacity, 25' from screen, aim left hand headlamp so hot spot centered on lamp vertical center-line with upper edge at horizontal lamp center-line. Aim right hand headlamp for same height but with left edge of hot spot at lamp vertical center-line (entire hot spot to right of center-line).

CONTINUED ON NEXT PAGE

C NTINUED FR M PRECEDIN PA E

Beam Indicator—In upper edge of speedometer dial. Lighted when upper beams (Country Driving) lighted.

Switches

Lighting—Delco-Remy No. 1994507.

Beam Selector—Delco-Remy No. 1997002.

Bulb Specifications

Position	Candlepower	Mazda No.
Headlamps	32-32	2330
Headlamps (Export)	32-21	1104
Parking, Fender	1½	55
Instr., Clock, Reading	1½	55
Beam & Heater Indicators	1	51
Stop & Tail	21-3	1158
Stop (Trunk Rack Equip.)	15	87
Tail (Trunk Rack Equip.)	3	63
License Plate	3	63
Dome	6	81
Fog Light	32	1321
Spotlight	32	1323

MISC. ELECTRICAL

THERMOSTATIC RELAY:—On lighting switch, protects lighting circuits. Remains closed with 25 amperes but opens in 2 minutes with 38 amperes. Not adjustable.

FUSES:—Dome, Stop Light & Accessories—Two 20 ampere. On back of lighting switch.

Instrument & Tail Light—20 ampere. In connector in switch lead near lighting switch.

Clock—2 ampere (Borg), 1 ampere (Western).

HORNS:—**Sparton Model H-32.** Vibrator type, Air tone, Twin horns operated by relay.

Air Gap—.032-.035" (low note—long horn), .026-.030" (high note—short horn).

Horn Current—22-25 amperes (total).

Horn Relay:—R-B-M Model 4760. NOTE—Relay not adjustable (cover welded on).

Closing Voltage—3.5-4.5 volts.

ENGINE

ENGINE SPECIFICATIONS:—8 cylinder, 'L' head.

Bore—3¼". **Stroke**—4¼".

Displacement—282.04 cu. ins. **Rated HP.**—33.8.

Developed Horsepower—120 HP. (Std. 6.41-1 hd) at 3800 R.P.M.

Compression Ratio—6.41-1 Std., 6.85-1 Optl.

Compression Pressure—110 lbs. (Std. 6.41-1 hd.), 118 lbs. (Optl. 6.85-1 hd) at 125 R.P.M.

Vacuum Reading—Steady 18-21" idling at 6 M.P.H.

See Packard Shop Notes for Cylinder Head data.

PISTONS:—Nelson Bohnalite, aluminum alloy, autothermic, strut type, tin plated, cam ground.

Weight—16⅞ ozs. (stripped), 22¾ ozs. (with rings and pin) and equal within 4 grams. **Length**—3⅞".

Removal—Pistons and rods removed from above.

Clearance—.0005-.001" skirt. See Fitting Pistons.

Original Bore & Pistons Sizes, Replacement Pistons:—*See Packard Shop Notes for complete data.*

Fitting New Pistons:—Insert .0015" feeler ½" wide between piston and cylinder wall on side opposite slot. Pull to withdraw feeler should be 12-18 lbs.

Installing Pistons:—Slot toward valves.

PISTON RINGS:—2 compression (Perfect Circle #70), one oil control (#X90-85) per piston, above pin.

Ring	Width	End Gap	Side Clearance
Comp. #1	.123-.1240"	.007-.017"	.0025-.003"
Comp. #2	.123-.1240"	.007-.017"	.0025-.003"
Oil Contr.	.186-.1865"	.007-.015"	.0015-.002"

Replacement Rings:—Furnished standard and .005", .010", .020", .030", and .040" oversize.

PISTON PIN:—**Diameter**—⅞". **Length**—2 51/64". Pin floats in piston and rod, held by locking rings. Furnished std. and .003", .006" oversize.

Pin Fit in Piston—Finger push fit with piston heated to 160°F.

Pin Fit in Rod Bushing—Finger push fit at 70°F.

CONNECTING ROD:—**Length**—7 11/16". **Weight** 33 ozs. 1939 CHANGE—After Engine No. B-303053, bearings are .010" thicker and rod hole .020" larger diameter. Rods with large hole marked '330613' on web at lower end. Use only thicker bearing shells (marked by inked star) in these rods.

Upper Bearing (Piston Pin Bushing)—Split type. *See Packard Shop Notes for complete data.*

Crankpin Journal Diameter—2 3/32".

Lower Bearing—Interchangeable steel-backed, babbitt-lined type. Bearings furnshed std. and .001", .002", .003", .015" undersize. NOTE—.010" thicker bearing shells (marked by inked star) should be used on rods marked '330613' on web at lower end. **Clearance**—.0005-.0015". **Sideplay**—.004-.010".

Bearing Adjustment:—None (no shims). Replace bearings. Do not file rods or caps. Tighten bolt nuts to 715-725 in. lbs. *See Packard Shop Notes for 'Palnut' installation data.*

Installing Rods:—Oil squirt hole to camshaft.

CRANKSHAFT:—5 bearing, integral counterweights with rubber friction disc vibration dampener.

Journal Diameters—2¾".

Bearing Type—Interchangeable babbitt-lined steel shell type. Bearings furnished standard and .001" and .002" undersize. **Clearance**—.001-.003".

Bearing Adjustment:—None (no shims). Replace bearings (upper half can be 'rotated' in place). Do not file caps. Tighten bolt nuts to 980-1020 in. lbs.

End Thrust:—Taken by #3 bearing.

Endplay—.003-.008".

CAMSHAFT:—5 bearing. Non-adjustable chain drive.

Bearing Type—Steel-backed, babbitt-lined.

Clearance—.001-.003".

End Thrust:—Taken by thrust plate in back of camshaft sprocket. **Endplay**—.002-.004".

Timing Chain:—Morse No. 3682-R. Width 1¼". Pitch .375". Length 21¾" or 58 links.

Camshaft Setting:—Install chain and sprockets together with '0' marks on sprockets adjacent and in line with a straightedge across shaft centers with #1 piston on top dead center.

See Packard Shop Notes for Radiator & Fender (unit) removal for work on front end of engine.

VALVES:—	Head Diameter	Stem Diameter	Length
Intake	1 17/32"	.34025"	5⅝"
Exhaust	1 13/32"	.34025"	5⅝"

	Seat Angle	Lift	Stem Clearance
Intake	30°	.317-.319"	.001-.003"
Exhaust	45°	.3165-.3185"	.003-.005"

Valve Guides:—New type. Press in block so that upper end 31/32" below valve seat and finish-ream to size.

Valve Springs:—Intake and exhaust springs interchangeable.

	Spring Pressure	Length
Valve Closed	47-52 lbs.	1 5/8"
Valve Open	114-124 lbs.	1 5/16"

NOTE—Serrated washer on top of each spring.

Valve Lifters:—Mushroom type. Remove from below with camshaft out. Service by reaming (work through valve guide) and installing oversize lifter. Furnished .001", .002", .005" oversize.

VALVE TIMING

Tappet Clearance:—.007" Intake, .010" Exh. (hot). NOTE—Remove right front fender apron for access to valves.

Valve Timing:—See Camshaft Setting above.

Intake Valves—Open 1° BTDC. Close 39° ALDC.

Exhaust Valves—Open 45° BLDC. Close 5° ATDC.

To Check Timing—Set tappet clearance #1 exhaust valve at .015". This valve should close with piston 5° or .0103" past top dead center when 5° point on flywheel (midpoint between second and third graduations after top dead center mark '#1 UP DC.') lines up with pointer on housing in inspection hole in left front face of flywheel housing below starter. Permissible variation 3 graduations either side of mark. Reset tappet clearance at .010" warm.

LUBRICATION

LUBRICATION:—Pressure system with gear type oil pump mounted on right side of engine.

See Packard Shop Notes for Oil Pump installation.

Normal Oil Pressure:—35 lbs. at 30 M.P.H. (warm oil).

Oil Pressure Regulator:—Mounted on pump cover. Not adjustable. Replace spring if pressure less than 5 to 8 lbs. at 2".

Crankcase Capacity:—6 quarts (refill).

COOLING

COOLING SYSTEM:—**Capacity**—15 quarts.

Water Pump:—Packless type with ball-bearing shaft *See Water Pump Section for complete data.*

Thermostat:—In top radiator tank. Operates shutters. Use 162° thermostat in cylinder head outlet for heaters. Remove this thermostat in summer.

Setting—Starts to open 135°F. Fully open 150°.

Adjustment—At room temperature with thermostat sylphon closed, pull back on shutter pullrod to close shutters, tighten nut on rod to remove all slack, then tighten 1 turn additional for pre-load.

CLUTCH

CLUTCH:—**Long Model 10 CF-CL.** Semi-centrifugal, single plate, dry disc type.

See Clutch Section for complete data.

Facings—Woven (US Asbestos 1133G), 2 required. Inside Diam. 6". Outside Diam. 10". Thickness .125".

Adjustment—Adjust nut on pedal rod (at clutch fork) for 1½-1¾" pedal free movement.

See Packard Shop Notes for 1941 design clutch linkage which may be installed on these cars to correct wear.

Removal:—Remove transmission (see Transmission Removal following). Remove clutch throwout bearing, pedal rod, and mounting screws in clutch cover flange, remove clutch from below.

TRANSMISSION

TRANSMISSION:—Own Make. New type with constant-mesh, helical, ball-bearing mounted low speed gear (sliding spur gear for reverse). Synchro-mesh (second and high).

See Transmission Section for complete data.

Transmission Control:—Own remote control type.

See Transmission Section for complete data.

Removal:—Disconnect shifter rods, speedometer cable, ground strap at transmission case. Disconnect drive shaft at front universal and block shaft up against floorpan. Support rear end of engine, unbolt cross-member from frame (on cars with Econo-Drive remove cross-member at rear with stabilizer, disconnect wires at solenoid). Disconnect hand brake cable at equalizer, remove flywheel housing lower cover, clutch throwout retracting spring. Take out transmission-to-bell housing mounting screws and remove assembly.

OVERDRIVE

OVERDRIVE (ECONO-DRIVE) 1939: Warner Model AS9-R6 overdrive unit with electrical control.

See Transmission Section for complete data.

►**Overdrive Change—New Reverse Switch added on later cars (should be installed on early cars):** *See Warner R6 Overdrive Control in Transmission Section.*

Overdrive Solenoid—Delco-Remy No. 1569.

Throttle Switch—R-B-M. Adjust for .046" clearance between switch plunger and accelerator pedal tappet screw with throttle valve wide open (see that pedal has sufficient over-travel to close switch).

Control Relay—R-B-M. Model 4780. No fuse used.

UNIVERSALS

UNIVERSAL JOINT:—Mechanics Model 3C. Needle bearing type. Two used.

See Universals Section for complete data.

REAR AXLE

REAR AXLE:—Own Make. Semi-floating hypoid gear type with Hotchkiss drive.

See Rear Axle Section for complete data.

Ratios—4.36-1 Std., 4.54-1 with Overdrive unit. Long wheelbase—4.7-1 Std. 4.9-1 with Overdrive. Optional ratios—4.36-1, 4.54-1, 5.22-1.

Backlash—.003-.005". Screw adjustment.

Removal:—Remove wheel, hub, and brake backing plate assembly. Withdraw axle shafts. Disconnect rear universal joint and drop drive shaft. Remove carrier-to-housing bolt nuts, withdraw carrier.

Wheel Bearing Adjustment—Endplay controlled by shims between flanged end of housing and brake backing plate. **Endplay**—.004-.007".

SHOCK ABSORBERS

SHOCK ABSORBERS:—Delco. Model 1966-D (right frt.), 1966-C (left frt.), 1751-Z (right rear), 1751-M (left rear). Double acting, hydraulic type.

See Shock Absorber Section for complete data.

Fifth Shock Absorber (Stabilizer):—Houdaille Model NFT. Double acting, hydraulic, adjustable type.

See Shock Absorber Section for complete data.

FRONT SUSPENSION

Front Suspension:—Independent 'Safe-T-fleX' type

See Front Suspension Section for complete data.

NOTE—Frame Height must be set first before checking Caster and Camber.

Frame Height—With car on level floor, distance from floor to top of frame side rail at front wheel center-line 19¼" (load car for correct figure).

Kingpin Inclination—1°54' crosswise.

Camber—½° (plus ¾°, minus 0°). Adjustable.

Caster—1½° (1701), 0° (1702) plus or minus ½°.

Toe In—0" (plus 1/16", minus 0") at hub height. Adjust tie rods equally (lengths must be equal after adjustment).

STEERING GEAR

Steering Gear: Packard (Gemmer design Model 330) Worm-and-Roller type with center steering. Refer to Gemmer Model 330 article.

See Steering Gear Section for complete data.

BRAKES

BRAKES:—Service. Bendix hydraulic, duo-servo, single anchor type with eccentric adjustment. Hand lever applies rear service brakes.

See Brake Section for complete data.

Drums—Centrifuse. Diameter—12".

Lining—Marshall #2201 (1701). US Asbestos #714—primary, #589—secondary (1701A,2). Width 1¾" (1701), 2¼" (1701A,2), Thickness 3/16". Length 13" per shoe.

Clearance—.010" at heel and toe of each shoe.

Hand Brake:—See Service Brakes (above).

MODEL IDENTIFICATION

SERIAL NUMBER:—On front of dash (Use Engine No.).

ENGINE NUMBER:—First number B-500001. Stamped on boss on upper left hand side of cylinder block.

TUNE-UP

COMPRESSION :—Ratio—6.45-1 Std., 6.85-1 Optl. HC., 6.20-1 Optl. LC. NOTE—Heads marked 242511 (6.45-1), 335618 (6.85-1), 338960 (6.20-1).

Pressure—110 lbs. (Std. 6.45-1 Hd.), 118 lbs. (Optl. 6.85-1 Hd.) at 125 RPM. cranking speed.

VACUUM READING: Steady 18-19" idling at 6 MPH.

FIRING ORDER: 1-6-2-5-8-3-7-4. See diagram.

SPARK PLUGS: AC No. 104 or Champion Y-4. 10 mm. **Gaps**—.028". Limits .026-.030".
NOTE—If colder plug required use AC No. 103S or Champion early Y-4. Do not tighten these small plugs excessively. Tightening tension 50 in. lbs.

IGNITION: See Coil, Condenser, and Distributor.
Breaker Gap—.015". Limit .017" maximum.
Cam Angle—27° Closed with .017" Breaker gap.
Automatic Advance—10½° max. at 1600 RPM(distr)
Vacuum Advance—5½° (distr.) with 16" vacuum.

IGNITION TIMING See Ignition Timing.
Std. Setting 7-8½°BTDC. Vibration dampener mark (correct degree mark ahead of #1UP.DC) aligned with pointer at front of engine. ***See Ignition Timing for Settings on engines with optional heads.***

CARBURETION: See Carburetor & Carb. Equipment.
Idle Setting—Set idle adjusting screws midway between 'miss' and 'roll' points. Idle speed 6 MPH.
Float Level—Fuel level ⅝" below edge of bowl.
Accelerating Pump—Inner Hole (Summer), outer (Winter).
Fuel Pump Pressure: 4 lbs. maximum.

MANIFOLD HEAT CONTROL:—Thermostatic coil type. See that manifold valve operates freely (valve must not stick or bind). Do not oil control.

VALVES: See Valve Timing.
Tappet Clearance—.006" Intake, .008" Exh., hot.

STARTING: See Battery, Starter, Generator, Regulator.

IGNITION

Ignition Switch:—Mitchellock Model 24-B, No. 8060.
Ignition Lock—Briggs & Stratton. Mitchell #6760.

COIL: Auto-Lite Model No. CE-4633. Service Coil (less switch & cable) CE-3224LS. On cylinder head.
Ignition Current—½ ampere idling, 2½ stopped.

CONDENSER: Auto-Lite Part No. IG-2671G.
Capacity—.20-.25 microfarad..

DISTRIBUTOR: Auto-Lite Model IGT-4006-A. Single breaker, 8 lobe cam, full automatic advance type with Vacuum Spark Control and Fuel Compensator.
Breaker Plate Identification—Maximum vacuum advance limited by slot and marked by number (#5½) on plate.
Breaker Gap—.015". Limit .017" Max.
Cam Angle or Dwell—27° clsd., 18° open (.017" gap).
Breaker Arm Spring Tension—18-20 ozs.
Rotation—Clockwise viewed from the top.

Automatic Advance

Distributor Degrees	Distributor R.P.M.	Engine Degrees	Engine R.P.M.
Start	300	0	500
2½	500	5	1000
5	700	10	1400
7½	1100	15	2200
10½	1600	21	3200

Vacuum Spark Control—Integral type. Mounted on distributor cup and linked to breaker plate. Provides additional advance at all speeds above idling except when engine accelerated or operated with wide open throttle when spark retarded by return spring.

Vacuum Advance

Distr. Degrees	Eng. Degrees	Vacuum (" of HG).
Start	0	7"
2	4	10¼"
4	8	13½"
5½	11	16"

Fuel Compensator—Manual adjustment at distributor providing 10° advance or retard from center '0' position. See Ignition Timing for setting.

Distributor Removal:—Mounted on cylinder head. To remove, disconnect vacuum line, take out hold-down screw in advance arm.

IGNITION TIMING

IGNITION TIMING:—Standard setting (for 76 Octane fuel) as follows. See Fuel Compensator Setting.

	Flywheel Degrees	Piston Position
Std. 6.45-1 Head	7-8½° BTDC	.0230-.0338" BTDC
Optl. HC. 6.85-1	5-6½° BTDC	.0117-.0199" BTDC
Optl. LC. 6.20-1	8-9½° BTDC	.0299-.0421" BTDC

NOTE—Vibration dampener marked #1 UP D.C. at #1 TDC. point with 15 - 1° graduations each side.
Timing—Loosen thumbnut, set Fuel Compensator pointer at '0', tighten thumbnut. With #1 piston on compression, turn engine over until piston

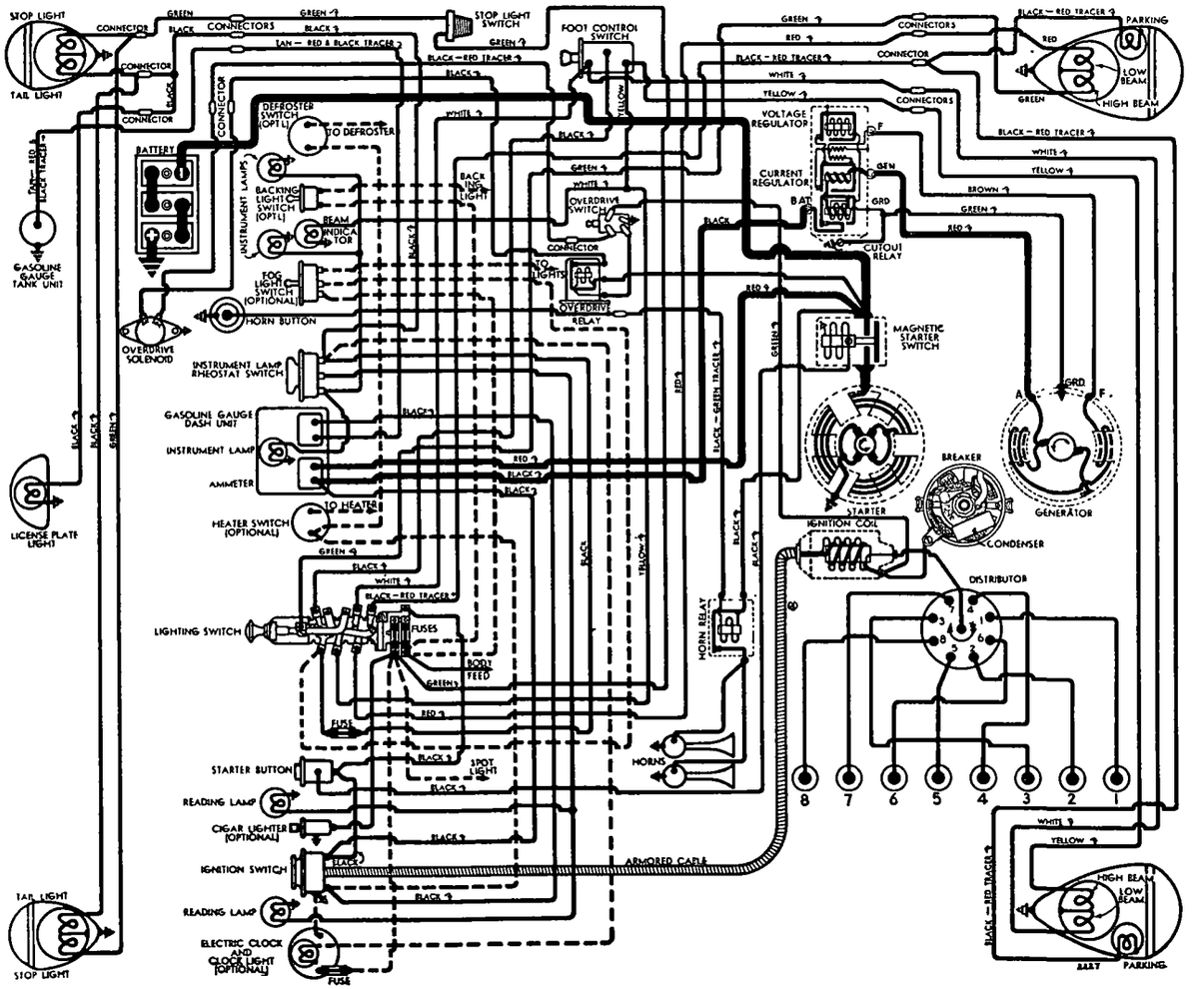

See Transmission Section for late 1939 type Overdrive Control Wiring

reaches firing position (see table above), stop when correct graduation on vibration dampener at front of engine lines up with pointer on chain case cover. Loosen advance arm clamp bolt, rotate distributor until contacts begin to open, tighten clamp bolt, see that rotor opposite #1 segment in distributor cap, check Fuel Compensator setting.

Timing (Neon Timing Light)—Mark vibration dampener with white paint at proper point, idle engine below 500 RPM., adjust distributor (above).

Fuel Compensator Setting—Should be set for light ping when accelerating with wide open throttle. To adjust, loosen thumbnut, rotate distributor counter-clockwise toward low end of scale (if ping too severe), clockwise toward high end of scale (if no ping noted), recheck performance.

CARBURETOR

CARBURETION:—Carburetor—Stromberg Model EE-23. 1¼" Duplex or double barrel, downdraft type.
For complete data, refer to Carburetor Index.

Idle Adjustment—With engine warmed up so that Automatic Choke and Fast Idle inoperative, set throttle lever stopscrew so that engine idles at 6 MPH., turn idle adjusting screw for each barrel (in succession) out until engine begins to roll, then turn screw in slowly until engine fires smoothly, readjust throttle stopscrew for correct idling speed.

Accelerating Pump—Two holes provided in throttle lever for pump link engagement as follows:
Outer Hole (Max.)—Normal fuel and weather.
Inner Hole (Min.)—Hot weather, high-test fuel.

Fast Idle:—Integral (built-in carburetor).
For complete data, refer to Carburetion Equip. Index.
Setting—Turn fast idle screw in 2½-3 turns from point where it contacts fast idle cam (with choke valve closed) to provide .016-.020" throttle opening.

Automatic Choke:—Integral (built-in carburetor).
For complete data, refer to Carburetion Equip. Index.
Setting—Pointer on thermostatic coil plate to line up with punchmark (10 notches Rich). Setting may varied 3 graduations, if required, for satisfactory warming up performance.

Throttle Guard (Cars With Overdrive):—Vacuum operated throttle-kicker to prevent engine stalling when free-wheeling below 20 M.P.H.
For complete data, refer to Carburetion Equip. Index.

CARB. EQUIPMENT

Air Cleaner:—AC #1529077 heavy-duty oil-bath type Std. NOTE—#1528066 oil-wetted type crankcase breather (oil filler) cleaner used.

Fuel Pump:—AC Type AJ #1523896 combination fuel-and-vacuum pump. Diaphragm type.
For complete data, refer to Carburetion Equip. Index.

Gasoline Gauge:—Stewart (Stewart-Warner) Electric. S-W No. 99332 (dash unit), 98259 (tank unit).
For complete data, refer to Carburetion Equip. Index.

BATTERY

BATTERY:—Prest-O-Lite, Type HP2-17. 6 volt, 17 plate, 114 Ampere Hour Capacity (20 hour rate).

Starting Capacity—133 amperes for 20 minutes.
Zero Capacity—300 amperes for 3.5 minutes.
Grounded Terminal—Positive (+) grounded to frame 'X' member. **Engine Ground**—Strap Connector between transmission cover bolt and frame.
Dimensions—Lgth. 10 5/16". Width 7 1/16". Hgt. 8¾".
Location—Under left front seat.

Export Battery—Willard Type SR-5-153. 6 volt, 19 plate, 153 A.H. Capacity (20 hr. rate).
Starting Capacity—180 amperes for 20 minutes.
Zero Capacity—300 amperes for 6.6 minutes. Five second voltage 4.5 volts.
Dimensions—Length 13". Width 7 1/16". Height 9 5/16".

STARTER

Owen-Dyneto Model DI-1568. Armature No. 16666.
Drive—Outboard Barrel type Bendix No. A-1729.
Rotation—Counter-clockwise at commutator end.
Brush Spring Tension—56-60 ozs. (new brushes).
Cranking Engine—125 RPM., 150 amperes, 5.5 volts.

Performance Data—Owen-Dyneto

Torque	R.P.M.	Volts	Amperes
0 ft. lbs.	4500	6.0	60
5.0 "	1010	5.2	200
9.4 "	650	4.8	300
14.2 "	410	4.5	400
19.3 "	220	4.2	500
24.0 "	100	3.8	600
29.2 "	Lock	3.6	730

Removal:—Sleeve mounted on left front face of flywheel housing. To remove, take out pilot mounting screw in housing.

Starting Switch: Auto-Lite SS-4012. Magnetic type, on starter controlled by switch on instrument panel.
For complete data, refer to Electrical Equipment Index.

GENERATOR

Auto-Lite Model GCO-4803A, 4807A; GCO-4806A, 4808A With Tachometer Drive. Two Brush straight shunt type with external voltage and current regulation. Ventilated by fan on drive pulley.

Armature Nos.—GCO-2006F (GCO-4803A, 4807A), GCO-2047F (GCO-4806A, 4808A).

Maximum Charging Rate—28 amperes, 8.0 volts, 1850 RPM. and above (with load or discharged battery). Actual charging rate controlled by regulator and dependent on battery condition.

Charging Rate Adjustment—No adjustment at generator. See Regulator data below.

Performance Data

Cold			Hot		
Amperes	Volts	R.P.M.	Amperes	Volts	R.P.M.
0	6.4	825	0	6.4	900
4	6.6	940	4	6.6	1025
8	6.85	1050	8	6.85	1160
12	7.1	1175	12	7.1	1310
16	7.3	1300	16	7.3	1475
20	7.55	1450	20	7.55	1660
24	7.8	1610	24	7.8	1880
28	8.0	1850	28	8.0	2200

NOTE—28 amperes is Current Regulator setting.
Rotation—Counter-clockwise at commutator end.
Brush Spring Tension—53 ozs. Max. (new brushes).
Field Current—1.47-1.63 amperes at 6.0 volts.
Motoring Current—3.94-4.46 amperes at 6.0 volts.

Removal:—Pivot mounted at left front of engine. To remove, take out pivot and clamp bolts.

Belt Adjustment:—Swing generator ut until 40 lb. reading secured on spring scale hooked to clamp bolt lug parallel to clamp link or until belt deflection midway between generator and pump pulleys is ½-¾" with thumb pressure.

REGULATOR

Auto-Lite Model VRB-4012A. Consists of Cutout Relay, vibrating Voltage Regulator and Current Regulator in case on dash.
For complete data, refer to Electrical Equipment Index.
NOTE—Regulator cover sealed. Serviced on exchange basis if seals not broken.

Cutout Relay

Cuts In—6.4-7.0 volts, 800 R.P.M. Cold.
Cuts Out—.5-3.0 ampere discharge current.
Contact Gap—.015" Minimum.
Air Gap—.034-.038" with contacts open, measured at hinge end of core.

Voltage Regulator

Setting—7.3-7.6 volts at 70°F.
To Check (without breaking seals)—Connect ammeter in charging line at regulator 'B' terminal, voltmeter between 'B' and 'GD' terminals. Operate generator, charging fully charged battery ,at speed equivalent to 30 MPH. until voltage is steady. Voltage should be within limits of 7.21-7.83 volts.
To Adjust (with cover removed)—Change armature spring tension by bending lower spring hanger slightly. See Electrical Equipment Section for complete adjustment directions.
Contact Gap—.010-.020" (armature against stop pin).
Air Gap—.0595-.0625" with contacts just opening.

Current Regulator

Setting—27-29 amperes (marked '28' on cover).
To Check (without breaking seals)—Connect test meters as for Voltage test (above). Operate generator at 30 MPH., add load (use bank of headlamp bulbs or turn on car lights and discharge battery) so that generator charges at peak rate and Current Regulator operates. Charging current should not exceed 28 amperes (if more than slight excess, regulator is defective).
Adjustment, Contact Gap, Air Gap—Same as for Voltage Regulator (above).

LIGHTING

LIGHTING:—Guide Multi-beam, 'cross-beam' type with pre-focused bulbs. Asymetrical passing beam (Upper beam left hand headlamp, lower beam right hand headlamp) controlled by Beam Selector Switch on toeboard.

Headlamp Adjustment—With tires properly inflated, car loaded to rated capacity, 25' from screen and upper beams lighted, aim left hand headlamp so that hot spot centered on horizontal line at lamp center height and left edge of hot spot touching vertical line directly ahead of lamp center (entire hot spot to right of this line). Aim right hand headlamp for same height but with right edge of hot spot 10" to right of vertical line directly ahead of this lamp.

Beam Indicator—In Speedometer dial. Lighted when Upper Beams (Country Driving) in use.

Switches

Lighting—Delco-Remy No. 1994507.
Beam Selector—Delco-Remy No. 1997002.

CONTINUED ON NEXT PA E

C NTINUED FR M PRECEDING PAGE

Bulb Specifications

Position	Candlepower	Mazda No.
Headlamps	32-32	2330
Headlamps (Export)	32-21	1104
Parking, Fender	1½	55
Instr., Clock, Reading	1½	55
Beam & Heater Indicators	1	51
Stop & Tail	21-3	1158
Stop (Trunk Rack Equip.)	15	87
Tail (Trunk Rack Equip.)	3	63
License Plate, Courtesy	3	63
Dome	6	81
Fog Light	32	1321
Spotlight	32	1323

MISC. ELECTRICAL

THERMOSTATIC RELAY:—On lighting switch, protects lighting circuits. Remains closed with 25 amperes but opens in 2 minutes with 38 amperes. Not adjustable.

FUSES:—Dome, Stop Light & Accessories—Two 20 ampere. On back of lighting switch.
Instrument & Tail Light—20 ampere. In connector in switch lead near lighting switch.
Clock—2 ampere (Borg), 1 ampere (Western).

HORNS:—Sparton Model H-32. Vibrator type, Air tone, Twin horns operated by relay.
Air Gap—.032-.035" (low note—long horn), .026-.030" (High note—short horn).
Horn Current—22-25 amperes (total).

Horn Relay:—R-B-M Model 4760. NOTE—Relay not adjustable (cover welded on).
Closing Voltage—3.5-4.5 volts.

ENGINE

ENGINE SPECIFICATIONS:—8 cylinder, 'L' head.
Bore—3 3/16". **Stroke**—5".
Displacement—320 cu. ins. **Rated HP.**—32.5.
Developed Horsepower—130 HP. (Std. Hd.), 135 HP. (Optl. HC. Hd.) at 3200 R.P.M.
Compression Ratio—6.45-1 Standard, 6.85-1 Optl. H.C., 6.20-1 Optl. L.C.
Compression Pressure—110 lbs. (Std. 6.45-1 hd.), 118 lbs. (Optl. 6.85-1 hd.) at 125 R.P.M.
Vacuum Reading—Steady 18-19" idling at 6 MPH.
See Packard Shop Notes for Cylinder Head data and Block Removal instructions.

PISTONS:—Nelson Bohnalite, aluminum alloy, autothermic, strut type, tin plated, cam ground.
Weight—17¾ ozs. (stripped), 24 ozs. (with rings and pin) and equal within 4 grams. **Length**—4¼".
Removal—Pistons from above, rods from below.
Clearance—.0005-.001" skirt. See Fitting Pistons.

Original Bore & Pistons Sizes, Replacement Pistons:—***See Packard Shop Notes for complete data.***

Fitting New Pistons:—Insert .0015" feeler ½" wide between piston and cylinder wall on side opposite slot. Pull to withdraw feeler must be 12-14 lbs.

Installing Pistons:—Slot toward valves.

PISTON RINGS:—#1 compression (plain), #2 compression (#70 Perfect Circle), #3 oil (P-C #85), #4 oil (P.C. #X-90) rings per piston, all above pin.

Ring	Width	End Gap	Side Clearance
Comp. #1 & 2	.123-.1240"	.007-.017"	.003"
Comp. #3	.123-.1240"	.007-.015"	.003"
Oil Contr	.186-.1865"	.007-.015"	.0015"

Replacement Rings:—Standard and .003", .005", .010", .015", .020", .025", .030", .035" & .045" oversize.

PISTON PIN:—Diameter—⅞". **Length**—2 47/64". Pin floats in piston and rod, held by locking rings.
Pin Fit in Piston—Finger push fit with piston heated to 160° F.
Pin Fit in Rod Bushing—Finger push fit at 70° F.
Replacement Pins:—Std. and .003", .006" oversize.

CONNECTING ROD:—Length 10⅞". **Weight** 40-40.125 ozs. (with bearings).
Crankpin Journal Diameter—2 3/16".
Lower Bearing—Copper lead alloy, interchangeable type. Furnished .001", .002", .003", .015" undersize.
Clearance—.0007-.00125". **Sideplay**—.005-.008".

Bearing Adjustment:—None (no shims). Replace bearings. Do not file rods or bearing caps. Tighten rod bolt nuts to 550-570 in. lbs.

Installing Rods:—Oil hole toward camshaft.

CRANKSHAFT:—9 bearing, 8 bolted counterweights with rubber friction disc vibration dampener.
Journal Diameters—2⅝" (all bearings).
Bearings—Removable steel-backed, babbitt-lined, shimless type. Bearing shells doweled in block and cap. Dowel in cap is flanged (seats between bearing and cap) and hollow (for bearing lubrication).
Clearance—.001-.002".

Bearing Adjustment:—None (no shims). Replace bearings (requires removal of crankshaft).

End Thrust:—Taken by #7 bearing. **Endplay**.003-.005".

CAMSHAFT:—8 bearing. Non-adjustable chain drive.
Bearing Type—Steel-backed, babbitt-lined.
Clearance—.0015-.0035".

End Thrust:—Taken by thrust plate assembled in back of camshaft sprocket. **Endplay**—.003-.006".

Timing Chain:—Morse No. 3682-KX. **Width** 1½". Pitch .375". Length 26¼" or 70 links.

Camshaft Setting:—Install chain and sprockets together with marks adjacent and in line with a straightedge across the shaft centers.
See Packard Shop Notes for Radiator & Fender (unit) removal for work on front of engine.

VALVES:—	Head Diameter	Stem Diameter	Length
Intake	1 21/32"	.3405"	7 13/32"
Exhaust	1 15/32"	.3405"	7 13/32"

	Seat Angle	Lift	Stem Clearance
Intake	45°	.358"	.0025-.004"
Exhaust	45°	.358"	.004-.006"

Valve Guides:—New type. Press guides in block so top is 1 1/32" below valve seat and finish-ream.

Valve Rocker Arms:—Consist of pivoted arms mounted on bracket on crankcase which transmit motion from cam to valve pushrod (valve lifter).
Removal—Take out screws in bracket on right side of crankcase, withdraw bracket assembly.

Valve Lifters (Tappets):—Removable from above with valve springs removed. Operate in individual guides held in place by bottom face of cylinder block (remove block to remove guides).

Valve Springs:	Spring Pressure	Spring Length
Valve Closed	68-78 lbs.	3 1/16"
Valve Open	154-164 lbs.	2 45/64"

NOTE—Serrated washer on top of each spring.

VALVE TIMING

Tappet Clearance:—.006" Int., .008" Exh. (warm).
NOTE—Remove right front fender plate for adj.

Valve Timing.:—See Camshaft Setting (above).
Intake Valves—Open 26° BTDC. Close 69° ALDC.
Exhaust Valves—Open 61° BLDC. Close 34° ATDC.
To Check Timing—Set tappet clearance #1 exhaust valve at .005" (or .010", then insert .005" feeler). Turn engine over until pointer over damper (at front of engine) lines up with a point 1 1/16" (plus or minus 11/32") past '1-UPDC' mark (feeler should withdraw with finger pull). Valve closes 34° or .5176" ATDC. Reset tappet clearance at .008" warm.

LUBRICATION

LUBRICATION:—Gear type oil pump in crankcase.
Normal Oil Pressure:—55-60 lbs. max., 5 lbs. min. idling (SAE #20 oil, engine warm or 150° F.).
Oil Pressure Regulator:—Located under plug on left side of crankcase. To adjust, remove acorn nut, turn slotted screw.
Relief Valves—Non-adjustable relief valve located in regulator housing opens at 17 lbs. back-pressure in filter and cooler to by-pass oil to manifold. By-pass valve in oil filter opens at 7-8 lbs.
Crankcase Capacity:—7½ quarts.

COOLING

COOLING SYSTEM:—Water Capacity—22 quarts.
Water Pump:—New ball-bearing, packless type.
See Water Pump Section for complete data.

Thermostat:—In top radiator tank. Operates shutters.
Setting—Starts to open 135° F. Fully open 150° F.
NOTE—Install 162° cylinder head thermostat for use with heaters. Remove in summer.
Adjustment—Pull back on the shutter pullrod to close shutters, tighten nut to remove all slack in rod, then tighten one turn additional for pre-load.

CLUTCH

CLUTCH:—Long Model 11CFS-CI. Semi-centrifugal, single plate, dry disc type (riveted assembly).
See Clutch Section for complete data.
Facings—Woven (US Asbestos #1133G), 2 required. Inside Diam. 6½". Outside Diam. 11". Thickness .125".
Adjustment—Adjust nut on pedal rod (at clutch fork) for 1½-2" pedal free movement.
Removal:—Remove transmission (see Transmission Removal below), remove flywheel bell housing by taking out 4 screws and removing nuts on 4 studs. Remove mounting screws in clutch cover flange

TRANSMISSION

TRANSMISSION:—Own Make. New type with constant-mesh, helical, ball-bearing mounted low-speed gear (sliding gear for reverse). Synchro-mesh (second and high).
See Transmission Section for complete data.

Transmission Control:—Own remote control type.
See Transmission Section for complete data.

Removal:—Disconnect shifter rods, speedometer cable, ground strap at transmission case. Disconnect drive shaft at front universal joint and block shaft up against floorpan. Support rear end f en-

gine, unbolt cross-member from frame (on cars with Econo-Drive remove cross-member at rear with stabilizer, disconnect wires at solenoid). Disconnect hand brake cable at equalizer, remove flywheel housing lower cover, clutch throwout retracting spring. Take out transmission-to-bell housing mounting screws and remove assembly.

OVERDRIVE

OVERDRIVE (ECONO-DRIVE): Warner Model AS9-R6. Overdrive unit with electric 'kick-down'. Optl.
See Transmission Section for complete data.

►**Overdrive Change—New Reverse Switch added on later cars (should be installed on early cars):** *See Warner R6 Overdrive Control in Transmission Section.*

Overdrive Solenoid—Delco-Remy No. 1569.

Throttle Switch—R-B-M. Adjust for .046" clearance between switch plunger and accelerator pedal tappet screw with throttle valve wide open (see that pedal has sufficient over-travel to close switch).

Control Relay—R-B-M. Model 4780. No fuse used.

UNIVERSALS

UNIVERSAL JOINT:—Mechanics Model 3C. Needle bearing type, 2 used.
See Universals Section for complete data.
CAUTION—Do not disturb universal flange nut on first cars (this nut controls overdrive rear bearing pre-load). On later cars (with 'M' stamped on flange), bearing pre-load controlled by spring washer and nut should be kept tight.

REAR AXLE

REAR AXLE:—Own Make. New type, semi-floating, hypoid gear type with Hotchkiss drive. NOTE—Axle has special Ring Gear Support Roller, differential case is straight (not Angle-set), cover welded on.
See Rear Axle Section for complete data.
Ratio—4.36-1 Std., 4.54-1 With Overdrive (1703), 4.54-1 Std., 4.7-1 With Overdrive (1705).
Backlash—.003-.005". Screw adjustment.

Removal:—Remove wheel, hub, brake assembly, wheel bearing and axle shaft. Disconnect rear universal joint at flange, drop drive shaft, remove differential housing mounting nuts, withdraw carrier.
Wheel Bearing Adjustment—Controlled by shims between flanged end of housing and backing plate.
Endplay—.004-.007".

SHOCK ABSORBERS

SHOCK ABSORBERS:—Delco. Model 1966-D, C (front), 1751-Z, M (rear). Double acting, hydraulic type.
See Shock Absorber Section for complete data.
Fifth Shock Absorber (Stabilizer):—Houdaille Model NFT. Double acting, hydraulic, adjustable type.
See Shock Absorber Section for complete data.

FRONT SUSPENSION

Front Suspension:—Independent Safe-T-fleX type.
See Front Suspension Section for complete data.
NOTE—Frame Height must be set first before checking Caster and Camber.

Frame Height—With car on level floor, distance from floor to top of frame side rail at front wheel center-line 19¼" (load car for correct figure).

Kingpin Inclination—1°54' crosswise.

Camber—½° plus ¾° minus 0°. Adjustable.

Caster—½° (1703, 5), 2½° (1703A) plus or minus ½°. Adjustable.

Toe In—1/32-⅛" at hub height. Adjust by turning both tie rods equally (lengths must be equal after adjustment).

STEERING GEAR

Steering Gear: Packard (Gemmer design Model 330) Worm-and-Roller type with center steering. Refer to Gemmer Model 330 article.
See Steering Gear Section for complete data.

BRAKES

BRAKES:—Service—Bendix hydraulic, duo-servo, single anchor type. Hand lever applies rear service brakes.
See Brake Section for complete data.

Drum—Centrifuse. Diameter—12".
Lining—Primary Shoe—US Asbestos #714 (1703, 5), Marshall #1035 (1703A). Secondary Shoe—US Asbestos #589 (1703, 5), Marshall #600 (1703A). Width 2¼" (1703, 5), 2½" (1703A). Thickness 3/16". Length 13" per shoe.
Clearance—.010" at heel and toe of each shoe.

Hand Brake Adjustment:—See Service Brakes.

MODEL IDENTIFICATION

SERIAL NUMBER:—On left side of cowl (use Eng. No.).

ENGINE NUMBER:—First number C-1501. On left side of block between #1 and #2 cylinders.

TUNE-UP

COMPRESSION:—**Ratio**—6.39-1 Std., 6.71-1 Optl. **Pressure**—110 lbs. (6.39-1 Std. cast-iron hd.), 118 lbs. (6.71-1 Optl. cast-iron hd.) at 125 RPM.

VACUUM READING:—Steady 18-20" idling at 6 MPH.

FIRING ORDER: 1-5-3-6-2-4. See wiring diagram.

SPARK PLUGS: AC No. 104 or Champion Y-4. 10 mm. **Gaps**—.028". Limits .026-.030".
NOTE—Do not tighten these small plugs excessively. Tightening tension 50 inch lbs. maximum.

IGNITION: See Coil, Condenser, and Distributor.
Breaker Gap—.020".
Cam Angle—Closed 35° (IGW-4143), 41° (IGW-4143-A), 38° (IGC-4503).
Automatic Advance—8¾° max. at 2000 RPM (4143), 9½° max. at 1600 RPM (IGW-4143A & IGC-4503).

IGNITION TIMING: See Ignition Timing.
Std. Setting—4½-6° BTDC. Flywheel mark (correct degree graduation ahead of #1UP.DC) aligned with inspection hole pointer below starter.

CARBURETION: See Carburetor & Carb. Equipment.
Idle Setting—Set idle adjusting screw 1-1¼ turns open. Adjust for smooth idle. Idle speed 6 MPH.
Float Level—Fuel level ⅝" below edge of bowl.
Accelerating Pump—Center Hole—Normal Setting.
Fuel Pump Pressure: 4¼ lbs. maximum.

MANIFOLD HEAT CONTROL:—Thermostatic coil type. Make certain that valve operates freely (valve must not bind or stick). Do not oil control.

VALVES: See Valve Timing.
Tappet Clearance:—.007" Intake, .010" Exhaust (hot and idling). NOTE—Remove right front fender apron for access to valves.

STARTING: See Battery, Starter, Generator, Regulator.

IGNITION

Ignition Switch:—Mitchellock Model 24-B, No. 8058.
Ignition Lock—Briggs & Stratton. B & S No. 50184.
Key Series—P1251 to P1500. **Groove**—No. 2.

COIL: Auto-Lite Model CE-4632. Service Coil (less switch & cable) CE-3224ES. On left side of block.
Ignition Current—½ ampere idling, 2½ stopped.

CONDENSER: Auto-Lite Part No. IGW-3128A.
Capacity—.28-.32 microfarad.
NOTE—IGW distributors before 1U-0000 fitted with IGW-3075E condenser with .20-.25 mfd. capacity.

DISTRIBUTOR: Auto-Lite Models IGW-4143, IGW-4143A, IGC-4503. Single breaker, 6 lobe cam, full automatic advance type with Fuel Compensator.
Breaker Gap—Set at .020".
Cam Angle or Dwell—(IGW-4143) 35° closed, 25° open; (IGW-4143A) 41° closed, 19° open; (IGC-4503) 38° closed, 22° open (Dist. ° in each instance).
Breaker Arm Spring Tension—17-20 ounces.
Rotation—Counter-clockwise viewed from above.

Automatic Advance—IGW-4143

Distributor Degrees	R.P.M.	Engine Degrees	R.P.M.
Start	300	0	600
2	550	4	1100
4	800	8	1600
6	1300	12	2600
8.75	2000	17.5	4000

Automatic Advance—IGW-4143A, IGC-4503

Degrees	R.P.M.	Degrees	R.P.M.
Start	300	0	600
3	590	6	1180
5	780	10	1560
7	1150	14	2300
9.5	1600	19	3200

Fuel Compensator—Manual adjustment at distributor provides 12° advance or retard from center '0' position. See Ignition Timing for setting.

Distributor Removal:—Mounted on left side of crankcase. To remove, take out hold-down screw in advance arm.

IGNITION TIMING

IGNITION TIMING:—Standard setting listed below (see Fuel Compensator Setting following):

	Flywheel Degrees	Piston Position
All heads	4½-6° BTDC	.0083-.0149" BTDC.

NOTE—Flywheel marked '1 UP DC' with five 2° graduations before and after this point.

Timing—Remove inspection hole cover (left front face of flywheel housing below starter). Loosen

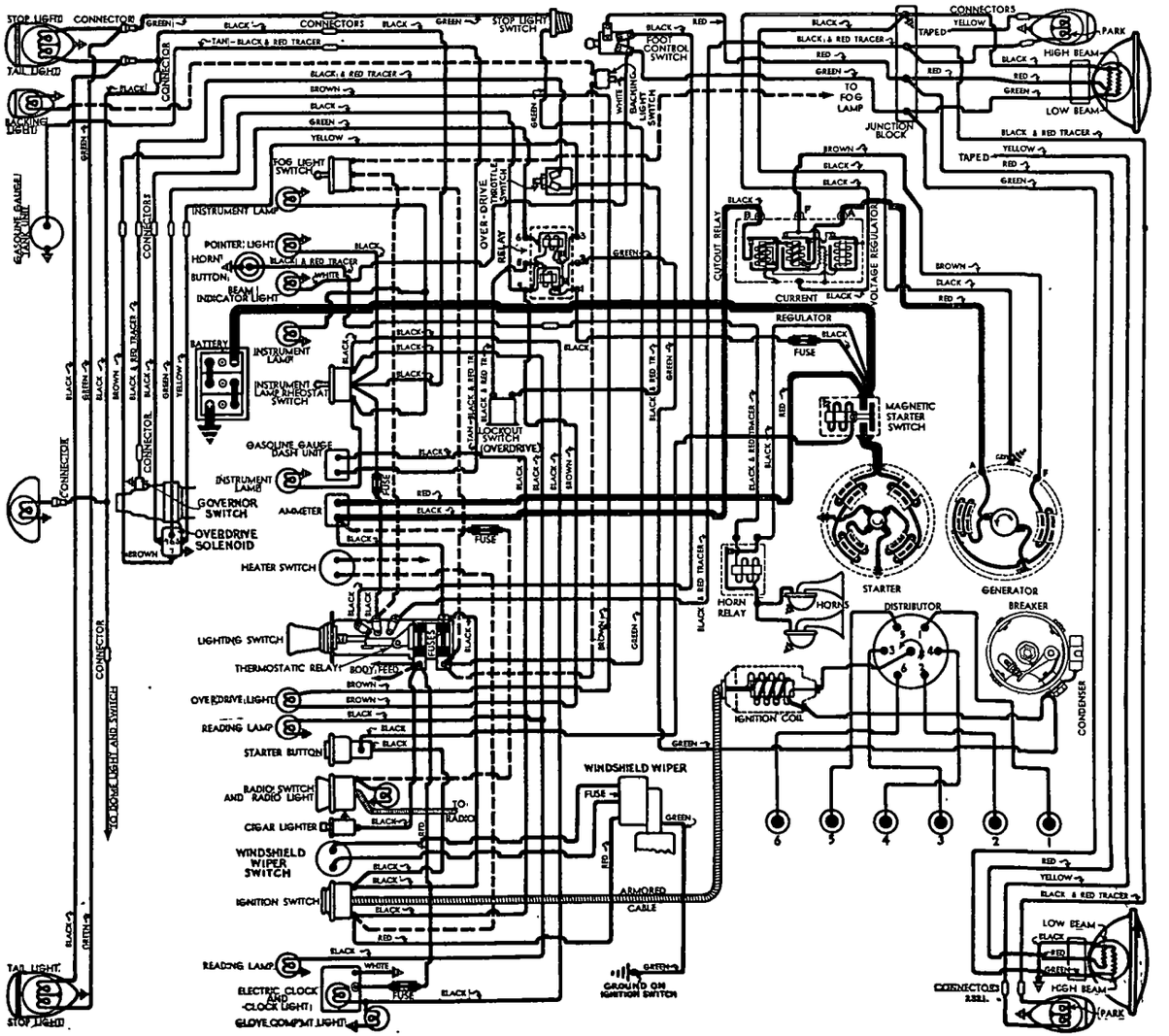

thumbnut, set Fuel Compensator pointer at '0' (center graduation on scale), tighten thumbnut. With #1 piston on compression, turn engine over until piston reaches firing position (see table above), stop when correct graduation on flywheel lines up with pointer. Loosen advance arm clamp bolt, rotate distributor until contacts begin to open, tighten clamp bolt, see that rotor opposite #1 segment in distributor cap, check Fuel Compensator setting.

Timing (Neon Timing Light)—White mark provided on flywheel to indicate timing range (leading edge of mark 6° BTDC). Idle engine and adjust distributor as directed above.

Fuel Compensator Setting—*Should be set for slight* ping when accelerating with wide open throttle. To adjust, loosen thumbnut, rotate distributor counterclockwise (if ping too severe), clockwise (if no ping noted), tighten thumbnut and recheck performance.

CARBURETOR

CARBURETION:—**Carburetor**—Stromberg Model BXOV-26 (No. A-19162). 1¼" single barrel, downdraft type. Code marked 10-39.

For complete data, refer to Carburetor Index.

Idle Adjustment—With engine warm and running at slow idle speed (choke valve wide open, fast idle inoperative), set throttle stopscrew for 6 MPH idle speed. Adjust idle adjusting screw until engine fires smoothly (1-1¼ turns open—turn screw in for leaner mixture). Readjust idle speed.

Accelerating Pump Setting—Three holes provided in pump lever for pump link engagement as follows:
Inner (min. stroke)—Hot weather or high-test fuel.
Center Hole—Normal temperatures and fuel.
Outer (max. stroke)—Cold weather or low test fuel.

Float Level—Fuel level ⅝" below top edge of bowl.

Fast Idle:—Integral type, operated by automatic choke. ***See article in Carburetion Equipment Section.***

Fast Idle Setting—Not adjustable.

Automatic Choke:—Stromberg BXOV-26 carburetor type.

For complete data, refer to Carburetion Equip. Index.

Choke Setting—5 Notches Rich ('V' on scale centered on mark on housing). May be varied 2 notches.

Throttle Guard (Cars with Econo-Drive):—Vacuum operated throttle kicker to prevent engine stalling when operating below 20 MPH.

For complete data, refer to Carburetion Equip. Index.

CARB. EQUIPMENT

Air Cleaner:—AC #1529340 oil-wetted type standard. Heavy duty oil-bath type optl. Crankcase filler tube cap equipped with copper mesh cleaner.

Fuel Pump:—AC Type AT #1537060 diaphragm type.

For complete data, refer to Carburetion Equip. Index.

Gasoline Gauge:—Stewart (Stewart-Warner) Electric.

For complete data, refer to Carburetion Equip. Index.

BATTERY

Prest-O-Lite Type, Model MT1-15. 6 volt, 15 plate, 95 ampere hour capacity (20 hour rate).

Starting Capacity—300 amperes for 3.1 minutes.

Zero Capacity—300 amperes for 3.1 minutes.

Grounded Terminal—Positive (+) grounded to the frame 'X' member. **Engine Ground**—Strap connector between transmission cover bolt and frame. **Dimensions**—Length 9". Width 7". Height 8¾". **Location**—Under left front seat.

STARTER

Auto-Lite Model MZ-4078. Armature No. MZ-2134. Drive—Outboard Barrel Type Bendix No. A-1792. **Rotation**—Counter-clockwise at commutator end. **Brush Spring Tension**—42-53 ozs. (new brushes). **Cranking Engine**—150-175 amperes, 5.1 volts.

Performance Data

Torque	R.P.M.	Volts	Amperes
0 ft. lbs.	4300	5.5	70
.65 " "	2500	5.5	100
2.55 " "	1325	5.0	200
4.95 " "	750	4.5	300
7.65 " "	220	4.0	400
7.8 " "	Lock	3.0	420
11.8 " "	Lock	4.0	560

Removal:—Flange mounted on left front face of flywheel housing. To remove, take out flange mounting screws, lift out starter and switch assembly.

Starting Switch: Auto-Lite SS-4001. Magnetic type. Mounted on starter, controlled by switch on instrument panel. ***See article in Electrical Equipment Section.***

GENERATOR

Auto-Lite Model GEA-4801-A. Armature No. GDZ-2006F. Two brush with current-voltage control.

Charging Rate Adjustment—No adjustment at generator. Charging rate controlled by Voltage Regulator and maximum output by Current Regulator.

Maximum Charging Rate—35 amperes (hot or cold), 8.0 volts, 1570 RPM and above with load or discharged battery (Current Regulator setting). Actual charging rate controlled by Voltage Regulator and dependent on battery condition.

Performance Data

Cold			Hot		
Amperes	Volts	R.P.M.	Amperes	Volts	R.P.M.
0	6.4	780	0	6.4	840
4	6.6	870	4	6.6	935
8	6.8	960	8	6.8	1025
12	6.95	1050	12	6.95	1120
16	7.15	1140	16	7.15	1220
20	7.3	1230	20	7.3	1320
24	7.6	1320	24	7.6	1420
28	7.7	1410	28	7.7	1550
32	7.85	1500	32	7.85	1685
35	8.0	1570	35	8.0	1800

Rotation—Counter-clockwise at commutator end.

Brush Spring Tension—53 ozs. max. (new brushes).

Field Current—1.57-1.75 amperes at 6.0 volts.

Motoring Current—4.45-4.9 amperes at 6.0 volts.

Removal:—Pivot mounted at left front of engine. To remove, take out pivot and clamp bolts.

Belt Adjustment:—Swing generator out until 25 lb. reading secured on scale hooked to clamp bolt lug parallel to clamp link or until belt deflection midway between generator and water pump pulley is ½" with thumb pressure.

REGULATOR

Auto-Lite Model VRB-4012B-1 (First Cars), VRP-4002A, VRP-4201A-1 (Later Cars). Current-voltage Type. Mounted in single case on engine side of dash.

For complete data, refer to Electrical Equipment Index.

NOTE—Regulator case cover is sealed. Serviced on exchange basis if seals not broken.

Cutout Relay

Cuts In—6.4-7.0 volts (VRB), 6.4-6.6 volts (VRP).

Cuts Out—.5-3.0 ampere discharge (VRB), 4.1-4.8 volts with approx. 4-6 ampere discharge (VRP-4002A), 4.8-5.6 volts with approx. 7-8 ampere disch. (VRP-4201A-1).

Contact Gap—.015" minimum.

Air Gap—.034-.038" (VRB & VRP-4201A-1), .031-.034" (VRP-4002A) with contacts open.

Voltage Regulator

Setting—7.3-7.6 volts (VRB), 7.2-7.5 volts (VRP), at 70° F.

To Check (without breaking seals)—Connect ammeter in charging line at regulator 'B' terminal, voltmeter between 'B' terminal and ground. Operate generator at speed equivalent to 30 MPH, charging battery until voltage is steady. Voltage reading should be within limits of 7.36-7.66 volts (VRB), 7.2-7.5 volts (VRP) at 70° F. See Electrical Equipment Section for voltages at other temperatures.

To Adjust (with cover removed)—Change regulator armature spring tension by bending lower spring hanger slightly. See Electrical Equipment Section.

Contact Gap—.010-.020" (VRB), .012" Min. (VRP) with armature against stop pin.

Air Gap—.0595-.0625" (VRB), .048-.052" (VRP) with contacts just opening.

Current Regulator

Setting—34-36 amperes (marked '35' on cover).

To Check (without breaking seals)—Connect test meters as for Voltage check (above). Operate generator at 30 MPH, charging battery, add load (use bank of headlamp bulbs, or turn on car lights and accessories and discharge battery) so that generator charges at peak rate and Current Regulator operates. Charging current should not exceed 34-36 amperes. If more than slight excess noted, regulator is defective.

Adjustment & Contact Gap—Same as for Voltage Regulator (above).

Air Gap—.0595-.0625" (VRB), .034-.038" (VRP-4002A before No. 5U-000001 & All VRP-4201A-1), .048-.052" (VRP-4002A after above No.).

LIGHTING

LIGHTING:—**Headlamps**—Hall 'Sealed Beam' type.

For complete data, refer to Electrical Equipment Index.

Headlamp Adjustment—Aim upper beam for each lamp straight ahead with center of hot spot 3" below lamp center height.

Beam Indicator—Tell-tale light on speedometer face. Lighted when Country (upper) beams in use.

Switches

Lighting—Delco-Remy 1995011.

Beam Selector—R-B-M No. 1050D or Delco-Remy No. 1997001 (LHD), 1997002 (RHD).

CONTINUED ON NEXT PAGE

CONTINUED FROM PRECEDING PA E

Bulb Specifications

Position	Candlepower	Mazda No.
Headlamps		Sealed Beam
Front Turn Indic. & Fender	21-3	1158
Instr., Speed'mtr., Clock	1½	55
Front Reading, Radio, Trunk	1½	55
Glove Comp't., Rear Radio	1	51
Beam, Heater & Defrost Indic.	1	51
Dome and Rear Reading	6	81
Stop & Tail	21-3	1158
Rear License	3	63
Fog Light	32	1321
Spot Light	32	1323
Backing Light	15	87

MISC. ELECTRICAL

THERMOSTATIC RELAY:—Delco-Remy. On lighting switch. Contacts remain closed with 30 amperes, open in 3 minutes with 42 amps. @ 70°F. Not adj.

FUSES:—Dome, Stop Light and Accessories—Two 20 ampere. Mounted on back of lighting switch.
Instrument and Tail Light—20 ampere. In connector in tail light lead near light switch.
Clock—2 ampere. In feed wire.
Radio—14 ampere. In feed wire.
Overdrive—30 ampere. In relay lead near starter.
Windshield Wiper—14 ampere. On dynamic breaker to right of wiper motor.

HORNS:—Sparton Model H-32. Vibrator type, Air tone, Twin horns operated by horn relay.
Air Gap—.032-.035" (low note—long horn), .026-.030" (high note—short air column).
Horn Current—22-25 amperes (total).
Horn Relay:—R-B-M Model 4760.
NOTE—Relay not adjustable (cover welded on).
Closing Voltage—3.5-4.5 volts.

ENGINE

ENGINE SPECIFICATIONS:—6 cylinder, 'L' head type.
Bore—3½". **Stroke**—4¼".
Displacement—245.3 cu. ins. **Rated HP**—29.4.
Developed Horsepower—100 HP (Std. 6.39-1 head), 103-105 HP (Optl. 6.71-1 head) at 3200 RPM.
Compression Ratio and Pressure:—As follows:
6.39-1 Std. cast-iron head—110 lbs. at 125 RPM.
6.71-1 Optl. HC cast-iron hd.—118 lbs. at 125 RPM.
Vacuum Reading—Steady 18-21" idling at 6 MPH.
See Packard Shop Notes for Cylinder Head data.

PISTONS:—Nelson Bohnalite, aluminum alloy, autothermic, strut type, tin plated, cam ground type.
Weight—20¼ ozs. (stripped), 26½ (with rings & pin).
Length—3⅞".
Removal—Pistons and rods removed from above.
Clearance—.0005-.001". See Fitting Pistons.
Original Bore & Piston Sizes, Replacement Pistons:—*See Packard Shop Notes for complete data.*
Fitting New Pistons:—Insert .0015" feeler ½" wide between piston and cylinder wall on side opposite slot. Pull to withdraw feeler should be 12-18 lbs.
Installing Pistons:—Slot toward valves.

PISTON RINGS:—2 coated compression (Perfect Circle #200, No. 1 upper inner edge beveled, #70 No. 2), 1 oil cont. (X90-85 expander type), all above pin.

Ring	Width	End Gap	Side Clearance
Comp. (#1)	.0930-.0935"	.007-.017"	.0025-.003"
Comp. (#2)	.1240-.1235"	.007.-017"	.0025-.003"
Oil Cont.	.1860-.1865"	.007-.015"	.0015-.002"

Replacement Rings:—Furnished standard size and .005", .010", .020", .030", .040" oversize.

PISTON PIN:—Diameter—⅞". Length—3 1/64". Pin floats in piston and rod, held by locking rings. Pins furnished Std. and .003", .006" oversize.
Pin Fit in Piston—Finger push fit (piston at 160°).
Pin Fit in Rod Bushing—Finger push fit at 70° F.

CONNECTING ROD:—Length 7 11/16". Weight 31.60 ozs.
Upper Bearing (Piston Pin Bushing)—Split type.
See Packard Shop Notes for complete data.
Crankpin Journal Diameter—2 3/32".
Lower Bearing—Interchangeable steel-backed, babbitt-lined. Bearings furnished standard and .001", .002", .003", .015" undersize.
Clearance—.0005-.0015". **Endplay**—.004-.010".
Bearing Adjustment:—None (no shims). Replace bearings. Do not file rods or caps. *See Packard Shop Notes for 'Palnut' installation data.*

Installing Rods:—Oil squirt hole toward camshaft.

CRANKSHAFT:—4 bearings, 6 integral counterweights and rubber friction disc vibration damper.
Journal Diameters—2¾".
Bearings—Interchangeable steel-backed, babbitt-lined. Furnished std., .001", .002" undersize.
Clearance—.001-.003".
Bearing Adjustment:—None (no shims). Replace bearings (upper half can be 'rotated' in or out).
End Thrust:—Taken by front (#1) bearing.
Endplay—.003-.008".

CAMSHAFT:—4 bearing. Non-adjustable chain drive.
Bearing Type—Steel-backed, babbitt-lined.
Clearance—.001-.003".
End Thrust:—Taken by thrust plate in back of camshaft sprocket. **Endplay**—.002-.004".
Timing Chain:—Morse Type C-3682R (#1525) or Ramsey. Width 1¼". Pitch .375". Length 21¾" or 58 links. Same as 1939.
Camshaft Setting:—Install chain and sprockets together with '0' marks on sprockets adjacent and in line with a straightedge across the shaft centers. *See Packard Shop Notes for Radiator & Fender (unit) removal for work on front end of engine.*

VALVES:—	Head Diameter	Stem Diameter	Length
Intake	1 17/32"	.34025"	5⅝"
Exhaust	1⅜"	.34025"	5⅝"
	Seat Angle	**Lift**	**Stem Clearance**
Intake	30°	.318"	.001-.003"
Exhaust	45°	.3175"	.003-.005"

Valve Guides:—Pressed in block from above with upper end 31/32" below valve seat. Exhaust guides counter-bored on upper inner diameter.

Valve Springs:—Intake and exhaust springs interchangeable.

	Spring Pressure	Length
Valve Closed	47-52 lbs.	1⅝"
Valve Open	114-124 lbs.	1 5/16"

NOTE—Serrated washer installed on top of spring.

Valve Lifters:—New larger (diameter ⅝") mushroom type. Remove from below with camshaft out. Service by reaming (work through valve guide using ST-5144—23/32") and installing oversize lifters furnished .001", .002", .005" oversize.
Diameter—.6235-.6240". **Clearance**—.0003-.0012".
NOTE—1939 tool (ST-5101) cannot be used.

VALVE TIMING

Tappet Clearance:—.007" Int., .010" Exh. (hot & idling). NOTE—Self-locking tappet screw used. Remove right front fender plate for access to valves.
Valve Timing:—See Camshaft Setting above.
Intake Valves—Open 1° BTDC. Close 39° ALDC.
Exhaust Valves—Open 45° BLDC. Close 5° ATDC.
To Check Timing—With .0125" tappet clearance #1 intake valve should open with #1 piston 1° or .0004" BTDC when 1° point on flywheel (½ graduation before '1 UP DC' mark) lines up with pointer in inspection hole in flywheel housing below starter (left side). Permissible variation plus or minus 2 graduations. Reset tappet cl. at .007" (hot & idling).

LUBRICATION

LUBRICATION:—Gear type pump on right of engine. *See Packard Shop Notes for Oil Pump installation.*
Normal Oil Pressure:—45 lbs. at 45 MPH.
Oil Pressure Relief Valve:—Mounted on pump cover. Not adjustable. Spring pressure should be 14 lbs. plus or minus 2 ounces at 1⅞".
Crankcase Capacity:—5 quarts (refill).

COOLING

COOLING SYSTEM:—Capacity—17 quarts.
Water Pump:—Packless type with ball-bearing shaft. *See Water Pump Section for complete data.*
Removal—Remove fan belt, disconnect pump hose, take out pump mounting screws, lift out pump.
Thermostat:—Harrison. In cylinder head outlet. Starts to open at 145° F.

CLUTCH

CLUTCH:—Long Model 9½ CF-CS. Semi-centrifugal, single plate, dry disc type.
NOTE—Borg & Beck Model 10A7 (marked #948) Single plate, dry disc type with 'Borglite' driven member used after Engine No. 17621 to No. 28824. *See Clutch Section for complete data.*
Facings (Long)—Spiral or chevron wound woven, US Asbestos No. 1133G, 2 used. Inside Diam. 6". Outside Diam. 9½". Thickness .125".
Adjustment:—Adjust nut on pedal rod (at clutch fork) for 1½-2" pedal free movement. *See Packard Shop Notes for 1941 design clutch linkage which may be installed on these cars to correct wear.*
Removal:—Remove transmission (see Transmission Removal following) and flywheel housing lower cover. Disconnect and remove pedal rod, clutch throw-out bearing. Remove clutch cover screws and remove assembly from below.

TRANSMISSION

TRANSMISSION:—Own Make. Constant-mesh, helical, ball-bearing mounted low speed gear (sliding spur gear for reverse). Synchro-mesh (second and high). *See Transmission Section for complete data.*

Transmission Control:—Own Remote Control type.

See Transmission Section for complete data.

Removal:—Disconnect shifter rods, speedometer cable, hand brake cable at equalizer, engine ground strap, overdrive cable and solenoid wires (if used), front universal (block drive shaft up against floor pan) and rubber bearing at rear of overdrive. Support rear of engine with jack and unbolt cross member (at frame ends and flywheel housing lower cover). Disconnect clutch retractor spring and fore and aft restraint rod. Take out transmission-to-flywheel housing mounting screws and remove assembly from car.

OVERDRIVE

Econo-Drive Transmission:—New Warner-Packard type (Warner model AS1-R9) overdrive unit with electrical control. Optional equipment on all cars.

See Transmission Section for complete data.

Overdrive Solenoid—Delco Remy Model 1118005.

Overdrive Indicator Light—In light switch knob. Lighted when overdrive is ready to engage (light goes out when accelerator pedal released so that overdrive can engage).

Throttle Switch—Cole-Hersee, Packard No. 347496. Adjust tappet screw on throttle lever to just contact switch plunger with carburetor throttle valve in wide open position.

Lock-out Switch—Ark-less or Soreng-Manegold, Packard No. 354820 or 347641.

Control Relay—Delco-Remy Model 1116801.

Governor Switch—Bendix, Packard No. 347478 Std.

See Warner (Packard) Overdrive Control article in Transmission Section for Optional Switches.

UNIVERSALS

UNIVERSAL JOINTS:—**Mechanics.** Model 2C (Std.), 3C (with Econo-Drive). Needle bearing type. 2 used.

See Universals Section for complete data.

CAUTION—Rear universal flange controls pinion bearing pre-load. See Packard Rear Axle article in Rear Axle Section for complete data.

REAR AXLE

REAR AXLE:—**Own Make.** Semi-floating, hypoid gear type with Hotchkiss drive. Cover welded.

NOTE—Axle bearings not interchangeable with 1700 cars.

See Rear Axle Section for complete data.

Ratio—4.36-1 Std., 4.55-1 with Econo-Drive trans'm.

Backlash—.003-.005". Screw adjustment.

Removal:—Remove wheel, hub, and brake backing plate assembly. Withdraw axle shafts. Disconnect rear universal joint and drop drive shaft. Remove carrier-to-housing bolt nuts, withdraw carrier.

Wheel Bearing Adjustment—Endplay controlled by shims between flanged end of housing and brake backing plate. Unbolt backing plate and clips holding brake tube to housing. Add or remove shims (endplay up to .050" can be adjusted at one wheel).

Endplay—.004-.007".

SHOCK ABSORBERS

SHOCK ABSORBERS:—

	Front	Rear
Domestic	Delco 2206-A,B	Monroe 347416
Exp. & Spec.	Delco 2206-A,B	Delco 1130-W

Front shocks are parallel cylinder type. Rear shocks are direct acting (adjustable type Delco).

See Shock Absorber Section for complete data.

NOTE—No Fifth Shock Absorber used.

FRONT SUSPENSION

Front Suspension:—Independent 'Safe-T-fleX' type with coil springs.

See Front Suspension Section for complete data.

NOTE—Frame height must be set first before checking Caster and Camber.

Frame Height—With car on level floor, distance from floor to top of frame side rail at front wheel center-line 18⅝" (load car until figure correct).

Kingpin Inclination—1°54' crosswise.

Camber—Pos. ½° (plus ¾°, minus 0°). Adjustable.

Caster—Pos. 1½° ± ½°. Shim adjustment.

Toe In—0" (+1/16", —0") at hub height. Turn both tie rods equally (must be equal after adjusting).

Steering Geometry (Toe-out on Turns)—Inner wheel turned 23°. Outer wheel 20°.

STEERING GEAR

Steering Gear: Packard (Gemmer design Model 330) Worm-and-Roller type with center steering. Refer to Gemmer Model 330 article.

See Steering Gear Section for complete data.

BRAKES

BRAKES:—**Service.** Bendix hydraulic, duo-servo, single anchor type without eccentric adjustment. Hand lever applies rear wheel service brakes.

See Brake Section for complete data.

Drums—Centrifuse. Diameter—11".

Lining—Moulded. Width 1¾". Thickness 3/16". Length per shoe 10⅝" (primary), 12" (secondary).

Clearance—.015" at both ends of secondary shoe with primary shoe forced out against drum.

Hand Brake:—See Service Brakes (above).

MISC. MECHANICAL

WINDSHIELD WIPER:—**Stewart-Warner Series 645.** Electric type. 14 ampere fuse mounted on dynamic breaker (behind instrument panel to right of wiper motor).

See Miscellaneous Section for complete data.

MODEL IDENTIFICATION

SERIAL NUMBER:—On left side of cowl (use Eng. No.)

ENGINE NUMBER:—First number C-300001. On left side of block between #1 and #2 cylinders.

TUNE-UP

COMPRESSION:—Ratio—6.41-1 Std., 6.85-1 Optl. Pressure—110 lbs. (6.41-1 Std. cast-iron hd.), 118 lbs. (6.85-1 Optl. cast-iron hd.) at 125 RPM.

VACUUM READING:—Steady 18-20" idling at 6 MPH.

FIRING ORDER: 1-6-2-5-8-3-7-4. See diagram.

SPARK PLUGS: AC No. 104 or Champion Y-4. 10 mm. Gaps—.028". Limits .026-.030".

NOTE—Do not tighten these small plugs excessively. Tightening tension 50 inch lbs. maximum.

IGNITION: See Coil, Condenser, and Distributor.

Breaker Gap—.015" (.017" maximum).

Cam Angle—27° Closed with .017" Breaker Gap.

Automatic Advance—8° at 1200 RPM (IGP-4501), 11½° at 1550 RPM (IGP-4501A). Distr. ° & RPM.

IGNITION TIMING: See Ignition Timing.

Std. Setting—6½-8° BTDC (for standard head), 5½-7° BTDC (HC head). Flywheel mark (correct degree mark ahead of #1UP.DC) aligned with inspection hole pointer (left front face of housing below starter).

CARBURETION: See Carburetor & Carb. Equipment.

Idle Setting—Set idle adjusting screws 2-2½ turns open. Adjust for smooth idle. Idle speed 6 MPH.

Float Level—Fuel level 15/32" below edge of bowl.

Accelerating Pump—No seasonal adjustment.

Fuel Pump Pressure: 3¾ lbs. maximum.

MANIFOLD HEAT CONTROL:—Thermostatic coil type. Make certain that valve operates freely (valve must not bind or stick). Do not oil control.

VALVES: See Valve Timing.

Tappet Clearance:—.007" Intake, .010" Exhaust (hot and idling). NOTE—Remove right front fender apron for access to valves.

STARTING: See Battery, Starter, Generator, Regulator.

IGNITION

Ignition Switch:—Mitchellock Model 24-B, No. 8058. **Ignition Lock**—Briggs & Stratton. B & S No. 50184. **Key Series**—P1251 to P1500. **Groove**—No. 2.

COIL: Auto-Lite Model CE-4632. Service Coil (less switch & cable) CE-3224ES. On left side of block.

Ignition Current—½ ampere idling, 2½ stopped.

CONDENSER: Auto-Lite Part No. IG-2671K.

Capacity—.20-.25 microfarad..

DISTRIBUTOR: Auto-Lite Model IGP-4501 or IGP-4501A. Single breaker, 8 lobe cam, full automatic advance with Fuel Compensator.

Breaker Gap—Set at .015".

Cam Angle or Dwell—27° clsd., 18° open (.017" gap).

Breaker Arm Spring Tension—17-20 ounces.

Rotation—Counter-clockwise viewed from the top.

Automatic Advance—IGP-4501

Distributor Degrees	R.P.M.	Engine Degrees	R.P.M.
Start	300	0	600
3	400	6	800
4	560	8	1120
6	875	12	1750
8	1200	16	2400

Automatic Advance—IGP-4501A

Degrees	R.P.M.	Degrees	R.P.M.
Start	250	0	500
3	525	6	1050
6	800	12	1600
9	1210	18	2420
11.5	1550	23	3100

Fuel Compensator—Manual adjustment at distributor provides 12° advance or retard from center '0' position. See Ignition Timing for setting.

Distributor Removal:—Mounted on left side of crankcase. To remove, take out hold-down screw in advance arm.

IGNITION TIMING

IGNITION TIMING:—Standard setting listed below (see Fuel Compensator Setting following):

	Flywheel Degrees	Piston Position
Std. 6.41-1 head	6½-8° BTDC	.0174-.0262" BTDC
Optl. 6.85-1 HC hd.	5½-7° BTDC	.0124-.0202" BTDC

NOTE—Flywheel marked '1 UP DC' with five 2° graduations before and after this point.

Timing—Remove inspection hole cover (left front

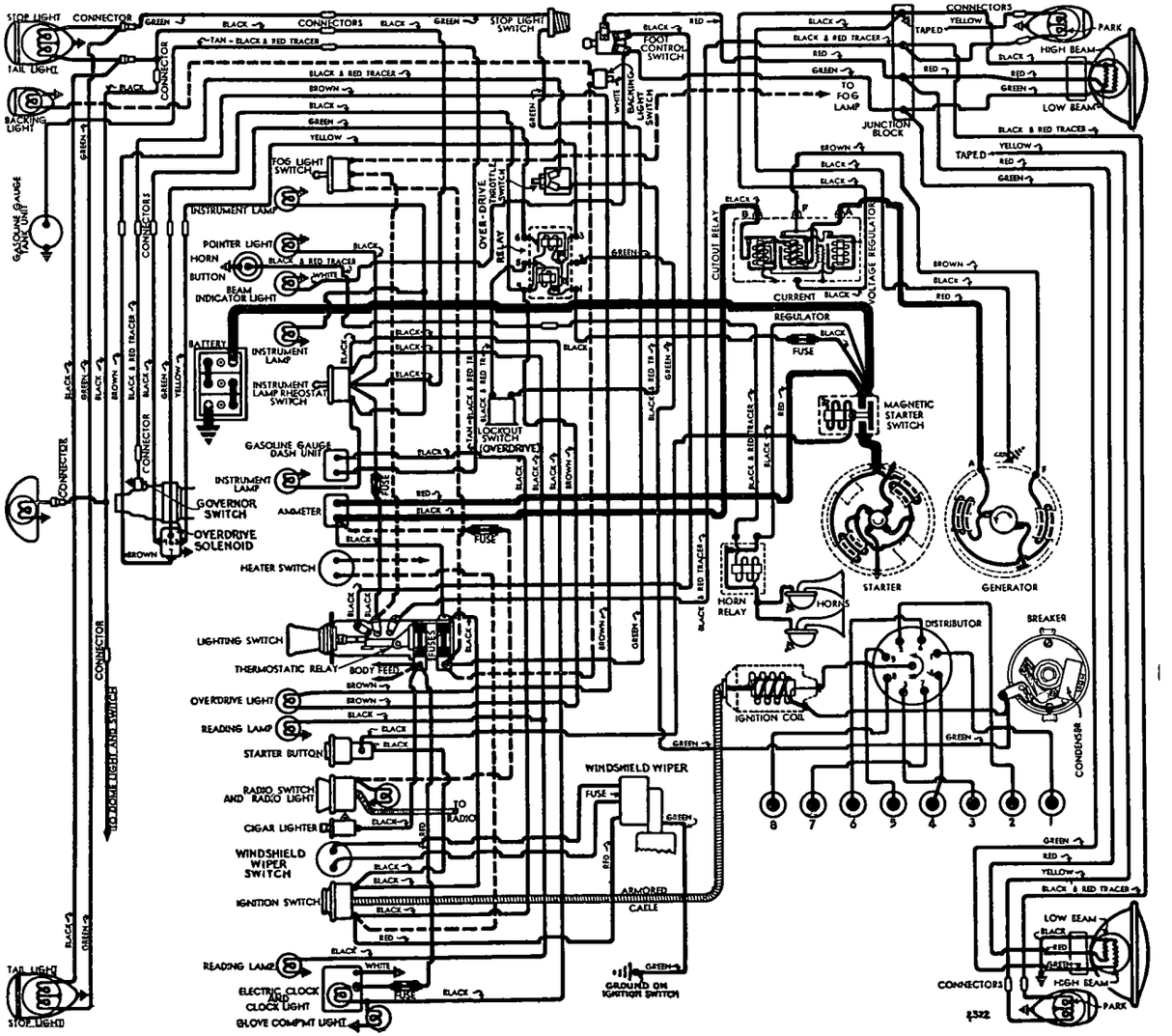

face of flywheel housing below starter). Loosen thumbnut, set Fuel Compensator pointer at '0' (center graduation on scale), tighten thumbnut. With #1 piston on compression, turn engine over until piston reaches firing position (see table above), stop when correct graduation on flywheel lines up with pointer. Loosen advance arm clamp bolt, rotate distributor until contacts begin to open, tighten clamp bolt, see that rotor opposite #1 segment in distributor cap, check Fuel Compensator setting.

Timing (Neon Timing Light)—White mark provided on flywheel to indicate timing range (leading edge of mark 8° BTDC). Idle engine and adjust distributor as directed above.

Fuel Compensator Setting—Should be set for slight ping when accelerating with wide open throttle. To adjust, loosen thumbnut, rotate distributor counterclockwise (if ping too severe), clockwise (if no ping noted), tighten thumbnut and recheck performance.

CARBURETOR

CARBURETION:—Carburetor—Stromberg EE-16, No. A-18341 (code marked 10-33A on upper main body flange or float bowl cover. 1" Duplex double barrel downdraft type.

For complete data, refer to Carburetor Index.

Idle Adjustment—With engine warm and running at slow idle speed (choke valve wide open, fast idle inoperative), set throttle stopscrew for 6 MPH idle speed. Adjust idle adjusting screw (one for each barrel) in succession until engine fires smoothly (2-2½ turns open for each screw—turn screws in for leaner mixture). Readjust idle speed.

Accelerating Pump—Not adjustable.

Float Level—Fuel level 15/32" below top edge of bowl.

Fast Idle:—Stromberg EE-16 carburetor type.

For complete data, refer to Carburetion Equip. Index.

Fast Idle Setting—Turn screw in to contact lowest step of fast idle cam, then back out ½ turn.

Automatic Choke:—Stromberg EE-16 carburetor type.

For complete data, refer to Carburetion Equip. Index.

Choke Setting—4 Notches Rich ('V' on scale centered on mark on housing). May be varied 2 notches.

Throttle Guard (Cars with Econo-Drive):—Vacuum operated throttle kicker to prevent engine stalling when operating below 20 MPH.

For complete data, refer to Carburetion Equip. Index.

CARB. EQUIPMENT

Air Cleaner:—AC # 1529339 oil-wetted type standard. Heavy duty oil-bath type optl. Crankcase filler tube cap equipped with copper mesh cleaner.

Fuel Pump:—AC Type AH #1537067 diaphragm type.

For complete data, refer to Carburetion Equip. Index.

Gasoline Gauge:—Stewart (Stewart-Warner) Electric.

For complete data, refer to Carburetion Equip. Index.

BATTERY

Willard Type, Model SW-2-113. 6 volt, 17 plate, 113 ampere hour capacity (20 hour rate).

Starting Capacity—134 amperes for 20 minutes.

Zero Capacity—300 amperes for 4.2 minutes.

Grounded Terminal—Positive (+) grounded to the frame 'X' member. **Engine Ground**—Strap connector between transmission cover bolt and frame.

Dimensions—Length 10 5/16". Width 7 1/16". Height 8 13/16".

Location—Under left front seat.

STARTER

Auto-Lite Model MAW-4018. Armature MAW-2006.

Drive—Outboard Barrel Type Bendix No. A-1718.

Rotation—Counter-clockwise at commutator end.

Brush Spring Tension—42-53 ozs. (new brushes).

Cranking Engine—125 RPM, 175 amperes, 5.1 volts.

Performance Data

Torque	R.P.M.	Volts	Amperes
0 ft. lbs.	4900	5.5	65
2.75 " "	1480	5.0	200
5.45 " "	820	4.5	300
8.50 " "	400	4.0	400
11.55 " "	110	3.5	500
11.5 " "	Lock	3.0	505
18.0 " "	Lock	4.0	670

Removal:—Flange mounted on left front face of flywheel housing. To remove, take out flange mounting screws, lift out starter and switch assembly.

Starting Switch: Auto-Lite SS-4001 Magnetic type. Mounted on starter, controlled by switch on instrument panel. ***See article in Electrical Equipment Section.***

GENERATOR

Auto-Lite Model GEA-4801-A. Armature No. GDZ-2006F. Two brush with current-voltage control.

Charging Rate Adjustment—No adjustment at generator. Charging rate controlled by Voltage Regulator and maximum output by Current Regulator.

Maximum Charging Rate—35 amperes (hot or cold), 8.0 volts, 1570 RPM and above with load or discharged battery (Current Regulator setting). Actual charging rate controlled by Voltage Regulator and dependent on battery condition.

Performance Data

Cold			Hot		
Amperes	Volts	R.P.M.	Amperes	Volts	R.P.M.
0	6.4	780	0	6.4	840
4	6.6	870	4	6.6	935
8	6.8	960	8	6.8	1025
12	6.95	1050	12	6.95	1120
16	7.15	1140	16	7.15	1220
20	7.3	1230	20	7.3	1320
24	7.6	1320	24	7.6	1420
28	7.7	1410	28	7.7	1550
32	7.85	1500	32	7.85	1685
35	8.0	1570	35	8.0	1800

Rotation—Counter-clockwise at commutator end.

Brush Spring Tension—53 ozs. max. (new brushes).

Field Current—1.57-1.75 amperes at 6.0 volts.

Motoring Current—4.45-4.9 amperes at 6.0 volts.

Removal:—Pivot mounted at left front of engine. To remove, take out pivot and clamp bolts.

Belt Adjustment:—Swing generator out until 25 lb. reading secured on scale hooked to clamp bolt lug parallel to clamp link or until belt deflection midway between generator and water pump pulley is ½" with thumb pressure.

REGULATOR

Auto-Lite Model VRB-4012B-1 (First Cars), VRP-4002A, VRP-4201A-1 (Later Cars). Current-voltage Type. Mounted in single case on engine side of dash.

For complete data, refer to Electrical Equipment Index.

NOTE—Regulator case cover is sealed. Serviced on exchange basis if seals not broken.

Cutout Relay

Cuts In—6.4-7.0 volts (VRB), 6.4-6.6 volts (VRP).

Cuts Out—.5-3.0 ampere discharge (VRB), 4.1-4.8 volts with approx. 4-6 ampere discharge (VRP-4002A), 4.8-5.6 volts with approx. 7-8 ampere disch. (VRP-4201A-1).

Contact Gap—.015" minimum.

Air Gap—.034-.038" (VRB & VRP-4201A-1), .031-.034" (VRP-4002A) with contacts open.

Voltage Regulator

Setting—7.3-7.6 volts (VRB), 7.2-7.5 volts (VRP), at 70° F.

To Check (without breaking seals)—Connect ammeter in charging line at regulator 'B' terminal, voltmeter between 'B' terminal and ground. Operate generator at speed equivalent to 30 MPH, charging battery until voltage is steady. Voltage reading should be within limits of 7.36-7.66 volts (VRB), 7.2-7.5 volts (VRP) at 70° F. See Electrical Equipment Section for voltages at other temperatures.

To Adjust (with cover removed)—Change regulator armature spring tension by bending lower spring hanger slightly. See Electrical Equipment Section.

Contact Gap—.010-.020" (VRB), .012" Min. (VRP) with armature against stop pin.

Air Gap—.0595-.0625" (VRB), .048-.052" (VRP) with contacts just opening.

Current Regulator

Setting—34-36 amperes (marked '35' on cover).

To Check (without breaking seals)—Connect test meters as for Voltage check (above). Operate generator at 30 MPH, charging battery, add load (use bank of headlamp bulbs, or turn on car lights and accessories and discharge battery) so that generator charges at peak rate and Current Regulator operates. Charging current should not exceed 34-36 amperes. If more than slight excess noted, regulator is defective.

Adjustment & Contact Gap—Same as for Voltage Regulator (above).

Air Gap—.0595-.0625" (VRB), .034-.038" (VRP-4002A before No. 5U-000001 & All VRP-4201A-1), .048-.052" (VRP-4002A after above No.).

LIGHTING

LIGHTING:—Headlamps—Hall 'Sealed Beam' type.

For complete data, refer to Electrical Equipment Index.

Headlamp Adjustment—Aim upper beam for each lamp straight ahead with center of hot spot 3" below lamp center height.

Beam Indicator—Tell-tale light on speedometer face. Lighted whenever Country (upper) beam in use.

Switches

Lighting—Delco-Remy 1995011.

Beam Selector—R-B-M No. 1050D or Delco-Remy N . 1997001 (LHD), 1997002 (RHD).

CONTINUED N NEXT PA E

CONTINUED FR M PRECEDING PA E

Bulb Specifications

Position	Candlepower	Mazda No.
Headlamps		Sealed Beam
Front Turn Indic. & Fender	21-3	1158
Instr., Speed'mtr., Clock	1½	55
Front Reading, Radio, Trunk	1½	55
Glove Comp't., Rear Radio	1	51
Beam, Heater & Defrost Indic.	1	51
Dome and Rear Reading	6	81
Stop & Tail	21-3	1158
Rear License	3	63
Fog Light	32	1321
Spot Light	32	1323
Backing Light	15	87

MISC. ELECTRICAL

THERMOSTATIC RELAY:—Delco-Remy. On lighting switch. Contacts remain closed with 30 amperes, open in 3 minutes with 42 amps. @ 70°F. Not adj.

FUSES:—Dome, Stop Light and Accessories—Two 20 ampere. Mounted on back of lighting switch.

Instrument and Tail Light—20 ampere. In connector in tail light lead near light switch.

Clock—2 ampere. In feed wire.

Radio—14 ampere. In feed wire.

Overdrive—30 ampere. In relay lead near starter.

Windshield Wiper—14 ampere. On dynamic breaker to right of wiper motor.

HORNS:—Sparton Model H-32. Vibrator type, Air tone, Twin horns operated by horn relay.
Air Gap—.032-.035" (low note—long horn), .026-.030" (high note—short air column).
Horn Current—22-25 amperes (total).

Horn Relay:—R-B-M Model 4760.
NOTE—Relay not adjustable (cover welded on).
Closing Voltage—3.5-4.5 volts.

ENGINE

ENGINE SPECIFICATIONS:—8 cylinder, 'L' head type.
Bore—3¼". **Stroke**—4¼".
Displacement—282.04 cu. ins. **Rated HP**—33.8.
Developed Horsepower—120 (Std. hd.) at 3600 RPM.
Compression Ratio—6.41-1 Std., 6.85-1 Optl. CI hds.
Compression Pressure—110 lbs. (Standard 6.41-1 hd.), 118 lbs. (Optl. 6.85-1 head) at 125 RPM.
Vacuum Reading—Steady 18-21" idling at 6 MPH.
See Packard Shop Notes for Cylinder Head data.

PISTONS:—Nelson Bohnalite, aluminum alloy, autothermic, strut type, tin plated, cam ground type.
Weight—17¼ ozs. stripped, 23⅛ with rings & pin.
Length—3⅞".
Removal—Pistons and rods removed from above.
Clearance—.0005-.001". See Fitting Pistons.
Original Bore & Piston Sizes, Replacement Pistons:—
See Packard Shop Notes for complete data.
Fitting New Pistons:—Insert .0015" feeler ½" wide between piston and cylinder wall on side opposite slot. Pull to withdraw feeler should be 12-18 lbs.
Installing Pistons:—Slot toward valves.

PISTON RINGS:—2 coated compression (Perfect Circle #200, No. 1 upper inner edge beveled, #70 No. 2), 1 oil cont. (X90-85 expander type), all above pin.

Ring	Width	End Gap	Side Clearance
Comp. (#1)	.0930-.0935"	.007-.017"	.0025-.003"
Comp. (#2)	.1240-.1235"	.007.-017"	.0025-.003"
Oil Cont.	.1860-.1865"	.007-.015"	.0015-.002"

Replacement Rings:—Furnished standard size and .005", .010", .020", .030", .040" oversize.

PISTON PIN:—Diameter—⅞". **Length**—2 51/64".
Pin floats in piston and rod, held by locking rings. Pins furnished Std. and .003", .006" oversize.
Pin Fit in Piston—Finger push fit with piston heated to 160° F.
Pin Fit in Rod Bushing—Finger push fit at 70° F.

CONNECTING ROD:—Length 7 11/16". **Weight** 31.60 ozs.
Upper Bearing (Piston Pin Bushing)—Split type.
See Packard Shop Notes for complete data.
Crankpin Journal Diameter—2 3/32".
Lower Bearing—Interchangeable steel-backed, babbitt-lined. Bearings furnished standard and .001", .002", .003", .015" undersize.
Clearance—.0005-.0015". **Endplay**—.004-.010".

Bearing Adjustment:—None (no shims). Replace bearings. Do not file rods or caps. ***See Packard Shop Notes for 'Palnut' installation data.***

Installing Rods:—Oil squirt hole toward camshaft.

CRANKSHAFT:—5 bearings, 8 integral counterweights and rubber friction disc vibration dampener.
Journal Diameters—2¾".
Bearings—Interchangeable steel-backed, babbitt-lined. Furnished std., .001", .002" undersize.
Clearance—.001-.003".

Bearing Adjustment:—None (no shims). Replace bearing (upper half can be 'rotated' in or out).

End Thrust:—By #3 bearing. **Endplay**—.003-.008".

CAMSHAFT:—5 bearing. Non-adjustable chain drive.
Bearing Type—Steel-backed, babbitt-lined.
Clearance—.001-.003".

End Thrust:—Taken by thrust plate in back of camshaft sprocket. **Endplay**—.002-.004".

Timing Chain:—Morse Type C-3682R (#1525) or Ramsey. Width 1¼". Pitch .375". Length 21¾" or 58 links. Same as 1939.

Camshaft Setting:—Install chain and sprockets together with '0' marks on sprockets adjacent and in line with a straightedge across shaft centers with #1 piston on top dead center.
See Packard Shop Notes for Radiator & Fender (unit) removal for work on front of engine.

VALVES:—	Head Diameter	Stem Diameter	Length
Intake	1 31/64"	.34025"	5⅝"
Exhaust	1⅜"	.34025"	5⅝"

	Seat Angle	Lift	Stem Clearance
Intake	30°	.318"	.001-.003"
Exhaust	45°	.3175"	.003-.005"

Valve Guides:—Pressed in block from above with upper end 31/32" below valve seat. Exhaust guides counter-bored on upper inner diameter.

Valve Springs:—Intake and exhaust springs interchangeable.

	Spring Pressure	Length
Valve Closed	47-52 lbs.	1⅝"
Valve Open	114-124 lbs.	1 5/16"

NOTE—Serrated washer installed on top of spring.

Valve Lifters:—New larger (diameter ⅝") mushroom type. Remove from below with camshaft out. Service by reaming (work through valve guide using ST-5144—23/32") and installing oversize lifters furnished .001", .002", .005" oversize.
Diameter—.6235-.6240". **Clearance**—.0003-.0012".

VALVE TIMING

Tappet Clearance:—.007" Int., .010" Exh. (hot & idling). NOTE—Self-locking tappet screw used. Remove right front fender plate for access to valves.

Valve Timing:—See Camshaft Setting above.
Intake Valves—Open 1° BTDC. Close 39° ALDC.
Exhaust Valves—Open 45° BLDC. Close 5° ATDC.
To Check Timing—With .0125" tappet clearance #1 intake valve should open with #1 piston 1° or .0004" BTDC when 1° point on flywheel (½ graduation before '1 UP DC' mark) lines up with pointer in inspection hole in flywheel housing below starter (left side). Permissible variation plus or minus 2 graduations. Reset tappet cl. at .007" (hot & idling).

LUBRICATION

LUBRICATION:—Gear type pump on right of engine.
See Packard Shop Notes for Oil Pump installation.

Normal Oil Pressure:—45 lbs. at 45 MPH.

Oil Pressure Relief Valve:—Mounted on pump cover. Not adjustable. Spring pressure should be 14 lbs. plus or minus 2 ounces at 1⅞".

Crankcase Capacity:—6 quarts (refill).

COOLING

COOLING SYSTEM:—Capacity—18 quarts.

Water Pump:—Packless type with ball-bearing shaft.
See Water Pump Section for complete data.

Removal—Remove fan belt, disconnect pump hose, take out pump mounting screws, lift out pump.

Thermostat:—Harrison. In cylinder head outlet (1801) in radiator top tank controlling shutters (1801A). Starts to open at 145° F.

CLUTCH

CLUTCH:—Long Model 10CF-CI. Semi-centrifugal, single plate, dry disc type.
NOTE—Borg & Beck Model 10A7 (marked #922) Single plate, dry disc type with 'Borglite' driven member used after Engine No. 30798 to No. 314328.
See Clutch Section for complete data.
Facings (Long)—Spiral or chevron wound woven, US Asbestos No. 1133G, 2 used. Inside Diam. 6". Outside Diam. 10". Thickness .125".
Adjustment:—Adjust nut on pedal rod (at clutch fork) for 1½-2" pedal free movement.
See Packard Shop Notes for 1941 design clutch linkage which may be installed on these cars to correct wear.
Removal:—Remove transmission (see Transmission Removal following) and flywheel housing lower cover. Disconnect and remove pedal rod, clutch throw-out bearing. Remove clutch cover screws and remove assembly from below.

TRANSMISSION

TRANSMISSION:—Own Make. Constant-mesh, helical, ball-bearing mounted low speed gear (sliding spur gear reverse). Synchro-mesh (second & high).
See Transmission Section for complete data.

Transmission Control:—Own Remote Control type.
See Transmission Section for complete data.

Removal:—Disconnect shifter rods, speedometer cable, hand brake cable at equalizer, engine ground strap, overdrive cable and solenoid wires (if used),

front universal (block drive shaft up against floor pan) and rubber bearing at rear of overdrive. Support rear of engine with jack and unbolt cross member (at frame ends and flywheel housing lower cover). Disconnect clutch retractor spring and fore and aft restraint rod. Take out transmission-to-flywheel housing screws, remove assembly.

OVERDRIVE

Econo-Drive Transmission:—New Warner-Packard type (Warner model AS1-R9) overdrive unit with electrical control. Optional equipment on all cars.
See Transmission Section for complete data.

Overdrive Solenoid—Delco Remy Model 1118005.

Overdrive Indicator Light—In light switch knob. Lighted when overdrive is ready to engage (light goes out when accelerator pedal released so that overdrive can engage).

Throttle Switch—Cole-Hersee, Packard No. 347496. Adjust tappet screw on throttle lever to just contact switch plunger with carburetor throttle valve in wide open position.

Lock-out Switch—Ark-less or Soreng-Manegold, Packard No. 354820 or 347641.

Control Relay—Delco-Remy Model 1116801.

Governor Switch—Bendix, Packard No. 355075 Std.

See Warner (Packard) Overdrive Control article in Transmission Section for Optional Switches.

UNIVERSALS

UNIVERSAL JOINTS:—**Mechanics Model 3C.** Needle bearing type.
See Universals Section for complete data.

CAUTION—Rear universal flange controls pinion bearing pre-load. See Packard Rear Axle article in Rear Axle Section for complete data.

REAR AXLE

REAR AXLE:—**Own Make.** Semi-floating, hypoid gear type with Hotchkiss drive. Cover welded.
See Rear Axle Section for complete data.

Ratio—1801—4.09-1 Std., 4.36-1 with Econo-Drive transmission. 1801A Comm'l—4.7-1 Std.

Backlash—.003-.005". Screw adjustment.

Removal:—Remove wheel, hub, and brake backing plate assembly. Withdraw axle shafts. Disconnect rear universal joint and drop drive shaft. Remove carrier-to-housing bolt nuts, withdraw carrier.

Wheel Bearing Adjustment—Endplay controlled by shims between flanged end of housing and brake backing plate. Unbolt backing plate and clips holding brake tube to housing. Add or remove shims
Endplay—.004-.007".

SHOCK ABSORBERS

SHOCK ABSORBERS:—**Delco**	**Front**	**Rear**
1801 Domestic	2206-A,B	1001-V
1801 Exp. & Spec.	2206-A,B	1130-W
1801A Comm'l	1966-C,D	1751-M,Z

See Shock Absorber Section for complete data.
Parallel cylinder type (2206-A,B), Direct Acting (1001-V). Direct Acting Adjustable (1130-W), Double Acting (1966-C,D & 1751-M,Z).

Fifth Shock Absorber (Stabilizer):—Houdaille Model NFT. Double acting, hydraulic, adjustable type.
See Shock Absorber Section for complete data.

FRONT SUSPENSION

Front Suspension:—Independent 'Safe-T-fleX' type with coil springs.
See Front Suspension Section for complete data.
NOTE—Frame height must be set first.
Frame Height—With car on level floor, distance from floor to top of frame side rail at front wheel center-line should be 18¾" (1801), 19¼" (1801A). Load car until this figure correct.
Kingpin Inclination—1°54' crosswise.
Camber—Pos. ½° (plus ¾°, minus 0°). Adjustable.
Caster—Pos. 1½° ± ½°. Shim adjustment.
Toe In—0" (+1/16", —0") at hub height. Turn both tie rods equally (must be equal after adjusting).
Steering Geometry (Toe-out on Turns)—Inner wheel turned 22°50'. Outer wheel 20°.

STEERING GEAR

Steering Gear: Packard (Gemmer design Model 330) Worm-and-Roller type with center steering. Refer to Gemmer Model 330 article.
See Steering Gear Section for complete data.

BRAKES

BRAKES:—**Service.** Bendix hydraulic, duo-servo, single anchor type (no eccentric adjustment on 1801). Hand lever applies rear wheel service brakes.
NOTE—Brakes on 1801A Heavy Duty Ambulance same as on Model 1803A (see next page).
See Brake Section for complete data.

Drums—Centrifuse. Diameter—12".

Lining—Moulded. Width 1¾" (1801), 2¼" (1801A). Thickness 3/16". Length per shoe—13" (except 1801 primary), 11½" (1801 primary).

Clearance—1801—.015" at both end of secondary shoe with primary shoe forced out against drum. 1801A—.010" at heel and toe of each shoe.

Hand Brake:—See Service brakes (above).

MISC. MECHANICAL

WINDSHIELD WIPER:—**Stewart-Warner Series 645.** Electric type. 14 ampere fuse mounted on dynamic breaker (behind instrument panel to right of wiper motor).
See Miscellaneous Section for complete data.

MODEL IDENTIFICATION

SERIAL NUMBER:—On left side of cowl (use Eng. No.).

ENGINE NUMBER:—First number C-500,051 (1803,4,5), CC-500,051 (1806,7,8). Stamped on left side of cylinder block between #3 and #4 cylinders.

TUNE-UP

COMPRESSION:—**Ratio**—6.45-1 Std., 6.85-1 Optl. (both heads are cast-iron).

Pressure—118 lbs. at cranking speed.

VACUUM READING:—Steady 18½" idling at 6 MPH.

FIRING ORDER: 1-6-2-5-8-3-7-4. See diagram.

SPARK PLUGS: AC No. 104 or Champion Y-4. 10 mm. **Gaps**—.028". Limits .026-.030".

NOTE—Do not tighten these small plugs excessively. Tightening tension 50 inch lbs. maximum.

IGNITION: See Coil, Condenser, and Distributor.

Breaker Gap—.015" (.017" maximum).

Cam Angle—27° Closed with .017" Breaker Gap.

Automatic Advance—11½° max. at 1800 RPM(dist.).

Vacuum Advance—5½° (distr.) with 16" vacuum.

IGNITION TIMING See Ignition Timing.

Std. Setting—3½-5° BTDC (for standard head), 2½-4° BTDC (HC head). Vibration dampener mark (correct degree mark ahead of 'UDC') aligned with pointer at front of engine.

CARBURETION: See Carburetor & Carb. Equipment.

Idle Setting—Set idle adjusting screws 1½-1¾ turns open. Adjust for smooth idle. Idle speed 6 MPH.

Float Level—Fuel level 5/8" below edge of bowl.

Accelerating Pump—Lower Hole—Normal Setting.

Fuel Pump Pressure: 4 lbs. maximum.

MANIFOLD HEAT CONTROL:—Thermostatic coil type. Make certain that valve operates freely (valve must not bind or stick). Do not oil control.

VALVES: See Valve Timing.

Tappet Clearance None in service, hydraul. take-up.

STARTING: See Battery, Starter, Generator, Regulator.

IGNITION

Ignition Switch:—Mitchellock Model 24-B, No. 8187.

Ignition Lock—Briggs & Stratton. B & S No. 50184. Key Series—P1251 to P1500. Groove—No. 2.

COIL: Auto-Lite Model CE-4639. Service Coil (less switch & cable) CE-3224RS.

Ignition Current—½ ampere idling, 2½ stopped.

CONDENSER: Auto-Lite Part No. IG-2671J.

Capacity—.20-.25 microfarad..

DISTRIBUTOR: Auto-Lite Model IGT-4102. Single breaker, 8 lobe cam, full automatic advance type with vacuum spark control and Fuel Compensator.

Breaker Plate Identification—Maximum vacuum advance limited by slot and marked by number (#5½) on plate.

Breaker Gap—Set at .015".

Cam Angle or Dwell—27° clsd., 18° pen (.017" gap).

Breaker Arm Spring Tension—17-20 ounces.

Rotation—Counter-clockwise viewed from the top.

Automatic Advance

Distributor Degrees	Distributor R.P.M.	Engine Degrees	Engine R.P.M.
Start	250	0	500
3	475	6	950
6	700	12	1400
9	1300	18	2600
11½	1800	23	3600

Vacuum Spark Control—Integral type (on distributor, linked directly to breaker plate). Provides additional advance at speeds above idling except when engine accelerated or operated with wide open throttle (spark retarded by return spring in unit).

Vacuum Advance

Distr. Degrees	Eng. Degrees	Vacuum (" of HG)
Start	0°	7"
1°	2°	8⅝"
3°	6°	12"
4°	8°	13½"
5½°	11°	16"

Fuel Compensator—Manual adjustment at distributor providing 10° advance or retard from center '0' position. See Ignition Timing for setting.

Distributor Removal:—Mounted on left side of crankcase. To remove, disconnect vacuum line and take out hold-down screw in advance arm.

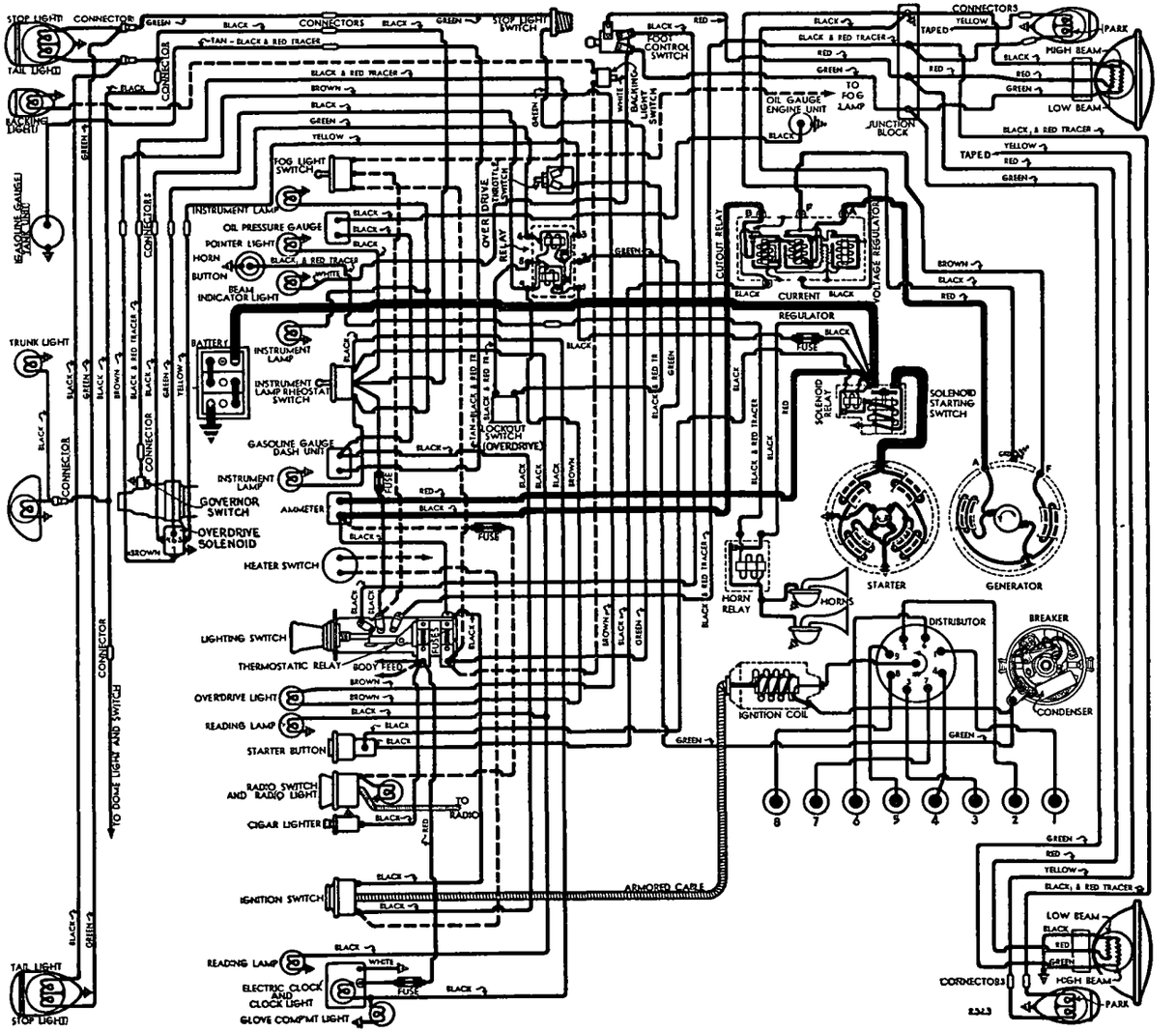

IGNITION TIMING

IGNITION TIMING:—Standard setting listed below (see Fuel Compensator Setting following):

	Flywheel Degrees	Piston Position
6 45-1 Std. hd.	3½-5° BTDC	.0053-.0110" BTDC
6.85-1 Optl. HC hd.	2½-4° BTDC	.0027-.0070" BTDC

NOTE—Vibration damper marked 'UDC' at TDC with 15 (1°) graduations before this point.

Timing—Loosen thumbnut, set Fuel Compensator pointer at '0', tighten thumbnut With #1 piston on compression, turn engine over until piston reaches firing position (see table above), stop when correct graduation on vibration dampener at front of engine lines up with pointer on chain case cover. Loosen advance arm clamp bolt, rotate distributor until contacts begin to open, tighten clamp bolt, see that rotor opposite #1 segment in distributor cap, check Fuel Compensator setting

Timing (Neon Timing Light)—Mark vibration dampener with white paint at proper point, idle engine below 500 RPM, adjust distributor (above).

Fuel Compensator Setting—Should be set for slight ping when accelerating with wide open throttle To adjust, loosen thumbnut, rotate distributor counter-clockwise (if ping too severe), clockwise (if no ping noted), tighten thumbnut and recheck performance.

CARBURETOR

CARBURETION:—**Carburetor**—Stromberg Model AAV-26 No. A-19172 (Code marked 10-40). 1¼" dual, downdraft type.
For complete data, refer to Carburetor Index.

Idle Adjustment—With engine warm and running, at slow idle speed (choke valve wide open, fast idle inoperative), set throttle stopscrew for 6 MPH idle speed Adjust idle adjusting screw (one for each barrel) in succession until engine fires smoothly (1½-1¾ turns open for each screw—turn screws in for leaner mixture) Readjust idle speed

Accelerating Pump Setting—Two holes provided in throttle lever for pump link engagement as follows.

Lower (max stroke)—Normal setting.

Upper (min stroke)—If less charge required

Float Level—Fuel level 5/8" below top edge of bowl

Fast Idle:—Stromberg AAV-26 carburetor type. Not adjustable.
For complete data, refer to Carburetion Equip. Index.

Automatic Choke:—Stromberg AAV-26 Carb. type.
For complete data, refer to Carburetion Equip. Index.

Choke Setting—Aligned 'V' mark on thermostat cover with reference mark on housing Setting may be varied 2 notches on either side

Throttle Guard (Cars with Econo-Drive):—Vacuum operated throttle kicker to prevent engine stalling when operating below 20 MPH.
For complete data, refer to Carburetion Equip. Index.

CARB. EQUIPMENT

Air Cleaner:—AC #1529361 oil-wetted type standard Heavy duty oil-bath type optional Crankcase filler tube cap equipped with copper mesh cleaner.

Fuel Pump:—AC Type AJ #1523867 combination fuel-and-vacuum pump Diaphragm type.
For complete data, refer to Carburetion Equip. Index.

Gasoline Gauge:—Stewart (Stewart-Warner) Electric
For complete data, refer to Carburetion Equip. Index.

BATTERY

BATTERY:—**Willard, Type SW-2-113.** 6 volt, 17 plate, 113 ampere hour capacity (20 hour rate).

Starting Capacity—134 amperes for 20 minutes.

Zero Capacity—300 amperes for 4 2 minutes.

Grounded Terminal—Positive (+) grounded to the frame 'X' member. **Engine Ground**—Strap connector between transmission cover bolt and frame.

Dimensions—Length 10 5/16". Width 7 1/16". Height 8 13/16".

Location—Under left front seat.

STARTER

Auto-Lite Model MAX-4041. Armature MAW-2069.
Drive—Overrunning clutch (solenoid pinion shift) through reduction gears.
Rotation—Clockwise at commutator end.
Brush Spring Tension—42-53 ozs. (new brushes).

Performance Data

Torque	**R.P.M.	Volts	Amperes
0 ft. lbs.	2695	5 5	77
33 5 " "	Lock	3.0	652
45 9 " "	Lock	4.0	906

**—Pinion shaft R.P.M.

Removal:—Flange mounted on left front face of flywheel housing. To remove, take out flange mounting screws, lift out starter and switch assembly.

Starting Switch: Auto-Lite SS-4205 Solenoid type. Controlled through relay by pushbutton on instrument panel. ***See article in Electrical Equipment Sect'n.***

NOTE—Cutout relay has extra set of contacts ("T" terminal on regulator connected to starter button) which grounds starter circuit at speeds above cut-in point of Cutout Relay.

GENERATOR

Auto-Lite Model GEA-4802-A. Armature No. GDZ-2006F. Two brush with current-voltage control.

Charging Rate Adjustment—No adjustment at generator. Charging rate controlled by Voltage Regulator and maximum output by Current Regulator.
See Regulator data following.

Maximum Charging Rate—35 amperes (hot or cold), 8 0 volts, 1570 RPM and above with load or discharged battery (Current Regulator setting). Actual charging rate controlled by Voltage Regulator and dependent on battery condition.

Performance Data①

Cold			Hot		
Amperes	Volts	R.P.M.	Amperes	Volts	R P.M.
0	6 4	850	0	6 4	865
4	6 6	950	4	6 6	975
8	6.75	1050	8	6 75	1075
12	6 95	1150	12	6 95	1180
16	7.1	1250	16	7.1	1300
20	7.3	1345	20	7.3	1425
24	7 5	1440	24	7.5	1560
28	7 7	1540	28	7.7	1695
32	7 85	1635	32	7.85	1850
35	8.0	1700	35	8 0	1970

①—With new type service brushes. Refer to '120' Eight (GEA-4801A) for performance with original type brushes.

Rotation—Counter-clockwise at commutator end.
Brush Spring Tension—53 ozs. max. (new brushes).
Field Current—1 57-1.75 amperes at 6.0 volts.
Motoring Current—4.45-4.9 amperes at 6.0 volts.

Removal:—Pivot mounted at left front of engine. To remove, take out pivot and clamp bolts.

Belt Adjustment:—Swing generator out until 25 lb. reading secured on scale hooked to clamp bolt lug parallel to clamp link or until belt deflection midway between generator and water pump pulley is ½" with thumb pressure.

REGULATOR

Auto-Lite Model VRP-4003A (First Cars), VRP-4202A-1 (Later Cars). Voltage-current type. Mounted in single case on engine side of dash. NOTE—Cutout Relay has extra set of contacts ("T" terminal) for grounding of starter solenoid relay circuit.
For complete data, refer to Electrical Equipment Index.
NOTE—Regulator case cover is sealed. Serviced on exchange basis if seals not broken.

Cutout Relay

Cuts In—6.4-6.6 volts, 700 Gen. RPM.

Cuts Out—4 1-4 8 volts with approx. 4-6 ampere discharge (VRP-4003A), 4 8-5.6 volts with approx. 7-8 ampere discharge (VRP-4202A-1).

Contact Gap—.015" minimum with upper ground contacts closed (closed when main contacts open).

Air Gap—.031-.034" (VRP-4003A), .034-.038" (VRP-4202A-1) with contacts open. Measure at hinge end.

Voltage Regulator

Setting—7.2-7 5 volts at 70° F. (All Models).

To Check (without breaking seals)—Connect ammeter in charging line at regulator 'B' terminal, voltmeter between 'B' terminal and ground Operate generator at speed equivalent to 30 MPH, charging battery until voltage is steady. Voltage reading should be within limits of 7 2-7 5 volts at 70° F. See Electrical Equipment Section for voltages at other temperatures.

To Adjust (with cover removed)—Change regulator armature spring tension by bending lower spring hanger slightly. See Electrical Equipment Section.

Contact Gap—.012" Min. (armature against stop pin).

Air Gap—.048-.052" with contacts just opening.

Current Regulator

Setting—34-36 amperes (marked '35' on cover).

To Check (without breaking seals)—Connect test meters as for Voltage check (above). Operate generator at 30 MPH, charging battery, add load (use bank of headlamp bulbs, or turn on car lights and accessories and discharge battery) so that generator charges at peak rate and Current Regulator operates Charging current should not exceed 34-36 amperes If more than slight excess noted, regulator is defective.

Adjustment & Contact Gap—Same as for Voltage Regulator (above).

Air Gap—.034-.038" (VRP-4003A before No. 5U-000001 and all VRP-4202A-1), .048-.052" (VRP-4003A after above Number).

CONTINUED ON NEXT PAGE

C NTINUED FR M PRECEDIN PA E

LIGHTING

LIGHTING:—Headlamps—Hall 'Sealed Beam' type.
For complete data, refer to Electrical Equipment Index.
Headlamp Adjustment—Aim upper beam for each lamp straight ahead with center of hot spot 3" below lamp center height.
Beam Indicator—Tell-tale light on speedometer face. Lighted whenever Country (upper) beam in use.

Switches

Lighting—Delco-Remy 1995011.
Beam Selector—Delco-Remy 1997001, 2 (RHD).

Bulb Specifications

Position	Candlepower	Mazda No.
Headlamps	Sealed Beam	
Front Turn Indic. & Fender	21-3	1158
Instr., Speed'mtr., Clock	1½	55
Front Reading, Radio, Trunk	1½	55
Glove Comp't., Rear Radio	1	51
Beam, Heater & Defrost Indic.	1	51
Dome and Rear Reading	6	81
Rear Quarter & Vanity Cabinet	3	63
Stop & Tail	21-3	1158
Rear License	3	63
Fog Light	32	1321
Spot Light	32	1323
Backing Light	15	87

MISC. ELECTRICAL

THERMOSTATIC RELAY:—Delco-Remy. On lighting switch. Contacts remain closed with 30 amperes, open in 3 minutes with 42 amps. @ 70°F. Not adj.

FUSES:—Dome, Stop Light and Accessories—Two 20 ampere. Mounted on back of lighting switch.
Instrument and Tail Light—20 ampere. In connector in tail light lead near light switch.
Clock—2 ampere. In feed wire.
Radio—14 ampere. In feed wire.
Overdrive—30 ampere. In relay lead near starter.

HORNS:—Sparton Model H-32. Vibrator type, Air tone, Twin horns operated by horn relay.
Air Gap—.032-.035" (low note—long horn), .026-.030" (high note—short air column).
Horn Current—22-25 amperes (total).

Horn Relay:—R-B-M Model 4760.
NOTE—Relay not adjustable (cover welded on).
Closing Voltage—3.5-4.5 volts.

ENGINE

ENGINE SPECIFICATIONS:—8 cylinder, 'L' head type.
Bore—3½". **Stroke**—4⅝".
Displacement—356 cu. ins. **Rated HP**—39.2.
Developed Horsepower—160 at 3600 RPM (Std. hd.).
Compression Ratio—6.45-1 Std. 6.85-1 Optl. CI hds.
Compression Pressure—118 lbs. at cranking speed for standard head.
Vacuum Reading—18½" steady idling at 6 MPH.

PISTONS:—Nelson Bohnalite, aluminum alloy, autothermic, strut type, tin plated, cam ground.
Weight—20¼ ozs. (stripped), 26½ (with rings & pin).
Length—3⅞".
Removal—Pistons and rods removed from above.
Clearance—.0005-.001". See Fitting Pistons.
Original Bore & Piston Sizes, Replacement Pistons:— ***See Packard Shop Notes for complete data.***

Fitting New Pistons:—Insert .0015" feeler ½" wide between piston and cylinder wall on side opposite slot. Pull to withdraw feeler should be 12-18 lbs.
Installing Pistons:—Slot toward valves.

PISTON RINGS:—2 coated compression (Perfect Circle #200, No. 1 upper inner edge beveled, #70 No. 2), 1 oil cont. (X90-85 expander type), all above pin.

Ring	Width	End Gap	Side Clearance
Comp. (#1)	.0930-.0935"	.007-.017"	.0025-.003"
Comp. (#2)	.1240-.1235"	.007-.017"	.0025-.003"
Oil Cont.	.1860-.1865"	.007-.015"	.0015-.002"

Replacement Rings:—Furnished standard and .005", .010", .020", .030" and .040" oversize.

PISTON PIN:—Diameter—⅞. **Length**—3 1/64".
Pin floats in piston and rod, held by locking rings. Furnished standard and .003", .006" oversize.
Pin Fit in Piston—Finger push fit with piston heated to 160°F.
Pin Fit in Rod Bushing—Finger push fit at 70°F.

CONNECTING ROD:—Length—9¼". **Weight**—42.0 ozs.
Upper Bearing (Piston Pin Bushing)—Split type.
See Packard Shop Notes for complete data.
Crankpin Journal Diameter—2¼".
Lower Bearing—Interchangeable steel-backed, babbitt lined type. Bearings furnished std. and .001", .002", .003", .015" undersize.
Clearance—.0005-.0015". **Sideplay**—.004-.010".
Bearing Adjustment:—None (no shims). Replace bearings. Do not file rods or caps.
Installing Rods:—Oil squirt hole to camshaft.

CRANKSHAFT:—9 bearing type with 8 bolted-on counter-weights. Vibration dampener on front end.
Journal Diameters—2¾".
Bearings—Interchangeable steel-backed, babbitt-lined. Furnished std., .001", .002" undersize.
Clearance—.001-.003".
Bearing Adjustment:—None (no shims). Replace bearings (upper half can be 'rotated' in or out). Do not file caps.
End Thrust:—Taken by #5 bearing. **Endplay** .003-.008".

CAMSHAFT:—8 bearing. Non-adjustable chain drive.
Bearing Type—Steel-backed, babbitt-lined.
Clearance—.001-.003".
End Thrust:—Taken by thrust plate behind camshaft sprocket. **Endplay**—.002-.004".
Timing Chain:—Morse Type C-3682R (#765) or Ramsey. Width 1¼". Pitch ⅜". Length 62 links or 23¼".
Camshaft Setting:—Install chain and sprockets together with '0' marks on sprockets adjacent and in line with a straightedge across the shaft centers.
See Packard Shop Notes for Radiator & Fender (unit) removal for work on front end of engine.

VALVES:—	Head Diameter	Stem Diameter	Length
Intake	1 43/64"	.34025"	6 3/16"
Exhaust	1 7/16"	.34025"	6 3/16"

	Seat Angle	Lift	Side Clearance
Intake	30°	.340"	.001-.003"
Exhaust	45°	.340"	.003-.005"

Valve Guides:—Straight reamed type pressed in block from above. Install with stepped end up (Intake), down (Exh) & top of guide 31/32" below valve seat.

Valve Springs:—Washer used on top of each spring.

	Spring Pressure	Length
Valve Open	147-157 lbs.	1 13/32"

Valve Lifters:—Wilcox-Rich 'Zero-lash' type hydraulic lifters (mushroom type). Remove from below with camshaft out. Service by reaming (use tool ST-5101, work through valve guide hole) and installing lifters furnished .001", .002", .005" oversize.
See Miscellaneous Section for complete data.
Diameter .7177-.7182". **Clearance** .0002" selective.
See Packard Shop Notes for Valve Lifter Clearance check when grinding valves.

VALVE TIMING

Tappet Clearance:—None in service (hydraulic type lifter). ***See Valve Servicing in Packard Shop Notes.***
Valve Timing:—See Camshaft Setting above.
Intake Valves—Open 4° BTDC. Close 51° ALDC.
Exhaust Valves—Open 49° BLDC. Close 10° ATDC.
To Check Timing—#1 exhaust valve closes 10° or .0438" after top dead center with hydraulic lifter dry (oil drained) and built up with shim stock for zero tappet clearance.

LUBRICATION

LUBRICATION:—Pressure (pump on right of engine).
See Packard Shop Notes for Oil Pump installation.
Normal Oil Pressure:—50 lbs. at 45 MPH.
Oil Pressure Relief Valve:—Mounted on pump cover. Not adjustable. Spring pressure should be 17½-18½ lbs. at 1⅞".
Oil Pressure Gauge: Stewart-Warner electric type.
Crankcase Capacity: 7 quarts.

COOLING

COOLING SYSTEM:—Capacity—20 quarts.
Water Pump:—Packless type with ball-bearing shaft.
See Water Pump Section for complete data.
Removal—Remove fan belt, disconnect pump hose, take out pump mounting screws, lift out pump.
Thermostat:—Harrison. In radiator top tank. Operates radiator shutters. Starts to open 145° F.

CLUTCH

CLUTCH:—Long Model 11CFS-CI. Semi-centrifugal, single plate, dry disc type (riveted assembly).
NOTE—Borg & Beck Model 11A6 (marked #944) Single plate dry disc type with 'Borglite' driven member used after Engine No. 501609 to No. 503811.
See Clutch Section for complete data.
Facings (Long)—Ammco No. 8263M1, 2 used. Inside Diam. 6½". Outside Diam. 11". Thickness .125".
Adjustment:—Adjust nut on pedal rod (at clutch fork) for 1¾-2¼" pedal free movement.
Removal:—Remove transmission (see Transmission Removal following) and flywheel housing lower cover. Disconnect and remove pedal rod, clutch throw-out bearing. Remove clutch cover screws and remove assembly from below.

TRANSMISSION

TRANSMISSION:—Own Make. Constant-mesh, helical, ball-bearing mounted low speed gear (sliding spur gear reverse). Synchro-mesh (second & high).
See Transmission Section for complete data.
Transmission Control:—Own Remote Control type.
See Transmission Section for complete data.

Removal:—Disconnect shifter rods, speedometer cable, hand brake cable at equalizer, engine ground strap, overdrive cable and solenoid wires (if used), front universal (block drive shaft up against floor pan) and rubber bearing at rear of overdrive. Support rear of engine with jack and unbolt cross member (at frame ends and flywheel housing lower cover). Disconnect clutch retractor spring and fore and aft restraint rod. Take out transmission-to-flywheel housing screws, remove assembly.

OVERDRIVE

Econo-Drive Transmission:—New Warner-Packard type (Warner Model AS1-R9A) overdrive unit with electrical control. Optional.

See Transmission Section for complete data.

Overdrive Solenoid—Delco Remy Model 1118005.

Overdrive Indicator Light—In light switch knob. Lighted when overdrive is ready to engage (light goes out when accelerator pedal released so that overdrive can engage).

Throttle Switch—Cole-Hersee, Packard No. 347496. Adjust tappet screw on throttle lever to just contact switch plunger with carburetor throttle valve in wide open position.

Lock-out Switch—Ark-less or Soreng-Manegold, Packard No. 354820 or 347641.

Control Relay—Delco-Remy Model 1116801.

Governor Switch—Bendix, Packard No. 355075 Std.

See Warner (Packard) Overdrive Control article in Transmission Section for Optional Switches.

UNIVERSALS

UNIVERSAL JOINTS:—Mechanics Model 3C. Needle bearing type. 2 used.

See Universals Section for complete data.

CAUTION—Rear universal flange controls pinion bearing pre-load. See Packard Rear Axle article in Rear Axle Section for complete data.

REAR AXLE

REAR AXLE:—Own Make. Semi-floating, hypoid gear type with Hotchkiss drive and special Ring Gear Support Roller. Cover is welded in place.

See Rear Axle Section for complete data.

Model	Ratios:— Std.	Econ-Dr.	Optl.
1803, 1806	3.92-1	4.36-1	4.09-1
1804, 1807	4.09-1	4.36-1	4.36-1
1805, 1808	4.36-1	4.54-1	4.54-1
1803A	4.54-1	4.7-1	4.7-1

Backlash—.003-.005". Screw adjustment.

Removal:—Remove wheel, hub, and brake backing plate assembly. Withdraw axle shafts. Disconnect rear universal joint and drop drive shaft. Remove carrier-to-housing bolt nuts, withdraw carrier.

Wheel Bearing Adjustment—Endplay controlled by shims between flanged end of housing and brake backing plate. Unbolt backing plate and clips holding brake tube to housing. Add or remove shims (endplay up to .050" can be adjusted at one wheel).

Endplay—.004-.007".

SHOCK ABSORBERS

SHOCK ABSORBERS:—	Front	Rear
1803,6	Delco 2206-A,B	Monroe 351194
" " Export	Delco 2206-A,B	Delco 1130-W
1804,5,7,8	Delco 1966-C,D	Delco 2007-G,H
1803A Comm'l	Delco 1966-C,D	Delco 1751-M,Z

See Shock Absorber Section for complete data.

Parallel cylinder type (2206-A,B). Double acting type (1966-C,D; 2007-G,H; 1751-M,Z). Direct acting type (Monroe 351194). Direct acting adjustable type (Delco 1130-W).

Fifth Shock Absorber (Stabilizer):—Houdaille Model NFT. Double acting, hydraulic, adjustable type.

See Shock Absorber Section for complete data.

FRONT SUSPENSION

Front Suspension:—Independent 'Safe-T-fleX' type with coil springs.

See Front Suspension Section for complete data.

NOTE—Frame height must be set first.

Frame Height—With car on level floor, distance from floor to top of frame side rail at front wheel center-line 19¼" (load car until figure correct).

Kingpin Inclination—1°54' crosswise.

Camber—Pos. ½° (plus ¾°, minus 0°). Adjustable.

Caster—Neg. 1° ± ½° (except 1803A). Pos. 2½° ± ½° (1803A Comm'l).

Toe In—0" (+1/16", —0") at hub height. Turn both tie rods equally (must be equal after adjusting). **Steering Geometry**—Inner wheel turned 22°50' 1803,6), 22°30' (1804,7), 22°20' (1805,8). Outer 20°.

STEERING GEAR

Steering Gear: Packard (Gemmer design Model 330) Worm-and-Roller type with center steering. Refer to Gemmer Model 330 article.

See Steering Gear Section for complete data.

BRAKES

BRAKES:—Service. Bendix hydraulic, duo-servo, single anchor type with eccentric adjustment (except 1803,6). Hand lever applies rear service brakes.

See Brake Section for complete data.

Drums—Centrifuse. Diameter 12".

Lining—Moulded. Width 2" (1803,6), 2¼" (1804,5,7, 8), 2½" (1803A). Thickness 3/16". Length per shoe 13" (except 1803,6 primary shoe which is 11½").

Clearance—All except 1803,6—.010" at heel and toe of each shoe. 1803,6—.015" at both ends of secondary shoe with primary shoe forced out against drum.

Hand Brake:—See Service brakes (above).

EQUIPMENT NOTE:—Both Delco-Remy & Auto-Lite Electrical Equipment are used on this model.

HOOD LOCK:—Conventional center hinge hood. Hood latch handles located on side panels.

MODEL IDENTIFICATION

SERIAL NUMBER:—On left side of cowl (use Eng. No.).

ENGINE NUMBER:—First No. D-1551. Stamped on left side of engine block between #2 and #3 cylinders.

TUNE-UP

COMPRESSION:—Ratio—6.39-1 Std., 6.71-1 Optl. Pressure—110 lbs. at 125 RPM. (Std. Hd.).

VACUUM READING:—18-20" steady idling at 6 MPH.

FIRING ORDER:—1-5-3-6-2-4. See diagram.

SPARK PLUGS:—AC No. 104 or Champion Y4. 10 MM. Gaps—.028". Limits .0255-.0305". NOTE—Do not tighten these small plugs excessively. Tightening tension 50 inch lbs. maximum.

IGNITION: See Coil, Condenser, and Distributor. Breaker Gap—.020". Cam Angle—Closed 38° (Auto-Lite), 35° (Delco-Remy). Automatic Advance—Auto-Lite: 9½° at 1600 RPM. Delco-Remy: 10¼° at 1600 RPM. Distr. ° & RPM. Vacuum Advance—7½° (distr.) with 17" vacuum.

IGNITION TIMING See Ignition Timing. Std. Setting—6° BTDC for all engines. Vibration dampener mark (correct degree mark ahead of #1UP.DC) aligned with pointer at front of engine.

CARBURETION: See Carburetor & Carb. Equipment. Idle Setting—Set idle adjusting screw 1-1⅛ turns open. Adjust for smooth idle. Idle speed 6 MPH. Float Level—Fuel level 5/8" below top edge of bowl. Accelerating Pump—Center Hole—Normal Setting. Fuel Pump Pressure: 4¼ lbs. maximum.

MANIFOLD HEAT CONTROL:—Thermostatic coil type. Make certain that valve operates freely and does not bind or stick. Do not oil control.

VALVES: See Valve Timing. Tappet Clearance:—.007" Int., .010" Exh. Warm. Adjusting screws are self-locking (no locknuts). Removable fender plate under right front fender.

STARTING: See Battery, Starter, Generator, Regulator.

IGNITION

AUTO-LITE

Ignition Switch:—Mitchellock Model 24-B, No. 8781. Ignition Lock—Briggs & Stratton No. 50184. Key Series—P-1250 to P-1500. Groove—No. 2.

COIL: Auto-Lite Model CE-4644 or CE-4652. Service Coil (less switch and cable) CE-3224VS (for CE-4644), CE-3224US (for CE-4652). Mounted on engine. Ignition Current—2.75 amperes idling, 5 stopped.

CONDENSER: Auto-Lite Part No. IGW-3128. Capacity—.28-.32 microfarad.

DISTRIBUTOR: Auto-Lite IGC-4505. Single breaker, 6 lobe cam, full automatic advance type with vacuum spark control and Fuel Compensator adjmt. Breaker Gap—.020". Cam Angle r Dwell—38° closed, 22° open. Breaker Arm Spring Tension—17-20 zs. Rotation—Counter-clockwise viewed from above.

Automatic Advance—Auto-Lite

Distributor Degrees	Distributor R.P.M.	Engine Degrees	Engine R.P.M.
Start	300	0	600
3	590	6	1180
5	780	10	1560
7	1150	14	2300
9.5	1600	19	3200

Vacuum Spark Control—Separate unit mounted on hold-down plate and linked to adjusting quadrant on distributor. Provides additional advance at speeds above idling except when engine accelerated or operated with wide open throttle when spark retarded by return spring within unit.

Vacuum Advance—Auto-Lite

Distr. Degrees	Eng. Degrees	Vacuum (" of HG)
Start	0°	6"
4°	8°	11⅞"
7.5°	15°	17"

Fuel Compensator Adjustment—Permits 40° range of adjustment by loosening vacuum unit link screw at distributor quadrant. See Ignition Timing below.

Removal:—Distributor mounted on left side of crankcase. To remove, disconnect vacuum line, take out screw in hold-down plate, lift entire unit out.

IGNITION

DELCO-REMY

Ignition Switch:—Delco-Remy No. 1116308 (Std.), 1116318 (RHD). Coil connection armored. **Ignition Lock**—Briggs & Stratton No. 50184. Key Series—P-1250 to P-1500. Groove—No. 2.

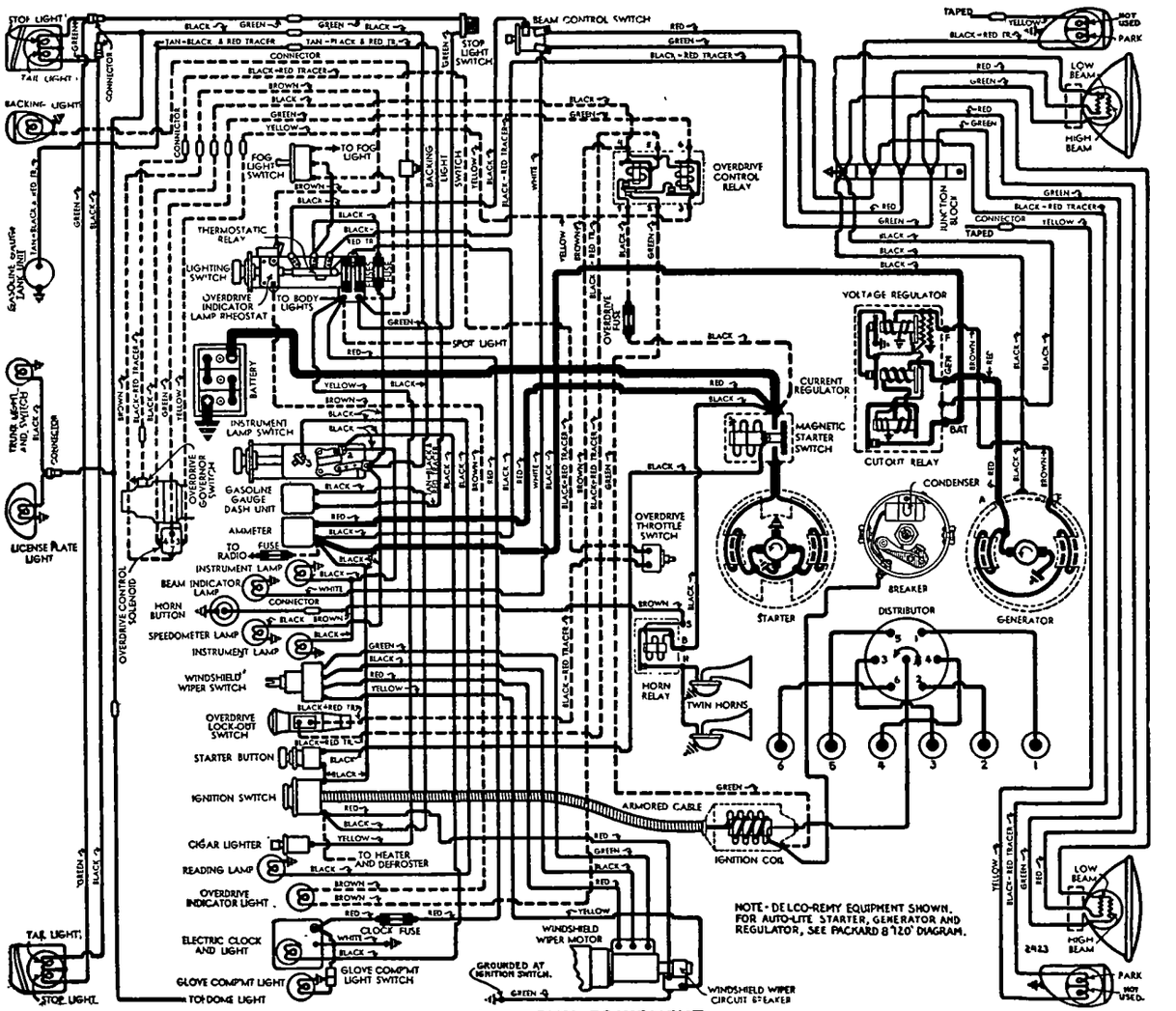

DELCO-REMY EQUIPMENT

See 1941 '120' Eight Diagram for Auto-Lite internal circuits

COIL: Delco-Remy 1115001, 1115029 (Conv. Coupe & RHD). Mounted on engine with armored cable coil connection.

CONDENSER: Delco-Remy Part No. 1869704.
Capacity—.18-.25 microfarad.

DISTRIBUTOR: Delco-Remy Model 1110092. Single breaker, 6 lobe cam, full automatic advance type with Vacuum Spark Control and Fuel Compensator.
Breaker Gap—.020". Limits .018-.024".
Cam Angle or Dwell—35° closed, 25° open.
Breaker Arm Spring Tension—19-23 ozs.
Rotation—Counter-clockwise viewed from above.

Automatic Advance—Delco-Remy

Distributor		Engine	
Degrees	R.P.M.	Degrees	R.P.M.
Start	300	1.5	600
5	700	10	1400
10.25	1600	20.5	3200

Vacuum Spark Control—Separate unit mounted on hold-down plate and linked to distributor. Provides additional advance at speeds above idling except when engine accelerated or operated with wide open throttle when spark retarded by return spring within unit.

Vacuum Advance—Delco-Remy

Distr. Degrees	Eng. Degrees	Vacuum (" of HG)
Start	0°	5-7"
7.5°	15°	15-19"

Fuel Compensator Adjustment—Slot in advance plate permits distributor to be advanced or retarded from center point on scale when hold-down screw loosened. See Ignition Timing for setting.
Removal:—Same as for Auto-Lite model (above).

IGNITION TIMING

IGNITION TIMING:—See Fuel Compensator setting also.

Flywheel Degrees	Piston Position
6° BTDC	.0149" BTDC

Timing Mark Note—Marks now on vibration dampener at front of engine. Dampener marked '#1 UP.-DC' with fifteen 1° graduations before this point.
Timing—With #1 piston on compression, turn engine over until piston reaches firing position with correct mark on dampener in line with pointer on chain case cover (see table above). Loosen vacuum unit link screw in distributor quadrant (Auto-Lite Distributors), hold-down screw in advance arm (Delco-Remy Distributors), rotate distributor until contacts begin to open, tighten screw. Check Fuel Compensator setting (below).
Timing (Neon Timing Light)—Mark correct graduation on vibration dampener, clip neon timing light to #1 spark plug and direct light on vibration dampener, idle engine and adjust distributor as directed
Fuel Compensator Setting—Should be set for slight ping when accelerating engine with wide open throttle. To adjust, loosen vacuum unit link screw in distributor quadrant (Auto-Lite Distributors), advance arm hold-down screw (Delco-Remy Distributors), rotate distributor one graduation at a time counter-clockwise (if ping too severe), clockwise (if no ping), until correct performance secured.

CARBURETOR

CARBURETION:—**Carburetor**—Stromberg Model BXO-V-26 (Code 10-45). 1¼" downdraft type with Automatic Choke. *For data, refer to Carburetor Index.*
Idle Adjustment—With engine warm so that choke valve wide open and fast idle inoperative, set throttle stopscrew for 6 MPH hot or slow idle speed. Adjust idle adjusting screw for smooth idling performance (screw should 1-1⅛ turns open from inner seated position—turn screw in for leaner mixture). Recheck idle speed.
Accelerating Pump Setting—Throttle lever has 3 holes for pump rod link connection as follows:
Inner (Min. stroke)—Hot weather or high-test fuel.
Center (Med. stroke)—Normal temperatures & fuel.
Outer (Max. stroke)—Cold weather or low test fuel.
Float Level—Fuel level ⅝" below top edge of bowl with engine idling (3 lbs. pressure).
Metering Jets—*See Stromberg Jet Table in Carburetor Section for complete data.*
Fast Idle:—Integral (operated by Automatic Choke). *For complete data, refer to Carburetion Equip. Index.*
Setting—To check, hold stopscrew against lowest step of fast idle cam, move choke valve toward closed position as far as possible, check choke valve opening with 11/32" drill. Adjust by bending connector rod.
Automatic Choke:—Stromberg BXOV-26 type. *For complete data, refer to Carburetion Equip. Index.*
Setting—'V' mark on thermostat case in line with reference mark on housing. May be varied not more than two graduations to improve warming up.
Throttle Guard (Cars with Econo-Drive):—Vacuum operated throttle kicker to prevent engine stalling when free-wheeling. Kicks in 4 MPH., out 9 MPH. *For complete data, refer to Carburetion Equip. Index.*
Setting—Set gap between plunger and carburetor throttle lever at .060" (carburetor set for 6 MPH slow idle speed), set spring tension adjusting screw 3/16" out beyond face of locknut.

CARB. EQUIPMENT

Air Cleaner:—AC No. 1542093 oil-wetted type Std., Heavy duty oil-bath type Optl.
Fuel Pump:—AC Type AT. Inverted, diaphragm type. Pump Replacement Exchange No. 524G. *For complete data, refer to Carburetion Equip. Index.*
Gasoline Gauge:—Stewart (Stewart-Warner) Electric. *See article in Carburetion Equipment Section.*

BATTERY

BATTERY:—**Willard Type SW-1-95.** 6 volt, 15 plate, 95 Ampere Hour Capacity (20 hour rate).
Starting Capacity—117 amperes for 20 minutes.
Zero Capacity—300 amperes for 3.1 minutes. Five second voltage 4.2 volts.
Grounded Terminal—Positive (+) to frame 'X' member. **Engine Ground**—Separate strap connector from transmission to frame 'X' member.
Location—Under left front seat.
Dimensions—Length 9". Width 7". Height 8¾".

STARTER

AUTO-LITE

Year	Auto-Lite Model	Armature Number	Magnetic Switch
Early '41	MAW-4021	MAW-2006	SS-4017
Late '41	MAW-4024	MAW-2128	SS-4017

Drive—Outboard Barrel Type Bendix No. A-1718 (with MAW-4021), A-1792 (with MAW-4024 starter).
Rotation—Counter-clockwise at commutator end.
Brush Spring Tension—42-53 ozs. (new brushes).
Cranking Engine—125 RPM., 175 amperes, 5.1 volts.

Performance Data—Auto-Lite

Torque	R.P.M.	Volts	Amperes
0 ft. lbs.	4900	5.5	65
0.60 "	3300	5.5	100
2.75 "	1480	5.0	200
5.45 "	820	4.5	300
8.50 "	400	4.0	400
11.55 "	110	3.5	500
11.5 "	Lock	3.0	505
18.0 "	Lock	4.0	670

Removal: Similar to Delco-Remy data below.
Starting Switch:—A-L Model SS-4017. Magnetic type. Mounted on starter and controlled by R.B.M. #5380 pushbutton switch on instrument panel.
For complete data, refer to Electrical Equipment Index.

STARTER

DELCO-REMY

Delco-Remy Model 1107037. Armature No. 1878077.
Drive—Outboard Barrel Type Bendix No. A-1792.
Rotation—Counter-clockwise at commutator end.
Brush Spring Tension—24-28 ozs. each.

Performance Data—Delco-Remy

Torque	R.P.M.	Volts	Amperes
0 ft. lbs.	5000	5.0	65
12 "	Lock	3.37	525

Removal:—Starter flange mounted on left front face of flywheel housing. To remove, disconnect wires, take out flange mounting screws, remove starter and switch as an assembly.
Starting Switch:—Delco-Remy No. 1452. Magnetic type mounted on starter and controlled by push-button switch on instrument panel.
For complete data, refer to Electrical Equipment Index.

GENERATOR

AUTO-LITE

Auto-Lite Model GDZ-4801F. Armature No. GDZ-2006F. Two brush type (Current-Voltage control).
Charging Rate Adjustment—No adjustment at generator. Charging rate controlled by Voltage Regulator and maximum output by Current Regulator. *See Regulator data following.*
Maximum Charging Rate—35 amperes (hot or cold), 8.0 volts, 1900 RPM and above with load or discharged battery (Current Regulator setting). Actual charging rate controlled by Voltage Regulator and dependent on battery condition.

Performance Data—Auto-Lite

Cold			Hot		
Amperes	Volts	R.P.M.	Amperes	Volts	R.P.M.
0	6.4	925	0	6.4	1000
4	6.6	1035	4	6.6	1120
8	6.75	1140	8	6.75	1235
12	6.95	1250	12	6.95	1350
16	7.15	1370	16	7.15	1460
20	7.3	1480	20	7.3	1590
24	7.5	1590	24	7.5	1730
28	7.7	1710	28	7.7	1900
32	7.9	1820	32	7.9	2090
*35	8.0	1900	35	8.0	2250

*—Current Regulator setting.
Rotation—Counter-clockwise at commutator end.
Field Current—1.60-1.78 amperes at 6.0 volts.
Motoring Current—4.16-4.60 amperes at 6.0 volts.
Brush Spring Tension—53 ozs. max. (new brushes).
Removal & Belt Adjustment: See data given below.

GENERATOR

DELCO-REMY

Delco-Remy Model 1102682. Armature No. 1879002. Two brush with Current-Voltage Control.
Charging Rate Adjustment—None. Charging rate controlled by Voltage Regulator, maximum output controlled by Current Regulator. See Regulator
Maximum Charging Rate—32-34 amperes, 8.0 volts hot. Actual charging rate controlled by Voltage Regulator and dependent on battery condition.

Performance Data—Delco-Remy

	Amperes	Volts	R.P.M.
Cold	30①	8.0	1750

① Not maximum output. See Current Regulator.

CONTINUED ON NEXT PA E

C NTINUED FROM PRECEDING PAGE

Rotation—Counter-clockwise at commutator end.
Brush Spring Tension—25 ozs. each.
Field Current—1.67-1.82 amperes at 6.0 volts.
Removal:—Generator pivot mounted at left front of engine. To remove, take out pivot and clamp bolts.
Belt Adjustment:—50 lbs. tension on spring scale hooked to generator frame, or ½" thumb-pressure deflection midway between gen. and pump pulleys.

GENERATOR

SPECIAL EQUIPMENT

Taxicab Generator: Auto-Lite GEB-4802C-2 with VRP-4002D Regulator. ***Refer to 1941-42 Packard '120' pages following for complete data on these units.***

REGULATOR

AUTO-LITE

Auto-Lite Model VRP-4002C. 3-unit Current-Voltage type. In case on left side of engine dash.
For complete data, refer to Electrical Equipment Index.
NOTE—Regulator case cover is sealed. Serviced on exchange basis if seals not broken (to remove cover).

Cutout Relay—Auto-Lite

Cuts In—6.4-6.6 volts. 920 RPM (cold).
Cuts Out—4.1-4.8 volts (approx. 4-6 amps. disch.).
Contact Gap—.015" minimum.
Air Gap—.031-.034" with contacts open (check at hinge end of core).

Voltage Regulator—Auto-Lite

Setting—7.2-7.5 volts at 70°F. See Electrical Equipment Section for settings at other temperatures.
To Check (without breaking seals)—Connect ammeter in charging line at regulator 'B' terminal (use short heavy leads), voltmeter between 'B' terminal and ground. Operate generator at speed equivalent to 30 MPH., charging fully charged battery, until voltage is steady. Voltage reading should agree with setting given above.
To Adjust (with cover removed)—Change regulator armature spring tension by bending lower spring hanger slightly. See Electrical Equipment Section.
Contact Gap—.012" min. (armature against stop pin).
Air Gap—.048-.052" with contacts just opening.

Current Regulator—Auto-Lite

Setting—34-36 amperes (marked '35' on the cover).
To Check (without breaking seals)—Connect test meters as for voltage check (above). Operate generator at speed equivalent to 30 MPH. charging battery, turn on car lights and accessories or connect load (bank of headlamp bulbs, etc.) between ammeter and battery so that generator charges at peak rate and Current Regulator operates. Current reading should agree with setting given above. If more than slight excess noted, regulator is defective.
Adjustment, Contact Gap, Air Gap—Same as given for Voltage Regulator (above).

REGULATOR

DELCO-REMY

Delco-Remy Model 1118202. Single Core Current Voltage Regulator. In case on dash.
For complete data, refer to Electrical Equipment Index.
CAUTION—Check generator for grounded field coils and leads before changing regulator settings to correct High Charging Rate or High Voltage.

Cutout Relay—Delco-Remy

Cuts In—6.2-6.7 volts hot, 900 RPM.
Cuts Out—0-4.0 ampere discharge current.
Contact Gap—.020" (same for both sets).
Air Gap—.020" (with contacts just closed).

Voltage Regulator—Delco-Remy

Setting—7.2-7.4 volts hot (operating temperature). Should be checked with cover in place and hot.
To Check—Connect ammeter in charging line at regulator 'BAT' terminal, voltmeter between this terminal and ground. Operate generator at 2800 RPM., adjust charging rate to 8-10 amperes (use variable rheostat or AVR set). With regulator hot (150°F.), decrease generator speed until cutout relay contacts open, then increase speed to 2800 RPM. and check hot voltage setting (above).
To Adjust—Change regulator armature spring tension slightly by bending hanger at lower end of one spring only. If further adjustment required, see Single Core Regulator article in Electrical Equipment Section for other (2nd.) spring adjustment.
Air Gap—.070" between center of core and armature with contacts just closing (press down on armature to open contacts, release pressure, check gap at point where contacts just close).

Current Regulator—Delco-Remy

Setting—34-36 amperes hot (at operating temp.).
To Check—Remove regulator cover, connect short jumper between Voltage Regulator frame and upper contact support bracket (to short out Voltage Regulator), connect ammeter in charging line at regulater 'BAT' terminal, turn on car lights and accessories. Operate generator and increase speed until output remains constant. With regulator hot (150°F), current reading should agree with setting (above).
To Adjust—Same as for Voltage Regulator (above).
Air Gap—.080" (check same as Voltage Regulator).

LIGHTING

LIGHTING:—Headlamps—Hall 'Sealed Beam' type.
For complete data, refer to Electrical Equipment Index.
Headlamp Adjustment—Aim upper beam straight ahead (hot spot center 3" below lamp center hght.).
Beam Indicator—Red light on left side of speedometer. Lighted when Upper Beams in use.

Switches

Lighting—Delco-Remy No. 1995011 (Std.), 1995019 (With Econo-drive—has dimmer switch for Econo-drive Indicator light controlled by switch knob).
Beam Selector—Delco-Remy No. 1997001 (LHD cars), 1997002 (RHD cars).

Bulb Specifications

Position	Candlepower	Mazda No.
Headlamps	Sealed Beam	
Front Fender	21-3	1154
Instr., Speed'mtr., Clock	1½	55
Front Reading, Econo Dr. Ind.	1½	55
Glove Compt., Beam Indicator	1	51
Stop & Tail	21-3	1154
Rear License	3	63
Dome	6	81

MISC. ELECTRICAL

THERMOSTATIC RELAY:—Delco-Remy. On lighting switch. Contacts remain closed with 30 amperes, open in 3 minutes with 42 amps. @ 70°F. Not adj.
FUSES:—Stop Light, Cigar Lighter & Accessories—Two 20 ampere. On back of lighting switch.
Instrument & Tail Light—20 ampere. In connector in lead near ammeter.
Clock—4 ampere. In lead near clock.
Econo-drive—30 ampere. In relay lead near starter.
Windshield Wiper—No fuse (circuit- breaker).
HORNS:—Sparton. Vibrator type, air tone, twin horns
Horn Current—22-25 amperes (total both horns).
Horn Relay:—R-B-M Model 6006.
Contacts Close—3-4 volts (with relay upright).

ENGINE

ENGINE SPECIFICATIONS:—6 cylinder, 'L' head type.
Bore—3½". **Stroke**—4¼".
Displacement—245 cu. ins. **Rated HP**—29.4.
Developed Horsepower—100 at 3600 RPM (Std. hd.).
Compression Ratio and Pressure—As follows:
6.39-1 Std. cast-iron head—110 lbs. at 125 RPM.
6.71-1 Optl. HC cast-iron hd.—118 lbs. at 125 RPM.
See Packard Shop Notes for Cylinder Head data.
Vacuum Reading—18-20" steady idling at 6 MPH.

PISTONS:—Aluminum alloy, autothermic, strut type, tin plated, cam ground type. **Length**—3⅞".
Weight—20¼ ozs. (stripped), 26¾ (with rings & pin).
Removal—Pistons and rods removed from above.
Clearance—.0005-.001". See Fitting New Pistons.
Original Bore & Piston Sizes, Replacement Pistons:—***See Packard Shop Notes for sizes and markings.***
Fitting New Pistons:—Insert .0015" feeler ½" wide between piston and cylinder wall on side opposite slot. Pull to withdraw feeler should be 12-18 lbs.
Installing Pistons:—Slot toward valves.

PISTON RINGS:—2 Ferrox coated compression rings (Perfect Circle—#1 K-200 upper inner edge beveled, #2 K-70 lower outer edge grooved), 1 oil control (X-90 'C' wall) ring, all above pin. CAUTION—Use 'K' type rings only (have greater wall thickness than S.A.E. type). ***See Packard Shop Notes for Replacement (Triple Action) Piston Ring installation data.***

Ring	Width	End Gap	Side Clearance
Comp. (#1)	...0930-.0935"	.....007-.017"	.....0025-.003"
Comp. (#2)	...1240-.1235"	.....007-.017"	.....0025-.003"
Oil Control	.....1865-.186"	.....007-.015"	.....0015-.002"

Replacement Rings:—.005", .010", .020", .030", .040" O.S. Triple Action (packaged sets) std. & .020" oversize.

PISTON PIN:—Diameter—.875". **Length**—3 1/64". Pin floats in piston and rod, held by locking rings.
Pin Fit in Piston—Finger push fit (piston at 160°).
Pin Fit in Rod Bushing—Finger push fit at 70° F.
Replacement Pins:—Std. and .003", .006" oversize.

CONNECTING ROD:—Length 7 11/16". **Weight** 31.6 ozs.
Upper Bearing (Piston Pin Bushing)—Split type.
See Packard Shop Notes for servicing data.
Crankpin Bearing Diameter—2 3/32".
Lower Bearing—Shimless, precision, steel backed, babbitt lined type. Bearings furnished standard and .001", .002", .003", .015" undersize.
Clearance—.0005-.0015". **Endplay**—.004-.010".
Bearing Adjustment:—None (no shims). Replace bearings. Do not file rods or caps.
See Packard Shop Notes for 'Palnut' installation data.
Installing Rods:—Oil squirt hole toward camshaft.

CRANKSHAFT:—4 bearings, 6 integral counterweights
Bearing Diameter—2¾".
Bearings—Interchangeable, shimless, precision, steel-backed, babbitt lined type. Furnished standard size and .001", .002" undersize.
Clearance—.0005-.0015".
Bearing Adjustment:—None (no shims). Replace bearings (upper halves can be 'rotated' in and out).
End Thrust:—Taken by front (#1) bearing.
Endplay—.003-.008".

CAMSHAFT:—4 bearing. Non-adjustable chain drive.
See Packard Shop Notes for Radiator & Fender assembly (unit) removal for work on front end of engine.

ENGINE

C NTINUED FR M PRECEDING PAGE

Bearings—Shimless, precision, steel backed, babbitt lined type. **Clearance**—.001-.003".

End Thrust:—Taken by thrust plate in back of camshaft sprocket. **Endplay**—.0025-.006".

Timing Chain:—Morse Type C-3682R (No. 1525) or Ramsey. Width 1¼". Pitch .375". Length 21¾" or 58 links.

Camshaft Setting:—Install chain and sprockets together with '0' marks on sprockets adjacent and in line with straightedge across shaft centers.

VALVES:—	Head Diameter	Stem Diameter	Length
Intake	1 19/32"	33975"	5.619"
Exhaust	1⅜"	33975"	5.619"

	Seat Angle	Lift	Stem Clearance
Intake	30°	318"	.002-.003"
Exhaust	45°	3175"	.004-.005"

Valve Guides:—Pressed in block from above with upper end 31/32" below valve seat. Exhaust guides counter-bored on upper inner diameter to ⅜" diameter and ⅜" deep.

Valve Springs:—Intake and exhaust springs interchangeable.

	Spring Pressure	Spring Length
Valve Closed	47-52 lbs.	1⅝"
Valve Open	114-124 lbs.	1 5/16"

NOTE—Serrated washer installed on top of springs.

Valve Lifters:—Mushroom type. Remove from below with camshaft out. Lifters furnished .001", .002", .005" oversize. Use Tool S.T. 5144 (piloted in valve guide) and ream for .005" oversize lifters. **Diameter**—.6235-.6240". **Clearance**—.0003-.0012".

VALVE TIMING

Tappet Clearance:—.007" Intake, .010" Exh. (warm & idling). NOTE—Self-locking tappet screw used. Remove right front fender plate for access to valves.

Valve Timing:—See Camshaft Setting above.

Intake Valves—Open 1° BTDC. Close 39° ALDC.

Exhaust Valves—Open 45° BLDC. Close 5° ATDC. With tappet clearance of .0125" Intake, .015" Exh.

Valve Timing Check—With .0125" tappet clearance #1 intake valve should open with #1 piston 1° or .0004" BTDC with 1st graduation before top dead center mark '#1 UP.DC' on vibration damper lined up with pointer (permissable variation 4° either way). Reset tappet clear. .007" (hot & idling).

LUBRICATION

LUBRICATION:—Pressure (pump on right of engine). *See Packard Shop Notes for Oil Pump installation.*

Normal Oil Pressure:—40 lbs. at 45 MPH.

Oil Pressure Relief Valve:—Mounted on pump cover. Not adjustable. Spring pressure 14 lbs. ± 2 oz. @ 1⅞".

Crankcase Capacity:—5 quarts.

COOLING

COOLING SYSTEM:—**Capacity**—15 quarts.

Pressure Valve—In filler cap. Opens at 4½ lbs. (Std.), 12 lbs. (with Air Conditioning equipment).

Water Pump:—Packless, sealed ball-bearing type. *See Water Pump Section for complete data.*

Removal—Remove fan belt, disconnect pump hose, take out pump mounting screws, lift out pump.

Thermostat:—Bishop & Babcock. In head outlet. **Setting**—Starts to open at 147½° F.

CLUTCH

CLUTCH:—**Long Model 9½CF-CS, 11CFS-CI (Early Taxi), 11CF-CI (Late Taxi).** Semi-centrifugal, single plate, dry disc types. NOTE—11CFS-CI (Early Taxi) is a riveted assembly. *See Clutch Section for complete data.*

Facings—Woven (U.S. Asbestos No. 1133-G), 2 used. I.D. 6", 6½" (Taxi). O.D. 9½", 11" (Taxi). Thick. ⅛".

Adjustment:—Adjust nut on pedal rod (at clutch fork) for 1½-1¾" free travel (2" when equipped with Electromatic Clutch).

Removal:—Remove transmission (see Transmission Removal following) and flywheel housing lower cover. Disconnect and remove pedal rod, clutch throw-out bearing. Remove clutch cover screws (release tension evenly) and lower assembly out.

ELECTROMATIC CLUTCH

ELECTROMATIC CLUTCH: Vacuum type with electrical control. Optional on all models.

Control Solenoid—Auto-Lite SSD-4001.

Control Relay—Auto-Lite HRH-4001.

See Clutch Section for complete data.

TRANSMISSION

TRANSMISSION:—**Own Make.** Constant-mesh, helical, ball-bearing mounted low speed gear (sliding spur reverse gear). Synchro-mesh (second & high). *See Transmission Section for complete data.*

Transmission Control:—Own Remote Control type. *See Transmission Section for complete data.*

Removal:—Disconnect shifter rods, speedometer cable, hand brake cable at equalizer, engine ground strap, overdrive cable and solenoid wires (if used), front universal (block drive shaft up against floor pan) and rubber bearing at rear of overdrive. Support rear of engine with jack and unbolt cross member (at frame ends and flywheel housing lower cover). Disconnect clutch retractor spring and fore and aft restraint rod. Take out transmission-to-flywheel housing screws, remove assembly.

OVERDRIVE

OVERDRIVE: Warner Type R9 (Kick-down). Model AS2-R9 overdrive unit with electrical control. *See Transmission Section for complete data.*

Overdrive Solenoid—Delco-Remy Model 1118005.

Overdrive Indicator Light—Green light on right side of speedometer dial. Lighted whenever overdrive is ready to engage (light goes out when accelerator pedal is released so that overdrive can engage).

Throttle Switch—Cole-Hersee. Packard No. 347496. Adjust tappet screw on throttle lever to just contact switch plunger with throttle valve wide open.

Governor Switch—Bendix No. 364782.

Control Relay—Delco-Remy Model 1116801.

Removal: Procedure same as for regular transmission (see above) plus the following: Disconnect control cable, solenoid wires, and overdrive rear mounting.

UNIVERSALS

UNIVERSAL JOINTS:—**Detroit-Universal Series 4251 (4200 front, 5150 rear).** Front joint is ball & trunnion type with roller bearings (takes slip or end travel—no slip joint used). Rear joint is roller bearing type with cross. *See Universals Section for complete data.*

►*CAUTION*—Rear universal flange controls pinion bearing pre-load. *For complete data, refer to the Rear Axle Section for Packard Rear Axle article.*

REAR AXLE

REAR AXLE:—**Own Make.** Semi-floating, Hypoid gear type with Hotchkiss drive. Cover welded in place. *See Rear Axle Section for complete data.*

Ratio—4.3-1 Std. 4.55-1 with Overdrive.

Backlash—.003-.005". Screw adjustment.

Removal:—Remove wheel, hub, and brake backing plate assembly. Withdraw axle shafts. Disconnect rear universal joint and drop drive shaft. Remove carrier-to-housing bolt nuts, withdraw carrier.

Wheel Bearing Adjustment—Endplay controlled by shims between flanged end of housing and brak backing plate. Unbolt backing plate and clips holding brake tube to housing. Add or remove shims (endplay up to .050" can be adjusted to desired .006" at one wheel). **Endplay**—.004-.007".

SHOCK ABSORBERS

SHOCK ABSORBERS:—	Front	Rear
Domestic	Delco 1966-C,D	Monroe 364630
Export	Delco 1966-C,D	Delco 1130-W

Front shocks are double acting type. Rear shocks are direct acting (adjustable type Delco). *See Shock Absorber Section for complete data.*

FRONT SUSPENSION

Front Suspension:—Independent 'Safe-T-fleX' type (parallelogram type—coil springs & torque arms). *See Front Suspension Section for complete data.*

NOTE—Frame height must be set first before checking Caster and Camber.

Frame Height—With car on level floor, distance from floor to top of frame side rail at front wheel center-line 17⅝" (load car until figure correct).

Kingpin Inclination—2½° crosswise.

Camber—Pos. ½° (plus ¾°, minus 0°). Adjustable.

Caster—Pos. ½° ± ½°. Shim adjustment.

Toe In—0" (+ 1/16", — 0") at hub height. Turn both tie rods equally (rod lengths equal within ½").

Steering Geometry—Inner wheel 23½°. Outer 20°.

STEERING GEAR

Steering Gear: Packard (Gemmer design Model 330) Worm-and-Roller type with center steering. Refer to Gemmer Model 330 article. *See Steering Gear Section for complete data.*

BRAKES

BRAKES:—**Service.** Bendix hydraulic, duo-servo, single anchor type without eccentric adjustment. Hand lever applies rear wheel service brakes. *See Brake Section for complete data.*

Drums—Centrifuse. Diameter 11".

Lining—Molded (Marshall 2201). Width 1¾". Thick. 3/16". Length 10⅝" (primary shoe), 12" (secondary).

Clearance—.015" at both ends of secondary shoe with primary shoe forced out against drum.

Hand Brake:—See Service Brakes above.

MISC. MECHANICAL

WINDSHIELD WIPER:—**Stewart-Warner Series 645-E.** Electric type. NOTE—'Klixon' type circuit-breaker mounted on unit (no fuse used). *See Miscellaneous Section for complete data.*

Power Operated Convertible Top: Vacuum Power type. *See Miscellaneous Section for complete data.*

EQUIPMENT NOTE:—Both Delco-Remy & Auto-Lite Electrical Equipment are used on this model.

CLIPPER HOOD LOCK DATA & FRONT SHEET METAL ASSEMBLY REMOVAL: *See Packard Shop Notes.*

MODEL IDENTIFICATION

SERIAL NUMBER:—On left side of cowl (use Eng. No.).

ENGINE NUMBER:—First number E1551. On upper left side of block between #3 and #4 cylinders.

COMPRESSION:—Ratio—6.71-1 cast-iron head. No Optl. **Pressure**—118 lbs. at 125 RPM.

VACUUM READING:—18-20" steady idling at 6 MPH.

FIRING ORDER:—1-5-3-6-2-4. See diagram.

SPARK PLUGS: AC #104 or Champion Y4-A. 10 mm. **Gaps**—.028". Limits .0255-.0305".
NOTE—Do not tighten these small plugs excessively. Tightening tension 50 inch lbs. maximum.

IGNITION: See Coil, Condenser, and Distributor.
Breaker Gap—.020".
Cam Angle Closed 38°(Auto-Lite), 35°(Delco-Remy).
Automatic Advance—Auto-Lite: 9½° at 1600 RPM. Delco-Remy: 10¼° at 1600 RPM. Distr. ° & RPM.
Vacuum Advance—7½° (distr.) with 17" vacuum.

IGNITION TIMING: See Ignition Timing.
Std. Setting—4° BTDC for all engines. Vibration dampener mark (correct degree mark ahead of #1UP.DC) aligned with pointer at front of engine.

CARBURETION: See Carburetor & Carb. Equipment.
Idle Setting—Set idle adjusting screw ½-1½ turns open. Adjust for smooth idle. Idle speed 6 MPH.
Float Level—⅜" from projection on bowl cover to top of float seam at free end (invert to check).
Accelerating Pump—No seasonal adjustment.
Fuel Pump Pressure: 4¼ lbs. maximum.

MANIFOLD HEAT CONTROL:—Thermostatic coil type. Make certain that valve operates freely and does not bind or stick. Do not oil control.

VALVES: See Valve Timing.
Tappet Clearance:—.007" Intake, .010" Exh. warm. Adjusting screws are self-locking type (no locknuts). Removable fender plate under fender.

STARTING: See Battery, Starter, Generator, Regulator.

IGNITION
AUTO-LITE

Ignition Switch:—Mitchellock Model 24-B, No. 8781.
Ignition Lock Cylinder—Briggs & Stratton 50184.
Key Series—P1251 to P1500. **Groove**—No. 2.

COIL: Auto-Lite CE-4659 (Clipper), CE-4652 (Others). On dash (Clipper), on left side of engine (Others). **Service Coil (less switch & cable) CE-3224US.**
Ignition Current—2.75 amperes idling, 5 stopped.

CONDENSER: Auto-Lite No. IGW-3128.
Capacity—.28-.32 microfarad.

DISTRIBUTOR: Auto-Lite Model IGC-4505. Single breaker, 6 lobe cam, full automatic advance type with Vacuum Spark Control and Fuel Compensator.
Breaker Gap—.020".
Cam Angle or Dwell—38° closed, 22° open.
Breaker Arm Spring Tension—17-20 ozs.
Rotation—Counter-clockwise viewed from above.

Automatic Advance (Auto-Lite)

Distributor Degrees	R.P.M.	Engine Degrees	R.P.M.
Start	300	0	600
3	590	6	1180
5	780	10	1560
7	1150	14	2300
9.5	1600	19	3200

Vacuum Spark Control—Separate unit mounted on hold-down plate and linked to adjusting quadrant on distributor. Provides additional advance at speeds above idling except when engine accelerated or operated with wide open throttle when spark retarded by return spring within unit.

Vacuum Advance (Auto-Lite)

Distr. Degrees	Eng. Degrees	Vacuum (" of HG)
Start	0°	6"
4°	8°	11⅞"
7.5°	15°	17"

Fuel Compensator Adjustment—Permits 40° range of adjustment by loosening vacuum unit link screw **Removal:**—Distributor mounted on left side of crankcase. To remove, disconnect vacuum line, take out screw in hold-down plate, lift entire unit out.

IGNITION
DELCO-REMY

Ignition Switch:—Delco-Remy No. 1116333 (standard), 1116321 (Conv. Coupe), 1116323 (RHD).
Ignition Lock Cylinder—Briggs & Stratton 50184.
Key Series—P1251 to P1500. **Groove**—No. 2.

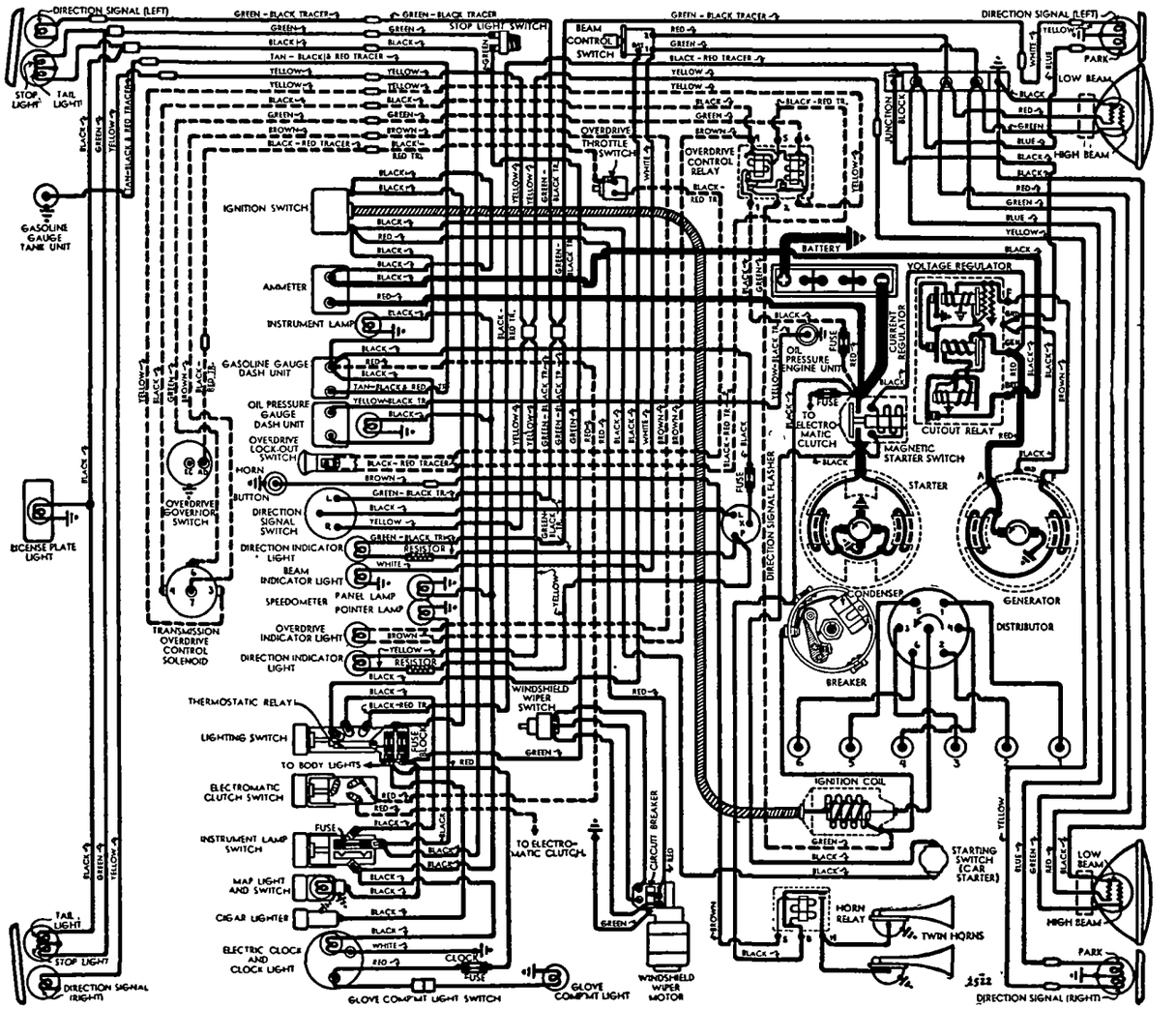

DELCO-REMY EQUIPMENT

See 1942 '120' Eight Diagram for Auto-Lite internal circuits

COIL: Delco-Remy 1115001, 1115029 (Conv. Coupe & RHD). On dash (Clipper), on left side of engine (Others).
Ignition Current—2.75 amperes idling, 5 stopped.
CONDENSER: Delco-Remy No. 1869704.
Capacity—.18-.25 microfarad.
DISTRIBUTOR: Delco-Remy 1110092 or 1110132. Single breaker, 6 lobe cam, full automatic advance type with vacuum spark control and Fuel Compensator
Breaker Gap—.020". Limits .018-.024".
Cam Angle or Dwell—35° closed, 25° open.
Breaker Arm Spring Tension—17-21 ozs.
Rotation—Counter-clockwise viewed from above.

Automatic Advance (Delco-Remy)

Distributor		Engine	
Degrees	R.P.M.	Degrees	R.P.M.
Start	300	1.5	600
5	700	10	1400
10.25	1600	20.5	3200

Vacuum Spark Control—Separate unit mounted on hold-down plate and linked to distributor. Provides additional advance at speeds above idling except when engine accelerated or operated with wide open throttle when spark retarded by return spring within unit.

Vacuum Advance (Delco-Remy)

Distr. Degrees	Eng. Degrees	Vacuum (" of HG)
Start	0°	5-7"
7.5°	15°	15-19"

Fuel Compensator Adjustment—Slot in advance plate permits distributor to be advanced or retarded from center point on scale when hold-down screw loosened. See Ignition Timing for setting.
Removal:—Same as for Auto-Lite model (above).

IGNITION TIMING

IGNITION TIMING:—See Fuel Compensator Setting following.

	Flywheel Degrees	Piston Position
All Engines	4° BTDC	.0066" BTDC

Timing Mark—Vibration dampener marked #1UP. DC at TDC with 15 (1°) graduations before mark.
Timing—With #1 piston on compression, turn engine over until piston reaches firing position (eee table above) with 4th graduation ahead of #1UP.DC mark in line with pointer on chain case cover. Loosen vacuum unit link screw in distributor quadrant (Auto-Lite distributors), or hold-down screw in advance arm (Delco-Remy distributors), rotate distributor until contacts begin to open, tighten screw.
Timing (Neon Timing Light)—Mark 4th graduation ahead of #1UP.DC mark on vibration dampener with white paint, clip neon timing light at #1 spark plug and direct light on vibration dampener, idle engine below 600 RPM and adjust distributor as directed above until mark in line with pointer on chain case cover.
Fuel Compensator Setting—Should be set for slight ping when accelerating engine with wide open throttle. To adjust, loosen vacuum unit link screw in distributor quadrant (Auto-Lite Distributors), advance arm hold-down screw (Delco-Remy Distributors), rotate distributor one graduation at a time counter-clockwise (if ping too severe), clockwise (if no ping), until correct performance secured.

CARBURETOR

CARBURETION:—Carburetor. Carter Type WA-1, Model 530-S. 1¼" single barrel downdraft type with Carter Climatic Control.
For complete data, refer to Carburetor Index.
Idle Setting—With engine warm (fast idle inoperative), set throttle stopscrew for 6 MPH. idle speed. Adjust idle adjusting screw for smooth idling performance (½-1½ turns open—turn screw in for leaner mixture). Recheck idle speed. NOTE—Cars with Electromatic Clutch, idle speed 8-10 MPH.
Accelerating Pump—Non-adjustable type.
Float Level—⅜" from projection on bowl cover to top of float seam at free end (invert to check).
Metering Rods & Jets—***Refer to Carburetor Index for Carter Downdraft Carburetor Jet Specification Table.***
Fast Idle:—Integral type (built-in carburetor).
For complete data, refer to Carburetion Equip. Index.
Fast Idle Setting—⅝" clearance between choke valve and air horn (gauge T109-85) with throttle stopscrew against (not on) first step of fast idle cam. Adjust by bending fast idle link offset.
Automatic Choke:—Carter Climatic Control.
For complete data, refer to Carburetion Equip. Index.
Setting—Coil housing centered (at index mark).

CARB. EQUIPMENT

Air Cleaner:—AC No. 1542265 oil-wetted type Std. #1542266 heavy duty oil-bath type Optl. Use Replacement Filter Element Assembly: Type #3 (for #1542265), #1542245 (for 1542266).
Fuel Pump:—AC 'AT' #1537403—Exch. No. 524G diaphragm type fuel pump. **Pressure**—4½ lbs. max.
For complete data, refer to Carburetion Equip. Index.
Gasoline Gauge:—Stewart (Stewart-Warner) electric
For complete data, refer to Carburetion Equip. Index.

BATTERY

BATTERY:—Clipper: Auto-Lite P-15ZR or Willard Type SW-1D-100 (End-to-End Types). 6 volt, 15 plate, 100 ampere hour capacity (20 hr. rate).
Starting Capacity—120 amperes (A-L), 122 amperes (Willard), for 20 minutes.
Zero Capacity—300 amperes for 3.2 minutes. Five second voltage 4.2 volts (for both types).
Grounded Terminal—Positive (+) to frame.
Dimensions—Length 19⅜". Width 4". Height 9 3/16" (Auto-Lite), 8 15/16" (Willard).
Location—On left side in engine compartment.
Convertible Coupe: Willard Type SW-1-93. 6 volt, 15 plate, 93 ampere hour capacity (20 hr. rate).
Starting Capacity—117 amperes for 20 minutes.
Zero Capacity—300 amperes for 3.1 minutes. Five second voltage 4.2 volts.
Grounded Terminal—Positive (+) to frame.
Engine Ground—Strap from transmission to frame.
Dimensions—Length 9". Width 7". Height 8¾".

STARTER

AUTO-LITE

Auto-Lite Model MAW-4027. Armature MAW-2128.
Drive—Outboard Barrel Type Bendix No. A-1792.
Rotation—Counter-clockwise at commutator end.
Brush Spring Tension—42-53 ozs. (new brushes).
Cranking Engine—125 RPM., 175 amperes, 5.1 volts.

Performance Data

Torque	R.P.M.	Volts	Amperes
0 ft. lbs.	4900	5.5	65
0.6 "	3300	5.5	100
2.75 "	1480	5.0	200
5.45 "	820	4.5	300
8.50 "	400	4.0	400
11.55 "	110	3.5	500
11.5 "	Lock	3.0	505
18.0 "	Lock	4.0	670

Removal:—Flange mounted on left front face of flywheel housing. To remove, take out flange mounting screws, lift out starter and switch assembly.
Starting Switch: Auto-Lite SS-4025. Magnetic type. Mounted on starter and controlled by Carter Car Starter No. 192-11U on carburetor (accelerator pedal starting).
For complete data, refer to Electrical Equip. Index for Auto-Lite Magnetic Starter Control and Carter Car Starter.

STARTER

DELC -REMY

Delco-Remy Model 1107037 (first 3300), 1107056 (on Later Cars). Armature No. 1878077.
Drive—Barrel Type Bendix No. A-1792.
Rotation—Counter-clockwise at commutator end.
Brush Spring Tension—24-28 ozs. each.

Performance Data (Delco-Remy)

Torque	R.P.M.	Volts	Amperes
0 ft. lbs.	5000	5.0	65
12 "	Lock	3.37	525

Removal:—Starter flange mounted on left front face of flywheel housing. To remove, disconnect wires, take out flange mounting screws, remove starter and switch as an assembly.
Starting Switch:—Delco-Remy Model 1460. Magnetic type. Mounted on starter and controlled by Carter Car Starter No. 192-11U on carburetor (accelerator pedal starting). ***For data, refer to Electrical Equipment Index for Auto-Lite Magnetic Starter Control and Carter Car Starter articles.***

GENERATOR

AUTO-LITE

Auto-Lite Model GDZ-4801F. Armature GDZ-2006F. Two brush type with Current & Voltage Control.
Charging Rate Adjustment—No adjustment at generator. Charging rate controlled by Voltage Regulator and maximum output by Current Regulator.
Maximum Charging Rate—35 amperes, 8.0 volts hot. Actual charging rate controlled by Voltage Regulator and dependent on battery condition.

Performance Data

Cold			Hot		
Amperes	Volts	R.P.M.	Amperes	Volts	R.P.M.
0	6.4	925	0	6.4	1000
4	6.6	1035	4	6.6	1120
8	6.75	1140	8	6.75	1235
12	6.95	1250	12	6.95	1350
16	7.15	1370	16	7.15	1460
20	7.3	1480	20	7.3	1590
24	7.5	1590	24	7.5	1730
28	7.7	1710	28	7.7	1900
32	7.9	1820	32	7.9	2090
*35	8.0	1900	35	8.0	2250

*—Current Regulator setting.
Rotation—Counter-clockwise at commutator end.
Field Current—1.60-1.78 amperes at 6.0 volts.
Motoring Current—4.15-4.60 amperes at 6.0 volts.
Brush Spring Tension—53 ozs. max. (new brushes).
Removal:—Pivot mounted at left side of engine at front. To remove, take out pivot and clamp bolts.
Belt Adjustment:—50 lbs. tension on spring scale hooked to generator frame, or ½" thumb-pressure deflection midway between generator and pump pulleys.

GENERATOR

DELCO-REMY

Delco-Remy Model 1102682. Armature No. 1879002. Two brush type with Current & Voltage Control.
Charging Rate Adjustment—None. Charging rate controlled by Voltage Regulator, maximum output controlled by Current Regulator. See Regulator.

C NTINUED ON NEXT PA E

CONTINUED FR M PRECEDIN PA E

Maximum Charging Rate—32-34 amperes, 8.0 volts hot. Actual charging rate controlled by Voltage Regulator and dependent on battery condition.

Performance Data (Delco-Remy)

	Amperes	Volts	R.P.M.
Cold	30①	8.0	1750

①Not maximum output. See Current Regulator.

Rotation—Counter-clockwise at commutator end.

Brush Spring Tension—25 ozs. each.

Field Current—1.67-1.82 amperes at 6.0 volts.

Removal:—Generator pivot mounted at left front of engine. To remove, take out pivot and clamp bolts.

Belt Adjustment:—50 lbs. tension on spring scale hooked to generator frame, or ½" thumb-pressure deflection midway between gen. and pump pulleys.

REGULATOR

AUTO-LITE

Auto-Lite Model VRP-4002-C. Current—Voltage type. In case on left side of engine dash.

For complete data, refer to Electrical Equipment Index.

NOTE—Regulator case cover sealed. Serviced on exchange basis if seals not broken (to remove cover).

Cutout Relay

Cuts In—6.4-6.6 volts, 920 generator RPM (cold).

Cuts Out—4.1-4.8 volts (approx. 4-6 amps. disch.).

Contact Gap—.015" minimum.

Air Gap—.031-.034" with contacts open (check at hinge end of core).

Voltage Regulator

Setting—7.2-7.5 volts at 70° F. See Electrical Equipment Section for settings at other temperatures.

To Check (without breaking seals)—Connect ammeter in charging line at regulator 'B' terminal (use short heavy leads), voltmeter between 'B' terminal and ground. Operate generator at speed equivalent to 30 MPH., charging fully charged battery, until voltage is steady. Voltage reading should agree with setting given above.

To Adjust (with cover removed)—Change regulator armature spring tension by bending lower spring hanger slightly. See Electrical Equipment Section.

Contact Gap—.012" min. (armature against stop pin.)

Air Gap—.048-.052" with contacts just opening.

Current Regulator

Setting—34-36 amperes (marked '35' on the cover).

To Check (without breaking seals)—Connect test meters as for voltage check (above). Operate generator at speed equivalent to 30 MPH. charging battery, turn on car lights and accessories or connect load (bank of headlamp bulbs, etc.) between ammeter and battery so that generator charges at peak rate and Current Regulator operates. Current reading should agree with setting given above. If more than slight excess noted, regulator is defective.

To Adjust (with cover removed)—Same as for Voltage Regulator (above).

Contact Gap & Air Gap—Same as Voltage Regulator.

REGULATOR

DELCO-REMY

Delco-Remy Model 1118202. "Single Core" Current Voltage Regulator. In case on dash.

For complete data, refer to Electrical Equipment Index.

CAUTION—Check generator for grounded field coils and leads before changing regulator settings to correct High Charging Rate or High Voltage.

Cutout Relay

Cuts In—6.2-6.7 volts at 800 RPM (cold).

Cuts Out—0-4.0 ampere discharge current.

Contact Gap—.020" (same for both sets).

Air Gap—.020" (with contacts just closed).

Voltage Regulator

Setting—7.2-7.4 volts hot (operating temperature). Regulator over-compensated for temperature. Should be checked with cover in place and hot.

To Check—Connect ammeter in charging line at regulator 'BAT' terminal, voltmeter between this terminal and ground. Operate generator at 2800 RPM., adjust charging rate to 8-10 amperes (use variable rheostat or AVR set). With regulator hot (150°F), decrease generator speed until cutout relay contacts open, then increase speed to 2800 RPM. and check hot voltage setting (above).

To Adjust—Change regulator armature spring tension slightly by bending hanger at lower end of one spring only. If further adjustment required, see Single Core Regulator article in Electrical Equipment Section for other (2nd) spring adjustment.

Air Gap—.070" between center of core and armature with contacts just closing (press down on armature to open contacts, release pressure, check gap at point where contacts just close).

Current Regulator

Setting—34-36 amperes hot (at operating temp.).

To Check—Remove regulator cover, connect short jumper between Voltage Regulator frame and upper contact support bracket (to short out Voltage Regulator), connect ammeter in charging line at regulator 'BAT' terminal, turn on car lights and accessories. Operate generator and increase speed until output remains constant. With regulator hot (150°F), reading should agree with setting (above).

To Adjust—Same as for Voltage Regulator (above).

Air Gap—.080" (check same as Voltage Regulator).

LIGHTING

LIGHTING:—Headlamps—Hall 'Sealed Beam' type.

For complete data, refer to Electrical Equipment Index.

Headlamp Adjustment—Aim upper beam straight ahead (hot spot center 3" below lamp center height).

Beam Indicator—Red light on left side of speedometer. Lighted when Upper beams in use.

Direction Signal—*Refer to Electrical Equip. Index.*

Switches

Lighting—Delco-Remy No. 1995021 (Clipper), No. 1995011 (Conv. Coupe).

Beam Selector—Delco-Remy No. 1997002.

Bulb Specifications

Position	Candlepower	Mazda No.
Headlamps	Sealed Beam	
Front Dir. Sig. & Park	21-3	1154
Rear Dir. Signal	21	1129
Beam Indic., Glove Compt.	1	51
Instr., Speedometer Pointer	1½	55
Clock, Map Light	1½	55
Aero-Drive, Direct. Indic.	1½	55
Stop & Tail	21-3	1154
Rear License	3	63
Dome & Courtesy	6	82

MISC. ELECTRICAL

THERMOSTATIC RELAY:—Delco-Remy. On lighting switch. Contacts remain closed with 30 amperes, open in 3 minutes with 42 amps. at 70° F. Not adj.

FUSES:—Stop Light, Cigar Lighter, Accessories—Two 20 ampere fuses on back of lighting switch.

Instrument & Tail Light—20 ampere. In socket in tail lamp lead near lighting switch.

Clock—3 ampere. In feed wire near clock.

Aero-Drive & Electro-Matic Clutch—Separate 30 ampere fuses. In feed wire from starter switch.

Direction Signal—9 ampere. In feed wire to flasher.

Windshield Wiper No fuse (Klixon circuit breaker).

HORNS:—Sparton. Vibrator type, air tone, twin horns

Horn Current—22-25 amperes (toal both horns).

Horn Relay:—R-B-M Model 6006.

Contacts Close—3-4 volts (with relay upright).

ENGINE

ENGINE SPECIFICATIONS:—6 cylinder, 'L' head type.

Bore—3½". **Stroke**—4¼".

Displacement—245 cubic inches. **Rated HP**—29.4.

Developed Horsepower—105 at 3600 RPM.

Compression Ratio—6.71-1 cast-iron head. No Optl.

Compression Pressure—118 lbs. at 125 RPM.

Vacuum Reading—18-20" steady idling at 6 MPH.

See Packard Shop Notes for Cylinder Head data.

PISTONS:—Aluminum alloy, autothermic, strut type, tin plated, cam ground type. **Length**—3⅞".

Weight—20¼ oz. (stripped), 26¾ (with rings & pin).

Removal—Pistons and rods removed from above.

Clearance—.0005-.001". See Fitting New Pistons.

Original Bore & Piston Sizes, Replacement Pistons:—*See Packard Shop Notes for sizes and markings.*

Fitting New Pistons:—Insert .0015" feeler ½" wide between piston and cylinder wall on side opposite slot. Pull to withdraw feeler should be 12-18 lbs.

Installing Pistons:—Slot toward valves.

PISTON RINGS:—Three 'K' type rings, all above pin. #1 Comp. (K-200), #2 Comp. (K-70), #3 Oil Control (X-90 'B' wall). CAUTION—Use 'K' type rings only (have greater wall thickness than S.A.E. type rings). *Refer to Packard Shop Notes for Replacement (Triple Action) Piston Ring installation data.*

Ring	Width	End Gap	Side Clearance
Comp. (#1)	.093-.0935"	.007-.017"	.0025-.003"
Comp. (#2)	.124-.1235"	.007-.017"	.0025-.003"
Oil Control	.1865-.186"	.007-.015"	.0015-.002"

Replacement Rings:—.005", .010", .020", .030", .040" O. S. Triple Action (packaged sets) std. & .020" oversize.

PISTON PIN:—Diameter—.875". **Length**—3 1/64". Pin floats in piston and rod, held by locking rings.

Pin Fit in Piston—Finger push fit (piston at 160°).

Pin Fit in Rod Bushing—Finger push fit at 70° F.

Replacement Pins:—Std. and .003", .006" oversize.

CONNECTING ROD:—**Length** 7 11/16". **Weight** 31.6ozs.

Upper Bearing (Piston Pin Bushing)—Split type.

See Packard Shop Notes for Piston Pin servicing data.

Crankpin Bearing Diameter—2 3/32".

Lower Bearing—Shimless, precision, steel backed, babbitt lined type. Bearings furnished standard and .001", .002", .003", .015" undersize.

Clearance—.0005-.0015". **Endplay**—.004-.010".

Bearing Adjustment:—None (no shims). Replace bearings. Do not file rods or caps.

See Packard Shop Notes for 'Palnut' installation data.

Installing Rods:—Oil squirt hole toward camshaft.

CRANKSHAFT:—4 bearings, 6 integral counterweights.

Bearing Diameter—2¾".

Bearings—Interchangeable, shimless, precision, steel-backed, babbitt lined type. Furnished stand-

ENGINE

CONTINUED FROM PRECEDING PAGE

ard size and .001", .002" undersize.
Clearance—.0005-.0015".

Bearing Adjustment:—None (no shims). Replace bearings (upper halves can be 'rotated' in and out).

End Thrust:—At front bearing. **Endplay** .003-.008".

CAMSHAFT:—4 bearing. Non-adjustable chain drive.
Bearings—Shimless, precision, steel-backed, babbitt lined type. **Clearance**—.001-.003".

End Thrust:—Taken by thrust plate in back of camshaft sprocket. **Endplay**—.0025-.006".

Timing Chain:—Morse C-3682R (No. 1525) or Ramsey. Width 1¼". Pitch .375". Length 21¾" or 58 links.

Camshaft Setting:—Install chain and sprockets together with '0' marks on sprockets adjacent and in line with straightedge across shaft centers.

VALVES:—	Head Diameter	Stem Diameter	Length
Intake	1 19/32"	.33975"	5.619"
Exhaust	1⅜"	.33975"	5.619"

	Seat Angle	Lift	Stem Clearance
Intake	30°	.318"	.002-.003"
Exhaust	45°	.3175"	.004-.005"

Valve Guides:—Pressed in block from above with upper end 31/32" below valve seat. Exhaust guides counter-bored on upper inner diameter to ⅜" diameter and ⅜" deep.

Valve Springs:—Intake and exhaust springs interchangeable. Anti-rotation washer installed on top of springs.

	Spring Pressure	Spring Length
Valve Closed	52-57 lbs.	1 5/8"
Valve Open	119-129 lbs.	1 5/16"

Valve Lifters:—Mushroom type. Remove from below with camshaft out. Lifters furnished .001", .002", .005" oversize. Use Tool S.T. 5144 (piloted in valve guide) and ream for .005" oversize lifters.
Diameter—.6235-.6240". **Clearance**—.0003-.0012".

VALVE TIMING

Tappet Clearance:—.007" Intake, .010" Exh. (warm & idling). NOTE—Self-locking tappet screws used. Remove right front fender plate for access to valves.

Valve Timing:—See Camshaft Setting above.
Intake Valves—Open 1° BTDC. Close 39° ALDC.
Exhaust Valves—Open 45° BLDC. Close 5° ATDC.
With tappet clearance of .0125" Intake, .015" Exh.
Valve Timing Check—With .0125" tappet clearance #1 intake valve should open with #1 piston 1° or .0004" BTDC with 1st graduation before top dead center mark '#1 UP.DC' on vibration damper lined up with pointer (permissible variation 4° either way). Reset tappet clearance .007" (hot & idling).

LUBRICATION

LUBRICATION:—Pressure (pump on right of engine).
See Packard Shop Notes for Oil Pump Installation.

Normal Oil Pressure:—40 lbs. at 45 MPH.

Oil Pressure Relief Valve:—Mounted on pump cover. Not Adj. Spring pressure 14 lbs. ± 2 ozs. at 1⅞".

Oil Pressure Gauge:—Stewart-Warner electric type.

Crankcase Capacity:—5 quarts.

COOLING

COOLING SYSTEM:—**Cap.** 15 qts. (Clipper), 14 (Others).
See Packard Shop Notes for Radiator Core Removal.
Pressure Valve—In filler cap. Opens at 4½ lbs. (Std.), 12 lbs. (with Air Conditioning equipment).

Water Pump:—Packless, sealed ball-bearing type.
See Water Pump Section for complete data.

Thermostat:—Bishop & Babcock. In cyl. head outlet.
Setting—Starts to open 147½°F.

CLUTCH

CLUTCH:—**Long Model 9½CF-CS (Std.), 10CF-CI (with Electromatic Clutch), 11CF-CI (Taxi).** Semi-centrifugal, dry disc types.
See Clutch Section for complete data.
Facings—Woven (U. S. Asbestos No. 1133-G), 2 used. Inside Diam. 6" (9½CF, 10CF), 6⅝ (11CF). Outside Diam. 9½" (9CF), 10" (10CF), 11" (11CF). Thick. ⅛".

Pedal Adjustment:—1½-1¾" (Std.), 2" (with Electromatic Clutch) free travel. Adjusting nut (with locknut) at clutch fork end of connector link.

Removal:—Remove transmission (see below). Disconnect pedal linkage, remove throw-out bearing. Remove cover mounting screws evenly, remove clutch.

ELECTROMATIC CLUTCH

ELECTROMATIC CLUTCH:—Vacuum type with electrical control. Optl. on all models.
See Clutch Section for complete data.
Control Solenoid—Auto-Lite SSD-4001.
Control Relay—Auto-Lite HRH-4001.
Control Governor ('42)—Auto-Lite TGC-4001.

TRANSMISSION

TRANSMISSION:—**Own Make.** Helical, constant-mesh (low speed gear), constant-mesh, synchro-mesh (second and high). Sliding spur (reverse gear).
See Transmission Section for complete data.

Transmission Control:—**Steering column mech. shift.**
See Transmission Section for complete data.

Removal:—Disconnect shifter rods, speedometer cable, hand brake cable at equalizer, and ground strap at transmission. Disconnect front universal, block drive shaft up for clearance. Support rear of engine with jack, unbolt frame cross-member carrying rear engine mountings, remove flywheel housing lower cover, disconnect stabilizer (transmission to X-member). Take out transmission to flywheel housing screws, withdraw transmission.

OVERDRIVE

Aero-Drive Transmission:—Warner-Packard type (Warner Model AS2-R9) overdrive unit with electrical control. Optional equipment on all cars.
See Transmission Section for complete data.

►**Overdrive Lock-up in Reverse Correction for Clipper:** Install 1948 Safety Switch (Kit No. 394484).
See 1948 Packard Car Pages for Overdrive Safety Switch description and Car Wiring Diagram showing Overdrive Circuit with Safety Switch installed.

Overdrive Solenoid—Delco-Remy Model 1118005.

Overdrive Indicator Light—Green light on right side of speedometer dial. Lighted whenever overdrive is ready to engage (light goes out when accelerator pedal is released so that overdrive can engage).

Throttle Switch—Cole-Hersee. Packard No. 347496. Adjust tappet screw on throttle lever to just contact switch plunger with throttle valve wide open.

Governor Switch—Packard No. 367335, or Packard No. 377787 (with Electromatic Clutch).

Control Relay—Delco-Remy Model 1116823.

Removal: Procedure same as for regular transmission (see above) plus the following: Disconnect control cable, solenoid wires, and overdrive rear mounting.

UNIVERSALS

UNIVERSAL JOINTS:—**Mechanics Type 3CR (Clipper), Detroit Universal Series 4251 (Others).**
See Universals Section for complete data.

►*CAUTION*—Rear universal flange nut controls pinion bearing pre-load (must be adjusted whenever nut is loosened). *Refer to Rear Axle Section for 'Packard Rear Axle' article for complete data.*

REAR AXLE

REAR AXLE:—**Own Make.** Semi-floating, hypoid gear type with Hotchkiss drive. Cover welded in place.
See Rear Axle Section for complete data.
Ratio—4.3-1 Std. 4.55-1 with Aero-Drive.
Backlash—.003-.005". Screw adjustment.

Removal:—Remove wheel, hub, and brake backing plate assembly. Withdraw axle shafts. Disconnect rear universal joint and drop drive shaft. Remove carrier-to-housing bolt nuts, withdraw carrier.
Wheel Bearing Adjustment—Endplay controlled by shims between flanged end of housing and brake backing plate. Unbolt backing plate and clips holding brake tube to housing. Add or remove shims (endplay up to .050" can be adjusted to desired .006" at one wheel). **Endplay**—.004-.007".

SHOCK ABSORBERS

SHOCK ABSORBERS:—	Front	Rear
Clipper	Delco 1946-J,K	Monroe 371195
Conv. Coupe	Delco 1966-C,D	Monroe 364630
Taxi	Delco 1966-C,D	Delco 1021-V

See Shock Absorber Section for complete data.

Fifth Shock Absorber (Stabilizer):—Monroe 956790. Direct acting type. Used on Clipper models only.
See Shock Absorber Section for complete data.

FRONT SUSPENSION

Front Suspension (Clipper):—New type Packard Safe-T-fleX (parallelogram type with upper & lower support arms & coil springs—no torque arms).
Other Models—Packard Safe-T-fleX type. Parallelogram type with coil springs and torque arms.
See Front Suspension Section for complete data.
Kingpin Inclination—5°35' (Clipper), 2½°(Others).
Caster—Neg. 1°±½° (Clipper), ¼°±½° (Others).
Camber—0° ± ½° (Clipper), 0° + ¾° — ¼° right wheel, Min. 0° +1° —0° left wheel (Others).
Toe In—0-1/16" measured 10" up from floor.
Steering Geometry Inner wheel 23°±½°. Outer 20°

STEERING GEAR

Steering Gear: Packard (Gemmer design Model 330). Worm-and-Roller type with idler arm on right frame rail (Clippers), center steering (Others). Refer to Gemmer Model 330 article.
See Steering Gear Section for complete data.

BRAKES

BRAKES:—**Service.** Bendix hydraulic, duo-servo, single anchor type without eccentric adjustment. Hand lever applies rear wheel service brakes.
See Brake Section for complete data..
Drums—Centrifuse. Diameter 12"(front), 11"(rear).
Lining—Moulded (Marshall 2201-H-8). Width 1¾". Thickness 3/16". Length: Primary shoe 11½" (front) 10⅝" (rear). Secondary 13" (front), 12" (rear).
Clearance—.015" at both ends of secondary shoe with primary shoe forced out against drum.

Hand Brake:—See Service Brakes abov .

MISC. MECHANICAL

WINDSHIELD WIPER:—**Stewart-Warner Series 645-H (Clipper), 645-E (Others).** Electric type. 'Klixon' circuit-breaker mounted near wiper motor.
See Miscellaneous Section for complete data.

Power Operated Convertible Top: Vacuum Power type.
See Miscellaneous Section for complete data.

CLIPPER HOOD LOCK DATA & FRONT SHEET METAL ASSEMBLY REMOVAL: *See Packard Shop Notes.*

MODEL IDENTIFICATION

SERIAL NUMBER: On left side of cowl (use Eng. No.).
ENGINE NUMBER: On upper left side of block between #2 and #3 cyls. ('41), #3 and #4 ('41 Clip., All '42). 1st No. D-300051 '41, D-400051 '41 Clip., E-300051 '42.

TUNE-UP

COMPRESSION: Ratio—6.41-1 (Standard head '41), 6.85-1 ('41 Clipper, All '42, Optl. HC head '41).
Pressure—110 lbs. (6.41), 118 (6.85) at 125 RPM.
VACUUM READING:—Steady 18-20" idling at 6 MPH.
FIRING ORDER:—1-6-2-5-8-3-7-4. See diagram.
SPARK PLUGS:—AC No. 104 or Champion Y4. 10 MM.
Gaps—.028". Limits .0255-.0305".
NOTE—Do not tighten these small plugs excessively. Tightening tension 50 inch lbs. maximum.
IGNITION: See Coil, Condenser, and Distributor.
Breaker Gap—.015".
Cam Angle—Closed 27° with .017" Breaker Gap.
Automatic Advance—11½° (IGP-4502), 10¾° (4502A) at 1550 RPM. Distributor degrees & RPM.
Vacuum Advance—6° (distr.) with 17" vacuum.
IGNITION TIMING See Ignition Timing.
Std. Setting 7° BTDC '41, 5° BTDC '41 Clipper & '42. Vibration dampener mark (correct degree mark ahead of #1UP.DC) at pointer on front of engine.
CARBURETION: See Carburetor & Carb. Equipment.
Idle Setting—Set idle adjusting screws ½-1½ turns open. Adjust for smooth idle. Idle speed 6 MPH (or 8-10 MPH for cars with Electromatic Clutch).
Float Level—5/32" from top of float to bowl cover with valve seated (remove gasket & invert to check).
Accelerating Pump—Inner Hole (Summer), Outer (winter).
Fuel Pump Pressure: 3¾ lbs. maximum.
MANIFOLD HEAT CONTROL:—Thermostatic coil type. Make certain that valve operates freely (valve must not bind or stick). Do not oil control.
VALVES: See Valve Timing.
Tappet Clearance:—.007" Int., .010" Exh. Warm. Adjusting screws are self-locking (no locknuts).
STARTING: See Battery, Starter, Generator, Regulator.

IGNITION

Ignition Switch:—Mitchellock Model 24-B, No. 8781.
Ignition Lock—Briggs & Stratton. B & S No. 50184.
Key Series—P1250 to P1500. **Groove**—No. 2.
COIL: Auto-Lite Model CE-4644 ('41), CE-4652 ('41-42), CE-4659 (Clipper). Service Coil (less switch & cable) CE-3224VS (for CE-4644), CE-3224US (CE-4652, 59)
Ignition Current—2.4 amperes idling, 5 stopped.
CONDENSER: Auto-Lite Part No. IG-2671K.
Capacity—.20-.25 microfarad..
DISTRIBUTOR: Auto-Lite IGP-4502 or IGP-4502A. Single breaker, 8 lobe cam, full automatic advance with vacuum spark control and Fuel Compensator.
Breaker Gap—Set at .015".
Cam Angle or Dwell—27° clsd., 18° open (.017" gap).
Breaker Arm Spring Tension—17-20 ounces.
Rotation—Counter-clockwise viewed from above.

Automatic Advance—IGP-4502

Distributor Degrees	R.P.M.	Engine Degrees	R.P.M.
Start	250	0	500
3	525	6	1050
6	800	12	1600
9	1210	18	2420
11.5	1550	23	3100

Automatic Advance—IGP-4502A

Distributor Degrees	R.P.M.	Engine Degrees	R.P.M.
Start	325	0	650
3	600	6	1200
5.3	800	10.6	1600
8	1175	16	2350
10.75	1550	21.5	3100

Fuel Compensator Adjustment—Permits 40° range of adjustment by loosening vacuum unit link screw at distributor quadrant. See Ignition Timing below.
Vacuum Spark Control—Separate unit mounted on hold-down plate and linked to adjusting quadrant on distributor. Provides additional advance at speeds above idling except when engine accelerated or operated with wide open throttle when spark retarded by return spring within unit.

Vacuum Advance

Distr. Degrees	Eng. Degrees	Vacuum (" of HG)
Start	0°	10"
1°	2°	11⅛"
3°	6°	13½"
5°	10°	15⅞"
6°	12°	17"

Removal:—Distributor mounted on left side of crankcase. To remove, disconnect vacuum line, take out screw in hold-down plate, lift entire unit out.

IGNITION TIMING

IGNITION TIMING:	Flywheel Deg.	Piston Position
'41 exc. Clip'r	7° BTDC	.0202" BTDC
'41 Clip'r, All '42	5° BTDC	.0103" BTDC

NOTE—Vibration dampener marked '#1UP.DC' at TDC with 15 (1°) graduations before this point.

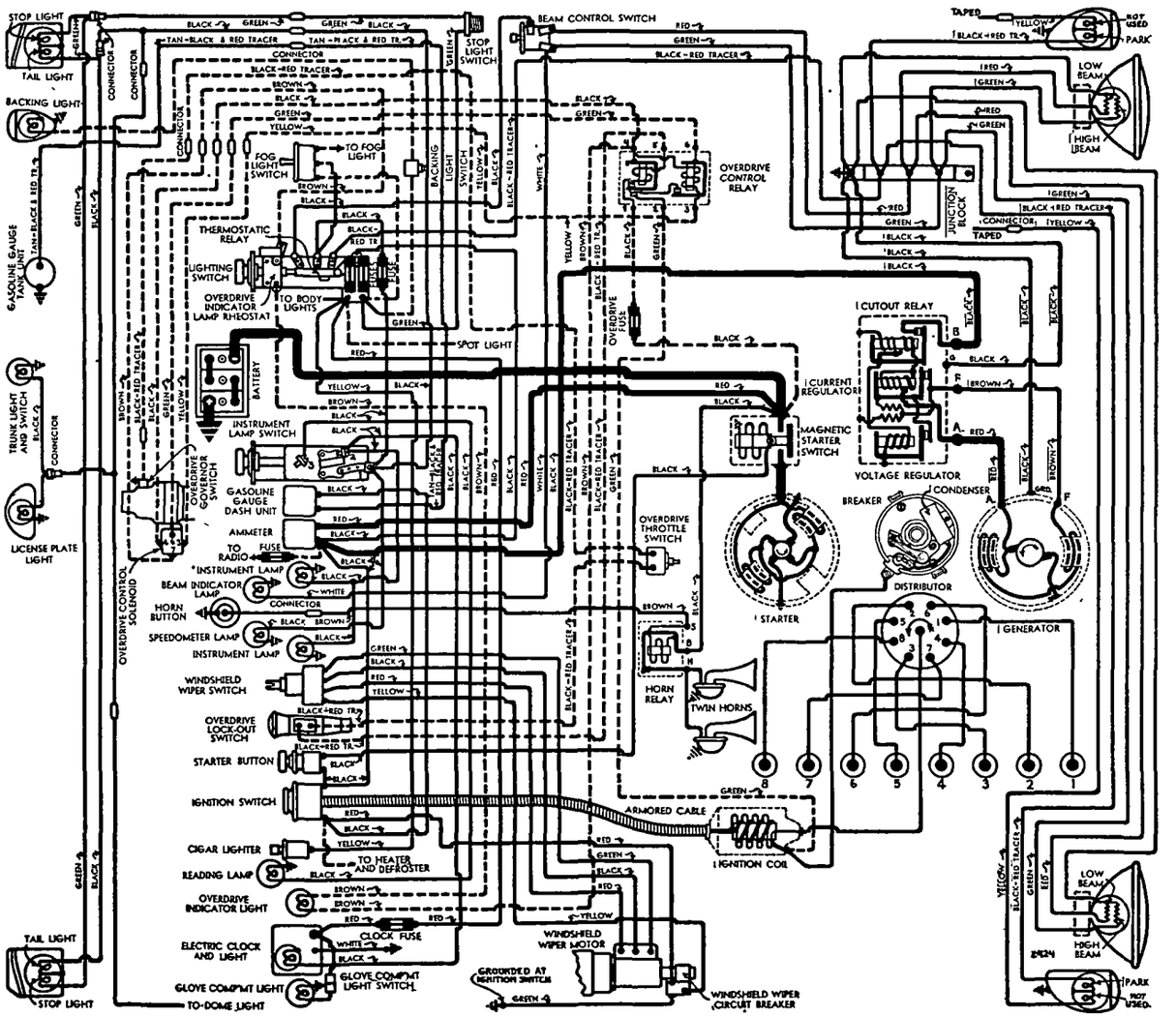

1941 MODELS (EXCEPT CLIPPER MODEL 1951)

Timing—With #1 piston on compression, turn engin over until piston reaches firing position with correct mark on dampener in line with pointer on chain case cover (see table above). Loosen vacuum unit link screw in distributor quadrant, rotate distributor until contacts begin to open, tighten screw. Check Fuel Compensator Setting (below).

Timing (Neon Timing Light)—Mark correct graduation on vibration dampener, clip neon timing light to #1 spark plug and direct light on vibration dampener, idle engine, adjust distributor as above.

Fuel Compensator Setting—Should be set for slight ping when accelerating engine with wide open throttle. To adjust, loosen vacuum unit link screw distributor quadrant, rotate one graduation at a time counter-clockwise (if ping too severe), clockwise (if no ping), until correct performance secured.

CARBURETOR

Carter WDO, 478-S ('41), 512-S ('41 Clipper, All '42). 1" dual downdraft types with Carter Climatic Control. #327 ('41), #371 ('42) cast on face of flange. ***For complete data, refer to Carburetor Index.***

Idle Adjustment—With engine warm and running at slow idle speed (choke valve wide open, fast idle inoperative), set throttle stopscrew for 6 MPH. idle speed. Adjust idle adjusting screw for each barrel (in succession) until engine fires smoothly (½-1½ turns open for each screw—turn screws in for leaner mixture). Readjust idle speed. Set at 8-10 MPH for cars equipped with Electromatic Clutch.

Accelerating Pump—2 holes in pump arm as follows Inner (min. stroke)—Hot weather or hi-test fuel. Outer (max. stroke)—Cold weather or low-test fuel. **Float level**—5/32" from top of float to bowl cover with valve seated (remove gasket & invert to check). **Metering Rods & Jets**—***See Carter Jet Table in Carburetor Section for complete data.***

Fast Idle:—Integral type (built-in carburetor). ***For complete data, refer to Carburetion Equip. Index.*** **Setting**—With choke valve closed adjust fast idle screw, .030" 478-S, .020" 512-S throttle opening.

Automatic Choke:—Carter Climatic Control. ***For complete data, refer to Carburetion Equip. Index.*** **Setting**—Thermostatic coil housing should be set 1 Notch Rich (478-S), at Index Mark (512-S).

Throttle Guard (1941 with Overdrive): Vacuum operated throttle kicker to prevent engine stalling when free-wheeling. Kicks in 4 MPH, out 9 MPH. ***For complete data, refer to Carburetion Equip. Index.*** **Setting**—Set gap between plunger and carburetor throttle lever at .020" (carburetor set for 6 MPH. slow idle speed), set spring tension adjusting screw 3/16" out beyond face of locknut.

CARB. EQUIPMENT

Air Cleaner: AC oil wetted type #1542094 (1941), 1529847 ('42). Optl. oil bath type #1542240 ('42). Use Replacement Filter Element Assembly: Type #3 (for 1529847), #1542245 (for 1542240).

Fuel Pump: AC Type 'AH'. #1537067 ('42). Exchange Pump #525 ('41-42). **Pressure**—3¾ lbs. ***For complete data, refer to Carburetion Equip. Index.***

Gasoline Gauge:—Stewart (Stewart-Warner) Electric. ***For complete data, refer to Carburetion Equip. Index.***

BATTERY

1941 Clipper: Auto Lite P-17ZR. ***Refer to 1941-42 Packard Super 8 article following for data.***

1942 Clipper: Auto-Lite Type P-15ZR or Willard Type SW-1D-100 (End-to-End Types). 6 volt, 15 plate, 100 ampere hour capacity (20 hr. rate). **Starting Capacity**—120 amperes (A-L), 122 amperes (Willard), for 20 minutes. **Zero Capacity**—300 amperes for 3.2 minutes. Five second voltage 4.2 volts (for both types). **Grounded Terminal**—Positive (+) to frame. **Dimensions**—Length 19⅜". Width 4". Height 9 3/16" (Auto-Lite), 8 15/16" (Willard). **Location**—On left side in engine compartment.

Other Models:—Auto-Lite Type PN-17P. 6 volt, 17 plate, 114 ampere hour capacity (20 hour rate). **Starting Capacity**—135 amperes for 20 minutes. **Zero Capacity**—300 amperes for 4.1 minutes. **Grounded Terminal**—Positive (+) to frame. **Dimensions**—Length 10¼". Width 7". Height 8⅝". **Location**—Under left front seat.

STARTER

Early '41: Auto-Lite MAW-4021. Arm. No. MAW-2006.
Late '41: Auto-Lite MAW-4024. Arm. No. MAW-2128.
1942: Auto-Lite MAW-4027. Armature # MAW-2128.
Drive—Outboard Barrel Bendix A-1718 (MAW-4021), A-1792 (for MAW-4024 and 4027 Starters).
Rotation—Counter-clockwise at commutator end.
Brush Spring Tension—42-53 ozs. (new brushes).
Cranking Engine—125 RPM, 175 amperes, 5.1 volts.

Performance Data

Torque	R.P.M.	Volts	Amperes
0 ft. lbs	4900	5.5	65
2.75 "	1480	5.0	200
5.45 "	820	4.5	300
8.50 "	400	4.0	400
11.55 "	110	3.5	500
11.5 "	Lock	3.0	505
18.0 "	Lock	4.0	670

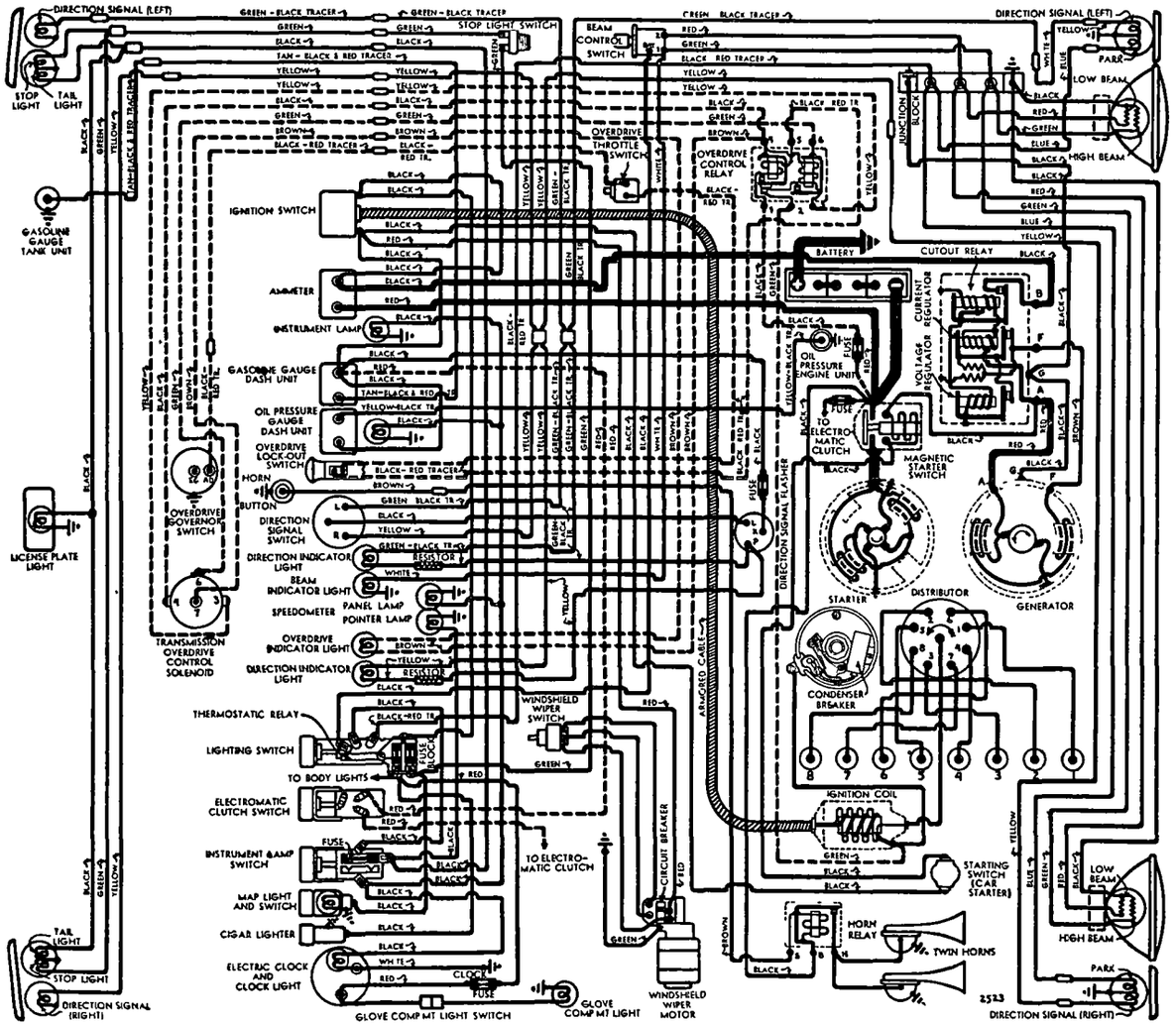

ALL 1942 MODELS & 1941 CLIPPER MODEL 1951

C NTINUED N NEXT PAGE

C NTINUED FR M PRECEDIN PAGE

Removal:—Flange mounted n left front face of flywheel housing. To remove, take out flange mounting screws, lift out starter and switch assembly.

Starting Switch: Auto-Lite SS-4017('41), SS-4025('42) Magnetic type. Mounted on starter and controlled by instrument pushbutton switch RBM 5350 (1941), by Carter Car Starter 192-11U('41 Clip'r, All 1942—accelerator pedal starting). *See Auto-Lite Magnetic Starter Control and Carter Car Starter articles in Electrical Equipment Section for data.*

GENERATOR

Auto-Lite GDZ-4801F ('41-42), GDZ-4801G ('41), Armature GDZ-2006F (Std.); GEB-4802C-2, Armature GEB-2006F (Taxicab & Police). Two brush (shunt) types with voltage and current regulation.
Charging Rate Adjustment—None. See Regulator.
Maximum Charging Rate—35 amperes, 8.0 volts hot. Actual charging rate controlled by Voltage Regulator and dependent on battery condition.

Performance Data—GDZ-4801F

Cold			Hot		
Amperes	Volts	R.P.M.	Amperes	Volts	R.P.M.
0	6.4	925	0	6.4	1000
4	6.6	1035	4	6.6	1120
8	6.75	1140	8	6.75	1235
12	6.95	1250	12	6.95	1350
16	7.15	1370	16	7.15	1460
20	7.3	1480	20	7.3	1590
24	7.5	1590	24	7.5	1730
28	7.7	1710	28	7.7	1900
32	7.9	1820	32	7.9	2090
*35	8.0	1900	35	8.0	2250

Performance Data—GEB-4802C-2

0	6.4	560	0	6.4	620
5	6.6	640	5	6.6	700
10	6.8	720	10	6.8	800
15	7.1	800	15	7.1	910
20	7.3	880	20	7.3	1040
25	7.5	980	25	7.5	1170
30	7.8	1080	30	7.8	1340
*35	8.0	1200	35	8.0	1520

*—Current Regulator setting.

Rotation—Counter-clockwise at commutator end.
Brush Spring Tension—53 ozs. max. (GDZ Gen.), 64-68 ozs. (GEB Generator) with new brushes.
Field Current—1.60-1.78 amperes at 6.0 volts (all).
Motoring Current—4.16-4.60 amperes (GDZ Gen.), 4.0-4.5 amperes (GEB Generator) at 6.0 volts.

Removal:—Pivot mounted at left side of engine at front. To remove, take out pivot and clamp bolts.

Belt Adjustment:—50 lbs. tension on spring scale hooked to generator frame, or ½" thumb-pressure deflection between generator and pump pulleys.

REGULATOR

Auto-Lite Model VRP-4002C (GDZ Gen.), VRP-4002D (GEB Gen.). Current-Voltage type on dash. *For complete data, refer to Electrical Equipment Index.* NOTE—Regulator cover sealed. Warranty void if seals broken.

Cutout Relay

Cuts In—6.4-6.6 volts, 920 generator RPM (cold).
Cuts Out—4.1-4.8 volts (approx. 4-6 amps. disch.).
Contact Gap—.015" Min. **Air Gap**—.031-.034" with contacts open (check at hinge end of core).

Voltage Regulator

Setting—7.2-7.5 volts at 70° F. See Electrical Equipment Section for settings at other temperatures.
Checking (without breaking seals) & Adjustment—*See Electrical Equipment Section for complete data.*
Contact Gap—.012" min. (armature against stop pin).
Air Gap—.048-.052" with contacts just opening.

Current Regulator

Setting—34-36 amperes (marked '35' on the cover).
Checking (without breaking seals) & Adjustment—*See Electrical Equipment Section for complete data.*
Contact & Air Gap—Same as for Voltage Regulator.

LIGHTING

LIGHTING:—**Headlamps**—Hall 'Sealed Beam' type. *For complete data, refer to Electrical Equipment Index.*
Headlamp Adjustment—Aim upper beam straight ahead (hot spot center 3" below lamp center height).
Beam Indicator—Red light on left side of speedometer. Lighted when Country (Upper) beams in use.
Direction Signal ('42)—*See Electrical Equip. Section.*

Switches

Lighting—Delco-Remy 1995021 (Clipper), 1995011 (Others), 1995019 (Others—with Overdrive, equipped with Overdrive Indic. Light dimmer rheostat which is controlled by light switch knob).
Beam Selector—Delco-Remy 1997001 or 1997002.

Bulb Specifications

Position	Candlepower	Mazda No.
Headlamps	Sealed Beam	
Front Dir. Sig. & Park	21-3	1154
Rear Dir. Signal	21	1129
Beam Indic., Glove Compt.	1	51
Instr., Speedometer Pointer	1½	55
Clock, Map Light	1½	55
Direction & Ovd. Ind.	1½	55
Stop & Tail	21-3	1154
Rear License	3	63
Dome & Courtesy	6	.81 ('41), 82 ('42)

MISC. ELECTRICAL

THERMOSTATIC RELAY:—**Delco-Remy.** On lighting switch. Contacts remain closed with 30 amperes, open in 3 minutes with 42 amps. @ 70° F. Not adj.

FUSES:—**Stop Light, Cigar Lighter and Accessories**—Two 20 ampere. On back of lighting switch.
Instrument & Tail Light—20 ampere. In connector near ammeter, or on Clipper instrum't light switch.
Overdrive & Electro-matic Clutch—Separate 30 ampere fuses. In feed wire from starter switch.
Clock—3 amp. ('41), 4 amp. ('42). In feed wire.
Direction Signal—9 ampere. In feed wire to flasher.
Windshield Wiper—No fuse (circuit-breaker).

HORNS:—**Sparton**—Vibrator type, air tone, twin horns operated by relay.
Horn Current—22-25 amperes (total both horns).
Horn Relay:—R-B-M Model 6006.
Contacts Close—3-4 volts (with relay upright).

ENGINE

ENGINE SPECIFICATIONS:—8 cylinder, 'L' head type.
Bore—3¼". **Stroke**—4¼".
Displacement—282 cu. ins. **Rated HP**—33.8.
Developed Horsepower—120 HP (for 1941 engines) 125 HP ('41 Clipper, All '42) at 3600 RPM.
Compression Ratio and Pressure—As follows:
6.41-1 (Std. '41) .....110 lbs. at 125 RPM
6.85-1 ('41 Clpr., '42, Optl. '41).....118 lbs. at 125 RPM
See Packard Shop Notes for Cylinder Head data.
Vacuum Reading—18-20" steady idling at 6 MPH.

PISTONS ('41-42 ALUMINUM): Aluminum alloy, autothermic strut, cam ground, tin plated. **Length** 3⅞".
Weight—17¼ oz. (stripped), 23⅛ (with rings & pin).
Removal—Pistons and rods removed from above.
Clearance—.0005-.001". See Fitting New Pistons.
Original Bore & Piston Sizes, Replacement Pistons:—*See Packard Shop Notes for sizes and markings.*
Fitting New Pistons:—Insert .0015" feeler ½" wide between piston and cylinder wall on side opposite slot. Pull to withdraw feeler should be 12-18 lbs.
Installing Pistons:—Slot toward valves.

PISTONS ('42 CAST IRON): Cast iron, cam ground pistons used on later cars. NOTE—Engines with cast-iron pistons carry suffix 'C' after Engine No.
Length—3 11/16".
Weight—22¾ oz. (stripped). 28⅝ (with rings & pin).
Removal—Pistons and rods removed from above.
Clearance—.0013-.00175" for Skirt.
Original Bore & Piston Sizes, Replacement Pistons:—*See Packard Shop Notes for sizes and markings.*

PISTON RINGS:—2 Ferrox coated compression rings (Perfect Circle—#1 K-200 upper inner edge beveled, #2 K-70 lower outer edge grooved), 1 oil control (X-90, 'C' wall '41, 'B' wall '42). CAUTION—Use 'K' type rings only (have greater wall thickness than S.A.E. type). *See Packard Shop Notes for Replacement (Triple Action) Piston Ring installation data.*

Ring	Width	End Gap	Side Clearance
Comp. (#1)	...0925-.0935"	.....007-.017"	.....0025-.003"
Comp. (#2)	...1240-.1235"	.....007-.017"	.....0025-.003"
Oil Control	.....1865-.186"	.....007-.015"	.....0015-.002"

Replacement Rings:—.005", .010", .020", .030", .040" O.S. Triple Action (packaged sets) std. & .020" oversize.

PISTON PIN:—**Diameter**—.875". **Length**—2 51/64". Pin floats in piston and rod, held by locking rings.
Pin Fit in Piston—Finger push fit with piston heated to 160°F (Al. Pistons), push fit in piston at 70° or press fit of 80-130 lbs. per sq. in. (C.I. Pistons).
Pin Fit in Rod Bushing—Finger push fit at 70° F.
Replacement Pins:—Std. and .003", .006" oversize.

CONNECTING ROD:—**Length** 7 11/16". **Weight** 31.6 ozs.
Upper Bearing (Piston Pin Bushing)—Split type. *See Packard Shop Notes for servicing data.*
Crankpin Bearing Diameter—2 3/32".
Lower Bearing—Shimless, precision, steel backed, babbitt lined type. Bearings furnished standard and .001", .002", .003", .015" undersize.
Clearance—.0005-.0015". **Endplay**—.004-.010".
Bearing Adjustment:—None (no shims). Replace bearings. Do not file rods or caps. *See Packard Shop Notes for 'Palnut' installation data.*
Installing Rods:—Oil squirt hole toward camshaft.

CRANKSHAFT:—5 bearings, 8 integral counterweights
Bearing Diameter—2¾".
Bearings—Interchangeable, shimless, precision, steel-backed, babbitt lined type. Furnished standard size and .001", .002" undersize.
Clearance—.0005-.0015".
Bearing Adjustment:—None (no shims). Replace bearings (upper halves can be 'rotated' in and out).
End Thrust:—By #3 bearing. **Endplay**—.003-.008".

CAMSHAFT:—5 bearing. Non-adjustable chain drive. *See Packard Shop Notes for Radiator & Fender assembly (unit) removal for work on front end of engine.*
Bearings—Shimless, precision, steel backed, babbitt lined type. **Clearance**—.001-.003".
End Thrust:—Taken by thrust plate in back of camshaft sprocket. **Endplay**—.0025-.006".
Timing Chain: Morse Type C-3682R or Ramsey. Width 1¼". Pitch .375". Length 21¾" or 58 links.

ENGINE

C NTINUED FR M PRECEDIN PA E

Camshaft Setting:—Install chain and sprockets together with '0' marks on sprockets adjacent and in line with straightedge across shaft centers.

VALVES:—	Head Diameter	Stem Diameter	Length
Intake	1 31/64"	33975"	5.619"
Exhaust	1⅜"	33975"	5.619"
	Seat Angle	**Lift**	**Stem Clearance**
Intake	30°	318"	002-.003"
Exhaust	45°	3175"	004-.005"

Valve Guides:—Pressed in block from above with upper end 31/32" below valve seat. Exhaust guides counter-bored on upper inner diameter to ⅜" diameter and ⅜" deep.

Valve Springs: Intake & Exhaust interchangeable.

Pressure—	1941	1942	Length
Closed	47-52 lbs.	52-57 lbs.	1 5/8"
Open	114-124 lbs.	119-129 lbs.	1 5/16"

NOTE—Serrated washer installed on top of springs.

Valve Lifters:—Mushroom type. Remove from below with camshaft out. Lifters furnished .001", .002", .005" oversize. Use Tool S.T. 5144 (piloted in valve guide) and ream for .005" oversize lifters. **Diameter**—.6235-.6240". **Clearance**—.0003-.0012".

VALVE TIMING

Tappet Clearance:—.007" Intake, .010" Exh. (warm & idling). NOTE—Self-locking tappet screw used. Remove right front fender plate for access to valves.

Valve Timing:—See Camshaft Setting above.

Intake Valves—Open 1° BTDC. Close 39° ALDC.

Exhaust Valves—Open 45° BLDC. Close 5° ATDC.

For .0125" Intake, .015" Exhaust tappet clearance.

Valve Timing Check—With .0125" tappet clearance #1 intake valve should open with #1 piston 1° or .0004" BTDC with 1st graduation before top dead center mark '#1 UP.DC' on vibration damper lined up with pointer (permissable variation 4° either way). Reset tappet clear. .007" (hot & idling).

LUBRICATION

LUBRICATION:—Pressure (pump on right of engine). *See Packard Shop Notes for Oil Pump installation.*

Normal Oil Pressure:—40 lbs. at 45 MPH.

Oil Pressure Relief Valve:—Mounted on pump cover. Not adjustable. Spring pressure 14 lbs. ± 2 oz. @ 1⅞".

Oil Pressure Gauge ('42): Stewart-Warner Electric.

Crankcase Capacity: 6 qts. ('41), 5½ qts. ('42).

COOLING

COOLING SYSTEM:—Capacity—17 quarts.

Pressure Valve—In filler cap. Opens at 4½ lbs. (Std.), 12 lbs. (with Air Conditioning equipment).

Water Pump:—Packless, sealed ball-bearing type. *See Water Pump Section for complete data.*

Removal—Remove fan belt, disconnect pump hose, take out pump mounting screws, lift out pump.

Thermostat:—Harrison. In cylinder head outlet.

Setting—Starts to open 147½° (135° for radiator shutter thermostat used on 1901A).

CLUTCH

CLUTCH:—Long Model 10CF-CI. Semi-centrifugal, single plate, dry disc type. *See Clutch Section for data.*

Facings—Woven (Pass.—US Asbestos 1133 G, Com'l. —Hycoe DV3112A), 2 required. Inside Diameter 6". Outside Diameter 10". Thickness .125".

Adjustment:—Adjust nut on pedal rod (at clutch fork) 1½-1¾" free travel (2" Electromatic Clutch).

Removal:—Remove transmission (see Transmission Removal following) and flywheel housing lower cover. Disconnect and remove pedal rod, clutch throw-out bearing. Remove clutch cover screws (release tension evenly) and lower assembly out.

ELECTROMATIC CLUTCH

ELECTROMATIC CLUTCH: Vacuum electric type Optl. *See Clutch Section for complete data.*

TRANSMISSION

TRANSMISSION:—Own Make. Constant-mesh, helical, ball-bearing mounted low speed gear (sliding spur reverse gear). Synchro-mesh (second & high). *See Transmission Section for complete data.*

Transmission Control:—Own Remote Control type. *See Transmission Section for complete data.*

Removal:—Disconnect shifter rods, speedometer cable, hand brake cable at equalizer, engine ground strap, overdrive cable and solenoid wires (if used), front universal (block drive shaft up against floor pan) and rubber bearing at rear of overdrive. Support rear of engine with jack and unbolt cross member. Disconnect clutch retractor spring & fore and aft restraint rod. Take out transmission-to-flywheel housing screws, remove assembly.

OVERDRIVE

OVERDRIVE: Warner Type R9 (Kick-down). Model AS2-R9 overdrive unit with electrical control. *See Transmission Section for complete data.*

►**Overdrive Lock-up in Reverse Correction for Clipper:** Install 1948 Safety Switch (Kit No. 394484). *See 1948 Packard Car Pages for Overdrive Safety Switch description and Car Wiring Diagram showing Overdrive Circuit with Safety Switch installed.*

Overdrive Solenoid—Delco-Remy Model 1118005.

Overdrive Indicator Light—Green light on right side of speedometer dial. Lighted whenever overdrive is ready to engage (light goes out when engaged).

Throttle Switch—Cole-Hersee. Packard No. 347946. Adjust tappet screw on throttle lever to just contact switch plunger with throttle valve wide open.

Governor Switch—Bendix No. 364782 (1941), Packard #367335 '42, 377787 '42 Electromatic Clutch.

Control Relay Delco-Remy 1116801 '41, 1116823 '42.

Removal: Procedure same as for regular transmission (see above) plus the following: Disconnect control cable, solenoid wires, and overdrive rear mounting.

UNIVERSALS

UNIVERSAL JOINTS: Mechanics 3CR. Needle bearings. *See Universals Section for complete data.*

►*CAUTION*—Rear universal flange controls pinion bearing pre-load. *For complete data, refer to the Rear Axle Section for Packard Rear Axle article.*

REAR AXLE

REAR AXLE:—Own Make. Semi-floating, Hypoid gear type with Hotchkiss drive. Cover welded in place. *See Rear Axle Section for complete data.*

Ratios—	Std.	Overdrive	Optional
'41 Clpr., Others	4.09-1	4.36-1	
'42 Clipper	4.1-1	4.3-1	
Long WB	4.7-1	4.9-1	5.22-1

Backlash—.003-.005". Screw adjustment.

Removal:—Remove wheel, hub, and brake backing plate assembly. Withdraw axle shafts. Disconnect rear universal joint and drop drive shaft. Remove carrier-to-housing bolt nuts, withdraw carrier.

Wheel Bearing Adjustment—Endplay controlled by shims between flanged end of housing and brake backing plate. Unbolt backing plate and clips holding brake tube to housing. Add or remove shims (endplay up to .050" can be adjusted to desired .006" at one wheel). **Endplay**—.004-.007".

SHOCK ABSORBERS

SHOCK ABSORBERS:	Front	Rear
'41 Clipper	Delco 1946-J, K	Monroe 371196
'42 Clipper	Delco 1946-J, K	Delco 1020-V
'42 Clipper	Delco 1946-J, K	Monroe 379465
Others	Delco 1966-C, D	Delco 1021-V
Long WB Exp	Delco 1966-C, D	Delco 1130-W

Double acting (Front), Direct acting (Rear).

Fifth Shock Absorber (Stabilizer): Clipper: Monroe 373935 '41, 956790 '42. Others: Houde NFT. *See Shock Absorber Section for complete data.*

FRONT SUSPENSION

Front Suspension:—Independent 'Safe-T-fleX' type (parallelogram type—coil springs & torque arms). NOTE—No torque arms used on Clipper Suspension. *See Front Suspension Section for complete data.*

NOTE—Frame height must be set first before checking Caster and Camber.

Frame Height—With car on level floor, distance from floor to top of frame side rail at front wheel center-line 18⅛" (1901), 18¾" (1901A), equal on both sides within 1/16-5/16" (1942 except Clipper) with car loaded.

	Kingpin Incl.	Caster	Camber
1941	2½°	½° ± ½°	½° (½-1¼°)
1942	2½°	¼°	0° (—¼° + ¾°)
Clipper	5°35'	Neg 1° ± ½°	0° ± ½°

Toe In—0-1/16" measured 10" up from floor.

Steering Geometry—With the outer wheel turned 20°, inner wheel 23½° (1941-42), 23° ± ½° (Clipper).

STEERING GEAR

Steering Gear: Packard (Gemmer design Model 330). Worm-and-Roller type with idler arm on right frame rail (Clippers), center steering (Others). Refer to Gemmer Model 330 article. *See Steering Gear Section for complete data.*

BRAKES

BRAKES:—Service. Bendix hydraulic, duo-servo, single anchor type without eccentric adjustment. Hand lever applies rear wheel service brakes. *See Brake Section for complete data.*

►**Model 1901A Note**—*Refer to 1941-42 Super Eight pages following for all brake data on these models.*

Drums—Centrifuse. Diameter 12".

Lining—Molded (Marshall 2201). Width 1¾". Thick. 3/16". Length 11½" (primary shoe), 13" (secondary).

Clearance—.015" at both ends of secondary shoe with primary shoe forced out against drum.

Hand Brake:—See Service Brake (above).

MISC. MECHANICAL

WINDSHIELD WIPER: Stewart-Warner No. 645-H (Clipper), 645-E (Others). Electric type. 'Klixon' circuit breaker mounted on or near wiper motor. *See Miscellaneous Section for complete data.*

Power Operated Convertible Top: Vacuum Power type. *See Miscellaneous Section for complete data.*

Power Window Regulators: Hydro-Electric type. *See Miscellaneous Section for complete data.*

Window Lift Relay—Auto-Lite No. HRD-4001.

CLIPPER HOOD LOCK DATA & FRONT SHEET METAL ASSEMBLY REMOVAL: *See Packard Shop Notes.*

MODEL IDENTIFICATION

SERIAL NUMBER:—On left side of cowl (use Eng. No.).

ENGINE NUMBER: On left side of block between #3 & #4 cylinders. First number: D-500051 ('160' 1941), CD-500051 ('180' 1941), E-500051 (1942).

TUNE-UP

COMPRESSION: Ratio—6.45-1 (Std. iron hd., for '41), 6.85-1 (Std. iron '42, Optl. HC '41).
Pressure—110 lbs. at 125 RPM (for 6.45-1 hd.), 133 lbs. at 300 RPM (for 6.85-1 head).

VACUUM READING:—Steady 18½" idling at 6 MPH.

FIRING ORDER:—1-6-2-5-8-3-7-4. See diagram.

SPARK PLUGS:—AC No. 104 or Champion Y4. 10 MM. **Gaps**—.028". Limits .0255-.0305".
NOTE—Do not tighten these small plugs excessively. Tightening tension 50 inch lbs. maximum.

IGNITION: See Coil, Condenser, and Distributor.
Breaker Gap—.015".
Cam Angle—Closed 27° with .017" Breaker Gap.
Automatic Advance—11½° max. at 1800 RPM, distr.
Vacuum Advance—5½° (distr.) with 16" vacuum.

IGNITION TIMING See Ignition Timing.
Std. Setting—3½-5° BTDC ('41 Std. hd.), 2½-4° BTDC ('41 HC hd.), 4° BTDC (1942). Vibration dampener mark (correct degree mark ahead of 'UDC') aligned with pointer at front of engine.

CARBURETION: See Carburetor & Carb. Equipment.
Idle Setting—Set idle adjusting screws 1-1⅛ turns open (Stromberg '41), ½-1½ turns (Carter '42). Adjust for smooth idle. Idle speed 6 MPH (or 8-10 MPH on cars with Electromatic Clutch).
Float Level—Fuel level should be ⅝" below top edge of bowl (Stromberg '41), or 5/32" from top of float to bowl cover with gasket removed and valve seated (Carter ('42).
Accelerating Pump—Normal setting—Outer hole max. for Stromberg, inner hole min. for Carter.
Fuel Pump Pressure: 4 lbs. (AJ '41), 3¾ lbs. (AH '42).

MANIFOLD HEAT CONTROL:—Thermostatic coil type. Make certain that valve operates freely (valve must not bind or stick). Do not oil control.

VALVES: See Valve Timing.
Tappet Clearance None in service, hydraul. take-up.

STARTING: See Battery, Starter, Generator, Regulator.

IGNITION

Ignition Switch:—Mitchellock Model 24-B, No. 8779.
Ignition Lock—Briggs & Stratton. B & S No. 50184.
Key Series—P1250 to P1500. **Groove**—No. 2.

COIL: Auto-Lite Model CE-4645 ('41), CE-4654 ('41-42), CE-4659 (Clipper). Service Coil (less switch and cable) CE-3224RS (for CE-4645), CE-3224ABS (CE-4654), CE-3224US (for CE-4659). On left side engine.
Ignition Current—2.4 amperes idling, 5 stopped.

CONDENSER: Auto-Lite Part No. IG-2671J.
Capacity— 20-.25 microfarad.

DISTRIBUTOR: Auto-Lite Model IGT-4102 ('41, Early '42), IGT-4203 (Late '42). Single breaker, 8 lobe cam, full automatic advance with vacuum spark control and Fuel Compensator.
Breaker Plate Identification—Maximum vacuum advance limited by slot (plate marked 5½).
Breaker Gap—Set at .015".
Cam Angle or Dwell—27° clsd., 18° open (.017" gap).
Breaker Arm Spring Tension—17-20 ounces.
Rotation—Counter-clockwise viewed from the top.

Automatic Advance

Distributor Degrees	Distributor R.P.M.	Engine Degrees	Engine R.P.M.
Start	250	0	500
3	475	6	950
6	700	12	1400
9	1300	18	2600
11½	1800	23	3600

Fuel Compensator—Manual adjustment at distributor providing 10° advance or retard from center '0' position. See Ignition Timing for setting.

Vacuum Spark Control—Integral type (on distributor, linked directly to breaker plate). Provides additional advance at speeds above idling except when engine accelerated or operated with wide open throttle (spark retarded by return spring in unit).

Vacuum Advance

Distr. Degrees	Eng. Degrees	Vacuum (" of HG)
Start	0°	7"
1°	2°	8⅝"
3°	6°	12"
5½°	11°	16"

Distributor Removal:—Mounted on left side of crankcase. To remove, disconnect vacuum line and take out hold-down screw in advance arm.

IGNITION TIMING

IGNITION TIMING:	Flywheel Deg.	Piston Position
'41 Std. head	3½-5° BTDC	.0053-.0110" BTDC
'41 HC head	2½-4° BTDC	.0027-.0070" BTDC
1942	4° BTDC	.0070" BTDC

NOTE—Vibration dampener marked 'UDC' at TDC with 15 (1°) graduations before this point.

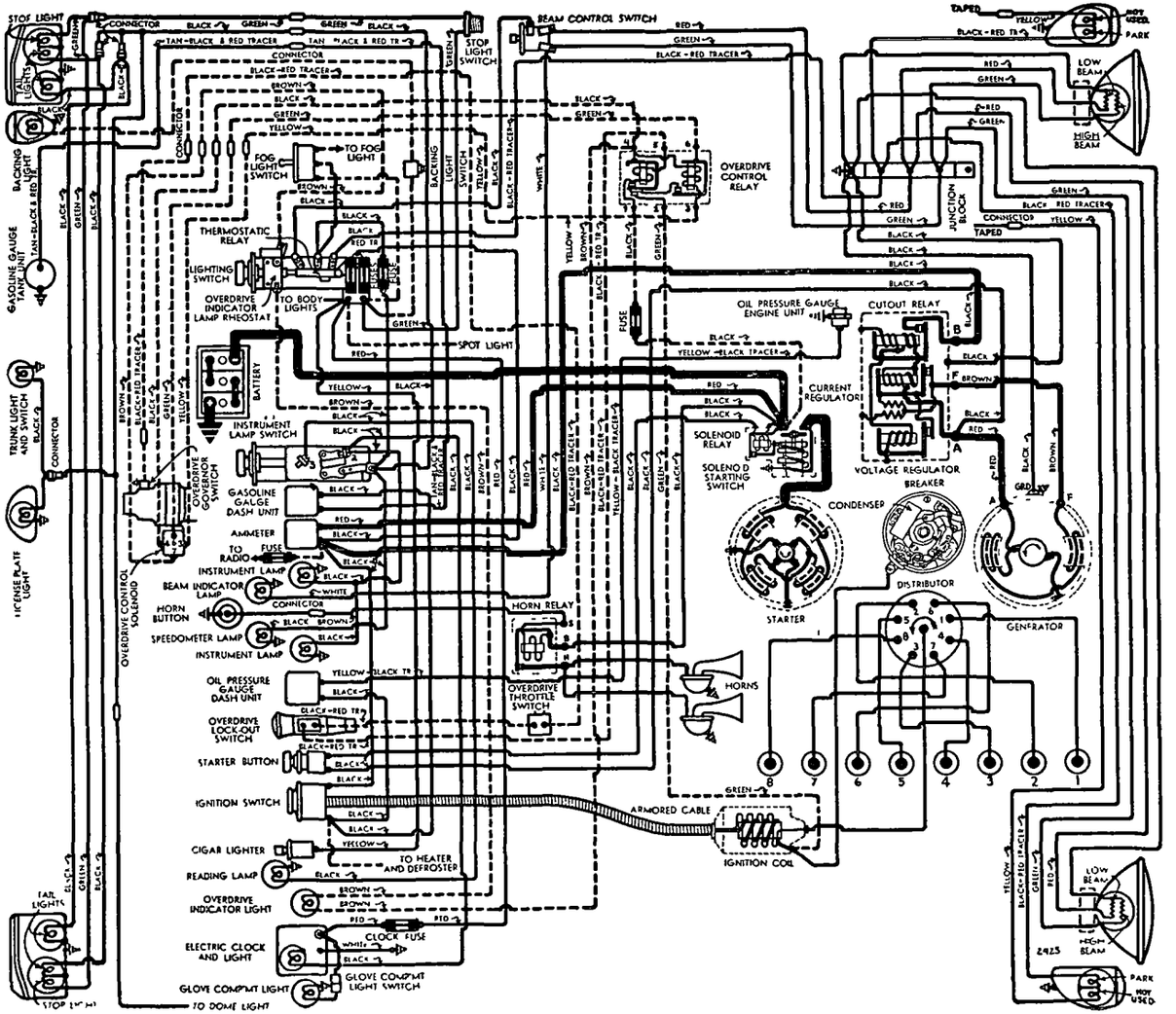

1941 MODELS

Timing—Loosen thumbnut, set Fuel Compensator pointer at '0', tighten thumbnut. With #1 piston on compression, turn engine over until piston reaches firing position (see table above), stop when correct graduation on vibration dampener at front of engine lines up with pointer on chain case cover. Loosen advance arm clamp bolt, rotate distributor until contacts begin to open, tighten clamp bolt, see that rotor opposite #1 segment in distributor cap, check Fuel Compensator setting.

Timing (Neon Timing Light)—Mark vibration dampener with white paint at proper point, idle engine below 500 RPM, adjust distributor (above).

Fuel Compensator Setting—Should be set for slight ping when accelerating with wide open throttle. To adjust, loosen thumbnut, rotate distributor counter-clockwise (if ping too severe), clockwise (if no ping noted), tighten thumbnut and recheck performance.

CARBURETOR

1941—Stromberg Model AAV-26. Code marked 10-44, 10-44A, or 10-44B. 1¼" dual downdraft type with Automatic Choke. ***For recommended change to improve idling performance on first carburetors and complete data on all models, refer to Carburetor Section for Stromberg AAV-26 carburetor article.***

1942—Carter Type WDO, Model 531-S. 1¼" dual downdraft type with Carter Climatic Control and Carter Car Starter. ***See Carburetor Section for data.***

Idle Adjustment—With engine warm and running at slow idle speed (choke valve wide open, fast idle inoperative), set throttle stopscrew for 6 MPH idle speed. Adjust idle adjusting screw (one for each barrel) in succession until engine fires smoothly. (1-1⅛ turns open Stromberg '41, ½-1½ turns open Carter '42). Readjust idle speed. NOTE—On cars with Electromatic Clutch set idle speed 8-10 MPH.

Accelerating Pump Setting—Two holes provided for pump link connection. Set as follows:
Outer (max. stroke)—Normal Setting (Stromberg).
Inner (min. stroke)—Normal Setting (Carter).

Float Level (Stromberg)—Fuel level ⅝" below top edge of bowl with engine idling (3 lbs. pressure).
(Carter)—5/32" from top of float to bowl cover with valve seated (remove gasket & invert to check).

Metering Jets—*See Stromberg Jet Table or Carter Downdraft Jet Table in Carburetor Section.*

Fast Idle: Stromberg AAV-26 type ('41 Stromberg), Carter Dual Carburetor Type ('42 Carter).
For complete data, refer to Carburetion Equip. Index.

Setting (Stromb'g)—Hold throttle stopscrew against high lobe of fast idle cam, move choke valve toward closed position as far as possible, check choke valve opening. Adjust by bending fast idle connector rod for 7/64" choke valve opening.

Setting (Carter)—Adjust fast idle screw for .023-.028" throttle opening with choke closed.

Automatic Choke: Stromberg AAV-26 type or Carter Climatic Control.
For complete data, refer to Carburetion Equip. Index.
Setting—'V' mark on thermostat cover lined up with mark on housing (Stromberg). Set Coil Housing 1 Notch Rich (Carter).

Throttle Guard (1941 with Overdrive): Vacuum operated throttle kicker to prevent engine stalling when free-wheeling. Kicks in 4 MPH, out 9 MPH.
For complete data, refer to Carburetion Equip. Index.

Setting—Set gap between plunger and carburetor throttle lever at .020" (carburetor set for 6 MPH slow idle speed), set spring tension adjusting screw 7/32" out beyond face of locknut.

CARB. EQUIPMENT

Air Cleaner: AC oil bath type Std. #1542095 ('41), #1543318 ('42). Use Replacement Filter Element Assembly #1542261 (for #1543318).

Fuel Pump: AC Type 'AJ' (1941), Type 'AH' #1537700 ('42). Exchange No. 537 (for 1941), No. 545 (for '42).
For complete data, refer to Carburetion Equip. Index.

Gasoline Gauge:—Stewart (Stewart-Warner) Electric.
For complete data, refer to Carburetion Equip. Index.

BATTERY

Clipper Models: Auto-Lite Type P-17ZR. (End-to End type). 6 volt, 17 plate, 120 ampere hour capacity
Starting Capacity—138 amperes for 20 minutes.
Zero Capacity—300 amperes for 4.1 minutes.
Grounded Terminal—Positive (+) to frame.
Dimensions—Length 19⅜". Width 4". Height 9 3/16".
Location—On left side in engine compartment.

Other Models:—Auto-Lite Type PN-17P. 6 volt, 17 plate, 114 ampere hour capacity (20 hour rate).
Starting Capacity—135 amperes for 20 minutes.
Zero Capacity—300 amperes for 4.1 minutes.
Grounded Terminal—Positive (+) to frame.
Engine Ground—Strap from transmission to frame.
Dimensions—Length 10¼". Width 7". Height 8⅝".
Location—Under left front seat.

STARTER

1941—Auto-Lite MAX-4041. Armature MAW-2069.
1942—Auto-Lite MAX-4052. Armature MAW-2069.
Drive—Overrunning clutch (solenoid pinion shift) through reduction gears.
Rotation—Clockwise at commutator end.
Brush Spring Tension—42-53 ozs. (new brushes).

CONTINUED ON NEXT PAGE

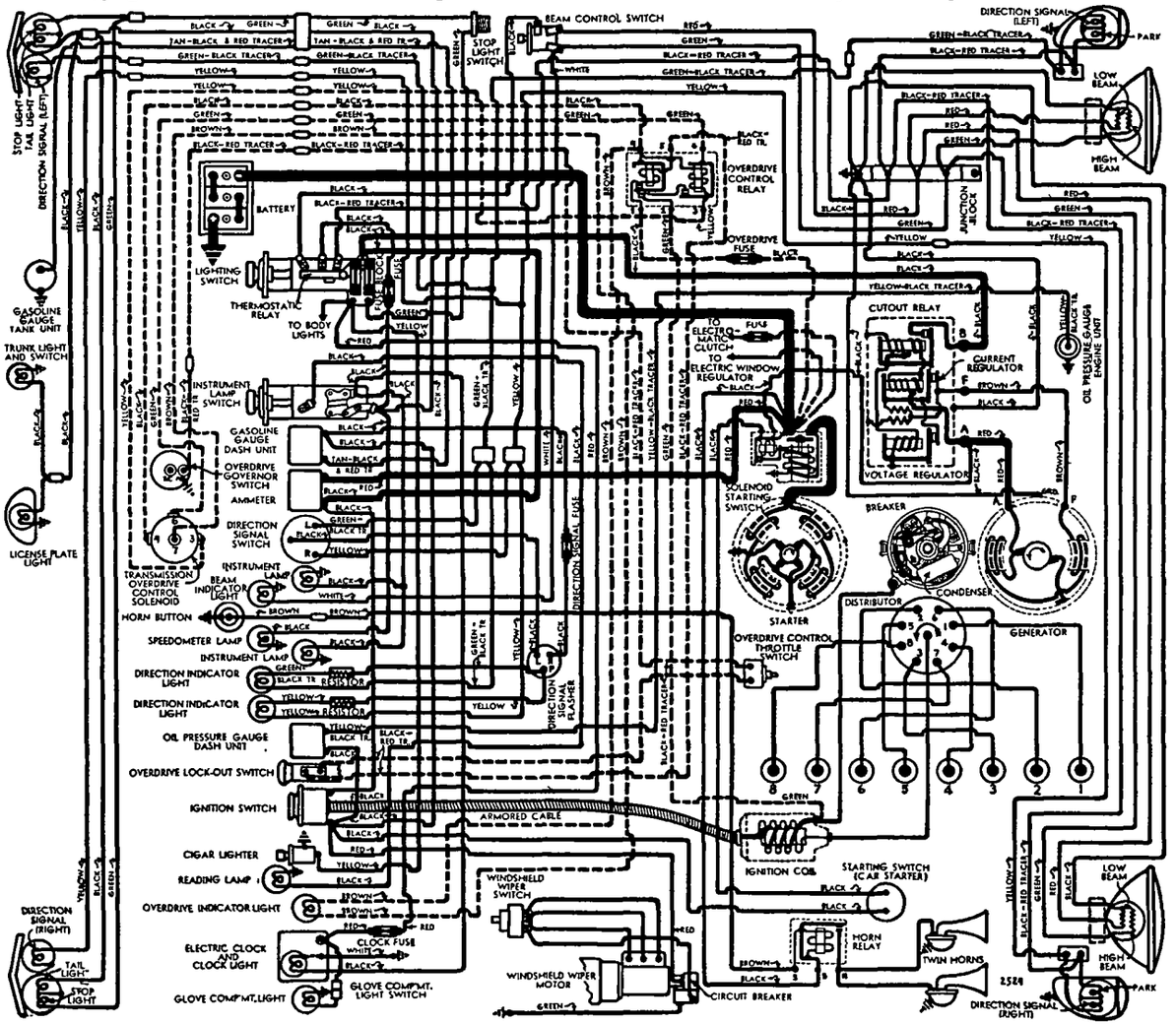

1942 MODELS

CONTINUED FROM PRECEDING PAGE

Performance Data

Torque	**R.P.M.	Volts	Amperes
0 ft. lbs.	2695	5.5	77
33.5 "	Lock	3.0	652
45.9 "	Lock	4.0	906

**—Pinion shaft R.P.M.

Removal:—Flange mounted on left front face of flywheel housing. To remove, take out flange mounting screws, lift out starter and switch assembly.

Starting Switch: Auto-Lite SS-4205 Solenoid type. Mounted on starter and controlled through relay by pushbutton switch RBM 5380 (1941), by Carter Car Starter No. 192-11U (1942—accelerator pedal starting). *See Auto-Lite Solenoid Starter Control and Carter Car Starter in Electrical Equip. Section.*

GENERATOR

Auto-Lite Mod. GEA-4802A-1. Armature GDZ-2006F. Two-brush type with Current-Voltage control.

Charging Rate Adjustment—None. See Regulator.

Maximum Charging Rate—35 amperes (hot or cold), 8.0 volts, 1570 RPM and above with load or discharged battery (Current Regulator setting).

Performance Data

Cold Amperes	Volts	R.P.M.	Hot Amperes	Volts	R.P.M.
0	6.4	850	0	6.4	865
4	6.6	950	4	6.6	975
8	6.75	1050	8	6.75	1075
12	6.95	1150	12	6.95	1180
16	7.1	1250	16	7.1	1300
20	7.3	1345	20	7.3	1425
24	7.5	1440	24	7.5	1560
28	7.7	1540	28	7.7	1695
32	7.85	1635	32	7.85	1850
35	8.0	1700	35	8.0	1970

Rotation—Counter-clockwise at commutator end.

Brush Spring Tension—53 ozs. max. (new brushes).

Field Current—1.57-1.75 amperes at 6.0 volts.

Motoring Current—4.45-4.9 amperes at 6.0 volts.

Removal:—Pivot mounted at left front of engine. To remove, take out pivot and clamp bolts.

Belt Adjustment:—Swing generator out until 50 lb. reading secured on scale hooked to clamp bolt lug parallel to clamp link or until belt deflection midway between generator and pump pulleys is ½".

REGULATOR

Auto-Lite Model VRP-4002-C. Current-Voltage Type. Mounted in single case on engine side of dash. *For complete data, refer to Electrical Equipment Index.* NOTE—Regulator cover sealed. Warranty void if seals broken.

Cutout Relay

Cuts In—6.4-6.6 volts, 780 generator RPM (cold).

Cuts Out—4.1-4.8 volts (approx. 4-6 amps. disch.).

Contact Gap—.015" minimum.

Air Gap—.031-.034" with contacts open (check at hinge end of core).

Voltage Regulator

Setting—7.2-7.5 volts at 70°F.

To Check (without breaking seals)—Connect ammeter in charging line at regulator 'B' terminal (use short heavy leads), voltmeter between 'B' terminal and ground. Operate generator at speed equivalent to 30 MPH., charging fully charged battery, until voltage steady. Voltage should agree with setting.

To Adjust (with cover removed)—Change regulator armature spring tension by bending lower spring hanger slightly. See Electrical Equipment Section.

Contact Gap—.012" min. (armature against stop pin).

Air Gap—.048-.052" with contacts just opening.

Current Regulator

Setting—34-36 amperes (marked '35' on the cover).

To Check (without breaking seals)—Connect test meters as for voltage check (above). Operate generator at speed equivalent to 30 MPH. charging battery, turn on car lights and accessories or connect load (bank of headlamp bulbs etc.) between ammeter and battery so that generator charges at peak rate and Current Regulator operates. Current reading should agree with setting given above.

Adjustment, Contact Gap, Air Gap—Same as for Voltage Regulator (above).

LIGHTING

LIGHTING:—Headlamps—Hall 'Sealed Beam' type. *For complete data, refer to Electrical Equipment Index.*

Headlamp Adjustment—Aim upper beam straight ahead (hot spot center 3" below lamp center height).

Beam Indicator—Red light on left side of speedometer. Lighted when Country (upper) beam in use.

Direction Signal ('42)—*See Electrical Equip. Section.*

Switches

Lighting—Delco-Remy 1995021 (Clipper), 1995011 (Others), 1995019 (Others—with Overdrive, equipped with Overdrive Indic. Light dimmer rheostat which is controlled by light switch knob).

Beam Selector—Delco-Remy 1997001 or 1997002.

Bulb Specifications

Position	Candlepower	Mazda No.
Headlamps	Sealed Beam	
Front Dir. Sig. & Park	21-3	1154
Rear Dir. Signal	21	1129
Beam Indic., Glove Compt.	1	51
All Other Instrument Lights	1½	55
Stop & Tail	21-3	1154
Rear License	3	63
Dome & Courtesy	6	.81 ('41), 82 ('42)

MISC. ELECTRICAL

THERMOSTATIC RELAY:—Delco-Remy. On lighting switch. Contacts remain closed with 30 amperes, open in 3 minutes with 42 amps. @ 70° F. Not adj.

FUSES:—Stop Light, Cigar Lighter and Accessories—Two 20 ampere. On back of lighting switch.

Instrument & Tail Light—20 ampere. In connector near ammeter, or on Clipper instrum't light switch.

Overdrive & Electro-matic Clutch—Separate 30 ampere fuses. In feed wire from starter switch.

Clock—3 amp. ('41), 4 amp. ('42). In feed wire.

Direction Signal—9 ampere. In feed wire to flasher.

HORNS:—Sparton—Vibrator type, air tone, twin horns operated by relay.

Horn Current—33-36 amperes (total both horns).

Horn Relay:—R-B-M Model 6006.

Contacts Close—3-4 volts (with relay upright).

ENGINE

ENGINE SPECIFICATIONS:—8 cylinder, 'L' head type.

Bore—3½". **Stroke**—4⅝".

Displacement—356 cu. ins. **Rated HP**—39.2.

Developed Horsepower 160 '41, 165 '42 at 3600 RPM.

Compression Ratio and Pressure—As follows:

6.45-1 iron (Std. '41)—110 at 125 RPM

6.85-1 iron (Std. '42, Optl. '41)—133 at 300 RPM

See Packard Shop Notes for Cylinder Head data.

Vacuum Reading—18½" steady idling at 6 MPH.

PISTONS:—Aluminum alloy, autothermic, strut type, tin plated, cam ground type. **Length**—3⅞".

Weight—20¼ ozs. (stripped), 26¾" (with rings&pin).

Removal—Pistons and rods removed from above.

Clearance—.0005-.001". See Fitting New Pistons.

Original Bore & Piston Sizes, Replacement Pistons:—*See Packard Shop Notes for sizes and markings.*

Fitting New Pistons:—Insert .0015" feeler ½" wide between piston and cylinder wall on side opposite slot. Pull to withdraw feeler should be 12-18 lbs.

Installing Pistons:—Slot toward valves.

PISTON RINGS:—2 Ferrox coated compression rings (Perfect Circle—#1 K-200 upper inner edge grooved, #2 K-70 lower outer edge grooved), 1 oil control (X-90 'C' wall) ring, all above pin. CAUTION—Use 'K' type rings only (have greater wall thickness than S.A.E. type). *See Packard Shop Notes for Replacement (Triple Action) Piston Ring installation data.*

Ring	Width	End Gap	Side Clearance
Comp. (#1)	.0930-.0935"	.007-.017"	.0025-.003"
Comp. (#2)	.1240-.1235"	.007-.017"	.0025-.003"
Oil Control	.1865-.186"	.007-.015"	.0015-.002"

Replacement Rings:—.005", .010", .020", .030", .040" O.S. Triple Action (packaged sets) std. & .020" oversize.

PISTON PIN:—Diameter—.875". **Length**—3 1/64". Pin floats in piston and rod, held by locking rings.

Pin Fit in Piston—Finger push fit (piston at 160°).

Pin Fit in Rod Bushing—Finger push fit at 70° F.

Replacement Pins:—Std. and .003", .006" oversize.

CONNECTING ROD:—Length 9¼". **Weight** 42.0 ozs.

Upper Bearing (Piston Pin Bushing)—Split type. *See Packard Shop Notes for servicing data.*

Crankpin Bearing Diameter—2¼".

Lower Bearing—Shimless, precision, steel backed, babbitt lined. Furn. Std., .001", .002", .003", .015" US. **Clearance**—.0005-.0015". **Endplay**—.004-.010".

Bearing Adjustment:—None (no shims). Replace bearings. Do not file rods or caps.

Installing Rods:—Oil squirt hole toward camshaft.

CRANKSHAFT:—9 bearings, 8 bolted counterweights

Bearing Diameter—2¾".

Bearings—Interchangeable, shimless, precision, steel-backed, babbitt lined type. Furnished standard, 001", 002" undersize. **Clearance**—.0005-.0015".

Bearing Adjustment:—None (no shims). Replace bearings (upper halves can be 'rotated' in and out).

End Thrust:—By #5 bearing. **Endplay**—.003-.008".

CAMSHAFT:—8 bearing. Non-adjustable chain drive. *See Packard Shop Notes for Radiator & Fender Assembly (unit) removal for work on front end of engine.*

Bearings—Shimless, precision, steel-backed, babbitt lined type. **Clearance**—.001-.003".

End Thrust:—Taken by thrust plate in back of camshaft sprocket. **Endplay**—.0025-.006".

Timing Chain:—Morse Type C-3682R (No. 765). Width 1¼". Pitch .375". Length 62 links or 23¼".

Camshaft Setting:—Install chain and sprockets together with '0' marks on sprockets adjacent and in line with a straightedge across the shaft centers.

VALVES:—	Head Diameter	Stem Diameter	Length
Intake	1.670"	.33975"①	6.212"②
Exhaust	1 7/16"	.33975"①	6.212"②

	Seat Angle	Lift	Stem Clearance
Intake	30°	.340"	.002-.003"
Exhaust	45°	.340"	.004-.005"

①—For '42: .34025". ②—For '42: 6.224".

Valve Guides:—Pressed in block from above with upper end 31/32" below valve seat. Exhaust guides upper end counterbored to ⅜" diameter, ⅜" deep.

Valve Springs:—Washer used on top of each spring.

	Spring Pressure	Spring Length
Valve Closed	55-61 lbs.	1¾"
Valve Open	130-140 lbs.	1 13/32"

Valve Lifters:—Wilcox-Rich 'Zero-lash' type hydraulic lifters (mushroom type). Remove from below with camshaft out. Lifters furnished .001", .002", .005" oversize. Use Tool S.T. 5101 (piloted in valve guide) and ream for .005" oversize lifters.

ENGINE

C NTINUED FR M PRECEDING PAGE

See Packard Shop Notes for Valve Lifter Clearance check when grinding valves.

Diameter .7177-.7182". **Clearance** .0002" selective.
See Miscellaneous Section for complete data.

VALVE TIMING

Tappet Clearance:—None in service (hydraulic type lifter). *See Valve Servicing in Packard Shop Notes.*

Valve Timing:—See Camshaft Setting above.

Intake Valves—Open 4° BTDC. Close 51° ALDC.

Exhaust Valves—Open 49° BLDC. Close 10° ATDC.

Valve Timing Check—#1 exhaust valve close 10° after top dead center (#1 piston .0438" ATDC) with hydraulic lifter dry (all oil drained out) and built up with feeler stock for zero tappet clearance.

LUBRICATION

LUBRICATION:—Pressure (pump on right of engine).
See Packard Shop Notes for Oil Pump Installation.

Normal Oil Pressure:—50 lbs. at 45 MPH.

Oil Pressure Relief Valve:—On pump cover. Not adjustable. Spring pressure 17½-18½ lbs. at 1⅞".

Oil Pressure Gauge: Stewart-Warner Electric type.

Crankcase Capacity:—7 quarts.

COOLING

COOLING SYSTEM:—**Capacity**—20 quarts.

Pressure Valve—In filler cap. Opens at 7 lbs. (Std.), 12 lbs. (with Air Conditioning equipment).

Water Pump:—Packless, sealed ball-bearing type.
See Water Pump Section for complete data.

Thermostat:—Harrison. In cyl. head outlet (Clipper). In radiator top tank operating shutters (Others). **Setting**—Std.: Starts to open 162° F (Clipper), 135° (Others). Alcohol Anti-Freeze: 147°F (Clipper). For heater use 162°F cyl. head outlet type for all models.

CLUTCH

CLUTCH: Long Model 11CF-CI (Late '41, All '42), Model 11CFS-CI (Early 1941). Semi-centrifugal, single plate, dry disc types. NOTE—Early 1941 (11CFS-CI) are riveted assemblies and cannot be dismantled.
See Clutch Section for complete data.

Facings—Woven (U.S. Asbestos No. 1133-G), 2 used. Inside Diam. 6⅝". Outside Diam. 11". Thick. .125".

Pedal Adjustment:—1¾-2¼" (Std.), 2" (with Electromatic Clutch) free travel. Adjusting nut (with locknut) at clutch fork end of connector link.

Removal:—Remove transmission (see below). Disconnect pedal linkage, remove throw-out bearing. Remove cover mounting screws evenly, remove clutch.

ELECTROMATIC CLUTCH

ELECTROMATIC CLUTCH: Vacuum electric type Optl.
See Clutch Section for complete data.

TRANSMISSION

TRANSMISSION:—**Own Make.** Constant-mesh, helical, ball-bearing mounted low speed gear (sliding spur reverse gear). Synchro-mesh (second & high).
See Transmission Section for complete data.

Transmission Control:—Own Remote Control type.
See Transmission Section for complete data.

Removal:—Disconnect shifter rods, speedometer cable, hand brake cable at equalizer, and ground strap at transmission. Disconnect front universal, block drive shaft up for clearance. Support rear of engine with jack, unbolt frame cross-member carrying rear engine mountings, remove flywheel housing lower cover, disconnect stabilizer (transmission to X-member). Take out transmission to flywheel housing screws, withdraw transmission.

OVERDRIVE

OVERDRIVE: Warner Type R9 (Kick-down). Model AS1-R9A overdrive unit with electrical control.
See Transmission Section for complete data.

►**Overdrive Lock-up in Reverse Correction for Clipper:** Install 1948 Safety Switch (Kit No. 394484).
See 1948 Packard Car Pages for Overdrive Safety Switch description and Car Wiring Diagram showing Overdrive Circuit with Safety Switch installed.

Overdrive Solenoid—Delco-Remy Model 1118005.

Overdrive Indicator Light—Green light on right side of speedometer dial. Lighted whenever overis ready to engage (light goes out when engaged).

Throttle Switch—Cole-Hersee, Packard No. 347496. Adjust tappet screw on throttle lever to just contact switch plunger with throttle valve wide open.

Governor Switch—Bendix No. 364782 (1941), Packard #367335 '42, 377787 '42 Electromatic Clutch.

Control Relay Delco-Remy 1116801 '41, 1116823 '42.

Removal: Procedure same as for regular transmission (see above) plus the following: Disconnect control cable, solenoid wires, and overdrive rear mounting.

UNIVERSALS

UNIVERSAL JOINTS: Mechanics 3CR or 3C (front shaft Long Whbse. Cars). Needle bearing types.
See Universals Section for complete data.

►*CAUTION*—Rear universal flange controls pinion bearing pre-load. *For complete data, refer to the Rear Axle Section for Packard Rear Axle article.*

REAR AXLE

REAR AXLE:—**Own Make.** Semi-floating, Hypoid gear type with Hotchkiss drive and special Ring Gear Support Roller. Cover welded in place.
See Rear Axle Section for complete data.

Model	Axle Ratio: Standard	Overdrive
1903, 6	3.92-1	4.36-1
1904, 7; 2004, 7	4.09-1	4.36-1
1903A	4.54-1	4.7-1
1903AB	5.12-1	
1905 ,8; 2005, 8	4.36-1	4.54-1
2003, 6, 2023	3.92-1	4.09-1

Backlash—.003-.005". Screw adjustment.

Removal:—Remove wheel, hub, and brake backing plate assembly. Withdraw axle shafts. Disconnect rear universal joint and drop drive shaft. Remove carrier-to-housing bolt nuts, withdraw carrier.

Wheel Bearing Adjustment—Endplay controlled by shims between flanged end of housing and brake backing plate. Unbolt backing plate and clips holding brake tube to housing. Add or remove shims **Endplay**—.004-.007".

SHOCK ABSORBERS

SHOCK ABSORBERS:	Front	Rear
Clipper	Delco 1946-J, K	Monroe 371197
1903 Coupe, 1906	Delco 1966-C, D	Monroe 364725
1903 Sedans	" "	Monroe 362710
2023 Conv. Coupe	" "	Monroe 371197
All Others	" "	Delcoe 1021-V
Exp't (exc. Clip'r)	" "	Delcoe 1130-W

Double acting (Front), Direct Acting (Rear).

Fifth Shock Absorber (Stabilizer): Monroe 956790 direct acting type (Clipper), Houde NFT (Others).
See Shock Absorber Section for complete data.

FRONT SUSPENSION

Front Suspension:—Independent 'Safe-T-fleX' type (parallelogram type—coil springs & torque arms).
NOTE—No torque arms used on Clipper Suspension.
See Front Suspension Section for complete data.

NOTE—Frame height must be set first before checking Caster and Camber.

Frame Height—With car on level floor, distance from floor to top of frame side rail at front wheel center-line 18¾" (1903,4,5,6,7,8), 19¼" (1903A, 3AB). equal on both sides within 1/16-5/16"(1942 models except Clipper). Load car until figure correct.

	Kingpin Incl.	Caster	Camber
1941	2½°	Neg. ¾° ± ½° ①	½° (½-1¼°)
1942	2½°	Neg. 1¼° ± ½°	0° ②
Clipper	5°35'	Neg. 2° ± ½°	0° ± ½°

①—Caster 2½° ± ½° for 1903A (Long Wheelbase).
②—Limits—¼° to +¾° Right, 0° to + 1° Left.
Toe In—0-1/16" measured 10" up from floor.

STEERING GEAR

Steering Gear: Packard (Gemmer design Model 330). Worm-and-Roller type with idler arm on right frame rail (Clippers), center steering (Others). Refer to Gemmer Model 330 article.
See Steering Gear Section for complete data.

BRAKES

BRAKES: Service. (1903,6; 2023 & Clipper) Bendix hydraulic, duo-servo, single anchor type **without eccentric** adjustment. **(All Others)** Bendix hydraulic, duo-servo, single anchor **with eccentric** adjustment. Hand lever applies rear service brakes on all cars.
See Brake Section for complete data.

Drum—Centrifuse. Diameter 12".

Lining—Moulded type. Marshall 2201.

1941 Models

Model	Width	Thick-ness	Length per Shoe Primary	Secondary
1903,6	2"	3/16"	11½"	13"
1904,5,7,8	2¼"	3/16"	13"	13"
1901A①	2¼"	3/16"	13"	13"
1901A②	2½"	3/16"	13"	—
1901A②	2¼"	3/16"	—	13"
1903A①	2½"	3/16"	13"	13"
1903AB③ Front	2½"	3/16"	13"	13"
1903AB③ Rear	2¾"	¼"	15"	15"

①—Hearse & Ambulance. ③—Airport Limousine.
②—Heavy Duty Ambulance 4194HD, 4194HDF.

1942—Moulded (Marshall 2201-H-8). Thick 3/16". Width 2" (All wheels 2023, Rear wheels Clipper), 2¼" (All Others). Length per shoe: Primary 13" (2004,5,7,8), 11½" (Others). Secondary 13" (All).
Clearance—(Clipper & 1903, 6; 2023)—.015" at both ends of secondary shoe with primary shoe forced out against drum. **All Others**—.010" at heel and toe of each shoe.

Hand Brake:—See Service Brakes (above).

MISC. MECHANICAL

WINDSHIELD WIPER:—**Stewart-Warner Series 645-H (Clipper), 645-E (Others).** Electric type. 'Klixon' circuit breaker mounted on or near wiper motor.
See Miscellaneous Section for complete data.

Power Operated Convertible Top: Vacuum Power type.
See Miscellaneous Section for complete data.

Power Window Regulators: Hydro-Electric type.
See Miscellaneous Section for complete data.
Window Lift Relay—Auto-Lite No. HRD-4001.

ELECTRICAL EQUIPMENT NOTE: Both Auto-Lite and Delco-Remy electrical equipment are used.

HOOD LOCK: One-piece side hinge hood. To raise hood, release lever under instrument panel on side to be raised, lift hood slightly, release safety catch (approx. 2 ft. from rear edge of hood), raise hood, hold in open position with prop on dash.

MODEL IDENTIFICATION

SERIAL NUMBER: On left side of cowl (use Eng. No.).

ENGINE NUMBER: First No. F-1501 (1946), F-15001 (1947). On upper left side of cylinder block between #3 and #4 cylinders.

TUNE-UP

COMPRESSION: Pressure—118 lbs. at cranking speed.

VACUUM READING: Steady 18-20" idling at 6 MPH.

FIRING ORDER: 1-5-3-6-2-4.

SPARK PLUGS: AC No. 104 or Champion Y4-A. 10 mm. or Auto-Lite No. P-4. 10 mm.

Gaps—.028" (.0255-.0305").

NOTE—Tighten spark plugs to 50 inch lbs. only.

IGNITION: See Coil, Condenser, and Distributor.

Breaker Gap—.020". Limits .018-.022".

Cam Angle—Closed 38° Auto-Lite, 35° Delco-Remy.

Automatic Advance—Start 300 RPM, Max. 9½° (Auto-Lite), 10¼° (Delco-Remy) at 1600 RPM. Distr. ° & RPM.

Vacuum Advance—Starts with 6" of HG., 7½° Max. with 17" of HG. Distributor degrees.

IGNITION TIMING: See Ignition Timing.

Std. Setting—4° BTDC.

Timing Mark—Vibration dampener at front of engine marked "#1 UP.DC" with fifteen 1° graduations before this point. Set ignition contacts to open at 4th graduation before "DC" mark.

Fuel Compensator—Set for slight ping accelerating with wide open throttle. NOTE—Auto-Lite distributor adjusted by shifting vacuum link on quadrant.

CARBURETION: See Carburetor & Carb. Equipment.

Idle Setting—Set idle adjusting screw ½-1½ turns open. Adjust for smooth idle. Idle speed 6 MPH.

Float Level—⅜" from projection on bowl cover to top of float seam at free end (invert to check).

Accelerating Pump—No seasonal adjustment.

Fuel Pump Pressure: 4 lbs. maximum.

MANIFOLD HEAT CONTROL: Thermostatic coil type. Make certain that valve operates freely and does not bind or stick. Do not oil control.

VALVES: See Valve Timing.

Tappet Clearance—.007" Intake, .010" Exh., Hot.

STARTING: See Battery, Starter, Generator and Regulator.

IGNITION

AUTO-LITE

IGNITION SWITCH: Mitchellock Switch Model 24-B. Auto-Lite No. CE-2260BCS Lock Switch and cable.

Lock Cylinder—Briggs & Stratton No. 50184.

Key Series—P1251 to P1500. **Groove No. 2.**

COIL: Auto-Lite No. CE-4659. Service Coil (less switch & cable) CE-3224US. On dash.

Ignition Current—2.75 amperes idling, 5 stopped.

CONDENSER: Auto-Lite Part No. IGW-3128.

Capacity—.28-.32 microfarad.

DISTRIBUTOR: Auto-Lite No. IGC-4505. Automatic advance with vacuum Spark Control and Fuel Compensator.

Breaker Gap—.020". Limits .018-.022".

Cam Angle or Dwell—38° closed, 22° open.

Breaker Arm Spring Tension—17-20 ozs.

Rotation—Counter-clockwise viewed from above.

Automatic Advance (Auto-Lite)

Distributor Degrees	Distributor R.P.M.	Engine Degrees	Engine R.P.M.
Start	300	0	600
3	590	6	1180
5	780	10	1560
7	1150	14	2300
9.5	1600	19	3200

Fuel Compensator Adjustment—Permits 40° range of adjustment by loosening vacuum unit link screw at distributor quadrant. See Ignition Timing below.

Vacuum Spark Control: Auto-Lite Unit. Mounted on hold-down plate and linked to adjusting quadrant on distributor. Provides additional advance at speeds above idling except when engine accelerated or operated with wide open throttle when spark retarded by return spring within unit.

Vacuum Advance (Auto-Lite)

Distr. Degrees	Eng. Degrees	Vacuum (" of HG)
Start	0°	6"
4°	8°	11⅞"
7.5°	15°	17"

Removal:—Distributor mounted on left side of crankcase. To remove, disconnect vacuum line, take out screw in hold-down plate, lift entire unit out.

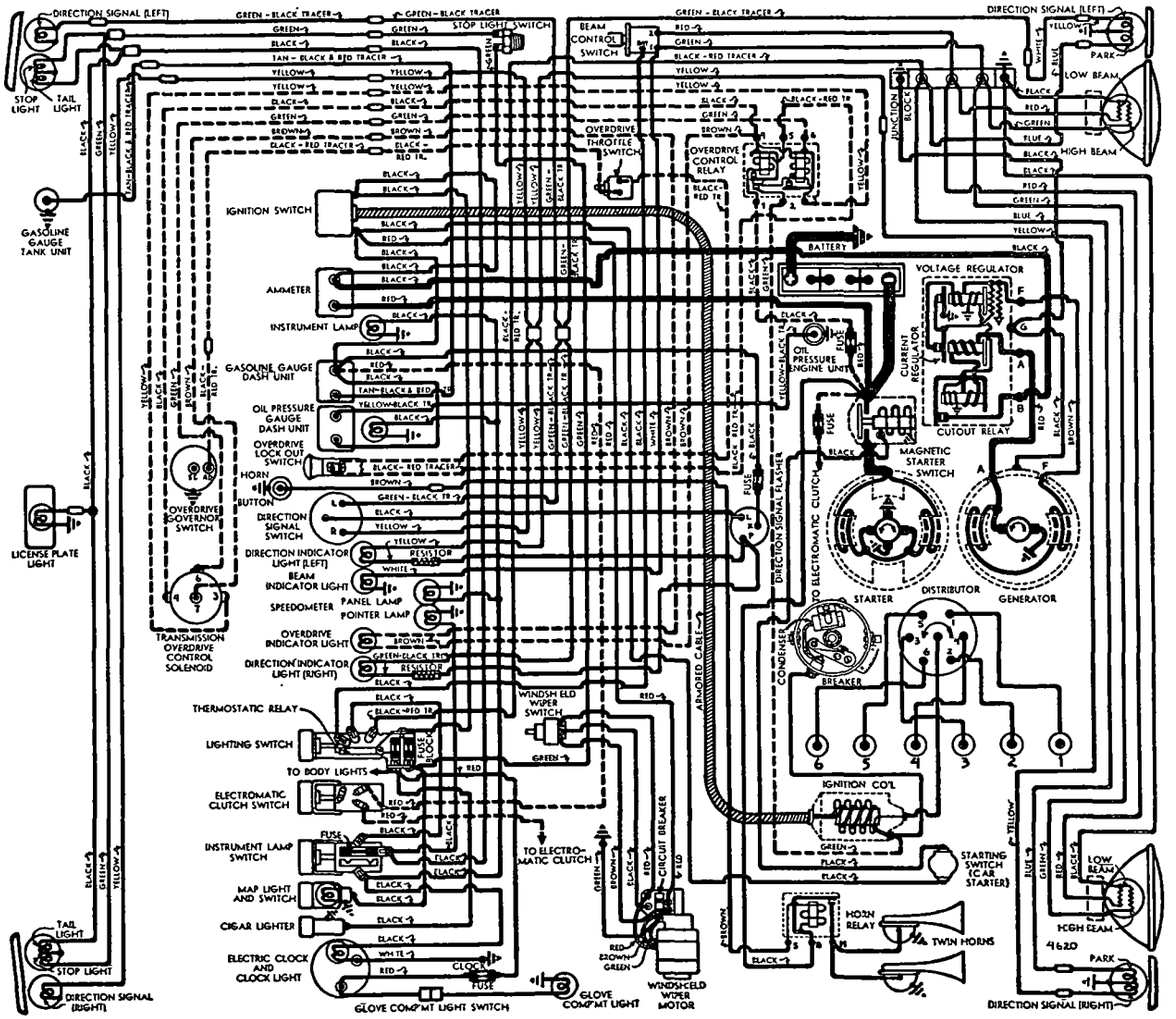

IGNITION

DELCO-REMY

IGNITION SWITCH: Delco-Remy Model 1116333 (Std.), 1116356 (RHD. Cars). Switch & cable assembly (connected to coil by armored cable).

Lock Cylinder—Briggs & Stratton No. 50184.
Key Series—P1251 to P1500. **Groove No. 2.**

COIL: Delco-Remy 1115001 or 538-Z. On dash.
Ignition Current—2.75 amperes idling, 5 stopped.

CONDENSER: Delco-Remy Part No. 1869704.

Capacity—.18-.25 microfarad.

DISTRIBUTOR: Delco-Remy 1110092 or 1110132. Automatic advance type with Vacuum Spark Control and Fuel Compensator adjustment.

Breaker Gap—.020". Limits .018-.024".
Cam Angle or Dwell—35° closed, 25° open.
Breaker Arm Spring Tension—17-21 ozs.
Rotation—Counter-clockwise viewed from above.

Automatic Advance (Delco-Remy)

Distributor		Engine	
Degrees	R.P.M.	Degrees	R.P.M.
Start	300	1.5	600
5	700	10	1400
10.25	1600	20.5	3200

Fuel Compensator Adjustment—Slot in advance plate permits distributor to be advanced or retarded from center point on scale when hold-down screw loosened. See Ignition Timing for setting.

Vacuum Spark Control: Delco-Remy Unit. Mounted on hold-down plate and linked to distributor. Provides additional advance at speeds above idling except when engine accelerated or operated with wide open throttle when spark retarded by return spring within unit.

Vacuum Advance (Delco-Remy)

Distr. Degrees	Eng. Degrees	Vacuum (" of HG)
Start	0°	5-7"
7.5°	15°	15-19"

Removal: Same as for Auto-Lite unit (above).

IGNITION TIMING

Std. Setting—As given below. See Fuel Compensator Setting for service and fuel corrections.

	Flywheel Degrees	Piston Position
All Engines	4° BTDC	.0066" BTDC.

Timing Mark—Vibration dampener marked #1UP. DC at TDC with 15 (1°) graduations before mark.

Timing—With #1 piston on compression, turn engine over until piston reaches firing position (see table above) with 4th graduation ahead of #1UP.DC mark in line with pointer on chain case cover. Loosen vacuum unit link screw in distributor quadrant (Auto-Lite distributors), or hold-down screw in advance arm (Delco-Remy distributors), rotate distributor until contacts begin to open, tighten screw.

Timing (Neon Timing Light)—Mark 4th graduation ahead of #1UP.DC mark on vibration dampener with white paint, clip neon timing light at #1 spark plug and direct light on vibration dampener, idle engine below 600 RPM and adjust distributor as directed above until mark in line with pointer on chain case cover.

Fuel Compensator Setting—Should be set for slight ping when accelerating engine with wide open throttle. To adjust, loosen vacuum unit link screw in distributor quadrant (Auto-Lite Distributors), advance arm hold-down screw (Delco-Remy Distributors), rotate distributor one graduation at a time counter-clockwise (if ping too severe), clockwise (if no ping), until correct performance secured.

CARBURETOR

Carter Vacumeter Type WA-1, Model 530S. 1¼" Single barrel, downdraft type with Carter Climatic Control and Carter Car Starter.
NOTE—Carburetor Casting No. 317 on flange.
See Carburetor Section for complete data.

Idle Setting—With engine warm (choke valve wide open and fast idle inoperative), set throttle stop-screw for 6 MPH. idle speed (8-10 MPH. on cars with Electromatic Clutch), set idle adjusting screw for smooth idling performance (screw ½-1½ turns open, turn screw in for leaner mixture). Recheck idle speed.

Accelerating Pump—No seasonal adjustment.

Float Level—⅜" from top of projection on bowl cover to top of soldered seam on free end of float with needle valve seated (invert to check).

Metering Rods & Jets—***See Carter Jet Specification Table in Carburetor Section for data.***

Fast Idle: Integral type (built-in carburetor).
See Carburetion Equipment Section for data.

Setting—⅝" clearance between edge of choke valve and air horn (Gauge T109-85) with throttle stop-screw against (not on) first step of fast idle cam. Adjust by bending fast idle link at the offset.

Automatic Choke: Carter Climatic Control.
See Carburetion Equipment Section for data.

Setting—Centered (at index).

CARB. EQUIPMENT

Air Cleaner: AC. Oil-wetted type Std., Heavy duty Oil-bath type Optl.

Servicing (Oil-wetted type)—Wash and re-oil filter element whenever crankcase oil changed (1000-2000 mile intervals for normal service).

Servicing (Oil-bath type)—Clean filter element, clean and refill oil reservoir with SAE No. 50 engine oil (Summer), SAE No. 30 (Winter) to level of indicator line on case (approx. 1 pint) whenever crankcase oil changed (1000-2000 mile intervals).

Oil Filler Cap (Crankcase Ventilator Filter)—Wash filter element in filler cap and re-oil when servicing air cleaner.

Fuel Pump: AC. Type AT (Std.), Type AJ (Optl.). Diaphragm type fuel pump (AT), combination fuel-and-vacuum pump (AJ). Pump Exchange AC. No. 524 (AT), 508 (AJ).
See Carburetion Equipment Section for data.
Pressure—3-4 lbs. (AT), 3-3¾ lbs. (AJ).

Gasoline Gauge: Stewart (Stewart-Warner) electric
See Carburetion Equipment Section for data.

BATTERY

Auto-Lite Type PN-15ZR or Willard Type SW-1D-100. 6 Volt, 15 Plate, 100 Ampere Hour Capacity (20 hour rate). End-to-end type.

Starting Capacity—120 amperes (Auto-Lite), 122 amperes (Willard) for 20 minutes.

Zero Capacity—300 amperes for 3.2 minutes. Five second voltage 4.15 volts (Auto-Lite), 4.2 volts (Willard).

Grounded Terminal—Positive (+) to frame.

Dimensions—Length 19⅜". Width 4". Height 9 3/16" (Auto-Lite), 8 15/16" (Willard).

Location—On left side in engine compartment.

STARTER

AUTO-LITE

Auto-Lite Model MAW-4024 or MAW-4027. Armature No. MAW-2128.

Drive—Outboard Barrel Type Bendix No. A1792.

Rotation—Counter-clockwise at commutator end.

Brush Spring Tension—42-53 ozs. (new brushes).

Cranking Engine—125 RPM., 175 amperes, 5.1 volts.

Performance Data—Auto-Lite

Torque	R.P.M.	Volts	Amperes
0 ft. lbs	4900	5.5	65
0.60 "	3300	5.5	100
2.75 "	1480	5.0	200
5.45 "	820	4.5	300
8.50 "	400	4.0	400
11.55 "	110	3.5	500
11.5 "	Lock	3.0	505
18.0 "	Lock	4.0	670

Removal: Flange mounted on left front face of flywheel housing. To remove, take out flange mounting screws, lift out starter and switch assembly.

Starting Switch: Auto-Lite Model SS-4017 Magnetic Switch mounted on starter and controlled by Carter Car Starter Model 192-11U on carburetor.
See Electrical Equipment Section for complete data on Magnetic Switch & Carter Car Starter.

STARTER

DELCO-REMY

Delco-Remy Model 1107037 or 1107056. Armature No. 1878077 (All Models).

Drive—Outboard Barrel Type Bendix No. A1792.

Rotation—Counter-clockwise at commutator end.

Brush Spring Tension—24-28 ozs. each.

Performance Data (Delco-Remy)

Torque	R.P.M.	Volts	Amperes
0 ft. lbs	5000	5.0	65
12 "	Lock	3.37	525

Removal: Starter flange mounted on left front face of flywheel housing. To remove, disconnect wires, take out flange mounting screws, remove starter and switch as an assembly.

Starting Switch: Delco-Remy Model 1460. Magnetic type. Mounted on starter and controlled by Carter Car Starter Model 192-11U on carburetor.
See Electrical Equipment Section for complete data on Magnetic Switch and Carter Car Starter.

GENERATOR

AUTO-LITE

Auto-Lite Model GDZ-4801F (Std.), GEB-4802C-2 (Taxicab). Armature No. GDZ-2006F (GDZ Gen.), GEB-2006F (GEB Gen.). Two brush (shunt) type with voltage and current regulation. Ventilated.
SEE 1946-47 PACKARD 8 CAR PAGES FOR DATA

C NTINUED ON NEXT PAGE

CONTINUED FR M PRECEDIN PA E

GENERATOR

DELC -REMY

Delco-Remy Model 1102682. Armature No. 1879002. Two brush (shunt) type with voltage and current regulation. Ventilated by fan on drive pulley.

Charging Rate Adjustment—None. Charging rate controlled by Voltage Regulator, maximum output controlled by Current Regulator. See Regulator.

Maximum Charging Rate—34-36 amperes, 8.0 volts hot. Actual charging rate controlled by Voltage Regulator and dependent on battery condition.

Performance Data (Delco-Remy)

	Amperes	Volts	RPM.
Cold	30①	8.0	1750

①Not maximum output. See Current Regulator.

Rotation—Counter-clockwise at commutator end.

Brush Spring Tension—25 ozs. each.

Field Current—1.75-1.9 amperes at 6.0 volts.

Removal: Pivot mounted at left side of engine at front. To remove, take out pivot and clamp bolts.

Belt Adjustment: 50 lbs. tension on spring scale hooked to generator frame, or ½" thumb-pressure deflection midway between generator and pump pulleys.

REGULATOR

AUT -LITE

Auto-Lite Model VRP-4002C (GDZ-4801F Gen.), Model VRP-4002D (GEB-4802C-2 Taxi Generator).

SEE 1946-47 PACKARD 8 CAR PAGES FOR DATA

REGULATOR

DELC -REMY

Delco-Remy Model 1118202 (1946), 1118278 (1946-47). Single Core Type. Vibrating type Voltage and Current Regulators in case with Cutout Relay.

See Electrical Equipment Section for complete data.

CAUTION—Check generator for grounded field coils and leads before changing regulator settings to correct High Charging Rate or High Voltage.

Cutout Relay

Cuts In—6.2-6.7 volts at 800 RPM (cold).
Cuts Out—0-4.0 ampere discharge current.
Contact Gap—.020" (same for both sets).
Air Gap—.020" (with contacts just closed).

Voltage Regulator

Setting—7.2-7.4 volts hot (operating temperature). Regulator over-compensated for temperature. Should be checked with cover in place and hot.

To Check—Connect ammeter in charging line at regulator 'BAT' terminal, voltmeter between this terminal and ground. Operate generator at 2800 RPM, adjust charging rate to 8-10 amperes (use variable rheostat or AVR set). With regulator hot (150°F), decrease generator speed until cutout relay contacts open, then increase speed to 2800 RPM and check hot voltage setting (above).

To Adjust—Change regulator armature spring tension slightly by bending hanger at lower end of one spring only. If further adjustment required, see Single Core Regulator article in Electrical Equipment Section for other (2nd) spring adjustment.
Air Gap—.070" between center of core and armature with contacts just closing (press down on armature to open contacts, release pressure, check gap at point where contacts just close).

Current Regulator

Setting—34-36 amperes hot (operating temp.).
To Check—Remove regulator cover, connect short jumper between Voltage Regulator frame and upper contact support bracket (to short out Voltage Regulator), connect ammeter in charging line at regulator 'BAT' terminal, turn on car lights and accessories. Operate generator and increase speed until output remains constant. With regulator hot (150°F), reading should agree with setting (above).
To Adjust—Same as for Voltage Regulator (above).
Air Gap—.080" (check same as Voltage Regulator).

LIGHTING

Headlamps: Hall "Sealed Beam" type. Upper and lower beams controlled by Beam Selector Switch on toeboard.

See Electrical Equipment Section for complete data.

Adjustment—Aim upper beam straight ahead (hot spot center 3" below lamp center height at 25 ft.).
Beam Indicator—Red light on left side of speedometer dial. Lighted when Country (upper) beams in use.

Direction Signal: *See Electrical Equipment Section.*
Direction Signal Indicator—Illuminated arrows on face of speedometer dial. Right or Left arrow lighted when direction signal on same side operating.

Switches

Lighting—Delco-Remy No. 1995021.
Beam Selector—Delco-Remy No. 1997008.

Bulb Specifications

Position	Candlepower	Mazda No.
Headlamps	40-30 watts	Sealed Beam
Parking & Frt. Direc. Sig.	21-3	1154
Rear Direc. Sig.	21	1129
Direc. Sig. Indicator	1½	55
Beam Ind., Glove Compt.	1	51
Instrument, Map Light	1½	55
Clock & Speedometer ('46)	1	51
Clock & Speedometer ('47)	1½	55
Overdrive Indicator	1½	55
Courtesy, Dome	6	82
Stop & Tail	21-3	1154
Rear License	3	63

MISC. ELECTRICAL

THERMOSTATIC RELAY: Delco-Remy. On lighting switch. Contacts remain closed with 30 amperes but open in 3 minutes with 42 amperes at 70°F. Not adjustable.

FUSES: Auxiliary (Stop Light, Cigar Lighter, Body Lights, Accessories)—SFE 20 ampere. Two fuses on lighting switch.

Instrument & Tail Light—SFE 20 ampere. On Panel Light Switch.

Clock—SFE 4 ampere. In clock lead near clock.

Overdrive—SFE 30 ampere. In relay lead.

Direction Signal—9 ampere. In flasher lead.

HORNS: Sparton. Vibrator type, air tone, twin horns operated by relay.
Horn Current—22-25 amperes.

Horn Relay: Delco-Remy No. 1116775.
Contact Gap—.025". **Air Gap**—.015" (closed).
Contacts Close—2.75-4.0 volts.

ENGINE

ENGINE SPECIFICATIONS: 6 cylinder, 'L' head type.
Bore—3½". **Stroke**—4¼".
Displacement—245 cubic inches. **Rated H.P.** 29.4.
Developed Horsepower—105 at 3600 RPM.
Compression Ratio—6.71-1 Std. Cast Iron head.
Compression & Vacuum Reading—*See Tune-up data.*

ORIGINAL BORE & PISTONS: *See Packard Shop Notes*

TIGHTENING TORQUES: *See Packard Shop Notes.*

CYLINDER HEAD: Tightening Torque & Cylinder Head Diagram—*See Packard Shop Notes.*

PISTONS: Aluminum alloy, Autothermic strut type.
Length—3⅞".
Weight—20¼ ozs. (stripped), 26¾ ozs. (complete).
Removal—Pistons and rods removed from above.
Clearance—.0005-.001". See Fitting New Pistons.

Replacement Pistons: *See Packard Shop Notes.*

Fitting New Pistons:—Insert .0015" feeler ½" wide between piston and cylinder wall on side opposite slot. Pull to withdraw feeler should be 12-18 lbs.

Installing Pistons:—Slot toward valves.

PISTON RINGS: Two compression rings (No. 200 top groove, No. 70 second groove), one oil control ring (No. 86) per piston, all above pin. Oil ring groove has twelve 5/32" oil drain holes.

Ring	Width	End Gap	Side Clearance
Compr. (#1)	.093-.0935"	.007-.017"	.0025-.003"
Compr. (#2)	.1235-.124"	.007-.017"	.0025-.003"
Oil Contr.(#3)	.186-.1865"	.007-.015"	.0025-.003"

NOTE—Oil Ring (Perfect Circle No. 86) has coil spring type expander spring.

Replacement Rings:—.005", .010", .020", .030", .040" O. S. Triple Action (packaged sets) std. & .020" oversize.
See Packard Shop Notes for Piston Ring data.

PISTON PIN: Diameter .875". Length 3 1/64".
Pin floats in piston and rod, held by locking rings.
Pin Fit in Piston—Palm push fit with piston at 160°F. (heat in water).
Pin Fit in Rod Bushing—Finger push fit at 70° F.
Piston Pin & Connecting Rod Bushing Servicing—*See Packard Shop Notes.*

Replacement Pins:—Std. and .003", .006" oversize.

CONNECTING ROD: Length 7 11/16". Wgt. 31.6 ozs.
Upper Bearing (Piston Pin Bushing)—Split type.
See Packard Shop Notes for Piston Pin servicing data.
Crankpin Bearing Diameter—2 3/32".
Lower Bearing—Shimless, precision, steel backed, Moraine Durex "300" (copper nickel matrix with babbitt overlay) lined type.
Clearance—.0005-.0015". **Endplay**—.004-.010".

Bearing Adjustment:—None (no shims). Replace bearings. Do not file rods or caps.
See Packard Shop Notes for 'Palnut' installation data.

Replacement Bearings: Furnished Std. size and .001", .002", .003", .015" Undersize.

Installing Rods:—Oil squirt hole toward camshaft.

CRANKSHAFT: Four bearing type with integral counterweights and vibration dampener on forward end.
Bearings—Interchangeable, shimless, precision type steel-backed, Moraine Durex "300" (copper nickel matrix with babbitt overlay) lined type.
Bearing Diameter—2¾". **Clearance**—.0005-.0015".

Bearing Adjustment:—None (no shims). Replace bearings (upper halves can be 'rotated' in and out).

ENGINE

CONTINUED FR M PRECEDING PAGE

Replacement Bearings: Furnished Std. size and .001", .002" Undersize.

End Thrust: Taken by front bearing. **Endplay** .003-.008".

CAMSHAFT: Four-bearing type. Driven by non-adjustable chain (two-sprocket drive).
Bearings—Shimless, precision, steel-backed, babbitt lined type. **Clearance**—.001-.003".

End Thrust:—Taken by thrust plate in back of camshaft sprocket. **Endplay**—.0025-.006".

Timing Chain: Morse or Ramsey. Width 1¼". Pitch .375". Length 21¾" or 58 links.

Camshaft Setting:—Install chain and sprockets together with '0' marks on sprockets adjacent and in line with straightedge across shaft centers.

VALVES:	Head Diameter	Stem Diameter	Length
Intake	1 19/32"	.33975"	5.619"
Exhaust	1 3/8"	.33975"	5.619"

	Seat Angle	Lift	Stem Clearance
Intake	30°	.318"	.0025"
Exhaust	45°	.3175"	.0045"

Valve Guides:—Pressed in block from above with upper end 31/32" below valve seat. Exhaust guide upper end counterbored to ⅜" diameter, ⅜" deep.

Valve Springs:—Intake and exhaust springs interchangeable. Anti-rotation washer installed on top of springs.

	Spring Pressure	Spring Length
Valve Closed	52-57 lbs.	1 5/8"
Valve Open	119-129 lbs.	1 5/16"

Valve Lifters:—Mushroom type. Remove from below with camshaft out. Lifters furnished .001", .002", .005" oversize. Use Tool S.T. 5144 (piloted in valve guide) and ream for .005" oversize lifters.
Diameter—.6235-.6240". **Clearance**—.0003-.0012".

VALVE TIMING

Tappet Clearance:—.007" Intake, .010" Exh. (warm & Idling). NOTE—Tappet screws are self-locking type.

Valve Timing:—See Camshaft Setting above.
Intake Valves—Open 1° BTDC. Close 39° ALDC.
Exhaust Valves—Open 45° BLDC. Close 5° ATDC.
With tappet clearance of .0125" Intake, .015" Exh.
Valve Timing Check—With .0125" tappet clearance #1 intake valve should open with #1 piston 1° or .0004" BTDC with 1st graduation before top dead center mark '#1 UP.DC' on vibration damper lined up with pointer (permissible variation 4° either way). Reset tappet clearance .007" (hot & idling).

LUBRICATION

Engine Oiling System: Full pressure system (pressure to main and connecting rod bearings, camshaft bearings, piston pins, valve lifters, and timing chain). Oil pump mounted externally on right side of crankcase.
Crankcase Capacity—5 quarts.
Normal Oil Pressure—40 lbs. at driving speeds.
Oil Pressure Regulator—On oil pump cover. Not adjustable. Pressure regulator spring tension should be 14 lbs. ± 2 oz. at 1⅞".

Oil Pump: Gear type. On right side of crankcase.
Oil Pump Installation—*See Packard Shop Notes.*

Oil Filter: Special equipment.
Servicing—Renew filter cartridge at 8000-10000 mile intervals.

Oil Pressure Gauge:—Stewart-Warner electric type.

COOLING

Cooling System: Pressure type with pressure valve (relief valve) in radiator filler cap. Water pump mounted on front of engine with fan belt drive.
Capacity—14 quarts.
Radiator Core Removal—*See Packard Shop Notes.*
Pressure Valve—In filler cap. Opens at 4½ lbs. (Passenger Cars), 7 lbs. (Taxicab).

Water Pump:—Packless, sealed ball-bearing type.
See Water Pump Section for complete data.
Belt Adjustment—*See Generator Belt Adjustment.*

Thermostat:—Bishop & Babcock. In cyl. head outlet.
Setting—Starts to open at 145-150°F. (Std. Type), 160-165°F. (Optl. High Reading Type).

CLUTCH

Long Model 9½CF-CS (Std.), 11CF-CI (Taxicab). Single plate, semi-centrifugal, dry disc type.
See Clutch Section for complete data.
Facings—Woven (US Asbestos type), 2 required.
Pass. Cars: I.D. 6". O.D. 9½". Thickness .125" (⅛").
Taxicab: I.D. 6⅝". O.D. 11". Thickness .125" (⅛").

Pedal Adjustment:—1½-1¾" (Std.), 2" (with Electromatic Clutch) free travel. Adjusting nut (with locknut) at clutch fork end of connector link.

Removal:—Remove transmission (see below). Disconnect pedal linkage, remove throw-out bearing. Remove cover mounting screws evenly, remove clutch.

ELECTROMATIC CLUTCH

Electromatic Clutch—Vacuum electric type. Optl.
See Clutch Section for complete data.

TRANSMISSION

Own Make—3 Speed type. Helical, constant-mesh (low speed gear), constant-mesh, synchro-mesh (second and high). Sliding spur (reverse gear).
See Transmission Section for complete data.

Transmission Control: Steering col. mechanical shift.
See Transmission Section for complete data.

Removal:—Disconnect shifter rods, speedometer cable, hand brake cable at equalizer, and ground strap at transmission. Disconnect front universal, block drive shaft up for clearance. Support rear of engine with jack, unbolt frame cross-member carrying rear engine mountings, remove flywheel housing lower cover, disconnect stabilizer (transmission to X-member). Take out transmission to flywheel housing screws, withdraw transmission.

OVERDRIVE

Warner Model AS2-R9 ("Econo-drive" used with Packard Transmission). Electric solenoid operated type (no centrifugal pawls) with Governor control and throttle operated "kick-down."
See Transmission Section for complete data.

►**Overdrive Lock-up in Reverse Correction for Clipper:** Install 1948 Safety Switch (Kit No. 394484).
See 1948 Packard Car Pages for Overdrive Safety Switch description and Car Wiring Diagram showing Overdrive Circuit with Safety Switch installed.
Overdrive Indicator Light—Green light on right side of speedometer dial. Lights when overdrive is ready to engage (at car speed of 22 MPH), goes out when accelerator pedal released for engagement.
Overdrive Relay—Delco-Remy No. 1116823.

Removal: Disconnect control cable and all leads to solenoid, governor, and lockout switch. Free mounting at rear of overdrive case. Then remove overdrive & transmission. See Transmission Removal

UNIVERSALS

Mechanics Type 3CR. Needle bearing type, 2 used.
See Universals Section for complete data.

►*CAUTION*—Rear universal flange nut controls rear axle pinion bearing pre-load which must be adjusted whenever nut is loosened. *See Packard Rear Axle article in Rear Axle Section for complete data.*

REAR AXLE

Own Make—Hypoid Gear Type. Semi-floating type with Hotchkiss drive. Rear cover welded in place.
See Rear Axle Section for complete data.
Ratio—4.3-1 (std.), 4.54-1 (with Overdrive & Taxi).
Backlash—.003-.005". Screw adjustment.

Removal:—Remove wheel, hub, and brake backing plate assembly. Withdraw axle shafts. Disconnect rear universal joint and drop drive shaft. Remove carrier-to-housing bolt nuts, withdraw carrier.
Wheel Bearing Adjustment—Endplay controlled by shims between flanged end of housing and brake backing plate. Unbolt backing plate and clips holding brake tube to housing. Add or remove shims (endplay up to .050" can be adjusted to desired .006" at one wheel). **Endplay**—.004-.007".

SHOCK ABSORBERS

Delco Model 1946-J,K (front), Model 1040-V (rear). Hydraulic, double acting (front), direct (rear).

Fifth Shock Absorber (Stabilizer):—Monroe 956790 direct acting type (in one end of stabilizer bar).
See Shock Absorber Section for complete data.

FRONT SUSPENSION

Front Suspension: Clipper Type Packard Safe-T-Flex, independent, linked parallelogram type.
See Front Suspension Section for complete data.
Kingpin Inclination—5°35' crosswise.
Caster—Negative 1° plus or minus ½°.
Camber—0° plus or minus ¼°.
Toe In—0-1/16" measured 10" up from floor.
Steering Geometry Inner wheel 23° ± ½°. Outer 20°

STEERING GEAR

Steering Gear: Own Make (same design as the Gemmer 335) Worm & Roller, "push-pull" adjustment.
See Steering Gear Section for complete data.

BRAKES

Service: Bendix Hydraulic, 4-wheel, Duo-Servo, Single anchor type without eccentric adjustment. Hand lever applies rear wheel service brakes.
See Brake Section for complete data.
Drums—Centrifuse type. Diameter: Passenger Car 12" (front), 11" (rear). Taxicab: 12" (all wheels).
Lining—Primary: Marshall 2201H-8. **Secondary:** Marshall B-50 (Pass. Car), Marshall 9017 (Taxicab).
Thickness 3/16". Width 2" (Taxi rear wheels), 1¾" (all shoes Pass. Cars, front wheels Taxi). Length per shoe: **Front Wheels** Primary 11½", Secondary 13" **Rear Wheels**—Primary 10⅝" (Pass. Cars), 11½" (Taxi). Secondary 12" (Pass. Car), 11½" (Taxi).
Clearance—.015" at both ends of secondary shoe with primary shoe forced out against drum.

Hand Brake:—See Service Brakes above.

MISC. MECHANICAL

WINDSHIELD WIPER: Stewart-Warner Type 645-H. Electric type. "Klixon" type circuit breaker mounted near wiper motor.
See Miscellaneous Section for complete data.

ELECTRICAL EQUIPMENT NOTE: If Delco-Remy units are used (Starter, Generator, Regulator), refer to preceding article on Packard Clipper Six for complete data on these units.

HOOD LOCK: One piece side hinge hood. To raise hood, release lever under instrument panel on side to be raised, lift hood slightly, release safety catch (approx. 2 feet from rear edge of hood), raise hood, engage prop on dash to hold hood open.

MODEL IDENTIFICATION

SERIAL NUMBER: On left side of cowl (use Eng. No.)

ENGINE NUMBER: First No. F-300001 (1946), F-320001 (1947). On upper left side of cylinder block between #3 and #4 cylinders.

TUNE-UP

COMPRESSION: Pressure—118 lbs. at cranking speed.

VACUUM READING: Steady 18-20" idling at 6 MPH.

FIRING ORDER: 1-6-2-5-8-3-7-4.

SPARK PLUGS: AC No. 104 or Champion Y4-A. 10 mm. or Auto-Lite No. P-4. 10 mm.
Gaps—.028" (.0255-.0305").
NOTE—Tighten plugs to 50 inch lbs. only.

IGNITION: See Coil, Condenser, and Distributor.
Breaker Gap—.017". **Cam Angle**—27° Closed.
Breaker Arm Spring Tension—17-20 ozs.
Automatic Advance—Starts 325 RPM., 5.3° at 800 RPM., Max. 10.75° at 1500 RPM. Distr. ° & RPM.
Vacuum Advance—Starts with 10" of vacuum, Max. 6° with 17" vacuum. Distributor degrees.

IGNITION TIMING: See Ignition Timing.
Std. Setting—5° BTDC.
Timing Mark—Vibration dampener at front of engine marked "#1UP.DC" with fifteen 1° graduations before this point. Set ignition contacts to open at 5th graduation before "DC" mark.
Fuel Compensator—Set for slight ping accelerating with wide open throttle (shift link on quadrant).

CARBURETION: See Carburetor & Carb. Equipment.
Idle Setting—Set both idle adjusting screws ½-1½ turns open. Adjust for smooth 6 MPH. idle speed.
Float Level—5/32" from top of float to cover with valve seated (remove gasket and invert to check).
Accelerating Pump—Inner Hole (minimum) Normal, outer hole (max. stroke) if greater charge required.

Fuel Pump Pressure: 4¾ lbs. maximum.

MANIFOLD HEAT CONTROL: Thermostatic coil type. Make certain that valve operates freely and does not bind or stick. Do not oil control.

VALVES: See Valve Timing.
Tappet Clearance—.007" Intake, .010" Exh., Hot.

STARTING: See Battery, Starter, Generator and Regulator.

IGNITION

IGNITION SWITCH: Mitchellock Switch Model 24-B. Auto-Lite No. CE-2260BCS Lock Switch and cable.
Ignition Lock—Briggs & Stratton. B & S No. 50184.
Key Series—P1250 to P1500. **Groove**—No. 2.

COIL: Auto-Lite Model CE-4659. Service coil (less switch & cable) CE-3224US. On left side of engine.
Ignition Current—2.4 amperes idling, 5 stopped.

CONDENSER: Auto-Lite Part No. IG-2671K.
Capacity—.20-.25 microfarad..

DISTRIBUTOR: Auto-Lite Model IGP-4502A. Single breaker, 8 lobe cam, full automatic advance type with vacuum spark control and Fuel Compensator.
Breaker Gap—.017" Limits .0125-.0175".
Cam Angle or Dwell—27° clsd., 18° open (.017" gap).
Breaker Arm Spring Tension—17-20 ounces.
Rotation—Counter-clockwise viewed from above.

Automatic Advance

Distributor Degrees	R.P.M.	Engine Degrees	R.P.M.
Start	325	0	650
3	600	6	1200
5.3	800	10.6	1600
8	1175	16	2350
10.75	1550	21.5	3100

Fuel Compensator Adjustment—Permits 40° range of adjustment by loosening vacuum unit link screw at distributor quadrant. See Ignition Timing below.

Vacuum Spark Control: Auto-Lite Unit. Mounted on hold-down plate and linked to adjusting quadrant on distributor. Provides additional advance at speeds above idling except when engine accelerated or operated with wide open throttle when spark retarded by return spring within unit.

Vacuum Advance

Distr. Degrees	Eng. Degrees	Vacuum (" of HG)
Start	0°	10"
1°	2°	11⅛"
3°	6°	13½"
5°	10°	15⅞"
6°	12°	17"

Removal:—Distributor mounted on left side of crankcase. To remove, disconnect vacuum line, take out screw in hold-down plate, lift entire unit out.

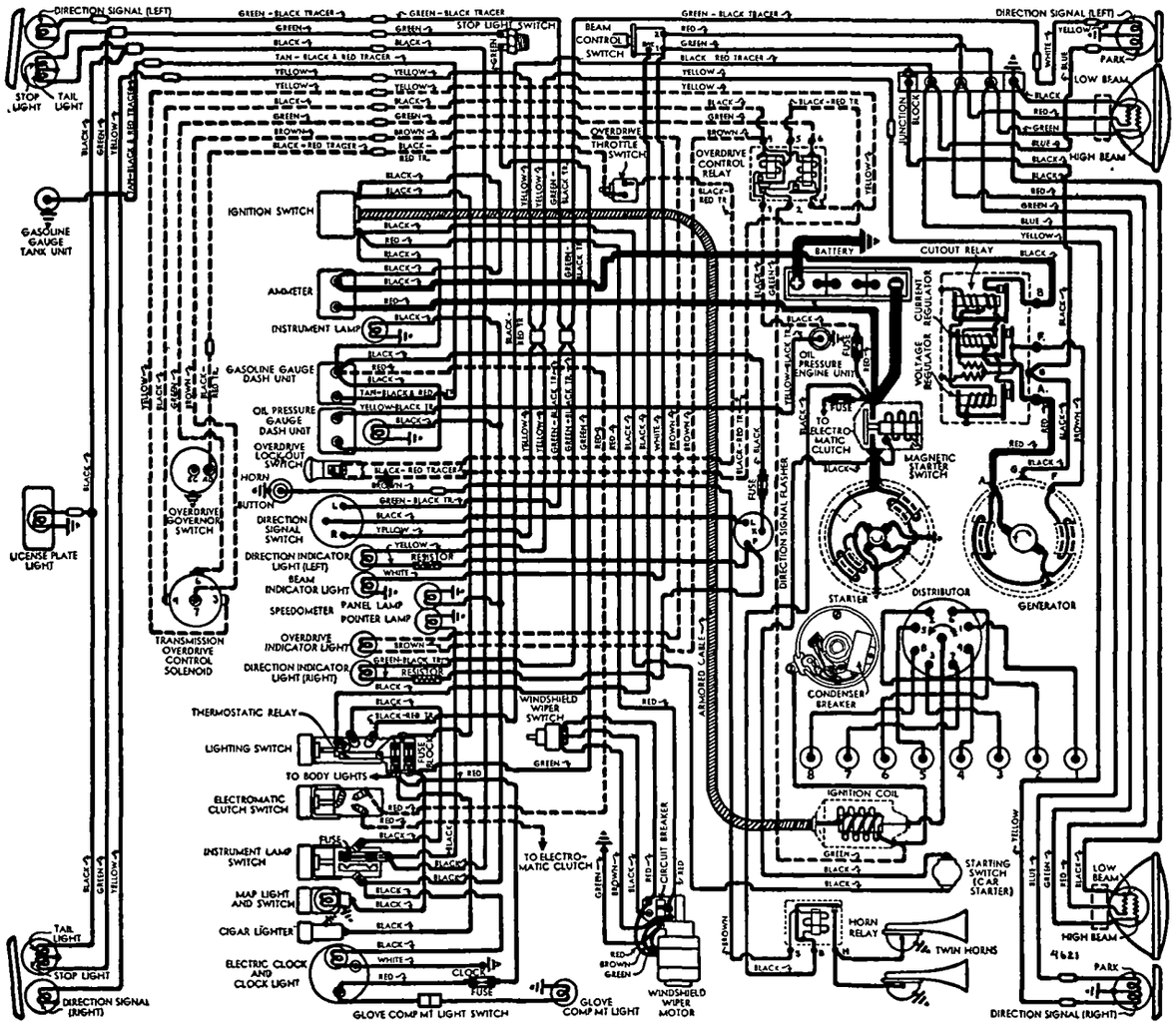

IGNITION TIMING

Std. Setting—As given below. See Fuel Compensator Setting for service and fuel corrections.

	Flywheel Degrees	Piston Position
All Engines	5° BTDC	.0103" BTDC

Timing Mark Note—Marks on vibration dampener at front of engine. Dampener marked '#1 UP.DC' with fifteen 1° graduations before this point.

Timing—With #1 piston on compression, turn engine over until piston reaches firing position with correct mark on dampener in line with pointer on chain case cover (see table above). Loosen vacuum unit link screw in distributor quadrant, rotate distributor until contacts begin to open, tighten screw. Check Fuel Compensator Setting (below).

Timing (Neon Timing Light)—Mark correct graduation on vibration dampener, clip neon timing light to #1 spark plug and direct light on vibration dampener, idle engine and adjust distributor as directed above.

Fuel Compensator Setting—Should be set for slight ping when accelerating engine with wide open throttle. To adjust, loosen vacuum unit link screw in distributor quadrant, rotate one graduation at a time counter-clockwise (if ping too severe), clockwise (if no ping), until correct performance secured.

CARBURETOR

Carter Type WDO, Model 512S. 1" Dual (double barrel), Downdraft type with Carter Climatic Control. *See Carburetor Section for complete data.*

NOTE—Carburetor Casting No. 371 on flange.

Idle Adjustment—With engine warm and running at slow idle speed (choke valve wide open, fast idle inoperative), set throttle stopscrew for idle speed of 6 MPH. (8-10 MPH. for cars with Electromatic Clutch). Turn idle adjusting screw for each barrel (in succession) until engine fires smoothly (½-1½ turns open for each screw—turn screws in for leaner mixture). Readjust idle speed.

Accelerating Pump—Pump arm under dust cover at top of carburetor has two holes for pump link engagement. Set as follows:

Inner (min. stroke)—Normal weather & fuel.
Outer (max. stroke)—Cold weather or low-test fuel.

Float Level—5/32" from top of float to bowl cover with valve seated (remove gasket & invert to check).

Metering Rods & Jets—*See Carter Jet Table in Carburetor Section for complete data.*

Fast Idle:—Integral type (built-in carburetor). *See Carburetion Equipment Section for data.*

Setting—Adjust fast idle screw for .020" throttle opening with choke valve closed.

Automatic Choke:—Carter Climatic Control. *See Carburetion Equipment Section for data.*

Setting—Set thermostat coil housing at Index mark.

CARB. EQUIPMENT

Air Cleaner: AC. Oil-wetted type Std., Heavy duty Oil-bath type Optl.

Servicing (Oil-wetted type)—Wash and re-oil filter element whenever crankcase oil changed (1000-2000 mile intervals for normal service).

Servicing (Oil-bath type)—Clean filter element, clean and refill oil reservoir with SAE No. 50 engine oil (Summer), SAE No. 30 (Winter) to level of indicator line on case (approx. 1 pint) whenever crankcase oil changed (1000-2000 mile intervals).

Oil Filler Cap (Crankcase Ventilator Filter)—Wash filter element in filler cap and re-oil when servicing air cleaner.

Fuel Pump: AC. Type AH (Std.), Type AJ (Optl.). Diaphragm type fuel pump (AH), combination fuel-and-vacuum pump (AJ). Pump Exchange AC. No. 525 (AH), 508 (AJ).

Pressure—4-4¾ lbs. (AH), 3-3¾ lbs. (AJ).

Gasoline Gauge:—Stewart (Stewart-Warner) Electric. *See Carburetion Equipment Section for data.*

BATTERY

Auto-Lite Type PN-15ZR or Willard Type SW-1D-100. 6 Volt, 15 Plate, 100 Ampere Hour Capacity (20 hour rate). End-to-end type.

Starting Capacity—120 amperes (Auto-Lite), 122 amperes (Willard) for 20 minutes.

Zero Capacity—300 amperes for 3.2 minutes. Five second voltage 4.15 volts (Auto-Lite), 4.2 volts (Willard).

Grounded Terminal—Positive (+) to frame.

Dimensions—Length 19⅜". Width 4". Height 9 3/16" (Auto-Lite), 8 15/16" (Willard).

Location—On left side in engine compartment.

STARTER

Auto-Lite Model MAW-4024 or MAW-4027. Armature No. MAW-2128.

Drive—Outboard Barrel Type Bendix No. A1792.

Rotation—Counter-clockwise at commutator end.

Brush Spring Tension—42-53 ozs. (new brushes).

Cranking Engine—125 RPM., 175 amperes, 5.1 volts.

Performance Data—Auto-Lite

Torque	R.P.M.	Volts	Amperes
0 ft. lbs.	4900	5.5	65
0.60 "	3300	5.5	100
2.75 "	1480	5.0	200
5.45 "	820	4.5	300
8.50 "	400	4.0	400
11.55 "	110	3.5	500
11.5 "	Lock	3.0	505
18.0 "	Lock	4.0	670

Removal: Flange mounted on left front face of flywheel housing. To remove, take out flange mounting screws, lift out starter and switch assembly.

Starting Switch: Auto-Lite Model SS-4017 Magnetic Switch mounted on starter and controlled by Carter Car Starter Model 192-11U on carburetor. *See Electrical Equipment Section for complete data on Magnetic Switch & Carter Car Starter.*

GENERATOR

Auto-Lite Model GDZ-4801F (Std.), GEB-4802C-2 (Taxicab). Armature No. GDZ-2006F (GDZ Gen.), GEB-2006F (GEB Gen.). Two brush (shunt) type with voltage and current regulation. Ventilated.

Charging Rate Adjustment—No adjustment at generator. Charging rate controlled by Voltage Regulator, maximum output by Current Regulator.

Maximum Charging Rate—35 amperes, 8.0 volts, 1900 RPM and above with load or discharged battery. Actual charging rate controlled by voltage regulator and dependent on battery condition.

Performance Data—GDZ-4801F

Cold Amperes	Cold Volts	Cold RPM.	Hot Amperes	Hot Volts	Hot RPM.
0	6.4	925	0	6.4	1000
5	6.65	1060	5	6.65	1150
10	6.85	1200	10	6.85	1290
15	7.05	1340	15	7.05	1430
20	7.3	1480	20	7.3	1590
25	7.55	1620	25	7.55	1750
30	7.8	1760	30	7.8	1980
*35	8.0	1900	35	8.0	2250

Performance Data—GEB-4802C-2

0	6.4	560	0	6.4	620
5	6.6	640	5	6.6	700
10	6.8	720	10	6.8	800
15	7.1	800	15	7.1	910
20	7.3	880	20	7.3	1040
25	7.5	980	25	7.5	1170
30	7.8	1080	30	7.8	1340
*35	8.0	1200	35	8.0	1520

*—Current Regulator Setting.

Rotation—Counter-clockwise at commutator end.

Brush Spring Tension—35-53 ozs. (GDZGen.), 64-68 ozs. (GEB Gen.) for new brushes.

Field Current—1.60-1.78 amperes at 6.0 volts.

Motoring Current—4.16-4.60 amperes (GDZ Gen.), 4.0-4.5 amperes (GEB Gen.) at 6.0 volts.

Removal: Pivot mounted at left side of engine at front. To remove, take out pivot and clamp bolts.

Belt Adjustment: 50 lbs. tension on spring scale hooked to generator frame, or ½" thumb-pressure deflection midway between generator and pump pulleys.

REGULATOR

Auto-Lite Model VRP-4002C (GDZ-4801F Gen.), Model VRP-4002D (GEB-4802C-2 Gen.). Voltage-Current Type. Vibrating type Voltage and Current Regulators in case with Cutout Relay. *See Electrical Equipment Section for complete data.*

NOTE—Regulator case cover is sealed. Serviced on exchange basis if seals not broken (to remove cover).

Cutout Relay

Cuts In—6.4-7.0 volts. 920 RPM (set to 6.4-6.6 volts).

Cuts Out—4.1-4.8 volts (approx. 4-6 amps. disch.).

Contact Gap—.015" minimum.

Air Gap—.031-.034" with contacts open (check at hinge end of core).

Voltage Regulator

Setting—7.2-7.5 volts at 70°F. See Electrical Equipment Section for settings at other temperatures.

To Check (without breaking seals)—Connect ammeter in charging line at regulator 'B' terminal (use short heavy leads), voltmeter between 'B' terminal and ground. Operate generator at speed equivalent to 30 MPH, charging fully charged battery, until voltage is steady. Voltage reading should agree with setting given above.

To Adjust (with cover removed)—Change regulator armature spring tension by bending lower spring hanger slightly. *See Electrical Equipment Section.*

Contact Gap—.012" min. (armature against stop pin).

Air Gap—.048-.052" with contacts just opening.

Current Regulator

Setting—34-36 amperes (marked '35' on the cover).

To Check (without breaking seals)—Connect test meters as for voltage check (above). Operate gen-

C NTINUED N NEXT PAGE

C NTINUED FR M PRECEDING PAGE

erator at speed equivalent to 30 MPH. charging battery, turn on car lights and accessories or connect load (bank of headlamp bulbs, etc.) between ammeter and battery so that generator charges at peak rate and Current Regulator operates. Current reading should agree with setting given above. If more than slight excess noted, regulator is defective.

To Adjust (with cover removed)—Same as for Voltage Regulator (above).

Contact Gap & Air Gap—Same as Voltage Regulator.

LIGHTING

Headlamps: Hall "Sealed Beam" type. Upper and lower beams controlled by Beam Selector Switch on toeboard.

See Electrical Equipment Section for complete data.

Adjustment—Aim upper beam straight ahead (hot spot center 3" below lamp center height at 25 ft.).

Beam Indicator—Red light on left side of speedometer dial. Lighted with upper beam "on".

Direction Signal: *See Electrical Equipment Section.*

Direction Signal Indicator—Illuminated arrows on face of speedometer dial. Right or Left arrow lighted when direction signal on same side operating.

Switches

Lighting—Delco-Remy No. 1995021.

Beam Selector—Delco-Remy No. 1997008.

Bulb Specifications

Position	Candlepower	Mazda No.
Headlamps	40-30 watts	Sealed Beam
Parking & Frt. Direc. Sig.	21-3	1154
Rear Direc. Sig.	21	1129
Direc. Sig. Indicator	1½	55
Beam Ind., Glove Compt.	1	51
Instrument, Map Light	1½	55
Clock & Speedometer ('46)	1	51
Clock & Speedometer ('47)	1½	55
Overdrive Indicator	1½	55
Courtesy, Dome	6	82
Stop & Tail	21-3	1154
Rear License	3	63

MISC. ELECTRICAL

THERMOSTATIC RELAY: Delco-Remy. On lighting switch. Contacts remain closed with 30 amperes, open in 3 minutes with 42 amps. at 70° F. Not adj.

FUSES: Auxiliary (Stop Light, Cigar Lighter, Body Lights, Accessories)—SFE 20 ampere. Two fuses on lighting switch.

Instrument & Tail Light—SFE 20 ampere. On Panel Light Switch.

Clock—SFE 4 ampere. In clock lead near clock.

Overdrive—SFE 30 ampere. In relay lead.

Direction Signal—9 ampere. In flasher lead.

HORNS: Sparton. Vibrator type, air tone, twin horns operated by relay.

Horn Current—22-25 amperes.

Horn Relay: Delco-Remy No. 1116775.

Contact Gap—.025". **Air Gap**—.015" (closed).

Contacts Close—2.75-4.0 volts.

ENGINE

ENGINE SPECIFICATIONS: Eight cylinder "L" head type. **Bore**—3¼". **Stroke**—4¼".

Displacement—282 cubic ins. **Rated HP.**—33.8.

Developed Horsepower—125 at 3600 RPM.

Compression Ratio—6.85-1 Std. cast iron head.

Compression & Vacuum Reading—*See Tune-up data.*

ORIGINAL BORE & PISTONS: *See Packard Shop Notes*

TIGHTENING TORQUES: *See Packard Shop Notes.*

CYLINDER HEAD: Tightening Torque & Cylinder Head Diagram—*See Packard Shop Notes.*

PISTONS: Aluminum alloy, autothermic strut type. **Length** 3⅞".

Weight—17¼ ozs. (stripped), 23⅛ (with rings&pin).

Removal—Pistons and rods removed from above.

Clearance—.0005"-.001". See Fitting New Pistons.

Replacement Pistons: *See Packard Shop Notes.*

Fitting New Pistons:—Insert .0015" feeler ½" wide between piston and cylinder wall on side opposite slot. Pull to withdraw feeler should be 12-18 lbs.

Installing Pistons:—Slot toward valves.

PISTON RINGS: Two compression rings (No. 200 top groove, No. 70 second groove), one oil control ring (No. 86) per piston, all above pin. Oil ring groove has twelve 5/32" oil drain holes.

Ring	Width	End Gap	Side Clearance
Comp. (#1)	.0925-.0935"	.007-.017"	.0025-.003"
Comp. (#2)	.1240-.1235"	.007-.017"	.0025-.003"
Oil Control	.1865-.186"	.007-.015"	.0025-.003"

NOTE—Oil Ring (Perfect Circle No. 86) has coil spring type expander spring.

Replacement Rings:—.005, .010", .020", .030", .040" O.S. Triple Action (packaged sets) std. & .020" oversize. *See Packard Shop Notes for Piston Ring data.*

PISTON PIN: Diameter .875". Length 2 51/64". Pin floats in piston and rod, held by locking rings.

Pin Fit in Piston—Palm push fit with piston at 160°F. (heat in water).

Pin Fit in Rod Bushing—Finger push fit at 70°F.

Piston Pin & Connecting Rod Bushing Servicing—*See Packard Shop Notes.*

Replacement Pins:—Std. and .003", .006" oversize.

CONNECTING ROD: Length 7 11/16". Weight 31.6 oz.

Upper Bearing (Piston Pin Bushing)—Split type. *See Packard Shop Notes for servicing data.*

Crankpin Bearing Diameter—2 3/32".

Lower Bearing—Shimless, precision, steel backed, Moraine Durex "300" (copper nickel matrix with babbitt overlay) lined type.

Clearance—.0005-.0015". **Endplay**—.004-.010".

Bearing Adjustment:—None (no shims). Replace bearings. Do not file rods or caps.

See Packard Shop Notes for 'Palnut' installation data.

Replacement Bearings: Furnished Std. size and .001", .002", .003", .015" Undersize.

Installing Rods:—Oil squirt hole toward camshaft.

CRANKSHAFT: Five bearing type with integral counterweights and vibration dampener on forward end. **Bearing Diameter**—2¾".

Bearings—Interchangeable, shimless, precision type steel-backed, Moraine Durex "300" (copper nickel matrix with babbitt overlay) lined type. **Clearance**—.0005-.0015".

Bearing Adjustment:—None (no shims). Replace bearings (upper halves can be 'rotated' in and out).

Replacement Bearings: Furnished Std. size and .001", .002" Undersize.

End Thrust:—By #3 bearing. **Endplay**—.003-.008".

CAMSHAFT: Five bearing type. Non-adjustable (two sprocket) chain drive.

Bearings—Shimless, precision, steel backed, babbitt lined type. **Clearance**—.001-.003".

End Thrust:—Taken by thrust plate in back of camshaft sprocket. **Endplay**—.0025-.006".

Timing Chain: Morse or Ramsey. Width 1¼". Pitch .375". Length 21¾" or 58 links.

Camshaft Setting:—Install chain and sprockets together with '0' marks on sprockets adjacent and in line with straightedge across shaft centers.

VALVES:	Head Diameter	Stem Diameter	Length
Intake	1 31/64"	.33975"	5.619"
Exhaust	1⅜"	.33975"	5.619"

	Seat Angle	Lift	Stem Clearance
Intake	30°	.318"	.0025"
Exhaust	45°	.3175"	.0045"

Valve Guides:—Pressed in block from above with upper end 31/32" below valve seat. Exhaust guides counter-bored on upper inner diameter to ⅜" diameter and ⅜" deep.

Valve Springs:—Intake and exhaust springs interchangeable. Anti-rotation serrated washer installed on top of springs.

	Spring Pressure	Spring Length
Valve Closed	52-57 lbs.	1 5/8"
Valve Open	119-129 lbs.	1 5/16"

Valve Lifters:—Mushroom type. Remove from below with camshaft out. Lifters furnished .001", .002", .005" oversize. Use Tool S.T. 5144 (piloted in valve guide) and ream for .005" oversize lifters.

Diameter—.6235-.6240". **Clearance**—.0003-.0012".

VALVE TIMING

Tappet Clearance:—.007" Intake, .010" Exh. (warm & idling). NOTE—Self-locking tappet screw used.

Valve Timing:—See Camshaft Setting above.

Intake Valves—Open 1° BTDC. Close 39° ALDC.

Exhaust Valves—Open 45° BLDC. Close 5° ATDC.

Above figures correct with .0125" Intake, .015" Exhaust tappet clearance.

Valve Timing Check—With .0125" tappet clearance #1 intake valve should open with #1 piston 1° or .0004" BTDC with 1st graduation before top dead center mark '#1 UP.DC' on vibration damper lined up with pointer (permissible variation 4° either way). Reset tappet clearance .007" (hot & idling).

LUBRICATION

Engine Oiling System: Full pressure system (pressure to main and connecting rod bearings, camshaft bearings, piston pins, valve lifters, and timing chain). Oil pump mounted externally on right side of crankcase.

Crankcase Capacity—5½ quarts.

Normal Oil Pressure—40 lbs. at driving speeds.

Oil Pressure Regulator—On oil pump cover. Not adjustable. Pressure regulator spring tension should be 14 lbs. ± 2 oz. at 1⅞".

Oil Pump: Gear type. On right side of crankcase.

Oil Pump Installation—*See Packard Shop Notes.*

Oil Filter: Special equipment.

Servicing—Renew filter cartridge at 8000-10000 mile intervals.

COOLING

Cooling System: Pressure type with pressure valve (relief valve) in radiator filler cap. Water pump mounted on front of engine with generator & fan belt drive.

Capacity—17 quarts.

Radiator Core Removal—*See Packard Shop Notes.*

Pressure Valve—In filler cap. Opens at 4½ lbs.

Water Pump:—Packless, sealed ball-bearing type.

See Water Pump Section for complete data.

Removal—Remove fan belt, disconnect pump hose, take out pump mounting screws, lift out pump.

Belt Adjustment—*See Generator Belt Adjustment.*

Thermostat:—Harrison. In cylinder head outlet.

Setting—Starts to open at 145-150°F. (Std. Type), 160-165°F. (Optl. High Reading Type).

CLUTCH

Long Model 10CF-CI. Single plate, semi-centrifugal, dry disc type.

See Clutch Section for complete data.

Facings—Woven (US Asbestos) type, 2 required. I.D. 6". O.D. 10". Thickness .125" (⅛").

Adjustment:—Adjust nut on pedal rod (at clutch fork) for 1½-1¾" free travel (2" on cars with Electromatic Clutch).

Removal:—Remove transmission (see Transmission Removal following) and flywheel housing lower cover. Disconnect and remove pedal rod, clutch throw-out bearing. Remove clutch cover screws (release tension evenly) and lower assembly out.

ELECTROMATIC CLUTCH

Electromatic Clutch—Vacuum type actuation with electrical control. Optl. on all models.

See Clutch Section for complete data.

TRANSMISSION

Own Make. Helical gear, constant-mesh, synchro-mesh (Second & High), constant-mesh (Low). Sliding spur gear (Reverse). Low & Second speed gears are ball bearing mounted.

See Transmission Section for complete data.

Transmission Control: Remote control type with shift lever mounted on steering column.

See Transmission Section for complete data.

Removal:—Disconnect shifter rods, speedometer cable, hand brake cable at equalizer, engine ground strap, overdrive cable and solenoid wires (if used), front universal (block drive shaft up against floor pan) and rubber bearing at rear of overdrive. Support rear of engine with jack and unbolt cross member (at frame ends and transmission case), disconnect clutch retractor spring and fore-and-aft restraint rod. Take out transmission-to-housing mounting screws, remove transmission assembly.

OVERDRIVE

Warner Model AS2-R9 ("Econo-drive" used with Packard Transmission). Electric solenoid operated type (no centrifugal pawls) with Governor control and throttle operated "kick-down."

See Transmission Section for complete data.

►**Overdrive Lock-up in Reverse Correction for Clipper:** Install 1948 Safety Switch (Kit No. 394484). *See 1948 Packard Car Pages for Overdrive Safety Switch description and Car Wiring Diagram showing Overdrive Circuit with Safety Switch installed.*

Overdrive Indicator Light—Green light on right side of speedometer dial. Lights when overdrive is ready to engage (at car speed of 22 MPH), goes out when accelerator pedal released momentarily to engage overdrive.

Overdrive Relay—Delco-Remy No. 1116823.

Removal: Disconnect control cable and all leads to solenoid, governor, and lockout switch. Free mounting at rear of overdrive case. Then remove overdrive and transmission assembly as directed in Transmission removal (above).

UNIVERSALS

Mechanics Type 3CR. Needle bearing type, 2 used.

See Universals Section for complete data.

►CAUTION—Rear universal flange nut controls rear axle pinion bearing pre-load which **must be adjusted whenever nut is loosened.** *See Packard Rear Axle article in Rear Axle Section for complete data.*

REAR AXLE

Own Make. Semi-floating, hypoid gear type with Hotchkiss Drive.

See Rear Axle Section for complete data.

Ratio—4.1-1 (Std.), 4.3-1 (With Overdrive).

Backlash—.003-.005". Screw adjustment.

Removal:—Remove wheel, hub, and brake backing plate assembly. Withdraw axle shafts. Disconnect rear universal joint and drop drive shaft. Remove carrier-to-housing bolt nuts, withdraw carrier.

Wheel Bearing Adjustment—Endplay controlled by shims between flanged end of housing and brake backing plate. Unbolt backing plate and clips holding brake tube to housing. Add or remove shims (endplay up to .050" can be adjusted to desired .006" at one wheel). **Endplay**—.004-.007".

SHOCK ABSORBERS

Delco Model 1946-J,K (front), Model 1040-V (rear). Hydraulic, double acting (front), direct (rear).

See Shock Absorber Section for complete data.

Fifth Shock Absorber (Stabilizer):—Monroe 373935. Direct acting, hydraulic (built-in rear stabilizer).

See Shock Absorber Section for complete data.

FRONT SUSPENSION

Front Suspension: Clipper Type Packard Safe-T-Flex, independent, linked parallelogram type with coil springs.

See Front Suspension Section for complete data.

Kingpin Inclination—5°35' crosswise.

Camber—0° plus or minus ¼°.

Caster—Neg. 1° plus or minus ½°. Adjustable.

Toe In—0" (plus 1/16", minus 0") at hub height. Adjust by turning adjuster at outer end of each tie rod equally.

Steering Geometry—Inner wheel 23° ± ½°. Outer 20°.

STEERING GEAR

Steering Gear: Own Make (same design as Gemmer Model 335) Worm & Roller with "push-pull" adjustment.

See Steering Gear Section for complete data.

BRAKES

Service: Bendix Hydraulic, 4-wheel, Duo-Servo, Single anchor type **without eccentric adjustment.** Hand lever applies rear wheel service brakes.

See Brake Section for complete data.

Drums—Centrifuse. Diameter 12".

Lining—Marshall 2201H-8 (primary shoe), Marshall B-50 (secondary). Width 1¾". Thickness 3/16". Length per shoe 11½" (primary), 13" (secondary).

Clearance—.015" at both end of secondary shoe with primary shoe forced out against drum.

Hand Brake:—See Service Brake (above).

MISC. MECHANICAL

WINDSHIELD WIPER: Stewart-Warner Type 645-H. Electric type. NOTE—'Klixon' type circuit-breaker mounted on unit (no fuse used).

See Miscellaneous Section for complete data.

HOOD LOCK: One piece design, side hinge type hood with remote control levers at each side of front compartment under instrument panel. To raise hood, push remote control lever in to unlocked position on side to be raised, raise hood about 1", release safety catch under hood (approx. 2' ahead of rear edge of hood), raise hood up and prop in open position with lever pivoted on dash.

MODEL IDENTIFICATION

SERIAL NUMBER: On left side of cowl (use Eng. No.).

ENGINE NUMBER: First No. F-500001 (1946), F-506001 (1947). On upper left side of cylinder block between #3 and #4 cylinders.

TUNE-UP

COMPRESSION: Pressure—133 lbs. at 300 RPM.

VACUUM READING: Steady 18½" idling at 6 MPH.

FIRING ORDER: 1-6-2-5-8-3-7-4.

SPARK PLUGS: AC No. 104 or Champion Y4-A. 10mm. or Auto-Lite No. P-4. 10 mm.
Gaps—.028" (.0255-.0305").
NOTE—Tighten spark plugs to 50 inch lbs. only.

IGNITION: See Coil, Condenser, and Distributor.
Breaker Gap—.017". **Cam Angle**—27° Closed.
Breaker Arm Spring Tension—17-20 ozs.
Automatic Advance—Starts 250 RPM, 6° at 700 RPM, Max. 11½° at 1800 RPM. Distributor degrees & RPM.
Vacuum Advance—Starts with 7" of vacuum, Max. 5½° with 16" of vacuum. Distributor degrees.

IGNITION TIMING: See Ignition Timing.
Std. Setting—4° BTDC.
Timing Mark—Vibration dampener at front of engine marked "#1 UP.DC" with fifteen 1° graduations before this point. Set ignition contacts to open at 4th graduation before "DC" mark.
Fuel Compensator—Set for slight ping accelerating with wide open throttle.

CARBURETION: See Carburetor & Carb. Equipment.
Idle Setting—Set both idle adjusting screws 1 to 2 turns open. Adjust for smooth idle. Idle speed 6 MPH.
Float Level—5/32" from top of float to cover with valve seated (remove gasket and invert to check).
Accelerating Pump—Inner Hole (minimum) Normal, outer hole (max. stroke) if greater charge required.

Fuel Pump Pressure: 4¾ lbs. maximum.

MANIFOLD HEAT CONTROL: Thermostatic coil type. Make certain that valve operates freely and does not bind or stick.

VALVES: See Valve Timing.
Tappet Clearance—None in service (automatic hydraulic type tappet take-up).

STARTING: See Battery, Starter, Generator, and Regulator.

IGNITION

IGNITION SWITCH: Mitchellock Switch Model 24-B. Auto-Lite No. CE-2260BCS Lock Switch and cable.
Ignition Lock Cylinder—Briggs & Stratton 50184. **Key Series**—P1251 to P1500. **Groove**—No. 2.

COIL: Auto-Lite No. CE-4659. Service Coil (less switch & cable) CE-3224US. On dash.
Ignition Current—2.4 amperes idling, 5 stopped.

CONDENSER: Auto-Lite Part No. IG-2671J.
Capacity—.20-.25 microfarad.

DISTRIBUTOR: Auto-Lite No. IGT-4203 (or IGT-4102). Automatic advance type with Vacuum Spark Control and Fuel Compensator adjustment.
Breaker Plate Identification—Maximum vacuum advance limited by slot and marked by number (#5½) on plate.
Breaker Gap—Set at .017".
Cam Angle—27° closed, 18° open (with .017" gap).
Breaker Arm Spring Tension—17-20 ozs.
Rotation—Counter-clockwise viewed from above.

Automatic Advance

Distributor Degrees	R.P.M.	Engine Degrees	R.P.M.
Start	250	0	500
3	475	6	950
6	700	12	1400
9	1300	18	2600
11½	1800	23	3600

Fuel Compensator—Manual adjustment at distributor providing 10° advance or retard from center '0' position. See Ignition Timing for setting.

Vacuum Spark Control: Auto-Lite Unit. On distributor, linked directly to breaker plate). Provides additional advance at speeds above idling except when engine accelerated or operated with wide open throttle (spark retarded by return spring in unit).

Vacuum Advance

Distr. Degrees	Engine Degrees	Vacuum (" of HG)
Start	0°	7"
1°	2°	8⅝"
3°	6°	12"
4°	8°	13½"
5½°	11°	16"

Distributor Removal:—Mounted on left side of crankcase. To remove, disconnect vacuum line and take out hold-down screw in advance arm.

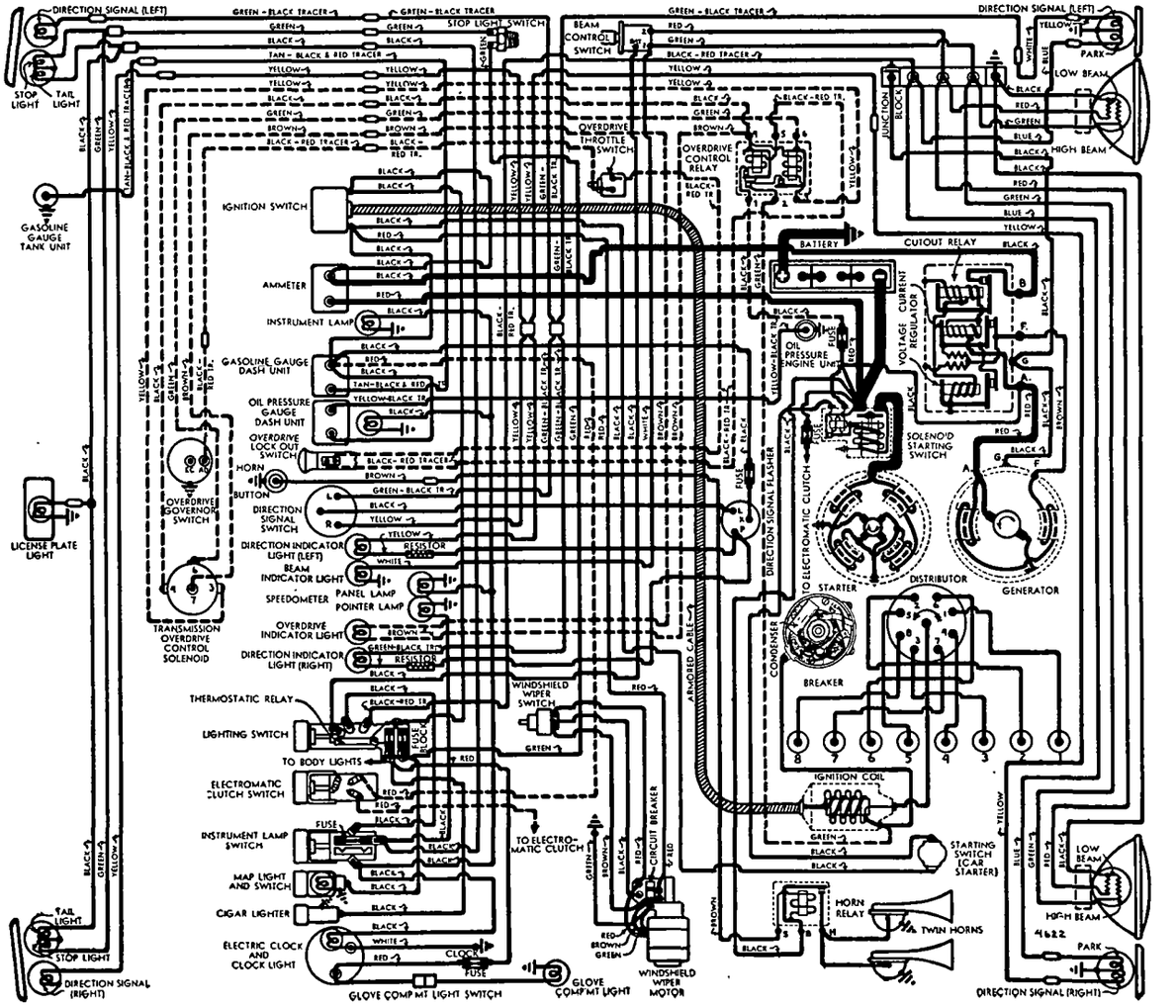

IGNITION TIMING

Std. Setting—As given below. See Fuel Compensator Setting for service and fuel corrections.

	Flywheel Degrees	Piston Position
All Engines	4° BTDC	.0070" BTDC.

Timing Mark—Vibration dampener at front of engine marked '#1 UP.DC' at top dead center for #1 piston with 15 (1°) graduations before this mark.
Timing—Loosen thumbnut, set Fuel Compensator pointer at '0', tighten thumbnut. With #1 piston on compression, turn engine over until piston reaches firing position (see table above) with 4th graduation ahead of #1UP.DC mark in line with pointer on chain case cover. Loosen advance arm clamp bolt, rotate distributor until contacts begin to open, tighten clamp bolt, see that rotor opposite #1 segment in distributor cap, check Fuel Compensator setting (following).
Timing (Neon Timing Light)—Mark 4th graduation ahead of #1UP.DC mark on vibration dampener with white paint, clip neon timing light at #1 spark plug and direct light on vibration dampener, idle engine below 500 RPM and adjust distributor as directed above until mark in line with pointer on chain case cover.
Fuel Compensator Setting—Should be set for slight ping when accelerating with wide open throttle. To adjust, loosen thumbnut, rotate distributor counterclockwise (if ping too severe), clockwise (if no ping noted), tighten thumbnut and recheck performance.

CARBURETOR

Carter Type WDO, Model 531S. 1¼" Dual (double barrel), Downdraft type with Carter Climatic Control.
See Carburetor Section for complete data.
NOTE—Carburetor has Casting No. 377 on flange.
Idle Setting—With engine warm (fast idle inoperative), set throttle stopscrew for 6 MPH idle speed. (Std.), 8-10 MPH. (Cars with Electromatic Clutch) Adjust both idle screws (1 for each barrel, adjust alike) for smooth idling performance (turn screws in for leaner mixture, correct setting 1 to 2 turns open for each screw. Recheck idle speed.
Accelerating Pump—Pump arm under dust cover at top of carburetor has two holes for pump link engagement. Set as follows:
Inner Hole (min. stroke)—Normal setting.
Outer (max. stroke)—If greater charge required.
Float Level—5/32" from top of float to bowl cover with valve seated (remove gasket & invert to check).
Metering Rods & Jets—*Refer to Carburetor Index for Carter Downdraft Carburetor Jet Specification Table.*
Fast Idle:—Integral type (built-in carburetor).
See Carburetion Equipment Section for data.
Setting—Adjust fast idle screw for .023-.028" throttle opening (Gauge T109-189) with choke closed.
Automatic Choke:—Carter Climatic Control.
See Carburetion Equipment Section for data.
Setting—Set thermostat coil housing 1 Notch Rich.

CARB. EQUIPMENT

Air Cleaner: AC. Oil-wetted type Std., Heavy duty Oil-bath type Optl.
Servicing (Oil-wetted type)—Wash and re-oil filter element whenever crankcase oil changed (1000-2000 mile intervals for normal service).
Servicing (Oil-bath type)—Clean filter element, clean and refill oil reservoir with SAE No. 50 engine oil (Summer), SAE No. 30 (Winter) to level of indicator line on case (approx. 1 pint) whenever crankcase oil changed (1000-2000 mile intervals).
Oil Filler Cap (Crankcase Ventilator Filter)—Wash filter element in filler cap and re-oil when servicing air cleaner.
Fuel Pump: AC. Type AH. Diaphragm type fuel pump. Exchange Pump AC No. 545.
See Carburetion Equipment Section for data.
Pressure—4-4¾ lbs. max.
Gasoline Gauge:—Stewart (Stewart-Warner) electric.
See Carburetion Equipment Section for data.

BATTERY

Auto-Lite Type PN-17ZR. 6 Volt, 17 Plate, 120 Ampere Hour Capacity (20 hour rate).
Starting Capacity—138 amperes for 20 minutes.
Zero Capacity—300 amperes for 4.1 minutes. Five second voltage 4.35 volts.
Grounded Terminal—Positive (+) to frame.
Dimensions—Length 19⅜". Width 4". Hght. 9 3/16".
Location—On left side in engine compartment.

STARTER

Auto-Lite Model MAX-4052. Armature MAW-2069.
Drive—Overrunning clutch (solenoid pinion shift) through reduction gears.
Rotation—Clockwise at commutator end.
Brush Spring Tension—42-53 ozs. (new brushes).

Performance Data

Torque	RPM①	Volts	Amperes
0 ft. lbs.	2700	5.5	77
33.5 "	Lock	3.0	650
45.9 "	Lock	4.0	900

①—Pinion shaft RPM. (reduction gear drive).

Removal:—Flange mounted on left front face of flywheel housing. To remove, take out flange mounting screws, lift out starter and switch assembly.
Starting Switch: Auto-Lite Model SS-4205 Solenoid type. Mounted on starter and controlled by Carter Car Starter Model 192-11U mounted on carburetor (accelerator pedal starting). *See Electrical Equipment Section for Auto-Lite Solenoid Switches and Carter Car Starter.*

GENERATOR

Auto-Lite Model No. GEA-4802A-1. Armature No. GDZ-2006F. Two brush type with Current and Voltage control. Air cooled by fan on pulley.
Charging Rate Adjustment—None. See Regulator.
Maximum Charging Rate—35 amperes (hot or cold), 8.0 volts, 1700 RPM and above with load or discharged battery (Current Regulator setting). Actual charging rate controlled by Voltage Regulator and dependent on battery condition.

Performance Data

Cold			Hot		
Amperes	Volts	R.P.M.	Amperes	Volts	R.P.M.
0	6.4	850	0	6.4	865
4	6.6	950	4	6.6	975
8	6.75	1050	8	6.75	1075
12	6.95	1150	12	6.95	1180
16	7.1	1250	16	7.1	1300
20	7.3	1345	20	7.3	1425
24	7.5	1440	24	7.5	1560
28	7.7	1540	28	7.7	1695
32	7.85	1635	32	7.85	1850
35	8.0	1700	35	8.0	1970

Rotation—Counter-clockwise at commutator end.
Brush Spring Tension—53 ozs. max. (new brushes).
Field Current—1.57-1.75 amperes at 6.0 volts.
Motoring Current—4.45-4.9 amperes at 6.0 volts.
Removal:—Pivot mounted at left front of engine. To remove, take out pivot and clamp bolts.
Belt Adjustment:—Swing generator out until 50 lb. reading secured on scale hooked to clamp bolt lug parallel to clamp link or until belt deflection midway between generator and water pump pulley is ½" with thumb pressure.

REGULATOR

Auto-Lite Model VRP-4002C. Voltage-Current Type. Vibrating type Voltage and Current Regulators in case with Cutout Relay.
See Electrical Equipment Section for complete data.
NOTE—Regulator case cover is sealed. Serviced on exchange basis if seals not broken (to remove cover).

Cutout Relay

Cuts In—6.4-7.0 volts, 780 RPM (set to 6.4-6.6 volts).
Cuts Out—4.1-4.8 volts (approx. 4-6 amps. disch.).
Contact Gap—.015" minimum.
Air Gap—.031-.034" with contacts open (check at hinge end of core).

Voltage Regulator

Setting—7.2-7.5 volts at 70°F. See Electrical Equipment Section for settings at other temperatures.
To Check (without breaking seals)—Connect ammeter in charging line at regulator 'B' terminal (use short heavy leads), voltmeter between 'B' terminal and ground. Operate generator at speed equivalent to 30 MPH., charging fully charged battery, until voltage is steady. Voltage reading should agree with setting given above.
To Adjust (with cover removed)—Change regulator armature spring tension by bending lower spring hanger slightly. See Electrical Equipment Section.
Contact Gap—.012" min. (armature against stop pin).
Air Gap—.048-.052" with contacts just opening.

Current Regulator

Setting—34-36 amperes (marked '35' on the cover).
To Check (without breaking seals)—Connect test meters as for voltage check (above). Operate generator at speed equivalent to 30 MPH. charging battery, turn on car lights and accessories or connect load (bank of headlamp bulbs, etc.) between ammeter and battery so that generator charges at peak rate and Current Regulator operates. Current reading should agree with setting given above. If more than slight excess noted, regulator is defective.
To Adjust (with cover removed)—Same as for Voltage Regulator (above).
Contact Gap & Air Gap—Same as Voltage Regulator.

LIGHTING

Headlamps: Hall "Sealed Beam" type. Upper and lower beams controlled by Beam Selector Switch on toeboard.
See Electrical Equipment Section for complete data.
Adjustment—Aim upper beam straight ahead (hot spot center 3" below lamp center height at 25 ft.).
Beam Indicator—Red light on left side of speedometer. Lighted when Upper beams in use.

C NTINUED N NEXT PA E

CONTINUED FR M PRECEDIN PAGE

Direction Signal: *See Electrical Equipment Section.*

Direction Signal Indicator—Illuminated arrows on face of speedometer dial. Right or Left arrow lighted when direction signal on same side operating.

Switches

Lighting—Delco-Remy No. 1995021.

Beam Selector—Delco-Remy No. 1997008.

Bulb Specifications

Position	Candlepower	Mazda No.
Headlamps	40-30 watts	Sealed Beam
Parking & Frt. Direc. Sig.	21-3	1154
Rear Direc. Sig.	21	1129
Direc. Sig. Indicator	1½	55
Beam Ind., Glove Compt.	1	51
Instrument, Map Light	1½	55
Clock & Speedometer ('46)	1	51
Clock & Speedometer ('47)	1½	55
Overdrive Indicator	1½	55
Courtesy, Dome	6	82
Stop & Tail	21-3	1154
Rear License	3	63

MISC. ELECTRICAL

THERMOSTATIC RELAY: Delco-Remy. On lighting switch. Contacts remain closed with 30 amperes, open in 3 minutes with 42 amps. at 70° F. Not adj.

FUSES: Auxiliary (Stop Light, Cigar Lighter, Body Lights, Accessories)—SFE 20 ampere. Two fuses on lighting switch.

Instrument & Tail Light—SFE 20 ampere. On Panel Light Switch.

Clock—SFE 4 ampere. In clock lead near clock.

Overdrive—SFE 30 ampere. In relay lead.

Direction Signal—9 ampere. In flasher lead.

HORNS: Sparton. Vibrator type, air tone, twin horns operated by relay.

Horn Current—22-25 amperes.

Horn Relay: Delco-Remy No. 1116775.
Contact Gap—.025". **Air Gap**—.015" (closed).
Contacts Close—2.75-4.0 volts.

ENGINE

ENGINE SPECIFICATIONS: Eight cylinder, "L" head type.
Bore—3½". **Stroke**—4⅝".

Displacement—356 cubic inches. **Rated HP**—39.2.

Developed Horsepower—165 at 3600 RPM.

Compression Ratio—6.85-1 cast-iron head. No Optl.
Compression & Vacuum Reading—*See Tune-up data.*

ORIGINAL BORE & PISTONS: *See Packard Shop Notes*

TIGHTENING TORQUES: *See Packard Shop Notes.*

CYLINDER HEAD: Tightening Torque & Cylinder Head Diagram—*See Packard Shop Notes.*

PISTONS: Aluminum alloy, autothermic strut type.
Length—3⅞".

Weight 20¼ oz. (stripped), 26¾ (with rings & pin).

Removal—Pistons and rods removed from above.

Clearance—.0005-.001". See Fitting New Pistons.

Replacement Pistons: *See Packard Shop Notes.*

Fitting New Pistons:—Insert .0015" feeler ½" wide between piston and cylinder wall on side opposite slot. Pull to withdraw feeler should be 12-18 lbs.

Installing Pistons:—Slot toward valves.

PISTON RINGS: Two compression rings (No. 200 top groove, No. 70 second groove), one oil control ring (No. 86) per piston, all above pin. Oil ring groove has twelve 5/32" oil drain holes.

Ring	Width	End Gap	Side Clearance
Comp. (#1)	.0930-.0935"	.007-.017"	.0025-.003"
Comp. (#2)	.1240-.1235"	.007-.017"	.0025-.003"
Oil Control	.1865-.186"	.007-.015"	.0025-.003"

NOTE—Oil Ring (Perfect Circle No. 86) has coil spring type expander spring.

Replacement Rings:—.005", .010", .020", .030", .040" O.S. Triple Action (packaged sets) std. & .020" oversize.
See Packard Shop Notes for Piston Ring data.

PISTON PIN: Diameter ⅞". Length 3 1/64".
Pin floats in piston and rod. Held by locking rings.

Pin Fit in Piston—Palm push fit with piston at 160°F (heat in water).

Pin Fit in Rod Bushing—Finger push fit at 70°F.

Piston Pin & Connecting Rod Bushing Servicing—*See Packard Shop Notes.*

Replacement Pins: Std. and .003", .006", oversize.

CONNECTING ROD: Length—9¼". **Weight**—39 ozs.

Upper Bearing (Piston Pin Bushing)—Split type.
See Packard Shop Notes for Piston Pin servicing data.

Crankpin Bearing Diameter—2¼".

Lower Bearing—Shimless, precision, steel backed, Moraine Durex "300" (copper nickel matrix with babbitt overlay) lined type.

Clearance—.0005-.0015". **Endplay**—.004-.010".

Bearing Adjustment:—None (no shims). Replace bearings. Do not file rods or caps.

Replacement Bearings: Furnished Std. size and .001", .002", .003", .015" Undersize.

Installing Rods:—Oil squirt hole toward camshaft.

CRANKSHAFT: Nine bearing type with bolted-on counterweights and vibration dampener at forward end.

Bearing Diameter—2¾".

Bearings—Interchangeable, shimless, precision, steel-backed, Moraine Durex "300" (copper nickel matrix with babbitt overlay) lined type.

Clearance—.0005-.0015".

Bearing Adjustment:—None (no shims). Replace bearings (upper halves can be 'rotated' in and out).

Replacement Bearings: Furnished Std. size and .001", .002" Undersize.

End Thrust:—By #5 bearing. **Endplay**—.003-.008".

CAMSHAFT: Eight bearing type. Non-adjustable (two-sprocket) chain drive.

Bearings—Shimless, precision, steel-backed, babbitt lined type. **Clearance**—.001-.003".

End Thrust:—Taken by thrust plate in back of camshaft sprocket. **Endplay**—.0025-.006".

Timing Chain: Morse. Width 1¼". Pitch .375" (⅜"). Length 23¼" or 62 links.

Camshaft Setting:—Install chain and sprockets together with '0' marks on sprockets adjacent and in line with a straightedge across the shaft centers.

VALVES:	Head Diameter	Stem Diameter	Length
Intake	1.670"	.34025"	6.224"
Exhaust	1 7/16"	.34025"	6.224"

	Seat Angle	Lift	Stem Clearance
Intake	30°	.340"	.002"
Exhaust	45°	.340"	.004"

Valve Guides:—Pressed in block from above with upper end 31/32" below valve seat. Exhaust guide upper end counterbored to ⅜" diameter, ⅜" deep.

Valve Springs:—Washer used on top of each spring.

	Spring Pressure	Spring Length
Valve Closed	60-66 lbs.	1¾"
Valve Open	135-145 lbs.	1 13/32"

Valve Lifters:—Wilcox-Rich 'Zero-lash' type hydraulic lifters (mushroom type). Remove from below with camshaft out. Lifters furnished .001", .002", .005" oversize. Use Tool S.T. 5101 (piloted in valve guide) and ream for .005" oversize lifters.
Refer to Packard Shop Notes for checking Valve Lifter Clearance when grinding valves.

Diameter .7177-.7182". **Clearance** .0002" selective.
See Miscellaneous Section for complete data.

VALVE TIMING

Tappet Clearance:—None in service (hydraulic type lifter). *See Valve Servicing in Packard Shop Notes.*

Valve Timing:—See Camshaft Setting above.

Intake Valves—Open 4° BTDC. Close 51° ALDC.

Exhaust Valves—Open 49° BLDC. Close 10° ATDC.

Valve Timing Check—#1 exhaust valve close 10° after top dead center (#1 piston .0438" ATDC) with hydraulic lifter dry (all oil drained out) and built up with feeler stock for zero tappet clearance.

LUBRICATION

Engine Oiling System: Full pressure system (pressure to main and connecting rod bearings, camshaft bearings, piston pins, valve lifters, and timing chain). Oil pump mounted externally on right side of crankcase.

Crankcase Capacity—7 quarts.

Normal Oil Pressure—50 lbs. at driving speeds.

Oil Pressure Regulator—On oil pump cover. Not adjustable. Pressure regulator spring tension should be 17½-18½ lbs. at 1⅞".

Oil Pump: Gear type, on right side of crankcase.
Oil Pump Installation—*See Packard Shop Notes.*

Oil Filter: Std. equipment. On left side of engine.
Servicing—Replace filter cartridge at 8000-10000 mile intervals.

Oil Pressure Gauge: Stewart-Warner Electric type.

COOLING

Cooling System: Pressure type with pressure valve (relief valve) in radiator filler cap. Water pump mounted on front of engine (belt driven with generator and fan).

Capacity—20 quarts.

Pressure Valve—In filler cap. Opens at 7 lbs. (Std.), 12 lbs. (with Air Conditioning equipment).

Water Pump:—Packless, sealed ball-bearing type.
See Water Pump Section for complete data.

Thermostat: Harrison. In water outlet elbow on cylinder head.

Setting—Starts to open at 145-150°F. (Std. Type), 160-165°F. (Optl. High Reading Type).

CLUTCH

Long Model 11CF-CI. Single plate, semi-centrifugal, dry disc type.

See Clutch Section for complete data.

Facings—Woven type (US Asbestos), 2 required. I.D. 6". O.D. 11". Thickness .125" (⅛").

Pedal Adjustment: 1¾-2¼" (Std.), 2" (with Electromatic Clutch) pedal free travel. Adjusting nut (with locknut) located on clutch fork end of connecting link.

Removal: Remove Transmission (see Transmission Removal below), disconnect pedal linkage, remove throw-out bearing. Remove clutch cover mounting screws evenly to relieve spring pressure, remove clutch and driven member.

ELECTROMATIC CLUTCH

Electromatic Clutch—Vacuum type actuation with electrical control. Optl. on all models.

See Clutch Section for complete data.

TRANSMISSION

Own Make. Helical gear, constant-mesh, synchromesh (Second & High), constant-mesh (Low), sliding spur gear (Reverse). Constant-mesh gears (Low & Second) are ball-bearing mounted.

See Transmission Section for complete data.

Transmission Control: Remote control type with shift lever mounted on steering column.

See Transmission Section for complete data.

Removal: Disconnect shifter rods, speedometer cable, hand brake cable at equalizer, and ground strap at transmission. Disconnect front universal joint, block drive shaft up for clearance. Support engine with jack, unbolt frame cross-member carrying rear engine mountings and remove cross-member. Remove flywheel housing lower cover, disconnect stabilizer rod (from transmission to X-member). Take out transmission-to-housing mounting screws, pull transmission straight back and remove from car.

OVERDRIVE

Warner Model AS1-R9A ("Econo-drive" used with Packard Transmission). Electric solenoid operated type (no centrifugal pawls) with Governor control and throttle operated "kick-down."

See Transmission Section for complete data.

►**Overdrive Lock-up in Reverse Correction for Clipper:** Install 1948 Safety Switch (Kit No. 394484). *See 1948 Packard Car Pages for Overdrive Safety Switch description and Car Wiring Diagram showing Overdrive Circuit with Safety Switch installed.*

Overdrive Indicator Light—Green light on right side of speedometer dial. Lights when overdrive is ready to engage (at car speed of 22 MPH), goes out when accelerator pedal released momentarily to engage overdrive.

Overdrive Relay—Delco-Remy No. 1116823.

Removal: Disconnect control cable and all leads to solenoid, governor, and lockout switch. Free mounting at rear of overdrive case. Then remove overdrive and transmission assembly as directed in Transmission removal (above).

UNIVERSALS

Mechanics Type 3CR. Needle bearing type, 2 used.

See Universals Section for complete data.

►*CAUTION*—Rear universal flange nut controls rear axle pinion bearing pre-load which **must be adjusted whenever nut is loosened.** *See Packard Rear Axle article in Rear Axle Section for complete data.*

REAR AXLE

Own Make. Semi-floating, hypoid gear type with Hotchkiss Drive. NOTE—Ring gear has special Support Roller. Housing cover is welded in place.

See Rear Axle Section for complete data.

►**Pinion Bearing Spacer**—*CAUTION*—1/16" spacer used on some 2103, 2106, 2126 cars. *See 1946-47 Packard in Rear Axle Section.*

Ratio—3.92-1 (Std.), 4.09-1 (With Overdrive).

Backlash—.003-.005". Screw adjustment.

Removal: Remove wheel, hub, and brake backing plate assembly, withdraw axle shafts. Disconnect rear universal joint and drop drive shaft. Remove axle carrier mounting bolt nuts, withdraw carrier assembly.

Wheel Bearing Adjustment—Endplay controlled by shims between flanged end of housing and brake backing plate. To adjust endplay, unbolt backing plate and clips holding brake tube to housing, add or remove shims.

Endplay—.004-.007"

SHOCK ABSORBERS

Delco No. 1946-J,K (front), Monroe No. 18096 (rear), Hydraulic, double acting (front), direct (rear). EXPORT CARS—Used Delco 1040-V (direct) rear.

See Shock Absorber Section for complete data.

Fifth Shock Absorber (Stabilizer): Monroe Model 373935 Direct acting type (built-in one end of stabilizer bar).

See Shock Absorber Section for complete data.

FRONT SUSPENSION

Front Suspension (Clipper):—New type Packard Safe-T-fleX (parallelogram type with upper & lower support arms and coil springs—no torque arms)

See Front Suspension Section for complete data.

Kingpin Inclination—5°35' crosswise.
Caster—Negative 1° plus or minus ½°.
Camber—0° plus or minus ¼°.
Toe In—0-1/16" measured 10" up from floor.
Steering Geometry Inner wheel 23°±½°. Outer 20°.

STEERING GEAR

Steering Gear: Own Make (same design as Gemmer Model 335) Worm & Roller with "push-pull" adjustment.

See Steering Gear Section for complete data.

BRAKES

Service: Bendix Hydraulic, 4-wheel, Duo-Servo, Single anchor type **without eccentric adjustment.** Hand lever applies rear wheel service brakes.

See Brake Section for complete data.

Drums—Centrifuse type. Diameter 12".

Lining—Marshall 2201H-8 (primary),) B-50 (secondary). Width 2¼" (front wheels), 2" (rear wheels). Thickness 3/16". Length per shoe 11½" (primary), 13" (secondary).

Clearance—.015" at both ends of secondary shoe with primary shoe forced out against drum.

Hand Brake: See Service Brakes above.

MISC. MECHANICAL

WINDSHIELD WIPER: Stewart-Warner Type 645-H. Electric type. NOTE—"KLIXON" type circuit breaker mounted near wiper motor.

See Miscellaneous Section for complete data.

ELECTRICAL EQUIPMENT NOTE: Both Auto-Lite and Delco-Remy electrical equipment are used.

HOOD LOCK: One piece side hinge hood. To raise hood, release lever under instrument panel on side to be raised, lift hood slightly, release safety catch (approx. 2 feet from rear edge of hood), raise hood, engage prop on dash to hold hood open.

MODEL IDENTIFICATION

SERIAL NUMBER: On left side of cowl (use Eng. No.).

ENGINE NUMBER: Stamped on upper left side of cylinder block between #3 and #4 cylinders.
1948 Numbers—G-200001 Up (8), G-400001 Up (Super 8).

►***ENGINE NUMBER CODE:*** ***Code marks* following *engine number indicate changes or differences over unmarked engines as follows:***
★—Engine Bore. .020" Oversize.
"A"—Oversize Valve Guides used.
"C"—Late type Pistons and Rings used.
"CD"—Same as "C" and "D".
"CE"—Same as "C" and "E".
"D"—7 qt. oil pan—"7 qt." mark on dip stick.
"E"—7 qt. oil pan and Late type Camshaft used.

TUNE-UP

COMPRESSION PRESSURE: 120 lbs. at cranking speed.

VACUUM READING: Steady 18-20" idling at 6 MPH.

FIRING ORDER: 1-6-2-5-8-3-7-4. See diagram.

SPARK PLUG GAP: .028", Limits .025-.030".
Plug Types—Auto-Lite P-4, AC No. 104, or Champion Y4A. 10 mm. Metric.
CAUTION—Avoid overtightening plugs. Tighten snugly with fingers using plug wrench.

IGNITION: ***See Coil, Condenser, and Distributor.***
Breaker Gap—.017". Limits .013-.018".
Cam Angle—Closed 27° Auto-Lite, 31° Delco-Remy.
Breaker Arm Spring Tension—17-20 ounces.
Automatic & Vacuum Advance—***See Distributor.***

IGNITION TIMING: 6° BTDC.
Timing Procedure—***See Ignition Timing.***
Vibration Dampener Mark—"#1UP.DC" with fifteen 1° graduations ahead of this point. Set ignition contacts to open at 6th graduation before "DC" mark.
Fuel Compensator Setting—Slight ping accelerating with wide open throttle.

CARBURETION: ***See Carburetor & Carb. Equipment.***
Idle Setting—⅝-1⅛ turns open (Eight), ¾-1¼ turns open (Super 8). Two screws—turn out for richer mixture.
Idle Speed (standard)—6 MPH.
Float Level—5/32" from top of float to cover with valve seated (remove gasket and invert to check).
Acelerating Pump—Not adjustable on 643S, SA. Inner Hole (Normal 644S). Outer hole if more charge needed.
Fuel Pump Pressure—4-4¾ lbs.

MANIFOLD HEAT CONTROL: Automatic. No adjustment. Valve must operate freely.

►**VALVE TAPPET CLEARANCE (EARLY CAMSHAFT):** **.006" Intake, .008" Exhaust, Hot.** ***For engines WITHOUT code letters "CE" or "E" following Engine Number.*** This setting reduced from production setting of .007" Intake and .010" Exhaust to reduce tappet noise.

►**VALVE TAPPET CLEARANCE (LATE CAMSHAFT):** **.007" Intake, .010" Exhaust, Hot.** ***for engines WITH code letters "CE" or "E" following Engine Number.***
Valve Timing Check—***See Valve Timing.***

STARTING: ***See Battery, Starter, Generator, Regulator.***

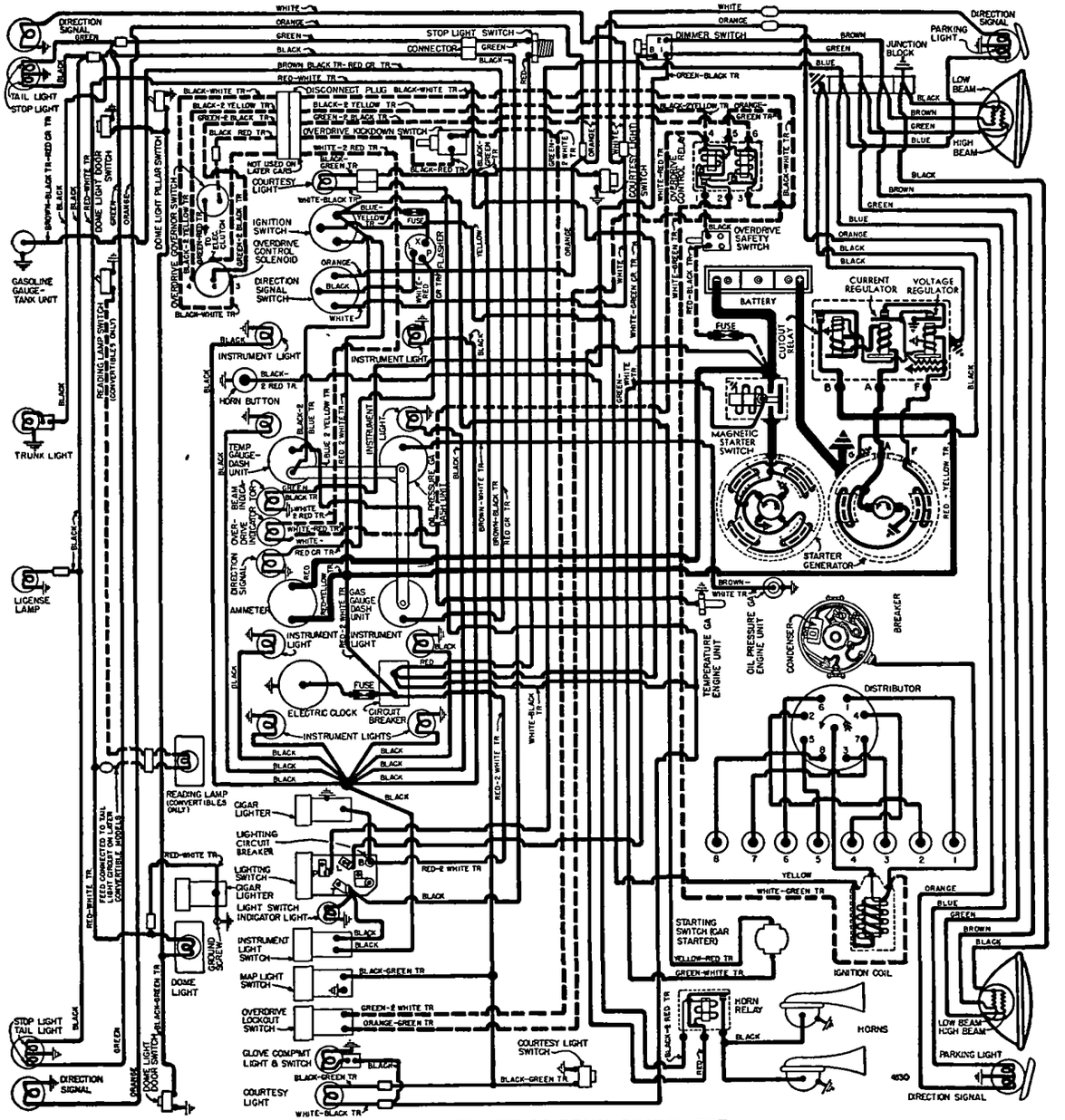

CARS WITH DELCO-REMY EQUIPMENT

IGNITION

AUT -LITE

IGNITION SWITCH: Mitchellock Type 42-B.
Ignition Lock—Briggs & Stratton. B & S No. 50184.
Key Series—P1251 to P1500. **Groove**—No. 2.

COIL: Auto-Lite Model CE-4033.
Location—Left side of engine above distributor.
Ignition Current—2.4 amperes idling, 5 stopped.

CONDENSER: Auto-Lite Part No. IG-2671K.
Capacity—.20-.25 microfarad.

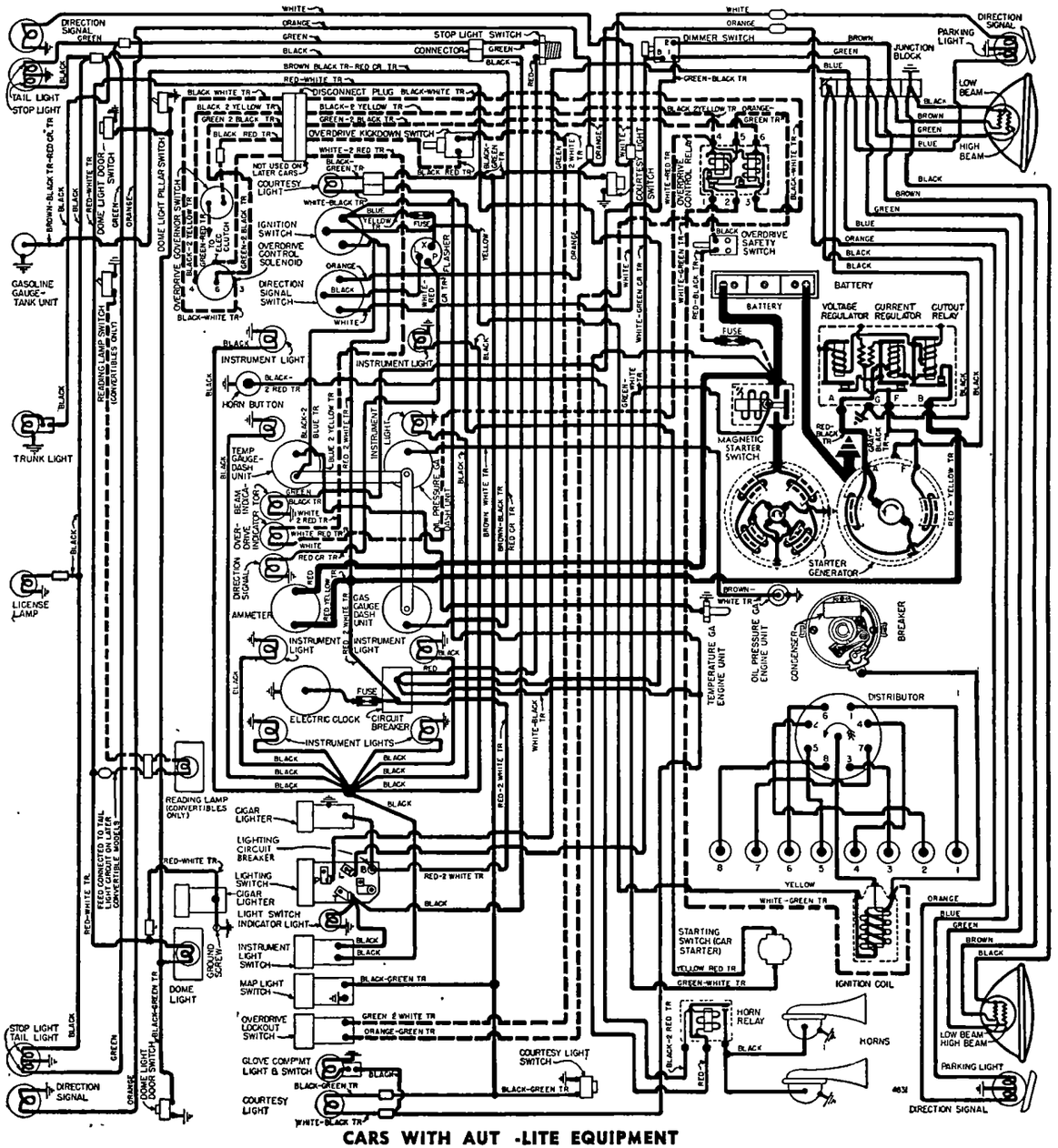

CARS WITH AUT -LITE EQUIPMENT

DISTRIBUTOR: Auto-Lite Model IGP-4502B. Automatic advance type with Vacuum Spark Control and Fuel Compensator Adjustment.
Breaker Gap—.017". Limits .013-.018".
Cam Angle—27° Closed, 18° Open.
Breaker Arm Spring Tension—17-20 ounces.
Rotation—Counter-clockwise viewed from above.

Automatic Advance (Auto-Lite)

Degrees	Distr.	R.P.M.	Degrees	Eng.	R.P.M.
Start		300	0		600
1		400	2		800
3		600	6		1200
6		1200	12		2400
8		1600	16		3200

Fuel Compensator: 40° range of adjustment on quadrant at vacuum link connection. See Ignition Timing.

Vacuum Spark Control: Auto-Lite. Mounted on hold-down plate and linked to adjusting quadrant on distributor. Provides additional advance at speeds above idling except when engine accelerated or operated with wide open throttle when spark retarded by return spring.

Vacuum Advance (Auto-Lite)

Distr. Degrees	Eng. Degrees	Vacuum (" of HG)
Start	0°	6"
2°	4°	9⅜"
4°	8°	10½"
6°	12°	12⅞"
7°	14°	14"

Distributor Removal: On left side of engine. Disconnect vacuum line, take out hold-down plate screw, lift off.

IGNITION

DELCO-REMY

IGNITION SWITCH: Mitchellock Type 42-B.
Ignition Lock—Briggs & Stratton. B & S No. 50184.
Key Series—P1251 to P1500. Groove No. 2.

COIL: Delco-Remy No. 1115380.
Location—Left side of engine above distributor.
Ignition Current—2.4 amperes idling, 5 stopped.

CONDENSER: Delco-Remy Part No. 1869704.
Capacity—.18-.25 microfarad.

DISTRIBUTOR: Delco-Remy Model 1110811. Automatic advance type with Vacuum Spark Control and Fuel Compensator.
Breaker Gap—.017". Limits .013-.018".
Cam Angle—31° Closed, 14° Open.
Breaker Arm Spring Tension—17-20 ounces.
Rotation—Counter-clockwise viewed from above.

Automatic Advance (Delco-Remy)

Degrees	Distr.	R.P.M.	Degrees	Eng.	R.P.M.
Start		300	2		600
4		600	8		1200
9		1600	32		3200

Fuel Compensator: 10° advance or retard adjustment at distributor. See Ignition Timing.

Vacuum Spark Control: Delco-Remy 1116041. Integral type mounted on distributor and linked directly to breaker plate. Provides additional advance at speeds above idling except when engine accelerated or operated with wide open throttle when spark retarded by return spring in unit. Plunger Travel—5/32" max.

Vacuum Advance (Delco-Remy)

Distr. Degrees	Eng. Degrees	Vacuum (" of HG)
Start	0°	5-7"
7°	14°	13.0-15.0"

Distributor Removal: Same as for Auto-Lite (above)

C NTINUED N NEXT PAGE

C NTINUED FROM PRECEDIN PAGE

IGNITION TIMING

Std. Setting ..... 6° BTDC.

NOTE—Modify this setting for special fuel and altitude conditions. See Fuel Compensator Setting.

Vibration Dampener Mark—"#1UP.DC" with fifteen 1° graduations ahead of mark.

Timing—With #1 piston on compression, turn engine over until piston reaches firing position with correct mark on dampener in line with pointer on chain case cover (see table above). Loosen vacuum unit link screw in distributor quadrant (Auto-Lite distributors), or hold-down screw in advance arm (Delco-Remy distributors), rotate distributor until contacts begin to open, tighten screw.

Timing (with Neon Timing Light)—Mark 6th line ahead of "#1UP.DC" mark on vibration dampener with white paint, clip timing light to #1 spark plug. Idle engine below 600 RPM., adjust distributor (as directed above) until mark lines up with pointer.

Fuel Compensator Setting—Should be set for slight ping when accelerating engine with wide open throttle. To adjust, loosen vacuum unit link screw in distributor quadrant (Auto-Lite Distributors), advance arm hold-down screw (Delco-Remy Distributors), rotate distributor one graduation at a time counter-clockwise (if ping too severe), clockwise (if no ping), until correct performance secured.

CARBURETOR

Eight.....**Carter WDO, No. 644S or SA.**
Super Eight.....**Carter WDO, No. 643S or SA.**
1¼" dual barrel downdraft types with Carter Climatic Control.

Casting No. on Flange—377 (643S), 561 (643SA, 644S).
See Carburetor Section for complete data.

Settings (Idle Setting, Float Level, and Accelerating Pump): *See Tune-Up data.*

Metering Rods & Jets—*See Carter Jet Table in Carburetor Section.*

Fast Idle: Carter Dual (WDO) Carburetor type.
See Carburetion Equipment Section for complete data.

Setting—.026" (643S, SA), .020" (644S) throttle opening with choke valve closed. Adjust by turning fast idle screw on high step of fast idle cam.

Automatic Choke: Carter Climatic Control (Dual Carburetors).
See Carburetion Equipment Section for complete data.

Setting—Centered (at index).

CARB. EQUIPMENT

Fuel Pump (Fuel-&-Vacuum): AC Type AJ. No. 1523867.

Replacement Pump—AC No. 508.

Pressure—4-4¾ lbs.
See Carburetion Equipment Section for complete data.

Gasoline Gauge: King-Seeley Electric.
Dash Unit—K-S No. 41635.
Tank Unit—K-S No. 41678 (Eight), 41676 (Super 8).
See Carburetion Equipment Section for complete data.

Air Cleaner (std.—oil wetted): AC No. 1544180 (Type #6 element).
Optl. (oil bath)—AC.

Servicing (oil-wetted type)—Wash and re-oil filter element every 1000 to 2000 miles whenever crankcase oil is changed.

Servicing (oil bath type)—Clean filter element, clean and refill oil reservoir with SAE No. 50 engine oil (Summer), No. 30 (Winter) to level of indicator line on case (approx. 1 pint) every 5000 miles or oftener if required.

BATTERY

Auto-Lite Type PN-15ZR or Willard SW-1D-100.
6 volt, 15 plate, 100 amp. hr. capacity (20 hr. rate).
Starting Capacity—120 amperes (Auto-Lite), 122 amperes (Willard) for 20 minutes.

Zero Capacity—300 amperes for 3.2 minutes. Five second voltage—4.2 volts.

Grounded Terminal—Positive (+) to frame.

Dimensions—Length 19⅜". Width 4". Height 9 3/16" (Auto-Lite), 8 15/16" (Willard).

Location—Left side in engine compartment.

STARTER

AUTO-LITE

Auto-Lite Model MCL-6003. Armature No. MCH-2021
Drive—Outboard Barrel Type Bendix No. A-1915.
Rotation—Counter-clockwise at commutator end.
Cranking Engine—175-225 amperes.
Brush Spring Tension—42-53 ozs. (new brushes).

Performance Data (Auto-Lite)

Torque	R.P.M.	Volts	Amperes
0 ft. lbs.	5300	5.5	65
8.0 "	Lock	2.0	410

Removal: On left front face of flywheel housing. To remove, take out flange mounting screws.

Starting Switch: Auto-Lite Model SS-4017 Magnetic Switch on starter controlled by Carter Car Starter No. 192-11U on carburetor (accelerator pedal control).
See Electrical Equipment Section for complete data.

STARTER

DELCO-REMY

Delco-Remy Model 1107943. Armature No. 1910938.
Drive—Outboard Barrel Type Bendix No. A-1792.
Rotation—Counter-clockwise at commutator end.
Brush Spring Tension—24-28 ozs. each.
Cranking Engine—175-225 amperes.

Performance Data (Delco-Remy)

Torque	R.P.M.	Volts	Amperes
0 ft. lbs.	6000	5.0	60
15 "	Lock	3.0	600

Removal: Same as Auto-Lite data (above).

Starting Switch: Delco-Remy Model 1452 Magnetic Switch on starter controlled by Carter Car Starter No. 192-11U on carburetor (accelerator pedal control).
See Electrical Equipment Section for complete data.

GENERATOR

AUTO-LITE

Auto-Lite Model GDZ-4801F. Armature GDZ-2006F.
2 brush with voltage and current regulation.
Maximum Charging Rate—35 amperes, 8.0 volts.
Charging Rate Adjustment—None. See Regulator.

Performance Data (Auto-Lite)

Cold			Hot		
Amperes	Volts	R.P.M.	Amperes	Volts	R.P.M.
0	6.4	925	0	6.4	1000
5	6.65	1060	5	6.65	1150
10	6.85	1200	10	6.85	1290
15	7.05	1340	15	7.05	1430
20	7.3	1480	20	7.3	1590
25	7.55	1620	25	7.55	1750
30	7.8	1760	30	7.8	1980
*35	8.0	1900	35	8.0	2250

*—Current Regulator Setting.

Rotation—Counter-clockwise at commutator end.

Brush Spring Tension—35-53 ozs. (new brushes).

Field Current—1.60-1.78 amperes at 6.0 volts.

Motoring Current—4.16-4.60 amperes at 6.0 volts.

Removal: Pivot mounted at left front of engine. To remove, take out strap screw and mounting bolts.

Belt Adjustment: ¼" belt deflection between fan and generator. Loosen adjusting strap screw, pry generator out for ¼" setting, tighten screw.

GENERATOR

DELCO-REMY

Delco-Remy Models 1102699 or 1102705.
Armature No.—Delco-Remy No. 1879002.
2 brush with voltage and current regulation.
Maximum Charging Rate—35 amperes at 8.0 volts.
Charging Rate Adjustment—None. See Regulator.

Performance Data (Delco-Remy)

	Amperes	Volts	R.P.M.
Cold	30①	8.0	1750

①—Not maximum output. See Current Regulator.

Rotation—Counter-clockwise at commutator end.

Brush Spring Tension—25 ounces each.

Field Current—1.75-1.9 amperes at 6.0 volts.

Removal & Belt Adjustment: See Auto-Lite (above).

REGULATOR

AUTO-LITE

Auto-Lite Model VRP-4402A. Voltage-current type.
See Electrical Equipment Section for complete data.
NOTE—Regulator cover sealed. Warranty void if seals broken.

Cutout Relay

Cuts In—6.4-7.0 volts, 920 RPM. (set to 6.4-6.6 volts).
Cuts Out—4.1-4.8 volts (approx. 4-6 amps. disch.).
Contact Gap—.015" minimum.
Air Gap—.031-.034" with contacts open (check at hinge end of core).

Voltage Regulator

Setting—7.2-7.5 volts at 70°F. See Electrical Equipment Section for settings at other temperatures.
Checking (without breaking seals) & Adjustment—*See Electrical Equipment Section for complete data.*
Contact Gap—.012" min. (armature against stop pin).
Air Gap—.048-.052" with contacts just opening.

Current Regulator

Setting—34-36 amperes (marked '35' on cover).
Checking (without breaking seals) & Adjustment—*See Electrical Equipment Section for complete data.*
Contact Gap—.012" min. (armature against stop pin).
Air Gap—.048-.052" with contacts just opening.

REGULATOR

DELCO-REMY

Delco-Remy 1118278 Single Core Voltage & Current type.
See Electrical Equipment Section for complete data.
CAUTION—Check generator for grounded field coils and leads before changing regulator settings to correct High Charging Rate or High Voltage.

Cutout Relay

Cuts In—6.2-6.7 volts hot.
Cuts Out—0-4.0 ampere discharge current.
Contact Gap—.020" (same for both sets).
Air Gap—.020" (with contacts just closed).

Voltage Regulator

Setting—7.2-7.4 volts hot (operating temperature). Regulator over-compensated for temperature. Should be checked with cover in place and hot.
Checking & Adjustment—***See Electrical Equip. Section.***
Air Gap—.070" between center of core and armature with contacts just closing (press down on armature to open contacts, release pressure, check gap at point where contacts just close).

Current Regulator

Setting—34-36 amperes hot (operating temp.).
Checking & Adjustment—***See Electrical Equip. Section.***
Air Gap—.080" (check same as Voltage Regulator).

LIGHTING

Headlamps: Hall "Sealed Beam" type.
See Electrical Equipment Section for complete data.
Adjustment—Aim upper beams straight ahead (hot spot center 3" below lamp center height at 25 ft.).
Beam Indicator—Left hand indicator below speedometer. Lighted when Upper Beam "on".

Direction Signal: Std. ***See Electrical Equipment Section.***
Direction Signal Indicator—Below speedometer. Flashes when Signal in use.

Switches

Lighting—Packard No. 393563.
Beam Selector—Delco-Remy No. 1997008.
Instrument—Packard No. 393565.
Map Light—Packard No. 396675.
Courtesy Light (Door Switch)—Packard 393517.
Dome Light—Packard No. 399289.

Bulb Specifications

Position	Candlepower	Mazda No.
Headlamps	Sealed Beam	4030
Parking (no Dir. Signal)	3	63
Dir. Signal & Parking	21-3	1154
Rear Dir. Signal	21	1129
Instrument, Glove Box	1½	55
Light Switch Position Indic.	1	51
Beam & Dir. Sig. Indicators	1	51
Overdrive Indicator	1½	55
Courtesy & Reading	6	82
Stop & Tail	21-3	1158
Rear License	3	63

MISC. ELECTRICAL

CIRCUIT BREAKERS: Vibrating, thermostatic types. Packard No. 410047 (Lighting), 393746 (Accy.).
Lighting—On lighting switch, 30 ampere.
Accessory (Stop & Body Lights)—Behind instrument panel above Clock. 30 ampere.
Hydro-Lectric Power (Convertible)—On engine side of dash on pump upper bracket.

FUSES: Clock—SFE 2 ampere in lead near Clock.
Direction Signal—SFE 9 ampere. In Flasher feed wire above speedometer.
Overdrive—SFE 30 ampere. In lead from Starter to Overdrive Safety Switch.
Electromatic Clutch—9 ampere. In lead from Ignition Switch to Electromatic Switch.
Heater—SFE 30 ampere. In cable under clock.

HORNS: Sparton. Dual horns operated by relay.
Horn Current—22-25 amperes.

Horn Relay: Delco-Remy No. 1116775.
Contact Gap—.025". **Air Gap**—.015" (closed).
Contacts Close—2.75-4.0 volts.

ENGINE

ENGINE SPECIFICATIONS: 8 cylinder, "L" head type.

	Eight	Super 8
Bore	3½"①	3½"①
Stroke	3¾"	4¼"
Displacement	288 cu. ins.	327 cu. ins.
Rated HP	39.2	39.2
Developed HP	130 at 3600	145 at 3600

①—***For Original Bore Sizes, see Packard Shop Notes.***
Compression Ratio—7.0-1 std. cast iron head.
Compression & Vacuum Reading—***See Tune-Up data.***

►***.020" OVERSIZE BORE ENGINES: Marked by star following engine number.***

TIGHTENING TORQUES: ***See Packard Shop Notes.***

CYLINDER HEAD: Tightening Torque & Cylinder Head Diagram—***See Packard Shop Notes.***

PISTONS: Aluminum alloy, autothermic strut type.
Original Piston Sizes & Markings, see Packard Shop Notes.

►***LATE TYPE PISTONS AND RINGS: Used on engines marked with letters "C", "CD", or "CE" following engine number.***
Length—3⅞".
Weight—19½ ozs. (stripped), 25⅞ (with rings & pin)
Removal—Pistons and rods removed from above.
Clearance—.0005-.001". See Fitting New Pistons.

Replacement Pistons: ***See Packard Shop Notes.***

Fitting New Pistons: Insert .0015" feeler ½" wide between piston and cylinder wall on side opposite slot. Pull to withdraw feeler should be 12-18 lbs.

Install Pistons: Slot toward valves.

PISTON RINGS: Two compression rings (No. 200 top groove, No. 70 second groove), one oil control ring (No. 86) per piston, all above pin. Oil ring groove has twelve 5/32" oil drain holes.

►***LATE TYPE PISTONS AND RINGS: Used on engines marked C, CD, or CE following engine number.***

Ring	Width	End Gap	Side Clearance
Comp. (#1)	.0930-.0935"	.007-.017"	.0025-.003"
Comp. (#2)	.1235-.124"	.007-.017"	.0025-.003"
Oil Control	.186-.1865"	.007-.015"	.0025-.003"

Oil Ring Note—Perfect Circle No. 86 with coil spring type expander.

Replacement Rings: .005", .010", .020", .030", .040" OS. Triple Action Sets (std. & .020" OS.). ***For installation of these sets see Packard Shop Notes.***

PISTON PIN Diameter—.875". **Length**—3 1/64". Floating type retained by lock ring at each end. Split type bushing used in upper end of rod.
Pin Fit in Piston—Palm push fit with piston at 160°F. (heat piston in water only).
Pin Fit in Rod Bushing—Finger push fit at 70°F.
Piston Pin (Connecting Rod) Bushing Installation—***See "Piston Pins" in Packard Shop Notes.***

Replacement Pins: Std. and .003", .006" oversize.

CONNECTING ROD: Length 7 15/16" (8), 7 11/16" (Super 8).
Weight—35.7 ozs. (Eight), 35.4 ozs. (Super 8).
Connecting Rod Journal Diameter—2.250".
Lower Bearing—Shimless, precision, steel backed, Moraine Durex or Federal Mogul H-24.
Clearance—.0005-.0025". **Endplay**—.004-.010".
NOTE—Plastigage can be used for checking bearing clearance as described in Packard Shop Notes.

Bearing Adjustment: None (no shims). Replace bearings. Self-locking nuts used on cap bolts (tighten to 60-65 ft. lbs.).

Replacement Bearings: .001", .002", .003", .015" U. S.

Installing Rods: Oil squirt hole toward camshaft.

CRANKSHAFT: 5 bearing type with integral counterweights.
Vibration Dampener—Houde with Silicone fluid (8), Rubber Friction Disc (Super 8).
Dampener Removal Note—Use Puller Tool No. J-2636 to avoid damaging Dampeners. Denting of housing may impair balancer operation.
Main Bearing Journal Diameter—2.7465".
Bearings—Interchangeable, shimless, precision, steel-backed Moraine Durex or Federal Mogul H-24.
Clearance—.0005-.0025".
NOTE—Plastigage can be used for checking bearing clearance as described in Packard Shop Notes.

Bearing Adjustment: None (no shims). Replace bearings (upper halves can be rotated in and out).

Replacement Bearings: Std., .001", .002" undersize.

End Thrust: At #3 bearing. **Endplay**—.003-.008".

CAMSHAFT: 5 bearing. Non-adjustable chain drive.

►***LATE TYPE CAMSHAFT—Has redesigned cam lobe contour reducing tappet noise. Engines equipped with this camshaft marked "E" or "CE" following engine number.***

►***CAUTION—Different tappet clearance settings used for each camshaft. See Tappet Clearance under VALVE TIMING.***

Bearings—Steel-backed, babbitt lined bushings.
Clearance—.001-.003".

End Thrust: Taken by thrust plate in back of camshaft sprocket. **Endplay**—.0025-.006".

Timing Chain: Morse or Ramsey. Width 1¼". Pitch .375". Length 21¾" or 58 links.

Camshaft Setting: Install chain and sprockets together with "0" marks on sprockets adjacent and in line with straightedge across shaft centers.

C NTINUED N NEXT PAGE

ENGINE

CONTINUED FROM PRECEDING PAGE

VALVES:	Head Diameter	Stem Diameter	Length
Intake	1 43/64"	.3417"	5 7/8"
Exhaust	1 7/16"	.3398"	5 7/8"

	Seat Angle	Lift	Stem Clearance
Intake	30°	.342"	.002"
Exhaust	45°	.342"	.004"

Valve Guides: Lubrite coated. Pressed in block from above with upper end 31/32" below top of block. Exhaust guides counterbored on upper inner diameter to .375" diameter and .375" deep.

►***OVERSIZE VALVE GUIDES—Used on engines marked "A" following engine number.***

Valve Springs: Intake and exhaust springs interchangeable. Anti-rotation serrated washer installed on top of spring and seats in recess in block.

	Spring Pressure	Spring Length
Valve Closed	60-66 lbs.	1¾"
Valve Open	135-145 lbs.	1 13/32"

Valve Lifters: Mushroom type. Remove from below **Diameter**—.6235-.6240". **Clearance**—.0003-.0012".

Replacement Lifters—.001", .002", .005" oversize. Use Tool S.T. 5144 (piloted in valve guide) and ream for .005" oversize lifters.

VALVE TIMING

►**VALVE TAPPET CLEARANCE (EARLY CAMSHAFT): .006" Intake, .008" Exhaust, Hot.** ***For engines WITHOUT code letters "CE" or "E" following Engine Number.*** This setting reduced from production setting of .007" Intake and .010" Exhaust to reduce noise.

►**VALVE TAPPET CLEARANCE (LATE CAMSHAFT): .007" Intake, .010" Exhaust, Hot.** ***for engines WITH code letters "CE" or "E" following Engine Number.***

Valve Timing: See Camshaft Setting above.

Intake Valves—Open 10° BTDC. Close 50° ALDC.
Exhaust Valves—Open 50° BLDC. Close 5° ATDC.
Above figures for .0125" Intake, .015" Exhaust tappet clearance.

Valve Timing Check—With .0125" tappet clearance #1 intake valve should open with #1 piston 10° BTDC. with 10th graduation before top dead center mark "#1UP.DC" on vibration dampener aligned with pointer. Reset tappet clearance .007" Hot.

LUBRICATION

Engine Oiling System: Pressure to main and connecting rod bearings, camshaft bearings, piston pins, valve lifters, and timing chain. Oil pump mounted externally on right side of engine.

►**Crankcase Capacity**—*CAUTION*—6 quarts on unmarked engines. **7 quarts** on engines marked "CD", "CE", "D", or "E" following engine number and "7 qt." mark on dip stick.

Normal Oil Pressure—40 lbs. Normal Driving.

Oil Pressure Regulator—On oil pump cover. Not adjustable. Pressure regulator spring tension should be 14 lbs. ± 2 ozs. at 1⅞".

Oil Pump: Gear type. On right side of crankcase.

Oil Pump Installation—*See Packard Shop Notes.*

Oil Filter: Optl. Replace cartridge at 8000-10000 miles or when oil shows signs of being dirty.

Oil Pressure Gauge: King-Seeley Electric.

Dash Unit—K-S No. 41640.

Engine Unit—K-S No. 40767.

See Miscellaneous Section for complete data.

Crankcase Ventilation: Oil-wetted type filter element in oil filler cap (air intake). Outlet pipe in valve compartment cover at rear.

COOLING

Cooling System: Pressure type with pressure relief valve in filler cap and fan belt driven pump.

Capacity—18 qts. (Eight), 20 qts. (Super 8), with 2 quarts additional for heater and defroster.

Radiator Core Removal—*See Packard Shop Notes.*

Pressure Valve—AC 850005 Filler Cap. Opens 7 lbs.

Water Pump: Centrifugal, belt-driven, packless type.

See Water Pump Section for complete data.

Belt Adjustment—*See Generator Belt Adjustment.*

Thermostat: In cylinder head outlet.

Setting (std.)—Starts to open 145-150°F.

Setting (Optl. High Reading)—Starts to open 160-165°F. or 175-180°F.

Temperature Gauge: King-Seeley Electric.

Dash Unit—K-S No. 41645.

Engine Unit—K-S No. 41085.

See Miscellaneous Section for complete data.

CLUTCH

Long 10CF-TI (Eight), 11CF-10½TI (Super Eight). Single plate, semi-centrifugal, dry disc type.

See Clutch Section for complete data.

Facings—Woven (U. S. Asbestos). Thickness .125". I.D. 6¾" (8), 7" (Super 8). Outside Diameter 10" (8), 10½" (Super 8).

Pedal Adjustment: 1¼-1½" free travel. Adjusting nut on rod between relay lever and throwout lever.

Removal: Remove transmission (see Transmission Removal following) and flywheel housing lower cover. Disconnect throwout linkage and remove throwout bearing. Remove clutch cover screws (release tension evenly), lower assembly out of car.

ELECTROMATIC CLUTCH

Electromatic Clutch: Vacuum type clutch actuation with electrical control. Optional equipment.

See Clutch Section for complete data.

TRANSMISSION

Own Make. Helical gear, constant-mesh, synchromesh (Second & High), constant-mesh (Low). Sliding spur gear (Reverse). Low & Second speed gears are ball bearing mounted.

See Transmission Section for complete data.

Transmission Control: Steering column type.

See Transmission Section for complete data.

Removal: Disconnect shifter rods, speedometer cable, hand brake cable at equalizer, engine ground strap, front universal (block driveshaft up against floor pan). Support rear of engine with jack and unbolt cross member (at frame ends and transmission), Disconnect clutch retractor spring and fore-and-aft restraint rod. Take out transmission-to-housing mounting screws, remove transmission.

OVERDRIVE

Warner Model AS2-R9 (Eight), AS1-R9A (Super Eight). Optl. equipment used with Packard transmission. Overdrive is solenoid operated type no centrifugal pawls) with Governor Control and throttle operated "kick-down".

See Transmission Section for complete data.

►**Overdrive Short-Circuit Correction**—Disconnect Plug under car (as shown in wiring diagram) discontinued on Late 1948 Cars to avoid short circuits at this point due to water and corrosion. On earlier cars Plug can be removed and wires spliced, soldered, taped and coated with shellac to prevent short circuits.

►**Overdrive Safety Switch**—Mounted at lower end of steering column and operated by first and reverse shift lever when in reverse position to open circuit between battery and overdrive relay (see wiring diagram). Switch has two extra terminals to operate back-up light. **1947 & Earlier Clipper Models**—To prevent overdrive lock-up when car shifted to reverse, this Safety Switch (Kit No. 394484) can be installed.

Overdrive Indicator Light—Next to high beam indicator under speedometer. Lights when overdrive ready to engage (22 MPH and up), goes out when accelerator pedal released to engage overdrive.

Overdrive Relay—D-R 1116823, Packard 347943.

Throttle Kick-down Switch—Packard No. 347496.

Safety (Rev. Lock-out) Switch—Packard 403303.

Lock-out Switch—Packard No. 354820.

Removal: Disconnect control cable and all leads to solenoid and governor. Free mounting at rear of overdrive case. Then remove overdrive and transmission (see Transmission Removal above).

UNIVERSALS

Mechanics Type 3CR (Type 3C used at front on Long WB. Cars with 3 universals). Needle bearing.
NOTE—Shaft is one-piece type (without Overdrive).

See Universals Section for complete data.

►CAUTION—Rear universal flange nut controls rear axle pinion bearing pre-load which **must be adjusted whenever nut is loosened.** ***See Packard Rear Axle article in Rear Axle Section for complete data.***

REAR AXLE

Own Make. Semi-floating, hypoid gear type with Hotchkiss Drive.

Model 2222 (141" WB. 7-Pass. Sedan) Note—Axle is Custom 8 type with Ring Gear Idler Roller.

See Rear Axle Section for complete data.

Ratio—Std.: 3.9-1 (39-10). OD.: 4.1-1 (41-10).

NOTE—Some cars without Overdrive use 4.1-1 ratio. 2222 NOTE—Std. Ratio 4.09-1 (45-11).

Backlash—.004-.006". Screw adjustment.

Removal: Remove axle shafts (see Removal below). Disconnect rear universal (wire trunnions), wire or prop propeller shaft up against floor pan with 2 x 4 inserted inside frame X-member. Drain differential, replace drain plug. Clean off housing, take off carrier lock nuts, lift carrier out.

Axle Shaft Removal: Remove wheel, brake drum (use screw type puller KMO-476—do not use knock-out type puller or thrust block may be damaged). Disconnect brake line at wheel cylinder. Remove nuts at oil seal guard and take off seal guard, gasket, retainer, oil seal, brake support plate, and bearing shims. Remove axle shaft and bearing using Puller J-2552 (do not drag shaft on inner oil seal). Use Tool J-943-B to remove inner oil seal.

Wheel Bearing Adjustment: Endplay controlled by shims between flanged end of housing and brake backing plate. Add or remove shims (furnished .005", .007", .020" thick) at one wheel for .050" or under, at both wheels if over .050" to secure .004-.007" endplay.

Endplay—.004-.007".

SHOCK ABSORBERS

Delco Model 1946-J, K (front), Model 1040-V (rear). Double acting (front), direct acting (rear).
See Shock Absorber Section for complete data.

Fifth Shock Absorber (Stabilizer): Monroe 373935. Direct acting, hydraulic (built-in rear stabilizer).
See Shock Absorber Section for complete data.

FRONT SUSPENSION

Front Suspension: Packard Clipper Safe-T-Flex, independent, linked parallelogram type with coil springs and double acting shock absorbers.
See Front Suspension Section for complete data.

Kingpin Inclination—5°50' crosswise.

Caster—Neg. 1° ± ½°. Eccentric adjustment.

Camber—0° ± ¼°. Eccentric adjustment.

Toe In—0" (plus 1/16", minus 0"). Adjust by turning adjuster at outer end of each tie rod equally.

STEERING GEAR

Packard—Gemmer Model 335—"3-tooth" Worm-and-Roller type with "push-pull" adjustment. See Gemmer.
See Steering Gear Section for complete data.

BRAKES

Service: Bendix Hydraulic, Duo-Servo, Single Anchor type without eccentric adjustment. Hand lever applies rear wheel service brakes.
See Brake Section for complete data.

Wheel Cylinder—Front 1 1/16" (1" on 7-pass.), Rear 15/16".

Drums—12" centrifuse type.

Lining—Marshall 2201H-8 (primary shoe), Marshall B-50 (secondary). Width 1¾". Thickness 3/16". Length per shoe 11½" (primary), 13" (secondary).

Model 2222 7-Pass. Note—Lining width 2¼" all shoes except 2" on rear wheel secondary shoe.

Clearance—.015" at both ends of secondary shoe with primary shoe forced out against drum.

Hand Brake: See Service Brakes above.

MISC. MECHANICAL

Power Operated Convertible Tops, Windows & Front Seat: Hydro-Lectric type (hydraulic actuation with motor-driven pump supplying oil under pressure for power cylinders).
See Miscellaneous Section for complete data.

MODEL IDENTIFICATION

SERIAL NUMBER: On left side of cowl (use Eng. No.).

ENGINE NUMBER: Stamped on upper left side of cylinder block between #3 and #4 cylinders.
1948 Numbers—G-600001 Up.

►***ENGINE NUMBER CODE: Code marks following engine number indicate changes or differences over unmarked engines as follows:***
★—Engine Bore .020" Oversize.
"C"—Late type Pistons and Rings used.

TUNE-UP

COMPRESSION PRESSURE: 135 lbs. at 300 RPM.

VACUUM READING: Steady 18-20" idling at 6 MPH.

FIRING ORDER: 1-6-2-5-8-3-7-4. See Diagram.

SPARK PLUG GAP: .028". Limits .025-.030".
Plug Types—Auto-Lite P-4, AC No. 104, or Champion Y4A. 10 mm. Metric.
CAUTION—Tighten plugs with plug wrench snugly with fingers. Avoid overtightening.

IGNITION: *See Coil, Condenser, and Distributor.*
Breaker Gap—Set at .017". Limits .015-.019".
Cam Angle—27° closed, 18° open (with .017" gap).
Breaker Arm Spring Tension—17-20 ounces.
Automatic & Vacuum Advance—*See Distributor.*

IGNITION TIMING: 6° BTDC.
Timing Procedure—*See Ignition Timing.*
Vibration Dampener Mark—"#1UP.DC" with fifteen 1° graduations ahead of this point. Set ignition contacts to open at 6th graduation before "DC"
Fuel Compensator Setting—Slight ping accelerating with wide open throttle.

CARBURETION: *See Carburetor & Carb. Equipment.*

►***METERING ROD CHANGE ON EARLY 531-S CARBURETORS FOR SMOOTHER PERFORMANCE DURING WARM-UP AND AT LOW SPEED (ALSO INCREASED GAS MILEAGE): New rod No. 75-616 (stamped on shank of rod) installed on 531-S carburetors marked with round hole punched in brass inspection tag on carburetor. This rod used on all 531-SA carburetors (later type). Car manufacturer recommends this rod be installed on unmarked 531-S carburetors.***
Idle Setting—1½-2 turns open. Two screws—turn out for richer mixture.
Idle Speed (standard)—6 MPH.
Float Level—5/32" from top of float to cover with valve seated (remove gasket and invert to check).
Accelerating Pump—Not adjustable.
Fuel Pump Pressure—4-4¾ lbs.

MANIFOLD HEAT CONTROL: Automatic. No adjustment. Valve must operate freely.

VALVE TAPPET CLEARANCE: None in service (hydraulic type lifters).
Valve Timing Check—*See Valve Timing.*

STARTING: *See Battery, Starter, Generator, Regulator.*

IGNITION

IGNITION SWITCH: Mitchellock Type 42-B.
Ignition Lock—Briggs & Stratton. B & S No. 50184.
Key Series—P1251 to P1500. **Groove**—No. 2.

COIL: Auto-Lite Model CE-4033.
Location—Left side of engine above distributor.
Ignition Current—2.4 amperes idling, 5 stopped.

CONDENSER: Auto-Lite Part No. IG-2671J.
Capacity—.20-.25 microfarad.

DISTRIBUTOR: Auto-Lite Model IGT-4203. Automatic advance type with Vacuum Spark Control and Fuel Compensator Adjustment.

Breaker Plate Identification—Maximum vacuum advance limited by slot (marked 5½) on plate.
Breaker Gap—Set at .017". Limits .015-.019".
Cam Angle—27° closed, 18° open (with .017" gap).
Breaker Arm Spring Tension—17-20 ounces.
Rotation—Counter-clockwise viewed from above.

Automatic Advance

Degrees Distr.	R.P.M.	Degrees Eng.	R.P.M.
Start	250	0	500
3	475	6	950
6	700	12	1400
9	1300	18	2600
11½	1800	23	3600

Fuel Compensator: 10° advance or retard manual adjustment at distributor. See Ignition Timing.

Vacuum Spark Control: Auto-Lite. On distributor, linked directly to breaker plate. Provides additional advance at speeds above idling except when engine accelerated or operated with wide open throttle when spark retarded by return spring.

Vacuum Advance

Distr. Degrees	Eng. Degrees	Vacuum (" of HG)
Start	0°	7"
1°	2°	8⅝"
3°	6°	12"
4°	8°	13½"
5½°	11°	16"

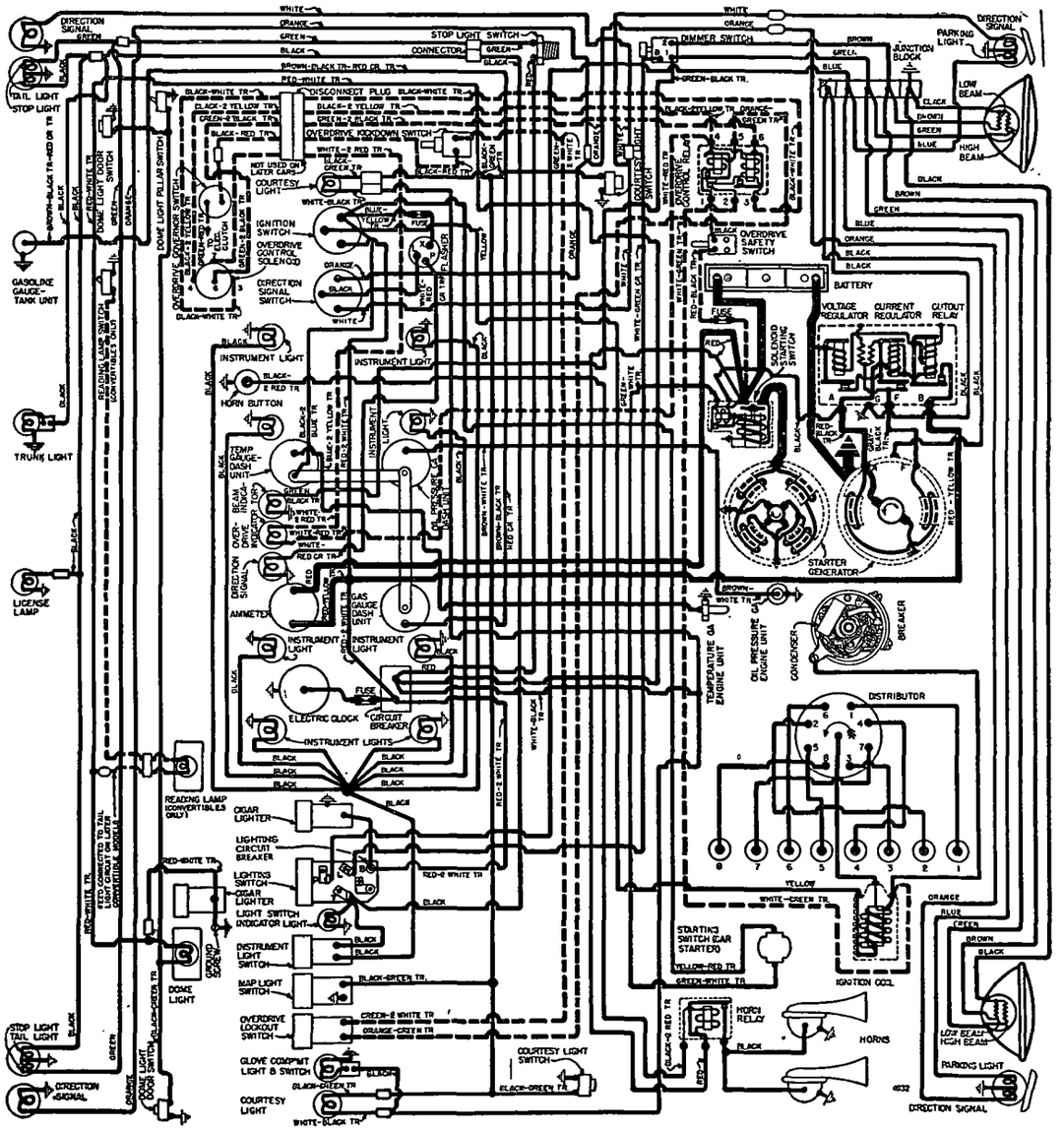

Distributor Removal: On left side of engine. Disconnect vacuum line, take out hold-down screw, lift off.

IGNITION

Std. Setting ..... **6° BTDC.**
NOTE—Modify this setting for special fuel and altitude conditions. See Fuel Compensator Setting.
Vibration Dampener Mark—"#1UP.DC" with fifteen 1° graduations ahead of mark.
Timing—Set Fuel Compensator at "0". With #1 piston on compression, turn engine over until piston reaches firing position with correct mark on dampener in line with pointer on chain case cover (see table above). Loosen advance arm clamp bolt, rotate distributor until contacts begin to open, tighten clamp bolt. Check spark plug connections (see diagram), see that rotor opposite #1 segment in cap. Check Fuel Compensator Setting.
Timing (with Neon Timing Light)—Mark 6th line ahead of "#1UP.DC" mark on vibration dampener with white paint, clip timing light to #1 spark plug. Idle engine below 500 RPM., adjust distributor (as directed above) until mark lines up with pointer.
Fuel Compensator Setting—Should be set for slight ping when accelerating with wide open throttle. To adjust, loosen thumbnut, rotate distributor counterclockwise (if ping too severe), clockwise (if no ping noted), tighten thumbnut and recheck performance.

CARBURETOR

Carter WDO, No. 531S (Early), 531SA (Later). 1¼" Dual barrel downdraft-type with Carter Climatic Control.
Casting No. on Flange—377 (for 531S), 564 (531SA).
See Carburetor Section for complete data.

►**Production Change 531S to 531SA.** New metering rods used in 531SA carburetors for smoother performance during warm up and slow speeds (and improved gas mileage). Can be installed in 531S carburetors. *See Carter WDO Vacumeter Carburetor article in Carburetor Section.*

Settings (Idle Setting, Float Level, and Accelerating Pump): *See Tune-Up data.*

Metering Rods & Jets—*See Carter Jet Table in Carburetor Section.*

Fast Idle: Carter Dual (WDO) Carburetor type.
See Carburetion Equipment Section for complete data.
Setting—Adjust fast idle screw for .023-.028" throttle opening (Gauge T109-189) with choke closed.

Automatic Choke: Carter Climatic Control (Dual Carburetors).
See Carburetion Equipment Section for complete data.
Setting—Centered (at index).

CARB. EQUIPMENT

Fuel Pump (Fuel-&-Vacuum): AC Type AH. No. 1539116.
Replacement Pump—AC No. 9116.
Pressure—4-4¾ lbs.
See Carburetion Equipment Section for complete data.

Gasoline Gauge: King-Seeley Electric.
Dash Unit—K-S No. 41635.
Tank Unit—K-S No. 41676.
See Carburetion Equipment Section for complete data.

Air Cleaner (std.—oil bath): AC No. 1542318.
Element—AC No. 1542261.
Servicing (oil bath type)—Clean filter element, clean and refill oil reservoir with SAE No. 50 engine oil (Summer), No. 30 (Winter) to level of indicator line on case (approx. 1 pint) every 5000 miles or oftener if required.

BATTERY

Auto-Lite Type PN-17ZR. 6 Volt, 17 Plate, 120 Ampere Hour Capacity (20 hour rate).
Starting Capacity—138 amperes for 20 minutes.
Zero Capacity—300 amperes for 4.1 minutes. Five second voltage—4.3 volts.
Grounded Terminal—Positive (+) to frame.
Dimensions—Length 19¼". Width 4". H. 8 29/32".
Location—On left side in engine compartment.

STARTER

Auto-Lite Model MAX-4052. Armature MAW-2069.
Drive—Overrunning clutch (solenoid pinion shift) through reduction gears.
Rotation—Clockwise at commutator end.
Brush Spring Tension—42-53 ozs. (new brushes).
Cranking Engine—200-250 amperes.

Performance Data

Torque	RPM①	Volts	Amperes
0 ft. lbs.	2560	5.5	70
13.0 "	Lock	2.0	410

①—Pinion Shaft RPM. (reduction gear drive).

Removal: On left front face of flywheel housing. To remove, take out flange mounting screws.

Starting Switch: Auto-Lite Model SS-4205 Solenoid Switch on starter controlled by Carter Car Starter No. 192-11U on carburetor (accelerator pedal control).
See Electrical Equipment Section for complete data.

GENERATOR

Auto-Lite Model GDZ-4801G. Armature GDZ-2006F. 2 brush with voltage and current regulation.
Maximum Charging Rate—35 amperes, 8.0 volts.
Charging Rate Adjustment—None. See Regulator.

Performance Data

Cold			Hot		
Amperes	Volts	R.P.M.	Amperes	Volts	R.P.M.
0	6.4	925	0	6.4	1000
5	6.65	1060	5	6.65	1150
10	6.85	1200	10	6.85	1290
15	7.05	1340	15	7.05	1430
20	7.3	1480	20	7.3	1590
25	7.55	1620	25	7.55	1750
30	7.8	1760	30	7.8	1980
35①	8.0	1900	35	8.0	2250

①—Current regulator setting. See Regulator data.
Rotation—Counter-clockwise at commutator end.
Brush Spring Tension—35-53 ozs. (new brushes).
Field Current—1.60-1.78 amperes at 6.0 volts.
Motoring Current—4.16-4.60 amperes at 6.0 volts.

Removal: Pivot mounted at left front of engine. To remove, take out strap screw and mounting bolts.

Belt Adjustment: ¼" belt deflection between fan and generator. Loosen adjusting strap screw, pry generator out for ¼" setting, tighten screw.

REGULATOR

Auto-Lite Model VRP-4402A. Voltage-current type.
See Electrical Equipment Section for complete data.
NOTE—Regulator cover sealed. Warranty void if seals broken.

Cutout Relay

Cuts In—6.4-7.0 volts, 920 RPM. (set to 6.4-6.6 volts).
Cuts Out—4.1-4.8 volts (approx. 4-6 amps. disch.).
Contact Gap—.015" minimum.
Air Gap—.031-.034" with contacts open (check at hinge end of core).

Voltage Regulator

Setting—7.2-7.5 volts at 70°F. See Electrical Equipment Section for settings at other temperatures.
Checking (without breaking seals) & Adjustment—*See Electrical Equipment Section for complete data.*
Contact Gap—.012" min. (armature against stop pin).
Air Gap—.048-.052" with contacts just opening.

Current Regulator

Setting—34-36 amperes (marked '35' on cover).
Checking (without breaking seals) & Adjustment—*See Electrical Equipment Section for complete data.*
Contact Gap—.012" min. (armature against stop pin).
Air Gap—.048-.052" with contacts just opening.

LIGHTING

Headlamps: Hall "Sealed Beam" type.
See Electrical Equipment Section for complete data.
Adjustment—Aim upper beams straight ahead (hot spot center 3" below lamp center height at 25 ft.).
Beam Indicator—Left hand indicator below speedometer. Lighted when Upper Beam "on".

Direction Signal: Optl. *See Electrical Equip. Section.*
Direction Signal Indicator—Below speedometer. Flashes when Signal in use.

Switches

Lighting—Packard No. 393563.
Beam Selector—Delco-Remy No. 1997008.
Instrument—Packard No. 393565.
Map Light—Packard No. 396675.
Courtesy Light (Door Switch)—Packard 393517.
Dome Light—Packard No. 399289.

Bulb Specifications

Position	Candlepower	Mazda No.
Headlamps	Sealed Beam	4030
Parking (no Dir. Signal)	3	63
Dir. Signal & Parking	21-3	1154
Rear Dir. Signal	21	1129
Instrument, Glove Box	1½	55
Light Switch Position Indic.	1	51
Beam & Dir. Sig. Indicators	1	51
Overdrive Indicator	1½	55
Courtesy & Reading	6	82
Stop & Tail	21-3	1158
Rear License	3	63

MISC. ELECTRICAL

CIRCUIT BREAKERS: Vibrating, thermostatic types. Packard No. 410047 (Lighting), 393746 (Accy.).
Lighting—On lighting switch. 30 ampere.
Accessory (Stop & Body Lights)—Behind instrument panel above Clock. 30 ampere.
Hydro-Lectric Power (Convertible)—On engine side of dash on pump upper bracket.

FUSES: Clock—SFE 2 ampere in lead near Clock.
Direction Signal—SFE 9 ampere. In Flasher feed wire above speedometer.
Overdrive—SFE 30 ampere. In lead from Starter to Overdrive Safety Switch.
Electromatic Clutch—9 ampere. In lead from Ignition Switch to Electromatic Switch.
Radio—SFE 14 ampere in cable at left of radio.
Heater—SFE 30 ampere. In cable under clock.

HORNS: Sparton. Dual horns operated by relay.
Horn Current—22-25 amperes.

Horn Relay: Delco-Remy No. 1116775.
Contact Gap—.025". **Air Gap**—.015" (closed).
Contacts Close—2.75-4.0 volts.

C NTINUED N NEXT PA E

C NTINUED FR M PRECEDING PA E

ENGINE

ENGINE SPECIFICATIONS: 8 cylinder, "L" head type.
Bore—3½"①. **Stroke**—4⅝".
①—*For Original Bore Sizes, see Packard Shop Notes.*

►*.020" OVERSIZE BORE ENGINES: Marked by star following engine number.*
Displacement—356 cubic inches. **Rated HP.**—39.2.
Developed Horsepower—160 at 3600 RPM.
Compression Ratio—7.0-1 std. cast iron head.
Compression & Vacuum Reading—*See Tune-Up data.*

TIGHTENING TORQUES: *See Packard Shop Notes.*

CYLINDER HEAD: Tightening Torque & Cylinder Head Diagram—*See Packard Shop Notes.*

PISTONS: Aluminum alloy, autothermic strut type. *Original Piston Sizes & Markings, see Packard Shop Notes.*

►*LATE TYPE PISTONS AND RINGS: Used on engines marked with letter "C" following engine number.*
Length—3⅞".
Weight—19½ ozs. (stripped), 25⅞ (with rings & pin)
Removal—Pistons and rods removed from above.
Clearance—.0005-.001". See Fitting New Pistons.

Replacement Pistons: *See Packard Shop Notes.*

Fitting New Pistons: Insert .0015" feeler ½" wide between piston and cylinder wall on side opposite slot. Pull to withdraw feeler should be 12-18 lbs.

Install Pistons: Slot toward valves.

PISTON RINGS: Two compression rings (No. 200 top groove, No. 70 second groove), one oil control ring (No. 86) per piston, all above pin. Oil ring groove has twelve 5/32" oil drain holes.

►*LATE TYPE PISTONS AND RINGS: Used on engines marked with letter "C" following engine number.*

Ring	Width	End Gap	Side Clearance
Comp. (#1)	.0930-.0935"	.007-.017"	.0025-.003"
Comp. (#2)	.1235-.124"	.007-.017"	.0025-.003"
Oil Control	.186-.1865"	.007-.015"	.0025-.003"

Oil Ring Note—Perfect Circle No. 86 with coil spring type expander.

Replacement Rings: .005", .010", .020", .030", .040" OS. Triple Action Sets (std. & .020" OS.). *For installation of these sets see Packard Shop Notes.*

PISTON PIN Diameter—.875". **Length**—3 1/64".
Floating type retained by lock ring at each end. Split type bushing used in upper end of rod.
Pin Fit in Piston—Palm push fit with piston at 160°F. (heat piston in water only).
Pin Fit in Rod Bushing—Finger push fit at 70°F.
Piston Pin (Connecting Rod) Bushing Installation—*See "Piston Pins" in Packard Shop Notes.*

Replacement Pins: Std. and .003", .006" oversize.

CONNECTING ROD: Length 9¼". **Weight** 38.9 ozs.
Connecting Rod Journal Diameter—2.250".
Lower Bearing—Shimless, precision, steel backed, Moraine Durex or Federal Mogul H-24.
Clearance—.0005-.0025". **Endplay**—.004-.012".
NOTE—Plastigage can be used for checking bearing clearance as described in Packard Shop Notes.

Bearing Adjustment: None (no shims). Replace bearings. Self-locking nuts used on cap bolts (tighten to 60-65 ft. lbs.).

Replacement Bearings: .001", .002", .003", .015" U. S.

Installing Rods: Oil squirt hole toward camshaft.

CRANKSHAFT: 9 bearing with bolted-on counterweights. Rubber friction disc dampener on front end.
Main Bearing Journal Diameter—2.7465".
Bearings—Interchangeable, shimless, precision, steel-backed Moraine Durex or Federal Mogul H-24.
Clearance—.0005-.0025".
NOTE—Plastigage can be used for checking bearing clearance as described in Packard Shop Notes.

Bearing Adjustment: None (no shims). Replace bearings (upper halves can be rotated in and out).

Replacement Bearings: Std., .001", .002" undersize.

End Thrust: At #5 bearing. **Endplay**—.003-.008".

CAMSHAFT: 8 bearing. Non-adjustable chain drive.
Bearings—Steel-backed, babbitt lined bushings.
Clearance—.001-.003".

End Thrust: Taken by thrust plate in back of camshaft sprocket. **Endplay**—.0025-.006".

Timing Chain: Morse. Width 1¼". Pitch .375" (⅜"). Length 23¼" or 62 links.

Camshaft Setting: Install chain and sprockets together with "0" marks on sprockets adjacent and in line with straightedge across shaft centers.

VALVES:	Head Diameter	Stem Diameter	Length
Intake	1 43/64"	.3417"	6 7/32"
Exhaust	1 7/16"	.3398"	6 7/32"

	Seat Angle	Lift	Stem Clearance
Intake	30°	.342"	.002"
Exhaust	45°	.342"	.004"

Valve Guides: Lubrite coated. Pressed in block from above with upper end 31/32" below top of block. Exhaust guides counterbored on upper inner diameter to .375" diameter and .375" deep.

Valve Springs: Intake and exhaust springs interchangeable. Anti-rotation serrated washer installed on top of spring and seats in recess in block.

	Spring Pressure	Spring Length
Valve Closed	60-66 lbs.	1¾"
Valve Open	135-145 lbs.	1 13/32"

Valve Lifters: Wilcox-Rich "Zero-lash" type hydraulic lifters (mushroom type). Remove from below with camshaft out.
Diameter .7177-.7182". **Clearance** .0002" selective.
See Miscellaneous Section for complete data.
Replacement Lifters—.001", .002", .005" oversize. Use Tool S.T. 5101 (piloted in valve guide) and ream for .005" oversize lifters.
Valve Lifter Clearance Check when Grinding Valves—*See Packard Shop Notes.*

VALVE TIMING

Tappet Clearance: None in service (hydraulic type lifters). See Valve Lifters above.

Valve Timing: See Camshaft Setting above.
Intake Valves—Open 4° BTDC. Close 51° ALDC.
Exhaust Valves—Open 49° BLDC. Close 10° ATDC.
Valve Timing Check—#1 exhaust valve closes 10° after top dead center (#1 piston .0438" ATDC) with hydraulic lifter dry (all oil drained out) and built up with feeler stock for zero tappet clearance.

LUBRICATION

Engine Oiling System: Pressure to main and connecting rod bearings, camshaft bearings, piston pins, valve lifters, and timing chain. Oil pump mounted externally on right side of engine.
Crankcase Capacity—7 quarts.
Normal Oil Pressure—50 lbs. Normal Driving.
Oil Pressure Regulator—On oil pump cover. Not adjustable. Pressure regulator spring tension should be 17½-18½ lbs. at 1⅞".

Oil Pump: Gear type. On right side of crankcase.
Oil Pump Installation—*See Packard Shop Notes.*

Oil Pressure Gauge: King-Seeley Electric.
Dash Unit—K-S No. 41640.
Engine Unit—K-S No. 40767.
See Miscellaneous Section for complete data.

Crankcase Ventilation: Oil-wetted type filter element in oil filler cap (air intake). Outlet pipe in valve compartment cover at rear.
Servicing—Wash filter element in gasoline and re-oil when changing oil (1000-2000 miles).

COOLING

Cooling System: Pressure type with pressure relief valve in filler cap and fan belt driven pump.
Capacity—20 qts.
Radiator Core Removal—*See Packard Shop Notes.*
Pressure Valve—AC No. 850005 pressure cap. Opens at 7 lbs.

Water Pump: Centrifugal, belt-driven, packless type.
See Water Pump Section for complete data.
Belt Adjustment—*See Generator Belt Adjustment.*

Thermostat: In cylinder head outlet.
Setting (std.)—Starts to open 145-150°F.
Setting (Optl. High Reading)—Starts to open 160-165°F. or 175-180°F.

Temperature Gauge: King-Seeley Electric.
Dash Unit—K-S No. 41645.
Engine Unit—K-S No. 41085.
See Miscellaneous Section for complete data.

CLUTCH

Long Model 11CF-TI. Single plate, semi-centrifugal, dry disc type.
See Clutch Section for complete data.
Facings—Woven (U. S. Asbestos). Thickness .125". Inside Diameter 7". Outside Diameter 11".

Pedal Adjustment: 1¼-1½" free travel. Adjusting nut on rod between clutch relay lever and throwout lever.

Removal: Remove transmission (see Transmission Removal following) and flywheel housing lower cover. Disconnect throwout linkage and remove throwout bearing. Remove clutch cover screws (release tension evenly), lower assembly out of car.

ELECTROMATIC CLUTCH

Electromatic Clutch: Vacuum type clutch actuation with electrical control. Optional equipment.
See Clutch Section for complete data.

TRANSMISSION

Own Make. Helical gear, constant-mesh, synchromesh (Second & High), constant-mesh (Low). Sliding spur gear (Reverse). Low & Second speed gears are ball bearing mounted.
See Transmission Section for complete data.

Transmission Control: Steering column type.
See Transmission Section for complete data.

Removal: Disconnect shifter rods, speedometer cable, hand brake cable at equalizer, engine ground strap, front universal (block driveshaft up against floor pan). Support rear of engine with jack and unbolt cross member (at frame ends and transmission). Disconnect clutch retractor spring and fore-and-aft restraint rod. Take out transmission-to-housing mounting screws, remove transmission.

OVERDRIVE

Warner Model AS1-R9A. Optl. equipment used with Packard Transmission. Overdrive is solenoid operated type (no centrifugal pawls) with Governor Control and throttle operated "kick-down". A new Overdrive Safety Switch is used.
See Transmission Section for complete data.

►**Overdrive Short-Circuit Correction**—Disconnect Plug under car (as shown in wiring diagram) discontinued on Late 1948 Cars to avoid short circuits at this point due to water and corrosion. On earlier cars Plug can be removed and wires spliced, soldered, taped and coated with shellac to prevent short circuits.

►**Overdrive Safety Switch**—Mounted at lower end of steering column and operated by first and reverse shift lever when in reverse position to open circuit between battery and overdrive relay (see wiring diagram). Switch has two extra terminals to operate back-up light. **1947 & Earlier Clipper Models**—To prevent overdrive lock-up when car shifted to reverse, this Safety Switch (Kit No. 394484) can be installed.

Overdrive Indicator Light—Next to high beam indicator under speedometer. Lights when overdrive ready to engage (22 MPH and up), goes out when accelerator pedal released to engage overdrive.

Overdrive Relay—D-R 1116823, Packard 347943.
Throttle Kick-down Switch—Packard No. 347496.
Safety (Rev. Lock-out) Switch—Packard 403303.
Lock-out Switch—Packard No. 354820.

Removal: Disconnect control cable and all leads to solenoid and governor. Free mounting at rear of overdrive case. Then remove overdrive and transmission (see Transmission Removal above).

UNIVERSALS

Mechanics Type 3CR (Type 3C used at front on Long Wheelbase Cars with 3 Universals). Needle bearing type.

NOTE—One-piece shaft used on cars without Overdrive.
See Universals Section for complete data.

►CAUTION—Rear universal flange nut controls rear axle pinion bearing pre-load which **must be adjusted whenever nut is loosened.** *See Packard Rear Axle article in Rear Axle Section for complete data.*

REAR AXLE

Own Make. Semi-floating, hypoid gear type with Hotchkiss drive and Ring Gear Idler Roller.
See Rear Axle Section for complete data.
Ratio—Std. 3.92-1 (47-12). OD.: 4.09-1 (45-11).
NOTE—2226 (148" WB.) Std. Ratio 4.09-1 (45-11).
Backlash—.004-.006". Screw adjustment.

Removal: Remove axle shafts (see Removal below). Disconnect rear universal (wire trunnions), wire or prop propeller shaft up against floor pan with 2 x 4 inserted inside frame X-member. Drain differential, replace drain plug. Clean off housing, take off carrier lock nuts, lift carrier out.

Axle Shaft Removal: Remove wheel, brake drum (use screw type puller KMO-476—do not use knock-out type puller or thrust block may be damaged). Disconnect brake line at wheel cylinder. Remove nuts at oil seal guard and take off seal guard, gasket, retainer, oil seal, brake support plate, and bearing shims. Remove axle shaft and bearing using Puller J-2552 (do not drag shaft on inner oil seal). Use Tool J-943-B to remove inner oil seal.

Wheel Bearing Adjustment: Endplay controlled by shims between flanged end of housing and brake backing plate. Add or remove shims (furnished .005", .007", .020" thick) at one wheel for .050" or under, at both wheels if over .050" to secure .004-.007" endplay.
Endplay—.004-.007".

SHOCK ABSORBERS

Delco No. 1946-J, K (front), Monroe No. 18096 (rear). Hydraulic, double acting (front), direct (rear).
See Shock Absorber Section for complete data.

Fifth Shock Absorber (Stabilizer): Monroe 373935. Direct acting, hydraulic (built-in rear stabilizer).
See Shock Absorber Section for complete data.

FRONT SUSPENSION

Front Suspension: Packard Clipper Safe-T-Flex, independent, linked parallelogram type with coil springs and double acting shock absorbers.
See Front Suspension Section for complete data.
Kingpin Inclination—5°50′ crosswise.
Caster—Neg. 2° ± ½°. Eccentric adjustment.
Camber—0° ± ¼°. Eccentric adjustment.
Toe In—0" (plus 1/16", minus 0"). Adjust by turning adjuster at outer end of each tie rod equally.

STEERING GEAR

Packard—Gemmer Model 335—"3-tooth" Worm-and-Roller type with "push-pull" adjustment. See Gemmer.
See Steering Gear Section for complete data.

BRAKES

Service: Bendix Hydraulic, Duo-Servo, Single Anchor type without eccentric adjustment. Hand lever applies rear wheel service brakes.
See Brake Section for complete data.
Wheel Cylinder—Front 1". Rear 15/16". For Model 2226 7-Pass. 1¼" front, 1⅛" rear.
Lining—Marshall 2201H-8 (primary shoe), Marshall B-50 (secondary). Width 2¼" (front wheel), 2" (rear). Length per shoe 11½" (primary), 13" (secondary). Thickness 3/16".
Model 2226 7-Pass. Note—Marshall 9017 (secondary). All shoes 13" long, 2½" wide.
Clearance—.015" at both ends of secondary shoe
Hand Brake: See Service Brakes above.

MISC. MECHANICAL

Power Operated Convertible Tops, Windows & Front Seat: Hydro-Lectric type (hydraulic actuation with motor-driven pump supplying oil under pressure for power cylinders).
See Miscellaneous Section for complete data.

MODEL IDENTIFICATION

SERIAL NUMBER:—Stamped on plate on right (1936), left (1937-38) side rail at rear of front spring rear shackle. First number as follows:

	(438-138" WB)	(444-144" WB)	(447-144" WB)
1936	2,215,001	2,600,001	
1937	2,225,001	2,610,001	1,100,001
1938	2,230,001	2,615,001	1,105,001

ENGINE NUMBER:—Stamped on left side of cylinder block below head at center of engine.

TUNE-UP

COMPRESSION:—Ratio—6.4-1 Standard aluminum hd. No optl. ratios. **Pressure**—148 lbs. at 2500 RPM or 75-80 lbs. at cranking speed (100-105 R.P.M.).

VACUUM READING:—Gauge should show steady reading of 19-20" with engine idling.

FIRING ORDER: 1-6-2-5-8-3-7-4. See diagram.

SPARK PLUGS: Champion Type J-6. 14 mm. Metric. Gaps—.025". Limits .022-.025".

IGNITION: See Coil, Condenser, and Distributor.

Passenger Cars

Breaker Gap—.018". **Cam Angle**—33° Closed.
Synchronization—Set movable contacts to open 45° after stationary contacts.
Automatic Advance—9° max. at 1550 RPM (distr.).

Transportation Sedan

Breaker Gap—.015". **Cam Angle**—31° Closed
Automatic Advance—10° max. at 1750 RPM (distr.).
Vacuum Advance—7½° (distr.) with 14-17" vacuum.

IGNITION TIMING See Ignition Timing.
Std. Setting—5° BTDC. Flywheel mark 'IGN/5-4' aligned with inspection hole indicator (on left side of housing) for #4 cylinder (stationary contacts). Movable contacts should open 45° after this point. See IGNITION TIMING for detailed instructions.

CARBURETION: See Carburetor & Carb. Equipment.
Idle Setting—Set idle adjusting screws midway between 'miss' and 'roll' points. Idle speed 37-39 explosions in 15 seconds (removable inspection plug in exhaust manifold provided).
Float Level—Fuel level 9/16" below edge of bowl.
Accelerating Pump—Inner Hole (Summer), outer (winter).

Fuel Pump Pressure: 4¼ lbs. maximum.

VALVES: See Valve Timing.
Tappet Clearance None in service, hydraulic take-up.

STARTING: See Battery, Starter, Generator, Regulator.

IGNITION

Ignition Switch:—Delco-Remy Model 430-U. Switch and cable assembly with armored coil connection.

COIL: Delco-Remy Model 539-K. Mounted on dash.
Ignition Current—2 amperes idling, 4 stopped.

CONDENSER: Delco-Remy Part No. 829092 (for 662-J). **Capacity**—.20-.25 microfarad.

DISTRIBUTOR (PASSENGER CARS): Delco-Remy 662-J. Double breaker, 4 lobe cam, semi-automatic advance. Contacts open alternately at 45° intervals corresponding to 90° firing interval of engine, and must be synchronized. See IGNITION TIMING.
Breaker Gap—Set at .018". Limits .018-.024".
Cam Angle or Dwell—33° closed, 12° open (distrib.). Both sets together when properly synchronized.
Breaker Arm Spring Tension—19-23 ounces.
Manual Advance—33° (engine-maximum). Consists of retard operated by pulling out button on dash. Used for hand cranking or heavy pulling.

Automatic Advance—662-J

Distributor		Engine	
Degrees	R.P.M.	Degrees	R.P.M.
Start	300	2	600
9	1550	18	3100

DISTRIBUTOR (TRANSPORTATION SEDAN): Delco-Remy Model 663-M. Single breaker, 8 lobe cam, full automatic advance with Vacuum spark control. NOTE—No synchronization required.
Breaker Gap—.015". Limits .0125-.0175".
Cam Angle or Dwell—31° closed, 14° open (distr.).
Breaker Arm Spring Tension—22 ounces.
Rotation—Clockwise viewed from the top.
Manual Advance—33° engine (retard only).

Automatic Advance—663-M

Distributor		Engine	
Degrees	R.P.M.	Degrees	R.P.M.
Start	300	2	600
4.75	700	9.5	1400
10	1750	20	3500

Vacuum Spark Control 681-R (663-M Distributor only):—Integral type. Mounted on distributor and linked directly to breaker plate. Provides additional advance except when engine accelerated or operated with wide open throttle when spark retarded by return spring within unit.

Vacuum Advance (for 663-M)

Distr. Degrees	Eng. Degrees	Vacuum (" of HG)
Start	0°	5-7"
7.5°	15°	14-17"

Distributor Removal:—Mounted on right hand side of cylinder head. To remove, take out hold-down screw in advance arm.

IGNITION TIMING

IGNITION TIMING:—

	Flywheel Degrees	Piston Pos.
All engines	5° BTDC	.0123" BTDC

Timing (Stationery Contacts)—Advance spark control button (push button in), turn ignition key to 'on' position with automatic starting inoperative (if ignition turned on), remove cover over inspection hole in flywheel housing. With #4 piston on

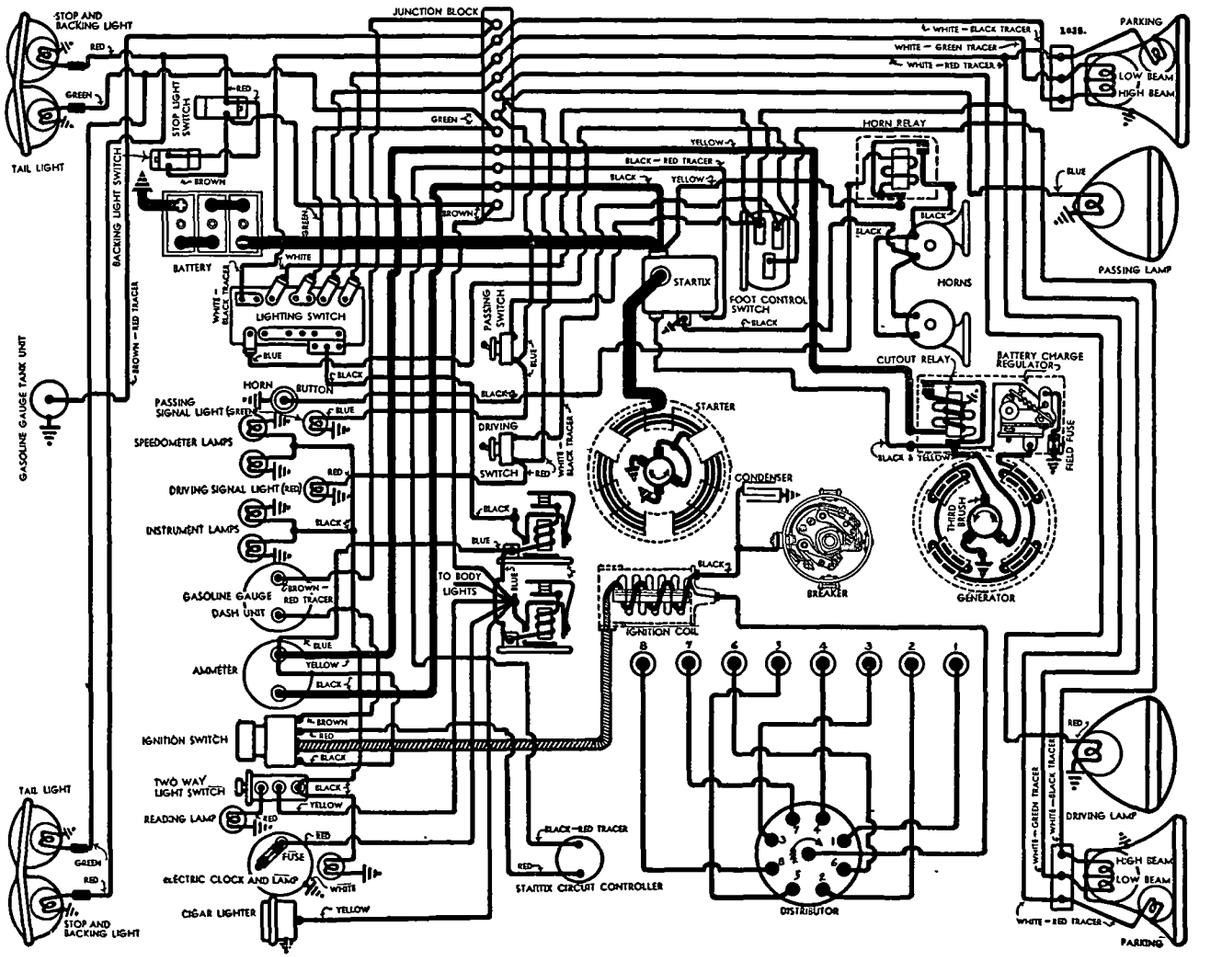

compression, turn engine over until flywheel mark 'IGN/4' lines up with indicator on housing (mark is 5° before top dead center mark 'UDC/4'), loosen advance arm clamp bolt, rotate distributor until stationery contacts (mounted directly on breaker plate) begin to open, tighten clamp bolt, then check sychronization.

Synchronization (Movable Contacts)—Turn engine over 90° or ¼ revolution to firing position for piston #1, stop when flywheel mark 'IGN./1-8' lines up with indicator (mark is 5° before top dead center mark 'UDC./1-8'), loosen lockscrews on movable sub-plate, turn eccentric adjusting screw until contacts begin to open, tighten lockscrews, check spark plug connections.

Synchronization (Using Tool)—Use special synchronizing tool, Delco-Remy Part No. 1838182, and follow complete directions in Equipment Section.

CARBURETOR

CARBURETION:—Carburetor—Stromberg Mod. EE-3, 1½" dual downdraft type.

For complete data, refer to Carburetor Index.

NOTE—Do not adjust carburetor until engine is warmed up so that choke valve is wide open and engine idling at hot or slow idling speed.

Idle Adjustment—Adjust each screw individually with engine idling on four cylinders (ground #1, 2, 7, 8 plug cables when adjusting inner screw, #3, 4, 5, 6 while adjusting outer screw). Turn screw in until engine begins to lag or miss, then out until engine begins to roll, finally turn screw in slowly until engine fires smoothly. Repeat with other adjusting screw in the same manner. Adjust throttle stopscrew so that idle speed is 37-39 explosions in 15 seconds (checked by removing plug in exhaust manifold).

Accelerating Pump Setting—Adjusted by changing position of pump link rod in throttle valve lever.
Inner Hole (Min. stroke)—Summer temperatures.
Outer Hole (Max. stroke)—Winter temperatures.

Fast Idle:—Stromberg type. See special article in Carburetion Section.

For complete data, refer to Carburetion Equip. Index.

Automatic Choke:—Stromberg Type 'C' No. A-17630.

For complete data, refer to Carburetion Equip. Index.

CARB. EQUIPMENT

Air Cleaner:—AC. oil-wetted type standard.

Fuel Pump:—AC. Type D #1522112. Diaphragm type.

For complete data, refer to Carburetion Equip. Index.

Gasoline Gauge:—Motometer Electric. Dash unit—NG-7833 (1936), NG-8440D (1937). Tank unit—NG-7741T (all).

For complete data, refer to Carburetion Equip. Index.

BATTERY

Willard Type WH-4-17, or RH-4-17 (Export). 6 volt, 17 plate, 136 amp. hour capacity (20 hour rate).
Starting Capacity—160 amperes for 20 minutes.
Zero Capacity—300 amperes for 5.4 minutes.
Grounded Terminal—Positive (+) term. grounded to transmission cover bolt.
Location—Left hand side under front floor.

STARTER

Owen-Dyneto Model DI-1314. Armature No. 16437.
Drive—Bendix Type RCD11FXT-10.
Cranking Engine—100-105 R.P.M., 175 amperes at 5.35 volts.
Rotation—Counter-clockwise at commutator end.
Brush Spring Tension—56-60 unces each.

Performance Data

Torque	R.P.M.	Volts	Amperes
0 ft. lbs.	4500	6.0	60
2 "	1600	5.5	130
3.6 "	1200	5.35	170
7.4 "	800	5.05	250
14.4 "	400	4.5	400
28.0 "	Lock	3.5	650
29.24 "	Lock	3.6	720

Removal:—Starter flange mounted on left front face of flywheel housing. To remove, take out three flange mounting capscrews.

Starting Switch:—Startix Type 'D'. Automatic starting switch and Startix circuit controller (anti-backfire unit), controlled by ignition switch. See special article in Equipment Section for complete data.

For complete data, refer to Electrical Equipment Index.

GENERATOR

Owen-Dyneto Model CO-1309. Armature No. 23691. Air-cooled. Third brush control type with Battery Charge Regulator (two-step charging rate).

Charging Rate Adjustment—Third brush shifted through rack-and-pinion control by slotted adjusting screw on commutator end plate. To adjust, turn adjusting screw to right or clockwise to increase, and to left or counter-clockwise to decrease charging rate.

Maximum Charging Rate—32 amperes (cold), 8.0 volts, 1900 R.P.M., 20-25 M.P.H.

Performance Data—Regulator Inoperative

Cold			Hot		
Amperes	Volts	R.P.M.	Amperes	Volts	R.P.M.
0	7.0	580	0	7.3	625
5	7.2	630	5	7.5	700
10	7.5	700	10	7.7	800
15	7.7	790	15	7.9	930
20	7.9	910	20	8.0	1100
25	8.0	1080	25	8.0	1380
30	8.0	1380	28	8.0	2000
32	8.0	1900			

Rotation—Counter-clockwise at commutator end.
Brush Spring Tension—20-22 ozs. (main), 12-14 ozs. (third).
Field Current—3.5-3.7 amperes at 6.0 volts.
Motoring Current—16.7-18 amperes at 6.0 volts (½ ampere more if relay and regulator in circuit).
Field Fuse—5 ampere capacity in knurled plug in side of regulator case.

Removal:—Generator cradle mounted at left front of engine with fan belt drive (double Vee belt). To remove, slack off drive belt, disconnect water pump drive coupling, loosen mounting clamp band.

Belt Adjustment:—To adjust, loosen clamp bolt on fan bracket, turn eccentric shaft spindle until 10 lb. pull on belt midway between pulleys causes 1" deflection, tighten clamp bolt. Additional range of adjustment secured by taking bracket off engine and moving bracket up until mounting bolts engage lower holes.

REGULATOR

Owen-Dyneto 40300 Battery Charge Regulator. Consists of Cutout Relay and Battery Charge Regulator in a single case on the generator field frame.

For complete data, refer to Electrical Equipment Index.

Cutout Relay

Cuts In—6.8-7.2 volts, 600 R.P.M., 8 M.P.H.
Cuts Out—0-2.5 amperes discharge current.
Contact Gap—.030-.032".
Air Gap—.020-.025" with contacts closed.

Battery Charge Regulator

Setting—8.2 volts (cold), 7.8 volts (hot)—contact opening point.
Regulator Resistance—1.85 ohms.

LIGHTING

LIGHTING:—Headlamps—Guide Multi-beam, Pre-focused, Cross-beam type with special non-interchangeable lenses. Headlamps aimed straight ahead with lenses removed. Asymetrical passing beam (upper beam left hand headlamp, lower beam right hand headlamp), controlled by foot selector switch with lighting switch in 'Country Driving' position.
Driving Lamp—Mounted on right of radiator. Controlled by separate switch on instrument panel with Red indicator lamp lighted with driving lamp 'on'. Lighted with lighting switch in 'Country Driving' position except when Driving Lamp Switch turned off.
Passing Lamp—Mounted at left of radiator. Controlled by separate switch on instrument panel with Green indicator lamp lighted with passing lamp 'on'. Lighted with lighting switch in 'City Driving' position or with foot selector switch in passing position (see Headlamps above) except when Passing Lamp Switch turned off.

Switches

Lighting—Delco-Remy Model 479-M.
Instrument Lamps—Delco-Remy Model 1411.
Foot Selector—Delco-Remy Model 471-Z.

Bulb Specifications

Position	Candlepower	Mazda No.
Headlamps	32-32	2330
Stop and Backing	21	1129
Driving and Passing	32	1323 **
Driving and Passing Pilots	3	64
License Plate	3	63
Instrument Panel, Parking	1½	55
Tail, Dome & Corn., Smoke Cab.	6	81

** This bulb Pre-focused, single contact type.

MISC. ELECTRICAL

FUSES:—Electric Clock—5 ampere on back of clock.
Generator Field—5 ampere in regulator case.

CURRENT LIMIT RELAY: Delco-Remy 410-N. 2 units used. Vibrating type. Starts to operate with current load of 35-40 amperes, limiting load to 5-22 amps.

Horn Relay:—Model 266-TK. Requires .25 amperes to close contacts. Current draw .8 amperes.
Contact Gap—.012-.030".
Air Gap—.015-.030" with contacts closed.
Spring Tension—5 ounces minimum measured at brass button.

HORNS:—Klaxon Model K-33-S. Type 2051 (low note), 2052 (high note). Vibrator type, blended tone, twin horns operated by horn relay.

Horn Type	Current at 6 volts	Air Gap
2051 (low note)	11-13	.042-.046"
2052 (high note)	10-12	.032-.036"

Contact Gap—.015-.025".
Air Gap—.012-.017" with contacts closed.

ENGINE

ENGINE SPECIFICATIONS:—8 cylinder, In Line, 'L' hd.
Bore—3½". **Stroke**—5".
Displacement—385 cubic inches.
Rated Horsepower—39.2 (AMA).
Developed Horsepower—150 at 3400 R.P.M.
Compression Ratio—6.4-1 Std. aluminum head, no optional ratios.
Compression Pressure—148 lbs. at 2500 R.P.M. or

C NTINUED N NEXT PA E

ENGINE

CONTINUED FROM PRECEDING PAGE

75-80 lbs. at cranking speed.
Vacuum Reading—Gauge should show steady reading of 19-20" with engine idling.

PISTONS:—Bohn, Bohnalite aluminum alloy, Invar strut, split skirt type or Lynite aluminum alloy, 'T' slot type with Anodic finish (special hard oxide bearing surface). **Length**—4¼".
Weight—22.71 ozs. (stripped).
Removal—Pistons and rods removed from above.
Clearance—Top .025" (Bohn), .035" (Lynite), Bottom .002". See Fitting New Pistons.
Replacement Pistons:—Pistons furnished in standard oversizes of .002", .004", .010", .020".
Fitting New Pistons:—Pistons should be snug on .0015" feeler and locked on .002" feeler.
Installing Pistons:—Slot should be toward left viewed from driver's seat.

PISTON RINGS:—Before Eng. No. 314480. Four rings per piston, one plain compression ring (top), two Perfect Circle #70 scraper rings (# 2 & 3), one Perfect Circle #85 oil control ring, all above pin. Oil ring groove drilled for oil drainage.

Ring	Width	End Gap	Side Clearance
Comp. (all)	.1235-.1240"	.013-.018"	.001-.002"
Oil Cont.	.1860-.1865"	.013-.018"	.001-.002"

PISTON RINGS:—After Eng. No. 314480. Four rings per piston, two compression (Perfect Circle #70), two oil control (Perfect Circle #85). Both oil ring grooves drilled for oil drainage.

Ring	Width	End Gap	Side Clearance
Compression	.1235"	.020-.025"	.001-.002"
Oil Control	.1545"	.013-.021"	.001-.002"

PISTON PIN:—Diameter .8749". Length 3.031".
Pin floats in piston and rod. Held by retaining rings.
Pin hole in connecting rod is bronze bushed.
Pin Fit in Piston—Thumb push fit at 70° F.
Pin Fit in Rod Bushing—.0004-.0006" clearance.

CONNECTING ROD:—Weight 34.82 ozs. Length 8.999".
Crankpin Journal Diameter—2.251-2.2515".
Lower Bearing—Centrifugally cast, babbitt-lined type. No shims used.
Clearance—.001-.0025". Sideplay .004-.006".
Bearing Adjustment:—None (no shims). Replace rods. Do not file caps.
NOTE—Oil spray holes in both sides of connecting rod lower bearing upper half.

CRANKSHAFT:—9 bearing. Integral counterweights.
Journal Diameters—2⅝" all bearings.
Bearing Type—Removable bronze-backed, babbitt-lined. No shims.
Clearance—.0015-.003".
Bearing Adjustment:—None (no shims). Replace bearings. Do not file caps.
End Thrust:—Taken by front bearing. Endplay .002-.004". Adjustable by adding or removing shims.

CAMSHAFT:—6 bearing. Non-adjustable chain drive.
Bearing Type—Steel-backed, babbitt-lined.
Clearance—.002". Endplay .003-.009".
Timing Chain:—Whitney #CL-206. Width 1½". Pitch ½". Length 25" or 50 links.
Camshaft Setting:—Sprockets are marked. Mesh chain with sprockets turned so that a straightedge across shaft centers splits the 'O' mark on the crankshaft sprocket and is midway between the two 'O' marks on the camshaft sprocket.
NOTE—Special puller tool necessary to install timing chain. Timing chain must be installed 'endless.'

VALVES:—

	Head Diameter	Stem Diameter	Length
Intake	1 9/16"	.3725-.3735"	4¾"
Exhaust	1 9/16"	.3715-.3725"	4¾"

	Seat Angle	Lift	Stem Clear.
Intake	45°	.355"	.0015-.0025"
Exhaust	45°	.355"	.0025-.0035"

NOTE—Exhaust valve lift .343" on 1936 model.

Valve Springs:—	Spring Pressure	Spring Length
Valve Closed	60-65 lbs.	2 3/32"
Valve Open	120-128 lbs.	1 25/32"

Valve Lifters: Wilcox-Rich 'Zero-Lash' type hydraulic lifters.
See Miscellaneous Section for complete data.
NOTE—Hydraulic lifters have been redesigned. Service instructions as given for previous types apply to the new type but new type lifters are not interchangeable in part or as a unit with previous lifters. Lifters used on eight and twelve cylinder engines not interchangeable (longer body used on eight). Cannot be adapted to twelve engine as previously (by changing plunger cap).
Installing Hydraulic Valve Lifters—Install this type lifter without oil. Oil in lifter will retard escape of air and delay quieting of lifter when engine is operated. Remove plunger from lifter body, wash out all oil with gasoline. Do not interchange plungers—they are selective fit in lifter bodies—this is important.

VALVE TIMING

Tappet Clearance:—None in service. See data above on Hydraulic Valve Lifters.
Valve Timing:—See Camshaft Setting above.
Intake Valves—Open 5° ATDC. Close 45° ALDC.
Exhaust Valves—Open 40° BLDC. Close 12° ATDC.
To Check Valve Timing—Remove #1 intake hydraulic valve lifter, pull out plunger, remove spring, wash lifter assembly in gasoline, replace plunger, install lifter in bracket. Check clearance between end of plunger and valve stem (valve closed—clearance will be about .070"). Insert sufficient feeler stock to take up all except .010" clearance. Turn engine over until piston #1 is .0123" past top dead center, stop when flywheel mark 'IN.OP./1-8' lines up with indicator on housing. #1 intake valve should begin to open at this point. Remove feeler stock, re-assemble hydraulic valve lifter as directed above.

LUBRICATION

LUBRICATION:—Pressure. Gear type oil pump located in crankcase.
Normal Oil Pressure—40 lbs. at 40 M.P.H. (1936), 53 M.P.H. (1937-38).
Oil Pressure Regulator:—Located at pump. Opens at 50 lbs. Adjustable by adding or removing spacer washers.
Oil temperature Regulator:—Harrison Radiator Co. type.
Crankcase Capacity:—9 qts. (refill). 10 qts. (dry).

CLUTCH

CLUTCH:—Long Model 12CB-CL. Single plate, dry disc type. See article in Clutch Section for relining and assembling directions. No adjustment for wear
See Clutch Section for complete data.
Facings—Moulded type, 2 required. Inside diameter 7". Outside diameter 12". Thickness .137".
Adjustment—Free movement of clutch pedal must be ¾-1¼". Screw adjustment provided at bell housing. Pedal should have free clearance at underside of toeboard.
Removal:—Remove transmission (see Transmission Section below), remove clutch housing, take out mounting screws in clutch cover mounting flange on flywheel.

TRANSMISSION

TRANSMISSION:—Warner with Overdrive. Model AS1-T82A (1937-38). Constant mesh, synchro-mesh (second and high), sliding helical gear (low and reverse).
See Transmission Section for complete data.
Removal:—Disconnect drive shaft at front universal, take out transmission mounting bolts, pull transmission straight back.

OVERDRIVE

OVERDRIVE(1937-38): Warner Type R1. Model AS1-T82A transmission and overdrive unit.
See Transmission Section for complete data.

UNIVERSALS

UNIVERSAL JOINTS:—Detroit Series 5350. Roller bearing type, 2 used.
See Universals Section for complete data.

REAR AXLE

REAR AXLE:—Own Make. Semi-floating, hypoid gear type with Hotchkiss drive.
Ratio—4.58-1.
Backlash—.002-.003". Shim adjustment.

FRONT SUSPENSION

Front Suspension:—Conventional 'I' beam section axle with Reverse-Elliott ends and semi-elliptic springs.
Kingpin Inclination—8° crosswise.
Caster (1936)—¾° plus or minus ¼° for axles with plain bearings, 1° plus or minus ¼° for axles with needle bearings. Spring seat on axle should tilt down at rear 4° 15' (axles with plain bearings), 4° (axles with needle bearings). Correct caster by inserting wedge shims between spring and spring pad on axle.
Caster (1937-38)—1°. Adjust by inserting wedge shims between spring and spring pad on axle.
Camber—1° (plus or minus ½°). Wheel felloe at top of wheel should be not more than 15/32" or less than 5/32" outside felloe at bottom. No adjustment provided.
Toe In—3/16" plus 0" or minus 1/16" (1936), ¼" 1937-38). Adjust by loosening clamp bolts and turning tie rod.
Steering Geometry—Inner wheel turned 40°, uter wheel 30°.

STEERING GEAR

Steering Gear: Ross Model 660. Cam-and-Lever type.
See Steering Gear Section for complete data.

BRAKES

BRAKES:—Service—Stewart-Warner mechanical four wheel type with vacuum power operation. Hand lever applies all four service brakes.
See Brake Section for complete data.
Drum Diameter—16".
Lining—Moulded type. Width 2¼". Thickness ¼". Length per wheel 38".
Clearance—.009" (front wheels), .012" (rear wheels), at heel and toe of each shoe.
Hand Brake Adjustment:—See Service Brakes.
Power Unit:—Bendix vacuum power unit.
See Brake Section for complete data.

MODEL IDENTIFICATION

SERIAL NUMBER:—Stamped on plate on right (1936), left (1937-38) frame side rail at rear of front spring rear shackle. First number as follows:

	138" WB	144" WB	147" WB
1602	3,130,001	3,140,001	
1603			3,150,001
1702	3,160,001	3,170,001	
1703			3,180,001
1802	3,165,001	3,175,001	
1803			3,190,001

ENGINE NUMBER:—Stamped on left cylinder block below head at center of engine.

TUNE-UP

COMPRESSION:—Ratio—6.4-1 Standard aluminum head. No optl. ratios. **Pressure**—140 lbs. at 2500 R.P.M. or 80-85 lbs. at cranking speed (100-105 R.P.M.)

VACUUM READING:—Gauge should show steady reading of 19-20" with engine idling.

FIRING ORDER: 1-4-9-8-5-2-11-10-3-6-7-12 with cylinders numbered as shown on diagram:
Right Bank—2, 4, 6, 8, 10, 12.
Left Bank—1, 3, 5, 7, 9, 11.

SPARK PLUGS: Champion Type J-6. 14 mm. Metric. **Gaps**—.025". Limits .022-.025".

IGNITION: See Coil, Condenser, and Distributor.
Breaker Gap—.018". **Cam Angle**—38° Closed.
Synchronization—Set movable contacts to open 40° after stationary contacts.
Automatic Advance—7° max. at 1400 RPM (distr.).

IGNITION TIMING See Ignition Timing.
Std. Setting—5° BTDC. Flywheel mark 'IGN.#1/' aligned with inspection hole indicator on housing for #1 cylinder (stationary contacts). Movable contacts should open 40° after this point. See IGNITION TIMING for detailed instructions.

CARBURETION: See Carburetor & Carb. Equipment.
Idle Setting—Set idle adjusting screw midway between 'miss' and 'roll' point (adjust each carburetor separately by cutting out ignition on opposite bank —then synchronize throttle valves— see carburetor article in Carburetor Section for complete data). Idle speed 37-39 explosions in 15 seconds (removable inspection plug in exhaust manifold provided).
Float Level—Fuel level 9/16" below edge of bowl.
Accelerating Pump—Inner Hole (Summer), outer (winter).

Fuel Pump Pressure: 4½ lbs. maximum.

VALVES: See Valve Timing.
Tappet Clearance None in service, hydraulic take-up.

STARTING: See Battery, Starter Generator, Regulator.

IGNITION

Ignition Switch:—Delco-Remy Model 430-T. Switch and cable assembly. Connected to coil unit by armored cable. See article in Equipment Section.

COIL: Delco-Remy Model 553-E (2 used). On dash.
Ignition Current—2 amperes idling, 4 amperes stopped, for each coil.

CONDENSER: Delco-Remy Part No. 1837231. 2 used.
Capacity—.20-.25 microfarad.

DISTRIBUTOR: Delco-Remy Model 4105 (for 1936), Delco-Remy Model 4160 (for 1937-38 cars). Double breaker, 6 lobe cam, semi-automatic advance type. Contacts open alternately at 20° and 40° intervals (corresponding to 40° and 80° firing intervals of engine—caused by 80° included angle between cylinder banks). Contacts must be synchronized—see Timing.

Breaker Gap—Set at .018". Limits .018-.024".
Cam Angle or Dwell—Closed 38° Open 22° (distr.). Each set operates independently.
Breaker Arm Spring Tension—19-23 ounces.
Manual Advance—33° (engine—maximum). Consists of a retard operated by pulling button on dash out. Used for hand cranking or heavy pulling.

Automatic Advance

Distributor Degrees	Distributor R.P.M.	Engine Degrees	Engine R.P.M.
Start	400	2	800
7	1400	14	2800

Distributor Removal:—Mounted at rear of engine between cylinder banks. Take out distributor bracket screws.

IGNITION TIMING

IGNITION TIMING:—

	Flywheel Deg.	Piston Position
All engines	5° BTDC	.0091" BTDC

Timing (Stationary Contacts)—Advance spark control (push button in), if ignition turned 'on' turn key to 'on' position with automatic starting inoperative, remove cover over inspection hole in flywheel housing. With #1 piston on compression, turn engine over until flywheel mark 'IGN.#1' lines up with indicator on housing (mark is 5° before top dead center mark 'UDC/No.1'). Loosen locking screw in center of breaker cam, carefully locate cam so that stationary contacts (mounted directly on breaker plate) are just opening, tighten locking screw, check rotor position. Then check synchronization.

Synchronization (Movable Contacts)—Turn engine over 40° or exactly 1/9 revolution to firing position of piston #4 (#2 on right hand bank), stop when flywheel mark 'IGN/No. 4' lines up with indicator on housing (mark is 5° before top dead center mark 'UDC/No. 4'). Loosen lockscrews on movtable subplate, turn eccentric adjusting screw until contacts open. Tighten lockscrews.

Synchronization—Other Methods—Use synchronizing tool or rotary spark gap, set movable contacts to open exactly 20° after first or stationary contacts (adjust by loosening lockscrews and turning eccentric adjusting screw on sub-plate). Firing intervals are 20-40-20 (distributor degrees).

CONTINUED ON NEXT PAGE

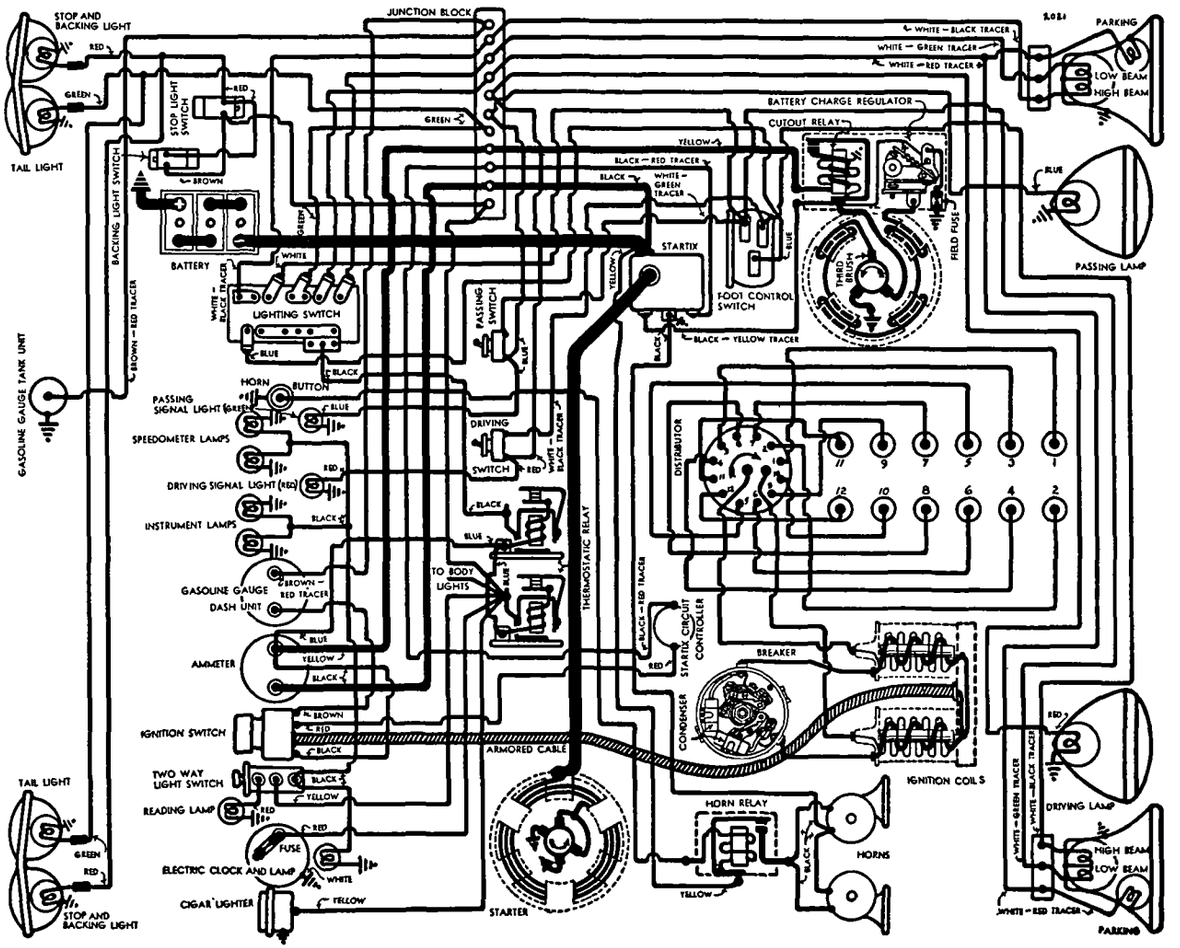

C NTINUED FROM PRECEDING PAGE

CARBURETOR

CARBURETION:—Carburetor—Stromberg Model EX-32, 1½" downdraft type. One carburetor used for each bank of cylinders (throttles must be synchronized.)
For complete data, refer to Carburetor Index.
NOTE—Do not adjust carburetors until engine is warmed up so that choke valve is wide open and engine idling at hot or slow idling speed.

Idle Adjustment—Adjust one carburetor at a time. Cut out the six cylinders of the other bank by grounding the high tension lead of the coil firing that bank. Turn idle adjusting screw in until engine begins to lag or miss, then turn screw out until engine begins to roll, finally turn screw in slowly until engine fires smoothly. Then check idling speed by taking out plug in exhaust manifold and counting explosions or form small gap by disconnecting one high tension lead at spark plug and count sparks. Adjust throttle lever stopscrew so that there are 37-39 explosions in 15 seconds. Recheck idle adjusting screw setting (this must be reset if idling speed has been changed. After adjusting each carburetor, connect both coils, idle engine on all twelve cylinders and check throttle valve synchronization (see article in Carburetion Section).

Accelerating Pump Setting—Adjusted by changing position of pump link rod in throttle valve lever.
Inner Hole (Min. stroke)—Summer temperatures.
Outer Hole (Max. stroke)—Winter temperatures.

Fast Idle:—Stromberg type. See special article in Carburetion Section.
For complete data, refer to Carburetion Equip. Index.

Automatic Choke:—Stromberg Type 'C' No. A-16090.
For complete data, refer to Carburetion Equip. Index.

CARB. EQUIPMENT

Air Cleaner:—AC. oil-wetted type standard, oil-bath heavy duty type optional.

Fuel Pump:—AC. Type D #1523010. Diaphragm type.
For complete data, refer to Carburetion Equip. Index.

Gasoline Gauge:—Motometer Electric. Dash unit—NG-8055D (1936), NG-8440D (1937). Tank unit—NG-7741T (all).
For complete data, refer to Carburetion Equip. Index.

BATTERY

Willard Type WH-5-19 or RH-5-19 (Export). 6 volt, 19 plate, 153 amp. hour (20 hour rate).
Starting Capacity—180 amperes for 20 minutes.
Zero Capacity—300 amperes for 6.6 minutes.
Grounded Terminal—Positive (+) terminal.
Location—Left hand side under front floor.

STARTER

Owen-Dyneto Model DI-1313. Armature No. 16437.
Drive—Bendix Type RCD11FXT-10.
Cranking Engine—100-105 R.P.M., 175 amperes at 5.35 volts.
Rotation—Counter-clockwise at commutator end.
Brush Spring Tension—56-60 ounces each.

Performance Data

Torque	R.P.M.	Volts	Amperes
0 ft. lbs.	4500	6.0	60
2 "	1600	5.5	130
3.6 "	1200	5.35	170
7.4 "	800	5.05	250
14.4 "	400	4.5	400
28.0 "	Lock	3.5	650
29.24 "	Lock	3.6	720

Removal:—Starter flange mounted on right fr nt face of flywheel housing. To remove, take ut three flange mounting capscrews.

Starting Switch:—Startix Type 'D' Automatic starting switch and Startix circuit controller (anti-backfire unit), controlled by ignition switch. See special article in Equipment Section for complete data.
For complete data, refer to Electrical Equipment Index.

GENERATOR

Owen-Dyneto Model CO-1309. Armature No. 23691. Air-cooled. Third brush control type with Battery Charge Regulator (two-step charging rate).
Charging Rate Adjustment—Third brush shifted through rack-and-pinion control by slotted adjusting screw in commutator end plate. To adjust, turn adjusting screw to right or clockwise to increase, and to left or counter-clockwise to decrease charging rate.
Maximum Charging Rate—32 amperes (cold), 8.0 volts, 1900 R.P.M., 25-30 M.P.H.

Performance Data—Regulator Inoperative

Cold			Hot		
Amps	Volts	R.P.M.	Amps	Volts	R.P.M.
0	7.0	580	0	7.3	625
5	7.2	630	5	7.5	700
10	7.5	700	10	7.7	800
15	7.7	790	15	7.9	930
20	7.9	910	20	8.0	1100
25	8.0	1080	25	8.0	1380
30	8.0	1380	28	8.0	2000
32	8.0	1900			

Rotation—Counter-clockwise at commutator end.
Brush Spring Tension—20-22 ozs. (main), 12-14 ozs. (third).
Field Current—3.5-3.7 amperes at 6.0 volts.
Motoring Current—16.7-18 amperes at 6.0 volts (½ ampere more if relay and regulator in circuit).
Field Fuse—5 ampere capacity in knurled plug in side of regulator case.

Removal:—Generator cradle mounted on left front of engine with fan belt drive (double Vee belt). To remove, slack off drive belt, disconnect water pump drive coupling, loosen mounting clamp band.

Belt Adjustment:—To adjust, loosen clamp bolt on fan bracket, turn eccentric shaft spindle until 10 lb. pull on belt midway between pulleys causes 1" deflection, tighten clamp bolt. Additional range of adjustment secured by taking bracket off engine and moving bracket up until mounting bolts engage lower holes.

REGULATOR

Owen-Dyneto 40300 Battery Charge Regulator. Consists of Cutout Relay and Battery Charge Regulator in a single case on the generator field frame.
For complete data, refer to Electrical Equipment Index.

Cutout Relay
Cuts In—6.8-7.2 volts, 600 R.P.M., 8 M.P.H.
Cuts Out—0-2.5 amperes discharge current.
Contact Gap—.030-.032".
Air Gap—.020-.025" with contacts closed.

Battery Charge Regulator
Setting—8.2 volts (cold), 7.8 volts (hot)—contact opening point.
Regulator Resistance—1.85 ohms.

LIGHTING

LIGHTING:—Headlamps—Guide Multi-beam, Pre-focused, Cross-beam type with special non-interchangeable lenses. Headlamps aimed straight ahead with lenses removed. Asymetrical passing beam (upper beam left hand headlamp, lower beam right hand headlamp), controlled by foot selector switch with lighting switch in 'Country Driving' position.
Driving Lamp—Mounted on right of radiator. Controlled by separate switch on instrument panel with Red indicator lamp lighted with driving lamp 'on'. Lighted with lighting switch in 'Country Driving' position except when driving lamp switch turned off.
Passing Lamp—Mounted on left of radiator. Controlled by separate switch on instrument panel with Green indicator lamp lighted with passing lamp 'on'. Lighted with lighting switch in 'City Driving' position or with foot selector switch in passing position (see Headlamps above) except when passing lamp switch turned off.

Switches
Lighting—Delco-Remy Model 479-M.
Instrument Lamps—Delco-Remy Model 1411.
Foot Selector—Delco-Remy Model 471-Z

Bulb Specifications

Position	Candlepower	Mazda N.
Headlamps	32-32	2330
Stop and Backing	21	1129
Driving and Passing	32	1323**
Driving and Passing Pilots	3	64
License Plate	3	63
Instrument Panel, Parking	1½	55
Tail, Dome & Corn., Smok. Cab.	6	81

** This bulb Pre-focused, single contact type.

MISC. ELECTRICAL

FUSES:—Electric Clock—5 ampere on back of clock.
Generator Field—5 ampere in regulator case.

CURRENT LIMIT RELAY: Delco-Remy 410-N. 2 units used. Vibrating type. Starts to operate with current load of 35-40 amperes, limiting load to 5-22 amperes.
Contact Gap—.012-.030".
Air Gap—.015-.030" with contacts closed.
Spring Tension—5 ounces minimum measured at brass button.

HORNS:—Klaxon Model K-33-S. Type 2051 (low note), 2052 (high note). Vibrator type, blended tone, twin horns operated by horn relay.

Horn Type	Current at 6 volts	Air Gap
2051 (low note)	11-13	.042-.046"
2052 (high note)	10-12	.032-.036"

Horn Relay:—Model 266-TK. Requires .25 amperes to close contacts. Current draw .8 amperes.
Contact Gap—.015-.025".
Air Gap—.012-.017" with contacts closed.

ENGINE

ENGINE SPECIFICATIONS:—12 cylinder, 80° included angle Vee, 'L' head type. Cylinders cast en bloc for each bank.
Bore—3½". **Stroke**—4".
Displacement—462 cubic inches.
Rated Horsepower—58.8 (AMA).
Developed Horsepower—185 at 3400 R.P.M.
Compression Ratio—6.4-1 Std. aluminum head. No. optional ratios.
Compression Pressure—140 lbs. at 2500 R.P.M. or 80-85 lbs. at cranking speed.
Vacuum Reading—Gauge should show steady reading of 19-20" with engine idling.

PISTONS:—Bohn, Bohnalite aluminum alloy, Invar strut, split skirt type or Lynite aluminum alloy, "T" slot type with Anodic finish (special hard oxide

bearing surface). **Length**—4¼".
Weight—22.70-22.82 ozs. (stripped).
Removal—Pistons and rods removed from above.
Clearance—Top .025" (Bohn), .035" (Lynite), Bottom .002". See Fitting New Pistons.
Replacement Pistons:—Pistons furnished in standard oversizes of .002", .004", .010", .020".
Fitting New Pistons:—Pistons should be snug on .0015" feeler and locked on .002" feeler.
Installing Pistons:—Slot should be toward left on both banks (viewed from driver's seat).

PISTON RINGS (1936):—Four rings per piston, three compression, one oil control, all above pin. Oil Ring groove drilled radially with oil drain holes.

Ring	Width	End Gap	Side Clearance
Comp. (all)	.1235-.1240"	.013-.018"	.001-.002"
Oil Cont.	.1860-.1865"	.013-.018"	.001-.002"

PISTON RINGS (1937-38):—Four rings per piston, two compression (one stepped ring, one plain), two oil control, all above pin. Both oil ring grooves drilled radially with oil drain holes.

Ring	Width	End Gap	Side Clearance
Compression	.1235"	.020-.025"	.001-.002"
Oil Control	.1545"	.013-.021"	.001-.002"

PISTON PIN:—Diameter—.8749-.8751".
Length—3.031-3.041".
Pin floats in piston and rod. Held by retaining rings. Pin hole in rod is bronze-bushed.
Pin Fit in Piston:—Thumb push fit at 70° F.
Pin Fit in Rod Bushing:—.0004-.0006" clearance.

CONNECTING ROD:—Weight—35.62 ounces.
Length—9.936-9.939" (center-to-center).
Crankpin Journal Diameter—2.126-2.1265".
Lower Bearing—Centrifugally-cast, babbitt-lined type. No shims used.
Clearance—.001-.0025". Sideplay .006-.009".
Bearing Adjustment:—None (no shims). Replace rods. Do not file caps. Bearings .010" and .020" undersize furnished for service.
NOTE—Oil spray holes are drilled in both sides of connecting rod lower bearing upper half. Rods are installed at factory with chamfer in crankpin bore next to crankshaft cheek (rods mounted side by side).

CRANKSHAFT:—7 bearing. Integral counterweights.
Journal Diameters—2½" all bearings.
Bearing Type—Removable bronze-backed, babbitt-lined. No shims used.
Clearance—.0015-.003".
Bearing Adjustment:—None (no shims). Replace bearings. Do not file caps.
End Thrust:—Taken by front bearing. Endplay .002-.004" Adjustable by adding or removing shims.

CAMSHAFT:—4 bearing. Non-adjustable chain drive.
Bearing Type—Steel-backed, babbitt-lined.
Clearance—.002". Endplay .003-.009".
Timing Chain:—Whitney CLG-206. Width 1½". Pitch ½". Length 26½" or 53 links.
Camshaft Setting:—Sprockets are marked. Mesh chain with sprockets turned so that marks are adjacent and in line with a straightedge across the shaft centers.
NOTE—Special puller tool necessary to install timing chain. Install timing chain 'endless.'

VALVES:—

	Head Diameter	Stem Diameter	Length
Intake	1 21/32"	.3725-.3735"	4¾"
Exhaust	1 9/16"	.3715-.3725"	4¾"

	Seat Angle	Lift	Stem Clear.
Intake	45°	.324"	.0015-.0025"
Exhaust	45°	.324"	.0025-.0035"

Valve Springs:—Install springs with small end up. Flat coil spring type dampener installed on all springs at top.

	Spring Pressure	Length
Valve Closed	60-65 lbs.	2 3/32"
Valve Open	120-128 lbs.	1 25/32"

Valve Lifters: Wilcox-Rich 'Zero-Lash' type hydraulic lifters.
See Miscellaneous Section for complete data.

NOTE—Hydraulic lifters have been redesigned. Service instructions as given for previous types apply to the new type but new type lifters are not interchangeable in part or as a unit with previous lifters. Lifters used on eight and twelve cylinder engines not interchangeable (longer body used on eight). Cannot be adapted to eight engine as previously (by changing plunger cap).

VALVE TIMING

Tappet Clearance:—None in service. See data above on hydraulic valve lifters.
Valve Timing:—See Camshaft Setting above.
Intake Valves—Open 19° BTDC. Close 69° ALDC.
Exhaust Valves—Open 56° BLDC. Close 28° ATDC.
To Check Valve Timing—Remove #1 intake hydraulic valve lifter, pull out plunger, remove spring, wash lifter assembly in gasoline to remove all oil, replace plunger, install lifter in bracket, check clearance between end of plunger and valve stem (valve closed—clearance will be about .070"). Insert sufficient filler stock to take up all except .004" clearance, turn engine over with #11 piston on compression, stop when flywheel mark 'IN.OP.#1/' lines up with indicator on housing, #1 intake valve should begin to open at this point. Remove feeler stock, reassemble hydraulic valve lifter.

LUBRICATION

LUBRICATION:—Pressure. Gear type oil pump located in crankcase.
Normal Oil Pressure:—45 lbs. at 53 M.P.H.
Oil Pressure Relief Valve:—Located at oil pump. Operates at 50 lbs. Adjustable by adding or removing spacing washers.
Oil Temperature Regulator:—Harrison Radiator Co. type.
Crankcase Capacity:—11 qts. (refill).

CLUTCH

CLUTCH:—Long Model 12CB-CL. Single plate, dry disc type. See article in Clutch Section for relining and assembling directions. No adjustment for wear required.
See Clutch Section for complete data.
Facings—Moulded type, 2 required. Inside diameter 7". Outside diameter 12". Thickness .137".
Adjustment—Free movement of clutch pedal must be ¾-1¼". Screw adjustment provided at bell housing. Pedal must have free clearance at underside of toeboard.
Removal:—Remove transmission (see Transmission Section below), remove clutch housing, take out mounting screws in clutch cover mounting flange on flywheel.

TRANSMISSION

TRANSMISSION:—Warner with Overdrive. Model AS1-T82A (1937-38). Constant mesh, synchro-mesh (second and high), sliding helical gear (low and reverse).
See Transmission Section for complete data.
Removal:—Disconnect drive shaft at front universal, take out transmission mounting bolts, pull transmission straight back.

OVERDRIVE

OVERDRIVE (1937-38): Warner Type R1. Model AS1-T82A transmission and overdrive unit.
See Transmission Section for complete data.

UNIVERSALS

UNIVERSAL JOINTS:—Detroit Series 5350. Roller bearing type. 2 used.
See Universals Section for complete data.

REAR AXLE

REAR AXLE:—Own Make. Semi-floating, hypoid gear type with Hotchkiss drive.
Ratio—4.58-1.
Backlash—.002-.003". Shim adjustment.

FRONT SUSPENSION

Front Suspension:—Conventional axle with Reverse-Elliott ends and semi-elliptic springs.
Kingpin Inclination—8° crosswise.
Caster—¾° (1936), 1° (1937-38). Adjust by inserting wedge shims between spring and spring pad on axle.
Camber—1° (plus or minus ½°). Wheel felloe at top of wheel should be not more than 15/32" or less than 5/32" outside felloe at bottom. No adjustment provided.
Toe In—¼". Adjusted in usual manner by loosening clamp bolts and turning tie rod.
Steering Geometry—Inner wheel turned 40°, outer wheel 30°.

STEERING GEAR

Steering Gear: Ross Model 660. Cam-and-Lever type.
See Steering Gear Section for complete data.

BRAKES

BRAKES:—Service—Stewart-Warner mechanical four wheel type with vacuum power operation. Hand lever applies all four service brakes.
See Brake Section for complete data.
Drum Diameter—16".
Lining—Moulded type. Width 2¼". Thickness ¼". Length per wheel 38".
Clearance—.009" (front wheels), .012" (rear wheels), at heel and toe of each shoe.
Hand Brake Adjustment:—See Service Brakes.
Power Unit:—Bendix vacuum power unit.
See Brake Section for complete data.

MODEL IDENTIFICATION

NOTE—Economy Model equipped with smaller carburetor, intake manifold and 3.7-1 ratio rear axle. This series may be distinguished by letter 'E' inserted in engine number: thus P2-E241409. This letter 'E' should not be confused with letters 'A', 'B', etc., following engine number. This series does not have separate serial numbers.

SERIAL NUMBER:—On right front door hinge pillar post. First number:

	Detroit	Los Angeles	Evansville	Canada
P1	1,111,701	3,151,151	9,000,101	9,397,351
P2	2,641,401	3,040,601	9,025,101	9,332,286

ENGINE NUMBER:—First number—P2-1001 (see note above). Stamped on left side of cylinder block between #1 and 2 cylinders. Letter 'A' following number indicates bore .020" larger than standard. 'B' indicates main and connecting rod bearings .010" smaller than standard. 'AB' indicates that bore and bearing sizes are as above. 'C' indicates main and connecting rod bearings standard, but outside diameter of connecting rod bearings .005" larger than standard.

TUNE-UP

COMPRESSION:—Ratio—6.7-1 Std. cast-iron head, 6.07-1 cast-iron head (available for export only).
Pressure—(6.7-1 Std. head) 140-150 lbs. at 1000 R.P.M. or approx. 113 lbs. at cranking speed.

VACUUM READING:—Gauge should show steady reading of 16-18" with engine idling at 6 M.P.H.

FIRING ORDER: 1-5-3-6-2-4. See diagram.

SPARK PLUGS: AC Type K-9 superseded by Champion Type J-8. 14 mm. Metric type.
Gaps—.025".

IGNITION: See Coil, Condenser, and Distributor.
Breaker Gap—.020". **Cam Angle**—38° Closed.
Automatic Advance—11° maximum at 1600 RPM for IGS-4003-1 & 4003A-1, 1850 RPM for IGS-4003B-1.
Vacuum Advance—10° (distr.) with 14" vacuum.

IGNITION TIMING—See Ignition Timing.
Std. Setting—4° ATDC. Crankshaft pulley mark (correct graduation after dead center '0' mark) aligned with pointer at front of engine.

CARBURETION: See Carburetor & Carb. Equipment.
Idle Setting—Set idle adjusting screw ⅛-¾ turn open. Adjust for smooth idle. Idle speed 6 MPH.
Float Level—5/64" from top of float (not seam) to top edge of bowl with needle valve seated.
Accelerating Pump—Center hole normal setting.
Fuel Pump Pressure: 3½ lbs. maximum.

VALVES: See Valve Timing.
Tappet Clearance—.006" Int., .008" Exh. (hot). .010" Exh. recommended for sustained high speed.

STARTING: See Battery, Starter Generator, Regulator.

IGNITION

Ignition Switch:—Mitchellock Model 24-R, Type 6517. Connected to coil by armored cable.
Ignition Lock—Yale & Towne Model DP-108, Mitchell No. 6286.

COIL: Auto-Lite Model IG-4629. Service Winding (less switch & cable) IG-3224S. Mounted on dash.
Ignition Current—2.5 amperes idling, 5.5 stopped.

CONDENSER: Auto-Lite Part No. IG-3927A.
Capacity—.25-.28 microfarad.

DISTRIBUTOR: Auto-Lite Model IGS-4003-1 (early), IGS-4003A-1 or IGS-4003B-1 (later). Single breaker 6 lobe cam, full automatic advance with vacuum spark control.
See Electrical Equipment Section for special servicing directions on these distributors.
For complete data, refer to Electrical Equipment Index.
Breaker Gap—Set at .020".
Cam Angle or Dwell—38° closed, 22° open.
Breaker Arm Spring Tension—16-20 ounces.

Automatic Advance—IGS-4003-1, IGS-4003A-1

Distributor Degrees	R.P.M.	Engine Degrees	R.P.M.
Start	350	0	700
3	400	6	800
6	850	12	1700
9	1300	18	2600
11	1600	22	3200

Automatic Advance—IGS-4003B-1

Distributor Degrees	R.P.M.	Engine Degrees	R.P.M.
Start	350	0	700
3	400	6	800
6	950	12	1900
9	1500	18	3000
11	1850	22	3700

Vacuum Spark Control—Integral with distributor. Mounted on distributor housing and linked directly to breaker plate. Provides additional advance for all speeds above idling except when engine is accelerated or operated with wide open throttle when spark is retarded by return spring within unit.

Vacuum Advance

Distr. Degrees	Eng. Degrees	Vacuum (" of HG)
Start	0°	5"
5°	10°	9.5"
10°	20°	14"

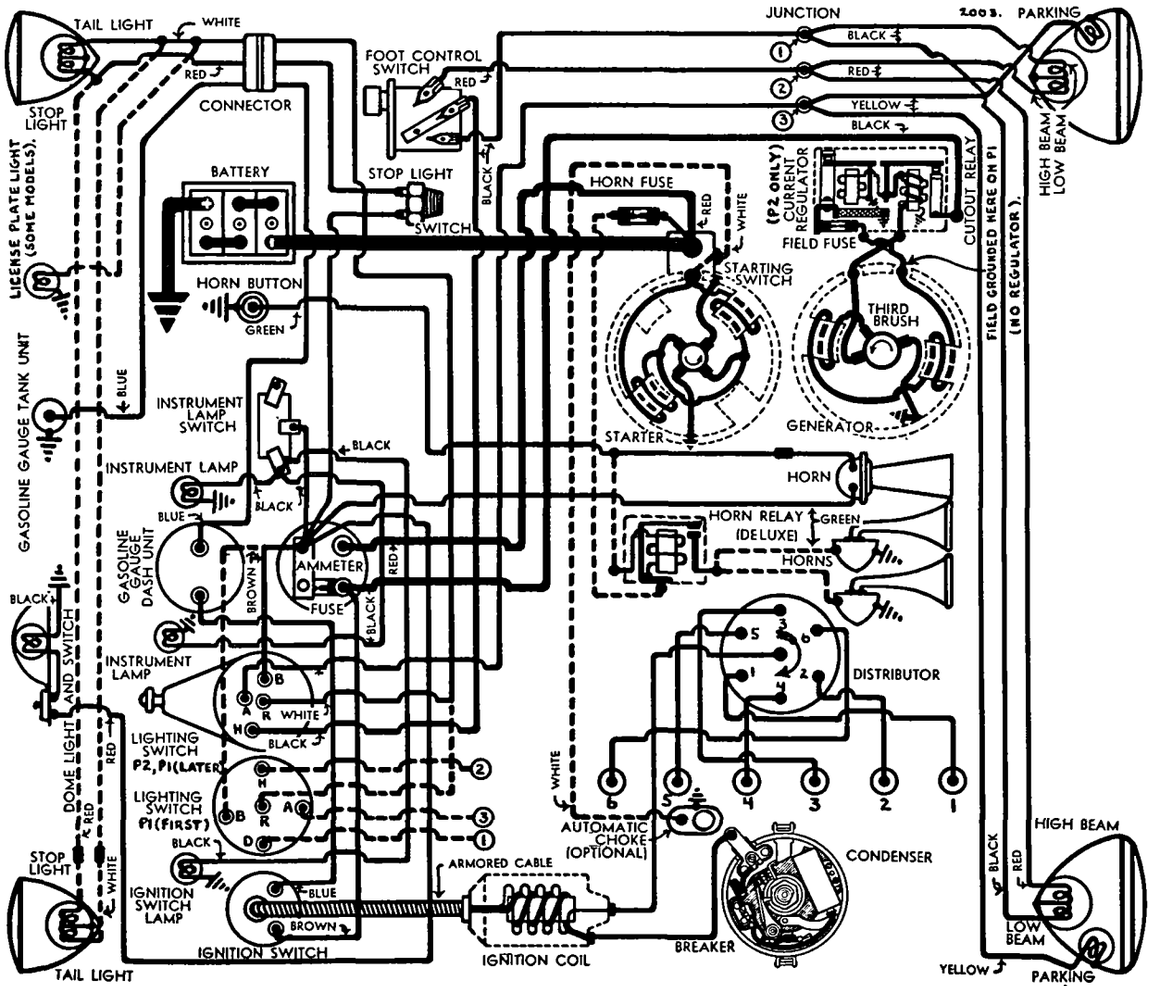

Distributor Removal:—Mounted n left side f engine. To remove, disconnect vacuum line, take out hold-down screw in advance arm.

IGNITION TIMING

IGNITION TIMING:—Flywheel Degrees Piston Pos.
6.7-1 Std. head .....4° ATDC.....0068" ATDC.
6.07-1 Export .....4° ATDC.....0068" ATDC.

See Manual Adjustment (following) for final setting for best performance depending on fuel used.

Timing (Using Timing Light)—Connect timing light between distributor terminal and battery terminal on generator control unit. With #1 piston on compression, turn engine over until piston is 4° (or .0068") past top dead center, stop when fourth graduation to left of center '0' mark on fan pulley at front of engine lines up with pointer on chain case cover. Loosen hold-down screw in advance arm, center pointer on scale, tighten hold-down screw. Loosen advance arm clamp bolt, rotate distributor until lamp goes out, tighten clamp bolt.

Timing (Using Synchroscope)—Clip lead to #1 spark plug, direct light at fan pulley, fill in 4° mark to left of center '0' mark with chalk or white paint. See Equipment Section.

Manual Adjustment:—After setting ignition as above, road test car and adjust for slight ping with wide open throttle when accelerating from 10 to 30 M.P.H. To adjust, loosen hold-down screw, advance (counter-clockwise), retard (clockwise) pointer on scale. Scale graduated in engine degrees. Do not advance more than 5° on scale.

CARBURETOR

CARBURETION:—Carburetor—Carter (Ball & Ball) Model C6E1 (Motor No. P2-1001 to P2-269322 inclusive), C6E2 (P2-269323 and up), 1¼" downdraft type with Fast Idle. Model B6F1, 1" downdraft type (No. P2-E241409 and up—Economy Model). See Carburetion Section for complete adjustment, overhaul, and Jet Specifications.

For complete data, refer to Carburetor Index.

NOTE—Do not make carburetor adjustments until engine is warmed up with choke valve wide open and fast idle inoperative.

Idle Adjustment—Adjust throttle stopscrew so that idle speed is 300 R.P.M. or 6 M.P.H. Turn idle adjusting screw in until engine begins to lag or miss, then out until engine begins to roll, finally turn screw in until engine fires smoothly. Final setting should be ⅛-¾ (C6E1, 2), ¼-¾ (B6F1) turn of screw from inner closed or seated position. Readjust throttle stopscrew for correct idling speed.

Accelerating Pump Setting—Engage pump link in proper hole in throttle lever for seasonal requirements as follows:

Inner Hole (Min. stroke)—Extremely warm weather

Center Hole—Normal summer setting.

Outer Hole (Max. stroke)—Extremely cold weather.

NOTE—5% and 10% lean main metering screws (high altitude calibration) may be used at lower altitudes for maximum fuel economy although with considerably reduced speed and power. See Carter (B & B) Jet Specifications in Carburetion Section.

Fast Idle:—Integral with carburetor (C6E1, C6E2 only) No adjustment.

Throttle Cracker: Linkage between starter pedal and throttle lever provides one-third throttle opening when starter pedal depressed.

Automatic Choke:—Sisson Type AC-751B available as optional equipment on C6E1, C6E2 carburetors. See article in Carburetion Section for complete data.
For complete data, refer to Carburetion Equip. Index.

CARB. EQUIPMENT

Air Cleaner:—AC. #1526642 oil-wetted type standard, #1526712 heavy duty oil-bath type optional.

Fuel Pump:—AC. Type B #1522237 (early cars), #1522995 (later cars). Diaphragm type. See article in Carburetion Section.
For complete data, refer to Carburetion Equip. Index.

Gasoline Gauge:—Motometer Electric. Dash unit—NG-7762-D (P1), NG-7642-D (P2). Tank unit—NG-7687-T (all). See article in Carburetion Section.
For complete data, refer to Carburetion Equip. Index.

BATTERY

Willard Type WHT-1-90 (U. S.), R-1-90 (Export). 6 volt, 13 plate, 90 ampere hr. capacity (20 hr. rate).
Starting Capacity—114, 109 (Exp.) amps. for 20 min.
Zero Capacity—300 amperes for 3.0, 2.3 (Exp.) mins.
Grounded Terminal—Positive (+) terminal.
Location—On left side under front seat.

Radio: Willard Type WT-1-90. 6 volt, 15 plate, 90 ampere hour capacity (20 hour rate).
Starting Capacity—117 amperes for 20 minutes.
Zero Capacity—300 amperes for 3.1 minutes.
Grounded Terminal & Location—Same as above.

STARTER

Domestic—Auto-Lite MAW-4009. Arm. MAW-2030.
Export—Auto-Lite MAW-4011. Armature MAW-2030.
Drive—Positive shift outboard pinion.
Cranking Engine—Approx. 175 amperes at 5 volts.
Rotation—Counter-clockwise at commutator end.
Brush Spring Tension—42-53 ozs. (new brushes).

Performance Data

Torque	R.P.M.	Volts	Amperes
0 ft. lbs.	4900	5.5	65
.60 "	3300	5.5	100
2.75 "	1480	5.0	200
5.45 "	820	4.5	300
8.50 "	400	4.0	400
11.55 "	110	3.5	500
11.5 "	Lock	3.0	505
18.0 "	Lock	4.0	670

Removal:—Flange mounted on left front face of flywheel housing. To remove, take out two flange mounting screws.

Starting Switch: Auto-Lite SW-2677-A. On starter frame and operated by pinion shift (starting pedal).
For complete data, refer to Electrical Equipment Index.

GENERATOR

STANDARD MODEL

Auto-Lite Model GBM-4603-B. Armature GBM-2006F. Third brush type used with Cutout Relay.

Charging Rate Adjustment—Use test meters to check generator output. Shift third brush by hand counter-clockwise to increase, or clockwise to decrease charging rate until output is 17-19 amperes at 8.25 volts, with generator at room temperature (70° F.). Third brush held in position by friction.

Commutator Bar Method—Shift third brush until there are exactly 4 commutator bars exposed between edge of third brush and nearest main brush.

Maximum Charging Rate—As given above. Do not exceed.

Performance Data—GBM-4603-B

Cold			Hot		
Amps.	Volts	R.P.M.	Amps.	Volts	R.P.M.
0	6.4	800	0	6.4	850
4	6.8	950	4	6.9	1050
8	7.25	1125	8	7.4	1250
12	7.7	1375	12	7.9	1680
16	8.1	1800	15.2	8.3	2500
18	8.3	2400			

Rotation—Counter-clockwise at commutator end.

Brush Spring Tension—50-60 ozs. (new brushes).

Field Current—3.80-4.20 amps. at 6.0 volts.

Motoring Current—5.7-6.3 amperes at 6.0 volts.

Removal:—Pivot mounted at left front of engine. To remove, take out two pivot bolts and one clamp bolt.

Belt Adjustment:—Swing generator away from engine until 40-50 lb. reading indicated on scale attached to generator frame.

GENERATOR

DELUXE MODEL

Auto-Lite Model GAR-4608E-5. Armature GAR-2116F. Third brush type used with Two-Charge Regulator.

Charging Rate Adjustment—Use test meters. Connect jumper between fuse cup on regulator and ground. Shift third brush by hand counter-clockwise to increase or clockwise to decrease charging rate until output is 21 amperes at 8.6 volts with generator at room temperature (70°F.). Third brush held in position by friction. Remove jumper.

Commutator Bar Method—Shift third brush until exactly 4 commutator bars are exposed between brush and nearest main brush.

Maximum Charging Rate—As given above. Do not exceed.

Performance Data—GAR-4608E-5

Cold	Regulator Contacts Closed		Hot		
Amps.	Volts	R.P.M.	Amps.	Volts	R.P.M.
0	6.4	800	0	6.4	825
4	6.8	950	4	6.8	1000
8	7.25	1100	8	7.25	1200
12	7.7	1275	12	7.7	1440
16	8.1	1525	16	8.1	1825
21	8.6	2400	18.5	8.35	2500

Rotation—Counter-clockwise at commutator end.

Brush Spring Tension—50-60 ozs. (new brushes).

Field Current—3.51-3.89 amps. at 6.0 volts.

Motoring Current—5.03-5.57 amps. at 6.0 volts.

Field Fuse—5 ampere in plug on regulator case.

Removal:—Pivot mounted at left front of engine. To remove, take out pivot bolts and clamp bolt.

Belt Adjustment:—Swing generator away from engine until 40-50 lb. reading indicated on scale attached to generator frame.

GENERATOR

SPECIAL EQUIPMENT

SPECIAL GENERATORS:—Other Makes—*Refer to Electrical Equipment Index for 'Special Generators' article for complete data on special Generators and Regulators which may be found on these cars.*

CONTINUED N NEXT PAGE

C NTINUED FROM PRECEDIN PAGE

CUTOUT RELAY

STANDARD MODEL

Auto-Lite Model CB-4014 (for GBM Generator).
For complete data, refer to Electrical Equipment Index.

Cuts In—6.5-7.25 volts.

Cuts Out—.5-2.5 amperes discharge current.

Contact Gap—.015-.045".

Air Gap—.010-.030" with contacts closed.

REGULATOR

DELUXE MODEL

Auto-Lite Model TC-4301A. Two-Charge Regulator Type. On generator. Consists of Cutout Relay and Current Regulator (two-rate charging control). See article in Equipment Section for complete data.
For complete data, refer to Electrical Equipment Index.

Cutout Relay—Same as CB-4014 (see above).

Current Regulator

Contacts Open—8.25-8.75 volts at 70° F.
Contacts Close—1.2-1.4 volts below opening point.
Contact Gap—.005" minimum.
Air Gap—.045" with contacts closed.

LIGHTING

LIGHTING—Headlamps—Corcoran Brown Pre-focused type. Headlamps aimed straight ahead (upper beam with lenses in place). Lower beam deflected slightly to right. Upper and lower beams controlled by foot selector switch except for early P1 models.

Switches

Lighting—Plymouth Part No. 659631 (early P1), 635451 (P2 and later P1 models). Douglas switch which is available only through Plymouth Parts Dpt
Foot Selector—Clum Model 9654.
Stop Light—R.B.M. No. 910. Hydraulic type mounted on brake master cylinder.

Bulb Specifications

Location	Candlepower	Mazda No.
Headlamps	32-32	2331
Parking, Ign.Sw.	1½	55
Stop and Tail	21-3	1158
Instrument	3	63
Dome	15	87

MISC. ELECTRICAL

FUSES:—Lighting—20 ampere on back of ammeter.
Generator Field—5 ampere in plug on regulator (P2 only).
Twin Horns—20 ampere in connector near starter.

HORNS:—Auto-Lite Model HA-4001 (P1), HB-4001 (P2), Std. Klaxon Model K-33-F Type 2101 (low note), 2102 (high note) Optl. Vibrator type, blended tone, twin horns operated by horn relay.

Horn Type	Current at 6 volts	Air Gap
2101	11-13	.040-.044"
2102	9-11	.032-.036"

NOTE—Auto-Lite Horn Set HC-5003 also used.

Horn Relay:—Model 266-TK. Requires .25 amperes at 2 volts min. to close contacts. Current draw .8 amps.
Contact Gap—.015-.025".
Air Gap—.012-.017" with contacts closed.

ENGINE

ENGINE SPECIFICATIONS:—6 cylinder, 'L' head.
Bore—3⅛". **Stroke**—4⅜".
Displacement—201.31 cubic inches.
Rated Horsepower—23.44 (AMA).
Developed Horsepower—82 at 3600 R.P.M.
Compression Ratio—6.7-1 Std. cast-iron head. No optional ratios.
Compression Pressure—140-150 lbs. at 1000 R.P.M. or approximately 113 lbs. at cranking speed.
Vacuum Reading—Gauge should show steady reading of 16-18" with engine idling at 6 M.P.H.

PISTONS:—Aluminum alloy, 'T' slot, Cam ground type with anodized finish (special hard oxide formed on bearing surface). **Length**—3 11/16".
Weight—Held to two gram max. variation.
Removal—Pistons and rods removed from above.
Clearance—Top .022". Skirt .0005". Limits .0005-.001". See Fitting New Pistons.
Replacement Pistons:—Finished anodized pistons furnished in standard and .003", .005", .010", .015", .020", .023", .025", .030", .040", .050", .060" oversizes. Semi-finished pistons furnished: (1) standard to .023" oversize. (2) .025-.050" oversize, not interchangeable. Pistons should be slotted and then finished on cam grinding equipment.
Fitting New Pistons:—Micrometer gauge recommended. Check cylinder bore and piston diameter. Measurement on piston made at bottom of skirt at right angles to piston pin (pin must be removed).
Installing Pistons:—Slot should be at left or away from valves.

PISTON RINGS:—Two undercut compression rings, two oil control rings per piston, all above pin. Lower ring groove drilled with oil drain holes.

Ring	Width	End Gap	Side Clearance
Comp (all)	⅛"	.007-.015"	.002-.003"
Oil (both)	5/32"	.007-.015"	.002-.003"

Replacement Rings:—Furnished in standard and .003" .010", .020", .030", .040", .050", .060" oversizes.
NOTE—Install compression rings with step down.

PISTON PIN:—Diameter 55/64". **Length** 2⅝". Pin floats in piston and rod. Held by retaining rings. Pin hole in rod is bronze-bushed.
NOTE—Heat piston in boiling water to remove or install pins.
Pin Fit in Piston—Tight thumb push fit with piston heated to 130° F.
Pin Fit in Rod Bushing—Tight thumb push fit with piston and rod at 70° F.
Replacement Pins:—Pins furnished in standard and .003", .005", .008" oversizes. Ream rod bushing and pin holes in piston bosses for correct fit.

CONNECTING ROD:—Weight—All rods held to ¼ oz. maximum variation. **Length**—7 15/16".
Crankpin Journal Diameter—1 15/16".
Lower Bearing—Steel-backed, copper-lead lined, interchangeable. Furnished standard and .010" undersize.
Clearance—.001-.003". Sideplay .0055-0115".
Bearing Adjustment—None (no shims). Replace bearings. Do not file rods r caps. Install new bearings so small bosses engage grooves in rod and cap.
Installing Rods:—Lower bearings are offset. Install rods with widest half of bearing toward rear (#1, 3, 5) and toward front (#2, 4, 6). Oil hole in lower bearing upper half toward camshaft on all rods.

CRANKSHAFT—4 bearing. Integral counterweights.
Journal Diameters—2¼" (all bearings).
Bearing Type—Removable steel-backed, babbitt-lined (#1 and 4), copper-lined or cadmium-nickel (#2 and 3). Furnished standard & .010" undersize.
Clearance—(#1 & 4) .001-.002". (#2 & 3) .0015-.0025"
Bearing Adjustment:—None (no shims). Replace bearings. *For Front Main Bearing Cap Removal and Bearing Adjustment data, refer to Chrysler Shop Notes.*
Replacement Bearings & Bearing Caps: *See Chrysler Shop Notes for complete data.*
End Thrust:—Taken by flange faces on rear (#4) bearing. Endplay .003-.007".

CAMSHAFT:—4 bearing. Non-adjustable chain drive.
Journal Diameters—#1, 2"; #2, 1 31/32"; #3, 1 15/16"; #4, 1¼".
Bearing Type—Removable steel-backed, babbitt-lined (except #4 machined in crankcase).
Clearance—.001-.003" (#1), .0015-.0035" (all others).
NOTE—New bearings require no line-reaming.
End Thrust:—Taken by thrust plate at rear of sprocket hub. Endplay .002-.006".
Timing Chain:—Morse. Width 1". Pitch .500". Length 24" or 48 links.
Camshaft Setting:—Sprockets are marked. Mesh chain with sprockets turned so that 'O' marks are adjacent and in line with a straightedge across shaft centers. Install chain endless.
NOTE—Engine must be supported under front end of oil pan and front engine support removed for work on timing chain and camshaft.

VALVES:—

Head Diameter	Stem Diameter	Length
All valves 1 15/32"	.340-.341"	4 25/32"

Seat Angle	Lift	Stem Clearance
Intake 45°	5/16"	.001-.003"
Exhaust 45°	5/16"	.003-.005"

See Chrysler Special Shop Notes for Exhaust valve seat insert removal and installation instructions.
Valve Guides:—Use special tool to remove and install guides. Insert guides with taper end up (intake) and down (exhaust). Top of guide must be ⅞" below top of block. After installing finish ream new guides to give correct stem clearance.
Valve Springs:—Variable pitch type. Install springs with close coil at top. Do not compress springs to over all length of less than 1⅜".

	Spring Pressure	Spring Length
Valve Closed	34-38 lbs.	1¾"
Valve Open	77-83 lbs.	1 7/16"

Valve Lifters:—Mushroom type. Ream guides to take following oversizes: .001", .008", .030", .060".

VALVE TIMING

Tappet Clearance:—.006" Int., .008" Exh., with engine hot. .010" Exh., recommended for sustained high speed.
Valve Timing:—See Camshaft Setting above.
Intake Valves—Open 6° ATDC. Close 46° ALDC.
Exhaust Valves—Open 42° BLDC. Close 8° ATDC.
To Check Valve Timing—Install regular timing gauge in timing plug hole over #6 piston, set tappet clearance #6 valves at .011" (intake), .012" (exhaust). Intake valve should open with piston .015" past top dead center, and exhaust valve close with piston .027" past top dead center. Reset tappet clearance at .006 (intake), .008" (exhaust) with eng. hot.

LUBRICATION

LUBRICATION:—Pressure. Gear type oil pump located at right of crankcase.

NOTE—Ignition timing should be checked whenever oil pump is installed in engine.

Normal Oil Pressure:—30-40 lbs. at 30 M.P.H.

Oil Pressure Relief Valve:—Under plug on left hand side of crankcase. Operates at 40 lbs. Adjustable by changing spring. Standard spring unpainted. Heavy spring (to increase pressure) painted green. Lighter spring (to decrease pressure) painted red.

Crankcase Capacity:—5 qts. (refill).

CLUTCH

CLUTCH:—**Borg & Beck Model 9A6. Single plate, dry** disc type. See article in Clutch Section for data.

See Clutch Section for complete data.

Facings—Woven (pressure plate side), molded (flywheel side), 2 required. Inside Diam. 5⅝". Outside Diam. 9¼". Thickness .133".

Adjustment—Clutch pedal should just clear under side of toe board with clutch engaged. To adjust, turn stopscrew located just above clutch pedal shaft. Free movement of pedal should be 1 1/16". To adjust, loosen locknut and turn adjusting nut (clevis) on clutch fork adjusting rod.

Removal—Disconnect clutch pedal linkage, remove fork pivot screw, take out clutch fork. Remove transmission (release bearing and spring are withdrawn with transmission), remove clutch housing pan, prick punch clutch cover and flywheel (install in same position to maintain balance), take out clutch mounting bolts, turning all bolts out evenly to release spring tension and avoid distortion of clutch cover. Remove clutch from below. Use pilot studs when removing and installing transmission to avoid springing clutch plate.

Automatic Clutch:—See article in Clutch Section.

See Clutch Section for complete data.

FRONT SUSPENSION

Front Suspension:—Conventional tubular section front axle with Reverse-Elliott ends and semi-elliptic springs.

Kingpin Inclination—9½° crosswise. Limits 9-10°.

Caster—2° (1½-2½°). Adjust by inserting wedge plates between springs and axle pads. Wedges available in ½, 1, 2° angles.

Camber—½° (¼-¾°). No adjustment, Replace tubular axle if camber is out more than ½°.

Toe In—0-⅛". Adjust in usual manner by loosening tie rod end clamps and rotating tie rod.

STEERING GEAR

Steering Gear: Chrysler (Gemmer design Model 300) Worm-and-Roller type. See Gemmer 300 article.

See Steering Gear Section for complete data.

BRAKES

BRAKES:—Service—Lockheed Hydraulic, double anchor type. Hand lever applies brake at rear of transmission or rear wheel service brakes (special equipment). See article in Brake Section.

See Brake Section for complete data.

Wheel Cylinders—Diameters, Front Wheel (Front end 1¼", Rear end 1⅜"). Rear Wheel (Front end 1⅛", Rear end 1¼").

Drum Diameter—10".

Lining—Moulded type. Width 2". Thickness 13/64". Length per wheel 19 13/16".

Clearance—.012" toe, .006" heel for each shoe.

Hand Brake:—External type on drum at rear of transmission. See Service Brake (above) for cars with rear wheel hand brake.

Adjustment—With lever in released position, remove anchor screw locking wire, turn anchor screw so that clearance between lining and drum is 1/16", lock anchor screw with wire. Adjust brake band guide bolt nut to give 1/16" clearance (as above) for lower portion of band, secure with locknut. Finally, adjust brake adjusting bolt nut to give 1/16" clearance (as above), making sure that groove in bolt nut is lined up with ridge lockwasher.

Drum Diameter—6".

Lining—Width 2". Thickness 5/32". Length 18 13/32".

NOTE—Clearance at anchor and saddle .005" max.

MODEL IDENTIFICATION

NOTE—Economy Model equipped with smaller carburetor, intake manifold and 3.7-1 ratio rear axle. This series may be distinguished by letter 'E' inserted in engine number: thus P4-E-478653. This letter 'E' should not be confused with letters 'A', 'B', etc., following engine number. This series does not have separate serial numbers.

SERIAL NUMBER:—On right front door hinge pillar post. First number as follows:

	Detroit	Los Angeles	Evansville	Canada
P-3	1,184,001	3,101,401	9,085,551	9,376,676
P-4	10,101,001	3,162,501	9,950,001	9,339,691

ENGINE NUMBER:—First number—P-4-1001. Stamped on left side of block between #1 and #2 cylinders. *See Chrysler Shop Notes for engine number lettering data (denoting special bore and bearing sizes).*

TUNE-UP

COMPRESSION:—**Ratio**—6.7-1 Std. cast-iron head. **Pressure**—(6.7-1 Std. head) 140-150 lbs. at 1000 R.P.M. or approx. 113 lbs. at cranking speed.

VACUUM READING:—Gauge should show steady reading of 18-21" with engine idling at 6 M.P.H.

FIRING ORDER: 1-5-3-6-2-4. See diagram.

SPARK PLUGS: Champion Type J-8. 14 mm. Metric. **Gaps**—.025".

IGNITION: See Coil, Condenser, and Distributor. **Breaker Gap**—.020". **Cam Angle**—38° Closed. **Automatic Advance**—11° max. at 1850 RPM (distr.). **Vacuum Advance**—10° max. with 14" vacuum.

IGNITION TIMING—See Ignition Timing. **Std. Setting**—4° ATDC. Crankshaft pulley mark (correct graduation after dead center '0' mark) aligned with pointer at front of engine.

CARBURETION: See Carburetor & Carb. Equipment. **Idle Setting**—Set idle adjusting screw ½-1¼ turns open (Carter). Adjust for smooth idle. Idle speed 6 MPH. **Float Level**—(Carter) 5/64" from top of float (not seam) to top edge of bowl with valve seated. (Chandler-Groves) Fuel level 17/32" below top edge of bowl. **Accelerating Pump**—Center hole normal setting. **Fuel Pump Pressure:** 3½ lbs. maximum.

VALVES: See Valve Timing. **Tappet Clearance**—.006" Intake, .008" Exhaust, hot. Remove right front wheel and wheel housing for access to valve compartment.

STARTING: See Battery, Starter Generator, Regulator.

IGNITION

Ignition Switch:—Mitchellock Model 24-R, Type 7061. Connected to coil by armored cable. **Ignition Lock**—Yale & Towne, Mitchell No. 6286.

COIL: Auto-Lite Model IG-4601 or CL-4601. Service Winding (less switch & cable) IG-3224S for IG-4601, CL-3224S for CL-4601. Mounted on dash. **Ignition Current**—2½ amperes idling, 5½ stopped.

CONDENSER: Auto-Lite Part No. IG-3927A. **Capacity**—.25-.28 microfarad.

DISTRIBUTOR: Auto-Lite Model IGS-4003B-1. Single breaker, 6 lobe cam, full automatic advance type with vacuum spark control.

See Electrical Equipment Section for special servicing directions on these distributors.

For complete data, refer to Electrical Equipment Index.

Breaker Gap—Set at .020".

Cam Angle r Dwell—38° (closed), 22° (pen).

Breaker Arm Spring Tension—16-20 ounces.

Automatic Advance

Distributor Degrees	Distributor R.P.M.	Engine Degrees	Engine R.P.M.
Start	350	0	700
3	400	6	800
6	950	12	1900
9	1500	18	3000
11	1850	22	3700

Vacuum Spark Control—Integral with distributor. Mounted on distributor housing and linked directly to breaker plate. Provides additional advance for all speeds above idling except when engine is accelerated or operated with wide open throttle when spark is retarded by return spring within unit.

Vacuum Advance

Distr. Degrees	Eng. Degrees	Vacuum (" of HG)
Start	0°	5"
5°	10°	9.5"
10°	20°	14"

Distributor Removal:—Mounted on left side of engine. To remove, disconnect vacuum line, take out hold-down screw in advance arm.

IGNITION TIMING

IGNITION TIMING:—Flywheel Degrees Piston Pos.
6.7-1 Std. head .....4° ATDC.....0068" ATDC.

See Manual Adjustment (following) for final setting for best performance depending on fuel used.

Timing (Using Timing Light)—Connect timing light between distributor terminal and battery terminal on generator control unit. With #1 piston on compression, turn engine over until piston is 4° (or .0068") past top dead center, stop when fourth grad-

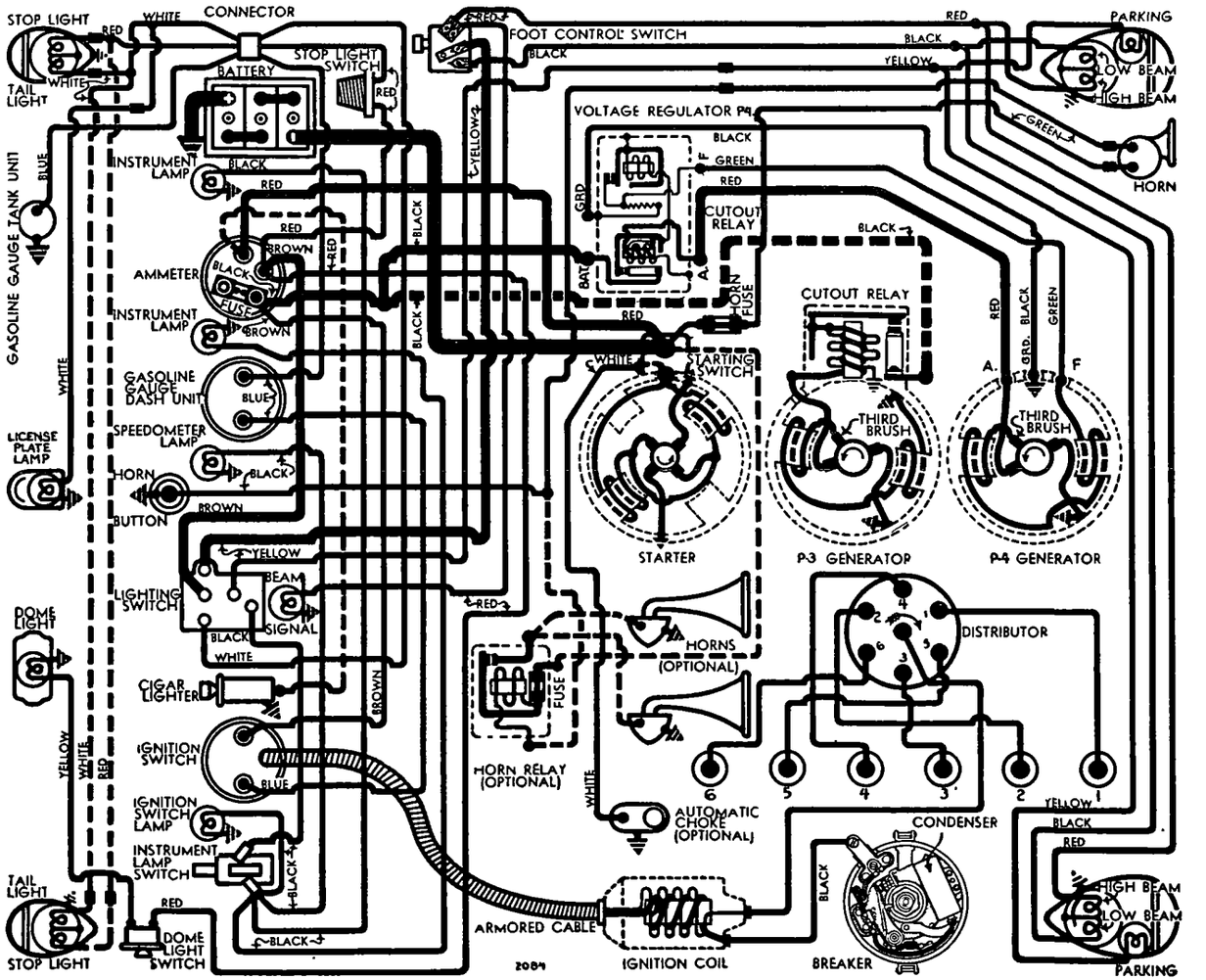

uation to left of center '0' mark on fan pulley at front of engine lines up with pointer on chain case cover. Loosen hold-down screw in advance arm, center pointer on scale, tighten hold-down screw. Loosen advance arm clamp bolt, rotate distributor until lamp goes out, tighten clamp bolt.

Timing (Using Synchroscope)—Clip lead to #1 spark plug, direct light at fan pulley, fill in 4° mark to left of center '0' mark with chalk or white paint. See article in Electrical Equipment Section.

Manual Adjustment:—After setting ignition as above, road test car and adjust for slight ping with wide open throttle when accelerating from 10 to 30 M.P.H. To adjust, loosen hold-down screw, advance (counter-clockwise), retard (clockwise) pointer on scale. Scale graduated in engine degrees. Do not advance more than 5° on scale.

CARBURETOR

CARBURETION:—Carburetor—Carter (Ball & Ball) Models C6F1 (Motor No. P-4-1001 to 10497), C6F2 (P4-10498 to 88610), C6F3 (P4-88611 to 96179), C6F4 (P4-96180 to 136611), C6F5 (P4-136612 and up). 1¼" downdraft type with Fast Idle.

For complete data, refer to Carburetor Index.

NOTE—See recommended changes for early carburetors for improved performance in article in Carburetion Section.

Holley (Chandler-Groves) Model A-2—Used on Late P-3 and Commercial Model PT-50. 1¼" downdraft type with Fast Idle.

For complete data, refer to Carburetor Index.

Economy Carburetor—Carter (Ball & Ball) Model B6F1, 1" downdraft type.

For complete data, refer to Carburetor Index.

Idle Adjustment—With engine warm, choke valve wide open and fast idle inoperative, adjust throttle stopscrew so that idle speed is 300 R.P.M. or 6 M.P.H. Turn idle adjusting screw in until engine begins to lag or miss, then turn screw out until engine begins to roll, finally turn screw in slowly until engine fires smoothly. Final setting (Carter) should be ½-1¼ turns of screw from closed or seated position. Readjust throttle stopscrew for correct idling speed.

Accelerating Pump Setting—Engage pump link in proper hole in throttle lever as follows:

Inner Hole (Min. stroke)—Extremely hot climate.
Center Hole (Med. stroke)—Normal setting.
Outer Hole (Max. stroke)—Extremely cold weather.

Fast Idle:—On standard carburetors only. Integral with carburetor. No adjustment.

Throttle Cracker: Linkage between starter pedal and throttle lever provides one-third throttle opening when starter pedal depressed.

Automatic Choke:—Sisson Type AC-751B available as special equipment on standard carburetors.

For complete data, refer to Carburetion Equip. Index.

CARB. EQUIPMENT

Air Cleaner:—AC. #1528196 oil-wetted type standard, #1528197 heavy duty oil-bath type optional.

Fuel Pump:—AC. Type B #1522995 diaphragm type. Type AL #1523137 combination Fuel-and-Vacuum pump optional.

For complete data, refer to Carburetion Equip. Index.

Gasoline Gauge:—Motometer Electric. Dash unit—NG-8279D. Tank unit—NG-8257T.

For complete data, refer to Carburetion Equip. Index.

BATTERY

Willard Type WHT-1-90. 6 volt, 13 plate, 90 ampere hour capacity (20 hour rate).
Starting Capacity—114 amperes for 20 minutes.
Zero Capacity—300 amperes for 3.0 minutes.
Grounded Terminal—Positive (+) terminal.
Location—Left side under drivers seat.

(Radio)—Willard, Type WHT-2-105. RHT-2-105 (Exp. Radio).—6 volt, 15 plate, 105 ampere hour capacity (20 hr. rate).
Starting Capacity—133 amperes for 20 minutes.
Zero Capacity—300 amperes for 3.9 minutes.
Grounded terminal and Location as above.

STARTER

Domestic—Auto-Lite MAW-4009. Arm. MAW-2030.
Export—Auto-Lite MAW-4011. Armature MAW-2030.
Drive—(MAW-4009) Positive pinion shift. (MAW-4011) magnetic pinion shift type.
Cranking Engine—Approx. 175 amperes at 5 volts.
Rotation—Counter-clockwise at commutator end.
Brush Spring Tension—42-53 ozs. (new brushes).

Performance Data

Torque	R.P.M.	Volts	Amperes
0 ft. lbs	4900	5.5	65
.60 "	3300	5.5	100
2.75 "	1480	5.0	200
5.45 "	820	4.5	300
8.50 "	400	4.0	400
11.55 "	110	3.5	500
11.5 "	Lock	3.0	505
18.0 "	Lock	4.0	670

Removal:—Flange mounted on left front face of flywheel housing. To remove, take out two flange mounting screws.

Starting Switch: MAW-4009 Auto-Lite SW-2677A. on starter field frame and operated by pinion shaft (starting pedal). See article in Electrical Equipment Section for pedal adjustment.

MAW-4011 Auto-Lite SS-4104 Solenoid Type Controlled through relay by pushbutton on dash.

For complete data, refer to Electrical Equipment Index.

Solenoid Switch

Closes against 105 lb. pull with ⅜" air gap drawing 65 amperes. Holds switch closed with draw of 15 amperes (hold-in coil only).

Solenoid Relay

Contacts Close—3.5-4.5 volts. **Open**—1.5-2.5 volts.
Contact Gap—.025-.030". **Air Gap**—.005-.007" (closed).

GENERATOR

STANDARD MODEL

Auto-Lite Model GBM-4606C-1. Arm. GBM-2065F. Third brush control type used with Cutout Relay.

Charging Rate Adjustment—Use test meters to check generator output. Shift third brush by hand counter-clockwise to increase, or clockwise to decrease charging rate until output is 18 amperes at 8.3 volts, with generator at room temperature (70° F.). Third brush held in position by friction.

Commutator Bar Method—Shift third brush until there are exactly 4 commutator bars exposed between edge of third brush and nearest main brush.

Maximum Charging Rate—As given above. Do not exceed figure given.

Performance Data—GBM-4606C-1

Cold Amps.	Volts	R.P.M.	Hot Amps.	Volts	R.P.M.
0	6.4	800	0	6.4	850
4	6.8	950	4	6.9	1050
8	7.25	1125	8	7.4	1250
12	7.7	1375	12	7.9	1680
16	8.1	1800	15.2	8.3	2500
18	8.3	2400			

Rotation—Counter-clockwise at commutator end.
Brush Spring Tension—50-60 ozs. (new brushes).
Field Current—3.90-4.20 amperes at 6.0 volts.
Motoring Current—5.7-6.3 amperes at 6.0 volts.

Removal:—Pivot mounted at left front of engine. To remove ,take out two pivot bolts and one clamp bolt.

Belt Adjustment:—Swing generator away from engine until 40-50 lb. reading indicated on scale attached to generator frame.

GENERATOR

DELUXE M DEL

Auto-Lite Model GCJ-4802A. Armature GCJ-2006F. Third brush control used with vibrating Voltage Regulator in case on dash.

Charging Rate Adjustment—Disconnect wire on generator at 'F' terminal, ground terminal. Connect ammeter in line at 'A' terminal. Connect voltmeter between 'A' terminal and ground. Shift third brush by hand counter-clockwise to increase or clockwise to decrease charging rate until output is 25 amperes at 8.0 volts with generator at room temperature (70° F). Third brush held in position by friction. Actual charging rate controlled by regulator setting. See Regulator Section below.

Commutator Bar Method—Shift third brush until 2 to 2⅛ commutator bars are exposed between brush and nearest main brush.

Maximum Charging Rate—As given above. Do not exceed this figure.

Performance Data—GCJ-4802A

Cold Amperes	Volts	R.P.M.	Hot Amperes	Volts	R.P.M.
0	6.4	760	0	6.4	850
4	6.65	920	4	6.7	1020
8	6.9	1080	8	7.0	1240
12	7.2	1240	12	7.3	1406
16	7.45	1400	16	7.6	1650
20	7.7	1580	20	7.9	2100
25	8.0	2500	22	8.0	2700

Rotation—Counter-clockwise at commutator end.
Brush Spring Tension—53 ozs. max. (new brushes).
Field Current—1.9-2.1 amperes at 6.0 volts.
Motoring Current—4.0-4.4 amperes at 6.0 volts.
Removal and Belt Adjustment as given above.

GENERATOR

SPECIAL EQUIPMENT

Police Generators: Auto-Lite GCB-4802-A (City Police), GCB-4802-B (State Police). Used with Model VRB-4004C Regulator. *See 1939 De Soto Model S6 pages for data on these generators and regulators.*

Model GBW-4803A (Export), C (Bolivia), E (P4 Taxi). Used with Model VRB-4005A Regulator. *See 1937 Chrysler Model C16 pages for data on these generators and regulator.*

C NTINUED ON NEXT PA E

CONTINUED FR M PRECEDING PA E

Special Generators—Other Makes:—*Refer to Electrical Equipment Index for 'Special Generators' article for complete data on special Generators and Regulators which may be found on these cars.*

CUTOUT RELAY

STANDARD MODEL

Auto-Lite Model CB-4014 (for GBM Generator). *For complete data, refer to Electrical Equipment Index.*

Cuts In—6.5-7.25 volts.

Cuts Out—.5-2.5 amperes discharge current.

Contact Gap—.015-.045".

Air Gap—.010-.030" with contacts closed.

REGULATOR

DELUXE MODELS

Auto-Lite Model VRD-4002A Voltage Regulator. Consists of Cutout Relay and Vibrating Voltage Regulator in case on dash. See article in Electrical Equipment Section.
For complete data, refer to Electrical Equipment Index.

NOTE—Regulator case cover is sealed. Serviced on exchange basis if seals not broken. Cover must be removed to make adjustments.

Cutout Relay

Cuts In—6.4-7.0 volts Cold.

Cuts Out—.5 ampere Min., 3.0 amperes Max. Cold.

Contact Gap—.015" minimum.

Air Gap—.034" Min., .038" Max. with contacts open. Measure at hinge end of core.

Voltage Regulator

Setting—7.5-7.8 volts at 70°F (Before Serial No. 8R-000001), 7.3-7.6 volts at 70°F (After 8R-000001). **See Electrical Equipment Section for complete settings and changes.**

To Check—Connect ammeter in charging line at 'B' terminal on regulator (use short heavy leads), connect voltmeter between regulator 'B' and 'GD' terminals. Operate generator, charging fully charged battery, at speed equivalent to 30 M.P.H. car speed until voltage is steady. Voltmeter reading should be within limits of 7.4-7.9 volts (Before No. 8R-000001), 7.3-7.6 volts (cold 70°), 7.1-7.4 volts (hot 140°) for units after 8R-000001. **See Setting above.**

To Adjust—Change regulator armature spring tension by bending lower spring hanger. See Electrical Equipment Section for complete instructions.

Contact Gap—.010" Min., .020" Max. with armature against stop pin.

Air Gap—.0595-.0625" with contacts just opening.

LIGHTING

LIGHTING:—Headlamps—Corcoran-Brown, pre-focused type. Aim headlamps straight ahead (lenses in place, upper beams lighted, car unloaded) with center of hot spot of beam 3" below center horizontal line of headlamps, at 25 feet. Upper and lower beams (lower beam deflected slightly to right) controlled by foot selector switch with lighting switch in full out position.

Headlamp Beam Indicator—Located in light switch knob. Lighted whenever upper beams in use.

Switches

Lighting—Plymouth Part No. 675344.
Instrument Light—Plymouth Part No. 675345.
Foot Selector—Plymouth Part No. 659512.
Stop Light—Plymouth Part No. 661721.

Bulb Specifications

Location	Candlepower	Mazda No.
Headlamps	32-32	2331
Parking	1½	55
Stop and Tail	21-3	1158
Instruments, Indicator	1	51
Rear License	3	63
Dome	15	87

MISC. ELECTRICAL

FUSES:—Lighting—20 amperes on back of ammeter. **Horn**—Single horn—20 ampere in connector near starter. Dual horns—30 ampere in horn relay.

HORNS:—Auto-Lite HA-4020, B. Single horn std., HC-5103, B dual horns with HR-4002 horn relay optl.

ENGINE

ENGINE SPECIFICATIONS:—6 cylinder, 'L' head.
Bore—3⅛". **Stroke**—4⅜".
Displacement—201.31 cubic inches.
Rated Horsepower—23.44 (AMA).
Developed Horsepower—82 at 3600 R.P.M.
Compression Ratio—6.7-1 Std. cast-iron head.
Compression Pressure—140-150 lbs. at 1000 R.P.M. or approximately 113 lbs. at cranking speed.
Vacuum Reading—Steady reading of 18-21" with engine idling at 6 M.P.H.

PISTONS:—Aluminum alloy, U-slot, cam ground type with anodized finish. **Length**—3 11/16".
Weight—14.43 ozs. (plus or minus 2 grams).
Removal—Pistons and rods removed from above.
Clearance—Top .022". Skirt .0005". Limits .0005-.001".

Replacement Pistons:—Finished pistons furnished standard and .003", .005", .010", .015", .023" .025", .030", .040", .050", .060" oversizes. Semi-finished pistons furnished (1) standard to .023" oversize, (2) .025-.050" oversize, not interchangeable. Pistons should be slotted, then cam ground.

Fitting New Pistons:—Check piston (across pin support ribs at bottom of skirt) and cylinder bore with micrometer gauge. Piston should pass through bore with slight drag (70° F), with pin removed.

Installing Pistons:—Slot to left, away from valves.

PISTON RINGS:—2 undercut compression, 2 oil control rings per piston, all above pin. Ten ⅛" oil drain holes #3 groove, five in #4 groove.

Ring	Width	End Gap	Side Clearance
Compression	⅛"	.007-.015"	.0015-.003"
Oil Control	5/32"	.007-.015"	.0015-.003"

Replacement Rings:—Furnished standard and .003", .005", .010", .015", .020", .025", .030", .040", .050", .060" oversizes.
NOTE—Install compression rings with step down.

PISTON PIN:—Diameter 55/64". **Length**—2⅝". Floating type. Pin hole in rod bronze bushed.
Pin Fit in Piston—Thumb push fit at 130° F.
Pin Fit in Rod Bushing—Thumb push fit at 70° F.
Replacement Pins:—Furnished standard and .003", .005", .008" oversize. Ream bushing and pin hole to size.

CONNECTING ROD:—Weight—31.0 ounces.
Length—7 15/16".
Crankpin Journal Diameter—1 15/16".
Lower Bearing—Steel-backed, babbitt-lined, interchangeable. Furnished standard and .0015", .010" undersize.
Clearance—.0005-.0025". **Sideplay**—.0055-.0115".
Bearing Adjustment:—None. Install new bearings with bosses engaging grooves in rod and cap.
Installing Rods:—Lower bearings offset. Install wide portion to rear on #1, 3, 5, to front on #2, 4, 6. Oil hole in lower bearing upper half toward valves.

CRANKSHAFT:—4 bearing. Integral counterweights.
Journal Diameters—2¼" (all bearings).
Bearing Type—Removable steel-backed, babbitt-lined. Furnished stand. and .0015", .010" undersize.
Clearance—.001-.002".

Bearing Adjustment:—*See Chrysler Shop Notes for Front Main Bearing Cap Removal & Adjustment data.*
Replacement Bearings & Bearing Caps: *See Chrysler Shop Notes for complete data.*

End Thrust:—Taken by flange faces on rear (#4) bearing. **Endplay**—.003-.007".

CAMSHAFT:—4 bearing. Non-adjustable chain drive.
Journal Diameters—#1, 2"; #2, 1 31/32"; #3, 1 15/16"; #4, 1¼".
Bearing Type—Removable steel-backed, babbitt-lined (except #4 machined in crankcase).
Clearance—.0015-.0035".

End Thrust:—Taken by thrust plate at rear of camshaft sprocket hub. **Endplay**—.002-.006".

Timing Chain:—Morse. Width 1". Pitch .500". Length 24" or 48 links.

Camshaft Setting:—Mesh chain with sprockets turned so that '0' marks are adjacent and in line with a straightedge across shaft centers.

VALVES:—

	Head Diameter	Stem Diameter	Length
All valves	1 15/32"	.340-.341"	4 25/32"

	Seat Angle	Lift	Stem Clearance
Intake	45°	5/16"	.001-.003"
Exhaust	45°	5/16"	.003-.005"

See Chrysler Special Shop Notes for Exhaust valve seat insert removal and installation instructions.

Valve Guides:—Guides must be ⅞" below top of block. Ream guides after installing (.342-.343" Int., .344-.345" Exh.).

Valve Springs:—1⅜" limit of compression.

	Spring Pressure	Spring Length
Valve Closed	34-38 lbs.	1¾"
Valve Open	77-83 lbs.	1 7/16"

Valve Lifters:—Mushroom type. Ream guides to take following oversizes: .001", .008", .030", .060".

VALVE TIMING

Tappet Clearance:—.006" Int., .008" Exh., hot. Remove front wheel and wheel housing to adjust.

Valve Timing:—See Camshaft Setting above.
Intake Valves—Open 6° ATDC. Close 46° ALDC.
Exhaust Valves—Open 42° BLDC. Close 8° ATDC.

To Check Valve Timing:—Install timing gauge in hole over #6 piston, set intake valve at .011" (cold). Valve should open with piston .015" past top dead center. Reset tappet clearance .006" (hot).

LUBRICATION

LUBRICATION:—Gear type oil pump on rt. of engine. NOTE—Check ignition timing whenever oil pump installed on engine.

Normal Oil Pressure:—30-45 lbs. at 30 M.P.H.

Oil Pressure Relief Valve:—Under plug on left side of crankcase. Operates at 40-50 lbs. Adjustable. Heavy (green) spring to increase pressure, lighter (red) spring to decrease pressure.

Crankcase Capacity:—5 quarts (refill).

CLUTCH

CLUTCH:—Borg & Beck Mod. 9A6. Mod. #869 stamped on cover. Single plate, dry disc type.
See Clutch Section for complete data.

Facings—Moulded (flywheel side), woven (pressure plate side). 2 required. I.D. 5⅝". O.D. 9¼". Thickness .133".

Adjustment—Adjust stopscrew (just above clutch pedal shaft) so that pedal arm just clears floor board. Free movement of pedal should be 1 1/16" (adjust by turning release fork rod adjusting nut).

Removal:—Remove floor board, remove transmission (see Transmission Removal below), remove housing under-pan, mark cover and flywheel, remove cover bolts evenly, remove assembly from below.

TRANSMISSION

TRANSMISSION:—Own—All helical gear type with synchronizing shift on second and high gears.
See Transmission Section for complete data.

Removal:—Disconnect front and rear U-joints, disconnect hand brake, remove nuts from studs at clutch housing, disconnect release fork pull-back spring, pull release fork out of clutch housing, remove transmission cover assembly, remove unit with two pilot studs in upper stud holes.

NOTE—Run-out of clutch housing .003" maximum.

UNIVERSALS

UNIVERSAL JOINTS:—Detroit Universal Series 4200. Ball and trunnion type with roller bearings. 2 used. NOTE—Three U-joints used on 7 pass. sedan.
See Universals Section for complete data.

Propeller Shaft Center Bearing:—Used on 7 Pass. models. *See Chrysler Shop Notes for data.*

REAR AXLE

REAR AXLE:—Own—Semi-floating, hypoid gear type with Hotchkiss drive.
See Rear Axle Section for complete data.
Ratio—P-3 std. 3.9-1, optl. 3.73-1.
P-3, 4 (5.25x20" tires), P-4 (7 pass.) 4.3-1.
P-4 (5 pass.) 4.1-1, (coupe) 3.9-1.
Backlash—.006-.010". Shim adjustment.

Removal:—Remove axle shaft nut, hub and drum assembly (use hub puller, do not hammer out or bearing damage may result), disconnect brake line at wheel cylinder, remove backing plate (with oil seal). Use shaft puller to remove axle shaft and bearing. With axle shafts removed, differential carrier may be removed by disconnecting rear U-joint at flange and removing housing capscrews.
Wheel Bearing Adjustment—Controlled by shims between brake backing plates and flanged ends of housing. Remove brake backing plates (see above) and add or remove shims to give proper clearance.
Endplay—.003-.008".
NOTE—Shims supplied .010", .0125", .030" thick.

SHOCK ABSORBERS

SHOCK ABSORBERS:—Delco—Model 1162-U (front), 1163-U (rear). Direct acting, hydraulic type.
See Shock Absorber Section for complete data.

FRONT SUSPENSION

Front Suspension:—Conventional tubular section axle, Reverse-Elliott ends, semi-elliptic springs.

Kingpin Inclination—4½-5½° crosswise.

Caster—2° (1-3°). Adjust by inserting wedge shims between spring & axle pad. ½° & 2° wedges supplied.

Camber—½° (¼-¾°). No adjustment.

Toe In—1/16" (0-⅛"). Adjust by turning tie rod.

Steering Geometry—Outer wheel turned 20°. Inner wheel turned 22°50'. 22°20' (7 pass.).

STEERING GEAR

Steering Gear: Chrysler (Gemmer design Model 300) Worm-and-Roller type. See Gemmer 300 articl .
See Steering Gear Section for complete data.

BRAKES

BRAKES:—Service—Lockheed hydraulic, double anchor type. Hand brake at rear of transmission.
See Brake Section for complete data.

Wheel Cylinders—Stepped or two-stage bore type: Front Wheel—Front cyl. 1¼", Rear 1⅜".
Rear Wheel—Front cyl. 1⅛", Rear 1¼".

Drum Diameter:—10".

Lining—Moulded. Width 2". Thickness .200". Length (Rear wh. rear shoe) 7 25/64", (all others) 9 29/32".

Clearance—.012" toe, .006" heel for each shoe.

Braking Power—55% front wheels, 45% rear.

Hand Brake:—On drum at rear of transmission.

Adjustment—Fully release hand brake lever. Remove anchor screw locking wire (left side), adjust anchor screw for .025" clearance between band and drum, set anchor screw with lock wire. Free large adjusting bolt nut (upper end of band), loosen locknut, adjust guide bolt nut to .025" clearance between band and drum, set with locknut. Tighten adjusting bolt nut until tension on either end of guide bolt is just relieved (groove in nut must align with ridge in lockwasher).

Drum Diameter—6".

Lining—Width 2". Thickness 5/32". Length 16 15/16".
NOTE—Clearance at anchor and saddle .005" max.

MODEL IDENTIFICATION

ECONOMY MODEL:—Equipped with smaller carburetor, intake manifold and special 3.54-1 ratio rear axle. Identified by letter 'E' inserted in engine number (P6-E-1234). Do not confuse with other letters before or after engine number.

SERIAL NUMBER:—On right front door hinge pillar post. First number as follows:

	Detroit	Los Angeles	Evansville	Canada
P-5	1,240,001	3,105,000	9,097,601	9,381,161
P-6	10,470,001	3,206,001	20,001,001	9,349,566

ENGINE NUMBER:—First number P-6-1001. Stamped on left side of block between #1 and #2 cylinders. ***See Chrysler Special Shop Notes for engine number lettering data (for special bore and bearing sizes).***

TUNE-UP

COMPRESSION:—Ratio and pressure as follows:

Ratio	Pressure at 1000 R.P.M.	At 100 R.P.M.
6.7-1 Std. hd.	140-150 lbs.	Approx. 113 lbs.
7.0-1 Optl. hd.	150-160 lbs.	Approx. 117 lbs.

VACUUM READING:—Steady 18-21" idling at 6 M.P.H

FIRING ORDER: 1-5-3-6-2-4. See diagram.

SPARK PLUGS: Champion Type J-8 (for P5), Auto-Lite A-7 (for P6), Champion H-10 (for Al. hd.). 14 mm. **Gaps**—.025".

IGNITION: See Coil, Condenser, and Distributor.
Breaker Gap—.020". **Cam Angle**—38° Closed.
Automatic Advance—11° maximum at 1850 RPM for IGS-4003B-1, 13° at 1450 RPM for IGS-4015-1.
Vacuum Advance—10° with 14" vacuum (IGS-4003B-1), 10° with 12" vacuum (for IGS-4015-1). Distr. degrees.

IGNITION TIMING—See Ignition Timing.
Std. Setting—4° ATDC (for standard iron head), 3° ATDC (for Optl. aluminum HC hd.). Crankshaft pulley mark (correct graduation after dead center) aligned with pointer at front of engine.

CARBURETION: See Carburetor & Carb. Equipment.
Idle Setting—Set idle adjusting screw ¾ turn open (P5 Chandler Grove Carb.), ½-1¼ turns (P6 Deluxe, Carter Carb.), ¼-¾ turn (P5, 6 Economy Carb). Adjust for smooth idle. Idle speed 6 MPH.
Float Level—(Carter) 5/64" from top of float (not seam) to top edge of bowl with valve seated. (Chandler-Groves) Fuel level 17/32" below top edge of bowl.
Accelerating Pump—Center hole normal setting.
Fuel Pump Pressure: 3½ lbs. maximum.

MANIFOLD HEAT CONTROL:—Thermostatic coil type. Thermostatic coil assembled on manifold heat valve shaft beside silencer and counterweight assembly. **Setting**—With center end of thermostatic coil engaged in heat valve shaft, wind coil up 1/3 turn counter-clockwise and hook outer end on stop pin. CAUTION—Do not wind coil up more than 1/3 turn.

VALVES: See Valve Timing.
Tappet Clearance—.006" Int., .008" Exh. (hot). NOTE—Additional .002" exhaust clearance recommended for sustained high speed driving.

STARTING: See Battery, Starter Generator, Regulator.

IGNITION

Ignition Switch:—Mitchellock Model 24-R, Type 7061. Connected to coil by armored cable.
Ignition Lock—Yale & Towne, Mitchell No. 6286.

COIL: Auto-Lite Model CL-4601. Service Winding (less switch & cable) CL-3224S. Mounted on dash.
Ignition Current—2½ amperes idling, 5½ stopped.

CONDENSER: Auto-Lite Part No. IG-3927A.
Capacity—.25-.28 microfarad.

DISTRIBUTOR: Auto-Lite Model IGS-4003B-1, Model IGS-4015-1 (Canada—part production). Single breaker, 6 lobe cam, full automatic advance type with vacuum spark control and manual adjustment at distributor.

See Electrical Equipment Section for Distributor servicing data.

Breaker Gap—Set at .020".
Cam Angle or Dwell—38° (closed), 22° (open).
Breaker Arm Spring Tension—18-20 ounces.
Rotation—Clockwise viewed from top.

Automatic Advance—IGS-4003B-1

Distributor Degrees	R.P.M.	Engine Degrees	R.P.M.
Start	350	0	700
3	400	6	800
6	950	12	1900
9	1500	18	3000
11	1850	22	3700

Automatic Advance—IGS-4015-1

Distributor Degrees	R.P.M.	Engine Degrees	R.P.M.
Start	350	0	700
3	400	6	800
7	820	14	1640
11	1240	22	2480
13	1450	26	2900

Vacuum Spark Control—Integral with distributor. Mounted on distributor housing and linked directly to breaker plate. Provides additional advance for all speeds above idling except when engine is accelerated or operated with wide open throttle when spark is retarded by return spring within unit.

Vacuum Advance—IGS-4003B-1

Distr. Degrees	Eng. Degrees	Vacuum (" of HG)
Start	0°	5"
5°	10°	9-10"
10°	20°	14"

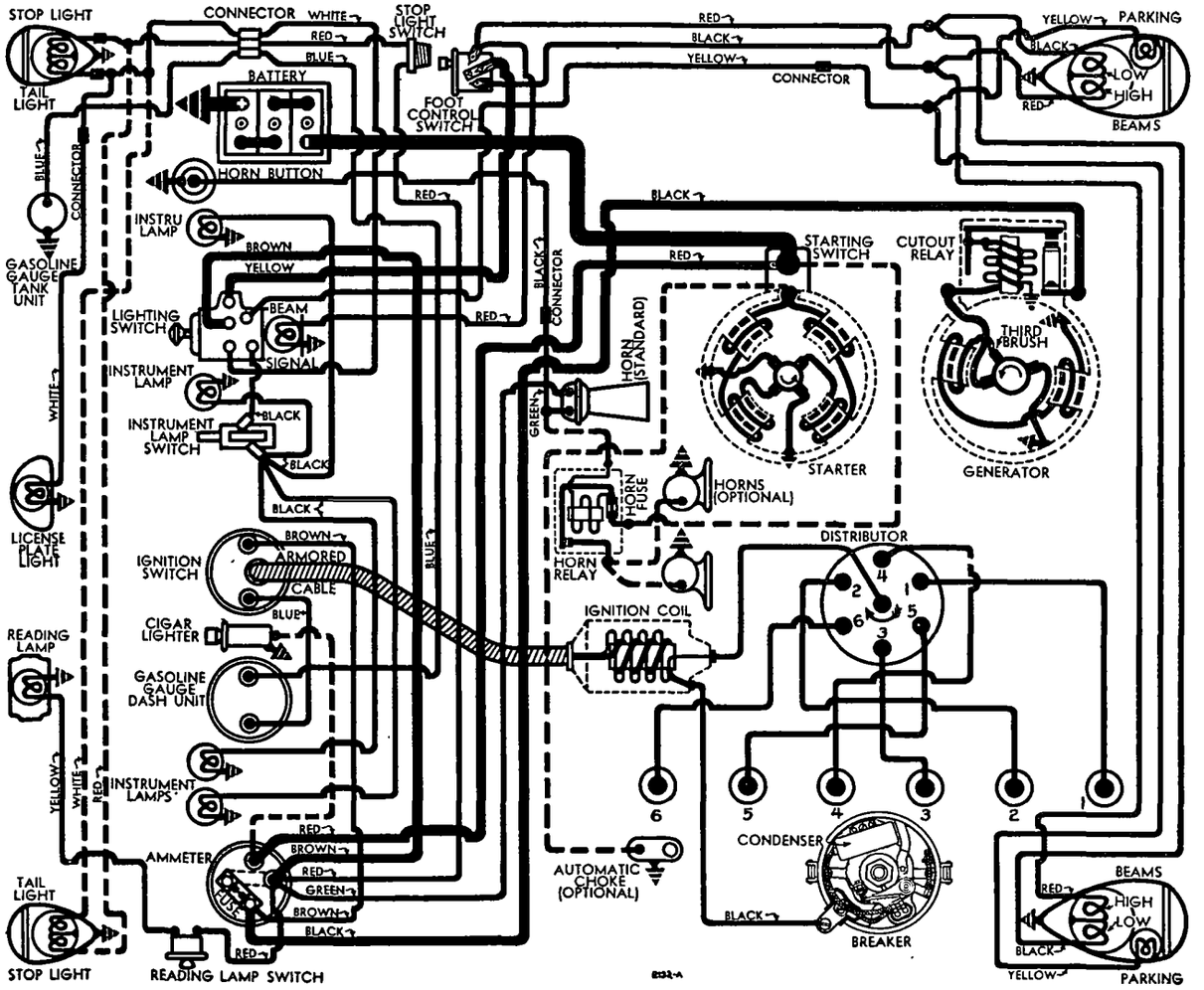

STANDARD M DELS

Vacuum Advance—IGS-4015-1

Distr. Degrees	Eng. Degrees	Vacuum (" of HG)
Start	0°	4¾"
5°	10°	8⅜"
10°	20°	12"

Manual Adjustment—Provides for minor changes in ignition timing at distributor. See Ignition Timing.

Distributor Removal:—Mounted on left side of crankcase. To remove, take out hold-down screw in advance arm, disconnect vacuum line.

IGNITION TIMING

IGNITION TIMING:—Initial setting (for gasoline of approximately 70 octane rating). See Manual Adjustment Setting (following).

	Flywheel Degrees	Piston Position
6.7-1 Std. CI. hd.	4° ATDC	.0068" ATDC.
7.0-1 Opti. AL. hd.	3° ATDC	.0038" ATDC.

NOTE—Crankshaft pulley marked 'DC' at TDC with 15 (1°) graduations on either side.

Timing (Using Timing Light)—Connect timing light between distributor and battery terminal on generator regulator. With #6 piston on compression, turn engine over until piston reaches firing position (see table), stop when correct line on impulse neutralizer lines up with pointer on chain case cover. Loosen distributor hold-down screw, center pointer on scale, tighten hold-down screw. Loosen advance arm clamp bolt, rotate distributor until timing light just goes out, tighten clamp bolt.

Timing (Using Synchroscope)—Tool No. C-374. Clip lead to #1 spark plug, direct light on impulse neutralizer, fill in correct mark with white chalk.

Manual Adjustment Setting:—After ignition set as above, road test car to give slight ping with wide open throttle at speeds of 10-30 M.P.H. To adjust, loosen hold-down screw and advance (counter-clockwise) or retard (clockwise) pointer on scale. Scale graduated in engine degrees. Do not advance pointer more than 5° on scale.

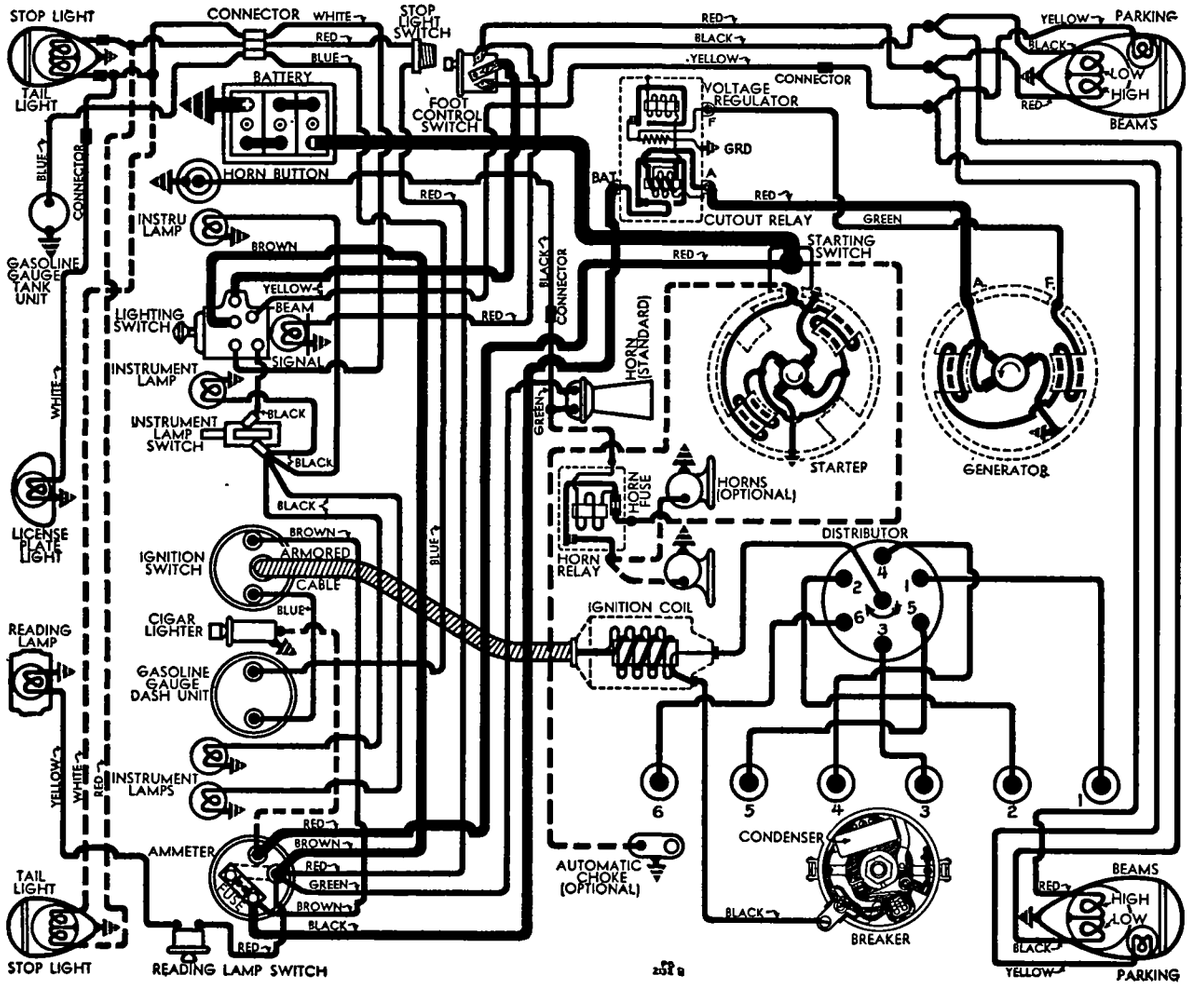

DELUXE M DELS

CARBURETOR

P5 STANDARD & PT-57 COMMERCIAL

Holley (Chandler-Groves) Mod. A-25. Code No. 117-1. 1¼" downdraft type.

For complete data, refer to Carburetor Index.

P6 DELUXE

Carter (B & B) Model C6J1 (without crankcase ventilator). **Model C6K1** (with crankcase ventilator). 1¼" single barrel downdraft types.

For complete data, refer to Carburetor Index.

P5 & P6 ECONOMY

Carter (B & B) Model B6H1 (without governor), **Model B6J1** (with governor). Single barrel downdraft type. NOTE—Approximately first 25 cars with B6H1 carburetors equipped with incorrect gasket (1A-32) under carburetor flange. This should be changed to 1A-33 (with 4 slots). Original gaskets may cause poor mileage.

For complete data, refer to Carburetor Index.

Idle Adjustment—With engine warm and choke valve wide open (fast idle inoperative), adjust throttle stopscrew so that idle speed is approximately 300 R.P.M. or 6 M.P.H. Turn idle adjusting screw in until engine begins to hesitate or miss, then out until engine begins to roll, finally turn screw in slowly until engine fires smoothly. Final setting ¾ (Ch-Gr), ½-1¼ (P6), ¼-¾ (Econ. B & B) turns of screws from inner position. Readjust throttle stopscrew for correct idling speed. NOTE—Car manufacturer recommends use of vacuum gauge. Set for highest reading on gauge.

Accelerating Pump Setting—Pump lever has three holes for pump link engagement. Set as follows:
Inner Hole (Short stroke)—Extremely warm weather or altitudes above 3000 feet.
Center Hole—Normal summer temperatures.
Outer Hole (Long stroke)—Winter temperatures.

Fast Idle: Used on Chandler-Groves and Carter (B&B) except Economy Models. Not adjustable.

Throttle Cracker:—Consists of an interconnecting linkage between the starter pedal and the accelerator rod by which the throttle valve is opened slightly when starter pedal is depressed. Adjusting screw is located on forward side of throttle cracker lever directly above starter switch.

Automatic Choke: Sisson AC-758B optional equipm't.

For complete data, refer to Carburetion Equip. Index.

CARB. EQUIPMENT

Air Cleaner:—AC. #1528196 oil-wetted type standard. #1528197 oil-bath type optional used in conjunction with oil vent cleaner #1525313.

Fuel Pump:—AC. Type B #1522995 diaphragm type. Type AL #1523137 fuel & vacuum pump optional.

For complete data, refer to Carburetion Equip. Index.

Gasoline Gauge:—Auto-Lite (Motometer) Electric. Dash: NG8743D (P5), NG8702D (P6). Tnk: NG8697T.

For complete data, refer to Carburetion Equip. Index.

BATTERY

Willard Type WHT-1-90 (Regular), RHT-1-90 (Export). 6 volt, 13 plate, 90 AH capacity (20 hr. rate).
Starting Capacity—114 amperes for 20 minutes.
Zero Capacity—300 amperes for 3.0 minutes. Five second voltage—4.12 volts.
Grounded Terminal—Positive (+) to transmission.
Dimensions—Length 9 1/16". (WHT), 8 15/16" (RHT). Width 7 1/16". Height 8 7/32 (WHT), 8 13/16" (RHT).
Location—Left side under driver's seat.

C NTINUED ON NEXT PAGE

CONTINUED FR M PRECEDING PAGE

Radio Battery—Willard, Type WHT-2-105, RHT-2-105 (Special Export). 6 volt, 15 plate, 105 ampere hour capacity (20 hour rate).
Starting Capacity—133 amperes for 20 minutes.
Zero Capacity—300 amperes for 3.9 minutes. Five second voltage—4.27 volts.
Dimensions—Length 10 5/16". Width 7 1/16". Height 8 13/16".
Grounded Terminal & Location—As above.

STARTER

P5—Auto-Lite MZ-4056. Armature No. MZ-2108.
P6—Auto-Lite MAW-4009. Armature MAW-2030.
P5 Canada—Auto-Lite MAW-4009. Arm. MAW-2030.
RHD Exp.—Auto-Lite MAW-4011A. Arm. MAW-2030.
Drive—Manual (solenoid on RHD Export) operated positive pinion shift through overrunning clutch.
Rotation—Counter-clockwise at commutator end.
Cranking Engine—Approx. 160 amperes at 5 volts.
Brush Spring Tension—42-53 ozs. (new brushes).

Performance Data—MZ Starters

Torque	R.P.M.	Volts	Amperes
0 ft. lbs.	4300	5.5	70
2.55 " "	1325	5.0	200
4.95 " "	750	4.5	300
7.65 " "	220	4.0	400
7.8 " "	Lock	3.	420
11.8 " "	Lock	4.	560

Performance Data—MAW Starters

0 ft. lbs.	4900	5.5	65
2.75 " "	1480	5.0	200
5.45 " "	820	4.5	300
8.50 " "	400	4.0	400
11.55 " "	110	3.5	500
11.55 " "	Lock	3.	505
18. " "	Lock	4.	670

Removal:—Flange mounted on left front face of flywheel housing. Disconnect wire connections (tape battery lead), oil filter lines (if so equipped), and 2 clips on linkage. Remove two fastening bolts.
Starting Switch: Auto-Lite SW-2677A. On starter, operated by pinion shift (starter pedal).
RHD EXPORT NOTE—Cars with MAW-4011A starter use Auto-Lite SS-4203 Solenoid controlled through relay by pushbutton on instrument panel.
For complete data, refer to Electrical Equipment Index.

GENERATOR

STANDARD MODEL

Auto-Lite Model GBM-4606C-1. Arm. GBM-2065F. Third brush control type used with Cutout Relay.
Charging Rate Adjustment—Remove commutator cover band, shift third brush by hand counter-clockwise to increase, or clockwise to decrease charging rate (brush held in position by friction).
Commutator Bar Method—Standard third brush setting (for maximum output as shown in table below) 4 commutator bars between third brush and insulated (nearest) main brush.
Maximum Charging Rate—18 amperes (cold), 15.2 (hot), 8.3 volts, 2500 RPM.

Cold Performance Data			Hot Performance Data		
Amps.	Volts	R.P.M.	Amps.	Volts	R.P.M.
0	6.4	800	0	6.4	850
4	6.8	950	4	6.9	1050
8	7.25	1125	8	7.4	1250
12	7.7	1375	12	7.9	1680
16	8.1	1800	15.2	8.3	2500
18	8.3	2400			

Rotation—Counter-clockwise at commutator end.
Brush Spring Tension—50-60 ozs. (new brushes).
Field Current—3.90-4.20 amperes at 6.0 volts.
Motoring Current—5.7-6.3 amperes at 6.0 volts.
Removal & Belt Adjustment: Same as given below.

GENERATOR

DELUXE MODEL

Auto-Lite Model GDF-4801A. Armature No. GDF-2006F. Third brush control type with external voltage regulation. Ventilated by fan on drive pulley.
Charging Rate Adjustment—Disconnect wire on generator at 'F' terminal, ground terminal. Connect ammeter in line at 'A' terminal. Connect voltmeter between 'A' terminal and ground. Shift third brush by hand counter-clockwise to increase or clockwise to decrease charging rate until output is 28-32 amperes at 8.0 volts, generator at room temp. 70°F. Actual charging rate controlled by regulator.
Commutator Bar Method—Shift third brush until 2 to 2⅛ commutator bars are exposed between brush and insulated (nearest) main brush.
Maximum Charging Rate—As given above.

Cold Performance Data			Hot Performance Data		
Amperes	Volts	R.P.M.	Amperes	Volts	R.P.M.
0	6.4	920	0	6.4	1000
4	6.6	1030	4	6.6	1140
8	6.8	1140	8	6.85	1280
12	7.0	1300	12	7.1	1440
16	7.25	1460	16	7.3	1640
20	7.45	1650	20	7.55	1840
24	7.65	1880	24	7.75	2220
28	7.9	2220	28.3	8.0	3200
32	8.0	3100			

Rotation—Counter-clockwise at commutator end.
Brush Spring Tension—53 ozs. max. (new brushes).
Field Current—1.90-2.10 amperes at 6.0 volts.
Motoring Current—5.3-5.9 amperes at 6.0 volts.
Belt Adjustment:—Swing generator away from engine until 40-50 lb. reading indicated on scale attached to generator frame.
Removal:—Pivot mounted at left front of engine. To remove, take out two pivot bolts and one clamp bolt.

GENERATOR

SPECIAL EQUIPMENT

State Police: Auto-Lite GDA-4801A. Used with Model VRB-4004B Regulator. ***See 1938 Dodge Model D8 pages for data on this generator and regulator.***
City Police: Auto-Lite GCB-4802A. Used with Model VRB-4009A Regulator. ***See 1939 De Soto Model S6 pages for data on this generator and regulator.***
Special Generators—Other Makes:—***Refer to Electrical Equipment Index for 'Special Generators' article for complete data on special Generators and Regulators***

CUTOUT RELAY

STANDARD

Auto-Lite Model CB-4014. Mounted on generator. ***For complete data, refer to Electrical Equipment Index.***
Cuts In—6.5-7.25 volts.
Cuts Out—.5-2.5 amperes discharge current.
Contact Gap—.015-.045".
Air Gap—.010-.030" with contacts closed.

REGULATOR

DELUXE MODEL

Auto-Lite Model VRD-4002B. Voltage Type. Consists of Cutout Relay and Voltage Regulator on dash. ***For complete data, refer to Electrical Equipment Index.***

Cutout Relay

Cuts In—6.4-7.0 volts Cold.
Cuts Out—.5 ampere min., 3.0 amperes max. cold.
Contact Gap—.015" minimum.
Air Gap—.034" min., .038" max. with contacts open Measure at hinge end of core.

Voltage Regulator

Setting—7.3-7.6 volts at 70°F. (Regulator Serial No. 8R-000001 Up). See Electrical Equipment Section for settings and changes on units before this serial no.
To Check (without breaking seal)—Connect ammeter in charging line at 'BAT' terminal on regulator, connect voltmeter between 'BAT' terminal and ground. Operate generator at speed equivalent to 30 M.P.H., charging fully charged battery until voltage is constant. Voltmeter reading should be within limits of 7.3-7.6 volts (cold—70°F), 7.1-7.4 volts (hot—140°F). See Regulator Setting above.
To Adjust (with cover removed)—Change regulator armature spring tension slightly by bending lower spring hanger. Check setting as directed above.
Contact Gap—.010-.020" (armature against stop pin)
Air Gap—.0595-.0625" with contacts just opening.

LIGHTING

LIGHTING:—Headlamps—Corcoran-Brown, pre-focused type. Upper and lower beams controlled by foot control switch with lighting switch on.
Headlamp Adjustment—Aim headlamps straight ahead (upper beam lighted, lenses in place, car unloaded) with center of hot spot 4" below center horizontal line of headlamps at 25 feet.
Headlamp Beam Indicator—In light switch knob. Lighted when headlamp upper beam in use.

Switches

Lighting—Plymouth Part No. 684038.
Instrument Panel—Plymouth Part No. 685888.
Foot Dimmer—Plymouth Part No. 659512.
Stop Light—Plymouth Part No. 677112.

Bulb Specifications

Position	Candlepower	Mazda No.
Headlamps	32-32	2331
Stop and Tail	21-3	1158
Park'g., Beam Indicator	1½	55
Instrum., Ign. Sw.	1½	55
Dome	15	87
Rear License	3	63

MISC. ELECTRICAL

FUSES:—Lighting—20 ampere on back of ammeter.
Single Horn—Early cars as shown on diagram. On later cars horn feed taken from regulator with 20 ampere fuse in connector on dash.
Dual Horns—30 ampere on horn relay. NOTE—New long type (SFE-30) fuse used. Replaces 3AG type.
HORNS:—Klaxon Model K-16 Type 2016 Single Horn Std., Auto-Lite Horn Set Model HC-5105 Twin Horns Optl. Twin horns operated by horn relay.
Horn Relay:—Auto Lite Model HR-4101S. A 30 ampere fuse on base. **Contacts Close**—2.5-3.5 volts.
Contact Gap—.026". **Air Gap**—.012-.017" (closed).

ENGINE

ENGINE SPECIFICATIONS:—6 cylinder, 'L' head.
Bore—3⅛". **Stroke**—4⅜".
Displacement—201.3 cubic inches.
Rated Horsepower—23.44 (A.M.A.).
Developed Horsepower—82 HP. (std. 6.7-1 head), 86 HP. (optl. 7.0-1 head) at 3600 R.P.M.
Compression Ratio & Pressure—As follows:

Ratio	Pressure at 1000 RPM.	At 100 RPM.
6.7-1 Std. C.I. head	140-150 lbs.	Approx. 113 lbs.
7.0-1 Optl. Al. head	150-160 lbs.	Approx. 117 lbs.

Vacuum Reading—Steady 18-21" idling at 6 MPH.

ENGINE

CONTINUED FROM PRECEDIN PA E

PISTONS:—Aluminum alloy, U-slot, cam ground type anodized finish. **Length 3 11/16". Weight 14.56 oz.**
Removal—Pistons and rods removed from above.
Clearance—Top .022". See Fitting New Pistons.
Replacement Pistons:—*See Chrysler Shop Notes.*
Fitting New Pistons:—Check piston size with micrometer at right angles to pin bosses at bottom of skirt. Fit piston with slight drag using .0005-.001" feeler between piston and cylinder wall. Piston should float through cylinder with feeler removed.
Installing Pistons:—Slot away from camshaft.

PISTON RINGS:—2 undercut compression, 2 slotted oil rings per piston, above pin.

Ring	Width	End Gap	Side Clearance
Compression	1/8"	.007-.015"	.0015-.003"
Oil Control	5/32"	.007-.015"	.0015-.003"

Replacement Rings: *See Chrysler Shop Notes.*

PISTON PIN:—Diameter—55/64". Length—2⅝". Floating type. Pin hole in rod bronze bushed.
Pin Fit in Piston—Thumb push fit. Piston 100° F.
Pin Fit in Rod Bushing—Thumb push fit at 70°F.
Replacement Pins:—Furnished std. & .003", .005",.008" oversize. Ream bushing and pin hole to size.

CONNECTING ROD:—Weight 29.13 oz. Length 7 15/16".
Crankpin Journal Diameter—1 15/16".
Lower Bearing—Removable steel-backed, babbitt-lined. Furnished std. & .002", .010", .012" undersize.
Clearance—.0005-.0025". **Sideplay**—.0055-.0115".
Bearing Adjustment:—None. Install new bearings with bosses engaging grooves in rod and cap.
Installing Rods:—Install rods with wide portion of bearing to rear on #1, 3, 5, to front on #2, 4, 6. Oil spit hole to camshaft (all rods).

CRANKSHAFT:—4 bearing type, 7 counterweights.
Journal Diameters—2¼" all bearings.
Bearing Type—Steel-backed, babbitt-lined.
Clearance—.001-.002".
Bearing Adjustment:—*See Chrysler Shop Notes for Bearing Removal and Adjustment, Front Main Bearing Cap Removal, and Crankshaft Front & Rear Oil Seals.*
Replacement Bearings & Bearing Caps: *See Chrysler Shop Notes for complete data.*
End Thrust:—Taken by flange faces on rear (#4) bearing. **Endplay**—.003-.007".

CAMSHAFT:—4 bearing. Non-adjustable chain drive.
Journal Diameters—#1, 2"; #2, 1 31/32"; #3, 1 15/16"; #4, 1¼".
Bearing Type—Removable steel-backed babbitt-lined bushings (except #4 machined in block).
Clearance—.001-.003" (#1), .0015-.0035" (all others).
NOTE—Replacement bushings finish reamed.
End Thrust:—Taken by thrust plate behind camshaft sprocket hub. **Endplay**—.002-.006".
Timing Chain:—Morse #1866 (restricted bend). Width 1". Pitch .500". Length 24" or 48 links.
See Chrysler Special Shop Notes for front end removal for work on timing chain.
Camshaft Setting:—Mesh chain with sprockets turned so that '0' marks are adjacent and in line with a straightedge across the shaft centers.

VALVES:—

	Head Diameter	Stem Diameter	Length
All valves	1 15/32"	.340-.341"	4 25/32"

	Seat Angle	Lift	Stem Clearance
Intake	45°	5/16"	.001-.003"
Exhaust	45°	5/16"	.003-.005"

See Chrysler Special Shop Notes for Exhaust valve seat insert removal and installation instructions.
Valve Guides:—Install with round end up to ⅞" below top of block. Finish ream guides after installing to .342-.343" Int., .344-.345 Exh.
Valve Springs:—Free length approx. 2 3/32". Limit of compression 1 9/32".

Spring Pressure	Length
Valve Closed 34-38 lbs.	1 3/4"
Valve Open 77-83 lbs.	1 7/16"

Valve Lifters:—Mushroom type. Ream guides from above for following oversizes: .001", .008", .030", .060".

VALVE TIMING

Tappet Clearance: .006" Int., .008" Exh. (hot). .010" Exh. setting recommended for sustained high speed driving. Valves accessible by removing right front wheel and wheel housing panel.
Valve Timing:—See Camshaft Setting above.
Intake Valves—Open 6° ATDC. Close 46° ALDC.
Exhaust Valves—Open 42° BLDC. Close 8° ATDC.
To Check Timing—Set tappet clearance #6 intake valve at .011". This valve should open with piston 6° (.0153") past top dead center when 6° ATDC. mark on crankshaft pulley at front of engine lines with pointer. Reset tappet cl. at .006" (hot).

LUBRICATION

LUBRICATION:—Gear type oil pump on right of engine.
Normal Oil Pressure:—30-45 lbs. at 30 M.P.H.
Oil Pressure Relief Valve:—Under plug on left side of engine. Operates at 40 lbs. Adjustable. Change to heavy (green) spring to increase pressure, light (red) spring to decrease.
Crankcase Capacity:—5 quarts (refill).

COOLING

Water Pump: Centrifugal, belt driven packless type.
See Water Pump Section for complete data.
Removal—Drain water, remove hood and side panels, disconnect inlet & outlet hoses, remove fan blades and pulley (attached by 4 capscrews), remove radiator core-to-shell bolts, lift out radiator, disconnect pump hoses, remove nuts from pump mounting studs and lift out.
Thermostat:—Bishop & Babcock. In outlet on hd. Setting—Start to open 150-155°F. Fully open 176°F.
Water Capacity:—14 quarts.
Drain Valves:—At lower left corner of radiator and on left side of block in front of distributor.

CLUTCH

CLUTCH:—Borg & Beck Model 9A6, 11A6 (P-5 Taxi). Model #918, 917 (Taxi) stamped on cover. Single plate, dry disc type. New pressure plate oil baffle used. Spiral grooved type facings used on 11A6
See Clutch Section for complete data.
Facings—Molded-woven (spiral grooved—Taxi only), 2 required. .133", ⅛" (Taxi) thick. I.D. 5⅝", 6½" (Taxi). O.D. 9¼", 11" (Taxi).
Adjustment—Adjust stopscrew (to rear of pedal) so that pedal arm just clears floor board. Pedal free movement must be 1 1/16". Adjusting nut provided on fork rod next to release fork.
Removal:—Remove transmission (see following), remove clutch housing underpan, mark cover and flywheel, remove cover bolts evenly, take out assembly from below.

TRANSMISSION

TRANSMISSION:—Own Make. All helical gear type with synchro-mesh on second and high speeds.
See Transmission Section for complete data.
Removal:—Remove floor boards, battery cable, disconnect front and rear universals (see Propeller Shaft Center Bearing below for 7 pass. sedan), free hand brake cable at clevis. Take off nuts on mounting studs, disconnect clutch release fork pull-back spring, free clevis pin on release fork rod, remove transmission cover with gear-shifter assembly and mounting stud nuts. Install two pilot studs and withdraw transmission.

UNIVERSALS

UNIVERSAL JOINTS:—Detroit-Universal. Series 4200. Ball and trunnion type with roller bearings. 2 used. NOTE—Three universals used on 7 pass. sedan.
See Universals Section for complete data.
Propeller Shaft Center Bearing:—Used on 7 Pass. models. *See Chrysler Shop Notes for data.*

REAR AXLE

REAR AXLE:—Own make. Semi-floating, hypoid gear type with Hotchkiss drive.
See Rear Axle Section for complete data.
Ratio—3.54-1 (P-5 Econ.). 3.73-1 (P-5 optl., P-6 Econ.). 3.9-1 (P-5 std., P-6 Coupe). 4.1-1 (P-6 Sedan). 4.3-1 (P-5,6 with 18" or 20" tires; P-6 7 pass.).
Backlash—.006-.010". Screw adjustment.
Removal:—Remove wheel, hub, and drum assembly (using screw type hub puller). Place block under brake pedal, disconnect brake line, remove backing plate and oil seal, pull axle shaft and bearing (Tool C-158). With shafts removed, carrier may be removed by disconnecting rear universal at flange, and removing housing capscrews.
Wheel Bearing Adjustment—Controlled by shims at flanged ends of axle housing. With wheel and hub removed measure endplay with dial indicator. To adjust remove backing plate (see above) and add or remove shims (equally at both sides) to proper clearance. **Endplay**—.003-.008".

SHOCK ABSORBERS

SHOCK ABSORBERS:—Delco—Model 1162-U (front), 1163-U (rear). Direct acting, hydraulic type.
See Shock Absorber Section for complete data.

FRONT SUSPENSION

Front Suspension:—Conventional tubular section axle, Reverse-Elliott ends, semi-elliptic springs.
Kingpin Inclination—4½-5½° crosswise.
Caster—2° (1-3°). Adjust by inserting wedge plates between springs and axle center.
Camber—½° (¼-¾°). Not adjustable.
Toe In—1/16" (0-⅛"). Turn tie rod to adjust.
Steering Geometry—Outer wheel 20°. Inner 22°50'.

STEERING GEAR

Steering Gear: Chrysler (Gemmer design Model 300) Worm-and-Roller type. See Gemmer 300 article.
NOTE—RHD cars equipped with Gemmer Model 305.
See Steering Gear Section for complete data.

BRAKES

BRAKES:—Service—Lockheed hydraulic, double anchor type. Hand brakes at rear of transmission.
See Brake Section for complete data.
Wheel Cylinders—Stepped or two-stage bore type. Front Wheel—Front cylinder 1¼". Rear 1⅜".
Rear Wheel—Front cylinder 1⅛". Rear 1¼".
Drum—Centrifuse. Diameter 10" (11" on 7 Pass.).
Lining—Moulded. Width 2". Thickness 13/64". Length (frt. shoe) 10 9/32", 11 15/32"—7 pass., (rear shoe) 7 11/16", 7 31/32"—7 Pass.
Clearance—.012" toe, .006" heel for each shoe.
Braking Power—55% front, 45% rear.
Hand Brake:—External at rear of transmission.
Adjustment—*See Chrysler Shop Notes.*
Drum—Cast-iron. Diameter—6".
Lining—Width 2". Thick. 5/32". Length 17 1/16".

FRONT END ASSEMBLY (UNIT) REMOVAL):—Should be removed as a unit for work on front of engine. *See Chrysler Shop Notes for directions.*

MODEL IDENTIFICATION

ECONOMY MODEL NOTE:—These cars have special Carburetor and rear axle ratio. Identified by 'E' in Eng. No. as follows: P7-E-1234 or P8-E-1234.

SERIAL NUMBER: On right front door hinge post.

	Detroit	Los Angeles	Evansville	Canada
P-7	1,298,001	3,110,001	9,150,401	9,603,586
P-8	10,630,001	3,222,001	20,027,001	9,358,626

ENGINE NUMBER:—First number P-8-1001. Stamped on left side of block between #1 and #2 cylinders. *See Chrysler Shop Notes for Engine Number Lettering ('Special Standard' bore and bearing sizes).*

TUNE-UP

COMPRESSION:—Ratio and pressure as follows:

Ratio	Pressure at 1000 RPM	At 100 RPM
6.7-1 Std. C.I. head	140-150 lbs.	Approx. 113 lbs.
7.0-1 Optl. Al. head	150-160 lbs.	Approx. 117 lbs.

VACUUM READING:—Steady 18-21" idling at 6 M.P.H.

FIRING ORDER: 1-5-3-6-2-4. See wiring diagram.

SPARK PLUGS: Champion Type J-8 or Auto-Lite A-7 (for Std. hd.). Champion H-10 (Al. hd.). 14 mm. Gaps—.025".

IGNITION: See Coil, Condenser, and Distributor.

Breaker Gap—.020". Cam Angle—38° Closed.

Distributor	Autom. Advance	Vacuum Adv.
IGS-4102A-2	13° at 1450 RPM	10° at 12"
IGS-4102B-2	12° at 1750 RPM	10° at 12"
IGS-4103-1	11° at 1850 RPM	10° at 14"
IGS-4103A-1	11° at 1850 RPM	10° at 17"

IGNITION TIMING—See Ignition Timing.

Std. Setting—TDC. Crankshaft pulley 'DC' mark aligned with pointer at front of engine.

CARBURETION: See Carburetor & Carb. Equipment.

Idle Setting—Set idle adjusting screw ½-1¼ turns open (½-1½ for B6M1). Idle speed setting 6 MPH.

Float Level—5/64" (5/32" for B6M1) from top of float (not seam) to top edge of bowl, valve seated.

Accelerating Pump—Center hole normal setting.

Fuel Pump Pressure: 4½ lbs. (3½ lbs. RHD cars) max.

MANIFOLD HEAT CONTROL:—Thermostatic coil type. See that shaft and valve rotate freely. When installing coil, wind up free end 1/3 turn counter-clockwise and hook end over stop pin.

VALVES: See Valve Timing.

Tappet Clearance:—.006" Int., .008" Exh. hot. Remove right front wheel and housing panel for adjustment. NOTE—Tappet screws are self-locking (no lock-nuts). .002" additional exhaust tappet clearance recommended for sustained high speed driving.

STARTING: See Battery, Starter Generator, Regulator.

IGNITION

Ignition Switch:—Mitchellock Model 24-R, Type 8052. Ignition Lock—Yale & Towne.

COIL: Auto-Lite Model CL-4069 (P7), IG-4654 (P8), CL-4069X (P7 Canada). Service Winding (less switch & cable) CL-3224DS (for CL), IG-3224JS (for IG). Ignition Current—2½ amperes idling, 5½ stopped.

CONDENSER: Auto-Lite Part No. IG-3927A. Capacity—.25-.28 microfarad.

DISTRIBUTOR: Auto-Lite Models for 1939 as follows:

IGS-4103-1.....U. S. cars to Eng. No. 67594
IGS-4103A-1.....U. S. cars after Eng. No. 67594
IGS-4102A-1.....Canada cars to Eng. No. 4660
IGS-4102B-2.....Canada cars after Eng. No. 4660

Single breaker, 6 lobe cam, full automatic advance with vacuum spark control and Manual Adjustm't.

Breaker Plate Identification—Maximum vacuum advance limited by slot (plate marked #10).
Breaker Gap—Set at .020".
Cam Angle or Dwell—38° (closed), 22° (open).
Breaker Arm Spring Tension—18-20 ounces.
Rotation—Clockwise viewed from top.

Automatic Advance—IGS-4102A-2

Distributor Degrees	Distributor R.P.M.	Engine Degrees	Engine R.P.M.
Start	350	0	700
3	400	6	800
5	600	10	1200
7	810	14	1620
9	1025	18	2050
13	1450	26	2900

Automatic Advance—IGS-4102B-2

Start	350	0	700
3	400	6	800
6	850	12	1700
9	1300	18	2600
12	1750	24	3500

Automatic Advance—IGS-4103-1, IGS-4103A-1

Distributor Degrees	Distributor R.P.M.	Engine Degrees	Engine R.P.M.
Start	350	0	700
3	400	6	800
5	760	10	1520
7	1120	14	2240
9	1500	18	3000
11	1850	22	3700

Vacuum Spark Control—Integral type (on distributor, linked directly to breaker plate). Provides additional advance at speeds above idling except when engine accelerated with wide open throttle.

Vacuum Advance—IGS-4102A-2, IGS-4102B-2

Distr. Degrees	Eng. Degrees	Vacuum (" of HG)
Start	0°	4¾"
5°	10°	8⅜"
10°	20°	12"

Vacuum Advance—IGS-4103-1

Start	0°	5"
10°	20°	14"

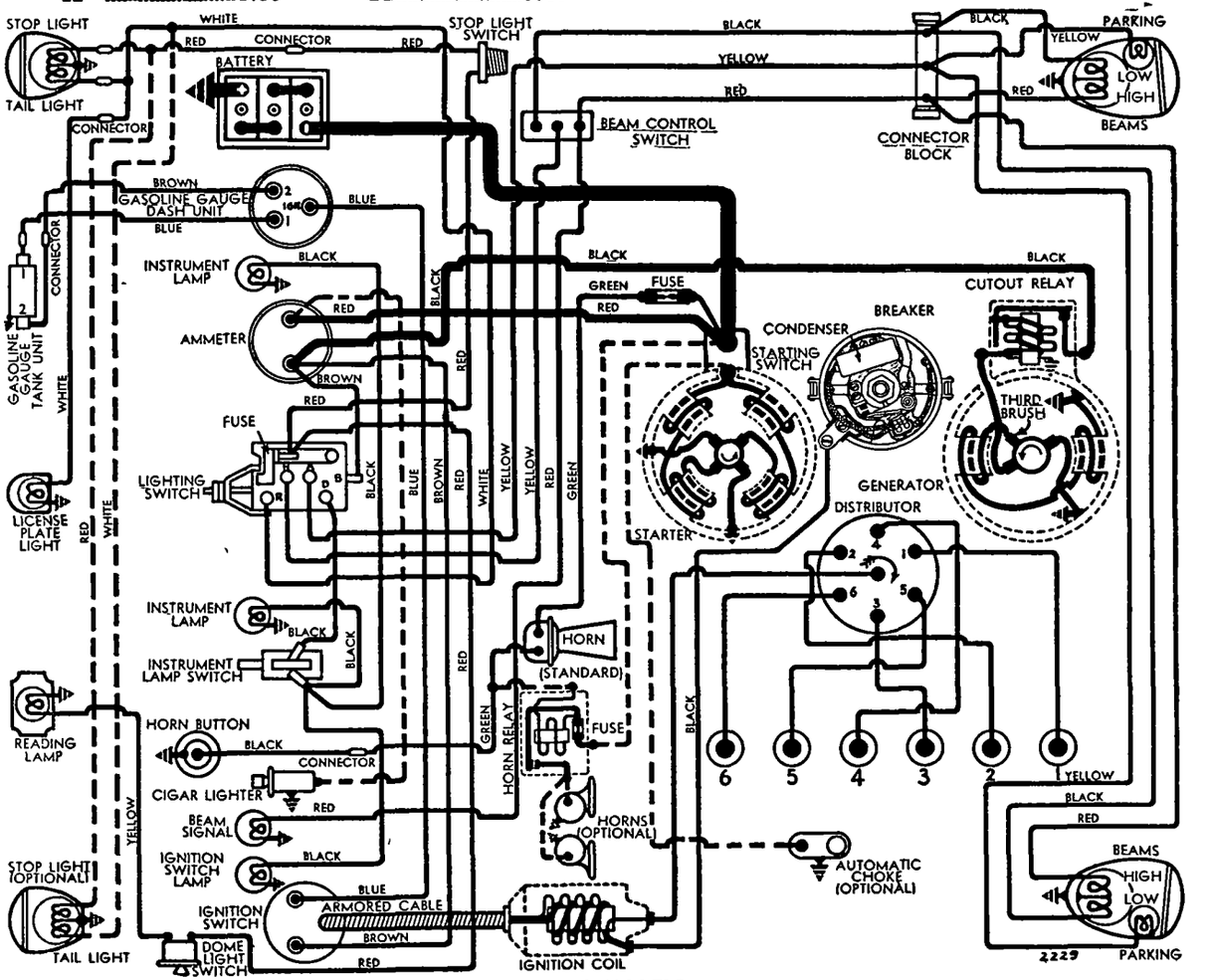

ROADKING MODELS

Vacuum Advance—IGS-4103A-1

Distr. Degrees	Eng. Degrees	Vacuum (" of HG)
Start	0°	5"
5°	10°	11"
10°	20°	17"

Manual Adjustment—Provides for minor changes in ignition timing at distributor. See Ignition Timing.

Distributor Removal:—Mounted on left side of crankcase. To remove, disconnect vacuum line, take out hold-down screw in advance arm.

IGNITION TIMING

IGNITION TIMING:—Initial setting (correct for fuel of 70 octane rating at low altitudes) shown below. See Manual Adjustment (following).

NOTE—Use premium fuel with HC 7.0-1 optl. head.

	Flywheel Degrees	Piston Position
All Engines	0° at TDC	.0000" TDC.

Crankshaft pulley marked 'DC' at TDC. point with 15 one-degree graduations on either side.

Timing (Using Timing Light)—Connect timing light between distributor and battery terminal on generator relay. With #6 piston on compression, turn engine over until piston reaches firing position (see Initial Setting), stop when correct mark on crankshaft pulley lines up with pointer on chain case cover. Loosen advance arm hold-down screw, center pointer on scale, tighten screw. Loosen advance arm clamp bolt, rotate distributor until timing light just goes out, tighten clamp bolt. Check manual adjustment setting as directed below.

Timing (Using Synchroscope)—Tool No. C-374. Clip lead to #1 spark plug, direct light on crankshaft pulley (correct mark filled in with paint or chalk), idle engine and adjust distributor as directed above.

Manual Adjustment—Standard ignition setting should be varied not more than 4° (piston 4° or .0068" before or after top dead center) so that slight ping noticeable between 10 and 30 MPH. when accelerating with wide open throttle for best performance. To adjust, loosen hold-down screw, rotate distributor counter-clockwise to advance spark (if no ping), clockwise to retard (if ping too severe).

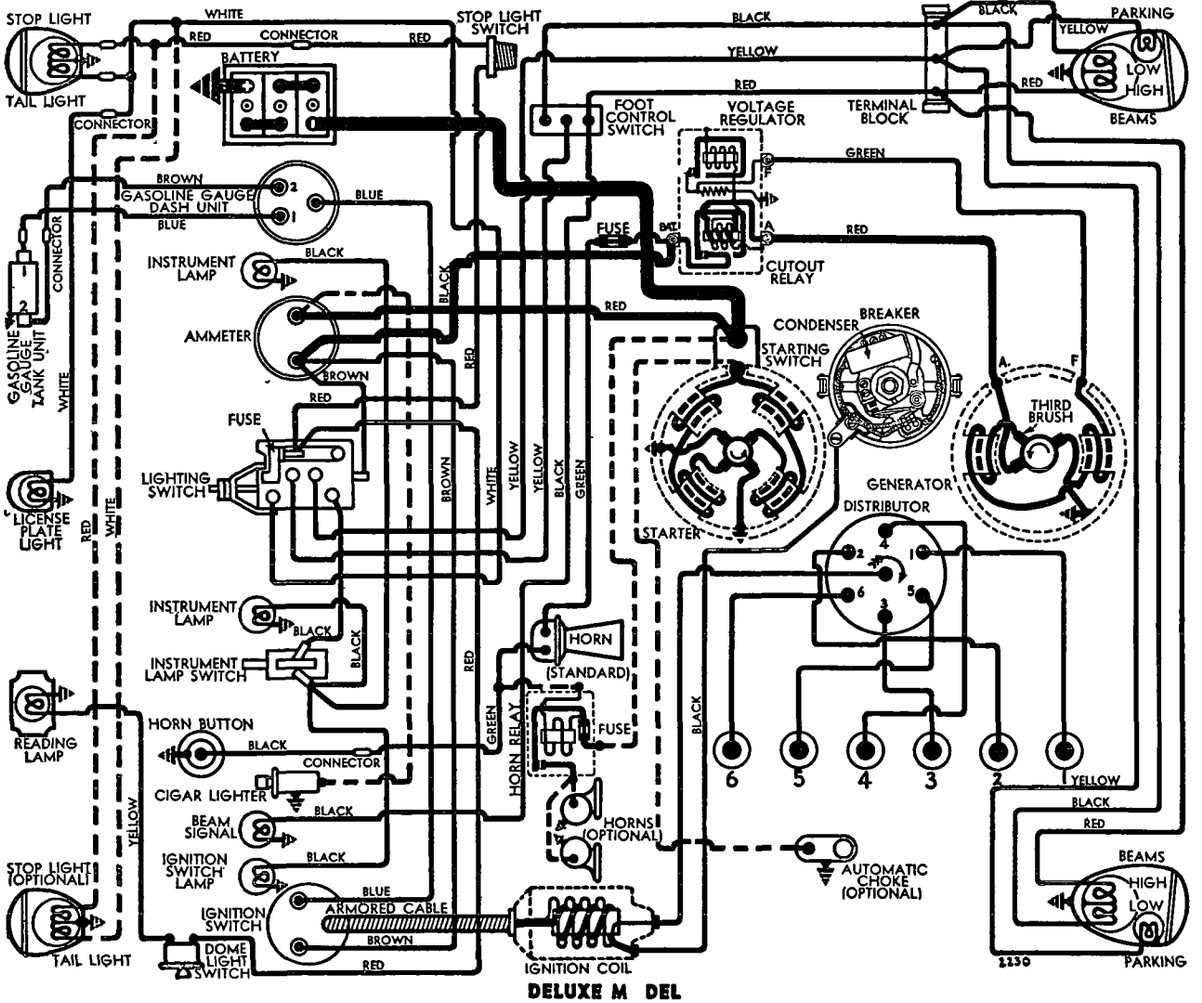

DELUXE M DEL

CARBURETOR

CARBURETION:—Carburetor. Carter (Ball & Ball) Model D6A1 (early), D6A2 (later). 1½" downdraft

For complete data, refer to Carburetor Index.

Economy Carburetor—Carter (Ball & Ball) Model B6K1, B6M1. 1¼" downdraft type.

For complete data, refer to Carburetor Index.

Idle Adjustment—With engine warm and choke valve wide open (fast idle inoperative), adjust throttle stopscrew so that idle speed is approximately 300 R.P.M. or 6 M.P.H. Turn idle adjusting screw in until engine begins to hesitate or miss, then out until engine begins to roll, finally turn screw in slowly until engine fires smoothly. Final setting should be ½-1¼ (D6A1, B6K1), ½-1½ (B6-M1) turns of screw from inner closed or seated position. Readjust throttle stopscrew for correct idle speed. If vacuum gauge used, set for highest reading.

Accelerating Pump—Pump lever has three holes for pump link engagement. Set as follows:

Inner Hole (Short Stroke)—Extremely warm weather or altitudes above 3000 feet.

Center Hole—Normal summer temperatures.

Outer Hole (Long Stroke)—Winter temperatures.

Throttle Cracker:—Interconnector between starting pedal and accelerator rod which opens throttle slightly when pedal depressed for starting. Adjust by loosening throttle pickup clamp bolt (above starter switch), shift clamp on rod.

Fast Idle (D6A1, 2):—Integral type. No adjustment.

Automatic Choke:—Sisson Type AC-758B. Optional.

For complete data, refer to Carburetion Equip. Index.

CARB. EQUIPMENT

Air Cleaner:—AC #1528196 oil-wetted type Std., #1528839 heavy duty oil-bath type Optl.

NOTE—AC #1525313 crankcase vent cleaner used.

Fuel Pump:—AC Type AT #1523647, Type B #1522995 RHD. Std., Type AS #1523648, Type AL #1523885 RHD. combination fuel-and-vacuum pump Optl.

For complete data, refer to Carburetion Equip. Index.

Gasoline Gauge—Auto-Lite Electric. No. NG-9009D (dash unit), NG-8989T (tank unit).

For complete data, refer to Carburetion Equip. Index.

BATTERY

Auto-Lite CT-1-13 or Willard SW-1-90. 6 volt, 13 plate, 90 ampere hour capacity (20 hour rate).

Starting Capacity—114 amperes for 20 minutes.

Zero Capacity—300 amperes for 3.0 minutes.

Grounded Terminal—Positive (+) to transmission.

Dimensions—Length 9". Width 7". Height 9".

Location—On left side under front seat.

STARTER

Domestic: Auto-Lite MZ-4062. Armature MZ-2108.

Canada: Auto-Lite MAW-4016. Arm. MAW-2030.

Drive—Overrunning clutch, manual pinion shift.

Rotation—Counter-clockwise at commutator end.

Cranking Engine—150-175 amperes, 5.1 volts.

Brush Spring Tension—42-53 ozs. (new brushes).

Performance Data—MZ-4062

Torque	R.P.M.	Volts	Amperes
0 ft. lbs.	4300	5.5	70
.65 "	2500	5.5	100
2.55 "	1325	5.0	200
4.95 "	750	4.5	300
7.65 "	220	4.0	400
7.8 "	Lock	3.0	420
11.8 "	Lock	4.0	560

CONTINUED ON NEXT PAGE

C NTINUED FR M PRECEDING PA E

Performance Data—MAW-4016

Torque	R.P.M.	Volts	Amperes
0 ft. lbs.	4900	5.5	65
2.75 "	1480	5.0	200
5.45 "	820	4.5	300
8.50 "	400	4.0	400
11.55 "	110	3.5	500
11.5 "	Lock	3.0	505
18. "	Lock	4.0	670

Removal:—Flange mounted on left front face of flywheel housing. Remove cables, 2 clips on starter linkage, oil filter lines, 2 mounting bolts. Lift off.
Starting Switch: Auto-Lite SW-2813. On starter. Manually operated by starter pedal (pinion shift).
For complete data, refer to Electrical Equipment Index.

GENERATOR

R AD KING—FIRST CARS

Auto-Lite Model GBM-4606C-1. Arm. GBM-2065F. Third brush control type used with Cutout Relay.
Charging Rate Adjustment—Remove commutator cover band, shift third brush by hand counter-clockwise to increase, or clockwise to decrease charging rate (brush held in position by friction).
Commutator Bar Method—Set third brush four commutator bars from nearest main brush.
Maximum Charging Rate—18 amperes (cold), 15.2 (hot), 8.3 volts, 2500 RPM.

Performance Data

Cold Amps.	Cold Volts	Cold R.P.M.	Hot Amps.	Hot Volts	Hot R.P.M.
0	6.4	800	0	6.4	850
4	6.8	950	4	6.9	1050
8	7.25	1125	8	7.4	1250
12	7.7	1375	12	7.9	1680
16	8.1	1800	15.2	8.3	2500
18	8.3	2400			

Rotation—Counter-clockwise at commutator end.
Brush Spring Tension—50-60 ozs. (new brushes).
Field Current—3.80-4.20 amperes at 6.0 volts.
Motoring Current—5.7-6.3 amperes at 6.0 volts.
Removal:—Pivot mounted at left front of engine. To remove, take out pivot bolts and clamp bolt.
Belt Adjustment:—Swing generator away from engine until 40-50 lb. reading secured on scale attached to generator frame.

GENERATOR

ROAD KING & DELUXE MODELS

Auto-Lite Model GDF-4801A. Armature No. GDF-2006F. Third brush type with Voltage Regulator.
Charging Rate Adjustment—Disconnect wire on generator at 'F' terminal, ground terminal. Connect ammeter in line at 'A' terminal. Connect voltmeter between 'A' terminal and ground. Shift third brush by hand counter-clockwise to increase or clockwise to decrease charging rate until output is 28-32 amperes at 8.0 volts, generator at room temp. 70° F. Actual charging rate controlled by regulator.
Commutator Bar Method—Set third brush 2-2⅛ commutator bars from nearest main brush.

Performance Data

Cold Amperes	Cold Volts	Cold R.P.M.	Hot Amperes	Hot Volts	Hot R.P.M.
0	6.4	920	0	6.4	1000
4	6.6	1030	4	6.6	1140
8	6.8	1140	8	6.85	1280
12	7.0	1300	12	7.1	1440
16	7.25	1460	16	7.3	1640
20	7.45	1650	20	7.55	1840
24	7.65	1880	24	7.75	2220
28	7.9	2220	28.3	8.0	3200
32	8.0	3100			

Rotation—Counter-clockwise at commutator end.
Brush Spring Tension—53 ozs. max. (new brushes).
Field Current—1.90-2.10 amperes at 6.0 volts.
Motoring Current—5.3-5.9 amperes at 6.0 volts.
Removal & Belt Adjustment: Same as given above.

GENERATOR

SPECIAL EQUIPMENT

Auto-Lite Model GCE-4804-B. Armature Number GBX-2006AF. 2 brush type (current-voltage control).
Wiring Note—*Internal wiring for GCE generator & VRB regulator same as shown on '39 Dodge diagram.*
Charging Rate Adjustment—No adjustment at generator. Charging rate controlled by Voltage Regulator and maximum output by Current Regulator.
Maximum Charging Rate—As given in table below.

Performance Data

Cold Amperes	Cold Volts	Cold R.P.M.	Hot Amperes	Hot Volts	Hot R.P.M.
0	6.4	740	0	6.4	785
4	6.6	830	4	6.6	880
8	6.8	920	8	6.8	975
12	7.05	1015	12	7.05	1070
16	7.25	1100	16	7.25	1165
20	7.5	1190	20	7.5	1275
24	7.7	1280	24	7.7	1385
*30	8.0	1400	30	8.0	1580

*—Current Regulator Setting. See Regulator data.
Rotation—Counter-clockwise at commutator end.
Brush Spring Tension—64-68 ozs. (new brushes).
Field Current—1.66-1.84 amperes at 6.0 volts.
Motoring Current—5.03-5.57 amperes at 6.0 volts.
Removal & Belt Adjustment:—As given above.
SPECIAL GENERATORS:—Other Makes—*Refer to Electrical Equipment Index for 'Special Generators' article for complete data on special Generators and Regulators which may be found on these cars.*

CUTOUT RELAY

ROAD KING—FIRST CARS

Auto-Lite Model CB-4014 (P7 for GBM Generator). Mounted on generator.
For complete data, refer to Electrical Equipment Index.
Cuts In—6.5-7.25 volts.
Cuts Out—.5-2.5 amperes discharge current.
Contact Gap—.015-.045".
Air Gap—.010-.030" with contacts closed.

REGULATOR

ROAD KING & DELUXE MODELS

Auto-Lite Model VRD-4002B (for GDF Generator) Voltage Regulator. In case on dash.
For complete data, refer to Electrical Equipment Index.

Cutout Relay

Cuts In—6.4-7.0 volts Cold.
Cuts Out—.5 ampere min., 3.0 amperes max. cold.
Contact Gap—.015" minimum.
Air Gap—.034" min., .038" max. with contacts open.

Voltage Regulator

Setting—7.3-7.6 volts at 70°F.
To Check (without breaking seal)—Connect ammeter in charging line at 'BAT' terminal on regulator, connect voltmeter between 'BAT' terminal and ground. Operate generator at speed equivalent to 30 M.P.H., charging fully charged battery until voltage is constant. Voltmeter reading should be within limits of 7.3-7.7 volts (cold—70°F), 7.1-7.4 volts (hot—140°F). See Regulator Setting above.
To Adjust (with cover removed)—Change regulator armature spring tension slightly by bending lower spring hanger. Check setting as directed above.
Contact Gap—.010-.020" (armature against stop pin)
Air Gap—.0595-.0625" with contacts just opening.

REGULATOR

SPECIAL EQUIPMENT

Auto-Lite Model VRB-4004A (for GCE Generator) Current-Voltage Regulator. In case on dash.
For complete data, refer to Electrical Equipment Index.

Cutout Relay & Voltage Regulator

Same as VRD-4002B regulator (see data above).

Current Regulator

Setting—29-31 amperes (marked '30' on cover).
To Check (without breaking seals)—Connect test meters as for Voltage check (above). Operate generator at speed equivalent to 30 MPH. charging battery, turn on car lights and accessories so that generator charges at peak rate and Current Regulator operates. Current should not exceed setting.
Adjustment, Contact Gap, Air Gap—Same as for Voltage Regulator (see above).

LIGHTING

LIGHTING:—Headlamps—Corcoran-Brown pre-focused type. Upper and lower beams controlled by foot switch on toeboard with light switch on.
Headlamp Adjustment—Aim upper beam straight ahead (hot spot center 4" below lamp center hght.).
Beam Indicator—Red light on instrument panel above speedometer. Lighted with upper beams on.

Switches

Lighting—Chrysler No. 853295 or 852535.
Beam Selector—Chrysler No. 853323 or 659512.
Instrument—Chrysler No. 695943.
Stop Light—Chrysler No. 677112.

Bulb Specifications

Position	Candlepower	Mazda No.
Headlamps	32-32	2331
Stop and Tail	21-3	1158
Parking, Instrument	1½	55
Beam Indic., Ign. Switch	1	51
Dome	15	87
Rear License	3	63

MISC. ELECTRICAL

FUSES:—Lighting. 20 ampere. On light switch.
Horn—20 ampere in connector at starter on single horns. 30 amp. on relay for duals.
Clock—2 ampere (when factory equipped).
HORNS:—Single. Klaxon Model K-16 Type 2016. Std.
Dual—Auto-Lite HH or HL-4001 (low pitch), HH or HL-4002 (high pitch), operated by horn relay.
Horn Relay:—Auto-Lite Model HR-4101. 30 ampere fuse mounted on base. **Contacts Close**—2.5-3.5 volts. **Contact Gap**—.026". **Air Gap**—.012-.017" (closed).

ENGINE

ENGINE SPECIFICATIONS:—6 cylinder, 'L' head type. **Bore**—3⅛". **Stroke**—4⅜". **Displacement**—201.3 cu.ins. **Rated Horsepower**—23.44 (A.M.A.).
Developed Horsepower—82 @ 3600 RPM. (Std. 6.7-1 hd.). 86 @ 3600 RPM. (Optl. 7.0-1 Al. hd.).
Compression Ratio & Pressure—As follows:

Ratio	Pressure at 1000 RPM.	At 100 RPM.
6.7-1 Std. C.I. head	140-150 lbs.	Approx. 113 lbs.
7.0-1 Optl. Al. head	150-160 lbs.	Approx. 117 lbs.

Vacuum Reading—Steady 18-21" idling at 6 M.P.H.
PISTONS:—Aluminum alloy, U-slot, Cam-ground, with Anodic finish. **Length** 3 11/16". **Weight** 14.56 ozs.
Removal—Pistons and rods removed from above.
Clearance—Top .021". Skirt .0001-.0011".
Original Bore & Piston Sizes, Replacement Pistons:—*See Chrysler Shop Notes for sizes and markings.*
Fitting New Pistons:—Use micrometers. Check piston at bottom of skirt at right angles to pin bosses. With piston and wall dry, piston should pass through bore of own weight with slight drag (pin removed).

ENGINE

C NTINUED FR M PRECEDING PA E

Installing Pistons:—Slot away from camshaft.

PISTON RINGS:—Four rings, all above pin—#1 Compression (upper inner edge beveled), #2 Comp. (lower edge stepped), #3 & 4 (slotted oil rings).

Ring	Width	End Gap	Side Clearance
Comp. (Top)	⅛"	.007-.015"	.002 -.004"
Comp. (#2)	⅛"	.007-.015"	.0015-.0035"
Oil Control	5/32"	.007-.015"	.0015-.003"

Replacement Rings:—Furnished Std. and .005", .010", .015", .020", .025", .030", .040", .050", .060" oversize.

PISTON PIN:—Diameter—55/64". **Length**—2⅝".
Floating type. Pin hole in rod bronze bushed.
Pin Fit in Piston—Thumb push fit. Piston 100°F.
Pin Fit in Rod Bushing—Thumb push fit at 70°F.
Replacement Pins:—Std. & .003", .005", .008" oversize.

CONNECTING ROD:—Weight 29.13 oz. Length 7 15/16".
Crankpin Journal Diameter—1 15/16".
Lower Bearing—Removable steel-backed, babbitt-lined. Furnished Std. & .002", .010", .012" undersize.
Clearance—.0005-.0025". **Sideplay**—.0055-.0115".
Bearing Adjustment:—None (no shims). Install bearings with boss engaging groove in rod and cap.
Installing Rods:—Wide portion of bearing to rear (#1, 3, 5), to front (#2, 4, 6). Oil hole to camshaft.

CRANKSHAFT:—4 bearing type with 7 counterweights.
Journal Diameters—2¼" all bearings.
Bearing Type—Removable, precision type steel-backed, babbitt-lined. **Clearance**—.001-.002".
Bearing Adjustment: None (no shims). Replace bearings. *For Front Main Bearing Cap Removal, Bearing Adjustment, and Crankshaft Front and Rear Oil Seals, refer to Chrysler Shop Notes.*
Replacement Bearings & Bearing Caps: *See Chrysler Shop Notes for complete data.*
End Thrust:—Taken by flange faces on rear (#4) bearing. **Endplay**—.003-.007".

CAMSHAFT:—4 bearing. Non-adjustable chain drive.
Journal Diameters—#1, 2"; #2, 1 31/32"; #3, 1 15/16"; #4, 1¼".
Bearing Type—Removable, Steel-backed, babbitt-lined bushings (except #4 machined in block).
Clearance—.001-.003" (#1), .0015-.0035" (all others).
End Thrust:—Taken by thrust plate behind camshaft sprocket hub. **Endplay**—.002-.006".
Timing Chain:—Morse Type 1866-N, No. 2661. Width 1". Pitch .500". Length 24" or 48 links.
Camshaft Setting:—Mesh chain with sprockets turned so that '0' marks are adjacent and in line with a straightedge across the shaft centers.

VALVES:—

	Head Diameter	Stem Diameter	Length
All valves	1 15/32"	.340-.341"	4 25/32"

	Seat Angle	Lift	Stem Clearance
Intake	45°	5/16"	.001-.003"
Exhaust	45°	5/16"	.003-.005"

See Chrysler Shop Notes for Exh. Valve Seat Insert data.
Valve Guides:—Remove from above. Press new guides in (tapered end up) so top ⅞" below top of block, then finish ream to .342-.343" Int., .344-.345" Exh.
Valve Springs:—Free length 2 3/32". Limit of compression 1 9/32".

	Spring Pressure	Length
Valve Closed	34-38 lbs.	1 3/4"
Valve Open	77-83 lbs.	1 7/16"

Valve Lifters:—Mushroom type. Ream holes from above (pilot in valve stem guide) for new lifters .001", .008", .030", .060" oversize. Stem Diam. ⅝".

VALVE TIMING

Tappet Clearance:—.006" Int., .008" Exh. (hot). .002" additional exhaust clearance recommended for sustained high speed driving. NOTE—Tappet screws self-locking type. Remove right front wheel and housing panel for access to valves.
Valve Timing:—See Camshaft Setting above.
Intake Valves—Open 6° ATDC. Close 46° ALDC.
Exhaust Valves—Open 42° BLDC. Close 8° ATDC.
To Check Timing—Set tappet clearance #6 intake valve at .011". This valve should open with piston 6° (.0153") past top dead center when 6° ATDC. mark on crankshaft pulley at front of engine lines up with pointer. Reset tappet cl. .006" (hot).

LUBRICATION

LUBRICATION:—Gear type pump (right of engine).
Normal Oil Pressure:—30-45 lbs. at 30 M.P.H.
Oil Pressure Relief Valve:—Under cap below starter. Opens at 40-45 lbs. To increase pressure use heavy (green) spring, to decrease use light (red) spring.
Crankcase Capacity:—5 quarts (refill).

COOLING

COOLING SYSTEM:—Capacity—14 quarts.
Radiator Core Removal—*See Chrysler Shop Notes.*
Water Pump:—Packless type.
See Water Pump Section for complete data.
Thermostat:—Bishop & Babcock. In head outlet.
Setting—Start to open 157-162°F. Fully open 183°.
Temperature Gauge:—Motometer (Auto-Lite) No. H-9008. *See article in Miscellaneous Section for data.*

CLUTCH

CLUTCH:—Borg & Beck Model 9A6, 11A6 (P-7 Taxi). Single plate, dry disc type. Marked #918 (9A6), 931 (11A6) on cover. Pressure plate oil-baffle and new Over-center return spring (hooked to pedal) *See Clutch Section for complete data.*
Facings—Woven & compressed, 2 required. Inside Diam. 5⅝" (9A6), 6½" (11A6). Outside Diam. 9¼" (9A6), 11" (11A6). Thick. .133" (9A6), .125" (11A6). NOTE—Spiral grooved type facings used on 11A6.
Adjustment:—Pedal should just clear toeboard (adjust stopscrew on lower end) and have 1" free movement (adjust nut on link rod at clutch fork).
Removal:—Remove floor board, unhook clutch fork pull-back spring and take out clevis pin in connecting link. Remove transmission (see Transmission Removal below), remove housing underpan, mark cover & flywheel, remove clutch cover bolts evenly.

TRANSMISSION

TRANSMISSION:—Own Make. All helical gear, constant-mesh, synchro-mesh (second & high), sliding gear (low & reverse) with steering column gear shift (P8). *See Transmission Section for data.*
Transmission Control (P-8):—Remote control type. *See Transmission Section for complete data.*
Removal:—Remove floor boards, disconnect battery ground cable, speedometer cable, front and rear universal joints (see Chrysler Shop Notes for Propeller Shaft Center Bearing on 7 Pass. models), free hand brake cable at clevis, disconnect gear shifter rod and selector cable at transmission case (P-8 only). Remove mounting stud nuts, take out cover capscrews and lift off cover assembly (with shift lever on P-7), install two pilot studs in upper mounting stud holes, withdraw transmission.

UNIVERSALS

UNIVERSAL JOINTS:—Detroit-Universal Series 4200. Ball and trunnion type with roller bearings.
See Universals Section for complete data.
Propeller Shaft Center Bearing:—On 7 pass. sedans.
See Chrysler Shop Notes for servicing.

REAR AXLE

REAR AXLE:—Own Make. Semi-floating, hypoid gear type with Hotchkiss drive.
See Rear Axle Section for complete data.
Ratio—3.54-1 (P-7 Econ.). 3.73-1 (P-7 Spec., P-8 Econ.). 3.9-1 (P-7 Std., P-8 Coupe). 4.1-1 (P-8 Sedan). 4.3-1 (P-7, 8 with 18" or 20" tires, P-8 7 pass.).
Backlash—.006-.010". Screw adjustment.
Removal:—Disconnect drive shaft at rear universal, remove axle shafts (see below), remove capscrews on carrier flange, pull carrier assembly out.
Axle Shaft Removal—Remove wheel, hub and drum assembly (use screw type hub puller), block brake pedal, disconnect brake line at wheel cylinder, take off backing plate & oil seal, pull shaft & bearing.
Wheel Bearing Adjustment:—Shims between backing plate and axle housing. With wheel and hub removed check endplay with dial indicator. To adjust, remove backing plate (see above), add or remove shims equally (at both sides). **Endplay**—.003-.008".

SHOCK ABSORBERS

SHOCK ABSORBERS:—Delco. Direct acting type. Domestic—Front 1110-C. Rear 1111-T, W (20" wh.). Exp.—Front 1114-C. Rear 1115-T, W (20" wh.). Adj. Exp.—Front 1134-E. Rear 1130-W, Y (20" wh.). Adj.
See Shock Absorber Section for complete data.

FRONT SUSPENSION

Front Suspension:—Independent, linked parallelogram type with coil springs.
See Front Suspension Section for complete data.
Kingpin Inclination—5¼-6½° (4¾-6°—7 pass.).
Caster—Minus ¼° to Plus 1½° (plus ½-2½° 7 pass).
Camber—0° preferred. Limits minus ¼° to plus ½°. Minus ¼° to Plus ¾° (7 passenger).
Toe In—1/16" (0-⅛"). Set long tie rod to 31 11/16" (between ball centers). Adjust short rod only.
Steering Geometry—Outer wheel 20°. Inner 22°30'.

STEERING GEAR

Steering Gear: Chrysler (Gemmer design Model 300) Worm-and-Roller type. See Gemmer 300 article.
NOTE—RHD cars equipped with Gemmer Mod. 305.
See Steering Gear Section for complete data.

BRAKES

BRAKES:—Service. Lockheed hydraulic, double anchor type. Hand lever applies independent shaft brake.
See Brake Section for complete data.
Wheel Cylinders—Stepped or two-stage bore type.
Drum—Centrifuse. Diameter 10", 11" (7 pass.).
Lining—Moulded type. Width 2". Thickness 13/64". Length per shoe, Front 10 9/32", 11 15/32" (7 Pass.), Rear 7 11/16", 7 31/32" (7 Pass.).
Clearance—.012" toe, .006" heel, for each shoe.
Hand Brake:—On drum at rear of transmission.
Adjustment—*See Chrysler Shop Notes for data.*
Drum—Cast-iron. Diameter—6".
Lining—Width 2". Thick. 5/32". Length 17 1/16".

MISC. MECHANICAL

Power Operated Convertible Top: Vacuum Power type.
See Miscellaneous Section for complete data.

FRONT END ASSEMBLY (UNIT) REMOVAL:—Should be removed as a unit for work on front of engine. *See Chrysler Shop Notes for directions.*

MODEL IDENTIFICATION

ECONOMY MODEL NOTE:—These cars have special Carburetor and rear axle ratio. Identified by 'E' in Eng. No. as follows: P9-E-1234 or P10-E-1234.

SERIAL NUMBER:—On right front door hinge post.

	Detroit	Los Angeles	Evansville	Canada
P9	1,378,001	3,114,801	9,062,201	9,368,516
P10	10,883,001	3,242,501	20,063,001	9,607,611

ENGINE NUMBER:—P9-1001 Up (P9), P10-1001 Up (P10). Left side of block between #1 and #2 cylinders. *See Chrysler Shop Notes for Engine Number Lettering ('Special Standard' bore and bearing sizes). See Economy Model Note above.*

TUNE-UP

COMPRESSION:—Ratio and pressure as follows:

Ratio	Pressure at 1000 RPM	At 100 RPM
6.7-1 cast-iron hd.	145-155 lbs.	Approx. 115 lbs.
7.0-1 aluminum hd.	150-160 lbs.	Approx. 120 lbs.

VACUUM READING: Steady 18-21" idling (below 1000').

FIRING ORDER: 1-5-3-6-2-4. See wiring diagram.

SPARK PLUGS: Champion Type J-8 or Auto-Lite A-7B (for std. iron head), Champion Type H-10 or Auto-Lite Type AL-7A (Optl. HC aluminum hd.). 14 mm. **Gaps**—.025".
NOTE—Spark plug tightening tension 26-32 ft. lbs.

IGNITION: See Coil, Condenser, and Distributor.
Breaker Gap—.020". **Cam Angle**—38° Closed.
Automatic Advance—(U.S.) 11° max. at 1850 RPM. (Canada) 12° max. at 1750 RPM (distr. ° and RPM).
Vacuum Advance—(U.S.) 10° with 17" vacuum. (Canada) 7° with 15" vacuum (except early P9, P10 with IGS-4108A-1, 11° with 17" vacuum).

IGNITION TIMING—See Ignition Timing.
Std. Setting—TDC. Crankshaft pulley 'DC' mark aligned with pointer at front of engine.

CARBURETION: See Carburetor & Carb. Equipment.
Idle Setting—Set idle adjusting screw ½-1¼ turns open (½-1½ for B6P1 Economy carburetor). Adjust for smooth idle. Idle speed setting 6 MPH.
Float Level—5/64" from top of float (not seam) to top edge of bowl with needle valve seated.
Accelerating Pump—Center hole normal setting.
Fuel Pump Pressure: 4¼ lbs. maximum.

MANIFOLD HEAT CONTROL:—Thermostatic coil type. See that shaft and valve rotate freely. When installing coil, wind up free end ½ turn counter-clockwise and hook end over stop stud.
CAUTION—Do not wind coil up more than ½ turn.

VALVES: See Valve Timing.
Tappet Clearance:—.006" Int., .008" Exh. (hot&idling). .002" add'tl exh. clearance desirable for sustained high speeds. NOTE—Tappet screws self-locking (no locknuts). Remove right front wheel, lower housing panel and fuel pump shield for access to valves.

STARTING: See Battery, Starter Generator, Regulator.

IGNITION

Ignition Switch:—Mitchellock Model 24-R, No. 8197. **Ignition Lock**—Yale & Towne or Briggs & Stratton. B&S No. 80651. Key Series 1BP to 1000BP. Groove #24.

COIL: Auto-Lite Model No. IG-4661. Service Winding (less switch & cable) IG-3224JS. Mounted on dash. **Ignition Current**—2¼ amperes idling, 5½ stopped.

CONDENSER: Auto-Lite Part No. IG-3927A. **Capacity**—.25-.28 microfarad.

DISTRIBUTOR: Auto-Lite Models for 1940 as follows:

Car Model	Distributor
P9 & P10	IGS-4109-1
P9 Canada up to Eng. No. P9C-1375	IGS-4108A-1
P9 Canada after Eng. No. P9C-1375	IGS-4108-1
P10 Canada up to Eng. No. P10C-1942	IGS-4108A-1
P10 Canada after Eng. No. P10C-1942	IGS-4108-1

Single breaker, 6 lobe cam, full automatic advance with vacuum spark control and Manual Adjustm't.

Breaker Plate Identification—Maximum vacuum advance limited by slot and marked with number (#10—IGS-4109-1, #11—IGS-4108A-1, #7—IGS-4108-1) stamped on breaker plate.

Breaker Gap—Set at .020". Limits .018-.022".
Cam Angle or Dwell—38° closed, 22° open (distr.).
Breaker Arm Spring Tension—17-20 ounces.
Rotation—Clockwise viewed from the top.

Automatic Advance—IGS-4108-1, IGS-4801A-1

Distributor Degrees	Distributor R.P.M.	Engine Degrees	Engine R.P.M.
Start	350	0	700
3	400	6	800
6	850	12	1700
9	1300	18	2600
12	1750	24	3500

Automatic Advance—IGS-4109-1

Start	350	0	700
3	400	6	800
6	950	12	1900
9	1500	18	3000
11	1850	22	3700

Vacuum Spark Control—Integral type (on distributor, linked directly to breaker plate). Provides additional advance at speeds above idling except when engine accelerated or operated with wide open throttle (spark retarded by return spring in unit).

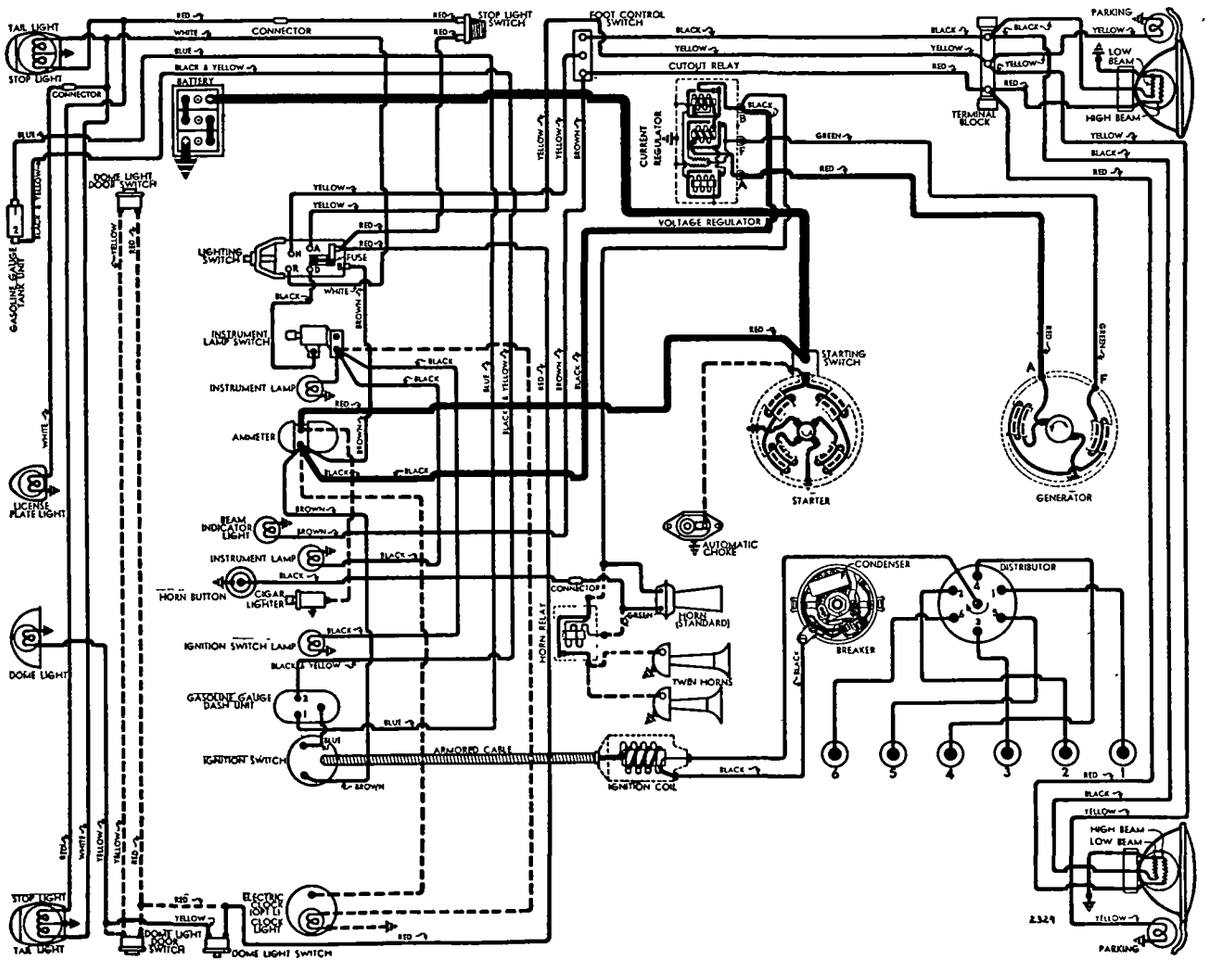

Vacuum Advance—IGS-4108-1

Distr. Degrees	Eng. Degrees	Vacuum (" of HG)
Start	0°	5"
1°	2°	6½"
3°	6°	9¼"
5°	10°	12⅛"
7°	14°	15"

Vacuum Advance—IGS-4108A-1

Start	0°	5"
2°	4°	7¼"
5°	10°	10½"
8°	16°	13¾"
11°	22°	17"

Vacuum Advance—IGS-4109-1

Start	0°	5"
2°	4°	7⅜"
5°	10°	11"
8°	16°	14⅝"
10°	20°	17"

Manual Adjustment—At distributor. Provides 10° advance or retard from center '0' position. See Ignition Timing for adjustment.

Distributor Removal:—Mounted on left side of crankcase. To remove, disconnect vacuum line, take out hold-down screw in lock plate.

IGNITION TIMING

IGNITION TIMING:—Initial setting (correct for fuel of 70 octane rating at low altitudes for both cast-iron and aluminum heads) shown below. See Manual adjustment (following) for correction (not to exceed 4° either way) dependent on fuel regularly used and operating conditions.

	Flywheel Degrees	Piston Position
6.7 & 7.0-1 heads	0° at TDC	.0000" at TDC.

NOTE—Crankshaft pulley marked 'DC' at TDC with 15 (1°) graduations on either side.

Timing (Using Timing Light)—Connect timing light between distributor and battery terminal on generator regulator. With #6 piston on compression, turn engine over until piston reaches firing position (see Initial Setting), stop when correct mark on crankshaft pulley lines up with pointer on chain case cover. Loosen advance arm hold-down screw, center pointer on scale, tighten screw. Loosen advance arm clamp bolt, rotate distributor until timing light just goes out, tighten clamp bolt. Check manual adjustment setting as directed below.

Timing (Using Synchroscope)—Tool No. C-374. Clip lead to #1 spark plug, direct light on crankshaft pulley (correct mark filled in with paint or chalk), idle engine and adjust distributor as directed above.

Manual Adjustment—Initial ignition setting should be varied not more than 4° (piston 4° or .0068" before or after top dead center) so that slight ping noticeable between 10 and 30 MPH. when accelerating with wide open throttle for best performance. To adjust, loosen hold-down screw, rotate distributor counter-clockwise to advance spark (if no ping noted), clockwise to retard spark (if ping too severe) not more than 4°. Scale graduated in engine degrees.

CARBURETOR

CARBURETION:—**Carburetor**—Carter (Ball & Ball) Model D6A2. 1½" downdraft type. NOTE—Model D6C2 used on cars with automatic choke optl.

For complete data, refer to Carburetor Index.

Economy Carburetor—Carter (Ball & Ball) Model B6P1. 1¼" single barrel, downdraft type.

For complete data, refer to Carburetor Index.

Idle Adjustment—With engine warm and running at slow idle speed (choke valve wide open, fast idle inoperative on D6A2 & D6C2), set throttle stopscrew for 6 MPH idle speed. Adjust idle adjusting screw until engine fires smoothly (½-1¼ turns open D6A2 & D6C2, ½-1½ turns open B6P1—turn screw in for leaner mixture). Readjust idle speed. NOTE—Car manufacturer recommends use of vacuum gauge. Set idle screw for highest reading on gauge.

Accelerating Pump Setting—Pump lever has three holes for pump link engagement. Set as follows: Inner Hole (min. stroke)—Extreme hot temperatures or altitudes above 3000 feet.

Center Hole (med. stroke)—Normal setting.

Outer Hole (max. stroke)—Winter temperatures.

NOTE—If lean metering jets (High Alt. calibration) used at lower altitudes for increased economy, reduced speed and power will result (not recommended by manufacturer). See Carter (B&B) Jet Table in Carburetor Section for complete jet data.

Float Level—5/64" from top of float (not soldered seam) to top edge of float bowl.

Fast Idle:—Used on D6A2, D6C2 only. Not adjustable.

Throttle Cracker:—Interconnector between starting pedal and accelerator rod which opens throttle approximately one-third when pedal depressed for starting. Adjust by loosening throttle pickup clamp bolt (above starter switch), shift clamp on rod.

Automatic Choke:—Sisson Type AC-758B. Optl.

For complete data, refer to Carburetion Equip. Index.

CARB. EQUIPMENT

Air Cleaner:—AC #1528196 oil-wetted type standard.

Fuel Pump:—AC Type AT #1523647 diaphragm type std. Type AS #1523648 comb. fuel-and-vacuum pump Optl. ***See article in Carburetion Equip. Section.***

Gasoline Gauge:—Auto-Lite Electric. No. NG-9335D (dash unit). No. NG-9329T (tank unit).

For complete data, refer to Carburetion Equip. Index.

BATTERY

Auto-Lite CT-1-13.....**P9 & P10**

6 volt 13 plate, 90 ampere hr. capacity (20 hr. rate).

Starting Capacity—114 amperes for 20 minutes.

Zero Capacity—300 amperes for 3.0 minutes. Five second voltage—4.1 volts.

Grounded Terminal—Positive (+) grounded to the transmission case.

Dimensions—Length 9 1/16". Width 7 1/16". Height 8 15/16".

Location—Left side under front seat.

STARTER

U.S.—Auto-Lite MZ-4062 or A. Arm. No. MZ-2108. Canada——Auto-Lite MAW-4016. Arm. MAW-2030.
Drive—Overrunning clutch, manual pinion shift.
Rotation—Counter-clockwise at commutator end.
Cranking Engine—150-175 amperes, 5.1 volts.
Brush Spring Tension—42-53 ozs. (new brushes).

Performance Data—MZ Starters

Torque	R.P.M.	Volts	Amperes
0 ft. lbs	4300	5.5	70
.65 " "	2500	5.5	100
2.55 " "	1325	5.0	200
4.95 " "	750	4.5	300
7.65 " "	220	4.0	400
7.8 " "	Lock	3.0	420
11.8 " "	Lock	4.0	560

Performance Data—MAW Starters

0 ft. lbs	4900	5.5	65
2.75 " "	1480	5.0	200
5.45 " "	820	4.5	300
8.50 " "	400	4.0	400
11.55 " "	110	3.5	500
11.5 " "	Lock	3.0	505
18.0 " "	Lock	4.0	670

Removal:—Flange mounted on left front face of flywheel housing, Remove cables, 2 clips on starter linkage, oil filter lines, 2 mounting bolts. Lift off.
Starting Switch: Auto-Lite SW-2813. On starter. Manually operated by starter pedal (pinion shift).
For complete data, refer to Electrical Equipment Index.

GENERATOR

Auto-Lite Model GDZ-4801-A (Std.), GDZ-4801-B or GEB-4801A (Police). Armature No. GDZ-2006F (GDZ-4801A, B), GEB-2006F (GEB-4801A). Two brush type with current voltage control. Air-cooled.
Charging Rate Adjustment—No adjustment at generator. Charging rate controlled by Voltage Regulator and maximum output by Current Regulator.
Maximum Charging Rate—35 amperes (GDZ Gen.), 32 amperes (GEB Gen.), 8.0 volts, 2200 Gen. RPM (GDZ), 1400 RPM (GEB), at approx. 24 MPH (GDZ) and above with load or discharged battery (Current Regulator setting). Actual charging rate controlled by voltage regulator and dependent on battery

Performance Data—GDZ-4801A, B

Cold			Hot		
Amperes	Volts	R.P.M.	Amperes	Volts	R.P.M.
0	6.4	925	0	6.4	1000
4	6.6	1035	4	6.6	1120
8	6.75	1140	8	6.75	1235
12	6.95	1250	12	6.95	1350
16	7.15	1370	16	7.15	1460
20	7.3	1480	20	7.3	1590
24	7.5	1590	24	7.5	1730
28	7.7	1710	28	7.7	1900
32	7.9	1820	32	7.9	2090
*35	8.0	1900	35	8.0	2250

Performance Data—GEB-4801A

0	6.4	560	0	6.4	600
4	6.6	630	4	6.6	675
8	6.8	700	8	6.8	750
12	7.0	775	12	7.0	840
16	7.2	845	16	7.2	930
20	7.4	920	20	7.4	1030
24	7.6	1000	24	7.6	1140
28	7.8	1075	28	7.8	1260
*32	8.0	1150	32	8.0	1400

*—Current regulator setting.

CONTINUED ON NEXT PAGE

C NTINUED FR M PRECEDIN PAGE

Rotation—Counter-clockwise at commutator end.

Brush Spring Tension—53 ozs. max. (GDZ Gen), 64-68 ozs. (GEB Gen.), with new brushes.

Field Current—1.60-1.78 amperes at 6.0 volts (all).

Motoring Current—4.16-4.60 amperes (GDZ Gen.), 4.0-4.5 amperes (GEB Gen.) at 6.0 volts.

Removal:—Pivot mounted at left side of engine at front. To remove, take out pivot and clamp bolts.

Belt Adjustment:—Loosen clamp and pivot bolts, swing generator out until scale (attached to field frame) reads 40-50 lbs., tighten bolts.

GENERATOR

SPECIAL EQUIPMENT

SPECIAL GENERATORS:—Other Makes—*Refer to Electrical Equipment Index for 'Special Generators' article for complete data on special Generators and Regulators which may be found on these cars.*

REGULATOR

Auto-Lite Model VRP-4001A (GDZ Gen.), VRP-4001B (GEB Gen.). Current-voltage type. In case on dash. NOTE—For Two-way Radio (Neg. Grd.), VRP-4005A (GDZ Gen.), VRP-4005B (GEB Gen.) used. *For complete data, refer to Electrical Equipment Index.*

NOTE—Regulator case cover is sealed. Serviced on exchange basis if seals not broken.

Cutout Relay

Cuts In—6.4-6.6 volts at approximately 1000 generator RPM (VRP-4001A,5A), 600 RPM (VRP-4001B,5B).

Cuts Out—4.1-4.8 volts (approx. 4-6 amps. disch.).

Contact Gap—.015" minimum.

Air Gap—.031" min., .034" max. with contacts open. Measure at hinge end of core.

Voltage Regulator

Setting—7.2-7.5 volts at 70° F.

To Check (without breaking seals)—Connect ammeter in charging line at regulator 'B' terminal, voltmeter between 'B' terminal and ground. Operate generator at speed equivalent to 30 MPH charging battery until voltage is steady. Voltage reading should be 7.2-7.5 volts at 70° F. See Electrical Equipment Section for voltages at other temperatures.

To Adjust (with cover removed)—Change regulator armature spring tension by bending lower spring hanger slightly. See Electrical Equipment Section.

Contact Gap—.012" Min. (armature against stop pin).

Air Gap—.048-.052" with contacts just opening.

Current Regulator

Setting (VRP-4001A,5A)—34-36 amperes (marked '35') **(VRP-4001B, 5B)** 31-33 amperes (marked '32').

To Check (without breaking seals)—Connect test meters as for Voltage check (above). Operate generator at speed equivalent to 30 MPH charging battery, turn on car lights and accessories so that generator charges at peak rate and Current Regulator operates. Charging current should not exceed maximum setting noted above. If more than slight excess noted, regulator is defective.

Adjustment & Contact Gap—Same as for Voltage Regulator (above).

Air Gap—.034-.038" (before No. 5U-000001), .048-.052" (after above No.) with contacts just opening.

LIGHTING

LIGHTING:—Headlamps—Corcoran-Brown 'Sealed Beam' type. *See article in Electrical Equipment Section.*

Headlamp Adjustment—Aim upper beam for each lamp straight ahead with center of hot spot 3" below lamp center height.

Beam Indicator—Red light above speedometer dial. Lighted with Country (upper) beam in use.

Switches

Lighting—Chrysler No. 854756, 854757 Optl.
Beam Selector—Chrysler No. 859974.
Instrument—Chrysler No. 853371.
Stop Light—Chrysler No. 677112.

Bulb Specifications

Position	Candlepower	Mazda No.
Headlamps		Sealed Beam
Parking, Instrument	1½	55
Beam Indicator, Ign. Sw.	1	51
Stop and Tail	21-3	1158
Rear License	3	63
Dome or Reading	15	87

MISC. ELECTRICAL

FUSES:—Lighting—30 amp. On back of light switch.

Clock—2 ampere. In connector behind clock.

Horns—No fuse used on either single or duals.

HORNS:—Single—Delco-Remy No. 1999911 standard.

Dual—Auto-Lite HO-5001 horn set. HL-4001 (low pitch), HL-4002 (high pitch) operated by horn relay.

Current Draw—Approx. 7 amps. single, 35-40 dual.

Horn Relay:—Auto-Lite Model HRC-4001 (no fuse).

Contacts Close—1.5-3.0 volts. **Open**—.5 volt.

Contact Gap—.026". **Air Gap**—.016-.020" (closed).

ENGINE

ENGINE SPECIFICATIONS:—6 cylinder, 'L' head type.
Bore—3⅛". **Stroke**—4⅜".
Displacement—201.3 cu. ins. **Rated HP**—23.44.
Developed Horsepower—84 at 3600 RPM (Std. hd.).
Compression Ratio and Pressure—As follows:

Ratio	Pressure at 1000 RPM	At 100 RPM
6.7-1 cast-iron hd.	145-155 lbs.	Approx. 115 lbs.
7.0-1 aluminum hd.	150-160 lbs.	Approx. 120 lbs.

Vacuum Reading—Steady 18-21" idling at 6 MPH. *See Chrysler Shop Notes for Engine Removal data.*

PISTONS:—Aluminum alloy, U-slot, cam ground, tin coated. **Length** 3 11/16". **Weight** 14.4 ozs. (stripped). **Removal**—Pistons and rods removed from above. **Clearance**—Top .011". Skirt .0001-.0011".

Original Bore & Piston Sizes, Replacement Pistons:—*See Chrysler Shop Notes for sizes and markings.*

Fitting New Pistons:—Use micrometers. Check piston at bottom of skirt at right angles to pin bosses. With piston and wall dry, piston should pass through bore of own weight with slight drag (pin removed) at normal room temperature (70°F).

Installing Pistons: Slot away from camshaft.

PISTON RINGS:—4 rings, all above pin—#1 Compression (upper inner edge beveled), #2 Comp. (lower outer edge stepped), #3 & 4 (slotted oil rings).

Ring	Width	End Gap	Side Clearance
Comp. (Top)	⅛"	.007-.015"	.002-.004"
Comp. (#2)	⅛"	.007-.015"	.0015-.0035"
Oil Control	5/32"	.007-.015"	.001-.0025"

Replacement Rings:—Std. & .003", .005", .010", .015", .020", .023", .025", .030", .040", .050", .060" oversize.

PISTON PIN:—**Diameter**—55/64". **Length**—2⅝". Floating type. Pin hole in rod bronze bushed.
Pin Fit in Piston—Thumb push fit. Piston 100° F.
Pin Fit in Rod Bushing—Thumb push fit at 70°F.
Replacement Pins:—Std. & .003", .005", .008" oversize.

CONNECTING ROD:—**Weight**—30.7 ozs. (with bearings and bolts). **Length**—7 15/16".
Crankpin Journal Diameter—1 15/16".
Lower Bearing—Removable, precision type, steel-backed babbitt.
Clearance—.0005-.0025". **Sideplay**—.0055-.0115".

Bearing Adjustment:—None (no shims). Install bearings with boss engaging groove in rod and cap.

Replacement Bearings: *Refer to Chrysler Shop Notes.*

Installing Rods:—Wide portion of bearing to rear (#1, 3, 5), to front (#2, 4, 6). Oil hole to camshaft.

CRANKSHAFT:—4 bearing type with 7 counterweights.
Journal Diameters—2¼" all bearings.
Bearing Type—Removable, precision type, steel-backed, babbitt-lined. **Clearance**—.001-.002".

Bearing Adjustment:—*See Chrysler Shop Notes for Bearing Removal and Adjustment, Front Main Bearing Cap Removal and Crankshaft Front & Rear Oil Seals.*

Replacement Bearings & Bearing Caps: *See Chrysler Shop Notes for complete data.*

End Thrust:—Taken by flange faces on rear (#4) main bearing. **Endplay**—.003-.007".

CAMSHAFT:—4 bearing. Non-adjustable chain drive. *See Chrysler Shop Notes for camshaft removal.*
Journal Diameters—#1, 2"; #2, 1 31/32"; #3, 1 15/16"; #4, 1¼".
Bearing Type—Removable steel-backed, babbitt-lined bushings (except #4 machined in block).
Clearance—.001-.003" (#1), .0015-.0035" (all others).

End Thrust:—Taken by thrust plate behind camshaft sprocket hub. **Endplay**—.002-.006".

Timing Chain:—Morse Type 1883-N, No. 2661. Width 1". Pitch .500" (½"). Length 24" or 48 links.

Camshaft Setting:—Sprockets marked. Mesh chain with sprockets turned so that '0' marks are adjacent and in line with a straightedge across shaft centers.

VALVES:—

	Head Diameter	Stem Diameter	Length
All valves	1 15/32"	.340-.341"	4 25/32"

	Seat Angle	Lift	Stem Clearance
Intake	45°	5/16"	.001-.003"
Exhaust	45°	5/16"	.003-.005"

See Chrysler Shop Notes for Exh. valve seat insert data.

Valve Guides:—Remove from above. Press new guides in (stepped end down) with upper end ⅞" below top of block (use Tool CM-83), then finish ream to .342-.343" Intake, .344-.345" Exhaust.

Valve Springs:—Install with closely coiled ends to top.

Free length 2 3/32".	Spring Pressure	Length
Valve Closed	34-38 lbs.	1¾"
Valve Open	77-83 lbs.	1 7/16"

Valve Lifters:—Mushroom type (remove from below). Stem diam. ⅝". Ream holes from above (pilot in valve stem guide). Oversizes .001", .008", .030", .060". **Clearance in block**—.000-.001".

VALVE TIMING

Tappet Clearance:—.006" Int., .008" Exh. (hot & idling). .002" addt'l exh. clearance desirable for sustained high speeds. NOTE—Tappet screws self-locking (no locknuts). Remove right front wheel, lower housing panel and pump shield for access.

Valve Timing:—See Camshaft Setting above.
Intake Valves—Open 6° ATDC. Close 46° ALDC.
Exhaust Valves—Open 42° BLDC. Close 8° ATDC.
Valve Timing Check—With .011" (cold) tappet clearance, #6 intake valve should open with #6 piston 6° or .0153" ATDC with 6th graduation after DC mark on crankshaft pulley aligned with pointer on chain cover. Reset tappet clearance .006" (hot).

LUBRICATION

LUBRICATION:—Pressure (pump on right of engine).
See Chrysler Shop Notes for oil pump removal.
Normal Oil Pressure:—30-45 lbs. @ 30 MPH, 15 idling.
Oil Pressure Relief Valve:—Under plug below starter. Opens at 40-45 lbs. To increase pressure use heavy (green)spring, to decrease use light (red) spring.
Crankcase Capacity:—5 quarts (refill).

COOLING

COOLING SYSTEM:—**Capacity**—14 quarts.
See Chrysler Shop Notes for radiator core removal.
Water Pump:—Packless type with belt drive.
See Water Pump Section for complete data.
Removal—Drain water. Remove fan belt. Disconnect pump inlet hose. Remove pump mounting stud nuts and lockwashers and move pump and fan assembly against radiator core. Remove 3 pump mounting studs. Lift pump and fan out.
Thermostat:—Bishop & Babcock or Fulton (Fulton only on P9). Starts to open 157-162°F. Fully open 183°.
Temperature Gauge:—Motometer (A-L) Type H-9334.
See Miscellaneous Section for complete data.

CLUTCH

CLUTCH:—**Borg & Beck Model 9A7, 11A6 (Taxi) with 'Borglite' member. #926 or #955 (9A7), #931 (11A6)** stamped on cover. Single plate dry disc type with spiral grooved facings & pressure plate oil baffle.
See Clutch Section for complete data.
Facings—Spiral wound moulded woven, 2 used. Inside Diam. 6" (9A7), 6½" (11A6). Outside Diam, 9¼" (9A7), 11" (11A6). Thickness ⅛" (all).
Adjustment:—Pedal should just clear toeboard (adjust stopscrew on lower end) and have 1" free movement (adjusting nut on link rod at clutch fork).
Removal:—Remove release fork pull-back spring. Transmission (see following) and housing underpan. Disconnect release fork from pivot and pull out as far as possible. Mark cover and flywheel, remove clutch cover screws evenly, lower assembly out.

TRANSMISSION

TRANSMISSION:—**Own Make.** All helical gear, constant-mesh, synchro-mesh (second & high), sliding gear (low & reverse) with remote shift.
See Transmission Section for complete data.
Transmission Control:—Steering column shift Std.
See Transmission Section for complete data.
Removal:—Remove propeller shaft (loosen comp. flange nut if transmission to be disassembled—See Chrysler Shop Notes for Propeller Shaft Center Bearing Removal on 7 pass.). Disconnect speedometer cable, battery ground cable, hand brake cable, and gear shift rod and cable at transmission. Remove mounting stud nuts and lockwashers. Pull unit back, lower and remove from under car.

UNIVERSALS

UNIVERSAL JOINTS:—**Detroit-Universal Series 4200 (3 & 5 pass.), Series 7200 (7 pass.).** Roller bearings with ball & trunnion (4200), cross type (7200).
See Universals Section for complete data.
Propeller Shaft Center Bearing:—Used on 7 passenger sedans. *See Chrysler Shop Notes for servicing.*

REAR AXLE

REAR AXLE:—**Own Make.** Semi-floating, hypoid gear
See Rear Axle Section for complete data.
Ratio—3.54-1 (P9 Econ.). 3.73-1 (P9 Spec., P10 Econ.). 3.9-1 (P9 Std., P10 Coupe). 4.1-1 (P10 Sedan). 4.3-1 (P9, 10—18 or 20" whls.; P10 7 Pass.).
Backlash—.006-.010". Screw adjustment.
Removal:—Disconnect drive shaft at rear universal. Remove axle shafts (see below) and capscrews on carrier flange. Pull carrier assembly out.
Axle Shaft Removal—Remove wheel, hub, and drum assembly (use screw type hub puller—Tool C-319), block brake pedal, disconnect brake line at wheel cylinder, take off backing plate with oil seal, pull shaft and bearing (Tool C-158). NOTE—Use Tool C-358 to pull oil washer, C-201, 2 to install.
Wheel Bearing Adjustment:—Shims between backing plate and axle housing. With wheel and hub removed, check endplay with dial indicator. To adjust, remove backing plate, add or remove shims at both wheels equally. **Endplay**—.003-.008".

SHOCK ABSORBERS

SHOCK ABSORBERS:—**Domestic**—Delco Direct Acting. **Export**—Delco Direct Acting or Delco Adjustable Direct Acting (Special Equip. Dom. also).
See Shock Absorber Section for complete data.

FRONT SUSPENSION

Front Suspension:—Independent, linked parallelogram type with coil springs.
See Front Suspension Section for complete data.
Kingpin Inclination—4¾° to 6°.
Camber—Pos. ¼°. Limits 0° to Pos. ¾°.
Caster—Neg. 1° to Pos. 1°. Not adjustable.
Toe In—1/16" (0-⅛"). Turn both rods equally.
Steering Geometry—Outer wheel 20°, Inner 22°.

STEERING GEAR

Steering Gear: Chrysler (Gemmer design Model 300) Worm-and-Roller type. See Gemmer 300 article.
NOTE—7 Pass. equipped with Gemmer Model 305.
See Steering Gear Section for complete data.

BRAKES

BRAKES:—**Service.** Lockheed hydraulic, double anchor type. Hand brake applies independent shaft brake.
See Brake Section for complete data.
Wheel Cylinders—Stepped or two-stage bore type.
Drums—Centrifuse. Diameter—10", 11" (7 pass.).
Lining—Molded. Width 2". Thickness 13/64".
Length per shoe: Front—10 5/16", 11 15/32" (7 pass.), Rear—7 11/16", 7 31/32" (7 passenger).
Clearance—.012" toe, .006" heel, for each shoe.
Hand Brake:—On drum at rear of transmission.
Adjustment—*See Chrysler Shop Notes for data.*
Drum—Cast-iron. Diameter—6".
Lining—Width 2". Thick. 5/32". Length 17 1/16".

MISC. MECHANICAL

Power Operated Convertible Top: Vacuum Power type.
See Miscellaneous Section for complete data.

HOOD LOCK, FRONT END ASSEMBLY & OIL PAN REMOVAL:—*See Chrysler Shop Notes.*

MODEL IDENTIFICATION

SERIAL NUMBER:—On right front door hinge post.

	Detroit	Los Angeles	Evansville	Canada
P11	15,000,101	3,121,501	22,001,001	9,821,241
P12	11,123,001	3,269,301	20,105,001	9,616,761

ENGINE NUMBER:—P11-1001 & up (P11), P12-1001 & up (P12). On left side of block between #1 & #2 cyls. *See Chrysler Shop Notes for Engine Number Lettering data ('Special Standard' bore and bearing sizes).*

ECONOMY MODEL NOTE:—These cars have special Carburetor and Rear Axle ratio. Identified by 'E' in Eng. No. as follows: P11-E-1001 or P12-E-1001.

TUNE-UP

COMPRESSION:—Ratio—6.7-1 cast-iron head std. **Pressure**—145-155 lbs. at 1000 RPM or approx. 115 lbs. at cranking speed (std. head). 10 lbs. maximum variation between cylinders.

VACUUM READING:—Steady 18-20" idling (below 1000').

FIRING ORDER:—1-5-3-6-2-4. See diagram.

SPARK PLUGS:—Auto-Lite A-7B. 14 MM. metric. **Gaps**—.025". NOTE—Spark plug tightening tension 26-32 ft. lbs.

IGNITION: See Coil, Condenser, and Distributor. **Breaker Gap**—.020". **Cam Angle**—38° Closed. **Automatic Advance**—(U. S.) 11° max. at 1850 RPM. (Canada) 12° max. at 1750 RPM (distr. ° and RPM). **Vacuum Advance**—(U.S.) 10° max. with 17" vacuum. (Canada) 7° max. with 15" vacuum. Distr. degrees.

IGNITION TIMING: See Ignition Timing. **Std. Setting**—TDC. Crankshaft pulley 'DC' mark aligned with pointer at front of engine.

CARBURETION: See Carburetor & Carb. Equipment. **Idle Setting**—Set idle adjusting screw ½-1¼ turns open (½-1½ for B6P1 Economy carburetor). Adjust for smooth idle. Idle speed setting 6 MPH. **Float Level**—5/64" from top of float (not seam) to top edge of bowl with needle valve seated. **Accelerating Pump**—Center hole normal setting.

Fuel Pump Pressure: 4¼ lbs. maximum.

MANIFOLD HEAT CONTROL:—Thermostatic coil type. See that valve and shaft rotate freely. When installing coil, place inner end in slot in valve shaft, wind free end up one turn only counter-clockwise

VALVES: See Valve Timing. **Tappet Clearance:**—.008" Intake, .010" Exh. (hot & idling). .002" add'l. exh. clearance desirable for sustained high speeds. NOTE—Self-locking tappet screws used. Remove right front wheel and lower wheel housing panel for access to valves.

STARTING: See Battery, Starter, Generator, Regulator.

IGNITION

Ignition Switch:—Mitchellock Model 24-R, No. 8197. **Ignition Lock**—Yale & Towne or Briggs & Stratton. B&S No. 80592. Key Series 1BP to 1000BP. Groove #24.

COIL: Auto-Lite IG-4661 (Dom.), IG-4668 (Canada). Service Coil (less switch & cable) IG-3224 JS. **Ignition Current**—2.25 amperes idling, 5 stopped.

CONDENSER: Auto-Lite Part No. IG-3927A. **Capacity**—.25-.28 microfarad.

DISTRIBUTOR: Auto-Lite IGS-4111-1 or IGS-4204-1 (U.S.), IGS-4113-1 or IGS-4202-1 (Canada). Single breaker, 6 lobe cam, full automatic advance type with auxiliary vacuum spark control and Manual Adjustment at distributor.
Breaker Plate Identification—Maximum vacuum advance limited by slot and plate marked #10 (IGS-4111-1, IGS-4204-1), #7 (IGS-4113-1, IGS-4202-1).
Breaker Gap—Set at .020".
Cam Angle or Dwell—38° closed, 22° open (distr. °).
Breaker Arm Spring Tension—17-20 ounces.
Rotation—Clockwise viewed from above.

Automatic Advance—IGS-4111-1, 4204-1

Distributor Degrees	R.P.M.	Engine Degrees	R.P.M.
Start	350	0	700
3	400	6	800
6	950	12	1900
9	1500	18	3000
11	1850	22	3700

Automatic Advance—IGS-4113-1, 4202-1

Distributor Degrees	R.P.M.	Engine Degrees	R.P.M.
Start	350	0	700
3	400	6	800
6	850	12	1700
9	1300	18	2600
12	1750	24	3500

Vacuum Spark Control—Integral type (on distributor, linked directly to breaker plate). Provides additional advance at speeds above idling except when engine accelerated or operated with wide open throttle (spark retarded by return spring in unit).

Vacuum Advance—IGS-4111-1, 4204-1

Distr. Degrees	Eng. Degrees	Vacuum (" of HG)
Start	0°	5"
2°	4°	7⅜"
5°	10°	11"
8°	16°	14⅝"
10°	20°	17"

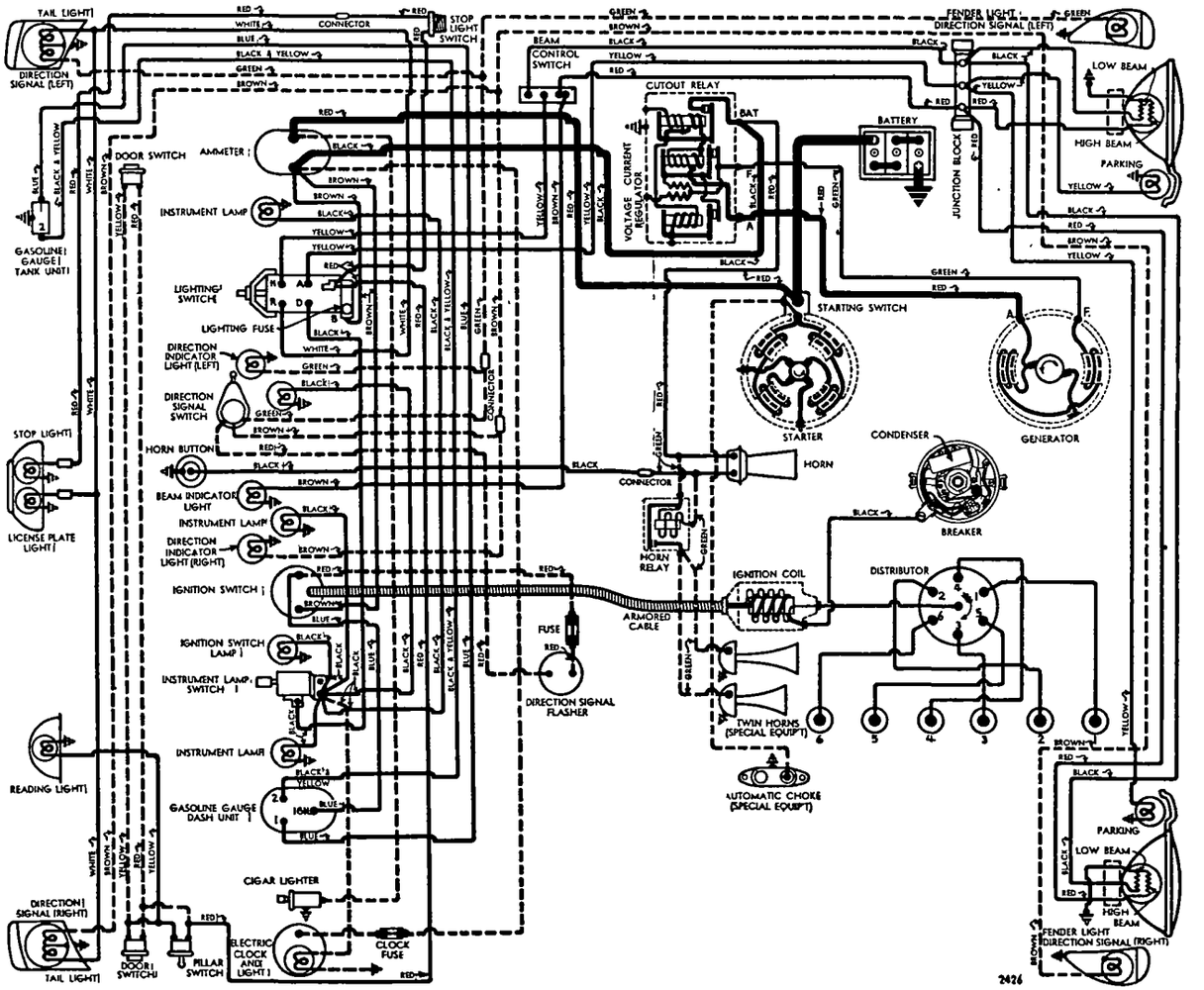

Vacuum Advance—IGS-4113-1, 4202-1

Distr. Degrees	Eng. Degrees	Vacuum ("of HG)
Start	0°	5"
1°	2°	6½"
3°	6°	9¼"
5°	10°	12⅛"
7°	14°	15"

Manual Adjustment—Provides for minor changes in ignition timing at distributor. See Ignition Timing

Distributor Removal:—Mounted on left side of crankcase. To remove, disconnect vacuum line, take out hold-down screw in lock plate. **Installation Note**—Install distributor with #1 piston in firing position (at TDC) and rotor opposite #1 segment in cap.

IGNITION TIMING

IGNITION TIMING:—Initial setting (correct for fuel of approx. 70 octane rating at low altitudes for all heads shown below. See Manual Adjustment also.

	Flywheel Degrees	Piston Position
All cyl. heads	0° at TDC	0000" at TDC

NOTE—Crankshaft pulley marked 'DC' at TDC point with 15 (1°) graduations on either side.

Timing (Using Timing Light)—Connect timing light between distributor primary terminal and battery terminal on generator regulator. Set #1 or #6 piston in firing position (see setting above) with correct mark on crankshaft pulley aligned with pointer on chain case cover. Loosen lock-plate hold-down screw, center pointer on scale, tighten screw. Loosen lock-plate clamp bolt, rotate distributor until timing light just goes out, tighten clamp bolt. Check Manual Adjustment (following).

Timing (Using Synchroscope)—Tool C-374. Clip lead to #1 spark plug, direct light on crankshaft pulley (mark correct graduation with paint), idle engine and adjust distributor (as above) until mark appears in line with pointer.

Manual Adjustment—Set to give slight ping from 10-30 MPH accelerating with wide open throttle from 10 MPH. To adjust, loosen lock-plate hold-down screw, move plate (not more than 4° or .007" before or after initial setting) counter-clockwise (if no ping noted), clockwise to retard spark (if ping too severe), tighten screw.

CARBURETOR

CARBURETION:—**Carburetor**—Carter (Ball & Ball) Models D6A2 (Std.), D6C2 (with Automatic Choke). 1½" single barrel, downdraft types.
For complete data, refer to Carburetor Index.

Economy Carburetor—Carter (Ball & Ball) Model B6P1. 1¼" single barrel, downdraft type.
For complete data, refer to Carburetor Index.

Idle Adjustment—With engine warm and running at slow idle speed (choke valve wide open, fast idle inoperative on D6A2 & D6C2), set throttle stopscrew for 6 MPH min. idle speed. Adjust idle adjusting screw until engine fires smoothly (½-1¼ turns open D6A2 & D6C2, ½-1½ turns open B6P1—turn screw in for leaner mixture). Recheck idle speed.

Accelerating Pump Setting—Pump lever has three holes for pump link engagement. Set as follows:
Inner Hole (minimum stroke)—Extreme hot temperatures or altitudes above 3000 feet.
Center Hole (med. stroke)—Normal summer setting.
Outer Hole (max. stroke)—Winter setting.

Float Level—5/64" from top of float (not seam) to top edg f bowl with valve seated. Use Tool C-449.

Metering Jet—***See Carter (B&B) Jet Tables in Carburetor Section for complete data.***

NOTE—If lean metering jet (High Altitude calibration) used at lower altitudes for increased economy, speed and power are reduced (not recommended).

Fast Idle:—D6A2 & D6C2 only. Not adjustable.

Throttle Cracker:—Not adjustable.

Automatic Choke:—Sisson AC-758B (on optl. D6C2).
For complete data, refer to Carburetion Equip. Index.

CARB. EQUIPMENT

Air Cleaner:—AC #1529937 heavy duty oil-bath type.

Fuel Pump:—AC diaphragm type pump. Replacement Exchange Pump No. 505.
For complete data, refer to Carburetion Equip. Index.

Gasoline Gauge:—Auto-Lite electric. No. NG-9651D (dash unit), No. 9329T (tank unit).
For complete data, refer to Carburetion Equip. Index.

BATTERY

BATTERY:—**Auto-Lite CF-1-13 (P11), CF-1-13R (P12).** 6 volt, 13 plate, 90 ampere hour (20 hour rate).

Starting Capacity—114 amperes for 20 minutes.

Zero Capacity—300 amperes for 3.0 minutes. Five second voltage—4.1 volts.

Grounded Terminal—Positive (+) to engine.

Dimensions—Lgth. 9". Width 7 1/16". Hght. 9 5/16".

Location—Under hood in left fender shield.

STARTER

Car Model	Auto-Lite Model	Armature Number
P11, P12	MZ-4089 or MZ-4089A	MZ-2108
P11, P12 Can.	MAW-4019 or MAW-4019A	MAW-2030

Drive—Overrunning clutch (manual pinion shift).

Rotation—Counter-clockwise at commutator end.

Brush Spring Tension—42-53 ozs. (new brushes).

Cranking Engine—150-175 amperes, 5.1 volts.

Performance Data—MZ Starters

Torque	R.P.M.	Volts	Amperes
0 ft. lbs.	4300	5.5	70
2.55 "	1325	5.0	200
4.95 "	750	4.5	300
7.65 "	220	4.0	400
7.8 "	Lock	3.0	420
11.8 "	Lock	4.0	560

Performance Data—MAW Starters

Torque	R.P.M.	Volts	Amperes
0 ft. lbs.	4900	5.5	65
0.60 "	3300	5.5	100
2.75 "	1480	5.0	200
5.45 "	820	4.5	300
8.50 "	400	4.0	400
11.55 "	110	3.5	500
11.5 "	Lock	3.0	505
18.0 "	Lock	4.0	670

Removal:—Flange mounted on left front face of flywheel housing. Disconnect wires (tape battery lead). Remove oil filter tubes, filter and 2 starter bolts.

Starting Switch:—A-L SW-2813. On starter. Manually operated by starter (pinion shift) pedal.
For complete data, refer to Electrical Equipment Index.

GENERATOR

Auto-Lite Model GDZ-4801B (Std.), Models GEB-4801A, GEG-4818A (City Police & Taxicab), GEG-4818B (State Police). Two brush. With current and voltage regulation. Ventilated.

Armature Nos.—No. GDZ-2006F (GDZ-4801B), GEB-2006F (GEB-4801A), GEG-2006F (GEG-4818B).

Charging Rate Adjustment—No adjustment at generator. Charging rate controlled by Voltage Regulator and maximum output by Current Regulator.

Maximum Charging Rate—35 amperes (GDZ Gen.), 40 amperes (GEG Gen.), 8.0 volts, 2200 Gen. RPM (GDZ), 1680 RPM (GEG), at approx. 24 MPH (GDZ) and above with load or discharged battery (Current Regulator setting). Actual charging rate controlled by voltage regulator, dependent on battery condition.

Cold Performance Data—GDZ-4801B Hot

Cold Amperes	Cold Volts	Cold R.P.M.	Hot Amperes	Hot Volts	Hot R.P.M.
0	6.4	925	0	6.4	1000
5	6.65	1060	5	6.65	1150
10	6.85	1200	10	6.85	1290
15	7.05	1340	15	7.05	1430
20	7.3	1480	20	7.3	1590
25	7.55	1620	25	7.55	1750
30	7.8	1760	30	7.8	1980
35①	8.0	1900	35	8.0	2250

Performance Data—GEB-4801A

0	6.4	560	0	6.4	600
4	6.6	630	4	6.6	675
8	6.8	700	8	6.8	750
12	7.0	775	12	7.0	840
16	7.2	845	16	7.2	930
20	7.4	920	20	7.4	1030
24	7.6	1000	24	7.6	1140
28	7.8	1075	28	7.8	1260
32①	8.0	1150	32	8.0	1400

Performance Data—GEG-4818A, B

0	6.4	780	0	6.4	820
5	6.6	870	5	6.6	900
10	6.8	960	10	6.8	990
15	7.0	1040	15	7.0	1080
20	7.2	1130	20	7.2	1170
25	7.4	1220	25	7.4	1270
30	7.6	1310	30	7.6	1380
35	7.8	1410	35	7.8	1510
40①	8.0	1520	40	8.0	1680

①—Current regulator setting. See Regulator data.

Rotation—Counter-clockwise at commutator end.

Brush Spring Tension—53 ozs. max. (GDZ Gen.), 64-68 ozs. (GEB & GEG Gen.) with new brushes.

Field Current—1.60-1.78 amperes at 6.0 volts (all).

Motoring Current—4.16-4.60 amperes (GDZ Gen.), 4.5 amps. (GEB), 4.7-5.2 amps. (GEG) at 6.0 volts.

Removal:—Pivot mounted at left side of engine at front. To remove, take out pivot and clamp bolts.

Belt Adjustment:—Loosen pivot and clamp bolts, pull out on generator until belt is snug or 40-50 lbs. tension secured on scale attached to field frame.

GENERATOR

SPECIAL EQUIPMENT

SPECIAL GENERATORS:—**Other Makes**—***Refer to Electrical Equipment Index for 'Special Generators' article for complete data on special Generators and Regulators which may be found on these cars.***

C NTINUED ON NEXT PAGE

C NTINUED FROM PRECEDING PA E

REGULATOR

Auto-Lite Regulator Positive Grd.	Neg. Ground	Generator Model
VRP-4001A	VRP-4005A	GDZ-4801-A, B
VRP-4001B	VRP-4005B	GEB-4801-A
VRP-4001F	VRP-4005E	GEG-4818-A, B

Current-Voltage types in single case on dash.
For complete data, refer to Electrical Equipment Index.
NOTE—Regulator case cover sealed. Serviced on exchange basis if seals not broken (to remove cover).

Cutout Relay

Cuts In—6.4-6.6 volts at approx. 1000 gen. RPM (VRP-4001A,5A), 600 RPM (1B,5B), 820 RPM (1F,5E).
Cuts Out—4.1-4.8 volts (approx. 4-6 amps. disch.).
Contact Gap—.015" Min. **Air Gap**—.031-.034" with contacts open (measure at hinge end of core).

Voltage Regulator

Setting—7.2-7.5 volts at 70° F. See Electrical Equipment Section for settings at other temperatures.
To Check (without breaking seals)—Connect ammeter in charging line at regulator 'B' terminal (use short heavy leads), voltmeter between 'B' terminal and ground. Operate generator at speed equivalent to 30 MPH., charging fully charged battery, until voltage steady. Voltage should agree with setting.
To Adjust (with cover removed)—Change regulator armature spring tension by bending lower spring hanger slightly. See Electrical Equipment Section.
Contact Gap—.012" min. (armature against stop pin).
Air Gap—.048-.052" with contacts just opening.

Current Regulator

Regulator	Setting	Cover Mark
VRP-4001A & 5A	34-36 amperes	'35'
VRP-4001B & 5B	31-33 amperes	'32'
VRP-4001F & 5E	39-41 amperes	'40'

To Check (without breaking seals)—Connect test meters as for voltage check (above). Operate generator at speed equivalent to 30 MPH. charging battery, turn on car lights and accessories or connect load (bank of headlamp bulbs etc.) between ammeter and battery so that generator charges at max. rate with regulator operating. Current reading should agree with setting above.
Adjustment, Contact Gap, Air Gap—Same as for for Voltage Regulator (above).

LIGHTING

LIGHTING:—**Headlamps**—Corcoran-Brown 'Sealed Beam' type. *For data refer to Elec. Equip. Index.*
Headlamp Adjustment—Aim upper beam straight ahead (hot spot center 3" below lamp center height).
Beam Indicator—Red light on upper edge of panel above speedometer. Lighted with upper beams on.
Direction Signal—*Refer to Electrical Equip. Index.*

Switches

Lighting—Plymouth No. 863823.
Beam Selector—Plymouth No. 859974.
Instrument—Plymouth No. 853371.
Direction Signal—Plymouth No. 865763.

Bulb Specifications

Position	Candlepower	Mazda No.
Headlamps		Sealed Beam
Park., Instr., Dir. Ind.	1½	55
Front Direction Signal	21	1129
Beam Ind., Ign. Switch	1	51
Rear Dir. Sig. & Tail	21-3	1158
Stop	21	1129
Rear License, Tail (No Sig.)	3	63
Reading or Dome	15	87

MISC. ELECTRICAL

FUSES:—**Lighting**—30 amp. On back of light switch.
Direction Signal (late cars)—30 amp. Behind instr. panel in wire from ign. switch to flasher.

HORNS: Auto-Lite or Delco-Remy types as follows:
Single Delco-Remy 1999911, 18, 21, or 24 (6 volt), D-R 1999912 (12 volt), or Auto-Lite HA-4001 (6 volt).
Dual—Auto-Lite Horn Set HO-5005, HO-5007, or HT-5005. HO-5003 (Canada). Low Note Auto-Lite HA-4028 or HA-4030, High Note HA-4029 or HA-4031.
Current Draw—Approx. 7 amps. single, 35-40 dual.
Horn Relay:—Auto-Lite Model HRC-4001 (no fuse).
Contacts Close—1.5-3.0 volts. **Open**—.5 volt.
Contact Gap—.026". **Air Gap**—.016-.020" (closed)

ENGINE

ENGINE SPECIFICATIONS:—6 cylinder, 'L' head type.
Bore—3⅛". **Stroke**—4⅜".
Displacement—201.3 cu. ins. **Rated HP**—23.44.
Developed Horsepower—87 HP at 3800 RPM.
Compression Ratio—6.7-1 cast-iron head std.
Compression Pressure—145-155 lbs. at 1000 RPM or 110-120 lbs. at cranking speed (125 RPM).
Vacuum Reading—Steady 18-20" idling (below 1000').
See Chrysler Shop Notes for Engine Removal directions.

PISTONS:—**Two types used optionally: (1)**—Aluminum alloy, U-slot type, or (2)—Steel-banded, aluminum alloy and steel. Both types cam ground & tin coated.
Length—3 11/16" (Al.), 3 5/16" (steel-banded).
Weight—14.4 ozs. (Al.), 14.5 ozs. (steel-banded).
Removal—Pistons and rods removed from above.
Clearance—Top land .028" (U-slot), .031" (steel banded). Skirt .0001-.0011" (U-slot), .001-.002" (steel).
Original Bore & Piston Sizes, Replacement Pistons:—*See Chrysler Shop Notes for sizes and markings.*
Fitting New Pistons:—Check piston size with micrometer at bottom of skirt at right angles to pin bosses. With piston and wall dry, piston should pass through bore of own weight (pin removed) with slight drag at normal room temperature (70° F.).
Installing Pistons:—Slot away from valves (U-slot). Strut toward front of engine (steel-banded type).

PISTON RINGS:—4 rings, all above pin—#1 Compression (upper inner edge stepped), #2 Comp. (lower outer edge stepped), #3 and #4 (slotted oil rings).

Ring	Width	End Gap	Side Clearance
Compr. (Top)	3/32"	.007-.015"	.0025-.004"
Compr. (#2)	⅛"	.007-.015"	.0015-.0035"
Oil Control	5/32"	.007-.015"	.001-.0025"

Replacement Rings:—Std. & .003", .005", .010", .015", .020", .023", .025", .030", .040", .050", .060" oversize.

PISTON PIN:—**Diameter**—55/64". **Length**—2⅝". Floating type. Pin hole in rod bronze bushed.
Pin Fit in Piston—Thumb push fit (piston at 100°).
Pin Fit in Rod Bushing—Thumb push fit at 70° F.
Replacement Pins:—Std. & .003", .005", .008" oversize.

CONNECTING ROD:—**Weight** 31.52 ozs. (with bearings and bolts). **Length**—7 15/16".
Lower Bearing Diameter—1 15/16". *See Engine Lettering Note in Chrysler Shop Notes for 'Special Std.' size.*
Lower Bearing—Removable, precision type, thin babbitt. **Clearance** .0005-.0015". **Sideplay** .0055-.0115".
Bearing Adjustment:—None (no shims). Replace bearings. *See Chrysler Shop Notes for instructions.*
Replacement Bearings:—*See Chrysler Shop Notes.*
Installing Rods:—Wide portion of bearing to rear (#1, 3, 5) to front (#2, 4, 6). Oil hole to camshaft.

CRANKSHAFT:—4 bearings, 7 integral counterweights.
Bearing Diameters—2¼". *See Engine Lettering Note in Chrysler Shop Notes for 'Special Standard' size.*
Bearing Type—Removable, precision type, thin babbitt on steel. **Clearance**—.001-.002".
Bearing Adjustment:—*See Chrysler Shop Notes for Front Main Bearing Cap Removal and Adjustment data.*
Replacement Bearings & Bearing Caps: *See Chrysler Shop Notes for complete data.*
End Thrust:—Taken by flange faces on rear (#4) main bearing. **Endplay**—.003-.007".

CAMSHAFT:—4 bearing. Non-adjustable chain drive.
NOTE—2 types used (see Valve Timing).
See Chrysler Shop Notes for Camshaft Removal.
Bearing Diameters—#1, 2"; #2, 1 31/32"; #3, 1 15/16"; #4, 1¼".
Bearing Type—Removable steel-backed, babbitt-lined bushings (except #4 machined in block).
Clearance—.0015-.0035".
End Thrust:—Taken by thrust plate behind camshaft sprocket hub. **Endplay**—.002-.006".
Timing Chain:—Morse Type 1883N, No. 2661. Width 1". Pitch .500" (½"). Length 24" or 48 links.
Camshaft Setting:—Sprockets marked. Mesh chain with sprockets turned so that '0' marks are adjacent and in line with a straightedge across shaft centers.

VALVES:—

	Head Diameter	Stem Diameter	Length
All Valves	1 15/32"	.340-.341"	4 25/32"

	Seat Angle	Lift	Stem Clearance
Intake	45°	⅜"	.001-.003"
Exhaust	45°	⅜"	.003-.005"

See Chrysler Shop Notes for Exhaust Valve Seat Inserts.
Valve Guides:—Remove from above. Press new guides in (stepped end down) with upper end ⅞" below top of block, ream to .342-.343" Int., .344-.345" Exh.
Valve Springs:—Install with closely coiled end to top.

Free length 2".	Spring Pressure	Length
Valve Closed	40- 45 lbs.	1¾"
Valve Open	107-115 lbs.	1⅜"

Valve Lifters:—Mushroom type (remove from below). Stem diam. ⅝". Ream holes from above (pilot in valve guide). Oversizes .001", .008", .030" & .060".
Lifter Clearance in Block—.000-.001".

VALVE TIMING

Tappet Clearance:—.008" Intake, .010" Exh. (hot and idling), .002" additional exh. clearance desirable for sustained high speeds. NOTE—Tappet screws self-locking (no locknuts). Remove right front wheel and lower wheel housing panel for access to valves.
Valve Timing:—See Camshaft Setting above.

Engine Numbers 1001 to 150391

Intake Valves—Open 12° BTDC. Close 44° ALDC.
Exhaust Valves—Open 50° BLDC. Close 6° ATDC.

Engine Number 150392 and Up

Intake Valves—Open 9° BTDC. Close 47° ALDC.
Exhaust Valves—Open 47° BLDC. Close 9° ATDC.
Valve Timing Check—With .014" (cold) tappet clearance #6 intake valve should open with #6 piston 12° or .060" (up to Engine No. 150391), 9° or .0343" BTDC (Engine No 150392 and Up) with 12th graduation (first cars), 9th graduation (later cars) before DC mark on crankshaft pulley aligned with pointer on cover. Reset tappet clear .008" hot.

LUBRICATION

LUBRICATION:—Pressur (pump n right of engine).
See Chrysler Shop Notes for Oil Pump Removal.
Normal Oil Pressure:—30-45 lbs. at 30 MPH and above.
Oil Pressure Relief Valve:—Under plug below starter.

Opens at 40-45 lbs. Spring painted red, green or unmarked. If spring replaced, use same color spring.
Crankcase Capacity:—5 quarts (refill).

COOLING

COOLING SYSTEM:—**Capacity** 14 qts. *See Chrysler Shop Notes Radiator Core Removal & Water Distrib. Tube data.*
Water Pump:—Packless type with grease fitting.
See Water Pump Section for complete data.
Thermostat:—Bishop & Babcock or Fulton (Fulton only on P11). Starts to open 157-162° F. Fully open 183°.
Temperature Gauge—Auto-Lite (Motometer) Vapor tension type. A-L Part No. H-9650.
See Miscellaneous Section for complete data.

CLUTCH

CLUTCH:—**Borg & Beck Model 9A7, 11A6 (Taxi) with 'Borglite' driven member.** #955 (9A7), #931 (11A6) stamped on cover. Single plate, dry disc types.
See Clutch Section for complete data.
Facings—Molded-Woven, 2 used. I.D. 6" (9A7), 6½" (11A6). O.D. 9¼" (9A7), 11" (11A6). Thickness ⅛".
Adjustment:—Pedal should just clear toeboard (adjust stopscrew an lower end of pedal & have 1" free travel (adjusting nut on connector link at fork).
Removal:—Remove release fork pull-back spring, transmission (see Transmission) and housing underpan. Disconnect release fork from pivot, pull out release bearing and sleeve. Mark cover and flywheel. Take out cover screws evenly, remove assembly.

TRANSMISSION

TRANSMISSION:—**Own Make.** All helical gear, constant-mesh, synchro-mesh (second and high), sliding gear (low and reverse) with remote shift.
See Transmission Section for complete data.
Transmission Control:—Steering column shift. Manual type Std. Power Shift (vacuum type) Optl.
See Transmission Section for complete data.
Removal:—Jack up front end of car, disconnect front universal (loosen companion flange nut if disassembling transmission—see Chrysler Shop Notes for Propeller Shaft Center Bearing Removal on 7 pass.). Disconnect speedometer cable, hand brake cable, gear-shift rods, vacuum and air hose (if Power Shift used). Remove trans.-to clutch housing capscrews and nuts. Pull unit to rear, down and out of car.

UNIVERSALS

UNIVERSAL JOINTS:—**Detroit-Universal Series 4200** (3 & 5 pass.), **Series 7200** (7 pass.). Roller bearings, ball and trunnion type (4200), cross type (7200).
See Universals Section for complete data.
Propeller Shaft Center Bearing:—Used on 7 passenger sedans. *See Chrysler Shop Notes for servicing.*

REAR AXLE

REAR AXLE:—**Own Make.** Semi-floating, Hypoid gears with Hotchkiss drive.
See Rear Axle Section for complete data.
Ratio—3.73-1 (P11, 12 Econ.), **3.9-1** (P11 Coupe), **4.1-1** (P11 Sedan, P12 Coupe exc. Conv.), **4.3-1** (P12 5 & 7 pass. Sedans, Conv. Coupe), **4.56-1** (P11, 12 6.00x18" tires). **Backlash** .006-.010". Screw adjustmet.
Removal:—Disconnect rear universal, remove axle shafts (see below) and carrier assembly cap screws.
Axle Shaft Removal—Remove wheel, hub, and drum assembly (use screw type hub puller—Tool C-319), block brake pedal, disconnect brake line at wheel cylinder, take off backing plate with oil seal, pull shaft and bearing (using Tool C-158).
Wheel Bearing Adjustment:—Shims between backing plate and axle housing. With wheel and hub removed, check endplay with dial indicator. To adjust, remove backing plate (see above), add or remove shims (furnished .010", .0125", .015", .030" thick) equally at both wheels. **Endplay**—.003-.008"

SHOCK ABSORBERS

SHOCK ABSORBERS:—**Delco**—Direct Acting (Dom. & Exp.), Adjustable Direct Acting (Dom. 20" wheels, and Export Models).
See Shock Absorber Section for complete data.

FRONT SUSPENSION

Front Suspension:—Independent, linked parallelogram type with coil springs.
See Front Suspension Section for complete data.
Kingpin Inclination—4¾° to 6°.
Camber—Positive ¼°. Limits 0° to Pos. ¾°.
Caster—Negative 1° to Positive 1°. Not adjustable.
Toe In—1/16" (0-⅛"). Turn both rods equally.
Steering Geometry—Inner wheel 22°0'. Outer 20°.

STEERING GEAR

Steering Gear: Chrysler (Gemmer design Model 305, 335 on 7 passenger) Worm-and-Roller with 'push-pull' adjustments. See Gemmer Model 305, 335 article.
See Steering Gear Section for complete data.

BRAKES

BRAKES:—**Service.** Lockheed hydraulic, double anchor type. Hand lever applies independent shaft brake.
See Brake Section for complete data.
Drums—10" centrifuse, 11" (7 passenger).
Lining—Molded asbestos. 2" wide, 13/64" thick. Length per shoe: Front—10 5/16", 11 15/32" (Seven passenger); Rear—7 11/16", 7 31/32" (7 passenger).
Clearance—.012" Toe (top), .006" Heel, for each shoe.
Hand Brake:—On drum at rear of transmission.
Adjustment—*See Chrysler Shop Notes for instructions.*
Drum—Cast-iron. Diameter 6".
Lining—Width 2". Thick. 5/32". Length 17 1/16".

MISC. MECHANICAL

Power Operated Convertible Top: Vacuum Power type.
See Miscellaneous Section for complete data.

HOOD LOCK, FRONT END ASSEMBLY & OIL PAN REMOVAL:—*Refer to Chrysler Shop Notes for data.*

MODEL IDENTIFICATION

SERIAL NUMBER:—On right front door hinge post.

	Detroit	Evansville	Los Angeles
P14S Deluxe	15,135,501	22,037,001	3,134,501
P14C Spec. Del.	11,399,501	20,148,001	3,297,001

ENGINE NUMBER:—First number P14-1001. On pad on left side of block between #1 and #2 cylinders. *Refer to Chrysler Shop Notes for Engine Number Lettering data (Special Standard' bore and bearing sizes).*

Economy Engine Note—Economy models (with special carburetor) marked by letter 'E' inserted in Engine Number as follows: P14-E-1001.

TUNE-UP

COMPRESSION:—Ratio—6.80-1. Cast-iron head. Pressure—160-170 lbs. at 1000 RPM. or 125-135 lbs. at cranking speed of 125 RPM.

VACUUM READING:—18-21" steady, idling at 6 MPH.

FIRING ORDER:—1-5-3-6-2-4.

SPARK PLUGS:—Auto-Lite A7. 14 MM. Metric. Gaps—.025".
NOTE—Spark plug tightening tension 26-32 ft. lbs.

IGNITION: See Coil, Condenser, and Distributor. Breaker Gap—.020". Cam Angle—38° Closed. Automatic & Vacuum Advance—Maximum as follows:

Distributor	Automatic Adv.	Vacuum Adv.
IGS-4203A-1	9° at 1300 RPM	9° at 14"
IGS-4203B-1	10° at 1150 RPM	8½° at 16"
IGS-4203C-1	10° at 1150 RPM	7½° at 15"
IGS-4113-1 & 4202-1	12° at 1750 RPM	7° at 15"

IGNITION TIMING—See Ignition Timing. Std. Setting—TDC. Impulse neutralizer 'DC' mark aligned with pointer at front of engine.

CARBURETION: See Carburetor & Carb. Equipment. Idle Setting—Set idle adjusting screw ½-1¼ turns open. Adjust for smooth idle. Idle speed 6 MPH. Float Level—5/64" from top of float (not seam) to top edge of bowl with valve seated. Accelerating Pump—Center hole normal setting. Fuel Pump Pressure: 4¼ lbs. maximum.

MANIFOLD HEAT CONTROL:—Thermostatic coil type. See that valve and shaft rotate freely. When installing coil, place inner end in slot in valve shaft, wind free end up one turn only counter-clockwise and hook free end over stop.

VALVES: See Valve Timing.

Tappet Clearance:—.008" Intake, .010" Exh. (hot and idling), .002" additional exh. clearance desirable for sustained high speeds. NOTE—Tappet screws self-locking. Remove right front engine inspection shield between fender and frame for access to valves.

STARTING: See Battery, Starter Generator, Regulator.

IGNITION

Ignition Switch:—Mitchellock Model 24-R, No. 8197. Ignition Lock—Yale & Towne or Briggs & Stratton. B&S No. 80592. Key Series 1BP to 1000BP. Groove 24.

COIL: Auto-Lite Model IG-4676. Service Winding (less switch & cable) IG-3224JS. On engine dash. Ignition Current—2¼ amperes idling, 5 stopped.

CONDENSER: Auto-Lite Part No. IG-3927A. Capacity—.25-.28 microfarad.

DISTRIBUTOR: Auto-Lite Models for 1942 as follows:

P14	IGS-4203A-1 or 4203B-1
P14 with Iron Pistons	IGS-4203C-1
P14 Canada	IGS-4113-1 or 4202-1

Single breaker, 6 lobe cam, full automatic advance type with vacuum spark control and manual adjustment at distributor.

Breaker Plate Identification—Maximum vacuum advance limited by slot and marked with number stamped on plate as follows:

#9—IGS-4203A-1
#8.5 or #8½—IGS-4203B-1
#7.5 or #7½—IGS-4203C-1
#7—IGS-4113-1 or IGS-4202-1

Breaker Gap—.020". Limits .018-.022".

Cam Angle—38° closed, 22° open.

Breaker Arm Spring Tension—17-20 ounces.

Rotation—Clockwise viewed from above.

Automatic Advance—IGS-4203A-1

Distributor Degrees	Distributor R.P.M.	Engine Degrees	Engine R.P.M.
Start	350	0	700
3	400	6	800
5	700	10	1400
7	1000	14	2000
9	1300	18	2600

Automatic Advance—IGS-4203B-1 or 4203C-1

Start	350	0	700
3	400	6	800
5	620	10	1240
8	940	16	1880
10	1150	20	2300

Automatic Advance—IGS-4113-1 or 4202-1

Start	350	0	700
3	400	6	800
6	850	12	1700
9	1300	18	2600
12	1750	24	3500

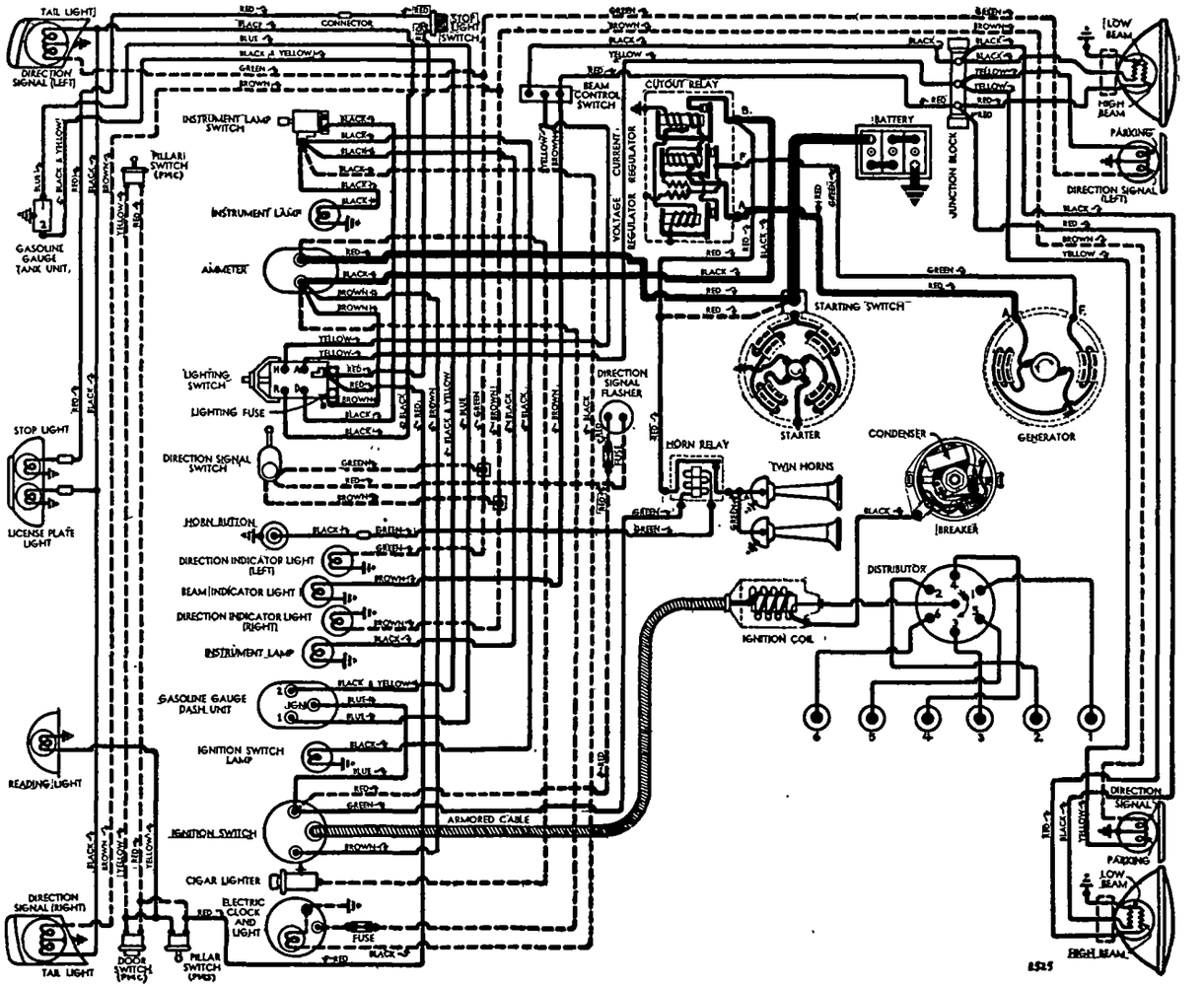

Vacuum Spark Control—Integral type (on distributor, linked directly to breaker plate). Provides additional advance at speeds above idling except when engine accelerated or operated with wide open throttle (spark retarded by return spring in unit).

Vacuum Advance—IGS-4203A-1

Distr. Degrees	Eng. Degrees	Vacuum (" of HG)
Start	0°	5"
2°	4°	7"
4°	8°	9"
6°	12°	11"
9°	18°	14"

Vacuum Advance—IGS-4203B-1

Start	0°	5"
2°	4°	7 5/8"
4°	8°	10 1/8"
6°	12°	12 3/4"
8.5°	17°	16"

Vacuum Advance—IGS-4203C-1

Start	0°	5"
2°	4°	7 5/8"
4°	8°	10 1/4"
6°	12°	13"
7.5°	15°	15"

Vacuum Advance—IGS-4113-1 or 4202-1

Start	0°	5"
1°	2°	6 1/2"
3°	6°	9 1/4"
5°	10°	12 1/8"
7°	14°	15"

Manual Adjustment—Provides for minor changes in ignition timing at distributor. See Ignition Timing.

Distributor Removal:—Mounted on left side of crankcase. To remove, disconnect vacuum line, take out hold-down screw in lock plate. **Installation**—Install distributor with #1 piston in firing position (see table below) and rotor opposite #1 segment in cap.

IGNITION TIMING

IGNITION TIMING:—Initial setting (correct for fuel of approx. 70 octane rating at low altitudes for all engines) shown below. See Manual Adjustment (following) for Final Setting.

	Flywheel Degrees	Piston Position
All Engines	0° at TDC	.0000" at TDC.

NOTE—Impulse neutralizer marked 'DC' at TDC. with 15 (1°) graduations on either side.

Timing (Using Timing Light)—Connect timing light between distributor primary terminal and battery terminal on generator regulator. Set #1 or #6 piston in firing position (see setting above) with correct mark on impulse neutralizer aligned with pointer on chain case cover. Loosen lock-plate hold-down screw, center pointer on scale, tighten screw. Loosen lock-plate clamp bolt, rotate distributor until timing light just goes out, tighten clamp bolt. Check Manual Adjustment (following) for final setting.

Timing (Using Synchroscope)—Tool C-374. Clip lead to #1 spark plug, direct light on impulse neutralizer (mark correct graduation with paint), idle engine, adjust distributor as directed above until mark aligned with pointer on chain case cover.

Manual Adjustment—Set to give slight ping from 10-30 MPH accelerating with wide open throttle. To adjust, loosen lock-plate hold-down screw, move plate (not more than 4° or .007" before or after initial setting) counter-clockwise (if no ping), clockwise (if ping too severe), tighten screw.

CARBURETOR

CARBURETION:—Carburetor. Carter (Ball & Ball) Model D6G1. 1½" single barrel, downdraft type.
For complete data, refer to Carburetor Index.

Idle Adjustment—With engine warm and running at slow idle speed (choke valve wide open, fast idle inoperative on D6G1), set throttle stopscrew for 6 MPH min. idle speed. Adjust idle adjusting screw for smooth idling (½-1¼ turns open—turn screw in for leaner mixture). Readjust idle speed. NOTE—If vacuum gauge used, adjust for highest reading on gauge (see Vacuum Reading above).

Accelerating Pump Setting—Pump lever has three holes for pump link engagement. Set as follows:
Inner Hole (minimum stroke)—Extreme hot temperatures or altitudes above 3000 feet.
Center Hole (med. stroke)—Normal summer setting.
Outer Hole (max. stroke)—Winter temperatures.

Float Level—5/64" from top of float (not seam) to top edge of bowl with valve seated. Use Tool C-449.

Metering Jets—*Refer to Carburetor Index for Carter (B&B) Downdraft Carburetor Jet Specification Table.*

NOTE—If lean metering jet (High Altitude calibration) used at lower altitudes for increased economy, speed and power are reduced (not recommended).

Fast Idle:—Non-adjustable type.
Throttle Cracker:—Not adjustable.
Automatic Choke:—Sisson Type AC-758B. Optional.
For complete data, refer to Carburetion Equip. Index.

CARB. EQUIPMENT

Air Cleaner:—AC #1542283 heavy duty oil-bath type. Use Replacement Filter Element Assembly #1542296.

Fuel Pump:—AC 'AT' #1523647—Exch. No. 505 diaphragm type pump. Pressure—4 lbs.
For complete data, refer to Carburetion Equip. Index.

Gasoline Gauge:—Auto-Lite electric. No. NG-9913D (dash unit), No. NG-9329T (tank unit).
For complete data, refer to Carburetion Equip. Index.

BATTERY

BATTERY:—Auto-Lite PF-1-15 or Willard WT-1-15C. 6 volt, 15 plate, 95 ampere hour (20 hour rate).
Grounded Terminal—Positive (+) to engine.
Location—Under hood in left fender shield.

STARTER

STARTER:—Auto-Lite MZ-4105. Armature MZ-2108. MAW-4026 (Canada). Armature MAW-2030.
Drive—Overrunning clutch (manual pinion shift).
Rotation—Counter-clockwise at commutator end.
Brush Spring Tension—42-53 ozs. (new brushes).
Cranking Engine—150-175 amperes, 5.1 volts.

Performance Data—MZ-4105

Torque	R.P.M.	Volts	Amperes
0 ft. lbs.	4300	5.5	70
.65 "	2500	5.5	100
2.55 "	1325	5.0	200
4.95 "	750	4.5	300
7.65 "	220	4.0	400
7.8 "	Lock	3.0	420
11.8 "	Lock	4.0	560

Performance Data—MAW-4026

Torque	R.P.M.	Volts	Amperes
0 ft. lbs.	4900 Min.	5.5	65
2.75 "	1480	5.0	200
5.45 "	820	4.5	300
8.50 "	400	4.0	400
11.55 "	110	3.5	500
12.0 "	Lock	3.0	505
18.0 "	Lock	4.0	670

Removal:—Flange mounted on left front face of flywheel housing. Disconnect wires (tape battery lead). Remove oil filter tubes, filter and 2 starter bolts.

Starting Switch: Auto-Lite SW-2813 or SW-2677A. On starter. Operated by starter pedal (pinion shift).
For complete data, refer to Electrical Equipment Index.

GENERATOR
STANDARD

GENERATOR (STD.):—Auto-Lite GDZ-4801B (Domestic), GDZ-4801A (Canada) Armature No. GDZ-2006F. Two brush with current & voltage regulation.

Charging Rate Adjustment—No adjustment at generator. Charging rate controlled by Voltage Regulator and maximum output by Current Regulator.

Maximum Charging Rate—35 amperes, 8.0 volts, 2200 gen. RPM or approx. 25 MPH, and above with load or discharged battery (Current Regulator setting). Actual charging rate controlled by Voltage Regulator and dependent on battery condition.

Performance Data—GDZ-4801A, B

Cold			Hot		
Amperes	Volts	R.P.M.	Amperes	Volts	R.P.M.
0	6.4	925	0	6.4	1000
5	6.65	1060	5	6.65	1150
10	6.85	1200	10	6.85	1290
15	7.05	1340	15	7.05	1430
20	7.3	1480	20	7.3	1590
25	7.55	1620	25	7.55	1750
30	7.8	1760	30	7.8	1980
35①	8.0	1900	35	8.0	2250

①—Current regulator setting. See Regulator data.

Rotation—Counter-clockwise at commutator end.

Brush Spring Tension—53 ozs. max. (new brushes).

Field Current—1.60-1.78 amperes at 6.0 volts.

Motoring Current—4.16-4.60 amperes at 6.0 volts.

Removal:—Pivot mounted at left side of engine at front. To remove, take out pivot and clamp bolts.

Belt Adjustment:—Loosen pivot and clamp bolts, pull out on generator until belt is snug or 40-50 lbs. tension secured on scale attached to field frame.

GENERATOR
SPECIAL EQUIPMENT

SPECIAL GENERATORS:—Auto-Lite GEB-4801A (City Police), GEG-4818B (State Police). *For complete data on these generators (and regulators used with these generators) refer to 1941 Plymouth pages (preceding).*

REGULATOR

REGULATOR:—Auto-Lite VRP-4001A. Current-Voltage type. In case on left side of engine dash. NOTE—For negative battery ground use VRP-4005A.
For complete data, refer to Electrical Equipment Index.

NOTE—Regulator case cover is sealed. Serviced on exchange basis if seals not broken (to remove cover).

CONTINUED ON NEXT PAGE

C NTINUED FR M PRECEDING PAGE

Cutout Relay

Cuts In—6.4-6.6 volts at approx. 1000 gen. RPM.
Cuts Out—4.1-4.8 volts (approx. 4-6 amps. disch.).
Contact Gap—.015" minimum.
Air Gap—.031-.034" with contacts open (check at hinge end of core).

Voltage Regulator

Setting—7.2-7.5 volts at 70°F. See Electrical Equipment Section for settings at other temperatures.

To Check (without breaking seals)—Connect ammeter in charging line at regulator 'B' terminal (use short heavy leads), voltmeter between 'B' terminal and ground. Operate generator at speed equivalent to 30 MPH., charging fully charged battery, until voltage is steady. Voltage reading should agree with setting given above.

To Adjust (with cover removed)—Change regulator armature spring tension by bending lower spring hanger slightly. See Electrical Equipment Section.

Contact Gap—.012" min. (armature against stop pin).

Air Gap—.048-.052" with contacts just opening.

Current Regulator

Setting—34-36 amperes (marked '35' on the cover).

To Check (without breaking seals)—Connect test meters as for voltage check (above). Operate generator at speed equivalent to 30 MPH. charging battery, turn on car lights and accessories or connect load (bank of headlamp bulbs, etc.) between ammeter and battery so that generator charges at peak rate and Current Regulator operates. Current reading should agree with setting given above. If more than slight excess noted, regulator is defective.

To Adjust (with cover removed)—Same as for Voltage Regulator (above).

Contact Gap & Air Gap—Same as Voltage Regulator.

LIGHTING

LIGHTING:—Headlamps—Corcoran-Brown 'Sealed Beam' type. *For data, refer to Elec. Equipment Index.*

Headlamp Adjustment—Aim upper beam straight ahead (hot spot center 3" below lamp center height).

Beam Indicator—Small red light on instrument panel above speedometer. Lighted with upper beams on.

Direction Signal—*Refer to Electrical Equip. Index.*

Switches

Lighting—Plymouth No. 863823 or No. 910507 (with Lighting Circuit Breaker).
Beam Selector—Plymouth No. 859974.
Instrument—Plymouth No. 976098.
Dome Light—Plymouth No. 317180 (Pillar Switch), No. 882943 (Door Switch).
Stop Light—Plymouth No. 677112.
Direction Signal—Plymouth No. 938926.

Bulb Specifications

Position	Candlepower	Mazda No.
Headlamps		Sealed Beam
Parking (without Dir. Signal)	3	63
Front Dir. Signal & Parking	21-3	1158
Instrument	6	81
Beam & Dir. Ind., Ign. Sw.	1	51
Tail (without Direct. Signal)	3	63
Rear Direct. Signal & Tail	21-3	1158
Stop Light	21	1129
Rear License	3	63
Reading or Dome	15	87

MISC. ELECTRICAL

FUSES:—Lighting—30 amp. On back of light switch.
Clock—2 ampere. In clock lead connector.
Direction Signal—9 ampere. In fuse connector in wire from ignition switch to flasher.

HORNS:—Dual. Auto-Lite HA-4028 (low pitch), HA-4029 (high pitch) or horn set HO-5005 or HT-5001.
Current Draw—35-40 amperes.
NOTE—Horns connected through ignition switch and are operative only with ignition switch 'on'.

Horn Relay:—Auto-Lite Model HRL-4001.
Contacts Close—1.5-3.0 volts. **Open**—.5 volt.
Contact Gap—.026". **Air Gap**—.016-.020" (closed).

ENGINE

ENGINE SPECIFICATIONS:—6 cylinder, 'L' head type.
Bore—3¼". **Stroke**—4⅜".
Displacement—217.8 cubic inches. **Rated HP**—25.35.
Developed Horsepower—95 at 3400 RPM.
Compression Ratio—6.8-1 cast-iron head standard.
Compression Pressure—160-170 lbs. at 1000 RPM or 125-135 lbs. at cranking speed. Variation 10 lbs. max.
Vacuum Reading—18-21" steady idling at 6 MPH.
Refer to Chrysler Shop Notes for Engine Removal data.

PISTONS:—Cast-iron, cam ground, ribbed, coated, lightweight type. **Length**—3½".
Removal—Pistons and rods removed from above.
Clearance—Top land .021". Skirt .0008-.0018".

Original Bore & Piston Sizes, Replacement Pistons:—*Refer to Chrysler Shop Notes for sizes and markings.*

Fitting New Pistons:—Check piston size with micrometer at bottom of skirt 90° from pin bosses. With piston and wall dry and clean, insert .0015"x½" feeler between cylinder wall and piston (piston inverted, pin removed) with feeler 90° from pin bosses. Feeler pull 10-15 lbs. (with piston and block at 70°F).

PISTON RINGS:—4 rings, all above pin. #1 & 2 Compression (upper inner edge stepped). #3 & 4 Oil (slotted).

Ring	Width	End Gap	Side Clearance
Compression	3/32"	.007-.015"	.0025-.004"
Oil Control	5/32"	.007-.015"	.001-.0025"

Replacement Rings:—*Refer to Chrysler Shop Notes.*

PISTON PIN:—Diameter—55/64". **Length**—2¾". Floating type. Pin hole in rod bronze bushed.
Pin Fit in Piston—Loose thumb push fit at 70°F. Pin should fall out if piston jarred.
Pin Fit in Rod Bushing—Thumb push fit at 70°F.
Replacement Pins:—Standard and .003, .008" oversize.

CONNECTING ROD:—Length—7 15/16".
Lower Bearing Diameter 2 1/16". *See Engine Lettering 'Special Standard' Note in Chrysler Shop Notes.*
Lower Bearing—Removable, precision type, thin babbitt. **Clearance** .001-.002". **Sideplay** .005-.011".
Bearing Adjustment:—*Refer to Chrysler Shop Notes for bearing removal and fitting data.*
Replacement Bearings: *See Chrysler Shop Notes.*
Installing Rods:—Wide portion of bearing to rear (#1, 3, 5), to front (#2, 4, 6). Oil hole to camshaft.

CRANKSHAFT:—4 bearings, 7 integral counterweights with new impulse neutralizer (vibration dampener).
Bearing Diameter—2½". *See Engine Lettering Note in Chrysler Shop N tes for 'Special Standard' sizes.*
Bearing Type—Removable, precision type, thin babbitt on steel. **Clearance**—.001-.002".
Bearing Adjustment:—*Refer to Chrysler Shop Notes for bearing removal, adjustment, & Crankshaft Oil Seals.*
Replacement Bearings & Bearing Caps: *See Chrysler Shop Notes for complete data.*
End Thrust:—Taken by flange faces on rear (#4) main bearing. **Endplay**—.003-.007" (.003" desired).

CAMSHAFT:—4 bearing. Non-adjustable chain driv .
Refer to Chrysler Shop Notes for Camshaft Removal.
Bearing Diameters—#1, 2"; #2, 1 31/32"; #3, 1 15/16"; #4, 1¼".
Bearing Type—Removable steel-backed, babbitt-lined bushings (except #4 machined in block). **Clearance**—.0015-.0035".
End Thrust:—Taken by thrust plate behind camshaft sprocket hub. **Endplay**—.002-.006".
Timing Chain:—Morse Type 1883N, No. 2661. Width 1". Pitch .500" (½"). Length 24" or 48 links.
Camshaft Setting:—Sprockets marked. Mesh chain with sprockets turned so that '0' marks are adjacent and in line with straightedge across shaft centers.

VALVES:—

	Head Diameter	Stem Diameter	Length
Intake	1 17/32"	.340-.341"	4 25/32"
Exhaust	1 13/32"	.340-.341"	4 25/32"

	Seat Angle	Lift	Stem Clearance
Intake	45°	⅜"	.001-.003"
Exhaust	45°	⅜"	.003-.005"

Refer to Chrysler Shop Notes for Exhaust Valve Seat Insert servicing and replacement data.

Valve Guides:—Remove from above. Press new guides in (stepped end down) with upper end ⅞" below top of block, ream to .342-.343" Int., .344-.345" Exh.

Valve Springs:—Install with closely coiled end to top.

Free length 2".	Spring Pressure	Length
Valve Closed	40-45 lbs.	1¾"
Valve Open	107-115 lbs.	1⅜"

Valve Lifters:—Mushroom type (remove from below). Stem diam. ⅝". Ream holes from above (pilot in valve guide). Oversizes .001", .008", and .030".
Lifter Clearance in Block—.000-.001".

VALVE TIMING

Tappet Clearance:—.008" Intake, .010" Exh. (hot and idling), .002" additional exh. clearance desirable for sustained high speeds. NOTE—Tappet screws self-locking. Remove right front engine inspection shield between fender and frame for access to valves.

Valve Timing:—See Camshaft Setting above.
Intake Valves—Open 12° BTDC. Close 44° ALDC.
Exhaust Valves—Open 50° BLDC. Close 6° ATDC.
Valve Timing Check—With .014" (cold) tappet clearance #6 intake valve should open with #6 piston 12° or .061" BTDC with 12th graduation before DC mark on impulse neutralizer aligned with pointer on chain case cover. Reset tappet clearance at .008" hot.

LUBRICATION

LUBRICATION:—Pressure (pump on right of engine).
Refer to Chrysler Shop Notes for Oil Pump Removal.
Normal Oil Pressure:—30-45 lbs. above 30 MPH.
Oil Pressure Relief Valve:—Under plug below starter. Opens at 40-45 lbs. Spring painted red, green, or unmarked. If spring replaced, use same color spring.
Crankcase Capacity:—5 quarts (refill).

COOLING

COOLING SYSTEM:—Capacity—15 quarts.
Refer to Chrysler Shop Notes for Radiator Core Removal and Water Distribution Tube servicing.

Water Pump:—Packless type with grease fitting.
See Water Pump Section for complete data.

Thermostat:—Bishop & Babcock or Fulton (Fulton on P14S). Starts to open 157-162°F. Fully open 183°. NOTE—By-pass thermostat on P14C must be installed with 2 by-pass ports to front, 2 to rear.

Temperature Gauge—Auto-Lite (Motometer) Vapor tension type. Auto-Lite Part No. H-9912.
See Miscellaneous Section for complete data.

CLUTCH

CLUTCH:—Borg & Beck 9A7 (Std.), 11A6 (Taxi) with 'Borglite' driven member. #955 or 926 (9A7), 931 (11A6) stamped on cover. Single plate, dry disc types.
See Clutch Section for complete data.

Facings—Spiral woven, 2 used. I.D. 6" (9A7), 6½" (11A6). O.D. 9¼" (9A7), 11" (11A6). Thickness ⅛".

Adjustment:—Pedal should just clear toeboard (adjust stopscrew on lower end of pedal) and have 1" free travel (adjusting nut on connector link at fork). NOTE—Do not disturb turnbuckle on pedal link (controls pedal over-center spring tension).

Removal:—Remove transmission (see below), release fork pull-back spring and housing underpan. Disconnect release fork from pivot, pull out release bearing and sleeve. Mark cover and flywheel. Take out cover screws evenly, lower assembly out.

TRANSMISSION

TRANSMISSION:—Own Make. All helical gear, constant-mesh, synchro-mesh (second and high), sliding gear (low and reverse) with remote shift.
See Transmission Section for complete data.

Transmission Control:—Steering column shift. Manual type Std. Power Shift (vacuum type) Opti.
See Transmission Section for complete data.

Removal:—Jack up front end of car. Remove propeller shaft (loosen mainshaft flange nut if transmission to be dismantled). Disconnect speedometer cable, hand brake cable at brake band, gearshift rods, vacuum and air hose (if Power Shift used). Remove transmission-to-clutch housing capscrews. Pull transmission to rear and lower out of car.

NOTE—When installing transmission, use pilot studs to prevent springing clutch plate.

UNIVERSALS

UNIVERSAL JOINTS:—Detroit-Universal Series 4200. Ball and trunnion type with roller bearings.
See Universals Section for complete data.

REAR AXLE

REAR AXLE:—Own Make. Semi-floating, hypoid gear type with Hotchkiss drive.
See Rear Axle Section for complete data.

Ratio—4.1-1 Suburban, 3.9-1 All other models.

Backlash—.006-.010". Screw adjustment.

Removal:—Hoist rear end of car, remove rear wheels. Disconnect brake hose at frame bracket, lower ends of shock absorbers and rear universal. Support axle housing, remove rear spring hold-down clips and withdraw assembly from car. NOTE—Carrier can be removed without taking out housing by removing axle shafts, disconnecting rear universal and removing carrier screws.

Axle Shaft Removal—Remove wheel, hub, and drum assembly (use screw type hub puller—Tool C-319), block brake pedal, disconnect brake line at wheel cylinder, take off backing plate with oil seal, pull shaft and wheel bearing (use Tool C-158).

Wheel Bearing Adjustment:—Shims between backing plate and axle housing. With wheel and hub removed, check endplay with dial indicator. To adjust, remove backing plate (see above), add or remove shims (furnished .010", .0125", .015", .030" thick) equally at both wheels. **Endplay**—.003-.008".

SHOCK ABSORBERS

SHOCK ABSORBERS:—Own make, direct acting hydraulic (same as Delco design). NOTE—Delco Direct acting, adjustable, shock absorbers used for export.
See Shock Absorber Section for complete data.

FRONT SUSPENSION

Front Suspension:—Independent, linked parallelogram type with coil springs and direct acting shocks.
See Front Suspension Section for complete data.
Kingpin Inclination—4¾° to 6°.
Camber—Positive ¼°. Limits 0° to Pos. ¾°.
Caster—Negative 1° to Positive 1°. Not adjustable.
Toe In—0-1/16". Turn both tie rods equally
Steering Geometry Inner wheel 22° ± 1°. Outer 20°.

STEERING GEAR

Steering Gear: Chrysler (Gemmer design 305) Worm-&-Roller with 'push-pull' adjustments. See Gemmer.
See Steering Gear Section for complete data.

BRAKES

BRAKES:—Service. Lockheed hydraulic, double anchor type. Hand lever applies independent shaft brake.
See Brake Section for complete data.
Wheel Cylinders—Stepped or two-stage bore type.
Drums—Centrifuse. Diameter 10".
Lining—Molded asbestos. Width 2". Thick. 13/64".
Length per shoe: Front 10 5/16", Rear 7 11/16".
Clearance—.012" Toe (top), .006" Heel, for each shoe.
Braking Power—60% front wheels, 40% rear.

Hand Brake:—On drum at rear of transmission.
Adjustment—*See Chrysler Shop Notes for instructions.*
Drum—Cast-iron. Diameter 6".
Lining—Woven asbestos. Width 2". Thickness 5/32".
Length 16 11/16".

MISC. MECHANICAL

WINDSHIELD WIPER:—Auto-Lite EWH-5001, 5003 (Conv. Coupe). Electric type with circuit-breaker.
See Miscellaneous Section for complete data.
Circuit Breaker—Vibrating, thermostatic type Starts to operate with current of 12 amperes.

Power Operated Convertible Top: Vacuum Power type.
See Miscellaneous Section for complete data.

MODEL IDENTIFICATION

SERIAL NUMBER: On right front door hinge post.

	Detroit	Evansville	Los Angeles
1946 Deluxe	15,154,001	22,042,001	26,000,001
1947 Deluxe	15,206,936	22,053,040	26,003,589
1948 Deluxe	15,252,279	22,063,370	26,010,840
1946 Spec. Del.	11,496,001	20,165,001	25,000,001
1947 Spec. Del.	11,643,104	20,185,186	25,009,753
1948 Spec. Del.	11,854,386	20,233,168	25,035,586

ENGINE NUMBER: Stamped on boss on left front side of engine block between #1 and #2 cylinders.

TUNE-UP

COMPRESSION: Pressure—120 lbs. at cranking speed.

VACUUM READING: Steady 18-21" idling at 6 MPH.

FIRING ORDER: 1-5-3-6-2-4.

SPARK PLUGS: Auto-Lite Type A-5. 14 mm. Metric. Gaps—.025".

IGNITION: See Coil, Condenser, and Distributor.
Breaker Gap—.020". Limits .018-.022".
Cam Angle or Dwell—38° closed, 22° open.
Breaker Arm Spring Tension—17-20 ozs.
Automatic & Vacuum Advance—*See Distributor.*

IGNITION TIMING: See Ignition Timing.
Std. Setting—At Top Dead Center.
Timing Mark—'DC' mark on dampener aligned with pointer on chain case cover. Vary as follows:
Octane Selector—Set for slight ping when accelerating with wide open throttle between 10-30 MPH.

CARBURETION: See Carburetor & Carb. Equipment.
Idle Setting—With engine warm, set throttle stop-screw for 6 MPH. idle speed. Set idle adjusting screw ½-1¼ turns open (Carter B&B), 1¼-2¼ turns open (Carter W1), adjust all models for smooth idle.
Idle Speed—6 MPH. hot or slow idle speed.
Float Level (Carter B&B)—Top of the float (not soldered seam) 5/64" ± 1/64" below top edge of bowl.
Float Level (Carter W1)—½" from top of float at free end to machined surface (gasket seat) on bowl cover with valve closed (invert to check).
Float Level (Stromberg)—Fuel level 5/8" below top edge of bowl (even with bottom of inspection hole).
Accelerating Pump—Center Hole Normal Setting, Outer Hole (max.) Winter, Inner (min.) Summer. Carter W1 carburetor does not have adjustment.

Fuel Pump Pressure: 3-4½ lbs.

MANIFOLD HEAT CONTROL: Thermostatic coil type. Install coil so approx. one full turn (335°) required to hook free end over stop stud for correct operation.

VALVES: See Valve Timing.
Tappet Clearance—.008" Intake, .010" Exh., Hot.

STARTING: See Battery, Starter, Generator, and Regulator.

IGNITION

IGNITION SWITCH: Briggs & Stratton or Mitchellock. NOTE—No armored cable used.
Briggs & Stratton—B & S Switch No. 85985.
Mitchellock Type 42-R—No. E-10182 (Yale & Towne lock), No. E-10663 (Hurd lock).
Lock Cylinder—Yale & Towne, Hurd, or Briggs & Stratton. B & S No. 85915 (Key Series CA1-CA800)

COIL: Auto-Lite No. IG-4806 or IG-4809. Mounted above distributor on ignition cable bracket.
Ignition Current—2¼ amperes idling, 5½ stopped.

CONDENSER: Auto-Lite Part No. IG-3927A.
Capacity—.25-.28 microfarad.

DISTRIBUTOR: Auto-Lite Model IGS-4207-1 (U. S.), IGS-4208B-1 (Canada). Automatic advance type with Vacuum Spark Control and Octane Selector.
Breaker Plate Identification—Maximum vacuum advance limited by slot in plate. Marked for identification by number: #10 (IGS-4207-1), #7 (IGS-4208B-1) stamped on plate.
Breaker Gap—.020". Limits .018-.022".
Cam Angle—38° closed, 22° open.
Breaker Arm Spring Tension—17-20 ounces.
Rotation—Clockwise viewed from above.

Automatic Advance—IGS-4207-1

Distributor Degrees	Distributor R.P.M.	Engine Degrees	Engine R.P.M.
Start	350	0	700
3	400	6	800
5	700	10	1400
7	1000	14	2000
9	1300	18	2600

Automatic Advance—IGS-4208B-1

Start	350	0	700
3	400	6	800
6	850	12	1700
9	1300	18	2600
12	1750	24	3500

Vacuum Spark Control: Auto-Lite Units. Integral type (on distributor, linked directly to breaker plate). Provides additional advance at speeds above idling except when engine accelerated or operated with wide open throttle (spark retarded by return spring

Vacuum Advance—IGS-4207-1

Distr. Degrees	Eng. Degrees	Vacuum (" of HG)
Start	0°	5"
2°	4°	6¾"
5°	10°	9½"
8°	16°	12¼"
10°	20°	14"

Vacuum Advance—IGS-4208B-1

Distr. Degrees	Eng. Degrees	Vacuum (" of HG)
Start	0°	5"
1°	2°	6¾"
3°	6°	9¼"
5°	10°	12⅛"
7°	14°	15"

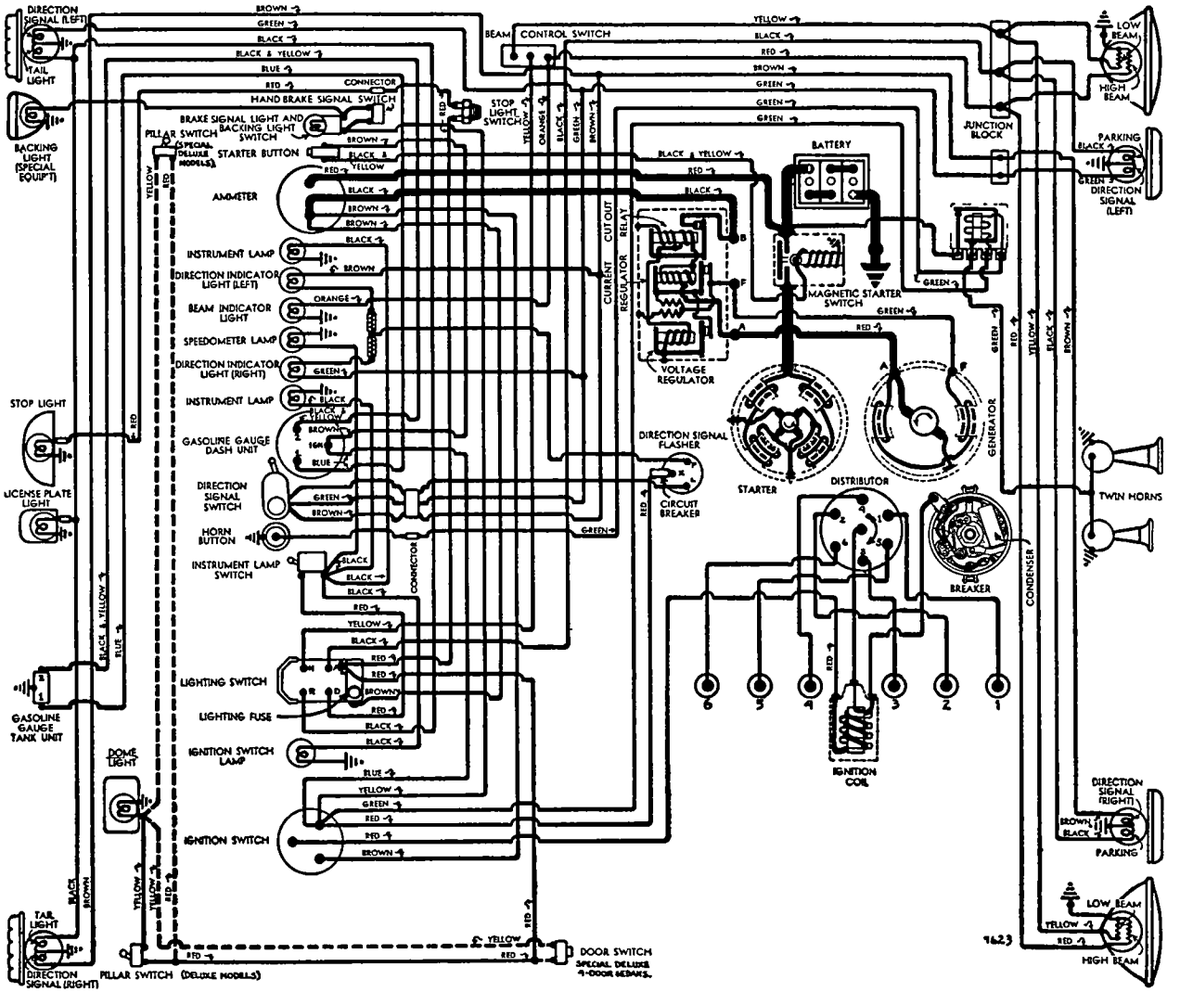

Manual Adjustment—Provides for minor changes in ignition timing at distributor. See Ignition Timing.

Distributor Removal: Mounted on left side of crankcase. To remove, disconnect vacuum line, take out hold-down screw in lock plate. **Installation Note**—Install distributor with #1 piston in firing position.

IGNITION TIMING

Std. Setting—Initial setting (for regular non-premium fuel) as shown below. See Manual Adjustment (following) for Final Setting.

	Flywheel Degrees	Piston Position
All Engines	0° at TDC	.000" TDC

NOTE—Impulse neutralizer marked 'DC' at TDC. with 15 (1°) graduations on either side.

Timing (Using Timing Light)—Connect timing light between distributor primary terminal and battery terminal on generator regulator. Set #1 or #6 piston in firing position (see setting above) with correct mark on impulse neutralizer aligned with pointer on chain case cover. Loosen lock-plate hold-down screw, center pointer on scale, tighten screw. Loosen lock-plate clamp bolt, rotate distributor until timing light just goes out, tighten clamp bolt. Check Manual Adjustment (following) for final setting.

Timing (Using Synchroscope)—Tool C-374. Clip lead to #1 spark plug, direct light on impulse neutralizer (mark correct graduation with paint), idle engine, adjust distributor as directed above until mark aligned with pointer on chain case cover.

Manual Adjustment—Set to give slight ping from 10-30 MPH accelerating with wide open throttle. To adjust, loosen lock-plate hold-down screw, move plate (not more than 4° or .007" before or after initial setting) counter-clockwise (if no ping), clockwise (if ping too severe), tighten screw.

CARBURETOR

CARTER (B&B)

Carter (B&B) Model D6G1 (Std.), B6V1 or B6W1 (Economy Models). 1½" Single barrel, downdraft type with manual choke control.

See Carburetor Section for complete data.

Settings (Idle Setting, Float Level, and Accelerating Pump): *See Tune-Up data.*

Metering Jet—***See Carter (B&B) Jet Tables in Carburetor Section for complete jet data.***

CARBURETOR

CARTER W1

Carter W1, No. 574S. 1¼" Single barrel, downdraft type with manual choke control.

See Carburetor Section for complete data.

Settings (Idle Setting, Float Level, and Accelerating Pump): *See Tune-Up data.*

Metering Rod & Jet—***See Carter Jet Table in Carburetor Section for complete data.***

CARBURETOR

STROMBERG

Stromberg Model BXV-3. Stromberg No. 380220. Code No. 3-84. 1½" single barrel, downdraft type.

See Carburetor Section for complete data.

Settings (Idle Setting, Float Level, and Accelerating Pump): *See Tune-Up data.*

Metering Jet—***See Stromberg Jet Table in Carburetor Section for complete jet data.***

CARB. EQUIPMENT

Fast Idle: Throttle opened to fast idle position when choke valve closed. Not used on Economy carb.

Automatic Choke: Sisson type Optl.

See Carburetion Equipment Section for data.

Air Cleaner: AC No. 1543851 Heavy duty oil-bath type. Filter Element AC No. 1544091.

Servicing—Wash filter element in kerosene, drain and clean oil reservoir and refill to indicated level mark with 1 pint SAE No. 50 engine oil (SAE No. 20W for temperatures below freezing) at 1000 mile or 30 day intervals, or more often if required.

Oil Filler Cap (crankcase Ventilator) Air Cleaner: Wash filter element in cap in kerosene and re-oil by dipping in SAE No. 50 engine oil at 1000 mile or 30 day intervals or more often if required.

Crankcase Ventilator Outlet Air Cleaner—Special equipment for cars operating in dusty regions. Servicing same as given for Oil Filler Cap Cleaner.

Fuel Pump: AC No. 1539042 or Carter No. M594S. Diaphragm type fuel pump.

Replacement Pump—AC No. 577 (for 1539042).

Pressure—3½-5½ lbs.

See Carburetion Equipment Section for data.

Fuel Tank Filter: New Oilite metal filter in tank.

Servicing—If more than 2 pints water in tank, fuel will not pass filter. Remove filler cap and drain plug, draining tank. Disconnect fuel line at some point between pump and tank, blow out line and filter with air, increasing pressure as filter is cleaned. Flush tank with clean gasoline.

Gasoline Gauge: Auto-Lite Electric type. Dash Unit No. NG-10878D, Tank Unit No. NG-10862T.

See Carburetion Equipment Section for data.

BATTERY

Auto-Lite Type 1M-100D or Willard WT-1-15C (Orig. Equip.), Auto-Lite Type PN-15 or Willard HW-1-100 (Replacement). 6 volt, 15 Plate, 100 Ampere Hour Capacity (20 hour rate).

Starting Capacity—120 amperes for 20 minutes.

Zero Capacity—300 amperes for 3.2 minutes (Auto-Lite), 3.3 minutes (Willard). Five second voltage 4.15 volts (Auto-Lite), 4.2 volts (Willard).

Grounded Terminal—Positive (+) to engine.

Location—In left fender shield under engine hood.

Dimensions—Length 9 3/32" (A-L), 9" (W). Width 7⅛" (A-L), 7" (W). Height 8⅝" (A-L), 8¾" (W).

STARTER

Auto-Lite Model MZ-4133 (U.S.), MAW-4041 (Can.).

Armature—Auto-Lite No. MZ-2108 (MZ-4133 Starter), MAW-2030 (MAW-4041 Starter).

Drive—Outboard Barrel Type Bendix No. A2089.

Rotation—Counter-clockwise at commutator end.

Brush Spring Tension—42-53 ozs. (new brushes).

Cranking Engine—150-175 amperes, 5.1 volts.

Performance Data—MZ-4133

Torque		R.P.M.	Volts	Amperes
0	ft. lbs.	4300	5.5	70
0.65	"	2500	5.5	100
2.55	"	1325	5.0	200
4.95	"	750	4.5	300
7.65	"	220	4.0	400
7.8	"	Lock	3.0	420
11.8	"	Lock	4.0	560

Performance Data—MAW-4041

Torque		R.P.M.	Volts	Amperes
0	ft. lbs.	4900	5.5	65
.60	"	3300	5.5	100
2.75	"	1480	5.0	200
5.45	"	820	4.5	300
8.50	"	400	4.0	400
11.55	"	110	3.5	500
11.5	"	Lock	3.0	505
18.0	"	Lock	4.0	670

Removal: Disconnect wires (tape battery lead), remove mounting bolts, withdraw starter (not necessary to disturb oil filter or oil lines).

Starting Switch: Auto-Lite Model SST-4001. Magnetic type mounted on left front fender shield and controlled by pushbutton on instrument panel.

See Electrical Equipment Section for complete data.

GENERATOR

STANDARD

Auto-Lite Model GDZ-4801A. Armature GDZ-2006F. Two brush (shunt) type with voltage and current regulation. Ventilated by fan on drive pulley.

Charging Rate Adjustment—None. See Regulator.

Maximum Charging Rate—35 amperes, 8.0 volts, 2200 gen. RPM or approx. 25 MPH, and above with load or discharged battery (Current Regulator setting). Actual charging rate controlled by Voltage Regulator and dependent on battery condition.

Performance Data

Cold			Hot		
Amperes	Volts	R.P.M.	Amperes	Volts	R.P.M.
0	6.4	925	0	6.4	1000
5	6.65	1060	5	6.65	1150
10	6.85	1200	10	6.85	1290
15	7.05	1340	15	7.05	1430
20	7.3	1480	20	7.3	1590
25	7.55	1620	25	7.55	1750
30	7.8	1760	30	7.8	1980
35①	8.0	1900	35	8.0	2250

①—Current regulator setting. See Regulator data.

Rotation—Counter-clockwise at commutator end.

Brush Spring Tension—35-53 ozs. (new brushes).

Field Current—1.60-1.78 amperes at 6.0 volts.

Motoring Current—4.16-4.60 amperes at 6.0 volts.

Removal: Pivot mounted at left side of engine at front. To remove, take out pivot and clamp bolts.

Belt Adjustment: Loosen pivot and clamp bolts, pull out on generator until belt is snug (40-50 lbs. tension secured on scale attached to field frame) or ¼" belt deflection between generator and pump

GENERATOR

SPECIAL EQUIPMENT

Auto-Lite GEG-4823A or GEG-4823B. Armature No. GEG-2006F. Two brush (shunt) type with voltage and current regulation. Ventilated.

SEE CHRYSLER 8 C39 PAGE FOR ALL DATA.

REGULATOR

Std. (for "GDZ" Gen.)—Auto-Lite VRP-4001A, VRP-4401A, VRP-4501A, VRP-4503A.

Spec. Equip. (for "GEG" Gen.)—Auto-Lite VRP-4001F, VRP-4401B, VRP-4501C (VRP-4005E for negative ground). Vibrating voltage and current regulators with Cutout Relay.

See Electrical Equipment Section for complete data.

NOTE—Regulator case cover is sealed. Serviced on exchange basis if seals not broken (to remove cover).

C NTINUED ON NEXT PA E

CONTINUED FR M PRECEDIN PA E

Cutout Relay

Cuts In—6.4-7.0 volts (set to 6.4-6.6 volts).
Cuts Out—4.1-4.8 volts (approx. 4-6 amps. disch.).
Contact Gap—.015" minimum.
Air Gap—.031-.034" with contacts open (check at hinge end of core).

Voltage Regulator

Setting—7.2-7.5 volts at 70°F. See Electrical Equipment Section for settings at other temperatures.
Checking (without breaking seals) & Adjustment—*See Electrical Equipment Section.*
Contact Gap—.012" min. (armature against stop pin).
Air Gap—.048-.052" with contacts just opening.

Current Regulator

Setting (VRP-4001A, 4401A)—34-36 amperes ("35").
Setting (VRP-4001F, 4005E, 4401B)—39-41 amperes (marked "40").
Setting (VRP-4501A, 4503A)—35 amperes (42 amperes at 70°F. after 15 minutes run, 33-37 amperes at 70° after additional 15 minutes run). CAUTION—These regulators are temperature-compensated and setting decreases with temperature rise.
Setting (VRP-4501C)—40 amperes (46 amperes at 70°F. after 15 minutes run, 38-42 amperes at 70° after additional 15 minutes run). CAUTION—This regulator temperature-compensated and setting decreases with temperature rise as indicated.
Checking (without breaking seals) & Adjustment—*See Electrical Equipment Section.*
Contact Gap—.012" min. (armature against stop pin).
Air Gap—.048-.052" with contacts just opening.

LIGHTING

Headlamps: Corcoran-Brown "Sealed Beam" type. *See Electrical Equipment Section for complete data.*

Adjustment—Aim upper beam straight ahead (hot spot center 3" below lamp center height at 25 ft.).
Beam Indicator—Red light directly above center of speedometer. Lighted with upper beams "on".

Direction Signal: Optl. *See Electrical Equipment Sec'n.*
Direction Signal Indicator—On either side of Headlamp Beam Indicator (above speedometer).

Switches

Lighting—Plymouth No. 910507.
Beam Selector—Plymouth No. 859974.
Instrument—Plymouth No. 1232617.
Map Light—Plymouth No. 1154278.
Dome Lamp Pillar—Plymouth No. 317180.
Door Switches—Plymouth No. 882943.
Stop Light—Plymouth No. 920355.
Direction Signal—Plymouth No. 1163984.

Bulb Specifications

Position	Candlepower	Mazda No.
Headlamps	45-35 watts	Sealed Beam
Parking	3	63
Park & Frt. Dir. Sig.	21-3	1158
Beam & Dir. Sig. Ind.	1	51
Instrument	3	63
Ign. Switch	1	51
Tail (No Dir. Sig.)	3	63
Tail & Rear Dir. Sig.	21-3	1158
Stop	21	1129
Rear License	3	63
Dome	15	87

MISC. ELECTRICAL

FUSES: Lighting—30 ampere. On back of lighting switch. NOTE—To replace fuse, press up on knurled cap or fuse and turn to left, withdraw cap and fuse.
Clock—2 ampere. In clock lead connector.
Radio—14 ampere. In fuse connector at radio.

CIRCUIT BREAKER: Direction Signal—On flasher behind instrument panel. 8 ampere, vibrating type.

HORNS: Auto-Lite Model HT-4011 (Low Pitch), HT-4012 (High Pitch). Dual horns operated by relay.

Horn Relay: Auto-Lite HRL-4101. Connected through ignition switch, operates only with ignition on.
Contact Close—1.5-3.0 volts (seal to core with 4 V).
Contacts Open—.5 volt min. (open from seal).
Contact Gap—.026". **Air Gap**—.016-.020" (armature air gap with contacts closed but not sealed), .015-.018" (gap between armature leg and yoke with armature sealed to core).

ENGINE

ENGINE SPECIFICATIONS: 6 cylinder, "L" hd. type.
Bore—3¼". **Stroke**—4⅜".
Displacement—217.8 cu.ins. **Rated H.P.** 25.35.
Developed Horsepower—95 at 3600 RPM.
Compression Ratio—6.6-1 Std. Cast Iron Head.
Compression & Vacuum Reading—*See Tune-up data.*

ORIGINAL BORE & PISTONS: *See Chrysler Shop Notes.*

ORIGINAL BEARING SIZES: *See Chrysler Shop Notes.*

OIL PAN REMOVAL: *See Chrysler Shop Notes.*

ENGINE REMOVAL: *See Chrysler Shop Notes.*

TIGHTENING TORQUES: *See Chrysler Shop Notes.*

CYLINDER HEAD: Tightening Torque & Cylinder Head Diagram—*See Chrysler Shop Notes.*

PISTONS: Aluminum alloy, "U" slot, cam ground type. NOTE—Piston skirt is elliptical (.010-.012" smaller diameter across pin bosses than across thrust faces), and tapered (.0005-.0015" smaller diameter at top of skirt than at bottom).
Length—3 11/16". **Weight**—16.0 ozs. (stripped).
Removal—Pistons and rods removed from above.
Clearance—.028-.032" (Head & Ring Lands), .0005-.001" (Skirt—across thrust faces and ¾" up from bottom). See Fitting New Pistons.

Fitting New Pistons: Measure piston size with micrometer across thrust faces (right angles to pin bosses) ¾" up from bottom of skirt with piston at 70°F. To fit pistons, with cylinder wall and piston dry and clean and at 70°F., invert piston in cylinder bore. Piston should have slight drag but should pass slowly through bore of own weight.

Replacement Pistons: *See Chrysler Shop Notes.*

Installing Pistons: "U" slot away from valves.

PISTON RINGS: Two compression, two slotted oil control, coated rings per piston, all above pin. Oil ring grooves drilled for oil drainage.

Ring	Width	End Gap	Side Clearance
Compr. (#1)	3/32"	.007-.015"	.0025-.004"
Compr. (#2)	3/32"	.007-.015"	.002-.0035"
Oil Contr. (#3, 4)	5/32"	.007-.015"	.001-.0025"

Installing Rings—#1 Compr. with step on inner edge up. #2 Compr. with step on inner edge up or if step on outer edge, install with step down.

Replacement Rings: *See Chrysler Shop Notes.*

PISTON PIN: Diameter 55/64". Length 2¾".
Pin floats in piston and rod, held by lock rings.
Pin Fit in Piston—Thumb push fit (piston at 130°F).
Pin Fit in Rod Bushing—Tight thumb push fit at 70°F.

Replacement Pins: Std., .0006", .003", .008" Oversize.

CONNECTING ROD: Length 7 15/16". Weight 1.941 lbs. with bolts less bearings.
NOTE—Pin hole in rod bronze bushed.
Lower Bearing Diameter—2 1/16". *See "Original Bearing Size" in Chrysler Shop Notes.*
Lower Bearing—Removable, precision type, steel-backed, thin babbitt lined. No shims.
Clearance—.001-.0015". **Sideplay** .0055-.0115".

Bearing Adjustment: None (no shims). Replace bearings. Do not file rods or bearing caps. *See "Connecting Rod & Bearings" in Chrysler Shop Notes.*

Replacement Bearings: *See Chrysler Shop Notes.*

Installing Rods: Wide portion of bearing to rear (#1, 3, 5), to front (#2, 4, 6). Oil hole to camshaft.

CRANKSHAFT: 4 bearings, 7 integral counterweights, with vibration dampener on front end.
Bearing Diameter—2½". *See "Original Bearing Size" in Chrysler Shop Notes.*
Bearings—Removable, precision type, steel-backed, thin babbitt lined. No shims.
Clearance—.001-.0015".

Bearing Adjustment: None (no shims). Replace bearings. Do not file bearing caps. *See "Crankshaft and Main Bearings" in Chrysler Shop Notes.*

Replacement Bearings: *See Chrysler Shop Notes.*

Crankshaft Front & Rear Oil Seals: *See "Crankshaft and Main Bearings" in Chrysler Shop Notes.*

End Thrust: Taken by flanged faces of #4 (rear) main bearing. **Endplay**—.003-.007".

CAMSHAFT: 4 bearing. Non-adjustable chain drive.
Bearing Diameters—#1, 2"; #2, 1 31/32"; #3, 1 15/16"; #4, 1¼".
Bearings—Removable, steel-backed, babbitt lined bushings (except #4—machined in crankcase).
Clearance—.001-.003".

End Thrust: Taken by thrust plate behind camshaft sprocket hub. **Endplay**—.002-.006".

Timing Chain: Width 1". Pitch .500" (½"). Length 24" or 48 links.

Camshaft Setting: Sprockets marked. Mesh chain with sprockets turned so that '0' marks are adjacent and in line with a straightedge across shaft centers.

VALVES:	Head Diameter	Stem Diameter	Length
Intake	1 17/32"	.340-.341"	4 25/32"
Exhaust	1 13/32"	.340-.341"	4 25/32"

	Seat Angle	Lift	Stem Clearance
Intake	45°	⅜"	.001-.003"
Exhaust	45°	⅜"	.003-.005"

Exhaust Valve Seat Inserts—*See Chrysler Shop Notes.*

Valve Guides: Remove from above. Press new guides in with stepped end down and upper end ⅞" below top of block, ream guides to inside diameter of .342-.343" (Intake), .344-.345" (Exhaust).

Valve Springs: Install with close-coil end to top.

Free Length 2".	Spring Pressure	Spring Length
Valve Closed	40-45 lbs.	1¾"
Valve Open	107-115 lbs.	1⅜"

Valve Lifters: Mushroom type (remove from below with camshaft out of engine). Stem diameter ⅝". Service by reaming lifter holes (work from above piloting reamer in valve guide) and installing oversize lifters furnished .001", .008", .030" Oversize.

VALVE TIMING

Tappet Clearance: .008" Intake, .010" Exhaust, Hot. NOTE—Tappet screws self-locking type.

Valve Timing: See Camshaft Setting above.
Intake Valves—Open 12° BTDC. Close 44° ALDC.
Exhaust Valves—Open 50° BLDC. Close 6° ATDC.
Valve Timing Check—With .014" tappet clearance (Cold), #6 intake valve should open with #6 piston 5° to 17° or .011" to .122" BTDC with 5th to 17th graduation before DC mark on impulse neutralizer aligned with pointer on chain case cover. Reset tappet clearance to running clearance .008" Hot.

LUBRICATION

Engine Oiling System: Pressure to main and connecting rod bearings, camshaft bearings, and timing chain. New "Rotor" type oil pump.
Crankcase Capacity—5 qts. (refill).
Normal Oil Pressure—40-45 lbs. above 30 MPH.
Oil Pressure Regulator—Under plug on left side of crankcase (below starter). Opens at 40-45 lbs. Adjustable by replacing spring (Std. spring Unpainted, Lighter spring—Red, Heavier spring—Green). CAUTION—Install replacement spring of same color as original spring.

Oil Pump: New "Rotor" type on right side of engine.
Servicing—*See "Oil Pump" in Chrysler Shop Notes.*

Oil Filter: On left side of engine above starter.
Servicing—Replace filter at 8000 mile intervals.

Oil Pressure Gauge: Auto-Lite No. G-10875 (not elec).

COOLING

Cooling System: Positive circulation with water pump on front of engine and water distribution tube in cylinder block. Special Deluxe model has by-pass type thermostat (with bypass between outlet on cylinder head and pump inlet) for re-circulation of water through engine with thermostat closed.
Capacity—15 quarts.

Radiator Core Removal & Water Distribution Tube Servicing: *See "Cooling System" in Chrysler Shop Notes.*

Water Pump: Packless type with grease fitting.
See Water Pump Section for complete data.
Removal—Drain cooling system, loosen generator mounting bolts and remove fan belt. Disconnect water inlet hose at pump (and by-pass hose connection on Special Deluxe models). Remove pump mounting capscrews, lift out pump and fan.

Thermostat: In cylinder head water outlet connection. NOTE—By-pass type on Special Deluxe.
Setting—Starts to open at 157-162°F. Fully open at 183-187°F.

Temperature Gauge: Auto-Lite H-11002. Not electric.

CLUTCH

Borg & Beck.....9A7 (Std.), 10A7 (Fleet), 11A6 (Taxi)
Auburn (1948 Part Production).....Model 9251-11

Clutch Identification: 3 pressure plate springs used on Auburn, 9 springs on Borg & Beck.

Borg & Beck Cover Nos. 955 (9A7), 938 (10A7), 931 (11A6).
See Clutch Section for complete data.
Facings (Borg & Beck)—Woven, 2 required.

	Inside Diam.	Outside Diam.	Thickness
9A6	6"	9¼"	.125" (⅛")
10A7	7"	10"	.125" (⅛")
11A6	6½"	11"	.125" (⅛")

Pedal Adjustment: Set pedal to just clear toeboard (stopscrew on lower end of pedal) and set for 1" free travel (adjust nut on connector link at fork). NOTE—Do not disturb turnbuckle on pedal link.
Clutch Over-Center Spring—*See "Clutch Notes" in Chrysler Shop Notes for setting procedure.*

Removal: Remove Transmission (see Transmission Removal below), remove release fork pull-back spring and clutch housing underpan. Disconnect release fork from pivot, withdraw release bearing and sleeve from housing. Mark clutch and flywheel (to insure correct re-installation), remove all clutch cover mounting screws evenly, remove clutch cover assembly and driven member through opening at bottom of housing.

TRANSMISSION

Own Make. All helical gear, constant-mesh, synchro-mesh (Second & High), sliding gear (Low & Reverse).
See Transmission Section for complete data.

Transmission Control: Remote control type with gearshift lever mounted on steering column.
See Transmission Section for complete data.

Removal: Jack up front end of car. Disconnect front universal by taking out bolts in shaft flange (if transmission to be dismantled, loosen flange retaining nut), and rear universal by removing bearing caps on rear axle yoke (wire bearing cups in place to prevent loss of bearing rollers). Disconnect speedometer cable, hand brake cable at brake band, gearshift control rod and selector rod at transmission case. Remove transmission mounting screws in clutch housing, pull transmission straight back to free clutch shaft, then lower transmission and remove from beneath car.
NOTE—When installing transmission, use pilot studs installed in upper mounting screw holes to maintain alignment and prevent springing clutch driven member.

UNIVERSALS

Detroit Universal Series 4283 (Early), 4200 (Late). 4283 is ball & trunnion front, cross type rear. 4200 is ball & trunnion front and rear.
See Universals Section for complete data.

REAR AXLE

Own Make. Semi-floating, hypoid gear type with Hotchkiss Drive.
See Rear Axle Section for complete data.
Ratio (Std.)—3.9-1 (exc. Sta. Wgn.), 4.1-1 (Sta. Wgn).
Ratio (Optl.)—3.54-1, 3.73-1, 4.1-1, 4.3-1, 4.56-1 & 4.78-1 (Export).
Backlash—.006-.010". Screw adjustment.

Removal: Hoist rear end of car. Remove rear wheels. Disconnect brake hose at frame bracket, disconnect lower end of shock absorbers. Disconnect propeller shaft by removing capscrews from bearing caps on rear axle yoke (wire bearing caps in place to prevent loss of bearing rollers). Support axle housing, remove rear spring "U" bolts, lower axle assembly and remove from beneath car.
NOTE—Carrier assembly can be removed without disturbing axle housing by removing axle shafts and taking out carrier-to-housing mounting screws.
Axle Shaft Removal—Remove wheel, hub, and drum assembly (use screw type hub puller—Tool C-675), block brake pedal, disconnect brake line at wheel cylinder, remove axle shaft key, install sleeve (Tool C-745) in oil seal, remove brake support (oil seal mounted in support), pull shaft and bearing (use C-499 puller). NOTE—Use Puller C-293-E to remove bearing from shaft, puller C-748 or C-358 to remove inner oil seal, drift C-201 to install seal.

Axle Shaft Oil Seal: New leather type mounted on brake support (backing plate).
Oil Seal Servicing—*See "Rear Axle" in Chrysler Shop Notes.*

Wheel Bearing Adjustment: Shims between backing plate and axle housing. With wheel and hub removed, check endplay with dial indicator. To adjust, remove backing plate (see above), add or remove shims (furnished .010", .0125", .015", .030" thick) equally at both wheels. **Endplay**—.003-.008".

SHOCK ABSORBERS

Delco—Model 1030-C (Front), 1031-T (Rear).
Monroe—Model K-11148 (Front), K-11149 (Rear).
See Shock Absorber Section for complete data.

FRONT SUSPENSION

Front Suspension: Independent, linked parallelogram type with coil springs and direct acting shock absorbers.
See Front Suspension Section for complete data.
Kingpin Inclination—4¾° to 6° crosswise.
Camber—Positive ¼°. Limits 0° to Pos. ¾°.
Caster—Negative 1° to Positive 1°. No adjustment.
Toe In—0" (0-1/16"). Adjust by turning both tie rods equally.
Steering Geometry—Inner wheel 22½°. Outer 20°.

STEERING GEAR

Own Make. Worm-and-roller type with "push-pull" adjustments. Same as Gemmer design Model 305. NOTE—See Gemmer Model 305 article for data.
See Steering Gear Section for complete data.

BRAKES

Service: Chrysler "Safe-guard" Lockheed Hydraulic type as follows:
Front Wheels—Two-cylinder type (front shoe anchored at bottom and actuated by upper cylinder, rear shoe anchored at top and actuated by lower cylinder).
Rear Wheels—Double anchor type with single double-acting wheel cylinder.
See Brake Section for complete data.
Wheel Cylinders—Single acting type (front), double acting type with straight (1⅛") bore (rear).
Drums—Centrifuse type. Diameter 10".
Lining—Molded Asbestos. Width 2". Thick. 13/64". Length per wheel 21" (front wheels), 18½" (rear wheels).
Clearance—.006" at each end of all brake shoes.

Hand Brake: Independent type. Hand lever actuates band on drum at rear of transmission.
Drum Diameter—6". Cast-iron.
Lining—Width 2". Thickness 5/32". Lgth. 16 11/16".
Clearance—.015-.020" around band.
Adjustment—*See Chrysler Shop Notes.*

MISC. MECHANICAL

CONVERTIBLE TOP CONTROL: Vacuum power type.
See Miscellaneous Section for complete data.

HOOD ASSEMBLY

1939 MODELS

HOOD SIDE PANEL BUMPERS: Eight bumpers, Part No. 500222, installed on front and lower edge of side panels to prevent rattles beginning with following Serial Nos.: P6EB35374, P6EA37719, P8EA23622.These bumpers can be installed on earlier cars as follows: Drill four ¼" holes in each panel at following positions, #1 on lower edge 4⅛" forward from rear edge, #2 11¾" ahead of #1, #3 on lower edge 3 5/16" to rear of front edge, #4 on front edge 3¼" up from lower front corner. Press rubber bumper in each of these holes.

1940 MODELS

FITTING HOOD PANELS: Hoods that are slightly loose at cowl can be fitted snugly by inserting 7/16" flat washer between flange of hood and hinge at each of three attaching bolts located on lower edge of hood at each hinge. This will place more tension on hood when in closed position.

1940 MODELS

HOOD LOCK ADJUSTMENT: Should be made whenever considerable force necessary to lock or unlock hood. Check hood and align so that lock hook is centered on lock bar. Remove hand hole cover and adjust lock stud height so that front of ornament is approximately 1⅝" from hood with hood closed and ornament in released position. Lock studs should incline toward rear of car approximately 7° (lock will not operate properly if angle greater or less than 7°). Stud heights must be equal so that lock bar horizontal and stud nuts must be kept tight (install lockwashers under lower nuts if studs loosen in service). Only light hand pressure should be required to snap lock ornament in place to lock hood. If excessive pressure required after adjustment, check lock ornament for binding and oil pivot pin.

1941-48 MODELS

HOOD LOCK ADJUSTMENT: If lock control button requires considerable effort to release catch, or if hood must be slammed to engage lock, lubricate all parts of lock mechanism. If this does not correct trouble, adjust lock pilot stud by loosening locknut on upper end of stud and turning stud in or out (lower end of stud slotted for screwdriver). Check operation and make certain that stud locknut tightened securely. With correct adjustment, hood should close and lock from a position 12" above the hood catch plate with moderate one-hand motion.

1941 MODELS

HOOD REMOVAL & INSTALLATION: Before removing hood, mark location of hinge on cowl (scribe around hinge with pointed tool) so that hinge can be re-installed in exact same position. Use pry bar to remove hood hinge springs, remove two bolts from hood hinge assembly at right and left side of cowl, remove hood. Hood panels can be dismantled by removing center silver streak and then taking out 14 sheet metal screws holding panels together. Re-install hood in same manner.

Hood Fitting—If hood does not fit tightly at cowl, loosen hood hinge to cowl bolts slightly and drive hinge down, tighten hinge bolts. When installing new hinges, install hinge on cowl, note alignment and whether hinge binds with mounting bolts tight. Shim with washers installed between bracket and cowl, if necessary, so that hinge operates freely, then bolt hinge to hood.

1942-48 MODELS

HOOD SERVICING: Replacing Hood Hinges. Lubricate all rivet joints in hinges with engine oil, install hinge in hood, tightening four outer bolts on each end of hinge reinforcement first and four center bolts last (to avoid straining back of hood and hinge). Place hood and hinge assembly on cowl, start outside bolts on each side and tighten only finger-tight. Lower hood and lock in position, align hood with cowl, doors, and fenders. If nose of hood does not line up with radiator center grille and fender, loosen radiator support bolt nuts and shift entire front end assembly by prying on radiator support (to maintain alignment between back of hood and cowl). Without disturbing position of hood, install and tighten both inside bolts on each side (use punch in one bolt hole to line up holes and start the other bolt). Raise hood and tighten outside bolts on each side. Install hood springs.

Hood Adjustment—Disconnect hood hinge springs, loosen outside bolts on both sides (leave nuts finger tight). Lower hood and lock in place. Loosen inside bolts on both sides. Space hood properly at cowl, rear of front fenders, front radiator grille, and fender assembly. Tighten inside bolts on both sides, then raise hood and tighten outside bolts at both sides. Install hinge springs.

Hinge Spring Removal & Installation—Will be facilitated if special removing tool made up to keep spring extended. Tool consists of open sided cylinder of sheet metal with end plates brazed on (make up from 1/16" thick sheet 3 3/16" wide by 6⅝" long with 3/32" slant at each end, bend in arc of 7/16" radius with open side 1⅝" wide, braze piece on each end). To use this tool, open hood approximately half-way so that spring is stretched, slip tool on spring with end plates between spring coils. Fully raise hood. Spring will remain extended and can be easily unhooked. Leave tool on spring until spring re-installed.

FRONT END SHEET METAL

1936-38 MODELS

FRONT FENDER & RADIATOR REMOVAL: Work on front of engine can be facilitated by removing radiator and front fenders as an assembly. Removal as follows:—Remove hood, side panels, front bumper, drain cooling system and free radiator tie rods at dash. Disconnect headlamp wires at lamps and withdraw from radiator shell. Free fenders from running boards and body, disconnect radiator and front fender support from frame cross member by removing two nuts under center of cross member. Lift off radiator and fenders as an assembly.

1939 MODELS

FRONT FENDER & RADIATOR REMOVAL: To facilitate work on front of engine remove front end assembly as follows: Remove hood side panels, front bumper assembly, fender-to-body and fender-to-frame brace hex head bolts, drain cooling system. Remove 6 stove bolts at top of fender side apron releasing headlamp wiring clips. Disconnect lamp wires at body side of terminal on apron, free wires from apron. Free radiator support by removing nuts on 2 support bolts under center of radiator. Lift off front end assembly as a unit.

1940-41 MODELS

FRONT FENDER & RADIATOR ASSEMBLY REMOVAL:—To facilitate work on front of engine, remove fenders and radiator as an assembly as follows: Drain radiator, disconnect hoses, remove separate hood side panels on 1940 car models only, front bumper assembly, hex head fender-to-body bolts, Fender-to-frame brace bolts, headlamp wires from top side of fender apron and headlamp terminal at body side of terminal, right headlamp wires from back of terminal on right fender side apron, wire harness from radiator, and 2 nuts from beneath radiator support. Lift front end assembly off

1942-48 MODELS

FRONT END SHEET METAL ASSEMBLY UNIT REMOVAL: Front sheet metal, fenders, & radiator core can be removed as a unit as follows: Disconnect wiring assembly and remove fender moulding. Remove fender bolts as follows: 4 (5 on Torpedo) at rear, 3 at rear to rocker panel extension, and 2 fender baffle-to-frame bolts and nuts. Disconnect radiator hoses and hood lock cable. Remove 2 nuts at bottom of radiator support and take off Front End Assembly.

Front End Assembly Alignment—Entire front end assembly should be aligned by inspecting and correcting alignment at each of the following points:

1. **Front Door Alignment at Cowl**—Each front door must be properly aligned in door opening with 3/16" clearance (¼" max.) at point where door, hood, and cowl meet. Move door forward or backward, as necessary, for correct clearance.

2. **Front Fender Alignment at Door**—Rear edge of each front fender should be parallel with front edge of door and have uniform clearance of 3/16". To adjust, remove cowl kick pad, loosen four fender mounting bolts, shift fender forward or backward, raising or lowering front end of fender as required for uniform clearance. NOTE—Fender Cap must be aligned to provide clearance for opening of door. See Fender Cap Alignment following.

3. **Hood Fit at Cowl**—Rear end of hood should have uniform clearance of 3/16" on cowl (at top) and at each front door. Before adjusting, mark original location of hood hinges on cowl, loosen hinge retaining bolts ½-1 turn, shift hood by tapping on hinges. CAUTION—Make certain that lower edges of hinge flange section are parallel on both hinges and that neither tilts down at front. Unequal action of hinges will cause hood to bind and may buckle hinge straps.

4. **Hood Fit at Fenders**—If nose of hood does not line up with center grille and clearance between hood and fenders is unequal, entire front end sheet metal assembly should be shifted by loosening radiator support bolt nuts and prying against radiator support (CAUTION—make certain that hood guide pin and safety catch are properly lined up). If fender clearance insufficient and fender interferes with hood closing, loosen two bolts at fender and radiator support and shift fender away from hood. If fenders are low (excessive clearance at hood edge), pry up on fender and drive up on radiator support (use wood block).

1942-48 MODELS

FRONT FENDER REMOVAL: Disconnect fender, see Front End Sheet Metal Assembly Removal (above), then remove attaching bolts and screws along inner edge as follows: one bolt and nut at end of front splash apron, two sheet metal screws at end of baffle, two bolts and nuts at top of baffle, two bolts

at hood lock plate reinforcement, two bolts from ends of hood lock plate, and two bolts at radiator support bracket. Lift fender off.

1942 MODELS

Front Fender Noise Corrections—May be caused by fender baffle or hood spring contact with fender and should be corrected as follows:

Fender Baffle Clearance—Insufficient clearance between fender baffle and fender at point where baffle attached to fender bottom flange will cause drumming noise on rough roads. Correct by loosening attaching screws and moving baffle so that clearance is ⅛-¼", then retighten screws.

Hood Spring Clearance—Contact between hood coil springs and edge of fender will cause rattles. Correct by removing springs and brackets and bending brackets in a vise so that forward end (to which spring attached) is bent ¼" toward center of car. This will provide greater clearance between bracket and fender.

Front Fender Road Splash Correction—Road splash on front fenders may be caused by water getting on fender at opening near headlamp rim or at front edge of fender cap & should be corrected as follows:

Headlamp Rim Sealing—Remove headlamp rim, clean all foreign material from top of headlamp, apply heavy coating of FS-655 Sealer around upper edge of headlamp, replace rim and clean off surplus sealer.

Fender Baffle Sealing—Splash appearing at fender cap is forced over top of fender baffle and baffle should be sealed by installing piece of door weather-strip as follows: Clean fender and top of baffle with gasoline and wipe dry, apply heavy coat of FS-655 Sealer to piece of door weatherstrip approximately 10" long, coat top of baffle and underside of fender with this sealer, install weatherstrip so as to close this opening above the baffle.

1942 MODELS

RADIATOR GRILLE REMOVAL: Pull parking light bulb out of socket, remove parking light cap by removing two nuts from behind grille, also parking light by taking out two nuts behind grille. Individual parts of grille assembly can then be removed as follows:

Outer Grilles—Remove 2 sheet metal screws on face of grille and attaching bolts as follows: 3 at bottom edge and 2 at each end.

Right or Left Center Grille—Take out 3 sheet metal screws at each side.

Right or Left Grille Moulding—Remove 4 sheet metal screws (2 beneath parking light, 2 at end of center grille), 2 bolts and nuts at top of grille moulding, and 2 screws at top inside end of moulding.

Center Grille Panel—Remove bolt and nut at top and center of panel. Disconnect right and left grille. Remove 2 screws from inner end and 2 top bolts and nuts in each moulding. Free lock plate and slide to rear, lift off center grille panel.

1942-48 MODELS

FRONT FENDER CAP ALIGNMENT: Fender cap mounting permits fore-and-aft and up-and-down adjustment of cap to give proper spacing with front fender. To adjust, loosen sheet metal screw at upper front corner of cap and 2 bolts in each bracket at front and rear end f cap, shift cap for proper fit. If clearance between fender cap and fender is insufficient for door operation, or too great, front fenders (and door) can be shifted in or out. NOTE—to shift door in or out, loosen hinge bolts in body sill, move door, retighten bolts (loosen hinge bolts in door only when adjusting door up-or-down).

Front Fender Cap Removal & Installation: Remove molding along lower edge of fender by disengaging seven clips and removing one bolt and nut at forward end. Remove three bolts along the side, and three screws in flange at forward end, of rocker panel extension (fender cap lower mounting bracket), remove extension from below. Remove bolt and nut in lower front bracket, sheet metal screw in lower rear bracket, and sheet metal screw from inside door flange at upper front corner of fender cap. Lift fender cap up and out. Replace fender cap in same manner and adjust as directed above.

Special Fender Cap Tool—On later Streamliner models, front fender door cap rear support bolt requires use of long thin wrench for access to bolt. This wrench can be made up as follows: Weld 10" piece of ½" x 3/16" strap iron on end of ¼" drive ratchet wrench. Make up ½" socket with ¼" drive by welding together a 5/16" socket with ¼" drive and ½" socket with ⅜" drive (for 1¼" overall length). NOTE—Bolt need only be loosened to point where fender cap flange can be slipped out from under clamp.

1946-47-48 MODELS

REAR FENDER REMOVAL & INSTALLATION: On these cars, the bumper guard, outer section of bumper impact bar, and apron extension must be removed before the fender can be taken off.

New Fender Installation Note—New fenders furnished for these cars do not have the four holes drilled for the bumper apron extension mounting. It is recommended that the fender be installed before drilling and the apron extension then placed in position and used as a template to locate the mounting holes.

ENGINE REMOVAL

1941 MODELS

POWER PLANT (ENGINE & TRANSMISSION) REMOVAL:—Drain radiator and cylinder block, remove hood. Remove Front Fenders and Radiator as a unit (see above). Disconnect and remove selector control rod from transmission, disconnect shifter lever from transmission shifter shaft. Disconnect fuel line at pump, oil pressure gauge line, windshield wiper tube, throttle control rods, temperature gauge engine unit, engine ground strap and all wiring, speedometer cable at transmission, clutch control bracket at flywheel housing, clutch throw-out fork, exhaust pipe at manifold. Disconnect rear universal joint, remove propeller shaft (withdraw shaft from transmission). Disconnect front engine support by taking out two bolts. Attach chain hoist to engine, remove bolts from rear engine mountings, lift engine free of rear support crossmember, pull engine and transmission assembly forward and remove from frame. Re-install in same manner using new exhaust pipe gaskets. Adjust clutch pedal free travel, Safety Shift adjustments, and throttle linkage after engine installed.

1942-48 MODELS

POWER PLANT (ENGINE & TRANSMISSION) REMOVAL:—Remove hood, disconnect headlamp wires, take out radiator (see Radiator Core Removal). Drill out 4 rivets in fender support cross bar (when re-assembling bar use bolts in place of rivets). Disconnect engine front insulator at engine. Remove selector control rod from transmission, disconnect shift lever from transmission shifter shaft. Disconnect gas line from fuel pump, oil pressure gauge line, windshield wiper tube from manifold, throttle control rods, temperature gauge engine unit from head, engine ground strap, all wiring at generator and starter, etc., speedometer cable at transmission, clutch control bracket at flywheel housing, clutch throw-out fork, and exhaust pipe at manifold. Disconnect rear universal joint and remove propeller shaft (withdraw shaft from transmission). Disconnect front engine support (take out 2 bolts). Attach chain hoist to engine, remove bolts from rear engine mountings, lift engine free of rear support cross member, pull engine and transmission forward and remove from car. NOTE—When re-installing Power Plant, reverse Removal Procedure given above. Use new exhaust pipe gaskets. After engine installed, carefully adjust Safety-shift, Clutch Pedal, and Throttle Linkage.

ENGINE MOUNTINGS

1940-48 MODELS

FRONT ENGINE INSULATOR REMOVAL: Remove splash shields in back of radiator, disconnect exhaust pipe, remove two bolts from front engine to mounting support, jack engine up enough at front end for access to insulator. Clean dirt off mounting from below, remove two screws holding mounting on frame, remove mounting. Re-install in same manner and tighten all mounting bolts securely.

1942-47 Models. Front insulator redesigned to provide clearance for new rebound clamp which is assembled over top of insulator. Movement of engine does not effect parts since insulator clears clamp. Insulator and clamp can be disassembled by clamping exposed ends of insulator with 'C' clamp. This new clamp should not be used on earlier models.

1940 MODELS

REAR ENGINE SUPPORT INSULATOR RE-INFORCEMENT PLATE: On some cars rear support insulators loosen from frame (insulator-to-frame bolt self-locking nuts gouge into washers). New hardened reinforcement plate #504992 (replacing washers) and longer bolts #120758 used in production starting with following serial numbers:
Special Six—P6HA-5026, L6HA-1976, C6HA-1467.
Deluxe Six—P6HB-17109, L6HB-4067, C6HB-3165.
Deluxe 8—P8HA-8047, L8HA-2425, C8HA-1863.
Torpedo 8—P8HB-5440, L8HB-1969, C8HB-1541.
NOTE—This plate can be installed on early cars.

ENGINE EXCHANGE

1946 MODELS

NUMBERING OF CYLINDER BLOCK & PISTON ASSEMBLIES: All partial engine assemblies and cylinder blocks fitted with pistons will be numbered in production after Sept. 17, 1946. Numbers are stamped in pad on left side of cylinder block at rear (Serial No. pad on left side at front end is left blank). First Nos. are as follows:

Six Cylinder Engines—S-6-5001
Eight Cylinder Engines—S-8-5001.

NOTE—Nos. 1001 to 5000 will be used to designate partial engine assemblies and cylinder blocks prior to beginning date (when required).

C NTINUED ON NEXT PA E

C NTINUED FROM PRECEDING PA E

CYLINDER HEAD

ALL MODELS

CYLINDER HEAD INSTALLATION: Use Torque Indicating Wrench to tighten cylinder head capscrews, tighten in correct sequence as shown in the diagram. Cast Iron heads should be tightened cold and rechecked after engine has been run sufficiently to bring all parts to normal operating temperature.

Tightening Torque—See Tightening (Torque Wrench) Specifications below.

PONTIAC 6

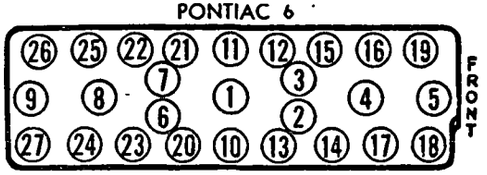

PONTIAC 8

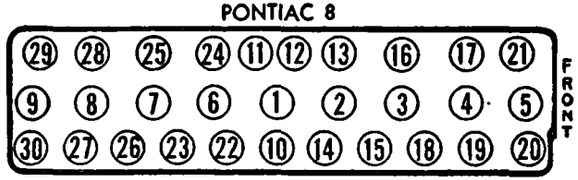

TIGHTENING (TORQUE WRENCH) SPECIFICATIONS

ALL MODELS

	Ft. Lbs.		In. Lbs.
Cylinder Head Capscrews	60	—	720
Main Bearing Cap Screws	85	—	1020
Connecting Rod Bolts	45	—	540
Flywheel to Crankshaft Bolts (6)	105	—	1260①
Flywheel to Crankshaft Bolts (8)	70	—	840①
Lower Control Arm Pin & Bar Bushings	200	—	2400

①—On 1946-48 models with self-locking bolts (no lockwashers), torque should be 100 ft. lbs. or 1200 in. lbs.

ORIGINAL BORE & PISTONS

1937-48 MODELS

ORIGINAL BORE & PISTON SIZES: Original bore sizes, and size of pistons installed in each cylinder bore, may be determined by letter stamped on piston head and on top face of cylinder block. Piston sizes graduated in .0005" steps as follows:

1937-40 Models

Piston & Engine Mark:	Six—Piston Size—Eight	
'A'	3.4355"	3.247"
'B'	3.436"	3.2475"
'C'	3.4365"	3.248"
'D'	3.437"	3.2485"
'E'	3.4375"	3.249"

1941-48 Models

Piston & Engine Mark	Six	Eight
'A'	3.5605"	3.247"
'B'	3.561"	3.2475"
'C'	3.5615"	3.248"
'D'	3.562"	3.2485"
'E'	3.5625"	3.249"

PISTONS

1937-48 MODELS

REPLACEMENT PISTONS: Standard Size. Furnished in following sizes for replacement of Standard Production Pistons listed above. Sizes and part numbers for each model as follows:

1937-38 Models

Part No. (6)	Size	Part No. (8)	Size
496949	3.4355"	549628	3.247"
496950	3.4365"	549629	3.248"
496951	3.4375"	549630	3.249"

1939-40 Models

Part No.	Size	Part No.	Size
503045	3.4355"	503048	3.247"
503046	3.4365"	503049	3.248"
503047	3.4375"	503050	3.249"

1941 Models

Part No. — Six — Size		Part No. — Eight — Size	
505036	3.5605"	503048	3.247"
505037	3.5615"	503049	3.248"
505038	3.5635"	503050	3.249"

1942-48 Models

Part No. — Six — Size		Part No. — Eight — Size	
507554	3.5605"	503048	3.247"
507555	3.5615"	503049	3.248"
507556	3.5635"	503050	3.249"

First size covers 'A' and Low Limit 'B' production pistons. Second size covers High Limit 'B', all 'C', and Low Limit 'D' pistons. Third size covers High Limit 'D' and all 'E' pistons.

IMPORTANT 6 CYL. PISTON NOTE—1941 type pistons must not be used on 1942 engines. If 1942 type pistons used on 1941 engines, install 1942 type piston rings and piston pin also.

Oversize Replacement Pistons:—Finished pistons furnished in following oversizes: .005", .010", .020", .030".

NOTE—All factory replacement pistons held to uniform weight within 1/16 oz. and all oversize pistons up to .030" oversize are same weight as standard pistons.

CAUTION—Factory replacement pistons electroplated after being finished to size and must not be ground.

ALL MODELS

PISTON OIL RING GROOVE DRAIN HOLE CHANGE: It is recommended that whenever rings are being installed on old type pistons (with 10 oil drain holes in oil ring groove) that 10 additional oil drain holes be provided on these pistons. New type pistons (with 20 oil drain holes in oil ringe groove) have been used on 1942 6 Cyl. cars and both 6 Cyl. and 8 Cyl. cars beginning with 1946 production.

PISTON RINGS

1936-48 MODELS

REPLACEMENT PISTON RINGS: Regular Type. These rings should be used on engines where out-of-round does not exceed .003".

Sealed Power Type—Special piston ring sets furnished under Group No. 0.643 may be used where out-of-round is within limits of .003" to .009".

Piston Ring Note: 1942 6 Cyl. Piston Rings. These rings tin-plated to prevent scuffing.

CAUTION—Do not use 1941 type rings (not plated) in 1942 engines. 1941 type rings may cause scuffing.

1946-48 Piston Rings—Rings are plated type.

PISTON PINS

1936-48 MODELS

PISTON PIN FITTING: Pin case-hardened & ground (out-of-round .0002" max.). To install pins, coat inside of piston bosses with graphite grease, insert slotted end of pin in lockscrew boss and press in place. Pressure to install pin in piston should be 200-300 lbs. If necessary, pin holes in piston can be sized with expansion reamer to secure this fit.

CAUTION—Pins will be noisy if fit in piston is too loose, and pin bosses may be fractured when installing pin if fit in piston is too tight.

NOTE—Car manufacturer recommends use of the following tools (in conjunction with arbor press): hydraulic cylinder & gauge (J-1325-SA-1), piston rest block (J-1325-1), piston pin remover (J-1325-2), piston skirt plug (J-1325-3).

1941 Engine Note—Pins are installed with slot to one side (toward bottom on previous models) and new self-locking pin lockscrew is used.

1942 Engine Note—Pins are slotted on side (similar to 1941) but slot is shorter and is concealed by piston when installed. Do not interchange pins, use 1942 type pins only in 1942 type pistons.

1946-48 Engine Note—Pins are shot-peened before final grinding and lapping. Slot same as for 1942.

1936-48 MODELS

PISTON PIN BUSHING: New Type Service Bushings. New type aluminum bronze bushings which are more resistant to corrosion furnished for service as follows: Part No. 505320 (6), 505321 (8). May be distinguished from previous bronze type by lighter color and less coppery appearance (bushings darken and may require polishing or buffing to bring out difference in color).

Installation—Press bushings in place, making sure that 3/32" groove between bushings aligned with oil hole in rod. Burnish bushings securely in place with burnishing bar. Then hone bushings for .0004-.0006" (1941 on), .0003-.0005" (1940 & earlier). The car manufacturer recommends use of following tools for servicing pin bushings: J-540-1—Bushing Remover. J-540-2—Bushing Replacer (tool fitted with shoulder which prevents bushings from being pressed too far in or from collapsing while being installed), J-516 Burnisher Bar, and J-526 Burnisher Block. NOTE—These tools are used in conjunction with an arbor press using the J-526 Burnisher Block as a support for the rod on the press.

CONNECTING ROD & BEARINGS

1937-48 MODELS

CONNECTING ROD LOWER BEARING: Removable type. No adjustment. Shims should not be used or bearing caps filed. When replacing bearings check crankpins. If scored or out-of-round and taper exceeds .001" crankshaft should be replaced.

Fitting—Use .0015" brass shim ½" wide and ⅞" long. Remove cap and lay shim across bearing. Tighten cap (with shim in place). Check bearing fit as follows:—Rod should be locked when testing end movement by hand but should slide on crankpin when tapped lightly with hammer. With shim removed rod should move freely on pin. If rod can be moved by hand with shim in place install .001" undersize bearing.

Installation—Bearing shells fitted with tangs (Six—one to each edge of bearing, Eight—two on each edge). Install cap with tangs on opposite sides of rod (Six), on opposite ends of crankpin (Eight).

CRANKSHAFT & MAIN BEARINGS

1936-48 MODELS

MAIN BEARINGS: Removal. Remove the bearings with caps removed and crankshaft in place by inserting suitable tool (see NOTE following) in oil hole in shaft and rotating shaft in usual direction.

NOTE—Bearing Removal Tool can be made from ⅛"x1½" cotter key. Bend each end of key up 5/16" to make ⅝" long base. With this as a base, bend key to form 59° angle. With this tool inserted in place end will just protrude far enough to engage bearing.

Installation—Insert plain edge of bearing in indented side of bearing support, slowly rotate crankshaft until bearing seated.

1937-48 MODELS

FITTING MAIN BEARINGS: If the crankshaft is badly scored manufacturer recommends that it be replaced. To check bearing fit, use .002" brass shim ½" wide and 1" long. With cap removed place shim across bearing. Tighten cap (with shim in place). Test bearing fit by rocking flywheel by hand. **Do not rock flywheel more than 1" in either direction** or bearing may be damaged by shim. If crankshaft locks with shim in place and rotates freely with shim removed bearing size correct. If shaft moves with shim in place use .001" undersize bearing.

IMPORTANT—Do not file main bearing caps. These caps are not furnished separately.

1939-48 SIX CYL. MODELS

REAR MAIN BEARING OIL SEAL: Seal consists of oil slinger on crankshaft to rear of rear main bearing operating in groove formed in block and cap (drain hole in cap returns oil to crankcase) with asbestos seal fitted in separate groove at rear.

1939 Note—One groove only with retainer fitted in front portion. Use retainer half with tangs in cap.

1946-48 Note—Edges of seal groove in cylinder block and rear main bearing cap are chamfered to reduce pressure between seal and crankshaft and prevent pinching of the seal. One end of the groove in the bearing cap is recessed and a portion of the seal should be worked into this recess to prevent the seal turning in service.

Installation—With crankshaft out of engine and bearing shells removed, press packing in rear groove in block, seat packing using Tool J-1045 (large diameter to front of engine) by tapping tool with lead or rawhide hammer. With tool in place, cut each end of seal flush with bearing cap seat. Repeat operation for cap. Install crankshaft & bearings.

VIBRATION DAMPENER

1936-48 MODELS

HARMONIC BALANCER SERVICING: No service operations are required and balancer should be serviced by replacement.

Removal and Installation—Remove front assembly (see Front Fender and Radiator Removal above). Retaining screw which secures balancer in place, can be removed by using 13/16" (6), 1" (8) socket wrench and turning ff. Pull balancer with suitable puller (No. J-496). NOTE—1936-38 balancer is secured by crank nut. This nut can be removed by inserting ¾" hexagonal bar in nut and turning ff.

CAMSHAFT & BEARINGS

1936-48 MODELS

CAMSHAFT: Removal. Remove Front Fender and Radiator Assembly (see above), remove fan belt, fan, and harmonic balancer (use Puller J-496). Support front end of engine with jack and remove front engine support, timing chain cover, chain, and sprockets. Remove cylinder head and valve covers, take out valves and lifters (lifters are barrel type and can be removed from above with valves out). Remove oil pump, fuel pump, and distributor. Take out screws and remove camshaft thrust plate, withdraw camshaft at front of engine. Re-install camshaft in same manner making certain that timing chain cover is properly centered (see Timing Chain Cover and Oil Seal data below). After camshaft installed, check Valve Timing, Ignition Timing, and Tappet Clearance.

Bearing Servicing—Use special tool J-550 to remove and install camshaft bearings (rear bearing on Eight must be pulled out toward front as expansion plug at rear prevents driving on bearing from rear). Use driver to install all bearings making certain that oil hole in bearings is lined up with hole in block (holes are at bottom of bearings). Then line ream all bearings to finished sizes as follows:

Bearing Finished Size:	Six	Eight
#1 (Front)	1.9950-1.9955"	1.9950-1.9955"
#2	1.9637-1.9642"	1.9637-1.9642"
#3	1.9325-1.9330"	1.9325-1.9330"
#4	1.9012-1.9017"	1.9012-1.9017"
#5		1.8700-1.8705"

1937-39 EIGHT CYL. MODELS

CAMSHAFT SPROCKET REPLACEMENT: On all 8 cylinder engines for 1937-38 & 1939 before No. 8-188892; a camshaft sprocket with a short hub and a spacer washer was used. New type camshaft sprocket, Part No. 503454, is furnished for service and when this new sprocket installed on above cars, **spacer washer should be discarded.**

1936-48 SIX CYL. MODELS

CAMSHAFT SPROCKET IDENTIFICATION: Two different camshaft sprockets furnished for replacement on these models. Sprockets can be identified by part no. cast on sprocket and by width of teeth:

Used On:	Part No.	Tooth Width
1935-36 Cars	497703	⅝"
1937-48 Cars	507044	¾"

TIMING CHAIN

ALL MODELS

TIMING CHAIN REPLACEMENT: Timing chain must be installed "endless" with both sprockets off the engine as directed below. CAUTION—Any attempt to install the chain by removing only one sprocket will result in breaking of the chain.

Timing Chain Removal—Remove Front End Sheet Metal Assembly as a unit, remove fan belt and fan, remove Harmonic Balancer (see Vibration Dampener). Support front end of engine with support jack, remove front engine support (see Front Engine Insulator Removal), remove timing chain cover, timing chain and sprockets.

Timing Chain Installation—Mesh sprockets in chain with timing marks on both sprockets lined up for correct valve timing (see Camshaft Setting on car model pages), install both sprockets together being careful not to place any side strain on chain. Re-install timing cover (see Timing Chain Cover Oil Seal data below), front engine support, harmonic balancer, fan and fan belt, and front end sheet metal assembly. NOTE—See Front End Sheet Metal Assembly data for alignment directions.

1936 & EARLIER 8 CYL. MODELS

TIMING CHAIN & SPROCKET REPLACEMENT: Due to exhaustion of stocks of original replacement parts for these models (P833 through 36), whenever any part of the camshaft drive is to be replaced (Crankshaft Sprocket, Camshaft Sprocket, and Timing Chain) the following parts **must be installed as a unit:**

Part	Replacement Part No.
Crankshaft Sprocket	497702
Camshaft Sprocket	497703
Timing Chain	497704

CAUTION—These parts are not interchangeable individually with parts originally used or furnished

1936-48 MODELS

TIMING CHAIN COVER & OIL SEAL: Consists of cork seal and spring assembled on the crankshaft in front of the chain sprocket so that the cork bears against the inner face of the timing chain cover.

Installing New Cork Seal—Coat seal with graphite lubricant, rubbing lubricant well into the face of the cork, before installing seal in engine. This lubrication necessary to prevent noise at this point.

Installing Timing Chain Cover—Use J-546 tool to center timing chain cover before screws tightened.

1939 MODELS

TIMING CHAIN COVER OIL SEAL: Squeak Correction. If seal becomes dry forming glazed surface, squeal may develop due to seal rubbing on chain cover. This may be corrected by squirting oil and graphite fluid on seal. If seal must be replaced, rub graphite into seal thoroughly. Also, seal may be drilled with four or five ⅛" holes 3/16" deep. These holes should then be packed with graphite.

1940 MODELS

TIMING COVER NOSE: Crankshaft balancer hub diameter reduced .006-.007" during production to eliminate noise between hub and timing cover oil seal due to insufficient clearance. Hubs on early cars can be turned down to diameter of 1.866-1.868".

OIL PUMP

1936-48 MODELS

OIL PUMP SERVICING: Pump Removal & Installation—Turn crankshaft so that #1 piston on top dead center of compression stroke with distributor rotor at #1 firing position. Remove steering idler arm and right hand engine side pan. Take out pump mounting bolts and remove pump. When installing pump, see that prick punch mark on pump is down, install pump without disturbing distributor shaft position, recheck Ignition Timing.

Pump Specifications—Pump shaft bearing clearance .0005-.002". Shaft and body end clearance .002-.006". Idler gear bearing clearance .0005-.002". Driving gear backlash .003-.004". Driving gear and idler gear backlash .006-.008". Driving gear and idler gear clearance .002-.006".

1941 Pressure Relief Valve—New type. Consists of spring loaded disc valve located in the pump body beneath the idler gear. When pressure exceeds 40 lbs., disc is forced off its seat and oil is by-passed back to inlet side. Valve is not adjustable.

C NTINUED N NEXT PAGE

C NTINUED FROM PRECEDIN PAGE

OILING SYSTEM

1941-48 MODELS

CRANKCASE OIL CLEANER: Pontiac type 'Controlled flow' design consisting of settling chamber in oil inlet and filter screen housing in crankcase.

NOTE—Beginning with 1942 engines, oil cleaner has greater capacity (1 pint 1941, 1 quart 1942 on).

Servicing—No servicing required but Oil Cleaner should be removed and settling chamber cleaned out when oil pan removed for other work, or if car has been upset or turned over.

1941 Cleaner Removal & Installation. To remove cleaner with oil pan off engine, disconnect oil suction pipe from crankcase as a unit. Take out attaching screws and remove cleaner from bracket and suction pipe. Remove snap ring on bottom of cleaner and remove oil screen. Take out ten screws which mount cleaner head in housing shell, remove settling chamber from housing shell. Wash all parts in gasoline and scrape sediment from settling chamber. When reassembling cleaner, see that all gaskets in good condition or use new gaskets, turn head and housing shell upside down, insert two screws and place gasket inside shell, then set settling chamber in place and start screw threads, turn assembly right side up and install remainder of screws, tighten all screws securely. Install strainer, snap ring, and suction pipe.

1942-48 Removal & Installation. To remove oil cleaner with oil pan off engine, disconnect oil suction pipe and remove oil cleaner assembly from engine. Remove screen assembly bottom cover by taking out 2 screws in bottom plate. Remove 12 screws which mount cleaner head in housing shell, remove settling chamber from housing shell. Wash all parts in gasoline and scrape sediment from settling chamber. When re-assembling cleaner, see that all gaskets in good condition or use new gaskets, turn head and housing shell upside down, insert 2 screws and place gasket inside shell, then set settling chamber in plate and start screw threads, turn assembly right side up and install remainder of screws, tighten all screws securely, assemble all other parts. Fill cleaner with fresh oil and install

CAUTION—Fill cleaner with oil before assembling to crankcase (avoids running bearings without oil when engine first started).

1939-40 MODELS

CRANKCASE OIL CLEANER INSTALLATION ON PREVIOUS MODELS: The 1941 type built-in permanent oil cleaner can be installed on 1939-40 Six Cylinder Models, and 1940 Eight Cylinder Models,

NOTE—Parts for this installation are furnished in Oil Cleaner Package, Part No. 504192.

1941-48 MODELS

OIL FILLER CAP & CRANKCASE VENTILATOR CLEANER:—All oil filler caps (Std. & Heavy Duty type) serve as inlet for crankcase ventilating system and must be correctly installed on engine. Install cap **with seam on side engaging groove in top of oil filler pipe** and opening in cap toward fan.

Standard Filler Cap—Inspect at 1000 mile intervals and clean when necessary. Wash copper gauze filter element in gasoline, re-oil by dipping in engine oil.

Heavy Duty Filler Cap—Used on cars with heavy duty (oil bath) type carburetor air cleaner. Similar to the standard cap except for greater cleaning capacity. Service in same manner as standard cap and always clean outlet pipe air cleaner at same time.

Crankcase Ventilator Outlet Pipe Air Cleaner—Consists of a copper gauze filtering element in an elbow on the crankcase outlet pipe. Clean in same manner as filler cap (above). NOTE—No outlet pipe cleaner used on cars with Standard Filler Cap.

1940 MODELS

CRANKCASE VENTILATOR OUTLET PIPE CLEANER: The small ventilator filter element installed in lower end of crankcase ventilator outlet pipe should be removed and discarded (this cleaner will restrict outlet and interfere with crankcase ventilation if not serviced regularly). NOTE—For cars operated in extremely dusty territory, manufacturer recommends that 1941 type Heavy Duty outlet pipe & filter be used (see 1941 data above).

OIL PAN REMOVAL

1939-40 EIGHT CYL MODELS

OIL PAN REMOVAL: 39-28 & 40-28. For access to front oil pan screws, remove Front Engine Insulator (see below) and rest front of engine on steel block (5¼" long, 1½" wide, 15/16" high).

Front Engine Insulator Removal—Remove hood side panels, disconnect exhaust pipe, take out 2 front engine to mounting bolts, raise engine with jack until insulator accessible, remove excess dirt from mounting, take out 2 mounting-to-frame screws, lift off mounting together with 'U' shaped shield. When reinstalling, tighten mounting bolts

Torpedo Eight 40-29—For access to front oil pan screws, take out Front Engine Insulator-to-Radiator Support Bracket screws, jack up engine and allow it to rest on 1" board.

1941-48 EIGHT CYL. MODELS

OIL PAN REMOVAL: All Eights. For access to attaching screws at front end of pan, remove radiator splash aprons as follows: Remove screws attaching aprons to front cross-member and radiator support, remove aprons from inside engine compartment by lifting aprons out with a circular motion (rotate right apron to right, and left apron to left, as they are being lifted out).

RADIATOR

1939-48 MODELS

RADIATOR CORE REMOVAL: Drain cooling system, disconnect radiator hoses, take out 3 capscrews at each side of radiator core and tip fan shroud back against front of engine. Lift radiator core up and out of shell, rotating fan to clear radiator outlet.

Water Distributing Tube Servicing—Consists of a metal tube installed in the engine block with closed end toward rear of engine which distributes cooling water through block. If engine overheats, check tube for corrosion or rust and replace tube. Install tube with closed end toward rear.

1946-48 Note—Water distributing tube beginning with 1946 engines is made of Brass to prevent corrosion.

CLUTCH NOTES

1935-38 MODELS

REPLACEMENT CLUTCHES (1942 TYPE): Car manufacturer has developed special Clutch Fork Ball Support Stud which makes it possible to install 1942 type Clutches on 1935-38 car models. **All the parts listed below must be installed as an assembly.**

1935-36 Models

Part	Part Number — 6 Cyl.	8 Cyl.
Clutch Assembly	753991	753991
Clutch-to-flywheel Bolt	500177	500177
Heavy Lockwasher (3/8)	108580	108580
Driven Plate Assembly	508403	505473
Flywheel Assembly	509018	509018
Clutch Fork Ball Support Stud	509017	509017
Starter-to-Housing Spacer	509019	509019

1937-38 Models

Clutch Cover Assembly	753991	753991
Driven Plate Assembly	505472	505473
Flywheel Assembly	①	503496
Clutch Fork Ball Support Stud	508990	508990

①—503496 (Up to Eng. No. 321922).
503495 (After Eng. No. 321923).

1936-40 MODELS

CLUTCH PILOT BUSHING: New type pilot bushing #412562 (oilless type) available for 1935 to 1940 cars. This can be used in place of regular production roller bearing where hole in crankshaft worn. Bushing can be driven into worn hole to give snug fit and provides a smooth running surface for shaft.

Installation—Soak bushing in light engine oil, place bushing on end of driver (Tool J-1329-P), insert tool through hole in flywheel housing and drive bushing in place making certain that it bottoms in hole. Manipulate driver out of bushing. NOTE—Use clutch pilot bushing remover (Tool J-1448-1).

1946-47-48 MODELS

CLUTCH RELEASE BEARING & SUPPORT: Release bearing is new factory lubricated and sealed ball bearing type. Bearing is piloted on tubular support mounted in clutch housing and entirely enclosing transmission main drive gear shaft. This tubular support is installed and removed through rear face of clutch housing (with transmission off car) and a paper gasket is used between the support flange and the face of the housing. An oil slinger is provided on the main drive shaft ahead of the bearing in the transmission and a felt oil seal is installed against shoulder ahead of oil slinger retaining ring (in 1946 seal originally installed in groove on shaft).

Release Bearing Support Removal—When removing support, **do not pry on flange in clutch housing,** tap support out of housing from inside (do not strike tubular portion of support, tap bell end of support at rear lightly with soft hammer).

Bearing Servicing—Do not wash bearing in solvent or attempt to remove grease (bearing is factory-lubricated and sealed). Check fit of bearing on tubular support. Bearing should not bind or have excessive clearance (see Release Bearing Noise Correction Note below).

1946 MODELS

CLUTCH RELEASE BEARING NOISE CORRECTION: May be caused by excessive clearance of release bearing on support tube allowing bearing to move on tube, or by excessive run-out of clutch release fingers. Correct these conditions as follows:

Clutch Release Bearing Support—On cars with first type Release Bearing Support, Part No. 1308585 with tubular section diameter of 1.355-1.357", replace this bearing support with new type, Part No. 509158 with tubular section diameter of 1.366-1.371". Increased diameter of later type support will reduce excessive clearance of bearing on support and prevent bearing moving on tube.

Clutch Release Finger Runout—Maximum permissible runout of fingers is .030" on a 1 15/16" diameter circle (check with a dial indicator). NOTE—Release fingers are integral part of the diaphragm

1937-46 MODELS

CLUTCH & BRAKE PEDAL MOUNTING CHANGE: To Correct Pedal Movement caused by Shaft Rotation. On cars on which clutch and brake pedal shaft is retained by a straight grooved pin driven through the shaft into the bracket, this pin can be replaced by new type bolt and nut which will retain shaft more securely and prevent any movement of one pedal when the other pedal is depressed. Parts required for this installation are as follows:

¼"-28 x 1¾" Hex. Head Bolt	123762
Bolt Nut	120367
Flat Washer	120392
Lock Washer	105109

Install head of bolt at bracket, place plain washer, lockwasher, and nut on bolt at shaft.

NOTE—This type shaft mounting used on 1946 models (after first cars).

1938 MODELS

CLUTCH HELPER SPRING: Removal and Installation—To remove assembly, disconnect pedal-to-cross shaft rod (allowing pedal to rest on floorboard with spring extended) and remove strut from pedal. Disconnect opposite end and remove from car. To assemble unit off car, oil lubrication felt and place in spring, install cup on pedal side of spring, insert strut with lubrication felt on top side, install cup on opposite end, compress cup and spring until cotter pin can be inserted through hole in strut holding assembly together. Lubricate pedal end of strut with lubriplate and install assembly on car. Remove cotter pin from strut and assemble connector link to pedal.

1939 MODELS

CLUTCH CHATTER CORRECTION: Clutch chatter may develop due to release bearing being off-center with release bearing plate in clutch assembly. This condition caused by too much clearance between clutch fork guide plate flanges and opening in clutch housing. To correct proceed as follows: With transmission off car, release bearing off-center condition can be checked by viewing through rear opening in housing. Remove clutch fork guide plate, center release bearing with bearing plate in clutch cover to align clutch fork, check fork clearance at guide plate, weld bar shims on outside of guide plate flanges until clutch fork alignment maintained. NOTE—On cars not equipped with flanged guide plate (Part No. 501871), replace part and make sure it does not move in housing.

1940 EIGHT CYL MODELS

CLUTCH SLIPPING CORRECTION: Starting with engine number 8-217982 clutch cover spring tension has been increased from 1200 to 1400 lbs. to overcome clutch slippage and consequent damage to facings due to regularly starting car in second gear with excessive throttle opening. Car manufacturer recommends that new style clutch cover and pressure plate (Part No. 753615) be installed whenever clutch damage found due to this condition.

1940 MODELS

CLUTCH PEDAL RATTLE CORRECTION: Due to endplay in countershaft lever as pedal depressed caused by shrinkage of felt at each end of shaft. To correct, leave felts on but install extra felt No. 502099 on frame end of shaft and soak all felts in engine oil. IMPORTANT—Oil felts regularly.

1939 EIGHT CYL. MODELS

CLUTCH HOUSING REMOVAL & REPLACEMENT: To remove clutch housing, the housing must be turned slightly and worked around until one end slides over frame cross member and clears toeboard. On some cars housing can be forced past toeboard if clearance insufficient.

PROPELLER SHAFT

1937-38 MODELS

FRONT PROPELLER SHAFT BEARING: Mounted in rear end of front propeller shaft housing.

Checking—Overhaul assembly if oil leakage excessive or when shaft play exceeds .008" (measure by dial indicator mounted on housing, use 20-30 lbs. lifting force on shaft). With assembly dismantled, check for worn teeth on shaft and coupling, leaky oil seals. Replace worn parts.

Disassembly—Wire front universal joint trunnions together, disconnect rear propeller shaft at front universal joint, take out mounting screws in housing flange at rear of transmission case, pull shaft and housing assembly back to disengage coupling, remove from below at front. Take out universal joint flange capscrew, press shaft out of flange, remove snap ring on shaft, pull shaft out toward front. Press bearing and oil seals out toward rear (use tool made of 13/16" diameter pipe 18" long).

Assembly—Press new bearing in at rear end against shoulder in housing, install leather oil seal (lip toward bearing), offset washer (raised center portion to rear), and retainer (soak retainer felt in oil first) so that distance from retainer to end of housing is 1 9/16". Complete assembly by reversing disassembling directions above. NOTE—Manufacturer recommends use of tool J-693 to install bearing and oil seals, and J-1086 cap on end of shaft to prevent damage to oil seals when shaft installed.

Installation—When installing assembly on car, place oil filler plug on left side and slightly below center line, fill with trans. lubricant to plug level.

ACCELERATOR LINKAGE

1940 MODELS

ACCELERATOR PEDAL STICKING: Causes engine to idle or run faster than normal. To correct this complaint, enlarge bolt holes in accelerator pedal cross-shaft mounting brackets with portable drill so brackets will align with shaft when reinstalled. Oil shaft at regular lubrication periods. Check to see that pedal rod has clearance at hole in toeboard and that rubber bellows on rod is not jammed in toeboard hole. On Torpedo 8, make certain that correct accelerator pedal #504294 (9⅜" long) installed.

ELECTRICAL SYSTEM NOTES

1942 MODELS

ELECTRIC SYSTEM SHORT-CIRCUIT CORRECTIONS:—Defroster Switch Shorting on Early 1942 Cars—On first 3000 cars with Underseat Heater Defrosters, stop built into heater control mechanism may be damaged by turning heater air button in clockwise direction with excessive force which will allow connecting link to contact heater panel light switch and cause short-circuit. Correct by installing new type positive stop lever No. 508118.

Tail Light Wire Breakage on 1942 Station Wagons. Wire is wedged in tail gate but is free to slide in hole in body sill when tail gate is opened. Ice or other obstruction preventing wire movement in body sill hole will cause wire to break when tail gate is opened. Correct by enlarging groove in tail gate to ⅝"x⅝" to allow free movement of wire, draw wire through hole in body sill to allow sufficient slack and wedge wire in body sill hole with wooden plug coated with FS-655 sealer. Wire will slide in gate.

1946 MODELS

CIGAR LIGHTER SHORT-CIRCUIT CORRECTION: Caused by Cowl Ventilator handle cutting into cigar lighter feed wire. Check open position of cowl ventilator, make certain that stop on handle is sufficiently high to prevent handle moving beyond open position and cutting cigar lighter lead. Correct ineffective stops by drilling a #10 (.193") hole through the handle at the original stop point and installing fillister head machine screw (No. 100659), lockwasher (No. 138481), and nut (No. 120614) in hole.

1946 MODELS

CIGAR LIGHTER BINDING CORRECTION: Streamliner Models. May be caused by misalignment of hole in instrument panel and hole in mounting bracket behind panel causing cigar lighter to stick in engaged position. Correct by installing special spacer, Part No. 509286, on mounting screw between instrument panel and bottom of bracket.

1946 MODELS

BACK-UP LIGHT SWITCH CORRECTIONS: Faulty Operation. May be caused by bending of switch support by over-travel of gearshift lever on first cars with No. 5933752 switch support. Correct by installing new type flexible Switch Support, Part No. 509257, and Switch Actuating Stop, Part No. 509258.

NOTE—New type Back-up Light Switch, Part No. 5936850 (with longer plunger) replaces No. 5933751.

Short-circuits causing Blown Fuses—May be caused by plastic tip of switch plunger cracking off on first type switches allowing plunger insert to short on switch stop. Install new switch No. 5936850.

1942-46 MODELS

FAULTY HORN OPERATION: Cars with Deluxe Steering Wheel. Failure of horn to blow, or slight shock noticed when pressing horn ring, may be caused by fact that horn circuit not completed to ground through horn contacts in steering wheel hub (pilot hole in hub out of alignment with metal cup insert so that coil type ground spring does not contact cup). Correct by installing two special ground plates, No. 509553, under sponge rubber ring.

NOTE—These ground plates installed on late 1946

Horn Ring Rattles (Cars with Deluxe Steering Wheel)—Caused by Sponge Rubber Separator, Part No. 507722, acquiring permanent set with 1/16-1/8" reduction in height. Correct by replacing separator.

1948 MODELS

STARTER CLICKING NOISE CORRECTION ON HYDRA-MATIC DRIVE CARS: If clicking noise heard when starter engaged on early Hydra-Matic Drive cars, it is due to ends of torus cover-to-flywheel bolts striking starter clutch cover (¾" long bolts were used, also lock washers broke on some bolts). To correct, replace damaged starter clutch assembly (No. 1873789) and install set (30) of new shorter torus cover-to-flywheel bolts (No. 511849). Remove flywheel pan, replace bolts one at a time (tighten to 30 ft. lbs.) so as not to disturb cover to flywheel seal.

MODEL IDENTIFICATION

SERIAL NUMBER:—First number (36-26A) 6BA-1001, (36-26B) 6BB-1001. On top of left frame siderail in front of steering gear under engine hood.

ENGINE NUMBER:—First number—6-84,001. Stamped n top left hand corner of block.

TUNE-UP

COMPRESSION:—Ratio 6.2-1. Pressure 149 lbs. at 1000 R.P.M. or approx. 106 lbs. at cranking speed.

VACUUM READING:—Gauge should show steady reading of 18-20" of HG. with engine idling at 360 R.P.M.

FIRING ORDER: 1-5-3-6-2-4 See diagram.

SPARK PLUGS: AC Type K-7 (or No. 45). 14 mm. Metric. Gaps—.025" (.022" cars with radio).

IGNITION: See Coil, Condenser, and Distributor.
Breaker Gap—.020". Cam Angle—35° Closed.
Automatic Advance—11° max. at 1900 RPM (distr.).
Vacuum Advance—7.5° distr. with 16-18" vacuum.

IGNITION TIMING: See Ignition Timing.
Std. Setting—6° BTDC. First line of flywheel mark 'IGN.1-6/' aligned with pointer in inspection hole on left side of housing.

CARBURETION: See Carburetor & Carb. Equipment.
Idle Setting—Set idle adjusting screw ½-1¼ turns open. Idle speed 6 MPH or 360 RPM.
Float Level—⅜" from top of float to gasket seat with valve seated (invert to check).
Accelerating Pump—Center hole normal setting.
Fuel Pump Pressure: 3½ lbs. maximum.

VALVES: See Valve Timing.
Tappet Clearance—.009-.011" all valves hot. Use .009" and .011" feelers as 'go' and 'no go' gauges. Set exhaust at .011" for sustained high speeds. Remove hood sill for access to valve covers.

STARTING: See Battery, Starter, Generator, Regulator.

IGNITION

Ignition Switch:—Delco-Remy Model 431-L. Switch and cable assembly. Connected to coil by armored cable.
Ignition Lock—Briggs & Stratton.

COIL: Delco-Remy Model 539-L. Mounted on dash.
Ignition Current—3.5 amperes at 6.2 volts.

CONDENSER: Delco-Remy Part No. 1858571.
Capacity—.20-.25 microfarad.

DISTRIBUTOR: Delco-Remy Model 647-B. Single breaker, 6 lobe cam, full automatic advance type with vacuum spark control and Gaselector adjustment.
Breaker Gap—.020". Limits .018-.024".
Cam Angle or Dwell—Closed 35° Open 25° (distr.).
Breaker Arm Spring Tension—17-21 ozs.

Automatic Advance

Distributor Degrees	R.P.M.	Engine Degrees	R.P.M.
Start	275	2	550
5.5	800	11	1600
11	1900	22	3800

Vacuum Spark Control Delco-Remy Model 680-U. Mounted on housing and linked directly to breaker plate. Provides additional advance at speeds above idling (vacuum port above throttle in carburetor) except when engine accelerated or operated with wide open throttle when spark is retarded by return spring within unit.

Vacuum Advance

Distr. Degrees	Eng. Degrees	Vacuum (" of HG)
Start	0°	9-11"
7.5°	15°	16-18"

Gaselector—Consists of adjustment at distributor providing 10° advance or retard from center 'O' position. See Ignition Timing for setting.

Distributor Removal:—Mounted on left side of crankcase. To remove, take out hold-down screw in advance arm.

IGNITION TIMING

IGNITION TIMING:—Standard setting as shown. See Gaselector Setting below.

	Flywheel Degrees	Piston Position
All engines	6° BTDC.	.0133" BTDC.

NOTE—The two straight lines of the ingnition mark 'IGN.1-6/' indicate allowable timing range of 4° on flywheel. Use first or 6° line in setting ignition.

To Set Timing (Using Timing Light)—Connect timing light between distributor terminal and ground, turn on ignition. With #1 piston n compression, turn engine over until piston is 6° or .0133" before top dead center, stop when first line of ignition mark '/IGN.1-6/' lines up with pointer in inspection hole in left front face of flywheel housing. Loosen Gaselector thumbnut, center pointer on scale, tighten thumbnut, loosen advance arm clamp bolt, rotate distributor until timing lamp lights (contacts opening), tighten clamp bolt.

Timing (Synchroscope)—Connect Synchroscope between #1 spark plug cable and distributor cap, fill in first line of flywheel mark '/IGN.1-6/' with white paint or chalk, idle engine at 360 R.P.M., adjust distributor as directed above until line coincides with pointer on housing.

Gaselector Setting—Should be set to provide best performance without spark knock or ping for particular operating conditions and octane rating of fuel used. To adjust, loosen thumbnut, move pointer clockwise to advance, or counter-clockwise to retard

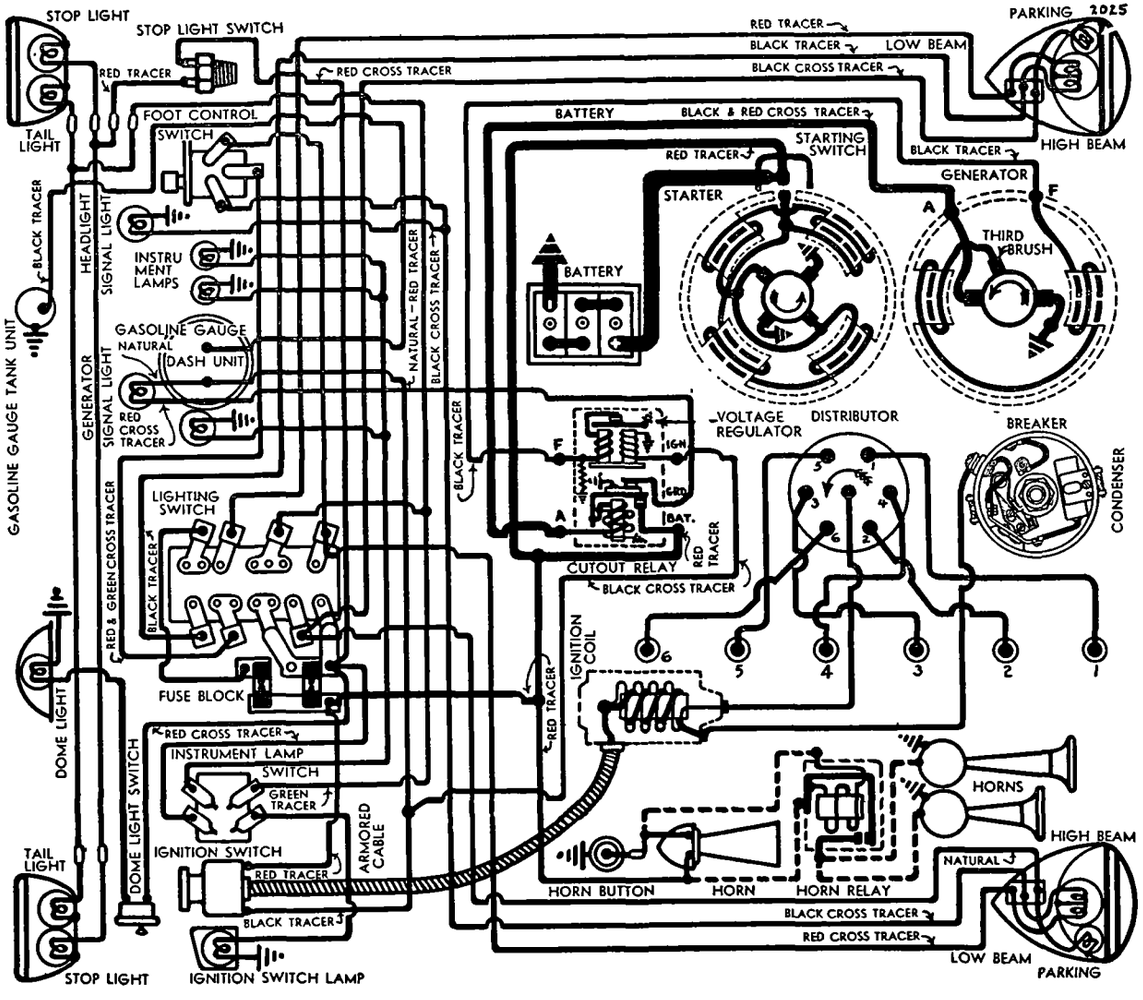

CARBURETOR

Carter 324S (Std.), 340S (Taxi). 1¼" downdraft type.
For complete data, refer to Carburetor Index.
Idle Adjustment—Vacuum Gauge (Tool J-89) recommended. With engine hot, adjust idle adjusting screw to give steady vacuum reading of 18-20" of HG. at idling speed of 360 R.P.M. or 6 M.P.H. To adjust without gauge, set throttle stopscrew for correct idling speed, turn idle adjusting screw in until engine begins to miss, then turn screw out until engine begins to roll, finally turn screw in slowly until engine fires smoothly. Setting should be ½-1¼ turn open of the screw from the inner seated position. Readjust throttle stopscrew for correct idling speed.
Accelerating Pump Setting—Pump lever under dust cover at top of carburetor has three holes for pump link engagement. Change for seasonal requirement: Outer Hole—Ordinary temperatures, std. gasoline. Upper Hole (Max. stroke)—Extremely cold weather. Inner Hole (Min. stroke)—Extremely hot weather.
Fast Idle:—Integral with carburetor. No adjustment. See article on Carter Fast Idle in Carburetion Sect.
For complete data, refer to Carburetion Equip. Index.
Accelerator Linkage Adjustment:—Must be maintained to provide correct 'throttle cracking' action for starting. To adjust, after setting carburetor idle speed at 6 M.P.H., loosen hand throttle wire lockscrew, pull button ⅛" out from instrument board, position hand throttle lever so that no clearance exists between lever and throttle cross shaft, tighten lockscrew. Turn throttle stopscrew in 3 turns, see that fast idle bar is up or in slow idle position and that stopscrew contacts carburetor casting, disconnect battery cable at starting motor to prevent cranking, fully depress starting pedal, adjust length of throttle cracking rod so that all clearance between cross shaft lever and accelerator pedal lever is taken up. Reset throttle stopscrew for correct idling speed.
Automatic Choke:—Carter Climatic Control.
For complete data, refer to Carburetion Equip. Index.

CARB. EQUIPMENT

Air Cleaner:—AC. #1525996 oil-wetted type standard, #1525998 heavy duty oil-bath type optional.
Fuel Pump:—AC. Type R #1522221. Diaphragm type.
For complete data, refer to Carburetion Equip. Index.
Gasoline Gauge:—AC. Electric. #1515304 (dash unit), 1515258 (tank unit).
For complete data, refer to Carburetion Equip. Index.

BATTERY

Delco, Type 15-T. 6 volt type, 15 plate, 94 ampere hour capacity (20 hour capacity).
Starting Capacity—115 amperes for 20 minutes.
Zero Capacity—300 amperes for 3.3 minutes.
Delco, Type 17-J (Special Equipment). 6 volt, 17 plate, 125 ampere hour capacity (20 hr. rate).
Grounded Terminal—Negative (—) terminal.
Location—Left hand side under front floor board.

STARTER

STD.: Delco-Remy Model 727-Y. Armature 823881.
RHD.: Delco-Remy Model 737-C. Armature 1847432.
Drive—Overrunning clutch and manual pinion shift operated by starting pedal (727-Y), Bendix Drive (737-C).
Cranking Engine—200-225 amperes at 5 volts.
Rotation—Counter-clockwise at commutator end.
Brush Spring Tension—24-28 ouces each.

Perf rmance Data—727-Y

Torque	R.P.M.	Volts	Amperes
0 ft. lbs.	6000	5.0	60
15 ft. lbs.	Lock	3	600

Performance Data—737-C

0 ft. lbs.	6000	5	65
15 ft. lbs.	Lock	3.15	570

Removal:—Mounted on left front face of flywheel housing. To remove, take out capscrews.
Starting Switch (727-Y): Delco-Remy No. 820052. On starter, operated by starter pedal (pinion shift).
For complete data, refer to Electrical Equipment Index.
(737-C) Delco-Remy Magnetic Switch Type 1528 used with Vacuum Switch 1588 (accelerator pedal starting).
For complete data, refer to Electrical Equipment Index.

GENERATOR

STANDARD

Delco-Remy Model 935-W, 936-R (Taxicab). Armature No. 1854856. Fixed third brush control type with external vibrating voltage regulator. Ventilated by fan on drive pulley.
NOTE—Third brush is clamped in position for maximum safe output and must not be disturbed.
Charging Rate Adjustment—None. See Regulator.
Maximum Charging Rate—19-21 amperes at 8.2 volts (cold), 16-18 amps, 7.6 volts (hot) at 40 MPH.
Generator Charge Indicator—Red jewel light at bottom of right group of instruments on instrument board. Lights when ignition key is turned on and remains lighted until generator begins to charge

Performance Data

	Amperes	Volts	R.P.M.
Cold	23-27	8.8-9.0	3000
Hot	18-23	8.2-8.7	3200

Rotation—Counter-clockwise at commutator end.
Brush Spring Tension—22-26 ozs. (main), 16-20 ozs. (third).
Field Current—2.3-2.6 amperes at 6 volts.
Removal:—Pivot mounted at left front of engine. To remove, take out two pivot bolts and one clamp bolt.
Belt Adjustment:—Loosen pivot bolts and clamp bolt, move generator out or away from engine to take up stretch or slack in belt.

GENERATOR

SPECIAL EQUIPMENT

Delco-Remy Model 934-F (used for City and State Police), 961-N (Spec. Equip.). Two brush (shunt) types used with Voltage & Current Regulators Model 5599 (934-F), 5832 (961-N). *Refer to 1937 Pontiac Eight page for data on these Generators.*

REGULATOR

Delco-Remy Model 5557. Double Core Type Voltage Regulator (With 'IGN' Terminal). Cutout Relay and vibrating type Voltage Regulator in case on dash. Cutout Relay has special 'ground' contacts for Generator Charge Signal control.
For complete data, refer to Electrical Equipment Index.

Cutout Relay

Cuts In—6.9-7.6 volts, 830 R.P.M., 10 M.P.H.'
Cuts Out—3 amperes maximum at 6.3 volts.
Contact Gap—.018-.025".
Air Gap—.018-.022" with contacts closed.

Voltage Regulator

Setting—7.5-7.9 volts Cold (70°F), 7.4-7.6 volts Hot 150° F. Regulator is over-compensated for temperature and must be checked at these points.
Adjustment—Disconnect lead on 'IGN' terminal of regulator, connect jumper between 'IGN' and 'BAT' terminals, connect test ammeter in charging line at 'BAT' terminal, connect voltmeter between 'IGN' terminal and ground. Operate generator at 2800-3000 R.P.M., adjust charging rate to 8-10 amperes, change regulator armature spring tension by bending spring hanger at lower end of spring slightly until setting is as given above.
NOTE—Regulator cover must be in place when tests are made. Do not operate generator on open-circuit.
Contact Gap—.015-.025".
Contact Spring Tension—2.7-3.5 ounces.
Air Gap—.060-.070" between armature and center of core with armature down and fibre bumper touching stop; .008-.013" between fibre bumper and stop with armature up.

LIGHTING

LIGHTING:—**Headlamps**—Guide Multi-beam, pre-focused. cross beam type (lenses not interchangeable).
Headlamp Beam Indicator—Located at bottom of speedometer dial. Lighted whenever driving or upper headlamp beams are lighted.

Switches

Lighting—Delco-Remy Model 479-S, 479-J Export.
Foot Beam Selector—Delco-Remy Model 471-T.
Instrument Lamp—Delco-Remy Model 1406.
Stop Lamp—Hydraulic type on brake master cyl.

Bulb Specifications

Position	Candlepower	Mazda No.
Headlamps	32-21	2320-L
Parking	1½	55
Speedometer, Dash, Indicators 1		51
Oil, Gas, Temp., Tail	3	63
Stop	15	87
Dome	6	81

MISC. ELECTRICAL

FUSES: D-R Fuse Block No. 1050-Z. On lighting switch on back of instrument panel. Two 20 ampere capacity fuses, one spare fuse. Fuse toward rear protects left hand headlamp circuit. Fuse toward engine protects all other lighting circuits.
HORNS:—Klaxon Model K-26-L Type 1601 Std., Model K-33-B, Type 1857 (low note), 1858 (high note) blended tone twin horns operated by horn relay Opt. All horns are vibrator type.

Horn Type	Current at 6 Volts	Air Gap
K-26-L, 1601	6.5-8.5	.025-.029"
K-33-B, 1857	12-14	.045-.050"
K-33-B, 1858	11-13	.036-.040"

Horn Relay: D-R No. 266-TK. Requires .25 amps. at 2 volts minimum to close contacts. Current draw .8 amperes.
Contact Gap—.015-.025". Spring Tension—6-8 ozs. Air Gap—.012-.017" with contacts closed.

ENGINE

ENGINE SPECIFICATIONS:—**Type**—6 cyl. 'L' head.
Bore—3⅜". Stroke—3⅞".
Displacement—208 cubic inches.
Rated Horsepower—27.4 (SAE).
Developed Horsepower—80 at 3600 R.P.M.
Compression Ratio—6.2-1 std. cast iron head.
NOTE—Special thick head gasket which reduces comp. ratio to 5.7-1 may be installed if desired.
Compression & Vacuum Reading—*See Tune-up data.*
See Pontiac Shop Notes for Radiator & Fender Removal.
PISTONS:—Electro-plated cast-iron. Tin-plated to thickness of .00075-.00125" after finishing and cannot be ground. Use finished replacement pistons.

C NTINUED N NEXT PA E

ENGINE

C NTINUED FR M PRECEDIN PAGE

Length—3½".
Weight—Held to 1/16 oz. maximum variation.
Removal—Pistons and rods removed from above
Clearance—Top .022". Bottom .0015". See Fitting New Pistons.
Replacement Pistons:—Finished pistons furnished in three standard sizes (marked by letter stamped on head) as follows: 'A'—3.3720", 'B'—3.3730", 'C'—3.3740", and .005", .010", .015", .020", .030" oversize. Pistons up to .030" oversize held to same weight as standard.
Fitting New Pistons:—Check clearance by inserting .002" feeler ½" wide between piston and cylinder wall at right angles to pin hole. Pressure to withdraw feeler must be 10-25 lbs. Piston taper allowance .0005".

PISTON RINGS:—Two compression rings above pin, one oil control ring below pin per piston. Lower ring groove drilled radially with ten ⅛" oil drain holes. Piston also has two ⅛" drain holes drilled on each side above pin hole.

Ring	Width	End Gap	Side Clearance
Comp.	⅛"	.007-.017"	.001-.0025"
Oil Cont.	3/16"	.007-.017"	.001-.0025"

NOTE—Install compression rings with groove or step downward.

PISTON PIN:—**Diameter 15/16". Length 3 1/16".**
Pin is locked in piston by lock screw in one boss. Opposite end slotted to allow boss to slide freely on pin.
Pin Fit in Piston—*See Pontiac Shop Notes.*
Pin Fit in Rod Bushing—.0003-.0005" clearance. See Connecting Rod Upper Bearing.
Fitting Pins—*See Pontiac Shop Notes.*

CONNECTING ROD:—**Length**—7 11/16" (center-to-center). **Weight**—Held to 1/16 oz. maximum variation.
Piston Pin Bushing (Upper Bearing)—Split bushed type. *See Pontiac Shop Notes for complete data.*
Crankpin Journal Diameter—2".
Lower Bearing—Interchangeable steel-backed, cadium-silver alloy lined type. Bearings furnished .0005" undersize for service.
Clearance—.0005-.0015". Sideplay .005-.010".
Bearing Adjustment:—None (no shims). Replace bearings. Do not file bearing caps. Clearance must be kept below .0015".
Installing Rods:—Rods not offset. Install rods in same cylinders from which removed.

CRANKSHAFT:—Four bearing. Integral counterw'ts.
See Pontiac Shop Notes for Harmonic Balancer data.
Journal Diameters—#1, 2¼"; #2, 2 9/32"; #3, 2 15/16"; #4, 2⅜".
Bearing Type—Interchangeable steel-backed, cadium-silver lined type. Upper and lower bearing halves interchangeable. Bearings furnished standard and .001" undersize.
Clearance—.001-.003".
Bearing Adjustment:—None (no shims). Replace berings. Do not file bearing caps. Bearing upper halves can be removed without removing crankshaft by turning bearing out as crankshaft is rotated.
End Thrust:—Taken by #3 rear center bearing. Endplay .003-.008". Adjusted by replacing bearing.

CAMSHAFT:—Four bearing. Non-adjustable chain drive.
See Pontiac Shop Notes for Camshaft Removal and Camshaft Bearing finished sizes.
Journal Diameters—#1, 2"; #2, 1 31/32"; #3, 1 15/16"; #4, 1 29/32".
Bearing Type—Steel-backed, babbitt-lined.
Clearance—.0015-.0025". Endplay .002-.005".
End Thrust:—Taken by steel thrust plate assembled behind camshaft sprocket. Endplay .002-.005". Adjusted by replacing thrust plate.
Timing Chain:—Morse. Width 1". Pitch ⅜". Length 56 links or 21".
Camshaft Setting:—Sprockets are marked. Mesh chain with sprockets turned so that 'O' marks are adjacent and in line with a straightedge across the shaft centers.

VALVES:—

Head Diameter	Stem Diameter	Length
Intake 1 17/32"	.310-.311"	5.718"
Exhaust 1 15/32"	.310-.311"	5.718"

Seat Angle	Lift	Stem Clearance
Intake 30°	19/64"	Free fit to .0006"
Exhaust 45°	19/64"	Free fit to .0006"

Valve Guides:—Removable, tapered guides (.001" taper to the inch, with greatest clearance at top). IMPORTANT—Measure clearance at bottom end. Valve should just fall through of own weight when started in guide. NOTE—When valves serviced, guides should be cleaned with wire brush or taper reamer (Tool P.R. 131).
Valve Springs:—Install with one closed coil at bottom two closed coils at top. Dampners installed on top of each spring. Use new dampner whenever dampner is removed.

	Spring Pressure	Spring Length
Valve Closed	52 lbs.	1 29/32"
Valve Open	82 lbs.	1 19/32"

Valve Lifters:—Single piece cast-iron. Furnished .005" oversize. Use special piloted reamer (J-551) when installing oversize lifter. Clearance .0005-.0015".

VALVE TIMING

Tappet Clearance—.009-.011" all valves (hot). For sustained high speed driving .011" exhaust setting is recommended. Use .009" and .011" feelers as 'go' and 'no go' gauges. Hood sill must be removed to adjust clearance of front valves.
Valve Timing:—See Camshaft Setting above.
Intake Valves—Open 5° BTDC. Close 39° ALDC.
Exhaust Valves—Open 45° BLDC. Close 5° ATDC.
To Check Valve Timing—Set tappet clearance on #6 intake valve at .0125". This valve should open with piston 5° (.0092") before top dead center and first straight line of ignition mark '/IGN. 1&6/' slightly past indicator (left front face of housing). Reset tappet clearance .010".

LUBRICATION

LUBRICATION:—Pressure. Gear type oil pump on right hand side of crankcase.
NOTE—Whenever oil pump is to be removed turn engine over until #1 piston is at top dead center on compression stroke. On cars with conventional front springs, jack up frame until pump will clear spring. Dip pump gears in oil before installing. Prick punch mark on pump is down when gears are correctly meshed and distributor rotor in #1 position. After installing reset ignition timing.
Normal Oil Pressure:—35-45 lbs. with oil warm.
Oil Pressure Regulator:—In oil pump, non-adjustable.
Crankcase Capacity:—6 qts. (full).

CLUTCH

CLUTCH:—Own Make with Long 10CF-CS driven member. Single plate, dry disc type. See article in Clutch Section for relining and assembling directions.
See Clutch Section for complete data.
Facings—Moulded type, 2 required. Inside Diam. 6¼". Outside Diam. 9⅞". Thickness ⅛".
Adjustment—Clearance between clutch pedal and underside of toeboard should be ⅝". Adjust by loosening locknut and turning stopscrew at lower end of pedal under shaft. Free movement or lash of pedal should be 1". Adjust by turning link screw at clutch fork end of link.
Removal—Remove floor and toeboards and front seat, disconnect universal joint, support engine at rear and remove rear engine support cross member, block up support tube against body cross sill and slide universal joint yoke and ball back as far as possible with yoke horizontal, remove transmission lowering engine slightly at rear if necessary to clear support tube. Then remove clutch housing bottom cover, clutch control countershaft, unhook clutch pedal pull-back spring, remove clutch fork ball support, clutch fork and throwout bearing. Loosen capscrews mounting clutch cover on flywheel turning all screws out evenly to release springs. If clutch cover sticks in flywheel strike cover plate sharply on radius outside spring cups before removing screws completely. Remove clutch from below without taking off housing.

FRONT SUSPENSION

DELUXE MODEL 36-26A

Front Suspension Model 36-26A:—Independent 'Knee Action' type. See article in Steering Section.
See Front Suspension Section for complete data.
Wheel Setting (Front Suspension Height)—5 3/8" from bottom of cross tube to bottom of brake drum.
Kingpin Inclination—8¾° crosswise.
Camber—Minus ¼° to plus ¼°. Not adjustable.
Caster—0°. Caster effect secured by trailing wheel behind suspension unit.
Toe In—0-1/16". To adjust change tie rod length.
Steering Geometry—Outer wheel 29°. Inner 38°.

FRONT SUSPENSION

MASTER MODEL 36-26B

Front Suspension Model 36-26B:—Conventional 'I' beam section front axle with reverse-elliott ends and semi-elliptic springs.
Kingpin Inclination—7°10' crosswise.
Caster—1¼° plus or minus ¼°. Adjustable by inserting wedge shims between axle and spring.
Camber—1½° plus 0° or minus 1°. No adjustment. Bending of axle to correct camber not recommended.
Toe In—0-⅛" measured 9" above floor. Adjustable in usual manner by changing length of tie rod.
Steering Geometry—Inner wheel turned 38°, uter wheel 29°. Check tie rod ends and kingpin for looseness, replace steering arms.

STEERING GEAR

Steering Gear: Saginaw Worm-and-Roller type.
See Steering Gear Section for complete data.

BRAKES

BRAKES:—Service—Bendix Hydraulic, Duo-Servo, Single anchor type. Hand lever applies rear wheel brakes.
See Brake Section for complete data.
Wheel Cylinders—(36-26A) 1" diameter on front wheels, 15/16" rear wheels, (36-26B) 15/16" diameter all wheels.
Drum Diameter—12".
Lining—Woven & Moulded type. Width 1¾" Thickness 3/16". Length 23 1/16" per wheel.
Clearance—.010" at heel and toe of each shoe.
Hand Brake: See Service Brakes above.

MODEL IDENTIFICATION

SERIAL NUMBER—First number—8-BA-1001. On left hand frame side rail under front fender.
ENGINE NUMBER:—First number—8-44,001. Stamped on boss on left hand top corner of block.

TUNE-UP

COMPRESSION:—Ratio 6.2-1. Pressure 144 lbs. at 1000 R.P.M. or aprox. 106 lbs. at cranking speed.
VACUUM READING:—Gauge should show steady reading of 18-20" of HG. with engine idling at 360 R.P.M.
FIRING ORDER: 1-6-2-5-8-3-7-4. See diagram.
SPARK PLUGS: AC Type K-7 (or No. 45). 14 mm. Metric. Gaps—.025" (.022" cars with radio).
IGNITION: See Coil, Condenser, and Distributor.
Breaker Gap—.018". Cam Angle—31° Closed.
Automatic Advance—11° max. at 1700 RPM (distr.).
Vacuum Advance—10° distr. with 16-21" vacuum.
IGNITION TIMING: See Ignition Timing.
Std. Setting—6° BTDC. First line of flywheel mark '/IGN.1-8/' aligned with pointer in inspection hole on left side of housing.
CARBURETION: See Carburetor & Carb. Equipment.
Idle Setting—Set idle adjusting screw ½-1¼ turns open. Idle speed 6 MPH or 360 RPM.
Float Level—⅜" from top of float to gasket seat with valve seated (invert to check).
Accelerating Pump—Center hole normal setting.
Fuel Pump Pressure: 3½ lbs. maximum.
VALVES: See Valve Timing.
Tappet Clearance—.009-.011" all valves hot. Use .009" and .011" feelers as 'go' and 'no go' gauges. Set exhaust at .011" for sustained high speeds. Remove hood sill for access to valve covers.
STARTING: See Battery, Starter, Generator, Regulator.

IGNITION

Ignition Switch:—Delco-Remy Model 431-L. Switch and cable assembly. Connected to coil by armored cable.
Ignition Lock—Briggs & Stratton.
COIL: Delco-Remy Model 539-L. Mounted on dash.
Ignition Current—3.5 amperes at 6.2 volts.
CONDENSER: Delco-Remy Part No. 1855968.
Capacity—.20-.25 microfarad.
DISTRIBUTOR: Delco-Remy Model 663-H. Single breaker, 8 lobe cam, full automatic advance type with vacuum spark control and Gaselector adjustment.
Breaker Gap—Set at .018". Limits .015-.020".
Cam Angle or Dwell—31° (closed), 14° (open).
Breaker Arm Tension—19-23 ozs.

Automatic Advance

Distributor Degrees	R.P.M.	Engine Degrees	R.P.M.
Start	300	3	600
5	600	10	1200
11	1700	22	3400

Vacuum Spark Control Delco-Remy Model 680-K. Mounted on housing and linked directly to breaker plate. Provides additional advance at speeds above idling (vacuum port above throttle in carburetor) except when engine accelerated or operated with wide open throttle when spark retarded by spring.

Vacuum Advance

Distr. Degrees	Eng. Degrees	Vacuum (" of HG)
Start	0°	4-6"
10°	20°	16-21"

Gaselector—Consists f adjustment at distributor providing 10° advance or retard from center 'O' position. See Ignition Timing for setting.
Distributor Removal:—Mounted on left side of crankcase. To remove, take out hold-down screw in advance arm.

IGNITION TIMING

IGNITION TIMING:—Standard setting as shown. See Gaselector Setting below.

	Flywheel Degrees	Piston Position
All engines	6° BTDC	.0117" BTDC.

NOTE—The two straight lines of the ignition mark '/IGN.1-8/' indicate allowable timing range of 4° on flywheel. Use first or 6° line in setting ignition.
To Set Timing (Using Timing Light)—Connect timing light between distributor terminal and ground, turn on ignition. With #1 piston on compression, turn engine over until piston is 6° or .0117" before top dead center, stop when first line of ignition mark '/IGN.1-8/' lines up with pointer in inspection hole in left front face of flywheel housing. Loosen Gaselector thumbnut, center pointer on scale, tighten thumbnut, loosen advance arm clamp bolt, rotate distributor until timing light lights (contacts opening), tighten clamp bolt.
Timing (Synchroscope)—Connect Synchroscope between #1 spark plug cable and distributor cap, fill in first line of flywheel mark '/IGN.1-8/' with white paint or chalk, idle engine at 360 R.P.M., adjust distributor as directed above until line coincides with pointer on housing.
Gaselector Setting—Should be set to provide best performance without spark knock or ping for particular operating conditions and octane rating of fuel used. To adjust, loosen thumbnut, move pointer clockwise to advance, or counter-clockwise to retard spark.

CARBURETOR

Carter 322S (Std.), 340S (Taxi). 1¼" downdraft type. *For complete data, refer to Carburetor Index.*
Idle Adjustment—Vacuum Gauge (Tool J-89) recommended. With engine hot, adjust idle adjusting

CONTINUED ON NEXT PAGE

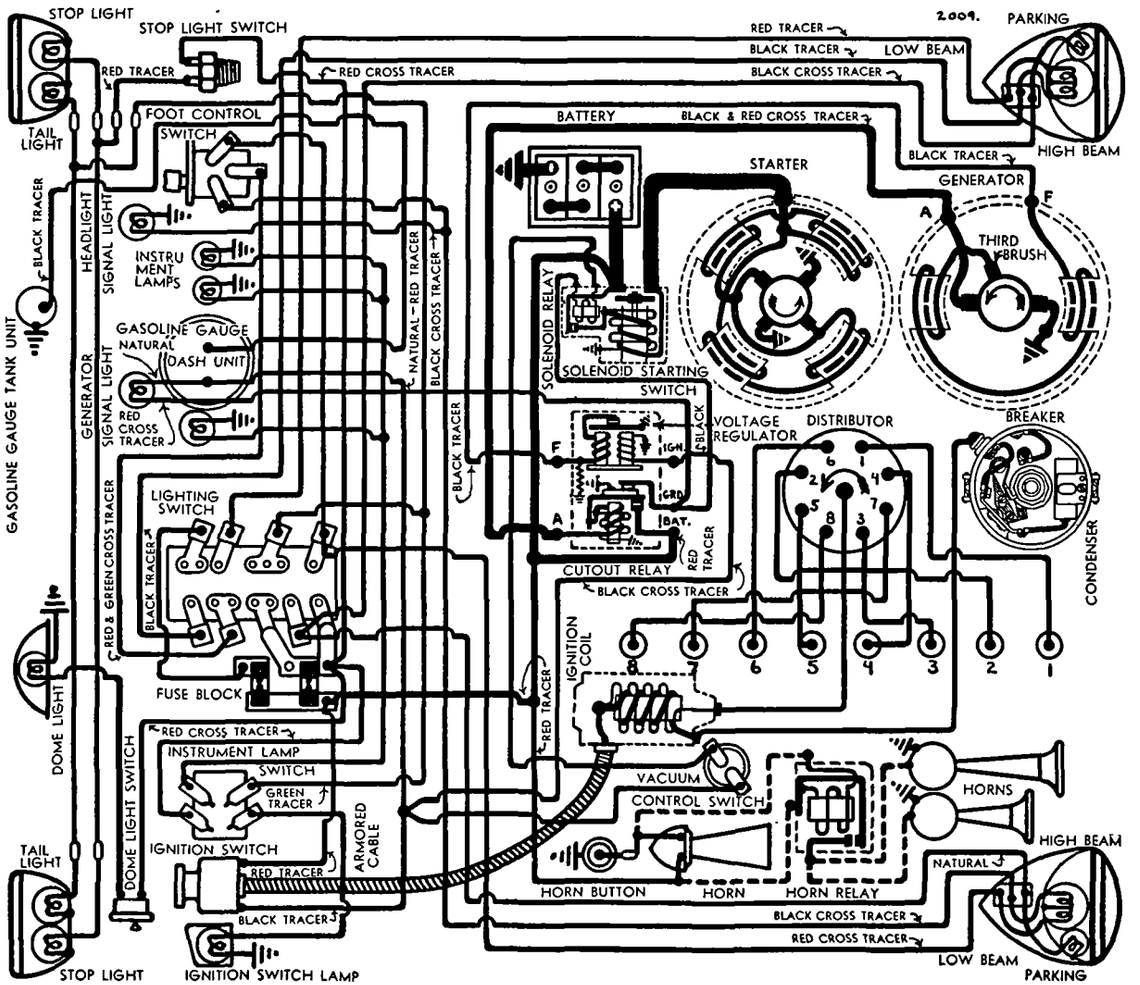

CONTINUED FROM PRECEDIN PAGE

screw to give steady vacuum reading of 18-20" f HG. at idling speed of 360 R.P.M. or 6 M.P.H. To adjust without gauge, set throttle stopscrew for correct idling speed, turn idle adjusting screw in until engine begins to miss, then turn screw out until engine begins to roll, finally turn screw in slowly until engine fires smoothly. Setting should be ½-1¼ turn open of the screw from the inner seated position. Readjust throttle stopscrew for correct idling speed.

Accelerating Pump Setting—Pump lever under dust cover at top of carburetor has three holes for pump link engagement. Change for seasonal requirement: Outer Hole—Ordinary temperatures, std. gasoline. Upper Hole (Max. stroke)—Extremely cold weather. Inner Hole (Min. stroke)—Extremely hot weather.

Fast Idle:—Integral with carburetor. No adjustment. See article on Carter Fast Idle in Carburetion Sect. *For complete data, refer to Carburetion Equip. Index.*

Accelerator Linkage Adjustment:—Adjust rod connecting bell cranks on side of manifold so that accelerator pedal just touches floor board with carburetor throttle valve wide open. Release accelerator pedal and with throttle valve in closed position, set adjusting screw in lever at forward end of this connecting rod so that clearance between this lever and lever which operates carburetor throttle valve rod is .235-.265" (use gauge #J-635-1). Disconnect vacuum switch operating rod at switch lever, turn switch lever so that pointer lines up with line on switch body, adjust length of rod by turning trunnion on rod until rod can be connected to switch lever without disturbing position of lever. See that hand throttle is fully closed, loosen set screw in throttle cable trunnion (at lower end of cable), adjust cable length so that clearance between lever at forward end of hand throttle operating rod and carburetor throttle valve rod lever is 1/16" minimum (use gauge #J-635-2). Check setting after opening and closing hand throttle. These clearances are important.

Automatic Choke:—Carter Climatic Control. *For complete data, refer to Carburetion Equip. Index.*

CARB. EQUIPMENT

Air Cleaner:—AC. #1525997 oil-wetted type standard, #1525998 heavy duty oil bath type optional.

Fuel Pump:—AC. Type R #1522221. Diaphragm type. *For complete data, refer to Carburetion Equip. Index.*

Gasoline Gauge:—AC. Electric. #1515304 (dash unit), #1515258 (tank unit). *For complete data, refer to Carburetion Equip. Index.*

BATTERY

Delco, Type 17-K. 6 volt, 110 ampere hr. capacity.
Starting Capacity—131 amperes for 20 minutes.
Zero Capacity—300 amperes for 4.4 minutes.
Grounded Terminal—Negative (—) terminal.
Location—Left hand side under front floor boards.

Delco, Type 17-J (Special Equipment). 6 volt, 17 plate, 125 ampere hour capacity (20 hr. rate).
Grounded Terminal & Location—Same as above.

STARTER

Delco-Remy Model 727-S. Armature No. 823881.
Drive—Overrunning clutch and manual pinion shift operated by solenoid switch.
Cranking Engine—220-225 amperes at 5 volts.
Rotation—Counter-clockwise at commutator end.
Brush Spring Tension—24-28 ounces each.

Performance Data

Torque	R.P.M.	Volts	Amperes
0 ft. lbs.	5500	5.0	65
15 ft. lbs.	Lock	3.0	600

Removal:—Mounted on left front face of flywheel housing. To remove, take out capscrews.

Starting Switch: Delco-Remy Solenoid 1516. Vacuum Switch Type 1588. Solenoid switch controlled thru relay by vacuum switch operated by accelerator *For complete data, refer to Electrical Equipment Index.*

GENERATOR
STANDARD

Delco-Remy Model 935-W, 936-R (Taxicab). Armature No. 1854856. Fixed third brush control type with external vibrating voltage regulator. Ventilated by fan on drive pulley.
NOTE—Third brush is clamped in position for maximum safe output and must not be disturbed.
Charging Rate Adjustment—None. See Regulator.
Maximum Charging Rate—19-21 amperes at 8.2 volts (cold), 16-18 amps, 7.6 volts (hot) at 40 MPH.
Generator Charge Indicator—Red jewel light at bottom of right group of instruments on instrument board. Lights when ignition key is turned on and remains lighted until generator begins to charge.

Performance Data

	Amperes	Volts	R.P.M.
Cold	23-27	8.8-9.0	3000
Hot	18-23	8.2-8.7	3200

Rotation—Counter-clockwise at commutator end.
Brush Spring Tension—22-26 ozs. (main), 16-20 ozs. (third).
Field Current—2.3-2.6 amperes at 6 volts.

Removal:—Pivot mounted at left front of engine. To remove, take out two pivot bolts and one clamp bolt.

Belt Adjustment:—Loosen pivot bolts and clamp bolt, move generator out or away from engine to take up stretch or slack in belt.

GENERATOR
SPECIAL EQUIPMENT

Delco-Remy Model 934-F (used for City and State Police), 961-N (Spec. Equip.). Two brush (shunt) types used with Voltage & Current Regulators Model 5599 (934-F), 5832 (961-N). *Refer to 1937 Pontiac Eight page for data on these Generators.*

REGULATOR

Delco-Remy Model 5557. Double Core Type Voltage Regulator (With 'IGN' Terminal). Cutout Relay and vibrating type Voltage Regulator in case on dash. Cutout Relay has special 'ground' contacts for Generator Charge Signal control. *For complete data, refer to Electrical Equipment Index.*

Cutout Relay

Cuts In—6.9-7.6 volts, 835 R.P.M., 10 M.P.H.
Cuts Out—3 amperes maximum at 6.3 volts.
Contact Gap—.018-.025".
Air Gap—.018-.022" with contacts closed.

Voltage Regulator

Setting—7.5-7.9 volts Cold (70°F), 7.4-7.6 volts Hot 150° F. Regulator is over-compensated for temperature and must be checked at these points.
Adjustment—Disconnect lead on 'IGN' terminal of regulator, connect jumper between 'IGN' and 'BAT' terminals, connect test ammeter in charging line at 'BAT' terminal, connect voltmeter between 'IGN' terminal and ground. Operate generator at 2800-3000 R.P.M., adjust charging rate to 8-10 amperes, change regulator armature spring tension by bending spring hanger at lower end of spring slightly until setting is as given above.
NOTE—Regulator cover must be in place when tests are made. Do not operate generator on open-circuit.
Contact Gap—.015-.025".
Contact Spring Tension—2.7-3.5 ounces.
Air Gap—.060-.070" between armature and center of core with armature down and fibre bumper touching stop; .008-.013" between fibre bumper and stop with armature up.

LIGHTING

LIGHTING:—**Headlamps**—Guide Multi-beam, pre-focused. cross beam type (lenses not interchangeable).
Headlamp Beam Indicator—Located at bottom f speedometer dial. Lighted whenever driving or upper headlamp beams are lighted.

Switches

Lighting—Delco-Remy Model 479-S, 479-J Export.
Foot Beam Selector—Delco-Remy Model 471-T.
Instrument Lamp—Delco-Remy Model 1406.
Stop Lamp—Hydraulic type on brake master cyl.

Bulb Specifications

Position	Candlepower	Mazda No.
Headlamps	32-21	2320-L
Parking	1½	55
Speedometer, Dash, Indicators	1	51
Oil, Gas, Temp., Tail	3	63
Stop	15	87
Dome	6	81

NOTE—Headlamps are Pre-focused 'Long-Life' type

MISC. ELECTRICAL

FUSES: D-R Fuse Block No. 1050-Z. On lighting switch on back of instrument panel. Two 20 ampere capacity fuses, one spare fuse. Fuse toward rear protects left hand headlamp circuit. Fuse toward engine protects all other lighting circuits.

HORNS:—Klaxon Model K-26-L Type 1601 Std., Model K-33-B, Type 1857 (low note), 1858 (high note) blended tone twin horns operated by horn relay Opt. All horns are vibrator type.

Horn Type	Current at 6 Volts	Air Gap
K-26-L, 1601	6.5-8.5	.025-.029"
K-33-B, 1857	12-14	.045-.050"
K-33-B, 1858	11-13	.036-.040"

NOTE—Twin horns are stamped 'L' (low note—long horn), 'S' (high note—short horn), on motor shell.

Horn Relay: D-R No. 266-TK. Requires .25 amps. at 2 volts minimum to close contacts. Current draw .8 amperes.
Contact Gap—.015-.025". **Spring Tension**—6-8 ozs.
Air Gap—.012-.017" with contacts closed.

ENGINE

ENGINE SPECIFICATIONS:—**Type**—8 cyl., 'L' head
Bore—3¼". **Stroke**—3½".
Displacement—232.3 cubic inches.
Rated Horsepower—33.8 (SAE).
Developed Horsepower—87 at 3800 R.P.M.
Compression Ratio—6.2-1 std. cast iron head.
NOTE—Special thick head gasket which reduces comp. ratio to 5.7-1 may be installed if desired.
Compression & Vacuum Reading—*See Tune-up data.*
See Pontiac Shop Notes for Radiator & Fender Removal.

PISTONS:—Electro-plated cast-iron. Tin-plated to thickness of .00075-.00125" after finishing and cannot be ground. Use finished replacement pistons.
Length—3 9/16".
Weight—All pistons held to 1/16 oz. max. variation.

ENGINE

CONTINUED FR M PRECEDIN PAGE

Removal—Pistons and rods removed from above.
Clearance—Top .022". Bottom .0015". See Fitting New Pistons.

Replacement Pistons:—Finished pistons furnished in three standard sizes (marked by letter stamped on head) as follows: 'A'—3.247", 'B'—3.248", 'C'—3.249" and .005", .010", .015", .020", .030" oversize. Pistons up to .030" oversize held to same weight as standard.

Fitting New Pistons:—Check clearance by inserting .002" feeler ½" wide between piston and cylinder wall at right angles to pin hole. Pressure required to withdraw feeler must be 10-25 lbs. Piston taper allowance .0005".

PISTON RINGS:—Two compression rings above pin, one oil control ring below pin per piston. Lower ring groove drilled radially with ten ⅛" oil drain holes. Piston also has two ⅛" drain holes drilled on each side above pin hole.

Ring	Width	End Gap	Side Clearance
Comp.	⅛"	.007-.017"	.001-.0025"
Oil Cont.	3/16"	.007-.017"	.001-.0025"

NOTE—Install compression rings with groove or step downward.

PISTON PIN:—Diameter 15/16". Length 2⅞".
Pin is locked in piston by lock screw. Opposite end slotted to allow boss to slide freely on pin.
Pin Fit in Piston—*See Pontiac Shop Notes.*
Pin Fit in Rod Bushing—.0003-.0005" clearance. See Connecting Rod Upper Bearing (below).
Fitting Pins—*See Pontiac Shop Notes.*

CONNECTING ROD:—Length—7 11/16" (center-to-center). **Weight**—Held to 1/16 oz. max. variation.
Piston Pin Bushing (Upper Bearing)—Split bushed type. *See Pontiac Shop Notes for complete data.*
Crankpin Journal Diameter—2".
Lower Bearing—Interchangeable steel-backed, cadium-silver alloy lined type. Bearings furnished .0005" undersize for service.
Clearance—.0005-.0015". Sideplay .005-.010".

Bearing Adjustment:—None (no shims) Replace bearings. Do not file bearing caps. Clearance must be kept below .0015".

Installing Rods:—Connecting rod lower bearings are offset. Install rods with narrow half of bearing toward nearst main bearing (widest half of bearing toward front on #2, 4, 6, 8 or toward rear on #1, 3, 5, 7).

CRANKSHAFT:—Five bearing. Integral counterweights. *See Pontiac Shop Notes for Harmonic Balancer data.*
Journal Diameters—#1, 2¼"; #2, 2 9/32"; #3, 2 5/16"; #4, 2 11/32"; #5 2⅜".
Bearing Type—Interchangeable steel-backed, cadium-silver lined type. Upper and lower bearing halves interchangeable. Bearings furnished standard and .001" undersize.
Clearance—.001-.003".

Bearing Adjustment:—None (no shims). Replace bearings. Do not file bearing caps. Bearing upper halves can be removed without removing crankshaft by turning bearing out as crankshaft is rotated.

End Thrust:—Taken by #3 (center) bearing. Endplay .003-.008". Adjusted by replacing bearing.

CAMSHAFT:—Five bearing. Non-adjustable chain drive. *See Pontiac Shop Notes for Camshaft Removal and Camshaft Bearing finished sizes.*
Journal Diameters—#1, 2"; #2, 1 31/32"; #3, 1 15/16"; #4, 1 29/32"; #5, 1⅞".
Bearing Type—Steel-backed babbitt-lined.
Clearance—.0015-.0025". Endplay .002-.005".

End Thrust:—Taken by a thrust plate assembled behind camshaft sprocket. Endplay .002-.005". Adjusted by replacing thrust plate.

Timing Chain:—Morse. Width 25/32". Pitch ⅜". Length 56 links or 21".

Camshaft Setting:—Sprockets are marked. Mesh chain with sprockets turned so that 'O' marks are adjacent and in line with a straightedge across the shaft centers.

VALVES:—Head Diameter Stem Diameter Length

Intake	1 13/32"	.310-.311"	5.53"
Exhaust	1 11/32"	.310-.311"	5.53"

	Seat Angle	Lift	Stem Clearance
Intake	30°	19/64"	Free fit to .0006"
Exhaust	45°	19/64"	Free fit to .0006"

Valve Guides:—Removable, tapered guides (.001" taper to the inch, with greatest clearance at top). IMPORTANT—Measure clearance at bottom end. Valve should just fall through of own weight when started in guide. NOTE—When valves serviced, guides should be cleaned with wire brush or taper reamer (Tool P.R. 131).

Valve Springs:—Install with one closed coil at bottom, two closed coils at top. Dampners installed on top of each spring. Use new dampner whenever dampner is removed.

	Spring Pressure	Spring Length
Valve closed	52 lbs.	1 29/32"
Valve Open	82 lbs.	1 19/32"

Valve Lifters:—Single piece cast-iron. Furnished .005" oversize. Use special piloted reamer (J-551) when installing oversize lifter. Clearance .0005-.0015".

VALVE TIMING

Tappet Clearance—.009-.011" all valves (hot). For sustained high speed driving .011" exhaust setting recommended. Use .009" and .011" feelers as 'go' and 'no go' gauges. Hood sill must be removed to adjust clearance of front valves.

Valve Timing:—See Camshaft Setting above.
Intake Valves—Open 5° BTDC. Close 39° ALDC.
Exhaust Valves—Open 45° BLDC. Close 5° ATDC.
To Check Valve Timing—Set tappet clearance on #8 intake valve at .0125". This valve should open with piston 5° (.0082") before top dead center and first straight line of ignition mark '/IGN. 1&8/' slightly past indicator (left front face of housing). Reset tappet clearance .010".

LUBRICATION

LUBRICATION:—Pressure. Gear type oil pump on right hand side of crankcase.
NOTE—Whenever oil pump is to be removed, turn engine over until #1 piston at top dead center on compression stroke. On cars with conventional front springs jack up frame until pump will clear spring. Dip pump gears in oil before installing. Prick punch mark on pump is down when gears are correctly meshed and distributor rotor in #1 position. After installing reset ignition timing.

Normal Oil Pressure:—35-45 lbs. with oil warm.
Oil Pressure Regulator:—In oil pump, non-adjustable.
Crankcase Capacity:—7 qts. (full).

CLUTCH

CLUTCH:—Own make with Long 10CF-CS driven member. Single plate, dry disc type. See article in Clutch Section for relining and assembling directions.
See Clutch Section for complete data.

Facings—Moulded type, 2 required. Inside Diam. 6¼". Outside Diam. 9⅞". Thickness ⅛".
Adjustment—Clearance between clutch pedal and underside of toeboard should be ⅝". Adjust by loosening locknut and turning stopscrew at lower end of pedal under shaft. Free movement or lash of pedal should be 1". Adjust by turning link screw at clutch fork end of link.

Removal—Remove floor and toeboards and front seat, disconnect universal joint, support engine at rear and remove rear engine support cross member, block up support tube against body cross sill and slide universal joint yoke and ball back as far as possible with yoke horizontal, remove transmission lowering engine slightly at rear if necessary to clear support tube. Then remove clutch housing bottom cover, clutch control countershaft, unhook clutch pedal pull-back spring, remove clutch fork ball support, clutch fork and clutch throwout bearing. Loosen capscrews mounting clutch cover on flywheel turning all screws out evenly to release springs. If clutch cover sticks in flywheel strike cover plate sharply on radius outside spring cups before removing screws completely. Remove clutch from below without taking off housing.

FRONT SUSPENSION

Front Suspension:—Independent 'Knee Action' type.
See Front Suspension Section for complete data.
Wheel Setting (Front Suspension Height)—5⅜" from bottom of cross tube to bottom of brake drum.
King Pin Inclination—8¾° crosswise.
Camber—Minus ¼° to plus ¼°. Not adjustable.
Caster—0°. Caster effect secured by trailing wheel behind suspension unit.
Toe In—0-1/16". Adjustable in usual manner by changing length of tie rod.
Steering Geometry—Inner wheel turned 38°, outer wheel 29°. Check tie rod ends and kingpin for looseness.

STEERING GEAR

Steering Gear: Saginaw Worm-and-Roller type.
See Steering Gear Section for complete data.

BRAKES

BRAKES:—Service—Bendix Hydraulic, Duo-Servo, Single anchor type. Hand lever applies rear wheel brakes.
See Brake Section for complete data.
Wheel Cylinders—1" diameter (front), 15/16" diameter (rear).
Drum Diameter—12".
Lining—Woven & Moulded type. Width 1¾". Thickness 3/16". Length 23 1/16" per wheel.
Clearance—.010" at heel and toe of each shoe.

Hand Brake Adjustment:—See Service Brake Adjustment.

MODEL IDENTIFICATION

SERIAL NUMBER:—First number 6CA-1001. Top left frame siderail under engine hood.

ENGINE NUMBER:—First number, 6-220001. Stamped on top left corner of engine block.

TUNE-UP

COMPRESSION:—Ratio—6.2-1. Pressure—140-143 lbs. at 1000 R.P.M. or approx. 115 lbs. at cranking speed.

VACUUM READING:—Steady reading of 18-20" with engine idling at 376 R.P.M. or 7 M.P.H.

FIRING ORDER: 1-5-3-6-2-4. See diagram.

SPARK PLUGS: AC Type K-7 (or No. 45) 14 mm. Metric. Gaps—.025" (.022" cars with radio).

IGNITION: See Coil, Condenser, and Distributor.
Breaker Gap—.020". **Cam Angle**—35° Closed.
Automatic Advance—14¼° max. at 2000 RPM (distr.).
Vacuum Advance—7.5° distr. with 13-16" vacuum.

IGNITION TIMING: See Ignition Timing.
Std. Setting—6° BTDC. First line of flywheel mark 'IGN.1-6/' aligned with pointer in inspection hole on left side of housing.

CARBURETION: See Carburetor & Carb. Equipment.
Idle Setting—Set idle adjusting screw ¾-1¼ turns open (¼-¾ '37 Taxi). Idle speed 376 RPM or 7MPH.
Float Level—⅜" from top of float to gasket seat with valve seated (invert to check).
Accelerating Pump—Center hole normal setting.
Fuel Pump Pressure: 3¾ lbs. (AJ Comb.), 4 lbs. (AH).

VALVES: See Valve Timing.
Tappet Clearance—.011-.013" all valves (hot). For sustained high speed driving .013" exhaust setting is recommended. Use .011" and .013" feelers as 'go' and 'no go' gauges. Remove hood side panel by unfastening two wing nuts at rear and one at top front.

STARTING: See Battery, Starter, Generator, Regulator.

IGNITION

Ignition Switch:—Delco-Remy Model 435-G. Switch and cable assembly. Connected to coil by armored cable.
See Article in Electrical Equipment Section.
Ignition Lock—Briggs & Stratton. #45792 (cylinder), #80203 (case). **Key Series**—8000-9499.

COIL: Delco-Remy Model 539-L. Mounted on dash.
Ignition Current—2.0 amperes idling, 3.5 stopped.

CONDENSER: Delco-Remy Part No. 1865972.
Capacity—.20-.25 microfarad.

DISTRIBUTOR: Delco-Remy Model 647-D. Single breaker, 6 lobe cam, full automatic advance type with vacuum spark control and Gaselector adjustment.
Breaker Gap—.020". Limits .018-.024".
Cam Angle or Dwell—Closed 35° Open 25° (distr.).
Breaker Arm Spring Tension—17-21 ounces.

Automatic Advance

Distributor Degrees	R.P.M.	Engine Degrees	R.P.M.
Start	400	4.0	800
8.0	1050	16.0	2100
8.5	1450	17.0	2900
14.25	2000	28.5	4000

Vacuum Spark Contr l Delc -Remy Model 681-M. Mounted on housing and linked directly to breaker plate. Provides additional advance at speeds above idling (vacuum port above throttle in carburetor) except when engine accelerated or operated with wide open throttle when spark is retarded by return spring within unit.

Vacuum Advance

Distr. Degrees	Eng. Degrees	Vacuum (" of HG)
Start	0°	7-9"
7.5°	15°	13-16"

Gaselector—Consists of adjustment at distributor providing 10° advance or retard from center '0' position. See Ignition Timing (below) for setting.

Distributor Removal:—Mounted on left side of engine. To remove, disconnect vacuum line and take out hold-down screw in advance arm.

IGNITION TIMING

IGNITION TIMING:—Standard setting as shown. See Gaselector Setting below.

	Flywheel Degrees	Piston Position
All engines	6° BTDC	.0138" BTDC.

NOTE—The two straight lines of the ignition mark '/IGN.1-6/' indicate allowable timing range of 4° on flywheel. Use first or 6° line in setting ignition.

To Set Timing (using Timing Light)—Connect timing light between distributor terminal and ground, turn on ignition. With #1 piston on compression, turn engine over until piston is 6° or .0138" before top dead center, stop when first line of ignition mark '/IGN.1-6/' lines up with pointer in inspection hole in left front face of flywheel housing. Loosen Gaselector thumbnut, center pointer on scale, tighten thumbnut, loosen advance arm clamp bolt, rotate distributor until timing lamp lights (contacts open-

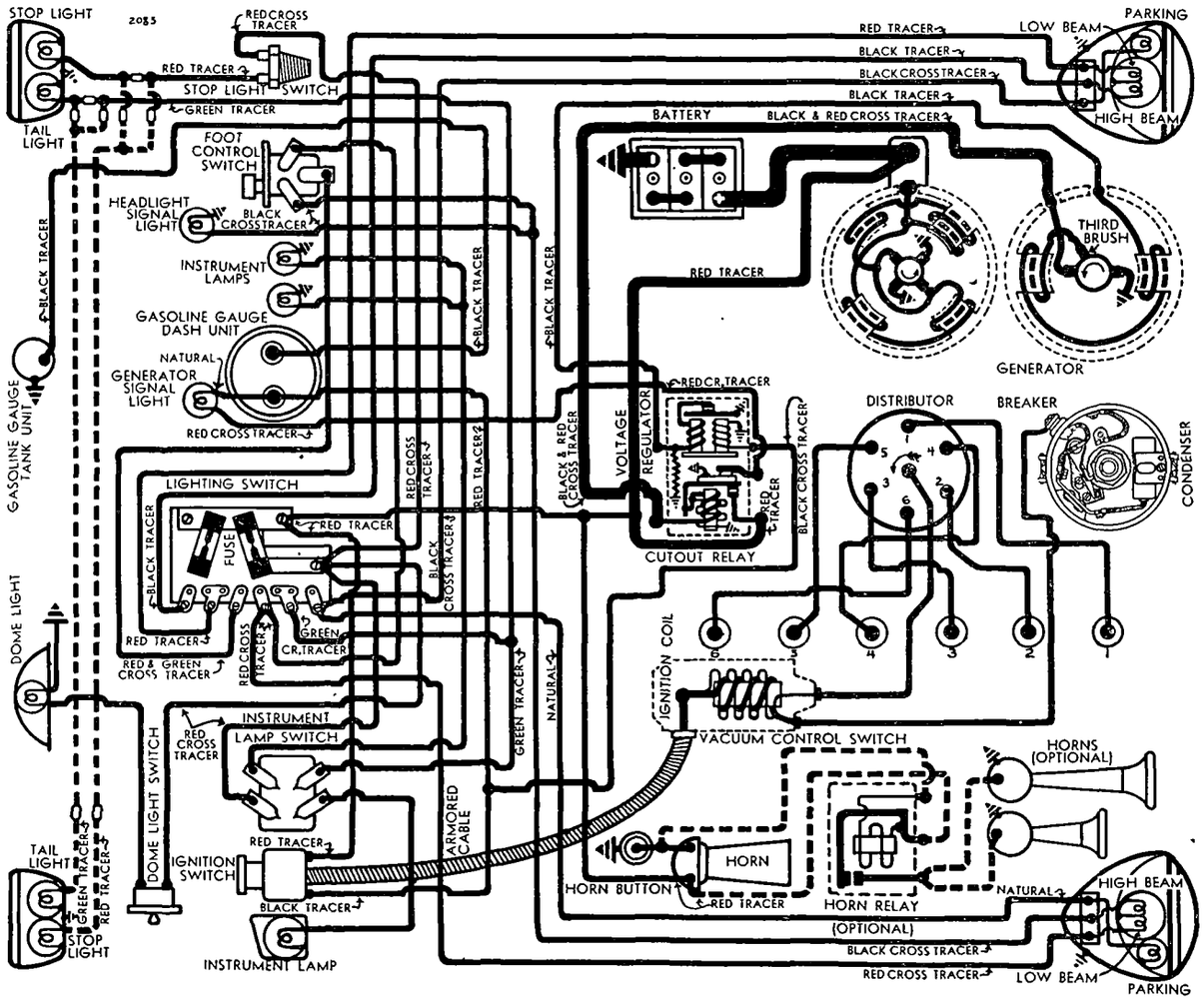

ing), tighten clamp bolt.

Timing (Synchroscope)—Connect Synchroscope between #1 spark plug cable and distributor cap, fill in first line of flywheel mark '/IGN.1-6/' with white paint or chalk, idle engine at 376 R.P.M. or 7 M.P.H. in high gear, adjust distributor as directed above until line coincides with pointer on housing.

Gaselector Setting—Should be set to provide best performance without spark knock or ping for particular operating conditions and octane rating of fuel used. To adjust, loosen thumbnut, move pointer clockwise to advance, or counter-clockwise to retard spark.

CARBURETOR

CARBURETION:—Carburetor—Carter Models 352-S, 364-S (Taxicab). 1¼" downdraft type.
For complete data, refer to Carburetor Index.

NOTE—Do not adjust carburetor until engine is warmed up so that choke valve is wide open and engine idling at hot or slow idling speed.

Idle Adjustment—Vacuum Gauge (Tool J-89) recommended. With engine hot, adjust idle adjusting screw to give steady vacuum reading of 18-20" of HG. at idling speed of 376 R.P.M. or 7 M.P.H. To adjust without gauge, set throttle stopscrew for correct idling speed, turn idling adjusting screw in until engine begins to miss, then turn screw out until engine begins to roll, finally turn screw in slowly until engine fires smoothly. Setting should be ¾-1¼ turns open of the screw from the inner seated position. Readjust throttle stopscrew for correct idling speed.

Accelerating Pump Setting—Pump lever under dust cover at top of carburetor has three holes for pump link engagement. Change for seasonal requirement: Outer Hole (Max. stroke)—Extremely cold weather. Lower Hole—Ordinary temperatures, std, gasoline. Inner Hole (Min. Stroke)—Extremely hot weather.

Fast Idle:—Consists of fast idle cam linked to choke mechanism which acts as throttle lever stop. Should not require adjustment. See Carburetion article in Carburetion Section and special article in Carburetion Equipment Section for complete data.
For complete data, refer to Carburetion Equip. Index.

Accelerator Linkage Adjustment:—Must be maintained to provide correct 'throttle cracking' action for starting. To adjust, after setting carburetor idle speed at 6-7 M.P.H., loosen hand throttle wire lockscrew, pull button ⅛" out from instrument board, position hand throttle lever so that no clearance exists between lever and throttle cross shaft, tighten lockscrew. Turn throttle stopscrew in 2 turns (with throttle stopscrew on high point of cam or 'cold' position), disconnect battery cable at starting motor to prevent cranking, fully depress starting pedal, adjust throttle cracking pin so that all clearance between cross shaft lever and accelerator pedal lever is taken up. Connect starting motor cable, reset engine idle speed.

Automatic Choke:—Carter Climatic Control.
For complete data, refer to Carburetion Equip. Index.

CARB. EQUIPMENT

Air Cleaner:—AC. #1528150 oil-wetted type standard, #1525998 (1st 1038 jobs), #1528304 (after 1038) heavy duty oil-bath type optional.

Fuel Pump:—AC. Type AH #1523109. Diaphragm type. AJ #1523110 (combination fuel and vacuum pump) optional.
For complete data, refer to Carburetion Equip. Index.

Gasoline Gauge:—AC. Electric #1515325 (dash unit), #1515450 (tank unit).
For complete data, refer to Carburetion Equip. Index.

BATTERY

Delco, Type 15-AA. 6 volt type, 15 plate, 94 ampere hour capacity (20 hour rate).
Starting Capacity—115 amperes for 20 minutes.
Zero Capacity—300 amperes for 3.3 minutes.
Grounded Terminal—Negative (—) terminal.
Location—Left hand side under front floor board.

Delco, Type 17-J (Special Equipment). 6 volt, 17 plate, 125 ampere hour capacity (20 hour rate).
Starting Capacity—149 amperes for 20 minutes.
Zero Capacity—300 amperes for 5.5 minutes.
Grounded Terminal & Location—Same as above.

STARTER

STD.: Delco-Remy Model 729-E. Armature 823881.
RHD.: Delco-Remy Model 737-C. Armature 1847432.
Drive—Overrunning clutch and manual pinion shift operated by starting pedal (729-E), Bendix Drive (737-C).
Rotation—Counter-clockwise at commutator end.
Brush Spring Tension—24-28 ounces each.
Cranking Engine—Approx. 200 amperes at 5.0 volts.

Performance Data—729-E

Torque	R.P.M.	Volts	Amperes
0 ft. lbs.	6000	5.0	60
15 "	Lock	3.0	600

Performance Data—737-C

0 ft. lbs.	6000	5.0	65
15 "	Lock	3.15	570

Removal:—Mounted on left front face of flywheel housing. To remove, take out capscrews.

Starting Switch (729-E): Delco-Remy No. 820052. On starter, operated by starter pedal (pinion shift).
For complete data, refer to Electrical Equipment Index.
(737-C) Delco-Remy Magnetic Switch Type 1528 used with Vacuum Switch 1605 (accelerator pedal starting).
For complete data, refer to Electrical Equipment Index.

Magnetic Switch

Closes contacts with 7.5-8.5 amperes draw at 3 volts and holds contacts closed with .85-.95 amperes draw at 1.5 volts (hold-in coil only).

Vacuum Switch

Contacts Close—10-14° rotation counter-clockwise from latch position.
Unlatch Action—3.4-4.6" of HG. approximately 30° from latch position.

GENERATOR

STANDARD

Delco-Remy Model 948-S. Armature No. 1854856. 948-Y (Taxicab). Armature No. 1854856. Fixed third brush control with external vibrating voltage regulator. Ventilated by fan on drive pulley.
NOTE—Third brush is clamped in position for maximum safe output and must not be disturbed.
Charging Rate Adjustment—Adjusted by changing setting of voltage regulator. See Regulator data
Maximum Charging Rate—22 amperes at 8.0 volts (cold), 18 amperes at 8.0 volts (hot). Reached at car speed of 30-35 M.P.H. To check charging rate, connect test ammeter in line at 'BAT' terminal of regulator, voltmeter between 'GEN' and ground, ground 'F' terminal to eliminate regulator action.
Generator Charge Indicator—Red jewel light at lower left corner of instrument group. Lights when ignition key is turned 'on' and remains lighted until generator begins to charge, then it goes out. If lamp does not light when ignition key is turned 'on', ground 'GRD' terminal on Cutout Relay, if lamp still does not light replace bulb. See Bulb Specifications below.

Performance Data

	Amperes	Volts	R.P.M.
Cold	23-27	8.8-9.0	3000
Hot	18-23	8.2-8.7	3200

Rotation—Counter-clockwise at commutator end.
Brush Spring Tension—22-26 ounces (main), 16-20 ounces (third).
Field Current—2.3-2.6 amperes at 6 volts.

Removal:—Pivot mounted at left front of engine. To remove, take out two pivot bolts and one clamp bolt.

Belt Adjustment:—Loosen pivot bolts and clamp bolt, move generator out or away from engine to take up stretch or slack in belt.

GENERATOR

SPECIAL EQUIPMENT

Delco-Remy Model 934-F (used for City and State Police), 961-N (Spec. Equip.). Two brush (shunt) types used with Voltage & Current Regulators Model 5599 (934-F), 5832 (961-N). *Refer to 1937 Pontiac Eight page for data on these Generators.*

REGULATOR

Delco-Remy Model 5808. Double Core Type Voltage Regulator (With 'IGN' Terminal). Cutout Relay and vibrating type Voltage Regulator in case on dash. Cutout Relay has special 'ground' contacts for Generator Charge Signal control.
For complete data, refer to Electrical Equipment Index.

Cutout Relay

Cuts In—6.9-7.6 volts.
Cuts Out—3 amperes maximum at 6.3 volts.
Contact Gap—.018-.025".
Air Gap—.018-.022" with contacts closed.

Voltage Regulator

Setting—7.5-7.9 volts Cold (70°F), 7.4-7.6 volts Hot 150° F. Regulator is over-compensated for temperature and must be checked at these points.
Adjustment—Disconnect lead on 'IGN' terminal of regulator, connect jumper between 'IGN' and 'BAT' terminals, connect test ammeter in charging line at 'BAT' terminal, connect voltmeter between 'IGN' terminal and ground. Operate generator at 2800-3000 R.P.M., adjust charging rate to 8-10 amperes, change regulator armature spring tension by bending spring hanger at lower end of spring slightly until setting is as given above.
NOTE—Regulator cover must be in place when tests are made. Do not operate generator on open-circuit.
Contact Gap—.015-.025".
Contact Spring Tension—2.7-3.5 ounces.
Air Gap—.060-.070" between armature and center of core with armature down and fibre bumper touching stop; .008-.013" between fibre bumper and stop with armature up.

LIGHTING

LIGHTING:—Headlamps—Guide Multi-beam, pre-focused, cross-beam type with special non-interchangeable lenses. Special asymetrical 'Passing' beam (upper beam left hand headlamp, lower beam

C NTINUED ON NEXT PAGE

C NTINUED FR M PRECEDIN PAGE

right hand headlamp) controlled by foot selector switch with lighting switch in driving or third position.

Headlamp Adjustment—Headlamps must be adjusted with lenses in place (beam with lenses removed is approximately 4° to right). Aim left hand headlamp (by loosening bracket bolt nut) so that upper edge of hot spot is on horizontal line (at lamp center height) and left edge just touches vertical lamp center line (entire hot spot to right of this line). Aim right hand headlamp for same beam height but center hot spot on lamp vertical center line (hot spot right cut-off approximately 8" to right of this vertical line).

Headlamp Beam Indicator—Located to left of speedometer dial. Lighted whenever driving or upper headlamp beams are lighted.

Switches

Lighting—Delco-Remy Model 480-V, T (Export).
Foot Beam Selector—Delco-Remy Model 471-T.
Dash Lamp—Delco-Remy Model 1406.
Stop Lamp—Hydraulic type on brake master cyl.

Bulb Specifications

Position	Candlepower	Mazda No.
Headlamps	32-21	2320-L
Parking, Instrument	1½	55
Dash, Indicators	1	51
Dome	6	81
Tail	3	63
Stop	15	87

MISC. ELECTRICAL

FUSES:—Fuse block mounted on lighting switch in back of instrument panel. Two 20 ampere capacity fuses and one spare. Fuse toward rear protects left hand headlamp circuit. Fuse toward engine protects all other lighting circuits.

HORNS:—Klaxon Model K-26-L, Type 1601 std. equipt. Model K-33-B, Type 1857 (low note), 1858 (high note) blended tone twin horns operated by horn relay optional equipment.

Horn Type	Current at 6 Volts	Air Gap
K-26-L, 1601	6.5-8.5	.025-.029"
K-33-B, 1857	12-14	.045-.050"
K-33-B, 1858	11-13	.036-.040"

NOTE—Twin horns are stamped 'L' (low note—long horn), 'S' (high note—short horn), on motor shell.

H rn Relay: Delco-Remy Model 271-C.
Points Close—2.7-4.0 volts.
Contact Gap—.015-.030".
Air Gap—.010-.025" with contacts closed.

ENGINE

ENGINE SPECIFICATIONS:—6 cylinder, 'L' head.
Bore—3 7/16". **Stroke**—4".
Displacement—222.7 cubic inches.
Rated Horsepower—28.3 (S.A.E.).
Developed Horsepower—85 at 3600 R.P.M.
Compression Rati & Pressure—6.2-1 Std. cast-iron head. Pressure 140-143 lbs. @ 1000 R.P.M. or approx. 115 lbs. at cranking speed.
Vacuum Reading—18-20" steady at 7 M.P.H.
See Pontiac Shop Notes for Radiator & Fender Removal.

PISTONS:—Electro-plated, chrome nickel alloy. Tin-plated .00075-.00125" thick after finishing and cannot be ground. Use finished replacement pistons. Pistons fitted in following standard sizes (marked by letter on top of head and on top of cylinder block)—'A'—3.4355", 'B'—3.436", 'C'—3.4365", 'D'—3.437", 'E'—3.4375". See Replacement Pistons below.
Length—3 37/64".
Weight—Held to 1/16 oz. maximum variation.
Removal—Pistons and rods removed from above.
Clearance—Skirt .002". See Fitting New Pistons.

Original Bore Size:—*See Pontiac Shop Notes.*

Replacement Pistons:—*See Pontiac Shop Notes.*

Fitting New Pistons:—Insert .002" feeler ½" wide between piston and cylinder wall at right angles to pin hole. Pressure to withdraw feeler must be 10-25 lbs. Piston taper allowance .0005".

PISTON RINGS:—Two undercut compression rings above pin, one oil control ring below pin, per piston. Lower ring groove drilled radially with ten .1402" oil drain holes (2 in each boss for pin lub.).

Ring	Width	End Gap	Side Clearance
Compression..	⅛"	.007-.012"	.0015-.003"
Oil Control	3/16"	.007-.012"	.001-.0025"

NOTE—Install comp. rings with groove down.

PISTON PIN:—**Diameter**—15/16". **Length**—3 1/16".
Pin is locked in piston by lockscrew in one boss. Opposite end slotted, slides freely in boss.
Pin Fit in Piston—*See Pontiac Shop Notes.*
Pin Fit in Rod Bushing—.0003-.0005". See Connecting Rod Upper Bearing below.
Replacement Pins—Three oversize pins furnished in service. Can be identified by daub of paint on end of pins as follows: .001" (red and brown), .003" (red), .005" (blue).
Fitting Pins—*See Pontiac Shop Notes.*

CONNECTING ROD:—Length—7 9/16" (center-to-center). Weight—32 ozs. Held to 1/16 oz. variation.
Piston Pin Bushing (Upper Bearing)—Split bushed type. *See Pontiac Shop Notes for complete data.*
Crankpin Journal Diameter—2".
Lower Bearing—Removable steel-backed, babbitt-lined type. Bearings furnished std. and .001" under.
Clearance—.0005-.0015". **Sideplay**—.005-.010".

Bearing Adjustment:—None (no shims). *See Pontiac Shop Notes for Fitting and Installing Bearings.*

Installing Rods:—Rods not offset. Install rods in same cylinder from which removed.

CRANKSHAFT:—4 bearing. Integral counterweights. *See Pontiac Shop Notes for Harmonic Balancer data.*
Journal Diameters—#1, 2⅜"; #2, 2 13/32"; #3, 2 15/16"; #4, 2½".
Bearing Type—Interchangeable steel-backed, babbitt-lined type. Upper and lower halves interchangeable. Bearings furnished std. and .001" undersize.
Clearance—.001-.003".

Bearing Adjustment:—None (no shims). *See Pontiac Shop Notes for Fitting and Installing Bearings.*

End Thrust:—Taken by #3 (rear center) bearing. Endplay .003-.008". No adjustment other than replacing bearing.

CAMSHAFT:—4 bearing, non-adjustable, chain-drive. *See Pontiac Shop Notes for Camshaft Removal and Camshaft Bearing finished sizes.*
Journal Diameters—#1, 2"; #2, 1 31/32"; #3, 1 15/16"; #4, 1 29/32".
Bearing Type—Removable steel-backed, babbitt-lined type.
Clearance—.0015-.0025".

End Thrust:—Taken by steel thrust plate assembled behind camshaft sprocket. **Endplay** .002-.005". No adjustment. Replace plate.

Timing Chain:—Morse. Width ¾" (nominal). Pitch ⅜". Length 56 links or 21".

Camshaft Setting:—Sprockets marked. Mesh chain with sprockets turned so that 'O' marks are adjacent and in line with a straightedge across the shaft centers.

VALVES:—	Head Diam.	Stem Diam.	Length
Intake	1 19/23"	.310-.311"	5.718"
Exhaust	1 15/32"	.310-.311"	5.718'

	Seat Angle	Lift	Stem Clearance
Intake	30°	19/64"	Free fit to .0006"
Exhaust	45°	19/64"	Free fit to .0006"

Valve Guides:—Removable, tapered guides (.001" taper to the inch, with greatest clearance at top). IMPORTANT—Measure clearance at bottom end. Valve should just fall through of own weight when started in guide. NOTE—When valves serviced, guides should be cleaned with wire brush or taper reamer (Tool P.R. 131).

Valve Springs:—Install with two close coils at top. Dampeners installed on top of each spring. Use new dampeners whenever removed from spring. Use care when removing split type spring keepers.

	Spring Pressure	Spring Length
Valve Closed	56 lbs.	1 29/32"
Valve Open	96 lbs.	1 39/64"

Valve Lifters:—Single piece cast-iron. Furnished .005" oversize. Use special piloted reamer (J-551) when installing oversize lifter. **Clearance**—.0005-.0015".

VALVE TIMING

Tappet Clearance:—.011-.013" all valves (hot). For sustained high speed driving .013" exhaust setting is recommended. Use .011" and .013" feelers as 'go' and 'no go' gauges.

Valve Timing:—See Camshaft Setting above.
Intake Valves—Open 5° BTDC. Close 39° ALDC.
Exhaust Valves—Open 45° BLDC. Close 5° ATDC.

To Check Valve Timing:—Set tappet clearance #6 intake valve at .0125". This valve should open with piston 5° (.0096") before top dead center and first straight line of ignition mark '/IGN.1&6/' slightly past indicator (left front face of housing).

LUBRICATION

LUBRICATION:—Pressure. Gear type oil pump on right hand side of engine.
See Pontiac Shop Notes for Pump Clearances.
NOTE—Whenever oil pump is to be removed (remove right engine side pan) turn engine over until #1 piston is at top dead center on compression stroke. To assemble, dip gears in oil, place prick-punch mark on oil pump gear down, see that distributor rotor is in #1 position, mesh gears, reset ignition timing.

Normal Oil Pressure:—35-45 lbs. with warm oil.
Oil Pressure Regulator:—In oil pump, non-adjust.
Crankcase Capacity:—6 quarts (refill).

CLUTCH

CLUTCH:—Own—Long 10CF-CS driven member. Single plate, dry disc type.
See Clutch Section for complete data.
Facings—Woven type, 2 required, I.D. 6", O.D. 10", .125" thick.

Adjustment—Clearance between pedal and underside of pedal felt retainer board should be ½". Adjust by loosening locknut and turning stopscrew at lower end of pedal. Free movement of pedal should be ¾". Adjustable link provided.

Removal:—Remove transmission (see Transmission Removal below), bottom housing cover, unlock pedal pull-back spring, remove fork ball support, fork, and throwout bearing. Loosen mounting screws evenly to release springs. Remove assembly from below.

TRANSMISSION

TRANSMISSION:—Pontiac—Synchro-mesh in second and high gears. All gears helical type.

See Transmission Section for complete data.

Removal:—Remove floor center panel, front seat, disconnect rear universal joint (wire trunnions), remove shaft housing to transmission capscrews, rear engine support bolts, jack up rear of engine, remove fastening bolts, pull unit straight back freeing main drive gear, then up and forward at front, removing transmission and coupling from front propeller shaft and housing. Remove assembly through floor opening.

UNIVERSALS

UNIVERSAL JOINTS:—Mechanics—Model 2C. Roller bearing type. Two used.

See Universals Section for complete data.

Front Propeller Shaft Bearing:—*See Pontiac Shop Notes for complete data.*

REAR AXLE

REAR AXLE:—Pontiac, semi-floating, spiral bevel gear type with Hotchkiss drive.

See Rear Axle Section for complete data.

Ratio—4.375-1 Std., 4.625-1 Mt., 4.125-1 Plains.

Backlash—.003-.010" new. Shim adjustment.

Removal:—To remove axle shaft, remove wheel, brake drum, 4 nuts freeing backing plate, static collector, pull axle shaft bearing retainer away from backing plate (do not shift backing plate or brake line damage may result) and withdraw axle shaft and bearing assembly (Tool No. J-942). Replace one nut to hold backing plate in place. With axle shafts removed, differential assembly may be removed by disconnecting rear universal joint and removing housing capscrews.

Wheel Bearing Adjustment—None.

SHOCK ABSORBERS

SHOCK ABSORBERS:—Delco—Model 1947-A,B (front), 1174-U (rear). Double acting, piston type. Direct acting on rear.

See Shock Absorber Section for complete data.

FRONT SUSPENSION

Front Suspension:—Independent, linked parallelogram type with coil springs.

See Front Suspension Section for complete data.

Kingpin Inclination—4½-5°.
Caster—Minus ¾° to minus 1¼°. Adjustable.
Camber—¾° to 1¼°. Adjustable (½ turn max. adj.).
Toe In—0-1/16".
Steering Geometry—Inner wheel 22½-23½°. Outer wheel 20°.

STEERING GEAR

Steering Gear: Saginaw Worm-and-Roller type with center steering.

See Steering Gear Section for complete data.

BRAKES

BRAKES:—Service—Bendix Hydraulic, duo-servo, single anchor. Hand lever applies rear service brakes.

See Brake Section for complete data.

Wheel Cylinders—Front wheel—1", rear 15/16".
Drum Diameter—12". Out-of-round—.004-.005".
Lining—Moulded type. Width 1¾". Thickness 3/16". Length per wheel 23 1/16".
Clearance—.010" at heel and toe of each shoe.

Hand Brake Adjustment:—See Service Brakes.

MODEL IDENTIFICATION

SERIAL NUMBER:—First number 8-CA-1001. On left hand frame side rail under hood.

ENGINE NUMBER:—First number 8-83001. Stamped on boss on left hand top corner of block.

TUNE-UP

COMPRESSION:—Ratio 6.2-1. Pressure 140-143 lbs. at 1000 R.P.M. or approx. 115 lbs. at cranking speed.

VACUUM READING:—Steady reading of 18-20" with engine idling at 376 R.P.M. or 7 M.P.H.

FIRING ORDER: 1-6-2-5-8-3-7-4. See diagram.

SPARK PLUGS: AC Type K-7 (or No. 45), 14 mm. Metric. Gaps—.025" (.022" cars with radio).

IGNITION: See Coil, Condenser, and Distributor.
Breaker Gap—.015". **Cam Angle**—31° Closed.
Automatic Advance—14° max. at 2100 RPM (distr.).
Vacuum Advance—10° distr. with 16-21" vacuum.

IGNITION TIMING: See Ignition Timing.
Std. Setting—6° BTDC. First line of flywheel mark '/IGN.1-8/' aligned with pointer in inspection hole on left side of housing.

CARBURETION: See Carburetor & Carb. Equipment.
Idle Setting—Set idle adjusting screw ½-1 turn open. Idle speed 7 MPH or 376 RPM.
Float Level—⅜" from top of float to gasket seat with valve seated (invert to check).
Accelerating Pump—Lower hole standard setting.
Fuel Pump Pressure: 4 lbs. (AH), 3½ lbs. (AJ Comb.).

VALVES: See Valve Timing.
Tappet Clearance—.011-.013" all valves (hot). For sustained high speed set exhaust clearance at .013". Use .011" and .013" feelers at 'go' and 'no go' gauges. NOTE—Remove hood side panels by unfastening two wing nuts at rear, one at top front (inside).

STARTING: See Battery, Starter Generator, Regulator.

IGNITION

Ignition Switch:—Delco-Remy Model 435-G. Switch and cable assembly. Connected to coil by armored cable.
Ignition Lock—Briggs & Stratton. #45792 (cylinder), #80203 (case). **Key Series**—8000-9499.

COIL: Delco-Remy Model 539-L. Mounted on dash.
Ignition Current—3.5 amperes at 6.2 volts.

CONDENSER: Delco-Remy Part No. 1865972.
Capacity—.20-.25 microfarad.

DISTRIBUTOR: Delco-Remy Model 663-X. Single breaker, 8 lobe cam, full automatic advance type with vacuum spark control and Gaselector adjustment.
Breaker Gap—.0125-.0175" (limits), set at .015".
Cam Angle or Dwell—31° (closed), 14° (open).
Breaker Arm Spring Tension—19-23 ounces.

Automatic Advance

Distributor Degrees	R.P.M.	Engine Degrees	R.P.M.
Start	400	4.0	800
7.0	1100	14.0	2200
8.5	1550	17.0	3100
14.0	2100	28.0	4200

Vacuum Spark Control Delco-Remy Model 681-N. Mounted on housing and linked directly to breaker plate. Provides additional advance at speeds above idling (vacuum port above throttle in carburetor) except when engine accelerated or operated with wide open throttle when spark is retarded by return spring within unit.

Vacuum Advance

Distr. Degrees	Eng. Degrees	Vacuum (" of HG)
Start	0°	5-6"
10°	20°	16-21"

Gaselector—Consists of adjustment at distributor providing 10° advance or retard from center '0' position. See Ignition Timing for setting.
Distributor Removal:—Mounted on left side of engine. To remove, disconnect vacuum line and take out hold-down screw in advance arm.

IGNITION TIMING

IGNITION TIMING:—Standard setting as shown. See Gaselector Setting below.

	Flywheel Degrees	Piston Position
All engines	6° BTDC	.0128" BTDC

NOTE—The two straight lines of the ignition mark '/IGN.1-8/' indicate allowable timing range of 4° on flywheel. Use first or 6° line in setting ignition.

To Set Timing (using Timing Light)—Connect timing light between distributor terminal and ground, turn on ignition. With #1 piston on compression turn engine over until piston is 6° or .0128" before top dead center, stop when first line of ignition mark '/IGN.1-8/' lines up with pointer in inspection hole in left front face of flywheel housing. Loosen Gaselector thumbnut, center pointer on scale, tighten thumbnut, loosen advance arm clamp bolt, rotate distributor until timing lamp lights (contacts opening), tighten clamp bolt.

Timing (Synchroscope)—Connect Synchroscope between #1 spark plug cable and distributor cap, fill in first line of flywheel mark '/IGN.1-8/' with white paint or chalk, idle engine at 376 R.P.M. or 7 M.P.H. (in high gear), adjust distributor as directed above until line coincides with pointer on housing.

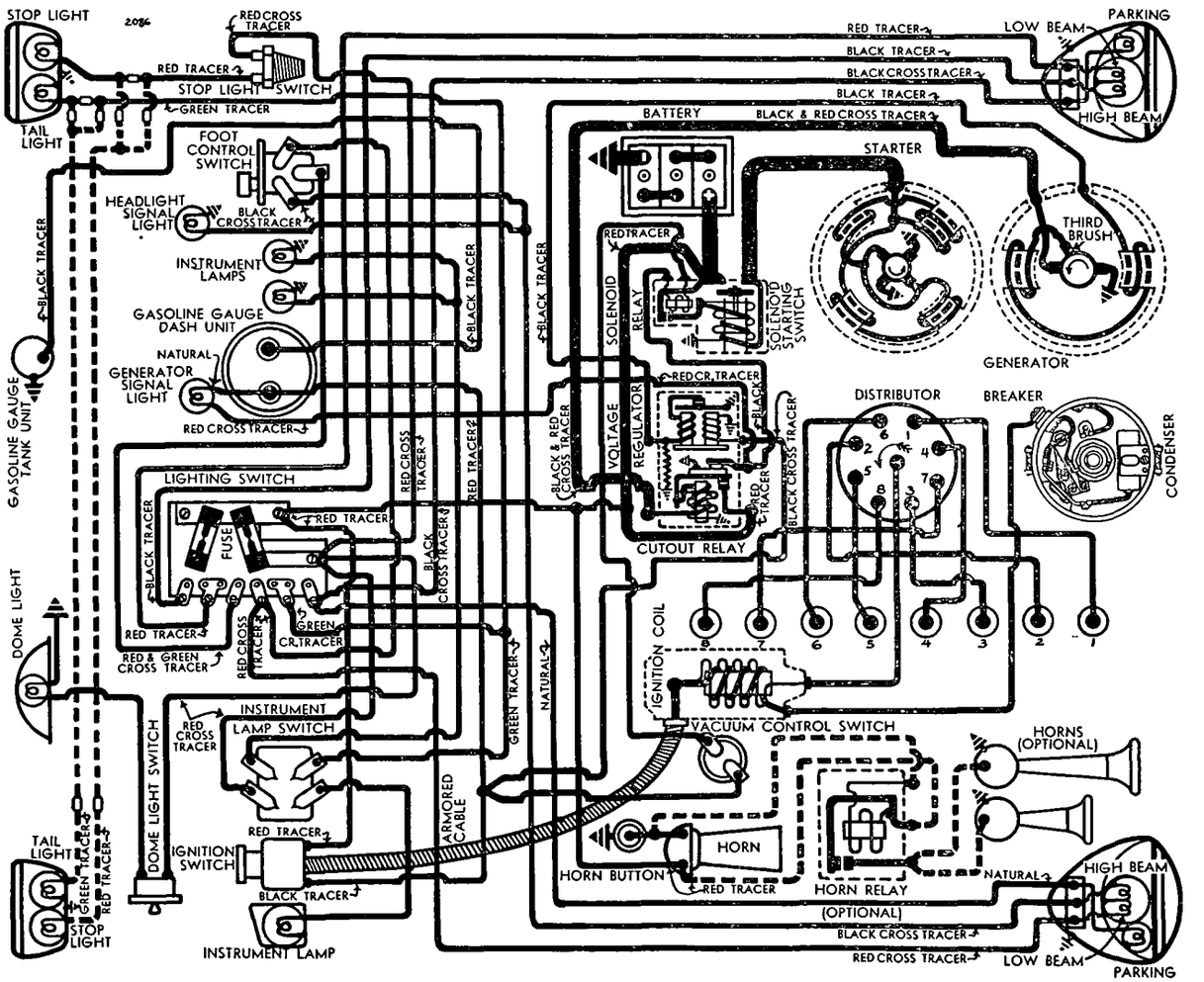

Gaselector Setting—Should be set to provide best performance without spark knock or ping for particular operating conditions and octane rating of fuel used. To adjust, loosen thumbnut, move pointer clockwise to advance or counter-clockwise to retard spark.

CARBURETOR

CARBURETION:—Carburetor—Carter Model 350-S. 1¼" downdraft type with Carter Climatic Control.
For complete data, refer to Carburetor Index.

Idle Adjustment—Vacuum Gauge (Tool J-89) recommended. With engine hot, choke valve wide open (fast idle inoperative), set throttle stopscrew to idle engine at 376 R.P.M. or 7 M.P.H., then adjust idle adjusting screw to give steady reading of 18-20" (at average altitudes). To adjust without gauge, proceed as above turning idle adjusting screw in until engine begins to miss, then turn screw out until engine begins to roll, finally turn screw in until engine fires smoothly. Readjust throttle stopscrew for correct idling speed if necessary.

Accelerating Pump Setting—Pump lever under dust cover at top of carburetor has three holes for pump link adjustment. Change for seasonal requirements:
Outer Hole (Max. stroke)—Extremely cold weather.
Lower Hole (Med. stroke)—Standard setting.
Inner Hole (Min. stroke)—Extremely hot weather.

Fast Idle:—Consists of fast idle cam linked to choke mechanism which acts as throttle lever stop. Should not require adjustment. See Carburetor article in Carburetion Section and special article in Carburetor Equipment Section for complete data.
For complete data, refer to Carburetion Equip. Index.

Accelerator Linkage Adjustment:—Adjust rod connecting bell cranks on side of manifold so that accelerator pedal just touches floor board with carburetor throttle valve wide open. Release accelerator pedal and with throttle valve in closed position (fast idle inoperative), set adjusting screw in lever at forward end of this connecting rod so that clearance between this lever and lever which operates the carburetor throttle valve rod is 5/32 - 3/16", secure the locknut. Disconnect vacuum switch operating rod at switch lever, turn switch lever so that pointer lines up with line on switch body, adjust length of rod by turning trunnion on rod until rod can be connected to switch lever without disturbing position of lever. See that hand throttle is fully closed, loosen set screw in throttle cable trunnion (at lower end of cable), adjust cable length so so that clearance between lever at forward end of hand throttle operating rod and carburetor throttle valve rod lever is 1/16" minimum. Check setting

Automatic Choke:—Carter Climatic Control.
For complete data, refer to Carburetion Equip. Index.

CARB. EQUIPMENT

Air Cleaner:—AC. #1528128 oil-wetted type standard. #1525998 (1st 1038 models), #1528304 (after 1038 models) heavy duty oil-bath type optional.

Fuel Pump:—AC. Type AH #1523109. Diaphragm type. Type AL #1523110 fuel & vacuum pump Optl.
For complete data, refer to Carburetion Equip. Index.

Gasoline Gauge:—AC. Electric. #1515325 (dash unit), #1515450 (tank unit).
For complete data, refer to Carburetion Equip. Index.

BATTERY

Delco, Type 17-K. 6 volt, 110 ampere hr. capacity.
Starting Capacity—131 amperes for 20 minutes.
Zero Capacity—300 amperes for 4.4 minutes.
Grounded Terminal—Negative (—) terminal.
Location—Left hand side under front floor boards.
Delco, Type 17-J (Police). 6 volt, 17 plate, 125 ampere hour capacity (20 hour rate).
Grounded Terminal & Location—Same as above.

STARTER

Delco-Remy Model 727-S. Armature No. 823881.
Drive—Overrunning clutch and manual pinion shift operated by solenoid switch.
Cranking Engine—220-225 amperes at 5 volts.
Rotation—Counter-clockwise at commutator end.
Brush Spring Tension—24-28 ounces each.

Performance Data

Torque	R.P.M.	Volts	Amperes
0 ft. lbs	5500	5.0	65
15 ft. lbs	Lock	3.0	600

Removal:—Mounted on left front face of flywheel housing. To remove, take out capscrews.
Starting Switch: Delco-Remy Solenoid 1546. Vacuum Switch Type 1605. Solenoid switch controlled through relay by vacuum switch operated by accelerator pedal with ignition switch turned on.
For complete data, refer to Electrical Equipment Index.

Solenoid Switch

Close against 70 lbs. with .5" air gap drawing 65-71 amperes at 5 volts. Holds switch closed with draw of 12-14 amperes (hold-in coil only).

Solenoid Relay

Contacts Close—1.9 volts. **Open**—1.0-1.2 volts
Contact Gap—.035". **Air Gap**—.010" closed.

Vacuum Switch

Contacts Close—10-14° rotation counter-clockwise from latch position.
Unlatch Action—3.4-4.6" of HG. approximately 30° from latch position.

GENERATOR

STANDARD

Delco-Remy Model 948-S. Armature No. 1854856. Model 948-Y (Taxicab). Armature No. 1854856. Fixed third brush control with external vibrating voltage regulator. Ventilated by fan on drive pulley.

NOTE—Third brush is clamped in position for maximum safe output and must not be disturbed.

Charging Rate Adjustment—Adjusted by changing setting of voltage regulator. See Regulator data

NOTE—Do not operate generator on open circuit.

Maximum Charging Rate—22 amperes at 8.0 volts (cold), 18 amperes at 8.0 volts (hot). Reached at car speed of 30-35 M.P.H. To check charging rate, connect test ammeter in line at 'BAT' terminal of regulator, voltmeter between 'GEN' and ground, ground 'F' terminal to eliminate regulator action.

Generator Charge Indicator—Red jewel light at lower left corner of instrument group. Lights when ignition key is turned 'on' and remains lighted until generator begins to charge, then goes out. If lamp does not light when ignition key is turned 'on', ground 'GRD' terminal on Cutout Relay, if lamp still does not light replace bulb. See Bulb Specifications below.

Performance Data

	Amperes	Volts	R.P.M.
Cold	23-27	8.8-9.0	3000
Hot	18-23	8.2-8.7	3200

Rotation—Counter-clockwise at commutator end.
Brush Spring Tension—22-26 ounces (main), 16-20 ounces (third).
Field Current—2.3-2.6 amperes at 6 volts.
Removal:—Pivot mounted at left front of engine. T remove, take out two pivot bolts and one clamp bolt.
Belt Adjustment:—Loosen pivot bolts and clamp bolt, move generator out or away from engine to take up stretch or slack in belt.

GENERATOR

SPECIAL EQUIPMENT

Delco-Remy Model 934-F (used for City and State Police), 961-N (Spec. Equip.). Two brush (shunt) types used with voltage and current regulation.
Charging Rate Adjustment—None. See Regulator.
Maximum Charging Rate—As follows:

Performance Data—Cold

	①Amperes	Volts	R.P.M.
934-F	26	8.1-8.3	1325
961-N	25	8.0	1650

①—Current Regulator setting. See Regulator.
Rotation—Counter-clockwise at commutator end.
Brush Spring Tension—25 ozs. each.
Field Current—1.7-2.0 amperes (934-F), 2.0-2.2 amperes (961-N) at 6.0 volts.
Removal & Belt Adjustment:—See Std. Gen. above.

REGULATOR

STANDARD

Delco-Remy Model 5808. Double Core Type Voltage Regulator (With 'IGN' Terminal). Cutout Relay and vibrating type Voltage Regulator in case on dash. Cutout Relay has special 'ground' contacts for Generator Charge Signal control.
For complete data, refer to Electrical Equipment Index.

Cutout Relay

Cuts In—6.9-7.6 volts.
Cuts Out—0-4.0 ampere discharge current.
Contact Gap—.018-.025".
Air Gap—.018-.022" with contacts closed.

Voltage Regulator

Setting—7.5-7.9 volts Cold (70°F), 7.4-7.6 volts Hot 150° F. Regulator is over-compensated for temperature and must be checked at these points.

Adjustment—Disconnect lead on 'IGN' terminal of regulator, connect jumper between 'IGN' and 'BAT' terminals, connect test ammeter in charging line at 'BAT' terminal, connect voltmeter between 'IGN' terminal and ground. Operate generator at 2800-3000 R.P.M., adjust charging rate to 8-10 amperes, change regulator armature spring tension by bending spring hanger at lower end of spring slightly until setting is as given above.

NOTE—Regulator cover must be in place when tests are made. Do not operate generator on open-circuit.
Contact Gap—.015-.025".
Contact Spring Tension—2.7-3.5 ounces.
Air Gap—.060-.070" between armature and center of core with armature down and fibre bumper touching stop; .008-.013" between fibre bumper and stop with armature up.

CONTINUED ON NEXT PAGE

CONTINUED FR M PRECEDIN PA E

REGULATOR

SPECIAL EQUIPMENT

Delco-Remy Model 5599 (for Spec. 934-F Generator), 5832 (961-N Gen.). Double Core Type Voltage and Current Regulator (with 'IGN' Terminal). Same design as Std. Model 5808 (above) with additional Current Regulator unit.

For complete data, refer to Electrical Equip. Index.

Cutout Relay & Voltage Regulator

All specifications and Adjustment directions same as for Std. Model 5808 (above) except Voltage Regulator Setting on Model 5599 (5832 same as 5808).

Voltage Regulator Setting (5599 Only)—7.0-7.4 volts Cold (70°), 6.95-7.15 volts Hot (150°).

Current Regulator

Setting—26-28 amperes (All Models).

Checking & Adjustment—Connect test ammeter in charging line at regulator 'BAT' terminal, disconnect lead at regulator 'IGN' terminal (to eliminate Voltage Regulator operation). Operate generator at speed for maximum output, note ammeter reading with Current Regulator operating (should agree with Setting). Adjust by bending spring hanger at lower end of armature spring slightly.

Contact Gap—.020". **Contact Spring Tension** 3.5 ozs.

Air Gap—.075" between armature and center of core with armature down so fibre bumper just touches the stop, .010" between fiber bumper and stop with armature up.

LIGHTING

LIGHTING:—Headlamps—Guide Multi-beam, prefocused, cross-beam type with special non-interchangeable lenses. Special asymetrical 'Passing' beam (upper beam left headlamp, lower beam right headlamp) controlled by foot dimmer switch with lighting switch in driving or third position.

Headlamp Adjustment—Must be adjusted with lenses in place (beam 4° to right without lenses), upper beam lighted, car unloaded on level floor 25' from screen. Lamps adjusted by loosening bracket bolt nut beneath each headlamp. Aim left headlamp so that upper edge of bright spot is on horizontal line at lamp center height and left edge is at lamp vertical center-line (entire bright spot to right of vertical line). Aim right headlamp for same height but center bright spot on lamp vertical center-line (right cut-off approx. 8" to right of center-line).

Headlamp Beam Indicator—Located to left of speedometer dial. Lighted whenever driving or upper headlamp beams are lighted.

Switches

Lighting—Delco-Remy Model 480-V, T (Export).
Foot Beam Selector—Delco-Remy Model 471-T.
Dash Lamp—Delco-Remy Model 1406.
Stop Lamp—Hydraulic type on brake master cyl.

Bulb Specifications

Position	Candlepower	Mazda No.
Headlamps	32-21	2320-L
Parking, Instrument	1½	55
Dash, Indicators	1	51
Dome	6	81
Tail	3	63
Stop	15	87

MISC. ELECTRICAL

FUSES:—Fuse block mounted on lighting switch in back of instrument panel. Two 20 ampere capacity fuses and one spare. Fuse toward rear protects left hand headlamp circuit. Fuse toward engine protects all other lighting circuits.

HORNS:—Klaxon Model K-26-L, Type 1601 std. equipt. Model K-33-B, Type 1857 (low note), 1858 (high note) blended tone twin horns operated by horn relay Optl. equipment.

Horn Type	Current at 6 Volts	Air Gap
K-26-L, 1601	6.5-8.5	.025-.028"
K-33-B, 1857	12-14	.045-.050"
K-33-B, 1858	11-13	.036-.040"

NOTE—Twin horns are stamped 'L' (low note—long horn), 'S' (high note—short horn), on motor shell.

Horn Relay: Delco-Remy Model 271-C.
Points Close—2.7-4.0 volts.
Contact Gap—.015-.030".
Air Gap—.010-.025" with contacts closed.

ENGINE

ENGINE SPECIFICATIONS:—8 cylinder, 'L' head.
Bore—3¼". **Stroke**—3¾".

Displacement—248.9 cubic inches.

Rated Horsepower—33.8 (S.A.E.)

Developed Horsepower—100 at 3800 R.P.M.

Compression Ratio & Pressure—6.2-1 std. cast-iron head. Pressure 140-143 lbs. @ 1000 R.P.M. or approx. 115 lbs. at cranking speed.

Vacuum Reading—Steady reading of 18-20" with engine idling at 376 R.P.M. or 7 M.P.H.
See Pontiac Shop Notes for Radiator & Fender Removal.

PISTONS:—Electro-plated, chrome nickel alloy. Tin-plated .00075-.00125" thick after finishing and cannot be ground. Use finished replacement pistons. Pistons fitted in following standard sizes (marked by letter on top of head and on top of cylinder block)—'A'—3.247", 'B'—3.2475", 'C'—3.248", 'D'—3.2485", 'E'—3.249". See Replacement Pistons below.
Length—3 19/32".

Weight—Held to 1/16 oz. maximum variation.

Removal—Pistons and rods removed from above.

Clearance—Skirt .002". See Fitting New Pistons.

Original Bore Size:—***See Pontiac Shop Notes.***

Replacement Pistons:—***See Pontiac Shop Notes.***

Fitting New Pistons:—Insert .002" feeler ½" wide between piston and cylinder wall at right angles to pin hole. Pressure to withdraw feeler must be 10-25 lbs. Piston taper allowance .0005".

PISTON RINGS:—Two undercut compression rings, above pin, one oil control ring below pin, per piston. Lower ring groove drilled radially with ten .1402" oil drain holes. Also two drain holes in each boss for pin lubrication.

Ring	Width	End Gap	Side Clearance
Compression	.124"	.007-.012"	.0015-.003"
Oil Control	.186"	.007-.012"	.001-.0025"

NOTE—Install comp. rings with groove down.

PISTON PIN:—Diameter—15/16". Length 2⅞".
Pin is locked in piston by lockscrew in one boss. Opposite end slotted, slides freely in boss.
Pin Fit in Piston—***See Pontiac Shop Notes.***
Pin Fit in Rod Bushing—.0003-.0005". See Connecting Rod Upper Bearing below.

Replacement Pins—Three oversize pins furnished in service. Can be identified by daub of paint on end of pin as follows: .001" (red and brown), .003" (red), .005" (blue).

Fitting Pins—***See Pontiac Shop Notes.***

CONNECTING ROD:—Length—7 9/16" (center to center). **Weight**—29⅞ oz. Held to 1/16 oz. max. var.

Piston Pin Bushing (Upper Bearing)—Split bushed type. ***See Pontiac Shop Notes for complete data.***

Crankpin Journal Diameter—2".

Lower Bearing—Removable steel-backed, babbitt-lined type. Furnished standard and .001" undersize. **Clearance**—.0005-.0015". **Sideplay**—.005-.010".

Bearing Adjustment:—None (no shims). ***See Pontiac Shop Notes for Fitting and Installing Bearings.***

Installing Rods:—Rods not offset. Install rods in same cylinder from which removed.

CRANKSHAFT:—5 bearing. Integral counterweights. ***See Pontiac Shop Notes for Harmonic Balancer data.***

Journal Diameters—#1, 2⅜"; #2, 2 13/32"; #3, 2 7/16"; #4, 2 15/32"; #5, 2½".

Bearing Type—Interchangeable steel-backed, babbitt-lined type. Upper and lower halves interchangeable. Furnished std., .001" undersize.

Clearance—.001-.003".

Bearing Adjustment:—None (no shims). ***See Pontiac Shop Notes for Fitting and Installing Bearings.***

End Thrust:—Taken by #4 (rear center) bearing. Endplay .003-.008". No adjustment other than replacing bearing.

CAMSHAFT:—5 bearing, non-adjustable chain drive. ***See Pontiac Shop Notes for Camshaft Removal, Bearing finished sizes and Replacement Camshaft Sprocket data.***

Journal Diameters—#1, 2"; #2, 1 31/32"; #3, 1 15/16"; #4, 1 29/32"; #5, 1⅞".

Bearing Type—Removable steel-backed, babbitt-lined.

Clearance—.0015-.0025".

End Thrust:—Taken by steel thrust plate assembled behind camshaft sprocket. **Endplay** .002-.005". No adjustment. Replace plate.

Timing Chain:—Morse. Width 1". Pitch ⅜". Length 56 links or 21".

Camshaft Setting:—Sprockets are marked. Mesh chain with sprockets turned so that 'O' marks are adjacent and in line with a straightedge across the shaft centers.

VALVES:—

	Head Diameter	Stem Diameter	Length
Intake	1 15/32"	.310-.311"	5.53"
Exhaust	1 11/32"	.310-.311"	5.53"

	Seat Angle	Lift	Stem Clearance
Intake	30°	19/64"	Free fit to .0006"
Exhaust	45°	19/64"	Free fit to .0006"

Valve Guides:—Removable, tapered guides (.001" taper to the inch, with greatest clearance at top).

IMPORTANT—Measure clearance at bottom end. Valve should just fall through of own weight when started in guide. NOTE—When valves serviced, guides should be cleaned with wire brush or taper reamer (Tool P.R. 131).

ENGINE

CONTINUED FROM PRECEDING PAGE

Valve Springs:—Install with two close coils at top. Dampeners installed on top of each spring. Use new dampeners whenever removed from spring. Use care when removing split type spring keepers.

	Spring Pressure	Spring Length
Valve Closed	56 lbs.	1 29/32"
Valve Open	96 lbs.	1 39/64"

Valve Lifters:—Single piece cast-iron. Furnished .005" oversize. Use special piloted reamer (J-551) when installing oversize lifter. **Clearance**—.0005-.0015".

VALVE TIMING

Tappet Clearance:—.011-.013" all valves (hot). For sustained high speed driving .013" exhaust setting is recommended. Use .011" and .013" feelers as 'go' and 'no go' gauges.

Valve Timing:—See Camshaft Setting above.

Intake Valves—Open 5° BTDC. Close 39° ALDC.

Exhaust Valves—Open 45° BLDC. Close 5° ATDC.

To Check Valve Timing:—Set tappet clearance #1 intake valve at .0125". This valve should open with piston 5° (.0089") before top dead center, and first straight line of ignition mark '/IGN. 1&8/' slightly past indicator (left front face of housing).

LUBRICATION

LUBRICATION:—Pressure. Gear type oil pump on right hand side of crankcase.

See Pontiac Shop Notes for Pump Clearances.

NOTE—Whenever oil pump is to be removed (remove right engine side pan) turn engine over until #1 piston is at top dead center on compression stroke. To assemble, dip gears in oil, place prick-punch mark on oil pump gear down, see that distributor rotor is in #1 position, mesh gears, reset ignition timing.

Normal Oil Pressure:—35-45 lbs. with warm oil.

Oil Pressure Regulator:—In oil pump, non-adjust.

Crankcase Capacity:—7 quarts, refill.

CLUTCH

CLUTCH:—**Own**—Long 10 CF-CS driven member. Single plate, dry disc type.

See Clutch Section for complete data.

Facings—Woven type, 2 required, I.D. 6", O.D. 10", .125" thick.

Adjustment—Clearance between pedal and underside of pedal felt retainer board should be ½". Adjust by loosening locknut and turning stopscrew at lower end of pedal. Free movement of pedal should be ¾". Adjustable link provided.

Removal:—Remove transmission (see Transmission Removal below), bottom housing cover, unlock pedal pull-back spring, remove fork ball support, fork, and throwout bearing. Loosen mounting screws evenly to release springs. Lower assembly.

TRANSMISSION

TRANSMISSION:—**Pontiac**—Synchro-mesh on second and high gears. All gears helical type.

See Transmission Section for complete data.

Removal:—Remove floor center panel, front seat, disconnect rear universal joint (wire trunnions), remove shaft housing to transmission capscrews, rear engine support bolts, jack up rear of engine, remove fastening bolts, pull unit straight back freeing main drive gear, then up and forward at front removing transmission and coupling from front propeller shaft and housing. Remove assembly through floor opening.

UNIVERSALS

UNIVERSAL JOINTS:—**Mechanics**—Model 2C. Roller bearing type. 2 used.

See Universals Section for complete data.

Front Propeller Shaft Bearing:—*See Pontiac Shop Notes for complete data.*

REAR AXLE

REAR AXLE:—Pontiac, semi-floating, spiral bevel gear type with Hotchkiss drive.

See Rear Axle Section for complete data.

Ratio—4.375-1 Std., 4.625-1 Mt., 4.125-1 Plains.

Backlash—.003-.010" new. Shim adjustment.

Removal:—To remove axle shaft, remove wheel, brake drum, 4 nuts freeing backing plate, static collector, pull axle shaft bearing retainer away from backing plate (do not shift backing plate or brake line damage may result) and withdraw axle shaft and bearing assembly (Tool No. J-942). Replace one nut to hold backing plate in place. With axle shafts removed, differential assembly may be removed by disconnecting rear universal joint and removing housing capscrews.

Wheel Bearing Adjustment—None.

SHOCK ABSORBERS

SHOCK ABSORBERS:—**Delco**—Model 1947-A, B (front), 1174-U (rear). Double acting, piston type. Direct acting on rear.

See Shock Absorber Section for complete data.

FRONT SUSPENSION

Front Suspension:—Independent, linked parallelogram type with coil springs.

See Front Suspension Section for complete data.

Kingpin Inclination—4½-5°.

Caster—Minus ¾° to minus 1¼°. Adjustable.

Toe In—0-1/16".

Steering Geometry—Inner wheel 22½-23½°. Outer wheel 20°.

STEERING GEAR

Steering Gear: Saginaw Worm-and-Roller type with center steering.

See Steering Gear Section for complete data.

BRAKES

BRAKES:—**Service**—Bendix Hydraulic, duo-servo, single anchor. Hand lever applies rear service brakes.

See Brake Section for complete data.

Wheel Cylinders—Front wheel—1", rear 15/16".

Drum Diameter—12". **Out-of-round**—.004-.005".

Lining—Moulded type. Width 1¾". Thickness 3/16". Length per wheel 23 1/16".

Clearance—.010" at heel and toe of each shoe.

Hand Brake Adjustment:—See Service Brakes.

HOOD LOCK ADJUSTMENT, SIDE PANEL BUMPERS, FRONT FENDER & RADIATOR (UNIT) REMOVAL:—*See Pontiac Shop Notes for data.*

MODEL IDENTIFICATION

SERIAL NUMBER: 1938 Models—First No. 6DA-1001. **1939 Models**—First car number 6EA-1001 (Deluxe 115), 6EB-1001 (Deluxe 120) with prefixes as follows: P—Pontiac, Mich., C—South Gate, Calif., L—Linden, N. J. On plate on left end of frame front cross member under hood.

ENGINE NUMBER: Stamped on boss on top left front corner of block. First No. 6-399501 ('38), 6-486200 ('39)

TUNE-UP

COMPRESSION:—**Ratio**—6.20-1 Std. cast-iron head. **Pressure**—140-143 lbs. at 1000 R.P.M. or approximately 115 lbs. at cranking speed.

VACUUM READING:—Steady reading of 18-20" with engine idling at 376 R.P.M. or 7 M.P.H.

FIRING ORDER: 1-5-3-6-2-4. See diagram.

SPARK PLUGS: AC Type K-7 (or No. 45). 14 mm. Metric. Gaps—.025".

IGNITION: See *Coil, Condenser, and Distributor.* **Breaker Gap**—.020". **Cam Angle**—35° Closed. **Automatic Advance**—14¼° max. at 2000 RPM (distr.). **Vacuum Advance**—7.5° distr. with 16-18" vacuum.

IGNITION TIMING: See Ignition Timing. **Std. Setting**—6° BTDC. First line of flywheel mark '/IGN.ONE/' aligned with pointer in inspection hole on left side of housing.

CARBURETION: See Carburetor & Carb. Equipment. **Idle Setting**—Set idle adjusting screw ¾-1¼ turns open (1938), ½-1½ turns open (1939). Idle speed setting 376 RPM or 7 MPH. **Float Level ('38 401-S)** ⅜" from top of float to gasket seat with valve seated (invert to check). ('39 433-S) ½" from machined projection on cover to top of soldered seam on float (invert to check). **Accelerating Pump**—Lower hole normal setting.

Fuel Pump Pressure: 4 lbs. (AH), 3¾ lbs. (AJ Comb.).

'38 MANIFOLD HEAT CONTROL: Thermostatic coil. Counterweight must be tightly clamped to shaft and about vertical with valve closed (engine cold). **Setting**—Move lever at forward end of heat tube between 'Winter' and 'Summer' end positions for seasonal temperatures as follows: Up to 50°F.—'Winter' setting, 50° to 70°F.—Intermediate (half way between winter and summer), 70°F and above—'Summer' setting.

'39 MANIFOLD HEAT CONTROL: Thermostatic coil. Adjustment provided by shifting anchor pin for following settings: Normal temperatures (center hole). Extremely cold temperatures (inner hole). Extremely hot temperatures (outer hole). Counterweight must be tightly clamped to shaft and should be about vertical with valve closed (engine cold).

VALVES: See Valve Timing. **Tappet Clearance:**—.011-.013" all valves (hot and running). Use .011" and .013" feelers as 'go' and 'no go' gauges. NOTE—.013" exhaust setting recommended by car manufacturer for sustained high speed.

STARTING: See Battery, Starter, Generator, Regulator.

IGNITION

IGNITION SWITCH: Delco-Remy Model 1116253 (All 1938, 39-25), 1116265 (39-26). Switch and cable assembly. Connected to coil by armored cable. **Ignition Lock**—Briggs & Stratton, B & S No. 45792. **Key Series**—8000-9499. **Groove**—#15.

COIL: Delco-Remy 539-L ('38), 1115023 ('39). On dash. **Ignition Current**—2.0 amperes idling, 3.5 stopped.

CONDENSER: Delco-Remy No. 1865972 (for 647-D distr.), #1869704 (for 1110202). **Capacity**—.18-.25 mfd.

DISTRIBUTOR: Delco-Remy 647-D (Std.), 1110202 (Taxi.) Single breaker, 6 lobe cam, full automatic advance with vacuum spark control and Gaselector adjustment (for fuel compensation) at distributor.
Breaker Gap—.020". Limits .018-.024".
Cam Angle or Dwell—35° (closed), 25° (open).
Breaker Arm Spring Tension—20 ounces.
Rotation—Counter-clockwise viewed from top.

Automatic Advance

Distributor Degrees	Distributor R.P.M.	Engine Degrees	Engine R.P.M.
Start	400	4.0	800
8.0	1050	16.0	2100
8.5	1450	17.0	2900
14.25	2000	28.5	4000

Vacuum Spark Control D-R No. 681-M. Integral with distributor. Mounted on housing and linked directly to breaker plate. Provides additional advance at speeds above idling (vacuum port in carburetor above throttle) except when engine accelerated or operated with wide open throttle when spark is retarded by return spring within unit. Total plunger travel 9/64".

Distr. Degrees	Eng. Degrees	Vacuum (" of HG)
Start	0°	7-9"
7.5°	15°	16-18"**

** at .125" travel.

Gaselector—Manual adjustment at distributor providing 10° advance or retard from center '0' position. See Gaselector Setting following.

Distributor Removal:—Mounted on left side of engine. To remove, disconnect vacuum line, take out hold-down screw in advance arm and lift out.

IGNITION TIMING

IGNITION TIMING:—Standard setting given. See Gaselector Setting following for final setting.

	Flywheel Degrees	Piston Position
All engines	6° BTDC	.0138" BTDC.

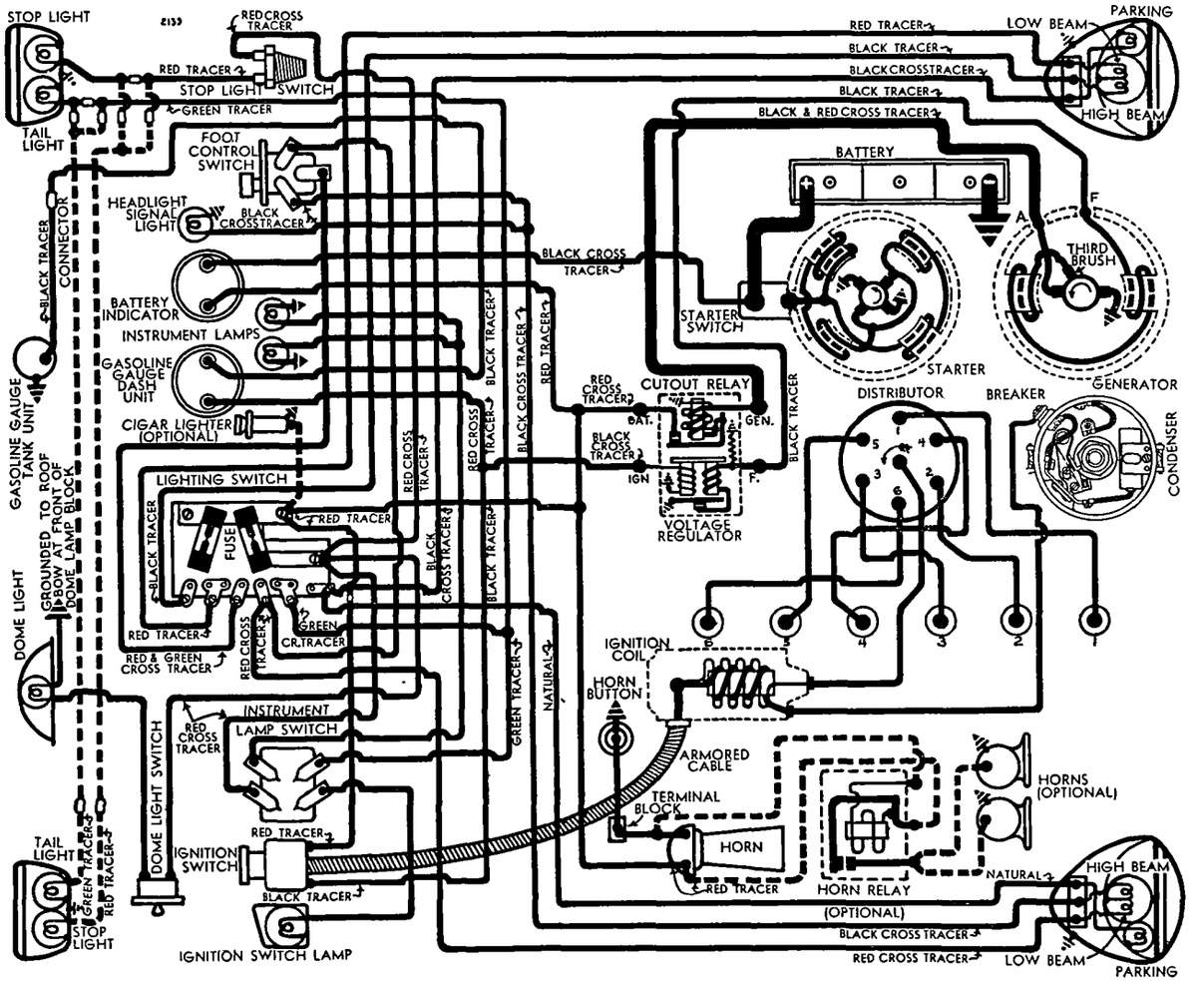

1938 M DELS

NOTE—The two straight lines of the ignition mark '/IGN.ONE/' indicates allowable timing range of 4° on flywheel. Use first or 6° line in setting ignition. Car manufacturer recommends use of Timing Light (Tool HM-494) or Synchroscope (HMO-161).

T Set Timing (using Timing Light)—Connect timing light between distributor terminal and ground, turn on ignition. With #1 piston on compression, turn engine over until piston is 6° or .0138" before top dead center, stop when first line of ignition mark '/IGN.ONE/' lines up with pointer in inspection hole in left front face of flywheel housing. Loosen Gaselector screw, center pointer on scale, tighten screw, loosen advance arm clamp bolt, rotate distributor until timing lamp lights (contacts opening), tighten clamp bolt.

To Set Timing (using Synchroscope)—Clip one synchroscope lead to #1 spark plug cable, insert other lead in distributor cap terminal from which #1 spark plug wire removed. Fill in first line of flywheel mark '/IGN.ONE/' with white chalk r paint. Direct synchroscope on flywheel through inspection hole in left front face of flywheel housing. Idle engine at 376 R.P.M. or 7 M.P.H., adjust distributor (as directed for Timing Light above) until white line coincides with pointer on housing.

Gaselector Setting—Should be set to provide best performance without spark knock or ping for particular operating conditions and octane rating of fuel used. To adjust, loosen screw, move pointer clockwise to advance or counter-clockwise to retard

CARBURETOR

1938—Carter Type W1 Vacumeter, Model 401-S. 1¼" single barrel downdraft type with Carter Climatic Control. Casting No. 344 on flange.

1939—Carter Type WA-1, Model 433-S. 1¼" single barrel downdraft type with Carter Climatic Control. Casting No. 154 on flange.

For complete data, refer to Carburetor Index.

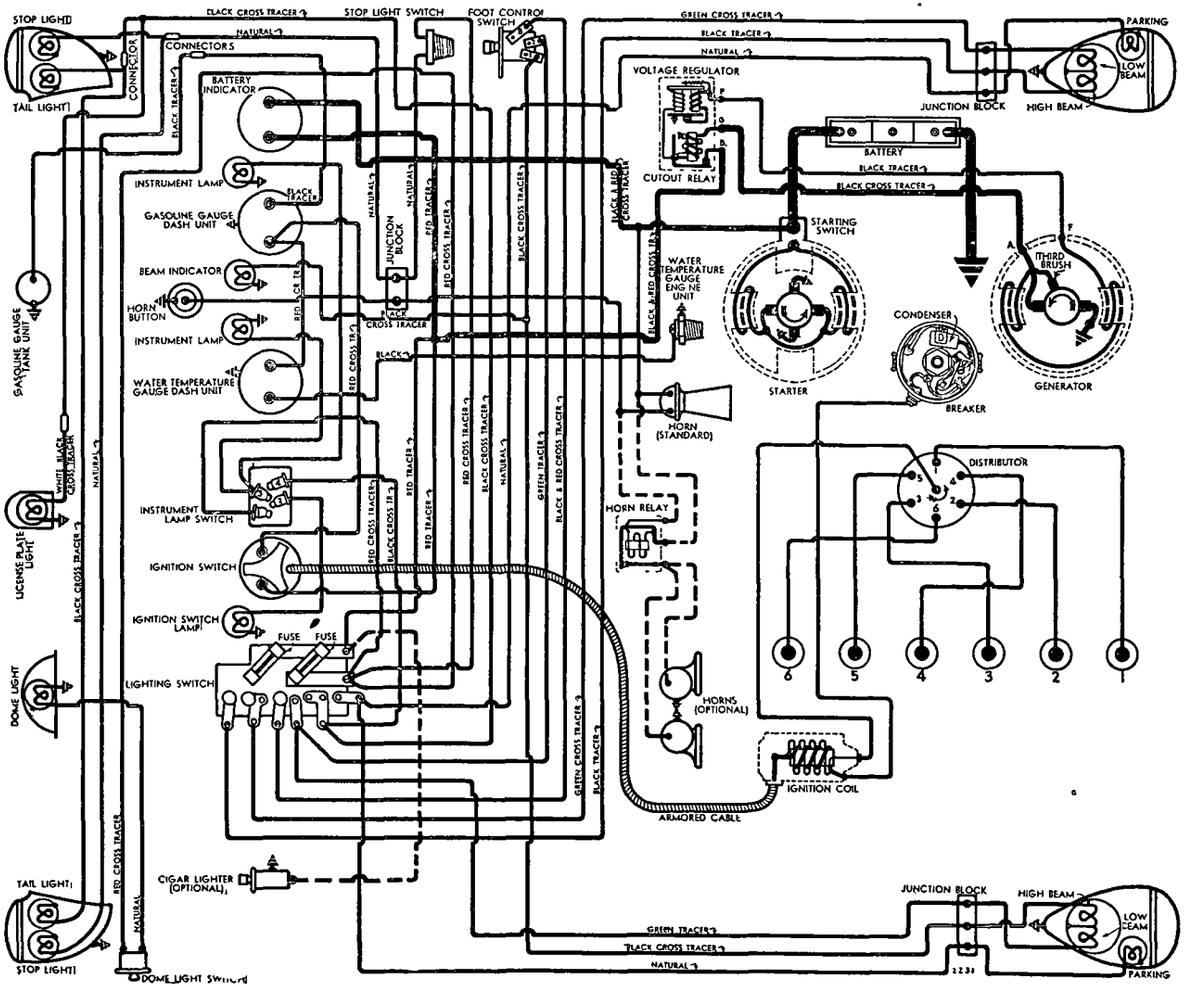

1939 M DELS

Idle Adjustment—Engine must be warm with automatic choke and fast idle inoperative. Car manufacturer recommends use of vacuum gauge. Set throttle stopscrew to idle engine at 7 M.P.H., adjust idle adjusting screw to give steady gauge reading of 18-20". To adjust without gauge, set throttle stopscrew as above, turn idle adjusting screw in until engine begins to miss, then turn screw out until engine begins to roll, finally turn screw in slowly until engine fires smoothly. Final setting should be ¾-1¼ turns open (401-S), ½-1½ turns open (433-S) of screw from inner seated position. Reset idle speed.

Accelerating Pump Setting—Pump lever under dust cover has 3 holes (401S), 2 (433S), for pump link:
Lower Hole (med. stroke)—Normal setting.
Inner Hole (min. stroke)—Extremely hot temperatures, high altitudes or hi-test fuels.
Upper Hole (max. stroke)—Extremely cold temp.

Fast Idle:—Integral type, built-in carburetor.
For complete data, refer to Carburetion Equip. Index.
Setting—With throttle lever stopscrew seated against (not on) first step of fast idle cam clearance between lower edge of choke valve and air horn should be ⅝" (gauge T108-85).

Accelerator Linkage Adjustment:—Must be maintained to provide correct 'Throttle cracking' action for starting. To adjust, after setting carburetor idle speed at 6-7 M.P.H., loosen hand throttle lockwire screw, pull button ⅛" out from instrument panel, position hand throttle lever so that no clearance exists between lever and throttle cross shaft, tighten lockscrew. Turn throttle stopscrew in 2 turns (with throttle stopscrew on high point of cam or 'cold' position), disconnect battery cable at starting motor, to prevent cranking, fully depress starter pedal, adjust throttle cracking pin so that all clearance between cross shaft lever and accelerator pedal lever is taken up. Connect starting motor cable and reset engine idle speed.

Automatic Choke:—Carter Climatic Control.
For complete data, refer to Carburetion Equip. Index.
Setting—Coil housing 1 Point Rich (All 1938, Late 1939), 2 Points Rich (Early 1939).

CARB. EQUIPMENT

Air Cleaner: AC oil-wetted type 1528150 (or 1528128) with crankcase inlet ventilator 498991 ('38), 502783 ('39). Oil bath optl. type 1528304 ('38), 1528944 ('39), with crankcase inlet ventilator 499327.

Fuel Pump: AC type AH standard #1523109 ('38), #1523844 ('39). Optl. comb. fuel-and-vacuum pump type AJ, #1523110 ('38), #1523825 ('39).
For complete data, refer to Carburetion Equip. Index.

Gasoline Gauge: AC Electric type.
Dash Unit: #1515343 ('38), #1515362 ('39).
Tank Unit: #1515470 ('38), #1515481 ('39).
For complete data, refer to Carburetion Equip. Index.

BATTERY

Delco Type 15E-1. 6 volt, 15 plate, 100 Amp. hour.
Starting Capacity—115 amperes for 20 minutes.
Zero Capacity—300 amperes for 3.3 minutes. Five second voltage—4.25 volts.
Grounded Terminal—Negative (—) to engine.
Dimensions—Length 19 5/16". Width 4". Height 9".
Location—Under engine hood on left side.

Police Battery:—Delco Type 19E-1. 6 volt, 19 plate, 125 A.H. capacity (20 hr. rate). End-to-end type.
Starting Capacity—150 amperes for 20 minutes.
Grounded Ter. & Location—Same as 15E-1 above.

CONTINUED ON NEXT PAGE

C NTINUED FR M PRECEDIN PAGE

STARTER

1938 MODELS

STD.: Delco-Remy Model 729-E. Armature 823881.
RHD.: Delco-Remy Model 737-C. Armature 1847432.
Drive—(729-E) Overrunning clutch with manual pinion shift. **(737-C)**—Bendix drive.
Rotation—Counter-clockwise at commutator end.
Brush Spring Tension—24-28 ounces each.
Cranking Engine—Approx. 200 amperes at 5 volts.

Performance Data—729-E

Torque	R.P.M.	Volts	Amperes
0 ft. lbs.	6000	5.0	60
15 " "	Lock	3.0	600

Performance Data—737-C

0 ft. lbs.	6000	5.0	65
15 " "	Lock	3.15	570

Removal:—Mounted on left front face of flywheel housing. To remove, take out capscrews.
Starting Switch (729-E): Delco-Remy No. 820052. On starter, operated by starter pedal (pinion shift). *For complete data, refer to Electrical Equipment Index.* (737-C) Delco-Remy Magnetic Switch Type 1528 used with Vacuum Switch 1605 (accelerator pedal starting). *For data, refer to Electrical Equip. Index.*

STARTER

1939 MODELS

STD: Delco-Remy Model 1107008. Armature 1867897.
RHD: Delco-Remy Model 727-S. Armature 823881.
Drive—Overrunning clutch with manual shift (1107008), solenoid pinion shift (727-S).
Cranking Engine—200 amperes at 5 volts.
Rotation—Counter-clockwise at commutator end.
Brush Spring Tension—24-28 ounces each.

Performance Data—1107008

Torque	R.P.M.	Volts	Amperes
0 ft. lbs.	5000	5.0	65
12 " "	Lock	3.37	525

Performance Data—727-S

0 ft. lbs.	5500	5.0	65
15 " "	Lock	3.0	600

Removal:—Mounted on left front face of flywheel housing. To remove take out mounting screws.
Starting Switch (1107008): Delco-Remy No. 820052. On starter. Operated by starter pedal (pinion shift). **(727-S)—Delco-Remy Solenoid Switch Type #1546 operated by pushbutton switch 1996004.**
For complete data, refer to Electrical Equipment Index.

GENERATOR

STANDARD

Delco-Remy Model No. 1100003. Armature 1866789.
Fixed third brush with vibrating voltage regulator.
Charging Rate Adjustment—Adjusted by changing setting of voltage regulator. See Regulator data.
Maximum Charging Rate—See table below. Reached at car speed of 30-35 MPH.

Performance Data

	Amperes	Volts	R.P.M.
Cold	26-30	8.0	3400
Hot	25-28	8.0	3600

Rotation—Counter-clockwise at commutator end.
Brush Spring Tension—25 oz. (main), 17 oz. (3rd).
Field Current—2.3-2.6 amperes at 6.0 volts.
Removal:—Pivot mounted at left front of engine. To remove, take out clamp and pivot bolts.
Belt Adjustment:—Loosen pivot and clamp bolts, move generator out or away from engine to take up stretch or slack in belt. 1" belt play between pulleys when grasped with fingers.

GENERATOR

SPECIAL EQUIPMENT

Delco-Remy Models

Generator	Regulator	Used for:
①934-F	5599	1939 Police
①961-N	5832	1939 Spec. Equipm.
②1105851	1118237	'39-40 Spec. Equipm.
②1105856	1118237	'39-40 Spec. Equipm.

①—2 brush generator with Double Core Type Regulator with IGN Terminal. *Refer to 1937 Pontiac Eight page for data on these Generators and Regulators.*
②—2 brush generator with Single Core Type Regulator. *Refer to 1940 Pontiac car article for data.*

REGULATOR

Delco-Remy Double Core Voltage Regulator with "IGN" terminal 5835 (1938), 5808 (RHD '39), No "IGN" terminal 5858 (1939). Cutout Relay and vibrating Voltage Regulator in case on dash.
For complete data, refer to Electrical Equipment Index.

Cutout Relay.

Cuts In—6.9-7.6 volts (5835, 5808), 6.3-6.9 volts (5858) at 70°F., 1340 RPM or 15 MPH.
Cuts Out—0-4.0 amps. discharge current at 6.3 v.
Contact Gap—.020". **Air Gap**—.020" (closed).

Voltage Regulator

Setting—7.5-7.9 volts (70° F.), 7.4-7.6 volts (150° F.).
Adjustment—For "IGN" types, disconnect lead on "IGN" terminal, connect jumper between "IGN" and "BAT" terminals, connect test ammeter in charging line at "BAT" terminal, connect voltmeter between "IGN" terminal and ground. For "NO IGN" types, connect ammeter in charging line at "BAT" terminal on regulator, voltmeter between "BAT" terminal and ground. Then check both types by operating generator at 2800-3000 RPM., adjust charging rate to 8-10 amperes (use variable rheostat or 'AVR' set), adjust regulator by bending spring hanger at lower end of armature slightly.
Contact Gap—.020". **Contact Spring**—3.5 ozs.
Air Gap—.063" between armature and center of core with armature down, .010" between fibre bumper and stop with armature up.
Caution—Regulator cover must be in place when testing. Do not run generator on open-circuit.

LIGHTING

Headlamps and Headlamp Adjustment. *All data same as for 1938-39 Pontiac Eight (following car article).*
Beam Indicator—Red indicator light above center of speedometer. Lighted with upper beams "on".

Switches

Lighting ('38)—D-R No. 1995002, 1995004 (RHD).
Lighting ('39)—D-R No. 1995006, 1995007 (RHD).
Beam Selector—Delco-Remy Model 471-T ('38), 1997008 (1939), 465-V (RHD).
Instrument Lamp—D-R Model 1406.
Stop Light—D-R Model 476-U.

Bulb Specifications

Position	Candlepower	Mazda No.
Headlamps	32-21	2320
Parking, Instrument	1½	55
Ign. Switch, Beam Indic.	1	51
Tail	3	63
Stop	15	87
Dome	6	81
License	3	63

MISC. ELECTRICAL

FUSES:—Fuse block mounted on lighting switch on back of instrument panel. Three 20 amp. fuses:
Left Headlamp Circuit—Fuse to rear.
Other Lighting Circuits—Fuse toward engine.
Spare—To left of Left Headlamp fuse.

HORNS:—**Single.** Klaxon Model K-26-L, Type 1643 Std. **Dual**—Klaxon Model K-33-S, Type 2067 (low note), 2074 (high note) or K-33-H No. 505 (low note), 506 (high note) with horn relay Optional.

Horn Type	Current (at 6 volts)	Air Gap
K-26-L, 1643	6.5-8.5	.025-.029"
K-33-S, 2067	11-13	.042-.046"
K-33-S, 2074	10-12	.032-.036"
K-33-H, 505	10-12	
K-33-H, 506	9-11	

Horn Relay:—Delco-Remy Model 271-A or 1116775.
Contact Gap—.020". **Air Gap**—.015" (closed).
Contacts Close—2.3-3.5 volts.

ENGINE

ENGINE SPECIFICATIONS:—6 cylinder, 'L' head.
Bore—3 7/16". **Stroke**—4".
Displacement—222.7 cu. ins. **Rated HP.**—28.3.
Developed Horsepower—85 at 3520 R.P.M.
Compression Ratio—6.20-1 standard cast-iron head.
Compression Pressure—140-143 lbs. at 1000 R.P.M. or approximately 115 lbs. at cranking speed.
Vacuum Reading—18-20" steady at 7 M.P.H.

PISTONS:—Electro-plated, chrome nickel type with rib between bosses. **Length**—3 37/64".
Weight—Stripped 26.68 ozs ('38), 27⅛ ozs. ('39).
Removal—Pistons and rods removed from above.
Clearance—Top .0175-.0295". Skirt .002".
Original Bore & Piston Sizes, Replacement Pistons:—*See Pontiac Shop Notes for data.*
Fitting New Pistons:—Insert .0015"x½" feeler between piston and cylinder wall. Pull to withdraw feeler must be 10-25 lbs. Piston taper .0005" max.
NOTE—Fit with .002" feeler for 1938 pistons.

PISTON RINGS:—Two compression rings above pin, one oil control ring below pin. Oil ring groove drilled radially with 10 oil drain holes.
See Pontiac Shop Notes for compression ring data.

1938 Piston Rings

Ring	Width	End Gap	Side Clearance
Compression	.1235-.1240"	.007-.017"	.0015-.003"
Oil Control	.1860-.1865"	.007-.017"	.001-.0025"

1939 Piston Rings

Compression	.0930-.0935"	.009-.014"	.0015-.003"
Oil Control	.1860-.1865"	.007-.017"	.001-.0025"

Replacement Rings:—.005", .010", .020", .030" oversize

PISTON PIN:—**Diameter**—15/16". **Length**—3 1/16".
Pin locked in one boss. Free end slotted.
Pin Fit in Piston—*See Pontiac Shop Notes.*
Pin Fit in Rod Bushing—.0003-.0005".
Replacement Pins:—.001", .003", .005" oversize.
Fitting Pins:—*See Pontiac Shop Notes for data.*

CONNECTING ROD: Length 7 9/16".
Weight—32 ozs. (1938), 2.16 lbs. (1939).
Piston Pin Bushing (Upper Bearing)—Split bushed type. *See Pontiac Shop Notes for complete data.*
Crankpin Journal Diameter—2" (1938), 2⅛" (1939).
Lower Bearing—Removable steel-backed, babbitt-lined type. Furnished std. & .001" undersize.
Clearance—.0005-.0015". **Endplay**—.005-.010".
Bearing Adjustment:—None (no shims). *See Pontiac Shop Notes for Fitting and Installing Bearings.*

ENGINE

C NTINUED FR M PRECEDIN PA E

CRANKSHAFT:—4 bearing type with integral counterweights. Balancer mounted on forward end.
See Pontiac Shop Notes for Balancer Removal and Rear Main Bearing Oil Seal Renewal.

Journal Diameters

	#1	#2	#3	#4
1938	2 3/8"	2 13/32"	2 15/32"	2 1/2"
1939	2 1/2"	2 17/32"	2 19/32"	2 5/8"

Bearing Type—Interchangeable steel-backed, babbit-lined type. Furnished Std. & .001" undersize.
Clearance—.001-.003".

Bearing Adjustment:—None (no shims). Replace bearings. Do not file caps. *See Pontiac Shop Notes.*
End Thrust: At #3 bearing. **Endplay**—.003-.008".

CAMSHAFT:—4 bearing. Non-adjustable chain drive.
See Pontiac Shop Notes for Camshaft Removal and Camshaft Bearing Finished Sizes.
Journal Diameters—#1, 2"; #2, 1 31/32"; #3, 1 15/16"; #4, 1 29/32".
Bearing Type—Removable steel-backed, babbitt-lined type. **Clearance**—.0015-.0025".

End Thrust:—Taken by steel thrust plate assembled behind camshaft sprocket. **Endplay**—.002-.005".

Timing Chain:—Morse. Width 1" (¾" nominal). Pitch ⅜". Length 56 links or 21". *See Pontiac Shop Notes for Timing Chain Cover Oil Seal squeak correction.*

Camshaft Setting:—Sprockets are marked. Mesh chain with '0' marks on sprockets adjacent and in line with straightedge across shaft centers.

VALVES:—	**Head Diameter**	**Stem Diameter**	**Length**
Intake	1 19/32"	.310-.311"	5.718"
Exhaust	1 15/32"	.310-.311"	5.718"

	Seat Angle	**Lift**	**Stem Clearance**
Intake	30°	19/64"	Free fit to .0006"
Exhaust	45°	19/64"	Free fit to .0006"

Valve Guides:—Removable, tapered guides (.001" taper to the inch, with greatest clearance at top). IMPORTANT—Measure clearance at bottom end. Valve should just fall through guide of own weight when started in guide. NOTE—Guides should be cleaned with wire brush or taper reamer Tool P.R.131 (also used for reaming replacement guides).

Valve Springs:—Intake and exhaust springs identical. Install with two closed coils at top and dampener on top of each spring. New dampeners should be used whenever removed. **Spring Free Length**—2 9/16".

	Spring Pressure	**Spring Length**
Valve Closed	54½ lbs.	1 29/32"
Valve Open	96 lbs.	1 19/32"

Valve Lifters:—Single piece, cast-iron, cylindrical type. Furnished .005" oversize. Use pilot reamer J-706-P when installing oversize lifter.
Clearance—Free fit. Lifter should just be free enough to move freely with finger touch.

VALVE TIMING

Tappet Clearance:—.011-.013" all valves (hot and running). Use .011" and .013" feelers as 'go' and 'no go' gauges. NOTE—Car manufacturer recommends .013" exhaust clearance for high speed driving.

Valve Timing:—See Camshaft Setting above.
Intake Valves—Open 5° BTDC. Close 39° ALDC.
Exhaust Valves—Open 45° BLDC. Close 5° ATDC.
To Check Timing—Set tappet clearance #6 intake valve at .0125". This valve should open with piston 5° or .0096" before top dead center with first straight line of flywheel mark '/IGN.ONE/' slightly past indicator in left front face of flywheel housing

LUBRICATION

LUBRICATION:—Gear type pump (right of engine).
See Pontiac Shop Notes for Oil Pump data and installation of 1941 type Pontiac (built-in) Oil Cleaner.
Normal Oil Pressure:—35-45 lbs. with warm oil.
Oil Pressure Regulator—In pump. Non-adjustable.
Crankcase Capacity:—6 quarts (refill).

COOLING

COOLING SYSTEM: Capacity 16 qts. ('38), 17 qts. ('39).
See Pontiac Shop Notes for Radiator Core Removal.
Water Pump:—Packless, sealed ball-bearing shaft.
See Water Pump Section for complete data.
Removal—Remove fan belt, pump mounting bolts and lower hose. Lift off pump and fan assembly.
Thermostat:—Harrison. In cylinder head outlet.
Setting—Closed 140° F. Start 145°. Fully open 172°.
Temperature Gauge ('39): AC Electric type. Part No. 1510771 (Dash Unit), 1510772 (Engine Unit).
See Miscellaneous Section for complete data.

CLUTCH

1938—Own Make. Long 10CF-CS driven member. Single plate, dry disc type.
See Clutch Section for complete data.
Facings—Woven Joined type, 2 required, I.D. 6", O.D. 10", thickness ⅛".
1939—Inland. 'Diaphragm' type. Long 9CF-CS driven member. Single plate, dry disc type.
See Clutch Section for complete data.
Facings—Moulded type, 2 required. **Inside Diam.** 5¾". Outside Diam. 9". Thickness .125".
NOTE—Install plain facing toward flywheel, facing with cushioned segments on pressure plate side.
For 1938 Clutch Helper Spring data and 1939 Clutch Chatter Correction, refer to Pontiac Shop Notes.
Pedal Adjustment: Clearance between underside of felt retainer and pedal ½" ('38), 1" ('39). Adjust by loosening lockscrew and turning adjusting screw. Free movement of pedal 1"±¼" ('38), 1"±⅛" ('39). Adjustment on clutch fork connecting rod.
Removal:—Remove transmission (see below), take off bottom housing cover, unlock pedal pull-back spring, remove fork ball support, fork and throwout bearing. Remove cover screws (turn screws out a few turns at a time until tension relieved). Move clutch away from flywheel at bottom and remove.

TRANSMISSION

TRANSMISSION:—Own. All helical gears, constant-mesh, synchro-mesh (second & high), sliding gear (low & reverse) with remote shift control.
See Transmission Section for complete data.
Transmission Control:—Pontiac 'Safety Shift' type. Optl. on 1938. *See Transmission Section for data.*
Removal ('38): Remove floor center panel, front seat assembly, and speedometer cable. (On cars with Safety Shift Gear Control disconnect control cable from selector plate hook and transmission case, withdraw cable and disconnect outer lever from cover shift shaft). Disconnect rear U-joint, remove shaft housing to transmission capscrews, rear engine support bolts, jack up rear of engine to have drain plug clear crossmember, remove fastening bolts. Pull unit straight back (use support at rear to keep in alignment) freeing clutch shaft, then up and forward at front, removing transmission with coupling from propellor shaft. Lift assembly out
Removal ('39): Remove mat, floor center panel and front seat assembly. Disconnect speedometer cable and selector control cable at transmission. Remove selector shaft uter lever (on left side). Remove propeller shaft by disconnecting rear U-joint and pulling to rear to disengage U-joint front yoke from transmission main shaft. Support transmission at rear and remove transmission mounting capscrews. Pull unit straight back freeing main drive gear, up and forward at front, and lift out.

UNIVERSALS

UNIVERSAL JOINTS:—Mechanics—Model 2C. Roller bearing. 2 used. *See Universals Section for data.*
Front Propeller Shaft Bearing ('38): *See Pontiac Shop Notes for complete data.*

REAR AXLE

REAR AXLE:—Own. Semi-floating, hypoid gear type with Hotchkiss drive. *See Rear Axle Section for data.*

Ratios—	**Std.**	**Mountain**	**Plains**
1938	4.375-1	4.625-1	4.125-1
39-25	4.1-1	4.3-1	3.9-1
39-26	4.3-1	4.55-1	4.1-1

Backlash—Not less than .003". Limits .003-.012".
Removal:—Disconnect rear universal and wire trunnions (do not disengage spline joint at front end of shaft), remove axle shafts (below), remove carrier flange capscrews, pull carrier assembly out.
Axle Shaft Removal: — Hoist rear of car, remove wheel, brake drum, 4 backing plate mounting bolt nuts and loosen bearing retainer (do not allow backing plate to shift to damage brake line). Pull shaft (Puller J-942) taking care not to drag shaft on oil seal. **Wheel Bearing Adjustment**—None.

SHOCK ABSORBERS

SHOCK ABSORBERS: Delco Hydraulic types as follows:

	1938	**1939**	**'39 Exp.**
Front	1947-A,B	1947-C,D	1947-C,D
Rear	P-1173-U	1116-V	1754-A,B

Double acting Front (and Rear on Export), Direct acting Rear. NOTE—3 different valve calibrations (front and rear) used during 1939 production.
See Shock Absorber Section for complete data.

FRONT SUSPENSION

Front Suspension:—Independent, linked parallelogram type with coil springs.
See Front Suspension Section for complete data.
Kingpin Inclination—4½-5°.
Caster Neg ¾° to Neg. 1¼° ('38). 0° to Neg ¾° ('39).
Camber—Neg. ½° to pos. 1°. ½ turn max. adj'mt.
Toe In—0-1/16". Adjust tie rod for each wheel.
Steering Geometry—Inner wh'122½-23½°.Outer 20°.

STEERING GEAR

Steering Gear: Saginaw Worm-and-Roller with center steering ('38), idler on right frame rail ('39).
See Steering Gear Section for complete data.

BRAKES

BRAKES:—Service—Bendix hydraulic, duo-servo, single anchor. Hand lever applies rear wheel brakes. IMPORTANT—Eccentric adjustment on 1938 only.
See Brake Section for complete data.
Drum—12" ('38), 11" ('39). Chrome nickel iron.
Wheel Cylinder Bore—Front wheel 1". Rear 15/16".
Lining—D-R Multibestos (primary), L-8 Multibestos (secondary). Width 1¾". Thickness 3/16". Length per wheel 23 1/16" ('38), 21 5/16" ('39).
Clearance (1938) .010" at heel and toe of each shoe. **(1939)** .015" at both ends of secondary shoe.
Hand Brake:—See Service Brakes above.

HOOD LOCK ADJUSTMENT, SIDE PANEL BUMPERS, FRONT FENDER & RADIATOR (UNIT) REMOVAL, OIL PAN REMOVAL:—*See Pontiac Shop Notes.*

MODEL IDENTIFICATION

SERIAL NUMBER: 1938 Models—First no. 8DA-1001. On top left frame siderail ahead of steering gear. 1939 Models—First car number 8EA-1001 with prefixes as follows: P—Pontiac, Mich., C—South Gate, Calif., L—Linden, N. J. On plate on left end of frame front cross member under hood.

ENGINE NUMBER: Stamped on boss on top left front corner of block. First No. 8-140001 ('38), 8-159601 ('39)

TUNE-UP

COMPRESSION:—Ratio and Pressure as follows:

Ratio	Pressure: @1000 RPM.	@ Crank'g Speed
6.2-1 Standard	140-143 lbs.	Approx. 115 lbs.
7.0-1 HC hd. '39	169 lbs.	Approx. 137 lbs.

VACUUM READING:—Steady reading of 18-20" with engine idling at 376 R.P.M. or 7 M.P.H.

FIRING ORDER: 1-6-2-5-8-3-7-4. See diagram.

SPARK PLUGS: AC Type 45. 14 mm. Metric type. Gaps—.025".

IGNITION: See Coil, Condenser, and Distributor. Breaker Gap—.015". Cam Angle—31° Closed. Automatic Advance—14° max. at 2100 RPM (distr.). Vacuum Advance—10° distr. with 16-21" vacuum.

IGNITION TIMING: See Ignition Timing. Std. Setting—6° BTDC. First line of flywheel mark '/IGN.ONE/' aligned with pointer in inspection hole on left side of housing.

CARBURETION: See Carburetor & Carb. Equipment. Idle Setting—Set idle adjusting screw ½-1 turn open (1938), ½-1½ turns open (1939). Idle speed setting 376 RPM or 7 MPH. Float Level ('38 400-S) ⅜" from top of float to gasket seat with valve seated (invert to check). ('39 432-S) ½" from machined projection on cover to top of soldered seam on float (invert to check). Accelerating Pump—Lower hole normal setting. Fuel Pump Pressure: 4 lbs. (AH), 3¾ lbs. (AJ Comb.).

MANIFOLD HEAT CONTROL:—Thermostatic coil type. Counterweight must be tightly clamped to shaft and about vertical with valve closed (engine cold). Setting—Move lever at forward end of heat tube between 'winter' and 'summer' end positions for seasonal temperatures as follows: Up to 50° F.—'Winter' setting. 50° to 70° F.—Intermediate (halfway between Winter and Summer). 70° F. and above—'Summer' setting.

VALVES: See Valve Timing. Tappet Clearance:—.011-.013" all valves (warm). Use .011" and .013" feelers as 'go' and 'no go' gauges. NOTE—.013" exhaust setting recommended by car manufacturer for sustained high speed driving.

STARTING: See Battery, Starter, Generator, Regulator.

IGNITION

IGNITION SWITCH: Delco-Remy Model 1116253 (1938), 1116264 (1939). Switch and cable assembly. Connected to coil by armored cable. Ignition Lock—Briggs & Stratton. B & S No. 45792. Key Series—8000-9499. Groove—#15.

COIL: Delco-Remy 539-L ('38-39), 1115129 ('39). On dash. Ignition Current—2.0 amperes idling, 3.5 stopped.

CONDENSER: Delco-Remy Part No. 1865972. Capacity—.18-.25 microfarad.

DISTRIBUTOR: Delco-Remy Model 663-X. Single breaker, 8 lobe cam, full automatic advance type with vacuum spark control and Gaselector (octane selector).

Breaker Gap—Set at .015". Limits .0125-.0175".
Cam Angle or Dwell—31° (closed), 14° (open).
Breaker Arm Spring Tension—22 ounces.
Rotation—Counter-clockwise viewed from top.

Automatic Advance

Distributor Degrees	Distributor R.P.M.	Engine Degrees	Engine R.P.M.
Start	400	4.0	800
7	1100	14	2200
8.5	1550	17	3100
14.0	2100	28.0	4200

Vacuum Spark Control D-R No. 681-N. Integral with distributor. Mounted on housing and linked directly to breaker plate. Provides additional advance at speeds above idling (vacuum port in carburetor above throttle) except when engine accelerated or operated with wide open throttle when spark is retarded by return spring within unit. Total plunger travel 7/32".

Vacuum Advance

Distr. Degrees	Eng. Degrees	Vacuum (" of HG)
Start	0°	4-6"
10°	20°	16-21"

Gaselector—Manual adjustment at distributor provides 10° advance or retard from center '0' position. See Gaselector Setting following.

Distributor Removal:—Mounted on left side of crankcase. To remove, disconnect vacuum line, take out hold-down screw on Gaselector and lift off.

IGNITION TIMING

IGNITION TIMING:—Initial setting given below. See Gaselector Setting (following) for final setting.

	Flywheel Degrees	Piston Position
For all heads	6° BTDC	.0128" BTDC.

NOTE—The two straight lines of the ignition mark '/IGN.ONE/' indicate timing range of 4° (1st line 6° BTDC, 2nd line 2° BTDC) on flywheel. Car manu-

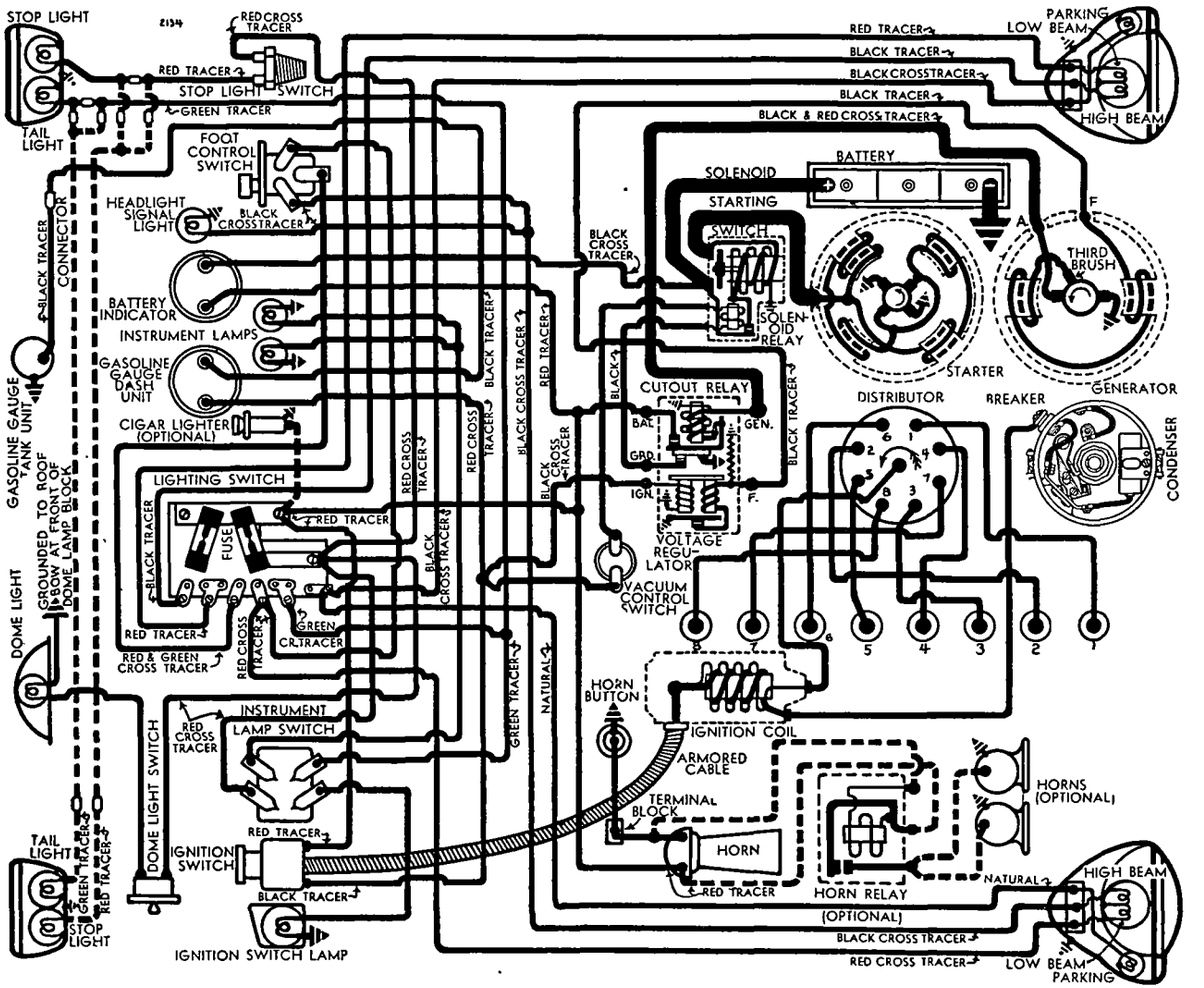

1938 MODELS

facturer recommends use of Timing Light (HM-494) or Synchroscope (HMO-161).

T Set Timing (using Timing Light)—Connect timing light between distributor terminal and ground, turn on ignition. With #1 piston on compression, turn engine over until piston is 6° or .0128" before top dead center, stop when first line of ignition mark '/IGN.ONE/' lines up with pointer in inspection hole in left front face of flywheel housing. Loosen Gaselector screw, center scale on crankcase mark, tighten screw, loosen distributor clamp bolt, rotate distributor until timing lamp lights (contacts opening), tighten clamp bolt. See Gaselector Setting

To Set Timing (using Synchroscope)—Connect synchroscope in #1 spark plug lead. Fill in first line of flywheel mark '/IGN.ONE/' with white chalk or paint. Direct light on flywheel through inspection hole in left front face of flywheel housing. Idle engine at 376 R.P.M. or 7 M.P.H., adjust distributor (as directed for Timing Light above) until white line coincides with pointer n h using.

Gaselector Setting—Should be set to provide best performance without spark knock or ping for particular operating conditions and octane rating of fuel used. To adjust, loosen screw, move pointer clockwise to advance or counter-clockwise to retard spark

CARBURETOR

1938—Carter Type W1 Vacumeter, Model 400-S. 1¼" single barrel downdraft type with Carter Climatic Control. Casting No. 343 on flange.
For complete data, refer to Carburetor Index.

1939—Carter Type WA-1, Model 432-S. 1¼" single barrel downdraft type with Carter Climatic Control. Casting No. 245 on flange.
For complete data, refer to Carburetor Index.

Idle Adjustment—Engine must be warm with automatic choke and fast idle inoperative. Car manufacturer recommends use of Vacuum Gauge. Set throttle stopscrew to idle engine at 7 M.P.H., adjust idle adjusting screw to give steady gauge reading of 18-20". To adjust without gauge, set throttle stopscrew as above, turn idle adjusting screw in until engine begins to miss, then turn screw out until engine begins to roll, finally turn screw in slowly until engine fires smoothly. Final setting ½-1 turn open (400-S), ½-1½ turns open (432-S) of screw from inner seated position. Reset idle speed.

Accelerating Pump Setting—Pump lever under dust cover at top of carburetor has three holes for pump link engagement. Change for seasonal requirements
Lower Hole (medium stroke)—Normal setting.
Inner Hole (minimum stroke)—Extremely hot temperatures, high altitudes or hi-test fuels.
Upper Hole (max. stroke)—Extremely cold temperatures.

Fast Idle (1938): Fast idle cam linked to the choke mechanism which acts as throttle lever stop. Should not require adjustment. See Carter Cam Type Fast Idle in Carburetion Equipment Section.
For complete data, refer to Carburetion Equip. Index.

Fast Idle (1939): Integral type, built-in carburetor.
For complete data, refer to Carburetion Equip. Index.
Setting—With throttle lever stopscrew seated against (not on) first step of fast idle cam clearance between lower edge of choke valve and air horn should be ⅝" (gauge T108-85).

Accelerator Linkage Setting ('38): Adjust rod connecting bell cranks on side of manifold so that accelerator pedal just touches floor board with carburetor throttle valve wide open. Release accelerator pedal and with throttle valve in closed position (fast idle inoperative), set adjusting screw in lever at forward end of this connecting rod so that clearance between this lever and lever which operates carburetor throttle valve rod is 5/32-3/16", secure locknut. Disconect vacuum switch operating rod at switch lever, turn switch lever so that pointer lines up with line on switch body, adjust length of rod by turning trunnion on rod until rod can be connected to switch lever without disturbing position of lever. See that hand throttle is fully closed, loosen set screw in throttle cable trunnion (at lower end of cable), adjust cable length so that clearance between lever at forward end of hand throttle operating rod and carburetor throttle valve rod lever is 1/16" minimum. Check setting.

Accelerator Linkage Setting ('39): Must be maintained to provide correct 'Throttle cracking' action for starting. To adjust, set carburetor idle speed at 6-7 M.P.H., loosen hand throttle lockwire screw, pull button ⅛" out from instrument panel, position hand throttle lever so that no clearance exists between lever and throttle cross shaft, tighten lockscrew. Turn throttle stopscrew in 2 turns (with throttle stopscrew on high point of cam or 'cold' position), disconnect battery cable at starting motor to prevent cranking, fully depress starting pedal, adjust throttle cracking pin so that all clearance between cross shaft lever and accelerator pedal lever is taken up. Connect starting motor cable and reset engine idle speed.

Automatic Choke:—Carter Climatic Control.
For complete data, refer to Carburetion Equip. Index.
Setting—Coil housing 1 Point Rich (All 1938, Late 1939), 2 Points Rich (Early 1939).

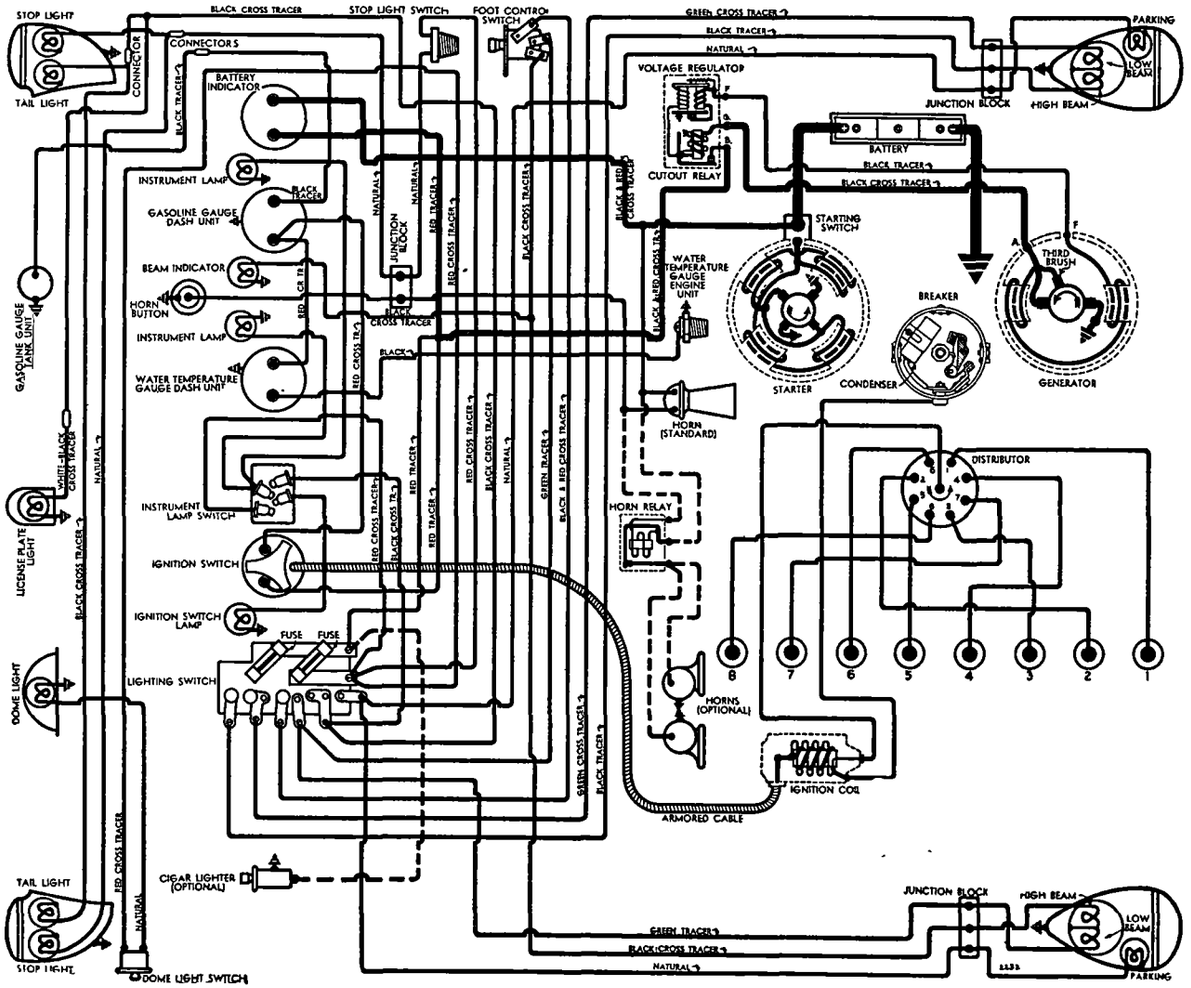

1939 MODELS

C NTINUED N NEXT PAGE

CONTINUED FROM PRECEDING PAGE

CARB. EQUIPMENT

Air Cleaner: AC oil-wetted type 1528128 used with crankcase inlet ventilator 498991 ('38), 502783 ('39). Oil bath optl. type 1528304 ('38), 1528944 ('39) with crankcase inlet ventilator 499327 ('38-39).

Fuel Pump: AC type AH standard #1523109 ('38), #1523844 ('39). Optl. comb. fuel-and-vacuum pump type AJ, #1523110 ('38), #1523825 ('39).
For complete data, refer to Carburetion Equip. Index.

Gasoline Gauge: AC Electric type.
Dash Unit: #1515343 ('38), #1515362 ('39).
Tank Unit: #1515470 ('38), #1515481 ('39).
For complete data, refer to Carburetion Equip. Index.

BATTERY

1938 Cars—Delco Type 17E-1. 6 volt, 17 plate, 115 ampere hour capacity (20 hour rate).
Starting Capacity—137 amperes for 20 minutes.
Zero Capacity—300 amperes for 4.3 minutes. Five second voltage—4.4 volts.
Grounded Terminal—Negative (—) terminal.
Dimensions—Length 19 5/16". Width 4". Height 9".
Location—Under engine hood on left side.

1939 Cars—Delco Type 15E-1. 6 volt, 15 plate, 100 AH. capacity (20 hr. rate). End-to-end type.
Starting Capacity—115 amperes for 20 minutes.
Zero Capacity—300 amperes for 3.3 minutes. Five second voltage—4.25 volts.

Police Battery:—Delco Type 19E-1. 6 volt, 19 plate, 125 A.H. capacity (20 hr. rate). End-to-end type.
Starting Capactiy—150 amperes for 20 minutes.
Zero Capacity—300 amperes for 5.3 minutes. Five second voltage—4.55 volts.

STARTER

1938 MODELS

Delco-Remy Model 727-S. Armature No. 823881.
Drive—Overrunning clutch and manual pinion shift operated by solenoid switch.
Cranking Engine—220-225 amperes at 5 volts.
Rotation—Counter-clockwise at commutator end.
Brush Spring Tension—24-28 ounces each.

Performance Data—727-S

Torque	R.P.M.	Volts	Amperes
0 ft. lbs	5500	5.0	65
15 ft. lbs	Lock	3.0	600

Removal:—Mounted on left front face of flywheel housing. To remove, take out capscrews.
Starting Switch: Delco-Remy Solenoid 1546. Vacuum Switch Type 1605. Solenoid switch controlled through relay by vacuum switch operated by accelerator pedal. *For data, see Electrical Equip. Section.*

STARTER

1939 MODELS

Delco-Remy Model 1107914. Armature No. 1867897.
Drive—Manual shift and overrunning clutch.
Rotation—Counter-clockwise at commutator end.
Cranking Engine—220-225 amperes at 5 volts.
Brush Spring Tension—24-28 ounces.

Performance Data—1107914

Torque	R.P.M.	Volts	Amperes
0 ft. lbs	6000	5.0	60
15 " "	Lock	3.0	600

Removal:—Flange mounted on left front face of flywheel housing. To remove, take out capscrews.
Starting Switch: Delco-Remy No. 820052. On starter. Operated by starter pedal (pinion shift).
For complete data, refer to Electrical Equipment Index.

GENERATOR

STANDARD

Delco-Remy Model No. 1100003. Armature 1866789. Fixed third brush with vibrating voltage regulator.
Charging Rate Adjustment—Adjusted by changing setting of voltage regulator. See Regulator data.
Maximum Charging Rate—See table below. Reached at car speed of 30-35 MPH.

Performance Data

	Amperes	Volts	R.P.M.
Cold	26-30	8.0	3400
Hot	25-28	8.0	3600

Rotation—Counter-clockwise at commutator end.
Brush Spring Tension—25 ozs. (main), 17 ozs. (3rd).
Field Current—2.3-2.6 amperes at 6.0 volts.
Removal:—Pivot mounted at left front of engine. To remove, take out clamp and pivot bolts.
Belt Adjustment:—Loosen pivot and clamp bolts, move generator out or away from engine to take up stretch or slack in belt. 1" belt play between pulleys when grasped with fingers.

GENERATOR

SPECIAL EQUIPMENT

Delco-Remy Models

Generator	Regulator	Used for:
①934-F	5599	1939 Police
①961-N	5832	1939 Spec. Equipm.
②1105851	1118237	'39-40 Spec. Equipm.
②1105856	1118237	'39-40 Spec. Equipm.

①—2 brush generator with Double Core Type Regulator with IGN Terminal. *Refer to 1937 Pontiac Eight page for data on these Generators and Regulators.*
②—2 brush generator with Single Core Type Regulator. *Refer to 1940 Pontiac car article for data.*

REGULATOR

Delco-Remy Double Core Voltage Regulator with "IGN" terminal 5835 (1938), 5808 (RHD '39), No "IGN" terminal 5858 (1939). Cutout Relay and vibrating Voltage Regulator in case on dash.
For complete data, refer to Electrical Equipment Index.

Cutout Relay

Cuts In—6.9-7.6 volts (5835, 5808), 6.3-6.9 volts (5858) at 70°F., 1340 RPM or 15 MPH.
Cuts Out—0-4.0 amps. discharge current at 6.3 v.
Contact Gap—.020". **Air Gap**—.020" (closed).

Voltage Regulator

Setting—7.5-7.9 volts (70° F.), 7.4-7.6 volts (150°F.).
Adjustment—*All data same as for 1938-39 Pontiac Six (preceding car article).*
Contact Gap—.020". **Contact Spring**—3.5 ozs.
Air Gap—.063" between armature and center of core with armature down, .010" between fibre bumper and stop with armature up.
Caution—Regulator cover must be in place when testing. Do not run generator on open-circuit.

LIGHTING

LIGHTING:—Headlamps—Guide Multi-beam, prefocused, cross-beam type with non-interchangeable lenses (marked 'Left' and 'Right' at top). Asymetrical passing beam (upper beam left hand headlamp, lower beam right hand headlamp) controlled by beam control switch on toeboard with lighting switch in driving or third position.
Headlamp Adjustment—Adjust lamps with lenses in place (beam 4° to right with lenses off). Place car on level floor 25' from screen with upper beam lighted (lower filament in each bulb). Aim left headlamp so that upper edge of bright spot is on horizontal line at lamp center height and left edge is at lamp vertical center-line (entire bright spot to right of vertical line). Aim right headlamp to same height but right cut-off of hot spot must be approx. 8" to right of lamp vertical center-line.
Beam Indicator—Red indicator light above center of speedometer dial. Lighted whenever upper beams in use.

Switches

Lighting ('38)—D-R No. 1995002, 1995004 (RHD).
Lighting ('39)—D-R No. 1995006, 1995007 (RHD).
Beam Selector—Delco-Remy Model 471-T ('38), 1997008 (1939), 465-V (RHD).
Instrument Panel—D-R Model 1406.
Stop Light—D-R Model 476-U.

Bulb Specifications

Position	Candlepower	Mazda No.
Headlamps	32-21	2320
Parking, Instrument	1½	55
Ign. Switch, Beam Indic.	1	51
Tail	3	63
Stop	15	87
Dome	6	81
License	3	63

MISC. ELECTRICAL

FUSES:—Fuse block mounted on lighting switch on back of instrument panel. Three 20 amp. fuses:
Left Headlamp Circuit—Fuse to rear.
Other Lighting Circuits—Fuse toward engine.
Spare—To left of Left Headlamp fuse.

HORNS:—Single. Klaxon Model K-26-L, Type 1643 Std.
Dual—Klaxon Model K-33-S, Type 2067 (low note), 2074 (high note) or K-33-H No. 505 (low note), 506 (high note) with horn relay Optional.

Horn Type	Current (at 6 volts)	Air Gap
K-26-L, 1643	6.5-8.5	.025-.029"
K-33-S, 2067	11-13	.042-.046"
K-33-S, 2074	10-12	.032-.036"
K-33-H, 505	10-12	
K-33-H, 506	9-11	

Horn Relay:—Delco-Remy Model 271-A or 1116775.
Contact Gap—.020". **Air Gap**—.015" (closed).
Contacts Close—2.3-2.5 volts.

ENGINE

ENGINE SPECIFICATIONS:—8 cylinder, 'L' head.
Bore—3¼". **Stroke**—3¾".
Displacement—248.9 cu. ins. **Rated HP.**—33.8.
Developed Horsepower—100 (6.2-1 Std. cast-iron hd.), 110 (7.0-1 HC '39 cast-iron hd.) at 3700 RPM.
Compression Ratios & Pressures—As follows:

Head	Pressure: at 1000 RPM	at Crank'g Speed
6.2-1 Standard	140-143 lbs.	Approx. 115 lbs.
7.0-1 HC hd. '39	169 lbs.	Approx. 137 lbs.

Vacuum Reading—18-20" steady at 7 M.P.H.

PISTONS:—Electro-plated, chrome nickel type with rib between bosses. Cannot be ground.
Length—3 19/32". **Weight**—24.25 ozs. (stripped).
Removal—Pistons and rods removed from above.
Clearance—Top .0175-.0295". Skirt .002".
Original Bore & Piston Sizes, Replacement Pistons:—*See Pontiac Shop Notes for data.*
Fitting New Pistons:—Insert .0015"x½" feeler between piston and cylinder wall. Pull to withdraw feeler must be 10-25 lbs. Piston taper .0005" max.
NOTE—Fit with .002" feeler for 1938 pistons.

PISTON RINGS:—Two compression rings above pin, one oil control ring below pin. Oil ring groove drilled radially with 10 oil drain holes.
See Pontiac Shop Notes for compression ring data.

ENGINE

CONTINUED FROM PRECEDING PA E

1938 Piston Rings

Ring	Width	End Gap	Side Clearance
Compression	.1235-.1240"	.007-.017"	.0015-.003"
Oil Control	.1860-.1865"	.007-.017"	.001-.0025"

1939 Piston Rings

Compression	.0930-.0935"	.009-.014"	.0015-.003"
Oil Control	.1860-.1865"	.007-.017"	.001-.0025"

Replacement Rings:—.005", .010", .020", .030" oversize.

PISTON PIN:—**Diameter**—15/16". **Length**—2⅞". Pin locked in one boss. Free end slotted.
Pin Fit in Piston—*See Pontiac Shop Notes.*
Pin Fit in Rod Bushing—.0003-.0005".
Replacement Pins:—.001" (red & brown), .003" (red), .005" (blue) oversize. Painted on ends.
Fitting Pins:—*See Pontiac Shop Notes.*

CONNECTING ROD:—**Length 7 9/16". Weight 29⅞ ozs.**
Piston Pin Bushing (Upper Bearing)—Split bushed type. *See Pontiac Shop Notes for complete data.*
Crankpin Journal Diameter—2".
Lower Bearing—Removable steel-backed, babbitt-lined type. Furnished std. & .001" undersize.
Clearance—.0005-.0015". **Sideplay**—.005-.010".
Bearing Adjustment:—None (no shims). *See Pontiac Shop Notes for Fitting and Installing Bearings.*

CRANKSHAFT:—5 bearing with integral count'weights. *See Pontiac Shop Notes for Balancer Removal.*
Journal Diameters—#1, 2⅜"; #2, 2 13/32"; #3, 2 7/16"; #4, 2 15/32"; #5, 2½".
Bearing Type—Interchangeable steel-backed, babbit-lined type. Furnished Std. & .001" undersize.
Clearance—.001-.003".
Bearing Adjustment:—None (no shims). Replace bearings. Do not file caps. *See Pontiac Shop Notes.*
End Thrust:—Rear center (#4) bearing.
Endplay—.003-.008".

CAMSHAFT:—5 bearing. Non-adjustable chain drive. *See Pontiac Shop Notes for Camshaft Removal, Bearing finished sizes and Replacement Camshaft Sprocket data.*
Journal Diameters—#1, 2"; #2, 1 31/32"; #3, 1 15/16"; #4, 1 29/32"; #5, 1⅞".
Bearing Type—Removable steel-backed, babbitt-lined type. **Clearance**—.0015-.0025".
End Thrust:—Thrust plate behind camshaft sprocket.
Endplay—.002-.005".
Timing Chain:—Morse. Width 1" (¾" nominal). Pitch ⅜". Length 56 links or 21".
See Pontiac Shop Notes for Timing Chain Cover Oil Seal squeak correction data.
Camshaft Setting:—Sprockets are marked. Mesh chain with '0' marks on sprockets adjacent and in line with a straightedge across shaft centers.

VALVES:—	Head Diameter	Stem Diameter	Length
Intake	1 15/32"	.310-.311"	5.53"
Exhaust	1 11/32"	.310-.311"	5.53"

	Seat Angle	Lift	Stem Clearance
Intake	30°	19/64"	Free fit to .0006"
Exhaust	45°	19/64"	Free fit to .0006"

Valve Guides:—Removable, tapered guides (.001" taper to the inch, with greatest clearance at top). IMPORTANT—Measure clearance at bottom end. Valve should just fall through guide of own weight when started in guide. NOTE—Guides should be cleaned with wire brush or taper reamer Tool P.R. 131. Replacement guides straight cut, ream to fit valve after installing with reamer P.R. 131.
Valve Springs:—Intake and exhaust springs identical. Install with two closed coils at top and dampener on top of each spring. New dampeners should be used whenever removed **Spring Free Length**—2 9/16".

	Spring Pressure	Spring Length
Valve Closed	54½ lbs.	1 29/32"
Valve Open	96 lbs.	1 19/32"

Valve Lifters:—Cast-iron, barrel type. Furnished .005" oversize. Use pilot reamer J-551 when installing oversize lifter to insure alignment of lifter hole and valve stem.
Clearance—Free fit. Lifter should move freely with finger touch.

VALVE TIMING

Tappet Clearance:—.011-.013" all valves (hot and running). Use .011" and .013" feelers as 'go' and 'no go' gauges. NOTE—Car manufacturer recommends .013" exhaust clearance for high speed driving.
Valve Timing:—See Camshaft Setting.
Intake Valves—Open 5° BTDC. Close 39° ALDC.
Exhaust Valves—Open 45° BLDC. Close 5° ATDC.
To Check Timing—Set tappet clearance #8 intake valve at .0125". This valve should open with piston 5° or .0089" before top dead center with first straight line of flywheel mark '/IGN.ONE/' slightly past pointer in left front face of flywheel housing.

LUBRICATION

LUBRICATION:—Pressure type (pump on right side of engine). *See Pontiac Shop Notes for Oil Pump data.*
Normal Oil Pressure:—35-45 lbs. with warm oil.
Oil Pressure Regulator—On pump. Not adjustable.
Crankcase Capacity:—7 quarts (refill).

COOLING

COOLING SYSTEM:—**Capacity**—19 quarts.
See Pontiac Shop Notes for Radiator Core Removal.
Water Pump:—Packless, sealed ball-bearing shaft.
Removal—Remove fan belt, lower hose and pump mounting bolts. Lift off pump and fan assembly.
Thermostat:—Harrison. In cylinder head outlet.
Setting—Closed 140° F. Start 145°. Fully open 172°.
Temperature Gauge ('39): AC Electric type. Part No. 1510771 (Dash Unit), 1510772 (Engine Unit).
See Miscellaneous Section for complete data.

CLUTCH

1938—Own Make. Long 10CF-CS driven member. Single plate, dry disc type.
See Clutch Section for complete data.
Facings—Woven Joined type, 2 required, I.D. 6", O.D. 10", thickness ⅛".
1939—Inland. 'Diaphragm' type. Long 9¼CF-CS driven member. Single plate, dry disc type.
See Clutch Section for complete data.
Facings—Moulded type, 2 required. Inside Diam. 5¾". Outside Diam. 9¼". Thickness .125".
NOTE—Install plain facing toward flywheel, facing with cushioned segments on pressure plate side.
For 1938 Clutch Helper Spring data and 1939 Clutch Chatter Correction and Clutch Housing Removal Note refer to Pontiac Shop Notes.
Pedal Adjustment: Clearance between underside of felt retainer and pedal ½" ('38), 1" ('39). Adjust by loosening lockscrew and turning adjusting screw. Free movement of pedal 1"±¼" ('38), 1"±⅛" ('39). Adjustment on clutch fork connecting rod.
Removal:—Remove transmission (see Transmission Removal below), take off bottom housing cover, unlock pedal pull-back spring, remove fork ball support, fork and throwout bearing. Loosen cover screws a little at a time to relieve tension, then take screws out. Move clutch assembly away from flywheel at bottom and lower assembly out.

TRANSMISSION

TRANSMISSION:—**Own.** All helical gears, constant-mesh, synchro-mesh (second & high), sliding gear (low & reverse) with remote shift control.
See Transmission Section for complete data.
Transmission Control:—Pontiac 'Safety Shift' type. Optl. on 1938. *See Transmission Section for data.*
Removal: *All data same as for the 1938-39 Pontiac Six (preceding car article).*

UNIVERSALS

UNIVERSAL JOINTS:—**Mechanics**—Model 2C. Roller bearing. 2 used. *See Universals Section for data.*
Front Propeller Shaft Bearing ('38): *See Pontiac Shop Notes for complete data.*

REAR AXLE

REAR AXLE:—**Own.** Semi-floating, hypoid gear type with Hotchkiss drive.
See Rear Axle Section for complete data.

Ratios—	Std.	Mountain	Plains
1938	4.375-1	4.625-1	4.125-1
1939	4.1-1	4.3-1	3.9-1

Backlash—Not less than .003". Limits .003-.012".
Removal:—Disconnect rear universal and wire trunnions (do not disengage spline joint at front end of shaft), remove axle shafts (below), remove carrier flange capscrews, pull carrier assembly out.
Axle Shaft Removal: — Hoist rear of car, remove wheel, brake drum, 4 backing plate mounting bolt nuts and loosen bearing retainer (do not allow backing plate to shift to damage brake line). Pull shaft (Puller J-942) taking care not to drag shaft on oil seal. **Wheel Bearing Adjustment**—None.

SHOCK ABSORBERS

SHOCK ABSORBERS: Delco Hydraulic types as follows:

Front	1947-A,B	1947-C,D	1947-C,D
Rear	P-1173-U	1116-V	1754-A,B

Double acting Front (and Rear on Export), Direct acting Rear. NOTE—3 different valve calibrations (front and rear) used during 1939 production.
See Shock Absorber Section for complete data.

FRONT SUSPENSION

Front Suspension:—Independent, linked parallelogram type with coil springs.
See Front Suspension Section for complete data.
Kingpin Inclination—4½-5°.
Caster Neg ¾° to Neg. 1¼° ('38). 0° to Neg ¾° ('39).
Camber—Neg. ½° to pos. 1°. ½ turn max. adj'mt.
Toe In—0-1/16". Adjust tie rod for each wheel.
Steering Geometry—Inner wh'122½-23½°. Outer 20°.

STEERING GEAR

Steering Gear: Saginaw Worm-and-Roller with center steering ('38), idler on right frame rail ('39).
See Steering Gear Section for complete data.

BRAKES

BRAKES:—**Service**—Bendix hydraulic, duo-servo, single anchor. Hand lever applies rear wheel brakes. IMPORTANT—Eccentric adjustment on 1938 only.
See Brake Section for complete data.
Drum—12" ('38), 11" ('39). Chrome nickel iron.
Wheel Cylinder Bore—Front wheel 1". Rear 15/16".
Lining—D-R Multibestos (primary), L-8 Multibestos (secondary). Width 1¾". Thickness 3/16". Length per wheel 23 1/16" ('38), 21 5/16" ('39).
Clearance (1938) .010" at heel and toe of each shoe. **(1939)** .015" at both ends of secondary shoe.
Hand Brake:—See Service Brakes above.

HOOD FITTING, HOOD LOCK ADJUSTMENT, AND FRONT FENDER & RADIATOR (UNIT) REMOVAL:—*See Pontiac Shop Notes for data.*

MODEL IDENTIFICATION

SERIAL NUMBER:—First number 6HA-1001 (Special), 6HB-1001 (Deluxe) with prefixes indicating factory as follows: P—Pontiac, Mich., C—South Gate, Calif., L—Linden, N. J. On plate fastened to left end of frame front cross member.

ENGINE NUMBER:—First number 6-595801. Stamped on boss on top left front corner of engine block.

TUNE-UP

COMPRESSION:—**Ratio**—6.5-1 Std., 7.2-1 Optl. **Pressure**—155-158 lbs. at 1000 RPM, or approximately 118-120 lbs. at cranking speed (Std. head).

VACUUM READING:—Steady 18-20" idling at 7 MPH.

FIRING ORDER: 1-5-3-6-2-4. See diagram.

SPARK PLUGS: AC Type 45. 14 mm. Metric. Gaps—.025".

IGNITION: See Coil, Condenser, and Distributor. **Breaker Gap**—.020". **Cam Angle**—35° Closed. **Automatic Advance**—14¼°max. at 2000 RPM(distr). **Vacuum Advance**—7.5° distr. with 16-18" vacuum.

IGNITION TIMING: See Ignition Timing. **Std. Setting**—6° BTDC. First line of flywheel mark '/IGN.ONE/' aligned with pointer in inspection hole on left side of housing.

CARBURETION: See Carburetor & Carb. Equipment. **Idle Setting**—Set idle screw ¾-1½ turns open. Idle speed 376 RPM or 7 MPH. **Float Level**—7/16" from machined projection on cover to top of soldered seam on float (invert to check). **Accelerating Pump**—Normal setting (minimum stroke, Inner Hole in Pump Arm and Upper Hole in Pump Plunger). NOTE—On 463-S (Early '40) carburetors change pump setting to correct complaints on hesitation when starting in second gear to maximum stroke (Upper Hole in Pump Arm and Lower Hole in Pump Plunger).

Fuel Pump Pressure: 4 lbs. (AH), 3¾ lbs. (AJ Comb.).

MANIFOLD HEAT CONTROL:—Thermostatic coil type. Non-adjustable (anchor pin fixed). Counter-weight must be tightly clamped to shaft and should be about vertical with valve closed (engine cold).

VALVES: See Valve Timing. **Tappet Clearance**—.011-.013" all valves (warm). .011 "go" and .013" "no go." NOTE—.013" exhaust setting recommended by car manufacturer for sustained high speeds.

STARTING: See Battery, Starter, Generator, Regulator.

IGNITION

Ignition Switch:—Delco-Remy Model 1116284 (40-25), 1116294 (40-25 RHD), 1116285 (40-26). Switch and cable assembly. Connected to coil by armored cable. **Ignition Lock**—Briggs & Stratton. B & S No. 45792. **Key Series**—8000 to 9499. **Groove**—No. 15.

COIL: Delco-Remy Model 1115023. Mounted on dash. Ignition Current—2.5 amperes idling, 4.5 stopped.

CONDENSER: Delco-Remy No. 1865972 (for 647-D), 1869704 (for 1110202). Capacity .18-.25 microfarad.

DISTRIBUTOR: Delco-Remy 647-D, 1110202 (Taxi). Single breaker, 6 lobe cam, full automatic advance with vacuum spark control and Gaselector adjustment (for fuel compensation) at distributor.

Breaker Gap—.020". Limits .018-.024".

Cam Angle or Dwell—35° closed, 25° open (distr.).

Breaker Arm Spring Tension—17-21 ounces.

Rotation—Counter-clockwise viewed from top.

Automatic Advance

Distributor Degrees	Distributor R.P.M.	Engine Degrees	Engine R.P.M.
Start	400	4.0	800
8.0	1050	16.0	2100
8.5	1450	17.0	2900
14.25	2000	28.5	4000

Vacuum Spark Control D-R No. 681-M. Integral with distributor. Mounted on housing and linked directly to breaker plate. Provides additional advance at speeds above idling (vacuum port in carburetor above throttle) except when engine accelerated or operated with wide open throttle when spark is retarded by return spring within unit. Total plunger travel 9/64".

Vacuum Advance

Distr. Degrees	Eng. Degrees	Vacuum (" of HG)
Start	0°	7-9"
7.5°	15°	16-18"••

•• at .125" travel.

Gaselector—Manual adjustment at distributor providing 10° advance or retard from center '0' position. See Gaselector Setting following.

Distributor Removal:—Mounted on left side of engine. To remove, disconnect vacuum line, take out hold-down screw in Gaselector and lift out.

IGNITION TIMING

IGNITION TIMING:—Standard setting given below (regular fuel Std. hd., Ethyl fuel HC hd.). See Gaselector Setting following for final setting.

	Flywheel Degrees	Piston Position
All engines	6° BTDC	.0138" BTDC.

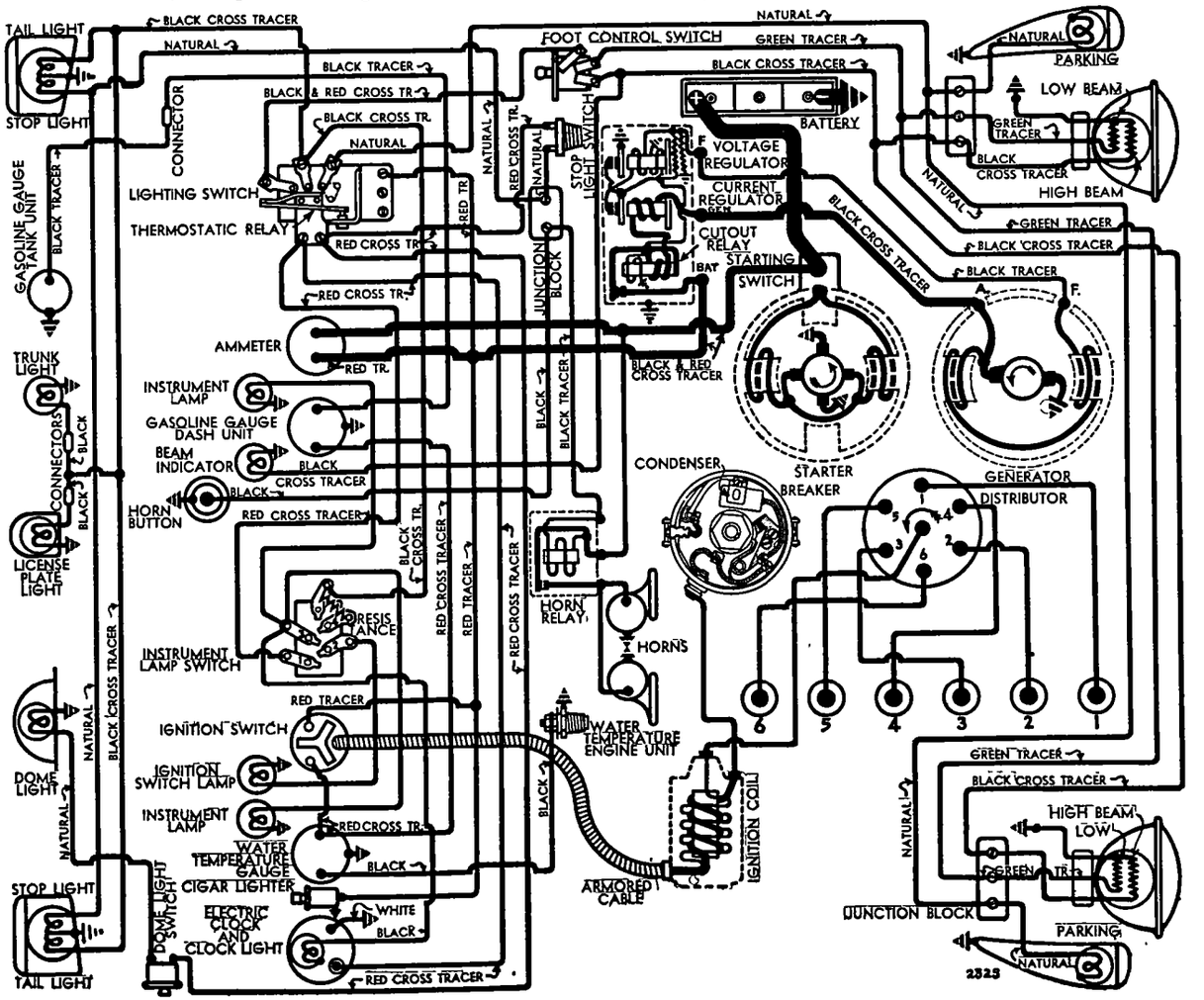

NOTE—The two straight lines of the ignition mark '/IGN.ONE/' indicates allowable timing range of 4° on flywheel. Use first or 6° line in setting ignition. Car manufacturer recommends use of Timing Light (Tool HM-494) or Synchroscope (HMO-161).

To Set Timing (using Timing Light)—Connect timing light between distributor terminal and ground, turn on ignition. With #1 piston on compression, turn engine over until piston is 6° or .0138" before top dead center, stop when first line of ignition mark '/IGN.ONE/' lines up with pointer in inspection hole in left front face of flywheel housing. Loosen Gaselector screw, center pointer on scale, tighten screw, loosen advance arm clamp bolt, rotate distributor until timing lamp lights (contacts opening), tighten clamp bolt.

To Set Timing (using Synchroscope)—Clip one synchroscope lead to #1 spark plug cable, insert other lead in distributor cap terminal from which #1 spark plug wire removed. Fill in first line of flywheel mark '/IGN.ONE/' with white chalk or paint. Direct synchroscope on flywheel through inspection hole in left front face of flywheel housing. Idle engine at 376 R.P.M. or 7 M.P.H., adjust distributor (as directed for Timing Light above) until white line coincides with pointer on housing.

Gaselector Setting—Should be set to provide best performance without spark knock or ping for particular operating conditions and octane rating of fuel used. To adjust, loosen screw, move pointer clockwise to advance or counter-clockwise to retard

CARBURETOR

CARBURETION:—Carburetor—Carter Type WA-1, Model 463-S (first), 463-SP (later). 1¼" downdraft type with Carter Climatic Control.

For complete data, refer to Carburetor Index.

Production Change—To correct engine hesitating when starting in second gear, a new pump plunger 64-70S used on 463-SP. On 463-S, change pump link to lower hole in arm and plunger shaft.

Idle Adjustment—With engine warm and running at slow idle speed (choke valve wide open, fast idle inoperative), set throttle stopscrew for 7 MPH idle speed. Adjust idle adjusting screw until engine fires smoothly (¾-1½ turns open—turn screw in for leaner mixture). Readjust idle speed.

To correct faster than normal idling, See Accelerator Pedal Sticking correction in Pontiac Shop Notes.

Accelerator Pump Setting—Pump arm and plunger under dust cover at top of carburetor have two holes for connector link engagement. Recommended settings as follows:

Short Stroke—Normal Setting (Inner Hole in Pump Arm, Upper Hole in Pump Plunger).

Long Stroke—Maximum Setting (Outer Hole in Pump Arm, Lower Hole in Pump Plunger).

NOTE—To correct hesitating when starting in second gear on 463-S (Early '40) carburetor, set Accelerating Pump for Long Stroke.

Float Level—7/16" from projection on cover to top of soldered seam at front end of float with needle valve seated (invert to check).

Fast Idle:—Integral type, built-in carburetor.

For complete data, refer to Carburetion Equip. Index.

Fast Idle Setting—Adjust by bending connecting link offset for ⅝" choke valve opening with stopscrew against (not on) first step of fast idle cam.

Accelerator Linkage Adjustment:—Must be maintained to provide correct 'Throttle cracking' action for starting. To adjust, after setting carburetor idle speed at 6-7 MPH, loosen hand throttle wire lock screw, pull button ⅛" out from instrument panel, position hand throttle lever so that no clearance exists between lever and throttle cross shaft, tighten lock screw. Turn throttle stopscrew in 2 turns (with throttle stopscrew on high point of cam or 'cold' position), disconnect battery cable at starting motor to prevent cranking, fully depress starter pedal, adjust throttle cracker lever to take up all clearance on pin. Connect starting motor and reset idle speed.

Automatic Choke:—Carter Climatic Control.

For complete data, refer to Carburetion Equip. Index.

Choke Setting—Set coil housing 1 notch Rich.

CARB. EQUIPMENT

Air Cleaner:—AC #1523985 oil-wetted type Std., #1528944 oil-bath type Optl. with Crankcase Vent Cleaner #502783 Std., #1529288 Optl.

Fuel Pump:—AC Type AH #1523985 standard. Type AJ #1523986 fuel-and-vacuum pump optional.

For complete data, refer to Carburetion Equip. Index.

Gasoline Gauge:—AC Electric. #1515371 (dash unit), #1515481 (tank unit).

For complete data, refer to Carburetion Equip. Index.

BATTERY

BATTERY:—Delco Type 15E-1, 2. 6 volt, 15 plate, 100 ampere hour capacity (20 hour rate).

Starting Capacity—120 amperes for 20 minutes.

Zero Capacity—300 amperes for 3.5 minutes. Five second voltage—4.25 volts.

Grounded Terminal—Negative (—) grounded to lower left side of block. No separate engine ground.

Dimensions—Length 19 5/16". Width 4". Height 9".

Location—Under engine hood on left side.

Police Battery:—Delco Type 19E-1. 6 volt, 19 plate, 130 A. H. capacity (20 hr. rate). End-to-end type.

All other date same as for 15E-1 above.

STARTER

STARTER:—Delco-Remy 1107022, 727-S (RHD). Armature No.—810601 (1107022), 823881 (727-S).

See Electrical Equipment Section for recommended correction for burning of starter commutators.

Drive—Overrunning clutch (manual shift on 1107022, solenoid pinion shift on 727-S).

Cranking Engine—200 amperes at 5 volts.

Rotation—Counter-clockwise at commutator end.

Brush Spring Tension—24-28 ounces each.

Performance Data—1107022

Torque	R.P.M.	Volts	Amperes
0 ft. lbs	5000	5.0	65
12 ft. lbs	Lock	3.37	525

Performance Data—727-S

Torque	R.P.M.	Volts	Amperes
0 ft. lbs	5500	5.0	65
15 " "	Lock	3.0	600

Removal:—Mounted on left front face of flywheel housing. To remove take out mounting screws.

Starting Switch (1107022):—Delco-Remy Part #820052. Mounted on starter. Operated by starting pedal.

For complete data, refer to Electrical Equipment Index.

Starting Switch (727-S): Delco-Remy Solenoid 1546 operated by pushbutton switch 1996007.

For complete data, refer to Electrical Equipment Index.

GENERATOR

GENERATOR:—Delco-Remy 1102665, Armature 1879002 (Std.), 1106403 (City Police), 1105851 or 1105856 (State Police). Two brush (shunt) types with voltage and current regulation. Ventilated.

Charging Rate Adjustment—No adjustment at generator. Charging rate controlled by Voltage Regulator and maximum output by Current Regulator.

Maximum Charging Rate—Standard: 32 amperes min. (hot), 8.0 volts, 2450 RPM, 25 MPH; Police: 34 amperes Min. (hot), 8.0 volts, 1040 RPM., 19.0 MPH. with load or discharged battery (Current Regulator setting). Actual charging rate controlled by Voltage Regulator and dependent on battery condition.

Performance Data Cold

	*Amperes	Volts	R.P.M.
1102665	30	8.0	1750
1106403	35	8.0	1040
1105851, 6	40	8.0	1850

*—Not maximum output—See Current Regulator.

Rotation—Counter-clockwise at commutator end.

Brush Spring Tension—25 ounces each.

Field Current—1.75-1.9 amperes (1102665), 1.77-2.0 amperes (1106403), 1.62-1.82 amperes (1105851, 6) at 6.0 volts.

Removal:—Pivot mounted at left front of engine. To remove, take out clamp and pivot bolts.

Belt Adjustment:—Loosen pivot and clamp bolts, move generator out or away from engine to take up stretch or slack in belt. Belt play should be 1" between pulleys when belt grasped with fingers.

REGULATOR

REGULATOR:—Delco-Remy Model 1118201 (1102665 Gen.), 1118229 (1106403 Gen.), 1118237 (1105851 & 1105856 Gens.). Single Core Type. Vibrating type voltage and current regulators in a single case.

For complete data, refer to Electrical Equipment Index.

CAUTION—Check generator for grounded fields before changing regulator settings. If field coils defective, new field coil parts 1877893 and 1878427 should be installed. Also check regulator terminals for clearance at dash.

Cutout Relay

Cuts In—6.2-6.7 volts (hot).
Cuts Out—0-4.0 amperes discharge current.
Contact Gap—.020" (same for both sets).
Air Gap—.020" (with points just closed).

Voltage Regulator

Setting—7.2-7.4 volts hot (1118201), 7.0-7.2 volts hot (1118229 & 1118237) at operating temperature.

CONTINUED ON NEXT PAGE

CONTINUED FR M PRECEDING PAGE

To Check—Connect ammeter in charging line at 'BAT' regulator terminal, voltmeter between 'BAT' terminal and ground. Operate generator at approx. 3000 RPM, adjust charging rate to 8-10 amperes (use variable rheostat or 'AVR' set). With regulator at hot operating temperature, retard generator speed until cut-out relay points open, then increase generator speed to 3000 RPM and check hot voltage setting (above). Cover must be in place.

To Adjust—Change regulator armature spring tension slightly by bending lower spring hanger for light (left) spring (or one spring if both alike) only. If further adjustment required see Single Core Regulator article in Electrical Equipment Section for Heavy (or other) Spring Adjustment.

Air Gap—.070" between center of core and armature with contacts just closed.

Current Regulator

Setting—34-36 amperes (1118201, 1118229), 38-40 amperes (1118237) hot (at operating temperature).

To Check—Remove cover, connect short jumper from voltage regulator frame to upper contact support bracket (shorting out Voltage Regulator). Connect ammeter in charging line at 'BAT' regulator terminal. Turn on lights and accessories, operate generator and increase speed until output remains stationary (run until hot). Check setting with regulator at operating temperature.

To Adjust—Change regulator armature spring tension slightly by bending lower spring hanger for one spring. If further adjustment required see Single Core Regulator article in Electrical Equipment Section for adjustment of Other Spring.

Air Gap—.080" (check same as Voltage Regulator).

LIGHTING

LIGHTING:—Headlamps—Guide 'Sealed Beam' type.

For complete data, refer to Electrical Equipment Index.

Headlamp Adjustment—Aim upper beam for each headlamp straight ahead with center of hot spot on horizontal line 3" below lamp center height.

Beam Indicator—Red light on speedometer dial. Lighted with upper beam in use.

Switches

Lighting—Delco-Remy 1995009, 1995014.

NOTE—This new switch Delco-Remy Model 1995014 with 9 ampere fuse for **Stop Light** circuit used after Serial No. P6HA-40968 (Spec. 6), P6HB-34427 (Del. 6). P8HA-14188 (Del. 8), P8HB-15513 (Torpedo 8). This new switch furnished for service after first type stock exhausted.

Beam Selector—Delco-Remy 1997008, 465-V (RHD).

Instrument Lamp—Delco-Remy 1997719.

Stop Light—Delco-Remy 1997725.

Bulb Specifications

Position	Candlepower	Mazda No.
Headlamps		Sealed Beam
Parking, Rear License	3	63
Instrument	1½	55
Ign. Switch, Beam Indic.	1	51
Stop & Tail	21-3	1154
Dome	6	81

MISC. ELECTRICAL

THERMOSTATIC RELAY:—Delco-Remy. On lighting switch. Contacts remain closed with 30 amperes, but open in 3 minutes with load of 42 amperes at 70°F.

FUSES:—Stop Light—9 ampere on lighting switch. Used on later cars only (see Light Switch Note above).

HORNS:—Delco-Remy Model K-33-H. No. 1999501, 519 (low note), 1999502, 520 (high note). Vibrator type, blended tone, operated by horn relay. Horn set 1999501 & 502 used on early cars.

Type	Current (at 6 volts)	Air Gap
1999501 (Low)	16-18 amperes	.044-.049"
1999502 (High)	15-17 amperes	.034-.039"
1999519 (Low)	19-21 amperes	.044-.049"
1999520 (High)	18-20 amperes	.034-.039"

Horn Relay:—Delco-Remy Model 1116775.

Contact Gap—.020". **Air Gap**—.015" (closed).

Contacts Close—2.75-4.0 volts.

ENGINE

ENGINE SPECIFICATIONS:—6 cylinder, 'L' head.
Bore—3 7/16". **Stroke**—4".
Displacement—222.7 cu. ins. **Rated HP**—28.3.
Developed Horsepower—87 at 3520 RPM (Std. hd.).
Compression Ratio—6.5-1 Std., 7.2-1 HC. Optl.
Compression Pressure—155-158 lbs. at 1000 RPM or approx. 118-120 lbs. at cranking speed (Std. head).
Vacuum Reading—Steady 18-20" idling at 7 MPH.
See Pontiac Shop Notes for Front Engine Insulator Removal and Engine Rear Support Reinforcement Plate.

PISTONS:—Electro-plated, chrome nickel alloy type with rib under head. Cannot be ground.
Length—3 37/64". **Weight**—27⅛ ozs. (stripped). Piston and pin weight variation 1/16 oz. max.
Removal—Pistons and rods removed from above.
Clearance—Top land .0175-.0295". **Skirt .002".**

Original Bore & Piston Sizes, Replacement Pistons:—*See Pontiac Shop Notes for complete data.*

Fitting New Pistons:—Insert .0015" x ½" feeler between piston and cylinder wall. Pull to withdraw feeler must be 10-25 lbs. Taper and out-of-round limits — Piston .0005", Cylinder .0005" max. new.

PISTON RINGS:—Two taper faced compression rings above pin, 1 oil control ring below pin. NOTE—Install compression rings with mark TOP up.

Ring	Width	End Gap	Side Clearance
Compression	.0930-.0935"	.009-.014"	.0015-.003"
Oil Control	.1860-.1865"	.007-.017"	.001-.0025"

Replacement Rings:—Oversizes .005", .010", .020", .030".

PISTON PIN:—Diameter 15/16". Length 3 1/16". Pin locked in one piston boss. Free end slotted.
Pin Fit in Piston—*See Pontiac Shop Notes.*
Pin Fit in Rod Bushing—.0003-.0005".

Replacement Pins:—.001" (red & brown), .003" (red), .005" (blue) oversize. Paint marked on end of pin.

CONNECTING ROD:—Weight 2.31 lbs. Length 7 9/16".
Piston Pin Bushing (Upper Bearing)—Split bronze bushings. *See Pontiac Shop Notes for servicing.*
Crankpin Journal Diameter—2⅛".
Lower Bearing—Removable steel-backed, babbitt-lined type. Furnished standard & .001" undersize.
Clearance—.0005-.0015". **Endplay**—.005-.010".
Bearing Adjustment:—None (no shims). *See Pontiac Shop Notes for Fitting and Installing Bearings.*
Installing Rods:—Not offset (install either way). NOTE—Self-locking rod bolt nuts used.

CRANKSHAFT:—4 bearing, integral counterweights. *See Pontiac Shop Notes for Balancer Removal and Rear Main Bearing Oil Seal Renewal.*
Journal Diameters—#1, 2½"; #2, 2 17/32"; #3, 2 19/32"; #4, 2⅝".
Bearings—Interchangeable (upper and lower) steel-backed, babbitt-lined type. Furnished std. & .001" undersize. **Clearance**—.001-.003".
Bearing Adjustment:—None (no shims). Replace bearings. Do not file caps. *See Pontiac Shop Notes.*
End Thrust:—At #3 bearing. **Endplay**—.003-.008".

CAMSHAFT:—4 bearing. Non-adjustable chain drive. *See Pontiac Shop Notes for Camshaft Removal, Bearing Finished Sizes and Timing Cover Oil Seal data.*
Journal Diameters—#1, 2"; #2, 1 31/32; #3, 1 15/16"; #4, 1 29/32".
Bearing Type—Steel-backed, babbitt-lined.
Clearance—.0015-.0025".
End Thrust:—Steel thrust plate behind camshaft sprocket. Replace if worn. **Endplay** .002-.005".
Timing Chain:—Morse No. 1532, Type C-1882-K. Width 1". Pitch ⅜". Length 21" or 56 links.
Camshaft Setting:—Sprockets marked. Mesh chain with sprockets turned so that '0' marks are adjacent and in line with a straightedge across shaft centers.

VALVES:—	**Head Diameter**	**Stem Diameter**	**Length**
Intake	1 19/32"	.310-.311"	5.718"
Exhaust	1 15/32"	.310-.311"	5.718"

	Seat Angle	**Lift**	**Stem Clearance**
Intake	30°	19/64"	Free fit to .0006"
Exhaust	45°	19/64"	Free fit to .0006"

Valve Guides:—Removable, tapered guides (.001" taper to the inch with greatest clearance at top). IMPORTANT—Measure clearance at bottom end. Valve should just fall through guide of own weight when started in guide. NOTE—Guides should be cleaned with wire brush or taper reamer Tool P.R. 131. Replacement guides straight cut, ream to fit valve stem after installing with reamer P.R. 131.

Valve Springs:—Intake and exhaust springs identical. Install with two closed coils at top and dampener on top of each spring. Use new dampeners whenever removed from spring. **Free Length 2 9/16".**

	Spring Pressure	**Spring Length**
Valve Closed	56-63 lbs.	1 29/32"
Valve Open	97-105 lbs.	1 19/32"

Valve Lifters:—Barrel type, cast-iron. Guides holes reamed in block. Lifters furnished .005" oversize (use special pilot reamer J-706-P when installing to obtain proper alignment). **Clearance**—Free fit. Lifter should just move freely with finger touch.

VALVE TIMING

Tappet Clearance:—.011-.013" all valves (engine warm). Use .011" feeler as 'go' gauge, .013" as 'no go'. NOTE—Car manufacturer recommends .013" exhaust clearance for sustained high speed driving.

Valve Timing:—See Camshaft Setting above.
Intake Valves—Open 5° BTDC. Close 39° ALDC.
Exhaust Valves—Open 45° BLDC. Close 5° ATDC.
Valve Timing Check—With .015" tappet clearance #6 intake valve should open with piston 5° or .0096"

before top dead center with first straight line of flywheel mark '/IGN.ONE/' slightly past indicator in left front face of flywheel housing.

LUBRICATION

LUBRICATION:—Pressure type (gear type pump on right side. ***See Pontiac Shop Notes for Oil Pump data, recommended Crankcase Ventilator Outlet Pipe Cleaner removal (to improve crankcase ventilation) and installation of 1941 type Pontiac (built-in) Oil Cleaner.***

Normal Oil Pressure:—35-40 lbs. above 40 MPH.

Oil Pressure Regulator:—On pump. Opens at 40 lbs. Non-adjustable type. **Crankcase Capacity:**—6 qts.

COOLING

COOLING SYSTEM:—**Capacity**—17 quarts.
See Pontiac Shop Notes for Radiator Core Removal.

Water Pump:—Packless, sealed ball-bearing shaft.
See Water Pump Section for complete data.

Removal—Remove fan belt, pump mounting bolts and lower hose. Lift off pump and fan assembly.

Thermostat:—Harrison. In cylinder head outlet. **Setting**—Closed 140°F. Starts 145°. Fully open 172°.

Temperature Gauge:—AC #1510916 (dash), #1510772 (engine unit). Electric type.
See Miscellaneous Section for complete data.

CLUTCH

CLUTCH:—**Inland.** 'Diaphragm' type, single plate, dry disc type with Long 9CF-CS, 10CF-CS (Taxi) driven member.
See Clutch Section for complete data.

Facings—Moulded (Ammco), 2 used. Inside Diam. 5¾", 6" (Taxi). O.D. 9", 10" (Taxi). Thickness .125".
See Pontiac Shop Notes for Clutch Pedal Rattle Correction and Replacement Pilot Bushing data.

Pedal Adjustment:—Free travel ⅞-1⅛" (adjusting nut on link at clutch fork). Pedal height above toe board (engaged) 5⅛" (Special), 4¾" (Deluxe), stop screw at lower end of pedal arm.

Removal:—Remove transmission (see below), take off bottom housing cover, unlock pedal pull-back spring, remove fork ball support, fork and throwout bearing. Remove cover screws evenly until tension relieved. Move clutch away from flywheel at bottom to remove disc, then lower cover assembly out.

TRANSMISSION

TRANSMISSION:—**Own.** All helical gear, constant-mesh, synchro-mesh (second & high), sliding gear (low & reverse) with remote steering col. shift.
See Transmission Section for complete data.

Transmission Control:—Pontiac 'Safety-Shift' type.
See Transmission Section for complete data.

Removal:—Remove floor mat and center panel. Disconnect speedometer cable, gearshift selector and control rods at transmission. Disconnect rear universal (wire trunnions) and pull propeller shaft to rear to disengage U-joint front yoke from transmission main shaft at slip joint. Remove upper transmission mounting screws, install guide pins (J-851), remove lower screws, pull unit to rear to free main drive gear, then up and forward at front,

UNIVERSALS

UNIVERSAL JOINTS:—**Mechanics 2C.** Roller bearing.
See Universals Section for complete data.
NOTE—1 piece driveshaft used. Slip joint formed at rear of transmission mainshaft ahead of front universal (front yoke of universal splined directly to mainshaft—no front companion flange used).

REAR AXLE

REAR AXLE:—**Own Make.** Semi-floating, hypoid gear type with Hotchkiss drive.
See Rear Axle Section for complete data.
Ratio—4.3-1 Std. (white), 4.55-1 Mount. (yellow), 4.1-1 Plains (green), 3.9-1 Economy (red). NOTE—Color marked on end of right or left axle shaft.
Backlash—.003-.012" (new).

Removal:—Disconnect rear universal and wire trunnions (do not disengage spline joint at front end of shaft), remove axle shafts (below), remove carrier flange capscrews, pull carrier assembly out.

Axle Shaft Removal:—Hoist rear of car, remove wheel, brake drum, 4 backing plate mounting bolt nuts and loosen bearing retainer (do not allow backing plate to shift to damage brake line). Pull shaft (Puller J-942) taking care not to drag shaft on oil seal. **Wheel Bearing Adjustment**—None.

SHOCK ABSORBERS

SHOCK ABSORBERS:—**Delco. Front**—1947-C,D. **Rear**—1000-V (Domestic), 1754-E,F (Export 25), 1754-A,B (Export 26). Double acting, hydraulic (1000-V direct acting—Rear Shocks Domestic cars).
See Shock Absorber Section for complete data.

FRONT SUSPENSION

Front Suspension:—Independent, linked parallelogram type with coil springs.
See Front Suspension Section for complete data.

Kingpin Inclination—4⅝° to 5¼°.

Caster—Negative ¾°. Limits Neg. ½° to Neg. 1°.

Camber—Positive ⅜°. Limits 0° to ⅝° positive.

Toe In—0-1/16". Adjust tie rod tubes equally.

Steering Geometry—Inner wh'l 23° ± ½°. Outer 20°.

STEERING GEAR

Steering Gear: Saginaw Worm-and-Roller type with steering idler arm on right frame rail.
See Steering Gear Section for complete data.

BRAKES

BRAKES:—**Service.** Bendix hydraulic, duo-servo, single anchor type without eccentric adjustment. Hand lever applies rear service brakes.
See Brake Section for complete data.

Drums—Chrome nickel iron. Diameter—11".
Wheel Cylinder Bore—Front wheel 1". Rear 15/16".
Lining—Moulded. Width 1¾". Thickness 3/16". Length 9 11/32" (Primary—D-R Multibestos), 11 31/32" (Secondary—L-8 Multibestos).
Clearance—.015" at both ends of secondary shoe (with primary shoe forced out against drum).
Braking Power—53% front wheels, 47% rear.

Hand Brake:—See Service Brakes above.

MISC. MECHANICAL

Power Operated Convertible Top: Vacuum Power type.
See Miscellaneous Section for complete data.

HOOD FITTING, HOOD LOCK ADJUSTMENT, AND FRONT FENDER & RADIATOR (UNIT) REMOVAL:—*See Pontiac Shop Notes for data.*

MODEL IDENTIFICATION

SERIAL NUMBER:—First number 8HA-1001 (Deluxe), 8HB-1001 (Torpedo) with prefixes indicating factory as follows: P—Pontiac, Mich., C—South Gate, Calif., L—Linden, N. J. On plate fastened to left end of frame front cross member under hood.

ENGINE NUMBER:—First number 8-194401. Stamped on boss on top left front corner of engine block.

TUNE-UP

COMPRESSION:—**Ratio**—6.5-1 Std., 7.2-1 Optl.

Pressure—155-158 lbs. at 1000 RPM or approximately 118-120 lbs. at cranking speed (Std. head).

VACUUM READING:—Steady 18-20" idling at 7 MPH.

FIRING ORDER: 1-6-2-5-8-3-7-4. See diagram.

SPARK PLUGS: AC Type 45. 14 mm. Metric type. **Gaps** .025".

IGNITION: See Coil, Condenser, and Distributor. Breaker Gap—.015". **Cam Angle**—31° Closed. **Automatic Advance**—Starts at 300 RPM. Maximum advance 13 5° at 2100 RPM. (Distr. degrees & RPM). **Vacuum Advance**—Starts with 7-9" vacuum. Maximum 7.5° (distr.) with 13-16" vacuum.

IGNITION TIMING: See Ignition Timing. Std. Setting—6° BTDC. First line of flywheel mark '/IGN.ONE/' aligned with pointer in inspection hole on left side of housing.

CARBURETION: See Carburetor & Carb. Equipment. Idle Setting—Set idle adjusting screw (1 on 462-S Deluxe, 2 on 469-S Torpedo) ¾-1½ turns open (462-S), ¼-1¼ turns open (469-S). Idle speed 376 RPM or 7 MPH.

Float Level (462-S)—7/16" from machined projection on cover to top of soldered seam on float. (469-S) 5/16" from top of float to gasket seat on cover with needle valve seated (invert to check).

Accelerating Pump (462-S)—Normal setting (minimum stroke, Inner Hole in Pump Arm and Upper Hole in Pump Plunger). NOTE—On Early 462-S carburetors change pump setting to correct complaints on hesitation when starting in second gear to maximum stroke (Upper Hole in Arm, Lower Hole in Plunger).

Accelerating Pump (469-S)—Original carburetors not adjustable. Re-worked carburetors may be equipped with new pump arm which has two holes for link engagement. Set to long stroke (upper hole) to correct hesitation or stumbling on acceleration.

Fuel Pump Pressure: 4 lbs. (AH), 3¾ lbs. (AJ Comb.).

MANIFOLD HEAT CONTROL:—Thermostatic coil type. Counterweight must be tightly clamped to shaft and about vertical with valve closed (engine cold). **Setting**—Adjustment provided by shifting anchor pin for following settings: Normal temperatures (center hole). Extremely cold temperatures (inner hole). Extremely hot temperatures (outer hole).

VALVES: See Valve Timing. Tappet Clearance:—.011-.013" all valves (warm). Use .011" and .013" feelers as 'go' and 'no go' gauges. NOTE—.013" exhaust setting recommended by car manufacturer for sustained high speed driving.

STARTING: See Battery, Starter, Generator, Regulator.

IGNITION

Ignition Switch:—Delco-Remy Model 1116286 (40-28), 1116285 (40-29). Switch and cable assembly. Connected to coil by armored cable.

Ignition Lock—Briggs & Stratton. B & S No. 45792. Key Series—8000 to 9499. Groove—No. 15.

COIL: Delco-Remy Model 1115129. Mounted on dash. **Ignition Current**—2.5 amperes idling, 4.5 stopped.

CONDENSER: Delco-Remy Part No. 1869704. **Capacity**—.18-.25 microfarad.

DISTRIBUTOR: Delco-Remy 1110804. Single breaker, 8 lobe cam, full automatic advance with vacuum spark control and Gaselector adjustment (for fuel compensation) at distributor.

Breaker Gap—.015". Limits .0125-.0175".

Cam Angle or Dwell—31° closed, 14° open (distr.).

Breaker Arm Spring Tension—19-23 ounces.

Rotation—Counter-clockwise viewed from above.

Automatic Advance

Distributor Degrees	Distributor R.P.M.	Engine Degrees	Engine R.P.M.
Start	300	2	600
7	1100	14	2200
8.5	1500	17	3000
13.5	2100	27	4200

Vac'm Spark Control D-R #1116021. Integral with distributor. Mounted on housing and linked directly to breaker plate. Provides additional advance at speeds above idling (vacuum port in carburetor above throttle) except when engine accelerated or operated with wide open throttle when spark is retarded by return spring within unit. Total plunger travel 7/32".

Vacuum Advance

Distr. Degrees	Eng. Degrees	Vacuum (" of HG)
Start	0°	7-9"
7.5°	15°	13-16"

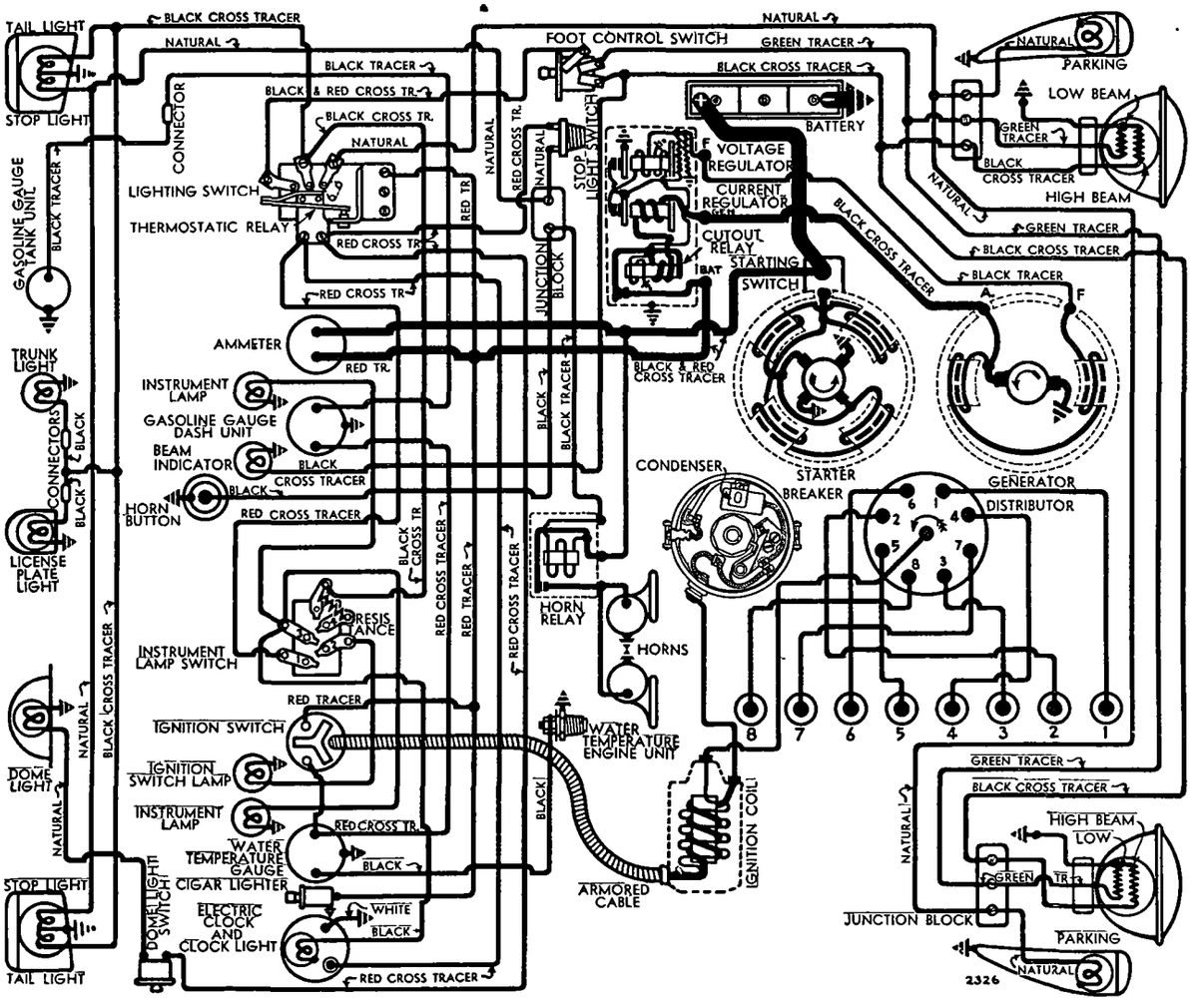

Gaselector—Manual adjustment at distributor providing 10° advance or retard from center '0' position. See Gaselector Setting following.

Distributor Removal:—Mounted on left side of engine. To remove, disconnect vacuum line, take out hold-down screw in Gaselector and lift out.

IGNITION TIMING

IGNITION TIMING:—Standard setting given below (regular fuel Std. hd., Ethyl fuel HC hd.). See Gaselector following for final setting.

	Flywheel Degrees	Piston Position
All engines	6° BTDC	.0128" BTDC.

NOTE—The two straight lines of the ignition mark '/IGN.ONE/' indicates allowable timing range of 4° on flywheel. Use first or 6° line in setting ignition. Car manufacturer recommends use of Timing Light (Tool HM-494) or Synchroscope (HMO-161).

To Set Timing (using Timing Light)—Connect timing light between distributor terminal and ground, turn on ignition. With #1 piston on compression, turn engine over until piston is 6° or .0128" before top dead center, stop when first line of ignition mark '/IGN.ONE/' lines up with pointer in inspection hole in left front face of flywheel housing. Loosen Gaselector screw, center pointer on scale, tighten screw, loosen advance arm clamp bolt, rotate distributor until timing lamp lights (contacts opening), tighten clamp bolt.

To Set Timing (using Synchroscope)—Clip one synchroscope lead to #1 spark plug cable, insert other lead in distributor cap terminal from which #1 spark plug wire removed. Fill in first line of flywheel mark '/IGN.ONE/' with white chalk or paint. Direct synchroscope on flywheel through inspection hole in left front face of flywheel housing. Idle engine at 376 R.P.M. or 7 M.P.H., adjust distributor (as directed for Timing Light above) until white line coincides with pointer on housing.

Gaselector Setting—Should be set to provide best performance without spark knock or ping for particular operating conditions and octane rating of fuel used. To adjust, loosen screw, move pointer clockwise to advance or counter-clockwise to retard spark.

CARBURETOR

DELUXE 8 MODEL 40-28

CARBURETION (DELUXE):—**Caburetor**—Carter Type WA-1, Model 462-S (first), 462-SP (later). 1¼" downdraft type with Carter Climatic Control.

Production Change—To correct engine hesitating when starting in second gear, a new pump plunger 64-70S used on 462-SP. On 462-S, change pump link to lower hole in arm and plunger shaft to correct this condition.

For complete data, refer to Carburetor Index.

Idle Adjustment—With engine warm and running at slow idle speed (choke valve wide open, fast idle inoperative), set throttle stopscrew for 7 MPH idle speed. Adjust idle adjusting screw until engine fires smoothly (¾-1½ turns open—turn screw in for leaner mixture). Readjust idle speed.

To correct faster than normal idling, See Accelerator Pedal Sticking correction in Pontiac Shop Notes.

Accelerator Pump Setting—Pump arm and plunger under dust cover at top of carburetor have two holes for connector link engagement. Recommended settings as follows:

Sh rt Stroke—Normal Setting (Inner Hole in Pump Arm, Upper Hole in Pump Plunger).

Long Stroke—Maximum Setting (Outer Hole in Pump Arm, Lower Hole in Pump Plunger).

NOTE—To correct hesitating when starting in second gear on 462-S (Early '40) carburetors, set Accelerating Pump for Long Stroke.

Float Level—7/16" from machined projection on cover to top of soldered seam on float (invert to check).

Fast Idle:—Integral type, built-in carburetor.

For complete data, refer to Carburetion Equip. Index.

Fast Idle Setting—Adjust by bending connecting link offset for ⅝" choke valve opening with stopscrew against (not on) first step of fast idle cam.

Accelerator Linkage Adjustment:—Must be maintained to provide correct 'Throttle cracking' action for starting. To adjust, set carburetor idle speed at 6-7 MPH, loosen hand throttle wire lock screw, pull button ⅛" out from instrument panel, position hand throttle lever so that no clearance exists between lever and throttle cross shaft, tighten lockscrew. Turn throttle stopscrew in 2 turns (with throttle stopscrew on high point of cam or 'cold' position), disconnect battery cable at starting motor, to prevent cranking, fully depress starting pedal, adjust throttle cracking pin so that all clearance between pin and cross shaft lever is taken up. Connect starting motor cable and reset idle speed.

Automatic Choke:—Carter Climatic Control.

For complete data, refer to Carburetion Equip. Index.

Setting—Set coil housing one notch rich.

CARBURETOR

TORPEDO 8 MODEL 40-29

CARBURETION (TORPEDO): — Carburetor — Carter Type WDO, Model 469-S (first), 469-SM (later). 1 5/16" dual downdraft type with Carter Climatic Control. ***For data, refer to Carburetor Index.***

IMPORTANT—***Refer to Carburetor article in 'C' Section for recommended correction for Hesitation or Stumble when accelerating (pump change to provide adjustable stroke).***

Production Change—New metering rods used on 469-SM. ***For data, refer to Carburetor Index.***

Idle Adjustment—With engine warm and running at slow idle speed (choke valve wide open, fast idle inoperative), set throttle stopscrew for 7 MPH idle speed. Adjust idle adjusting screw for each barrel (in succession) until engine fires smoothly (setting ¼-1¼ turns open—turn screw in for leaner mixture). Readjust idle speed. Car manufacturer recommends use of vacuum gauge for this adjustment.

Accelerator Pump Setting—Not adjustable.

IMPORTANT—***Refer to Carburetor article in 'C' Section for recommended correction for Hesitation or Stumble when accelerating (pump change to provide adjustable stroke).***

Float Level—5/16" from top of float to gasket seat on cover with needle valve seated (invert to check).

Fast Idle:—Integral type, built-in carburetor.

For complete data, refer to Carburetion Equip. Index.

Fast Idle Setting—Adjust fast idle screw for .010" throttle opening with choke valve fully closed.

Accelerator Linkage Adjustment:—Same as for Deluxe Eight. See Instructions listed above.

Automatic Choke:—Carter Climatic Control.

For complete data, refer to Carburetion Equip. Index.

Choke Setting—1½ Notches Rich (may be set 4 notches rich to correct poor starting or leanness after starting) for first type thermostat marked '170-G-16S' on choke housing. Later type thermostat marked '170-F-16S' is set 2 Notches Rich.

CARB. EQUIPMENT

DELUXE 8 MODEL 40-28

Air Cleaner:—AC #1528128 oil wetted type with crankcase ventilator #502783 standard. #1529478 oil bath type with #499327 ventilator cleaner optl.

Fuel Pump:—AC Type AH #1523985 standard. Type AJ #1523986 fuel-and-vacuum pump optional.

For complete data, refer to Carburetion Equip. Index.

Gasoline Gauge:—AC Electric. #1515371 (dash unit), #1515481 (tank unit).

For complete data, refer to Carburetion Equip. Index.

CARB. EQUIPMENT

TORPEDO 8 MODEL 40-29

Air Cleaner:—AC #1529478 heavy duty oil bath type standard.

Fuel Pump:—AC Type AJ #1537087 diaphragm type combination fuel-and-vacuum pump standard.

For complete data, refer to Carburetion Equip. Index.

Gasoline Gauge:—AC Electric. #1515371 (dash unit), #1515481 (tank unit).

For complete data, refer to Carburetion Equip. Index.

BATTERY

BATTERY:—**Delco Type 15E-1, 2.** 6 volt, 15 plate, 100 ampere hour capacity (20 hour rate).

Starting Capacity—120 amperes for 20 minutes.

Zero Capacity—300 amperes for 3.5 minutes. Five second voltage—4.25 volts.

Grounded Terminal—Negative (—) grounded to lower left side of block. No separate engine ground.

Dimensions—Length 19 5/16". Width 4". Height 9".

Location—Under engine hood on left side.

Police Battery:—**Delco Type 19E-1.** 6 volt, 19 plate, 130 A. H. capacity (20 hr. rate). End-to-end type.

Starting Capacity—150 amperes for 20 minutes.

Zero Capacity—300 amperes for 5.3 minutes. Five second voltage—4.55 volts.

All other data same as for 15E-1 above.

STARTER

STARTER:—**Delco-Remy 1107914. Armature 1867897.**

See Electrical Equipment Section for recommended correction for burning of starter commutators.

Drive—Overrunning clutch (manual pinion shift).

Rotation—Counter-clockwise at commutator end.

Cranking Engine—220-225 amperes at 5 volts.

Brush Spring Tension—24-28 ounces.

Performance Data

Torque	R.P.M.	Volts	Amperes
0 ft. lbs.	6000	5.0	60
15 " "	Lock	3.0	600

Removal:—Flange mounted on left front face of flywheel housing. To remove, take out capscrews.

Starting Switch:—Delco-Remy Part #820052. Mounted on starter. Operated by starting pedal.

For complete data, refer to Electrical Equipment Index.

CONTINUED ON NEXT PAGE

CONTINUED FROM PRECEDING PAGE

GENERATOR

GENERATOR:—Delco-Remy 1102665, Armature 1879002 (Std.), 1106403 (City Police), 1105851 or 1105856 (State Police). Two brush (shunt) types with voltage and current regulation. Ventilated.

Torpedo Note—On some early cars, generator to regulator wire (between generator and wiring harness clip at fender side apron) is tight and may be broken in normal service causing generator to operate on open-circuit. To correct, loosen wiring harness clips at fender side apron and move harness forward to provide slack in this wire.

Charging Rate Adjustment—None. Charging rate controlled by Voltage Regulator, maximum output by Current Regulator. See Regulator data below.

Maximum Charging Rate—Standard: 32 amperes min. (hot), 8.0 volts, 2450 RPM, 25 MPH; Police: 34 amperes Min. (hot), 8.0 volts, 1040 RPM, 19.0 MPH with load or discharged battery (Current Regulator setting). Actual charging rate controlled by Voltage Regulator and dependent on battery condition.

Performance Data—Cold

	Amperes①	Volts	R.P.M.
1102665	30	8.0	1750
1106403	35	8.0	1040
1105851, 6	40	8.0	1850

①—Current Regulator Setting—See Regulator.

Rotation—Counter-clockwise at commutator end.

Brush Spring Tension—25 ounces each.

Field Current—1.75-1.9 amperes (1102665), 1.77-2.0 amperes (1106403), 1.62-1.82 amperes (1105851, 6) at 6.0 volts.

Removal:—Generator pivot mounted on left front of engine. To remove, take out pivot and clamp bolts.

Belt Adjustment:—Belt deflection or sideplay midway between generator & pump pulley should be 1½".

REGULATOR

REGULATOR:—Delco-Remy 1118201 (1102665 Gen.), 1118229 (1106403 Gen.), 1118237 (1105851 and 1105856 Gens.). Single Core Type. Vibrating type Voltage & Current Regulators in a single case.

For complete data, refer to Electrical Equipment Index.

CAUTION—Check generator for grounded field coils and leads before changing regulator settings to correct High Charging Rate or High Voltage.

Cutout Relay

Cuts In—6.2-6.7 volts hot.
Cuts Out—0-4.0 ampere discharge current.
Contact Gap—.020" (same for both sets).
Air Gap—.020" (with contacts just closed).

Voltage Regulator

Setting—7.2-7.4 volts (1118201), 7.0-7.2 volts (1118229, 1118237) Hot (at operating temperature).

To Check—Connect ammeter in charging line at regulator 'BAT' terminal, voltmeter between this terminal and ground. Operate generator at 2800 RPM., adjust charging rate to 8-10 amperes (use variable rheostat or AVR set). With regulator hot (150°F.), decrease generator speed until cutout relay contacts open, then increase speed to 2800 RPM. and check hot voltage setting (above).

To Adjust—Change regulator armature spring tension slightly by bending hanger at lower end of one spring only. If further adjustment required, see Single Core Regulator article in Electrical Equipment Section for other (2nd.) spring adjustment.

Air Gap—.070" between center of core and armature with contacts just closing (press down on armature to open contacts, release pressure, check gap at point where contacts just close).

Current Regulator

Setting—34-36 amperes (1118201, 1118229), 38-40 amperes (1118237) hot (at operating temperature).

To Check—Remove regulator cover, connect short jumper between Voltage Regulator frame and upper contact support bracket (to short out Voltage Regulator), connect ammeter in charging line at regulater 'BAT' terminal, turn on car lights and accessories. Operate generator and increase speed until output remains constant. With regulator hot (150°F), current reading should agree with setting (above).

To Adjust—Same as for Voltage Regulator (above).

Air Gap—.080" (check same as Voltage Regulator).

CAUTION—Check generator for grounded fields before changing regulator settings. If field coils defective, new field coils parts 1877893 and 1878427 should be installed. Also check regulator terminals for clearance at dash.

LIGHTING

LIGHTING:—Headlamps—Guide 'Sealed Beam' type.
For complete data, refer to Electrical Equipment Index.

Headlamp Adjustment—Aim upper beam for each headlamp straight ahead with center of hot spot on horizontal line 3" below lamp center height.

Beam Indicator—Red light on speedometer dial. Lighted with upper beam in use.

Switches

Lighting—Delco-Remy 1995009, 1995014.

NOTE—This new switch Delco-Remy Model 1995014 with 9 ampere fuse for **Stop Light** circuit used after Serial No. P6HA-40968 (Spec. 6), P6HB-34427 (Del. 6). P8HA-14188 (Del. 8), P8HB-15513 (Torpedo 8). This new switch furnished for service after first type stock exhausted.

Beam Selector—Delco-Remy No. 1997008.
Instrument Lamp—Delco-Remy 1997719.
Stop Light—Delco-Remy 1997725.

Bulb Specifications

Position	Candlepower	Mazda No.
Headlamps		Sealed Beam
Parking, Rear License	3	63
Instrument	1½	55
Ign. Switch, Beam Indic.	1	51
Stop & Tail	21-3	1154
Dome	6	81

MISC. ELECTRICAL

THERMOSTATIC RELAY:—Delco-Remy. On lighting switch. Contacts remain closed with 30 amperes, but open in 3 minutes with load of 42 amperes at 70°F. Non-adjustable.

FUSES:—Stop Light—9 ampere on lighting switch. Used on later cars only (see Light Switch Note above).

HORNS:—Delco-Remy Model K-33-H. No. 1999501, 519 (low note), 1999502, 520 (high note). Vibrator type, blended tone, operated by horn relay. Horn set 1999501 & 502 used on early cars.

Type	Current (at 6 volts)	Air Gap
1999501 (Low)	16-18 amperes	.044-.049"
1999502 (High)	15-17 amperes	.034-.039"
1999519 (Low)	19-21 amperes	.044-.049"
1999520 (High)	18-20 amperes	.034-.039"

Horn Relay:—Delco-Remy Model 1116775.
Contact Gap—.020". **Air Gap**—.015" (closed).
Contacts Close—2.75-4.0 volts.

ENGINE

ENGINE SPECFICATIONS:—8 cylinder, 'L' head.
Bore—3¼". **Stroke**—3¾".
Displacement—248.9 cu. ins. **Rated HP**—33.8.
Developed Horsepower—100 (Deluxe), 103 (Torpedo), 110 (Deluxe HC head) at 3700 RPM.
Compression Ratio—6.5-1 Std., 7.2-1 HC. Optl.
Compression Pressure—155-158 lbs. at 1000 RPM or approx. 118-120 lbs. at cranking speed (Std. head).
Vacuum Reading—18-20" steady idling at 7 MPH.
See Pontiac Shop Notes for Oil Pan Removal, Front Engine Insulator Removal, and Engine Rear Support Reinforcement Plate data.

PISTONS:—Electro-plated, chrome nickel alloy type with rib under head. Cannot be ground.
Length—3 19/32". **Weight**—24⅝ ozs. (stripped).
Piston & pin and rod weight variation 1/16 oz. max.
Removal—Pistons and rods removed from above.
Clearance—Top land .0175-.0295". Skirt .002".

Original Bore & Piston Sizes, Replacement Pistons:—***See Pontiac Shop Notes for complete data.***

Fitting New Pistons:—Insert .0015" x ½" feeler between piston and cylinder wall. Pull to withdraw feeler must be 10-25 lbs. Taper and out-of-round limits—Piston .0005", Cylinder—.001" max. new.

PISTON RINGS:—Two taper faced compression rings above pin, 1 oil control ring below pin. NOTE—Install compression rings with mark TOP up.

Ring	Width	End Gap	Side Clearance
Compression	.0930-.0935"	.009-.014"	.0015-.003"
Oil Control	.1860-.1865"	.007-.017"	.001-.0025"

Replacement Rings:—Oversizes .005", .010", .020", .030".

PISTON PIN:—Diameter—15/16". **Length**—2⅞". Pin locked in one piston boss. Free end slotted.
Pin Fit in Piston—***See Pontiac Shop Notes.***
Pin Fit in Rod Bushing—.0003-.0005".

Replacement Pins:—.001" (red & brown), .003" (red), .005" (blue) oversize. Paint marked on end of pin.

CONNECTING ROD:—Weight 1.98 lbs. **Length** 7 9/16".
Piston Pin Bushing (Upper Bearing)—Split bronze bushings. ***See Pontiac Shop Notes for servicing.***
Crankpin Journal Diameter—2".
Lower Bearing—Removable steel-backed, babbitt-lined type. Furnished standard & .001" undersize.
Clearance—.0005-.0015". **Endplay**—.005-.010".

Bearing Adjustment:—None (no shims). ***See Pontiac Shop Notes for Fitting and Installing Bearings.***

Installing Rods:—Not offset (install either way). NOTE—Self-locking rod bolt nuts used.

CRANKSHAFT:—5 bearing, integral counterweights.
See Pontiac Shop Notes for Balancer Removal.
Journal Diameters—#1, 2 3/8"; #2, 2 13/32"; #3, 2 7/16"; #4, 2 15/32"; #5, 2½".
Bearings—Interchangeable (upper and lower) steel-backed, babbitt-lined type. Furnished std. & .001" undersize. **Clearance**—.001-.003".

Bearing Adjustment:—None (no shims). Replace bearings. Do not file caps. ***See Pontiac Shop Notes.***

End Thrust:—At #4 bearing. **Endplay**—.003-.008".

CAMSHAFT:—5 bearing. Non-adjustable chain drive.
See Pontiac Shop Notes for Camshaft Removal, Bearing Finished Sizes and Timing Cover Oil Seal data.

ENGINE

CONTINUED FR M PRECEDIN PA E

Journal Diameters—#1, 2"; #2, 1 31/32"; #3, 1 15/16"; #4, 1 29/32"; #5, 1⅞".

Bearing Type—Steel-backed, babbitt-lined.

Clearance—.0015-.0025".

End Thrust:—Steel thrust plate behind camshaft sprocket. Replace if worn. **Endplay**—.002-.005".

Timing Chain:—Morse No. 2660, Type 766-T. Width ⅞". Pitch ⅜". Length 21" or 56 links.

Camshaft Setting:—Sprockets marked. Mesh chain with sprockets turned so that '0' marks are adjacent and in line with a straightedge across shaft centers.

VALVES:—	Head Diameter	Stem Diameter	Length
Intake	1 15/32"	.310-.311"	5.53"
Exhaust	1 11/32"	.310-.311"	5.53"

	Seat Angle	Lift	Stem Clearance
Intake	30°	19/64"	Free fit to .0006"
Exhaust	45°	19/64"	Free fit to .0006"

Valve Guides:—Removable, tapered guides (.001" taper to the inch with greatest clearance at top).

IMPORTANT—Measure clearance at bottom end. Valve should just fall through guide of own weight when started in guide. NOTE—Guides should be cleaned with wire brush or taper reamer Tool P.R. 131. Replacement guides straight cut, ream to fit valve stem after installing with reamer P.R. 131.

Valve Springs:—Intake and exhaust springs identical. Install with two closed coils at top and dampener on top of each spring. Use new dampeners whenever removed from spring. **Free Length** 2 9/16".

	Spring Pressure	Spring Length
Valve Closed	56-63 lbs.	1 29/32"
Valve Open	97-105 lbs.	1 19/32"

Valve Lifters:—Barrel type, cast-iron. Guides holes reamed in block. Lifters furnished .005" oversize (use special pilot reamer J-706-P when installing to obtain proper alignment). **Clearance**—Free fit. Lifter should just move freely with finger touch.

VALVE TIMING

Tappet Clearance:—.011-.013" all valves (engine warm). Use .011" feeler as 'go' gauge, .013" as 'no go'.

NOTE—Car manufacturer recommends .013" exhaust clearance for sustained high speed driving.

Valve Timing:—See Camshaft Setting above.

Intake Valves—Open 5° BTDC. Close 39° ALDC.

Exhaust Valves—Open 45° BLDC. Close 5° ATDC.

Valve Timing Check—With .015" tappet clearance #8 intake valve should open with piston 5° or .0089" before top dead center with first straight line of flywheel mark '/IGN.ONE/' slightly past indicator in left front face of flywheel housing.

LUBRICATION

LUBRICATION:—Pressure type (gear type pump on right side. *See Pontiac Shop Notes for Oil Pump data, recommended Crankcase Ventilator Outlet Pipe Cleaner removal (to improve crankcase ventilation) and installation of 1941 type Pontiac (built-in) Oil Cleaner.*

Normal Oil Pressure:—35-40 lbs. above 40 MPH.

Oil Pressure Regulator:—On pump. Opens at 40 lbs. Non-adjustable type. **Crankcase Capacity**—6 qts.

COOLING

COOLING SYSTEM:—**Capacity**—19 quarts.
See Pontiac Shop Notes for Radiator Core Removal.

Water Pump:—Packless, sealed ball-bearing shaft.
See Water Pump Section for complete data.

Removal—Remove fan belt, pump mounting bolts and lower hose. Lift off pump and fan assembly.

Thermostat:—Harrison. In cylinder head outlet. **Setting**—Closed 140°F. Starts 145°. Fully open 172°.

Temperature Gauge:—AC #1510916 (dash), #1510772 (engine unit). Electric type.
See Miscellaneous Section for complete data.

CLUTCH

CLUTCH:—**Inland.** 'Diaphragm' type, single plate, dry disc type with Long 9¼CF-CS driven member.
See Clutch Section for complete data.

Facings—Moulded (Ammco), 2 used. Inside Diam. 5¾". Outside Diam. 9¼". Thickness .125".
See Pontiac Shop Notes for Clutch Changes, Pedal Rattle correction, and Replacement Pilot Bushing data.

Pedal Adjustment:—Pedal free travel ⅞-1⅛" (adjusting nut and locknut on link at clutch fork). Pedal height above toeboard (engaged) 4¾" (Deluxe), 5" (Torpedo). Adjusting screw on pedal.

Removal:—Remove transmission (see below), take off bottom housing cover, unlock pedal pull-back spring, remove fork ball support, fork and throwout bearing. Remove cover screws evenly until tension relieved. Move clutch away from flywheel at bottom to remove disc, then lower cover assembly out.

TRANSMISSION

TRANSMISSION:—**Own.** All helical gear, constant-mesh, synchro-mesh (second & high), sliding gear (low & reverse) with remote steering col. shift.
See Transmission Section for complete data.

Transmission Control:—Pontiac 'Safety-Shift' type.
See Transmission Section for complete data.

Removal:—Remove floor mat and center panel. Disconnect speedometer cable, gearshift selector and control rods at transmission. Disconnect rear universal (wire trunnions) and pull propeller shaft to rear to disengage U-joint front yoke from transmission main shaft at slip joint. Remove upper transmission mounting screws, install guide pins (J-851), remove lower screws, pull unit to rear to free main drive gear, then up and forward at front,

UNIVERSALS

UNIVERSAL JOINTS:—**Mechanics 2C.** Roller bearing.
See Universals Section for complete data.
NOTE—1 piece driveshaft used. Slip joint formed at rear of transmission ahead of front universal.

REAR AXLE

REAR AXLE:—**Own Make.** Semi-floating, hypoid gear type with Hotchkiss drive.
See Rear Axle Section for complete data.
Ratio—4.3-1 Std. (white), 4.55-1 Mount. (yellow), 4.1-1 Plains (green), 3.9-1 Economy (red). NOTE—Color marks on end of right or left axle shaft (Torpedo carries additional blue mark on end of shaft).
Backlash—.003-.012" (new).

Removal:—Disconnect rear universal and wire trunnions (do not disengage spline joint at front end of shaft), remove axle shafts (below), remove carrier flange capscrews, pull carrier assembly out.

Axle Shaft Removal:—Hoist rear of car, remove wheel, brake drum, 4 backing plate mounting bolt nuts and loosen bearing retainer (do not allow backing plate to shift to damage brake line). Pull shaft (Puller J-942) taking care not to drag shaft on oil seal. **Wheel Bearing Adjustment**—None.

SHOCK ABSORBERS

SHOCK ABSORBERS:—**Delco. Front**—1947-C, D. **Rear**—1000-V (Domestic), 1754-A, B (Deluxe Export), 1754-G, H (Torpedo Export). Double acting, hydraulic (Model 1000-V is direct acting type).
See Shock Absorber Section for complete data.

FRONT SUSPENSION

Front Suspension:—Independent, linked parallelogram type with coil springs.
See Front Suspension Section for complete data.
Kingpin Inclination—4⅝° to 5¼°.
Caster—Negative ¾°. Limits Neg. ½° to Neg. 1°.
Camber—Positive ⅜°. Limits 0° to ⅝° positive.
Toe In—0-1/16". Adjust tie rod tubes equally.
Steering Geometry—Inner wh'l 23° ± ½°. Outer 20°.

STEERING GEAR

Steering Gear: Saginaw Worm-and-Roller type with steering idler arm on right frame rail.
See Steering Gear Section for complete data.

BRAKES

BRAKES:—**Service.** Bendix hydraulic, duo-servo, single anchor type without eccentric adjustment. Hand lever applies rear service brakes.
See Brake Section for complete data.
Drums—Chrome nickel iron. Diameter—11".
Wheel Cylinder Bore—Front wheel 1". Rear 15/16".
Lining—Moulded. Width 1¾". Thickness 3/16". Length 9 11/32" (Primary—D-R Multibestos 40-28 all wheels, 40-29 front wheels, 1236A Multibestos 40-29 rear wheels). 11 31/32" (Secondary—L-8 Multibestos 40-28, 2320K Hycoe 40-29).
Clearance—.015" at both ends of secondary shoe (with primary shoe forced out against drum).

Hand Brake:—See Service Brakes above.

MISC. MECHANICAL

Power Operated Convertible Top: Vacuum Power type.
See Miscellaneous Section for complete data.

FRONT SHEET METAL ASSEMBLY REMOVAL, HOOD FITTING, HOOD LOCK ADJUSTMENT, 1942 FRONT FENDER REMOVAL & FENDER CAP ALIGNMENT: *Refer to Pontiac Shop Notes.*

MODEL IDENTIFICATION

SERIAL NUMBER:—First No. 1001 (all models) with Model & Plant prefix as shown below. Stamped on plate on left side of dash under engine hood.

	Pontiac	California	Linden
Deluxe 41-25	P6JA-1001	C6JA-1001	L6JA-1001
Str mlnr. 41-26	P6JB-1001	C6JB-1001	L6JB-1001
Custom 41-24	P6JC-1001	C6JC-1001	L6JC-1001
Torpedo 42-25	P6KA-1001	C6KA-1001	L6KA-1001
Str'mlnr 42-26	P6KB-1001	C6KB-1001	L6KB-1001

ENGINE NUMBER: First number 6-761501 (for 1941), same as Serial Number for 1942 (no separate motor number used). Stamped on small pad at the upper left front corner of the motor block.

TUNE-UP

COMPRESSION:—**Ratio**—6.5-1 Std., 7.5-1 Optl. HC. (HC head requires Ethyl fuel at low altitudes). **Pressure**—155 lbs. at 1000 RPM or approximately 118-120 lbs. at cranking speed (for Std. head).

VACUUM READING:—18-20" steady idling at 7-8 MPH.

FIRING ORDER:—1-5-3-6-2-4. See diagram.

SPARK PLUGS:—AC No. 45. 14 MM. Metric. **Gaps**—.025".

IGNITION: See Coil, Condenser, and Distributor. **Breaker Gap**—.020". **Cam Angle**—35° Closed. **Automatic Advance**—14¼° max. at 2000 RPM (dist.). **Vacuum Advance**—7½-8½° distr. with 16-18" vac.

IGNITION TIMING: See Ignition Timing. **Std. Setting**—6° BTDC. First line of flywheel mark '/IGN.ONE/' aligned with pointer in inspection hole on left side of housing.

CARBURETION: See Carburetor & Carb. Equipment. **Idle Setting**—Set idle adjusting screw ¾-1¾ turns open (WA-1 494-S), ½-1½ turns open (W-1 545-S, 521-S). Idle speed 450-475 RPM or 7-8 MPH. **Float Level**—(494-S) ½" from machined projection on cover to top of soldered seam (valve seated). (545-S, 521-S) 11/16" from top of float to gasket seat on cover (remove cover, invert to check). **Accelerating Pump**—Normal setting for 494-S (minimum stroke—Inner Hole in Pump Arm and Upper Hole in Pump Plunger). Normal Setting for 545-S & 521-S, medium stroke—Lower Hole. **Fuel Pump Pressure:** 4 lbs. (AH), 3¾ lbs. (AJ Comb.).

MANIFOLD HEAT CONTROL:—Thermostatic coil type, non-adjustable (fixed anchor pin). Counterweight should be securely clamped to shaft in approximately vertical position with valve closed (cold).

VALVES: See Valve Timing. **Tappet Clearance:**—.011-.013" all valves Hot (.011" gauge 'Go', .013" 'No Go'). NOTE—.013" exhaust clearance recommended for sustained high speed.

STARTING: See Battery, Starter, Generator, Regulator.

IGNITION

Ignition Switch:—Delco-Remy No. 1116306 (LHD), 1116312 (RHD). Connected to coil by armored cable. **Ignition Lock Cylinder**—Briggs & Stratton 45792. Key Series—8000 to 9499. Groove—No. 15.

COIL: Delco-Remy Model 1115023. Mounted on dash. **Ignition Current**—2.5 amperes idling, 4.5 stopped.

CONDENSER: Delco-Remy Part No. 1869704. **Capacity**—.18-.25 microfarad.

DISTRIBUTOR: Delco-Remy Mod 647-D. Single breaker 6 lobe cam, full automatic advance type with auxiliary vacuum control and Gaselector adjustment. **Breaker Gap**—.020". Limits .018-.024". **Cam Angle or Dwell**—35° closed, 25° open. **Breaker Arm Spring Tension**—17-21 ounces. **Rotation**—Counter-clockwise viewed from above.

Automatic Advance

Distributor Degrees	R.P.M.	Engine Degrees	R.P.M.
Start	400	4	800
8	1050	16	2100
8.5	1450	17	2900
14.25	2000	28.5	4000

Vacuum Spark Control D-R No. 681-M. On distrib'r (integral type linked directly to breaker plate). Provides additional advance at speeds above idling except when engine accelerated or operated with wide open throttle when spark retarded by return spring within unit. **Plunger Travel**—9/64" total.

Vacuum Advance

Distr. Degrees	Eng. Degrees	Vacuum (" of HG)
Start	0°	7-9"
6.5°	13°	13-16"
7.5-8.5°	15-17°	16-18"

Gaselector—Manual adjustment for 10° advance or retard from center '0' position. See Ign. Timing.

Removal:—Distributor mounted on left side of engine. To remove, disconnect vacuum line, take out screw in Gaselector arm, lift distributor out.

IGNITION TIMING

IGNITION TIMING:—Standard setting given below (regular fuel Std. Head, Ethyl fuel HC. Head). See Gaselector Setting (following) for correction and final setting.

Flywheel Degrees	Piston Position
All Engines ..... 6° BTDC	.0138" BTDC

Timing Mark Note—Two straight lines of ignition

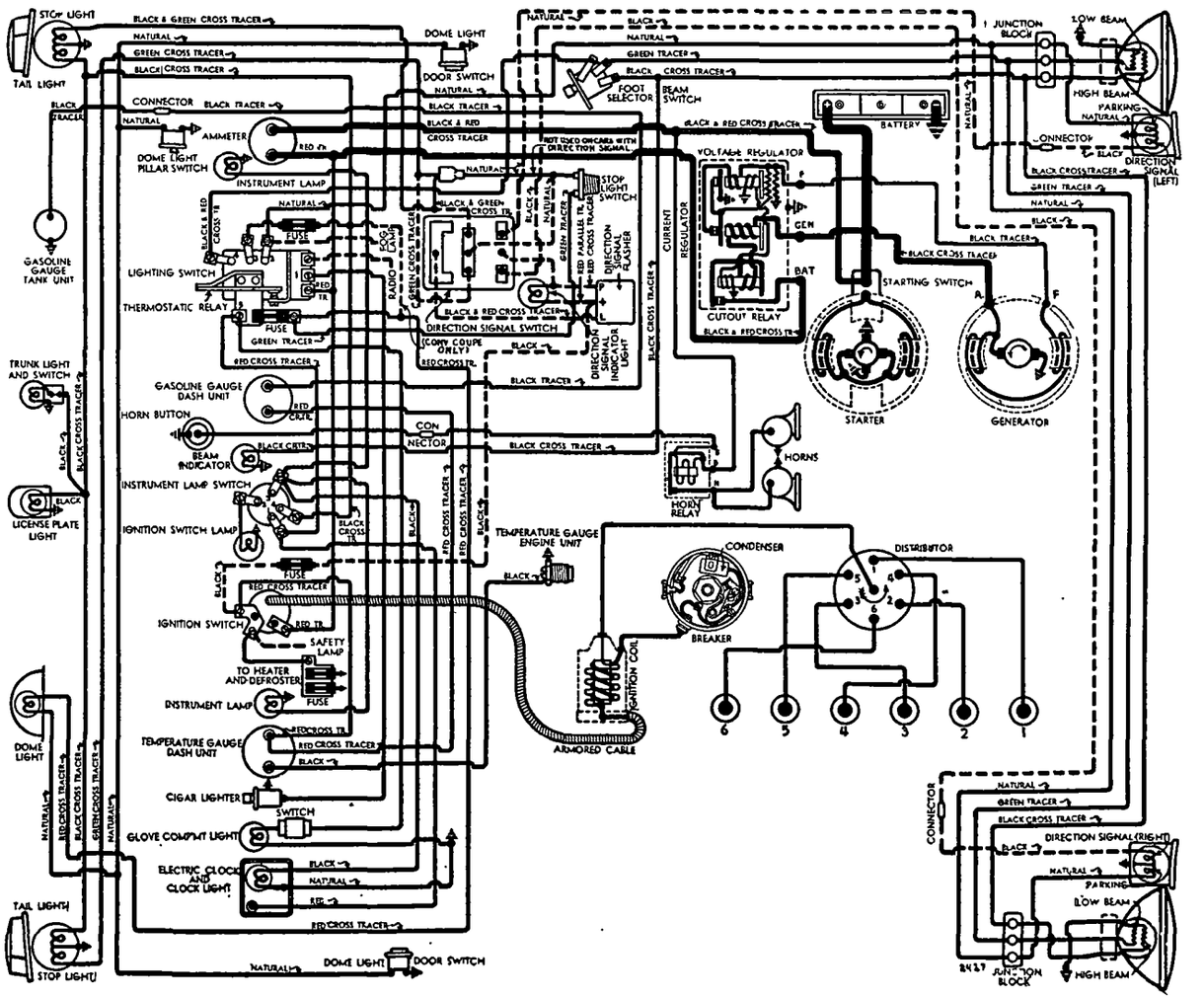

1941 MODELS

mark '/IGN.ONE/' indicate allowable timing range of 4° on flywheel. Use first (6°) line for setting ignition (second line is 2° before top dead center mark). NOTE—Manufacturer recommends use of HM-494 Timing Light or J-578 Synchroscope for Timing.

To Set Timing (With Timing Light)—Connect timing light between distributor terminal and ground, turn on ignition. With #1 piston on compression, turn engine over until piston is 6° or .0138" before top dead center with first line of ignition mark '/IGN.ONE/' lined up with pointer in inspection hole in left front face of flywheel housing above starter. Loosen Gaselector screw, center pointer scale ('0' mark at reference line), tighten screw. Loosen advance arm clamp bolt, rotate distributor until timing lamp lights (contacts just opening), tighten clamp bolt. Check Gaselector setting.

To Set Timing (With Synchroscope)—Connect synchroscope in series with #1 spark plug, fill in first line of ignition mark '/IGN.ONE/' with chalk or white paint, direct synchroscope light on flywheel (inspection hole on left side), idle engine at 6 MPH., adjust distributor as directed above.

Gaselector Setting—Set for barely audible ping at 20-30 MPH. on level road with wide open throttle to obtain best performance for particular operating conditions and octane rating of fuel used. To adjust, loosen Gaselector arm screw, move arm clockwise (toward 'ADV' end of scale) to advance spark, counter-clockwise (to 'RET' end) to retard spark.

CARBURETOR

All 1941, Early 1942 (U.S.)

Carter Type WA-1, Model 494-S. 1¼" single barrel downdraft type with Carter Climatic Control. Casting Number #348 on flange.

For complete data, refer to Carburetor Index.

Late 1942 (U.S.), All 1942 Canadian

Carter Type W-1 (Cast-iron), Model 545-S (U. S.), 521-S (Canada). 1¼" single barrel downdraft type with Carter Climatic Control. Casting Number #476 (545-S), #461 (521-S) on flange.

For complete data, refer to Carburetor Index.

'42 Note—Accelerator cross shaft spacing washer (Part No. 502306) should be installed on left end of shaft on early cars (if washer missing) to avoid any binding in accelerator linkage assembly.

Idle Setting—Set throttle stopscrew for 7-8 MPH or 450-475 RPM (engine) hot or slow idle speed. Set idle adjusting screw for smooth idle with screw ¾-1¾ (494-S), ½-1½ turns open (Others). Turn screw in for leaner mixture. Recheck idle speed. NOTE—Vacuum gauge method recommended (see reading above).

Accelerator Pump Setting (494-S)—2 holes in Pump Arm and Pump Plunger. Set as follows:

Short Stroke—Normal Setting (Inner Hole in Pump Arm, Upper Hole in Pump Plunger).

Long Stroke—Maximum Setting (Outer Hole in Pump Arm, Lower Hole in Pump Plunger).

Accelerator Pump Setting (545-S, 521-S)—3 holes in pump arm. Set as follows:

Lower Hole—Medium Stroke, Normal Setting.
Inner Hole—Minimum Stroke, Summer Setting.
Upper Hole—Maximum Stroke, Winter Setting.

Float Level (521-S,545-S)—11/16" from top of float at free end to lower face of bowl cover. **(494-S)**—½" from top of projection on underside of bowl cover to top of seam on free end of float (invert to check).

Metering Rods & Jets—***Refer to Carburetor Index for Carter Downdraft Carburetor Jet Specification Table.***

Accelerator Linkage Adjustment:—Must be set to provide correct 'throttle cracking' action for starting. To adjust, after carburetor set for correct 7-8 MPH. hot or slow idle speed, disconnect battery cable at starting motor (to prevent starter cranking engine), fully depress starting pedal, adjust adjusting screw on accelerator cross-shaft lug at idler lever so that clearance between throttle stopscrew and stop is .138" (use 9/64" drill rod as gauge) with carburetor fast idle cam in slow idle position. NOTE—For 1941 cars, this adjustment made by means of eccentric throttle cracker pin on starter motor lever.

Fast Idle:—Integral type (built-in carburetor).

For complete data, refer to Carburetion Equip. Index.

Setting (521-S, 545-S)—Hold choke valve wide open allow fast idle cam to drop free. Back off throttle stopscrew until throttle valve closed and screw just clears low step of fast idle cam. Hold throttle valve closed, release choke valve. Choke will move fast idle cam until stopscrew rests against second position of cam. Bend offset portion of fast idle link (do not disturb cam) so choke valve opening is 5/8". (494-S)—With fast idle cam in hot or slow idle position, close choke valve until throttle stopscrew is against (not on) first step of fast idle cam, adjust by bending connector rod offset so that choke valve opening is 5/8" (check opening with gauge T109-85).

Automatic Choke:—Carter Climatic Control.

For complete data, refer to Carburetion Equip. Index.

Setting—Set coil housing 3 Notches Rich (all).

CARB. EQUIPMENT

Air Cleaner:—AC No. 1529871 oil-wetted type Std. #1542322 heavy duty oil-bath type optl. Use Replacement Filter Element Assembly: Type #1 (for #1529871), #1542245 (for 1542322). Copper gauze type cleaner installed on oil filler and crankcase ventilator cap (also on ventilator outlet pipe on cars with heavy-duty oil-bath air cleaner).

C NTINUED ON NEXT PAGE

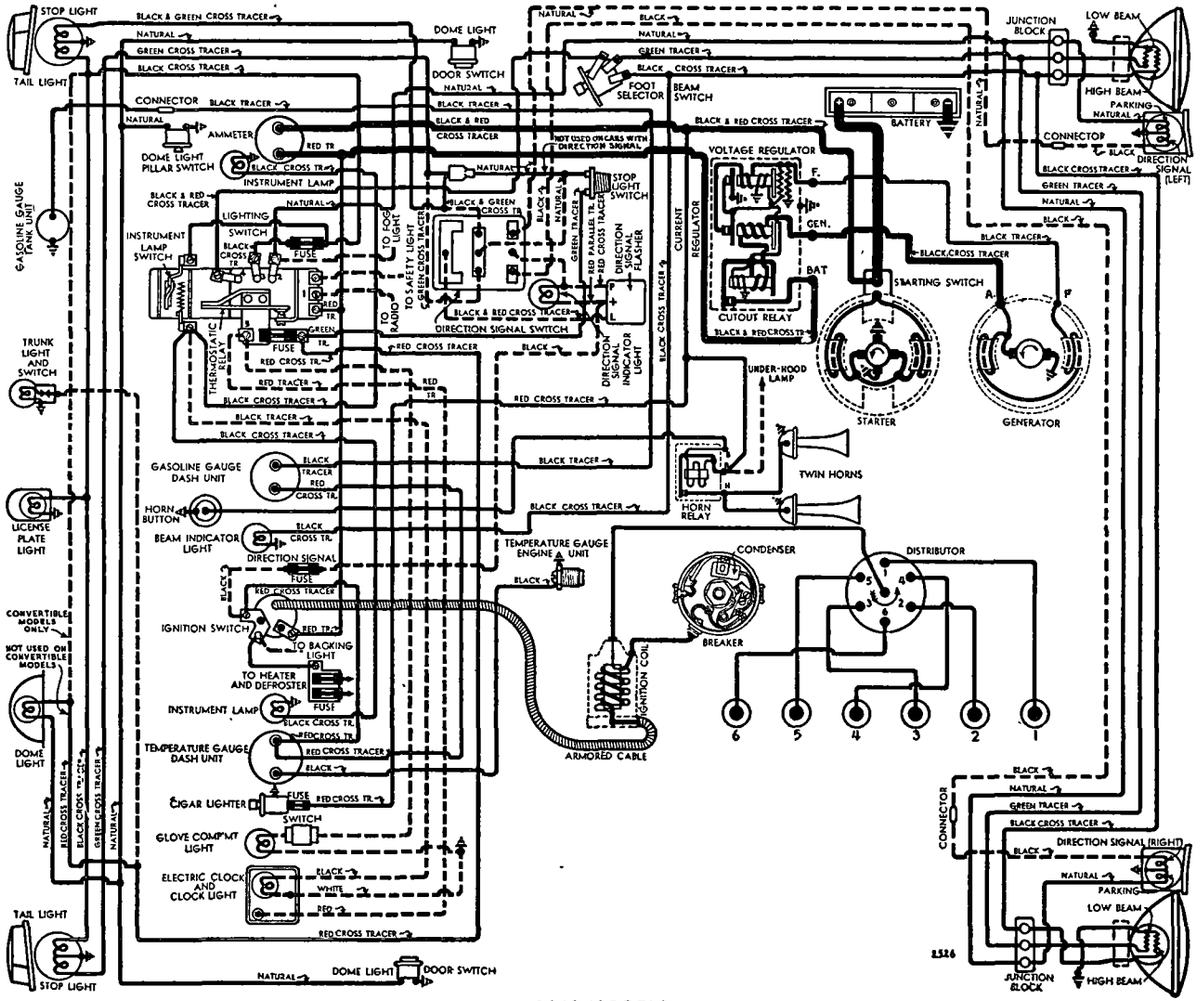

1942 MODELS

CONTINUED FROM PRECEDING PAGE

►CAUTION—Filler cap must be installed with air opening in cap to front (groove and seam aligned). Excessive oil consumption may result if installed in any other position.

Fuel Pump:—AC 'AH' No. 1523985—Exch. No. 496 Std. Type 'AJ' combination fuel-&-vacuum pump Optl. *For complete data, refer to Carburetion Equip. Index.* **Pressure**—4¾ lbs. (4-5).

Gasoline Gauge: AC Electric type. Part Nos. as follows: Dash Unit: #1516295 (1941), #1516391 (1942). Tank Unit: #1516316('41-42),#1516326('42 St.Wag.). *For complete data, refer to Carburetion Equip. Index.*

BATTERY

Delco Type 15E-2-W. 6 volt, 15 plate, 100 ampere hour capacity (20 hour rate).
Starting Capacity—120 amperes for 20 minutes.
Zero Capacity—300 amperes for 3.5 minutes. Five second voltage 4.25 volts.
Grounded Terminal—Negative (—) to engine.
Dimensions—Length 19 5/16". Width 4". Height 9".
Location—On left side in engine compartment.

Police Battery—Delco Type 19E-1. 6 volt, 19 plate, 130 ampere hour capacity (20 hour rate).
Starting Capacity—150 amperes for 20 minutes.
Zero Capacity—300 amperes for 5.3 minutes. Five second voltage—4.55 volts.
All Other data same as for 15E Battery above.

STARTER

STD.: Delco-Remy 1107032. Armature No. 1867897.
RHD '41: Delco-Remy 727-S. Armature No. 823881.
RHD '42: Delco-Remy 1107934. Armature 1867897.
Drive—Overrunning clutch with manual pinion shift (1107032), solenoid pinion shift ('41-42 RHD).
Rotation—Counter-clockwise at commutator end.
Brush Spring Tension—24-28 ounces each.
Cranking Engine—200 amps.@5 volts (for 1107032).

Performance Data—1107032

Torque	R.P.M.	Volts	Amperes
0 ft. lbs.	5000	5.0	65
12 "	Lock	3.37	525

Performance Data—727-S & 1107934

0 ft. lbs.	5500	5.0	65
15 "	Lock	3.0	600

Removal:—Flange mounted on left front face of flywheel housing. To remove, take out mounting screws.
Starting Switch (1107032): Delco-Remy No. 820052. Mounted on starter and operated by starting pedal.
Starting Switch (727-S & 1107934): Delco-Remy Solenoid 1546 ('41), 1118102 ('42) on starter, operated by pushbutton 1996012 ('41), 1996013 or 1996015 ('42). *For complete data, refer to Electrical Equipment Index.*

GENERATOR

Delco-Remy Model 1102665. Armature No. 1879002. (Std.), 1106403 (City Police), 1105856 (State Police). Two brush types with voltage & current regulation.
►NOTE—Some 1941 State Police Cars equipped with 1105851 Generator. All data given below (including Regulator) for 1105856 Generator also applies to this 1105851 Generator.
Charging Rate Adjustment—None. Charging rate controlled by Voltage Regulator, maximum output by Current Regulator. See Regulator data below.
Maximum Charging Rate—30 amperes, 8.0 volts 1700 RPM (1102665 Gen.), 1040 RPM (1106403 Gen.) and above (Current Regulator Setting) with load or discharged battery. Actual charging rate controlled by Regulator according to battery condition.

Performance Data—Cold

	Amperes①	Volts	R.P.M.
1102665	30	8.0	1750
1106403	35	8.0	1040
1105856	40	8.0	1850

①Not maximum output. See Current Regulator.
Rotation—Counter-clockwise at commutator end.
Brush Spring Tension—25 ounces each.
Field Current—1.75-1.9 amperes (1102665), 1.77-2.0 amperes (1106403), 1.62-1.82 amps. (1105856) at 6.0 volts.
Removal:—Generator pivot mounted on left front of engine. To remove, take out pivot and clamp bolts.
Belt Adjustment:—Belt deflection or sideplay midway between generator & pump pulley should be 1½".

REGULATOR

Delco-Remy Model 1118242 or 1118201 (for 1102665 Gen.), 1118229 (1106403 Gen.), 1118237 (1105856 Gen.). Single Core Type. Vibrating Voltage & Current Regulator.
For complete data, refer to Electrical Equipment Index.
CAUTION—Check generator for grounded field coils and leads before changing regulator settings to correct High Charging Rate or High Voltage.

Cutout Relay

Cuts In—6.2-6.7 volts hot.
Cuts Out—0-4.0 ampere discharge current.
Contact Gap—.020" (same for both sets).
Air Gap—.020" (with contacts just closed).

Voltage Regulator

Setting—7.2-7.4 volts (1118242, 1118201), 7.0-7.2 volts (All Others) at operating temperature (Hot)
To Check—Connect ammeter in charging line at regulator 'BAT' terminal, voltmeter between this terminal and ground. Operate generator at 2800 RPM., adjust charging rate to 8-10 amperes (use variable rheostat or AVR set). With regulator hot (150°F), decrease generator speed until cutout relay contacts open, then increase speed to 2800 RPM. and check hot voltage setting (above).
To Adjust—Change regulator armature spring tension slightly by bending hanger at lower end of **one spring only.** If further adjustment required, see Single Core Regulator article in Electrical Equipment Section for other (2nd) spring adjustment.
Air Gap—.070" between center of core and armature with contacts just closing (press down on armature to open contacts, release pressure, check gap at point where contacts just close).

Current Regulator

Setting—34-36 amperes (1118201, 1118229, 1118242), 38-40 amperes (1118237) hot (at operating temp.).
To Check—Remove regulator cover, connect short jumper between Voltage Regulator frame and upper contact support bracket (to short out Voltage Regulator), connect ammeter in charging line at regulator 'BAT' terminal, turn on car lights and accessories. Operate generator and increase speed until output remains constant. With regulator hot (150°F), reading should agree with setting (above).
To Adjust—Same as for Voltage Regulator (above).
Air Gap—.080" (check same as Voltage Regulator).

LIGHTING

Headlamps, Switches, Bulb Specifications—*All data same as for 1941-42 Pontiac Eight (following article).*

1942 Models—*For Defroster Switch Short Circuit Correction on early Cars and Tail Light Wire Breakage Correction on Station Wagons, refer to Pontiac Shop Notes.*

MISC. ELECTRICAL

THERMOSTATIC RELAY:—On lighting switch. Contacts remain closed with 30 amperes, open in 3 minutes with current of 42 amps. @ 70°. Not adjustable.
FUSES:—**Tail & Instrument Lights**—9 ampere. In line fuse holder clipped to panel above lighting switch. **Stop & Dome Light**—9 ampere. On lighting switch. **Direction Signal**—9 ampere. In fuse holder on panel brace at steering col. (bet. ign. switch & flasher). **Convertible Top**—9 ampere. In switch feed line.
HORNS & HORN RELAY: *All data same as for 1941-42 Pontiac Eight (following car article).*

ENGINE

ENGINE SPECIFICATIONS:—6 cylinder, 'L' head type. **Bore**—3 9/16". **Stroke**—4".
Displacement—239.2 cubic ins. **Rated HP**—30.4.
Developed Horsepower—90 at 3200 RPM (Std. hd.).
Compression Ratio—6.5-1 Std., 7.5-1 Optl. Iron hds.
Compression & Vacuum Reading—*See Tune-Up.*
Refer to Pontiac Shop Notes for Power Plant Assembly and Front Engine Insulator Removal.

PISTONS: Chrome nickel alloy iron, electro (tin) plat'd.
1941 Type—Can be identified by two ⅛" holes in wall above piston pin relief on each side of piston and 10 oil drain holes in oil ring groove.
1942 Type—Twenty oil drain holes in oil ring groove (no hole in wall above piston pin relief). These pistons used with new type piston pin and piston rings.
►*CAUTION—Use only 1942 Type Pistons with '42 Type Piston Pin and Piston Rings in 1942 Engines. If 1942 Type Pistons used in 1941 Engines, 1942 Type Piston Pin and Piston Rings must also be installed.*
Weight—27 ozs. (1941). **Length**—3 9/32".
Removal—Pistons and rods removed from above.
Clearance—Top land .0175-.0315". Skirt .002".
Original Bore & Piston Sizes, Replacement Pistons:—*Refer to Pontiac Shop Notes for sizes and markings.*
Fitting New Pistons:—Use .0015" x ½" feeler between piston and cylinder wall. Pull to withdraw feeler 10-20 lbs. Taper & out-of-round limits .0005" max.

PISTON RINGS: Two taper faced compression rings above pin, one slotted oil control ring below pin.
1941 Type—Ring NOT tin-plated. Oil ring face has slight radius on each side of slot.
1942 Type—Rings ARE tin-plated. Oil ring face now straight-cut.
►*CAUTION—Use only 1942 type Piston Rings in 1942 Engines (ring scuffing may result if other types used).*
NOTE—Install compress'n rings with mark TOP up.

Ring	Width	End Gap	Side Clearance
Compression	.0930-.0935"	.007-.012"	.0015-.003"
Oil Control	.1860-.1865"	.007-.012"	.001-.0025"

NOTE—1941 Compression Ring End Gap .009-.014".
Replacement Rings: Oversizes .005", .010", .020", .030".

PISTON PIN:—**Diameter**—15/16". **Length**—3 1/16". Pin locked in one piston boss by self-locking lockscrew. No lockwasher used with this new type screw. Free end of pin now slotted at side with shorter slot in 1942 (concealed by pin boss when installed).
►*CAUTION—Do not use 1941 Pins in 1942 Engines.*
Pin Fit in Piston—*See Pontiac Shop Notes for data.*
Pin Fit in Rod Bushing—.0004-.0006" clearance.
Replacement Pins:—.001" (red & brown), .003" (red), .005" (blue) oversize. Paint marked on end of pin.

CONNECTING ROD:—**Weight** 2.31 lbs. **Length** 7 9/16".
Piston Pin Bushing (Upper Bearing)—Split aluminum bronze bushings. *See Pontiac Shop Notes for data.*
Lower Bearing Diameter—2⅛".
Lower Bearing—Thin type, interchangeable steel-backed, white bearing metal alloy. Furnished std.

ENGINE

CONTINUED FROM PRECEDING PAGE

and .001" undersize. Rod bolt nuts self-locking. **Clearance**—.0005-.0015" (new). **Endplay**—.005-.010".

Bearing Adjustment:—None (no shims). *Refer to Pontiac Shop Notes for Connecting Rod Lower Bearing.*

Installing Rods: No offset (can be installed either way).

CRANKSHAFT:—4 bearing, integral counterweights. *Refer to Pontiac Shop Notes for Harmonic Balancer Removal and Rear Main Bearing Oil Seal Renewal.*

Bearing Diameters—#1, 2½"; #2, 2 17/32"; #3, 2 19/32"; #4, 2⅝".

Bearings—Thin type, steel-backed, white bearing metal alloy. Upper and lower halves alike. Furnished Std. and .001" undersize. **Clearance** .001-.003".

Bearing Adjustment:—None (no shims). *Refer to Pontiac Shop Notes for Bearing Removal & Fitting.*

End Thrust:—At #3 bearing. **Endplay**—.003-.008".

CAMSHAFT:—4 bearing. Non-adjustable chain drive. *Refer to Pontiac Shop Notes for Camshaft Removal, Bearing Servicing and Timing Cover Oil Seal data.*

Bearing Diameters—#1, 2"; #2, 1 31/32"; #3, 1 15/16"; #4, 1 29/32".

Bearings—Steel-backed, babbitt-lined bushings. **Clearance**—.0015-.0025" (new).

End Thrust:—Steel thrust plate behind camshaft sprocket. Replace if worn. **Endplay**—.002-.005".

Timing Chain: Morse Type C-1882-K (for 1941), Type C-1897-K (for 1942). Morse No. 1532 (all). Width 1". Pitch ⅜". Length 21" or 56 links.

Camshaft Setting:—Sprockets marked. Mesh chain with sprockets turned so that '0' marks are adjacent and in line with a straightedge across shaft centers.

VALVES:—	Head Diameter	Stem Diameter	Length
Intake	1 19/32"	.310-.311"	5.718"
Exhaust	1 15/32"	.310-.311"	5.718"

	Seat Angle	Lift	Stem Clearance
Intake	30°	19/64"	Free fit to .0006"①
Exhaust	45°	19/64"	Free fit to .0006"①

①Guides tapered (.0006" max. clearance at bottom).

Valve Guides:—Removable, tapered guides (.001" taper to the inch with greatest clearance at top). IMPORTANT—Measure clearance at bottom end. Valve should just fall through guide of own weight when started in guide. NOTE—Guides should be cleaned with Tool KMO-122 valve guide cleaner (blade type). Service guides not tapered (install and ream to fit valve stems with Reamer P.R.131).

Valve Springs:—Intake and exhaust springs identical. Install with two closed coils at top and dampener on top of each spring. Use new dampeners whenever removed from spring. **Free Length**—2 9/16".

	Spring Pressure	Spring Length
Valve Closed	56-63 lbs.	1 29/32"
Valve Open	97-105 lbs.	1 19/32"

Valve Lifters:—Barrel type, cast-iron. Guide holes reamed in block. Lifters furnished .005" oversize (use pilot reamer J-706-P when reaming holes to maintain alignment). **Clearance**—Free fit. Lifter should just move freely with finger touch.

VALVE TIMING

Tappet Clearance:—.011-.013" all valves (engine warm). Use .011" feeler as 'go' gauge, .013" as 'no go'. NOTE—Car manufacturer recommends .013" exhaust clearance for sustained high speed driving.

Valve Timing:—See Camshaft Setting above. **Intake Valves**—Open 5° BTDC. Close 39° ALDC. **Exhaust Valves**—Open 45° BLDC. Close 5° ATDC.

Valve Timing Check—With .015" tappet clearance #1 intake valve should open with #1 piston 5° or .0096" before top dead center with first straight line of flywheel mark '/IGN.ONE/' slightly past indicator in left front face of flywheel housing. Reset tappet clearance .011-.013" (warm).

LUBRICATION

LUBRICATION:—Pressure (pump on right of engine). *Refer to Pontiac Shop Notes for Oil Pump Servicing and Crankcase Oil Cleaner Servicing data.*

Normal Oil Pressure:—35-45 lbs. with warm oil.

Oil Pressure Regulator: New spring-loaded disc type in pump. Not adjustable. Opens at 40 lbs.

Crankcase Capacity:—5 qts. (refill), 6 qts. (dry).

COOLING

COOLING SYSTEM:—**Capacity**—18 quarts. *See Pontiac Shop Notes for Radiator Core Removal.*

Pressure Valve—In filler cap. Opens at 3¾ lbs.

Water Pump:—Packless, sealed ball-bearing type. *See Water Pump Section for complete data.*

Thermostat:—Harrison. In cylinder head outlet. **Setting**—Starts to open 151° F. Fully open 173° F.

Temperature Gauge: AC Electric. Nos. Dash Unit: 1511053 ('41), 1511190 ('42). Engine Unit: 1510772. *See Miscellaneous Section for complete data.*

CLUTCH

CLUTCH:—**Inland.** 'Diaphragm' type, single plate, dry disc type. Driven Member Long 9CF-CS (10CF-CS Taxi). *See Clutch Section for complete data.*

Facings—Moulded, two used. Inside Diam. 6" (all), Outside Diam. 9⅛", 10" (Taxi). Thickness .125".

Pedal Adjustment:—Free travel ⅞-1⅛" (adjusting nut on link at clutch fork). Pedal height to lower face of pedal should be 4¾" (on 25), 5 3/16" (others). Adjust stopscrew at lower end of pedal arm.

Removal:—Remove transmission (see below), take off housing bottom cover and control shaft inner bracket. Disconnect pedal pull-back spring. Remove fork ball support, fork, and throwout bearing. Paint mark cover and flywheel (align marks when reassembling to maintain balance). Remove cover bolts (loosen bolts evenly until tension relieved). Move clutch to rear, take out clutch plate, remove clutch.

TRANSMISSION

TRANSMISSION:—**Own Make.** All helical gear type, constant-mesh, synchro-mesh (second & high), sliding gear (low & reverse) with remote type shift. *See Transmission Section for complete data.*

Transmission Control:—Pontiac 'Safety-Shift' type. ►NOTE—Single shifter rod (replacing 2 rods and idler) used on late 41-24, 41-26 and for replacement. *See Transmission Section for complete data.*

Removal:—Disconnect speedometer cable, gearshift selector and control rods from transmission. Disconnect rear universal (wire trunnion) and pull out propeller shaft. Remove upper transmission mounting screws, install guide pins (J-851), remove lower screws, pull transmission to rear and lower out of car.

UNIVERSALS

UNIVERSAL JOINTS:—**Mechanics 2C or 2CR.** Roller bearing. Two used. NOTE—1 piece driveshaft used. *See Universals Section for complete data.*

REAR AXLE

REAR AXLE:—**Own Make.** Semi-floating, hypoid gear with Hotchkiss drive. *See Rear Axle Section for data.*

Ratio—Standard: Model 25, 4.1-1; Others, 4.3-1. Optional: Economy 3.9-1, Heavy Duty 4.55-1. Color marked on end of right axle shaft as follows: 3.9 Red, 4.1 Green, 4.3 White, 4.55 Yellow.

Backlash—.003-.012" (new), slightly over .012" (worn).

Removal:—Disconnect rear universal (wire trunnions, do not disengage spline joint at transmission), remove axle shafts, carrier screws and carrier.

Axle Shaft Removal:—Remove wheel, brake drum, 4 backing plate bolt nuts, static collector, and loosen bearing retainer (do not move backing plate or brake line may be damaged). Pull shaft with puller J-942 (do not drag axle shaft on oil seal).

Wheel Bearing Adjustment—None.

SHOCK ABSORBERS

SHOCK ABSORBERS:—**Delco.** FRONT—Model 1947-C (right), 1947-D (left). REAR—1024-V. Double acting type Front, Direct acting Rear. *See Shock Absorber Section for complete data.*

FRONT SUSPENSION

Front Suspension:—Independent, linked parallelogram type with coil springs and center steering. *See Front Suspension Section for complete data.*

Kingpin Inclination—5½-6°.

Caster—Negative ¾°. Limits Neg. ½° to Neg. 1°.

Camber—0° preferred. Limits Neg. ¼° to Pos. ¼°.

Toe In—0-1/16". Adjust tie rod tubes equally.

Steering Geometry—Inner wheel 23° ± ½°. Outer 20°.

STEERING GEAR

Steering Gear: Saginaw Worm-and-Roller type with steering idler arm on right frame rail. *See Steering Gear Section for complete data.*

BRAKES

1941 MODELS

BRAKES:—**Service.** Bendix hydraulic, duo-servo, single anchor type **without eccentric adjustment.** Hand lever applies rear wheel service brakes. *See Brake Section for complete data.*

Wheel Cylinder Bore—Front wheel 1". Rear 15/16".

Drums—Steel (nickel alloy iron liner). Diameter 11".

Lining—Moulded. Width 1¾". Thickness 3/16". Length 9 11/32" (Primary shoe—D-R Multibestos), 11 31/32" (Secondary shoe—L-8 Multibestos).

Clearance—.015" at both ends of secondary shoe with primary shoe forced out against drum.

Braking Power—53% front wheels, 47% rear.

Hand Brake:—See Service Brakes above.

BRAKES

1942 M DELS

BRAKES:—**Service.** Bendix hydraulic, duo-servo, single anchor type **with eccentric adjustment** (not used in '41). Hand lever applies rear wheel service brakes. NOTE—Braking power increased 3% on front wheels by use of wider lining and larger wheel cylinder. *See Brake Section for complete data.*

Wheel Cylinder Bore—Front 1 1/16". Rear 15/16".

Drums—Pressed steel (alloy iron liner). Diam. 11".

Lining—Moulded. Width 2" (front), 1¾" (rear). Thickness 3/16". Length 9 11/32" (primary), 11 31/32" (secondary).

Clearance—.010" at heel and toe of each shoe.

Braking Power—56% front wheels, 44% rear.

Hand Brake:—See Service Brakes above.

MISC. MECHANICAL

Power Operated Conv. Top: (1941) Vacuum Power. (1942)—Electric type. *See Miscellaneous Section for complete data.*

FRONT SHEET METAL ASSEMBLY REMOVAL, HOOD FITTING, HOOD LOCK ADJUSTMENT, 1942 FRONT FENDER REMOVAL & FENDER CAP ALIGNMENT: *Refer to Pontiac Shop Notes.*

MODEL IDENTIFICATION

SERIAL NUMBER:—First No. 1001 (all models) with Model & Plant prefix as shown below. Stamped on plate on left side of dash under engine hood.

	Pontiac	California	Linden
Deluxe 41-27	P8JA-1001	C8JA-1001	L8JA-1001
Str'mlnr. 41-28	P8JB-1001	C8JB-1001	L8JB-1001
Custom 41-29	P8JC-1001	C8JC-1001	L8JC-1001
Torpedo 42-27	P8KA-1001	C8KA-1001	L8KA-1001
Str'mlnr. 42-28	P8KB-1001	C8KB-1001	L8KB-1001

ENGINE NUMBER: First number 8-246501 (for 1941), same as Serial Number for 1942 (no separate motor number used). Stamped on small pad at the upper left front corner of the motor block.

TUNE-UP

COMPRESSION:—**Ratio**—6.5-1 Std., 7.5-1 Optl. HC. (HC head requires Ethyl fuel at low altitudes). **Pressure**—155 lbs. at 1000 RPM or approximately 118-120 lbs. at cranking speed (for Std. head).

VACUUM READING:—18-20" steady idling at 7-8 MPH.

FIRING ORDER:—1-6-2-5-8-3-7-4. See diagram.

SPARK PLUGS:—AC No. 45. 14 MM Metric. Gaps— 025".

IGNITION: See Coil, Condenser, and Distributor. **Breaker Gap**—.015". **Cam Angle**—31° Closed. **Automatic Advance**—Starts at 300 RPM. Maximum advance 13 5° at 2100 RPM. (Distr degrees & RPM). **Vacuum Advance**—9-10° distr. with 16-21" vacuum.

IGNITION TIMING: See Ignition Timing. **Std. Setting**—6° BTDC. First line of flywheel mark '/IGN.ONE/' aligned with pointer in inspection hole on left side of housing.

CARBURETION: See Carburetor & Carb. Equipment. **Idle Setting**— Set idle adjusting screws ¼-1¼ turns open. Idle speed 450-475 RPM or 7-8 MPH. **Float Level**—5/16" from top of float to machined surface of cover (remove gasket, invert to check). **Accelerating Pump Setting**—Normal setting, Lower hole—minimum stroke.

Fuel Pump Pressure: 3¾ lbs. maximum.

MANIFOLD HEAT CONTROL:—Thermostatic coil type, non-adjustable (fixed anchor pin). Counterweight should be securely clamped to shaft in approximately vertical position with valve closed (cold).

VALVES: See Valve Timing. **Tappet Clearance:**—.011-.013" all valves Hot (.011" gauge 'Go', .013" 'No Go'). NOTE—.013" exhaust clearance recommended for sustained high speed.

STARTING: See Battery, Starter, Generator, Regulator.

IGNITION

Ignition Switch:—Delco-Remy No. 1116306 (LHD), 1116312 (RHD). Connected to coil by armored cable. **Ignition Lock Cylinder**—Briggs & Stratton 45792. Key Series—8000 to 9499. Groove—No. 15.

COIL: Delco-Remy Model 1115129. Mounted on dash. **Ignition Current**—2.5 amperes idling, 4 5 stopped.

CONDENSER: Delco-Remy Part No. 1869704. **Capacity**—.18-.25 microfarad.

DISTRIBUTOR: Delco-Remy 1110804. Single breaker 8 lobe cam, full automatic advance type with auxiliary vacuum control and Gaselector adjustment. **Breaker Gap**—.015". Limits .0125-.0175". **Cam Angle or Dwell**—31° closed, 14° open. **Breaker Arm Spring Tension**—19-23 ozs. **Rotation**—Counter-clockwise viewed from above.

Automatic Advance

Distributor Degrees	Distributor R.P.M.	Engine Degrees	Engine R.P.M.
Start	300	2	600
7	1100	14	2200
8.5	1500	17	3000
13.5	2100	27	4200

Vacuum Spark Control D-R No. 1116021. On distributor (integral type linked directly to breaker plate). Provides additional advance at speeds above idling except when engine accelerated or operated with wide open throttle when spark retarded by return spring within unit. **Plunger Travel**—7/32".

Vacuum Advance

Distr. Degrees	Eng. Degrees	Vacuum (" of HG)
Start	0°	7-9"
7.5	15°	14 5-17.5"
9-10°	18-20°	16-21"

Gaselector—Manual adjustment for 10° advance or retard from center '0' position. See Ign. Timing. **Removal:**—Distributor mounted on left side of engine. To remove, disconnect vacuum line, take out screw in Gaselector arm, lift distributor out.

IGNITION TIMING

IGNITION TIMING:—Standard setting given below (regular fuel Std. Head, Ethyl fuel HC. Head). See Gaselector Setting (following) for correction and final setting.

Flywheel Degrees	Piston Position
All Engines ..... 6° BTDC	.0128" BTDC

Timing Mark Note—Two straight lines of ignition mark '/IGN.ONE/' indicate allowable timing range of 4° on flywheel. Use first (6°) line for setting ignition (second line is 2° before top dead center mark). NOTE—Manufacturer recommends use of HM-494 Timing Light or J-578 Synchroscope for Timing.

To Set Timing (With Timing Light)—Connect timing light between distributor terminal and ground, turn on ignition. With #1 piston on compression,

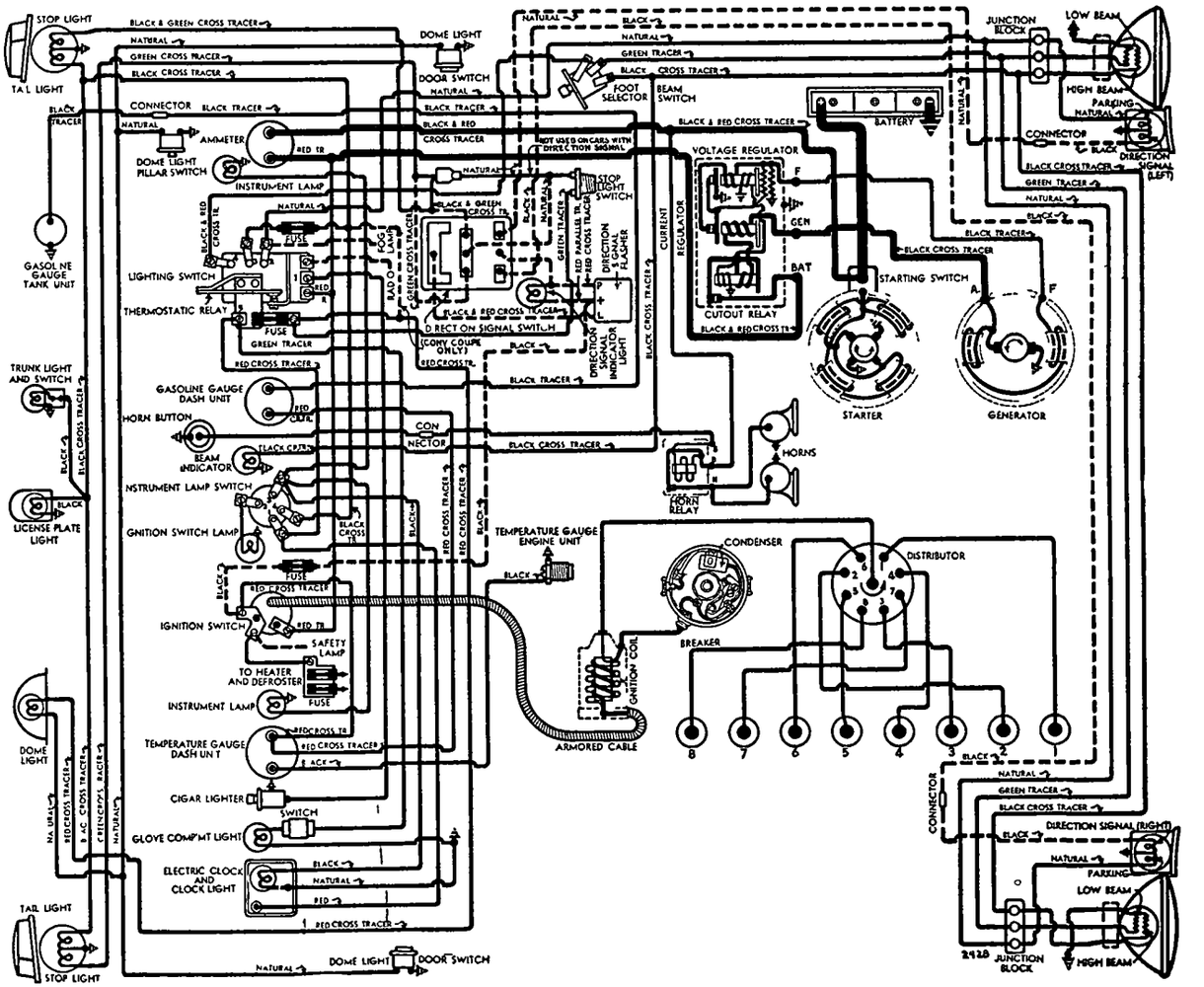

1941 MODELS

turn engine over until piston is 6° or .0128" before top dead center with first line of ignition mark '/IGN.ONE/' lined up with pointer in inspection hole in left front face of flywheel housing above starter. Loosen Gaselector screw, center pointer scale ('0' mark at reference line), tighten screw. Loosen advance arm clamp bolt, rotate distributor until timing lamp lights (contacts just opening), tighten clamp bolt. Check Gaselector setting.

To Set Timing (With Synchroscope)—Connect synchroscope in series with #1 spark plug, fill in first line of ignition mark '/IGN.ONE/' with chalk or white paint, direct synchoscope light on flywheel (inspection hole on left side), idle engine at 6 MPH., adjust distributor as directed above.

Gaselector Setting—Set for barely audible ping at 20-30 MPH. on level road with wide open throttle to obtain best performance for particular operating conditions and octane rating of fuel used. To adjust, loosen Gaselector arm screw, move arm clockwise (toward 'ADV' end of scale) to advance spark, counter-clockwise (toward 'RET' end of scale) to retard spark, tighten locking screw.

CARBURETOR

1941 Models

Carter Type WDO, Model 469-SM. 1¼" dual, downdraft type with Carter Climatic Control. Casting No. 306 on flange.

For complete data and recommended corrections for: (1) Hesitation & Stumbling on Acceleration, (2) Throttle Sticking Correction, refer to Carburetor Index for Carter WDO article.

1942 Models

Carter Typo WDO, Models 540-S (Early), 548-S (Later). 1¼" dual, downdraft type with Carter Climatic Control. Casting No. 306 on flange.

For complete data, refer to Carburetor Index.

'42 Note—Accelerator cross shaft spacing washer (Part No. 502306) should be installed on left end of shaft on early cars (if washer missing) to avoid any binding in accelerator assembly.

Idle Adjustment—With engine warm so that choke valve wide open and fast idle inoperative, set throttle stopscrew for idle speed of 7-8 MPH (450-475 RPM). Adjust idle adjusting screw so that engine fires smoothly (one screw for each barrel, adjust both screws alike). Final setting for each screw should be ¼-1¼ turns open from inner seated position (turn screws in for leaner mixture). Recheck idle speed. NOTE—Vacuum gauge recommended for this adjustment (see Vacuum Reading above).

Accelerating Pump Setting—Pump arm under dust cover (integral with air horn) has two holes for pump link engagement. Set as follows:
Lower Hole (min. stroke)—Normal all-year setting.
Upper Hole (max.)—If greater charge required.
NOTE—'41 469-SM carburetors not originally equipped with adjustable pump stroke. Replacement Pump Arm and Collar with adjustment provision available. *See Recommended Correction for Hesitation and Stumbling on Acceleration in Carter WDO Carburetor article in the Carburetor Section.*

Float Level—5/16" from top of float to machined surface of cover (remove gasket, invert to check).

Metering Rods & Jets—*Refer to Carburetor Index for Carter Downdraft Carburetor Jet Specification Table.*

Accelerator Linkage Adjustment:—Must be set to provide correct 'throttle cracking' action for starting. To adjust, after carburetor set for correct 7-8 MPH hot or slow idle speed, disconnect battery cable at starting motor (to prevent starter cranking engine), fully depress starting pedal, adjust adjusting screw on accelerator cross-shaft lug at idler lever so that clearance between throttle stopscrew and stop is .115" (use flat steel stock .115" as gauge) with fast idle cam in hot or slow idle position.
NOTE—For 1941 cars, this adjustment made by means of eccentric throttle cracker pin on starter motor lever.

Fast Idle:—Integral type (built-in carburetor).
For complete data, refer to Carburetion Equip. Index.
Setting—With throttle stopscrew set for correct 7-8 MPH hot or slow idle speed, hold choke valve tightly closed, turn fast idle adjusting screw in until clearance between throttle lever stopscrew and stop on carburetor casting is .032" (1941), .073" (1942). NOTE—This adjustment can also be made by holding choke valve tightly closed and adjusting fast idle screw for .010" ('41), .026" ('42) throttle opening.

Automatic Choke:—Carter Climatic Control.
For complete data, refer to Carburetion Equip. Index.
Setting (469-SM)—1½ Notches Rich (may be set 4 Notches Rich to correct poor starting or leanness after starting) for first type thermostat marked '170-G-16S' on choke housing. Later type thermostat marked '170-F-16S' is set 2 Notches Rich.
Setting (540-S, 548-S)—2 Notches Rich.

CARB. EQUIPMENT

Air Cleaner:—AC No. 1529473 oil-wetted type Std. #1529474 heavy duty oil-bath type Optl. Use Replacement Filter Element Assembly: Type #3 (for #1529473), #1528691 (for 1529474). Copper gauze type cleaner installed in oil filler and crankcase ventilator cap (also on ventilator outlet pipe on cars with heavy duty oil-bath air cleaner).
CAUTION—Filler cap must be installed with air opening in cap toward front of car and seam in line with groove in tube (may cause excessive oil consumption if installed backwards).

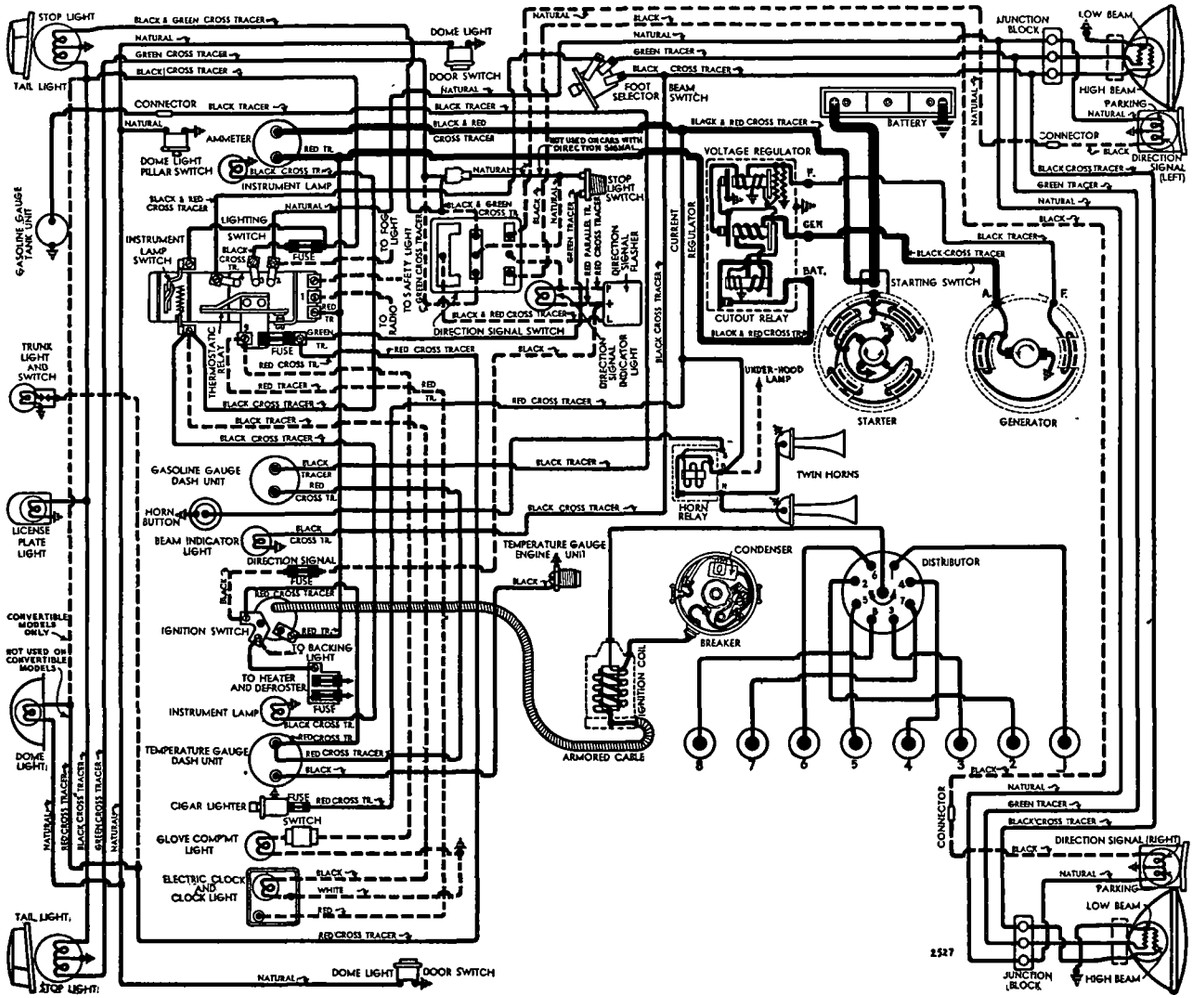

1942 M DELS

CONTINUED N NEXT PA E

C NTINUED FR M PRECEDING PAGE

Fuel Pump:—AC 'AJ' No. 1537317—Exch. No. 539 fuel & vacuum pump Std. **Pressure**—4¾ lbs. (4-5).
For complete data, refer to Carburetion Equip. Index.
Gasoline Gauge: AC Electric type. Part Nos. as follows:
Dash Unit: #1516295 (1941), #1516391 (1942).
Tank Unit: #1516316('41-42),#1516326('42 St.Wag.).
For complete data, refer to Carburetion Equip. Index.

BATTERY

Delco Type 15E-2-W. 6 volt, 15 plate, 100 ampere hour capacity (20 hour rate).
Dimensions—Length 19 5/16". Width 4". Height 9".
Starting Capacity—120 amperes for 20 minutes.
Zero Capacity—300 amperes for 3.5 minutes. Five second voltage 4.25 volts.
Grounded Terminal—Negative (—) on left side of engine block. Engine Ground (Cars with Radio)—strap from cylinder head to starter pedal bracket.
Location—On left side in engine compartment.
Police Battery Delco Model 19E-3. 6 volt, 19 plate, 130 ampere hour capacity (20 hour rate).
Starting Capacity—150 amperes for 20 minutes.
Zero Capacity—300 amperes for 5.3 minutes. Five second voltage 4.55 volts.
All Other data same as for 15E Battery above.

STARTER

STD: Delco-Remy 1107921. Armature No. 1867897.
RHD '41: Delco-Remy 727-S. Armature No. 823881.
RHD '42: Delco-Remy 1107934. Armature 1867897.
Drive—Overrunning clutch with manual pinion shift (1107921), solenoid pinion shift (RHD '41-42).
Rotation—Counter-clockwise at commutator end.
Brush Spring Tension—24-28 ounces each
Cranking Engine—220-225 amps.@5 volts (1107921).

Performance Data—1107921

Torque	R.P.M.	Volts	Amperes
0 ft. lbs.	6000	5.0	60
15 "	Lock	3.0	600

Performance Data—727-S & 1107934

0 ft. lbs.	5500	5.0	65
15 " "	Lock	3.0	600

Starting Switch (1107921): Delco-Remy No. 820052. Mounted on starter and operated by starting pedal.
Starting Switch (727-S & 1107934): Delco-Remy Solenoid 1546 ('41), 1118102 ('42) on starter, operated by pushbutton 1996012 ('41), 1996013 or 1996015 ('42).
For complete data, refer to Electrical Equipment Index.

GENERATOR

Delco-Remy Model 1102665. Armature No. 1879002. (Std.), 1106403 (City Police), 1105856 (State Police).
Two brush types with voltage & current regulation.
►NOTE—Some 1941 State Police Cars equipped with 1105851 Generator. All data given below (including Regulator) for 1105856 Generator also applies to this 1105851 Generator.
Charging Rate Adjustment—None. Charging rate controlled by Voltage Regulator, maximum output by Current Regulator. See Regulator data below.
Maximum Charging Rate—30 amperes, 8.0 volts, 1700 RPM (1102665 Gen.), 1040 RPM (1106403 Gen.) and above (Current Regulator Setting) with load or discharged battery. Actual charging rate controlled by Regulator according to battery condition.

Performance Data—Cold

	Amperes①	Volts	R.P.M.
1102665	30	8.0	1750
1106403	35	8.0	1040
1105856	40	8.0	1850

①Not maximum output. See Current Regulator.

Rotation—Counter-clockwise at commutator end.
Brush Spring Tension—25 ounces each.
Field Current—1.75-1.9 amperes (1102665), 1.77-2.0 amperes (1106403), 1.62-1.82 amps. (1105856) at 6.0 volts.
Removal:—Generator pivot mounted on left front of engine. To remove, take out pivot and clamp bolts.
Belt Adjustment:—Belt deflection or sideplay midway between generator & pump pulley should be 1½".

REGULATOR

Delco-Remy Model 1118242 or 1118201 (for 1102665 Gen.), 1118229 (1106403 Gen.), 1118237 (1105856 Gen.). Single Core Type. Vibrating Voltage & Current Regulator.
For complete data, refer to Electrical Equipment Index.
CAUTION—Check generator for grounded field coils and leads before changing regulator settings to correct High Charging Rate or High Voltage.

Cutout Relay

Cuts In—6.2-6.7 volts hot.
Cuts Out—0-4.0 ampere discharge current.
Contact Gap—.020" (same for both sets).
Air Gap—.020" (with contacts just closed).

Voltage Regulator

Setting—7.2-7.4 volts (1118242, 1118201), 7.0-7.2 volts (All Others) at operating temperature (Hot)
To Check—Connect ammeter in charging line at regulator 'BAT' terminal, voltmeter between this terminal and ground. Operate generator at 2800 RPM., adjust charging rate to 8-10 amperes (use variable rheostat or AVR set). With regulator hot (150°F), decrease generator speed until cutout relay contacts open, then increase speed to 2800 RPM. and check hot voltage setting (above).
To Adjust—Change regulator armature spring tension slightly by bending hanger at lower end of one spring only. If further adjustment required, see Single Core Regulator article in Electrical Equipment Section for other (2nd) spring adjustment.
Air Gap—.070" between center of core and armature with contacts just closing (press down on armature to open contacts, release pressure, check gap at point where contacts just close).

Current Regulator

Setting—34-36 amperes (1118201, 1118229, 1118242), 38-40 amperes (1118237) hot (at operating temp.).
To Check—Remove regulator cover, connect short jumper between Voltage Regulator frame and upper contact support bracket (to short out Voltage Regulator), connect ammeter in charging line at regulator 'BAT' terminal, turn on car lights and accessories. Operate generator and increase speed until output remains constant. With regulator hot (150°F), reading should agree with setting (above).
To Adjust—Same as for Voltage Regulator (above).
Air Gap—.080" (check same as Voltage Regulator).

LIGHTING

LIGHTING:—**Headlamps**—Guide 'Sealed Beam' type.
For complete data, refer to Electrical Equipment Index.
Headlamp Adjustment—Aim upper beam straight ahead (hot spot center 3" below lamp center height).
Beam Indicator—Pontiac emblem on face of speedometer dial. Lighted when upper beams in use.
Direction Signal—*Refer to Electrical Equip. Index.*

Switches

Lighting—Delco-Remy 1995018 ('41), 1995024 ('42).
Beam Selector—Delco-Remy 1997008, 465-V (RHD).
Instrument (1941)—Delco-Remy 1997740.
Stop Light—Delco-Remy 1997725, 1997901 (Canada).

Bulb Specifications

Position	Candlepower	Mazda No.
Headlamps		Sealed Beam
Front Dir. Signal & Park	21-3	1154
Park (without Dir. Signal)	3	63
Instrument, Ign. Lock	1½	55
Clock, Glove Comp't., Trunk	1½	55
Beam & Dir. Signal Indic.	1	51
Stop & Tail	21-3	1154
Rear License	3	63
Dome (exc. Conv. Coupe)	6	82
Dome (Convertible Coupe)	1½	55

1942 Models—*For Defroster Switch Short Circuit Correction on early Cars and Tail Light Wire Breakage Correction on Station Wagons, refer to Pontiac Shop Notes.*

MISC. ELECTRICAL

THERMOSTATIC RELAY:—On lighting switch. Contacts remain closed with 30 amperes, open in 3 minutes with current of 42 amps. @ 70°. Not adjustable.
FUSES:—**Tail & Instrument Lights**—9 ampere. In line fuse holder clipped to panel above lighting switch.
Stop & Dome Light—9 ampere. On lighting switch.
Direction Signal—9 ampere. In fuse holder on panel brace at steering col. (bet. ign. switch & flasher).
Convertible Top—9 ampere. In switch feed line.
HORNS: Delco-Remy. Low Note: 1999519 ('41), 1999571 ('42). High Note: 1999520 ('41), 1999521 ('42). Vibrator type, blended tone, twin horns operated by relay.

Type	Current (at 6 volts)	Air Gap
1999519 (low note)	19-21 amperes	.045-.049"
1999520 (high note)	17-19 amperes	.035-.039"
1999571 (low note)	19-21 amperes	.047-.052"
1999572 (high note)	18-20 amperes	.039-.044"

Horn Relay:—Delco-Remy No. 1116775.
Contact Gap—.025". **Air Gap**—.015" (closed).
Contacts Close—2.75-4.0 volts.

ENGINE

ENGINE SPECIFICATIONS:—8 cylinder, 'L' head type.
Bore—3¼". **Stroke**—3¾".
Displacement—248.9 cu. ins. **Rated HP**—33.8.
Developed Horsepower—103 at 3500 RPM (Std. hd.).
Compression Ratio—6.5-1 Std., 7.5-1 HC Optl.
Compression Pressure—155 lb.(Std.), 175 (HC hd.) @ 1000 RPM (approx. 118-120lbs., cranking spd. Std. hd.).
Vacuum Reading—Steady 18-20" idling at 7-8 MPH.
See Pontiac Shop Notes for Power Plant Assembly, Front Engine Insulator and Oil Pan Removal.
PISTONS:—Electro-plated, chrome nickel alloy iron. Cannot be ground. **Length** 3 19/32". **Weight** 24⅝ ozs. Piston & pin and rod weight variation 1/16 oz. max.
Removal—Pistons and rods removed from above.
Clearance—Top land .0175-.0295". Skirt .002".
Original Bore & Piston Sizes, Replacement Pistons:—*See Pontiac Shop Notes for sizes and markings.*
Fitting New Pistons:—Insert .0015" x ½" feeler between piston and cylinder wall. Pull to withdraw feeler must be 10-20 lbs. Taper and out-of-round limits—Piston .0005", Cylinder .0005" max. new.
PISTON RINGS:—Two taper faced compression rings above pin, one slotted oil control ring below pin. These piston rings are NOT tin plated.
NOTE—Install compression rings with mark TOP up.

Ring	Width	End Gap	Side Clearance
Compression	.0930-.0935"	.009-.014"	.0015-.003"
Oil Control	.1860-.1865"	.007-.017"	.001-.0025"

Replacement Rings:—Oversizes .005", .010", .020", .030".
PISTON PIN:—**Diameter**—15/16". **Length**—2⅞". Pin locked in one piston boss (new self-locking lockscrew used). Free end slotted (slot on side rather than bottom as on preceding models).
Pin Fit in Piston—*See Pontiac Shop Notes for data.*

ENGINE

C NTINUED FROM PRECEDING PAGE

Pin Fit in Rod Bushing—.0004-.0006" clearance.
Replacement Pins:—.001" (red & brown), .003" (red), .005" (blue) oversize. Paint marked on end of pin.
CONNECTING ROD:—Weight 1.98 lbs. **Length** 7 9/16".
Piston Pin Bushing (Upper Bearing)—Split aluminum bronze bushings. *See Pontiac Shop Notes for data.*
Lower Bearing Diameter—2".
Lower Bearing—New thin type, interchangeable, steel-backed, white bearing metal alloy. Furnished standard size and .001" undersize.
Clearance—.0005-.0015" (new). **Endplay**—.005-.010".
Bearing Adjustment:—None (no shims). *See Pontiac Shop Notes for Fitting and Installing Bearings.*
Installing Rods:—Not offset (install either way).
NOTE—Self-locking rod bolt nuts used.
CRANKSHAFT:—5 bearing, integral counterweights. *See Pontiac Shop Notes for Harmonic Balancer Removal.*
Bearing Diameters—#1, 2⅜"; #2, 2 13/32"; #3, 2 7/16"; #4, 2 15/32"; #5, 2½".
Bearings—New thin type, steel-backed, white bearing metal alloy. Upper & lower halves alike. Furnished Std. & .001" undersize. **Clearance** .001-.003".
Bearing Adjustment:—None (no shims). *See Pontiac Shop Notes for Removal and Fitting of Bearings.*
End Thrust:—At #4 bearing. **Endplay**—.003-.008".
CAMSHAFT:—5 bearing. Non-adjustable chain drive. *See Pontiac Shop Notes for Camshaft Removal, Bearing Finished Sizes and Timing Cover Oil Seal data.*
Bearing Diameters—#1, 2"; #2, 1 31/32"; #3, 1 15/16"; #4, 1 29/32"; #5, 1⅞".
Bearings—Steel-backed, babbitt-lined bushings.
Clearance—.0015-.0025" (new).
End Thrust:—Steel thrust plate behind camshaft sprocket. Replace if worn. **Endplay**—.002-.005".
Timing Chain:—Morse Type 766-T (No. 2660). Width ¾". Pitch ⅜". Length 21" or 56 links.
Camshaft Setting:—Sprockets marked. Mesh chain with sprockets turned so that '0' marks are adjacent and in line with a straightedge across shaft centers.

VALVES:—	**Head Diameter**	**Stem Diameter**	**Length**
Intake	1 15/32"	.310-.311"	5.53"
Exhaust	1 11/32"	.310-.311"	5.53"

	Seat Angle	**Lift**	**Stem Clearance**
Intake	30°	19/64"	Free fit to .0006"①
Exhaust	45°	19/64"	Free fit to .0006"①

① Guides tapered (.0006" max. clearance at bottom).
Valve Guides:—Removable, tapered guides (.001" taper to the inch with greatest clearance at top).
IMPORTANT—Measure clearance at bottom end. Valve should just fall through guide of own weight when started in guide. NOTE—Guides should be cleaned with Tool KMO-122 valve guide cleaner (blade type). Service guides straight cut, install guides (ream to fit valve stems with reamer P.R. 131).
Valve Springs:—Intake and exhaust springs identical. Install with two closed coils at top and dampener on top of each spring. Use new dampeners whenever removed from spring. **Free Length**—2 9/16".

	Spring Pressure	**Spring Length**
Valve Closed	56-63 lbs.	1 29/32"
Valve Open	97-105 lbs.	1 19/32"

Valve Lifters:—Barrel type, cast-iron. Guide holes reamed in block. Lifters furnished .005" oversize (use pilot reamer J-706-P when reaming holes to maintain alignment). **Clearance**—Free fit. Lifter should just move freely with finger touch.

VALVE TIMING

Tappet Clearance:—.011-.013" all valves (engine warm). Use .011" feeler as 'go' gauge, .013" as 'no go'.
NOTE—Car manufacturer recommends .013" exhaust clearance for sustained high speed driving.
Valve Timing:—See Camshaft Setting above.
Intake Valves—Open 5° BTDC. Close 39° ALDC.
Exhaust Valves—Open 45° BLDC. Close 5° ATDC.
Valve Timing Check—With .015" tappet clearance #8 intake valve should open with #8 piston 5° or .0089" before top dead center with first straight line of flywheel mark '/IGN.ONE/' slightly past indicator in left front face of flywheel housing. Reset tappet clearance .011-.013" (warm).

LUBRICATION

LUBRICATION:—Pressure (pump on right of engine). *Refer to Pontiac Shop Notes for Oil Pump Servicing and Crankcase Oil Cleaner Servicing data.*
Normal Oil Pressure: 35-45 lbs. with warm oil.
Oil Pressure Regulator: New spring-loaded disc type in pump. Not adjustable. Opens at 40 lbs.
Crankcase Capacity: 5 qts. (refill), 6 qts. (dry).

COOLING

COOLING SYSTEM:—Capacity 19½ qts. *See Pontiac Shop Notes Radiator Core Removal & Water Distr. Tube data.*
Pressure Valve—In filler cap. Opens at 3¾ lbs.
Water Pump:—Packless, sealed ball-bearing type. *See Water Pump Section for complete data.*
Thermostat:—Harrison. In cylinder head outlet.
Setting—Starts to open 151° F. Fully open 173° F.
Temperature Gauge: AC Electric. Nos. Dash Unit: 1511053 ('41), 1511190 ('42). Engine Unit: 1510772. *See Miscellaneous Section for complete data.*

CLUTCH

CLUTCH:—Inland. 'Diaphragm' type, single plate, dry member. *See Clutch Section for complete data.*
Facings Moulded, 2 used. Inside Diameter 6". Outside Diameter 9½". Thickness .125" (⅛").
Pedal Adjustment:—Free travel ⅞-1⅛" (adjusting nut on link at clutch fork). Pedal height to lower face of pedal should be 4¾" (on 27), 5 3/16" (others). Adjust stopscrew at lower end of pedal arm.
Removal:—Remove transmission (see below), take off bottom housing cover and control shaft inner bracket. Disconnect pedal pull-back spring. Remove fork ball support, fork, and throwout bearing. Paint mark cover and flywheel (locating pin in flywheel discontinued) and reassemble to these marks to maintain balance. Remove cover bolts evenly until tension relieved. Move clutch away from flywheel at bottom to remove disc, lower assembly out of car.

TRANSMISSION

TRANSMISSION:—Own Make. All helical gear, constant-mesh, synchro-mesh (second & high), sliding gear (low & reverse) with remote shift. *See Transmission Section for complete data.*
Transmission Control:—Pontiac 'Safety-Shift' type.
►NOTE—Single shifter rod (replacing 2 rods and idler) used on late 41-28, 41-29 and for replacement. *See Transmission Section for complete data.*
Removal:—Disconnect speedometer cable, gearshift selector and control rods from transmission. Disconnect rear universal (wire trunnions) and pull out propeller shaft. Remove upper transmission mounting screws, install guide pins (J-851), remove lower screws, pull transmission to rear and lower out of car.

UNIVERSALS

Mechanics 2C or 2CR. Roller bearing type. One piece drive shaft used (slip joint ahead of front U-joint). *See Universals Section for complete data.*

REAR AXLE

REAR AXLE:—Own Make. Semi-floating, Hypoid gear with Hotchkiss drive. *See Rear Axle Section for data.*
Ratio—Standard: Model 27, 4.1-1; Others 4.3-1. Optional: Economy 3.9-1, Heavy Duty 4.55-1. Color marked on end of right axle shaft as follows: 3.9 Red, 4.1 Green, 4.3 White, 4.55 Yellow.
Backlash—.003-.012" (new), slightly over .012" (worn).
Removal:—Disconnect rear universal and wire trunnions (do not disengage spline joint at transmission), remove axle shafts (see below), remove carrier flange capscrews, pull carrier assembly out.
Axle Shaft Removal:—Remove wheel, brake drum, 4 backing plate bolt nuts, static collector, and loosen bearing retainer (do not move backing plate or brake line may be damaged). Pull shaft with puller J-942 (do not drag axle shaft on oil seal).
Wheel Bearing Adjustment—None.

SHOCK ABSORBERS

SHOCK ABSORBERS:—Delco. FRONT—Model 1947-C (right), D (left). REAR—1024-V (Domestic). Double acting, hydraulic (1024-V direct acting). *See Shock Absorber Section for complete data.*

FRONT SUSPENSION

Front Suspension:—Independent, linked parallelogram type with coil springs. *See Front Suspension Section for complete data.*
Kingpin Inclination—5½-6°.
Caster—Negative ¾°. Limits Neg. ½° to Neg. 1°.
Camber—0° preferred. Limits Neg. ¼° to Pos. ¼°.
Toe In—0-1/16". Adjust tie rod tubes equally.
Steering Geometry—Inner wheel 23° ± ½°. Outer 20°.

STEERING GEAR

Saginaw Worm-and-Roller, idler arm on right side. *See Steering Gear Section for complete data.*

BRAKES

1941 MODELS

BRAKES:—Service. Bendix hydraulic, duo-servo, single anchor type **without eccentric adjustment.** Hand lever applies rear wheel service brakes. *See Brake Section for complete data.*
Wheel Cylinder Bore—Front wheel 1". Rear 15/16".
Drums—Steel (nickel alloy iron liner). Diameter 11".
Lining—Moulded. Width 1¾". Thickness 3/16". Length 9 11/32" (Primary shoe—D-R Multibestos), 11 31/32" (Secondary shoe—L-8 Multibestos).
Clearance—.015" at both ends of secondary shoe with primary shoe forced out against drum.
Braking Power—53% front wheels, 47% rear.
Hand Brake:—See Service Brakes above.

BRAKES

1942 M DELS

BRAKES:—Service. Bendix hydraulic, duo-servo, single anchor type **with eccentric adjustment** (not used in '41). Hand lever applies rear wheel service brakes. *See Brake Section for complete data.*
Wheel Cylinder Bore—Front 1 1/16". Rear 15/16".
Drums—Pressed steel (alloy iron liner). Diam. 11".
Lining—Moulded. Width 2" (front), 1¾" (rear). Thickness 3/16". Length 9 11/32" (primary), 11 31/32" (secondary).
Clearance—.010" at heel and toe of each shoe.
Braking Power—56% front wheels, 44% rear.
Hand Brake:—See Service Brakes above.

MISC. MECHANICAL

Power Operated Conv. Top: (1941) Vacuum Power. (1942)—Electric type. *See Miscellaneous Section for complete data.*

HOOD LOCK: Hood Alligator type with instrument panel lock. To raise hood, pull the control knob on instrument panel (hood will raise slightly), push up on Safety Catch tab under front edge of hood to release safety catch, lift hood up.
Hood Lock Adjustment—*See Pontiac Shop Notes.*

FRONT SHEET METAL ASSEMBLY REMOVAL, HOOD ADJUSTMENT, FRONT FENDER, FENDER CAP, & REAR FENDER REMOVAL & ALIGNMENT: *See Pontiac Shop Notes.*

MODEL IDENTIFICATION

SERIAL NUMBER: First number 1001 (All Models) with Model & Plant prefix as shown below. Stamped on plate on left side of dash under hood.

Serial No. Prefix	Torpedo		Streamliner	
Plant	46-25	47-25	46-26	47-26
Pontiac, Mich.	P6LA	P6MA	P6LB	P6MB
South Gate, Calif.	C6LA	C6MA	C6LB	C6MB
Linden, N. J.	L6LA	L6MA	L6LB	L6MB
Wilmington, Del.	W6LA	W6MA	W6LB	W6MB
Kansas City, Kans.	K6LA	K6MA	K6LB	K6MB
Atlanta, Ga.	A6LA	A6MA	A6LB	A6MB
Framingh'm, Mas.	F6LA	F6MA	F6LB	F6MB

Serial No. Prefix	Torpedo	Streamliner
Plant	48-25	48-26
Pontiac, Mich.	P6PA	P6PB
South Gate, Calif.	C6PA	C6PB
Linden, N. J.	L6PA	L6PB
Wilmington, Del.	W6PA	W6PB
Kansas City, Kans.	K6PA	K6PB
Atlanta, Ga.	A6PA	A6PB
Framingham, Mass.	F6PA	F6PB

ENGINE NUMBER: Same as Serial Number. Stamped on boss on left upper front corner of engine block.

TUNE-UP

COMPRESSION: Pressure—160 lbs. at 1000 RPM or 118-120 lbs. at cranking speed (Std. 6.5-1 Head), 191 lbs. at 1000 RPM. (Optl. 7.5-1 Head). NOTE—7.5-1 Head requires use of Ethyl fuel at low altitudes.

VACUUM READING: 18-20" steady idling at 7-8 MPH. (365-385 RPM. on Hydra-Matic cars).

FIRING ORDER: 1-5-3-6-2-4. See diagram.

SPARK PLUG GAPS: .025". Limits .023-.028".
Plug Type—AC No. 45. 14 mm. Metric.

IGNITION: *See Coil, Condenser, and Distributor.*
Breaker Gap—.020". Limits .018-.024".
Cam Angle or Dwell—35° closed, 25° open.
Breaker Arm Spring Tension—17-21 ounces.
Automatic & Vacuum Advance—*See Distributor.*

IGNITION TIMING: 6° BTDC.
Timing Procedure—*See Ignition Timing.*
Timing Mark—First line of flywheel mark "/IGN ONE/" at pointer in inspection hole in left front face of flywheel housing above starter.
Gaselector Setting—Set for barely audible ping when accelerating between 20-30 MPH. with wide open throttle.

CARBURETION: *See Carburetor & Carb. Equipment.*
Idle Setting—Set idle adjusting screw 1-1¾ turns open. Turn screw out for richer mixture.
Idle Speed (standard)—450-475 RPM. or 7-8 MPH.
Idle Speed (Hydra-Matic)—365-385 RPM.
Float Level—7/16" from machined projection on cover to top of soldered seam at free end (invert to check).
Accelerating Pump—Lower hole Normal Setting, Upper hole for greater charge, Inner hole less
Fuel Pump Pressure: 4 lbs. (AH), 3¾ lbs. (AJ Comb.).

MANIFOLD HEAT CONTROL: Thermostatic coil type, non-adjustable (fixed anchor pin). Counterweight should be securely clamped to shaft in approximately vertical position with valve closed (cold).
NOTE—Valve shaft bushings are Stainless Steel.

VALVE TAPPET CLEARANCE: .011-.013" Hot All Valves. (.011" gauge "Go", .013" gauge "No Go." NOTE—013" Exhaust tappet clearance recommended for sustained high speed.
Valve Timing Check—*See Valve Timing.*

STARTING: *See Battery, Starter, Generator, Regulator.*

IGNITION

IGNITION SWITCH: Delco-Remy Nos. as follows:
1946-47—1116306 (LHD), 1116312 (RHD cars).
1948—1116455 (All cars).
NOTE—Armored cable not used on 1948 cars.

Ignition Lock Cylinder—Briggs & Stratton 45792. Key Series—8000 to 9499. Groove—No. 15.

COIL: Delco-Remy 1115126 ('46-47), 1115380 ('48). 1946 NOTE—Primary terminal on 6 Cyl. coils located on right side (toward front on 8 Cyl. cars). Some 6 Cyl. coils have primary terminal at front (as on 8 Cyl. coils), later coils of this type have figure "6" stenciled in red on coil. CAUTION—These coils should be used on 6 Cyl. cars only (coils must not be interchanged).
Ignition Current—2.5 amperes idling, 4.5 stopped.

CONDENSER: Delco-Remy No. 1869704.
Capacity—.18-.25 microfarad.

DISTRIBUTOR: Delco-Remy #647-D. Single breaker 6 lobe cam, full automatic advance type with auxiliary vacuum control and Gaselector adjustment.

►**Late 1948 Distributor Cap**—Has built-in radio suppression. Can be identified by high wire towers and marks "Radio" on lower edge of cap on each side.

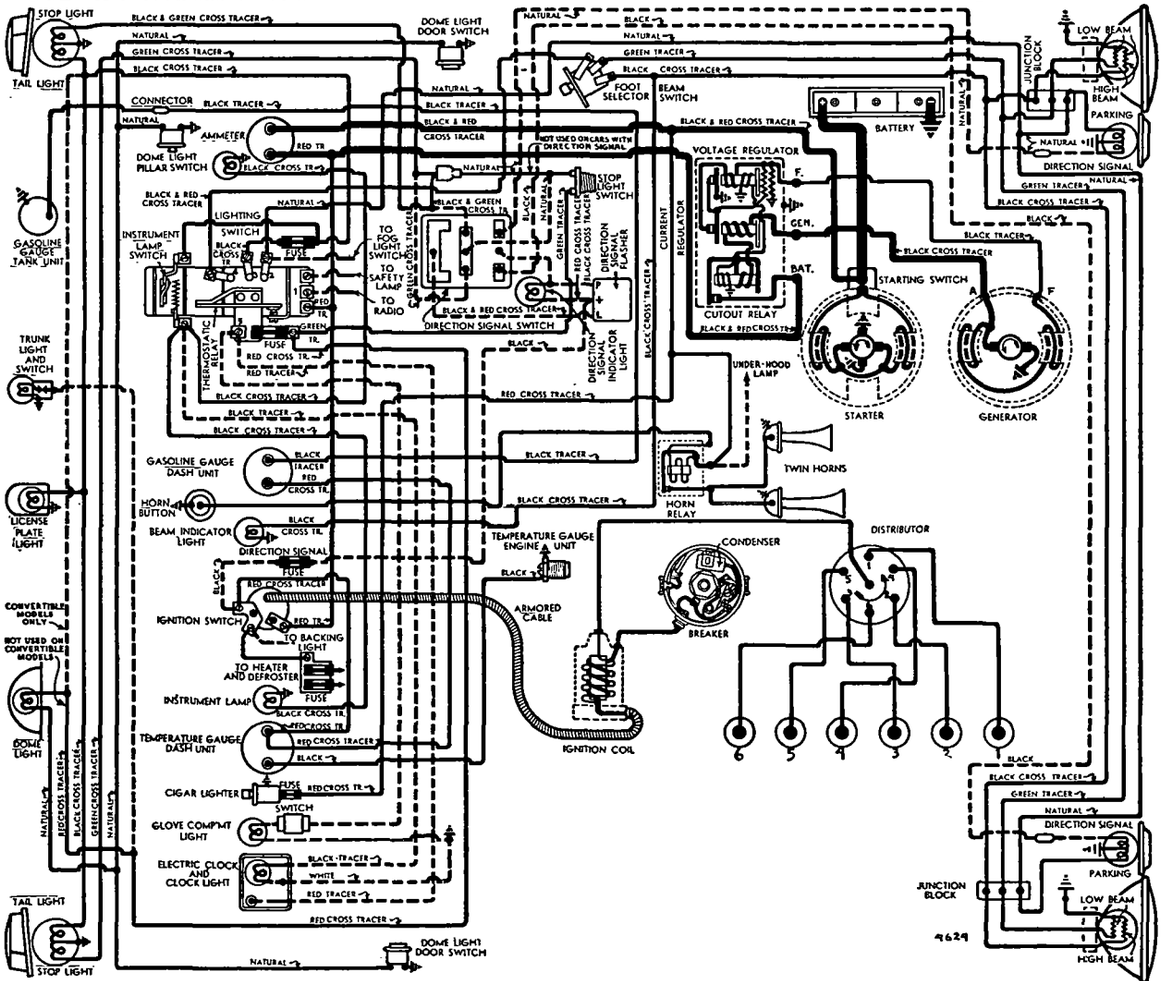

1946-47 PONTIAC SIX
►EARLY 1946 WIRE COLORS N T UNIFORM—SEE LIGHTING

Breaker Gap—.020". Limits .018-.024".
Cam Angle or Dwell—35° closed, 25° open.
Breaker Arm Spring Tension—17-21 ozs.
Rotation—Counter-clockwise viewed from above.

Automatic Advance

Distributor Degrees	R.P.M	Engine Degrees	R.P.M.
Start	400	4	800
8	1050	16	2100
8.5	1450	17	2900
14.25	2000	28.5	4000

Gaselector—Manual adjustment providing 10° advance or retard from center '0' position. See Ignition Timing for Gaselector Adjustment.

Vacuum Spark Control: Delco-Remy Mod. No. 681-M (integral type linked directly to breaker plate). Provides additional advance at speeds above idling except when engine accelerated or operated with wide open throttle when spark retarded by return spring within unit. **Plunger Travel**—9/64" total.

Vacuum Advance

Distr. Degrees	Eng. Degrees	Vacuum (" of HG)
Start	0°	7-9"
7½	15°	13-16"①
7½-8½	15-17°	16-18"

①—At .125" plunger travel.

Removal:—Distributor mounted on left side of engine. To remove, disconnect vacuum line, take out screw in Gaselector arm, lift distributor out.

IGNITION TIMING

Std. Setting—As given below for Regular Fuel (Std. 6.5-1 Head), Ethyl Fuel (Optl. 7.5-1 Head). See Gaselector Setting (following) for correction for operating conditions and fuel regularly used.

	Flywheel Degrees Piston Position
All Engines	6°BTDC .0138"BTDC

Timing Mark Note—Two straight lines of ignition mark '/IGN.ONE/' indicate allowable timing range of 4° on flywheel. Use first (6°) line for setting ignition (second line is 2° before top dead center mark). NOTE—Manufacturer recommends use of HM-494 Timing Light or J-578 Synchroscope for Timing.

To Set Timing (With Timing Light)—Connect timing light between distributor terminal and ground, turn on ignition. With #1 piston on compression, turn engine over until piston is 6° or .0138" before top dead center with first line of ignition mark '/IGN.ONE/' lined up with pointer in inspection hole in left front face of flywheel housing above starter. Loosen Gaselector screw, center pointer scale ('0' mark at reference line), tighten screw. Loosen advance arm clamp bolt, rotate distributor until timing lamp lights (contacts just opening), tighten clamp bolt. Check Gaselector setting.

To Set Timing (With Synchroscope)—Connect synchroscope in series with #1 spark plug, fill in first line of ignition mark '/IGN.ONE/' with chalk or white paint, direct synchroscope light on flywheel (inspection hole on left side), idle engine at 6 MPH., adjust distributor as directed above.

Gaselector Setting—Should be set to provide best performance without spark knock or ping for particular operating conditions and octane rating of fuel used. To adjust, loosen Gaselector arm screw, move arm clockwise (toward 'ADV' end of scale) to advance spark, counter-clockwise (toward 'RET' end of scale) to retard spark, tighten locking screw.

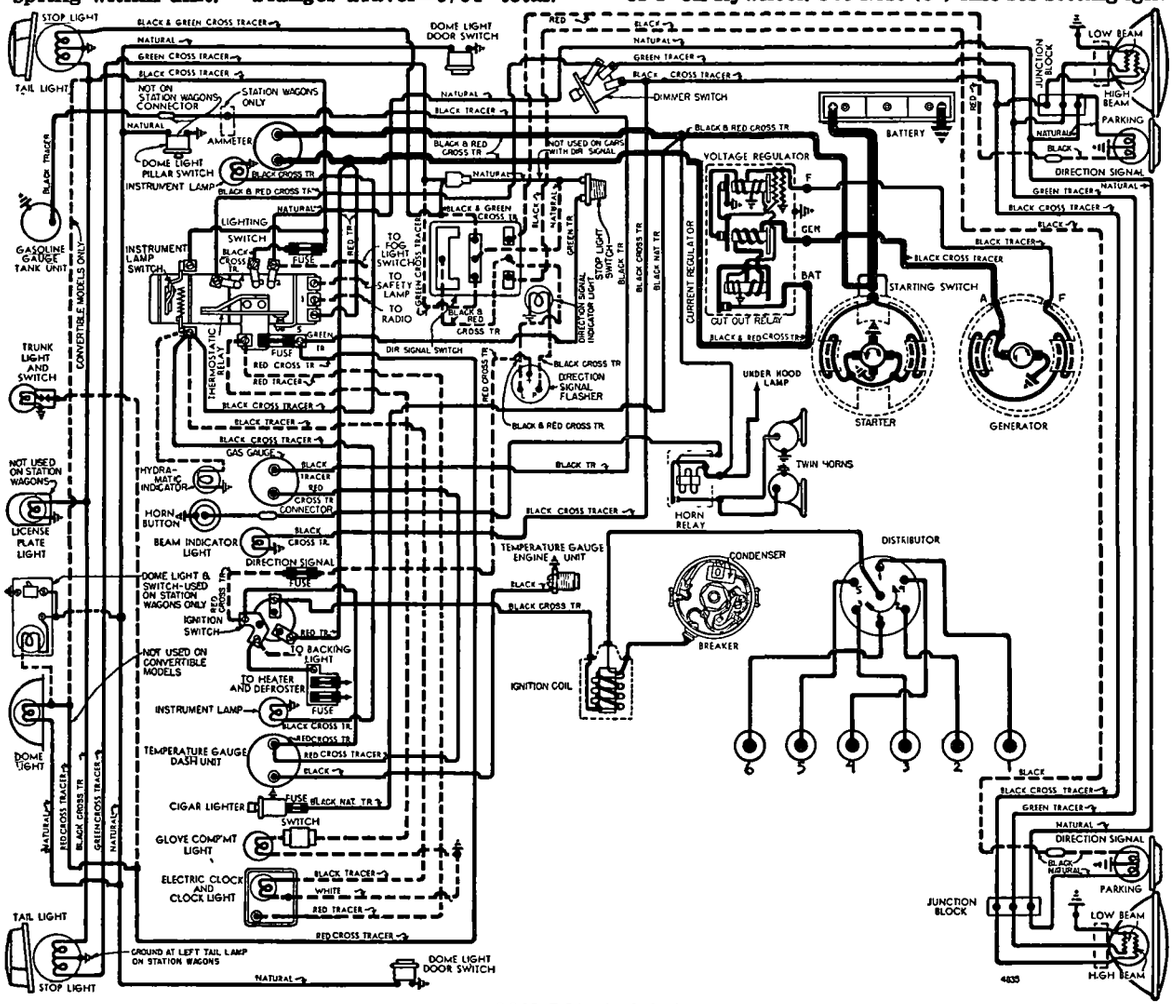

1948 PONTIAC SIX

CARBURETOR

Synchro-Mesh Trans. ... .. **Carter WA-1, No. 537S**
Hydra-Matic Drive..... **Carter WA-1, No. 652S**
1¼" single barrel downdraft types with Carter Climatic Control.
Casting No. on Flange—388 (537S), 592 (652S).
See Carburetor Section for complete data.

Settings (Idle Setting, Float Level, and Accelerating Pump): ***See Tune-Up data.***

Metering Rod & Jet—***See Carter Jet Table in Carburetor Section for complete data.***

►**Accelerator Pedal Service Note:** On new cars shipped from the factory, accelerator pedal hinge lockscrew is tightened only finger-tight (pedal must be removed for floor mat installation). **This screw must be securely tightened** (place screwdriver alongside locknut while turning screw in to lock hinge pin).

Accelerator Linkage Adjustment:—Must be set to provide correct 'throttle cracking' action for starting. To adjust, set carburetor idle speed at 450-475 RPM. (365-385 Hydra-Matic), disconnect battery cable at starting motor (to prevent starter cranking engine), insert 9/64" drill rod (or .138" diameter round steel rod) between throttle lever stopscrew and stop, fully depress starting pedal, adjust the adjusting screw on accelerator cross-shaft lug at idler lever (on Hydra-Matic, adjust throttle cracker lever mounted on throttle control lever—pin on starter lever must not strike throttle control lever) until gauge between the throttle stopscrew and stop just falls out with fast idle cam in slow idle position. NOTE—Before making this adjustment, check for full throttle opening with accelerator pedal fully depressed (adjust accelerator rod if required).

Hydra-Matic Throttle Adjustment: ***See Hydra-Matic Drive article in Transmission Section.***

CONTINUED N NEXT PAGE

CONTINUED FROM PRECEDING PAGE

Fast Idle: Carter Single Barrel Carburetor type.
See Carburetion Equipment Section for data.
Setting—With fast idle cam in hot or slow idle position, close choke valve until throttle stopscrew is against (not on) first step of fast idle cam, adjust by bending connector rod offset so that choke valve opening is 5/8" (check opening with gauge T109-85).

Automatic Choke: Carter Climatic Control (single carburetor type).
See Carburetion Equipment Section for data.
Setting—3 Notches Rich.

CARB. EQUIPMENT

Fuel Pump (std.): AC Type AH. No. 1523985.
Optl. (Fuel-&-Vacuum)—AC Type AJ. No. 1523986.
Replacement Pump—AC No. 496 (for AH), 515 (AJ).
Pressure—4 lbs. (AH), 3¾ lbs. (AJ).
See Carburetion Equipment Section for data.

Gasoline Gauge: AC Electric type.
Dash Unit—(1946) AC No. 1516818, (1947) 1516946, (1948) 1517065.
Tank Unit—AC No. 1516316 (All).
See Carburetion Equipment Section for data.

Air Cleaner (std.—oil-wetted): AC No. 1529871.
Optl. (oil-bath)—AC No. 1542070.
Servicing (Oil-wetted Type)—Wash and re-oil filter element at 10000 mile intervals (twice yearly) or more often if required by operating conditions.
Servicing (Oil-bath Type)—Wash filter element, drain and refill lower oil base with 1 pint SAE No. 50 engine oil (SAE 20W for temperatures below freezing) at 10000 mile intervals or more often if required by operating conditions.

BATTERY

Delco Type 15E-2W. 6 Volt, 15 Plate, 100 Ampere Hour Capacity (20 hour rate).
Starting Capacity—120 amperes for 20 minutes.
Zero Capacity—300 amperes for 3.5 minutes. Five second voltage 4.25 volts.
Grounded Terminal—Negative (—) to engine.
Engine Ground (Conv. Coupe & Cars with Radio)—Strap from left rear corner of cylinder head to upper left starter pedal bracket-to-dash screw.
Location—On left side in engine compartment

Police Battery Delco Type 19E-3. 6 Volt, 19 Plate, 130 ampere hour capacity (20 hour rate).
Starting Capacity—150 amperes for 20 minutes
Grounded Ter. & Location—Same as 15E-2 above.

STARTER

1946-47	Delco-Remy 1107032
1948	Delco-Remy 1107070
RHD Cars	Delco-Remy 1107934

Armature No.—Delco-Remy No. 1867897.
EARLY 1946 NOTE—Starters on these cars have oiler at commutator end, later starters have graphite-impregnated bronze bearing at this point (no lubrication required).

►**Starter Pedal Sticking Correction:** Lubricate starter pedal plunger with engine oil whenever car serviced (lack of lubrication will cause wear, noise, and faulty operation—may result in damage to starter). NOTE—Check all new cars (plunger not lubricated on some cars).

►**Hydra-Matic Starter Interlock Adjustment:** *See the Hydra-Matic Drive article in Transmission Section.*

►**Clicking Noise Correction at Starter (Hydra-Matic):** *See "Electrical System Notes" in Pontiac Shop Notes.*
Drive—Overrunning clutch and pinon shift. Manual type (1107032, 70), solenoid pinion shift (1107934).
Rotation—Counter-clockwise at commutator end.
Brush Spring Tension—24-28 ozs. each.
Cranking Engine—200 amperes at 5 volts.

Performance Data—1107032, 70

Torque	R.P.M.	Volts	Amperes
0 ft. lbs.	5000	5.0	65
12 "	Lock	3.37	525

Performance Data—1107934

0	ft. lbs.	6000	5.0	60
15	"	Lock	3.0	600

Removal:—Starter flange mounted on left front face of flywheel housing. To remove, take out flange mounting screws.

Starting Switch (1107032, 70): No. 820052. On top of starter and operated by starting pedal.
(1107934)—Delco-Remy Solenoid No. 1118102. Mounted on starter and controlled by Relay No. 269-G and pushbutton Switch No. 1996031 on instrument panel.
See Electrical Equipment Section for complete data.

GENERATOR

1946-47	Delco-Remy 1102665
1948	Delco-Remy 1102701
Police Cars	Delco-Remy 1106403

Armature No.—Delco-Remy 1879002 (1102665 & 701). Two brush (shunt) types with voltage and current regulation. Ventilated by drive pulley fan.

Charging Rate Adjustment—None. Charging rate controlled by Voltage Regulator, maximum output by Current Regulator. See Regulator data below.

Maximum Charging Rate—30 amperes, 8.0 volts, 1170 RPM. (1102665, 701), 1040 RPM. (1106403 Gen.), 25 MPH. and above (Current Regulator Setting) with load or discharged battery. Actual charging rate controlled by Voltage Regulator and dependent on battery.

Performance Data—1102665 & 701

	Amperes	Volts	R.P.M.
Cold	30①	8.0	1750

Performance Data—1106403

Cold	35①	8.0	1040

①Not maximum output. See Current Regulator.
Rotation—Counter-clockwise at commutator end.
Brush Spring Tension—25 ounces each.
Field Current—1.75-1.9 amperes (1102665 & 1102701), 1.77-2.0 amperes (1106403) at 6.0 volts.

Removal: Generator pivot mounted on left front of engine. To remove, take out pivot and clamp bolts.

Belt Adjustment: Belt deflection or sideplay midway between generator & pump pulley should be 1½".

REGULATOR

Delco-Remy 1118242 ....for 1102665 & 1102701 Gen.
Delco-Remy 1118229 ....for 1106403 Generator
Single Core Type. Vibrating type Voltage and Current Regulators in a single case with Cutout Relay.
See Electrical Equipment Section for complete data.
CAUTION—Check generator for grounded field coils and leads before changing regulator settings to correct High Charging Rate or High Voltage.

Cutout Relay

Cuts In—6.2-6.7 volts hot.
Cuts Out—0-4.0 amperage discharge current.
Contact Gap—.020" (same for both sets).
Air Gap—.020" (with contacts just closed).

Voltage Regulator

Setting—7.2-7.4 volts (1118242), 7.0-7.2 volts (1118229) hot (operating temperature). Regulator over-compensated for temperature. Should be checked with cover in place and hot.
Checking & Adjustment—*See Electrical Equip. Section.*
Air Gap—.070" between center of core and armature with contacts just closing (press down on armature to open contacts, release pressure, check gap at point where contacts just close).

Current Regulator

Setting—34-36 amperes hot (at operating temperature) for all models.
Checking & Adjustment—*See Electrical Equip. Section.*
Air Gap—.080" (check same as Voltage Regulator).

LIGHTING

1946-47 LIGHTING SYSTEM SERVICE NOTES

►**Wiring Harness Wire Colors (1946)**—Some harnesses were used in which wires were incorrectly color-coded (tracers not as shown in wiring diagram). All such wires were marked by typed identification on paper sleeve attached to the wire. CAUTION—If these identification are removed from wires, it will be necessary to trace circuits for continuity.

►**Chafing of Wiring Harness (causing a short in hot lead from starter terminal)**—Clearance between harness containing this lead and moving parts (Starter pedal lever, Accelerator pedal lever, Accelerator cross-shaft) must be 3/8-½". Make certain that harness is correctly installed (should pass down between starter and engine and then under starter), and that lower clamp-on clip on starter pedal bracket is closed tight so that harness cannot bend forward and rub on accelerator cross-shaft.

►**Back-up Light Faulty Operation and Blown Fuses**—*See Pontiac Shop Notes for directions on installation of new type switch parts to correct this trouble.*

►**Cigar Lighter Faulty Operation and Short-circuits**—*See Pontiac Shop Notes for re-working of Cowl Ventilator Hand Lever Stop (to prevent lever shorting cigar lighter lead), and installation of spacer (to prevent lighter binding on first cars).*

1948 LIGHTING SYSTEM SERVICE NOTES

►**Inoperative Stop Light (with Direction Signal):** On some early 1948 cars, 1 stop lamp (usually left) would not operate with brakes on and Direction Signal Switch in neutral due to misalignment at Direction Signal Switch. Correct by replacing direction signal base and wire assembly, part #5937832

►**Underhood Light not turning off:** On some early 1948 cars, Underhood Light Switch improperly mounted resulting in light remaining on when hood closed. To correct, install lock washer between mounting nut and radiator baffle (was incorrectly assembled between switch and underside of radiator baffle which resulted in switch being set too low).

Headlamps: Guide "Sealed Beam" type. Upper and lower beams controlled by Beam Selector Switch on toeboard.
See Electrical Equipment Section for complete data.

Adjustment—Aim upper beams straight ahead (hot spot center 3" below lamp center height at 25 ft.).
Beam Indicator—Pontiac emblem on face of speedometer dial. Lighted when upper beams in use.

Direction Signal: *See Electrical Equipment Section.*
Direction Signal Indicator—Pilot bulb in Direction Signal Switch. Lighted whenever Right or Left Direction Signal operating.

Switches

Lighting—D-R Nos. ('46-47) 1995024, ('48) 1995035.
Instrument—Part of Lighting Switch. Rheostat operated by turning lighting switch knob.
Beam Selector—Delco-Remy No. 1997008.
Stop Light—Delco-Remy No. 1997725.

Bulb Specifications

Position	Candlepower	Mazda No.
Headlamps		Sealed Beam
Park & Frt. Direc. Signal	21-3	1154
Park (Without Signal)	3	63
Instrument, Ign. Lock	1½	55
Beam & Direc. Signal Ind.	1	51
Stop & Tail	21-3	1154
Rear License Plate	3	63
Dome	15	88
Dome (Convertible)	1½	55

MISC. ELECTRICAL

THERMOSTATIC RELAY: Lighting. On switch. Contacts remain closed with 30 amperes, open in 3 minutes with current of 42 amperes at 70°F. Not adj.
Convertible Top—On rear of dash on right side. 30 ampere maximum capacity.

FUSES: Tail & Instrument Light. (1946-47) 9 ampere, (1948) SFE 14 ampere. In holder clipped to panel above lighting switch.
Stop & Dome Light—('46-47) 9 amp., ('48) SFE 14 ampere. On lighting switch.
Heater & Defroster—SFE 9 amp. each. In clip on instrument panel brace at steering column.
Direction Signal—SFE 9 amp. In connector in feed wire from ignition switch at panel brace.

HORNS: Delco-Remy No. 1999519 (Low Note), 1999520 (High Note). Vibrator type, blended tone, twin horns operated by relay.

Type	Current (at 6 volts)	Air Gap
1999519 (Low Note)	19-21 amperes	.044-.049"
1999520 (High Note)	18-20 amperes	.034-.039"

►**'46 Horn Ring Rattle & Failure of Horn to Blow (Deluxe Models) Correction**—*See Pontiac Shop Notes.*

►**'46 Horn Lead Wear Correction**—Blowing of horns when turning corners or when car is jarred may be caused by steering column shaft wearing through insulation of horn button lead at point where it enters steering column jacket. To correct this trouble (on first cars with rubber grommet in horn lead hole), remove and discard rubber grommet, install new horn button lead, No. 266918, which has 4-inch piece of protecting loom at point where wire enters jacket.

Horn Relay:—Delco-Remy No. 1116775.
Contact Gap—.025". **Air Gap**—.015" (closed).
Contacts Close—2.75-4.0 volts.

ENGINE

ENGINE SPECIFICATIONS: Own. Six Cylinder, "L" Head type.
Bore—3 9/16". **Stroke**—4".
Displacement—239.2 cu. ins. **Rated HP**—30.4.
Developed Horsepower—93½ at 3400 RPM.
Compression Ratio—6.5-1 Std., 7.5-1 Optl. iron hds.
Compression & Vacuum Reading—*See Tune-up data.*

ORIGINAL BORE & PISTONS: *See Pontiac Shop Notes.*

POWER PLANT ASSEMBLY REMOVAL & FRONT INSULATOR REMOVAL: *See Pontiac Shop Notes.*

TIGHTENING TORQUES: *See Pontiac Shop Notes.*

CYLINDER HEAD: Tightening Torque & Cylinder Head Diagram—*See Pontiac Shop Notes.*

PISTONS: Chrome nickel alloy, electro-plated type. Pistons have 20 oil drain holes in oil ring groove (same as 1942 type). NOTE—Pistons are plated with lead-tin alloy or pure tin (lead-tin alloy darker color) and cannot be ground. Use finished replacement pistons.
Length 3 19/32". Weight—27.1 ozs. (stripped).
Removal—Pistons and rods removed from above.
Clearance—Top Land .0175-.0295". Skirt .002".

Fitting New Pistons:—Insert .0015" x ½" feeler between piston and cylinder wall. Pull to withdraw feeler must be 10-20 lbs. Taper and out-of-round limits—Piston .0005", Cylinder .0005" max. new.

Replacement Pistons: *See Pontiac Shop Notes.*

PISTON RINGS: Two tapered-face compression rings above pin, one slotted oil control ring below pin. Oil ring groove has 20 oil drain holes.
NOTE—Rings are cadmium-plated or tin-plated.

Ring	Width	End Gap	Side Clearance
Compr. (#1,2)	3/32"	.006-.013"	.0015-.003"
Oil (#3)	3/16"	.007-.017"	.001-.0025"

Installing Rings—Install compression rings with mark "TOP" upward.

Replacement Rings: Furnished in Oversizes of .005", .010", .020", .030".

PISTON PIN: Diameter 15/16". Length 3 1/16". Pin is shot-peened type (shot-peened before final grinding and lapping). Pin is locked in one piston boss by self-locking lockscrew and opposite boss is slotted to permit pin movement.
Pin Fit in Piston—*See Pontiac Shop Notes for data.*
Pin Fit in Rod Bushing—.0004-.0006" clearance.

Pin Removal & Installation: *See Pontiac Shop Notes.*

Replacement Pins:—.001" (red & brown), .003" (red), .005" (blue) oversize. Paint marked on end of pin.

CONNECTING ROD: Weight 37 ozs. Length 7 9/16".
Piston Pin Bushing (Upper Bearing)—Split aluminum bronze bushings. *See Pontiac Shop Notes for data.*
Lower Bearing Diameter—2⅛".
Lower Bearing—New thin type, interchangeable, steel-backed, babbitt-lined type.
Clearance—.0001-.0021". **Sideplay** .007-.030".

Bearing Adjustment: None (no shims). *See Pontiac Shop Notes for Fitting and Installing Bearings.*

Replacement Bearings: Standard size & .001" Undersize. NOTE—Bearings have small tongue which must engage groove in rod and cap.

Installing Rods: Not offset (install either way).
NOTE—Rods and bearing caps marked to insure correct reassembly (marks must be together). These marks do not indicate cylinder in which rod used.
CAUTION—Keep each connecting rod and its bearing cap together.

CRANKSHAFT: Four bearing type with integral counterweights and vibration dampener on forward end.

►**Flywheel to Crankshaft Bolts (on Synchro-Mesh Transmission)**—¾" hex head bolts (No. 508463) or 1" hex head bolts (No. 510832) are used. Either type can be used for replacement but **head sizes must be alike on all bolts or engine balance will be destroyed.**

►**Vibration Dampener (Harmonic Balancer) Removal**—*See Pontiac Shop Notes.*
Bearing Diameters—#1, 2½"; #2, 2 17/32"; #3, 2 19/32"; #4, 2⅝".
Bearings—Thin type, removable, steel-backed, babbitt-lined. Upper and lower bearing halves alike.
Clearance—.0003-.0023".

Bearing Adjustment:—None (no shims). *See Pontiac Shop Notes for Removal and Fitting of Bearings.*

►**Rear Main Bearing Oil Seal Renewal**—*See Pontiac Shop Notes.*

Replacement Bearings: Standard size & .001" Undersize.

End Thrust: Taken by #3 (rear intermediate) bearing. **Endplay**—.003-.007".

CAMSHAFT: Four bearing type with non-adjustable (two sprocket) chain drive.
Camshaft Removal & Timing Cover Oil Seal Servicing—*See Pontiac Shop Notes.*
Bearing Diameters—#1, 2"; #2, 1 31/32"; #3, 1 15/16"; #4, 1 29/32".
Bearings—Steel-backed, babbitt-lined bushings. *See Pontiac Shop Notes for bearing finished sizes.*
Clearance—.0015-.0025" (new).

End Thrust:—Steel thrust plate behind camshaft sprocket. Replace if worn. **Endplay**—.002-.005".

Timing Chain: Morse. Width 1". Pitch ⅜". Length 21" or 56 links.
Timing Chain Installation—*See Pontiac Shop Notes.*

Camshaft Setting:—Sprockets marked. Mesh chain with sprockets turned so that '0' marks are adjacent and in line with a straightedge across shaft centers.

VALVES:	Head Diameter	Stem Diameter	Length
Intake	1 19/32"	.310-.311"	5.718"
Exhaust	1 15/32"	.310-.311"	5.718"

	Seat Angle	Lift	Stem Clearance
Intake	30°	19/64"	Free fit to .0006"①
Exhaust	45°	19/64"	Free fit to .0006"①

① Guides tapered (.0006" max. clearance at bottom).

Valve Guides:—Removable, tapered guides (.001" taper to the inch with greatest clearance at top). Use Tool J-2542 for removing valve guides.
Exhaust Guide Counterbore—Exhaust guides are counterbored to a depth of ¾". Use Tool Number J-2122 to clean out counterbore when servicing valves. This tool can be used to increase counterbore (from ½") if earlier type guides having this shallower counterbore are used.

►NOTE—On 1946 cars before Eng. No. 6-39209, exhaust guide counterbore was 31/32" deep. Any stocks of this type guide, Part No. 509041 (with 31/32" counterbore), are satsifactory for service. New exhaust guides will have the shallower (¾" plus 1/32", minus 0") counterbore depth.

IMPORTANT—Measure clearance at bottom end. Valve should just fall through guide of own weight when started in guide. NOTE—Guides should be cleaned with Tool KMO-122 valve guide cleaner (blade type). Service guides straight cut, install guides and ream to provide proper stem clearance with P.R. 131 Reamer.

Valve Springs:—Intake and exhaust springs identical. Install with two closed coils at top and dampener on top of each spring. Use new dampeners whenever removed from spring. **Free Length**—2 9/16".

C NTINUED ON NEXT PA E

ENGINE

CONTINUED FROM PRECEDING PAGE

	Spring Pressure	Spring Length
Valved Closed	59½ lbs.	1 29/32"
Valve Open	101 lbs.	1 19/32"

Valve Lifters:—Barrel type, cast-iron. Guide holes reamed in block. Lifters furnished .005" oversize (use pilot reamer J-706-P when reaming holes to maintain alignment—valve guides must be removed, use Valve Guide Removing Tool J-2542).

Clearance—Free fit. Lifter should just move freely with finger touch.

VALVE TIMING

Tappet Clearance:—.011-.013" all valves (engine warm). Use .011" feeler as 'go' gauge, .013" as 'no go'.

NOTE—Car manufacturer recommends .013" exhaust clearance for sustained high speed driving.

Valve Timing:—See Camshaft Setting above.

Intake Valves—Open 5° BTDC. Close 39° ALDC.

Exhaust Valves—Open 45° BLDC. Close 5° ATDC.

Valve Timing Check—With .015" tappet clearance #6 intake valve should open with #6 piston 5° or .0096" before top dead center with first straight line of flywheel mark '/IGN.ONE/' slightly past indicator in left front face of flywheel housing. Reset tappet clearance .011-.013" (warm).

LUBRICATION

Engine Oiling System: Pressure to main bearings, connecting rod lower bearings and piston pins (rifle-drilled rods), camshaft bearings, and timing chain. Oil pump mounted externally on right side of crankcase.

Crankcase Capacity—5 qts. (refill), 6 qts. (dry).

Normal Oil Pressure—35-45 lbs. at 40 MPH. with warm oil (10-30 lbs. idling).

Oil Pressure Regulator—On oil pump. Opens at 40 lbs. Non-adjustable. NOTE—Replace regulator spring if free length less than 2 5/16".

Oil Pump: Gear type. On right side of crankcase.

Oil Pump Servicing—*See Pontiac Shop Notes.*

Oil Cleaner: Pontiac precipitation type (in crankcase). **Servicing**—*See Pontiac Shop Notes.*

Oil Pressure Gauge: AC ('46) 1506803, ('47) 1507056, ('48) 1507221. Bourden Tube (not electric).

Crankcase Ventilation: Filter element in oil filler cap (inlet). Outlet pipe at valve compt. cover on right rear side of engine (cars with oil bath air cleaner equipped with 3-piece outlet pipe containing filter element).

Oil Filler (Crankcase Ventilator) Cap Servicing—Wash filter element and re-oil by dipping in engine oil when servicing air cleaner.

CAUTION—Filler cap must be installed with air opening in cap toward front of car and seam in line with groove in tube (may cause excessive oil consumption if installed backward).

Crankcase Ventilator Outlet Pipe—On cars with Oil-bath type Air Cleaner, special 3-piece ventilator outlet pipe used which has copper gauze type air cleaner in container section. Wash and re-oil filter element when servicing air cleaner.

COOLING

Cooling System: Pressure type with pressure valve (relief valve) in radiator filler cap. Positive circulation with water pump on front of engine and water distributing tube in cylinder block.

Capacity—18 qts. (19¾ with Underseat Heater).

Pressure Valve AC No. 846740 (Radiator Filler Cap). Opens at 4 lbs. (3¼-4¼ lbs.).

Water Pump: Packless type with sealed ball bearing shaft. *See Water Pump Section for complete data.*

Removal—Drain cooling system, remove hose connection at pump, loosen belt adjustment and remove belt, take out water pump mounting bolts and lift pump out.

Belt Adjustment—*See Generator Belt Adjustment.*

Thermostat:—Harrison. In cylinder head outlet.

Setting—Starts to open 151° F. Fully open 173° F.

Temperature Gauge: AC Electric type.

Dash Unit—('46) 1511661, ('47) 1511874, ('48) 1512027.

Engine Unit—('46-47) 1511734, ('48) 1512015.

See Miscellaneous Section for complete data.

CLUTCH

Inland. Single Plate, "Diaphragm", dry disc type with Long Driven Member Model 9½CF-TS (except Taxicab), Model 10CF-CS (Taxicab).

See Clutch Section for complete data.

NOTE—Driven Members on 6 Cyl. and 8 Cyl. cars are same size but **must not be interchanged.** May be identified by stenciled notation on facings and color marking of torsional springs in hub as follows:

	Facing Mark	Spring Color
6 Cyl. Models	41-42 6 Cyl.	Orange & Dark Blue
8 Cyl. Models	41-42 8 Cyl.	Brown & Blue

Facings—Moulded type, 2 required. I. D. 6" (All Models); O. D. 9½" (except Taxicab), 10" (Taxicab); Thickness ⅛".

Pedal Adjustment:—Free travel ⅞-1⅛" (adjusting nut on link at clutch fork). Pedal height to lower face of pedal should be 4¾" (Torpedo), 5 3/16" (Streamliner). Adjust by means of stopscrew at lower end of pedal arm.

►**1946 Clutch Pedal Shaft Installation Change**—*See Pontiac Shop Notes for new type mounting (used on later 1946 cars) to correct movement of clutch or brake pedal when other pedal is depressed.*

Removal: Remove Transmission (see Transmission Removal below), remove clutch bearing support spring washer (in rear face of clutch housing), remove clutch housing bottom cover and control shaft inner bracket. Remove release bearing support and release bearing (see Clutch Release Bearing & Support data), tapping the support from inside the clutch housing to aid in removing (CAUTION—avoid striking tubular portion of support). Mark flywheel and clutch cover (to insure reinstallation in same position to maintain balance), remove clutch cover mounting bolts evenly, move clutch assembly away from flywheel at bottom and withdraw Driven Member, lower cover assembly and withdraw it through bottom of housing.

►**Removal of Excess Release Bearing Lubricant to correct clutch sticking**—If recess in bore on release bearing over-lubricated when clutch assembly installed, excess lubricant may be found causing clutch sticking. Clean our excess lubricant found at the following points: transmission drive gear, driven plate hub, clutch facings, pressure plate and and cover assembly, release bearing support tube, fulcrum points of release fork, and recess in bore on release bearing (do not wash bearing, bearing is "sealed" type). Lubricate clutch parts exactly as described under Installation Note following to avoid above condition.

Clutch Installation Note—Install new felt oil seal against shoulder ahead of oil slinger retaining ring on Transmission Main Drive Gear (will bear against flared end of release bearing support when installed). This supersedes original position (on 1946 cars) where seal fitted in recess on Drive Gear. Lubricate seal with engine oil before transmission installed. Coat entire length of outer diameter of release bearing support tube with grease. Lubricate release fork fulcrum points with a very light coat of grease. Apply light coat of Lubriplate on main driving gear splines. Use new paper gasket between support flange and clutch housing, make certain that flange is not bent or distorted (will cause misalignment of transmission).

CAUTION—Make certain that correct type Driven Member is used (see Note above).

Clutch Release Bearing & Support: *See Pontiac Shop Notes for description.*

►**1946 Release Bearing Noise Correction**—*See Pontiac Shop Notes for new type Support Tube to correct noise due to movement of bearing on early 1946 support tube.*

TRANSMISSION

STANDARD

Own Make. All helical gear. Constant-mesh synchro-mesh (Second & High), sliding gear (Low & Reverse).

See Transmission Section for complete data.

Transmission Control: Pontiac "Safety-shift" remote control type with gearshift lever on steering column.

See Transmission Section for complete data.

Removal:—Disconnect speedometer cable, gearshift selector and control rods from transmission. Disconnect rear universal (wire trunnions) and pull out propeller shaft. Remove upper transmission mounting screws, install guide pins (J-851), remove lower screws, pull transmission to rear and lower out of car.

Installation Note—Use guide pins installed in two upper transmission mounting holes to assist in sliding transmission straight forward into place (to avoid damage to clutch release bearing tubular support).

NOTE—These guide pins may be made from ½-13 American National Thread bolts by cutting heads off and reducing over-all length to 4¼".

HYDRA-MATIC DRIVE

OPTIONAL EQUIPMENT

Own Make. Consists of fluid coupling and 4 speed automatic transmission.

See Transmission Section for complete data.

Lubrication—Check fluid level in transmission every 2000 miles (lubrication period). Drain and refill every 15000 miles. Use only GM Hydra-Matic Drive Fluid.

Capacity—11 qts. (drain oil pan and torus cover and refill). **12 qts.** (drain, disassemble, assemble transmission and refill).

Checking Fluid Level—Roll back floor mat, remove cover on floor board, set hand brake and start engine, set control lever in "DR" position, allow to run about 2 minutes. Remove indicator, wipe dry, then return and check level of fluid with indicator. Add fluid until level is at "FULL" mark.

►*CAUTION—Always check oil level when oil is hot, engine idling, hand brake tightly set and control lever in "DR" position.*

►**Oil Level Indicator Change**—A new indicator, Part No. 8605800 (stamped on blade—earlier type not marked) reduces capacity approx. 1 pint providing slightly lower fluid operating level to reduce fluid foaming when oil is hot.

Hydra-Matic Linkage Adjustment—*See Hydra-Matic Drive article in Transmission Section.*

Removal: *See Hydra-Matic Drive article in Transmission Section.*

UNIVERSALS

Mechanics Model 2CR. Roller bearing type, 2 used. *See Universal Section for complete data.*

►**1947-48 CAUTION**—Rear universal nut controls rear axle pinion bearing "pre-load" (must be adjusted whenever nut is loosened). *See Pontiac Rear Axle article in Rear Axle Section for complete data.*

NOTE—Driveshaft is one-piece type (slip joint on transmission mainshaft, ahead of front universal).

REAR AXLE

1946 Type—Same as 1942. Hypoid gear, semi-floating type. This type axle has three setscrews equally spaced around pinion housing.
See Rear Axle Section for complete data.

1947-48—New hypoid gear, semi-floating type. Design similar to 1946 type except that pinion is mounted on two taper roller bearings and companion flange nut controls pinion bearing "pre-load." No setscrews are used.

►CAUTION—Rear universal companion nut controls pinion bearing "pre-load".
See Rear Axle Section for complete data.

Ratios—As shown. Axles may be identified by paint mark on end of right hand axle shaft.

Model	Ratio	Ident. Paint Mark
Torpedo Std.	4.1-1	Green
Streamliner Std.	4.3-1	White
Hydra-Matic (All)	3.63-1	Violet
All (Econ.)	3.9-1	Red
All (Heavy Duty)	4.55-1	Yellow

Backlash—.003-.012" (new), slightly over .012" (worn).

Removal:—Disconnect rear universal and wire trunnions (do not disengage spline joint at transmission), remove axle shafts and carrier flange capscrews. Withdraw carrier assembly from housing.

►**1947-48 CAUTION**—Rear U-joint companion flange nut controls pinion bearing "pre-load" (must be adjusted whenever nut is loosened).

Axle Shaft Removal:—Remove wheel, brake drum, 4 backing plate bolt nuts, static collector, and loosen bearing retainer (do not move backing plate or brake line may be damaged). Pull shaft with puller J-942 (do not drag axle shaft on oil seal).

Wheel Bearing Adjustment—None.

SHOCK ABSORBERS

Delco Model 1947-C,D (front), Model 1044-V (rear). Hydraulic, double acting (front), direct (rear).
See Shock Absorber Section for complete data.

Adjustment: None (except by changing valve calibration).

Refilling: Requires dismantling of unit. See Shock Absorber article in Shock Absorber Section for directions.

FRONT SUSPENSION

Front Suspension: Independent, linked parallelogram type with coil springs.
See Front Suspension Section for complete data.

Kingpin Inclination—5½-6° crosswise.

Caster—Negative ¾°. Limits Neg. ½° to Neg. 1°.

Camber—0° preferred. Limits Neg. ¼° to Pos. ¼°.

Toe In—0-1/16". Adjust tie rod tubes equally.

Steering Geometry—Inner wheel 23° ± ½°. Outer 20°.

STEERING GEAR

Saginaw. Worm-and-Roller type.
See Steering Gear Section for complete data.

BRAKES

Service: Bendix Hydraulic, Duo-Servo, Single Anchor type with eccentric adjustment. Hand lever applies rear service brakes.
See Brake Section for complete data.

►IMPORTANT SERVICE NOTE—**Brake Drums**—Two different makes are used: 1) Kelsey-Hayes type can be identified by one-piece stamping and flange having a sharp edge; 2) Motor Wheel type consisting of two-stampings and rolled flange. **Each pair of drums (on opposite sides of car) front or rear must be the same type.**

	Brake Drum Part Numbers		
	Front Wheel		Rear
	Left	Right	Wheel
Kelsey-Hayes	507371	507370	505300
Motor Wheel	509221	509220	409176

Drums—Pressed steel with alloy iron liner. Diameter 11".

Clearance—.010" at heel and toe of each shoe.

Lining—Moulded. Width per wheel: 2" (front), 1¾" (rear). Thickness 3/16". Length per shoe: 9 11/32" (primary), 11 31/32" (secondary).

Braking Power—56% Front, 44% Rear.

Master Cylinder Filling Note—New cars shipped from the factory have master cylinder filled to level ⅞" below top of filler neck and this level is satisfactory for service (cylinders were filled to ½" below top).

Hand Brake: See Service Brakes above.
NoRol: Optional. *See Brake Section for complete data.*

MISC. MECHANICAL

Convertible Top Control: Hydro-lectric type (hydraulic actuation with motor-driven pump supplying oil under pressure for power cylinders).
See Miscellaneous Section for complete data.

HOOD LOCK: Hood is alligator type with instrument panel lock. To raise hood, pull out control knob on left side of instrument panel (hood will raise slightly), push up on safety catch tab under front edge of hood to release safety catch, raise hood.
Hood Lock Adjustment—*See Pontiac Shop Notes.*

FRONT SHEET METAL ASSEMBLY REMOVAL, HOOD ADJUSTMENT, FRONT FENDER, FENDER CAP, & REAR FENDER REMOVAL & ALIGNMENT: *See Pontiac Shop Notes.*

MODEL IDENTIFICATION

SERIAL NUMBER: First number 1001 (All Models) with Model & Plant prefix as shown below. Stamped on plate on left side of dash under engine hood.

Serial No. Prefix	Torpedo		Streamliner	
Plant	46-27	47-27	46-28	47-28
Pontiac, Mich.	P8LA	P8MA	P8LB	P8MB
South Gate, Calif.	C8LA	C8MA	C8LB	C8MB
Linden, N. J.	L8LA	L8MA	L8LB	L8MB
Wilmington, Del.	W8LA	W8MA	W8LB	W8MB
Kansas City, Kans.	K8LA	K8MA	K8LB	K8MB
Atlanta, Ga.	A8LA	A8MA	A8LB	A8MB
Framingham, Mass.	F8LA	F8MA	F8LB	F8MB

Serial No. Prefix—	Torpedo	Streamliner
Plant	48-27	48-28
Pontiac, Mich.	P8PA	P8PB
South Gate, Calif.	C8PA	C8PB
Linden, N. J.	L8PA	L8PB
Wilmington, Del.	W8PA	W8PB
Kansas City, Kans.	K8PA	K8PB
Atlanta, Ga.	A8PA	A8PB
Framingham, Mass.	F8PA	F8PB

ENGINE NUMBER: Same as Serial Number. Stamped on boss on left upper front corner of engine block.

TUNE-UP

COMPRESSION: Pressure—158 lbs. at 1000 RPM. or 118-120 lbs. at cranking speed (Std. 6.5-1 Head), 189 lbs. at 1000 RPM. (Optl. 7.5-1 Head). NOTE—7.5-1 Head requires use of Ethyl fuel at low altitudes.

VACUUM READING: 18-20" steady idling at 7-8 MPH. (365-385 RPM. on Hydra-Matic Cars).

FIRING ORDER: 1-6-2-5-8-3-7-4. See diagram.

SPARK PLUG GAPS: .025". Limits .023-.028".
Plug Type—AC No. 45. 14 mm. Metric.

IGNITION: *See Coil, Condenser, and Distributor.*
Breaker Gap—.015". Limits .0125-.0175".
Cam Angle or Dwell—31° closed, 14° open.
Breaker Arm Spring Tension—19-23 ozs.
Automatic & Vacuum Advance—*See Distributor.*

IGNITION TIMING: 6° BTDC.
Timing Procedure—*See Ignition Timing.*
Timing Mark—First line of flywheel mark "/IGN. ONE/" at pointer in inspection hole in left front face of flywheel housing above starter.
Gaselector Setting—Set for barely audible ping when accelerating between 20-30 MPH. with wide open throttle.

CARBURETION: *See Carburetor & Carb. Equipment.*
Idle Setting—(1946 WDO Carb.) ¼-1¼ turns open, (1947-48 WCD Carb.) ¾-1¾ turns open, 2 screws, turning screws out gives richer mixture.
Idle Speed (standard)—450-475 RPM. or 7-8 MPH.
Idle Speed (Hydra-Matic)—365-385 RPM.
Float Level (1946 "WDO" Carb.)—5/16" from top of float to gasket seat on cover (invert to check).
Float Level (1947-48 "WCD")—3/16" from top of the float to gasket seat on bowl cover (Gauge T109-162). Sides of floats should barely touch vertical uprights on gauge (so float won't bind on sides of bowl).
Accelerating Pump—Lower Hole (min. stroke) Normal. Upper Hole (max. stroke)—if greater charge required.

Fuel Pump Pressure: 4¾ lbs. maximum.

MANIFOLD HEAT CONTROL: Thermostatic coil type, non-adjustable (fixed anchor pin). Counterweight should be securely clamped to shaft in approximately vertical position with valve closed (cold).
NOTE—Valve shaft bushings are Stainless Steel.

VALVE TAPPET CLEARANCE: .011-.013" Hot All Valves. (.011" gauge "Go", .013" gauge "No Go". NOTE—.013" Exhaust tappet clearance recommended for sustained high speed.
Valve Timing Check—*See Valve Timing.*

STARTING: *See Battery, Starter, Generator, Regulator.*

IGNITION

IGNITION SWITCH: Delco-Remy Nos. as follows:
1946-47—1116306 (LHD), 1116312 (RHD cars).
1948—1116455 (All cars).
NOTE—Armored cable not used on 1948 cars.
Ignition Lock Cylinder—Briggs & Stratton 45792. Key Series—8000 to 9499. Groove—No. 15.

COIL: Delco-Remy 1115126 ('46-47), 1115380 ('48).
1946 NOTE—Primary terminal on 8 Cylinder is toward front. Some coils for 6 Cyl. cars have primary terminal located in same position but these coils are now marked by figure "6" stenciled in red.
CAUTION—Do not use coils marked "6" or coils with primary terminal on right side on 8 Cyl. cars.
Ignition Current—2.5 amperes idling, 4.5 stopped.

CONDENSER: Delco-Remy No. 1869704.
Capacity—.18-.25 microfarad.

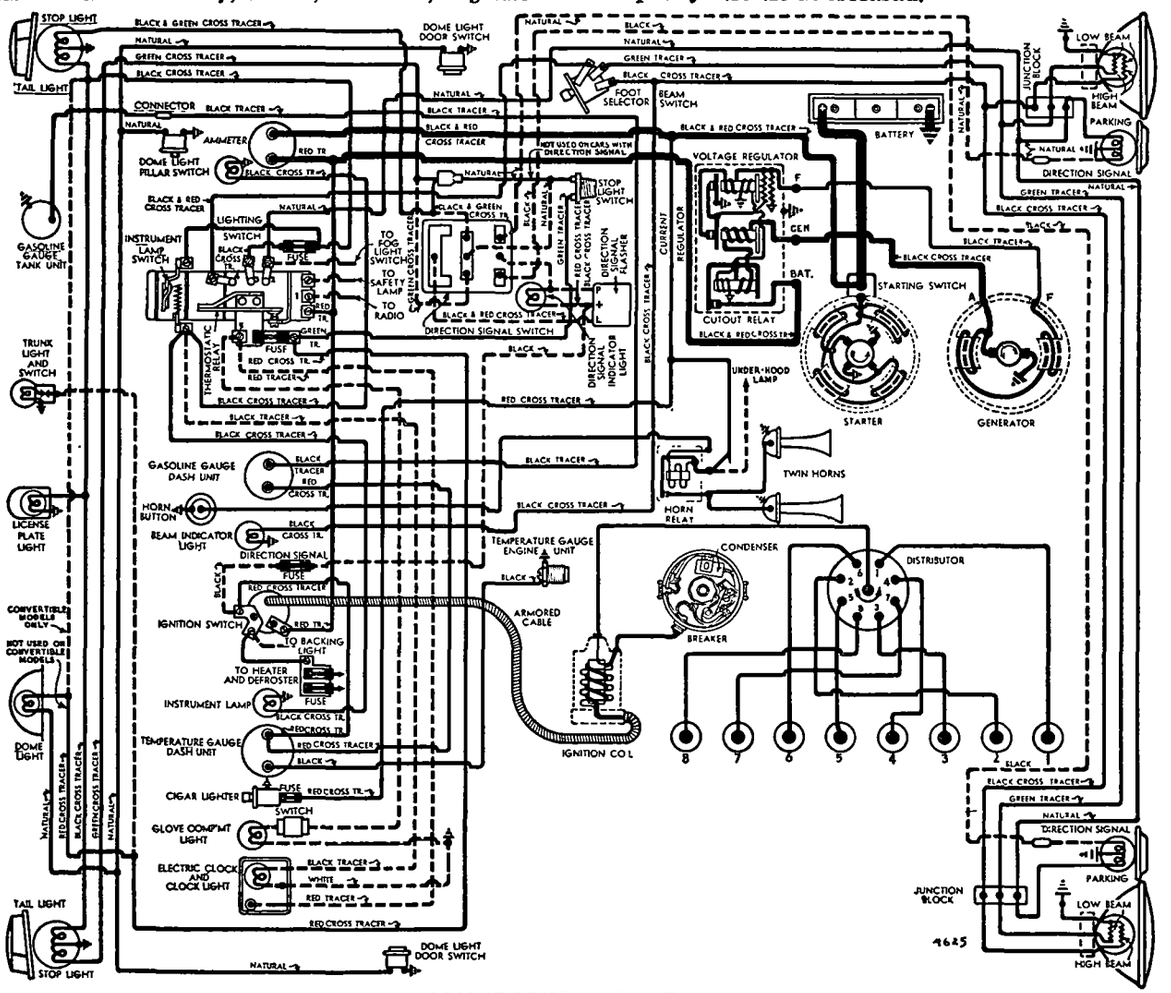

1946-47 PONTIAC EIGHT
►EARLY 1946 WIRE COLORS NOT UNIFORM—SEE LIGHTING

DISTRIBUTOR: Delco-Remy 1110804. Single breaker, 8 lobe cam, full automatic advance type with auxiliary vacuum control and Gaselector adjustment.

►**Late 1948 Distributor Cap**—Has built-in radio suppression. Can be identified by high wire towers and marks "Radio" on lower edge of cap on each side.

Breaker Gap—.015". Limits .0125-.0175".
Cam Angle or Dwell—31° closed, 14° open.
Breaker Arm Spring Tension—19-23 ozs.
Rotation—Counter-clockwise viewed from above.

Automatic Advance

Distributor Degrees	Distributor R.P.M.	Engine Degrees	Engine R.P.M.
Start	300	2	600
7	1100	14	2200
8½	1500	17	3000
13½	2100	27	4200

Gaselector—Manual adjustment providing 10° advance or retard from center '0' position. See Ignition Timing for Gaselector adjustment.

Vacuum Spark Control. Delco-Remy Model No. 1116-021. (integral type linked directly to breaker plate). Provides additional advance at speeds above idling except when engine accelerated or operated with wide open throttle when spark retarded by return spring within unit. **Plunger Travel—7/32".**

Vacuum Advance

Distr. Degrees	Eng. Degrees	Vacuum (" of HG)
Start	0°	7-9"
7½°	15°	13-16"
9-10°	18-20°	16-21"

Removal:—Distributor mounted on left side of engine. To remove, disconnect vacuum line, take out hold-down screw in Gaselector arm, lift distributor out.

IGNITION TIMING

Std. Setting—As given below for Regular Fuel (Std. 6.5-1 Head), Ethyl Fuel (Optl. 7.5-1 Head). See Gaselector Setting (following) for correction for operating conditions and fuel regularly used.

	Flywheel Degrees	Piston Position
All Engines	6° BTDC	.0128" BTDC.

Timing Mark Note—Two straight lines of ignition mark '/IGN.ONE/' indicate allowable timing range of 4° on flywheel. Use first (6°) line for setting ignition (second line is 2° before top dead center mark).

To Set Timing (With Timing Light)—Connect timing light between distributor terminal and ground, turn on ignition. With #1 piston on compression, turn engine over until piston is 6° or .0128" before top dead center with first line of ignition mark '/IGN.ONE/' lined up with pointer in inspection hole in left front face of flywheel housing above starter. Loosen Gaselector screw, center pointer scale ('0' mark at reference line), tighten screw. Loosen advance arm clamp bolt, rotate distributor until timing lamp lights (contacts just opening), tighten clamp bolt. Check Gaselector setting.

To Set Timing (With Synchroscope)—Connect synchroscope in series with #1 spark plug, fill in first line of ignition mark '/IGN.ONE/' with chalk or white paint, direct synchroscope light on flywheel (inspection hole on left side), idle engine at 6 MPH., adjust distributor as directed above.

Gaselector Setting—Should be set to provide best performance without spark knock or ping for particular operating conditions and octane rating of fuel used. To adjust, loosen Gaselector arm screw, move arm clockwise (toward 'ADV' end of scale) to advance spark, counter-clockwise (toward 'RET' end of scale) to retard spark, tighten locking screw.

CARBURETOR

1946 TYPE "WDO"

Carter Type WDO, Model 548S. 1¼" Dual (double barrel), Downdraft type with Carter Climatic Control.

Casting No. on Flange—306.

See Carburetor Section for complete data.

Settings (Idle Setting, Float Level, and Accelerating Pump): *See Tune-Up.*

Metering Rods Jets—*See Carter Jet Table in Carburetor Section for complete data.*

Accelerator Linkage Adjustment: See 1947-48 information listed below.

Fast Idle: Carter Dual (WDO) Carburetor type.

See Carburetion Equipment Section for complete data.

Setting—With the carburetor set for correct 7-8 MPH hot or slow idle speed, hold choke valve tightly closed, turn fast idle adjusting screw in until clearance between throttle lever stopscrew and stop on carburetor casting is .073". NOTE—This adjustment can also be made by backing off throttle stopscrew so that throttle valves tightly closed, then hold choke valve closed, turn fast idle screw in until it contacts high point of fast idle cam, then turn screw in until throttle opening is exactly .026".

Automatic Choke: Carter Climatic Control (dual carburetor type).

See Carburetion Equipment Section for complete data.

Setting—Coil housing 2 Notches Rich.

CARBURETOR

1947-48 TYPE "WCD"

Carter WCD, No. 630S, SA, or SB (Standard).
Carter WCD, No. 653S (Hydra-Matic Drive Cars).
1¼" dual barrel downdraft types with Carter Climatic Control.

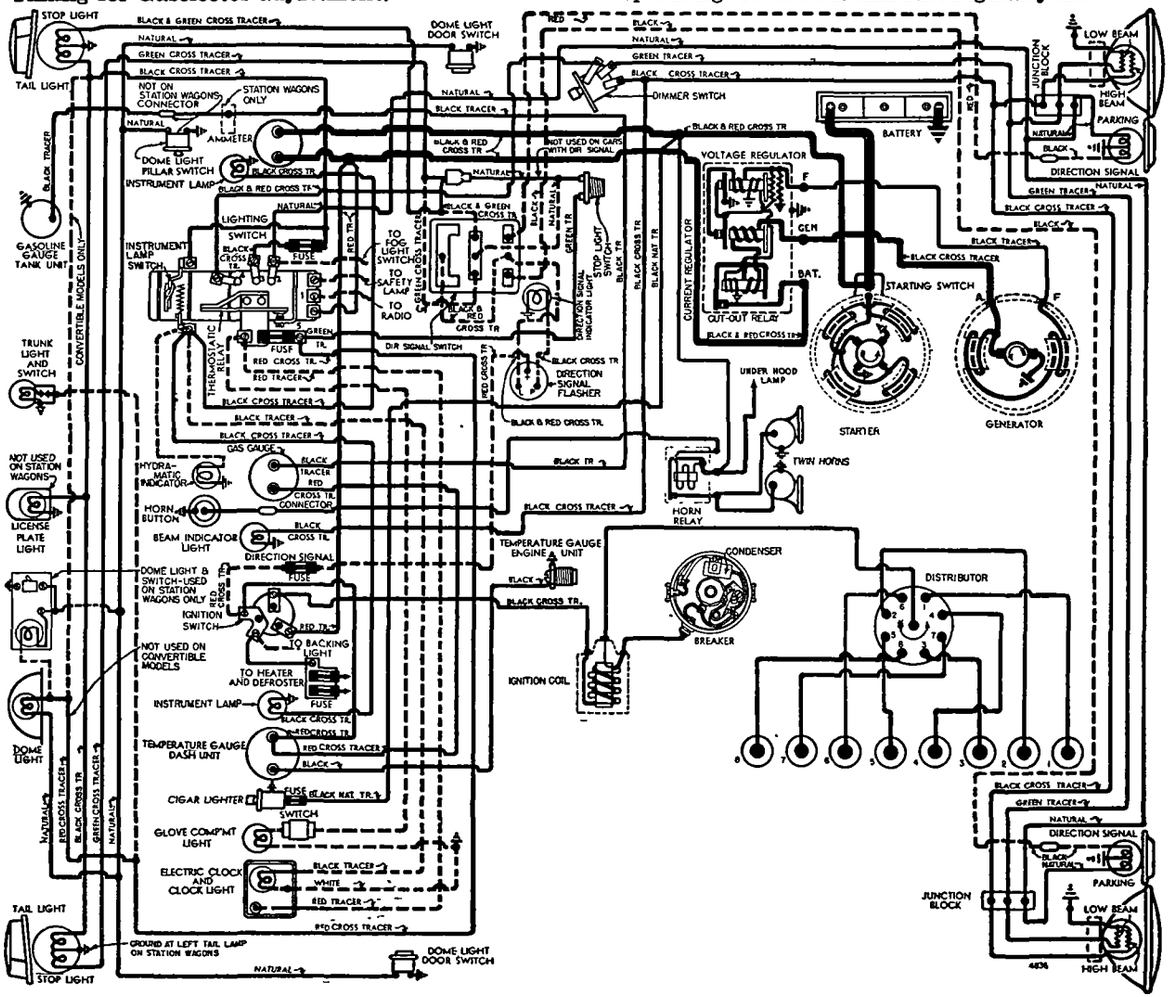

1948 PONTIAC EIGHT

C NTINUED N NEXT PA E

CONTINUED FR M PRECEDING PA E

Casting No. on Flange—373 (630S), 550 (630SA & SB), 558 (653S).
See Carburetor Section for complete data.

Settings (Idle Setting, Float Level, and Accelerating Pump): *See Tune-Up data.*
Metering Rods & Jets—*See Carter Jet Table in Carburetor Section for complete data.*

Accelerator Pedal Service Note: On new cars shipped from the factory, accelerator pedal hinge lockscrew is tightened only finger tight (pedal must be removed for floor mat installation). **This screw must be securely tightened** (place screwdriver alongside locknut to hold nut while turning screw in to lock hinge pin).

Accelerator Linkage Adjustment:—Must be set to provide correct 'throttle-cracking' action for starting. To adjust, set idle speed at 450-475 RPM. (365-385 RPM on Hydra-Matic), disconnect battery cable at starting motor (to prevent starter cranking engine), insert .115" flat gauge between throttle stopscrew and stop on carburetor, fully depress starting pedal, adjust the adjusting screw on the accelerator cross-shaft lug at idler lever (on Hydra-Matic adjust throttle cracker lever mounted on throttle control lever—pin on starter lever must not strike throttle control lever) until gauge between the throttle stopscrew and stop just falls out with fast idle cam in slow idle position. NOTE—Before making adjustment, check for full throttle opening with accelerator pedal fully depressed (adjust accelerator rod if required).

Hydra-Matic Throttle Adjustment: *See Hydra-Matic Drive article in Transmission Section.*

Fast Idle: Carter Dual (WCD) Carburetor type.
See Carburetion Equipment Section for data.
Setting—With the choke valve tightly closed and fast idle adjusting screw on highest step of fast idle cam, adjust fast idle screw until throttle opening is exactly .026" (use Gauge T109-189 between edge of throttle valve and carburetor wall on side opposite idle ports).

Automatic Choke: Carter Climatic Control (dual carburetor type).
See Carburetion Equipment Section for complete data.
Setting (630S, SA, SB)—Centered at index (for 6-547S air horn), One Point Lean (for 6-576S air horn—latest).
Setting (653S)—Centered at index.

CARB. EQUIPMENT

Fuel Pump (Fuel & Vacuum): AC Type AJ. No. 153717.
Replacement Pump—AC No. 539.
Pressure—4¾ lbs. maximum.
See Carburetion Equipment Section for data.

Gasoline Gauge: AC Electric type.
Dash Unit—(1946) AC No. 1516818, (1947) 1516946, (1948) 1517065.
Tank Unit—AC No. 1516316 (All).
See Carburetion Equipment Section for data.

Air Cleaner (std.—oil-wetted): AC No. 1529473.
Optl. (oil bath)—AC No. 1529474.
Servicing (Oil-wetted Type)—Wash and re-oil filter element at 10000 mile intervals (twice yearly) or more often if required by operating conditions.
Servicing (Oil-bath Type)—Wash filter element, drain and refill lower oil base with 1 pint SAE No. 50 engine oil (SAE 20W for temperatures below freezing) at 10000 mile intervals or more often if required by operating conditions.

BATTERY

1946

Delco Type 17E-2W. 6 volt, 17 Plate, 120 Ampere Hour Capacity (20 hour rate).
Starting Capacity—140 amperes for 20 minutes.
Zero Capacity—300 amperes for 4.5 minutes. Five second voltage 4.4 volts.
Grounded Terminal & Location—As given below.

BATTERY

1947-48

Delco Type 15E-2W. 6 Volt, 15 Plate, 100 Ampere Hour Capacity (20 hour rate).
Starting Capacity—120 amperes for 20 minutes.
Zero Capacity—300 amperes for 3.5 minutes. Five second voltage 4.25 volts
Grounded Terminal—Negative (—) to engine.
Engine Ground (Conv. Coupe & Cars with Radio)—Strap from left rear corner of cylinder head to upper left hand starter pedal bracket-to-dash screw.
Location—On left side in engine compartment.

Police Battery: Delco Type 19E-3. 6 Volt, 19 Plate, 130 ampere hour capacity (20 hour rate).
Starting Capacity—150 amperes for 20 minutes.
Grounded Ter. & Location—Same as 15E-2 above.

STARTER

1946-47 ..... **Delco-Remy 1107921**
1948 ..... **Delco-Remy 1107947**
RHD Cars ..... **Delco-Remy 1107934**
Armature No.—Delco-Remy No. 1867897.
1946 NOTE—Starters on early cars have oiler at at commutator end, later starters have graphite-impregnated bronze bearing at this point (no lubrication required).

►**Starter Pedal Sticking Correction:** Lubricate starter pedal plunger with engine oil whenever car serviced (lack of lubrication will cause wear, noise, and faulty operation—may result in damage to starter). NOTE—Check all new cars (plunger not lubricated on some cars).

►**Hydra-Matic Starter Interlock Adjustment:** *See the Hydra-Matic Drive article in Transmission Section.*

►**Clicking Noise Correction at Starter (Hydra-Matic):** *See "Electrical System Notes" in Pontiac Shop Notes.*
Drive—Overrunning clutch and pinion shift. Manual (1107921, 47), solenoid pinion shift (1107934).
Rotation—Counter-clockwise at commutator end.
Brush Spring Tension—24-28 ozs. each.
Cranking Engine—220-225 amperes at 5 volts.

Performance Data

Torque	R.P.M	Volts	Amperes
0 ft. lbs	6000	5.0	60
16 "	Lock	3.0	600

Removal:—Starter flange mounted on left front face of flywheel housing. To remove, take out flange mounting screws.

Starting Switch (1107921, 47): No. 820052. On top of starter and operated by starting pedal (1107934)—Delco-Remy Solenoid No. 1118102. Mounted on starter and controlled by Relay No. 269-G and pushbutton switch No. 1996031 on instrument panel.
See Electrical Equipment Section for complete data.

GENERATOR

1946-47 ..... **Delco-Remy 1102665**
1948 ..... **Delco-Remy 1102701**
Police Cars ..... **Delco-Remy 1106403**
Armature No.—Delco-Remy 1879002 (1102665 & 701). Two brush (shunt) types with voltage and current regulation. Ventilated by drive pulley fan.
Charging Rate Adjustment—None. Charging rate controlled by Voltage Regulator, maximum output by Current Regulator. See Regulator data below.
Maximum Charging Rate—30 amperes, 8.0 volts, 1170 RPM. (1102665, 701), 1040 RPM. (1106403 Gen.), and above (Current Regulator Setting) with load or discharged battery. Actual charging rate controlled by Regulator according to battery condition.

Performance Data—Cold

	Amperes①	Volts	R.P.M.
1102665, 1102701	30	8.0	1750
1106403	35	8.0	1040

①—Current Regulator Setting—See Regulator.
Rotation—Counter-clockwise at commutator end.
Brush Spring Tension—25 ounces each.
Field Current—1.75-1.9 amperes (1102665 & 1102701), 1.77-2.0 amperes (1106403) at 6.0 volts.

Removal:—Generator pivot mounted on left front of engine. To remove, take out pivot and clamp bolts.
Belt Adjustment:—Belt deflection or sideplay midway between generator & pump pulley should be 1½".

REGULATOR

Delco-Remy 1118242 .....**for 1102665 & 1102701 Gen.**
Delco-Remy 1118229 .....**for 1106403 Generator**
Single Core Type. Vibrating type Voltage and Current Regulators in a single case with Cutout Relay.
See Electrical Equipment Section for complete data.
CAUTION—Check generator for grounded field coils and leads before changing regulator settings to correct High Charging Rate or High Voltage.

Cutout Relay

Cuts In—6.2-6.7 volts hot.
Cuts Out—0-4.0 ampere discharge current.
Contact Gap—.020" (same for both sets).
Air Gap—.020" (with contacts just closed).

Voltage Regulator

Setting—7.2-7.4 volts (1118242), 7.0-7.2 volts (1118-229) Hot (at operating temperature).
Checking & Adjustment—*See Electrical Equip. Section.*
Air Gap—.070" between center of core and armature with contacts just closing (press down on armature to open contacts, release pressure, check gap at point where contacts just close).

Current Regulator

Setting—34-36 amperes Hot (at operating temperature) for all models.
Checking & Adjustment—*See Electrical Equip. Section.*
Air Gap—.080" (check same as Voltage Regulator).

LIGHTING

1946-47 LIGHTING SYSTEM SERVICE NOTES

►**Wiring Harness Wire Colors (1946)**—Some harnesses were used in which wires were incorrectly color-coded (tracers not as shown in wiring diagram). All such wires were marked by typed identification on paper sleeve attached to the wire. CAUTION—If these identification are removed from wires, it will be necessary to trace circuits for continuity.

►**Chafing of Wiring Harness (causing a short in hot l ad from starter terminal)**—Clearance between harness containing this lead and moving parts (Starter pedal lever, Accelerator pedal lever, Accelerator cross-shaft) must be ⅜-½". Make certain that harness is correctly installed (should pass down between starter and engine and then under starter), and that lower clamp-on clip on starter pedal bracket is closed tight so that harness cannot bend forward and rub on accelerator cross-shaft

►**Back-up Light Faulty Operation and Blown Fuses**—*See Pontiac Shop Notes for directions on installation of new type switch parts to correct this trouble.*

►**Cigar Lighter Faulty Operation and Short-circuits**—*See Pontiac Shop Notes for re-working of Cowl Ventilator Hand Lever Stop (to prevent lever shorting cigar lighter lead), and installation of spacer (to prevent lighter binding on first cars).*

1948 LIGHTING SYSTEM SERVICE NOTES

►**Inoperative Stop Light (with Direction Signal)**: On some early 1948 cars, 1 stop lamp (usually left) would not operate with brakes on and Direction Signal Switch in neutral due to misalignment at Direction Signal Switch Correct by replacing direction signal base and wire assembly, part #5937832

►**Underhood Light not turning off**: On some early 1948 cars, Underhood Light Switch improperly mounted resulting in light remaining on when hood closed. To correct, install lock washer between mounting nut and radiator baffle (was incorrectly assembled between switch and underside of radiator baffle which resulted in switch being set too low).

Headlamps: Guide "Sealed Beam" type. Upper and lower beams controlled by Beam Selector Switch on toeboard.
See Electrical Equipment Section for complete data.

Adjustment—Aim upper beams straight ahead (hot spot center 3" below lamp center height at 25 ft.).

Beam Indicator—Pontiac emblem on face of speedometer dial. Lighted when upper beams in use.

Direction Signal: *See Electrical Equipment Section.*
Direction Signal Indicator—Pilot bulb in Direction Signal Switch. Lighted whenever Right or Left Direction Signal operating.

Switches

Lighting—D-R Nos ('46-47) 1995024, ('48) 1995035
Instrument—Part of Lighting Switch. Rheostat operated by turning lighting switch knob.
Beam Selector—Delco-Remy No. 1997008.
Stop Light—Delco-Remy No. 1997725.

Bulb Specifications

Position	Candlepower	Mazda No.
Headlamps	Sealed Beam	
Park & Frt. Direc. Signal	21-3	1154
Park (Without Signal)	3	63
Instrument, Ign. Lock	1½	55
Beam & Direc. Signal Ind.	1	51
Stop & Tail	21-3	1154
Rear License Plate	3	63
Dome	15	88
Dome (Convertible)	1½	55

MISC. ELECTRICAL

THERMOSTATIC RELAY: Lighting. On switch. Contacts remain closed with 30 amperes, open in 3 minutes with current of 42 amperes at 70°F. Not adj.
Convertible Top—On rear of dash on right side. 30 ampere maximum capacity.

FUSES: Tail & Instrument Light. (1946-47) 9 ampere, (1948) SFE 14 ampere In holder clipped to panel above lighting switch
Stop & Dome Light—('46-47) 9 amp, ('48) SFE 14 ampere On lighting switch
Heater & Defroster—SFE 9 amp. each. In clip on instrument panel brace at steering column.
Direction Signal—SFE 9 amp. In connector in feed wire from ignition switch at panel brace.

HORNS: Delco-Remy No. 1999519 (Low Note), 1999520 (High Note). Vibrator type, blended tone, twin horns operated by relay.

Type	Current (at 6 volts)	Air Gap
1999519 (Low Note)	19-21 amperes	.044-.049"
1999520 (High Note)	18-20 amperes	.034-.039"

►**'46 Horn Ring Rattle & Failure of Horn to Blow (Deluxe Models) Correction**—*See Pontiac Shop Notes.*

►**'46 Horn Lead Wear Correction**—Blowing of horns when turning corners or when car is jarred may be caused by steering column shaft wearing through insulation of horn button lead at point where it enters steering column jacket To correct this trouble (on first cars with rubber grommet in horn lead hole), remove and discard rubber grommet, install new horn button lead, No. 266918, which has 4-inch piece of protecting loom at point where wire enters jacket

Horn Relay: Delco-Remy No. 1116775.
Contact Gap— 025". **Air Gap**—.015" (closed).

ENGINE

ENGINE SPECIFICATIONS: Own. Eight Cylinder, "L" Head type.
Bore—3¼". **Stroke**—3¾".
Displacement—248 9 cubic ins **Rated HP**—33 8.
Developed Horsepower—107½ at 3700 RPM.
Compression Ratio—6 5-1 Std. 7.5-1 Optl.
Compression & Vacuum Reading—*See Tune-up data.*

ORIGINAL BORE & PISTONS: *See Pontiac Shop Notes.*

POWER PLANT ASSEMBLY REMOVAL & FRONT INSULATOR REMOVAL: *See Pontiac Shop Notes.*

TIGHTENING TORQUES: *See Pontiac Shop Notes.*

CYLINDER HEAD: Tightening Torque & Cylinder Head Diagram—*See Pontiac Shop Notes.*

PISTONS: Chrome nickel alloy, electro-plated type. Pistons have 20 oil drain holes in oil ring groove (same as 1942 type). NOTE—Pistons are plated with lead-tin alloy or pure tin (lead-tin alloy darker color) and cannot be ground. Use finished replacement pistons.
Length—3 19/32". **Weight**—24.7 ozs. (stripped).
Removal—Pistons and rods removed from above.
Clearance—Top Land .0165-.0285". Skirt .002"

Fitting New Pistons:—Use .0015" x ½" feeler between piston and cylinder wall. Pull to withdraw feeler 10-20 lbs. Taper & out-of-round limits .0005" max.

Replacement Pistons: *See Pontiac Shop Notes.*

PISTON RINGS: Two tapered-face compression rings above pin, one slotted oil control ring below pin. Oil ring groove has 20 oil drain holes.
NOTE—Rings are cadmium-plated or tin-plated.

Ring	Width	End Gap	Side Clearance
Compr. (#1, 2)	3/32"	.008-.015"	.0015-.003"
Oil (#3)	3/16"	.006-.013"	.001-.0025"

Installing Rings—Install compression rings with mark "TOP" upward.

Replacement Rings: Furnished in Oversizes of .005", .010", .020", .030".

PISTON PIN: Diameter 15/16". Length 2⅞".
Pin is shot-peened type (shot-peened before final grinding and lapping). Pin is locked in one piston boss by self-locking lockscrew and opposite boss is slotted to permit pin movement.
Pin Fit in Piston—*See Pontiac Shop Notes for data.*
Pin Fit in Rod Bushing—.0004-.0006" clearance.

Pin Removal & Installation: *See Pontiac Shop Notes.*

Replacement Pins:—.001" (red & brown), .003" (red), .005" (blue) oversize Paint marked on end of pin

CONNECTING ROD: Weight 31.7 ozs. Length 7 9/16".
Piston Pin Bushing (Upper Bearing)—Split aluminum bronze bushings. *See Pontiac Shop Notes for data.*
Lower Bearing Diameter—2"
Lower Bearing—Thin type, interchangeable steel-backed, babbitt-lined type.
Clearance—.0001-.0021". **Sideplay**—.007-.012".

Bearing Adjustment:—None (no shims). *Refer to Pontiac Shop Notes for Connecting Rod Lower Bearing.*

Installing Rods: No offset (can be installed either way).
NOTE—Rods and bearing caps marked to insure correct reassembly (marks must be together). These marks do not indicate cylinder in which rod used.
CAUTION—Keep each connecting rod and its bearing cap together.

CRANKSHAFT: Five bearing type with integral counterweights and vibration dampener on forward end.

►**Flywheel to Crankshaft Bolts (on Synchro-Mesh Transmission)**—¾" hex head bolts (No. 508463) or 1" hex head bolts (No 510832) are used Either type can be used for replacement but **head sizes must be alike on all bolts or engine balance will be destroyed.**

►**Vibration Dampener (Harmonic Balancer) Remov**—*See Pontiac Shop Notes.*
Bearing Diameters—#1, 2⅜"; #2, 2 13/32"; #3, 2 7/16"; #4, 2 15/32"; #5, 2½".
Bearings—Thin type, removable, steel-backed, babbitt-lined. Upper and lower bearing halves alike.
Clearance—.0003-.0023".

►**Rear Main Bearing Oil Seal Renewal**—*See Pontiac Shop Notes.*

Bearing Adjustment:—None (no shims). *Refer to Pontiac Shop Notes for Bearing Removal & Fitting.*

Replacement Bearings: Standard size & .001" Undersize.

End Thrust: Taken by #4 (rear intermediate) bearing. **Endplay**—.003-.008".

CAMSHAFT: Five bearing type with non-adjustable (two sprocket) chain drive.
Camshaft Removal & Timing Cover Oil Seal Servicing—*See Pontiac Shop Notes.*
Bearing Diameters—#1, 2"; #2, 1 31/32"; #3, 1 15/16"; #4, 1 29/32"; #5, 1⅞".
Bearings—Steel-backed, babbitt-lined bushings
See Pontiac Shop Notes for bearing finished sizes.
Clearance—.0015-.0025" (new).

CONTINUED ON NEXT PAGE

ENGINE

C NTINUED FROM PRECEDIN PAGE

End Thrust:—Steel thrust plate behind camshaft sprocket. Replace if worn. Endplay—.002-.005".

Timing Chain: Morse. Width ¾". Pitch ⅜". Length 21" or 56 links.
Timing Chain Installation—*See Pontiac Shop Notes.*

Camshaft Setting:—Sprockets marked. Mesh chain with sprockets turned so that '0' marks are adjacent and in line with a straightedge across shaft centers.

VALVES:	Head Diameter	Stem Diameter	Length
Intake	1 15/32"	.310-.311"	5.53"
Exhaust	1 11/32"	.310-.311"	5.53"

	Seat Angle	Lift	Stem Clearance
Intake	30°	19/64"	Free fit to .0006"①
Exhaust	45°	19/64"	Free fit to .0006"①

①Guides tapered (.0006" max. clearance at bottom).

Valve Guides:—Removable, tapered guides (.001" taper to the inch with greatest clearance at top). Use Tool J-2542 for removing valve guides.
Exhaust Guide Counterbore—Exhaust guides are counterbored to a depth of ¾". Use Tool Number J-2122 to clean out counterbore when servicing valves. This tool can be used to increase counterbore (from ½") if earlier type guides having this shallower counterbore are used.

►NOTE—On 1946 cars before Eng. No. 8-36900, exhaust guide counterbore was 31/32" deep. Any stocks of this type guide, Part No. 509041 (with 31/32" counterbore), are satsifactory for service. New exhaust guides will have the shallower (¾" plus 1/32". minus 0") counterbore depth.
IMPORTANT—Measure clearance at bottom end. Valve should just fall through guide of own weight when started in guide. NOTE—Guides should be cleaned with Tool KMO-122 valve guide cleaner (blade type). Service guides not tapered (install and ream to fit valve stems with Reamer P.R.131).

Valve Springs:—Intake and exhaust springs identical. Install with two closed coils at top and dampener on top of each spring. Use new dampeners whenever removed from spring. **Free Length**—2 9/16".

	Spring Pressure	Spring Length
Valved Closed	59½ lbs.	1 29/32"
Valve Open	101 lbs.	1 19/32"

Valve Lifters:—Barrel type, cast-iron. Guide holes reamed in block. Lifters furnished .005" oversize (use pilot reamer J-706-P when reaming holes to maintain alignment—valve guides must be removed, use Valve Guide Removing Tool J-2542).
Clearance—Free fit. Lifter should just move freely with finger touch.

VALVE TIMING

Tappet Clearance:—.011-.013" all valves (engine warm). Use .011" feeler as 'go' gauge, .013" as 'no go'. NOTE—Car manufacturer recommends .013" exhaust clearance for sustained high speed driving.

Valve Timing:—See Camshaft Setting above.
Intake Valves—Open 5° BTDC. Close 39° ALDC.
Exhaust Valves—Open 45° BLDC. Close 5° ATDC.
Valve Timing Check—With .015" tappet clearance #1 intake valve should open with #1 piston 5° or .0089" before top dead center with first straight line f flywheel mark '/IGN.ONE/' slightly past indicator in left front face of flywheel housing. Reset tappet clearance .011-.013" (warm).

LUBRICATION

Engine Oiling System: Pressure to main bearings, connecting rod lower bearings and piston pins (rifle-drilled rods), camshaft bearings, and timing chain. Oil pump mounted externally on right side of crankcase.
Crankcase Capacity—5 qts. (refill), 6 qts. (dry).
Normal Oil Pressure—35-45 lbs. at 40 MPH. with warm oil (10-30 lbs. idling).
Oil Pressure Regulator—On oil pump. Opens at 40 lbs. Non-adjustable. NOTE—Replace regulator spring if free length less than 2 5/16".

Oil Pump: Gear type. On right side of crankcase.
Oil Pump Servicing—*See Pontiac Shop Notes.*

Oil Cleaner: Pontiac precipitation type (in crankcase). **Servicing**—*See Pontiac Shop Notes.*

Oil Pressure Gauge: AC ('46) 1506803, ('47) 1507056, ('48) 1507221. Bourden Tube (not electric).

Crankcase Ventilation: Filter element in oil filler cap (inlet). Outlet pipe at valve compt. cover on right rear side of engine (cars with oil bath air cleaner equipped with 3-piece outlet pipe containing filter element).
Oil Filler (Crankcase Ventilator) Cap Servicing—Wash filter element and re-oil by dipping in engine oil when servicing air cleaner.
Filler cap must be installed with air opening in cap toward front of car and seam in line with groove in tube (may cause excessive oil consumption if installed backward).
Crankcase Ventilator Outlet Pipe—On cars with Oil-bath type Air Cleaner, special 3-piece ventilator outlet pipe used which has copper gauze type air cleaner in container section. Wash and re-oil filter element when servicing air cleaner.

COOLING

Cooling System: Pressure type with pressure valve (relief valve) in radiator filler cap. Positive circulation with water pump on front of engine and water distributing tube in cylinder block.
Capacity—19½ qts. (21¼ with Underseat Heater).
Pressure Valve AC No. 846740 (Radiator Filler Cap). Opens at 4 lbs. (3¼-4¼ lbs.).

Water Pump: Packless type with sealed ball bearing shaft. *See Water Pump Section for complete data.*
Removal—Drain cooling system, remove hose connection at pump, loosen belt adjustment and remove belt, take out water pump mounting bolts and lift pump out.
Belt Adjustment—*See Generator Belt Adjustment.*

Thermostat:—Harrison. In cylinder head outlet.
Setting—Starts to open 151° F. Fully open 173° F.

Temperature Gauge: AC Electric type.
Dash Unit—('46) 1511661, ('47) 1511874, ('48) 1512027.
Engine Unit—('46-47) 1511734, ('48) 1512015.
See Miscellaneous Section for complete data.

CLUTCH

Inland. Single Plate, "Diaphragm", dry disc type with Long Driven Member Model 9½CF-TS (except Taxicab), Model 10CF-CS (Taxicab).
See Clutch Section for complete data.
NOTE—Driven Members on 6 Cyl. and 8 Cyl. cars are same size but **must not be interchanged.** May be identified by stenciled notation on facings and color marking of torsional springs in hub as follows:

	Facing Mark	Spring Color
6 Cyl. Models	41-42 6 Cyl.	Orange & Dark Blue
8 Cyl. Models	41-42 8 Cyl.	Brown & Blue

Facings—Moulded type, 2 required. I. D. 6" (All Models); O. D. 9½" (except Taxicab), 10" (Taxicab); Thickness ⅛".

Pedal Adjustment:—Free travel ⅞-1⅛" (adjusting nut on link at clutch fork). Pedal height to lower face of pedal should be 4¾" (Torpedo), 5 3/16" (Streamliner). Adjust by means of stopscrew at lower end of pedal arm.

►**1946 Clutch Pedal Shaft Installation Change**—*See Pontiac Shop Notes for new type mounting (used on later 1946 cars) to correct movement of clutch or brake pedal when other pedal is depressed.*

Removal: Remove Transmission (see Transmission Removal below), remove clutch bearing support spring washer (in rear face of clutch housing), remove clutch housing bottom cover and control shaft inner bracket. Remove release bearing support and release bearing (see Clutch Release Bearing & Support data), tapping the support from inside the clutch housing to aid in removing (CAUTION—avoid striking tubular portion of support). Mark flywheel and clutch cover (to insure reinstallation in same position to maintain balance), remove clutch cover mounting bolts evenly, move clutch assembly away from flywheel at bottom and withdraw Driven Member, lower cover assembly and withdraw it through bottom of housing.

►**Removal of Excess Release Bearing Lubricant to correct clutch sticking**—If recess in bore on release bearing over-lubricated when clutch assembly installed, excess lubricant may be found causing clutch sticking. Clean our excess lubricant found at the following points: transmission drive gear, driven plate hub, clutch facings, pressure plate and and cover assembly, release bearing support tube, fulcrum points of release fork, and recess in bore on release bearing (do not wash bearing, bearing is "sealed" type). Lubricate clutch parts exactly as described under Installation Note following to avoid above condition.

Clutch Installation Note—Install new felt oil seal against shoulder ahead of oil slinger retaining ring on Transmission Main Drive Gear (will bear against flared end of release bearing support when installed). This supersedes original position (on 1946 cars) where seal fitted in recess on Drive Gear. Lubricate seal with engine oil before transmission installed. Coat entire length of outer diameter of release bearing support tube with grease. Lubricate release fork fulcrum points with a very light coat of grease. Apply light coat of Lubriplate on main driving gear splines. Use new paper gasket between support flange and clutch housing, make certain that flange is not bent or distorted (will cause misalignment of transmission).
CAUTION—Make certain that correct type Driven Member is used (see Note above).

Clutch Release Bearing & Support: *See Pontiac Shop Notes for description.*

►**1946 Release Bearing Noise Correction**—*See Pontiac Shop Notes for new type Support Tube to correct noise due to movement of bearing on early 1946 support tube.*

TRANSMISSION

Own Make. All helical gear. Constant-mesh synchro-mesh (Second & High), sliding gear (Low & Reverse). *See Transmission Section for complete data.*

Transmission Control: Pontiac "Safety-shift" remote control type with gearshift lever on steering column. *See Transmission Section for complete data.*

Removal:—Disconnect speedometer cable, gearshift selector and control rods from transmission. Disconnect rear universal (wire trunnion) and pull out propeller shaft. Remove upper transmission mounting screws, install guide pins (J-851), remove lower screws, pull transmission to rear and lower out of car.

Installation Note—Use guide pins installed in two upper transmission mounting holes to assist in sliding transmission straight forward into place (to avoid damage to clutch release bearing support). NOTE—These guide pins may be made from ½-13 American National Thread bolts by cutting heads off and reducing over-all length to 4¼".

HYDRA-MATIC DRIVE

OPTIONAL EQUIPMENT

Own Make. Consists of fluid coupling and 4 speed automatic transmission.
See Transmission Section for complete data.

Lubrication—Check fluid level in transmission every 2000 miles (lubrication period). Drain and refill every 15000 miles. Use only GM Hydra-Matic Drive Fluid.

Capacity—11 qts. (drain oil pan and torus cover and refill). **12 qts.** (drain, disassemble, assemble transmission and refill).

Checking Fluid Level—Roll back floor mat, remove cover on floor board, set hand brake and start engine, set control lever in "DR" position, allow to run about 2 minutes. Remove indicator, wipe dry, then return and check level of fluid with indicator. Add fluid until level is at "FULL" mark.

►*CAUTION—Always check oil level when oil is hot, engine idling, hand brake tightly set and control lever in "DR" position.*

►**Oil Level Indicator Change**—A new indicator, Part No. 8605800 (stamped on blade—earlier type not marked) reduces capacity approx. 1 pint providing slightly lower fluid operating level to reduce fluid foaming when oil is hot.

Hydra-Matic Linkage Adjustment—*See Hydra-Matic Drive article in Transmission Section.*

Removal: *See Hydra-Matic Drive article in Transmission Section.*

UNIVERSALS

Mechanics Model 2CR. Roller bearing type, 2 used. *See Universal Section for complete data.*

►**1947-48 CAUTION**—Rear universal nut controls rear axle pinion bearing "pre-load" (must be adjusted whenever nut is loosened). *See Pontiac Rear Axle article in Rear Axle Section for complete data.*

NOTE—Driveshaft is one-piece type (slip joint on transmission mainshaft, ahead of front universal).

REAR AXLE

1946 Type—Same as 1942. Hypoid gear, semi-floating type. This type axle has three setscrews equally spaced around pinion housing.
See Rear Axle Section for complete data.

1947-48—New hypoid gear, semi-floating type. Design similar to 1946 type except that pinion is mounted on two taper roller bearings and companion flange nut controls pinion bearing "preload." No setscrews are used.

►CAUTION—Rear universal companion nut controls pinion bearing "pre-load".
See Rear Axle Section for complete data.

Ratios—As shown. Axles may be identified by paint mark on end of right hand axle shaft.

Model	Ratio	Ident. Paint Mark
Torpedo Std.	4.1-1	Green
Streamliner Std.	4.3-1	White
Hydra-Matic (All)	3.63-1	Violet
All (Econ.)	3.9-1	Red
All (Heavy Duty)	4.55-1	Yellow

Backlash—.003-.012" (new), slightly over .012" (worn).

Removal:—Disconnect rear universal (wire trunnions, do not disengage spline joint at transmission), remove axle shafts, carrier flange mounting screws and carrier.

►**1947-48 CAUTION**—Rear U-joint companion flange nut controls pinion bearing "pre-load" (must be adjusted whenever nut is loosened).

Axle Shaft Removal:—Remove wheel, brake drum, 4 backing plate bolt nuts, static collector, and loosen bearing retainer (do not move backing plate or brake line may be damaged). Pull shaft with puller J-942 (do not drag axle shaft on oil seal).

Wheel Bearing Adjustment—None.

SHOCK ABSORBERS

Delco Model 1947-C,D (front), Model 1044-V (rear). Hydraulic, double acting (front), direct (rear).
See Shock Absorber Section for complete data.

FRONT SUSPENSION

Front Suspension: Independent, linked parallelogram type with coil springs.
See Front Suspension Section for complete data.

Kingpin Inclination—5½-6° crosswise.

Caster—Negative ¾°. Limits Neg. ½° to Neg. 1°.

Camber—0° preferred. Limits Neg. ¼° to Pos. ¼°.

Toe In—0-1/16". Adjust tie rod tubes equally.

Steering Geometry—Inner wheel 23° ± ½°. Outer 20°.

STEERING GEAR

Saginaw. Worm-and-Roller type.
See Steering Gear Section for complete data.

BRAKES

Service: Bendix Hydraulic, Duo-Servo, Single Anchor type with eccentric adjustment. Hand lever applies rear service brakes.
See Brake Section for complete data.

►IMPORTANT SERVICE NOTE—**Brake Drums**—Two different makes are used: 1) Kelsey-Hayes type can be identified by one-piece stamping and flange having a sharp edge; 2) Motor Wheel type consisting of two stampings and rolled flange. **Each pair of drums (on opposite sides of car) front or rear must be of the same type.**

Brake Drum Part Numbers	Front Wheel Left	Front Wheel Right	Rear Wheel
Kelsey-Hayes	507371	507370	505300
Motor Wheel	509221	509220	409176

Drums—Pressed steel with alloy iron liner. Diameter 11".

Clearance—.010" at heel and toe of each shoe.

Lining—Moulded. Width per wheel 2" (front), 1¾" (rear). Thickness 3/16". Length per shoe 9 11/32" (primary), 11 31/32" (secondary).

Braking Power—56% Front, 44% Rear.

Master Cylinder Filling Note—New cars shipped from the factory have master cylinder filled to level ⅞" below top of filler neck and this level is satisfactory for service (cylinders were filled to ½" below top).

Hand Brake: See Service Brakes above.

NoRol: Optional. *See Brake Section for complete data.*

MISC. MECHANICAL

Convertible Top Control: Hydro-lectric type (hydraulic actuation with motor-driven pump supplying oil under pressure for power cylinders).
See Miscellaneous Section for complete data.

HOOD ASSEMBLY

1940-48 MODELS

HOOD LOCK: Alligator type hood with lock handle ('40), release button ('41-48) on instrument panel To release hood, push down on lock handle and press back safety catch on 1940, or pull out on release knob and pull forward on safety catch on 1941-48 cars.

Lock Adjustment (1941-48)—Lock stud should be positioned so that hood locks securely with firm pressure on top of hood (if stud adjusted too high, hood will not lock securely; if stud adjusted too low, hood will rattle). To adjust lock, loosen locknut on upper end of stud, turn stud counter-clockwise to lower stud, clockwise to raise stud, tighten locknut after completing adjustment. Lubricate latch on underside of grille top baffle and control wire in conduit.

1947-48 MODELS

HOOD ALIGNMENT: Raise hood, unhook hinge spring on each side of cowl, loosen three hinge plate to cowl bolts slightly at each plate, loosen four hood latch plate capscrews at front. Close hood, then position hood until aligned properly. Raise hood without disturbing hinge plates on cowl and tighten plate bolts. Hook hinge springs in place, lower hood to permit lock stud to center hood latch plate, raise hood, tighten plate capscrews. If further adjustment required, fenders and grille assembly can be shifted.

1939-42 MODELS

HOOD SIDE PANEL REMOVAL: Separate removable hood side panels used. To remove, take out attaching bolts and screws on upper and lower edges.

FRONT END SHEET METAL

CHAMPION (1939-40)

ENGINE PAN INSTALLATION: Champion 1939-40. To prevent mud and water splashing up on engine from road, special service pans, Front Engine Pan Part No. 199059, and Engine Side Pan Part No. 197183, may be installed as follows:

Engine Front Pan—Place pan in position between two front cross-members with notched edge clearing fuel line, mark mounting hole locations. Drill five mounting holes with 13/64" drill, bolt pan in position.

Engine Side Pan—Place pan in position on left side of engine so that it clears steering gear and clutch housing (pan attaches to upper edge of frame siderail and re-inforcing brace to lower edge), mark mounting hole locations. Drill three 13/64" mounting holes in top edge of frame for pan bolts, one 13/64" hole in lower edge of frame for re-inforcing brace, bolt pan and brace in position.

1939-40 MODELS

FRONT FENDER APRONS & BAFFLES: To correct Complaints of Ignition cutting out due to water splashing from road—Baffles should be installed on Champion cars and aprons should be checked on other models as follows:

Champion Models (1939-40):—Install baffles at front face of frame body brackets under each front fender to seal opening at rear edge of fender aprons. On late 1940 cars, holes are drilled in body bracket for baffle installation. On 1939 and early 1940 cars, drill hole 1" from top face of bracket and 1 7/16" from frame using 7/32" drill. Use special self-tapping screws to attach baffles.

Commander & President (1939-40):—Check shield at rear end of front fender aprons and bend apron so that anti-squeak strip riveted on lower edge of shield contacts forward face of front frame body bracket tightly. This will prevent water being deflected from bracket onto engine.

IMPORTANT SERVICE CAUTION—On cars before Serial No. 4157417 (Comm. 10A), 7134832 (Pres. 6C), check apron on both sides of car for interference with brake tubes located below lower edge of apron and bend apron in so that clearance is at least ¼".

ENGINE REMOVAL

CHAMPION (1947-48)

ENGINE REMOVAL: For Oil Pan Removal & Engine Servicing. Drain cooling system, position car under chain hoist, disconnect and remove parts as follows:

1. Remove hood (disconnect at hinge arms).
2. Remove center cylinder head capscrew and install lifting eyebolt (cylinder head must be in place on block). Attach chain hoist to eyebolt and take up slack in hoist chain.
3. Remove two clutch housing to engine rear plate dowel bolts and nuts, and 4 housing to engine plate bolts and nuts on lower edge. Remove 3 capscrews at top of housing by working through opening in front floor (housing will be secured by one bolt and nut at oil pressure pipe).
4. Disconnect battery ground at battery.
5. Remove 3 radiator core-to-core support screws on left side and free headlamp wiring harness from clips on radiator and fender.
6. Remove 2 water outlet-to-cylinder head capscrews.
7. Disconnect wires at generator and primary lead at ignition coil.
8. Disconnect accelerator cross shaft from push rod and heat indicator from cylinder head.
9. Take off starter (not necessary to disconnect wires) and place to left of hand brake cable.
10. Remove water pump inlet hose and 3 radiator core-to-core support screws on right side.
11. Take out radiator core, rotate fan and move headlamp wiring harness to clear radiator inlet and outlet.
12. Remove 4 fan capscrews, remove fan and pulley. Lay headlamp harness on top of core support.
13. Disconnect flexible fuel pump connection from front gasoline line, and exhaust pipe from manifold, lower pipe off manifold studs.
14. Loosen engine breather pipe capscrew. Disconnect windshield wiper hose at manifold and flexible line from upper oil pressure gauge pipe.
15. Remove one bolt and nut on clutch housing at oil pressure pipe.
16. Remove front engine support from front frame cross-member and front engine insulator.
17. Push car to rear to free engine from clutch housing, slowly raise engine while moving forward, tilting engine until clutch clears transmission main drive gear shaft, and engine rear plate clears center tie rod, then push engine to rear, turning engine 45° to right, finally hoist engine slowly from chassis.

NOTE—Engine should be placed on an engine stand for ease in performing service work.

Engine Installation Note: When installing engine, align clutch driven plate with pilot bearing and lubricate bearing with wheel bearing grease. Place car in high gear so that transmission main drive gear can be rotated by moving car for engaging clutch driven member. Use two ¼" x 8" tapered drifts to align clutch housing and engine rear plate, coat two clutch housing dowel bolts with white lead, install these bolts and tighten in place with nuts.

CAUTION—Do not drive these dowel bolts into place.

Engine Rear Mounting Note—See same note for Commander model (below) for rear engine mounting installation directions.

COMMANDER (1947-48)

ENGINE REMOVAL: For Oil Pan Removal & Engine Servicing. Drain cooling system, position car under chain hoist, disconnect and remove parts as follows:

1. Remove hood (disconnect at hinge arms).
2. Disconnect battery ground from cylinder head.
3. Remove exhaust pipe hanger ahead of muffler and bracket and clamp from pipe at clutch housing. Disconnect exhaust pipe at manifold.
4. Remove transmission (see Transmission Removal on car model page).
5. Disconnect clutch operating shaft from throwout shaft by taking out cotter pin and inner clevis pin from sleeve next to clutch housing and pulling shaft and sleeve toward frame.
6. Take out mounting bolts and remove rear engine mounting lower cushions and spacers and front engine mounting insulator-to-support bolts.
7. Remove center cylinder head capscrew and install lifting eyebolt (cylinder head must be in place on block). Attach chain hoist to eyebolt and take up weight of engine.
8. Remove right horn from cowl (not necessary to disconnect horn wires) and place on wiper motor.
9. Remove engine breather pipe. Disconnect windshield wiper hose at manifold and flexible line from upper oil pressure gauge pipe. Disconnect flexible fuel line coupling at fuel pump.
10. Disconnect radiator inlet and outlet hoses. Remove 6 radiator core-to-core support screws and free headlamp wiring harness from clips on radiator and fender.
11. Take out radiator core, rotate fan to clear radiator inlet and outlet. Remove fan and pulley.
12. Disconnect wires at generator and primary lead at ignition coil. Remove magnetic switch from starter without disconnecting wires and place switch to left of hand brake cable.
13. Disconnect accelerator cross shaft at push rod and heat indicator from cylinder head.
14. Push car to rear slowly, raise front of engine and maneuver front end into core support opening, then push engine to rear (swing rear end to right), finally hoist engine slowly from chassis.

NOTE—Engine should be placed on an engine stand for ease in performing service work.

Engine Installation Note: When installing engine, align clutch driven plate with pilot bearing and lubricate pilot bearing with wheel bearing grease.

Engine Rear Mounting Note—When installing rear mountings, make certain that spacer tube in place in biscuit type rubber mountings and tighten these mounting bolts with torque of 25-30 ft. lbs.

CAUTION—Spacer tube regulates compression of the rubber biscuits and must not be shortened or omitted. Excessive tightening of the bolts will damage spacer tubes.

CYLINDER HEAD

ALL MODELS

CYLINDER HEAD GASKET: Coat lower face of gasket and face of cylinder head with Perfect Seal Gasket cement before installing (use sparingly and see that it does not enter screw holes and water passage openings).

CYLINDER HEAD INSTALLATION: Use Torque Indicating Wrench to tighten cylinder head capscrews, tighten in correct sequence as shown in the diagrams. Tighten heads as follows:

Cast Iron Heads—With engine cold, tighten all nuts evenly to correct tension. Then run engine until it is thoroughly warmed up and recheck all nuts (additional tightening may be necessary for correct tension).

Aluminum Heads—With the engine cold, tighten all nuts to correct tension. Run engine until thoroughly warm, allow engine to cool off, and then recheck all nuts. Do not tighten aluminum heads when warm.

Tightening Torque—See Tightening (Torque Wrench) Specifications below.

STUDEBAKER CHAMPION

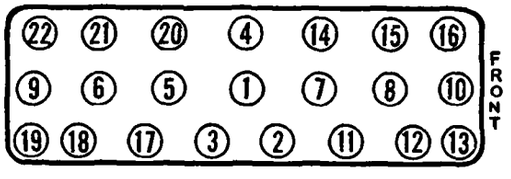

STUDEBAKER DICTATOR & COMMANDER

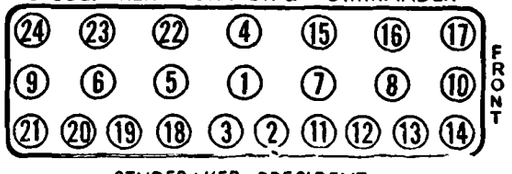

STUDEBAKER PRESIDENT

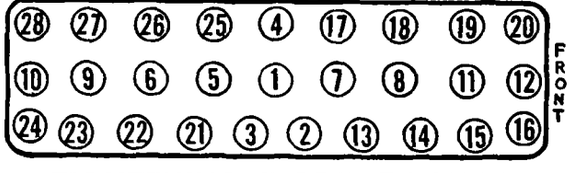

TIGHTENING (TORQUE WRENCH) SPECIFICATIONS

CHAMPION (1939-46)

	Ft. Lbs.	In. Lbs.
Cylinder Head Cap Screws	50-54	600-650
Main Bearing Cap Screws	91⅔	1100
Connecting Rod Cap Bolts	25-27	300-325

COMMANDER & PRESIDENT (1936-42)

	Ft. Lbs.	In. Lbs.
Cylinder Head Cap Screws	83⅓	1000
Main Bearing Cap Screws	91⅔	1100
Connecting Rod Bolt Nuts	54	650

CHAMPION (1947-48)

	Ft. Lbs.	In. Lbs.
Cylinder Head Cap Screws	46-50	550-600
Connecting Rod Bolt Nuts	28-32	336-384
Vib. Dampener Cap Screw	130-140	1560-1680
Rear Spring U Bolt Nut	47-50	565-600
Front Spring U Bolt Nut	75-80	900-960
Valve Tappet Adjusting Screw		25 min.

COMMANDER (1947-48)

	Ft. Lbs.	In. Lbs.
Cylinder Head Cap Screws	80-85	960-1020
Connecting Rod Bolt Nuts	52-54	624-648
Vibration Dampener Nut	160-170	1920-2040
Rear Spring U Bolt Nut	75-80	900-960
Front Spring U Bolt Nut	80-85	960-1020

CHAMPION & COMMANDER (1947-48)

	Ft. Lbs.	In. Lbs.
Main Bearing Cap Screws	88-93	1050-1115
Piston Pin Clamp Screw Nut	20-25	240-300
Spark Plugs (14 mm.)	25-30	300-360
Rear Axle Shaft Nut	120-130	1440-1560
Front Susp. Arm Bushing	170	2040
Flywheel Bolt Nut	33-35	396-420
Timing Cover Bolts & Screws	13-17	156-204
Clutch Cover Mounting Screw	13-15	156-180
Rear Engine Mounting	25-30	300-360

ORIGINAL BORE & PISTONS

1936-48 MODELS

ORIGINAL BORE & PISTON SIZES: Bore Sizes. Marked by figure stamped on top face of cylinder block next to each cylinder bore as follows:

Champion Mark	Champion Size	Commander Mark	Commander Size	President Mark	President Size
0	3.000"	25	3.3125"	05	3.0605"
05	3.0005"	3	3.313"	1	3.061"
1	3.001"	35	3.3135"	15	3.0615"
15	3.0015"	4	3.314"	2	3.0620"
2	3.002"	45	3.3145"	25	3.0625"
25	3.0025"	5	3.315"	3	3.063"

Dictator (1936-37)

Mark	Size
8	3.248"
85	3.2485"
9	3.249"
95	3.2495"
0	3.250"

Original Pistons—Stamped with size of cylinder bore in which pistons are installed.

Replacement Pistons—Stamped figure on top indicates actual size of piston. Pistons furnished std. & .002", .004", .010", .015", .020", .030" oversize.

PISTONS

1942 MODELS

REPLACEMENT PISTONS: Finished ferric-alloy pistons furnished for replacement on 1942 models as follows:

Champion 4G

Size	Limits	Part No.
Standard①	3.000-3.003"	515746
.002" Oversize①	3.0035-3.0055"	515747
.004" Oversize	3.0065-3.0085"	515748
.010" "	3.0125-3.0145"	515749
.015" "	3.0165-3.0185"	515750
.020" "	3.0215-3.0235"	515751
.030" "	3.0315-3.0335"	515752

Commander 12A

Size	Limits	Part No.
Standard①	3.312-3.315"	515759
.002" Oversize①	3.3155-3.3175"	515760
.004" Oversize	3.3185-3.3205"	515761
.010" "	3.3245-3.3265"	515762
.015" "	3.3285-3.3305"	515763
.020" "	3.3335-3.3355"	515764
.030" "	3.3435-3.3455"	515765

President 8C

Size	Limits	Part No.
Standard①	3.060-3.063"	515772
.002" Oversize①	3.0635-3.0655"	515773
.004" Oversize	3.0665-3.0685"	515774
.010" "	3.0715-3.0735"	515775
.015" "	3.0765-3.0785"	515776
.020" "	3.0815-3.0835"	515777
.030" "	3.0915-3.0935"	515778

①—Pistons in these 2 sizes furnished in .0005" steps. All other oversizes are within limits shown above.

1946-48 MODELS

REPLACEMENT PISTONS: Finished aluminum alloy pistons (with fitted piston pins) are furnished for replacement in the sizes listed below.

NOTE—Standard and .002" Oversize Pistons furnished in .0005" gradations. All pistons are within limits shown.

Champion 5G, 6G, 7G
(Before Engine No. 354, 186)

Size	Limits	Part No.
Standard	3.0000-3.0030"	512409
.002" Oversize	3.0035-3.0055"	512410
.004" Oversize	3.0065-3.0085"	512411
.010" Oversize	3.0125-3.0145"	512412
.015" Oversize	3.0165-3.0185"	512413
.020" Oversize	3.0215-3.0235"	512414
.030" Oversize	3.0315-3.0335"	512415
.040" Oversize	3.0415-3.0435"	522112

Champion 7G
(After Engine No. 354, 186)

Size	Limits	Part No.
Standard	3.0000-3.0030"	524316
.020" Oversize	3.0215-3.0235"	524296
.030" Oversize	3.0315-3.0335"	524297
.040" Oversize	3.0415-3.0435"	522112

Commander 14A, 15A
(Before Engine No. H-252, 223)

Size	Limits	Part No.
Standard	3.3120-3.3150"	521109
.002" Oversize	3.3155-3.3175"	521683
.004" Oversize	3.3185-3.3205"	521684
.020" Oversize	3.3335-3.3355"	521687
.030" Oversize	3.3435-3.3455"	521688
.040" Oversize	3.3535-3.3555"	522119

Commander 15A
(After Engine No. H-252, 223)

Size	Limits	Part No.
Standard	3.3120-3.3130"	524315
.020" Oversize	3.3335-3.3355"	524311
.030" Oversize	3.3435-3.3455"	524312
.040" Oversize	3.3535-3.3555"	522119

PISTON PINS

CHAMPION (1939-48)
COMMANDER (1947-48)

PISTON PIN REMOVAL & INSTALLATION: Champion—Tapered pin and nut secures pin in rod. To remove pin, place rod and piston on assembling fixture No. J1293, take nut off and install on opposite end of pin and turn nut down pulling pin out. To install, place pin on fixture, slip piston and rod on pin, tighten pin nut (rock rod to insure lock pin seats properly). One nut only used on lock pin.

CONTINUED ON NEXT PAGE

C NTINUED FR M PRECEDING PAGE

CONNECTING ROD & BEARINGS

1939-48 MODELS

CONNECTING ROD 'PALNUT' INSTALLATION: Used n all models. Consists of a special patented locknut installed on top of regular nut instead of cotterpin. To install Palnut, tighten regular nut properly (see Torque table), install Palnut with open face out (away from regular nut), tighten Palnut until it just contacts regular nut, then tighten Palnut ⅓ turn additional to lock it in place.

VIBRATION DAMPENER

PRESIDENT (1936-42)

VIBRATION DAMPENER: President. Consists of a spring-loaded flywheel mounted on four tapered rubber cushions between a friction facing on the fan pulley and a damper plate on the front end of the crankshaft. The flywheel oscillation is controlled by the friction of the friction facing and the compression of the rubber cushions. Flywheel radial movement is controlled by a fibre ring on the fan pulley hub. Spring tension is adjusted by shims under spring in flywheel, compression of rubber cushions adjusted by shims on bolt sleeve between cushion and damper plate.

Removal & Installation:—Dampener can be removed as an assembly (without disturbing adjustment) by removing two of the four retaining screws in the damper plate (do not disturb other two screws). Use Puller HM-925 to remove dampener assembly by installing two puller screws in holes from which dampener retaining screws removed.

NOTE—When installing crankshaft nut, make certain that copper-asbestos gasket in place under nut (necessary to prevent oil leaks at this point).

Servicing:—If dampener disassembled for replacement of rubber cones or springs, these parts must be adjusted when re-installed as follows:

Rubber Cones—Assemble friction facing, damper flywheel, bolt sleeves, and rubber cones on top of fan pulley. Install one heavy washer on top of each cone. Press cones and spacer sleeves firmly down in position, measure amount spacer projects above face of heavy washer on cone by using feeler gauge (build up feeler gauge thickness until top surface of feeler even with top edge of spacer sleeve). Measure total thickness of feeler gauge and heavy washer with micrometer, select two heavy washers and shims (as required) equal to the micrometer reading plus .015" (to insure correct cone compression of .015"), install this shim and washer pack on top of the rubber cone when installing the damper plate and retaining screws, tighten screws securely (sleeves limit cone compression to correct figure).

Damper Springs—Shims are installed in flywheel under each tension spring so that spring pressure is 50 lbs. each or 200 lbs. total. If new springs installed, use shim pack used under old spring.

CHAMPION (1942-48)
COMANDER (1938-48)

VIBRATION DAMPENER: Dampener consists of a flywheel mounted on two rubber discs (discs have insulating buttons at pilot rivet holes) mounted on the crankshaft pulley hub at the forward end of the crankshaft and retained by a larg nut on the end of the crankshaft. Compression of rubber discs is limited by length of crankshaft pulley hub (when retaining nut drawn up securely) and no adjustment required. If dampener does not operate correctly, replace rubber discs.

CHAMPION (1939-40)

OIL LEAKS AT FAN DRIVE PULLEY (CHAMPION): To correct oil leakage at this point on 1939 and 1940 cars, install special copper asbestos gasket No. 199108 on front face of fan drive pulley, install new heavier plain washer No. 189959 on gasket, and use new star type lockwasher on retaining screw. These parts are installed at factory on later 1940 cars.

CAMSHAFT & BEARINGS

CHAMPION (1939-46)

CAMSHAFT REMOVAL: Champion. To remove camshaft, use Puller HM-925 to remove vibration dampener, take out screws and remove timing gear cover. Remove oil pump and drive shaft, take off valve tappet cover plates, remove cylinder head. Install special valve lifter supports (see Note below) on each valve lifter (lifters are mushroom type and must be blocked up so as to clear cam lobes). Remove two capscrews retaining camshaft thrust plate (insert socket wrench between camshaft gear spokes), pull camshaft gear and camshaft out as an assembly. When installing camshaft, do not tighten timing gear cover screws until after crankshaft pulley has been installed so as to secure correct alignment of pulley hub and oil seal washer in gear cover.

NOTE—Valve lifter supports should be made of hardened strip steel in inverted 'U' shape .750" high and 21/32" wide (inside). A ⅜" slot, 9/16" deep, with rounded end and 1/16" radius corners, should be cut in top of support and front corners should be beveled ⅛" for distance ⅜" back from front edge. This will allow supports to be tipped down to engage lifters and will raise lifters sufficiently to clear cams when supports pushed in place.

COMMANDER (1939-42)

CAMSHAFT REMOVAL: Same as Champion except that valves, springs, and lifters are removed. Lifters are barrel type and can be removed from above after adjusting screw has been taken out.

PRESIDENT (1939-42)

CAMSHAFT REMOVAL: Same as Champion except that valve tappet and guide assemblies are removed by taking out screws in each assembly. When reinstalling assemblies, make certain that gaskets in place and oil holes in gaskets and block are aligned.

1947-48 MODELS

CAMSHAFT REMOVAL (With Engine out of Car): Remove vibration dampener (Puller HM-925), remove timing gear cover, pull crankshaft gear (Puller HM-925). Remove cylinder head, valves, valve springs, and oil pump. Invert engine so that valve lifters will not interfere with camshaft removal. Remove two capscrews and lockwashers in timing gear thrust plate, pull camshaft straight out through front of engine.

1947-48 MODELS

CAMSHAFT BUSHING INSTALLATION: Use Tool J-2036-A to remove old bushings and to install new bushings.

1947-48 MODELS

CAMSHAFT ENDPLAY: Endplay regulated by thickness of spacer installed on camshaft directly behind timing gear and is equal to amount by which thickness of spacer exceeds thickness of thrust plate bolted on cylinder block. When installing new parts, measure both thrust plate and spacer with a micrometer, select parts so that endplay is .004-.006" (spacer must be .004-.006" thicker than thrust plate).

TIMING GEARS

1936-48 MODELS

TIMING GEARS: Camshaft Gears (All Models). Holes provided in gears (on Champion and Commander), gear hub recess threaded (President) for gear puller to remove gears. Use tool HM-925 (Champ.&Comm.), HM-865 (President). See Replacement Camshaft Gear Sizes (below) for size selection when replacing gears. Use gear pusher tool HM-861Y (all models) to install gears. CAUTION—Do not drive gears on with a hammer which will loosen gear at hub.

Replacement Camshaft Gear Sizes:—Furnished in three sizes: 'S'—Standard, 'H'—High Limit, 'L'—Low Limit. When replacing gear on engine with considerable service, install next largest camshaft gear size. For reconditioned engine with new camshaft and main bearings use same size gear. Crankshaft gear furnished in standard size only.

Crankshaft Gear (All Models):—Tapped holes provided in all gears for puller. Use Puller HM-925 to remove gear, Pusher HM-861Y to install gear.

VALVE SYSTEM

1936-48 MODELS

VALVE SPRING INSTALLATION: Springs should be installed with closed-coil end of spring upward.

Valve Lifter Tension Spring: Consists of "U" shaped flat spring installed so as to engage lower end of valve stem and upper end of lifter (spring tension keeps lifter on cam lobe). Make certain that tension springs in place when valves and springs installed.

Spring Dampers (Commander & President)—Consist of open-sided cages installed on upper (closed coil) end of each valve spring. Make certain that dampers in place when springs installed.

SELF-LOCKING TAPPETS: Champion—Tappet screws slotted on lower end and require no locknuts. When tappet screws replaced, car manufacturer recommends that screws must check as follows: Pull required to move tappet screw must be 25 in. lbs. minimum (4 lbs. pull on 6" wrench).

OIL PUMP

CHAMPION (1939-48)

OIL PUMP REMOVAL: Oil pump must be disassembled as follows for removal from engine: Remove 4 cover screws and washers, take off cover, gasket, idler gear, and drive gear. Remove woodruff key and "C" washer from driveshaft which allows pump body to be taken off engine (driveshaft stays in engine). Oil pan must be removed in order to take out oil pump driveshaft.

Oil Pump Re-Assembly and Installation: Turn engine over until #1 piston at TDC entering power stroke, "UDC 1-6" flywheel mark (1939-46), vibration dampener mark ('47-48) aligned with pointer. Engage pump shaft with key-way in end of shaft pointing down (key way will rotate to rear when

gears meshed). Install new body gasket and pump body over shaft, insert "C" washer and woodruff key on shaft, install pump drive gear and idler gear. Install cover using a new cover gasket and tighten screws securely. Prime pump with engine oil by disconnecting oil pressure gauge line fitting at pump.

COMMANDER (1947-48)

OIL PUMP REMOVAL: Car manufacturer recommends following procedure for oil pump removal (and vacuum booster pump on 1947 models) with engine in chassis:

1. Drain radiator. Remove hood (disconnect at hinge arms). Position car under chain hoist with hook slightly to left of engine and turn front wheels to extreme right. Disconnect front engine insulator from engine support (take out bolts and nuts).

2. Remove center cylinder head capscrew and install lifting eyebolt. Attach chain hoist hook to eyebolt.

IMPORTANT—Upper end of chain hoist should be approx. 15° to left of engine.

3. Take off starter (not necessary to disconnect wires) and place to left of hand brake cable.

4. Disconnect clutch operating shaft from throwout shaft by taking out cotter pin and inner clevis pin from sleeve next to clutch housing and pulling shaft and sleeve toward frame.

5. Take out mounting bolts and remove rear engine mounting lower cushions and spacers.

6. Remove radiator inlet and outlet hoses.

7. Disconnect oil gauge pipe at pump. Loosen opposite end at flexible coupling and move pipe for clearance (do not bend pipe). On 1947 models with booster pump, remove pipe between vacuum booster (on outer end of oil pump) and manifold tee.

8. Hoist engine until bottom of right side of front engine support insulator is 1⅝" above support. With engine in this position, right front corner of cylinder head should be 17¼" from closest point on right fender skirt (if necessary engine can be levered and blocked into position for this clearance).

9. **On 1947 models,** remove booster body, gasket, and vane, by taking out 8 mounting screws (use 5/32" Allen wrench). Pull rotor off shaft using 3/16" drift punch inserted in hole on side of rotor. Take off booster base plate and gasket. Remove 4 screws in booster adapter plate (use 7/32" Allen wrench), take off plate, gasket and idler gear.

On 1948 models, remove 4 oil pump cover plate screws, take off plate, gasket, and idler gear.

10. Pull pump out of engine with twisting action, keeping pump toward front of engine as far as possible (outer end of shaft will pass between ends of steering knuckle upper control arm-to-frame rear bracket bolts).

11. Remove pin from driveshaft gear, press shaft out of gear and pump body. Pump gear can then be removed from shaft by pressing on outer end of shaft.

Oil Pump Re-Assembly and Installation Note: To reassemble pump, install "C" washer in groove on shaft and woodruff key in slot adjacent to "C" washer groove, press oil pump drive gear on shaft. Install shaft with gear in pump body. Press driveshaft gear on opposite end of shaft with pin hole in shaft and gear in alignment. Use new 3/16" pin to lock gear to shaft (peen pin securely). If new driveshaft and driveshaft gear installed, proper endplay secured by pressing shaft on gear with .003" feeler inserted between gear and upper end of pump body, drill hole in shaft using hole in gear as a guide, ream hole to 3/16", use new 3/16" pin to lock gear (peen pin securely). Use new gaskets throughout. Install pump on engine in same manner as described for 1942 Commander. Prime pump with engine oil by disconnecting oil gauge line fitting at pump.

COMMANDER (1938-48)

OIL PUMP INSTALLATION: Commander. To insure correct rotor position of distributor when pump installed, install pump as follows: Remove distributor, crank engine over (with piston #1 on compression) until vibration damper mark 'UDC/1-6' lines up with pointer on gear case, sight down distributor shaft hole and mesh oil pump drive gear so that drive tongue on shaft is 30° from the horizontal (upper end pointing toward rear of engine) with offset toward the top. Distributor shaft slot should engage drive tongue with rotor turned to #1 segment in distributor cap.

PRESIDENT (1938-42)

OIL PUMP INSTALLATION: President. Turn engine over until piston #1 is on TDC entering power stroke with vibration damper mark 'UDC/1-8' lined up with pointer on gear case, turn pump shaft so that distributor drive tongue is approximately 45° from the vertical (upper end pointing toward rear of engine) with offset toward the top (right side of car when installed). Install pump which will rotate gear so that tongue should be approximately parallel with camshaft and offset away from shaft. Install distributor drive shaft, meshing slot at lower end with oil pump shaft tongue. Slot at upper end of shaft should be at right angles to camshaft and offset toward rear of engine. Distributor shaft tongue should engage with this slot with rotor turned to #1 segment in distributor cap.

OIL PAN REMOVAL

COMMANDER (1939-42)

OIL PAN REMOVAL: Set #2 piston at Top Dead Center for oil pan removal and installation.

1947-48 MODELS

OIL PAN REMOVAL: Car manufacturer recommends that engine be removed from chassis. See ENGINE REMOVAL (preceding).

CHAMPION (1939-48)

OIL PAN INSTALLATION: Check engine front plate gasket and replace if required. Install side pan gaskets with tight fit against front plate gasket. Next install oil pan filler block gasket (use only iron filler block on 1947-48 cars). Do not tighten timing cover to block screws. Install rear oil pan gasket and guide oil pan into place using pilot screws. Tighten oil pan screws. Finally tighten oil pan filler block screws on timing gear cover.

RADIATOR

1939-40 MODELS

RADIATOR REMOVAL: To remove radiator, remove brace rods, uncouple hose connections, free radiator from shell and lift straight up.

CLUTCH NOTES

1939-40 MODELS

CLUTCH RELEASE SHAFT LUBRICATION: Champion 1939-40 Models—To prevent clutch slipping or sticking due to seizing of release shaft, shaft should be oiled at regular intervals as directed for 1941 model (below) and new type bushings can be installed as directed below. To correct squeaks or other noise at frame end of clutch release cross-shaft, felt oiler and cover should be installed on frame at outer end of shaft as directed below.

Champion Release Shaft Bushings (1939-40)—New type porous, oil-impregnated bushings available for service (Part No. 199918—bushing, 196080—bushing and retainer assembly) to correct sticking of shaft. The new bushings should be oiled regularly in same manner as other types as directed above.

Clutch Release Cross-shaft Oiler:—Consists of felt oiler, spring and cover similar to type used on all 1941 models. To install this assembly on 1939-40 cars, clean outer face of left frame siderail around end of clutch release cross-shaft and shaft, install felt on end of shaft, place cover over felt with attaching bolt holes along line of frame, mark bolt holes for drilling, remove cover and felt, drill holes for attaching bolts with 7/32" drill. Saturate felt (Part No. 199621) with #30 engine oil and install felt on end of shaft, install felt retainer washer, retainer spring (Part No. 631893), and cover (Part No. 199619) in order and tighten cover bolts securely. Cover should be removed and felt lubricated with SAE #30 engine oil every 5000 miles.

1941-47 MODELS

CLUTCH RELEASE SHAFT LUBRICATION: On all Studebaker models the clutch release cross-shaft bushing at each end of clutch release cross-shaft should be oiled with lubricating oil at regular chassis lubricating periods. CAUTION—If bushings not oiled, clutch may stick or slip due to seizing of shaft. **Clutch Release Shaft**—Lubricate shaft at each side of clutch housing with SAE #30 engine oil every 1000 miles.

1941-46 Cross Shaft—Remove cover on outside of frame siderail at left end of clutch cross-shaft and lubricate shaft at this point with SAE #30 engine oil every 5000 miles. CAUTION—When installing cover, make certain that felt, felt retainer, and spring are correctly installed within cover.

TRANSMISSION NOTES

COMMANDER (1936-40)
PRESIDENT (1936-42)

OVERDRIVE TRANSMISSION REAR SUPPORT INSTALLATION: On cars with Overdrive, rear support (must be removed to remove transmission) should be installed with original shims in same location in order to maintain alignment. These shims located between support and frame at each end. If shims lost or readjustment necessary, install support as follows: Hold support in place under transmission case, install sufficient shims at each end to take up all except 1/16" clearance between support and frame, install frame bolts, tighten bolts securely with shims in place. This clearance will provide correct compression of the support rubber cushions.

C NTINUED N NEXT PA E

CONTINUED FROM PRECEDING PAGE

PROPELLER SHAFT

1947-48 MODELS

PROPELLER SHAFT & SUPPORT BEARING ASSEMBLY: New type two-unit propeller shaft (separate Front and Rear Propeller Shafts) with intermediate Universal Joint in Support Bearing Assembly on cross-member.

Front Propeller Shaft—One piece type (no slip joint) with intermediate universal joint yoke splined on rear end and retained by capscrew in end of shaft. See Support Bearing Assembly.

Rear Propeller Shaft—Conventional type with slip joint at forward end.

Universal Joints—Spicer needle bearing type. Bearing cups are retained on yokes by "U" bolts and universals are dismantled by removing nuts from these bolts. *See Universals Section for complete Universal Joint data.*

Propeller Shaft & Support Bearing Removal: Disconnect rear propeller shaft by taking out "U" bolts mounting intermediate universal joint on rear flange of front shaft (behind support bearing assembly) and sliding universal joint and stub shaft back on slip-joint. Remove capscrew and washers retaining universal joint flange on rear of front shaft, punchmark flange and shaft to insure correct re-installation, remove flange using Puller J-2046. Remove nuts and washers on forward end of studs mounting support assembly on frame cross-member, pull assembly off splines of front propeller shaft. To dismantle support cushions, remove nuts and washers on rear end of frame mounting studs. Studs have shoulder at each end to position rubber cushion and prevent excessive compression of the cushion when stud nuts are tightened.

Installation—Re-install support bearing assembly and propeller shafts by reversing removal instruction.

Support Bearing Servicing: Bearing is sealed type (pre-packed with lubricant) and **must never be washed in gasoline or other solvents.**
CAUTION—Do not re-install support bearing which has been washed in gasoline or other liquids which will remove lubricant.

Bearing Removal & Installation—To remove bearing from support bracket, press bearing out using a piece of tubing of sufficient size to engage outer bearing race. Install new bearing in same manner and press bearing in until outer bearing race is just **flush with front edge of support bracket.** With front propeller shaft in place in car, install spacer (some Commander cars—see Note below) and dust shield on shaft, then install support bearing assembly, secure support to cross-member with lockwashers and nuts on forward ends of studs, make certain that plain washer and lockwasher installed on rear end of studs. Tighten nuts securely.

Spacer Note (Commander Models)—This spacer used on 1947 Commander cars without Overdrive before Serial Nos. 4,292,468 (South Bend), 4,818,501 (Los Angeles). Spacer not used on later Commander cars and other models.

FRONT SUSPENSION NOTES

LATE 1947 COMMANDER

CASTER CHANGE (Late 1947 Commander Model): Caster change (0° to +½° changed to —2° to —3°) went into effect beginning with the following serial numbers (see additional car numbers following):

Caster Change

Serial Number	South Bend	Los Angeles
Comm. 14A	4,276,243	4,819,208
Comm. 14A Convertible	4,276,102	
Land Cruiser 14AY	4,276,053	4,819,188

Serial Nos. (Other Cars)—Following cars also have this changed Caster specification: 4819196, 4819200, 4819201, 4819177, 4819180, 4819185.

Suspension Parts Change: Following parts were changed with change in Caster specification as listed above (these parts not interchangeable with similar parts used previously): Steering Knuckle (Right & Left), Steering Knuckle Shims, Steering Knuckle Arm (Right & Left), Steering Knuckle Upper Bushing (first) and Bearing Rollers (Later), Steering Knuckle Upper Control Arm Support (Right & Left), King Pin (Right & Left), and King Pin Thrust Bearing.

See Front Suspension Section for complete data.

BRAKE NOTES

ALL MODELS

HILL-HOLDER ADJUSTMENT: On cars with Hill-Holder (optional equipment), check action whenever clutch adjusted to make certain that brakes release just before clutch engages.

Adjustment—Loosen locknut on end of Hill-holder control rod, shorten rod for earlier brake release, lengthen rod for later release, tighten locknut.

COMMANDER & PRESIDENT (1941)

PARKING BRAKE CABLE (1941 Comm. & Pres.): To correct hand brake cable and conduit assembly being twisted or looped out of line when hand brake applied with hard pull, clip conduit to left front fender apron as follows: Use sheet metal screw Part No. 618x10, clip Part No. 172654, and washer Part No. 41x509. Punch hole in fender apron (opposite rear upper control arm frame bracket) approx. ⅛" diameter, install clip and screw.

MODEL IDENTIFICATION

NOTE:—These models are similar except that Model 3A fitted with conventional front axle, Model 4A with Planar type independent springing. All other data below applies to both models. Startix optional on all models.

SERIAL NUMBER:—On plate on left frame side member under front fender. First numbers as follows:

Factory	Model 3A	Model 4A
South Bend	5,512,001	5,235,001
Pacific Coast	5,850,001	5,800,001
Canada	5,960,801	5,965,801

ENGINE NUMBER:—First number—D-63,001. Stamped on left center of engine block.

TUNE-UP

COMPRESSION:—Ratio—6.3-1. Pressure—105 lbs. at cranking speed of 150 R.P.M.

VACUUM READING—Gauge should show steady reading of 18-20" of HG. with engine idling at 450 R.P.M. or 8 M P.H

FIRING ORDER: 1-5-3-6-2-4. See diagram.

SPARK PLUGS: Champion Type 8-S. 18 mm. Metric.
Gaps—Set at .025".
NOTE—Champion No. 6 Com-62 recommended by car manufacturer for replacement use.

IGNITION: See Coil, Condenser, and Distributor.
Breaker Gap—.020". **Cam Angle**—35° Closed.
Automatic Advance—10° max. at 1400 RPM (distr.).
Vacuum Advance—3° distr. with 6" vacuum.

IGNITION TIMING: See Ignition Timing.
Std. Setting—9/64" BTDC. Vibration dampener mark (9/64" ahead of 'UDC/1-6') aligned with pointer on timing gear cover at front of engine.

CARBURETION: See Carburetor & Carb. Equipment.
Idle Setting—Set idle adjusting screw midway between "miss" and "roll" points. Idle speed 450 RPM or 8 MPH.
Float Level—Fuel level 5/8" below top edge of bowl.
Accelerating Pump—Normal setting, Center Hole.
Fuel Pump Pressure—3½ lbs. maximum.

VALVES: See Valve Timing.
Tappet Clearance—.016" for all valves, Cold.

STARTING: See Battery, Starter, Generator, and Regulator (when used).

IGNITION

Ignition Switch:—Delco-Remy Model 430-R (switch & cable assembly). Connected to coil by armored cable. See article in Equipment Section for complete data.

COIL: Auto-Lite Model IG-4634. Mounted on dash.
Ignition Current—½-1½ amps. idling, 4-5 stopped.

CONDENSER: Auto-Lite Part No. IGB-1025.
Capacity—.20-.25 microfarad.

DISTRIBUTOR: Auto-Lite Model IGW-4001 or IGW-4004 (with Special Tachometer Drive). Single breaker, 6 lobe cam, full automatic advance type with auxiliary vacuum spark control.
Breaker Gap—Set at .020". Limits .018-.020".
Cam Angle or Dwell—35° closed, 25° open (distr.).
Breaker Arm Spring Tension—16-20 ounces.

Automatic Advance

Distributor Degrees	R.P.M.	Engine Degrees	R.P.M.
Start	400	0	800
2	600	4	1200
4	800	8	1600
6	1000	12	2000
8	1200	16	2400
10	1400	20	2800

Vacuum Spark Control A-L No. VC-4001. Mounted below distributor and linked to advance arm. Provides additional advance except when engine is operated at wide open throttle when spark is retarded by return spring within unit. Maximum vacuum advance—6° (engine).

Vacuum Advance

Distr Degrees	Eng. Degrees	Vacuum (" of HG)
Start	0°	3"
3°	6°	6"

Distributor Removal:—Mounted on left side of crankcase. To remove, loosen advance arm clamp bolt (not necessary to disconnect vacuum connection).

IGNITION TIMING

IGNITION TIMING:—Setting for all engines as follows:

Degrees	Piston Position
9/64" BTDC	.0016" BTDC

To Set Timing—Crank engine by engaging gears and rolling car on floor. On cars with Startix use left hand 'on' position of key to avoid automatic cranking if ignition turned on to check timing. With #1 piston on compression, turn engine over until straight line 'IGN' mark on vibration dampener at front of engine lines up with pointer on timing gear cover. This line is 9/64" before top dead center mark 'UDC/1-6.' Loosen advance arm clamp bolt, rotate distributor until contacts begin to open, tighten clamp bolt.

CARBURETOR

CARBURETION:—Carburetor—Stromberg Model EX-23, 1¼" downdraft type. See Carburetion Section for complete adjustment, overhaul, and jet specifications.

For complete data, refer to Carburetor Index.

NOTE—Do not adjust carburetor until engine is warmed up so that choke valve is wide open and engine idling at slow or hot idling speed.

CONTINUED ON NEXT PAGE

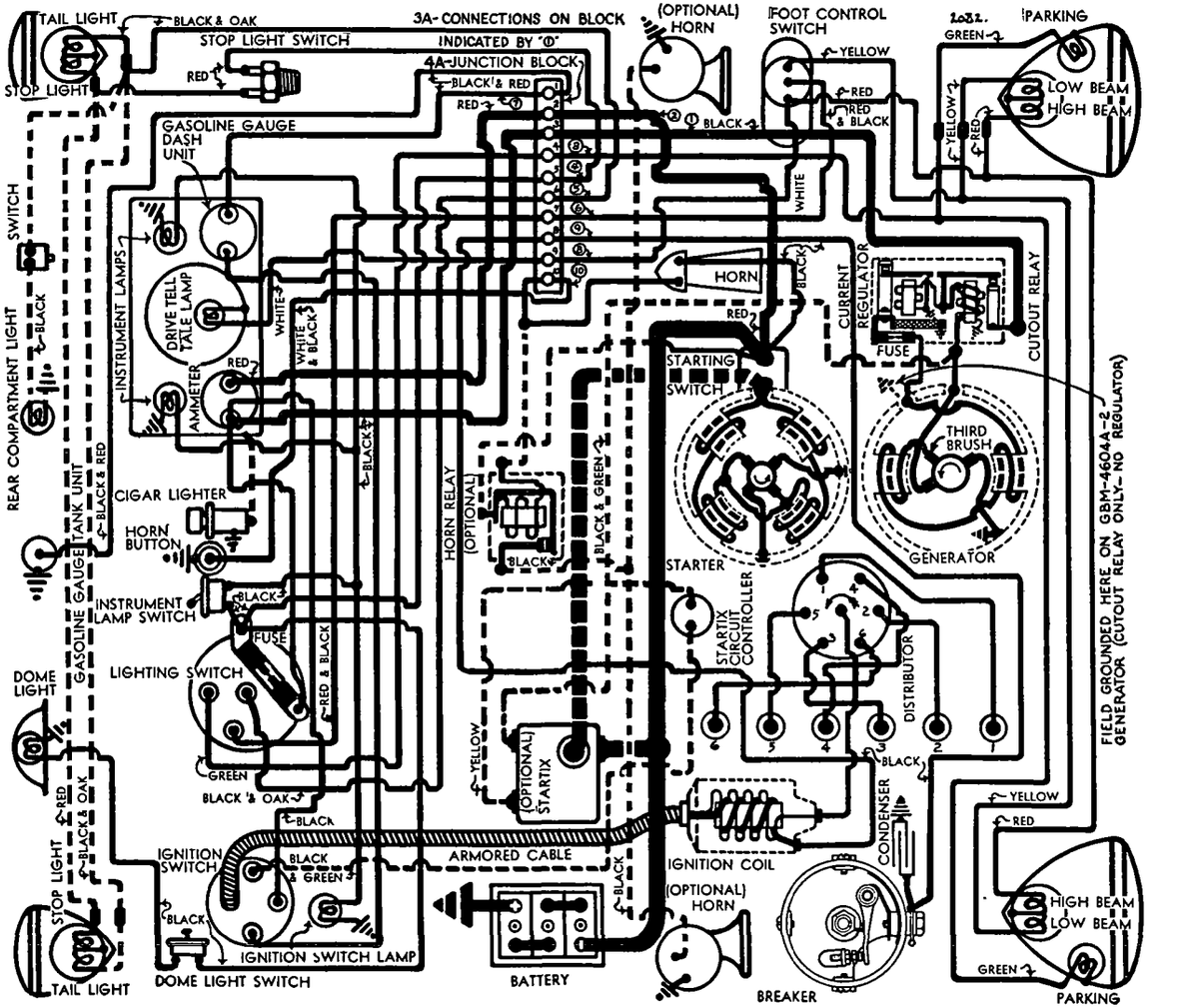

CONTINUED FROM PRECEDING PAGE

Idle Adjustment—Adjust throttle stopscrew so that engine idles at 450 R.P.M. or 8 M.P.H. Turn idle adjusting screw in until engine begins to miss, then turn screw out until engine begins to roll, finally turn screw in slowly until engine fires smoothly. Readjust throttle stopscrew for correct idling speed.

Accelerating Pump Setting—Three holes provided in throttle lever for pump link engagement. Change setting for seasonal requirements as follows:
Center Hole—Normal operating conditions.
Inner Hole (Min. stroke)—Extreme warm weather.
Outer Hole (Max. stroke)—Extreme cold weather.
NOTE—A .056" or one size smaller main metering jet may be installed to secure greater fuel economy with a slight loss in performance. The .054" two size smaller jet should only be used for high altitudes. See Jet Specification table in Carburetion Section.

Fast Idle Control & Automatic Choke—Integral with Carburetor. No adjustment required. See special article in Carburetion Section.

For complete data, refer to Carburetion Equip. Index.

CARB. EQUIPMENT

Air Cleaner:—Burgess oil-wetted type standard. AC. #1526824 oil-bath type optional.

Fuel Pump:—AC. Type W #1522227. Diaphragm type.

For complete data, refer to Carburetion Equip. Index.

Gasoline Gauge:—Motometer Electric. No. NG-7732-D (dash unit), NG-7679-T (tank unit).

For complete data, refer to Carburetion Equip. Index.

BATTERY

BATTERY:—Willard, Type WH-1-13, RH-1-13 (Export). 6 volt, 13 plate, 102 ampere hour capacity (20 hour rate).
Starting Capacity—120 amperes for 20 minutes.
Zero Capacity—300 amperes for 3.1 minutes.
Grounded Terminal—Positive (+) terminal.
Location—On left side under front floor boards.

STARTER

STD.: Auto-Lite MAX-4019. Armature MAW-2091.
STARTIX: Auto-Lite MAX-4018. Armature MAW-2091.
Drive—Outboard Bendix (barrel) Type A-1729.
Cranking Engine—110 R.P.M., 205 amps., at 5 volts.
Rotation—Counter-clockwise at commutator end.
Brush Spring Tension—42-53 ozs. (new brushes).

Performance Data

Torque	R.P.M.	Volts	Amperes
0 ft. lbs.	5300	5.5	65
.65 "	3300	5.5	100
2.75 "	1630	5.0	200
5.5 "	970	4.5	300
8.7 "	600	4.0	400
12.0 "	300	3.5	500
16.5 "	Lock	3.0	640
25.0 "	Lock	4.0	880

Removal:—Flange mounted on left front face of flywheel housing. To remove, take out two flange capscrews.

Starting Switch (MAX-4019): Auto-Lite SW-3737A. Mounted on starter and operated through flexible cable by button on instrument panel. Pull required to close switch should be 2.3 lbs. minimum at end of switch lever.
Startix (MAX-4018)—Type 'D' automatic starting

For complete data, refer to Electrical Equipment Index.

GENERATOR

STANDARD

Auto-Lite Model GBM-4604A-2. Armature GBM-2006B. Third brush type used with CB-4021 Cutout Relay.
Charging Rate Adjustment—Take off commutator cover band, shift third brush by hand counter-clockwise to increase, or clockwise to decrease charging rate. Third brush held in position by friction.
Maximum Charging Rate—17.2 amperes at 8.3 volts (cold), 14.6 amperes at 8.05 volts (hot). Do not exceed.

Performance Data

Amperes	Volts	R.P.M.	Amperes	Volts	R.P.M.
0	6.4	760	0	6.4	820
4	6.8	920	4	6.8	1000
8	7.3	1080	8	7.3	1200
12	7.75	1300	12	7.75	1500
16	8.2	1640	14.6	8.05	2300
17.2	8.3	2050			

Rotation—Counter-clockwise at commutator end.
Brush Spring Tension—50-60 ozs. (new brushes).
Field Current—3.80-4.20 amperes at 6.0 volts.
Motoring Current—5.7-6.3 amperes at 6.0 volts.
Field Fuse—5 ampere under cover on generator field frame.
Removal:—Pivot mounted at left front of engine with fan belt drive. To remove, take out two pivot bolts and one clamp bolt.
Belt Adjustment:—Loosen pivot bolts and clamp bolt, swing generator away from engine until fan can just be turned with belt held stationary.

GENERATOR

SPECIAL EQUIPMENT

Radio: Auto-Lite Model GAR-4609A-4. Armature No. GAR-2116-B. Third brush control in conjunction with Current Regulator (two-rate charging control). Ventilated by fan on drive pulley.
Charging Rate Adjustment—Use test meters. Connect jumper between fuse cup on regulator and ground. Shift third brush by hand counter-clockwise to increase or clockwise to decrease charging rate. Third brush held in position by friction. Remove jumper.
Maximum Charging Rate—24.8 amperes (cold), 21 amperes (hot), at 8.5 volts. Do not exceed.

Performance Data

Cold — Regulator Inoperative — Hot

Amperes	Volts	R.P.M.	Amperes	Volts	R.P.M.
0	6.4	750	0	6.5	840
4	6.75	900	4	6.85	980
8	7.1	1025	8	7.25	1160
12	7.4	1200	12	7.6	1400
16	7.7	1380	16	8.0	1720
20	8.1	1675	21	8.5	2680
24.8	8.5	2400			

Field Current—3.75-4.15 amperes at 6.0 volts.
Motoring Current—4.75-5.25 amperes at 6.0 volts.
Brush Spring Tension—50-60 ozs. maximum.
Field Fuse—5 ampere in knurled cup on regulator case. All other data same as for standard generator. See above.

CUTOUT RELAY

STANDARD

Auto-Lite Model CB-4021 (for GBM-4604A-2 Gen.). Mounted on generator. Special terminal connected to main brush lead for Startix connection.

For complete data, refer to Electrical Equipment Index.

Cuts In—6.5-7.25 volts.
Cuts Out—.5-2.5 amperes discharge current.
Contact Gap—.015-.045".
Air Gap—.010-.030" with contacts closed.

REGULATOR

SPECIAL EQUIPMENT

Auto-Lite Model TC-4302A (for GAR-4609A-4 Gen.). Two-Charge Type. On generator. Cutout Relay and Current-Regulator (two-rate charging control).

For complete data, refer to Electrical Equipment Index.

Cutout Relay—Data same as for CB-4021 above.

Current Regulator

Contacts Open—8.25-8.75 volts at 70° F.
Contacts Close—1.2-1.4 volts below opening point.
Contact Gap—.005" minimum.
Air Gap—.045" with contacts closed.

LIGHTING

LIGHTING:—Headlamps—Corcoran-Brown, Pre-focused type. Headlamps aimed straight ahead (upper beam with lenses in place). Upper and lower beams controlled by foot selector switch (lower beam deflected slightly to right).
Headlamp Beam Indicator—Green dot on speedometer face. Lighted when headlamp upper beams in use.

Switches

Lighting—Douglas.
Foot Selector—R.B.M. Model 1085.
Trunk Light—R.B.M. Model 2350.
Stop Light—Hydraulic type mounted on brake master cylinder.

Bulb Specifications

Position	Candlepower	Mazda No.
Headlamps	32-32	2331
Parking, Ign. Key	1½	55
Stop and Tail	21-3	1158
Instruments	1	51
Dome and Trunk	6	81

MISC. ELECTRICAL

FUSES:—Lighting—30 amperes on back of lighting switch.
Generator Field—5 amperes. Located on generator field frame under cover (standard gen.), on Current Regulator case under knurled cup (radio gen.).
HORNS:—Klaxon Model K-26L-1622. Vibrator type. Current draw 6.5-8.5 amperes at 6 volts. Air Gap .025-.029". See 1936 President Model (next page) for twin horns and horn relay.

ENGINE

ENGINE SPECIFICATIONS:—Type—6 cyl., 'L' head.
Bore—3¼". **Stroke**—4⅜".
Displacement—217.8 cubic inches.
Rated Horsepower—25.4 (NACC).
Developed Horsepower—90 at 3400 R.P.M.
Compression Ratio & Pressure—6.3-1 Std. cast-iron head. Pressure 105 lbs. at cranking speed of 150 R.P.M.
Vacuum Reading—Gauge should show steady reading of 18" with engine idling at 450 R.P.M. or 8 M.P.H.
PISTONS:—Lynite, aluminum alloy, 'T' slot, Cam Ground type with .00825-.01075" greater diameter at right angles to piston pin bosses.
Weight—15.2 ozs. **Length**—3¾".
Removal—Pistons and rods removed from above.
Clearance—.0005" as measured ¼" up on skirt at right angles to pin bosses for new pistons. See Fitting New Pistons.

ENGINE

C NTINUED FR M PRECEDING PAGE

Original Bore Sizes:—*See Studebaker Shop Notes.*

Replacement Pistons:—Finished pistons with fitted pins furnished .002", .004", .010", .015", .020", .030" oversize. Exact size of all new pistons as measured ¼" up on skirt at right angles to pin bosses is stamped on head.

Fitting New Pistons:—Check clearance by inserting .002" hardened feeler 1" wide between piston and cylinder wall on pressure or camshaft side at right angles to pin bosses. Piston should be inserted in inverted position with slot away from camshaft. Pressure required to withdraw feeler must be between 7-15 lbs.

Installing Pistons:—Slot should be on minimum pressure side or away from camshaft.

PISTON RINGS:—Two compression, one oil control ring per piston, all above pin. Lower ring groove drilled with ten 5/32" oil drain holes.

NOTE—Narrow heat deflector groove located above top ring groove. No ring fitted in this groove.

Ring	Width	End Gap	Wall Thickness
Comp.	⅛"	.013-.018"	.135"
Oil Cont.	3/16"	.013-.018"	.145"

NOTE—Compression rings are undercut. Install these rings with step or groove down.

PISTON PIN:—Diameter ⅞". Length 2⅞".

Pin is locked in connecting rod.

Pin Fit in Piston—.0002" clearance or light push fit.

NOTE—New pins fitted and furnished with all new replacement pistons.

CONNECTING ROD:—Weight 33.2 ozs. Length 8⅛".

Crankpin Journal Diameter—2.18675-2.18775".

Lower Bearing—Integral spun-babbitt lined type.

Clearance—.0005-.002". **Sideplay** .005-.009".

Bearing Adjustment:—None (no shims). Replace rods on exchange basis. Do not file rods or caps. Rods furnished with bearings standard and .010", .020" undersize.

Installing Rods:—Lower bearings are offset. Install rods with narrow half of bearing toward front in cylinders #1, 3, 5 and toward rear in #2, 4, 6. Marks on rods and caps must be together and oil escape hole in upper half of rod lower bearing must be toward right or camshaft side of engine on all rods.

CRANKSHAFT:—Four bearing. Integral counterweights.

Journal Diameters—2½" all bearings .

Bearings—Interchangeable steel-backed, babbitt-lined type. No shims.

Clearance—.0005-.0025".

Bearing Adjustment:—None (no shims). Replace bearings. Do not file bearing caps. No fitting or line reaming necessary for new bearings.

End Thrust:—Taken by thrust plate assembled between front main bearing and crankshaft gear. Adjusted by adding or removing shims between thrust plate and bearing. Endplay should be .003-.006".

CAMSHAFT:—Four bearing. Helical gear drive.

Bearings—Split, steel-backed, babbitt-lined type.

Clearance—.00075-.00225" (front), .002-.00375" (all others).

NOTE—When bushings installed see that oil holes in bushing and block line up.

End Thrust:—Taken by steel thrust washer and spacer between gear hub and front bearing. Endplay .006" maximum.

Timing Gears:—Cast-iron (crankshaft), Celoron Fabric (camshaft). Camshaft gears furnished in three sizes marked 'S'—standard, 'H'—high limit, 'L'—low limit. Use next largest size to take up backlash when replacing gears.

NOTE—Screw thread for gear puller and pusher formed in camshaft gear hub recess. Gear must not be driven on or off of shaft.

Camshaft Setting:—Gears are marked. Mesh marked tooth on crankshaft gear between two marked teeth on camshaft gear.

VALVES:—	Head Diameter	Stem Diameter	Length
Intake	1 15/32"	11/32"	5 7/32"
Exhaust	1 9/32"	11/32"	5 7/32"

	Seat Angle	Lift	Stem Clearance
Intake	45°	11/32"	.001-.003"
Exhaust	45°	11/32"	.001-.003"

Valve Guides:—Pressed in block from upper end.

Valve Springs:—No damper used. Install springs with closed-coil end at top. Replace springs if more than 10% weaker than specifications given below.

	Spring Pressure	Spring Length
Valve Open	1¾"	125-135 lbs.

NOTE—Valve spring will not clear tappet adjusting screw when extended. To install spring, place spring seat in position on spring, compress spring slightly with compressor so that it clears tappet adjusting screw, insert valve, compress spring fully and install valve spring seat locks.

Valve Lifters:—Barrel type operating directly in cylinder block (no separate guides). Lifters are same diameter throughout and can be removed from top or bottom.

VALVE TIMING

Tappet Clearance:—.016" all valves, cold.

Valve Timing:—See Camshaft Setting above.

Intake Valves—Open at 15° BTDC. Close 49° ALDC.

Exhaust Valves—Open 54° BLDC. Close 10° ATDC.

To Check Valve Timing—Set tappet clearance #1 intake valve at .020". This valve should open with piston 15° or .0942" before top dead center when mark 'IN.OP/1-6' on vibration dampener at front of engine line up with pointer on gear case cover. Reset tappet clearance at .016".

LUBRICATION

LUBRICATION:—Pressure type. Gear type oil pump located on right side of crankcase.

Normal Oil Pressure—40 lbs. min. at 40 M.P.H.

Oil Pressure Regulator—Located at right front corner of engine. Operates at 40 lbs. Not adjustable. Timing gears lubricated by overflow from regulator.

Crankcase Capacity—6 qts.

NOTE—Whenever oil pump is taken off engine, drive gear must be properly remeshed when pump is replaced so that distributor rotor position will be correct. To install pump, remove distributor, turn engine over until mark 'UDC/1-6' on vibration dampener lines up with pointer on chain case cover, sight down distributor shaft hole, mesh oil pump gear so that distributor drive slot is horizontal and offset toward top.

CLUTCH

CLUTCH:—**Borg & Beck Model 9A6. Single plate dry** disc type. See article in Clutch Section for relining and assembling instructions.

See Clutch Section for complete data.

Facings—Woven (pressure plate side), molded (flywheel side), 2 required. Inside Diam. 5⅝". Outside Diam. 9¼". Thickness .133".

Adjustment—Free movement of clutch pedal must be 1" minimum. To adjust, loosen locknut and turn adjustment lever setscrew on left side of clutch housing. Check Hill-Holder after adjusting clutch.

Hill-Holder Adjustment:—On cars with Hill-Holder, check action after adjusting clutch to see that brakes release just before clutch engages. Adjust by loosening locknut and turning adjusting nut at end of hill holder control rod. Shorten rod for earlier brake release or lengthen rod for later release.

Clutch Removal:—Disconnect drive shaft at front universal, support engine at rear end, remove transmission and clutch cover, take out screws mounting clutch on flywheel turning all screws out evenly to release clutch spring tension.

FRONT SUSPENSION

MODEL 3-A

Front Suspension Model 3A—Conventional 'I' beam section front axle with semi-elliptic springs.

King Pin Inclination—9½° crosswise.

Caster—1-1½°. Adjusted by inserting wedge shims between spring and spring pad on axle. Spring pad should incline 1½° toward rear (see Spring Camber)

Camber—1-1½°. No adjustment. Axle may be bent cold for minor camber adjustments.

Toe In—1/16-⅛". Adjust in usual manner by changing length of tie rod.

Spring Camber—⅛" minimum. Measure by stretching cord between spring eye centers and noting distance from cord to top of spring main plate at center. Camber must be positive (cord above spring) between each spring and bearing) is 1⅜".

FRONT SUSPENSION

MODEL 4-A

Front Suspension Model 4-A: Planar type front suspension with transverse spring.

See Front Suspension Section for complete data.

Kingpin Inclination—9½° crosswise.

Caster—Minus ¼° to plus ¾°. Not adjustable.

Camber—1-1½°. Check with tires properly inflated, car on level floor, after bouncing car up and down several times so wheels in normal running position.

Toe In—3/16" (⅛-7/32"). Adjustable.

STEERING GEAR

Steering Gear: Ross Cam-and-Lever types as follows: Model 140—first cars, Model T-14—later cars beginning with following serial numbers—3A 5526354 (South Bend), 5851960 (Pacific Coast) except 5526359-5526376 inc., 4A 5246240 (South Bend), 5801504 (Pacific Coast) except 5801547, 5801655, and 5801657. See article in Steering Section.

See Steering Gear Section for complete data.

BRAKES

BRAKES:—**Service**—Lockhead Hydraulic, four wheel type. Hand lever applies rear wheel brakes.

See Brake Section for complete data.

Wheel Cylinders—Stepped or two-stage bore type: Front Wheels—Front Shoe Cyl. 1⅜". Rear—1".
Rear Wheels—Front Shoe Cyl. 1¼". Rear—1".
NOTE—Wheel cylinder bore size marked on casting. Cylinders not interchangeable.

Brake Drum Diameter—11⅛".

Lining—Moulded type. Width 1¾". Thickness ¼". Length per wheel 23".

Clearance—.010" toe, .005" heel on each shoe.

Hand Brake Adjustment:—See Service Brakes.

Hill-Holder:—Optional on all models. See article in Brake Section and also Clutch data above.

See Brake Section for complete data.

MODEL IDENTIFICATION

SERIAL NUMBERS:—On plate on left frame side member under front fender. First numbers as follows:

Factory	Serial Number
South Bend	7,104,001
Pacific Coast	7,800,001
Canada	7,951,001

ENGINE NUMBER:—First number—B-7901. Stamped on left center of engine block.

TUNE-UP

COMPRESSION:—Ratio—6.5-1. Pressure—105-115 lbs. at cranking speed of 150 R.P.M.

VACUUM READING:—Gauge should show steady reading of 18-20" with engine idling at 450 R.P.M. or 8 M.P.H.

FIRING ORDER: 1-6-2-5-8-3-7-4. See digaram.

SPARK PLUGS: Champion Type 8-S. 18 mm. Metric.
Gaps—Set at .025".
NOTE—Champion No. 6 Com-62 recommended by car manufacturer for replacement use.

IGNITION: See Coil, Condenser, and Distributor.
Breaker Gap—.020". **Cam Angle**—33° Closed.
Synchronization—Set movable contacts to open 45° after stationary set.
Automatic Advance—14½° max. at 1800 RPM (distr).
Vacuum Advance—3° distr. with 6" vacuum.

IGNITION TIMING: See Ignition Timing.
Std. Setting—TDC. Flywheel mark 'UDC/1-8' aligned with indicator in flywheel housing inspection hole for stationary contacts. Flywheel mark 'UDC3-6' for movable contacts (¼ revolution from 'UDC/1-8' mark).

CARBURETION: See Carburetor & Carb. Equipment.
Idle Setting—Set idle adjusting screws midway between "miss" and "roll" points. Idle speed 450 RPM or 8 MPH.
Float Level—Fuel level 15/32" below top of bowl.
Accelerating Pump—No seasonal adjustment.
Fuel Pump Pressure: 3½ lbs. maximum.

VALVES: See Valve Timing.
Tappet Clearance—.016" for all valves, Cold.

STARTING: See Battery, Starter, Generator, Regulator.

IGNITION

Ignition Switch:—Delco-Remy Model 430-R (switch and cable). Connected to coil by armored cable. Key has two 'on' positions (cars with Startix). Turned right Startix operative, turned left if Startix (automatic cranking) not wanted.
Ignition Lock—Yale and Towne.

COIL: Delco-Remy Model 537-B. Mounted on dash.
Ignition Current—½-1½ amps. idling, 4-5 stopped.

CONDENSER: Delco-Remy—Part No. 1838163.
Capacity—.18-.25 microfarad.

DISTRIBUTOR: Delco-Remy Model 662-M. Double breaker, 4 lobe cam, full automatic advance type with auxiliary vacuum spark control. NOTE—Movable contacts must be synchronized. Open 45° after stationary set.
Breaker Gap—Set at .020". Limits .018-.024".
Cam Angle or Dwell—Closed 33° Open 12° (distr.). Both sets together when correctly synchronized.
Breaker Arm Spring Tension—19-23 ozs.

Automatic Advance

Distributor Degrees	R.P.M.	Engine Degrees	R.P.M.
Start	300	2½	600
14½	1800	29	3600

Vacuum Spark Control D-R No. 680-J. Mounted under distributor and linked to advance arm. Provides additional advance except when engine is operated with wide open throttle when spark is retarded by return spring within unit.

Vacuum Advance

Distr. Degrees	Eng. Degrees	Vacuum (" of HG)
Start	0°	3" Min.
3°	6°	6" Max.

Distributor Removal:—Mounted on cylinder head. To remove, loosen advance arm clamp bolt (not necessary to disconnect vacuum connection).

IGNITION TIMING

IGNITION TIMING:—Setting for all engines as follows:

Flywheel Degrees	Piston Position
0° or TDC	.000" TDC

Timing (Stationary Contacts)—Crank engine by engaging gears and rolling car on floor. On cars with Startix use left hand 'on' position of key to avoid automatic cranking if ignition turned on to check timing. With #1 piston on compression, turn engine over until piston reaches top dead center, stop when flywheel mark 'UDC/1-8' lines up with pointer in inspection hole in right top edge of housing. Loosen advance arm clamp bolt, rotate distributor until stationary contacts begin to open, tighten clamp bolt, then synchronize movable contacts.
Synchronization (On Engine)—Turn engine over 90° to #6 firing position, stop when flywheel mark 'UDC/3-6' lines up with indicator. Loosen lockscrews on movable sub-plate carrying second set of contacts, turn eccentric adjusting screw until contacts begin to open, tighten lockscrews.
Synchronization (Using Tool)—Use Delco-Remy tool #1838182 and follow complete directions in Equipment Section. Distributor intervals regular 45-45-45°.

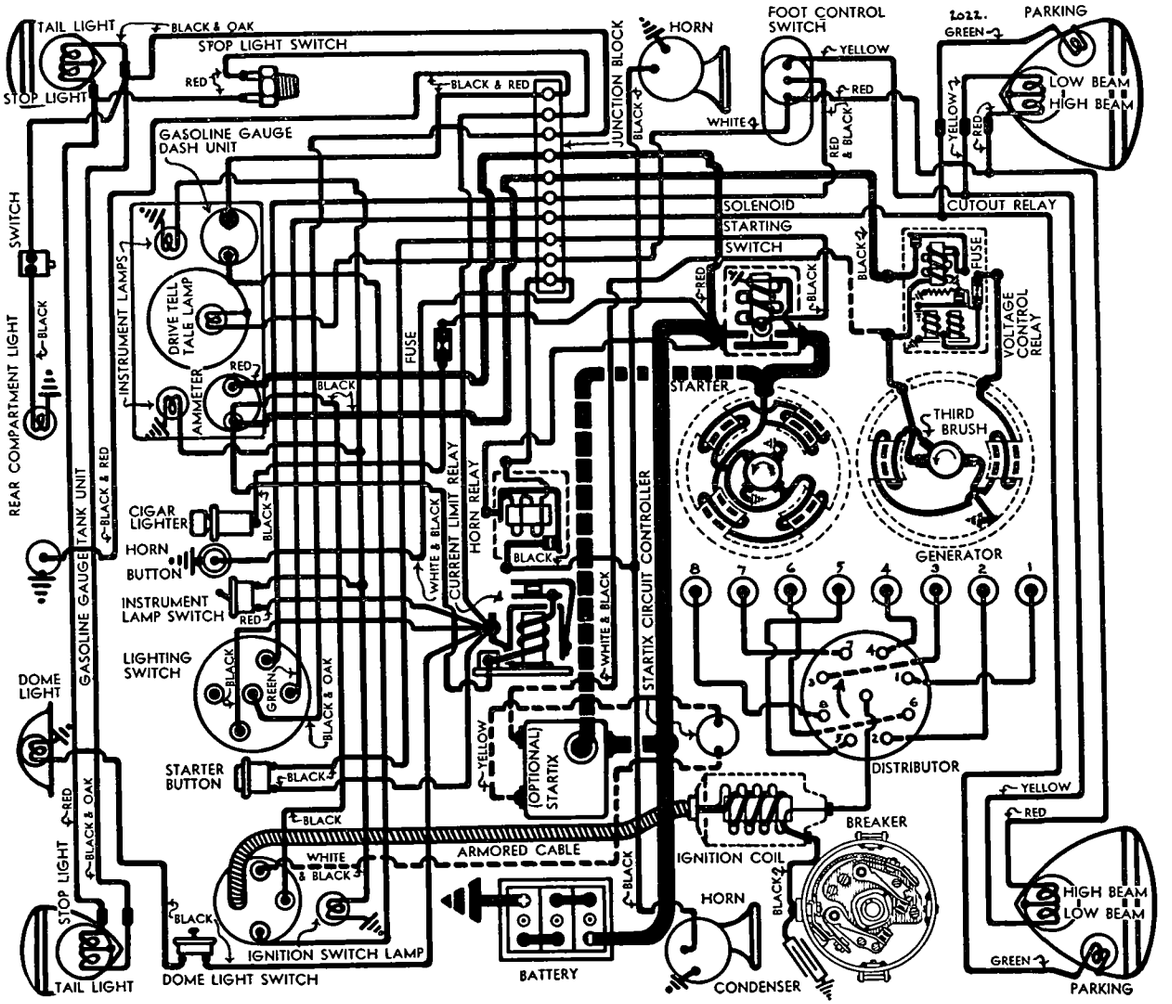

CARBURETOR

CARBURETION:—Carburetor—Stromberg Model EE-1, 1" dual, downdraft type. See Carburetion Section for complete adjustment, overhaul, and jet specifications.

For complete data, refer to Carburetor Index.

NOTE—Do not adjust carburetor until engine is warmed up so that choke valve is wide open and engine idling at slow or hot idling speed.

Idle Adjustment—Set throttle stopscrew so that engine idles at 450 R.P.M. or 8 M.P.H. Turn inner idling adjusting screw in until engine begins to lag or miss, then turn screw out until engine begins to roll, finally turn screw in slowly until engine fires smoothly. Repeat with outer idling adjusting screw. Readjust throttle stopscrew for correct idling speed.

Accelerating Pump—Not adjustable.

NOTE—A .045" or one size smaller main metering jet may be installed to secure greater fuel economy with slight loss in performance. The .043" two size smaller jet should be used only for high altitudes. See Jet Specification table in Carburetion Section.

Fast Idle:—Stromberg type. No adjustment required.

Automatic Choke:—Stromberg Type C. See article in Carburetion Section.

For complete data, refer to Carburetion Equip. Index.

CARB. EQUIPMENT

Air Cleaner:—Burgess oil-wetted type standard, AC. #1526864 oil-bath type optional.

Fuel Pump:—AC. Type P #1521829 standard. Combination fuel-and-vacuum pumps Type J #1521797 or Type AD #1522228 optional. See articles in Carburetion Section.

For complete data, refer to Carburetion Equip. Index.

Gasoline Gauge:—Motometer Electric No. NG-7815-D (dash unit), No. NG-7679-T (tank unit). See article in Carburetion Section.

For complete data, refer to Carburetion Equip. Index.

BATTERY

BATTERY:—Willard, Type WH-1-13, RH-1-13 (Export). 6 volt, 13 plate, 102 ampere hour capacity (20 hour rate).

Starting Capacity—120 amperes for 20 minutes.

Zero Capacity—300 amperes for 3.1 minutes.

Grounded Terminal—Positive (+) terminal.

Location—Left hand side under front floor boards.

STARTER

STD.: Delco-Remy 737-J. Armature No. 1863128.

STARTIX: Delco-Remy 737-K. Armature 1863128.

Drive—Outboard Bendix (barrel) Type A-1729.

Cranking Engine—110 R.P.M., 200 amperes at 5 volts.

Rotation—Counter-clockwise at commutator end.

Brush Spring Tension—32-36 ounces.

Performance Data

Torque	R.P.M.	Volts	Amperes
0 ft. lbs.	6000	5	65
15 "	Lock	3.15	570

Removal:—Flange mounted on left hand front face of flywheel housing. Take out two capscrews.

Starting Switch (737-J):—Magnetic switch mounted on starter controlled by push button (R.B.M. Model 1865), on left side of instrument panel.

Startix (737-K)—Type 'D' automatic starting switch and Startix circuit controller (anti-backfire unit), controlled by ignition switch. See Equipment Section for complete data.

For complete data, refer to Electrical Equipment Index.

GENERATOR

Delco-Remy Model 936-X. Armature No. 1856072. Third brush control with Voltage Control Relay (step voltage control). Ventilated by fan on drive pulley.

Charging Rate Adjustment—Connect test ammeter in charging line at 'BAT' terminal, ground generator field 'F' terminal to frame. Loosen lockscrew on commutator end plate, shift third brush by hand counter-clockwise to increase, or clockwise to decrease charging rate, tighten lockscrew, remove generator field ground.

Maximum Charging Rate—21 amperes (cold), 17 amperes (hot), 8.5 volts, 2800 R.P.M., 37 M.P.H.

Performance Data

	Amperes	Volts	R.P.M.
Cold	22-25	8.7-9.1	3000
Hot	17-20	8.1-8.5	3200

Rotation—Counter-clockwise at commutator end.

Brush Spring Tension—22-26 ozs. (main), 16-20 ozs. (third).

Field Current—2.3-2.6 amperes at 6 volts.

Field Fuse—6 ampere capacity in control unit.

Removal:—Cradle mounted at left front of engine. To remove, slack off belt, disconnect water pump drive coupling, loosen mounting clamp band.

Belt Adjustment:—To take up slack in generator drive belt, loosen nut back of fan bracket, lift up fan assembly until fan can just be turned with belt held stationary, tighten bracket nut.

REGULATOR

Delco-Remy Model 5546. Voltage Control Relay. Cut-out Relay and non-vibrating type Voltage Regulator in case on generator field frame.

For complete data, refer to Electrical Equipment Index.

Cutout Relay

Cuts In—6.4-6.8 volts, 8.1 M.P.H.

Cuts Out—3 amperes maximum discharge current.

Contact Gap—.015-.025".

Air Gap—.012-.017" contacts closed.

Voltage Control Relay

Contacts Open—8.35-8.65 volts at 70° F.

Contacts Close—7.3-7.7 volts at 70° F.

Contact Gap—.008-.013".

Contact Spring Tension—.7-.9 ounces.

Air Gap—.028-.040" between armature and core (armature down against lower stop), .028-.040" armature travel (between armature and lower stop).

LIGHTING

LIGHTING:—Headlamps—Corcoran-Brown, Prefocused type. Headlamps aimed straight ahead (upper beam with lenses in place. Upper and lower beams controlled by foot selector switch (lower beam deflected slightly to right).

Headlamp Beam Indicator—Green dot on speedometer face. Lighted when upper driving beam in use.

Switches

Lighting—Douglas. Studebaker Part No. 188006.

Foot Selector—R.B.M. Model 1085.

Stop Lamp—Hydraulic type mounted on brake master cylinder.

Trunk Lamp—R.B.M. Model 2350.

Bulb Specifications

Position	Candlepower	Mazda No.
Headlamps	32-32	2331
Parking, Ign. Key	1½	55
Stop and Tail	21-3	1158
Instruments	1	51
Dome and Trunk	6	81

MISC. ELECTRICAL

CURRENT LIMIT RELAY: D-R No. 410-R. Vibrating circuit breaker in lighting circuits. Starts to operate with load of 30-35 amperes limiting load to 5-18 amperes.

Contact Gap—.012-.030".

Air Gap—.015-.030" with contacts closed.

Spring Tension—5 ozs. min. at brass button.

FUSES:—Cigar Lighter—7½ amperes. In connector in lead from starter.

Generator Field—6 ampere in Control Unit.

HORNS:—Klaxon Model K-33-S, Types 2059, 2060. Vibrator type, blended tone, twin horns operated by horn relay.

Horn Type	Current at 6 volts	Air Gap
2059 Low Note	11-13	.042-.046"
2060 High Note	10-12	.032-.036"

Horn Relay:—Model 269-E. Requires .25 amperes at 2 volts minimum to close contacts. Current draw .8 amperes.

Contact Gap—.015-.025". **Spring Tension**—6-8 ozs.

Air Gap—.012-.017" with contacts closed.

ENGINE

ENGINE SPECIFICATIONS:—Type—8 cyl., 'L' head.

Bore—3 1/16". **Stroke**—4¼".

Displacement—250.4 cubic inches.

Rated Horsepower—30 (NACC).

Developed Horsepower—115 at 3600 R.P.M.

Compression Ratio—6.5-1 Std. aluminum head.

Compression Pressure—105-115 lbs. at cranking speed of 150 R.P.M.

Vacuum Reading—Gauge should show steady reading of 18" with engine idling at 450 R.P.M. or 8 M.P.H.

NOTE—Tighten aluminum cylinder heads only when engine is cold.

PISTONS:—Lynite, aluminum alloy, 'T' slot, Cam Ground type with elliptical skirt .00825-.01075" greater in diameter at right angles to pin bosses. Recondition cylinders to take finished replacement pistons.

Weight—13.6 ozs. **Length**—3¾".

Removal—Pistons and rods removed from above.

Clearance—.0015" as measured ¼" upon skirt at right angles to pin bosses for new pistons. See Fitting New Pistons.

Original Bore Size:—*See Studebaker Shop Notes.*

Replacement Pistons:—Finished pistons with fitted pins furnished .002", .004", .010", .015", .020", .030" oversize. Exact size of all new pistons as measured ¼" up on skirt at right angles to pin bosses is stamped on head.

Fitting New Pistons:—Check clearance by inserting .003" hardened feeler 1" wide between piston and cylinder wall on pressure or camshaft side at right

CONTINUED N NEXT PAGE

ENGINE

C NTINUED FR M PRECEDIN PAGE

angles to pin bosses. Piston should be inserted in inverted position with slot away from camshaft. Pressure requried to withdraw feeler must be between 7-13 lbs.

Installing Pistons:—Slot should be on minimum pressure side or away from camshaft.

PISTON RINGS:—Two compression, one oil control ring per piston, all above pin. Lower ring groove drilled radially with ten 5/32" oil drain holes. Do not increase size or number of holes.

NOTE—A narrow heat deflector groove is located above the top compression ring. No ring it fitted in this groove.

Piston Ring Specifications.

Ring.	Width.	End Gap.	Wall Thickness.
Comp.	1/8"	.013-.018"	.135"
Oil Cont.	3/16"	.013-.018"	.145"

NOTE—Compression rings are undercut or stepped and must be installed with this step downward. Inner rings used behind oil ring on all engines.

PISTON PIN:—Diameter 7/8". Length 2 5/8". Pin is locked in connecting rod.

Clearance in Piston—.0002" or light push fit.

NOTE—New pins are fitted and furnished with all new replacement pistons.

CONNECTING ROD:—Weight 32 ozs. Length 8".

Crankpin Journal Diameter—1.87425-1.87525".

Lower Bearing—Removable steel-backed, lead-bronze lined type.

Clearance—.00075-.00275". Sideplay .005-.010".

Bearing Adjustment:—None. Replace bearings. Do not file caps. New bearings should be pressed in place in rod and cap (upper and lower halves interchangeable) so that tongues on bearings engage grooves in rod and cap and oil holes line up. Bearings cannot be reamed, and crankpins must be turned down to size giving correct clearance. Bearings furnished .005", .010", .020" undersize and standard.

Installing Rods:—Oil escape hole in upper half of rod lower bearing must be toward right or camshaft side of engine on all rods.

CRANKSHAFT:—Nine bearings with bolted-on counterweights.

See Studebaker Shop Notes for Damper data.

Journal Diameters—2 11/32" all bearings.

Bearings—Interchangeable steel-backed, babbitt lined type. No shims.

Clearance—.001"-.003".

Bearing Adjustment:—None (no shims). Replace bearings. Do not file bearing caps. No fitting or line reaming necessary for new bearings.

End Thrust:—Taken by thrust plate assembled between front main bearing and crankshaft gear. Adjusted by adding or removing shims between thrust plate and bearing. Endplay should be .003-.006".

CAMSHAFT:—Six bearing. Helical gear drive.

Bearings—Split, steel-backed, babbitt-lined type.

Clearance—.00075-.00225" (front), .002-.00375" (all others).

NOTE—When new bearing installed, see that oil holes in bearings and block line up.

End Thrust:—Taken by steel thrust washer and spacer assembled between gear hub and front bearing. Endplay .006" maximum.

Timing Gears:—Cast-iron (crankshaft), Celoron Fabric (camshaft). Camshaft gears furnished in three sizes marked 'S'—standard, 'H'—high limit, 'L'—low limit. Use next largest size to take up backlash when replacing gears.

NOTE—Screw thread for gear puller and pusher formed in camshaft gear hub recess. Gears must not be driven on or off of shaft.

Camshaft Setting:—Gears are marked. Mesh marked tooth of crankshaft gear between two marked teeth on camshaft gear.

VALVES:—	**Head Diameter**	**Stem Diameter**	**Length**
Intake	1 13/32"	11/32"	5 7/32"
Exhaust	1 9/32"	11/32"	5 7/32"

	Seat Angle	**Lift**	**Stem Clearance**
Intake	45°	11/32"	.001-.003"
Exhaust	45°	11/32"	.001-.003"

Valve Guides:—Pressed in block from upper end.

Valve Springs:—Springs installed with closed coils at top. Damper (cup type valve cage) used on all springs at top. Replace springs if more than 10% weaker than specifications below.

	Spring Length	**Spring Pressure**
Valve Open	1 3/4"	125-135 lbs.

Valve Lifters:—Mushroom type with separate guides. Guide assemblies (groups of four) bolted to crankcase and removable from above.

VALVE TIMING

Tappet Clearance—.016" all valves (cold).

Valve Timing:—See Camshaft Setting above.

Intake Valves—Open 15° BTDC. Close 49° ALDC.

Exhaust Valves—Open 54° BLDC. Close 10° ATDC.

To Check Valve Timing—With tappet clearance of .020", #1 intake valve should open with piston 15° or .0915" before top dead center when mark 'IN.OP/1-8' on flywheel lines up with pointer in inspection hole in right top surface of housing.

LUBRICATION

LUBRICATION:—Force-feed by oil pump to main bearings, connecting rod bearings, camshaft bearings, and valve lifters. Splash from connecting rod bearing escape hole to cylinder walls and piston pins. Timing gears lubricated by oil by-passed by oil pressure regulator relief valve.

Normal Oil Pressure—40 lbs. minimum at 40 M.P.H.

Oil Pressure Relief Valve—Operates at 40 lbs. Located at right front cor. of engine. Not adjustable.

Crankcase Capacity—8 qts.

Oil Pump:—Gear type located in the oil pan. Driven by vertical shaft from camshaft (drive gear on oil pump shaft—distributor driven through tongue-and-slot coupling above gear).

NOTE—Whenever oil pump is taken off engine, drive gear must be properly meshed with camshaft so that distributor rotor position will be correct. To install pump, turn engine over until #1 piston is on top dead center entering power stroke with flywheel mark 'UDC/1-8' at indicator on clutch housing. Turn pump shaft so that distributor drive slot is two teeth clockwise (viewed from below) from correct installed position with slot parallel to camshaft and wide half of coupling toward camshaft. Shaft will be rotated to this position as gears are meshed. Check by sighting down distributor drive shaft hole (distributor off engine) or see that rotor is opposite #1 segment in distributor cap (see wiring diagram).

CLUTCH

CLUTCH:—Long Model 9AB-10CI. Single plate, dry disc type.

See Clutch Section for complete data.

Facings—Moulded type, 2 required. Inside Diam. 6". Outside Diam. 10". Thickness .137".

Adjustment—Free movement of clutch pedal must be 1" minimum. To adjust, loosen locknut and turn adjustment lever setscrew on left side of clutch housing. Check Hill-Holder setting.

Hill-Holder Adjustment:—On cars with Hill-Holder, check action after adjusting clutch. Brakes should be released just before clutch engages. Adjust by loosening locknut and turning adjusting nut at end of hill-holder control rod. Shorten rod for earlier brake release or lengthen rod for later release.

Clutch Removal:—Disconnect clutch pedal linkage, disconnect drive shaft at front universal, remove transmission, take off clutch pan under clutch housing, take out clutch mounting screws turning all screws out evenly to release clutch spring tension, remove clutch from below.

FRONT SUSPENSION

Front Suspension:—Planar type independent suspension with transverse spring.

See Front Suspension Section for complete data.

Kingpin Inclination—9½° crosswise.

Caster—Minus ¼ to plus ¾°. Not adjustable.

Camber—1-1½°. Check with tires properly inflated, car on level floor, after bouncing car up and down several times so that wheels are in normal running position.

Toe In—3/16" (1/8-7/32"). Adjustable.

STEERING GEAR

Steering Gear: Ross Model 620 Cam-and-Lever type.

See Steering Gear Section for complete data.

BRAKES

BRAKES:—Lockheed Hydraulic, four wheel type. Hand lever applies rear wheel brakes.

See Brake Section for complete data.

Wheel Cylinders—Stepped or two-stage bore type: Front Wheels—Front Shoe Cyl. 1 3/8". Rear 1".
Rear Wheels—Front Shoe Cyl. 1¼". Rear 1".
NOTE—Wheel cylinder bore size marked on casting. Not interchangeable.

Drum Diameter—12 1/8".

Lining—Moulded type. Width 1¾". Thickness ¼". Length per wheel 25".

Clearance—.010" toe, .005" heel on each shoe.

Hand Brake Adjustment:—See Service Brakes.

Hill-Holder:—Optional on all models.

See Brake Section for complete data.

MODEL IDENTIFICATION

SERIAL NUMBER:—On plate on left frame side member under front fender. First numbers as follows:

Factory	Model 5A	Model 6-A
South Bend	5,536,001	5,255,001
Pacific Coast	5,852,001	5,802,001

ENGINE NUMBER:—First number D-112,601. Stamped on left center of engine block.

TUNE-UP

COMPRESSION: Pressure—105 lbs. at 150 RPM.

VACUUM READING: 18" steady idling at 8 MPH.

FIRING ORDER: 1-5-3-6-2-4. See diagram.

SPARK PLUGS: Champion Type 8-A. 18 mm. Metric. Gaps—Set at .025".
NOTE—Champion No. 6 Com-62 recommended by car manufacturer for replacement use.

IGNITION: See Coil, Condenser, and Distributor. Breaker Gap—.020". Cam Angle—35° Closed. Automatic & Vacuum Advance—See tables below.

IGNITION TIMING: See Ignition Timing. Std. Setting—2° BTDC. Vibration dampener ignition mark (straight line 9/64" ahead of 'UDC/1-6') aligned with pointer on timing gear cover. Use .016" feeler between advance arm and hold-down plate when tightening distributor clamp bolt (avoids binding vacuum control).

CARBURETION: See Carburetor & Carb. Equipment. Idle Setting—Set idle adjusting screw midway between "miss" and "roll" points (½-1¼ turns open Carter). Idle speed 450 RPM or 8 MPH. Float Level (Stromberg)—Fuel level ⅝" below top edge of bowl. Float Level (Carter)—⅜" from bowl cover to top of float (needle valve seated, gasket removed). Accelerating Pump—Normal setting, Center Hole. Fuel Pump Pressure: 3½ lbs. maximum.

VALVES: See Valve Timing. Tappet Clearance—.016" for all valves, Cold.

STARTING: See Battery, Starter, Generator, and Regulator (when used).

IGNITION

Ignition Switch:—Mitchellock Model 24-R, Type 7071. Connected to coil by armored cable. Ignition Lock—Yale & Towne.

COIL: Auto-Lite Model IG-4634. Mounted on dash. Ignition Current—½-1½ amps. idling, 4-5 stopped.

CONDENSER: Auto-Lite Part No. IGB-1025. Capacity—.20-.25 microfarad.

DISTRIBUTOR: Auto-Lite Model IGW-4001 or IGW-4026 (with Special Tachometer Drive). Single breaker, 6 lobe cam, full automatic advance type with auxiliary vacuum spark control. Breaker Gap—Set at .020". Cam Angle or Dwell—35° closed, 25° open (distr.). Breaker Arm Spring Tension—16-20 ounces.

Distributor Degrees	Automatic Advance R.P.M.	Engine Degrees	R.P.M.
Start	400	0	800
2	600	4	1200
4	800	8	1600
6	1000	12	2000
8	1200	16	2400
10	1400	20	2800

Vacuum Spark Control A-L N . VC-4004. Mounted below distributor and linked to advance arm. Provides additional advance at speeds above idling (vacuum port in carburetor above throttle) except when engine is accelerated or operated with wide open throttle when spark is retarded by return spring within unit.

Vacuum Advance VC-4004—See Note

Distr. Degrees	Eng. Degrees	Vacuum (" of HG)
Start	0°	3"
2°	4°	5"
3°	6°	6"
5°	10°	10"
6°	12°	12"

NOTE—If VC-4001 Vacuum Spark Control Unit used, advance starts with 3" of HG., and reaches maximum advance of 6° (engine) with 6" of HG.

Distributor Removal:—Mounted on left side of crankcase. To remove, loosen advance arm clamp bolt (not necessary to disconnect vacuum connection). NOTE—When installing distributor place .016" feeler between hold-down plate (with hold-down screw tight) and advance plate, tighten clamp bolt (on advance plate), then remove gauge. This insures free movement of advance plate.

IGNITION TIMING

IGNITION TIMING:—Setting for all engines as follows:

Degrees	Piston Position
2° BTDC	.0016" BTDC

To Set Timing—Crank engine by engaging gears and rolling car on floor. With #1 piston on compression, turn engine over until straight line 'IGN' mark on vibration dampener at front of engine lines up with pointer on timing gear cover. This line is 9/64" before top dead center mark 'UDC/1-6.' Loosen advance arm clamp bolt, rotate distributor until contacts begin to open, insert .016" feeler between advance arm plate and hold-down plate(insuring free movement of advance plate), tighten clamp bolt, remove feeler gauge.

CONTINUED ON NEXT PA E

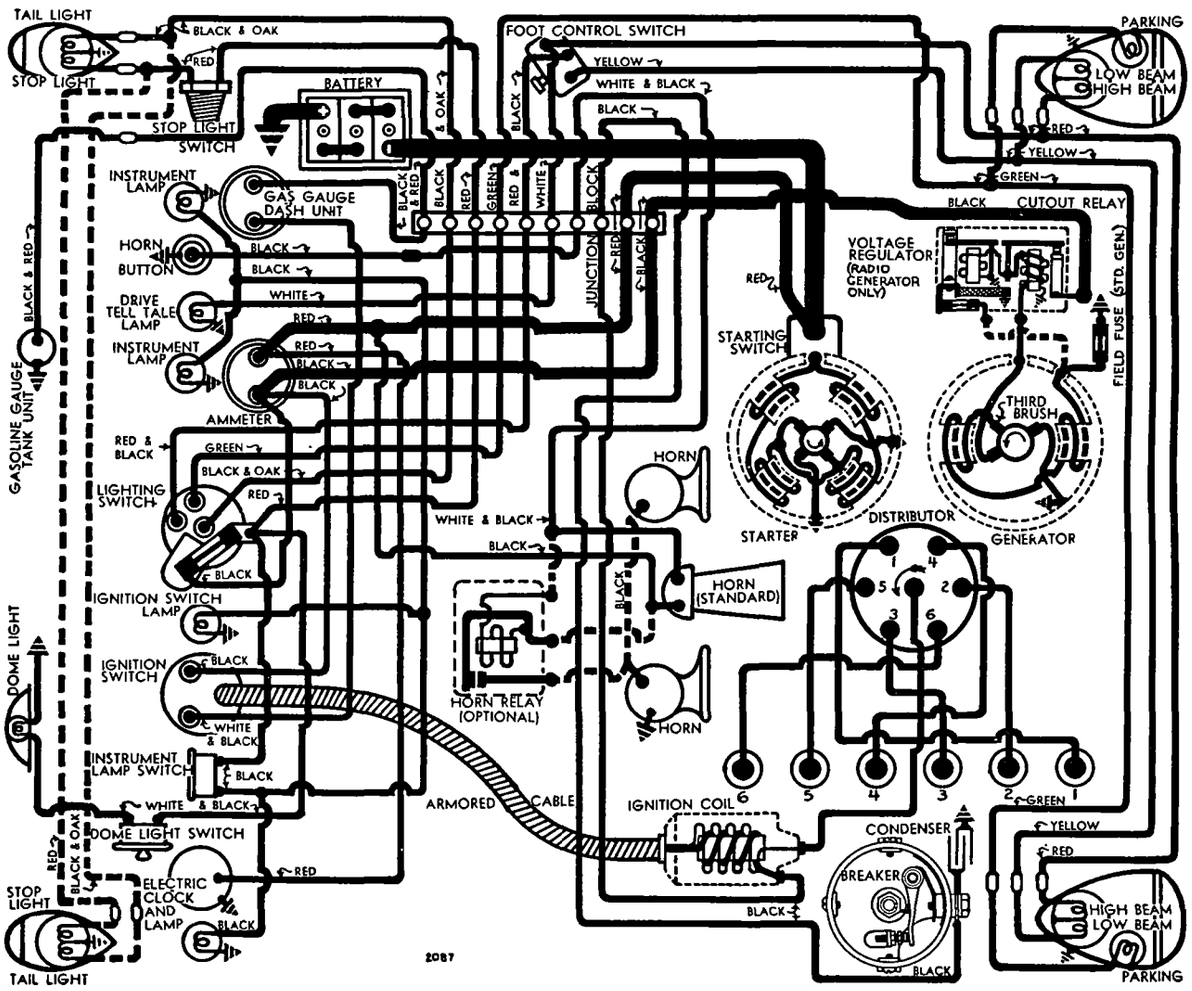

CONTINUED FROM PRECEDING PAGE

CARBURETOR

CARBURETION:—Carburetors—Stromberg Model EX-23, Carter Model 371-S (Motor #D-143675 and up), 1¼" downdraft types with automatic choke.
For complete data, refer to Carburetor Index.
Idle Adjustment—With engine warm, choke valve wide open and idling at hot or slow idling speed, adjust throttle stopscrew so that engine idles at 450 R.P.M. or 8 M.P.H. Turn idle adjusting screw in until engine begins to miss, then turn screw out until engine begins to roll, finally turn screw in slowly until engine fires smoothly. Readjust throttle stopscrew for correct idling speed.
Accelerating Pump Setting—Three holes provided Center Hole—Normal operating conditions.
Inner Hole (Min. stroke)—Extreme warm weather.
Outer Hole (Max. stroke)—Extreme cold weather.

Fast Idle Control & Automatic Choke:—Integral with carburetor. No adjustment required. See separate article for Stromberg and Carter Climatic Control.
For complete data, refer to Carburetion Equip. Index.

CARB. EQUIPMENT

Air Cleaner:—AC. #1528097 oil-wetted type standard, #1526923 oil-bath type optional.
Fuel Pump:—AC. Type W #1522227. Diaphragm type.
For complete data, refer to Carburetion Equip. Index.
Gasoline Gauge:—Motometer Electric. No. NG-8199D (dash unit). No. NG-8165T (tank unit).
For complete data, refer to Carburetion Equip. Index.

BATTERY

BATTERY:—Willard, Type WHT-2-105. 105 ampere hour capacity (20 hour rate).
Starting Capacity—133 amperes for 20 minutes.
Zero Capacity—300 amperes for 3.9 minutes.
Grounded Terminal—Positive (+) terminal.
Location—On left side under front seat.

STARTER

FIRST 15,000 CARS
Auto-Lite Model MAX-4028. Armature MAW-2030.
AFTER SERIAL NOS. 5A-5,542,738; 6A-5,260,534
Auto-Lite Model MAX-4019. Armature MAW-2091.
Drive—(MAX-4028) Positive shift with overrunning clutch. **(MAX-4019)** Outboard Bendix A-1729.
Cranking Engine—110 R.P.M., 150-200 amps., at 5.0-5.5 volts.
Rotation—Counter-clockwise at commutator end.
Brush Spring Tension—42-53 ozs. (new brushes).

Performance Data

Torque	R.P.M.	Volts	Amperes
0 ft. lbs.	5300	5.5	65
.65 "	3300	5.5	100
2.75 "	1630	5.0	200
5.5 "	970	4.5	300
8.7 "	600	4.0	400
12.0 "	300	3.5	500
16.5 "	Lock	3.0	640
25.0 "	Lock	4.0	880

Removal:—Flange mounted on left front face of flywheel housing. To remove, take out two flange capscrews.
Starting Switch (MAX-4028): Auto-Lite SW-2677-B. On starter field frame and operated by pinion shift (starting pedal). **(MAX-4019)** Auto-Lite SW-3737-S on starter and operated through flexible cable by button on instrument panel. Pull required to close switch should be 2.3 lbs. min. at end of switch lever.

GENERATOR

STANDARD

Auto-Lite Model GBM-4607A-2. Armature GBM-2065B. Third brush type with CB-4021 Cutout Relay.
Charging Rate Adjustment—Take off commutator cover band, shift third brush by hand counter-clockwise to increase, or clockwise to decrease **Maximum Charging Rate**—17.2 amperes at 8.3 volts (cold), 14.6 amperes at 8.05 volts (hot). Do not exceed.

Performance Data

Cold Amperes	Cold Volts	Cold R.P.M.	Hot Amperes	Hot Volts	Hot R.P.M.
0	6.4	760	0	6.4	820
4	6.8	920	4	6.8	1000
8	7.3	1080	8	7.3	1200
12	7.75	1300	12	7.75	1500
16	8.2	1640	14.6	8.05	2300
17.2	8.3	2050			

Rotation—Counter-clockwise at commutator end.
Brush Spring Tension—50-60 ozs. (new brushes).
Field Current—3.80-4.20 amperes at 6.0 volts.
Motoring Current—5.7-6.3 amperes at 6.0 volts.
Field Fuse—5 ampere under cover on generator field frame.
Removal:—Pivot mounted at left front of engine with fan belt drive. To remove, take out two pivot bolts and one clamp bolt.
Belt Adjustment:—Loosen pivot bolts and clamp bolt, swing generator away from engine until fan can just be turned with belt held stationary.

GENERATOR

SPECIAL EQUIPMENT

Radio: Auto-Lite Model GCM-4802A-4. Armature GCJ-2006B. Third brush control in conjunction with Current Regulator (two-rate charging control).
Charging Rate Adjustment—Use test meters. Connect jumper between fuse cap on regulator and ground. Shift third brush by hand counter-clockwise to increase or clockwise to decrease charging NOTE—Third brush setting 2⅜ to 2⅝ commutator bars from insulated main brush.
Maximum Charging Rate—22 amperes (cold), 18 amperes (hot), at 8.0 volts. Do not exceed.

Performance Data

Cold Amperes	Cold Volts	Cold R.P.M.	Hot Amperes	Hot Volts	Hot R.P.M.
0	6.4	760	0	6.4	830
4	6.7	920	4	6.75	980
8	7.0	1040	8	7.1	1040
12	7.3	1200	14	7.65	1660
16	7.6	1450	18	8.0	2600
20	7.85	1920			
22	8.0	2680			

Rotation—Counter-clockwise at commutator end.
Brush Spring Tension—53 ozs. max. (new brushes).
Field Current—3.50-3.89 amperes at 6.0 volts.
Motoring Current—5.75-6.25 amperes at 6.0 volts.
Field Fuse—5 ampere in knurled cup on regulator
Removal and Belt Adjustment same as for standard

CUTOUT RELAY

STANDARD

Auto-Lite Model CB-4021 (for GBM-4607A-2 Gen.).
NOTE—Special terminal for Startix connection
For complete data, refer to Electrical Equipment Index.
Cuts In—6.5-7.25 volts.
Cuts Out—.5-2.5 amperes discharge current.
Contact Gap—.015-.045".
Air Gap—.010-.030" with contacts closed.

REGULATOR

SPECIAL EQUIPMENT

Auto-Lite Model TC-4302A (for GCM-4802A-4 Gen.).
Two-Charge Type. On generator. Cutout Relay and Current Regulator (two rate charging control).
For complete data, refer to Electrical Equipment Index.
Cutout Relay—Data same as for CB-4021 above.

Current Regulator

Contacts Open—8.25-8.75 volts at 70° F.
Contacts Close—1.2-1.4 below opening point.
Contact Gap—.005" minimum.
Air Gap—.045" with contacts closed.

LIGHTING

Headlamps—Corcoran-Brown, pre-focused type. Aim straight ahead (upper beam with lenses in place).
Headlamp Beam Indicator—Green dot on speedometer face. Lighted with Upper Beam "on".

Switches

Lighting—Douglas. Studebaker Part No. 188036.
Foot Selector—R.B.M. Model 1085.

Bulb Specifications

Position	Candlepower	Mazda No.
Headlamps	32-32	2331
Parking, Ign. Key	1½	55
Stop and Tail	21-3	1158
Instruments	½	51
Dome	6	81

MISC. ELECTRICAL

FUSES: Lighting—30 ampere. On lighting switch.
Generator Field—5 amperes. Located on generator (standard generator), on regulator (radio gen.).
HORNS:—Klaxon Model K-26-L Type 1638 Std. Model K-33-S Types 2059, 2060 twin horns with relay optl.

Horn Type	Current at 6 volts	Air Gap
1638 Single (Low)	6.5-8.5	.025-.029"
2059 Low Note	11-13	.042-.046"
2060 High Note	10-12	.032-.036"

Horn Relay:—Mod. 271-A. Points close at 2.7-4.0 volts. **Contact Gap**—.015-.030". **Air Gap**—.010-.025".

ENGINE

ENGINE SPECIFICATIONS:—6 cylinder, 'L' head.
Bore—3¼". **Stroke**—4⅜".
Displacement—217.8 cu. ins. **Rated H.P.**—25.4.
Developed Horsepower—90 at 3400 R.P.M.
Compression Ratio—6.0-1 std. cast iron head.
Compression & Vacuum Reading—*See Tune-up data.*
NOTE—Optl. 7.0-1 aluminum head (devel. 94 HP. at 3400 R.P.M.) used at altitudes of 5000 ft. and over. Compression press. 111-118 lbs. at cranking speed. Ign. and valve timing same as std. head.

PISTONS:—Lynite, aluminum alloy, T-slot, cam ground (.00825-.01075" larger diam. 90° from pin bosses).
Weight—15.2 ozs. **Length**—3¾".
Removal—Pistons and rods removed from above.
Clearance—.0005" new. Measure ¼" up on skirt 90° from pin bosses. See Fitting New Pistons.
Original Bore Sizes:—*See Studebaker Shop Notes.*
Replacement Pistons:—Finished pistons (pins fitted) furnished .002", .004", .010", .015", .020", .030", oversize. Exact size stamped on piston head.
Fitting New Pistons:—Insert .002"x1" hardened feeler between piston and wall on camshaft side (T-slot away from camshaft, piston inverted). 7-15 lbs. to withdraw feeler.
Installing Pistons:—T-slot away from camshaft.

ENGINE

CONTINUED FROM PRECEDING PAGE

PISTON RINGS:—2 compression, 1 oil control, all above pin. Ten 5/32" oil drain holes in lower ring groove. Ring oversizes: .010", .020", .030". Heat deflector groove above top ring groove.

Ring	Width	End Gap	Wall Thickness
Compression	1/8"	.013-.018"	.145"
Oil Control	3/16"	.013-.018"	.135"

NOTE—Install comp. rings with step down.

PISTON PIN:—Diameter—7/8". Length—2 7/8".
Pin locked in connecting rod.
Pin Fit in Piston—.0002" clearance or light push fit.
NOTE—Replacement pistons have pins fitted.

CONNECTING ROD:—Weight—33.2 ozs. Length—8 1/8".
Crankpin Journal Diameter—2.18675-2.18775".
Lower Bearing—Integral spun-babbitt lined type.
Clearance—.0005-.002". **Sideplay**—.005-.009".
Bearing Adjustment:—None. Replace rods. Rods furnished std. and .010", .020" undersize on exchange
Installing Rods:—Install rods with narrow half of bearing toward front in cylinders #1, 3, 5, toward rear in #2, 4, 6. Marks on caps and rods must be together and oil hole toward camshaft.

CRANKSHAFT:—4 bearing, integral counterweights.
Journal Diameters—2 1/2" all bearings.
Bearing Type—Removable steel-backed, babbitt-lined. **Clearance**—.0005-.0025".
Bearing Adjustment:—None. (No shims). Replace bearings (no fitting or line reaming required). Furnished std., .010", .020" undersize.
End Thrust:—Thrust plate between front main bearing and crankshaft gear. Shim adjustment.
Endplay—.003-.006".

CAMSHAFT:—Four bearing. Helical gear drive.
Bearings—Split, steel-backed, babbitt-lined type.
Clearance—.00075-.00225" (#1), .002-.00375" (others).
NOTE—Oil holes in bushing and block must match.
End Thrust:—Steel thrust washer and spacer between gear hub and front bearing. **Endplay**—.003-.006".
Timing Gears:—Cast-iron (crankshaft), Celeron Fabric (camshaft). Camshaft gears furnished in 3 sizes *See Studebaker Shop Notes for Replacement Timing Gears.*
Camshaft Setting:—Mesh gears so that marked tooth on camshaft gear meshes with two marked teeth on crankshaft gear.

VALVES:—	Head Diameter	Stem Diameter	Length
Intake	1 15/32"	11/32"	5 7/32"
Exhaust	1 9/32"	11/32"	5 7/32"

	Seat Angle	Lift	Stem-Clearance
All valves	45°	11/32"	.001-.003"

Valve Guides—Pressed in block from above (1 5/32" below upper rim of valve seat) with stepped end down. Ream inside diameter to .3430-.3445".
Valve Springs:—Install with closed-coil at top. Damper used on top of spring. Replace springs if 10% weaker than specifications listed below.

	Spring Pressure	Spring Length
Valve Open	125-135 lbs	1 3/4"

NOTE—Spring will not clear tappet adjusting screw when extended. To install spring, place spring seat in position on spring, compress spring slightly with compressor so that it clears tappet adjusting screw, insert valve, compress spring fully and install valve spring seat locks.
Valve Lifters:—Barrel type (no separate guides). Can be removed from top. Furnished .0005", .001" ov'size.

VALVE TIMING

Tappet Clearance—.016" all valves (cold). Remove right hood side panel for work on valves.
Valve Timing:—See Camshaft Setting above.
Intake Valves—Open 15° BTDC. Close 49° ALDC.
Exhaust Valves—Open 54° BLDC. Close 10° ATDC.
To Check Valve Timing:—Set tappet clearance #1 intake valve at .020". This valve should open with piston 15° or .0942" before top dead center when mark 'IN.OP/1-6' on vibration dampener at front of engine lines up with pointer on gear case cover. Reset tappet clearance at .016" (cold—70° F.).

LUBRICATION

LUBRICATION:—Pressure. Gear type oil pump.
Normal Oil Pressure—40 lbs. min. at 40 M.P.H.
Oil Pressure Regulator—Located at right front corner of engine. Operates at 40 lbs. Not adjustable. Timing gears lubricated by overflow from regulator.
Crankcase Capacity—5 1/2 quarts (dry).
NOTE—Install oil pump as follows (to insure correct rotor position on distributor): remove distributor, turn engine over until mark 'UDC/1-6' on vibration dampener lines up with pointer on gear case cover, sight down distributor shaft hole, mesh oil pump gear so that distributor drive slot is horizontal and offset toward top.

CLUTCH

CLUTCH:—Borg & Beck Model 9A6. Mod. #869 stamped on cover. Single plate, dry disc type.
See Clutch Section for complete data.
Facings—Moulded (flywheel side) and woven (pressure plate side), 2 required. I.D. 5 5/8", O.D. 9 1/4", .133" thick.
Adjustment—Free movement of clutch pedal must be 1" minimum. To adjust, loosen locknut and turn adjustment lever setscrew on left side of clutch housing. Check Hill-Holder after adjusting clutch.
Hill-Holder Adjustment: *See Studebaker Shop Notes.*
Removal:—Remove transmission (see Transmission Removal below), support engine at rear, remove clutch housing, turn mounting screws out evenly to release spring tension, remove clutch assembly.

TRANSMISSION

TRANSMISSION:—Warner—Model AS23-T86 (std.), AS29-T86 (with overdrive). All helical gear type
See Transmission Section for complete data.
Removal:—Disconnect front and rear universal joints at companion flanges, remove capscrews at clutch housing, pull transmission back and up.

OVERDRIVE

Warner Type R6. Warner Transmission No. AS29-T86.
See Transmission Section for complete data.
Removal: Same as for Standard Transmission above after removing Overdrive Support. *See Overdrive Transmission Rear Support Installation data in Studebaker Shop Notes.*

UNIVERSALS

UNIVERSAL JOINTS:—Thompson Products—Rubber bushing type, two used.
NOTE—Single punch mark at front and double punch marks at rear must be aligned with respective marks at each coupling.
See Universals Section for complete data.

REAR AXLE

REAR AXLE:—Spicer—Semi-floating, hypoid gear type with Hotchkiss drive.
See Rear Axle Section for complete data.
Ratio—Std. 4.55-1. Optl. 4.82-1.
Backlash—.005-.007". Shim adjustment.
Removal:—Disconnect brake cables and fluid tube, rear universal joint, remove spring U-bolts, and disconnect springs. Axle assembly can then be removed.
Wheel Bearing Adjustment—Controlled by shims between brake backing plates and flanges on housing. Endplay .001-.005". Difference in shim thickness on either side must not exceed .005".

SHOCK ABSORBERS

SHOCK ABSORBERS:—Delco—Early: Models 1173-L (5A—front), 1171-S (6A—front), 1172-U (rear—all models). **Late:** Models 1180-L (5A—front), 1181-S (6A—front), 1182-U (rear—all models). Direct acting hydraulic types. Late type is adjustable.
See Shock Absorber Section for complete data.

FRONT SUSPENSION

MODEL 5-A

Front Suspension Model 5A:—'I' beam axle with Reverse-Elliott ends and semi-elliptic springs. Specifications below apply with car unloaded on level floor.
King Pin Inclination—9 1/2° crosswise.
Caster—1-1 1/2°. Adjusted by inserting wedge shims between spring and spring pad on axle. Spring pad should incline 1 1/2° toward rear (see Spring Camber).
Camber—1-1 1/2°. No adjustment. Axle may be bent cold for minor camber adjustments.
Toe In—1/16-1/8". Adjust by changing length of tie rod.

FRONT SUSPENSION

MODEL 6-A

Front Suspension Model 6A: Planar type front suspension with transverse spring.
See Front Suspension Section for complete data.
Kingpin Inclination—Two settings as follows:
9 1/2°.....South Bend Serial No. 5,258,246 and before
9 1/2°.....Pacific Coast Serial No. 5,803,288 and before
5 1/2°.....After Serial Numbers given above
Caster—Minus 1/4° to plus 3/4°. Not adjustable.
Camber—1-1 1/2°. Adjustable.
Toe In—1/8-7/32". To adjust, turn right (long) rod.

STEERING GEAR

Steering Gear: Ross T-14 Cam-&-Twin Lever type.
See Steering Gear Section for complete data.

BRAKES

BRAKES:—Service. Lockheed Hydraulic, double anchor type. Hand lever applies rear service brakes.
See Brake Section for complete data.
Wheel Cylinders—Stepped or two-stage bore type:
Front Wheels—Front shoe cyl. 1 3/8". Rear 1".
Rear Wheels—Front shoe cyl. 1 1/4". Rear 1".
NOTE—Wheel cylinder bore size marked on casting.
Drum Diameter—11".
Lining—Front shoe—woven. Rear shoe—moulded. Width 1 3/4". Thickness 3/16". Length per wheel 9 11/16".
Clearance—.010" toe, .005" heel, for each shoe.
Braking Power—45% rear.
Hand Brake Adjustment:—See Service Brakes.
Hill-Holder: Optional on all models.
See Brake Section for complete data.

MODEL IDENTIFICATION

SERIAL NUMBER:—On plate on left frame side member under front fender. First number as follows:

Factory	Serial Number
South Bend	7,111,001
Pacific Coast	7,800,801

ENGINE NUMBER:—Stamped on left side of engine First number B-15501.

TUNE-UP

COMPRESSION:—Ratio—6.5-1 Pressure—105-115 lbs. at cranking speed at 150 R.P.M.

VACUUM READING:—Gauge should show steady reading of 18-20" with engine idling at 450 R.P.M. or 8 M.P.H.

FIRING ORDER: 1-6-2-5-8-3-7-4. See diagram.

SPARK PLUGS: Champion Type 8-A. 18 mm. Metric.

Gaps—Set at .025".

NOTE—Champion No. 6 Com-62 recommended by car manufacturer for replacement use.

IGNITION: See Coil, Condenser, and Distributor.

Breaker Gap—.020". **Cam Angle**—33° Closed.

Synchronization—Set movable contacts to open 45° after stationary set.

Automatic Advance—14½° max. at 1800 RPM (distr).

Vacuum Advance—6° distr. with 11-14" vacuum.

IGNITION TIMING: See Ignition Timing.

Std. Setting—TDC. Flywheel mark 'UDC/1-8' aligned with indicator in flywheel housing inspection hole for stationary contacts. Flywheel mark 'UDC3-6' for movable contacts (¼ revolution from 'UDC/1-8' mark).

CARBURETION: See Carburetor & Carb. Equipment.

Idle Setting—Set idle adjusting screws midway between "miss" and "roll" points. Idle speed 450 RPM or 8 MPH.

Float Level—Fuel level 15/32" below top of bowl.

Accelerating Pump—No seasonal adjustment.

Fuel Pump Pressure: 3½ lbs. maximum.

VALVES: See Valve Timing.

Tappet Clearance—.016" for all valves, Cold.

STARTING: See Battery, Starter, Generator, Regulator.

IGNITION

Ignition Switch:—Mitchellock Model 24-R, Type 7073. Delco-Remy Model No. 1866783. Connect to coil by armored cable.

Ignition Lock—Yale and Towne.

COIL: Delco-Remy Model 537-B. Mounted on dash.

Ignition Current—½-1½ amps. idling, 4-5 stopped.

CONDENSER: Delco-Remy—Part No. 1838163.

Capacity—.18-.25 microfarad.

DISTRIBUTOR: Delco-Remy Model 662-M. Double breaker, 4 lobe cam, full automatic advance type with auxiliary vacuum spark control. NOTE—Movable contacts must be synchronized. Open 45° after stationary set.

Breaker Gap—Set at .020". **Limits**—.018-.024".

Cam Angle or Dwell—Closed 33° Open 12° (distr.). Both sets together when correctly synchronized.

Breaker Arm Spring Tension—19-23 ozs.

Automatic Advance

Distributor		Engine	
Degrees	R.P.M.	Degrees	R.P.M.
Start	300	2.5	600
14.5	1800	29.0	3600

Vac'm Spark Control D-R No. 681-S. Mounted under distributor and linked to advance arm. Provides additional advance except when engine is operated with wide open throttle when spark is retarded by return spring within unit. Plunger travel ¼" max.

Vacuum Advance

Distr. Degrees	Eng. Degrees	Vacuum (" of HG)
Start	0°	5-7"
6°	12°	11-14"

Distributor Removal:—Mounted on cylinder head. To remove, loosen advance arm clamp bolt (not necessary to disconnect vacuum connection).

IGNITION TIMING

IGNITION TIMING:—Setting for all engines as follows:

Flywheel Degrees	Piston Position
0° or TDC.	.000" TDC

Timing (Stationary Contacts)—Crank engine by engaging gears and rolling car on floor. With #1 piston on compression, turn engine over until piston reaches top dead center, stop when flywheel mark 'UDC/1-8' lines up with pointer in inspection hole in right top edge of housing. Loosen advance arm clamp bolt, rotate distributor until stationary con-

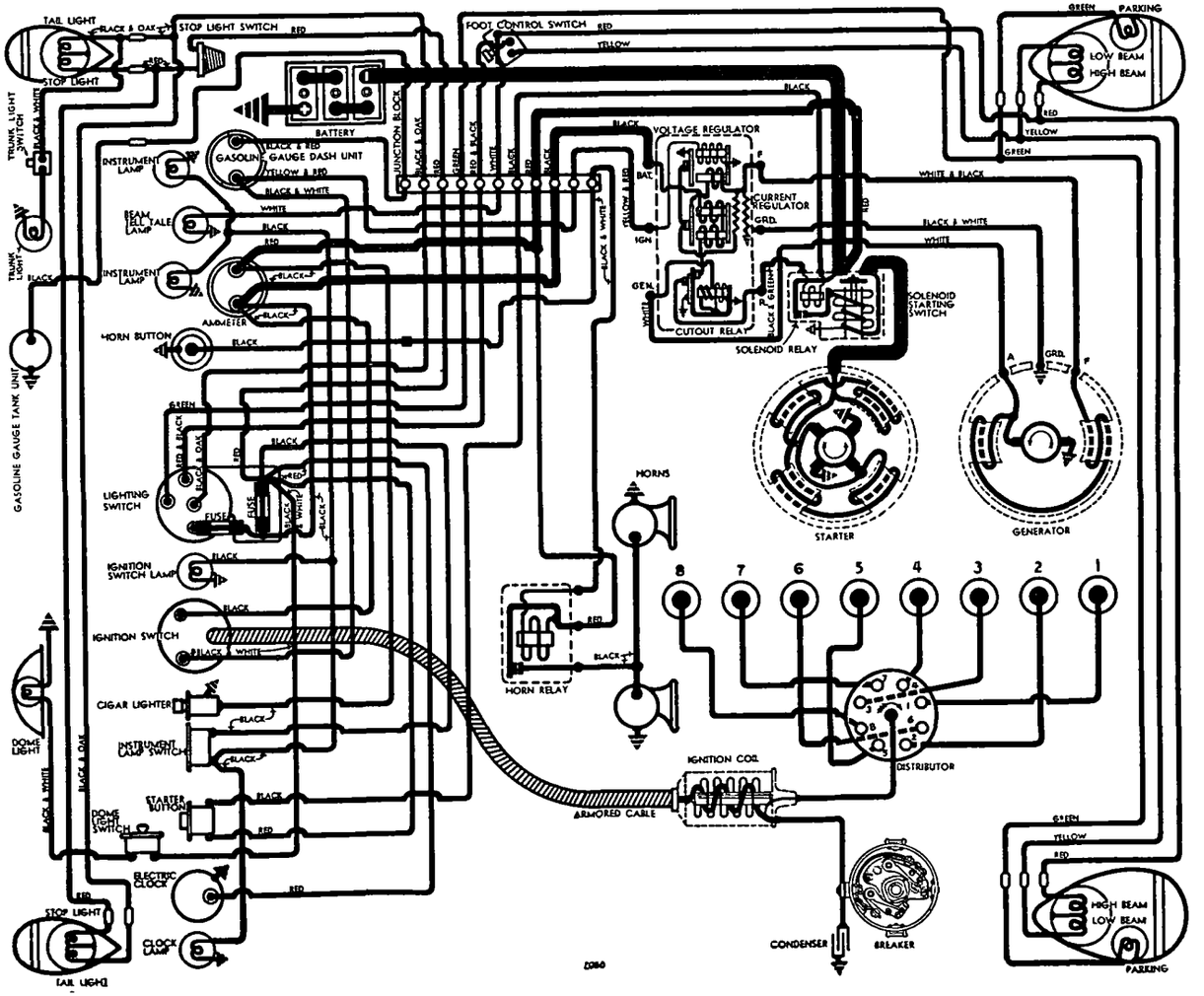

tacts begin to open, tighten clamp bolt, then synchronize movable contacts.

Synchronization (On Engine)—Turn engine over 90° to #6 firing position, stop when flywheel mark 'UDC/3-6' lines up with indicator. Loosen lockscrews on movable sub-plate carrying second set of contacts, turn eccentric adjusting screw until contacts begin to open, tighten lockscrews.

Synchronization (Using Tool)—Use Delco-Remy tool #1838182 and follow complete directions in Electrical Equipment Section. Distributor intervals regular 45-45-45°.

CARBURETOR

CARBURETION:—Carburetor—Stromberg Model EE-1, 1" dual downdraft type.

For complete data, refer to Carburetor Index.

NOTE—A .045" or one size smaller main metering jet may be installed to secure greater fuel economy with slight loss in performance. The .043" two size smaller jet should be used only for high altitudes. See Jet Specification Table in Carburetion Section.

Idling Adjustment—Adjust throttle stopscrew so that engine idles (hot or slow idling speed) at 450 R.P.M. or 8 M.P.H. Turn inner idling adjusting screw in until engine begins to lag or miss, then turn screw out until engine begins to roll, finally turn screw in slowly until engine fires smoothly. Repeat with outer idling adjusting screw. Readjust throttle stopscrew for correct idling speed.

Accelerating Pump—Not adjustable.

Fast Idle:—Stromberg type. See article in Carburetion Section for complete data.

For complete data, refer to Carburetion Equip. Index.

Automatic Choke:—Stromberg Type C.

For complete data, refer to Carburetion Equip. Index.

CARB. EQUIPMENT

Air Cleaner:—Burgess oil-wetted type standard, AC. #1528256 oil-bath optional.

Fuel Pump:—AC. Type P #1521829 standard. Combination fuel-and-vacuum Type J #1521797 or Type AD #1522228 optional.

For complete data, refer to Carburetion Equip. Index.

Gasoline Gauge:—Auto-Lite (Motometer) Electric. No. NG-8205D (dash unit), NG-8165T (tank unit).

For complete data, refer to Carburetion Equip. Index.

BATTERY

BATTERY:—Willard, Type WHT-2-105. 6 volt, 15 plate, 105 ampere hour capacity (20 hour rate).

Starting Capacity—133 amperes for 20 minutes.

Zero Capacity—300 amperes for 3.9 minutes.

Grounded Terminal—Positive (+) terminal.

Location—On left side under drivers seat.

STARTER

Delco-Remy Model 729-G. Armature No. 820158.

Drive—Solenoid pinion shift and overunning clutch.

Cranking Engine—110 R.P.M., 150-200 amperes at 5.0-5.5 volts.

Rotation—Counter-clockwise at commutator end.

Brush Spring Tension—24-28 ounces.

Performance Data

Torque	R.P.M.	Volts	Amperes
0 ft. lbs.	5500	5.0	65
16 ft. lbs.	Lock	3.0	600

Rem val:—Flange mounted on left front face f flywheel housing. Take out capscrews to remove.

Starting Switch: Delco-Remy Solenoid 1546. R.B.M. push button switch #1875. Solenoid switch controlled through relay by push button on instrument board.

For complete data, refer to Electrical Equipment Index.

Solenoid Switch

Closes against 70 lb. pull with ½" air gap drawing 65-71 amperes at 5 volts. Holds switch closed with current draw of 12-14 amperes (hold-in coil only).

Solenoid Relay

Contacts Close—1.9 volts Max. Open 1.0-1.2 volts. Contact Gap—.035". Air Gap—.010" closed.

GENERATOR

Delco-Remy Model 961-H. Armature No. 1866171. Straight shunt (two brush) type with external voltage and current regulation. Ventilated by fan on drive pulley.

Charging Rate Adjustment—No adjustment at generator. Charging rate controlled by Voltage Regulator and maximum output controlled by Current Regulator. See Control Unit Section below.

Maximum Charging Rate—25 amperes (cold) with discharged battery as indicated on test ammeter connected in charging line at 'BAT' terminal on control unit. Decreases as battery comes up on charge. Generator output constant at all speeds above 1650 R.P.M. or 25 M.P.H.

Performance Data—Generator Cold

Amperes	Volts	R.P.M.
25	8.0	1650

Rotation—Counter-clockwise at commutator end.

Brush Spring Tension—22-26 ounces.

Field Current—2.0-2.2 amperes at 6 volts.

Removal:—Cradle mounted at left front of engine. To remove, slack off belt, disconnect water pump drive coupling, loosen mounting clamp band.

Belt Adjustment:—To take up slack in generator drive belt, loosen nut back of fan bracket, lift up fan assembly until fan can just be turned with belt held stationary, tighten bracket nut.

REGULATOR

Delco-Remy Model 5818. Double Core Type Voltage & Current Regulator (With 'IGN' Terminal). Cutout Relay and vibrating type Voltage & Current Regulators in case on dash. Cutout Relay has special 'ground' contacts for starter solenoid control.

For complete data, refer to Electrical Equipment Index.

NOTE—Cover of case sealed and units are serviced on an exchange basis if seals are unbroken. Unit can be checked without breaking seal, but cannot be adjusted.

Cutout Relay

Cuts In—6.7-7.6 volts, 9¼ M.P.H.

Cuts Out—3 amperes maximum discharge.

Contact Gap—.018-.025".

Air Gap—.018-.022" with contacts closed.

Voltage Regulator

Setting—7.5-7.95 volts at 70°F., 7.4-7.6 at 150°F. Regulator is over-compensated for temperature and must be checked at these points.

Checking—To check without breaking seal, disconnect lead at 'IGN' terminal on regulator case, connect jumper between 'IGN' and 'BAT' terminals, connect test ammeter in charging line at 'BAT' terminal, connect voltmeter between 'IGN' terminal and ground. Operate generator at 2800-3400 R.P.M. Check with setting as given above (with 8-10 amps. charging rate).

To Adjust—This requires breaking seal in order to remove cover. Proceed as outlined under 'Checking' (above) and set regulator by bending spring hanger at lower end of armature spring until performance is as shown above. Remove jumper and restore original connections.

NOTE—Voltage Regulator readings must be taken with cover on unit and setting should be checked by decreasing speed until Cutout Relay contacts open, and then increasing speed to original point.

Contact Gap—.015-.025".

Contact Spring Tension—3.5 ozs. minimum.

Air Gap—.060-.070" between armature and core with armature down so that fibre bumper just touches stop, .008-.013" between fibre bumper and stop with armature up.

Current Regulator

Setting—24-26 amperes.

Checking—To check without breaking seal, disconnect 'IGN' and 'BAT' leads, connect ammeter with one lead to 'BAT' terminal and other to 'BAT' lead. Operate generator and check with setting given above.

To Adjust—This requires breaking of seal in order to remove cover. Proceed as outlined under 'Checking' (above) and set regulator by bending spring hanger at lower end of armature spring until maximum output is as given.

NOTE—Generator voltage must not be allowed to exceed 8.5 volts with Voltage Regulator shorted out.

Contact Gap—.015-.025".

Contact Spring Tension—3.5 ozs. minimum.

Air Gap—.070-.080" between armature and core with armature down so that fibre bumper just touches stop, .008-.013" between fibre bumper and stop with armature up.

NOTE—To repolarize generator whenever Control Unit is disconnected or removed, connect jumper between 'GEN' and 'BAT' terminals (after all leads connected) momentarily. Do not run engine.

LIGHTING

LIGHTING:—Headlamps—Corcoran-Brown, Prefocused type. Headlamps aimed straight ahead (upper beam) with lenses in place. Upper and lower beams controlled by foot selector switch (lower beam deflected slightly to right).

Headlamp Beam Indicator—Green dot on speedmeter face. Lighted when upper driving beam in use.

Switches

Lighting—Douglas. Studebaker Part No. 190015.

Foot Selector—R.B.M. Model 1085.

Stop Lamp—Hydraulic type mounted on brake master cylinder.

Trunk Lamp—R.B.M. Model 2350.

CONTINUED ON NEXT PAGE

CONTINUED FR M PRECEDING PAGE

Bulb Specifications

Position	Candlepower	Mazda No.
Headlamps	32-32	2331
Parking, Ign. Key	1½	55
Stop and Tail	21-3	1158
Instruments	½	51
Dome and Trunk	6	81

MISC. ELECTRICAL

FUSES:—Lighting—30 ampere on lighting switch. Auxiliary—30 ampere on lighting switch carries stop light and accessories.

HORNS:—Klaxon Model K-26-L Type 1638 std. Model K-33-S Types 2059, 2060 twin horns with horn relay optional.

Horn Type	Current at 6 volts	Air Gap
1638 Single (low)	6.5-8.5	.025-.029"
2059 Low Note	11-13	.042-.046"
2060 High Note	10-12	.032-.036"

Horn Relay:—Mod. 271-A. Points close at 2.7-4.0 volts. Contact Gap—.015-.030". Air Gap—.010-.025".

ENGINE

ENGINE SPECIFICATIONS:—8 cylinder, 'L' head.
Bore—3 1/16". Stroke 4¼".
Displacement—250.4 cu. ins. Rated HP.—30.
Developed Horsepower—115 at 3600 R.P.M.
Compression Ratio—6.5-1 Al. head Std.
Compression Pressure—105-115 lbs. @ 150 R.P.M.
Vacuum Reading—18" idling at 450 RPM. or 8 MPH.

PISTONS:—Lynite, aluminum alloy, T-slot, tin-plated, cam ground type.
Weight—13.6 ozs. Length—3¾".
Removal—Pistons and rods removed from above.
Clearance—.0015" (¼" up on skirt 90° from pin).

Original Bore Sizes:—*See Studebaker Shop Notes.*

Replacement Pistons:—Finished pistons (pins fitted) furnished .002", .004", .010", .015", .020", .030" oversize. Exact size stamped on piston head.

Fitting New Pistons:—Insert .003"x1" hardened feeler between piston and wall on camshaft side (T-slot away from camshaft, pin bosses parallel with crank shaft). Pull to withdraw feeler 7-15 lbs.

Installing Pistons:—T-slot away from camshaft.

PISTON RINGS:—2 compression, 1 oil control, all above pin. Ten 5/32" oil drain holes in lower ring groove. Oversize rings furnished .010", .020", .030". Heat deflector groove above top ring groove.

Ring	Width	End Gap	Side Clearance
Compression	⅛"	.013-.018"	.0015-.002"
Oil Control	3/16"	.013-.018"	.0015-.002"

NOTE—Install comp. rings with step down. Inner ring used behind oil control ring.

PISTON PIN:—Diameter—⅞". Length—2⅝".
Pin is locked in rod.
Pin Fit in Piston—.0001-.0003" clearance or light push fit.
NOTE—Replacement pistons have pins fitted.

CONNECTING ROD:—Weight—32 ozs. Length—8".
Crankpin Journal Diameter—1.87425-1.87525".
Lower Bearing—Removable steel-backed, lead-bronze lined type.
Clearance—.00075-.00275". Sideplay—.005-.010".

Bearing Adjustment:—None. Replace bearings. Press in new bearings so that tongues engage in slots and oil holes line up. Crankpins must be turned down to size. Bearings furnished .005", .010", .020" undersize and standard. Bearing halves identical.

Installing Rods:—Oil hole in rod toward camshaft.

CRANKSHAFT:—9 bearing, bolted counterweights. Rubber and friction disc vibration damper mounted on forward end. See Studebaker Shop Notes for vibration damper data.
Journal Diameters—2 11/32" all bearings.
Bearing Type—Interchangeable steel-backed, babbitt-lined. No shims. Clearance—.001-.003".

Bearing Adjustment:—None. Replace bearings. (No line reaming or fitting necessary). Furnished .010", .015" undersize.

End Thrust:—Thrust plate between front main bearing and crankshaft gear. Shim adjustment. Endplay—.003-.006".

CAMSHAFT:—Six bearing. Helical gear drive.
Bearings—Split, steel-backed, babbitt-lined.
Clearance—.00075-.00225" (#1), .002-.00375" (others)
NOTE—Oil holes in bushing and block must match.
End Thrust:—Steel thrust washer and spacer between gear hub and front bearing. Endplay—.003-.006".
Timing Gears:—Cast-iron (crankshaft), Celeron Fabric (camshaft). *See Studebaker Shop Notes for Gear Sizes and Gear Removal Instructions.*
Camshaft Setting:—Mesh gears so that marked tooth on camshaft gear meshes with two marked teeth on crankshaft gear.

VALVES:—	Head Diameter	Stem Diameter	Length
Intake	1 13/32"	11/32"	5 7/32"
Exhaust	1 9/32"	11/32"	5 7/32"

	Seat Angle	Lift	Stem Clearance
All valves	45°	11/32"	.001-.003"

Valve Guides:—Pressed in block from above (1 5/16" below top of block) with stepped end down. Ream inside diameter to .343-.344".

Valve Springs:—Install with closed-coil at top. Damper used on top of spring. Replace springs if 10% weaker than specifications listed below.
See Studebaker Shop Notes for Valve Spring Installation instructions.

	Spring Length	Spring Pressure
Valve Open	1¾"	125-135 lbs.

Valve Lifters:—Mushroom type with bolted-on guides (in clusters of four). Can be removed from side.

VALVE TIMING

Tappet Clearance:—.016" all valves, cold.
Valve Timing:—See Camshaft Setting above.
Intake Valves—Open 15° BTDC. Close 49° ALDC.
Exhaust Valves—Open 54° BLDC. Close 10° ATDC.
To Check Valve Timing:—With tappet clearance of .020", #1 intake valve should open with piston 15° or .0915" before top dead center when mark 'IN.OP./1-8' on flywheel lines up with pointer in inspection hole on right top side of flywheel housing. Reset tappet clearance at .016" cold.

LUBRICATION

LUBRICATION:—Pressure. Gear type oil pump.
See Studebaker Shop Notes for Oil Pump Installation directions.
Normal Oil Pressure—40 lbs. min. at 40 M.P.H.
Oil Pressure Regulator—Located at right front corner of engine. Operates at 40 lbs. Not adjustable.
Crankcase Capacity—8 quarts (dry).

COOLING

COOLING SYSTEM:—Water Pump—Centrifugal, belt driven, with adjustable type packing.
See Water Pump Section for complete data.
Removal—With all water drained and fan belt removed, disconnect pump inlet hose, take out pump mounting bolts, lift fan and pump assembly off.

Thermostat:—Bishop & Babcock or Fulton. In upper radiator hose.
Setting—Start to open 148-153°F.

Water Capacity:—16 quarts.

CLUTCH

CLUTCH:—Long Model 9AB-10CI. Single plate, dry disc type.
See Clutch Section for complete data.
Facings(3C)—Molded type, 2 required. Inside diam. 6". Outside Diam. 10". Thickness .137".
Adjustment—Free movement of clutch pedal must be 1" min. Adjustment lever setscrew at housing Check Hill-Holder after adjusting clutch.

Hill-Holder Adj.:—*See Studebaker Shop Notes.*

Removal:—Disconnect clutch pedal linkage, remove transmission (see Transmission Removal below), support engine at rear, remove clutch bell housing, clutch mounting screws, pull assembly out.

TRANSMISSION

TRANSMISSION: Warner—Model AS16-T85 (standard). All helical gear type (synchro-mesh second & high).
See Transmission Section for complete data.

Removal: Disconnect front and rear universal joints at companion flanges, remove capscrews at clutch housing. Pull transmission back and up.

OVERDRIVE

OVERDRIVE: Warner Automatic or Warner Type R-6. Complete assembly model number (transmission with Automatic type Overdrive) Warner No. AS14-T85. IMPORTANT—This Automatic Type Overdrive used only on 1937 Studebaker President.
See Transmission Section for complete data.

Removal: Same as for Standard Transmission above after removing Overdrive Support. *See Overdrive Transmission Rear Support Installation data in Studebaker Shop Notes.*

UNIVERSALS

UNIVERSAL JOINTS:—Spicer. Model 1311 (frt.), 1318 (rear). Needle bearing type.
See Universals Section for complete data.

NOTE—Arrows on front universal yoke and propeller shaft must be in alignment.

REAR AXLE

REAR AXLE: Spicer. Semi-floating, hypoid gear type with Hotchkiss drive.
See Rear Axle Section for complete data.
Ratio (3C)—4.55-1 Standard. 4.73-1 Optional.
Backlash—.005-.007". Shim adjustment.

Removal:—Hoist rear of car, disconnect propeller shaft at rear universal, brake line, and shock absorbers, remove spring U-bolts, disconnect rear spring shackles, pull axle assembly out.
NOTE—Bleed brake lines when axle reinstalled.

Wheel Bearing Adjustment—Shims provided between flanged end of axle housing and brake backing plate. To adjust, remove wheel, hub, drum, and backing plate (retained by 6 nuts). Remove shims to decrease endplay, add shims to increase. Shim thickness at both wheels must be equal within .005".
Endplay—.001-.005". Measure with dial indicator.

SHOCK ABSORBERS

SHOCK ABSORBERS:—**Delco (3C)—Early:** Models 1171S (front), 1172X (rear). **Late:** 1181S (front), 1182X (rear). Direct acting type. Late type adjustable.
See Shock Absorber Section for complete data.

FRONT SUSPENSION

Front Suspension:—Planar type independent suspension with transverse spring. Specifications below apply with car unloaded on level floor.
See Front Suspension Section for complete data.

Kingpin Inclination—Two settings as follows:

9½°.....Serial Number 7,111,836 & before
5½°.....After above Serial Number

Caster—Minus ¼° to plus ¾°. Not adjustable.

Camber—1-1½°. Adjustable.

Toe In—⅛-7/32". To adjust, turn right (long) rod.

STEERING GEAR

Steering Gear: Ross Model T-21. Cam & Twin Lever type.
See Steering Gear Section for complete data.

BRAKES

BRAKES:—Lockheed Hydraulic, double anchor type. Hand lever applies rear service brakes.
See Brake Section for complete data.
Wheel Cylinders—Stepped or two-stage bore type:
Front Wheels—Front shoe cyl. 1⅜". Rear 1".
Rear Wheels—Front shoe cyl. 1¼". Rear 1".
NOTE—Wheel cylinder bore size marked on casting.
Drum—Budd composite. Diameter—11".
Lining—Front shoe—woven. Rear shoe—moulded.
3C—Width 1¾". Thick. ¼". Length per wheel 21½".
Clearance—.010" toe, .005" heel, for each shoe.
Hand Brake Adjustment:—See Service Brakes.
Hill-Holder:—Optional equipment.
See Brake Section for complete data.

MODEL IDENTIFICATION

NOTE:—First Model 7A cars called Studebaker Six, later cars Commander. First Model 8A cars called Commander, later cars State Commander.

SERIAL NUMBER:—Stamped on plate on left frame side member under left front fender. First numbers as follows:

	South Bend	Los Angeles
7A (Six, Commander)	5582001	5857501
8A (Comm., State Comm)	4090001	4800001

ENGINE NUMBER:—Stamped on left side of engine block at rear. First number—H-101.

TUNE-UP

COMPRESSION:—Ratio—6.0-1 Std. 7.0-1 (high altitude). Pressure—105 lbs. (Std. 6-1 hd.), 110 lbs. (Optl. 7-1 hd.) at cranking speed of 150 R.P.M.

VACUUM READING:—18" steady reading with engine idling at 450 RPM. or 8 MPH.

FIRING ORDER: 1-5-3-6-2-4. See diagram.

SPARK PLUGS: Champion Type 8-A. 18 mm. Metric. Gaps—Set at .025".

NOTE—Champion No. 6 Com-62 recommended by car manufacturer for replacement use.

IGNITION: See Coil, Condenser, and Distributor. Breaker Gap—.020". Cam Angle—35° Closed. Automatic Advance—10° max. at 1400 RPM (distr.). Vacuum Advance—6° distr. with 12" vacuum.

IGNITION TIMING: See Ignition Timing. Std. Setting—2° BTDC. Vibration dampener mark 'IGN/' aligned with pointer on timing gear cover. Use .016" feeler between advance arm and hold-down plate when tightening distributor clamp bolt (avoids binding vacuum control).

CARBURETION: See Carburetor & Carb. Equipment. Idle Setting—Set idle adjusting screw midway between "miss" and "roll" points. Idle speed 450 RPM or 8 MPH.

Float Level—Fuel level 5/8" below top edge of bowl.

Accelerating Pump—Normal setting, Center Hole.

Fuel Pump Pressure: 3½ lbs. maximum.

MANIFOLD HEAT CONTROL:—Thermostatic coil type. To check valve, unlatch thermostatic coil by freeing outer end from bracket on manifold, operate valve by hand and see that valve is free (shaft can be cleaned with emery if necessary). Make certain that coil is properly latched on bracket and that tension spring (from shaft to clip on manifold flange) is in place.

VALVES: See Valve Timing.

Tappet Clearance—.016" for all valves, Cold.

STARTING: See Battery, Starter, Generator, Regulator.

IGNITION

Ignition Switch:—Mitchellock Type 24-R. No. 7652 (Mahogany finish), 7654 (Burl Tan), 7658 (Silver Beige), 7697 (Gunmetal Gray). Connected to coil by armored cable.

Ignition Lock—Yale & Towne. Mitchell No. 6770.

COIL: Auto-Lite Model IG-4649 (8A), IG-4649A (7A), IG-4649C (7A or 8A). Service Coil (less switch and cable) IG-3033ZS. Mounted on dash.

Ignition Current—½-1½ amps. idling, 4-5 stopped.

CONDENSER: Auto-Lite Part No. IGB-1025. Capacity—.20-.25 microfarad.

DISTRIBUTOR: Auto-Lite Model IGW-4101 or IGW-4111 (with Special Tachometer Drive). Single breaker, 6 lobe cam, full automatic advance type with auxiliary vacuum spark control.

Breaker Gap—Set at .020".

Cam Angle or Dwell—35° (closed), 25° (open).

Breaker Arm Spring Tension—16-20 ozs.

Rotation—Counter-lockwise viewed from top.

Automatic Advance

Distributor Degrees	Distributor R.P.M.	Engine Degrees	Engine R.P.M.
Start	400	0	800
3	700	6	1400
6	1000	12	2000
10	1400	20	2800

Vacuum Spark Control A-L No. VC-4004. Mounted below distributor and linked to advance plate. Provides additional advance at speeds above idling except when engine accelerated or operated with wide open throttle when spark retarded by return spring within unit.

Distr. Degrees	Vacuum Advance Eng. Degrees	Vacuum (" of HG)
Start	0°	3"
2°	4°	5"
3°	6°	6"
5°	10°	10"
6°	12°	12"

Distributor Removal:—Mounted on left side of engine. To remove, loosen advance arm clamp bolt (not necessary to disturb vacuum unit connection).

NOTE—When installing distributor, insert .016" feeler between hold-down plate and advance plate while tightening advance plate clamp bolt to prevent binding and allow free advance plate motion.

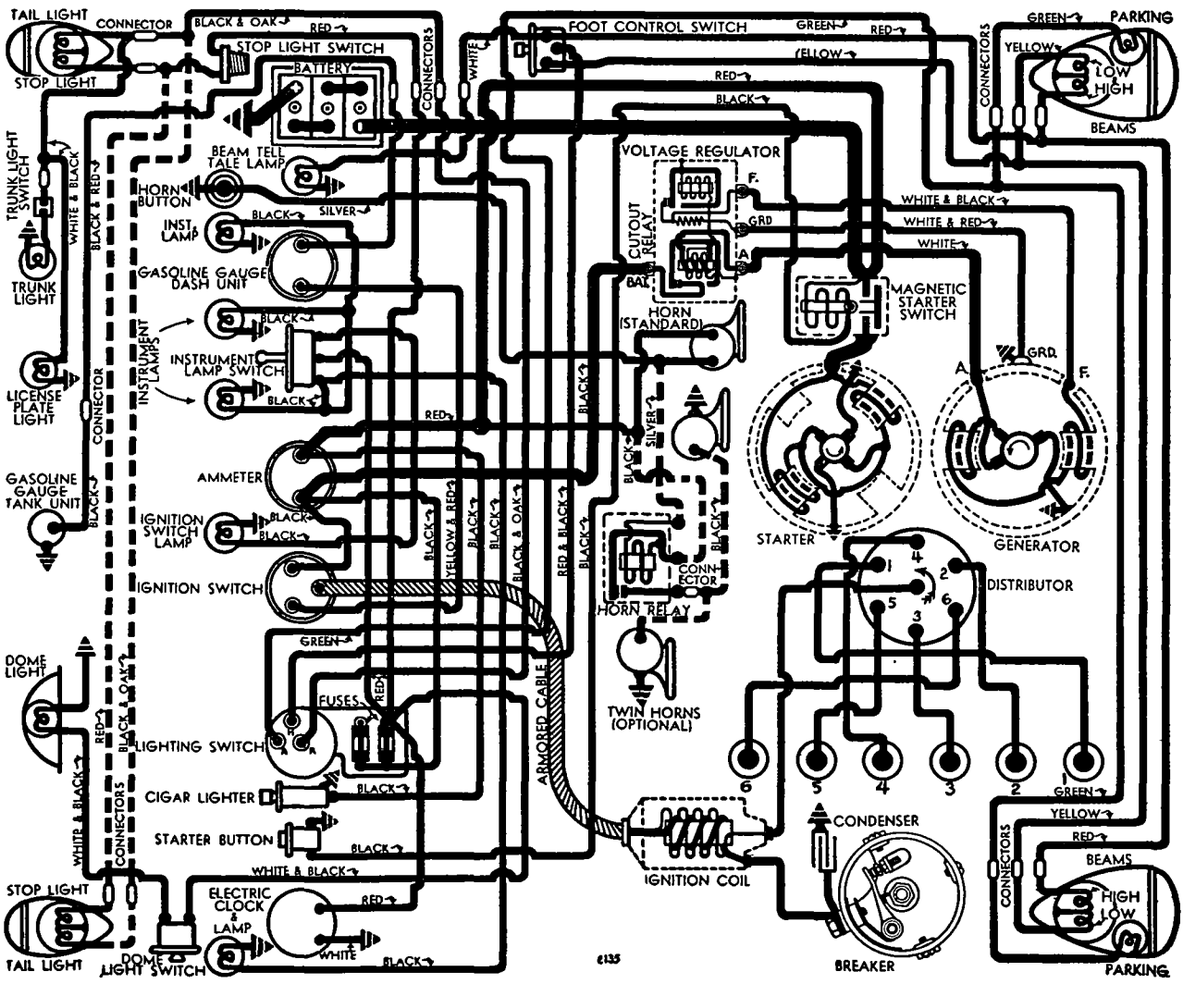

IGNITION TIMING

IGNITION TIMING:—For all engines as follows:

	Flywheel Degrees	Piston Position
7A, 8A	2° BTDC	.0016" BTDC.

To Set Timing—Crank engine by engaging gears and rolling car on floor. With #1 piston on compression, turn engine over until 'IGN/' mark on vibration dampener at front of engine lines up with pointer on timing gear cover (this mark is 2° or 9/64" before top dead center mark '/UDC.1-6'). Loosen advance arm clamp bolt, rotate distributor until contacts begin to open, insert .016" feeler between advance arm and hold-down plate (to insure clearance for free advance arm movement), tighten clamp bolt, remove feeler gauge.

CARBURETOR

CARBURETION:—**Carburetor**—Stromberg Model BXO-26, 1¼" single, downdraft type.

For complete data, refer to Carburetor Index.

Idle Adjustment—With engine warm, Fast Idle and Automatic Choke inoperative so that engine idles at hot or slow idle speed, set throttle stopscrew so that idling speed is 7-8 MPH., turn idle adjusting screw in until engine begins to miss or lag, turn screw out until engine begins to roll, finally turn screw in slowly until engine fires smoothly. Readjust stopscrew for correct idling speed.

Accelerating Pump Adjustment—Three holes provided in throttle lever for pump link engagement. Change setting for seasonal requirements:

Inner Hole (Min. stroke)—Extreme warm weather.

Center Hole—Normal operating conditions.

Outer Hole (Max. stroke)—Extreme cold weather.

NOTE—Metering jets need not be changed when heavy duty oil-bath type air cleaner installed. First size smaller main metering jet can be installed to secure greater fuel economy with slight loss of performance. See Jet Specification table in Carburetion Section for complete jet data.

Fast Idle & Automatic Choke:—Integral with carburetor.

For complete data, refer to Carburetion Equip. Index.

Automatic Choke Adjustment—Standard setting for ordinary fuel is with mark 'R' on thermostatic spring case lined with reference projection on housing. If this setting too rich (engine over-chokes or loads up), rotate case to 'M' mark (leaner setting). Use 'H' position for highly volatile fuels.

CARB. EQUIPMENT

Air Cleaner:—AC #1528630 oil-wetted type standard, #1528632 heavy-duty oil-bath type optl. (standard in severe dust condition states).

NOTE—AC #1528665 oil-vent air cleaner used with oil-wetted type air cleaner, #1528629 heavy duty type with oil-bath cleaners.

Fuel Pump:—AC Type W, #1522227 Std., Type AD #1522228 combination fuel-and-vacuum pump Optl.

For complete data, refer to Carburetion Equip. Index.

Gasoline Gauge:—Auto-Lite (Motometer) Electric. No. NG-8711D (dash unit).

For complete data, refer to Carburetion Equip. Index.

BATTERY

BATTERY:—Willard, Type WHT-2-105. 6 volt, 15 plate, 105 ampere hour capacity (20 hour rate).

Starting Capacity—133 amperes for 20 minutes.

Zero Capacity—300 amperes for 3.9 minutes. Five second voltage—4.27 volts.

Grounded Terminal—Positive (+) terminal. Battery grounded to frame. Engine grounded by separate ground strap at front engine mounting.

Dimensions—Width 7 1/6". Length 10 5/16". Height 8 13/16".

Location—On left hand side under front seat.

STARTER

Auto-Lite Model MAW-4015. Armature MAW-2091.

Drive—Outboard Barrel Type Bendix No. A-1719.

Rotation—Counter-clockwise at commutator end.

Brush Spring Tension—43-52 ozs. (new brushes).

Cranking Engine—130 RPM., approximately 175 amperes at 5.0-5.5 volts.

Performance Data

Torque	R.P.M.	Volts	Amperes
0 ft. lbs.	4900	5.5	65
.6 "	3300	5.5	100
2.75 "	1480	5.0	200
5.45 "	820	4.5	300
8.5 "	400	4.0	400
11.5 "	Lock	3.0	505
18.0 "	Lock	4.0	670

Removal:—Starter flange mounted on left front face of flywheel housing. To remove, take out two flange mounting screws, remove starter and switch as assembly.

Starting Switch:—R.B.M. Model 2214. Magnetic type. Mounted on starter and controlled by pushbutton switch on instrument panel.
Contacts Close—4-4½ volts. **Open**—1½ volts.
Current Draw—3-3½ amperes.

GENERATOR

EARLY CARS

Auto-Lite Model GCJ-4808-A. Armature GCJ-2006B. Fixed third brush type used with Auto-Lite Voltage Regulator Model VRD-4006-A.

MODEL 7A—SERIAL No. 5,591,818 & UP
MODEL 8A—SERIAL No. 4,104,800 & UP

Auto-Lite Model GDF-4804-B. Armature GDF-2006. Fixed third brush type used with Auto-Lite Voltage Regulator Model VRD-4006-B.

NOTE—Third brush is fixed non-adjustable type. Any attempt to adjust third brush position will damage brush holder.

Charging Rate Adjustment—Adjusted by changing Voltage Regulator setting (do not disturb third brush). See Regulator data below.

Maximum Charging Rate—As given in tables below. Reached at car speed of 25 to 30 M.P.H. To check generator output, connect test ammeter in line at 'B' terminal on regulator, connect voltmeter between 'A' terminal and ground, short out regulator by connecting jumper between 'F' and 'GD' terminals. Operate generator at speed of 25-30 M.P.H., check ammeter reading. Disconnect jumper and restore original connections after making test.

Performance Data—GCJ-4808-A

Cold Amperes	Cold Volts	Cold R.P.M.	Hot Amperes	Hot Volts	Hot R.P.M.
0	6.4	760	0	6.4	850
4	6.65	920	4	6.7	1020
8	6.9	1080	8	7.0	1240
12	7.2	1240	12	7.3	1400
16	7.45	1400	16	7.6	1650
20	7.7	1580	20	7.9	2100
25	8.0	2500	22	8.0	2700

Performance Data—GDF-4804-B

0	6.4	920	0	6.4	1000
4	6.6	1030	4	6.6	1140
8	6.8	1140	8	6.85	1280
12	7.0	1300	12	7.1	1440
16	7.25	1460	16	7.3	1640
20	7.45	1650	20	7.55	1840
24	7.65	1880	24	7.75	2220
28	7.9	2220	28.3	8.0	3200
32	8.0	3100			

Rotation—Counter-clockwise at commutator end.
Brush Spring Tension—53 ounces (new brushes).
Field Current—1.9-2.1 amperes at 6.0 volts.
Motoring Current (GCJ)—4.0-4.4 amperes at 6 volts.
Motoring Current (GDF)—5.3-5.9 amperes at 6 volts.

Removal:—Pivot mounted at left front of engine. To remove, take out pivot and clamp bolts.

Belt Adjustment:—Loosen pivot and clamp bolts, move generator out away from engine until fan can just be rotated with belt held stationary.

REGULATOR

Auto-Lite Model VRD-4006-A (for GCJ Generator), VRD-4006B (with GDF generator). Consists of Cut-out Relay and vibrating Voltage Regulator in case on engine side of dash.

For complete data, refer to Electrical Equipment Index.

NOTE—Regulator cover sealed. Serviced on exchange basis if seals not broken. Cover must be removed to make adjustments.

Cutout Relay

Cuts In—6.4-7.0 volts Cold.

Cuts Out—.5-3.0 amperes discharge current.

Contact Gap—.015" minimum.

Air Gap—.034" min., .038" max., with contacts open. Measure at hinge end of core.

Voltage Regulator

Setting—7.3-7.6 volts at 70°F. (Regulator Serial No. 8R-000001 Up). See Electrical Equipment Section for settings and changes on units before this serial no.

To Check (Without Breaking Seals)—Connect ammeter in charging line at 'B' terminal on regulator, connect voltmeter between 'B' and 'GD' terminals. Operate generator, charging fully charged battery, at speed equivalent to 30 M.P.H. until voltage is steady. Voltmeter reading should be within limits of 7.3-7.6 volts (cold—70°F), 7.1-7.4 volts (hot—140°F). See Regulator Setting above.

To Adjust—Change armature spring tension slightly by bending lower spring hanger. See Electrical Equipment Section for complete directions.

Contact Gap—.010" Min., .020" Max. with armature against stop pin.

Air Gap—.0595-.0625" with contacts just opening.

C NTINUED N NEXT PAGE

CONTINUED FR M PRECEDING PAGE

LIGHTING

LIGHTING:—Headlamps—Corcoran-Brown, pre-focused type. Upper and lower beams controlled by selector switch on toeboard (lower beam deflected slightly to right).

Headlamp Adjustment (Model 7A)—With car unloaded, on level floor 25' from screen, and with upper beams lighted, loosen mounting nut under headlamp and aim each lamp so that upper edge of beam is slightly above horizontal line at lamp-center height, and beam is centered on vertical line directly ahead of the lamp center.

Headlamp Adjustment (Model 8A)—Adjust for same beam pattern as 7A above. Adjusting screw for horizontal movement located on side of lamp body (remove hood side panel for access to screw), screw for vertical movement at rear of lamp body. **Beam Indicator**—Green Dot on face of speedometer dial, illuminated whenever upper beams in use.

Switches

Lighting—Douglas.
Beam Selector—R.B.M. #1081.

Bulb Specifications

Position	Candlepower	Mazda No.
Headlamps	32-32	2331
Headlamps (export)	32-32	2330
Parking, Ign., Instrument	1½	55
Stop & Tail	21-3	1158
License	3	63
Trunk	6	81
Dome	15	87

MISC. ELECTRICAL

FUSES:—Lighting—20 ampere. On back of lighting switch (nearest to instrument panel).

Accessory—20 ampere. On back of lighting switch. Protects Heater, Radio, etc.

HORNS:—Klaxon, Model K-33-S. Type 2083 (Std. 7A). Type 2078 (High Note, R.H. horn), Type 2077 (Low Note, L.H. horn) Std. on Model 8A, Optl. on 7A. All h rns are vibrator type. Twin horns are matched tone and operated by horn relay.

Type	Current (at 6 volts)	Air Gap
Type 2077 (Low Note)	12-14 amperes	.032-.036"
Type 2078 (High Note)	11-13 amperes	.042-.046"

Horn Relay:—Delco-Remy Model 1116756.
Contacts Close—2.7-4.0 volts.
Contact Gap—.020". **Air Gap**—.015".

ENGINE

ENGINE SPECIFICATIONS:—6 cylinder, 'L' head.
Bore—3 5/16". Stroke—4⅜".
Displacement—226 cu. ins. **Rated HP**—26.35.
Devel ped Horsepower—90 HP. (Std. head), 94 HP. (Optl. high altitude head) at 3400 RPM.
Compression Ratio—6.0-1 Std. cast-iron head. 7.0-1 aluminum hd. Optl. (high altitude only).
See Studebaker Shop Note for Head installation.
Compression Pressure—105 lbs. (Std. head), 110 lbs. (Optl. head) at 150 RPM. (cranking speed).
Vacuum Reading—18-20" at 450 RPM. or 8 MPH.

PISTONS:—Lynite, aluminum alloy, tin-plated, T-slot, cam ground type. **Length**—3¾".
Removal—Pistons and rods removed from above.
Clearance—.0005" new. Measure ¼" up on skirt 90° from pin bosses. See Fitting New Pistons.
Original Bore Sizes:—***See Studebaker Shop Notes.***
Replacement Pistons:—Finished pistons (pins fitted) furnished std. and .002", .004", .010", .015", .020", .030" oversize. Exact size stamped on piston head.
Fitting New Pistons:—Insert .002" X 1" feeler between piston and wall on camshaft side (pin parallel to crankshaft, T-slot away from camshaft). Pull to withdraw feeler must be between 7-15 lbs.
Installing Pistons:—T-slot away from camshaft.

PISTON RINGS:—2 (P-C#70) compression, 1 (#85) oil ring per piston, all above pin. Narrow heat-dam groove (no ring fitted) above top ring. Oil ring groove drilled with ten 5/32" oil drain hole.

Ring	Width	End Gap	Side Clearance
Compression	⅛"	.013-.018"	.0015-.002"
Oil Control	3/16"	.013-.018"	.0015-.002"

NOTE—Install compression rings with step down.
Replacement Rings:—Oversizes .010", .020", .030".

PISTON PIN:—Diameter—⅞". **Length**—2⅞".
Pin locked in connecting rod.
Pin Fit in Piston—Light push fit (rod should rock in piston of own weight. Clearance .0001-.0003".
NOTE—Replacement pistons have pins fitted.

CONNECTING ROD:—Weight—33.2 ozs. **Length**—8⅛". **Crankpin Journal Diameter**—2.18675-2.18775".
Lower Bearing—Spun babbitt. Rods exchanged.
Clearance—.0005-.002". **Sideplay**—.005-.009".
Bearing Adjustment:—None. Replace rods. Rods furnished std. and .010", .020" undersize. Ream to give clearance of .0005-.002". ***See Studebaker Shop Notes for 'Palnut' installation (some cars).***
Installing Rods:—Install rods with narrow half of bearing toward front in cylinders #1, 3, 5, toward rear in #2, 4, 6. Marks on caps and rods must be together and oil hole toward camshaft.

CRANKSHAFT:—4 bearing, integral counterweights with vibration dampener at forward end.
Journal Diameters—2.4995-2.500" all bearings.
Bearing Type—Removable steel-backed, babbitt-lined type. **Clearance**—.0005-.0025".
Bearing Adjustment:—None (no shims). Replace bearings. Furnished Std., .010", .020" undersize. Tighten bearing cap bolts to 1100 in. lbs.
End Thrust:—Thrust plate assembled between front bearing and crankshaft gear. Controlled by shims between plate and bearing. **Endplay** .003-.006".

CAMSHAFT:—Four bearing. Helical gear drive.
See Studebaker Shop Notes for Camshaft Removal.
Bearings—Steel-backed, babbitt-lined, split type bushings. When replacing, oil holes in block and bushing must be in alignment.
Clearance—.00075-.00225"(#1), .002-.00375"(others).
End Thrust:—Steel thrust washer and spacer between gear hub and front bushing.
Timing Gears:—Crankshaft (cast-iron). Camshaft (Celeron Fabric). ***See Studebaker Shop Notes for Gear Removal & Replacement Gear size selection.***
Camshaft Setting:—Mesh marked camshaft gear tooth with two marked teeth on crankshaft gear.

VALVES:

	Head Diameter	Stem Diameter	Length
Intake	1 15/32"	11/32"	5 7/32"
Exhaust	1 9/32"	11/32"	5 7/32"

	Seat Angle	Lift	Stem Clearance
All valves	45°	11/32"	.001-.003"

Valve Guides:—Pressed in block from above (1 5/32" below upper edge of valve seat) with stepped end down. Ream to inside diameter of .3435-.3445".
Valve Springs:—Install with closed coil at top. Damper on top of spring. Replace spring if 10% weak. ***See Studebaker Shop Notes for Valve Spring Installation instructions.***

	Spring Pressure	Spring Length
Valve Open	125-135 lbs.	1¾"

Valve Lifters:—Barrel type (no separate guides). Can be removed from top. Furnished .0005", .001" ov'size.

VALVE TIMING

Tappet Clearance—.016" all valves (cold). Remove right hood side panel for work on valves. ***See Studebaker Shop Notes for Side Panel Removal.***
Valve Timing:—See Camshaft Setting above.
Intake Valves—Open 15° BTDC. Close 49° ALDC.
Exhaust Valves—Open 54° BLDC. Close 10° ATDC.
To Check Timing—Set tappet clearance #1 intake valve at .020". This valve should open with piston 15° or .0942" before top dead center when mark 'IN-OP.1-6/' on vibration damper at front of engine lines up with pointer on gear case cover. Reset tappet clearance at .016" (cold).

LUBRICATION

LUBRICATION:—Pressure system with oil pump mounted on right of engine. ***See Studebaker Shop Notes for Oil Pump installation instructions.***
Normal Oil Pressure:—40 lbs. (min.) at 40 MPH.
Oil Pressure Regulator:—Located on right front corner of engine. Operates at 40 lbs. Not adjustable.
Crankcase Capacity: 5½ quarts.

COOLING

COOLING SYSTEM:—Capacity—14½ qts.
Water Pump:—Centrifugal with adjustable packing. ***See Water Pump Section for complete data.***
Removal—With water drained and fan belt removed, disconnect pump inlet hose, take out pump mounting bolts, lift fan and pump assembly off.
Thermostat:—Bishop & Babcock or Fulton. In cylinder head water outlet. Install with bellows down.
Setting—Starts to open 148-153°F.

CLUTCH

CLUTCH:—Borg & Beck Model 9A6. Model #869 stamped on cover. Single plate, dry disc type.
See Clutch Section for complete data.
Facings—Moulded (flywheel side), Woven (opposite side). Inside Diam. 5⅝". Outside Diam. 9¼". Thickness .133".
Adjustment—Free travel 1" (min.). Sleeve adjustment on rod connecting pedal to shaft lever. Turn sleeve out for greater travel, in for less. Check Hill-Holder after adjusting clutch.
Hill-Holder Adjustment:—On cars with Hill-Holder check action after adjusting clutch to see that

brakes release just before clutch engages. Adjust by loosening locknut and turning adjusting nut at end of hill-holder control rod. Shorten rod for earlier brake release or lengthen rod for later release.

Removal:—Remove transmission (see Transmission Removal following), support engine at rear, remove rear engine mountings, remove clutch housing. Take out mounting screws and remove clutch.

TRANSMISSION

TRANSMISSION: Warner 'Horizontal' Types. Model Nos. AS2-T88 (floor shift), AS4-T88 (Evans vacuum shift). All helical gear type with synchro-mesh (2nd & high).

See Transmission Section for complete data.

Transmission Control: Evans-Studebaker vacuum type optional equipment. Lever mounted on instrument panel.

See Transmission Section for complete data.

Removal: Disconnect front and rear universal joints. On cars with vacuum shift, disconnect vacuum power cylinder rod. Remove transmission mounting capscrews at clutch housing, pull transmission back and lift out.

OVERDRIVE

OVERDRIVE: Warner Type R6 (Horizontal Transmission). Complete assembly model number (Horizontal transmission with R6 Overdrive) Warner No. AS1-T88 (floor shift), AS3-T88 (vacuum shift).

See Transmission Section for complete data.

Removal: Same as for regular transmission after removing Overdrive Support. *See Overdrive Transmission Rear Support Installation in Studebaker Shop Notes*

UNIVERSALS

UNIVERSAL JOINTS: Thompson Products. Rubber bushed type. Two used.

See Universals Section for complete data.

REAR AXLE

REAR AXLE:—Spicer Model 41-2. Semi-floating, hypoid gear type with Hotchkiss drive.

See Rear Axle Section for complete data.

Ratio—4.55-1 Std., 4.82-1 Optl.

Backlash—.005-.007". Shim adjustment

Removal:—Hoist rear of car, disconnect propeller shaft at rear universal, brake line, and shock absorbers, remove spring U-bolts, disconnect rear spring shackles, withdraw axle assembly.

Wheel Bearing Adjustment—Shims provided between flanged end of axle housing and brake backing plate. To adjust, remove wheel, hub, drum, and backing plate (retained by 6 nuts). Remove shims to decrease endplay, add shims to increase. Shim thickness at both wheels must be equal within .005".

Endplay—.001-.005". Measure with dial indicator.

SHOCK ABSORBERS

SHOCK ABSORBERS: Houdaille-Model BEDVS (front), Model ASC (rear). Double acting, adjustable, hydraulic types. Rear shocks have thermostat control.

See Shock Absorber Section for complete data.

FRONT SUSPENSION

Front Suspension:—Planar type independent suspension with transverse spring. Specifications below apply with car unloaded on level floor.

See Front Suspension Section for complete data.

Kingpin Inclination—5½°.

Caster—Minus ¼° to plus ¾°. Not adjustable.

Camber—¼-¾°. Adjustable.

Toe In—1/16-1/8". To adjust, turn center tie rod.

STEERING GEAR

Steering Gear: Ross T-14 Cam-&-Twin Lever type.

See Steering Gear Section for complete data.

BRAKES

BRAKES:—Service—Lockheed hydraulic, double anchor type. Hand lever applies rear service brakes.

See Brake Section for complete data.

Wheel Cylinders—Stepped or two-stage bore type: Front Wheels—Front shoe cylinder 1⅜". Rear 1". Rear Wheels—Front shoe cylinder 1¼". Rear 1". NOTE—Wheel cylinder bore size marked on casting.

Drum—Budd composite. Diameter—11".

Lining—Front shoe—woven. Rear—moulded. Width 2". Thick. 3/16". Length per wheel 19 11/16".

Clearance—.010" toe, .005" heel, for each shoe.

Hand Brake Adjustment:—See Service Brakes.

Hill-Holder:—Optional equipment.

See Brake Section for complete data.

MODEL IDENTIFICATION

SERIAL NUMBER:—First number 7120101 (South Bend), 7801801 (Los Angeles). Stamped on plate on left frame side member under left front fender.

ENGINE NUMBER:—Stamped on left side of engine block at center. First number B-24601.

TUNE-UP

COMPRESSION:—Ratio—6.0-1 Std. cast-iron head.
Pressure—105 lbs. at cranking speed of 150 RPM.

VACUUM READING:—18-20" steady reading with engine idling at 450 RPM. or 8 MPH.

FIRING ORDER: 1-6-2-5-8-3-7-4. See diagram.

SPARK PLUGS: Champion Type 8-A. 18 mm. Metric.
Gaps—Set at .025".
NOTE—Champion No. 6 Com-62 recommended by car manufacturer for replacement use.

IGNITION: See Coil, Condenser, and Distributor.
Breaker Gap—.020". Cam Angle—33° Closed.
Synchronization—Set movable contacts to open 45° after stationary set.
Automatic Advance—14½° max. at 1800 RPM (distr.).
Vacuum Advance—6° distr. with 11-14" vacuum.

IGNITION TIMING: See Ignition Timing.
Std. Setting—TDC. Vibration dampener mark 'UDC.1-8' aligned with pointer at front of engine for stationary contacts. Mark 'UDC.3-6' for movable contacts (¼ revolution from 'UDC.1-8' mark).

CARBURETION: See Carburetor & Carb. Equipment.
Idle Setting—Set idle adjusting screws midway between 'miss' and 'roll' points. Idle speed 450 RPM or 8 MPH.
Float Level—Fuel level 5/8" below top edge of bowl.
Accelerator Pump—Inner Hole (short stroke) for minimum charge, Outer hole (long stroke) maximum charge.
Fuel Pump Pressure: 3½ lbs. maximum.

MANIFOLD HEAT CONTROL:—Thermostatic coil type. To check valve, unlatch thermostatic coil (free outer end from bracket on manifold), operate valve by hand and see that shaft is free (shaft can be cleaned with emery if necessary). Make certain that thermostatic coil is properly latched to bracket and that tension spring (from shaft to clip on flange) is in place.

VALVES: See Valve Timing.
Tappet Clearance—.016" for all valves, Cold.

STARTING: See Battery, Starter, Generator, Regulator.

IGNITION

Ignition Switch:—Mitchellock Type 24-R, No. 7656 (Mahogany finish), 7660 (Silver Beige), 7699 Gunmetal Gray), 7701 (Burl Tan). Delco-Remy Model No. 1116257. Connected to coil by armored cable.
Ignition Lock—Yale & Towne. Mitchell No. 6770.

COIL: Delco-Remy Model 1115021. Mounted on dash.
Ignition Current—½-1½ amps. idling, 4-5 stopped.

CONDENSER: Delco-Remy—Part No. 1838163.
Capacity—.18-.25 microfarad.

DISTRIBUTOR: Delco-Remy Model 662-M. Double breaker, 4 lobe cam, full automatic advance type with auxiliary vacuum spark control. NOTE—Movable contacts must be synchronized. Open 45° after stationary set.

Firing Interval—Regular 45° (dist.) intervals.

Breaker Gap—Set at .020". Limits .018-.024".

Cam Angle or Dwell—33° (closed), 12° (open). Both sets operating together and synchronized.

Breaker Arm Spring Tension—22 ounces.

Rotation—Clockwise viewed from top.

Automatic Advance

Distributor Degrees	R.P.M.	Engine Degrees	R.P.M.
Start	300	2.5	600
14.5	1800	29	3600

Vacuum Spark Control D-R No. 681-S. Mounted under distributor and linked to advance arm. Provides additional advance at speeds above idling except when engine is accelerated or operated with wide open throttle when spark is retarded by return spring within unit. Plunger travel ¼" max.

Vacuum Advance

Dist. Degrees	Eng. Degrees	Vacuum (" of HG)
Start	0	5-7"
6°	12°	11-14"

Removal:—Mounted on right hand side of cylinder head. To remove, loosen advance arm clamp bolt (not necessary to disturb vacuum unit or vacuum connections).

IGNITION TIMING

IGNITION TIMING:—Setting for all engines as follows:

Flywheel Degrees	Piston Position
0° (At TDC.)	.0000" TDC.

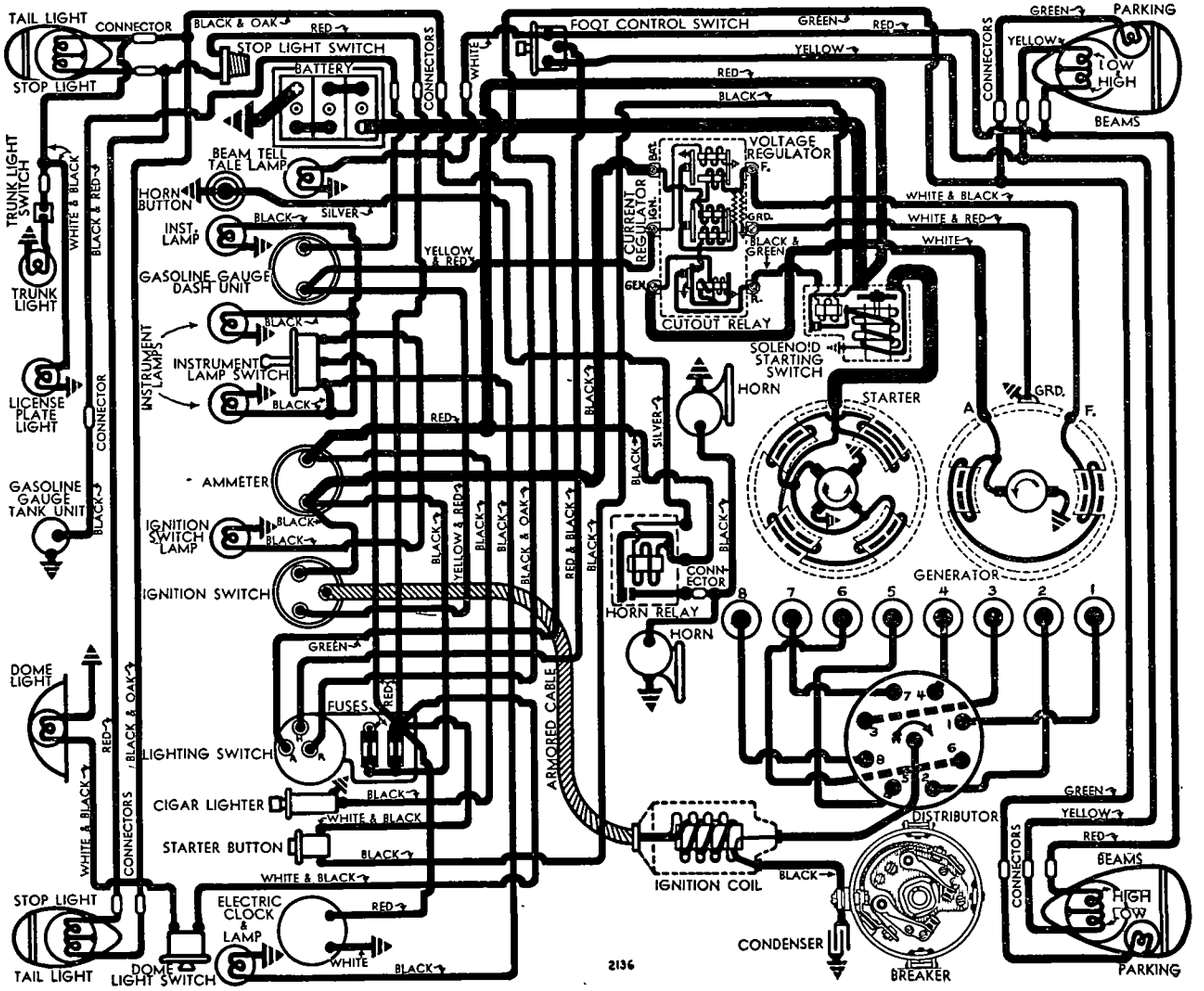

To Set Timing (Stationary Contacts)—Crank engine by engaging gears and rolling car on floor. With #1 piston on compression, turn engine over until piston reaches top dead center, stop when dead center mark 'U.D.C.1-8' on vibration dampener at front of engine lines up with pointer on timing gear cover. Loosen advance arm clamp bolt, rotate distributor until stationary breaker contacts (mounted directly on breaker plate) begin to open, tighten clamp bolt, then synchronize movable contacts.

Synchronization (On Engine)—Turn engine over 90° to #6 firing position with vibration dampener mark 'U.D.C.3-6' lined up with pointer on timing gear cover. Loosen lockscrews on movable sub-plate carrying second set of contacts, turn eccentric adjusting screw until contacts begin to open, tighten lockscrews.

Synchronization (Using Tool)—Use Delco-Remy tool #1838182. See Distributor Synchronization in Electrical Equipment Section for complete instructions. Distributor firing intervals regular 45-45-45°.

CARBURETOR

CARBURETION:—Carburetor—Stromberg Model AAO-161, 1" Dual Downdraft type.

For complete data, refer to Carburetor Index.

NOTE—Metering jets can be changed to first smaller size for increased fuel economy with slight loss in performance (jets for both barrels must be same size and should be changed as a unit). See Stromberg Jet Specifications in Carburetor Section for complete jet data.

Idle Adjustment—With engine warm so that Fast Idle and Automatic Choke inoperative and engine idling at hot or slow idling speed, set throttle stopscrew for 7-8 MPH. idling speed, turn idle adjusting screw for each carburetor barrel (in succession) in until engine begins to lag or miss, out until engine begins to roll, finally turn screw in slowly until engine fires smoothly. Readjust throttle stopscrew for correct idling speed.

Accelerating Pump Adjustment—Two holes provided in throttle lever for pump link engagement. Adjust for seasonal requirements as follows:

Inner Hole (Min. stroke)—Summer temperatures.

Outer Hole (Max. stroke)—Winter temperatures.

Fast Idle & Automatic Choke—Integral with carburetor.

For complete data, refer to Carburetion Equip. Index.

Automatic Choke Adjustment—Standard setting for ordinary fuel is with mark 'R' on thermostatic spring case lined up with reference projection on housing. If this setting too rich (engine overchokes or loads up), rotate case to 'M' mark (leaner setting). Use 'H' position for highly volatile fuel.

CARB. EQUIPMENT

Air Cleaner:—AC #1528631 oil-wetted type Std., #1528256 heavy duty oil-bath type Optl. (this type standard in severe dust condition states).

NOTE—AC #1528665 oil-vent air cleaner used with oil-wetted type air-cleaner, #1528629 heavy duty type with oil-bath cleaners.

Fuel Pump:—AC Type J #1521797 combination fuel-and-vacuum pump.

For complete data, refer to Carburetion Equip. Index.

Gasoline Gauge:—Auto-Lite (Motometer) Electric. Model No. NG-8711D (dash unit).

For complete data, refer to Carburetion Equip. Index.

BATTERY

BATTERY:—Willard, Type WHT-2-105. 6 volt, 15 plate, 105 ampere hour capacity (20 hour rate).

Starting Capacity—133 amperes for 20 minutes.

Zero Capacity—300 amperes for 3.9 minutes. Five second voltage—4.27 volts.

Grounded Terminal—Positive (+) terminal. Battery grounded to frame. Engine grounded by separate ground strap at front engine mounting.

Dimensions—Width 7 1/16". Length 10 5/16". Height 8 13/16".

Location—On left hand side under front seat.

STARTER

Delco-Remy Model 1107903. Armature No. 820158.

Drive—Overrunning Clutch (solenoid pinion shift).

Rotation—Counter-clockwise at commutator end.

Brush Spring Tension—24-28 ounces each.

Cranking Engine—110 RPM., 150-200 amperes, 5-5.5 volts.

Performance Data

Torque	R.P.M.	Volts	Amperes
0 ft. lbs.	6000	5.0	60
16 "	Lock	3.0	600

Removal:—Starter flange mounted on left front face of flywheel housing. To remove, take out flange mounting screws (remove starter and solenoid switch as an assembly).

Starting Switch: Delco-Remy Solenoid 1546. Mounted on starter field frame and controlled through relay (in switch case) by pushbutton switch on instrument panel.

For complete data, refer to Electrical Equipment Index.

Solenoid Switch

Closes against 70 lb. pull with ½" air gap drawing 65-71 amperes at 5 volts. Holds switch closed with current draw of 12-14 amperes (hold-in coil only).

Solenoid Relay

Contacts Close—1.9 volts **Max. Open**—1.0-1.2 volts.

Contact Gap—.035". **Air Gap**—.010".

GENERATOR

Delco-Remy Model No. 1102653. Armature Number 1857866. Shunt (two brush) type with external vibrating voltage and current regulation. Ventilated by fan on drive pulley.

Charging Rate Adjustment—No adjustment at generator. Charging rate controlled by Voltage Regulator and maximum output controlled by Current Regulator. See Control Unit section below.

Maximum Charging Rate—26 amperes (cold) with discharged battery as indicated on test ammeter connected in charging line at regulator 'BAT' terminal. Decreases as battery comes up on charge. Generator output constant at all speeds above 1750 R.P.M. or 21.1 M.P.H.

Performance Data—Generator Cold

Amperes	Volts	R.P.M.
25	8.0	1650

Rotation—Counter-clockwise at commutator end.

Brush Spring Tension—22-26 ounces each.

Field Current—2.0-2.2 amperes at 6.0 volts.

Removal:—Generator now pivot mounted at left front of engine. To remove, take out pivot and clamp bolts.

Belt Adjustment:—Loosen pivot and clamp bolts, pull generator out or away from engine until fan can just be turned with belt held stationary.

REGULATOR

Delco-Remy Model 5818. Double Core Type Voltage & Current Regulator (With 'IGN' Terminal). Cut-out Relay and vibrating type Voltage & Current Regulators in case on dash. Cutout Relay has special 'ground' contacts for starter solenoid control.

For complete data, refer to Electrical Equipment Index.

NOTE—Cover is sealed and units serviced on exchange basis if seals not broken. Unit can be checked without breaking seal but cover must be removed to make adjustments.

Cutout Relay

Cuts In—6.7-7.6 volts, 800-850 R.P.M., 9.7 M.P.H.
Cuts Out—0-3.0 amperes discharge current.
Contact Gap—.020". **Air Gap**—.020" (closed).

Voltage Regulator

Setting—7.5-7.95 volts (70°F.), 7.4-7.6 volts (150°F). Regulator over-compensated for temperature and must be checked at these points.

To Check (without breaking seal)—Disconnect lead at 'IGN' terminal on regulator, connect jumper between 'IGN' and 'BAT' terminals, connect ammeter in charging line at 'BAT' terminal, connect voltmeter between 'IGN' terminal and ground. Operate generator at 2800-3400 R.P.M., adjust charging rate to 8-10 amperes (use variable rheostat or AVR set). Voltmeter reading should check with setting given above.

To Adjust (with cover removed)—Change armature spring tension by bending spring hanger at lower end of spring slightly. Check performance as directed above.

NOTE—Voltmeter regulator readings must be taken with cover in place and setting should be checked by decreasing speed until Cutout Relay contacts open, and then increasing speed to original point.

Contact Gap—.020". **Contact Spring Tension**—3.5 oz.

Air Gap—.063" between armature and core with armature down so that fibre bumper just touches stop. .010" between fibre bumper and stop with armature up.

Current Regulator

Setting—26 amperes.

To Check (without breaking seal)—Disconnect lead on 'IGN' terminal of regulator, connect ammeter in charging line at 'BAT' terminal, operate generator and check output.

NOTE—Generator voltage must not be allowed to exceed 8.5 volts with Voltage Regulator disconnected.

To Adjust (with cover removed)—Change armature spring tension by bending spring hanger at lower end of spring slightly. Check performance as directed above.

C NTINUED N NEXT PA E

CONTINUED FR M PRECEDIN PAGE

Contact Gap—.020". **Contact Spring Tension**—3.5 oz.

Air Gap—.075" between armature and core with armature down so that fibre bumper just touches stop. .010" between fibre bumper and stop with armature up.

NOTE—Repolarize generator whenever Control Unit disconnected or removed by connecting jumper between 'GEN' and 'BAT' terminals momentarily after all leads have been connected. Do not operate engine.

LIGHTING

LIGHTING:—Headlamps—Corcoran-Brown, prefocused type. Upper and lower beams controlled by selector switch on toeboard (lower beam deflected slightly to right).

Headlamp Adjustment—With car unloaded, on level floor 25' from screen, and with upper beams lighted, aim each headlamp so that upper edge of beam is slightly above horizontal line at lamp-center height, and beam is centered on vertical line directly ahead of lamp center. Adjusting screw for horizontal movement located on side of lamp body (remove hood side panel for access to screw), screw for vertical movement at rear of lamp body.

Beam Indicator—Green dot on face of speedometer dial, illuminated whenever upper beams in use.

Switches

Lighting—Douglas.

Beam Selector—R.B.M. #1081.

Bulb Specifications

Position	Candlepower	Mazda No.
Headlamps	32-32	2331
Headlamps (Export)	32-32	2330
Parking, Ign., Instrument	1½	55
Stop & Tail	21-3	1158
License	3	63
Trunk	6	81
Dome	15	87

MISC. ELECTRICAL

FUSES:—Lighting—20 ampere. On back of lighting switch (nearest to instrument panel).

Accessory—20 ampere. On back of lighting switch (protects Heaters, Radio, etc.)

HORNS:—Klaxon, Model K-33-S. Type 2077 (Low Note, L.H. horn), Type 2078 (High Note, R.H. horn). Vibrator type, matched tone, twin horns operated by horn relay.

Type	Current (at 6 volts)	Air Gap
2077 (low note)	12-14 amperes	.032-.036"
2078 (high note)	11-13 amperes	.042-.046"

Horn Relay:—Delco-Remy Model No. 1116756.

Contacts Close—2.7-4.0 volts.

Contact Gap—.020". **Air Gap**—.015".

ENGINE

ENGINE:—Own. 8 Cyl., 'L' head type.

Bore—3 1/16". **Stroke**—4¼".

Displacement—250.4 cu. ins. **Rated HP**—30.

Developed Horsepower—110 at 3600 RPM.

Compression Ratio—6.0-1 Std. cast-iron head.

Compression Pressure—105 lbs. at 150 RPM.

Vacuum Reading—18" at 450 RPM., 8 MPH.

See Studebaker Shop Notes for Head Installation.

PISTONS:—Lynite, aluminum alloy, T slot, Cam-ground, tin-plated type. **Length** 3¾".

Weight—13.6 ozs. (stripped).

Removal—Pistons and rods removed from above.

Clearance—.0015" (¼" up on skirt 90° from pin).

Original Bore Sizes:—*See Studebaker Shop Notes.*

Replacement Pistons:—Finished pistons (with pins fitted) furnished .002", .004", .010", .015", .020", .030" oversize. Exact size stamped on piston head.

Fitting New Pistons:—Install .003" x 1" hardened feeler between piston and cylinder wall on camshaft side (T slot away from camshaft, pin bosses parallel to crankshaft). Pull to withdraw feeler must be 7-15 lbs.

Installing Pistons:—T-slot away from camshaft.

PISTON RINGS:—Two compression, 1 oil control ring, all above pin with narrow heat-dam groove (no ring) above top ring groove. Oil ring groove drilled with ten 5/32" oil drain holes.

Ring	Width	End Gap	Side Clearance
Compr.	⅛"	.013-.018"	.0015-.002"
Oil Contr.	3/16"	.013-.018"	.0015-.002"

NOTE—Install Compression rings with step down. Inner ring used with oil ring only.

Replacement Rings:—Oversizes .010", .020", .030".

PISTON PIN:—Diameter ⅞". **Length** 2⅝". Pin is locked in rod by clampscrew.

Pin Fit in Piston—Light push fit (rod should rock in piston of own weight). Clearance .0001-.0003".

NOTE—Replacement pistons have pins fitted.

CONNECTING ROD:—Weight 32 ozs. **Length** 8".

Crankpin Journal Diameter—1.87425-1.87525".

Lower Bearing—Removable, steel-backed, lead-bronze lined type.

Clearance—.00075-.00275". **Sideplay** .005-.010".

Bearing Adjustment:—None. Replace bearings. Furnished Std. and .005, .010", .020" undersize. Crankpin must be turned down to size (bearings should not be reamed). See that tongues on bearings engage slots and that oil holes line up.

See Studebaker Shop Notes for 'Palnut' installation

Installing Rods:—Oil hole in rod toward camshaft.

CRANKSHAFT:—9 bearing with bolted counterweights. Vibration dampener mounted on forward end. *See Studebaker Shop Notes for Vibration Dampener data.*

Journal Diameters—2.3435-2.3440" all bearings.

Bearing Type—Removable steel-backed, babbitt-lined type. **Clearance** .001-.003".

Bearing Adjustment:—None (no shims). Replace bearings. Do not file bearing caps. Tighten bearing cap bolts to 1100 in. lbs. Bearings furnished .010", .015" undersize.

End Thrust:—Thrust plate between front main bearing and crankshaft gear with shim adjustment.

Endplay—.003-.006".

CAMSHAFT:—Six bearing. Helical gear drive.

See Studebaker Shop Notes for Camshaft Removal.

Bearings—Split steel-backed, babbitted bushings.

Clearance—.00075-.00225"(#1), .002-.00375"(others).

NOTE—Oil holes in bushing & block must line up.

End Thrust:—Steel thrust washer and spacer between gear hub and bearing. **Endplay**—.003-.006".

Timing Gears:—Cast-iron (crankshaft), Celeron Fabric (camshaft). *See Studebaker Shop Notes for Gear Removal and Replacement Gear Size selection.*

Camshaft Setting:—Mesh marked tooth on camshaft gear between two marked teeth on crankshaft gear.

VALVES:—

	Head Diameter	Stem Diameter	Length
Intake	1 13/32"	11/32"	5 7/32"
Exhaust	1 9/32"	11/32"	5 7/32"

	Seat Angle	Lift	Stem Clearance
All Valves	45°	11/32"	.001-.003"

Valve Guides:—Pressed in block from above (1 5/16" below top of block) with stepped end down. Ream to inside diameter of .343-.344".

Valve Springs:—Install with closed-coil up and dampener on top of spring. Replace springs if 10% weak.

See Studebaker Shop Notes for Valve Spring Installation instructions.

	Spring Pressure	Spring Length
Valve Open	125-135 lbs.	1¾"

Valve Lifters:—Mushroom type in bolted-on guide brackets (clusters of four). Assemblies may be removed through valve opening on side of engine.

VALVE TIMING

Tappet Clearance:—.016" all valves, engine cold. Remove right hood side panel for work on valves. *See Studebaker Shop Note for Side Panel Removal.*

Valve Timing:—See Camshaft Setting above.

Intake Valves—Open 15° BTDC. Close 49° ALDC.

Exhaust Valves—Open 54° BLDC. Close 10° ATDC.

To Check Valve Timing—Set tappet clearance #1 intake valve at .020". This valve should open with piston 15° or .0915" before top dead center when 'IN.OP/1-8' mark on vibration dampener at front of engine lines up with pointer on gear cover. Reset tappet clearance at .016" cold.

LUBRICATION

LUBRICATION:—Pressure type. Gear type oil pump in crankcase. *See Studebaker Shop Notes for Oil Pump Installation directions.*

Normal Oil Pressure—40 lbs. min .at 40 MPH.

Oil Pressure Regulator—Located at right front corner of engine. Opens at 40 lbs. Not adjustable.

Crankcase Capacity—8 qts.

COOLING

COOLING SYSTEM:—Capacity—17 quarts.

Water Pump:—Centrifugal with adjustable packing. *See Water Pump Section for complete data.*

Removal—Drain water, remove fan belt, disconnect hose, take out mounting bolts, lift pump out.

Thermostat:—Bishop & Babcock or Fulton. In cylinder head outlet. Install with bellows down.

Setting—Starts to open 148-153°F.

CLUTCH

CLUTCH: Long Model 9½CF-CS. Semi-centrifugal, single plate, dry disc type.

See Clutch Section for complete data.

Facings—Moulded (flywheel side), Woven (away from flywheel). Inside Diam. 6". Outside Diam. 9½". Thickness .125".

Adjustment:—Clutch pedal free movement must be 1" Min. Sleeve adjustment on rod connecting pedal and shaft lever. Check Hill Holder after adjusting

Removal:—Disconnect clutch pedal linkage, remove Transmission (see Transmission Removal below), support engine at rear, remove rear engine mountings and clutch housing, take out mounting screws in clutch cover flange (turn all screws out evenly), remove clutch assembly. CAUTION—Support pressure plate by hand to avoid distorting pressure plate *See Studebaker Shop Notes for Clutch Cross-shaft Oiler installation instructions.*

TRANSMISSION

TRANSMISSION: Warner 'Horizontal' Types. Model Nos. AS2-T88 (floor shift), AS4-T88 (Evans vacuum shift). All helical gear type with synchro-mesh (2nd & high).
See Transmission Section for complete data.

Transmission Control: Evans-Studebaker vacuum type optional equipment. Lever mounted on instrument panel.
See Transmission Section for complete data.

Removal: Disconnect front and rear universal joints. On cars with vacuum shift, disconnect vacuum power cylinder rod. Remove transmission mounting capscrews at clutch housing, pull transmission back and lift out.

OVERDRIVE

OVERDRIVE: Warner Type R6 (Horizontal Transmission). Complete assembly model number (Horizontal transmission with R6 Overdrive) Warner No. AS1-T88 (floor shift), AS3-T88 (vacuum shift).
See Transmission Section for complete data.

Removal: Same as for regular transmission after removing Overdrive Support. *See Overdrive Transmission Rear Support Installation in Studebaker Shop Notes*

UNIVERSALS

UNIVERSAL JOINTS:—Spicer. Model 1271-01X (front), 1278-01X (rear). Needle bearing type.
See Universals Section for complete data.

REAR AXLE

REAR AXLE:—Spicer Model 41-2. Semi-floating, Hypoid gear type with Hotchkiss drive.
See Rear Axle Section for complete data.

Ratio—4.55-1 Std., 4.82-1 Optl. (Std. with Overdrive).

Backlash—.005-.007". Shim adjustment.

Removal:—Hoist rear of car, disconnect brake line, shock absorbers, drive shaft at rear universal, rear spring U bolts and rear spring shackles, withdraw axle assembly from beneath car. NOTE—Bleed brake lines when axle installed.

Wheel Bearing Adjustment:—Shims located between flanged end of axle housing and brake backing plate. To adjust, remove wheel, hub, brake drum, and backing plate (retained by 6 bolts). Remove shims (shim thickness at each wheel must be equal within .005").

Endplay—.001-.005" (measured with dial indicator).

SHOCK ABSORBERS

SHOCK ABSORBERS: Houdaille-Model BEDVS (front), Model ASC (rear). Double acting, adjustable, hydraulic types. Rear shocks have thermostat control.
See Shock Absorber Section for complete data.

FRONT SUSPENSION

Front Suspension:—Planar type independent suspension with transverse spring. Specifications below apply with car weight on wheels but without load.
See Front Suspension Section for complete data.

Kingpin Inclination—5½° crosswise.
Caster—Minus ¼° to plus ¾°. Not adjustable.
Camber—¼-¾°. Adjustable.
Toe In—1/16-1/8". To adjust, turn center tie rod.

STEERING GEAR

Steering Gear: Ross T-14 Cam-&-Twin Lever type.
See Steering Gear Section for complete data.

BRAKES

BRAKES:—Service—Lockheed hydraulic, double anchor type. Hand lever applies rear service brakes.
See Brake Section for complete data.

Wheel Cylinders—Stepped or two-stage bore type:
Front—Front Shoe Cylinder 1⅜". Rear 1".
Rear—Front Shoe Cylinder 1¼". Rear 1".

NOTE—Wheel cylinder bore size marked on casting.

Drum—Budd Composite. Diameter 11".

Lining—Front shoe—woven. Rear shoe—moulded. Width 2¼". Thickness 3/16". Length per wheel 19 11/16".

Clearance—.010" toe, .005" heel each shoe.

Brake Power—45% rear, 55% front.

Hand Brake:—See Service Brakes above.

Hill-Holder:—Optional equipment.
See Brake Section for complete data.

HOOD LOCK & SIDE PANELS, OIL PAN REMOVAL, INSTALLATION OF ENGINE PANS AND FRONT FENDER APRONS & BAFFLES:—*See Studebaker Shop Notes for complete instructions.*

MODEL IDENTIFICATION

SERIAL NUMBER:—On plate riveted to frame side rail under left front fender. First number G-00001 (South Bend), G-800001 (Los Angeles).

ENGINE NUMBER:—Stamped on pad at upper left front corner of engine. First number 101.

TUNE-UP

COMPRESSION:—Ratio—6.5-1 std. cast-iron head. Pressure—105 lbs. at 150 RPM.

VACUUM READING:—17-18" steady at 8 MPH. idle spd.

FIRING ORDER: 1-5-3-6-2-4. See diagram.

SPARK PLUGS: Champion Type 8. 18 mm. Metric. Gaps—Set at .025".
NOTE—Champion No. 6 Com-62 recommended by car manufacturer for replacement use.

IGNITION: See Coil, Condenser, and Distributor. Breaker Gap—.020". Cam Angle—35° Closed. Automatic Advance—7° max. at 1400 RPM (distr.). Vacuum Advance—9° distr. with 14¾" vacuum.

IGNITION TIMING: See Ignition Timing. Std. Setting—2° BTDC. Flywheel mark 'IGN' aligned with indicator in inspection hole on engine rear plate on left side. Use .016" feeler between advance arm and hold-down plate when setting distributor.

CARBURETION: See Carburetor & Carb. Equipment. Idle Setting—Set idle adjusting screw ¾-1¼ turns open. Idle speed 600 RPM or 8 MPH. Float Level—⅜" (for 444-S), ½" (for 453-SA and 453-S) from machined surface of bowl cover (gasket seat) to top of float with cover inverted. Accelerating Pump— Not adjustable. Fuel Pump Pressure: 3½ lbs. maximum.

MANIFOLD HEAT CONTROL:—Thermostatic coil type. To check, unhook coil from pin (valve in closed position, counterweight up). Hooked end of coil should be ¼ revolution away from pin (replace coil if beyond this limit). Lubricate shaft with kerosene & baking soda solution every 1000 miles.

VALVES: See Valve Timing. Tappet Clearance—.016" for all valves, Cold.

STARTING: See Battery, Starter, Generator, Regulator.

IGNITION

Ignition Switch:—Mitchellock Model 24-R. No. 8150. Ignition Lock—Yale & Towne. Mitchellock 6966.

COIL: Auto-Lite Model CE-4636. Service coil (less switch & cable) CE-3264S. Mounted on dash. Ignition Current—½-1½ amps. idling, 4-5 stopped.

CONDENSER: Auto-Lite Part No. IGB-1025. Capacity—.20-.25 microfarad.

DISTRIBUTOR: Auto-Lite Model IGW-4131 or IGW-4144 (with Special Tachometer Drive). Single breaker, 6 lobe cam, full automatic advance type with auxiliary vacuum spark control and Octane Selector. Breaker Gap—Set at .020". Cam Angle or Dwell—35° closed, 25° open (distr.). Breaker Arm Spring Tension—16-20 ounces. Rotation—Counter-clockwise viewed from top.

Automatic Advance

Distributor Degrees	R.P.M.	Engine Degrees	R.P.M.
Start	400	0	800
.8	500	1.6	1000
3	830	6	1660
5	1120	10	2240
7	1400	14	2800

Vacuum Spark Control A-L No. VC-4009—Mounted below distributor and linked to advance plate. Provides additional advance at speeds above idling except when engine accelerated or operated with wide open throttle when spark retarded by return spring within unit.

Vacuum Advance

Distr. Degrees	Eng. Degrees	Vacuum (" of HG)
Start	0°	4"
2°	4°	5½"
5°	10°	7¾"
7°	14°	11¼"
9°	18°	14¾"

Octane Selector—Provides manual adjustment at distributor (hold-down plate marked with scale) for variation in timing depending on fuel regularly used. See Ignition Timing following for adjustment.

Distributor Removal:—Mounted on left side f engine. To remove, loosen advance arm clamp bolt (not necessary to disturb vacuum unit connection).

NOTE—When installing distributor, insert .016" feeler between hold-down plate and advance plate while tightening advance plate clamp bolt to prevent binding and allow free advance plate motion.

IGNITION TIMING

IGNITION TIMING:—Standard setting as follows (see Octane Selector Setting following for correction dependent on fuel regularly used):

Flywheel Degrees	Piston Position
2° BTDC	.0015" BTDC.

To Set Timing—Crank engine by engaging gears and rolling car on floor. With #1 piston on com-

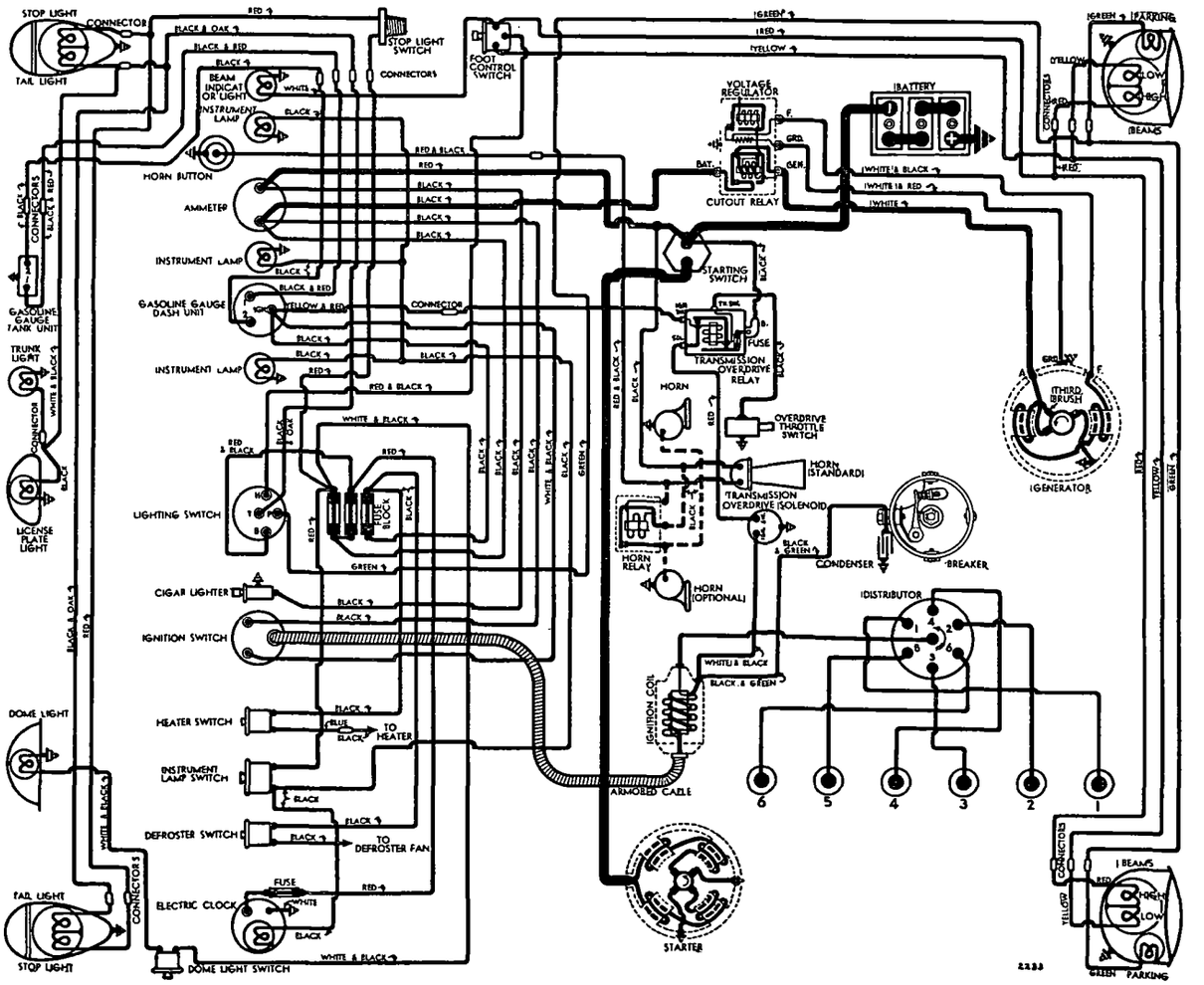

pression, turn engine over until 'IGN' mark (approx. 13/64" ahead of U.D.C.1-6 mark) on flywheel is in line with pointer on engine rear plate on left side of car. Loosen advance arm clamp bolt, rotate distributor until contacts begin to open, insert .016" feeler between advance arm and hold-down plate (to insure clearance for free advance arm movement), tighten clamp bolt, remove feeler gauge.

NOTE—Car manufacturer recommends use of Neon timing light.

Octane Selector Setting—After setting ignition timing, loosen selector (hold-down plate) screw and advance (move selector so that pointer toward 'A' end of scale) until motor 'pings' when hot and pulling hard. Then retard (move selector with pointer toward 'R' end of scale) until 'ping' just disappears.

CARBURETOR

CARBURETION:—Carburetor—Carter Model WO Type 444-S (Early—may de identified by #229 cast on flange), Type 453-S (Later cars). New type, single barrel, 1¼" downdraft type. IMPORTANT PRODUCTION CHANGE NOTE—See Carburetor article for part changes for Type 444-S to change over to latest type 453-S. *See article in Carburetor Section. For complete data, refer to Carburetor Index.*

Idle Adjustment—With engine warm and choke valve wide open (fast idle inoperative), adjust throttle stopscrew so that engine idles at 600 RPM. or 8 MPH. Turn idle adjusting screw in until engine begins to miss or lag, then turn screw out until engine begins to roll, finally turn screw in slowly until engine fires smoothly. Final setting should be ¾-1¼ turns of screw open from inner or closed position. Readjust throttle stopscrew for correct idle speed.

Accelerating Pump—Non-adjustable type.

Fast Idle Setting—Choke connector link opens throttle 3/32" with choke valve closed. Adjust by bending offset on connector link.

CARB. EQUIPMENT

Air Cleaner:—AC #1529210 oil-wetted type. #1529211 heavy duty oil bath type optional.

Fuel Pump:—AC Type W #1523957 diaphragm type. *For complete data, refer to Carburetion Equip. Index.*

Gasoline Gauge:—Auto-Lite electric. No. NG-9211D (dash unit), No. NG-9197T (tank unit). *For complete data, refer to Carburetion Equip. Index.*

BATTERY

Willard, Type SW-1-90. 6 volt, 13 plate, 90 ampere hour capacity (20 hour rate).
Starting Capacity—114 amperes for 20 minutes.
Zero Capacity—300 amperes for 3.0 minutes. Five second voltage—4.1 volts.
Grounded Terminal—Positive (+) grounded to dash.
Engine Ground—Strap connector at right front mounting bolt.
Dimensions—Length & Height 9". Width 7".
Location—On left side of dash under hood.

STARTER

EARLY: Auto-Lite MZ-4066. Armature MZ-2120.
LATER: Auto-Lite MZ-4074. Armature MZ-2130.
Drive—Barrel type Bendix N . A-2033 (similar in design to Ford '60' type A-1806).

IMPORTANT—A-2033 drive marked 'D' on pinion barrel. Must not be interchanged with Ford type due to difference in structure of pinion teeth.

Rotation—Counter-clockwise at commutator end.
Brush Spring Tension—42-53 ozs. (new brushes).
Cranking Engine—160 amperes, 5.2 volts, 130 RPM.

Performance Data

Torque	R.P.M.	Volts	Amperes
0 ft. lbs.	4300	5.5	70
.65 " "	2500	5.5	100
2.55 " "	1325	5.0	200
4.95 " "	750	4.5	300
7.65 " "	220	4.0	400
7.8 " "	Lock	3.0	420
11.8 " "	Lock	4.0	560

Removal:—Starter flange mounted on right rear engine plate. To remove, take out mounting bolts.

Starting Switch:—A-L Model SW-4011. Mounted on left side of car below clutch pedal. Operated by depressing clutch pedal fully.

GENERATOR
STANDARD

Auto-Lite Model GDF-4812-A. Aramature GDF-2006. Third brush control type used with Voltage Regulator.

Maximum Charging Rate—30 amperes (cold), 28 amperes (hot), at 8.0 volts, 3000 R.P.M. (generator), 32.5 M.P.H. Actual charging rate controlled by Voltage Regulator and dependent on battery condition.

Charging Rate Adjustment—Maximum output controlled by third brush. Do not adjust third brush for output greater than shown in table below (with field terminal grounded to render regulator inoperative). See Regulator Section (following).

NOTE—Third brush setting 2 bars 1 mica strip to 2 bars 2 mica strips from insulated main brush.

Cold Performance Data			Hot		
Amperes	Volts	R.P.M.	Amperes	Volts	R.P.M.
Start	6.4	920	0	6.4	1000
4	6.6	1030	4	6.6	1140
8	6.8	1140	8	6.85	1280
12	7.0	1300	12	7.1	1440
16	7.25	1460	16	7.3	1640
20	7.45	1650	20	7.55	1840
24	7.65	1880	24	7.75	2220
28	7.9	2220	28.3	8.0	3200
32	8.0	3100			

Rotation—Counter-clockwise at commutator end.
Brush Spring Tension—53 ozs. max. (new brushes).
Field Current—1.90-2.10 amperes at 6.0 volts.
Motoring Current—5.3-5.9 amperes at 6.0 volts.

Removal:—Pivot mounted at left front of engine. To remove, take out pivot and clamp bolts.

Belt Adjustment:—Loosen pivot and clamp bolts, move generator out away from engine until fan can just be rotated with belt held stationary.

GENERATOR
SPECIAL EQUIPMENT

Auto-Lite GCE-4824-A. Armature No. GBX-2006AF. Two brush type used with Current-Voltage Regulator.

Wiring Note—*Internal wiring for GCE Generator & VRP regulator same as shown on 1940 Studebaker Champion Model 2G car model page wiring diagram.*

Charging Rate Adjustment—No adjustment at generator. Charging rate controlled by Voltage Regulator and maximum output by Current Regulator.

Maximum Charging Rate—As given in table below.

Cold Performance Data			Hot		
Amperes	Volts	R.P.M.	Amperes	Volts	R.P.M.
0	6.4	740	0	6.4	785
4	6.6	830	4	6.6	880
8	6.8	920	8	6.8	975
12	7.05	1015	12	7.05	1070
16	7.25	1100	16	7.25	1165
20	7.5	1190	20	7.5	1275
24	7.7	1280	24	7.7	1385
*30	8.0	1400	30	8.0	1580

*—Current Regulator setting. See Regulator data.

Rotation—Counter-clockwise at commutator end.
Brush Spring Tension—64-68 ozs. (new brushes).
Field Current—1.66-1.84 amperes at 6.0 volts.
Motoring Current—5.03-5.57 amperes at 6.0 volts.

Removal & Belt Adjustment:—As given above.

REGULATOR
STANDARD

Auto-Lite Voltage Regulator Models VRD-4006-B or VRR-4002-B (for GDF generator). In case on dash. *For complete data, refer to Electrical Equipment Index.*
NOTE—Regulator cover sealed. Serviced on exchange basis if seals not broken.

Cutout Relay

Cuts In—6.4-7.0 volts Cold (VRD), 6.4-6.6 volts Cold (VRR), 900 RPM, 9.1 MPH.

Cuts Out— .5-3.0 amperes discharge current (VRD), 4.2-4.8 volts with approx. 4-6 amps. disch. (VRR).

Contact Gap—.015" minimum.

Air Gap—.034-.038". Contacts open—measure at hinge end of core.

Voltage Regulator

Setting—7.3-7.6 volts at 70° F.

To Check (without breaking seals)—Connect ammeter in charging line at regulator 'B' terminal, voltmeter between 'B' and 'GD' terminals. Operate generator at speed equivalent to 30 MPH., charging battery, until voltage is steady. Voltage reading should agree with setting given above.

To Adjust (with cover removed)—Change regulator armature spring tension by bending lower spring hanger. See Electrical Equipment Section for data.

Contact Gap—.010-.020" (VRD), .012" min. (VRR) with armature against stop pin.

Air Gap—.0595-.0625" (VRD), .048-.052" (VRR) with contacts just opening.

REGULATOR
SPECIAL EQUIPMENT

Auto-Lite Current-Voltage Regulator Model VRP-4004B (for GCE generator). In case on dash. *For complete data, refer to Electrical Equipment Index.*

Cutout Relay

Air Gap—.031-.034". Contacts open (measure at hinge end of core).

All other data same as for VRR (see preceding data).

CONTINUED ON NEXT PAGE

C NTINUED FROM PRECEDING PAGE

Voltage Regulator

Setting—7.2-7.5 volts at 70°F.
All other data same as for VRR (see preceding data).

Current Regulator

Setting—29-31 amperes (marked '30' on cover).

To Check (without breaking seals)—Connect test meters as for Voltage check (above). Operate generator at speed equivalent to 30 MPH charging battery, turn on car lights and accessories so that generator charges at peak rate and Current Regulator operates. Charging current should not exceed 29-31 amperes. If more than slight excess noted, regulator is defective.

Adjustment & Contact Gap—*Same as VRR (above).*

Air Gap—.034-.038" (before Reg. Ser. No. 5U-000001), .048-.052" (after above No.), contacts just opening.

LIGHTING

LIGHTING:—Headlamps—Corcoran-Brown, pre-focused type. Upper and lower beams controlled by selector switch on toeboard.

Headlamp Adjustment—With car unloaded, 25' from screen, and with upper beams lighted, aim each headlamp so that top of beam is 2" below horizontal line at lamp-center height, and beam is centered on lamp vertical center-line. Brass adjusting screws located behind lamp rim at top (vertical movement), at side (horizontal movement).

Beam Indicator—Red dot on speedometer face. Lighted when upper beams in use.

Switches

Lighting—Douglas No. 5724.

Beam Selector—R-B-M No. 1081.

Bulb Specifications

Position	Candlepower	Mazda No.
Headlamps	32-32	2331
Headlamps (Export)	32-32	2330
Parking, Ign. Sw., Trunk	1½	55
Instrument	1½	55
Stop & Tail	21-3	1158
License Plate	3	63
Dome	15	87
Beam Indicator	1	51

MISC. ELECTRICAL

FUSES:—Lighting—Three 20 ampere. On fuse block on back of instrument panel at center. Protects circuits as follows: **Top**—Clock, Dome, Stop, Instrument lamps. **Center**—Head and Tail lamps. **Lower**—Accessories.

Transmission Overdrive Control—14 amp. On relay.

HORNS:—Delco-Remy. Model K-26-H Single Horn Std., Model K-33-S No. 601 (low note—right), 602 (high note—left) twin horns with horn relay Optl.

Type	Current (at 6 volts)	Air Gap
K-26-H	6.5-8.5 amperes	.018-.022"
K-33-S601 (low note)	11-13 amperes	.042-.046"
K-33-S602 (high note)	10-12 amperes	.032-.036"

H rn Relay:—Delco-Remy Model 1116792.

Closing Voltage—2.3-3.5 volts.

Contact Gap—.020". **Air Gap**—.015" (closed).

ENGINE

ENGINE SPECIFICATIONS:—6 cylinder, 'L' head.
Bore—3". **Stroke**—3⅞".
Displacement—164.3 cu. in. **Rated HP.**—21.6.
Developed Horsepower—78 at 4000 RPM.
Compression Ratio—6.5-1 Std. cast-iron hd.
Compression Pressure—105 lbs. at 150 RPM.
See Studebaker Shop Notes for Cyl. Head Installation.
Vacuum Reading—Steady 17-18" idling at 8 MPH.

PISTONS:—Aluminum alloy, tin-plated, T-slot, cam ground type. **Length**—2⅝". **Weight**—.51 lbs.

Removal—Pistons and rods removed from above.

Clearance—.0005" new. See Fitting New Pistons.

Original Bore & Piston Sizes, Replacement Pistons:—*See Studebaker Shop Notes for sizes and markings.*

Fitting New Pistons:—Insert .002"x1" feeler between piston and wall on camshaft side (pin parallel to crankshaft, T-slot away from camshaft). Pull to withdraw feeler 16-22 lbs. NOTE—Cylinders out-of-round or taper over .002" should be reconditioned.

Installing Pistons:—T-slot away from camshaft.

PISTON RINGS:—3 coated rings, all above pin. #1 Comp. '200' (step up), #2 Comp. (step down). #3 Oil '85' (slotted). Heat dam above #1 groove.

Ring	Width	End Gap	Side Clearance
Comp. (Top)	3/32"	.007-.017"	.0015-.002"
Comp. (#2)	⅛"	.007-.017"	.0015-.002"
Oil Control	3/16"	.007-.017"	.0015-.002"

Replacement Rings:—.010", .020", .030" oversize.

PISTON PIN:—Diameter .7491-.7495". **Length** 2⅝". Pin locked in rod by tapered lockscrew and nut *See Studebaker Shop Notes for Pin servicing data.*

Pin Fit in Piston—.0001-.0003" clearance or light push fit. Replacement pistons have fitted pins.

Replacement Pins:—Std. & .0025", .005" oversize. Use Hone No. PH-1 to obtain proper fit in piston.

CONNECTING ROD:—**Length** 6 7/16". **Weight** 1.28 lbs.

Crankpin Journal Diameter—1.81175-1.81275".

Lower Bearing—Spun babbitt. Exchange rods furnished std. and .010" and .020" undersize.

NOTE—Babbitt in caps chamfered on upper edge.

Clearance—.0005-.002". **Sideplay**—.005-.009".

Bearing Adjustment:—None. Replace rods. *See Studebaker Shop Notes for 'Palnut' installation.*

Installing Rods:—Narrow portion of bearing to front (#1,3,5), to rear (#2,4,6). Side marked with number and oil spray hole toward camshaft.

CRANKSHAFT:—4 bearing, integral counterweights.
See Studebaker Shop Notes for data to correct Oil Leaks at Fan Drive Pulley.

Journal Diameters—2.437-2.4375".

Bearing Type—Removable steel-backed, babbitt-lined type. **Clearance**—.0005-.0025".

Bearing Adjustment:—None (no shims). Replace bearings. Furnished Std., .010", .020" undersize. Tighten bearing cap screws to 1100 in. lbs.

NOTE—Front oil pan seal block may be removed for access to front main bearing cap by removing 4 lower timing gear cover screws (on front face).

End Thrust:—Thrust plate assembled between front bearing and crankshaft gear. Controlled by shims between plate & journal face. **Endplay** .003-.006".

NOTE—Install new seals (specially treated wood) whenever rear main bearing cap replaced.

CAMSHAFT:—Four bearing with helical gear drive.
See Studebaker Shop Notes for Camshaft Removal.

Journal Diameters—#1, 1.7475-1.7480"; #2, 1.71625-1.71700"; #3, 1.68575-1.68650"; #4, 1.62325-1.62400".

Bearings—Steel-backed, babbitt-lined bushings. Align oil hole in block and bushing.

Clearance—.00075-.00225" (#1), .001-.00275" (others).

End Thrust:—Taken by thrust plate assembled on front face of engine behind camshaft gear. Spacer assembled back of gear hub. **Endplay**—.004-.008".

Timing Gears:—Crankshaft (cast-iron), Camshaft (Celeron Fabric). *See Studebaker Shop Notes for Gear Removal & Replacement Gear size selection.*

Backlash—.001-.003".

Camshaft Setting:—Mesh marked camshaft gear tooth between two marked teeth on crankshaft gear.

VALVES:—

	Head Diameter	Stem Diameter	Length
Intake	1 11/32"	.310-.311"	4 11/32"
Exhaust	1 9/32"	.310-.311"	4 11/32"

	Seat Angle	Lift	Stem Clearance
All Valves	45°	5/16"	.001-.0035"

Valve Guides:—Pressed in block from above 1 3/16" below top of block. Finish ream to .312-.3135".

Valve Springs:—Install with closed coils at top. Replace if springs 10% weak. Free length 2 3/32".

	Spring Pressure	Spring Length
Valve Closed	49-53 lbs	1 21/32"
Valve Open	90-94 lbs	1 11/32"

See Studebaker Shop Notes for Valve Spring data.

Valve Lifters:—Mushroom type. Lifter clearance in block .0005-.0015".

VALVE TIMING

Tappet Clearance:—.016" (cold) all valves. *See Studebaker Shop Notes for Hood Side Panel removal and Self-locking Tappet Screw data.*

Valve Timing:—See Camshaft Setting above.

Intake Valves—Open 15° BTDC. Close 49° ALDC.

Exhaust Valves—Open 54° BLDC. Close 10° ATDC.

To Check Timing—Set tappet clearance #1 intake valve at .020". This valve should open with piston 15° or .0835" before top dead center when flywheel mark 'IN.OP.1-6/' lines up with pointer on left rear engine plate. Reset tappet clearance at .016" (cold).

LUBRICATION

LUBRICATION:—Pressure system with oil pump mounted on right side of engine. *See Studebaker Shop Notes for Oil Pump installation instructions.*

Normal Oil Pressure:—40 lbs. at 40-60 M.P.H.

Oil Pressure Regulator:—Opens with 40 lbs. pressure. On right front corner of block. Not adjustable.

Crankcase Capacity:—5 quarts.

COOLING

COOLING SYSTEM:—**Capacity**—10½ quarts.

Water Pump:—Packless, sealed ball-bearing shaft.
See Water Pump Section for complete data.
Removal—Drain water, remove fan belt, fan blades and pulley, hose, 3 pump mounting screws.

Thermostat:—Bishop & Babcock. In cyl. head outlet. **Setting—Starts to open 156° F. to 160° F.**

Temperature Gauge:—Auto-Lite (Motometer) Vapor tension type. Part No. H-9210.

See Miscellaneous Section for complete data.

CLUTCH

CLUTCH:—Borg & Beck Model 8A7. Single plate, dry disc type. Identified by #925 stamped on cover.

See Clutch Section for complete data.

Facings—Molded (flywheel side), woven (pressure plate side), Inside Diam. 5⅛". Outside Diam. 7⅞". Thickness .125". NOTE—Grooved facing used on pressure plate side (After '39 Engine No. 17804).

Adjustment—Free travel 1" (min.). Turn clutch adjusting sleeve on connector link. Check Hill-holder.

See Studebaker Shop Notes for Release Shaft Lubrication and new type shaft bushings to correct sticking.

Removal:—Remove transmission (see below), take off clutch housing, take out mounting screws in clutch cover flange, remove clutch cover assembly.

TRANSMISSION

TRANSMISSION: Warner. Model Number AS1-T84F. Helical gear type with synchro-mesh (second & high), sliding spur gear (low & reverse).

See Transmission Section for complete data.

IMPORTANT—Correction for Shifting into Two Gears at Once (installation of Special Interlock), see Special Service Note in Transmission article in Transmission Section.

Transmission Control:—Remote steering col. shift Std.

See Transmission Section for complete data.

Removal (Std.):—Disconnect shift rods and speedometer cable, remove propeller shaft. Place jack under engine rear plate, free rear engine mountings. Take out transmission mounting bolts, pull transmission out.

OVERDRIVE

Overdrive:—Warner Type R7A, Model AS2-T84F with electrical 'kick-down' control. Optl.

See Transmission Section for complete data.

Overdrive Solenoid—Delco-Remy Model 1569.

Throttle Switch—Hersee #1687S. Adjust so that shoe on idle lever just contacts switch plunger with throttle valve wide open (lever against stop).

Control Relay—Auto-Lite Model HR-4201S. NOTE—Use only 14 ampere fuse on relay.

Removal: Same as regular transmission except that top radiator hose must be disconnected, exhaust pipe loosened at manifold and engine rear plate, clutch throw-out shaft pulled free, overdrive control lever and solenoid leads disconnected, propeller shaft disconnected at front universal, engine rear support cross-member removed, and rear of engine lowered so that transmission clears underside of frame X-member when removed.

UNIVERSALS

UNIVERSAL JOINTS: Spicer. Model 1261-01 (front), 1268-02 (rear). Needle bearing types.

See Universals Section for complete data.

REAR AXLE

REAR AXLE:—Spicer Model 23. Semi-floating, hypoid gear type with Hotchkiss drive.

See Rear Axle Section for complete data.

Ratio—4.56-1 standard. 4.1-1 optional.

Backlash—.003-.005". Shim adjustment.

Removal:—Hoist rear of car, disconnect propeller shaft at rear universal, hydraulic brake lines, brake cables, and shock absorbers. Remove spring U-bolts, disconnect rear spring shackles, and withdraw axle

Wheel Bearing Adjustment—Shims provided between flanged end of axle housing and brake backing plate. To adjust, remove wheel, hub and drum assembly (Puller J-446), and backing plate. Remove shims to decrease endplay, add shims to increase.

Endplay—.001-.005". Measure with dial indicator.

SHOCK ABSORBERS

SHOCK ABSORBERS:—Houdaille. Model BBFSS (front), BBDS (rear). Double acting, hydraulic.

See Shock Absorber Section for complete data.

FRONT SUSPENSION

Front Suspension:—Planar type independent suspension with transverse spring.

See Front Suspension Section for complete data.

Kingpin Inclination—5½°.

Caster—5½-6½°. Not adjustable.

Camber—¼-¾°. Shim adjustment.

Toe In—1/16-1/8". Adjust center rod (Early Cars), right reach rod (Later Cars).

Steering Geometry (Toe-out on Turns)—Inner wheel turned 22½°, Outer wheel 20°.

STEERING GEAR

Steering Gear: Ross Model T-12. Cam & Twin Lever.

NOTE—Steering linkage changed during production. Tie rod (center rod) is adjustable on Early Cars, Reach rods (to each wheel) adjustable on Later Cars.

See Steering Gear Section for complete data.

BRAKES

BRAKES:—Service. Lockheed hydraulic, single anchor type. Hand lever applies rear service brakes.

See Brake Section for complete data.

Drums—Diameter 9".

Lining—Front shoe (U.S. #714) 10 3/16". Rear shoe (Man. DV2921) 7 13/16". Width 1¾". Thick. 3/16".

Clearance—.010" toe, .006" heel, for each shoe.

Braking Power—43% rear.

Hand Brake Adjustment:—See Service Brakes.

Hill-Holder: Optional on all models.

See Brake Section for complete data.

MODEL IDENTIFICATION

SERIAL NUMBER:—First number 4110001 (South Bend), 4802301 (Los Angeles). Stamped on plate on left frame member under left front fender.

ENGINE NUMBER:—First number H-42501. Stamped on boss on left hand side of cylinder block.

TUNE-UP

COMPRESSION:—Ratio—6.0-1 Std., 7.0-1 Optl. (High Alt.).
Pressure—105 lbs. (6.0-1 head), 110 lbs. (7.0-1 head) at 150 RPM. cranking speed.

VACUUM READING:—18-20" steady at 8 MPH. idling speed.

FIRING ORDER: 1-5-3-6-2-4. See diagram.

SPARK PLUGS: Champion Type 8. 18 mm. Metric.
Gaps—Set at .025".
NOTE—Champion No. 6 Com-62 recommended by car manufacturer for replacement use.

IGNITION: See Coil, Condenser, and Distributor.
Breaker Gap—.020". **Cam Angle**—35° Closed.
Automatic Advance—10° max. at 1400 RPM (distr.).
Vacuum Advance—6° distr. with 12" vacuum.

IGNITION TIMING: See Ignition Timing.
Std. Setting—2° BTDC. Vibration dampener mark 'IGN/' aligned with pointer on timing gear cover. Use .016" feeler between advance arm and hold-down plate when tightening distributor clamp bolt (avoids binding vacuum control).

CARBURETION: See Carburetor & Carb. Equipment.
Idle Setting—Set idle adjusting screw midway between "miss" and "roll" points. Idle speed 450 RPM or 8 MPH.
Float Level—Fuel level 5/8" below top edge of bowl.
Accelerating Pump—Normal setting, Center Hole.
Fuel Pump Pressure: 3½ lbs. maximum.

MANIFOLD HEAT CONTROL:—Thermostatic coil type. To check valve, unlatch thermostatic coil by freeing outer end from bracket on manifold, operate valve by hand and see that valve is free (shaft can be cleaned with emery if necessary). Make certain that coil is properly latched on bracket and that tension spring (from shaft to clip on manifold flange) is in place.

VALVES: See Valve Timing.
Tappet Clearance—.016" for all valves, Cold.

STARTING: See Battery, Starter, Generator, Regulator.

IGNITION

Ignition Switch:—Mitchellock Model 24-R, No. 8056.
Ignition Lock—Yale & Towne. Mitchellock #8078.

COIL: Auto-Lite Model IG-4653. Service Coil (less switch & cable) IG-3033ZS. Mounted on dash.
Ignition Current—½-1½ amps. idling, 4-5 stopped.

CONDENSER: Auto-Lite Part No. IGB-1025.
Capacity—.20-.25 microfarad.

DISTRIBUTOR: Auto-Lite Model IGW-4101 or IGW-4111 (with Special Tachometer Drive). Single breaker, 6 lobe cam, full automatic advance type with auxiliary vacuum spark control.
Breaker Gap—Set at .020".
Cam Angle or Dwell—35° (closed), 25° (open).
Breaker Arm Spring Tension—16-20 ozs.
Rotation—Counter-clockwise viewed from top.

Automatic Advance

Distributor Degrees	R.P.M.	Engine Degrees	R.P.M.
Start	400	0	800
3	700	6	1400
6	1000	12	2000
10	1400	20	2800

Vacuum Spark Control A-L No. VC-4004. Mounted below distributor and linked to advance plate. Provides additional advance at speeds above idling except when engine accelerated or operated with wide open throttle when spark retarded by return spring within unit.

Vacuum Advance

Distr. Degrees	Eng. Degrees	Vacuum (" of HG)
Start	0°	3"
2°	4°	5"
3°	6°	6"
5°	10°	10"
6°	12°	12"

Distributor Removal:—Mounted on left side of engine. To remove, loosen advance arm clamp bolt (not necessary to disturb vacuum unit connection).
NOTE—When installing distributor, insert .016" feeler between hold-down plate and advance plate while tightening advance plate clamp bolt to prevent binding and allow free advance plate motion.

IGNITION TIMING

IGNITION TIMING:—For all engines as follows (see Octane Selector Setting following for correction dependent on fuel regularly used):

Flywheel Degrees	Piston Position
2° BTDC	.0016" BTDC.

To Set Timing—Crank engine by engaging gears and rolling car on floor. With #1 piston on compression, turn engine over until 'IGN/' mark on vibration dampener at front of engine lines up with pointer on timing gear cover (this mark is 2° or 9/64" before top dead center mark '/UDC.1-6'). Loosen advance arm clamp bolt, rotate distributor

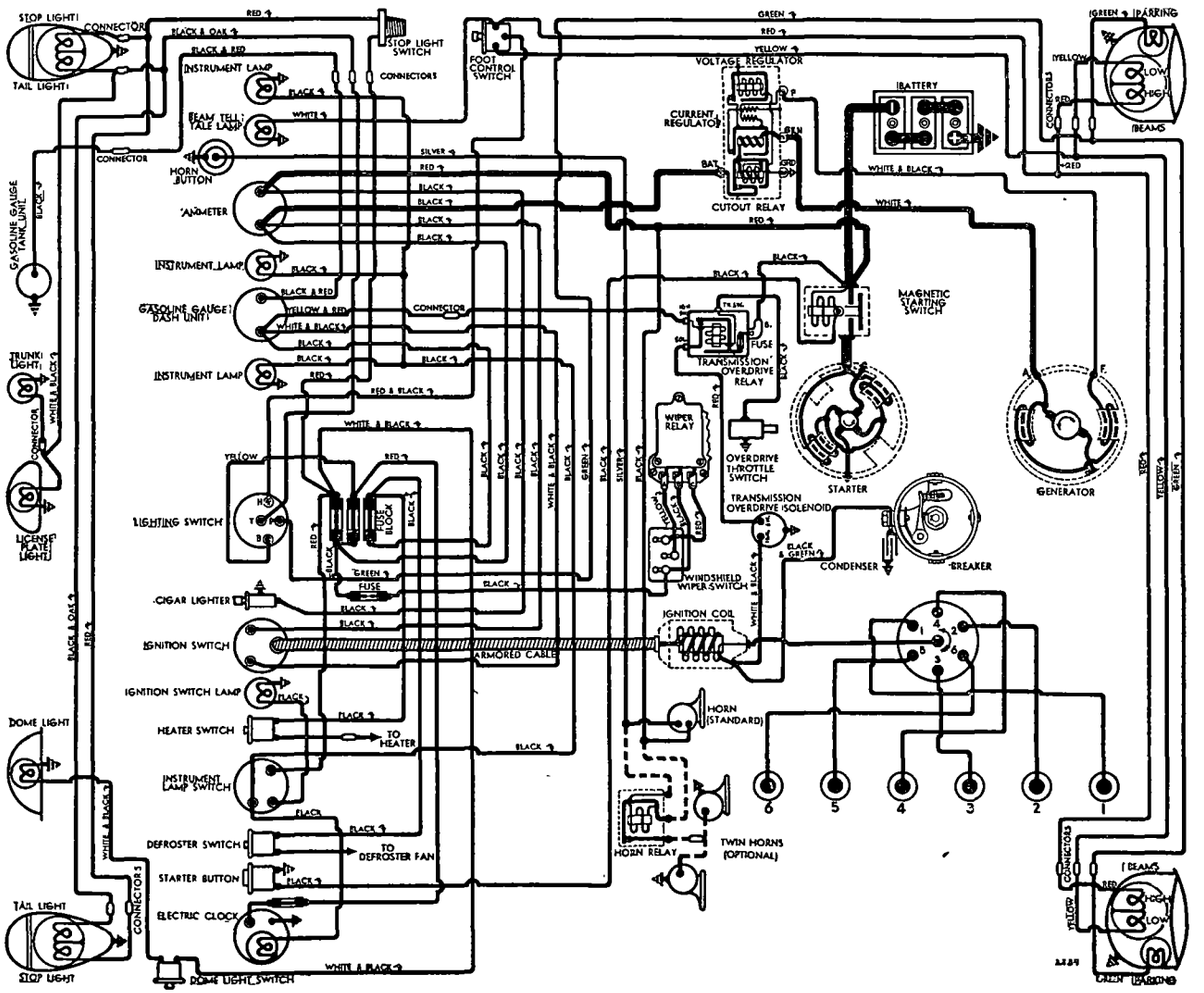

until contacts begin to open, insert .016" feeler between advance arm and hold-down plate(to insure clearance for free advance arm movement), tighten clamp bolt, remove feeler gauge.

Octane Selector Setting—With engine at normal operating temperature, adjust Octane Selector so that slight ping evident when accelerating with wide open throttle (rotate distributor clockwise if no ping, counter-clockwise if ping too severe).

CARBURETOR

CARBURETION:—Carburetor—Stromberg Model BXO-26, 1¼" single, downdraft type.
For complete data, refer to Carburetor Index.

NOTE—Metering jets need not be changed when heavy duty oil-bath type air cleaner installed. First size smaller main metering jet can be installed to secure greater fuel economy with slight loss of performance. *See Jet Specification table in Carburetion Section for complete jet data.*

Idle Adjustment—With engine warm, Fast Idle and Automatic Choke inoperative so that engine idles at hot or slow idle speed, set throttle stopscrew so that idling speed is 7-8 MPH., turn idle adjusting screw in until engine begins to miss or lag, turn screw out until engine begins to roll, finally turn screw in slowly until engine fires smoothly. Readjust stopscrew for correct idling speed.

Accelerating Pump Adjustment—Three holes provided in throttle lever for pump link engagement. Change setting for seasonal requirements.
Inner Hole (Min. stroke)—Extreme warm weather.
Center Hole—Normal operating conditions.
Outer Hole (Max. stroke)—Extreme cold weather.

Fast Idle:—Integral (Built-in carburetor).
For complete data, refer to Carburetion Equip. Index.
Setting—No adjustment required (if stopscrew set for correct hot or slow idle speed above). See that stopscrew rests on highest step of fast idle cam with choke valve fully closed.

Automatic Choke:—Integral (built-in carburetor).
For complete data, refer to Carburetion Equip. Index.
Setting—Mark 'R' on thermostatic spring case should line up with projection on housing (ordinary fuel). If this setting too rich (engine loads up), rotate case to 'M' mark (leaner setting). Use 'H' position only for very volatile fuels.

CARB. EQUIPMENT

Air Cleaner:—AC #1528630 oil-wetted type Std., #1528632 oil-bath type Optl. (Std. in severe-dust states).
NOTE—AC #1528665 oil-vent air cleaner Std., #1528629 type used with oil-bath air cleaners.

Fuel Pump:—AC Type W #1522227. Diaphragm type.
For complete data, refer to Carburetion Equip. Index.

Gasoline Gauge:—Stewart (Stewart-Warner) Electric type. No. G-99370.
For complete data, refer to Carburetion Equip. Index.

BATTERY

Willard Type SW-1-95. 6 volt, 15 plate, 95 ampere hour capacity (20 hour rate).
Starting Capacity—117 amperes for 20 minutes.
Zero Capacity—300 amperes for 3.1 minutes. Five second voltage 4.2 volts.
Grounded Terminal—Positive (+) gr unded to frame.
Engine Ground—Separate ground strap.
Dimensions—Length 9". Width 7". Height 8 13/16".
Location—In engine compartment on left side.

STARTER

Auto-Lite Model MAW-4015. Armature MAW-2091.
Drive—Outboard Barrel Type Bendix No. A-1719.
Rotation—Counter-clockwise at commutator end.
Brush Spring Tension—43-52 ozs. (new brushes).
Cranking Engine—130 RPM., approximately 175 amperes at 5.0-5.5 volts.

Performance Data

Torque	R.P.M.	Volts	Amperes
0 ft. lbs.	4900	5.5	65
.6 "	3300	5.5	100
2.75 "	1480	5.0	200
5.45 "	820	4.5	300
8.5 "	400	4.0	400
11.5 "	Lock	3.0	505
18.0 "	Lock	4.0	670

Removal:—Starter flange mounted on left front face of flywheel housing. To remove, take out two flange mounting screws, remove starter and switch as assembly.

Starting Switch:—R.B.M. Model 2214. Magnetic type. Mounted on starter and controlled by Douglas #5701 pushbutton switch on instrument panel.

GENERATOR

Auto-Lite Model GDA-4804A. Armature No. GDA-2006F. Two brush, shunt wound type with vibrating voltage and current regulation. Ventilated by fan on drive pulley.
Charging Rate Adjustment—Adjusted by changing Voltage & Current Regulator settings (no adjustment at generator). See Regulator data below.
Maximum Charging Rate—28 amperes, 8.0 volts, 2025 R.P.M., 20.5 M.P.H. with load or discharged battery (Current Regulator setting). Actual charging rate controlled by Voltage Regulator and dependent on battery condition.

Performance Data

Cold			Hot		
Amperes	Volts	R.P.M.	Amperes	Volts	R.P.M.
0	6.4	930	0	6.4	1010
4	6.6	1060	4	6.6	1180
8	6.85	1210	8	6.85	1350
12	7.1	1350	12	7.1	1530
16	7.3	1500	16	7.3	1730
20	7.5	1660	20	7.5	1950
24	7.75	1830	24	7.75	2220
28	8.0	2025	28	8.0	2520

NOTE—28 amperes is Current Regulator setting.
Rotation—Counter-clockwise at commutator end.
Brush Spring Tension—53 ozs. Max. (new brushes).
Field Current—1.66-1.84 amperes at 6.0 volts.
Motoring Current—3.50-4.15 amperes at 6.0 volts.

Removal:—Pivot mounted at left front of engine. To remove, take out pivot bolts and clamp bolts.

Belt Adjustment:—Swing generator out until it is just possible to rotate fan with belt held stationary.

REGULATOR

Auto-Lite Model VRB-4012-A. Consists of a Cutout Relay, Vibrating Voltage Regulator and Current Regulator in case on left hand side of dash.
For complete data, refer to Electrical Equipment Index.

NOTE—Regulator cover is sealed. Serviced on exchange basis if seals not broken.

Cutout Relay

Cuts In—6.4-7.0 Volts Cold. 900 RPM., 7.8 MPH.
Cuts Out—.5-3.0 ampere discharge current.
Contact Gap—.015" minimum.
Air Gap—.034-.038" Contacts open—measure at hinge end of core.

Voltage Regulator

Setting—7.3-7.6 volts at 70°F.
To Check (without breaking seals)—Connect ammeter in charging line at regulator 'B' terminal, voltmeter between 'B' and 'GD' terminals. Operate generator at speed equivalent to 30 MPH., charging battery, until voltage is steady. Voltage reading should be 7.3-7.6 volts (Cold—70°F), 7.1-7.4 volts (Hot—140°F).
To Adjust (with cover removed)—Change regulator armature spring tension by bending lower spring hanger slightly. See Electrical Equipment Section for complete directions.
Contact Gap—.010-.020" (armature against stop pin).
Air Gap—.0595-.0625" with contacts just opening.

Current Regulator

Setting—27-29 amperes (marked '28' on cover).
To Check (without breaking seals)—Connect test meters as for Voltage check (above). Operate generator at 30 MPH., charging battery, add load (use bank of headlamp bulbs, or turn on car lights and discharge battery) so that generator charges at peak rate and Current Regulator operates. Charging current should not exceed 28 amperes. If more than slight excess noted, regulator is defective.
Adjustment, Contact Gap, Air Gap—Same as for Voltage Regulator (above).

LIGHTING

LIGHTING:—Headlamps—Corcoran-Brown pre-focused type. Upper and lower beams controlled by selector switch on toeboard (lower beam deflected slightly to right).
Headlamp Adjustment—With car unloaded, 25' from screen, and with upper beams lighted, aim each headlamp so that top of beam is on horizontal line at lamp-center height, and beam is centered on lamp vertical center-line. Adjusting screws located behind lamp rim at top (vertical movement), at side (horizontal movement).
Beam Indicator—Red dot on speedometer dial. Illuminated when upper beams in use.

Switches

Lighting—Douglas, #5740.
Beam Selector—R.B.M. #1081.
Instrument—Douglas, #5697.

Bulb Specifications

Position	Candlepower	Mazda No.
Headlamps	32-32	2331
Headlamps (Export)	32-32	2330
Parking, Ign., Trunk	1½	55
Instrument	1 & 1½	51 & 55
Stop & Tail	21-3	1158
License Plate	3	63
D me	15	87

C NTINUED N NEXT PAGE

CONTINUED FR M PRECEDING PAGE

MISC. ELECTRICAL

FUSES—Lighting—Thre 20 ampere. On fuse block on back of instrument board at center. Protect circuits as follows: **Top**—Clock, Dome, Stop, Instrument Lamps.

Center—Head and Tail Lamps. **Lower**—Accessories.

Transmission Overdrive Control—14 ampere. On Relay.

Windshield Wiper—20 ampere. In control switch lead.

HORNS:—Klaxon. Delco-Remy Model K-33-S, type 601 (right hand, low note), 602 (left hand, high note). Vibrator type, matched tone, twin horns operated by relay.

Horn Current—10-12 amperes (601), 9-12 (602).

Horn Relay:—Delco-Remy No. 1116756. Closing Voltage 2.3-3.5 volts.

Contact Gap—.020". **Air Gap**—.015" (closed).

ENGINE

ENGINE SPECIFICATIONS:—6 cylinder, 'L' head type.

Bore—3 5/16". **Stroke**—4⅜".

Displacement—226.2 cu. ins. **Rated HP**—26.35.

Developed Horsepower—90 HP (for Std. head), 94 HP (Optl. high altitude head) at 3400 RPM.

Compression Ratio—6.0-1 Standard cast-iron head. 7.0-1 aluminum head optional.

Compression Pressure—105 lbs. at 150 RPM (Std.hd.). *See Studebaker Shop Notes for Cyl. Head Installation.*

Vacuum Reading—Steady 18-20" idling at 8 MPH.

PISTONS: Lynite, aluminum alloy, tin-plated, T-slot, cam ground type. **Length**—3¾".

Removal—Pistons and rods removed from above.

Clearance—.0005" new. Measure ¼" up on skirt 90° from pin bosses. See Fitting New Pistons.

Original Bore & Piston Sizes, Replacement Pistons:—*See Studebaker Shop Notes for sizes and markings.*

Fitting New Pistons:—Insert .002" x 1" feeler between piston and wall on camshaft side (pin parallel to crankshaft, T-slot away from camshaft). Pull to withdraw feeler must be between 7-15 lbs.

NOTE—Car manufacturer recommends cylinders out-of-round or taper over .002" be reconditioned.

Installing Pistons:—T-slot away from camshaft.

PISTON RINGS: Before Engine No. H-81539. 2 (P-C#70) compression, 1 (#85) oil ring, all above pin. Narrow heat-dam groove (no ring fitted) above top ring. Oil ring groove has ten 5/32" oil drain holes.

Engine No. H-81539 & Up. New sealed power type, 2 compression (with upper inner edge beveled), 1 oil control ring (no inner ring used). Narrow heat-dam groove above top ring. Oil drain holes in oil ring groove.

Ring	Width	End Gap	Side Clearance
①Compression	1/8"	.013-.018"	.0015-.002"
②Compression	3/32"	.013-.018"	.0015-.002"
Oil Control	3/16"	.013-.018"	.0015-.002"

①—Before Eng. No. H-81539.

②—Engine No. H-81539 & Up.

Replacement Rings:—Std. & .010", .020", .030" oversize.

PISTON PIN:—Diameter—.8741-.8745". Length—2⅞". Pin locked in connecting rod by lock screw.

Pin Fit in Piston—.0001-.0003" clearance or light finger-push fit at room temperature (70°).

Replacement Pins:—Std. & .0025", .005" oversize. Use Hone No. PH-1 to obtain proper piston fit.

NOTE—Replacement pistons fitted with pins.

CONNECTING ROD:—Length—8⅛". Weight—33.2 ozs.

Crankpin Journal Diameter—2.18675-2.18775".

Lower Bearing—Spun babbitt (cap bearings chamfered on upper edge). New rods furnished on exchange basis standard and .010", .020" undersize.

Clearance—.0005-.002". **Sideplay**—.005-.009".

NOTE—Use reamer HM-591-D to secure correct bearing clearance. Crankpin out-of-round, tapered or scored .0015" max. (use Tool No. 1C for reconditioning crankpins).

Bearing Adjustment:—None. Replace rods. *See Studebaker Shop Notes for 'Palnut' installation.*

Installing Rods:—Narrow portion of bearing to front (#1, 3, 5), to rear (#2, 4, 6). Numbers on rods and caps must be together and installed in same numbered cylinder with numbers and oil hole in lower end of rod toward camshaft side of engine.

CRANKSHAFT:—4 bearing, 5 integral counterweights. Vibration damper mounted on forward end of shaft. *See Studebaker Shop Notes for Vibration Damper data.*

Journal Diameter—2.4995-2.5000".

Bearings—Removable steel-backed, babbitt-lined.

Clearance—.0005-.0025".

Adjustment:—None (no shims). Replace bearings (std. size, .010", .020", .030" undersize).

End Thrust:—Thrust plate assembled between front bearing and crankshaft gear. Controlled by shims (furnished .003", .005", .007" thick) between plate and journal face. **Endplay**—.003-.006".

NOTE—Install new seals (specially treated wood) whenever rear main bearing cap replaced

CAMSHAFT:—Four bearing with helical gear drive. *See Studebaker Shop Notes for Camshaft Removal.*

Journal Diameters—#1, 1.9975-1.998"; #2, 1.96625-1.967"; #3, 1.93575-1.9365"; #4, 1.12325-1.124".

Bearings—Split steel-backed, babbitted bushings.

NOTE—Align bushing with oil hole in block.

Clearance—.00075-.00225" (#1), .001-.00275" (others).

End Thrust:—Taken by thrust plate assembled on front face of engine behind camshaft gear. Spacer assembled back of gear hub. **Endplay**—.004-.008"

Timing Gears:—Crankshaft (cast-iron), Camshaft (Celeron with steel hub). **Backlash** .001-.003". *See Studebaker Shop Notes for Gear Removal and Replacement Gear size selection.*

Camshaft Setting:—Mesh marked camshaft gear tooth between two marked teeth on crankshaft gear.

VALVES:—	Head Diameter	Stem Diameter	Length
Intake	1 15/32"	11/32"	5 7/32"
Exhaust	1 9/32"	11/32"	5 7/32"

	Seat Angle	Lift	Stem Clearance
All Valves	45°	11/32"	.0015-.0035"

Valve Guides:—Pressed in block from above (1 5/32" below upper edge of valve seat) with stepped end down. Ream to inside diameter of .3425-.3445".

Valv Springs:—Install with closed-coil up and dampener on top of spring. Replace springs if 10% weak (test with Tool U-15). **Free Length**—2½". *See Studebaker Shop Notes for Valve Spring installation.*

	Spring Pressure	Spring Length
Valve Closed	54-60 lbs.	2 3/32"
Valve Open	125-135 lbs.	1¾"

Valve Lifters:—Barrel type (remove from above with valve, valve spring and adjusting screw removed). Furnished std. size and .0005", .001" oversize. **Diameter** .9985-.999". **Clearance** .0005-.00175".

VALVE TIMING

Tappet Clearance:—.016" (cold) all valves. Remove hood side panel for access to valves.

Valve Timing:—See Camshaft Setting above.

Intake Valves—Open 15° BTDC. Close 49° ALDC.

Exhaust Valves—Open 54° BLDC. Close 10° ATDC.

Valve Timing Check—With .020" tappet clearance #1 intake valve should open with #1 piston 15° or .0942" BTDC with vibration damper mark 'IN.OP1-6/' aligned with pointer on timing gear cover. Reset tappet clearance .016" (cold).

LUBRICATION

LUBRICATION:—Pressure (pump on right of engine). *See Studebaker Shop Notes for Oil Pump installation.*

Oil Pan Note—Place #2 piston at approx. top dead center to facilitate Oil Pan Removal & Installation.

Normal Oil Pressure:—40 lbs. at 25-30 MPH.

Oil Pressure Relief Valve:—On lower right front corner of engine. Opens at 30-40 lbs. Not adjustable.

Crankcase Capacity:—6 quarts.

COOLING

COOLING SYSTEM: Capacity—14½ quarts.

Water Pump:—Centrifugal with adjustable packing, lubricant fitting and grease cup for bushings. *See Water Pump Section for complete data.*

Thermostat:—Bishop & Babcock or Fulton., In cylinder head outlet. Install with bellows down.

Setting—Starts to open 156°F. to 160°F.

CLUTCH

CLUTCH: Borg & Beck Model 9A6. Number 869 stamped on cover. Single plate, dry disc type. *See Clutch Section for complete data.*

Facings—Moulded (flywheel), Woven (pressure plate), Inside Diam. 5⅝". O. Diam. 9¼". Thickness .133".

Adjustment:—Free travel 1" (min.). Turn adjusting sleeve on pedal connector link.

Hill-Holder (NoRol) Note—Check whenever clutch pedal adjusted. Set so that Hill-Holder releases just as clutch engages (change rod length).

Removal: Remove transmission (see Transmission Removal following, disconnect clutch pedal linkag , support engine at rear, remove rear engine mountings, remove clutch housing. Take out mounting screws and remove clutch.

For Clutch Cross-shaft Oiler installation data, see Studebaker Shop Notes.

TRANSMISSION

TRANSMISSION: Warner 'Horizontal' Type. All helical gear type with synchro-mesh on second and high.
See Transmission Section for complete data.
Transmission Control: Steering Col. Shift Optional.
See Transmission Section for complete data.
Removal: Remove shift lever (floor shift), or disconnect control rods at transmission (steering col. shift). Remove driveshaft, take out transmission mounting screws, pull transmission back and lift out.

OVERDRIVE

OVERDRIVE: Warner R6 (Kick-down) Electric. This Overdrive used with 'Horizontal' T-88 transmission.
See Transmission Section for complete data.
Overdrive Solenoid—Delco-Remy Model 1569.
Throttle Switch—Hersee #1687S. Adjust so that shoe on idler lever just contacts switch plunger with throttle valve wide open (lever against stop).
Control Relay—Auto-Lite Model HR-4201S. NOTE—Use only 14 ampere fuse on relay.
Removal: Same as for regular transmission after removing Overdrive Support. *See Overdrive Transmission Rear Support Installation in Studebaker Shop Notes*

UNIVERSALS

UNIVERSAL JOINTS: Spicer. Model 1271-OIX (front), 1278-OIX (rear). Needle bearing types.
See Universals Section for complete data.

REAR AXLE

REAR AXLE:—Spicer Model 41-2. Semi-floating, Hypoid gear type with Hotchkiss drive.
See Rear Axle Section for complete data.
Ratio—4.55-1 standard. 4.82-1 optional.
Backlash—.005-.007". Shim adjustment.
Removal:—Hoist rear of car, disconnect propeller shaft at rear universal, hydraulic brake lines, brake cables, and shock absorbers. Remove spring U-bolts, disconnect rear spring shackles and withdraw axle. NOTE—Use Puller HM-931 to remove axle shaft,
Wheel Bearing Adjustment:—Shims between backing plate and axle housing. With wheel and hub removed (use Hub Puller ST-500) check endplay with dial indicator. To adjust, remove backing plate, add or remove shims (.003", .005", .010", .030" thick).
Endplay—.001-.005".

SHOCK ABSORBERS

SHOCK ABSORBERS: Houdaille Model BBFS (front), Model ACHS (rear). Double acting, adjustable, hydraulic types. Rear shocks have thermostat control.
See Shock Absorber Section for complete data.

FRONT SUSPENSION

Front Suspension:—Planar type independent suspension with transverse spring. Specifications below apply with car weight on wheels but without load. PRODUCTION CHANGE— Re-designed Front Suspension began with the following Serial Numbers: 4,112,701 (South Bend).....4,803,802 (Los Angeles)
See Front Suspension Section for complete data.
Kingpin Inclination—5½°.
Caster—Negative ¼° to Positive ¾°.
Camber—¼° to ¾°. Eccentric pin adjustment (Early), shim adjustment (Later Cars).
Toe In—1/16-1/8". Cars with non-adjustable reach rods (to each wheel), adjustment made on center tie rod. Cars with adjustable reach rods (to each wheel), toe in adjustment made on right rod after setting left front wheel in straight ahead position by means of left reach rod.
Steering Geometry (toe-out on turns)—Inner wheel turned 22-22½°. Outer wheel 20°.

STEERING GEAR

Steering Gear: Ross T-14 Cam-&-Twin Lever type.
See Steering Gear Section for complete data.

BRAKES

BRAKES:—Service. Lockheed hydraulic, double anchor type. Hand lever applies rear service brakes.
See Brake Section for complete data.
Wheel Cylinders—Stepped or two-stage bore type.
Front Wheels.....Front Shoe cylinder 1⅜". Rear 1".
Rear Wheels.....Front shoe cylinder 1¼". Rear 1".
NOTE—Wheel cylinder bore size marked on casting.
Drum—Budd composite. Diameter—11".
Lining—Front Shoe: woven. Rear: moulded. Width 2". Thickness 3/16". Length per wheel 19 11/16".
Clearance—.010" toe, .005" heel, for each shoe.
Hand Brake: See Service Brakes above.
Hill-Holder: Optional equipment on all models.
See Brake Section for complete data.

MISC. MECHANICAL

WINDSHIELD WIPER:—Auto-Lite Model EW-5003 (early cars), **EW-5103** (later cars). Electric type.
Windshield Wiper Switch—A-L No. XA-535.
See Miscellaneous Section for complete data.
NOTE—Use only 20 ampere fuse in wiper switch lead.

MODEL IDENTIFICATION

SERIAL NUMBER:—First number 7125501 (South Bend), 7802501 (Los Angeles). Stamped on plate on left frame member under left front fender.

ENGINE NUMBER:—First number B-30201. Stamped on boss on left center of cylinder block.

TUNE-UP

COMPRESSION:—Ratio—6.0-1 Std. cast-iron head. Pressure—105 lbs. at 150 R.P.M.

VACUUM READING:—Steady 18" at 450 RPM., 8 MPH.

FIRING ORDER: 1-6-2-5-8-3-7-4. See diagram.

SPARK PLUGS: Champion Type 8. 18 mm. Metric.
Gaps—Set at .025".
NOTE—Champion No. 6 Com-62 recommended by car manufacturer for replacement use.

IGNITION: See Coil, Condenser, and Distributor.
Breaker Gap—.020". Cam Angle—33° Closed.
Synchronization—Set movable contacts to open 45° after stationary set.
Automatic Advance—14½° max. at 1800 RPM (distr.).
Vacuum Advance—6° distr. with 11-14" vacuum.

IGNITION TIMING: See Ignition Timing.
Std. Setting—TDC. Vibration dampener mark 'UDC.1-8' aligned with pointer at front of engine for stationary contacts. Mark 'UDC.3-6' for movable contacts (¼ revolution from 'UDC.1-8' mark).

CARBURETION: See Carburetor & Carb. Equipment.
Idle Setting—Set idle adjusting screws midway between 'miss' and 'roll' points. Idle speed 450 RPM or 8 MPH.
Float Level—Fuel level ⅝" below top edge of bowl.
Accelerator Pump—Inner Hole (short stroke) for minimum charge, Outer hole (long stroke) maximum charge.
Fuel Pump Pressure: 3½ lbs. maximum.

MANIFOLD HEAT CONTROL:—Thermostatic coil type. To check valve, unlatch thermostatic coil (free outer end from bracket on manifold), operate valve by hand and see that shaft is free (shaft can be cleaned with emery if necessary). Make certain that thermostatic coil is properly latched to bracket and that tension spring (from shaft to clip on flange) is in place.

VALVES: See Valve Timing.
Tappet Clearance—.016" for all valves, Cold.

STARTING: See Battery, Starter, Generator, Regulator.

IGNITION

Ignition Switch:—Mitchellock Model 24-R, No. 8056. Delco-Remy No. 1116268 (switch & cable).
Ignition Lock—Yale & Towne. Mitchell #8078.

COIL: Delco-Remy Model 1115021. Mounted on dash.
Ignition Current—½-1½ amps. idling, 4-5 stopped.

CONDENSER: Delco-Remy—Part No. 1838163.
Capacity—.18-.25 microfarad.

DISTRIBUTOR: Delco-Remy Model 662-M. Double breaker, 4 lobe cam, full automatic advance type with auxiliary vacuum spark control. NOTE—Movable contacts must be synchronized. Open 45° after stationary set.

Firing Interval—Movable contacts open 45° (distr.) after fixed set.

Breaker Gap—Set at .020". Limits .018-.024".

Cam Angle or Dwell—33° (closed), 12° (open). Both sets operating together and synchronized.

Breaker Arm Spring Tension—22 ounces.

Rotation—Clockwise viewed from top.

Automatic Advance

Distributor Degrees	R.P.M.	Engine Degrees	R.P.M.
Start	300	2.5	600
14.5	1800	29	3600

Vacuum Spark Control D-R No. 681-S. Mounted under distributor and linked to advance arm. Provides additional advance at speeds above idling except when engine is accelerated or operated with wide open throttle when spark is retarded by return spring within unit. Plunger travel ¼" max.

Vacuum Advanc

Dist. Degrees	Eng. Degrees	Vacuum (" of HG)
Start	0	5-7"
6°	12°	11-14"

Removal:—Mounted on right hand side of cylinder head. To remove, loosen advance arm clamp bolt (not necessary to disturb vacuum unit or vacuum connections).

IGNITION TIMING

IGNITION TIMING:—Standard setting as follows (see Octane Selector Setting following for correction dependent on fuel regularly used):

Flywheel Degrees	Piston Positi n
0° (At TDC.)	.0000" TDC.

To Set Timing (Stationary Contacts)—Crank engine by engaging gears and rolling car on floor. With #1 piston on compression, turn engine ver

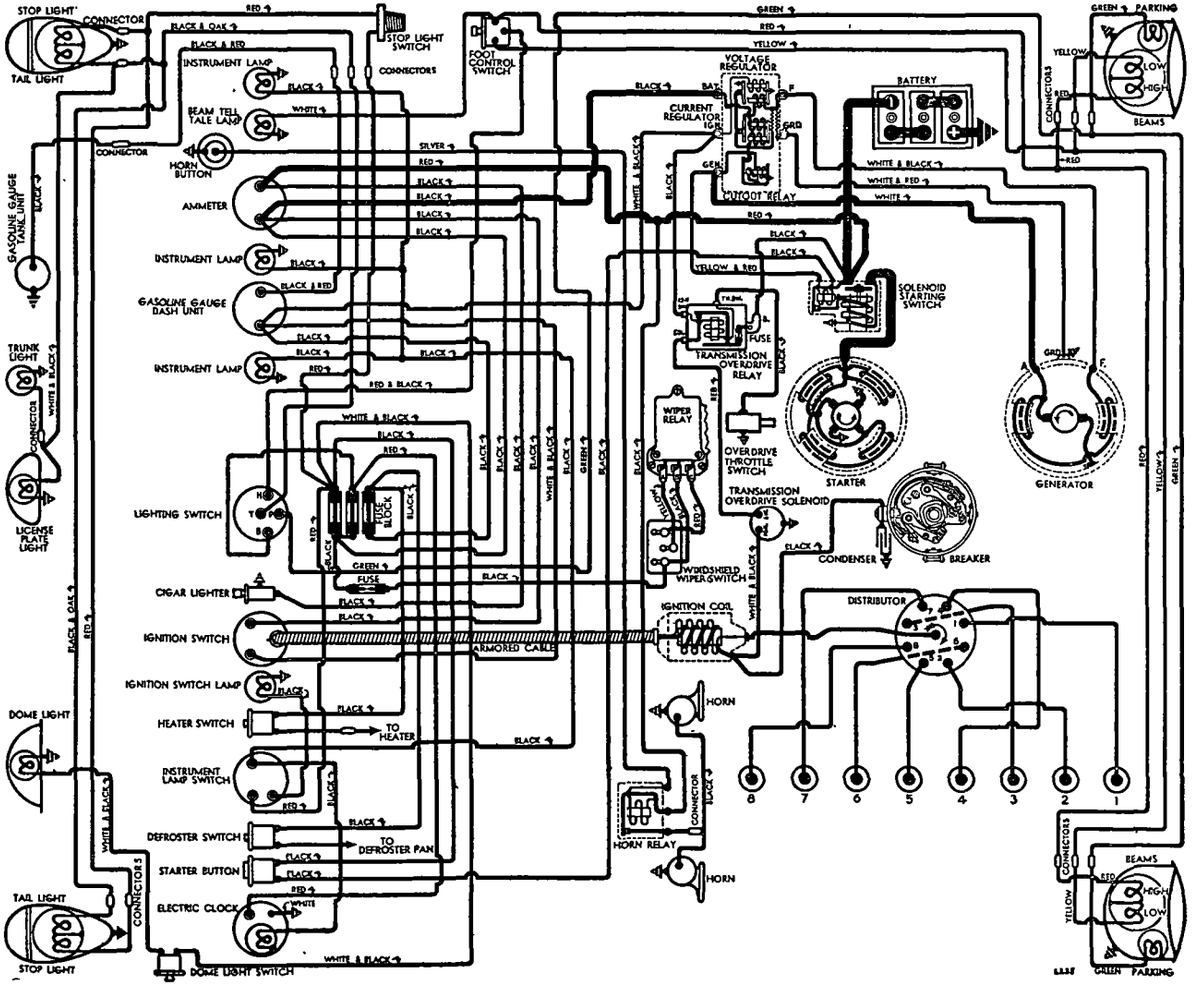

until piston reaches top dead center, stop when dead center mark 'U.D.C.1-8' on vibration dampener at front of engine lines up with pointer on timing gear cover. Loosen advance arm clamp bolt, rotate distributor until stationary breaker contacts (mounted directly on breaker plate) begin to open, tighten clamp bolt, then synchronize movable contacts.

Synchronization (On Engine)—Turn engine over 90° to #6 firing position with vibration dampener mark 'U.D.C.3-6' lined up with pointer on timing gear cover. Loosen lockscrews on movable sub-plate carrying second set of contacts, turn eccentric adjusting screw until contacts begin to open, tighten lockscrews.

Synchronization (Using Tool)—Use Delco-Remy tool #1838182. See Distributor Synchronization in Electrical Equipment Section for complete instructions. Distributor firing intervals regular 45-45-45°.

Octane Selector Setting—With engine at normal operating temperature, adjust Octane Selector so that slight ping secured when accelerating with wide open throttle (rotate distributor counter-clockwise if no ping noted, clockwise if ping too severe).

CARBURETOR

CARBURETION:—Carburetor—Stromberg Model AAO-161, 1" Dual Downdraft type.

For complete data, refer to Carburetor Index.

NOTE—Metering jets can be changed to first smaller size for increased fuel economy with slight loss in performance (jets for both barrels must be same size and should be changed as a unit). ***See Stromberg Jet Specifications in Carburetor Section for complete jet data.***

Idle Adjustment—With engine warm so that Fast Idle and Automatic Choke inoperative and engine idling at hot or slow idling speed, set throttle stopscrew for 7-8 MPH. idling speed, turn idle adjusting screw for each carburetor barrel (in succession) in until engine begins to lag or miss, out until engine begins to roll, finally turn screw in slowly until engine fires smoothly. Readjust throttle stopscrew for correct idling speed.

Accelerating Pump Adjustment—Two holes provided in throttle lever for pump link engagement. Adjust for seasonal requirements as follows:

Inner Hole (Min. stroke)—Summer temperatures.

Outer Hole (Max. stroke)—Winter temperatures.

Fast Idle:—Integral (Built-in carburetor).

For complete data, refer to Carburetion Equip. Index.

Setting—No adjustment provided.

Automatic Choke:—Integral (built-in carburetor).

For complete data, refer to Carburetion Equip. Index.

Setting—Mark 'R' on thermostatic coil case should line up with projection on housing (ordinary fuel). If this setting too rich (engine loads up), rotate case to 'M' mark (leaner setting). Use 'H' position only for very volatile fuels.

CARB. EQUIPMENT

Air Cleaner:—AC #1528631 oil-wetted type Std., #1528256 oil-bath type Optl. (std. in severe-dust states).

NOTE—AC #1528665 oil-filler air cleaner Std., #1528629 heavy duty type with il-bath cleaner.

Fuel Pump:—AC Type J #1521797. Diaphragm type combination fuel-and-vacuum pump.

For complete data, refer to Carburetion Equip. Index.

Gasoline Gauge:—Stewart (Stewart-Warner) Electric type. No. G-99370.

For complete data, refer to Carburetion Equip. Index.

BATTERY

Willard Type SW-1-95. 6 volt, 15 plate, 95 ampere hour capacity (20 hour rate).
Starting Capacity—117 amperes for 20 minutes.
Zero Capacity—300 amperes for 3.1 minutes. Five second voltage 4.2 volts.
Grounded Terminal—Positive (+) grounded to frame.
Engine Ground—Separate strap connector.
Dimensions—Length 9". Width 7". Height 8 13/16".
Location—In engine compartment on left side.

STARTER

Delco-Remy Model 1107903. Armature No. 820158.
Drive—Solenoid pinion shift & overrunning clutch.
Rotation—Counter-clockwise at commutator end.
Brush Spring Tension—24-28 ozs. each.
Cranking Engine—110 R.P.M., 150-200 amperes, 5-5.5 volts.

Performance Data

Torque	R.P.M.	Volts	Amperes
0 ft. lbs.	6000	5.0	60
16 "	Lock	3.0	600

Removal:—Flange mounted on left front face of flywheel housing. To remove, take out flange mounting screws (remove starter and solenoid switch as an assembly).

Starting Switch: Delco-Remy Solenoid 1546. Mounted on starter and controlled through relay (in switch case) by pushbutton switch (Douglas #5701) on instrument panel.

For complete data, refer to Electrical Equipment Index.

Solenoid Switch

Closes against 70 lb. pull with ½" gap drawing 65-71 amperes at 5 volts. Holds switch closed with 12-14 ampere current (hold-in coil only).

Solenoid Relay

Contacts Close—1.9 volts Max. **Open**—1.0-1.2 volts.
Contact Gap—.035". **Air Gap**—.010" (closed).

GENERATOR

Delco-Remy Model No. 1102656. Armature Number 1873866. Two brush, shunt type with external vibrating Voltage and Current regulation. Ventilated by fan on drive pulley.
Charging Rate Adjustment—No adjustment at generator. Charging rate controlled by Voltage Regulator and maximum output by Current Regulator. See Regulator data below.
Maximum Charging Rate—30 amperes (cold), 8.0 volts, 1700 R.P.M., 20 M.P.H. and above with load or discharged battery (Current Regulator setting). Actual charging rate controlled by Voltage Regulator and dependent on battery condition.

Performance Data

	Amperes	Volts	R.P.M.
Cold	30	8.0	1700

Rotation—Counter-clockwise at comutator end.
Brush Spring Tension—25 ounces each.
Field Current—2.0-2.2 amperes at 6.0 volts.

Removal:—Pivot mounted at left front of engine. T remove, take out pivot and clamp bolts.

Belt Adjustment:—Swing generator out until fan can just be turned with belt held stationary.

REGULATOR

Delco-Remy Model 5861. Double Core Type Voltage & Current Regulator (With 'IGN' Terminal). Cutout Relay and vibrating type Voltage & Current Regulators in case on dash. Cutout Relay has special 'ground' contacts for starter solenoid control.

For complete data, refer to Electrical Equipment Index.

NOTE—Regulator cover sealed. Serviced on exchange basis if seals not broken.

Cutout Relay

Cuts In—6.9-7.6 volts, 800-850 RPM., 9.7 MPH.
Cuts Out—0-4.0 ampere discharge current.
Contact Gap—.020". **Air Gap**—.020" (closed).

Voltage Regulator

Setting—7.5-7.9 volts at 70°F. 7.4-7.6 volts at 150°F. Regulator over-compensated for temperature and must be checked at these points.

To Check (without breaking seals)—Disconnect charging lead at regulator 'BAT' terminal, connect ¾ ohm fixed resistance (Nicrome wire capable of carrying 10 amperes) between this terminal and ground, disconnect lead on 'IGN' terminal, connect jumper between this terminal and 'BAT' terminal. Connect voltmeter between 'IGN' and 'GRD' terminals. Operate generator and increase speed to 2800-3000 R.P.M., note voltmeter reading (see setting above). NOTE—This test method recommended by manufacturer, does not require adjusting charging rate as with other methods (see Electrical Equipment Section for alternative checking directions).

To adjust (with cover removed)—Change armature spring tension by bending spring hanger at lower end of spring slightly. Recheck performance.

NOTE—Cover must be in place when regulator tests made. Check setting by decreasing speed until Cut-out contacts open and then increasing speed to original point.

Contact Gap—.020". **Contact Spring Tension**—3.5 ozs.

Air Gap—.063" between armature and core (armature down so that fibre bumper just touches stop) .010" between fibre bumper and stop (armature up).

Current Regulator

Setting—28-30 amperes.

To Check (without breaking seals)—Connect ammeter in charging line at regulator 'BAT' terminal, disconnect lead at 'IGN' terminal (to eliminate regulator action), turn on car lights. Operate generator and increase speed until Current Regulator limits output, note ammeter reading.

NOTE—Generator must not be operated on open-circuit and voltage must not be allowed to exceed 8.5 volts with Voltage Regulator disconnected.

To adjust (with cover removed)—Same as for Voltage Regulator (see directions above).

Specifications—Contact Gap, Contact Spring Tension, Fibre bumper clearance same as for Voltage Regulator (above). Armature Air Gap should be .075".

C NTINUED N NEXT PAGE

C NTINUED FR M PRECEDING PAGE

LIGHTING

LIGHTING:—Headlamps—Corcoran-Brown pre-focused type. Upper and lower beams controlled by beam selector switch on toeboard (lower beam deflected slightly to right).

Headlamp Adjustment—With car unloaded, 25' from screen, and with upper beams lighted, aim each headlamp so that top of beam is on horizontal line at lamp center height, and beam is centered on vertical lamp center-line. Adjusting screws located behind lamp rim at top (vertical movement), one side (horizontal movement).

Beam Indicator—Red dot on face of speedometer dial. Illuminated whenever upper beams lighted.

Switches

Lighting—Douglas #5740.
Beam Selector—R.B.M. # 1081.
Instrument—Douglas #5697.

Bulb Specifications

Position	Candlepower	Mazda No.
Headlamps	32-32	2331
Headlamps (Export)	32-32	2330
Parking, Ign., Trunk	1½	55
Instrument	1 & 1½	51 & 55
Stop & Tail	21-3	1158
License Plate	3	63
Dome	15	87

MISC. ELECTRICAL

FUSES:—Lighting—Three 20 ampere. On fuse block on back of instrument board at center. Protect circuits as follows: **Top**—Clock, Dome, Stop, Instrument lamps.

Center—Head and Tail lamps. **Lower**—Accessories.

Transmission Overdrive Control—14 amp. On Relay.

Windshield Wiper—20 ampere. In control switch lead.

HORNS:—Klaxon. Delco-Remy Model K-33-S, Type 1999601 (right-low note), 1999602 (left-high note). Vibrator type, matched tone, twin horns operated by relay.

Horn Relay:—Delco-Remy No. 1116756. Closing voltage 2.3-3.5 volts.

Contact Gap—.020". **Air Gap**—.015" (closed).

ENGINE

ENGINE SPECIFICATIONS:—8 cylinder, 'L' head type.
Bore—3 1/16". **Stroke**—4¼".
Displacement—250.4 cu. ins. **Rated HP**—30.
Developed Horsepower—110 at 3600 RPM.
Compression Ratio—6.0-1 Standard cast-iron head.
Compression Pressure—105 lbs.@150 RPM (Std.hd).
See Studebaker Shop Notes for Cyl. Head Installation.
Vacuum Reading—Steady 18-20" idling at 8 MPH.

PISTONS:—Aluminum alloy, T-slot, cam ground, tin plated. **Length** 3¾". Weight 13.6 ozs. (stripped).
Removal—Pistons and rods removed from above.
Clearance—Top .0115-.0165". Skirt .0015" selective.

Original Bore & Piston Sizes, Replacement Pistons:—*See Studebaker Shop Notes for sizes and markings.*

Fitting New Pistons:—Insert .003" x 1" feeler between piston and wall on camshaft side (pin parallel to crankshaft, T-slot away from camshaft). Pull to withdraw feeler must be between 7-15 lbs.

NOTE—Car manufacturer recommends cylinders out-of-round or taper over .002" be reconditioned.

Installing Pistons: T-slot away from camshaft.

PISTON RINGS: 3 piston rings, all above pin. #1 and #2 Compression (install with step down). #3 Oil Control (slotted type with expander ring installed behind this ring). Heat dam groove (no ring) above top ring groove. Oil drain holes in bottom groove.

Ring	Width	End Gap	Side Clearance
Compression	1/8"	.013-.018"	.0015-.002"
Oil Control	3/16"	.013-.018"	.0015-.002"

Replacement Rings:—Std. & .010", .020", .030" oversize.

PISTON PIN:—Diameter—.8741-.8745". **Length**—2⅝". Pin locked in connecting rod by lock screw.

Pin Fit in Piston—.0001-.0003" clearance or light finger-push fit at room temperature (70°).

Replacement Pins:—Std. & .002", .005" oversize. Use Hone No. PH-1 to obtain proper piston fit.

NOTE—Replacement pistons fitted with pins.

CONNECTING ROD:—Length—8". **Weight**—32 ozs.
Crankpin Journal Diameter—1.87425-1.87525".

Lower Bearing—Removable, steel-backed, lead-bronze lined type.

Clearance—.00075-.00275". **Sideplay**—.005-.009".

NOTE—Turn crankpins for bearing clearance (Tool No. 1C). Do not ream bearings.

Bearing Adjustment:—None. Replace bearings. Furnished Std. and .005", .010", .020" undersize. Align oil hole in rod and bearing shell. See that tongues on bearing engage grooves in rod and cap.
See Studebaker Shop Notes for 'Palnut' installation.

Installing Rods:—Rods and caps marked with cylinder number. Numbers must be together and installed in same numbered cylinder with numbers and oil hole in lower end of rod toward camshaft.

CRANKSHAFT:—9 bearing, 12 bolted counterweights. Vibration damper mounted on forward end of shaft.
See Studebaker Shop Notes for Vibration Damper data.

Journal Diameters—2.3435-2.3440".

Bearings—Removable steel-backed, babbitt-lined.
Clearance—.001-.003".

Adjustment:—None (no shims). Replace bearings (furnished Std. and .010", .020", .030" undersize).

End Thrust:—Thrust plate assembled between front bearing and crankshaft gear. Controlled by pinned bronze washers (furnished .003", .005", .007" thick) between plate and journal face. **Endplay**—.003-.006".

NOTE—Install new seals (specially treated wood) whenever rear main bearing cap replaced.

CAMSHAFT:—Six bearing with helical gear drive.
See Studebaker Shop Notes for Camshaft removal.

Journal Diameters:—#1, 1.935-1.9355"; #2, 1.90275-1.9035"; #3, 1.87225-1.873"; #4, 1.84075-1.8415"; #5, 1.80975-1.8105"; #6, 1.74725-1.748".

Bearings—Split steel-backed, babbitted bushings.

NOTE—Align bushing with oil hole in block.
Clearance—.00075-.00225" (#1), .002-.00375" (others).

End Thrust:—Taken by thrust plate assembled on front face of engine behind camshaft gear. Spacer assembled back of gear hub. **Endplay**—.004-.008"

Timing Gears:—Crankshaft (cast-iron), Camshaft (Celeron with steel hub). **Backlash**—.001-.003".
See Studebaker Shop Notes for Gear Removal and Replacement Gear Size selection.

Camshaft Setting:—Mesh marked camshaft gear tooth between two marked teeth on crankshaft gear.

VALVES:—

	Head Diameter	Stem Diameter	Length
Intake	1 13/32"	11/32"	5 7/32"
Exhaust	1 9/32"	11/32"	5 7/32"

	Seat Angle	Lift	Stem Clearance
All Valves	45°	11/32"	.001-.003"

Valve Guides:—Pressed in block from above (1 5/16" below upper edge of valve seat) with stepped end down. Ream to inside diameter of .343-.344".

Valve Springs:—Install with closed-coil up and dampener on top of spring. Replace springs if 10% weak (test with Tool U-15). **Free Length**—2½".

	Spring Pressure	Spring Length
Valve Closed	54-60 lbs.	2 3/32"
Valve Open	125-135 lbs.	1¾"

Valve Lifters:—Mushroom type in bolted-on guide brackets (clusters of four). Assemblies may be removed through valve opening on side of engine.
See Studebaker Shop Notes for Valve Lifter Spring data.

VALVE TIMING

Tappet Clearance:—.016" (cold) all valves. Remove hood side panel for access to valves.

Valve Timing:—See Camshaft Setting above.
Intake Valves—Open 15° BTDC. Close 49° ALDC.
Exhaust Valves—Open 54° BLDC. Close 10° ATDC.

Valve Timing Check—With .020" tappet clearance #1 intake valve should open with #1 piston 15° or .0915" BTDC with vibration damper mark 'IN.OP.1-8/' aligned with pointer on timing gear cover. Reset tappet clearance .016" (cold).

LUBRICATION

LUBRICATION:—Pressure (pump in crankcase).
See Studebaker Shop Notes for Oil Pump installation.

Normal Oil Pressure:—40 lbs. at 25-30 MPH.

Oil Pressure Relief Valve:—On lower right front corner of engine. Opens at 40 lbs. Not adjustable.

Crankcase Capacity:—8 quarts.

COOLING

COOLING SYSTEM: Capacity—17 quarts.
Water Pump: Adjustable packing type.
See Water Pump Section for complete data.

Removal—Drain water, remove fan belt, fan blades and pulley, pump hose, and pump mounting screws.

Thermostat:—Fulton. In cylinder head outlet.

Setting—Starts to open 156°F. to 160°F.

Temperature Gauge—Stewart (Stewart-Warner) No. G-99386.

CLUTCH

CLUTCH:—Inland. 'Diaphragm' type, single plate, dry disc type with Long 9½CF-CS driven member.
See Clutch Section for complete data.

Facings—Spirally grooved. Moulded (flywheel side). W ven—Man. Hycoe (pressure plate side). Inside Diam. 6". Outside Diam. 9½". Thickness .125".

Replacement Clutch Note—Remove spacers (one at each driving lug) after clutch installed on car.

Pedal Adjustment:—Free travel 1" min. Turn adjusting sleeve on pedal connector link. On cars with Hill-Holder (NoRol), check when pedal adjusted and see that brakes release just as clutch engages.

Removal: Remove transmission (see Transmission Removal following, disconnect clutch pedal linkage, support engine at rear, remove rear engine mountings, remove clutch housing. Take out mounting screws and remove clutch.

For Clutch Cross-shaft Oiler installation data, see Studebaker Shop Notes.

TRANSMISSION

TRANSMISSION: Warner 'Horizontal' Type. All helical gear type with synchro-mesh on second and high.
See Transmission Section for complete data.

Transmission Control: Steering Col. Shift Optional.
See Transmission Section for complete data.

Removal: Remove shift lever (floor shift), or disconnect control rods at transmission (steering col. shift). Remove driveshaft, take out transmission mounting screws, pull transmission back and lift out.

OVERDRIVE

OVERDRIVE: Warner R6 (Kick-down) Electric. This Overdrive used with 'Horizontal' T-88 transmission.
See Transmission Section for complete data.

Overdrive Solenoid—Delco-Remy No. 1569, 1573 (12 volt Exp.).

Throttle Switch—Hersee #1687S. Adjust so that end of throttle rod just contacts switch plunger with throttle valve wide open (lever against stop).

Control Relay—Auto-Lite Model HR-4201. NOTE—Use only 14 ampere fuse on relay.

Removal: Same as for regular transmission after removing Overdrive Support. ***See Overdrive Transmission Rear Support Installation in Studebaker Shop Notes***

UNIVERSALS

UNIVERSAL JOINTS: Spicer. Model 1271-OIX (front), 1278-OIX (rear). Needle bearing types.
See Universals Section for complete data.

REAR AXLE

REAR AXLE:—Spicer Model 41-2. Semi-floating, Hypoid gear type with Hotchkiss drive.
See Rear Axle Section for complete data.

Ratio—4.55-1 Std., 4.82-1 Optl. (Std. on Overdrive). **Backlash**—.005-.007". Shim adjustment.

Removal:—Hoist rear of car, disconnect propeller shaft at rear universal, hydraulic brake lines, brake cables, and shock absorbers. Remove spring U-bolts, disconnect rear spring shackles and withdraw axle.

NOTE—Use Puller HM-931 to remove axle shaft,

Wheel Bearing Adjustment:—Shims between backing plate and axle housing. With wheel and hub removed (use Hub Puller ST-500) check endplay with dial indicator. To adjust, remove backing plate, add or remove shims (.003", .005", .010", .030" thick).

Endplay—.001-.005".

SHOCK ABSORBERS

SHOCK ABSORBERS: Houdaille Model BBFS (front), Model ACHS (rear). Double acting, adjustable, hydraulic types. Rear shocks have thermostat control.
See Shock Absorber Section for complete data.

FRONT SUSPENSION

Front Suspension:—Planar type independent suspension with transverse spring. Specifications below apply with car weight on wheels but without load.
See Front Suspension Section for complete data.

Kingpin Inclination—5½°.

Caster—Negative ¼° to Positive ¾°.

Camber—¼° to ¾°. Shim adjustment.

Toe In—1/16-⅛". Adjust right reach rod only for toe-in. Left rod should be adjusted first for left wheel straight-ahead position (steering wheel centered).

NOTE—If car equipped with non-adjustable reach rods (to wheels), adjustment is made on center rod.

Steering Geometry (toe-out on turns)—Inner wheel turned 22-22½°. Outer wheel 20°.

STEERING GEAR

Steering Gear: Ross Model T-14. Cam & Twin Lever.
See Steering Gear Section for complete data.

BRAKES

BRAKES:—Service. Lockheed hydraulic, double anchor type. Hand lever applies rear service brakes.
See Brake Section for complete data.

Wheel Cylinders—Stepped or two-stage bore type.
Front Wheels.....Front Shoe cylinder 1⅜". Rear 1".
Rear Wheels.....Front shoe cylinder 1¼". Rear 1".

NOTE—Wheel cylinder bore size marked on casting.

Drum—Budd composite. Diameter—11".

Lining—Front Shoe: woven. Rear: moulded. Width 2¼". Thickness 3/16". Length per wheel 19 11/16".

Clearance—.010" toe, .005" heel, for each shoe.

Hand Brake: See Service Brakes above.

Hill-Holder: Optional equipment on all models.
See Brake Section for complete data.

MISC. MECHANICAL

WINDSHIELD WIPER:—Auto-Lite Model EW-5003 (first cars), EW-5103 (later cars). Electric type.
See Miscellaneous Section for complete data.

NOTE—Use only 20 ampere fuse in wiper switch lead.

HOOD LOCK & SIDE PANELS, OIL PAN REMOVAL, INSTALLATION OF ENGINE PANS AND FRONT FENDER APRONS & BAFFLES: *See Studebaker Shop Notes for complete instructions.*

MODEL IDENTIFICATION

SERIAL NUMBER:—First number G-30501 (South Bend), G-803701 (Los Angeles). Stamped on right hand body front door hinge pillar (under left front fender on first cars).

ENGINE NUMBER:—First number 34101. Stamped on pad on upper left front corner of engine block.

TUNE-UP

COMPRESSION:—Ratio—6.5-1 std. cast-iron head. Pressure—105 lbs. at 150 RPM.

VACUUM READING:—Steady 17-18" at 8 MPH idle spd.

FIRING ORDER: 1-5-3-6-2-4. See diagram.

SPARK PLUGS: Champion Type 8. 18 mm. Metric. Gaps—Set at .025".

NOTE—Champion No. 6 Com-62 recommended by car manufacturer for replacement use.

IGNITION: See Coil, Condenser, and Distributor. Breaker Gap—.020". Cam Angle—35° Closed. Automatic Advance—7° max. at 1400 RPM (distr.). Vacuum Advance—9° distr. with 14¾" vacuum.

IGNITION TIMING: See Ignition Timing. Std. Setting—2° BTDC. Flywheel mark 'IGN' aligned with indicator in inspection hole on engine rear plate on left side. Use .016" feeler between advance arm and hold-down plate when setting distributor.

CARBURETION: See Carburetor & Carb. Equipment. Idle Setting—Set idle adjusting screw ¾-1¼ turns open. Idle speed 600 RPM or 8 MPH. Float Level ¼" from machined surface of bowl cover (gasket seat) to top of float with cover inverted. Accelerating Pump—Not adjustable. Fuel Pump Pressure: 3½ lbs. maximum.

MANIFOLD HEAT CONTROL:—Thermostatic coil type. To check, unhook coil from pin (valve in closed position, counterweight up). Hooked end of coil should be ¼ revolution away from pin (replace coil if not within this limit). Car manufacturer recommends application (every 1000 miles) of kerosene and baking soda solution on shaft at coil to insure free operation of valve shaft.

Valve Noise Note—Manifold heater valve (No. 196657) has been changed to prevent rattle or noise by tapering lower (curved portion) of valve where it contacts manifold. Edge has been cut back ⅛" at one edge and tapers out to within ¼" from opposite edge of valve (leaving ¼" straight portion with remainder of edge tapered). If noise develops on early cars, valves should be tapered as above to remedy this condition.

VALVES: See Valve Timing.

Tappet Clearance—.016" for all valves, Cold.

STARTING: See Battery, Starter, Generator, Regulator.

IGNITION

Ignition Switch:—Mitchellock Model 24-R. No. 8271. Ignition Lock—Yale & Towne. Mitchell No. 6966.

COIL: Auto-Lite Model CE-4642. Service coil (less switch & cable) CE-3224US. Mounted on dash.

Ignition Current—½-1½ amps. idling, 4-5 stopped.

CONDENSER: Auto-Lite Part No. IGB-1025. Capacity—.20-.25 microfarad.

DISTRIBUTOR: Auto-Lite Model IGW-4131 or IGW-4144 (with Special Tachometer Drive). Single breaker, 6 lobe cam, full automatic advance type with auxiliary vacuum spark control and Octane Selector.

Breaker Gap—Set at .020".

Cam Angle or Dwell—35° closed, 25° open (distr.).

Breaker Arm Spring Tension—17-20 ounces.

Rotation—Counter-clockwise viewed from the top.

Automatic Advance

Distributor Degrees	Distributor R.P.M.	Engine Degrees	Engine R.P.M.
Start	400	0	800
2	680	4	1360
4	975	8	1950
6	1265	12	2530
7	1400	14	2800

Vacuum Spark Control A-L N . VC-4009 or VC-4011. on hold-down plate and linked to advance plate. Provides additional advance at speeds above idling except when engine accelerated or operated with wide open throttle (spark retarded by return spring in unit).

Vacuum Advance

Distr. Degrees	Eng. Degrees	Vacuum (" of HG)
Start	0°	4"
2°	4°	5½"
5°	10°	7¾"
7°	14°	11¼"
9°	18°	14¾"

Octane Selector—Provides manual adjustment at distributor (hold-down plate marked with scale) for variation in timing depending on fuel regularly used. See Ignition Timing following for adjustment.

Distributor Removal:—Mounted on left side of engine. To remove, disconnect vacuum line, take out screw in hold-down plate and lift distributor off.

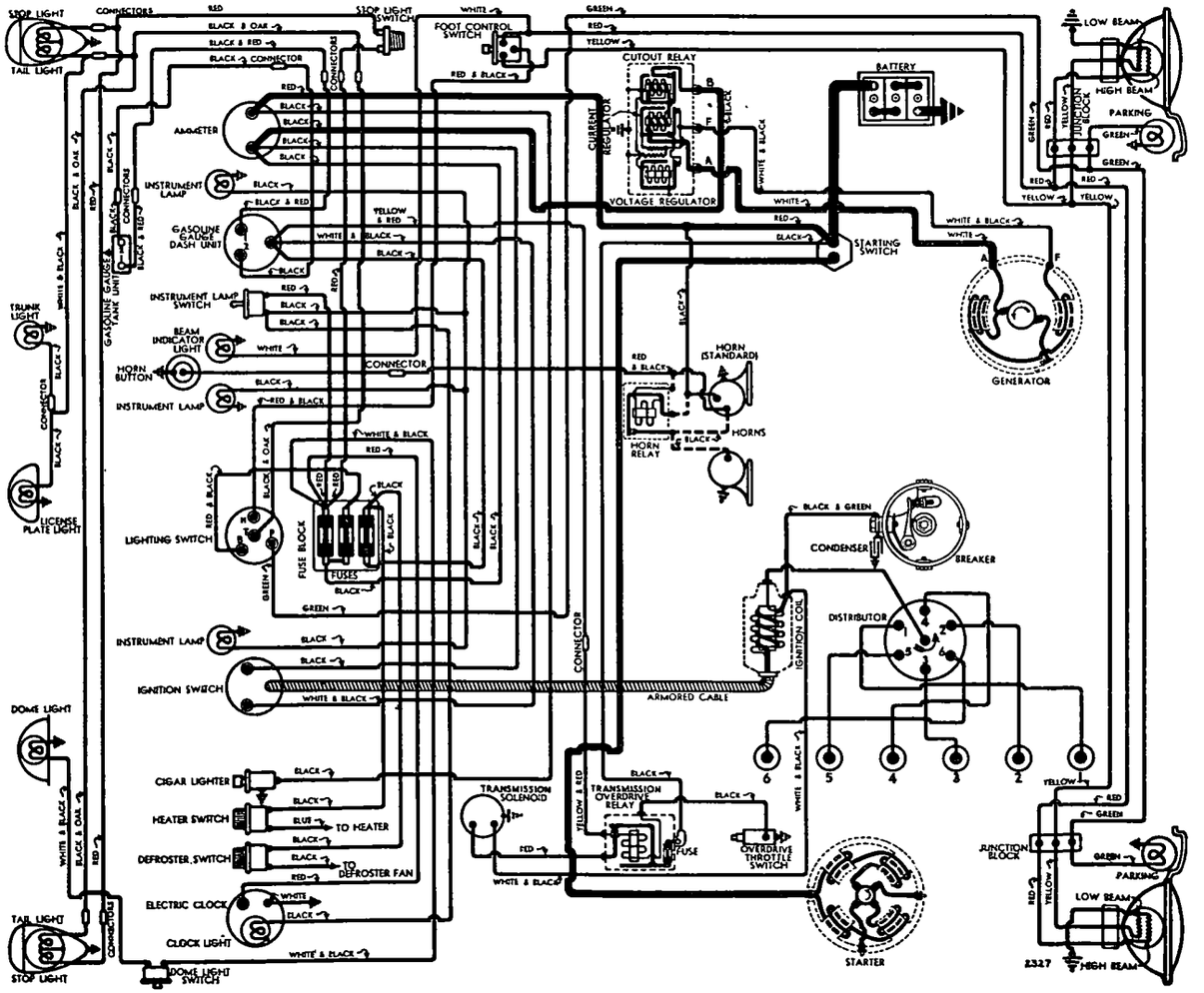

NOTE—When installing distributor, insert .016" feeler between hold-down plate and advance plate while tightening advance plate clamp bolt to prevent binding and allow free advance plate motion.

IGNITION TIMING

IGNITION TIMING:—Standard setting as follows (see Octane Selector Setting following for correction dependent on fuel regularly used):

Flywheel Degrees	Piston Position
2° BTDC	.0015" BTDC

To Set Timing—Crank engine by engaging gears and rolling car on floor. With #1 piston on compression, turn engine over until 'IGN' mark (approx. 13/64" ahead of U.D.C.1-6 mark) on flywheel is in line with pointer on engine rear plate on left side of car. Loosen hold-down plate screw and center scale on pointer, tighten screw. Loosen advance arm clamp bolt, rotate distributor until contacts begin to open, insert .016" feeler between advance arm and hold-down plate (to insure clearance for free advance arm movement), tighten clamp bolt, remove feeler gauge. Check Octane Selector Setting (following).

NOTE—Car manufacturer recommends use of Neon Timing Light for setting ignition timing.

Octane Selector Setting—After setting ignition timing, loosen selector (hold-down plate) screw and advance (move selector so that pointer toward 'A' end of scale) until motor 'pings' when it is hot and pulling hard. Then retard (move selector with pointer toward 'R' end of scale) until 'ping' just disappears.

See Studebaker Shop Notes in 'M' Section for Front Fender Apron Baffle Installation to correct Ignition missing or cutting out due to water splashing up from road.

CARBURETOR

CARBURETION:—**Carburetor**—Carter Type WO Model 468-S (#229 cast on flange). 1¼" single barrel, downdraft type.

For complete data, refer to Carburetor Index.

Idle Adjustment—With engine warm and running at slow idle speed (choke valve wide open, fast idle inoperative), set throttle stopscrew for 8 MPH or 600 RPM idle speed. Adjust idle adjusting screw until engine fires smoothly (¾-1¼ turns open—turn screw in for leaner mixture). Readjust idle speed.

Accelerating Pump—Non-adjustable type.

Float Level—¼" from top of float (free end) to gasket seat on cover. Invert to check with float hanging freely and spring in valve stem not compressed.

Fast Idle Setting—Choke connector link opens throttle .018-.022" with choke valve closed. Adjust by bending offset on connector link.

CARB. EQUIPMENT

Air Cleaner:—AC #1529210 oil-wetted type std. Heavy duty oil-bath type optional. Oil filler cap equipped with copper mesh cleaner.

Fuel Pump:—AC Type W # 1523957 diaphragm type. ***For complete data, refer to Carburetion Equip. Index.***

Gasoline Gauge:—Auto-Lite electric type. No. NG-9211D (dash unit), No. NG-9197T (tank unit). ***For complete data, refer to Carburetion Equip. Index.***

BATTERY

Willard, Type SW-1-90. 6 volt, 13 plate, 90 ampere hour capacity (20 hour rate).

Starting Capacity—114 amperes for 20 minutes.

Zero Capacity—300 amperes for 3.0 minutes. Five second voltage—4.1 volts.

Grounded Terminal—Positive (+) grounded to dash.

Engine Ground—Strap connector at right front mounting bolt.

Dimensions—Length & Height 9". Width 7".

Location—In carrier on left front side of dash in engine compartment.

STARTER

Auto-Lite Model MZ-4074. Armature No. MZ-2130.

Drive—Barrel type Bendix No. A-2033 (similar in design to Ford '60' type A-1806).

IMPORTANT—A-2033 drive marked 'D' on pinion barrel. Must not be interchanged with Ford type due to difference in structure of pinion teeth.

Rotation—Counter-clockwise at commutator end.

Brush Spring Tension—42-53 ozs. (new brushes).

Cranking Engine—160 amperes, 5.2 volts, 130 RPM.

Performance Data

Torque	R.P.M.	Volts	Amperes
0 ft. lbs	4300	5.5	70
.65 " "	2500	5.5	100
2.55 " "	1325	5.0	200
4.95 " "	750	4.5	300
7.65 " "	220	4.0	400
7.8 " "	Lock	3.0	420
11.8 " "	Lock	4.0	560

Removal:—Starter flange mounted on right rear engine plate. To remove take out mounting bolts and lift starter off.

Starting Switch:—A-L Model SW-4011. Mounted on left side of car below clutch pedal. Operated by depressing clutch pedal fully.

GENERATOR

Auto-Lite Model GEA-4804-A (Stand.), GEB-4803-A (Police). Two brush type. Current-voltage control. Armature—GDZ-2006F (GEA Gen.), GEB-2006F (GEB).

Charging Rate Adjustment—No adjustment at generator. Charging rate controlled by Voltage Regulator and maximum output by Current Regulator. ***See Regulator data following.***

Maximum Charging Rate—35 amperes (GEA), 32 amperes (GEB), 8.0 volts, 1800 RPM (GEA), 1400 RPM (GEB) or approximately 18.3 MPH and above with load or discharged battery (Current Regulator Setting). Actual charging rate controlled by Voltage Regulator and dependent on battery condition.

Performance Data—GEA-4804A

Cold			Hot		
Amperes	Volts	R.P.M.	Amperes	Volts	R.P.M.
0	6.4	780	0	6.4	840
4	6.6	870	4	6.6	935
8	6.8	960	8	6.8	1025
12	6.95	1050	12	6.95	1120
16	7.15	1140	16	7.15	1220
20	7.3	1230	20	7.3	1320
24	7.6	1320	24	7.6	1420
28	7.7	1410	28	7.7	1550
32	7.85	1500	32	7.85	1685
35	8.0	1570	35	8.0	1800

Performance Data—GEB-4803A

Cold			Hot		
Amperes	Volts	R.P.M.	Amperes	Volts	R.P.M.
0	6.4	560	0	6.4	600
4	6.6	630	4	6.6	675
8	6.8	700	8	6.8	750
12	7.0	775	12	7.0	840
16	7.2	845	16	7.2	930
20	7.4	920	20	7.4	1030
24	7.6	1000	24	7.6	1140
28	7.8	1075	28	7.8	1260
*32	8.0	1150	32	8.0	1400

*—Current regulator setting.

Rotation—Counter-clockwise at commutator end.

Brush Spring Tension—53 ozs. Max. (GEA Gen.), 64-68 ozs. (GEB Gen.) with new brushes.

Field Current—1.57-1.75 amperes (GEA Gen.), 1.6-1.78 amperes (GEB Gen.) at 6.0 volts.

Motoring Current—4.45-4.9 amperes (GEA Gen.), 4.0-4.5 amperes (GEB Gen.) at 6.0 volts.

Removal:—Pivot mounted at left front of engine. To remove, take out clamp and pivot bolts.

Belt Adjustment:—Loosen pivot and clamp bolts, move generator out away from engine until fan can just be rotated with belt held stationary.

REGULATOR

Auto-Lite Model VRP-4004-A (for GEA Gen.), VRP-4004C (GEB Gen.). Current-voltage type. In case on dash.

For complete data, refer to Electrical Equipment Index.

NOTE—Regulator case cover is sealed. Serviced on exchange basis if seals not broken.

Cutout Relay

Cuts In—6.4-6.6 volts, 850 Gen. RPM., 8.6 MPH.

Cuts Out—4.1-4.8 volts (approx. 4-6 amps. disch.).

Contact Gap—.015" minimum.

Air Gap—.031" min., .034" max. with contacts open. Measure at hinge end of core.

Voltage Regulator

Setting—7.2-7.5 volts at 70° F.

To Check (without breaking seals)—Connect ammeter in charging line at regulator 'B' terminal, voltmeter between 'B' terminal and ground. Operate generator at speed equivalent to 30 MPH, charging battery until voltage is steady. Voltage reading should be 7.2-7.5 volts at 70° F. See Electrical Equipment Section for voltages at other temperatures.

To Adjust (with cover removed)—Change regulator armature spring tension by bending lower spring hanger slightly. See Electrical Equipment Section.

Contact Gap—.012" Min. (armature against stop pin).

Air Gap—.048-.052" with contacts just opening.

Current Regulator

Setting (VRP-4004A)—34-36 amperes (marked '35' on cover). **(VRP-4004C)**—31-33 amperes (marked '32' on cover).

To Check (without breaking seals)—Connect test meters as for Voltage Check (above). Operate generator at 30 MPH, charging battery, add load (use bank of headlamp bulbs or turn on car lights and accessories and discharge battery) so that generator charges at peak rate and Current Regulator operates. Charging current should not exceed maximum setting given above. If more than slight excess noted, regulator is defective.

Adjustment & Contact Gap—Same as for Voltage Regulator (above).

C NTINUED N NEXT PAGE

CONTINUED FR M PRECEDING PAGE

Air Gap—.034-.038" (before No. 5U-000001), .048-.052" (after above No.) with contacts just opening.

LIGHTING

LIGHTING:—Headlamps—Own 'Sealed Beam' type.
For complete data, refer to Electrical Equipment Index.

Headlamp Adjustment—Aim upper beam for each lamp straight ahead with center of hot spot 3" below lamp center height.

Beam Indicator—Red light on speedometer face. Lighted whenever Country (upper) beam in use.

Switches

Lighting—Douglas Model 5724.

Beam Selector—Delco-Remy 1997002.

Instrument—Douglas Model 5645.

Bulb Specifications

Position	Candlepower	Mazda No.
Headlamps		Sealed Beam
Parking, Instr., Trunk	1½	55
Beam Indicator	1	51
Stop & Tail	21-3	1158
Rear License	3	63
Dome	15	87

MISC. ELECTRICAL

FUSES:—Lighting—Three 20 ampere. On fuse block on back of instrument panel at center. Protects circuits as follows: **Top**—Clock, Dome, Stop, Instrument lamps. **Center**—Head and Tail lamps. **Lower**—Accessories.

Transmission Overdrive Control—14 amp. On relay.

HORNS:—Single—Delco-Remy 1999805 standard.

Dual—Delco-Remy 1999511 (low note), 1999512 (high note) electric, air tone horns operated by relay.

Type	(Current at 6 volts)	Air Gap
1999805	7-9 amperes	.027-.033"
1999511 (low note)	19-21 amperes	.044-.049"
1999512 (high note)	18-20 amperes	.034-.039"

Horn Relay:—Delco-Remy Model 1116792.

Contact Gap—.020". **Air Gap**—.015" (closed).

Contacts Close—2.75-4.0 volts.

ENGINE

ENGINE SPECIFICATIONS:—6 cylinder, 'L' head type.

Bore—3". **Stroke**—3 7/8".

Displacement—164.3 cu. ins. **Rated HP**—21.6.

Developed Horsepower—78 at 4000 RPM.

Compression Ratio—6.5-1 Std. cast-iron head.

Compression Pressure—105 lbs. at 150 RPM.

See Studebaker Shop Notes for Cyl. Head Installation.

Vacuum Reading—Steady 17-18" idling at 8 MPH.

PISTONS:—Aluminum alloy, T-slot, cam ground, tin plated. **Length**—2⅝". **Weight**—.51 lb.
Removal—Pistons and rods removed from above.
Clearance—.0005" new. See Fitting New Pistons.

Original Bore & Piston Sizes, Replacement Pistons:—*See Studebaker Shop Notes for sizes and markings.*

Fitting New Pistons:—Insert .002" x 1" feeler between piston and wall on camshaft side (pin parallel to crankshaft, T-slot away from camshaft). Pull to withdraw feeler 16-22 lbs.

NOTE—Car manufacturer recommends cylinders out-of-round or taper over .002" be reconditioned.

Installing Pistons:—T-slot away from camshaft.

PISTON RINGS:—3 coated rings, all above pin. #1 Comp. '200' (step up). #2 Comp. '70' (step down). #3 Oil '85' (slotted). Heat dam above #1 groove.

Ring	Width	End Gap	Side Clearance
Comp. (Top)	3/32"	.007-.017"	.0015-.002"
Comp. (#2)	⅛"	.007-.017"	.0015-.002"
Oil Control	5/32"	.007-.017"	.0015-.002"

Replacement Rings:—Std. & .010", .020", .030" oversize.

PISTON PIN:—**Diameter** .7491-.7495". **Length**—2⅝". Pin locked in rod by tapered pin and locknut.
See Studebaker Shop Notes for Pin Servicing data.
Pin Fit in Piston—.0001-.0003" clearance or light finger-push fit at room temperature (70°).

Replacement Pins:—Std. & .0025", .005" oversize. Use Hone No. PH-1 to obtain proper piston fit.
NOTE—Replacement pistons fitted with pins.

CONNECTING ROD: Length—6 7/16". **Weight**—1.28 lbs.
Crankpin Journal Diameter—1.81175-1.81275".
Lower Bearing—Spun babbitt (cap bearings chamfered on upper edge). New rods furnished on exchange basis standard and .010", .020" undersize.
Clearance—.0005-.002". **Sideplay**—.005-.009".
NOTE—Use reamer HM-591-F to secure correct bearing clearance. Crankpin out-of-round, tapered or scored .0015" max. (use Tool No. 1C for reconditioning crankpins).

Bearing Adjustment:—None. Replace rods.
See Studebaker Shop Notes for 'Palnut' installation.

Installing Rods:—Narrow portion of bearing to front (#1, 3, 5), to rear (#2, 4, 6). Numbers on rods and caps must be together and installed in same numbered cylinder with numbers and oil hole in lower end of rod toward camshaft side of engine.

CRANKSHAFT:—4 bearing, integral counterweights.
Oil Leaks at Fan Drive Pulley, see Studebaker Shop Notes for installation of new type washers.
Journal Diameter—2.437-2.4375".
Bearings—Removable steel-backed, babbitt-lined.
Clearance—.0005-.0025".

Adjustment:—None (no shims). Replace bearings (std. size, .010", .020", .030" undersize).

NOTE—Front oil pan seal block may be removed for access to front main bearing cap by removing 4 lower timing gear cover screws (on front face).

End Thrust:—Thrust plate assembled between front bearing and crankshaft gear. Controlled by shims (furnished .003", .005", .007" thick) between plate and journal face. **Endplay**—.003-.006".

NOTE—Install new seals (specially treated wood) whenever rear main bearing cap replaced

CAMSHAFT:—Four bearing with helical gear drive.
See Studebaker Shop Notes for Camshaft Removal.
Journal Diameters—#1, 1.7475-1.7480"; #2, 1.71625-1.71700"; #3, 1.68575-1.68650"; #4, 1.62325-1.62400".

Bearings—Split steel-backed, babbitted bushings.

NOTE—Align bushing with oil hole in block.

Clearance—.00075-.00225" (#1), .001-.00275" (others).

End Thrust:—Taken by thrust plate assembled on front face of engine behind camshaft gear. Spacer assembled back of gear hub. **Endplay**—.004-.008"

Timing Gears:—Crankshaft (cast-iron), Camshaft (Celeron with steel hub). **Backlash** .001-.003".
See Studebaker Shop Notes for Gear Removal and Replacement Gear size selection.

Camshaft Setting:—Mesh marked camshaft gear tooth between two marked teeth on crankshaft gear.

VALVES:—

	Head Diameter	Stem Diameter	Length
Intake	1 11/32"	.310-.311"	4 11/32"
Exhaust	1 9/32"	.310-.311"	4 11/32"

	Seat Angle	Lift	Stem Clearance
All Valves	45°	5/16"	.001-.0035"

Valve Guides:—Pressed in block from above 1 3/16" below top of block. Finish ream to .312-.3135".

Valve Springs:—Install with closed coil up. Replace if springs over 10% weak (test with Tool U-15).

Free length 2 3/32".	Spring Pressure	Length
Valve Closed	49-53 lbs.	1 21/32"
Valve Open	90-94 lbs.	1 11/32"

Valve Lifters:—Mushroom type (remove from below). **Diameter**—.62375-.62425". **Clearance** .0005-.00175". Lifters furnished .0005", .001" oversize.

VALVE TIMING

Tappet Clearance:—.016" (cold) all valves. Self-locking tappet screw tension should be 25 in. lbs. Remove hood side panel for access to valves.

Valve Timing:—See Camshaft Setting above.

Intake Valves—Open 15° BTDC. Close 49° ALDC.

Exhaust Valves—Open 54° BLDC. Close 10° ATDC.

Valve Timing Check—With .020" tappet clearance #1 intake valve should open with #1 piston 15° or .0835" BTDC with flywheel mark 'IN.OP.1-6/' aligned with pointer on left rear engine plate. Reset tappet clearance at .016" (cold).

LUBRICATION

LUBRICATION:—Pressure (pump on right of engine).
See Studebaker Shop Notes for Oil Pan and Oil Pump installation instructions.

Normal Oil Pressure: 40 lbs. at 40-60 MPH.

Oil Pressure Relief Valve:—On lower right front corner of engine block. Opens at 30-40 lbs. Not adj.

Crankcase Capacity:—5 quarts.

COOLING

COOLING SYSTEM: Capacity—10½ quarts.

Water Pump:—Packless, sealed ball-bearing type.
See Water Pump Section for complete data.
Removal—Drain water, remove fan belt, fan blades and pulley, pump hose, 3 pump mounting screws

Thermostat:—Bishop & Babcock. In cyl. head outlet.
Setting—Starts to open 156°F. to 160°F.
Temperature Gauge—Auto-Lite (Motometer) Vapor tension type. No. H-9210.
See Miscellaneous Section for complete data.

Drain Valves:—At radiator lower tank and plug on left side of cylinder block at rear. If heater used, disconnect hose at cylinder head and hold hose below level of heater.

CLUTCH

CLUTCH:—Borg & Beck Model 8A7 with 'Borglite' driven member. Clutch assembly No. 925 stamped on cover. Single plate, dry disc type.
See Clutch Section for complete data.

Facings—Molded-metallic (spiral-grooved), 2 used. Inside Diam. 5⅜". Outside Diam. 8". Thickness ⅛".

Adjustment:—Free travel 1" (min.). Turn adjusting sleeve on pedal connector link.

Hill-Holder (NoRol) Note—Check whenever clutch pedal adjusted. Set so that Hill-Holder releases just as clutch engages (change rod length).

For Release Shaft Lubrication and New Type Shaft Bushings to Correct Sticking, see Studebaker Shop Notes.

Removal:—Remove transmission (see below), take off clutch housing, take out 6 mounting screws in clutch cover flange, lift off cover assembly.

TRANSMISSION

TRANSMISSION: Warner. Model Number AS5-T84F. Helical gear type with synchro-mesh (second & high), sliding spur gear (low & reverse).

See Transmission Section for complete data.

IMPORTANT—Correction for Shifting into Two Gears at Once (installation of Special Interlock), see Special Service Note in Transmission article in Transmission Section.

Transmission Control:—Mechanical steering col. shift.

See Transmission Section for complete data.

Removal:—Disconnect the rear universal and withdraw propeller shaft from transmission. Disconnect shift levers and speedometer cable at transmission. Place jack under engine rear plate and free rear engine support. Remove transmission-to-clutch housing capscrews, pull transmission out.

OVERDRIVE

OVERDRIVE: Warner R7A (Kick-down) Electric type. Complete assembly (with transmission) Warner Model No. AS6-T84F.

See Transmission Section for complete data.

Overdrive Solenoid—Delco-Remy Model 1118001.

Throttle Switch—Cole-Hersee No. 1687-S. Adjust so that shoe on accelerator linkage just contacts switch plunger with carburetor throttle in wide open position.

Control Relay—Auto-Lite HR-4201S. 14 ampere fuse mounted in holder on relay.

Removal: Same as for regular transmission after disconnecting overdrive control cable and solenoid wires except that front universal must also be disconnected for removal of driveshaft.

UNIVERSALS

UNIVERSAL JOINTS: Spicer: Model 1268-102 (both universals, cars with standard transmission, rear joint on cars with Overdrive), 1268-101 (front, cars with Overdrive). NOTE—Cars without Overdrive equipped with one piece propeller shaft with slip joint formed in rear of transmission ahead of front universal joint.

See Universals Section for complete data.

REAR AXLE

REAR AXLE:—Spicer Model 23. Semi-floating, Hypoid gear type with Hotchkiss drive.

See Rear Axle Section for complete data.

Ratio—4.56-1 standard. 4.10-1 optional.

Backlash—.005-.007". Shim adjustment.

Removal:—Hoist rear of car, disconnect propeller shaft at rear universal, hydraulic brake lines, brake cables, and shock absorbers. Remove spring U-bolts, disconnect rear spring shackles and withdraw axle.

NOTE—Use Puller HM-931 to remove axle shaft, Handle J-270-1 and disc J-270-13 to install inner shaft oil seal.

Wheel Bearing Adjustment:—Shims between backing plate and axle housing. With wheel and hub removed (use Hub Puller J-446) check endplay with dial indicator. To adjust, remove backing plate, add or remove shims (.003", .005", .010", .030" thick).

Endplay—.001-.005".

SHOCK ABSORBERS

SHOCK ABSORBERS: Houdaille. Model BBFSS (front), BBDS (rear). Double acting, hydraulic.

See Shock Absorber Section for complete data.

FRONT SUSPENSION

Front Suspension:—Planar type independent suspension with transverse spring. Specifications below apply with car weight on wheels but without load.

See Front Suspension Section for complete data.

Kingpin Inclination—5½°.

Caster—1° to 2°.

Camber—¼° to ¾°. Shim adjustment.

Toe In—1/16-⅛". Adjust right reach rod only for toe-in. Left rod should be adjusted first for left wheel straight-ahead position (steering wheel centered).

Steering Geometry (toe-out on turns)—Inner wheel turned 22½-23°. Outer wheel turned 20°.

STEERING GEAR

Steering Gear: Ross T-12 Cam-&-Twin Lever type.

See Steering Gear Section for complete data.

BRAKES

BRAKES:—Service. Lockheed hydraulic, single anchor type. Hand lever applies rear service brakes.

See Brake Section for complete data.

Drum—Budd composite. Diameter 9".

Lining—Moulded. Length per shoe 10 3/16". (front), 7 13/16" (rear). Width 1¾". Thickness 3/16".

Clearance—.010" toe (top), .005" heel, for each shoe.

Braking Power—43% rear wheels, 57% front.

Hand Brake:—See Service Brakes (above).

Hill-Holder: Optional on all models.

See Brake Section for complete data.

HOOD LOCK:—*See Studebaker Shop Notes for data.*

MODEL IDENTIFICATION

SERIAL NUMBER:—First number 4148501 (South Bend), 4807601 (Los Angeles). Stamped on left hand body front hinge pillar.

ENGINE NUMBER:—First number H-87601. Stamped on boss on upper left front corner of cylinder block.

TUNE-UP

COMPRESSION:—**Ratio**—6.0-1 standard cast-iron hd., 7.0-1 optl. high-altitude aluminum head.

Pressure—105 lbs. (6.0-1 head), 110 lbs. (7.0-1 head) at 150 RPM cranking speed.

VACUUM READING:—18-20" at 450 RPM or 8 MPH.

FIRING ORDER: 1-5-3-6-2-4. See diagram.

SPARK PLUGS: Champion Type 8. 18 mm. Metric. Gaps—Set at .025".
NOTE—Champion No. 6 Com-62 recommended by car manufacturer for replacement use.

IGNITION: See Coil, Condenser, and Distributor.
Breaker Gap—.020". **Cam Angle**—35° Closed.
Automatic Advance—10° max. at 1400 RPM (distr.).
Vacuum Advance—6° distr. with 12" vacuum.

IGNITION TIMING: See Ignition Timing.
Std. Setting—2° BTDC. Vibration dampener mark 'IGN/' aligned with pointer on timing gear cover. Use .016" feeler between advance arm and hold-down plate when tightening distributor clamp bolt (avoids binding vacuum control).

CARBURETION: See Carburetor & Carb. Equipment.
Idle Setting—Set idle adjusting screw midway between 'miss' and 'roll' points (½-1¼ turns open for Carter). Idle speed 450 RPM or 8 MPH.
Float Level (Carter)—¼" from top of machined projection on float bowl cover to top of soldered seam at free end of float (invert to check).
Float Level (Stromberg)—Fuel level ⅝" below top edge of float bowl.
Accelerating Pump—Normal setting, center hole.
Fuel Pump Pressure: 3½ lbs. (maximum).

MANIFOLD HEAT CONTROL:—Thermostatic coil type. To check valve, unlatch thermostatic coil by freeing outer end from bracket on manifold, operate valve by hand and see that valve is free (shaft can be cleaned with emery if necessary). Make certain that coil is properly latched on bracket and that tension spring (from shaft to clip on manifold flange) is in place.

VALVES: See Valve Timing.
Tappet Clearance—.016" for all valves, Cold.

STARTING: See Battery, Starter, Generator, Regulator.

IGNITION

Ignition Switch:—Mitchellock Model 24-R, No. 8229.
Ignition Lock—Yale & Towne. Mitchell No. 8078.

COIL: Auto-Lite Model IG-4663. Service coil (less switch & cable) IG-3224JS. Mounted on dash.
Ignition Current—½-1½ amps. idling, 4-5 stopped.

CONDENSER: Auto-Lite Part No. IGB-1025.
Capacity—.20-.25 microfarad.

DISTRIBUTOR: Auto-Lite Model IGW-4101 or IGW-4111 (with Special Tachometer Drive). Single breaker, 6 lobe cam, full automatic advance type with auxiliary vacuum spark control.
Breaker Gap—Set at .020".
Cam Angle or Dwell—35° closed, 25° open (distr.).
Breaker Arm Spring Tension—17-20 ounces.
Rotation—Counter-clockwise viewed from the top.

Automatic Advance

Distributor Degrees	Distributor R.P.M.	Engine Degrees	Engine R.P.M.
Start	400	0	800
2	600	4	1200
5	900	10	1800
8	1200	16	2400
10	1400	20	2800

Vacuum Spark Control A-L No. VC-4004. Mounted on hold-down plate and linked to advance plate. Provides additional advance at speeds above idling except when engine accelerated or operated with wide open throttle (spark retarded by return spring in unit).

Vacuum Advance

Distr. Degrees	Eng. Degrees	Vacuum (" of HG)
Start	0°	3"
2°	4°	5"
3°	6°	6"
5°	10°	10"
6°	12°	12"

Octane Selector—Provides manual adjustment at distributor (hold-down plate marked with scale) for variation in timing depending on fuel regularly used. See Ignition Timing following for adjustment.

Distributor Removal:—Mounted on left side of engine. To remove, disconnect vacuum line, take out screw in hold-down plate and lift distributor off.

NOTE—When installing distributor, insert .016" feeler between hold-down plate and advance plate while tightening advance plate clamp bolt to prevent binding and allow free advance plate motion.

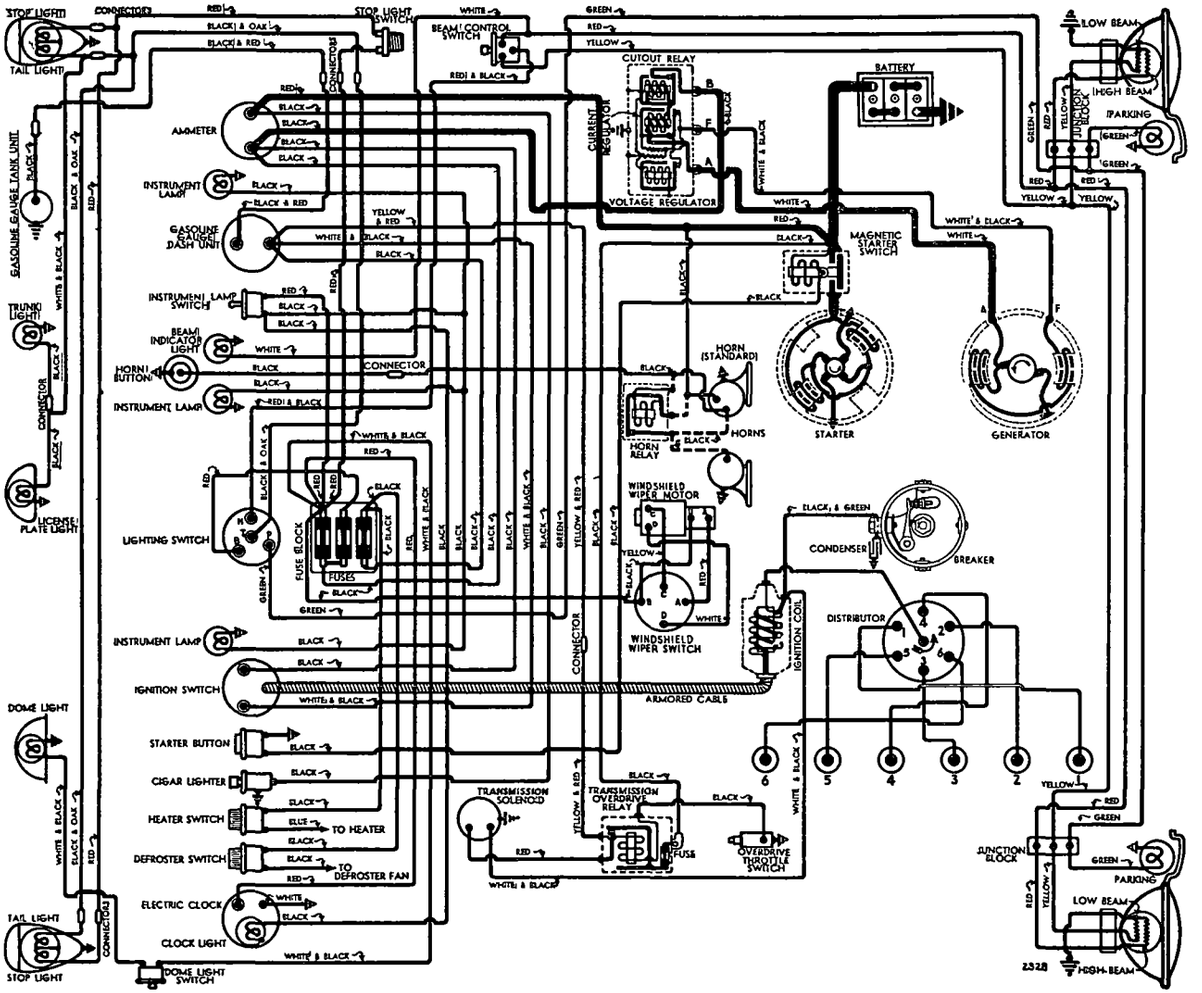

IGNITION TIMING

IGNITION TIMING:—For all engines as follows (see Octane Selector Setting following for correction dependent on fuel regularly used):

Flywheel Degrees	Piston Position
2° BTDC	.0016" BTDC.

To Set Timing—Crank engine by engaging gears and rolling car on floor. With #1 piston on compression, turn engine over until 'IGN/' mark on vibration dampener at front of engine lines up with pointer on timing gear cover (this mark is 2° or 9/64" before top dead center mark '/UDC.1-6'). Loosen hold-down plate screw and center scale on pointer, tighten screw. Loosen advance arm clamp bolt, rotate distributor until contacts begin to open, insert .016" feeler between advance arm and hold-down plate (to insure clearance for free advance arm movement), tighten clamp bolt, remove feeler gauge.

Octane Selector Setting—After setting ignition timing, loosen selector (hold-down plate) screw and advance (move selector so that pointer toward 'A' end of scale) until motor 'pings' when it is hot and pulling hard. Then retard (move selector with pointer toward 'R' end of scale) until 'ping' just disappears.

See Studebaker Shop Notes in 'M' Section for Front Fender Apron correction to correct ignition missing or cutting out due to water splashing up from road.

CARBURETOR

CARBURETION:—**Carburetor**—Carter Type WA-1 Model 410-S or Stromberg Model BXO-26 (code marked 6-84 on float chamber). 1¼" single barrel, downdraft types. ***See separate articles in Carburetor Section for data on each model.***

Idle Adjustment—With engine warm and running at slow idle speed (choke valve wide open, fast idle inoperative), set throttle stopscrew for 8 MPH idle speed. Adjust idle adjusting screw until engine fires smoothly (½-1¼ turns open for Carter—turn screw in for leaner mixture). Readjust idle speed.

Accelerating Pump Setting—3 holes provided in pump arm (Carter), throttle lever (Stromberg) for pump link engagement. Set as follows:

Inner Hole (min. stroke)—Extreme warm weather.

Center Hole (Stromberg) or Lower Hole (Carter)—Normal operating conditions.

Outer Hole (Stromberg) or Upper Hole (Carter)—Extreme cold weather.

Float Level (Carter)—¼" from top of machined projection on float bowl cover to top of soldered seam at free end of float (invert to check).

Float Level (Stromberg)—Fuel level ⅝" below top edge of float bowl.

Fast Idle (Carter):—Integral (built-in carburetor). ***For complete data, refer to Carburetion Equip. Index.***

Fast Idle Setting—Part of climatic control. Adjust by bending connector link offset to secure ⅝" choke valve opening with throttle stopscrew against (not on) first step of fast idle cam.

Fast Idle (Stromberg):—Stromberg BXO-26 carburetor type. ***See article in Carburetion Equipm't Section.***
Fast Idle Setting—With throttle stopscrew against second step of fast idle cam, choke valve should be 11/32" open. To adjust, bend choke lever.

Automatic Choke (Carter):—Carter Climatic Control. ***For complete data, refer to Carburetion Equip. Index.***
Setting—Set thermostatic coil housing 1 Notch Rich.

Automatic Choke (Stromberg):—Stromberg BXO-26 carburetor type. ***See article in Carburetion Equip. Sec.***
Setting—Mark 'R' on thermostatic spring case should line up with projection on housing (ordinary fuel). If setting too rich rotate case to 'M' mark (leaner setting). Use 'H' position only for very volatile fuels.

CARB. EQUIPMENT

Air Cleaner:—AC #1528630 oil-wetted type Std. Heavy duty oil-bath type optional. Oil filler cap equipped with copper mesh cleaner.

Fuel Pump:—AC Type W #1522227 diaphragm type. ***For complete data, refer to Carburetion Equip. Index.***

Gasoline Gauge:—Stewart (Stewart-Warner) Electric. Stewart-Warner No. G-102158.
For complete data, refer to Carburetion Equip. Index.

BATTERY

Willard Type SW-1-95. 6 volt, 15 plate, 95 ampere hour capacity (20 hour rate).

Starting Capacity—117 amperes for 20 minutes.

Zero Capacity—300 amperes for 3.1 minutes. Five second voltage 4.2 volts.
Grounded Terminal—Positive (+) grounded to frame. **Engine Ground**—Separate ground strap.
Dimensions—Length 9". Width 7". Height 8 13/16".
Location—In engine compartment on left side.

STARTER

Auto-Lite Model MAW-4015. Armature MAW-2091.
Drive—Outboard Barrel Type Bendix No. A-1729.

Rotation—Counter-clockwise at commutator end.

Brush Spring Tension—43-52 ozs. (new brushes).

Cranking Engine—130 RPM., approximately 175 amperes at 5.0-5.5 volts.

Performance Data

Torque	R.P.M.	Volts	Amperes
0 ft. lbs.	4900	5.5	65
.6 " "	3300	5.5	100
2.75 " "	1480	5.0	200
5.45 " "	820	4.5	300
8.5 " "	400	4.0	400
11.5 " "	Lock	3.0	505
18.0 " "	Lock	4.0	670

Removal:—Starter flange mounted on left front face of flywheel housing. To remove, take out two flange mounting screws, remove starter and switch as assembly.

Starting Switch:—R.B.M. Model 5607. Magnetic type. Mounted on starter and controlled by Douglas #5701 pushbutton switch on instrument panel.

GENERATOR

Auto-Lite Model GEA-4803-A. Armature No. GDZ-2006F. Two brush type with current-voltage control.

NOTE—If GDA-4804A Generator and VRB-4012A Regulator used, refer to the 1939 Commander 9-A car article (preceding) for complete data.

Charging Rate Adjustment—No adjustment at generator. Charging rate controlled by Voltage Regulator and maximum output by Current Regulator. ***See Regulator data following.***

Maximum Charging Rate—35 amperes (hot or cold), 8.0 volts, 1600 gen. RPM or 17 MPH and above with load or discharged battery (Current Regulator Setting). Actual charging rate controlled by Voltage Regulator and dependent on battery condition.

Performance Data

Cold			Hot		
Amperes	Volts	R.P.M.	Amperes	Volts	R.P.M.
0	6.4	780	0	6.4	840
4	6.6	870	4	6.6	935
8	6.8	960	8	6.8	1025
12	6.95	1050	12	6.95	1120
16	7.15	1140	16	7.15	1220
20	7.3	1230	20	7.3	1320
24	7.6	1320	24	7.6	1420
28	7.7	1410	28	7.7	1550
32	7.85	1500	32	7.85	1685
35	8.0	1570	35	8.0	1800

Rotation—Counter-clockwise at commutator end.

Brush Spring Tension—53 ozs. max. (new brushes).

Field Current—1.57-1.75 amperes at 6.0 volts.

Motoring Current—4.45-4.9 amperes at 6.0 volts.

Removal:—Pivot mounted at left front of engine. To remove, take out clamp and pivot bolts.

Belt Adjustment:—Loosen pivot and clamp bolts, move generator out away from engine until fan can just be rotated with belt held stationary.

REGULATOR

Auto-Lite Model No. VRP-4004-A. Current-Voltage type. In a single case mounted on engine dash.
For complete data, refer to Electrical Equipment Index.
NOTE—Regulator case cover is sealed. Serviced on exchange basis if seals not broken.

Cutout Relay

Cuts In—6.4-6.6 volts, 800 Gen. RPM., 6.1 MPH.

Cuts Out—4.1-4.8 volts (approx. 4-6 amps. disch.).

Contact Gap—.015" minimum.

Air Gap—.031" min., .034" max. with contacts open. Measure at hinge end of core.

Voltage Regulator

Setting—7.2-7.5 volts at 70° F.

To Check (without breaking seals)—Connect ammeter in charging line at regulator 'B' terminal, voltmeter between 'B' terminal and ground. Operate generator at speed equivalent to 30 MPH, charging battery until voltage is steady. Voltage reading should be 7.2-7.5 volts at 70° F. See Electrical Equipment Section for voltages at other temperatures.

To Adjust (with cover removed)—Change regulator armature spring tension by bending lower spring hanger slightly. See Electrical Equipment Section.

Contact Gap—.012" Min. (armature against stop pin).

Air Gap—.048-.052" with contacts just opening.

Current Regulator

Setting—34-36 amperes (marked '35' on cover).

To Check (without breaking seals)—Connect test meters as for Voltage Check (above). Operate generator at 30 MPH, charging battery, add load (use bank of headlamp bulbs or turn on car lights and accessories and discharge battery) so that generator charges at peak rate and Current Regulator

CONTINUED N NEXT PAGE

CONTINUED FROM PRECEDING PAGE

operates. Charging current should not exceed 34-36 amperes. If more than slight excess noted, regulator is defective.

Adjustment & Contact Gap—Same as for Voltage Regulator (above).

Air Gap—.034-.038" (before No. 5U-000001), .048-.052" (after above No.) with contacts just opening.

LIGHTING

LIGHTING:—**Headlamps**—Own 'Sealed Beam' type.

For complete data, refer to Electrical Equipment Index.

Headlamp Adjustment—Aim upper beam for each lamp straight ahead with center of hot spot 3" below lamp center height.

Beam Indicator—Red light on speedometer face. Lighted whenever Country (upper) beam in use.

Switches

Lighting—Douglas Model 5704.

Beam Selector—Delco-Remy 1997002.

Instrument—Douglas Model 7290.

Bulb Specifications

Position	Candlepower	Mazda No.
Headlamps		Sealed Beam
Parking, Instr., Trunk	1½	55
Beam Indicator	1	51
Stop & Tail	21-3	1158
Rear License	3	63
Dome	15	87

MISC. ELECTRICAL

FUSES:—**Lighting**—Three 20 ampere. On fuse block on back of instrument panel at center. Protects circuits as follows: **Top**—Clock, Dome, Stop, Instrument Lamps and Windshield Wiper. **Center**—Head and Tail lamps. **Lower**—Accessories.

Transmission Control—14 ampere. On relay.

Windshield Wiper—No separate fuse (protected by accessory fuse on fuse block).

HORNS:—**Single**—Delco-Remy No. 1999515 Standard.

Dual—Use Delco-Remy Package #1874459 (horn 1999512) to make matched set. Electric type, air tone horns operated by relay.

Type	Current (at 6 volts)	Air Gap
1999512 (low note)	19-21 amperes	.044-.049"
1999515 (high note)	18-20 amperes	.034-.039"

Horn Relay:—Delco-Remy Model 1116756.

Contact Gap—.020". **Air Gap**—.015" (closed).

Contacts Close—2.75-4.0 volts.

ENGINE

ENGINE SPECIFICATIONS:—**Model 10A.** 6 cylinder, 'L' head. **Bore**—3 5/16". **Stroke**—4⅜".

Displacement—226 cu. ins. **Rated HP**—26.35.

Developed Horsepower—90 HP (Std. head), 94 HP (Optl. high altitude head) at 3400 RPM.

Compression Ratio—6.0-1 Standard cast-iron head. 7.0-1 aluminum head Optl. (high altitude only).

Compression Pressure—105 lbs. @ 150 RPM (Std. head).

See Studebaker Shop Notes for Cyl. Head Installation.

Vacuum Reading—18-20" at 450 RPM or 8 MPH.

PISTONS:—Lynite, aluminum alloy, tin-plated, T-slot, cam ground type. **Length 3¾". Weight 14.4 ozs.** (stripped).

Removal—Pistons and rods removed from above.

Clearance—.0005" new. Measure ¼" up on skirt 90° from pin bosses. See Fitting New Pistons.

Original Bore Sizes:—***See Studebaker Shop Notes.***

Replacement Pistons:—Finished pistons (pins fitted) furnished standard and .002", .004", .010", .015", .020", .030" oversize. Exact size stamped on piston head.

Fitting New Pistons:—Insert .002" x 1" feeler between piston and wall on camshaft side (pin parallel to crankshaft, T-slot away from camshaft). Pull to withdraw feeler must be between 7-15 lbs.

Installing Pistons:—T-slot away from camshaft.

PISTON RINGS:—New sealed power type compression rings (2 used) with upper inner edge beveled, 1 oil control ring, all above pin. Narrow heat-dam groove (no ring fitted) above top ring. Oil ring groove drilled with oil drain holes. NOTE—New type ring used on 1939 Commander starting with Eng. #H-81539.

Ring	Width	End Gap	Side Clearance
Compression	3/32"	.013-.018"	.0015-.002"
Oil Control	3/16"	.013-.018"	.0015-.002"

NOTE—Install compr. rings with bevel edge up.

Replacement Rings:—Oversizes .010", .020", .030".

PISTON PIN:—**Diameter**—⅞". **Length**—2⅞".

Pin locked in connecting rod.

Pin Fit in Piston—Light push fit (rod should rock in piston of own weight. Clearance .0001-.0003".

NOTE—Replacement pistons have pins fitted.

CONNECTING ROD:—**Weight**—33.2 ozs. **Length**—8⅛".

Crankpin Journal Diameter—2.18675-2.18775".

Lower Bearing—Spun babbitt. Rods exchanged.

NOTE—Babbitt in caps chamfered on upper edge.

Clearance—.0005-.002". **Sideplay**—.005-.009".

Bearing Adjustment:—None. Replace rods. Rods furnished std. and .010", .020" undersize. Ream to give clearance of .0005-.002". ***See Studebaker Shop Notes for 'Palnut' installation instructions.***

Installing Rods:—Install rods with narrow half of bearing toward front in cylinders #1, 3, 5, toward rear in #2, 4, 6. Marks on rods and caps must be together and oil hole toward camshaft.

CRANKSHAFT:—4 bearing, 5 integral counterweights with vibration dampener mounted at forward end.

Journal Diameters—2.4995-2.500" all bearings.

Bearing Type—Removable steel-backed, babbitt-lined type. **Clearance**—.0005-.0025".

Bearing Adjustment:—None (no shims). Replace bearings. Furnished Std., .010", .020" undersize.

End Thrust:—Thrust plate assembled between front bearing and crankshaft gear. Controlled by shims between plate and bearing. **Endplay**—.003-.006".

CAMSHAFT:—Four bearing. Helical gear drive.

See Studebaker Shop Notes for Camshaft Removal.

Bearings—Steel-backed, babbitt-lined, split type bushings. When replacing bushings, oil holes in block and bushing must be in alignment.

Clearance—.00075-.00225" (#1), .002-.00375" (others).

End Thrust:—Steel thrust washer and spacer between gear hub and front bushing.

Timing Gears:—Crankshaft (cast-iron). Camshaft (Celeron fabric with steel hub). Two threaded holes in gears provided for puller for gear removal. ***See Studebaker Shop Notes for Gear Removal & Replacement Gear size selection.***

Camshaft Setting:—Mesh marked camshaft gear tooth with two marked teeth on crankshaft gear.

VALVES:—	Head Diameter	Stem Diameter	Length
Intake	1 15/32"	11/32"	5 7/32"
Exhaust	1 9/32"	11/32"	5 7/32"

	Seat Angle	Lift	Stem Clearance
All valves	45°	11/32"	.001-.003"

Valve Guides:—Pressed in block from above (1 5/32" below upper edge of valve seat) with stepped end down. Ream to inside diameter of .3425-.3445".

Valve Springs:—Install with closed coil at top. Damper on top of spring. Replace spring if 10% weak. ***See Studebaker Shop Notes for Valve Spring Installation instructions.***

	Spring Pressure	*Spring Length*
Valve Closed	54-60 lbs.	2 3/32"
Valve Open	125-135 lbs.	1¾"

Valve Lifters:—Barrel type (no separate guides). Can be removed from top. Furnished .0005", .001" ov'size.

VALVE TIMING

Tappet Clearance:—.016" all valves (cold). Remove right hood side panel for work on valves. ***See Studebaker Shop Notes for Hood Side Panel Removal.***

Valve Timing:—See Camshaft Setting above.

Intake Valves—Open 15° BTDC. Close 49° ALDC.

Exhaust Valves—Open 54° BLDC. Close 10° ATDC.

Valve Timing Check—Set tappet clearance #1 intake valve at .020". This valve should open with piston 15° or .0942" before top dead center when mark 'IN-OP.1-6/' on vibration damper at front of engine lines up with pointer on gear case cover at front of engine. Reset tappet clearance at .016" (cold).

LUBRICATION

LUBRICATION:—Pressure system with oil pump mounted on right side of engine. ***See Studebaker Shop Notes for Oil Pump installation instructions.***

Normal Oil Pressure:—40 lbs. at 25-30 MPH.

Oil Pressure Regulator:—Located on right front corner of engine. Operates at 40 lbs. Non-adjustable.

Crankcase Capacity:—6 quarts.

COOLING

COOLING SYSTEM:—**Capacity**—14½ quarts.

Water Pump:—Centrifugal with adjustable packing.

See Water Pump Section for complete data.

Removal—Drain water, remove fan belt, disconnect pump inlet hose, take out pump mounting bolts, lift fan and pump assembly out.

Thermostat:—Bishop & Babcock or Fulton. In Cylinder head water outlet. Install with bellows down.

Setting—Starts to open at 156-160°F.

Temperature Gauge—Stewart (Stewart-Warner). No. G-102072.

CLUTCH

CLUTCH:—**Borg & Beck Model 9A7 with 'Borglite' driven member.** Model #943 stamped on cover. Single plate, dry disc type.

See Clutch Section for complete data.

Facings—Spiral wound molded woven, 2 used. Inside Diam. 6". Outside Diam. 9¼". Thickness ⅛".

Pedal Adjustment:—Free travel 1". min. (sleeve on pedal connecting rod, turn out for greater travel, in for less). Check Hill-Holder after clutch adjustment.
See Studebaker Shop Notes for Clutch Cross-shaft Oiler installation instructions.

Removal:—Disconnect clutch linkage, remove transmission (see Transmission Removal following), support engine at rear, remove rear engine mountings and clutch housing. Take out mounting screws in clutch cover flange (turn screws out evenly) and remove clutch.

TRANSMISSION

TRANSMISSION: Warner—Model AS1-T86C (standard) All helical gear type (synchro-mesh second & high).
See Transmission Section for complete data.

Transmission Control:—New type remote shift.
See Transmission Section for complete data.

Removal:—Disconnect shift rods from levers and speedometer cable at transmission, take out U-bolts in front universal and lower propeller shaft. Remove transmission mounting screws at clutch housing, pull transmission back and lift out.

OVERDRIVE

OVERDRIVE: Warner R7 (Kick-down) Electric type. Complete assembly (with transmission) Warner Model No. AS2-T86C.

See Transmission Section for complete data.

Overdrive Solenoid—Delco-Remy Model 1118001.

Throttle Switch—Cole-Hersee No. 1687-S. Adjust so that shoe on accelerator linkage just contacts switch plunger with carburetor throttle in wide open position.

Control Relay—Auto-Lite HR-4201S. 14 ampere fuse mounted in holder on relay.

Removal: Same as for regular transmission after disconnecting Overdrive cable and solenoid wires, and removing Overdrive Rear Support. *See Overdrive Transmission Rear Support Installation data in Studebaker Shop Notes.*

UNIVERSALS

UNIVERSAL JOINTS:—Spicer—1271-101 (front), 1278-101 (rear). Needle bearing type. 2 used.
See Universals Section for complete data.

REAR AXLE

REAR AXLE:—Spicer Model 41-2. Semi-floating, hypoid gear type with Hotchkiss drive.
See Rear Axle Section for complete data.

Ratio—4.55-1 Std., 4.82-1 Optl.

Backlash—.005-.007". Shim adjustment.

Removal:—Hoist rear of car, disconnect propeller shaft at rear universal, brake line, and shock absorbers, remove spring U-bolts, disconnect rear spring shackles, withdraw axle assembly from car.

Wheel Bearing Adjustment—Shims provided between flanged end of axle housing and brake backing plate. To adjust, remove wheel, hub, drum, and backing plate (retained by 6 nuts). Remove shims to decrease endplay, add shims to increase. Shim thickness at both wheels must be equal within .005".

Endplay—.001-.005". Measure with dial indicator.

SHOCK ABSORBERS

SHOCK ABSORBERS:—Houdaille, Type BBFS (front), ACHS (rear). Double acting, hydraulic, adjustable type with thermostatic control (rear only).
See Shock Absorber Section for complete data.

FRONT SUSPENSION

Front Suspension:—Planar type independent suspension with transverse spring. Specifications below apply with car unloaded on level floor.
See Front Suspension Section for complete data.
Kingpin Inclination—5½°.
Caster—Negative ¼° to Positive ¾°. Not adjustable.
Camber—¼° to ¾°. Adjustable.
Toe In—1/16-⅛". Adjust right reach rod for toe-in.
Steering Geometry (Toe-out on Turns)—Inner wheel turned 22°, Outer wheel 20°.

STEERING GEAR

Steering Gear: Ross T-14 Cam-&-Twin Lever type.
See Steering Gear Section for complete data.

BRAKES

BRAKES:—Service—Lockheed hydraulic, double anchor type. Hand lever applies rear wheel brakes.
See Brake Section for complete data.
CAUTION—*See Front Fender Apron Note in Studebaker Shop Notes to correct apron interference with brake tubes on early cars.*
Wheel Cylinders—Stepped or two-stage bore type: Front Wheels—Front shoe cylinder 1⅜", Rear 1". Rear Wheels—Front shoe cylinder 1¼". Rear 1". NOTE—Wheel cylinder bore size marked on casting.
Drum—Budd composite. Diameter 11".
Lining—Front shoe—woven. Rear—moulded. Width 2". Thickness 3/16". Length per wheel 19 11/16".
Clearance—.010" toe, .005" heel, for each shoe.
Hand Brake Adjustment:—See Service Brakes
Hill-Holder: Optional on all models.
See Brake Section for complete data.

MISC. MECHANICAL

WINDSHIELD WIPER:—Auto-Lite Model EWB-4002. Electric type. NOTE—No separate fuse used.
See Miscellaneous Section for complete data.

HOOD LOCK:—*See Studebaker Shop Notes for data.*

MODEL IDENTIFICATION

SERIAL NUMBER:—On left front body hinge post. First No. 7133101 (South Bend), 7803301 (L.A.).

ENGINE NUMBER:—First number B-38501. Stamped on left side of engine block at center.

TUNE-UP

COMPRESSION:—**Ratio**—6.0-1 Std. CI. Hd. 6.5-1 Optl. **Pressure**—105 lbs. at 150 RPM.

VACUUM READING:—Steady 18" at 450 RPM, 8 MPH.

FIRING ORDER: 1-6-2-5-8-3-7-4. See diagram.

SPARK PLUGS: Champion Type 8. 18 mm. Metric.
Gaps—Set at .025".
NOTE—Champion No. 6 Com-62 recommended by car manufacturer for replacement use.

IGNITION: See Coil, Condenser, and Distributor.
Breaker Gap—.020". **Cam Angle**—33° Closed.
Synchronization—Set movable contacts to open 45° after stationary set.
Automatic Advance—14½° max. at 1800 RPM
Vacuum Advance—6° distr. with 11-14" vacuum.

IGNITION TIMING: See Ignition Timing.
Std. Setting—TDC. Vibration dampener mark 'UDC.1-8' aligned with pointer at front of engine for stationary contacts. Mark 'UDC.3-6' for movable contacts (¼ revolution from 'UDC.1-8' mark).

CARBURETION: See Carburetor & Carb. Equipment.
Idle Setting—Set idle adjusting screws midway between 'miss' and 'roll' points (¼-1¼ turns open on Carter). Idle speed 450 RPM or 8 MPH.
Float Level (Carter)—3/16" from top of float to gasket seat on cover (valve seated, invert to check).
Float Level (Stromberg)—Fuel level ⅝" below top edge of float bowl.
Accelerator Pump—Inner hole (short stroke) for minimum charge, Outer hole (long stroke) max charge.
Fuel Pump Pressure: 3½ lbs. maximum.

MANIFOLD HEAT CONTROL:—Thermostatic coil type. To check valve, unlatch thermostatic coil (free outer end from bracket on manifold), operate valve by hand and see that shaft is free (shaft can be cleaned with emery if necessary). Make certain that thermostatic coil is properly latched to bracket and that tension spring (from shaft to clip on flange) is in place.

VALVES: See Valve Timing.
Tappet Clearance—.016" for all valves, Cold.

STARTING: See Battery, Starter, Generator, Regulato.

IGNITION

Ignition Switch:—Mitchellock Model 24-R, No. 8229. Delco-Remy No. 1116274, 1116288 (RHD) switch and cable.
Ignition Lock—Yale & Towne. Mitchell No. 8078.

COIL: Delco-Remy Model 1115021. Mounted on dash.
Ignition Current—½-1½ amps. idling, 4-5 stopped.

CONDENSER: Delco-Remy—Part No. 1838163.
Capacity—.18-.25 microfarad.

DISTRIBUTOR: Delco-Remy Model 662-M. Double breaker, 4 lobe cam, full automatic advance type with auxiliary vacuum spark control. NOTE—Movable contacts must be synchronized. Open 45° after stationary set.
Firing Interval—Movable contacts open 45° (distr.) after fixed set.
Breaker Gap—.020". Limits .018-.024".
Cam Angle or Dwell—33° closed, 12° open (both sets perating together when properly synchronized).
Breaker Arm Spring Tension—19-23 ounces.
Rotation—Clockwise viewed from above.

Automatic Advance

Distributor		Engine	
Degrees	R.P.M.	Degrees	R.P.M.
Start	300	2.5	600
14.5	1800	29	3600

Vacuum Spark Control D-R No. 681-S. Mounted under distributor and linked to advance arm. Provides additional advance at speeds above idling except when engine is accelerated or operated with wide open throttle when spark is retarded by return spring within unit. Total plunger travel ¼".

Vacuum Advance

Distr. Degrees	Eng. Degrees	Vacuum (" of HG)
Start	0°	5-7"
6°	12°	11-14"

Octane Selector—Provides manual adjustment at distributor (hold-down plate marked with scale) for variation in timing depending on fuel regularly used. See Ignition Timing following for adjustment.

Distributor Removal:—Mounted on right side of cylinder head. To remove, take out screw in hold-down plate, loosen advance arm clamp bolt (not necessary to disturb vacuum unit or vacuum connections).

IGNITION TIMING

IGNITION TIMING:—Standard setting as follows (see Octane Selector Setting following for correction dependent on fuel regularly used):

Flywheel Degrees	Piston Position
0° (At TDC)	.0000" TDC.

To Set Timing (Stationary Contacts)—Crank engine by engaging gears and rolling car on floor. With #1 piston on compression, turn engine over until piston reaches top dead center, stop when dead center mark 'U.D.C.1-8' on vibration dampener at front of engine lines up with pointer on timing gear cover. Loosen hold-down plate screw, center scale on pointer, tighten screw. Loosen advance arm clamp bolt, rotate distributor until stationary

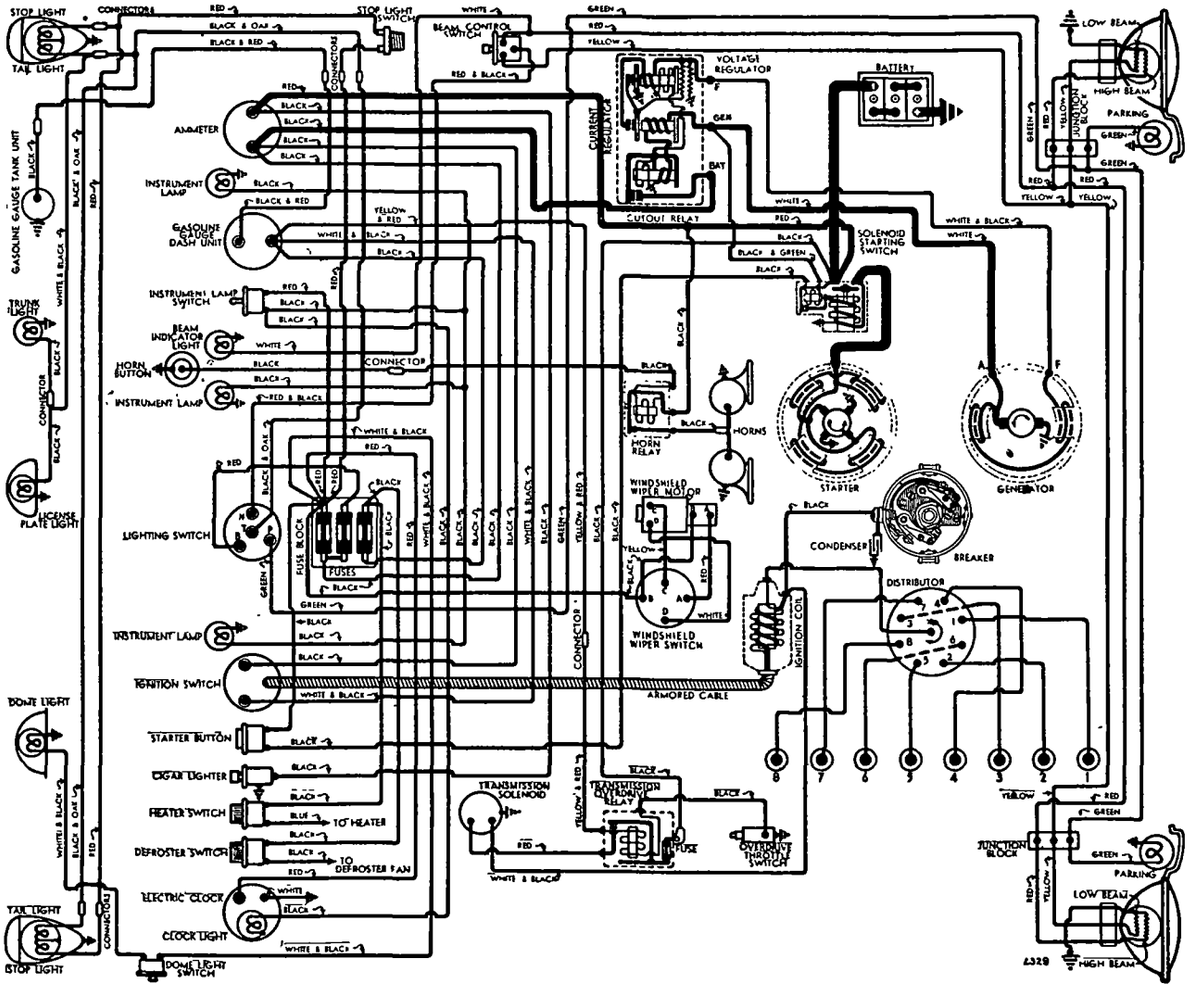

breaker contacts (mounted directly on breaker plate) begin to open, tighten clamp bolt, then synchronize movable contacts.

Synchronization (On Engine)—Turn engine over 90° to #6 firing position with vibration dampener mark 'U.D.C.3-6' lined up with pointer on timing gear cover. Loosen lockscrews on movable sub-plate carrying second set of contacts, turn eccentric adjusting screw until contacts begin to open, tighten lockscrews.

Synchronization (Using Tool)—Use Delco-Remy tool #1838182. See Distributor Synchronization in Electrical Equipment Section for complete instructions. Distributor firing intervals regular 45-45-45°.

Octane Selector Setting—After setting ignition timing, loosen selector (hold-down plate) screw and advance (move selector so that pointer toward 'A' end of scale) until motor 'pings' when it is hot and pulling hard. Then retard (move selector with pointer toward 'R' end of scale) until 'ping' just disappears.

See the Studebaker Shop Notes (preceding) for Front Fender Apron correction to correct ignition missing or cutting out due to water splashing up from road.

CARBURETOR

CARBURETION:—Carburetor—Carter Type WDO Model 409-S or Stromberg Model AAO-161 (code marked 6-85 on top of float chamber cover). 1¼" (Carter), 1" (Stromberg) dual, downdraft types. ***See separate articles in Carburetor Section for data.***

Idle Adjustment—With engine warm and running at slow idle speed (choke valve wide open, fast idle inoperative), set throttle stopscrew for 8 MPH idle speed. Adjust idle adjusting screw for each barrel (in succession) until engine fires smoothly (¼-1¼ turns open for each screw on Carter—turn screws in for leaner mixture). Readjust idle speed.

Accelerating Pump Setting—2 holes provided in pump arm (Carter), throttle lever (Stromberg) for pump link engagement. Set as follows:
Inner Hole (min. stroke)—Summer temperatures.
Outer Hole (max. stroke)—Winter temperatures.

Float Level (Carter)—3/16" from top of float to gasket seat on cover with needle valve seated (invert float chamber cover to check).

Float Level (Stromberg)—Fuel level 5/8" below top edge of bowl (level sight plug on engine side of carburetor—check with engine idling).

Fast Idle (Carter):—Integral (built-in carburetor). ***For complete data, refer to Carburetion Equip. Index.***

Fast Idle Setting—Adjust fast idle screw for .018" throttle opening with choke valve fully closed.

Fast Idle (Stromberg):—Stromberg AAO-161 carburetor type. ***See article in Carburetion Equipm't Section.***

Fast Idle Setting—No adjustment provided.

Automatic Choke (Carter):—Carter Climatic Control. ***For complete data, refer to Carburetion Equip. Index.***

Setting—Set coil housing one Notch Rich.

Automatic Choke (Stromberg):—Stromberg AAO-161 carburetor type. ***See Carburetion Equip. Sec. article.***

Setting—Mark 'R' on thermostatic spring case should line up with projection on housing (ordinary fuel). If this setting too rich, rotate case to 'M' mark (leaner setting). Use 'H' setting for high test fuels.

CARB. EQUIPMENT

Air Cleaner:—AC #1529440 oil-wetted type Std. Heavy duty oil-bath type optl. Oil filler cap equipped with copper mesh cleaner.

Fuel Pump:—AC Type E #1523926 diaphragm type. ***For complete data, refer to Carburetion Equip. Index.***

Gasoline Gauge:—Stewart (Stewart-Warner) Electric Stewart-Warner No. G-102158. ***For complete data, refer to Carburetion Equip. Index.***

BATTERY

Willard Type SW-1-95. 6 volt, 15 plate, 95 ampere hour capacity (20 hour rate).

Starting Capacity—117 amperes for 20 minutes.

Zero Capacity—300 amperes for 3.1 minutes. Five second voltage 4.2 volts.

Grounded Terminal—Positive (+) grounded to frame. **Engine Ground**—Separate ground strap.

Dimensions—Length 9". Width 7". Height 8 13/16".

Location—In engine compartment on left side.

STARTER

Delco-Remy Model 1107903. Armature No. 820158.

Drive—Solenoid pinion shift & overrunning clutch.

Rotation—Counter-clockwise at commutator end.

Brush Spring Tension—24-28 ozs. each.

Cranking Engine—110 RPM., 150-200 amperes, 5-5.5 volts.

Performance Data

Torque	R.P.M.	Volts	Amperes
0 ft. lbs.	6000	5.0	60
16 "	Lock	3.0	600

Removal:—Flange mounted on left front face of flywheel housing. To remove, take out flange mounting screws (remove starter and solenoid switch as an assembly).

Starting Switch: Delco-Remy Solenoid 1546. Mounted on starter and controlled through relay (in switch case by pushbutton switch Douglas #5700 on instrument panel. ***For complete data, refer to Electrical Equipment Index.***

GENERATOR

Delco-Remy Model 1102671. Armature No. 1879002. Two brush type with Current-Voltage Control.

Charging Rate Adjustment—No adjustment at generator. Charging rate controlled by Voltage Regulator and maximum output by Current Regulator. ***See Regulator data following.***

Maximum Charging Rate—33-35 amperes (hot or cold), 8.0 volts, 1850 gen. RPM or 22 MPH and above with load or discharged battery (Current Regulator setting). Actual charging rate controlled by Voltage Regulator and dependent on battery condition.

Performance Data

	Amperes	Volts	R.P.M.
Cold	30*	8.0	1750

*—Not maximum output—See Current Regulator.

Rotation—Counter-clockwise at commutator end.

Brush Spring Tension—25 ounces each.

Field Current—1.75-1.9 amperes at 6.0 volts.

Removal:—Pivot mounted at left front of engine. To remove, take out pivot and clamp bolts.

Belt Adjustment:—Swing generator out until fan can just be turned with belt held stationary.

REGULATOR

Delco-Remy Model 1118202. 'Single Core' type. Vibrating Voltage & Current regulator on dash. CAUTION—Check generator for grounded fields before changing regulator settings. ***For complete data, refer to Electrical Equipment Index.***

Cutout Relay

Cuts In—6.2-6.7 volts (hot), 750 RPM., 8.9 MPH.

Cuts Out—0-4.0 amperes discharge current.

Contact Gap—.020" (same for both sets).

Air Gap—.020" (with points just closed).

Voltage Regulator

Setting—7.2-7.4 volts hot (operating temperature). Regulator over-compensated for temperature.

To Check—Connect ammeter in charging line at 'BAT' regulator terminal, voltmeter between 'BAT' terminal and ground. Operate generator at 2800 RPM, adjust charging rate to 8-10 amperes (use variable rheostat or 'AVR' set). With regulator at hot operating temperature, retard generator speed until cut-out relay points open, then increase generator speed to 2800 RPM and check hot voltage setting (above).

To Adjust—Change regulator armature spring tension slightly by bending lower spring hanger for light (left) spring (or one spring if both alike) only. If further adjustment required see Single Core Regulator article in Electrical Equipment Section for Heavy (or Other) Spring adjustment.

Air Gap—.070" between center of core and armature with contacts just closed.

Current Regulator

Setting—34-36 amperes hot (at operating temp.).

To Check—Remove cover, connect short jumper from voltage regulator frame to upper contact support bracket (shorting out Voltage Regulator). Connect ammeter in charging line at 'BAT' regulator terminal. Turn on lights and accessories, operate generator and increase speed until output remains stationary (run until hot). Check setting with regulator at operating temperature.

To Adjust—Change regulator armature spring tension slightly by bending lower spring hanger for one spring. If further adjustment required see Single Core Regulator article in Electrical Equipment Section for adjustment of other spring.

Air Gap—.080" (check same as Voltage Regulator).

LIGHTING

LIGHTING:—Headlamps—Own 'Sealed Beam' type. ***For complete data, refer to Electrical Equipment Index.***

Headlamp Adjustment—Aim upper beam for each lamp straight ahead with center of hot spot 3" below lamp center height.

Beam Indicator—Red light on speedometer face. Lighted whenever Country (upper) beam in use.

Switches

Lighting—Douglas Model 5704.
Beam Selector—Delco-Remy 1997002.
Instrument—Douglas Model 7290.

C NTINUED N NEXT PAGE

C NTINUED FROM PRECEDING PAGE

Bulb Specifications

Position	Candlepower	Mazda No.
Headlamps		Sealed Beam
Parking, Instr., Trunk	1½	55
Beam Indicator	1	51
Stop & Tail	21-3	1158
Rear License	3	63
Dome	15	87

MISC. ELECTRICAL

FUSES:—**Lighting**—Three 20 ampere. On fuse block on back of instrument panel at center. Protects circuits as follows: **Top**—Clock, Dome, Stop, Instrument Lamps and Windshield Wiper. **Center**—Head and Tail lamps. **Lower**—Accessories.

Transmission Control—14 ampere. On relay.

Windshield Wiper—No separate fuse (protected by accessory fuse on fuse block).

HORNS:—**Delco-Remy.** Model 1999511 (low note), 1999512 (high note). Electric type, air tone operated by relay.

Type	Current (at 6 volts)	Air Gap
1999511 (low note)	19-21 amperes	.044-.049"
1999512 (high note)	18-20 amperes	.034-.039"

Horn Relay:—Delco-Remy Model 1116756.

Contact Gap—.020". **Air Gap**—.015" (closed).

Contacts Close—2.75-4.0 volts.

ENGINE

ENGINE SPECIFICATIONS:—Model 6C. 8 cylinder, 'L' head type. **Bore**—3 1/16". **Stroke**—4¼". **Displacement**—250.4 cu. ins. **Rated HP**—30. **Developed Horsepower**—110 at 3600 RPM. **Compression Ratio**—6.0-1 standard cast-iron head. 6.5-1 high compression head optional. **Compression Pressure**—105 lb. @ 150 RPM (Std.hd.). **Vacuum Reading**—18" at 450 RPM or 8 MPH. *See Studebaker Shop Notes for cyl. head installation.*

PISTONS:—Lynite, aluminum alloy, T-slot, Cam ground, tin-plated type. **Length**—3¾".

Weight—13.6 ozs. (stripped).

Removal—Pistons and rods removed from above. **Clearance**—.0015" (¼" up on skirt 90° from pin).

Original Bore Sizes:—*See Studebaker Shop Notes.*

Replacement Pistons:—Finished pistons (with pins fitted) furnished .002", .004", .010", .015", .020", .030" oversize. Exact size stamped on piston head.

Fitting New Pistons:—Install .003" x 1" hardened feeler between piston and cylinder wall on camshaft side (T-slot away from camshaft, pin bosses parallel to crankshaft). Pull to withdraw feeler must be 7-15 lbs.

Installing Pistons:—T-slot away from camshaft.

PISTON RINGS:—Two compression, 1 oil control ring, all above pin with narrow heat-dam groove (no ring) above top ring groove. Oil ring groove drilled with oil drain holes.

Ring	Width	End Gap	Side Clearance
Compression	⅛"	.013-.018"	.0015-.002"
Oil Control	3/16"	.013-.018"	.0015-.002"

NOTE—Install compression rings with step down. Inner ring used with oil ring only.

Replacement Rings:—Oversizes .010", .020", .030".

PISTON PIN:—**Diameter**—⅞. **Length**—2⅝".

Pin locked in rod by clampscrew.

Pin Fit in Piston—Light push fit (rod should rock in piston of own weight). Clearance .0001-.0003".

NOTE—Replacement Pistons have pins fitted.

CONNECTING ROD:—**Weight**—32 ozs. **Length**—8".

Crankpin Journal Diameter—1.87425-1.87525".

Lower Bearing—Removable, steel-backed, lead-bronze lined type.

Clearance—.00075-.00275". **Sideplay**—.005-.010".

Bearing Adjustment:—None. Replace bearings. Furnished Std. and .005", .010", .020" undersize. Crankpin must be turned down to size (bearings should not be reamed). See that tongues on bearings engage slots and that oil holes are aligned. *See Studebaker Shop Notes for 'Palnut' installation.*

Installing Rods:—Oil hole in rod toward camshaft.

CRANKSHAFT:—9 bearing, 12 bolted counterweights. Vibration dampener mounted on forward end. *See Studebaker Shop Notes on Vibration Dampener installation.*

Journal Diameters—2.3435-2.3440" all bearings.

Bearing Type—Removable steel-backed, babbitt-lined type. **Clearance**—.001-.003".

Bearing Adjustment:—None (no shims). Replace bearings. Do not file bearing caps. Bearings furnished .010" and .015" undersize.

End Thrust:—Thrust plate between front main bearing and crankshaft gear with shim adjustment. **Endplay**—.003-.006".

CAMSHAFT:—Six bearing. Helical gear drive. *See Studebaker Shop Notes for Camshaft Removal.*

Bearings—Split steel-backed, babbitted bushings. NOTE—Oil holes in bushing & block must line up. **Clearance**—.00075-.00225" (#1), .002-.00375" (others).

End Thrust:—Steel thrust washer and spacer between gear hub and bearing. **Endplay**—.003-.006".

Timing Gears:—Cast-iron (crankshaft). Celeron Fabric (camshaft). *See Studebaker Shop Notes for Gear Removal and Replacement Gear Size Selection.*

Camshaft Setting:—Mesh marked tooth on camshaft gear between two marked teeth on crankshaft gear.

VALVES:—	Head Diameter	Stem Diameter	Length
Intake	1 13/32"	11/32"	5 7/32"
Exhaust	1 9/32"	11/32"	5 7/32"

	Seat Angle	Lift	Stem Clearance
All Valves	45°	11/32"	.001-.003"

Valve Guides:—Pressed in block from above (1 5/16" below top of block) with stepped end down. Ream to inside diameter of .343-.344".

Valve Springs:—Install with closed-coil up and dampener on top of spring. Replace springs if 10% weak. *See Studebaker Shop Notes for Valve Spring Installation instructions.*

	Spring Pressure	Spring Length
Valve Closed	54-60 lbs.	2 3/32"
Valve Open	125-135 lbs.	1 3/4"

Valve Lifters:—Mushroom type in bolted-on guide brackets (clusters of four). Assemblies may be removed through valve opening on side of engine.

VALVE TIMING

Tappet Clearance:—.016" all valves—engine cold. Remove right hood side panel for work n valves. *See Studebaker Shop Notes for Side Panel Removal.*

Valve Timing:—See Camshaft Setting above.

Intake Valves—Open 15° BTDC. Close 49° ALDC.

Exhaust Valves—Open 54° BLDC. Close 10° ATDC.

Valve Timing Check—Set tappet clearance for #1 intake valve at .020". This valve should open with piston 15° or .0915" before top dead center when 'IN.OP/1-8' mark on vibration dampener at front of engine lines up with pointer on gear cover. Reset tappet clearance at .016" cold.

LUBRICATION

LUBRICATION:—Pressure type. Gear type oil pump in crankcase. *See Studebaker Shop Notes for Oil Pump Installation directions.*

Normal Oil Pressure:—60 lbs. (min.) at 25-30 MPH.

Oil Pressure Regulator:—Located at right front corner of engine. Opens at 60 lbs. Non-adjustable.

Crankcase Capacity—8 quarts.

COOLING

COOLING SYSTEM:—**Capacity**—17 quarts.

Water Pump:—Centrifugal with adjustable packing. *See Water Pump Section for complete data.*

Removal—With water drained and fan belt removed, disconnect hose, take out mounting bolts, lift off pump and fan assembly.

Thermostat:—Bishop & Babcock or Fulton. In cylinder head outlet. Install with bellows down. **Setting**—Starts to open 156-160°F.

Drain Valves:—On left side of radiator lower tank and plug at left rear of engine block.

Temperature Gauge—Stewart (Stewart-Warner). No. G-102072.

CLUTCH

CLUTCH:—**Inland.** 'Diaphragm' type, single plate, dry disc type with Long 9½CF-CS driven member. *See Clutch Section for complete data.*

Facings—Molded (spiral or chevron wound), 2 used. Inside Diam. 6". Outside Diam. 9½". Thickness .125".

Pedal Adjustment:—Free travel 1" min. Sleeve adjustment on pedal connecting rod. Check Hill-Holder after adjusting clutch.

Removal:—Disconnect clutch pedal linkage, remove transmission (see Transmission Removal following), support engine at rear, remove rear engine mountings and clutch housing, take out mounting screws in clutch cover flange (turn all screws out evenly), remove clutch assembly. CAUTION—Support pressure plate by hand to avoid distorting pressure plate tension springs. *See Studebaker Shop Notes for Clutch Cross-shaft Oiler installation instructions.*

TRANSMISSION

TRANSMISSION: Warner—Model AS1-T86C (standard) All helical gear type (synchro-mesh second & high). *See Transmission Section for complete data.*

Transmission Control:—New type remote shift. *See Transmission Section for complete data.*

Removal:—Disconnect shift rods from levers and speedometer cable at transmission, take out U-bolts in front universal and lower propeller shaft. Remove transmission mounting screws at clutch housing, pull transmission back and lift out.

OVERDRIVE

OVERDRIVE: Warner R7 (Kick-down) Electric type. Complete assembly (with transmission) Warner Model No. AS2-T86C.

See Transmission Section for complete data.

Overdrive Solenoid—Delco-Remy Model 1118001.

Throttle Switch—Cole-Hersee No. 1687S. Adjust so that end of accelerator rod just contacts switch plunger with throttle valve wide open.

Control Relay—Auto-Lite HR-4201S. 14 ampere fuse mounted in holder on relay.

Removal: Same as for regular transmission after disconnecting Overdrive cable and solenoid wires, and removing Overdrive Rear Support. *See Overdrive Transmission Rear Support Installation data in Studebaker Shop Notes.*

UNIVERSALS

UNIVERSAL JOINTS:—Spicer—1271-101 (front), 1278-101 (rear). Needle bearing type. 2 used.

See Universals Section for complete data.

REAR AXLE

REAR AXLE:—Spicer Model 41-2. Semi-floating, hypoid gear type with Hotchkiss drive.

See Rear Axle Section for complete data.

Ratio—4.55-1 Std., 4.82-1 Optl. (Std. with Overdrive).

Backlash—.005-.007". Shim adjustment.

Removal:—Hoist rear of car, disconnect brake line, shock absorbers, drive shaft at rear universal, rear spring U bolts and rear spring shackles, withdraw axle assembly from car. NOTE—Bleed brake lines when axle installed.

Wheel Bearing Adjustment:—Shims located between flanged end of axle housing and brake backing plate. To adjust, remove wheel, hub, brake drum, and backing plate (retained by 6 bolts). Remove shims to decrease endplay, add shims to increase. Shim thickness at both wheels must be equal within .005".

Endplay—.001-.005". Measure with dial indicator.

SHOCK ABSORBERS

SHOCK ABSORBERS:—Houdaille, Type BBFS (front), ACHS (rear). Double acting, hydraulic, adjustable type with thermostatic control (rear only).

See Shock Absorber Section for complete data.

FRONT SUSPENSION

Front Suspension:—Planar type independent suspension with transverse spring. Specifications below apply with car weight on wheels but without load.

See Front Suspension Section for complete data.

Kingpin Inclination—5½°.

Caster—Negative ¼° to Pos. ¾°. Not adjustable.

Camber—¼° to ¾°. Adjustable.

Toe In—1/16-⅛". Adjust right reach rod for toe-in.

Steering Geometry (Toe-out on Turns)—Inner wheel turned 22°, Outer wheel 20°.

STEERING GEAR

Steering Gear: Ross T-14 Cam-&-Twin Lever type.

See Steering Gear Section for complete data.

BRAKES

BRAKES:—Service—Lockheed hydraulic, double anchor type. Hand lever applies rear wheel service brakes.

See Brake Section for complete data.

CAUTION—*See Front Fender Apron Note in Studebaker Shop Notes to correct apron interference with brake tubes on early cars.*

Wheel Cylinders—Stepped or two-stage bore type: Front—Front Shoe Cylinder 1⅜". Rear 1".
Rear—Front Shoe Cylinder 1¼". Rear 1".

NOTE—Wheel cylinder bore size marked on casting.

Drum—Budd Composite. Diameter 11".

Lining—Front shoe—woven. Rear—moulded. Width 2¼". Thick. 3/16". Length per wheel 19 11/16".

Clearance—.010" toe, .005" heel, for each shoe.

Braking Power—45% rear, 55% front.

Hand Brake:—See Service Brakes above.

Hill-Holder: Optional on all models.

See Brake Section for complete data.

MISC. MECHANICAL

WINDSHIELD WIPER:—Auto-Lite Model EWB-4002. Electric type. NOTE—No separate fuse used.

See Miscellaneous Section for complete data.

HOOD LOCK: *See Studebaker Shop Notes for data.*

MODEL IDENTIFICATION

SERIAL NUMBER: Stamped on plate on left (1941), right (1942) front door hinge post. First numbers:

Year	Model	South Bend	Los Angeles
1941	3G	G-90,101	G-811,201
1942	4G	G-165,501	G-821,101

ENGINE NUMBER: On pad on upper left front corner of engine block. First Nos.: 101201 ('41), 186301 ('42).

TUNE-UP

COMPRESSION:—**Ratio**—6.5-1 std. cast-iron head. Optl. 7.0-1 Cast Iron Hd. recommended for altitudes greater than 5000 ft. only.
Pressure—105 lbs. at cranking speed of 150 RPM.
VACUUM READING:—Steady 17-18" at 8 MPH idle spd.
FIRING ORDER: 1-5-3-6-2-4. See diagram.
SPARK PLUGS: Champion No. J-8 ('41), No. J-9 ('42). 14 mm. Metric types.
Gaps—.025".
NOTE—Type J-9 plug recommended for service.
IGNITION: See Coil, Condenser, and Distributor.
Breaker Gap—.020". Limits .018-.022".
Cam Angle—Closed 35° (IGW distr.), 38° (IGC distr.)
Automatic Advance—7° max. at 1400 RPM (distr.).
Vacuum Advance—9° distr. with 14¾" vacuum.
IGNITION TIMING: See Ignition Timing.
Std. Setting—2° BTDC. Flywheel mark 'IGN' aligned with indicator in inspection hole on engine rear plate on left side. Use .020" feeler between advance arm and hold-down plate when tightening distributor clamp bolt (avoids binding vacuum control).
CARBURETION: See Carburetor & Carb. Equipment.
Idle Setting—Set idle adjusting screw ½-1½ turns open. Idle speed 500-525 RPM or 8 MPH.
Float Level—5/16" from top of projection on bowl cover to top of soldered seam on float (inverted).
Accelerating Pump—No seasonal adjustment.
Fuel Pump Pressure: 3½ lbs. maximum.
MANIFOLD HEAT CONTROL:—Thermostatic coil type.
Setting—To test coil tension, unhook coil from pin. With valve closed (counterweight up), hooked end of coil should be approximately 90° away from pin with coil at 70°F. Replace coil if angle incorrect. If valve sticks, shaft should be lubricated with kerosene and baking soda solution (for shafts which are badly stuck, remove shaft and turn shaft down to give .005" clearance—shaft bore in manifold should not be disturbed).
NOTE—Stainless steel bushings used in manifold for heater valve shaft mountings on 1942 models.
VALVES: See Valve Timing.
Tappet Clearance—.016" for all valves, Cold.
NOTE—Self-locking tappet screws (no locknuts).
STARTING: See Battery, Starter, Generator, Regulator.

IGNITION

Ignition Switch:—Mitchellock Model 24-R, No. 8771.
Ignition Lock—Yale & Towne. Mitchell No. 8414.
COIL: Auto-Lite Model CE-4646. Service coil (less switch & cable) CE-3224 WS. Mounted on engine.
Ignition Current—½-1½ amps. idling, 4-5 stopped.
CONDENSER: Auto-Lite No. IGB-1025 (for IGW distributor external mounting). No. IG-2671 (IGC distributor mounted inside distributor).
Capacity—.20-.25 microfarad.
DISTRIBUTOR: Auto-Lite Model IGW-4154 (1941-42), Model IGC-4801 (1942). Single breaker, 6 lobe cam, full automatic advance type with separate vacuum spark control and Octane Selector.
NOTE—IGC Distributor has condenser mounted inside distributor and eccentric screw breaker point adjustment.
Breaker Gap—Set at .020".
Cam Angle or Dwell (IGW)—35° Closed, 25° Open.
Cam Angle or Dwell (IGC)—38° Closed, 22° Open.
Breaker Arm Spring Tension—17-20 ounces.
Rotation—Counter-clockwise viewed from the top.

Automatic Advance

Distributor Degrees	Distributor R.P.M	Engine Degrees	Engine R.P.M.
Start	400	0	800
2	680	4	1360
4	975	8	1950
6	1265	12	2530
7	1400	14	2800

Vacuum Spark Control A-L No. VC-4011—On hold-down plate and linked to advance plate. Provides additional advance at speeds above idling except when engine accelerated or operated with wide open throttle (spark retarded by return spring in unit).

Vacuum Advance

Distr. Degrees	Eng. Degrees	Vacuum (" of HG)
Start	0°	4"
2°	4°	5½"
5°	10°	7¾"
7°	14°	11¼"
9°	18°	14¾"

Octane Selector—Provides manual adjustment at distributor (hold-down plate marked with scale) for variation in timing depending on fuel regularly used. See Ignition Timing following for adjustment.
Distributor Removal:—Mounted on left side of engine. To remove, disconnect vacuum line, take out bolt in clamp arm, lift distributor off.
Installation Note—When installing distributor, crank engine to firing position for #1 cylinder (flywheel mark 'IGN' in line with pointer on left rear engine plate), sight down distributor shaft

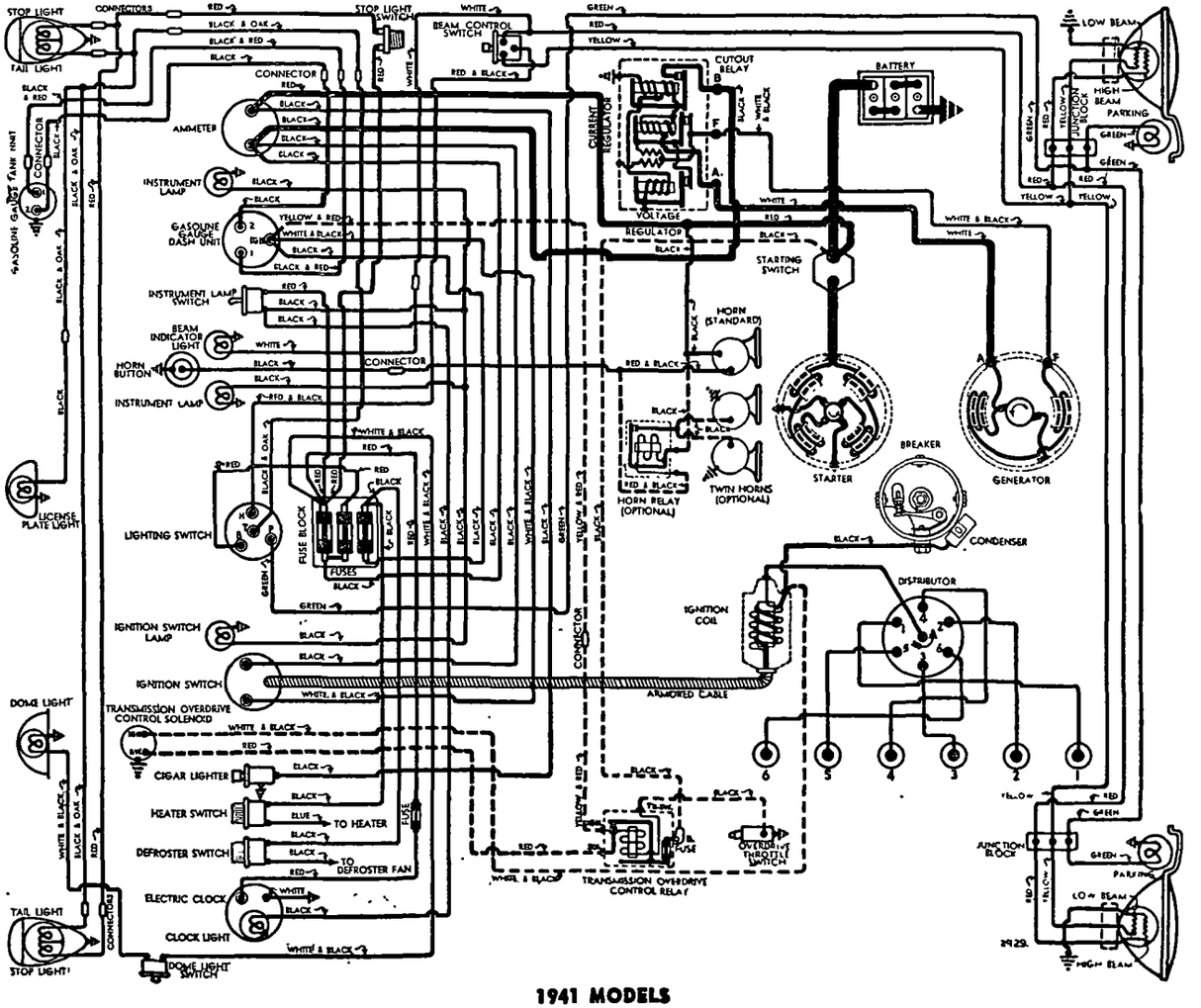

1941 MODELS

hole (distributor out) and see that distributor drive tongue in oil pump drive gear is parallel to and narrow half of offset toward camshaft, turn rotor to #1 segment, install distributor (insert .020" feeler between modifier control arm and clamp arm before tightening the clamp, to prevent binding), check timing.

IGNITION TIMING

IGNITION TIMING:—Initial setting for regular fuel (see Octane Selector Setting following for correction dependent on fuel regularly used).

Flywheel Degrees	Piston Position
2° BTDC	.0016" BTDC

1942 Timing Mark Note—Timing marks carried on the flywheel (same as for 1941). Vibration dampener at front of engine is new on 1942 models.

Timing (with Neon Timing Light)—Neon Light No. 890 recommended. Clip Neon light lead in series with #1 spark plug, idle engine and direct Neon light on flywheel inspection hole on left rear motor support. Loosen hold-down plate screw, center scale on pointer, tighten screw. Loosen clamp arm, rotate distributor until 'IGN' mark on flywheel (approx. 13/64" before top dead center mark 'U.D.C.1-6') lines up with pointer on engine rear plate. Insert .020" feeler between modifier control arm and clamp arm before tightening clamp (to insure clearance for modifier control arm). Check Octane Selector Setting (following).

Timing (without Neon Timing Light)—Turn engine over to firing position for #1 piston with 'IGN' mark on flywheel in line with pointer on inspection hole on left rear motor support and distributor rotor at #1 segment in distributor cap. Adjust distributor as directed above.

Octane Selector Setting—After setting ignition timing (above), loosen selector hold-down screw, advance selector (move toward 'A' end of scale) until motor 'pings' when it is hot and pulling hard. Then retard (move selector pointer toward 'R' end of scale) until 'ping' just disappears.

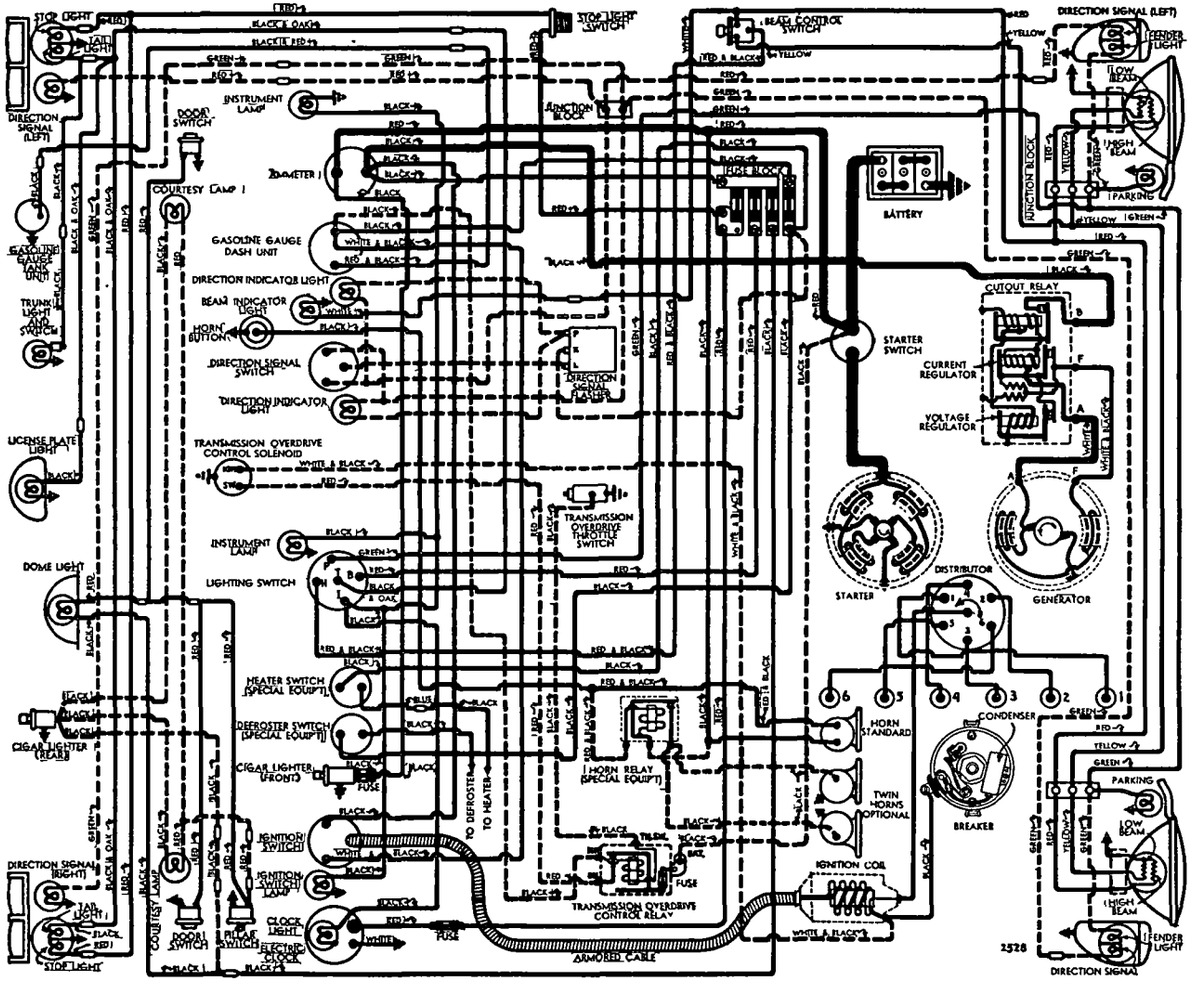

1942 MODELS

CARBURETOR

CARBURETION:—Carburetor—Carter Type WA-1 Model 496-S (#356 cast on face of flange). 1¼" single barrel downdraft type with Carter Climatic Control.
For complete data, refer to Carburetor Index.
Idle Adjustment—With engine warm and running at slow idle speed (choke valve wide open, fast idle inoperative, set throttle stopscrew for 8 MPH idle speed. Adjust idle adjusting screw until engine fires smoothly (½-1½ turns open—turn screw in for leaner mixture). Readjust idle speed.
Accelerating Pump—Non-adjustable type.
Float Level—5/16" from top of projection on bowl cover to top of soldered seam on float at free end with needle valve seated (invert cover assembly to check level).
Metering Rods & Jets—***See Carter Jet Table in Carburetor Section for complete data.***

Fast Idle:—Integral type (built-in carburetor).
For complete data, refer to Carburetion Equip. Index.
Setting—Adjust by bending connector rod offset for ⅝" choke valve opening with throttle stopscrew against (not on) first step of fast idle cam.

Automatic Choke:—Carter Climatic Control.
For complete data, refer to Carburetion Equip. Index.
Setting—1 Notch Lean (supersedes Centered setting originally specified for this model).

CARB. EQUIPMENT

Air Cleaner:—AC #1529210 oil-wetted type standard. #1529211 heavy duty oil-bath type optional. Use Replacement Filter Element Assembly: Type #2 (for 1529210), Type #8 (for 1529211). NOTE—Oil filler cap equipped with filter element which should be serviced at the same intervals as air cleaner.

1941 MODELS

Fuel Pump:—AC Type AE, diaphragm type. Replacement Part No. 527.
For complete data, refer to Carburetion Equip. Index.

Gasoline Gauge:—Auto-Lite electric type. No. NG-9594D (Dash Unit), No. NG-9659T (Tank Unit).
For complete data, refer to Carburetion Equip. Index.

1942 MODELS

Fuel Pump:—AC 'W' #1523957—Exch. No. 527. Diaphragm type fuel pump.
For complete data, refer to Carburetion Equip. Index.
Pressure—3½ lbs. maximum.

Gasoline Gauge:—Stewart-Warner electric type. Studebaker Nos. 515610 (dash unit), 515684 (tank).
For complete data, refer to Carburetion Equip. Index.

BATTERY

Willard Type WHT-1-13R. 6 volt, 13 plate, 90 ampere hour capacity (20 hour rate).
Starting Capacity—114 amperes for 20 minutes.
Zero Capacity—300 amperes for 3.0 minutes. Five second voltage 4.1 volts.
Grounded Terminal—Positive (+) terminal.
Engine Ground—Strap at right front motor support.
Dimensions—Length 9". Width 7". Height 9⅜".
Location—On left side under engine hood.

STARTER

Auto-Lite Model MZ-4090. Armature No. MZ-2130.
Drive—Barrel type Bendix. Special inboard type A-2033 (marked 'D' on pinion barrel).
Rotation—Counter-clockwise at commutator end.
Brush Spring Tension—42-53 ozs. (new brushes).
Cranking Engine—160 amperes, 5.2 volts, 130 RPM.

C NTINUED N NEXT PAGE

CONTINUED FR M PRECEDING PAGE

Performance Data

Torque	R.P.M	Volts	Amperes
0 ft. lbs	4300	5.5	70
0.65 " "	2500	5.5	100
2.55 " "	1325	5.0	200
4.95 " "	750	4.5	300
7.65 " "	220	4.0	400
7.8 " "	Lock	3.0	420
11.8 " "	Lock	4.0	560

Removal:—Starter flange mounted on right rear engine plate. To remove take out mounting bolts and lift starter off.

Starting Switch:—A-L Model SW-4011. Mounted on left side of car below clutch pedal. Operated by depressing clutch pedal fully.

GENERATOR

Auto-Lite Model GDZ-4804-A. Armature No. GDZ-2006F (Std.), GEB-4803A, Armature GEB-2006F (Police). Two brush (current-voltage control).

Charging Rate Adjustment—No adjustment at generator. Charging rate controlled by Voltage Regulator and maximum output by Current Regulator.

Maximum Charging Rate—35 amperes, 8.0 volts, 1600 Gen. RPM. or approx. 22.8 MPH. & above with load or discharged battery (Current Regulator Setting). Actual charging rate controlled by Voltage Regulator and dependent on battery condition.

Performance Data—GDZ-4804A

Cold			Hot		
Amperes	Volts	R.P.M.	Amperes	Volts	R.P.M.
0	6.4	925	0	6.4	1000
4	6.6	1035	4	6.6	1120
8	6.75	1140	8	6.75	1235
12	6.95	1250	12	6.95	1350
16	7.15	1370	16	7.15	1460
20	7.3	1480	20	7.3	1590
24	7.5	1590	24	7.5	1730
28	7.7	1710	28	7.7	1900
32	7.9	1820	32	7.9	2090
35	8.0	1900	35	8.0	2250

Performance Data—GEB-4803A

0	6.4	560	0	6.4	600
4	6.6	630	4	6.6	675
8	6.8	700	8	6.8	750
12	7.0	775	12	7.0	840
16	7.2	845	16	7.2	930
20	7.4	920	20	7.4	1030
24	7.6	1000	24	7.6	1140
28	7.8	1075	28	7.8	1260
32	8.0	1150	32	8.0	1400

Rotation—Counter-clockwise at commutator end.

Brush Spring Tension—53 ozs. max. (GDZ), 64-68 zs. (GEB) with new brushes.

Field Current—1.60-1.78 amperes at 6.0 volts.

Motoring Current—4.16-4.60 amperes (GDZ), 4.0-4.5 amperes (GEB) at 6.0 volts.

Removal:—Pivot mounted at left front of engine. To remove, take out pivot and clamp bolts.

Belt Adjustment:—Loosen pivot and clamp bolts, move generator out until ⅜-½" belt deflection midway between generator and fan pulleys is obtained.

REGULATOR

Auto-Lite Model VRP-4004-F (for GDZ Generator), VRP-4004C (GEB Gen.). Current-Voltage Type. Vibrating type voltage and current regulators.

For complete data, refer to Electrical Equipment Index.

Cutout Relay

Cuts In—6.4-6.6 volts.

Cuts Out—4.1-4.8 volts (approx. 4-6 amps. disch.).

Contact Gap—.015" minimum.

Air Gap—.031-.034" with contacts open (check at hinge end of core).

Voltage Regulator

Setting—7.2-7.5 volts at 70° F. See Electrical Equipment Section for settings at other temperatures.

To Check (without breaking seals)—Connect ammeter in charging line at regulator 'B' terminal (use short heavy leads), voltmeter between 'B' terminal and ground. Operate generator at speed equivalent to 30 MPH., charging fully charged battery, until voltage is steady. Voltage reading should agree with setting given above.

To Adjust (with cover removed)—Change regulator armature spring tension by bending lower spring hanger slightly. See Electrical Equipment Section.

Contact Gap—.012" min. (armature against stop pin).

Air Gap—.048-.052" with contacts just opening.

Current Regulator

Setting—(VRP-4004F) 34-36 amperes (marked '35'). (VRP-4004C) 31-33 amperes (marked '32').

To Check (without breaking seals)—Connect test meters as for voltage check (above). Operate generator at speed equivalent to 30 MPH. charging battery, turn on car lights and accessories or connect load (bank of headlamp bulbs etc.) between ammeter and battery so that generator charges at peak rate and Current Regulator operates. Current reading should agree with setting given above. If more than slight excess noted, regulator is defective.

To Adjust (with cover removed)—Same as for Voltage Regulator (above).

Contact Gap & Air Gap—Same as Voltage Regulator.

LIGHTING

LIGHTING:—Headlamps—Corcoran-Brown 'Sealed Beam' type. ***For data, refer to Elec. Equip. Index.***

Headlamp Adjustment—Aim upper beam straight ahead (hot spot center 3" below lamp center hght.).

Beam Indicator—At top center of speedometer dial. Lighted whenever Country (upper) beam in use.

Switches—1941

Lighting—H. A. Douglas. No. 5724.

Beam Selector—Delco-Remy No. 1997008.

Instrument—Cole-Hersee.

Switches—1942

Lighting—Douglas No. 5966. Studebaker No. 515324.

Beam Selector—Delco-Remy No. 1997008.

Stop Light—Studebaker No. 666858 (hydraulic type).

Dome Lamp Pillar—Studebaker No. 281130X1.

Door Switches—Studebaker No. 282674.

Direction Signal—Studebaker No. 515652.

Bulb Specifications

Position	Candlepower	Mazda No.
Headlamps		Sealed Beam
Parking	1½	55
Front Dir. Sig. & Fender	21-3	1158
Instrument, Ign. Lock	1½	55
Direction Sig. Indicator	1½	55
Beam Indicator	1	51
Stop & Tail	21-3	1158
Rear Direction Signal	21	1129
Rear License	3	63
Dome	15	87
Courtesy	3	64

MISC. ELECTRICAL

FUSES:—Fuse block on left side back of instrument panel with three or four 20 ampere fuses. Refer to the wiring diagrams for electrical connections.

Transmission Overdrive Control—14 amp. On relay.

Clock—2 ampere. In clock lead connector.

HORNS:—Single—Delco-Remy 1999807 standard.

Dual—Delco-Remy: Low Note 1999511 ('41), 1999541 ('42); High Note 1999512 ('41), 1999542 ('42). Air tone, twin horns operated by relay.

Type	Current (at 6 volts)	Air Gap
1999807	7-9 amperes	.027-.033"
1999511, 41 (low)	19-21 amperes	.044-.049"
1999512, 42 (high)	18-20 amperes	.034-.039"

Horn Relay:—R-B-M Model 6003.

Contacts Close—3-4 volts (with relay upright).

ENGINE

ENGINE SPECIFICATIONS:—6 cylinder, 'L' head type.

Bore—3". **Stroke**—4".

Displacement—169.6 cubic ins. **Rated HP**—21.6.

Developed Horsepower—80 at 4000 RPM. (Std. hd.).

Compression Ratio—6.5-1 Std., 7.0-1 Optl. CI hds.

Compression Pressure—105 lbs. @150 RPM (std.hd.). ***See Studebaker Shop Notes for Cyl. Head installation.***

Vacuum Reading—17-18" steady idling at 8 MPH.

PISTONS (1941): Aluminum alloy, T-slot, cam ground, tin-plated type.

Length—2 29/32". **Weight**—8.96 ozs. (stripped).

Removal—Pistons and rods removed from above.

Clearance—Top .014-.019". Skirt .0015" selective.

Original Bore & Piston Sizes, Replacement Pistons:—***See Studebaker Shop Notes for sizes and markings.***

Fitting New Pistons: Insert .002" x 1" feeler between piston and wall on camshaft side (pin parallel to crankshaft, T-slot away from camshaft). Pull to withdraw feeler must be between 16-22 lbs.

NOTE—Car manufacturer recommends cylinders out-of-round or taper over .002" be reconditioned.

Installing Pistons: T-slot away from camshaft.

PISTONS (1942): New ferric alloy, cam ground type with 'Parco-Lubrized' finish. **Length**—2 29/32". **Weight**—1.225-1.287 lbs. (with pin bushings).

Removal—Pistons and rods removed from above.

Clearance—Top .006-.009". Skirt (see Fitting Pistons).

Original Bore & Piston Sizes, Replacement Pistons:—***See Studebaker Shop Notes for sizes and markings.***

Fitting New Pistons:—Fit pistons to 15-20 lbs. pull on .002" feeler, 1" wide, inserted between piston and wall on camshaft side at right angles to pin hole.

NOTE—Cylinder out-of-round or taper .002" max.

Installing Pistons:—Install early type pistons with pattern no. (on inner surface of piston near pin boss) toward front of engine. Install later type pistons with raised boss (inside piston skirt on level of pin holes) toward valves. NOTE—Dip piston and rings in clean oil before installing in engine.

PISTON RINGS: 1941. 3 coated rings above pin. #1 Comp. '200' (step up), #2 Comp. '70' (step down), #3 Oil '85' (slotted). Heat dam above #1 groove.

1942 Type—2 coated, uniform pressure type compression rings, 1 uncoated, cast-iron oil ring, per piston, all above pin. NOTE—Install top compression ring with step up, #2 Comp. with step down.

Ring	Width	End Gap	Side Clearance
Comp. (Top)	3/32"	.007-.017"	.0015-.002"
Comp. (#2)	⅛"	.007-.017"	.0015-.002"
Oil Control	5/32"	.007-.017"	.0015-.002"

Replacement Rings:—Std.&.010", .020", .030" oversize.

PISTON PIN:—Diameter—.7491-.7495". **Length**—2⅝". Pin locked in rod by tapered pin and locknut.

See Studebaker Shop Notes for Piston Pin servicing.

Pin Fit in Aluminum Pistons—.0001-.0003" clearance or light finger push fit at room temperature (70°F).

Pin Fit in Cast-Iron Pistons—.0004" clearance, pin size selected as follows: Select pin which gives wring fit at 70°F., proper pin size will be one which is .0004" less in diameter than pin giving wring fit).

ENGINE

C NTINUED FR M PRECEDING PA E

Replacement Pins:—Std. & .0025", .005" oversize. Use Hone No. PH-1 to obtain proper piston fit.
NOTE—Replacement pistons fitted with pins.

CONNECTING ROD:—**Length 6⅜". Weight 20.48 ozs. Crankpin Journal Diameter**—1.81175-1.81275".
Lower Bearing—Spun babbitt (cap bearings chamfered on upper edge). New rods furnished on exchange basis standard and .010", .020" undersize.
Clearance—.0005-.002". **Sideplay**—.005-.009".
NOTE—Use reamer HM-591-F to secure correct bearing clearance. Crankpin out-of-round, tapered or scored .0015"max.(Crankpin Turning Tool #1-C).

Bearing Adjustment:—None(no shims). Replace rods. *See Studebaker Shop Notes for 'Palnut' installation.*

Installing Rods:—Narrow portion of bearing to front (#1, 3, 5), to rear (#2, 4, 6). Numbers on rods and caps must be together and installed in same numbered cylinder with numbers and oil hole in lower end of rod toward camshaft side of engine.

CRANKSHAFT:—4 bearing, 4 integral counterweights. Vibration damper used on 1942 models.
See Studebaker Shop Notes for Vibration Damper data.
Journal Diameter—2.437-2.4375".
Bearings—Removable steel-backed, babbitt-lined.
Clearance—.0005-.0025".

Adjustment:—None (no shims.) Replace bearings (std. size, .010", .020", .030" undersize).
NOTE—Front oil pan seal block may be removed for access to front main bearing cap by removing 4 lower timing gear cover screws (on front face).

End Thrust:—Thrust plate assembled between front bearing and crankshaft gear. Controlled by shims (furnished .003", .005", .007" thick) between plate and journal face. **Endplay**—.003-.006".
NOTE—Install new seals (specially treated wood) whenever rear main bearing cap replaced.

CAMSHAFT:—Four bearing with helical gear drive.
See Studebaker Shop Notes for Camshaft Removal data.
Journal Diameters—#1, 1.7475-1.7480"; #2, 1.71625-1.71700"; #3, 1.68575-1.68650"; #4, 1.62325-1.62400".
Bearings—Split steel-backed, babbitted bushings.
NOTE—Align bushing with oil hole in block.
Clearance—.00075-.00225"(#1), .001-.00275"(others).

End Thrust:—Taken by thrust plate assembled on front face of engine behind camshaft gear. Spacer assembled back of gear hub. **Endplay**—.004-.008".

Timing Gears:—Crankshaft (cast-iron), Camshaft (Celeron with steel hub). **Backlash** .001-.003".
Refer to Studebaker Shop Notes for Timing Gear Removal and Replacement Camshaft Gear size selection.

Camshaft Setting:—Mesh marked camshaft gear tooth between 2 marked teeth on crankshaft gear.

VALVES:—	Head Diameter	Stem Diameter	Length
Intake	1 11/32"	.310-.311"	4 11/32"
Exhaust	1 9/32"	.310-.311"	4 11/32"

	Seat Angle	Lift	Stem Clearance
All Valves	45°	5/16"	.001-.0035"

Valve Guides:—Pressed in block from above 1 3/16" below top of block. Finish ream to .312-.3135".

Valve Springs:—Install with closed coil up. Replace if springs over 10% weak (test with Tool U-15).

Free length 2 3/32".	Spring Pressure	Length
Valve Closed	52-56 lbs.	1 21/32"
Valve Open	90-94 lbs.	1 11/32"

Valve Lifters:—Mushroom type (remove from below). **Diameter**—.62375-.62425". **Clearance** .0005-.00175". Lifters furnished .0005", .001" oversize. *Refer to Studebaker Shop Notes for Valve Lifter Tension Spring*

VALVE TIMING

Tappet Clearance:—.016" (cold) all valves. Self-locking tappet screw tension should be 25 in. lbs. Remove hood side panel for access to valves.

Valve Timing:—See Camshaft Setting above.
Intake Valves—Open 15° BTDC. Close 49° ALDC.
Exhaust Valves—Open 54° BLDC. Close 10° ATDC.
Valve Timing Check—With .020" tappet clearance #1 intake valve should open with #1 piston 15° or .0893" BTDC with flywheel mark 'IN.OP.1-6/' aligned with pointer on left rear engine plate. Reset tappet clearance at .016" (cold).

LUBRICATION

LUBRICATION:—Pressure (pump on right of engine).
Refer to Studebaker Shop Notes for Oil Pan and Oil Pump installation instructions.

Normal Oil Pressure:—40 lbs. at 25-30 MPH.

Oil Pressure Relief Valve:—On lower right front corner of engine block. Opens at 30-40 lbs. Not adj.

Crankcase Capacity:—5 quarts.

COOLING

COOLING SYSTEM:—**Capacity**—10 quarts.

Water Pump:—Packless, sealed ball-bearing type.
See Water Pump Section for complete data.

Thermostat:—Bishop & Babcock. In cyl. head outlet.
Setting—Starts to open 151° F. to 155° F.

Temperature Gauge (1941): Auto-Lite (Motometer vapor tension type. A-L Part No. H-9593.
See Miscellaneous Section for complete data.

Temperature Gauge (1942): Stewart-Warner type. Studebaker Part No. 515609.

CLUTCH

CLUTCH:—**Borg&Beck Model 8A7 with 'Borglite' driven member.** Clutch assembly No. 925 stamped on cover. Single plate, dry disc type.
See Clutch Section for complete data.
Facings—Molded-metallic (spiral-grooved), 2 used. Inside Diam. 5⅜". Outside Diam. 8". Thickness ⅛".

Adjustment:—Free travel 1" (min.). Turn adjusting sleeve on pedal connector link.
Hill-Holder (NoRol) Note—Check whenever clutch pedal adjusted. Set so that Hill-Holder releases just as clutch engages (change rod length).

Removal:—Remove transmission (see below), take off clutch housing, take out 6 mounting screws in clutch cover flange, lift off cover assembly.
Refer to Studebaker Shop Notes for Clutch Release Shaft Lubrication instructions.

TRANSMISSION

TRANSMISSION:—**Warner**—Model AS1-T84G (Std.), AS2-T84G, Type R7C (optl. overdrive with electrical 'kick-down' control). All helical gear type, synchromesh (second & high), sliding gear (low & reverse).
See Transmission Section for complete data.

Transmission Control:—Mechanical steering col. shift.
See Transmission Section for complete data.

Removal:—Disconnect the rear universal and withdraw propeller shaft from transmission. Disconnect shift levers and speedometer cable at transmission. Place jack under engine rear plate and free rear engine support. Remove transmission-to-clutch housing capscrews, pull transmission out.

OVERDRIVE

OVERDRIVE: Warner R7C (Kick-down) Electric type. Complete assembly (with transmission) Warner Model No. AS2-T84G.
See Transmission Section for complete data.

►**1941 Production Change:** To correct free-wheel unit slippage when kicking down (also high speed vibration and grease leaks), free wheel unit bearing was changed to needle bearing type. *See Special Service Note in Transmission article in Transmission Section.*

Overdrive Solenoid—Delco-Remy Model 1118013.

Throttle Switch—Cole-Hersee No. 1687-S. Adjust so that shoe on accelerator linkage just contacts switch plunger with throttle valve wide open.

Control Relay—Auto-Lite No. HR-4201S (for 1941), No. HRB-4301 (1942). Fuse mounted in holder on relay. Fuse capacity, 14 ampere ('41), 20 ampere ('42).

Removal: Same as for regular transmission after disconnecting control cable and solenoid wires.

UNIVERSALS

UNIVERSAL JOINTS:—**Spicer Model 1268-102.** Needle bearing type. Two used.
See Universals Section for complete data.
NOTE—1 piece driveshaft used. Slip joint formed at rear of transmission ahead of front universal.

REAR AXLE

REAR AXLE:—**Spicer Model 23.** Semi-floating, Hypoid gear type with Hotchkiss drive.
See Rear Axle Section for complete data.
Ratio—4.10-1 Std. 4.56-1 Optl. (Std. on Overdrive).
NOTE—Ratio stamped on each gear and pinion.
Backlash—.005-.007". Shim adjustment.

Removal:—Hoist rear of car, disconnect propeller shaft at rear universal, hydraulic brake lines, brake cables, and shock absorbers. Remove spring U-bolts, disconnect rear spring shackles and withdraw axle.
NOTE—Use Puller HM-931 to remove axle shaft, Handle J-270-1 and disc J-270-13 to install inner shaft oil seal.

Wheel Bearing Adjustment:—Shims between backing plate and axle housing. With wheel and hub removed (use Hub Puller J-446) check endplay with dial indicator. To adjust, remove backing plate, add or remove shims (.003", .005", .010", .030" thick).
Endplay—.001-.005".

SHOCK ABSORBERS

SHOCK ABSORBERS: Houdaille. Dbl. acting, hydraulic

1941	BBFS-2 FRONT	BBDS REAR
1942	BBFS-5 FRONT	BBDS-2 REAR

See Shock Absorber Section for complete data.

FRONT SUSPENSION

Front Suspension:—Planar type independent suspension with transverse spring. Specifications below apply with car weight on wheels but without load.
See Front Suspension Section for complete data.
Kingpin Inclination—5½°.
Caster—1° to 2°.
Camber—¼° to ¾°. Shim adjustment.
Toe In—1/16-⅛". Adjust right reach rod only for toe-in. Left rod should be adjusted first for left wheel straight-ahead position (steering wheel centered).
Steering Geometry (toe-out on turns)—Inner wheel turned 22½-23°. Outer wheel turned 20°.

STEERING GEAR

Steering Gear: Ross T-12 Cam-&-Twin Lever type.
See Steering Gear Section for complete data.

BRAKES

BRAKES:—**Service.** Lockheed hydraulic, single anchor type. Hand lever applies rear service brakes.
See Brake Section for complete data.
Drum—Budd composite. Diameter 9".
Lining—Moulded. Length per shoe 10 3/16" (front), 7 13/16" (rear). Width 1¾". Thickness 3/16".
Clearance—.010" toe (top), .005" heel, for each shoe.
Hand Brake:—See Service Brakes (above).
Hill-Holder: Optional. *See Brake Section for data.*

HOOD LOCK: *See Studebaker Shop Notes for data.*

MODEL IDENTIFICATION

SERIAL NUMBER: Stamped on plate on left front door hinge post. First numbers as follows:

Year	Model	South Bend	Los Angeles
1941	11A	4,178,801	4,811,901
1942	12A	4,216,501	4,816,601

ENGINE NUMBER: On upper left side of cylinder block at center. First Nos.: H-122,201 ('41), H-164,301 ('42).

TUNE-UP

COMPRESSION:—**Ratio**—6.5-1 Std., 7.0-1 Optl. hds. Optl. 7.0-1 Cast Iron Hd. recommended for altitudes greater than 5000 ft. only.
Pressure—105 lbs. at 150 RPM (for Std. head).

VACUUM READING:—Steady 18-20" idling at 7-8 MPH.

FIRING ORDER: 1-5-3-6-2-4. See diagram.

SPARK PLUGS (1941): Champion No. 8. 18 mm. Metric. Gaps—.025".
NOTE—Champion No. 6 Com-62 recommended by car manufacturer for replacement use.

SPARK PLUGS (1942): Champion J-9. 14 mm. Metric. Gaps—.025".

IGNITION: See Coil, Condenser, and Distributor.
Breaker Gap—.020". Limits .018-.022".
Cam Angle—Closed 35° (IGW distr.), 38° (IGC distr.)
Automatic Advance—10° max. at 1400 RPM (distr.).
Vacuum Advance—6° distr. with 12" vacuum.

IGNITION TIMING: See Ignition Timing.
Std. Setting—2° BTDC. Vibration damper 'IGN' mark aligned with pointer on timing gear cover at front of engine. Use .020" feeler between advance arm and hold-down plate when tightening distributor clamp bolt (avoids binding vacuum control).

CARBURETION: See Carburetor & Carb. Equipment.
Idle Setting—Set idle adjusting screw midway between 'miss' and 'roll' points (½-1¼ turns open for Carter). Idle speed 8 MPH or 500-525 RPM.
Float Level (Carter)—¼" from top of machined projection on float bowl cover to top of soldered seam at free end of float (invert to check).
Float Level (Stromberg)—Fuel level ⅝" below top edge of float bowl.
Accelerating Pump—*Normal setting, center hole.*
Fuel Pump Pressure: 3½ lbs. maximum.

MANIFOLD HEAT CONTROL:—Thermostatic coil type.
Setting—To test coil tension, free outer end of coil from bracket on manifold. With valve closed, hooked end of coil should be approx. 90° from bracket with coil at 70°F. Replace coil if angle incorrect. If valve sticks, shaft should be lubricated with kerosene and baking soda solution (for shafts which are badly stuck, remove shaft and turn shaft down to give .005" clearance—shaft bore in manifold should not be disturbed). See that tension spring (from shaft to clip on manifold) is in place.
NOTE—Stainless steel bushings used in manifold for heater valve shaft mounting on 1942 models.

VALVES: See Valve Timing.
Tappet Clearance—.016" for all valves, Cold.

STARTING: See Battery, Starter, Generator, Regulator.

IGNITION

Ignition Switch:—Mitchellock Model 24-R, No. 8775.
Ignition Lock—Yale & Towne. Mitchell No. 8414.

COIL: Auto-Lite Model IG-4667. Service coil (less switch & cable) IG-3224VS. Mounted on engine.
Ignition Current—½-1½ amps. idling, 4-5 stopped.

CONDENSER: Auto-Lite No. IGB-1025 (for IGW distributor, external mounting). No. IG-2671 (IGC distributor, mounted inside distributor).
Capacity—.20-.25 microfarad.

DISTRIBUTOR: Auto-Lite Model IGW-4101 (1941-42), Model IGC-4802 (1942). Single breaker, 6 lobe cam, full automatic advance type with separate vacuum spark control and Octane Selector.
NOTE—IGC Distributor has condenser mounted inside distributor and eccentric screw breaker point adjustment.
Breaker Gap—Set at .020".
Cam Angle or Dwell (IGW)—35° Closed, 25° Open.
Cam Angle or Dwell (IGC)—38° Closed, 22° Open.
Breaker Arm Spring Tension—17-20 ounces.
Rotation—Counter-clockwise viewed from the top.

Automatic Advance

Distributor Degrees	Distributor R.P.M.	Engine Degrees	Engine R.P.M.
Start	400	0	800
2	600	4	1200
5	900	10	1800
8	1200	16	2400
10	1400	20	2800

Vacuum Spark Control A-L No. VC-4004—On hold-down plate and linked to advance plate. Provides additional advance at speeds above idling except when engine accelerated or operated with wide open throttle (spark retarded by return spring in unit).

Vacuum Advance

Distr. Degrees	Eng. Degrees	Vacuum (" of HG)
Start	0°	3"
2°	4°	5"
3°	6°	6"
5°	10°	10"
6°	12°	12"

Octane Selector—Provides manual adjustment at distributor (hold-down plate marked with scale) for variation in timing depending on fuel regularly used. See Ignition Timing following for adjustment.

Distributor Removal:—Mounted on left side of engine. To remove, disconnect vacuum line, take out bolt in clamp arm, lift distributor off.
Installation Note—When installing distributor,

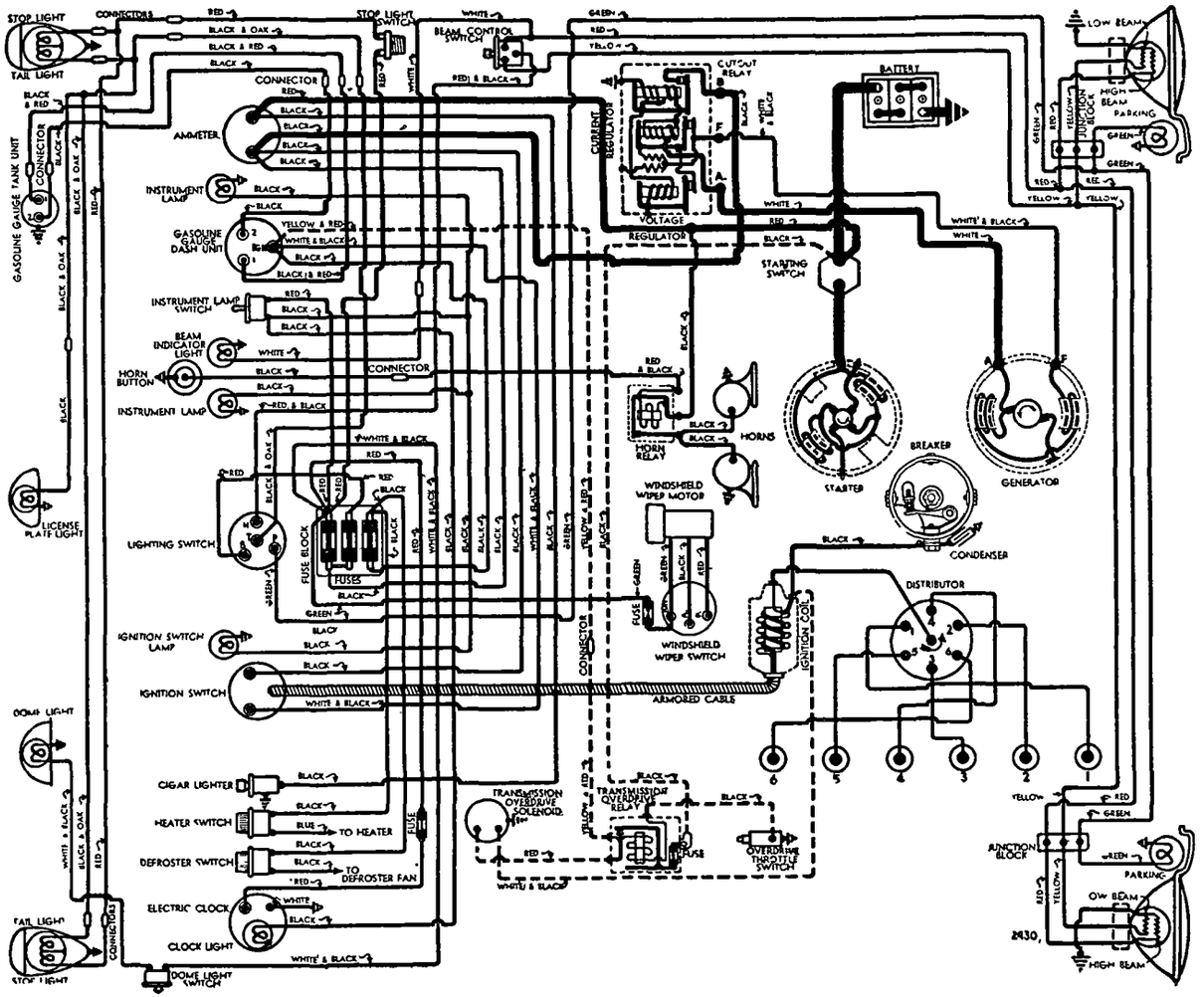

1941 MODELS

crank engine to firing position for #1 cylinder ('IGN' on vibration dampener in line with pointer on timing gear cover), sight down distributor shaft hole (distributor out) and see that distributor drive tongue in oil pump drive gear is 30° from the horizontal and offset toward the top, turn rotor to #1 segment, install distributor (insert .020" feeler between modifier control arm and clamp arm before tightening the clamp, to prevent binding), check timing.

IGNITION TIMING

IGNITION TIMING:—Initial setting for regular fuel (see Octane Selector Setting following for correction dependent on fuel regularly used).

	Flywheel Degrees	Piston Position
All Engines	2° BTDC	.0016" BTDC

Timing (with Neon Timing Light)—Neon Light No. 890 recommended. Clip Neon light lead in series with #1 spark plug, idle engine and direct light on vibration dampener (at pointer on timing gear cover). Loosen hold-down plate screw, center scale on pointer, tighten screw. Loosen clamp arm, rotate distributor until 'IGN' mark on vibration dampener lines up with pointer on timing gear cover. Insert .020" feeler between modifier control arm and clamp arm before tightening clamp (to insure clearance for modifier control arm). Check Octane Selector

Timing (without Neon Timing Light)—Turn engine over to firing position for #1 piston with 'IGN' mark on vibration dampener in line with pointer on timing gear cover and distributor rotor opposite #1 segment in distributor cap. Adjust distributor as directed above.

Octane Selector Setting—After setting ignition timing (above), loosen selector hold-down screw, advance selector (move toward 'A' end of scale) until motor 'pings' when it is hot and pulling hard. Then retard (move selector with pointer toward 'R' end of scale) until 'ping' just disappears.

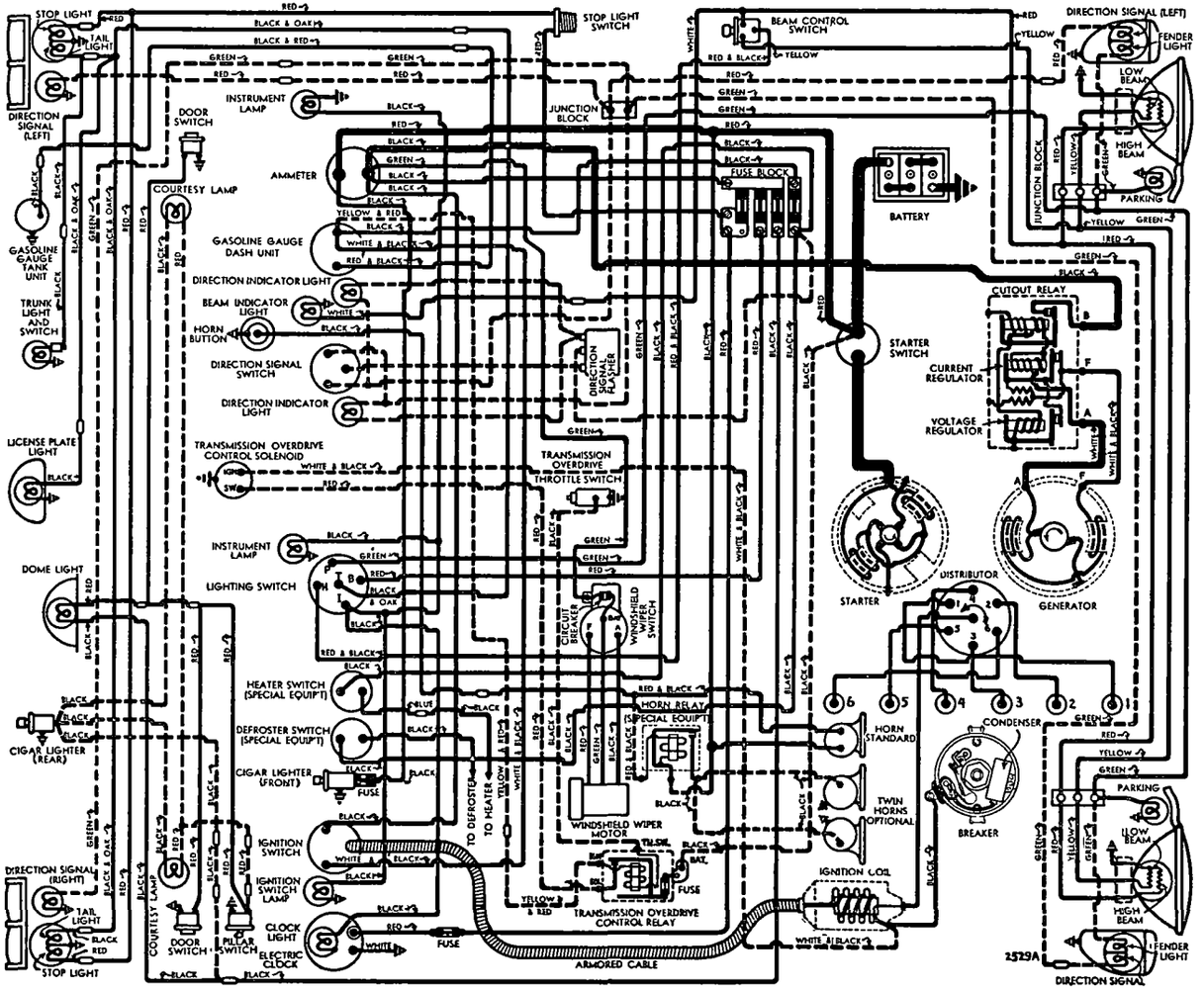

1942 M DELS

CARBURETOR

Carter (1941) Type WA-1, Model 410-S. Single barrel, 1¼" downdraft type with Carter Climatic Control. Casting No. 191 on flange.

Stromberg (1941-42) Model BXOV-26. Single barrel, 1¼" downdraft type with Stromberg automatic choke. Float bowl cover carries code No. 6-98 ('41), 6-98A ('42).

For complete data, refer to Carburetor Index.

Idle Adjustment—With engine warm and running at slow idle speed (choke valve wide open, fast idle inoperative), set throttle stopscrew for 8 MPH idle speed. Adjust idle screw until engine fires smoothly (½-1¼ turns open for Carter—turn screw in for leaner mixture). Readjust idle speed.

Accelerating Pump Setting—3 holes provided in pump arm (Carter), pump lever (Stromberg) for pump rod engagement. Set as follows:

Inner—Min.: Hot weather, hi-test gasoline.

Center—Med.: Std. all-year setting.

Outer—Max.: Cold weather, low-test gasoline.

Float Level (All Carburetors)—As follows:

Carter—¼" from top of projection on bowl cover to top of soldered seam on float at free end with needle valve seated (invert cover assembly to check).

Stromberg—Fuel level ⅝" below top edge of bowl with engine idling (3 lbs. pressure).

Metering Jets & Rods—***See Carter & Stromberg Jet Tables in Carburetor Section for data.***

Fast Idle (All Carburetors):—Integral types.

For complete data, refer to Carburetion Equip. Index.

Setting (Carter)—Adjust by bending connector link offset for ⅝" choke valve opening with throttle stopscrew against (not on) 1st step of fast idle cam.

Setting (Stromberg)—To check, hold throttle stopscrew against lowest step of fast idle cam, close choke valve until lip of next step on cam touches screw, check valve opening with 11/32" drill. Adjust by bending connector link.

Automatic Choke (All Carburetors):—Climatic Control (Carter), BXOV-26 Type (Stromberg). Built-in

For complete data, refer to Carburetion Equip. Index.

Setting (Carter)—Set coil housing 1 Notch Rich.

Setting (Stromberg)—'R' mark on thermostat cover in line with highest projection on housing. Shift to 'M' if engine loads up or overchokes. Use 'H' setting only if highly volatile fuels used.

CARB. EQUIPMENT

Air Cleaner:—AC #1528630 oil-wetted type standard. #1529840 heavy duty oil-bath type optional. Use Replacement Filter Element Assembly: Type #3 (for 1528630), #1542497 (for 1529840). NOTE—Service oil filler cap filter element at regular intervals.

Fuel Pump: AC Type 'AE' ('41), 'W' #1537378 ('42). Exchange #540. Diaphragm type fuel pump.

For complete data, refer to Carburetion Equip. Index.

Gasoline Gauge (1941): Auto-Lite electric. No. NG-9594D (dash unit), No. NG-9659T (tank unit).

For complete data, refer to Carburetion Equip. Index.

Gasoline Gauge (1942): Stewart-Warner elec. type. Studebaker Nos. 515506 (dash unit), 515684 (tank).

For complete data, refer to Carburetion Equip. Index.

BATTERY

Willard Type WHT-1-15R. 6 volt, 15 plate, 95 ampere hour capacity (20 hour rate).

Grounded Terminal—Positive (+) terminal.

Engine Ground—Strap at right front motor support.

Location—In engine compartment on left side.

C NTINUED N NEXT PAGE

CONTINUED FR M PRECEDING PAGE

STARTER

Auto-Lite Model MAW-4020 (LHD), No. MAW-4015 (RHD). Armature No. MAW-2091.
Drive—Outboard Barrel Type Bendix No. A-1729.
Rotation—Counter-clockwise at commutator end.
Brush Spring Tension—42-53 ozs. (new brushes).
Cranking Engine—130 RPM, 175 amperes, 5 volts.

Performance Data

Torque	R.P.M	Volts	Amperes
0 ft. lbs.	4900	5.5	65
2.75 "	1480	5.0	200
5.45 "	820	4.5	300
8.50 "	400	4.0	400
11.55 "	110	3.5	500
11.5 "	Lock	3.0	505
18.0 "	Lock	4.0	670

Removal:—Starter flange mounted on engine rear plate, on left side. To remove, take out flange mounting screws, remove starter assembly.
Starting Switch (MAW-4020):—Auto-Lite Model SW-4011. On left side of car below clutch pedal. Operated by depressing clutch pedal fully.
(MAW-4015)—R.B.M. Model 5607. Magnetic type. Mounted on starter and controlled by Douglas No. 5846 push-button switch on instrument panel.

GENERATOR

Auto-Lite Model GDZ-4805A. Armature No. GDZ-2006F (Std.), GEB-4806D (Spec. Equip.). Two brush shunt types with voltage and current control.
Charging Rate Adjustment—No adjustment at generator. Charging rate controlled by Voltage Regulator and maximum output by Current Regulator.
Maximum Charging Rate—35 amperes, 8.0 volts, 1900 Gen. RPM. or approx. 24 MPH. and above with load or discharged battery (Current Reg. Setting).

Performance Data—GDZ-4805A

Cold			Hot		
Amperes	Volts	R.P.M.	Amperes	Volts	R.P.M.
0	6.4	925	0	6.4	1000
4	6.6	1035	4	6.6	1120
8	6.75	1140	8	6.75	1235
12	6.95	1250	12	6.95	1350
16	7.15	1370	16	7.15	1460
20	7.3	1480	20	7.3	1590
24	7.5	1590	24	7.5	1730
28	7.7	1710	28	7.7	1900
32	7.9	1820	32	7.9	2090
35	8.0	1900	35	8.0	2250

Performance Data—GEB-4806D

0	6.4	560	0	6.4	600
4	6.6	630	4	6.6	675
8	6.8	700	8	6.8	750
12	7.0	775	12	7.0	840
16	7.2	845	16	7.2	930
20	7.4	920	20	7.4	1030
24	7.6	1000	24	7.6	1140
28	7.8	1075	28	7.8	1260
32	8.0	1150	32	8.0	1400

Rotation—Counter-clockwise at commutator end.
Brush Spring Tension—53 ozs. max. (GDZ), 64-68 ozs. (GEB) with new brushes.
Field Current—1.60-1.78 amperes at 6.0 volts.
Motoring Current—4.16-4.60 amperes (GDZ), 4.0-4.5 amperes (GEB) at 6.0 volts.
Removal:—Pivot mounted at left front of engine. To remove, take out pivot and clamp bolts.
Belt Adjustment:—Loosen pivot and clamp bolts, move generator out until ⅜-½" belt deflection midway between generator and fan pulleys is obtained.

REGULATOR

Auto-Lite Model VRP-4004-F (for GDZ Generator), VRP-4004C (GEB Gen.). Current-Voltage Type. Vibrating type voltage and current regulators in a single case.
For complete data, refer to Electrical Equipment Index.

Cutout Relay

Cuts In—6.4-6.6 volts.
Cuts Out—4.1-4.8 volts (approx. 4-6 amps. disch.).
Contact Gap—.015" minimum.
Air Gap—.031-.034" contacts open (hinge end).

Voltage Regulator

Setting—7.2-7.5 volts at 70° F. See Electrical Equipment Section for settings at other temperatures.
To Check (without breaking seals)—Connect ammeter in charging line at regulator 'B' terminal (use short heavy leads), voltmeter between 'B' terminal and ground. Operate generator at speed equivalent to 30 MPH., charging fully charged battery, until voltage steady. Voltage should agree with setting.
To Adjust (with cover removed)—Change regulator armature spring tension by bending lower spring hanger slightly. See Electrical Equipment Section.
Contact Gap—.012" min. (armature against stop pin).
Air Gap—.048-.052" with contacts just opening.

Current Regulator

Setting—(VRP-4004F) 34-36 amperes (marked '35'). **(VRP-4004C)** 31-33 amperes (marked '32').
To Check (without breaking seals)—Connect test meters as for voltage check (above). Operate generator at speed equivalent to 30 MPH. charging battery, turn on car lights and accessories or connect load (bank of headlamp bulbs etc.) between ammeter and battery so that generator charges at peak rate and Current Regulator operates. Current reading should agree with setting given above.
To Adjust (with cover removed)—Same as for Voltage Regulator (above).
Contact Gap & Air Gap—Same as Voltage Regulator.

LIGHTING

LIGHTING:—Headlamps—Corcoran-Brown 'Sealed Beam' type. ***For data, refer to Elec. Equip. Index.***
Headlamp Adjustment—Aim upper beam straight ahead (hot spot center 3" below lamp center hght.).
Beam Indicator—At top center of speedometer dial Lighted whenever Country (upper) beam in use.

Switches—1941

Lighting—H. A. Douglas. No. 5724.
Beam Selector—Delco-Remy No. 1997008.
Instrument—Cole-Hersee.

Switches—1942

Lighting—Douglas No. 5966. Studebaker No. 515324.
Beam Selector—Delco-Remy No. 1997008.
Stop Light—Studebaker No. 666858 (hydraulic type).
Dome Lamp Pillar—Studebaker No. 281130X1.
Door Switches—Studebaker No. 282674.
Direction Signal—Studebaker No. 515652.

Bulb Specifications

Position	Candlepower	Mazda No.
Headlamps	Sealed Beam	
Parking	1½	55
Front Dir. Sig. & Fender	21-3	1158
Instrument, Ign. Lock	1½	55
Direction Sig. Indicator	1½	55
Beam Indicator	1	51
Stop & Tail	21-3	1158
Rear Direction Signal	21	1129
Rear License	3	63
Dome	15	87
Courtesy	3	64

MISC. ELECTRICAL

FUSES: Lighting. Three or four 20 ampere fuses on fuse block behind instrument panel. Refer to wiring diagrams for electrical connections.
Overdrive Relay—14 amp. ('41), 20 ('42). On relay.
Windshield Wiper—14 amp. (Early '41), 20 (Late '41).
Klixon circuit-breaker (for 1942).
Clock—2 ampere. In clock lead connector.
HORNS & HORN RELAY: ***All data same as for 1941-42 Studebaker President. Refer to following car article.***

ENGINE

ENGINE SPECIFICATIONS:—6 cylinder, 'L' head type.
Bore—3 5/16". **Stroke**—4⅜".
Displacement—226.2 cubic ins. **Rated HP**—26.35.
Developed Horsepower—94 at 3600 RPM (Std. hd.).
Compression Ratio—6.5-1 Std., 7.0-1 Optl. CI hds.
Compression Pressure—105 lbs. at 150 RPM (std.hd.). ***See Studebaker Shop Notes for Cyl. Head installation.***
Vacuum Reading—18-20" steady idling at 8 MPH.

PISTONS (1941): Aluminum alloy, T-slot, cam ground, tin-plated. **Length** 3¾". **Weight** 14.4 oz. stripped.
Removal—Pistons and rods removed from above.
Clearance—Top .0125-0175". Skirt .0015".
Original Bore & Piston Sizes, Replacement Pistons:— ***See Studebaker Shop Notes for sizes and markings.***
Fitting New Pistons: Insert .002" x 1" feeler between piston and wall on camshaft side (pin parallel to crankshaft, T-slot away from camshaft). Pull to withdraw feeler must be between 14-19 lbs.
NOTE—Cylinder out-of-round or taper .002" max.
Installing Pistons: T-slot away from camshaft.

PISTONS (1942): New ferric alloy, cam ground type with 'Parco-Lubrized' finish. **Length**—3¾".
Weight—1.72-1.755 lbs. (with pin bushings).
Removal—Pistons and rods removed from above.
Clearance—Top .006-.009". Skirt (see Fitting Pistons).
Original Bore & Piston Sizes, Replacement Pistons:— ***See Studebaker Shop Notes for sizes and markings.***
Fitting New Pistons:—Fit pistons to 15-20 lbs. pull on .002" feeler, 1" wide, inserted between piston and wall on camshaft side at right angles to pin hole.
NOTE—Cylinder out-of-round or taper .002" max.
Installing Pistons:—Install early type pistons with pattern no. (on inner surface of piston near pin boss) toward front of engine. Install later type pistons with raised boss inside skirt toward camshaft.

PISTON RINGS:—3 coated rings, all above pin. #1 and #2 Compression (bevel face up), #3 Oil ring (revised slot on 1942 extends to gap ends).

Ring	Width	End Gap	Side Clearance
Compression	3/32"	.009-.014"	.0015-.002"
Oil Control	3/16"	.009-.014"	.0015-.002"

Replacement Rings:—Std. & .010", .020", .030" oversize.
PISTON PIN:—**Diameter**—.8741-.8745". **Length**—2⅞". Pin locked in connecting rod by lockscrew.
Pin Fit in Aluminum Pistons—.0001-.0003" clearance or light finger push fit at room temperature (70°F).
Pin Fit in Cast-Iron Pistons—.0004" clearance, pin size selected as follows: Select pin which gives wring fit at 70°F., proper pin size will be one which is .0004" less in diameter than pin giving wring fit).
Replacement Pins:—Std. & .0025", .005" oversize. Use Hone No. PH-1 to obtain proper piston fit.
CONNECTING ROD:—**Length**—8⅛". **Weight**—33.3 ozs.
Crankpin Journal Diameter—2.18675-2.18775".
Lower Bearing—Spun babbitt (cap bearings chamfered on upper edge). New rods furnished on exchange basis standard and .010", .020" undersize.
Clearance—.0005-.002". **Sideplay**—.005-.009".

ENGINE

CONTINUED FR M PRECEDING PAGE

NOTE—Use reamer HM-591-D to secure correct bearing clearance. Crankpin out-of-round, tapered or scored .0015"max.(Crankpin Turning Tool #1-C).

Bearing Adjustment:—None(no shims). Replace rods. *See Studebaker Shop Notes for 'Palnut' installation.*

Installing Rods:—Narrow portion of bearing to front (#1, 3, 5), to rear (#2, 4, 6). Numbers on rods and caps must be together and installed in same numbered cylinder with numbers and oil hole in lower end of rod toward camshaft side of engine.

CRANKSHAFT:—4 bearing, 5 integral counterweights. Vibration damper mounted on forward end of shaft. *See Studebaker Shop Notes for Vibration Damper data.*
Journal Diameter—2.4995-2.5000".
Bearings—Removable steel-backed, babbitt-lined.
Clearance—.0005-.0025".

Adjustment:—None (no shims.) Replace bearings (std. size, .010", .020", .030" undersize).

End Thrust:—Thrust plate assembled between front bearing and crankshaft gear. Controlled by shims (furnished .003", .005", .007" thick) between plate and journal face. **Endplay**—.003-.006".

CAMSHAFT:—Four bearing with helical gear drive. *See Studebaker Shop Notes for Camshaft Removal data.*
Journal Diameters—#1, 1.9975-1.998"; #2, 1.96625-1.967"; #3, 1.93575-1.9365"; #4, 1.12325-1.124".
Bearings—Split steel-backed, babbitted bushings.
NOTE—Align bushing with oil hole in block.
Clearance—.00075-.00225"(#1),.001-.00275"(others).

End Thrust:—Taken by thrust plate assembled on front face of engine behind camshaft gear. Spacer assembled back of gear hub. **Endplay**—.004-.008".

Timing Gears:—Crankshaft (cast-iron), Camshaft (Celeron with steel hub). **Backlash** .001-.003". *Refer to Studebaker Shop Notes for Timing Gear Removal and Replacement Camshaft Gear size selection.*

Camshaft Setting:—Mesh marked camshaft gear tooth between 2 marked teeth on crankshaft gear.

VALVES:—	Head Diameter	Stem Diameter	Length
Intake	1 15/32"	11/32"	5 7/32"
Exhaust	1 9/32"	11/32"	5 7/32"

	Seat Angle	Lift	Stem Clearance
All Valves	45°	11/32"	.0015-.0035"

Valve Guides:—Pressed in block from above (1 5/32" below upper edge of valve seat) with stepped end down. Ream to inside diameter of .3425-.3445".

Valve Springs:—Install with closed-coil up and dampener on top of spring. Replace springs if 10% weak (test with Tool U-15). **Free Length**—2½".

	Spring Pressure	Spring Length
Valve Closed	54-60 lbs.	2 3/32"
Valve Open	125-135 lbs.	1¾"

Valve Lifters:—Barrel type (remove from above with valve, valve spring and adjusting screw removed). **Diameter** .9985-.999". **Clearance** .0005-.00175". Lifters furnished .0005", .001" oversize. *Refer to Studebaker Shop Notes for Valve Lifter Tension Spring data.*

VALVE TIMING

Tappet Clearance:—.016" (cold) all valves. Remove hood side panel for access to valves.

Valve Timing:—See Camshaft Setting above.
Intake Valves—Open 15° BTDC. Close 49° ALDC.
Exhaust Valves—Open 54° BLDC. Close 10° ATDC.
Valv Timing Check—With .020" tappet clearance #1 intake valve should open with #1 piston 15° or .0942" BTDC with vibration damper mark 'IN.OP1-6/' aligned with pointer n timing gear cover. Reset tappet clearance .016" (cold).

LUBRICATION

LUBRICATION:—Pressure (pump on right of engine). *See Studebaker Shop Notes for Oil Pump installation.*
Oil Pan Note—Place #2 piston at approx. top dead center to facilitate Oil Pan Removal & Installation.
Normal Oil Pressure:—40 lbs. at 25-30 MPH.
Oil Pressure Relief Valve:—On lower right front corner of engine. Opens at 30-40 lbs. Not adjustable.
Crankcase Capacity:—6 quarts.

COOLING

COOLING SYSTEM:—**Capacity**—13 quarts.
Water Pump:—Centrifugal with adjustable packing, lubricant fitting and grease cup for bushings. *See Water Pump Section for complete data.*
Thermostat:—Bishop & Babcock or Fulton. In cylinder head outlet. Install with bellows down.
Setting—Starts to open 151° F. to 155° F.
Temperature Gauge (1941): Auto-Lite (Motometer) vapor tension type. A-L Part No. H-9593. *See Miscellaneous Section for complete data.*
Temperature Gauge (1942): Stewart-Warner type. Studebaker Part No. 515505.

CLUTCH

CLUTCH:—**Borg & Beck Model 9A7 (all cars).** Clutch assembly No. 943 or 963. Single plate, dry disc type. *See Clutch Section for complete data.*
Facings—Molded-metallic (spiral-grooved), 2 used. Inside Diam. 6". Outside Diam. 9¼". Thickness ⅛".
Pedal Adjustment:—Free travel 1" min. Turn adjusting sleeve on pedal connector link. On cars with Hill-holder (NoRol), check when pedal adjusted and see that brakes release just as clutch engages.
Removal:—Remove transmission (see below), take off clutch housing, take out 6 mounting screws in clutch cover flange, lift clutch off. *Refer to Studebaker Shop Notes for Clutch Release Shaft Lubrication.*

TRANSMISSION

TRANSMISSION:—**Warner**—Model AS1-T86D (Std.), AS2-T86D, Type R7C (optl. overdrive with electrical 'kick-down' control). All helical gear type, synchromesh (second & high), sliding gear (low & reverse). *See Transmission Section for complete data.*
Transmission Control:—Mechanical steering col. shift. *See Transmission Section for complete data.*
Removal:—Disconnect rear universal and withdraw propeller shaft from transmission. Disconnect shift levers and speedometer cable at transmission. Place jack under engine rear plate and free rear engine support. Remove transmission-to-clutch housing capscrews, pull transmission out to rear.

OVERDRIVE

OVERDRIVE: Warner R7C (Kick-down) Electric type. Complete assembly (with transmission) Warner Model No. AS2-T86D. *See Transmission Section for complete data.*
►**1941 Production Change:** To correct free-wheel unit slippage when kicking down (also high speed vibration and grease leaks), free wheel unit bearing was changed to needle bearing type. *See Special Service Note in Transmission article in Transmission Section.*
Overdrive Solenoid—Delco-Remy Model 1118013.
Throttle Switch—Cole-Hersee No. 1687-S. Adjust so that shoe on accelerator linkage just contacts the switch plunger with throttle valve wide open (switch should operate only after accelerator pedal is depressed past the wide open throttle position).
Control Relay—Auto-Lite N . HR-4201S (for 1941), No. HRB-4301 (1942). Fuse mounted in holder on relay. Fuse capacity, 14 ampere ('41), 20 ampere ('42).
Removal: Same as for regular transmission after disconnecting control cable and solenoid wires.

UNIVERSALS

UNIVERSAL JOINTS:—**Spicer 1268-102.** Needle bearing. *See Universals Section for complete data.*
NOTE—1 piece driveshaft used. Slip joint formed at rear of transmission ahead of front universal.

REAR AXLE

REAR AXLE:—**Spicer Model 41-2.** Semi-floating, hypoid gear type with Hotchkiss drive. *See Rear Axle Section for complete data.*
Ratio—4.55-1 (Std. '41, Optl. or with Overdrive '42), 4.09-1 (Std. '42), 4.82-1 (Optl. '41).
NOTE—Ratio stamped on each gear and pinion.
Backlash—.005-.007". Shim adjustment.
Removal:—Hoist rear of car, disconnect propeller shaft at rear universal, hydraulic brake lines, brake cables, and shock absorbers. Remove spring U-bolts, disconnect rear spring shackles and withdraw axle.
NOTE—Use Puller HM-931 to remove axle shaft.
Wheel Bearing Adjustment:—Shims between backing plate and axle housing. With wheel and hub removed (use Hub Puller ST-500) check endplay with dial indicator. To adjust, remove backing plate, add or remove shims (.003", .005", .010", .030" thick).
Endplay—.001-.005".

SHOCK ABSORBERS

SHOCK ABSORBERS: Houdaille. Dbl. acting, hydraulic, adjustable type (thermostatic control on rear).
1941.....BBFS-2 FRONT.....ACHS-2 REAR
1942.....BBFS-4 FRONT.....ACHS-3 REAR
See Shock Absorber Section for complete data.

FRONT SUSPENSION

Front Suspension:—Planar type independent suspension with transverse spring. Specifications below apply with car weight on wheels but without load. *See Front Suspension Section for complete data.*
Kingpin Inclination—5½°.
Caster—Negative ¼° to Positive ¾°.
Camber—¼° to ¾°. Shim adjustment.
Toe In—1/16-⅛". Adjust right reach rod only for toe-in. Left rod should be adjusted first for left wheel straight-ahead position (steering wheel centered).
Steering Geometry (toe-out on turns)—Inner wheel turned 22-22½°. Outer wheel 20°.

STEERING GEAR

Steering Gear: Ross T-14 Cam-&-Twin Lever type. *See Steering Gear Section for complete data.*

BRAKES

BRAKES:—**Service.** Lockheed hydraulic, double anchor type. Hand lever applies rear service brakes. *See Brake Section for complete data.*
Drum—Budd composite. Diameter 11".
Lining—Moulded. Width 2". Thickness 3/16". Length per shoe (each wheel): 11⅛" front, 8 9/16" rear.
Clearance—.010" toe (top), .005" heel, for each shoe.
Hand Brake:—See Service Brakes (above).
Hill-Holder: Standard. *See Brake Section for data.*

MISC. MECHANICAL

WINDSHIELD WIPER: Auto-Lite Electric types.
Model EWD-5002 (1941), EWH-5004 (1942).
20 ampere fuse (supersedes 14 ampere on '41 type), Klixon circuit-breaker used on 1942 type.
See Miscellaneous Section for complete data.

HOOD LOCK: *See Studebaker Shop Notes for data.*

MODEL IDENTIFICATION

SERIAL NUMBER: Stamped on plate on left front door hinge post. First numbers as follows:

Year	Model	South Bend	Los Angeles
1941	7C	7,139,101	7,803,901
1942	8C	7,145,501	7,804,601

ENGINE NUMBER: On upper left side of cylinder block at center. **First Nos. B-45,001 ('41), B-52,101 ('42).**

TUNE-UP

COMPRESSION:—Ratio—6.5-1 standard, 7.0-1 optional Optl. 7.0-1 Cast Iron Hd. recommended for altitudes greater than 5000 ft. only.
Pressure—105 lbs. at 150 RPM cranking speed.

VACUUM READING:—Steady 18-20" idling at 8 MPH.

FIRING ORDER:—1-6-2-5-8-3-7-4. See diagram.

SPARK PLUGS (1941): Champion No. 8. 18 mm. Metric. Gaps—.025".
NOTE—Champion No. 6 Com-62 recommended by car manufacturer for replacement use.

SPARK PLUGS (1942): Champion J-9. 14 mm. Metric. Gaps—.025".

IGNITION: See Coil, Condenser, and Distributor.
Breaker Gap—.020", Cam Angle—36° Closed.
Synchronization—Set movable contacts to open 45° after stationary contacts.
Automatic Advance—13½° max. at 1800 RPM (distr.)
Vacuum Advance—6° distr. with 12" vacuum.

IGNITION TIMING: See Ignition Timing.
Std. Setting—TDC. Vibration dampener mark 'U.D.C. 1-8' aligned with pointer at front of engine for stationary contacts (use .020" feeler between advance arm and hold-down plate when tightening clamp bolt to avoid binding vacuum control). Use mark 'U.D.C.3-6' for movable contacts (¼ revolution from 'U.D.C.1-8').

CARBURETION: See Carburetor & Carb. Equipment.
Idle Setting—Set idle adjusting screws midway between 'miss' and 'roll' points (¼-1¼ turns open on Carter). Idle speed 450 RPM or 8 MPH.
Float Level (Carter)—3/16" from top of float to gasket seat on cover (valve seated, invert to check).
Float Level (Stromberg)—Fuel level 5/8" below top edge of float bowl.
Accelerator Pump—Inner hole (short stroke) for minimum charge, Outer hole (long stroke) max charge.
Fuel Pump Pressure: 3½ lbs. maximum.

MANIFOLD HEAT CONTROL:—Thermostatic coil type.
Setting—To test coil tension, free outer end of coil from bracket on manifold. With valve closed, hooked end of coil should be approx. 90° from bracket with coil at 70°F. Replace coil if angle incorrect. If valve sticks, shaft should be lubricated with kerosene and baking soda solution (for shafts which are badly stuck, remove shaft and turn shaft down to give .005" clearance—shaft bore in manifold should not be disturbed). See that tension spring (from shaft to clip on manifold) is in place.
NOTE—Stainless steel bushings used in manifold for heater valve shaft mounting on 1942 models.

VALVES: See Valve Timing.
Tappet Clearance—.016" for all valves, Cold.

STARTING: See Battery, Starter, Generator, Regulator.

IGNITION

Ignition Switch:—Mitchellock Model 24-R, No. 8777.
Ignition Lock—Yale & Towne. Mitchell No. 8414.

COIL: Auto-Lite Model IG-4647. Service coil (less switch & cable) CE-3224JS. Mounted on dash.
Ignition Current—½-1½ amps. idling, 4-5 stopped.

CONDENSER: Auto-Lite Part No. IGB-1025C (for IGH-4029 distributor, condenser mounted outside), No. IGH-3076 (for IGH-4101 distributor, condenser on breaker plate).
Capacity—.20-.25 microfarad.

DISTRIBUTOR: Auto-Lite Model IGH-4029 (for 1941), IGH-4101 (1942). Double breaker, 4 lobe cam, full automatic advance types with separate vacuum spark control and Octane Selector.
Firing Interval—Movable contacts open 45° (distributor degrees) after fixed set.
NOTE—Contacts must be synchronized.
Breaker Gap—Set at .020".
Cam Angle or Dwell—36° closed, 9° open (both sets operating together when properly synchronized).
Breaker Arm Spring Tension—17-20 ounces.
Rotation—Clockwise viewed from above.

Automatic Advance

Distributor Degrees	Distributor R.P.M	Engine Degrees	Engine R.P.M.
Start	300	0	600
3	630	6	1260
7	1070	14	2140
10	1410	20	2820
13.5	1800	27	3600

Vacuum Spark Control A-L No. VC-4012.—On hold-down plate and linked to advance plate. Provides additional advance at speeds above idling except when engine accelerated or operated with wide open throttle (spark retarded by return spring in unit).

Vacuum Advance

Distr. Degrees	Eng. Degrees	Vacuum (" of HG)
Start	0	3"
3	6	6"
6	12	12"

Octane Selector—Provides manual adjustment at distributor for timing variation. See Ignition Timing

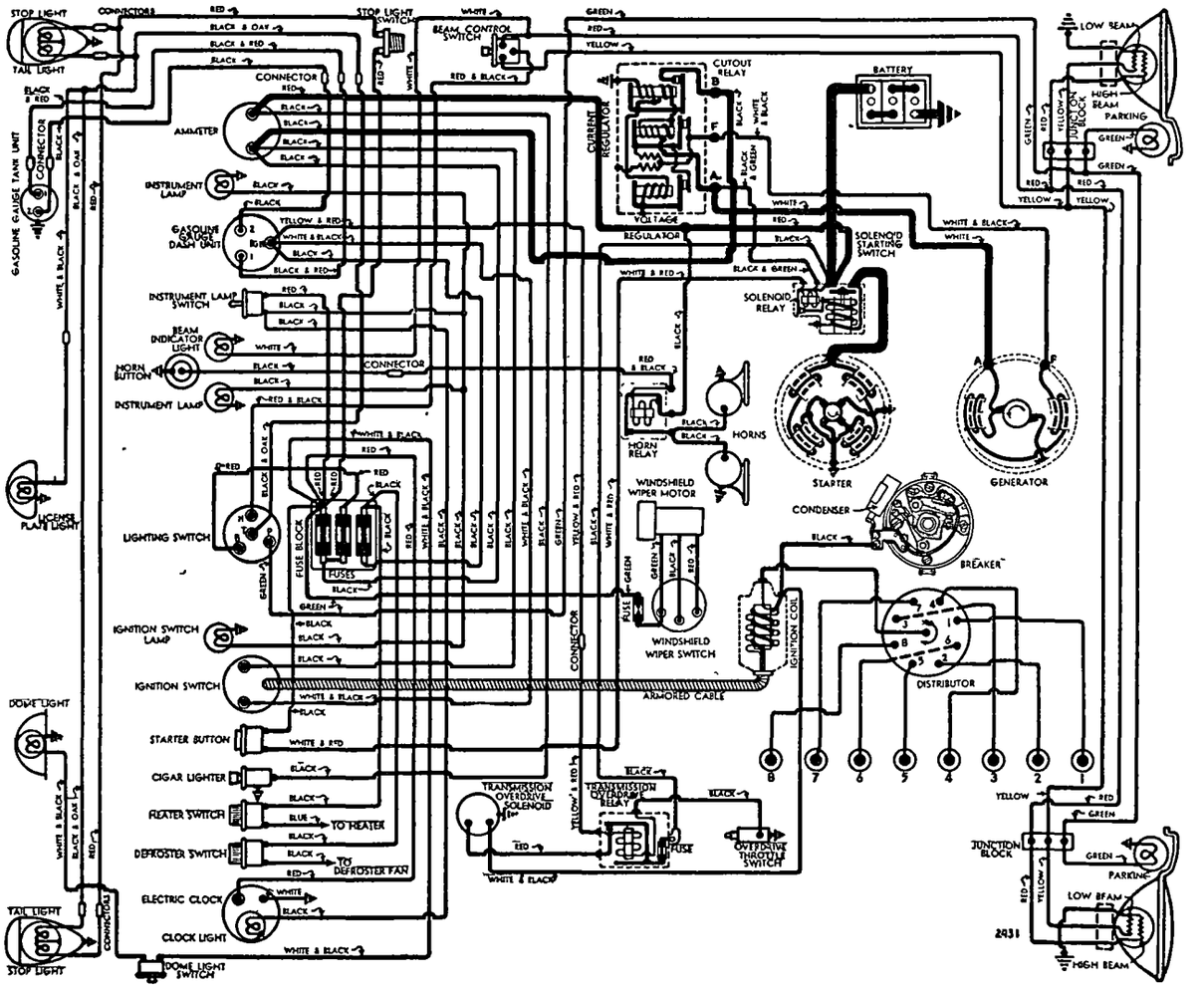

1941 MODELS

Distributor Removal:—Mounted on right side of cylinder head. To remove, disconnect vacuum line, take out bolt in clamp arm, lift distributor off.

Installation Note—When installing distributor, crank engine to firing position for #1 cylinder ('U.D.C1-8' mark on vibration dampener in line with pointer on timing gear cover), groove in upper end of distributor drive shaft should be at right angles with camshaft and offset to rear, turn rotor to #1 segment, install distributor (insert .020" feeler between modifier control arm and clamp arm to prevent binding), tighten clamp, check timing.

IGNITION TIMING

IGNITION TIMING:—Standard setting as follows (see Octane Selector Setting following for correction dependent on fuel regularly used):

Flywheel Degrees	Piston Position
0° (at TDC)	.0000" TDC

Timing (Stationary Contacts)—With #1 piston on compression, turn engine over until 'U.D.C.1-8' mark on vibration dampener lines up with pointer on timing gear cover. Loosen hold-down plate screw, center pointer on scale, tighten screw. Loosen advance arm clamp bolt, rotate distributor until contacts just open, tighten clamp bolt. Then synchronize movable contacts.

Timing (with Neon Timing Light)—Neon Light No. 890 recommended by car manufacturer. Clip Neon Light lead in series with #1 spark plug. Idle engine and adjust distributor as directed above.

Synchronization (On Engine)—Turn engine over 90° to #6 firing position with vibration dampaner mark 'U.D.C.3-6' lined up with pointer on timing gear cover. Loosen 2 lockscrews on movable subplate carrying second set of contacts, shift subplate by placing screwdriver between knob and plate and turning screwdriver until contacts begin to open, tighten lockscrews.

Octane Selector Setting—After setting ignition timing, loosen selector screw, advance pointer toward 'A' end of scale until motor 'pings' when it is hot & pulling hard, then retard until 'ping' disappears.

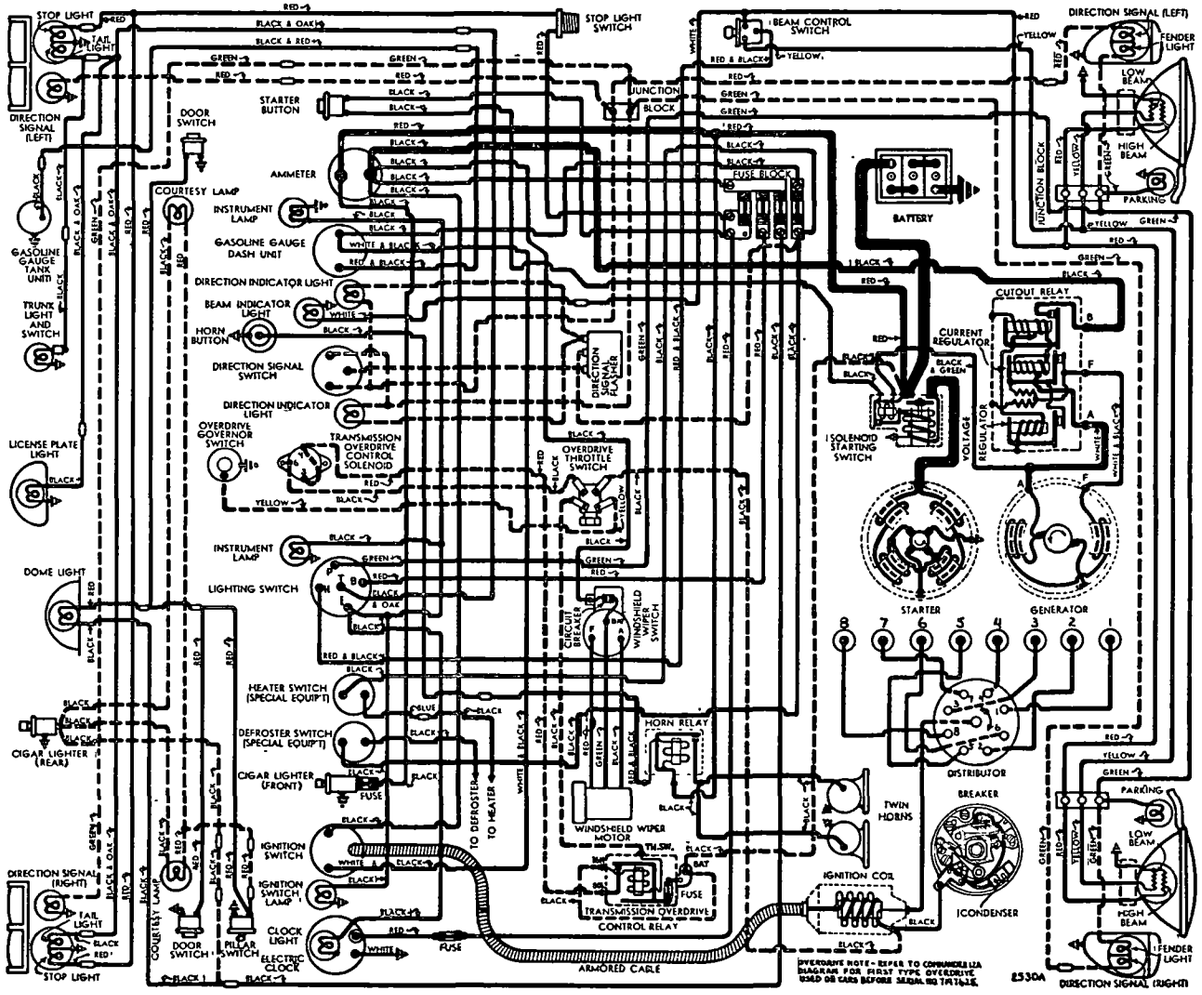

1942 M DELS

See 1941 Diagram for R7C Overdrive Circuit. R9 Overdrive Circuit shown above

CARBURETOR

Carter (1941) Type WDO, Model 409-S. Double barrel, 1¼" downdraft with Carter Climatic Control.
For complete data, refer to Carburetor Index.

Stromberg (1941-42) Model AAV-26. Double barrel, 1¼" downdraft type with Stromberg Automatic Choke. Float bowl cover carries Code No. 6-97, 6-97A ('41), 6-97C ('42).
For complete data, refer to Carburetor Index.

►**Stromberg AAV-26 (Code 6-97) change to correct acceleration flat spot**—*See Stromberg AAV-26 carburetor in Carburetor Section.*

Idle Adjustment—With engine warm and running at slow idle speed (choke valve wide open, fast idle inoperative), set throttle stopscrew for 8 MPH idle speed. Adjust idle adjusting screw for each barrel (in succession) until engine fires smoothly (¼-1¼ turns open for each screw on Carter—turn screws in for leaner mixture). Readjust idle speed.

Accelerating Pump Setting—Two holes provided:
Inner Hole (min. stroke)—Normal Setting.
Outer Hole (max.)—If greater charge required.

Float Level (All Carburetors)—As follows:
Carter—3/16" from top of float to machined surface of bowl cover (remove gasket, invert to check).
Stromberg—Fuel level ⅝" below top edge of bowl with engine idling (3 lbs. pressure) or even with bottom of inspection plug hole on side of bowl.

Metering Jets & Rods—*See Carter & Stromberg Jet Tables in Carburetor Section for complete data.*

Fast Idle:—Integral (built-in each carburetor).
For complete data, refer to Carburetion Equip. Index.
Setting (Carter)—Adjust fast idle screw for .018" throttle valve opening with choke valve closed.
Setting (Stromberg)—Hold throttle stopscrew against high lobe of fast idle cam, move choke valve toward closed position as far as possible, check valve opening. Adjust by bending fast idle connector rod for 7/64" choke valve opening.

Automatic Choke:—Climatic Control (Carter), AAV-26 type (Stromberg). Built-in carburetor.
For complete data, refer to Carburetion Equip. Index.
Setting (Carter)—Set coil housing 1 Notch Rich.
Setting (Stromberg)—'R' mark on thermostat cover in line with highest projection on housing. Shift to 'M' if engine loads up or overchokes. Use 'H' setting only if highly volatile fuels used.

CARB. EQUIPMENT

Air Cleaner:—AC #1529907 oil-wetted type standard. #1529745 heavy duty oil-bath type optional. Use Replacement Filter Element Assembly: Type #3 (for 1529907), #1529767 (for 1529745). NOTE—Service oil filler cap filter element at regular intervals.

Fuel Pump: AC Type 'AE' ('41), 'E' #1523926 ('42). Exchange #528. Diaphragm type fuel pump.
For complete data, refer to Carburetion Equip. Index.

Gasoline Gauge (1941): Auto-Lite electric. No. NG-9594D (dash unit), No. NG-9659T (tank unit).
For complete data, refer to Carburetion Equip. Index.

Gasoline Gauge (1942): Stewart-Warner elec. type. Studebaker Nos. 515506 (dash unit), 515684 (tank).
For complete data, refer to Carburetion Equip. Index.

C NTINUED N NEXT PA E

CONTINUED FROM PRECEDIN PAGE

BATTERY

Willard Type WHT-1-15R. 6 volt, 15 plate, 95 ampere hour capacity (20 hour rate).
Grounded Terminal—Positive (+) terminal.
Engine Ground—Separate strap connector from right front corner of engine to frame.
Location—In engine compartment on left side.

STARTER

1941—Auto-Lite MAX-4044. Armature MAW-2030.
1942—Auto-Lite MAX-4051. Armature MAW-2030.
Drive—Overrunning clutch (solenoid pinion shift).
Rotation—Counter-clockwise at commutator end.
Brush Spring Tension—42-53 ozs. (new brushes).

Performance Data

Torque	R.P.M.	Volts	Amperes
0 ft. lbs.	5300	5.5	65
2.75 "	1630	5.0	200
5.5 "	970	4.5	300
8.7 "	600	4.0	400
12.0 "	300	3.5	500
16.5 "	Lock	3.0	640
25.0 "	Lock	4.0	880

Removal:—Flange mounted on engine rear plate at left side. To remove, take out flange mounting screws, take off starter and switch assembly.
Starting Switch: Auto-Lite Solenoid No. SS-4702. Controlled through relay by pushbutton located on instrument panel (1941), on toeboard for clutch pedal starting (on 1942 Models).
For complete data, refer to Electrical Equipment Index.

GENERATOR

Auto-Lite Model GDZ-4805A. Armature No. GDZ-2006F. Two brush type with current-voltage control.
Charging Rate Adjustment—No adjustment at generator. Charging rate controlled by Voltage Regulator and maximum output by Current Regulator.
Maximum Charging Rate—35 amperes, 8.0 volts, 1800 Gen. RPM. or approx. 29 MPH. and above with load or discharged battery (Current Reg. Setting).

Performance Data

Cold Amperes	Volts	R.P.M.	Hot Amperes	Volts	R.P.M.
0	6.4	925	0	6.4	1000
4	6.6	1035	4	6.6	1120
8	6.75	1140	8	6.75	1235
12	6.95	1250	12	6.95	1350
16	7.15	1370	16	7.15	1460
20	7.3	1480	20	7.3	1590
24	7.5	1590	24	7.5	1730
28	7.7	1710	28	7.7	1900
32	7.9	1820	32	7.9	2090
35	8.0	1900	35	8.0	2250

Rotation—Counter-clockwise at commutator end.
Brush Spring Tension—53 ozs. max. (new brushes).
Field Current—1.60-1.78 amperes at 6.0 volts.
Motoring Current—4.16-4.60 amperes at 6.0 volts.
Removal:—Pivot mounted at left front of engine. To remove, take out pivot and clamp bolts.
Belt Adjustment:—Loosen pivot and clamp bolts, move generator out until ⅜-½" belt deflection midway between generator and fan pulleys is obtained.

REGULATOR

Auto-Lite Model No. VRP-4004-F. Current-Voltage type. In a single case mounted on engine dash.
For complete data, refer to Electrical Equipment Index.

Cutout Relay

Cuts In—6.4-6.6 volts.
Cuts Out—4.1-4.8 volts (approx. 4-6 amps. disch.).
Contact Gap—.015" minimum.
Air Gap—.031-.034" with contacts open (check at hinge end of core).

Voltage Regulator

Setting—7.2-7.5 volts at 70°F.
To Check (without breaking seals)—Connect ammeter in charging line at regulator 'B' terminal (use short heavy leads), voltmeter between 'B' terminal and ground. Operate generator at speed equivalent to 30 MPH., charging fully charged battery, until voltage steady. Voltage should agree with setting.
To Adjust (with cover removed)—Change regulator armature spring tension by bending lower spring hanger slightly. See Electrical Equipment Section.
Contact Gap—.012" min. (armature against stop pin).
Air Gap—.048-.052" with contacts just opening.

Current Regulator

Setting—34-36 amperes (marked '35' on the cover).
To Check (without breaking seals)—Connect test meters as for voltage check (above). Operate generator at speed equivalent to 30 MPH. charging battery, turn on car lights and accessories or connect load (bank of headlamp bulbs etc.) between ammeter and battery so that generator charges at peak rate and Current Regulator operates. Current reading should agree with setting given above.
Adjustment, Contact Gap, Air Gap—Same as given for Voltage Regulator above.

LIGHTING

LIGHTING:—Headlamps—Corcoran-Brown 'Sealed Beam' type. ***For data, refer to Elec. Equip. Index.***
Headlamp Adjustment—Aim upper beam straight ahead (hot spot center 3" below lamp center hght.).
Beam Indicator—At top center of speedometer dial. Lighted whenever Country (upper) beam in use.

Switches—1941

Lighting—H. A. Douglas. No. 5724.
Beam Selector—Delco-Remy No. 1997008.
Instrument—Cole-Hersee.

Switches—1942

Lighting—Douglas No. 5966. Studebaker No. 515324.
Beam Selector—Delco-Remy No. 1997008.
Stop Light—Studebaker No. 666858 (hydraulic type).
Dome Lamp Pillar—Studebaker No. 281130X1.
Door Switches—Studebaker No. 282674.
Direction Signal—Studebaker No. 515652.

Bulb Specifications

Position	Candlepower	Mazda No.
Headlamps	Sealed Beam	
Parking	1½	55
Front Dir. Sig. & Fender	21-3	1158
Instrument, Ign. Lock	1½	55
Direction Sig. Indicator	1½	55
Beam Indicator	1	51
Stop & Tail	21-3	1158
Rear Direction Signal	21	1129
Rear License	3	63
Dome	15	87
Courtesy	3	64

MISC. ELECTRICAL

FUSES: Lighting. Three or four 20 ampere fuses on fuse block behind instrument panel. Refer to wiring diagrams for electrical connections.
Overdrive Relay—14 amp. ('41), 20 ('42). On relay.
Windshield Wiper—14 amp. (Early '41), 20 (Late '41). Klixon circuit-breaker (for 1942).
Clock—2 ampere. In feed wire to clock.
HORNS: Delco-Remy. Low Note: 1999511 ('41), 1999541 ('42). High Note: 1999512 ('41), 1999542 ('42). Electric type twin horns with relay.

Type	Current (at 6 volts)	Air Gap
1999511, 41 (Low)	19-21 amperes	.044-.049"
1999512, 42 (High)	18-20 amperes	.034-.039"

Horn Relay:—R-B-M Model 6003.
Contacts Close—3-4 volts (with relay upright).

ENGINE

ENGINE SPECIFICATIONS:—8 cylinder, 'L' head typ .
Bore—3 1/16". **Stroke**—4¼".
Displacement—250.4 cubic inches. **Rated HP**—30.
Developed Horsepower—117 HP at 3800 RPM.
Compression Ratio—6.5-1 Std., 7.0-1 Optl. CI hds.
Compression Pressure—105 lbs. at 150 RPM (Std.hd.). ***See Studebaker Shop Notes for Cyl. Head installation.***
Vacuum Reading—18-20" steady idling at 8 MPH.

PISTONS (1941): Aluminum alloy, T-slot, cam ground, tin-plated. **Length** 3¾". **Weight** 13.6 oz. stripped.
Removal—Pistons and rods removed from above.
Clearance—Top .0115-.0165". Skirt .0015" selective.
Original Bore & Piston Sizes, Replacement Pistons:—***See Studebaker Shop Notes for sizes and markings.***
Fitting New Pistons: Insert .003" x 1" feeler between piston and wall on camshaft side (pin parallel to crankshaft, T-slot away from camshaft). Pull to withdraw feeler must be between 7-15 lbs.
Installing Pistons: T-slot away from camshaft.

PISTONS (1942): New ferric alloy, cam ground type with 'Parco-Lubrized' finish. **Length**—3¾".
Weight—1.505-1.556 lbs. (with pin bushings).
Removal—Pistons and rods removed from above.
Clearance—Top .006-.009". Skirt (see Fitting Pistons).
Original Bore & Piston Sizes, Replacement Pistons:—***See Studebaker Shop Notes for sizes and markings.***
Fitting New Pistons—Fit pistons to 10-15 lbs. pull on .002" feeler, 1" wide, inserted between piston and wall on camshaft side at right angles to pin hole.
Installing Pistons:—Install early type pistons with pattern no. (on inner surface of piston near pin boss) toward front of engine. Install later type pistons with raised boss (inside piston skirt on level of pin holes) toward camshaft side.

PISTON RINGS:—3 coated rings, all above pin. #1 and #2 Compr. ring installed with step down. New thin oil ring & expander used beginning with '42 Eng. No. B-52783 (expander used on all but early '42).

Ring	Width	End Gap	Side Clearance
Compression	⅛"	.013-.021"	.0015-.002"
Oil Control	3/16"	.013-.021"	.0015-.002"

Replacement Rings:—Std. & .010", .020", .030" oversize.

PISTON PIN:—Diameter—.8741-.8745". **Length**—2⅜".
Pin locked in connecting rod by lockscrew.
Pin Fit in Aluminum Pistons—.0001-.0003" clearance or light finger push fit at room temperature (70°F).
Pin Fit in Cast-Iron Pistons—.0004" clearance, pin size selected as follows: Select pin which gives wring fit at 70°F., proper pin size will be one which is .0004" less in diameter than pin giving wring fit).
Replacement Pins:—Std. & .0025", .005" oversize. Use Hone No. PH-1 to obtain proper fit in piston.
NOTE—Pins are fitted in replacement pistons.

CONNECTING ROD:—Length—8". **Weight**—32 ounces.
Crankpin Journal Diameter—1.87425-1.87525".
Lower Bearing—Precision type, removable steel-backed, lead-bronze lined (Early '41), micro-babbitt lined ('41 after Eng. No. B-48529, All 1942).
Clearance—.00075-.00275". **Sideplay**—.005-.009".
NOTE—Turn crankpins for bearing clearance (Tool No. 1C). Do not ream bearings.
Bearing Adjustment:—None (no shims). Replace bearings. Furnished Std. & .005", .010", .020" under-

ENGINE

C NTINUED FR M PRECEDIN PA E

size. Align oil hole in rod and bearing shell. See that tongues on bearing engage grooves in rod and cap. *See Studebaker Shop Notes for 'Palnut' installation.*

Installing Rods:—Rods and caps marked with cylinder number. Numbers must be together and installed in same numbered cylinder with numbers and oil hole in lower end of rod toward camshaft

CRANKSHAFT:—9 bearing, 12 bolted counterweights. Vibration damper mounted on forward end of shaft. *See Studebaker Shop Notes for Vibration Damper data.*
Journal Diameters—2.3435-2.3440".
Bearings—Removable steel-backed, babbitt-lined.
Clearance—.001-.003".
Adjustment:—None (no shims). Replace bearings furnished Std. & .010", .015", .020", .030" undersize.
End Thrust:—Thrust plate assembled between front bearing and crankshaft gear. Controlled by pinned bronze washers (furnished .003", .005", .007" thick) between plate and journal face. **Endplay**—.003-.006". NOTE—Install new seals (specially treated wood) whenever rear main bearing cap replaced.

CAMSHAFT:—Six bearing with helical gear drive. *See Studebaker Shop Notes for Camshaft Removal data.*
Journal Diameters:—#1, 1.935-1.9355"; #2, 1.90275-1.9035"; #3, 1.87225-1.873"; #4, 1.84075-1.8415"; #5, 1.80975-1.8105"; #6, 1.74725-1.748".
Bearings—Split steel-backed, babbitted bushings. NOTE—Align bushing with oil hole in block.
Clearance—.00075-.00225" (#1), .002-.00375" (others).
End Thrust:—Taken by thrust plate assembled on front face of engine behind camshaft gear. Spacer assembled back of gear hub. **Endplay**—.004-.008".
Timing Gears:—Crankshaft (cast-iron), Camshaft (Celeron with steel hub). **Backlash** .001-.003". *Refer to Studebaker Shop Notes for Timing Gear Removal and Replacement Camshaft Gear size selection.*
Camshaft Setting:—Mesh marked camshaft gear tooth between 2 marked teeth on crankshaft gear.

VALVES:—	Head Diameter	Stem Diameter	Length
Intake	1 13/32"	11/32"	5 7/32"
Exhaust	1 9/32"	11/32"	5 7/32"

	Seat Angle	Lift	Stem Clearance
All Valves	45°	11/32"	.001-.003"

Valve Guides:—Pressed in block from above (1 5/16" below upper edge of valve seat) with stepped end down. Ream to inside diameter of .343-.344".
Valve Springs:—Install with closed-coil up and dampener on top of spring. Replace springs if 10% weak (test with Tool U-15). **Free Length**—2½".

	Spring Pressure	Spring Length
Valve Closed	54-60 lbs	2 3/32"
Valve Open	125-135 lbs	1¾"

Valve Lifters:—Mushroom type in bolted-on guide brackets (clusters of four). Assemblies may be removed through valve opening on side of engine. *See Studebaker Shop Notes for Lifter Tension Spring.*

VALVE TIMING

Tappet Clearance:—.016" (cold) all valves. Remove hood side panel for access to valves.
Valve Timing:—See Camshaft Setting above.
Intake Valves—Open 15° BTDC. Close 49° ALDC.
Exhaust Valves—Open 54° BLDC. Close 10° ATDC.
Valve Timing Check—With .020" tappet clearance #1 intake valve should open with #1 piston 15° or .0915" BTDC with vibration damper mark 'IN.OP.1-8/' aligned with pointer on timing gear cover. Reset tappet clearance .016" (cold).

LUBRICATION

LUBRICATION:—Pressure (pump in crankcase). *See Studebaker Shop Notes for Oil Pump installation.*
Normal Oil Pressure:—40 lbs. at 25-30 MPH.
Oil Pressure Relief Valve:—On lower right front corner of engine. Opens at 40 lbs. To adjust, loosen locknut, turn adjusting screw to right to raise pressure, to left to decrease pressure. .
Crankcase Capacity:—8 quarts.

COOLING

COOLING SYSTEM:—**Capacity**—15 quarts.
Water Pump:—Packless, sealed ball-bearing type. *See Water Pump Section for complete data.*
Thermostat:—Fulton. In cylinder head outlet.
Setting—Starts to open 151° F. to 155° F.
Temperature Gauge (1941): Auto-Lite (Motometer) vapor tension type. A-L Part No. H-9593. *See Miscellaneous Section for complete data.*
Temperature Gauge (1942): Stewart-Warner type. Studebaker Part No. 515505.

CLUTCH

CLUTCH:—**Inland.** 'Diaphragm' type, single plate, dry disc type with Long 9½CF-CS driven member. *See Clutch Section for complete data.*
Facings—Spirally grooved. Moulded (both sides '42, flywheel side '41). Woven—Man. Hycoe (pressure plate side 1941). Inside Diameter 6". Outside Diameter 9½". Thickness .125".
Replacement Clutch Note—Remove spacers (one at each driving lug) after clutch installed on car.
Pedal Adjustment:—Free travel 1" min. Turn adjusting sleeve on pedal connector link. On cars with Hill-holder (NoRol), check when pedal adjusted and see that brakes release just as clutch engages.
Removal:—Remove transmission (see below), take off clutch housing, take out 6 mounting screws in clutch cover flange, lift clutch off. *Refer to Studebaker Shop Notes for Clutch Release Shaft Lubrication.*

TRANSMISSION

TRANSMISSION:—**Warner**—Model AS1-T86D (Std.). All helical gear type, synchro-mesh (second & high), sliding gear (low & reverse). *See Transmission Section for complete data.*
Transmission Control:—Mechanical steering col. shift. *See Transmission Section for complete data.*
Removal:—Disconnect rear universal and withdraw propeller shaft from transmission. Disconnect shift levers and speedometer cable at transmission. Place jack under engine rear plate and free rear engine support. Remove transmission-to-clutch housing capscrews, pull transmission out to rear.

OVERDRIVE

►**ALL 1941 CARS, EARLY 1942 CARS**

Overdrive (Cars before Serial No. 7147625):—Warner Type R7C electrical 'kick-down' control (with centrifugal pawls). Used with T86D transmission. *See Transmission Section for complete data.*
►**1941 Production Change:** To correct free-wheel unit slippage when kicking down (also high speed vibration and grease leaks), free wheel unit bearing was changed to needle bearing type. *See Special Service Note in Transmission article in Transmission Section.*
Overdrive Solenoid—Delco-Remy Model 1118013.
Throttle Switch—Cole-Hersee No. 1687-S. Adjust so that shoe on accelerator linkage just contacts switch plunger with throttle valve wide open.
Control Relay—Auto-Lite No. HR-4201S (for 1941), No. HRB-4301 (1942). Fuse mounted in holder on relay. Fuse capacity, 14 ampere ('41), 20 ampere ('42).
Removal: Same as for regular transmission after disconnecting Overdrive cable and wiring, and removing Overdrive Rear Support. *See Overdrive Transmission Rear Support Installation in Studebaker Shop Notes*

OVERDRIVE

►**LATE 1942 CARS**

Overdrive (Cars with Serial No. 7147625 & up):—Warner Type R9C Electric type (no centrifugal pawls) with Governor Control and Throttle switch 'kick-down'. Used with T86D transmission. *See Transmission Section for complete data.*
Control Relay—Auto-Lite HRB-4301, 20 amp. fuse.
Removal: Same as for Early '42 type above.

UNIVERSALS

UNIVERSAL JOINTS:—**Spicer 1268-102.** Needle bearing. *See Universals Section for complete data.*
NOTE—1 piece driveshaft used. Slip joint formed at rear of transmission ahead of front universal.

REAR AXLE

REAR AXLE:—**Spicer Model 41-2.** Semi-floating, hypoid gear type with Hotchkiss drive. *See Rear Axle Section for complete data.*
Ratio—4.55-1 (Std. '41, Optl. or with Overdrive '42), 4.09-1 (Std. '42), 4.82-1 (Optl. '41).
NOTE—Ratio stamped on each gear and pinion.
Backlash—.005-.007". Shim adjustment.
Removal & Wheel Bearing Adjustment: *Same as '41-42 Studebaker Commander (see preceding car article).*

SHOCK ABSORBERS

SHOCK ABSORBERS: Houdaille. Dbl. acting, hydraulic, adjustable type (thermostatic control on rear).

1941	BBFS-2 FRONT	ACHS-2 REAR
1942	BBFS-4 FRONT	ACHS-3 REAR

See Shock Absorber Section for complete data.

FRONT SUSPENSION

Front Suspension:—Planar type independent suspension with transverse spring. Specifications below apply with car weight on wheels but without load. *See Front Suspension Section for complete data.*
Kingpin Inclination—5½°.
Caster—Negative ¼° to Positive ¾°.
Camber—¼° to ¾°. Shim adjustment.
Toe In—1/16-⅛". Adjust right reach rod only for toe-in. Left rod should be adjusted first for left wheel straight-ahead position (steering wheel centered).
Steering Geometry (toe-out on turns)—Inner wheel turned 22-22½°. Outer wheel 20°.

STEERING GEAR

Steering Gear: Ross T-14 Cam-&-Twin Lever type. *See Steering Gear Section for complete data.*

BRAKES

BRAKES:—**Service.** Lockheed hydraulic, double anchor type. Hand lever applies rear service brakes. *See Brake Section for complete data.*
Drum—Budd composite. Diameter 11".
Lining Moulded. Width 2¼". Thickness 3/16". Length per shoe (each wheel): 11⅛" front, 8 9/16" rear.
Clearance—.010" toe (top), .005" heel, for each shoe.
Hand Brake:—See Service Brakes (above).
Hill-Holder: Standard. *See Brake Section for data.*

MISC. MECHANICAL

WINDSHIELD WIPER: Auto-Lite Electric types.
Model EWD-5002 (1941), EWH-5004 (1942).
20 ampere fuse (supersedes 14 ampere on '41 type), Klixon circuit-breaker used on 1942 type.
See Miscellaneous Section for complete data.

HOOD LOCK: Alligator hood. To raise hood, pull out hood lock button under left side of instrument panel, pull forward on safety catch under lower front edge of hood.

MODEL IDENTIFICATION

SERIAL NUMBER: First No. G-193001. Stamped on plate on left front door hinge pillar post.

ENGINE NUMBER: First No. 216501. Stamped on pad on upper left front corner of engine block.

TUNE-UP

COMPRESSION: Pressure—105 lbs. at cranking speed of 150 RPM for standard 6.5-1 Head.

VACUUM READING: Steady 17-18" idling at 8 MPH.

FIRING ORDER: 1-5-3-6-2-4.

SPARK PLUGS: Champion Type J-9. 14 mm. Metric. **Gaps**—.025". Limits .0225-.0275".

IGNITION: See Coil, Condenser, and Distributor.

Breaker Gap—.020". **Cam Angle**—38° (closed).

Breaker Arm Spring Tension—17-20 ozs.

Automatic Advance—Starts at 400 RPM. Maximum advance 7° at 1400 RPM (Distr. degrees & RPM). **Vacuum Advance**—Starts with 4" vacuum. Maximum 9° distr. with 14¾" vacuum.

IGNITION TIMING: See Ignition Timing.

Std. Setting—2° BTDC.

Timing Mark—Flywheel mark "IGN/" at indicator in inspection hole in left rear motor support. NOTE—Insert .020" feeler between modifier control arm and clamp arm before tightening clamp-screw (to prevent binding).

Octane Selector Setting—Set to just eliminate ping when engine hot and pulling hard (advance spark toward "A" end of scale until engine pings, then retard spark toward "R" end until ping disappears).

CARBURETION: See Carburetor & Carb. Equipment.

Idle Setting—Idle adjusting screw ½-1½ turn open

Idle speed setting 8 MPH or 500-525 RPM.

Float Level—¼" from top of projection on float bowl cover to top of soldered seam on free end of float with valve seated (invert to check).

Accelerating Pump—No adjustment.

Fuel Pump Pressure: 3½ lbs. max.

MANIFOLD HEAT CONTROL: Thermostatic coil type, See that valve operates freely (stainless steel bushings used in manifold to reduce sticking).

Setting—To test coil tension, unhook coil from pin. With valve closed (counterweight up), hooked end of coil should be approximately 90° away from pin with coil at 70°F. Replace coil if angle incorrect.

VALVES: See Valve Timing.

Tappet Clearance—.016" **All Valves**—Cold. NOTE—Self-locking tappet screws used (no locknuts).

STARTING: See Battery, Starter, Generator and Regulator.

IGNITION

Ignition Switch:—Mitchellock Model 24-R, No. 8771. NOTE—Mitchell No. E-10446 (for Hurd Lock). **Ignition Lock**—Yale & Towne. Studebaker #196900.

COIL: Auto-Lite CE-4646 or CE-4664. Service Coil CE-3224WS. Mounted on engine side of dash. **Ignition Current—½-1½ amperes idling, 4-5 stopped.**

CONDENSER: Auto-Lite Part No. IG-2671. Capacity—.20-.25 microfarad.

DISTRIBUTOR: Auto-Lite Model IGC-4801. Full automatic advance type with separate No. VC-4011 vacuum spark control unit and Octane Selector adjustment.

Breaker Gap—.020". Limits .018-.022".

Cam Angle—38° closed, 22° open.

Breaker Arm Spring Tension—17-20 ozs.

Rotation—Counter-clockwise viewed from above.

Automatic Advance

Distributor Degrees	Distributor R.P.M.	Engine Degrees	Engine R.P.M.
Start	400	0	800
2	680	4	1360
4	975	8	1950
6	1265	12	2530
7	1400	14	2800

Octane Selector—Provides manual adjustment at distributor (hold-down plate marked with scale) for variation in timing depending on fuel regularly used. See Ignition Timing following for adjustment.

Vacuum Spark Control: Auto-Lite VC-4011. On hold-down plate and linked to advance plate. Provides additional advance at speeds above idling except when engine accelerated or operated with wide open throttle (spark retarded by return spring in unit).

Vacuum Advance

Distr. Degrees	Eng. Degrees	Vacuum (" of HG)
Start	0°	4"
2°	4°	5½"
5°	10°	7¾"
7°	14°	11¼"
9°	18°	14¾"

Distributor Removal:—Mounted on left side of engine. To remove, disconnect vacuum line, take out bolt in clamp arm, lift distributor off.

Installation Note—When installing distributor, crank engine to firing position for #1 cylinder (flywheel mark 'IGN' in line with pointer on left rear engine plate), sight down distributor shaft hole (distributor out) and see that distributor drive

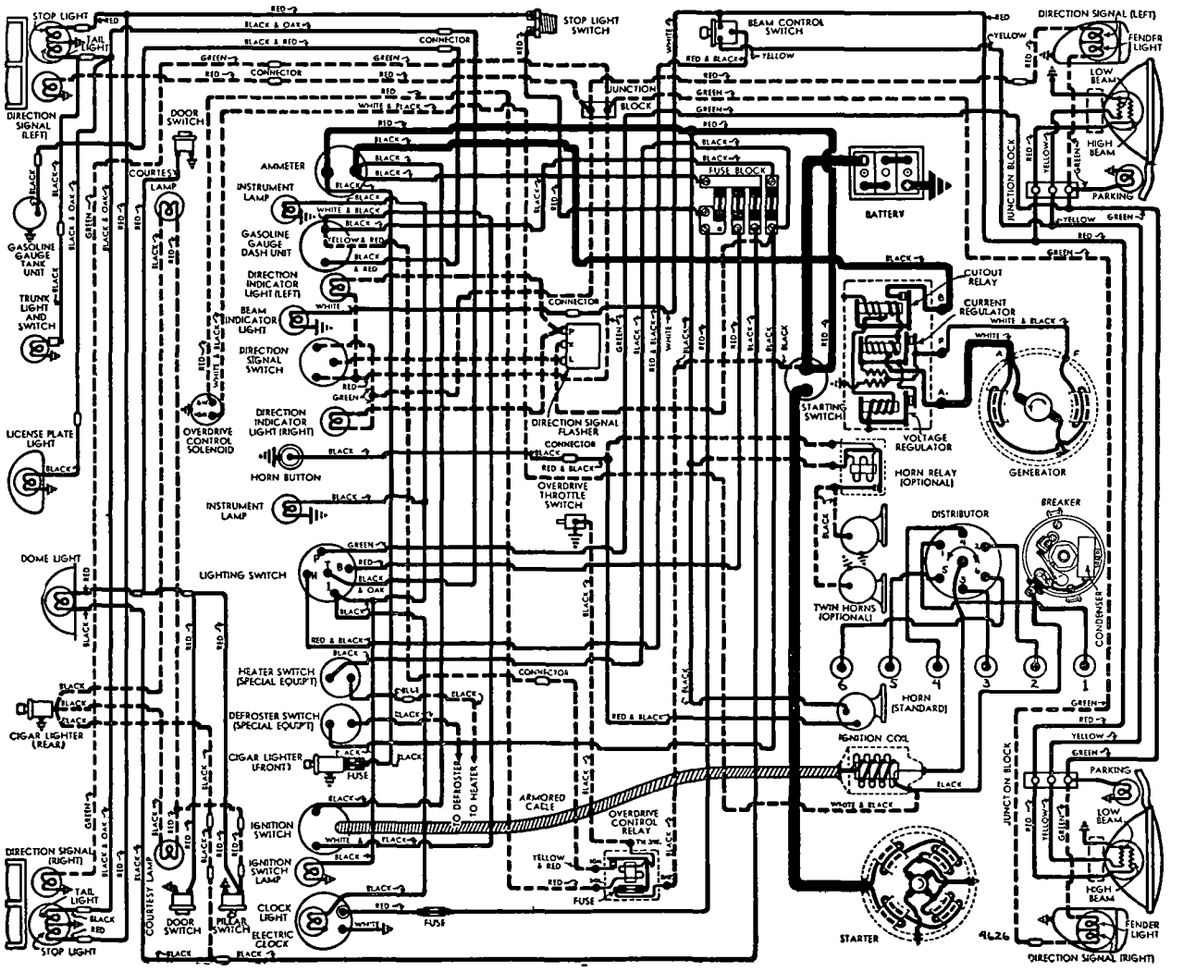

tongue in oil pump drive gear is parallel to and narrow half of offset toward camshaft, turn rotor to #1 segment, install distributor (insert .020" feeler between modifier control arm and clamp arm before tightening the clamp, to prevent binding), check timing.

IGNITION TIMING

Standard Setting—Initial setting for regular fuel (see Octane Selector Setting following for correction depending on fuel regularly used).

Flywheel Degrees	Piston Position
2° BTDC	.0016" BTDC

Timing (with Neon Timing Light)—Neon Light No. 890 recommended. Clip Neon light lead in series with #1 spark plug, idle engine and direct Neon light on flywheel inspection hole on left rear motor support. Loosen hold-down plate screw, center scale on pointer, tighten screw. Loosen clamp arm, rotate distributor until 'IGN' mark on flywheel (approx. 13/64" before top dead center mark 'U.D.C.1-6') lines up with pointer on engine rear plate. Insert .020" feeler between modifier control arm and clamp arm before tightening clamp (to insure clearance for modifier control arm). Check Octane Selector Setting (following).

Timing (without Neon Timing Light)—Turn engine over to firing position for #1 piston with 'IGN' mark on flywheel in line with pointer in inspection hole on left rear motor support and distributor rotor at #1 segment in distributor cap. Adjust distributor as directed above.

Octane Selector Setting—After setting ignition timing (above), loosen selector hold-down screw, advance selector (move toward 'A' end of scale) until motor 'pings' when it is hot and pulling hard. Then retard (move selector pointer toward 'R' end of scale) until 'ping' just disappears.

CARBURETOR

Carter Model WE, Type 532-S. 1¼" Single Barrel, Downdraft type with Fast Idle and Climatic Control *See Carburetor Section for complete data.*

Idle Setting—Set throttle stopscrew for 500-525 RPM. or 8 MPH. hot or slow idle speed (fast idle inoperative). Set idle adjusting screw ½-1½ turns open and adjust for smooth idle (turn screw in for leaner mixture), recheck idle speed.

Accelerating Pump—Non-adjustable type.

Float Level—¼" from top of projection on bowl cover to top of seam on free end of float with needle valve seated (invert to check).

Metering Rods & Jets—*Refer to Carburetor Index for Carter Downdraft Carburetor Jet Specification Table.*

Fast Idle:—Integral type (built-in carburetor). *See Carburetion Equipment Section for data.*

Setting—.054" throttle valve opening with choke valve closed. To check, open throttle wide to make certain fast idle cam drops into position, then with choke valve closed measure clearance between edge of throttle valve and carburetor wall on side opposite idle port (valve closed to fast idle position). To adjust, loosen locknuts and turn adjusting sleeve on connector link.

Automatic Choke: Carter Climatic Control (mounted on carburetor air horn). *See Carburetion Equipment Section for data.*

Setting—Centered (cover reference mark centered on housing scale).

CARB. EQUIPMENT

Air Cleaner: AC. No. 1529210 Oil-wetted type Std., No. 1529211 Heavy Duty Oil-bath type Optl. Replacement Filter Element Assy. No. 2 (1529210), No. 8 (1529211).

Servicing (Oil-wetted type)—Clean and re-oil filter element at 1000 mile intervals or as required by operating conditions.

Servicing (Oil-bath type)—Clean filter element and oil reservoir, fill reservoir to indicated level mark with SAE No. 40 or 50 engine oil at intervals as required by operating conditions.

Fuel Pump: AC Type W (AE). Diaphragm type. Pump Exchange type No. 527. **Pressure**—2½-3½ lbs. *See Carburetion Equipment Section for data.*

Gasoline Gauge: Stewart-Warner Electric type. *See Carburetion Equipment Section for data.*

BATTERY

Willard Type SW-1-90 (Orig. Equip), SW-1-92 (Replacement). 6 volt, 15 plate, 92 Ampere Hour Capacity (20 hour rate).

Starting Capacity—117 amperes for 20 minutes.

Zero Capacity—300 amperes for 3.1 minutes. Five second voltage 4.2 volts.

Grounded Terminal—Positive (+) to front fender.

Engine Ground—Strap at right front motor support.

Dimensions—Length 9". Width 6 13/16". Height 8⅝".

Location—On left side under engine hood.

STARTER

Auto-Lite Model MZ-4090. Armature No. MZ-2130. Drive—Barrel type Bendix. Special inboard type A-2033 (marked 'D' on pinion barrel).

Rotation—Counter-clockwise at commutator end.

Brush Spring Tension—42-53 ozs. (new brushes).

Cranking Engine—160 amperes, 5.2 volts, 130 RPM.

Performance Data

Torque	R.P.M.	Volts	Amperes
0 ft. lbs.	4300	5.5	70
0.65 "	2500	5.5	100
2.55 "	1325	5.0	200
4.95 "	750	4.5	300
7.65 "	220	4.0	400
7.8 "	Lock	3.0	420
11.8 "	Lock	4.0	560

Removal:—Starter flange mounted on right rear engine plate. To remove take out mounting bolts and lift starter off.

Starting Switch:—A-L Model SW-4011. Mounted on left side of car below clutch pedal. Operated by depressing clutch pedal fully.

GENERATOR

Auto-Lite Model GDZ-4804A. Armature No. GDZ-2006F. Two brush type with current-voltage control.

Charging Rate Adjustment—No adjustment at generator. Charging rate controlled by Voltage Regulator and maximum output by Current Regulator. *See Regulator data following.*

Maximum Charging Rate—35 amperes, 8.0 volts, 1900 generator RPM. or approx. 18.3 MPH. and above. with load or discharged battery (Current Regulator Setting). Actual charging rate controlled by Voltage Regulator and dependent on battery condition.

Performance Data

Cold Amperes	Cold Volts	Cold R.P.M.	Hot Amperes	Hot Volts	Hot R.P.M.
0	6.4	925	0	6.4	1000
4	6.6	1035	4	6.6	1120
8	6.75	1140	8	6.75	1235
12	6.95	1250	12	6.95	1350
16	7.15	1370	16	7.15	1460
20	7.3	1480	20	7.3	1590
24	7.5	1590	24	7.5	1730
28	7.7	1710	28	7.7	1900
32	7.9	1820	32	7.9	2090
35	8.0	1900	35	8.0	2250

Rotation—Counter-clockwise at commutator end.

Brush Spring Tension—53 ozs. max. (new brushes).

Field Current—1.60-1.78 amperes at 6.0 volts.

Motoring Current—4.16-4.60 amperes at 6.0 volts.

Removal:—Pivot mounted at left front of engine. To remove, take out pivot and clamp bolts.

Belt Adjustment:—Loosen pivot and clamp bolts, move generator out until ⅜-½" belt deflection midway between generator and fan pulleys is obtained or until fan can just be turned with belt held stationary.

REGULATOR

Auto-Lite Model VRP-4004F. Voltage & Current Type. Consists of Cutout Relay and vibrating type Voltage and Current Regulators in case on dash. *See Electrical Equipment Section for complete data.*

NOTE—Regulator case cover is sealed. Serviced on exchange basis if seals not broken (to remove cover).

Cutout Relay

Cuts In—6.4-7.0 volts (set to 6.4-6.6 volts).

Cuts Out—4.1-4.8 volts (approx. 4-6 amps. disch.).

Contact Gap—.015" minimum.

Air Gap—.031-.034" with contacts open (check at hinge end of core).

Voltage Regulator

Setting—7.2-7.5 volts at 70°F. See Electrical Equipment Section for settings at other temperatures.

To Check (without breaking seals)—Connect ammeter in charging line at regulator 'B' terminal (use short heavy leads), voltmeter between 'B' terminal and ground. Operate generator at speed equivalent to 30 MPH., charging fully charged battery, until voltage is steady. Voltage reading should agree with setting given above.

To Adjust (with cover removed)—Change regulator armature spring tension by bending lower spring hanger slightly. See Electrical Equipment Section.

Contact Gap—.012" min. (armature against stop pin).

Air Gap—.048-.052" with contacts just opening.

Current Regulator

Setting—34-36 amperes (marked '35' on the cover).

To Check (without breaking seals)—Connect test meters as for voltage check (above). Operate generator at speed equivalent to 30 MPH. charging battery, turn on car lights and accessories or connect load (bank of headlamp bulbs, etc.) between ammeter and battery so that generator charges at peak rate and Current Regulator operates. Current reading should agree with setting given above. If more than slight excess noted, regulator is defective.

To Adjust (with cover removed)—Same as for Voltage Regulator (above).

Contact Gap & Air Gap—Same as Voltage Regulator.

CONTINUED ON NEXT PAGE

C NTINUED FR M PRECEDING PAGE

LIGHTING

Headlamps: Corcoran-Brown "Sealed Beam" type. *See Electrical Equipment Section for complete data.*
Headlamp Adjustment—Aim upper beam straight ahead (hot spot center 3" below lamp center height).
Beam Indicator—At top center of speedometer dial. Lighted whenever Country (upper) beam in use.

Switches

Lighting—Douglas No. 5596.
Beam Selector—Delco-Remy No. 1997008.
Stop Light—Studebaker No. 666858 (hydraulic type)
Dome Light (Pillar)—Studebaker No. 281130X1.
Dome Light (Door)—Studebaker No. 282674.

Bulb Specifications

Position	Candlepower	Mazda No.
Headlamps	Sealed Beam	
Parking	1½	55
Dir. Sig. & Fender (Frt)	21-3	1158
Dir. Sig. Indicator	1½	55
Instrument, Trunk	1½	55
Beam Indicator	1	51
Stop & Tail	21-3	1158
Rear License	3	63
Direction Signal (Rear)	21	1129
Dome	15	87
Courtesy (Step)	3	64

MISC. ELECTRICAL

FUSES: Lighting—20 ampere. Three or four fuses on fuse block on back of instrument panel on left side. Protect lighting & accessory circuits thus:
#1—Stop Light and Clock (power).
#2—Headlamps, Tail & Instrument Lamps, Clock (lamps), Parking & Rear License Lamps.
#3—Dome & Courtesy Lamps, Rear Cigar Lighter.
#4—Accessories (Climatizer, Defroster, Direction Signal, etc.—controlled by Ignition Switch).
Overdrive—20 ampere. On Overdrive Relay.
Clock—2 ampere. In connector in feed wire.

HORNS: Single Delco-Remy No. 1999807 Standard.
Dual—Delco-Remy No. 1999511 (Low Note), 1999512 (High Note). Twin airtone horns operated by relay.

Type	Current (6 volts	Air Gap
1999807	7-9 amperes	.027-.043"
1999511 (Low Note)	19-21 amperes	.044-.049"
1999512 (High Note)	18-20 amperes	.034-.039"

Horn Relay: R-B-M No. 6003, Studebaker No. 512534.
Contacts Close—3.5-4.5 volts with relay upright.
Contacts Open—2.5 volts minimum.

ENGINE

ENGINE SPECIFICATIONS: 6 Cylinder, "L" Head
Bore—3.000". **Stroke**—4.000".
Displacement—169.6 cu. ins. **Rated HP**—21.6.
Developed Horsepower—80 at 4000 RPM (Std. Hd.).
Compression Ratio—6.5 Std., 7.0-1 Optl.
Compression & Vacuum Reading—*See Tune-up data.*
ORIGINAL BORE & PISTONS: *See Studebaker Shop Notes.*
TIGHTENING TORQUES: *See Studebaker Shop Notes.*
CYLINDER HEAD: Tightening Torque & Cylinder Head Diagram—*See Studebaker Shop Notes.*
PISTONS: Lynite aluminum alloy. Cam ground, T-slot, tin-plated type. **Length**—2 9/32".
Weight—8.16 ozs. (stripped).
Clearance—Selective Fit (See Fitting Pistons).
Rem val—Pistons and rods removed from above.
NOTE—Car manufacturer recommends that cylinders out-of-round or tapered more than .002" be reconditioned.
Fitting New Pistons: Insert .002" feeler, 1" wide, between piston and cylinder wall on camshaft side (piston pin parallel to camshaft, slot away from camshaft). Pull required to withdraw feeler should be 11-16 lbs.
Replacement Pistons: *See Studebaker Shop Notes.*
Installing Pistons: T-slot away from camshaft.
PISTON RINGS: Two compression, one oil control ring per piston, all above pin.

Ring	Width	End Gap	Side Clearanec
Compr. #1	3/32"	.007-.017"	.0015-.002"
Compr. #2	⅛"	.007-.017"	.0015-.002"
Oil Contr. (#3)	5/32"	.007-.017"	.0015-.002"

Replacement Rings: Std. & .010", .020", .030" oversize.
PISTON PIN: Diameter .7491-.7495". **Length** 2⅝". Pin is locked in rod by tapered pin and locknut.
Pin Fit in Piston—.0001-.0003" clearance or light finger-push fit at room temperature (70°F).
Replacement Pins: Std. & .0025". .005" oversize. Use Hone No. PH-1 to obtain proper piston pin fit.
NOTE—Replacement pistons fitted with pins.
CONNECTING ROD: Length 6⅜". **Weight** 20.96 ozs.
Crankpin Journal Diameter—1.81175-1.81275".
Lower Bearing—Spun babbitt (cap bearings chamfered on upper edge). See Replacement Bearings.
Clearance—.0005-.002". **Sideplay**—.005-.009".
NOTE—Use Reamer HM-591F to secure correct bearing clearance. Crankpin out-of-round, tapered, or scored limits .0015" max. Use tool No. 1C to recondition crankpins.
Bearing Adjustment: None. Replace rods. Do not file rods or caps.
NOTE—*See Studebaker Shop Notes for "Palnut" data.*
Replacement Bearings: New rods furnished on Exchange Basis in Std. Size and .010", .020" Undersize.
Installing Rods: Lower bearings "offset". Install rods with narrow portion of bearing toward front of engine (#1, 3, 5), toward rear (#2, 4, 6). Numbers on rods and bearing caps must be together and installed in same numbered cylinder with number and Oil hole in lower end of rod toward camshaft.
CRANKSHAFT: Four bearing type with integral counterweights. Vibration dampener on front end.
Journal Diameter—2.437-2.4375" (all bearings).
Bearing Type—Removable steel-backed, babbitt-lined.
Clearance—.0005-.0025".
NOTE—Install new seals (specially treated wood), whenever rear main bearing cap removed and installed.
Bearing Adjustment: None (no shims). Replace bearings. Do not file bearing caps.
NOTE—Front oil pan seal block may be removed for access to front main bearing cap by removing four lower timing gear cover retaining screws.
Replacement Bearings: Furnished Standard size and .010", .020", .030" undersize.
End Thrust: Taken by thrust washer assembled between front main bearing and crankshaft gear. Controlled by shims between thrust washer and main bearing journal. Adjust by changing shims furnished .003", .005", .007" thick.
Endplay—.003-.006".
CAMSHAFT: Four bearing type with helical gear drive.
Journal Diameters—#1, 1.7475-1.7480"; #2, 1.71625-1.71700"; #3, 1.68575-1.68650"; #4, 1.62325-1.624500".
Bearings—Split, steel-backed, babbitted bushings.
Clearance -.00075-.00225" (#1), .001-.00275" (others)
Bearing Adjustment: None. Replace bushings with camshaft removed. NOTE - Align bushing oil hole with oil hole in block.
Camshaft Removal: *See Studebaker Shop Notes.*
End Thrust: Taken by thrust plate assembled on front face of engine block behind camshaft gear (spacer assembled on shaft behind gear hub).
Endplay—.004-.008".
Timing Gears: Crankshaft gear Cast Iron, Camshaft gear Celoron with steel hub.
Backlash—.001-.003".
Removal & Replacement—*See Studebaker Shop Notes for directions and replacement gear oversizes.*
Camshaft Setting: Mesh marked tooth of camshaft gear between two marked teeth of crankshaft gear.

VALVES:	Head Diameter	Stem Diameter	Length
Intake	1 11/32"	.310-.311"	4 11/32"
Exhaust	1 9/32"	.310-.311"	4 11/32"

	Seat Angle	Lift	Stem Clearance
Intake	45°	5/16"	.001-.0035"
Exhaust	45°	5/16"	.0015-.0035"

Valve Guides: Pressed in block from above with top of guide 1 3/16" below top of block. Finish ream guides to inside diameter of .312-.3125".
Valve Springs: Install with closed coil end up. Replace springs if more than 10% weak (test with Tool U-15). Spring free length 2 3/32".

	Spring Pressure	Length
Valve Closed	52-56 lbs.	1 21/32"
Valve Open	90-94 lbs.	1 11/32"

Valve Lifters: Mushroom type. Remove from below with camshaft out of engine. *For Camshaft Removal directions, refer to Studebaker Shop Notes.*
Valve Lifter Tension Spring - *See Studebaker Shop Notes for data.*
Clearance—.0005-.00175".
Replacement Lifters—Furnished .0005" and .001" oversize.

VALVE TIMING

Tappet Clearance: .016" All Valves, Engine cold.
NOTE - Self-locking tappet adjusting screws used. Tappet screw tension should be 25 in. lbs. minimum. Remove hood side panel for access to valves.
Valve Timing: See Camshaft Setting above.
Intake Valves—Open 15° BTDC. Close 49° ALDC.
Exhaust Valves—Open 54° BLDC. Close 10° ATDC.
Valve Timing Check—With .020" tappet clearanc , #1 intake valve should open with #1 piston 15° or .0893" BTDC. with flywheel mark "IN.OP.1-6/" at pointer in inspection hole in left rear engine plate. Reset tappet clearance to .016" Cold running clearance.

LUBRICATION

Lubrication System: Pressure to crankshaft, connecting rod, and camshaft bearings and to valve lifters. Timing gears lubricated by oil by-passed by pump.

Oil pump mounted externally on right side of engine.

Crankcase Capacity - 5 qts. ("Add Oil" point on oil level indicator stick is 3 qt. level).

Normal Oil Pressure—40 lbs. at 25-30 MPH.

Oil Pressure Relief Valve—On lower right front corner of engine block. Opens at 40 lbs. Not adjustable.

Oil Pan Removal—*See Studebaker Shop Notes.*

Oil Pump: Helical gear type. Mounted externally on right hand side of crankcase.

Removal—Remove capscrews and lockwashers on pump cover, remove cover, gasket, oil pump gears, and woodruff key. Remove "C" washer (horseshoe washer) from pump shaft within pump body, withdraw pump body. Shaft and driving gear are removed from within crankcase.

Installation—*See Studebaker Shop Notes.*

Oil Filter: Fram (optional equipment).

Oil Pressure Gauge: Stewart-Warner Bourden tube type (not electric).

COOLING

Cooling System: Positive circulation with water pump mounted on front of block with fan.

Capacity—10½ quarts.

Water Pump: Packless, sealed ball bearing type.

See Water Pump Section for complete data.

Removal—Slack off drive belt, take out capscrews in fan pulley hub, remove fan and pulley. Disconnect hose connection, take out mounting screws in pump body flange, withdraw pump from engine block.

Belt Adjustment—*See Generator Belt Adjustment.*

Thermostat: Bishop & Babcock. In water outlet on cylinder head.

Setting—Starts to open at 151-155°F.

Temperature Gauge: Stewart-Warner Bourden tube type (not electric).

CLUTCH

Borg & Beck Model 8A7 with "Borglite" Driven Member. Single plate, dry disc type. NOTE - Clutch Assembly marked by number 959 stamped on cover.

See Clutch Section for complete data.

Facings—Moulded-asbestos, 2 required. Inside Diameter 5 ⅜". Outside Diameter 8". Thickness ⅛".

Adjustment: Pedal free-travel 1" minimum. Loosen locknuts on adjusting sleeve on link connecting pedal and clutch throw-out shaft lever, turn adjusting sleeve. Tighten locknuts after making adjustment.

Hill Holder (NoRol) Note—Check adjustment whenever clutch pedal adjusted. Hill Holder should be set to release just as clutch engages.

Removal: Remove Transmission (see Transmission Removal below), disconnect and remove clutch throw-out shaft, remove clutch housing by taking out mounting bolts in housing flange. Remove six mounting screws in clutch cover flange, lift out clutch assembly and driven member.

For Clutch Release Shaft Lubrication instructions, see Studebaker Shop Notes.

TRANSMISSION

Warner Model T84G Std. All helical gear type, constant-mesh, synchro-mesh (Second & High), sliding gear (Low & Reverse).

See Transmission Section for complete data.

Transmission Control: Remote control type with gearshift lever mounted on steering column.

See Transmission Section for complete data.

Removal: Disconnect propeller shaft at rear universal (remove nuts on "U" bolts), pull propeller shaft out toward rear disengaging front end of shaft from splined shaft in transmission case. Disconnect speedometer cable and shift lever rods at transmission case. Place support jack under engine at rear plate, free rear engine support. Remove transmission to clutch housing capscrews, pull transmission straight back and remove from beneath car.

OVERDRIVE

Warner Type R7C (with special T84G Transmission). Optl. Equipment. Overdrive has electrical "kick-down" control.

See Transmission Section for complete data.

Overdrive Control: Control Solenoid (for "kick-down") mounted on over-drive case and controlled through relay by accelerator pedal operated kick-down switch.

See Transmission Section for complete data.

Overdrive Solenoid—Delco-Remy Model 1118013.

Control Relay—Auto-Lite Model HRB-4301.

Throttle Switch—Adjust so that shoe on accelerator linkage just contacts switch plunger with throttle valve wide open (switch should operate only when accelerator pedal depressed past wide open throttle position).

Overdrive Control Fuse—20 ampere. Mounted on relay.

Removal: Same as for conventional transmission (above) except that overdrive control cable and wires at solenoid terminals must be disconnected first.

UNIVERSALS

Spicer Type 1268-102X. Needle bearing "cross" type, two used. NOTE—Propeller shaft is one piece type with slip joint at transmission main shaft ahead of front universal joint.

See Universals Sections for complete data.

REAR AXLE

Spicer Model 23. Semi-floating, hypoid gear type with Hotchkiss drive.

See Rear Axle Section for complete data.

Ratio—4.10-1 Std., 4.56-1 Optl.

Backlash—.003-.006" Shim adjustment.

Removal: Hoist rear of car, disconnect propeller shaft at rear universal by removing nuts on "U" bolts. Disconnect hydraulic brake lines, brake cables, and shock absorbers. Disconnect spring "U" bolts and rear spring rear shackles, withdraw axle assembly. **Axle Shaft Removal**—Remove wheel hub using Puller J-446, remove nuts on mounting studs and take off brake backing plate and brake assembly (CAUTION—do not lose wheel bearing adjusting shims in back of the backing plate). Use Puller HM-931 to remove axle shaft and bearing assembly.

NOTE—Inner oil seal can be removed by hooking axle shaft puller adapter under oil seal. Use Handle J-270-1 and Disc J-270-13 to install new oil seal.

Wheel Bearing Adjustment: Remove wheel and wheel hub (use Puller J-446). Check shaft endplay with dial indicator. To adjust, take off nuts on backing plate mounting studs, remove backing plate and brake assembly, add or remove shims on housing flange. Shims furnished in thickness of .003", .005", .010", .030".

Endplay—.001-.005".

SHOCK ABSORBERS

Houde (Houdaille) Model BBFS-10 (Front), BBDS-5 (Rear). Double acting, hydraulic type. Adjustable.

See Shock Absorber Section for complete data.

Adjustment: Adjusting pointer on end of shaft should be lined up with scribed line on end of shaft. Turn pointer clockwise for firmer action, counter-clockwise for softer action (not more than 1/32-1/16"). Stops provided to limit adjustment in each direction.

Refilling: Check at 5000 mile intervals. Fill to bottom of filler plug hole. CAUTION—use only Houdaille Shock Absorber Fluid No. L-1404 (new type fluid used only on shock absorbers with new circular top plug).

FRONT SUSPENSION

Front Suspension: Planar type independent suspension with transverse spring. Specifications below apply with car weight on wheels but without load.

See Front Suspension Section for complete data.

Kingpin Inclination—5½° crosswise.

Caster—1-2°. No adjustment.

Camber—½° (¼-¾°). Shim adjustment.

Toe In—1/16-1/8". Adjust right hand Reach Rod only for toe in after left hand rod adjusted first to place left wheel straight ahead with steering wheel centered.

Steering Geometry (Toe out on Turns)—Inner wheel turned 22½-23° with outer wheel turned exactly 20°.

STEERING GEAR

Ross Model T-12. Cam-and-Twin Lever type with insulated steering arm and intermediate steering arm (idler) on right hand side of frame.

See Steering Gear Section for complete data.

BRAKES

Service: Lockheed hydraulic, single anchor type. Hand lever applies rear wheel service brakes.

See Brake Section for complete data.

Drum—Budd Composite type. Diameter 9".

Lining—Moulded type. Width 1¾", Thickness 3/16". Length per wheel 18" (10 13/16" front shoe, 7 3/16" rear shoe).

Clearance—.010" toe (top), .005" heel, for each shoe.

Braking Power—43% Rear Wheels, 57% Front.

Hand Brake: See Service Brakes above.

Hill Holder: Optional equipment.

See Brake Section for complete data.

HOOD LOCK, LOCK ADJUSTMENT, HOOD ASSEMBLY ALIGNMENT: *See Studebaker Shop Notes.*

MODEL IDENTIFICATION

SERIAL NUMBER: Stamped on plate on left front door lock pillar post.

	South Bend	Los Angeles
1947 Numbers	G-212,501 Up	G-824,001 Up
1948 Numbers	G-314,501 Up	G-827,301 Up

Body Symbol Letter—Used with model designation (and on body number plate) to indicate body type as follows: C, 5-Pass. Coupe; F, 2-Door Sedan; Q, 3-Pass. Coupe; S, Convertible; W, 4-Door Sedan.

ENGINE NUMBER: Stamped on pad on upper front left corner of engine block.
1947 Numbers 236,001 Up. **1948 Numbers** 342,001 Up
NOTE—Letter "A" following engine number indicates crankshaft main bearing journals .005" Undersize.

TUNE-UP

COMPRESSION PRESSURE: 105 lbs. at 150 RPM.
VACUUM READING: Steady 17-18" idling at 8 MPH.
FIRING ORDER: 1-5-3-6-2-4.
SPARK PLUG GAPS: .025" Limits .0225-.0275".
Plug Type—Champion Type J7 or J9. 14 mm.
IGNITION: *See Coil, Condenser, and Distributor.*
Breaker Gap—.020". Limits. .018-.022".
Cam Angle or Dwell—38° Closed, 22° Open.
Breaker Arm Spring Tension—17-20 ozs.
Automatic & Vacuum Advance—*See Distributor.*
IGNITION TIMING: 2° BTDC.
Timing Procedure—*See Ignition Timing.*
Timing Mark—Vibration dampener mark "IGN/" aligned with pointer on left side of engine. NOTE—Insert .020" feeler between modifier control arm and clamp arm before tightening clampscrew.
Octane Selector Setting—Set to just eliminate ping when engine hot and pulling hard.
CARBURETION: *See Carburetor & Carb. Equipment.*
Idle Setting—½-1½ turns open. Turn screw out for richer mixture.
Idle Speed—8-10 MPH. at normal operating temp.
Float Level—¼" (532S), ⅜" (661S). Measure from top of projection on bowl cover to top of soldered seam on free end of float with needle valve seated and bowl cover assembly inverted.
Accelerating Pump—No seasonal adjustment.
Fuel Pump Pressure—4-5 lbs. maximum.
MANIFOLD HEAT CONTROL: Automatic thermostatic type operating in stainless steel bushings.
Setting—To test coil tension, free outer end of coil from anchor post. With valve closed (counterweight up), hooked end of coil should be approx. 90° from anchor post with coil at 70°F. NOTE—To overcome sticking, lubricate valve shaft with kerosene and soda solution or Bendix Carburetor Cleaner. If necessary, shaft diameter can be reduced for .005" clearance in bushings (do not ream bushings).
VALVE TAPPET CLEARANCE: .016" All Valves, Cold.
Valve Timing Check—*See Valve Timing.*
STARTING: *See Battery, Starter, Generator, Regulator.*

IGNITION

IGNITION SWITCH: Mitchellock Switch Model 42-R. No. E-10336 (for Y & T lock) or E-10522.
Ignition Lock—Yale & Towne.
COIL: Auto-Lite ('47) CE-4032, ('48) CE-6007. On eng. above distributor (under spark plug cable bracket).
Ignition Current—½-1½ amps. idling, 4-5 stopped.

CONDENSER: Auto-Lite Part No. IG-2671.
Capacity—.20-.25 microfarad.

DISTRIBUTOR: Auto-Lite Model IGC-4805. Full automatic advance type with vacuum spark control.
Breaker Gap—.020". Limits .018-.022".
Cam Angle—38° closed, 22° open.
Breaker Arm Spring Tension—17-20 ozs.
Rotation—Counter-clockwise viewed from above.

Distributor Automatic Advance		Engine	
Degrees	R.P.M.	Degrees	R.P.M.
Start	400	0	800
2	680	4	1360
4	975	8	1950
6	1265	12	2530
7	1400	14	2800

Vacuum Spark Control: Auto-Lite Model VC-4011. Unit mounted on hold-down plate and linked to advance plate. Provides additional advance at speeds above idling except when engine accelerated or operated with wide open throttle when spark retarded by return spring in unit.

Vacuum Advance		
Distr. Degrees	Eng. Degrees	Vacuum (" of HG)
Start	0°	4"
2°	4°	5½"
5°	10°	7¾"
7°	14°	11¼"
9°	18°	14¾"

Octane Selector—Provides manual adjustment at distributor (hold-down plate marked with scale) for variation in timing depending on fuel regularly used. See Ignition Timing following for adjustment.

Distributor Removal: —Mounted on left side of engine. To remove, disconnect vacuum line, take out bolt in clamp arm, lift distributor off.
Installation Note—When installing distributor, crank engine to firing position for #1 cylinder (dampener mark 'IGN' in line with pointer on the timing gear cover, sight down distributor shaft hole (distributor out) and see that distributor drive tongue in oil pump drive gear is parallel to and narrow half of offset toward camshaft, turn rotor to

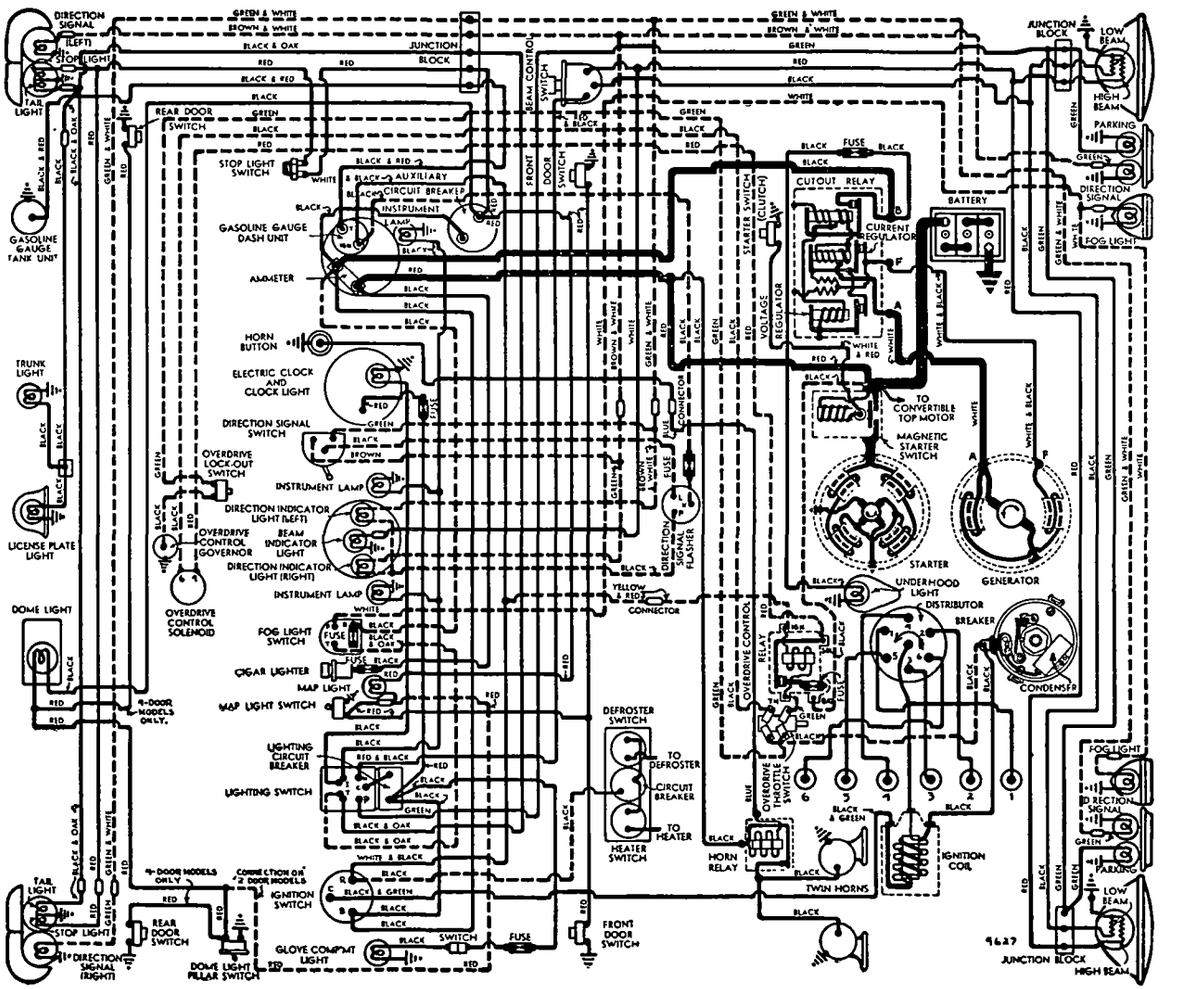

#1 segment, install distributor (insert .020" feeler between modifier control arm and clamp arm before tightening the clamp, to prevent binding),

IGNITION TIMING

Std. Setting	Flywheel Degrees	Piston Pos.
All Engines	2° BTDC	.0016" BTDC

This setting correct for regular fuel (See Octane Selector Setting for service and fuel modification).
NOTE—Ignition marks now located on vibration dampener at front of engine.
Timing (With Neon Timing Light)—Clip timing light lead in series with #1 spark plug, direct light on vibration dampener at front of engine. Loosen hold-down plate screw, center octane selector pointer on scale, tighten hold-down screw. Run engine at idle speed, loosen clamp arm, rotate distributor until "IGN/" mark on dampener appears in line with pointer on left side of timing gear cover, tighten clamp screw. Check Octane Selector setting.
CAUTION—Insert .020" feeler between modifier arm and clamp arm when tightening clamp arm
Timing (Without Neon Timing Light)—With #1 piston on compression, turn engine over until "IGN/" mark on vibration dampener lines up with pointer on left side of timing gear case. Adjust distributor as directed above.
Octane Selector Setting—After setting timing (above), loosen selector hold-down screw, advance timing by turning distributor clockwise (move pointer toward "A" end of scale) until engine "pings" when hot and pulling hard, then retard timing by turning distributor counter-clockwise (move pointer toward "R") until ping disappears.

CARBURETOR

Before Eng. No. 350,841.....**Carter WE, No. 532S**
After Eng. No. 350,841.....**Carter WE, No. 661S**
1¼" single barrel, downdraft with Carter Clim. Cont.
Casting No. on Flange—375 (both models).
See Carburetor Section for complete data.

Settings (Idle Setting, Float Level, & Accelerating Pump): ***See Tune-Up.***

Metering Rods & Jets—***See Carter Jet Table in Carburetor Section.***

Fast Idle: Carter Single Barrel Carburetor type.
See Carburetion Equipment Section for data.
Setting—.054" throttle valve opening with choke valve closed. To check, open throttle wide to make certain fast idle cam drops into position, then with choke valve closed measure clearance between edge of throttle valve and carburetor wall on side opposite idle port (valve closed to fast idle position). To adjust, turn adjusting sleeve on connector link.

Automatic Choke: Carter Climatic Control (Single Carburetor type).
See Carburetion Equipment Section for data.
►***CAUTION—Setting different on each type carburetor.***
Setting (532S)—Centered (cover centered on scale).
Setting (661S)—1 Point Lean.

CARB. EQUIPMENT

Air Cleaner: AC No. 1543970 Oil-wetted type Std. Filter Element AC #1. Oil-bath Air Cleaner Optl.
Servicing (Oil-wetted type)—Clean and re-oil filter element at 1000 mile intervals.
Servicing (Oil-bath type)—Clean filter element and oil reservoir, fill reservoir to indicated level mark with SAE No. 40 or 50 engine oil at intervals as required by operating conditions.

Fuel Pump (Std.): AC Type AE. Stude. No. 522249.
Optl. (Fuel & Vacuum): AC. Studebaker No. 523824.
Exchange Pump—AC. No. 576 (for Type AE).
Pressure—4-5 lbs. maximum.
See Carburetion Equipment Section for data.

Gasoline Gauge: Stewart-Warner Electric type.
Dash Unit—Studebaker No. 522177.
Tank Unit—Studebaker No. 519423.
See Carburetion Equipment Section for data.

BATTERY

Willard Type HW-1-100. 6 volt, 15 plate, 100 Ampere Hour Capacity (20 hour rate).
Starting Capacity—120 amperes for 20 minutes.
Zero Capacity—300 amperes for 3.5 minutes. Five Second Voltage 4.3 volts.
Grounded Terminal—Positive (+) to cyl. head.
Dimensions—L. 9 3/64". W. 6 13/16". H. 8⅝".
Location—In engine compartment on left side.

STARTER

1947.....**Auto-Lite MZ-4136. Arm. No. MZ-2211**
1948.....**Auto-Lite MZ-4151. Arm. No. MZ-2211**
Drive—Barrel type Bendix Drive No. A1792.
Rotation—Counter-clockwise at commutator end.
Brush Spring Tension—42-53 ozs. (new brushes).
Cranking Engine—150 amperes, 5.2 volts, 150 RPM.

Performance Data

Torque	R.P.M.	Volts	Amperes
0 ft. lbs.	4300	5.5	70
.65 "	2500	5.5	100
2.55 "	1325	5.0	200
4.95 "	750	4.5	300
7.65 "	220	4.0	400
7.8 "	Lock	3.0	420
11.8 "	Lock	4.0	560

Starting Switch: Magnetic switch mounted on starter and controlled by Auto-Lite Model SW-4016 manual switch on toeboard operated by clutch pedal.

Removal:—Flange mounted on engine rear plate at left side. To remove, take out flange mounting screws, take off starter and switch assembly.

GENERATOR

Auto-Lite Model GDZ-4804A. Armature No. GDZ-2006F. Two brush type with current-voltage control.
Charging Rate Adjustment—None. See Regulator.
Maximum Charging Rate—35 amperes, 8.0 volts, 2250 Gen. RPM (hot), at car speed of 24 MPH & above with load or discharged battery (regulator setting).

Cold		Performance Data	Hot		
Amperes	Volts	R.P.M.	Amperes	Volts	R.P.M.
0	6.4	925	0	6.4	1000
4	6.6	1035	4	6.6	1120
8	6.75	1140	8	6.75	1235
12	6.95	1250	12	6.95	1350
16	7.15	1370	16	7.15	1460
20	7.3	1480	20	7.3	1590
24	7.5	1590	24	7.5	1730
28	7.7	1710	28	7.7	1900
32	7.9	1820	32	7.9	2090
35	8.0	1900	35	8.0	2250

Rotation—Counter-clockwise at commutator end.
Brush Spring Tension—35-53 ozs. (new brushes).
Field Current—1.60-1.78 amperes at 6.0 volts.
Motoring Current—4.16-4.60 amperes at 6.0 volts.

Removal:—Pivot mounted at left front of engine. To remove, take out pivot and clamp bolts.

Belt Adjustment:—Loosen pivot and clamp bolts, move generator out until ⅜-½" belt deflection midway between generator and fan pulleys is obtained.

REGULATOR

Auto-Lite Model VRP-4004F. Voltage & Current Type. Consists of Cutout Relay and vibrating type Voltage & Current Regulators in case on dash.
See Electrical Equipment Section for complete data.
NOTE—Regulator case cover is sealed. Serviced on exchange basis if seals not broken (to remove cover).

Cutout Relay

Cuts In—6.4-7.0 volts (set to 6.4-6.6 volts), 10.4 MPH.
Cuts Out—4.1-4.8 volts (approx. 4-6 amps. disch.).
Contact Gap—.015" minimum.
Air Gap—.031-.034" with contacts open (check at hinge end of core).

Voltage Regulator

Setting—7.2-7.5 volts at 70°F. See Electrical Equipment Section for settings at other temperatures.
Checking (without breaking seal) & Adjustment—***See Electrical Equipment Section.***
Contact Gap—.012" min. (armature against stop pin).
Air Gap—.048-.052" with contacts just opening.

Current Regulator

Setting—34-36 amperes (marked '35' on the cover).
Checking (without breaking seal) & Adjustment—***See Electrical Equipment Section.***
Contact Gap & Air Gap—Same as Voltage Regulator.

LIGHTING

Headlamps: Corcoran-Brown "Sealed Beam" type.
See Electrical Equipment Section for complete data.
Adjustment—Aim upper beam straight ahead (hot spot center 3" below lamp center height at 25 ft.).
Beam Indicator—At center of speedometer dial. Lighted whenever Country (upper) beams in use.

Direction Signal: ***See Electrical Equipment Section.***
Direction Signal Indicators—In face of Speedometer dial. Left or right indicator lighted when corresponding direction signal is in operation.

Switches

Lighting—Douglas. Studebaker No. 519798.
Beam Selector—Delco-Remy No. 1997008, Studebaker No. 519246.
Stop Light—Studebaker No. 666858.
Direction Signal—Studebaker No. 520304.

Bulb Specifications

Position	Candlepower	Mazda No.
Headlamps	Sealed Beam	4030
Parking	1.5	55
Direction Signal (Front)	21	1129
Beam Indicator	1	51
Direc. Signal Indicator	1.5	55
Instrument, Glove Compt.	1.5	55
Underhood, Trunk	1.5	55
Map, Dome	15	88
Stop & Tail	21-3	1158
Direction Signal (Rear)	21	1129
Rear License	3	63

MISC. ELECTRICAL

LIGHTING CIRCUIT BREAKER (On Light Switch): Studebaker No. 522014. 30-ampere thermostatic type. Protects Headlamps, Parking, Tail, & Instrument Lamps by vibrating to limit current.

Auxiliary Circuit Breaker (On Instrument Panel): Studebaker No. 519825 (1947), 523056 (1948). 15-ampere thermostatic type. Protects Body & Stop Lamps by vibrating to limit current.

ACCESSORY CIRCUIT BREAKER: One 15-ampere type used n cars with Climatizer and Defroster.

CONTINUED ON NEXT PA E

C NTINUED FROM PRECEDIN PAGE

FUSES: **Clock**—3 ampere. In clock lead.
Direction Signal—14 ampere. In Flasher lead.
Overdrive—20 ampere. On Overdrive Relay.
Glove Compt. Light—5 ampere. In lamp lead.
Under Hood Light—5 ampere. In lamp lead.
Fog Lights—20 ampere. On Fog Light Switch.

HORNS: **Sparton or Delco-Remy No. 1999610 (High Note), 1999611 (Low Note).** Twin Airtone type horns operated by relay. **Horn Current**—12-15 ams.(each).

Horn Relay: Delco-Remy No. 1116775.
Contacts Close—2.75-4.0 volts.
C ntact Gap—.025". **Air Gap**—.015" (closed).

ENGINE

ENGINE REMOVAL for Oil Pan Removal and all major engine work: *See Studebaker Shop Notes.*

ENGINE SPECIFICATIONS: Six cylinder, "L" Head.
Bore—3". **Stroke**—4".
Displacement—169.6 cu.ins. **Rated H.P.**—21.6
Developed Horsepower—80 at 4000 RPM.
Compression Ratio—6.5-1 Std. 7.0-1 Optl. iron hds.
NOTE—7.0-1 Head for 5000 ft. & higher altitudes.
Compression & Vacuum Reading—*See Tune-up data.*

ORIGINAL BORE & PISTONS: *See Studebaker Shop Notes.*

TIGHTENING TORQUES: *See Studebaker Shop Notes.*

CYLINDER HEAD INSTALLATION: *See Studebaker Shop Notes.*

PISTONS: Lynite aluminum alloy, Cam ground, T-slot, bearing-metal plated type. **Length**—2 29/32". **Weight**—8.48 ozs. (without rings or pin).
Clearance—Selective fit (see Fitting Pistons).
Removal—Pistons and rods removed from above.

Fitting New Pistons: Insert .002" feeler, 1" wide, between piston and cylinder wall on camshaft side (piston pin parallel to camshaft, slot away from camshaft). Pull required to withdraw feeler should be 11-16 lbs.

Replacement Pistons: *See Studebaker Shop Notes.*

Installing Pistons: T-slot away from camshaft.

PISTON RINGS: Two compression (Perfect Circle #200 Top, #70 —2nd), one Oil Control (#85).

Ring	Width	End Gap	Side Clearance
Compr. #1	3/32"	.007-.017"	.0015-.002"
Compr. #2	1/8"	.007-.017"	.0015-.002"
Oil Contr. (#3)	5/32"	.007-.017"	.0015-.002"

Installing Rings: Step up top ring, step down 2nd ring.

Replacement Rings: Sets furnished Std. size and .020", .030", .040" Oversize. Single rings Std. size and .010", .020", .030", .040" Oversize.

PISTON PIN: **Diameter .7491-.7495". Length 2⅝".** Pin is locked in rod by tapered pin and locknut.
Pin Fit in Piston—.0001-.0003" clearance or light finger-push fit at room temperature (70°F).

Installing Pins: Use Pin Assembly Tool J-1293. Install clamp bolt nut and star washer on heavy boss side of rod. NOTE—Threads on opposite end of clamp bolt used only to remove bolt from rod (install nut on this end, tighten nut to pull bolt out of rod).

Replacement Pins: Std. & .0025". .005" oversize. Use Hone No. PH-1 to obtain proper piston pin fit.
NOTE—Replacement pistons fitted with pins.

CONNECTING ROD: **Length 6⅜". Weight 20.48 ozs.**
Crankpin Journal Diameter—1.81175-1.81275"
Lower Bearing—Interchangeable steel-backed, micro-babbitt lined type. No shims.
Clearance—.0005-.002" **Sideplay**—.005-.009".

Bearing Adjustment: None (no shims). Replace bearings. Do not file rods or bearing caps.
NOTE—Make certain that small tongue on bearing shells engage grooves. Palnuts used on bolt nuts.
Palnut Installation—*See Studebaker Shop Notes.*

Replacement Bearings: Bearings furnished Std. Size and .001", .005", .010", .020" Undersize.

Installing Rods: Lower bearings "offset". Install rods with narrow portion of bearing toward front of engine (#1, 3, 5), toward rear (#2, 4, 6). Numbers on rods and bearing caps must be together and installed in same numbered cylinder with number and oil hole in lower end of rod toward camshaft side.

CRANKSHAFT: Four bearing type with integral counterweights. Vibration dampener on front end.
Vibration Dampener—*See Studebaker Shop Notes.*
Journal Diameters—2.4370-2.4375" (All) Std.
►*CAUTION—Journals are .005" Undersize on engines with letter "A" following Engine Number.*
Bearing Type—Removable type, steel-backed, micro-babbitt lined. No shims.
Clearance—.0005-.0025".
Rear Bearing Oil Seals—Consist of rubber ring, Studebaker No. 521544 (After Eng. No. 284200), on crankshaft; two rubber seal strips, Studebaker No. 522144, in grooves on top of bearing cap; and two specially treated wood strips, Studebaker No. 197178, in grooves on sides of bearing cap.
►*CAUTION—Install new wood oil seals (above) each time rear main bearing cap removed and re-installed.*

Bearing Adjustment: None (no shims). Replace bearings. Do not file bearing caps.
NOTE—Front oil pan seal block may be removed for access to front main bearing cap by removing four lower timing gear cover retaining screws. Use only malleable iron type filler block on these cars.
►*CAUTION—Do not securely tighten timing gear cover to-filler block screws until after oil pan screws tightened uniformly and securely.*

Replacement Bearings: Furnished as sets or single bearings Std. & .001", .005", .010", .020", .030" U. S.

End Thrust: Taken by thrust washer assembled between front main bearing and crankshaft gear. Controlled by shims between thrust washer and main bearing journal. Adjust by changing shims (.003", .005", .007" thick). **Endplay**—.003-.006".

CAMSHAFT: Four bearing type. Helical gear drive.
Journal Diameters—#1, 1.7475-1.7480"; #2, 1.7162-1.7170"; #3, 1.6857-1.6865"; #4, 1.6232-1.6240".
Bearings—Split, steel-backed, babbitted bushings.
Clearance—.0007-.0022" (#1), .0010-.0027" (others).

Bearing Adjustment: None. Replace bushings with camshaft removed. NOTE - Align bushing oil hole with oil hole in block.

Camshaft Removal: *See "Camshaft & Bearings" in Studebaker Shop Notes.*

End Thrust: Taken by thrust plate assembled on front face of engine block behind camshaft gear (spacer assembled on shaft behind gear hub).
Endplay—.004-.008" (or .004-.006" if new thrust plate and thrust spacer installed. Check thickness by which spacer exceeds plate (endplay).

Timing Gears: Crankshaft gear Cast Iron, Camshaft gear Celoron with steel hub.
Backlash—.001-.003".
Replacement Gears—Camshaft gear furnished in three sizes: Standard (marked "S"), High Limit (marked "H"), Low Limit (marked "L"). Crankshaft gear furnished Standard size only.
Timing Gear Removal & Installation—*See "Timing Gears" in Studebaker Shop Notes.*

Camshaft Setting: Mesh marked tooth of camshaft gear between two marked teeth of crankshaft gear.

VALVES:

	Head Diameter	Stem Diameter	Length
Intake	1 11/32"	5/16"	4 11/32"
Exhaust	1 9/32"	5/16"	4 11/32"

	Seat Angle	Lift	Stem Clearance
All Valves	45°	5/16"	.0015-.0035"

Valve Guides: Pressed in block from above with top of guide 1 3/16" below top of block. Finish ream guides to inside diameter of .312-3125". Use Valve Stem Guide Remover and Replacer Tool J-2034. Replace worn guides if clearance greater than .0035".

Valve Springs: Install with closed coil end up. Replace springs if more than 10% weaker than test pressure of 77-85 lbs. at 1 7/16" (U-15 or other accredited tester). Spring free length 2 3/32".

	Spring Pressure	Length
Valve Closed	52-56 lbs	1 21/32"
Valve Open	90-94 lbs	1 11/32"

NOTE—Install valve spring retainer with flange engaging flat surface on lower coil and tongue on inner diameter engaging groove in spring lock.

Valve Lifters: Mushroom type. Remove from below with camshaft out of engine. *For Camshaft Removal directions, refer to Studebaker Shop Notes.*
Valve Lifter Tension Spring—*See "Valve System" in Studebaker Shop Notes.*
Clearance—.0005-.00175".
Replacement Lifters—Furnished Std. size and .0005", .001" Oversize.

VALVE TIMING

Tappet Clearance: .016" All Valves, Engine cold.
NOTE - Self-locking tappet adjusting screws used. Tappet screw tension should be 25 in. lbs. minimum.

Valve Timing: See Camshaft Setting above.
Intake Valves—Open 15° BTDC. Close 49° ALDC.
Exhaust Valves—Open 54° BLDC. Close 10° ATDC.
Valve Timing Check—With .020" tappet clearance, #1 intake valve should open with #1 piston 15° or .0893" BTDC. with vibration dampener mark "IN. OP .1-6/" in line with pointer on left side of timing gear cover. Reset tappet clearance to .016" Cold

LUBRICATION

Lubrication System: Pressure to crankshaft, connecting rod, and camshaft bearings and to valve lifters. Timing gears lubricated by oil by-passed by pump.
Crankcase Capacity - 5 qts. ("Add Oil" point on oil level indicator stick is 3 qt. level).
Normal Oil Pressure—20-40 lbs. at 40 MPH.
Oil Pressure Relief Valve—On lower right front corner of engine. Opens at 40 lbs. Adjustable by inserting shims between outer end of spring and plug.

Oil Pan Removal: *See Engine Removal in Studebaker Shop Notes (recommended for pan removal).*

Oil Pump: Helical gear type. Mounted externally on right hand side of crankcase.
Oil Pump Removal & Installation—*See "Oil Pump" in Studebaker Shop Notes.*

Oil Filter (Optl.): Fram Model F3-P2 (Std. Service), F4-P2 (Heavy Duty). Replacement Cartridge Kit Studebaker No. 520829 (F3-P2), 520830 (F4-P2).

Oil Pressure Gauge: Stewart-Warner Bourden tube (not electric) type. Studebaker No. 522179.

Crankcase Ventilation: Filter element in oil filler cap (air intake) and in breather pipe on left rear of engine (air outlet).
Servicing—Wash both filter elements in kerosene and re-oil at regular intervals. NOTE—Filter in outlet pipe removed by taking out cotter pin.

COOLING

Cooling System: Positive circulation with water pump mounted on front of block with fan.
Capacity—10 quarts (11 qts. with Climatizer)

Water Pump: Packless, sealed ball bearing type.
See Water Pump Section for complete data.
Removal—Slack off drive belt, take out capscrews in the fan pulley hub & remove fan blades. Disconnect hose connection, take out mounting screws in pump body flange, withdraw pump from engine
Belt Adjustment—*See Generator Belt Adjustment.*

Thermostat: Bishop & Babcock. In water outlet on cylinder head.
Setting—Starts to open at 151-155°F.

Temperature Gauge: Stewart-Warner Bourden tube type (not electric). Studebaker No. 522180.

CLUTCH

Borg & Beck Model 8A7 with Borglite Driven Member. Single plate, dry disc type. NOTE—Clutch assembly marked by number 980 stamped on cover.
See Clutch Section for complete data.
Facings—Moulded Metallic type, 2 required. I. D. 5⅜". O. D. 8". Thickness ⅛".

►*CAUTION—Special driven member used on cars with Overdrive. Identify each type by hub damper spring color as follows:* Damper Spring Color.
Cars with Conventional Trans.....2 Lavender, 2 Black
Cars with Overdrive Trans. ..... 4 Lavender

Pedal Adjustment: Pedal free travel ½" to 1". To adjust, unhook pull-back spring on outside of frame rail, loosen locknut at adjusting clevis and remove clevis pin at inner end of pedal shaft, turn clevis on rear end of pedal shaft-to-operating shaft rod for correct clearance, reassemble linkage.
Cars before Serial No. G-217064—Pedal free travel must be set to ½" to ¾" on these cars.
Hill-Holder Note—Check setting whenever clutch pedal adjusted and adjust Hill-holder to release just as clutch engages.
See Studebaker Shop Notes for Clutch Release Shaft Lubrication and Hill-Holder Adjustment.

Removal: Car manufacturer recommends Engine (with clutch attached) be removed. *See "Engine Removal" in Studebaker Shop Notes.* Block release levers. Remove six mounting screws in clutch cover flange, lift off clutch assembly and driven member.

TRANSMISSION

Warner Model AS1-T96 (Std.), AS2-T96 with R10B type Overdrive (Optl.). All helical gear type. Constant-mesh, synchro-mesh (Second & High), sliding gear (Low & Reverse).
See Transmission Section for complete data.

Transmission Control: Remote control type with gearshift lever mounted on steering column.
See Transmission Section for complete data.

Removal: Drain transmission. Disconnect hand brake cable and move out of way for clearance. Disconnect front universal at transmission (wire caps or use clamp to prevent losing rollers). Take out center support bearing mounting bolts. Push front shaft and support to rear (will slide on splines on rear shaft). Disconnect shift rods from levers on case and speedometer cable (remove speedometer pinion). On Overdrive transmission disconnect all control wires and cable. Take out transmission to clutch housing capscrews, pull transmission straight back and remove from car.

OVERDRIVE

Warner Type R10B (part of AS2-T96 Transmission). New Governor controlled type (no centrifugal pawls) with electrical solenoid operation and throttle controlled "kick-down."
See Transmission Section for complete data.
Overdrive Solenoid—Warner Model No. 3AR10B-62, Studebaker No. 521429.
Overdrive Governor—Warner Model No. AR10B-72, Studebaker No. 520454.
Control Relay—Auto-Lite HRT-4001, Studebaker No. 523297.
Throttle Kick-down Switch—Studebaker 515667.
Lock-out Switch—Studebaker No. 521436.
Fuse—20 ampere. On Overdrive Relay.

Removal: See Std. Transmission Removal data

UNIVERSALS

Spicer Model 1268-110X (Front & Rear), 1261-102X intermediate). Needle bearing type. Three used with intermediate universal at propeller shaft support bearing on crossmember (see Propeller Shaft)
See Universals Section for complete data.

Propeller Shaft & Support Bearing: Two shafts used:
1) Front Shaft with intermediate universal yoke bolted on rear end (no slip-joint).
2) Rear Shaft with slip-joint on forward end at intermediate universal.
Propeller Shaft & Support Bearing Removal & Servicing—*See "Propeller Shaft" in Studebaker Shop Notes.*

REAR AXLE

Spicer Salisbury Model 23. Semi-floating, Hypoid Gear type with Hotchkiss Drive.
See Rear Axle Section for complete data.
Ratio—4.1-1 Std. 4.56-1 Optl. (Std. with Overdrive).
NOTE—Rear axle ratio stamped on plate attached to axle by cover capscrew.
Backlash—.005-.007" Shim adjustment.

Removal: Remove hub caps, take out cotter pin from axle nut, loosen rear wheel nuts. Place car on stands on frame just ahead of rear springs. Remove wheels, hubs and drums. Disconnect hand brake cable. Take out backing plate bolts from backing plates, free hydraulic brake line from axle housing clips (do not disconnect brake line). Backing plates and adjusting shims can then be wired to frame (do not disconnect brake line from wheel cylinders). Disconnect rear universal (wire caps or use clamp to prevent losing rollers). Remove rear spring "U" bolts, disconnect lower shock absorber links, remove rear axle assembly from car.
Axle Shaft Removal—Remove wheel, remove wheel hub (use puller J-446-A). Take out backing plate retaining bolts, remove outer oil seal. Pull backing plate out over end of axle shaft and wire plate to frame (CAUTION—do not lose adjusting shims located between backing plate and axle housing flange), pull axle shaft with Puller HM-931.

Wheel Bearing Adjustment: Use dial indicator to check axle shaft endplay. Adjust by removing backing plate (see Axle Shaft Removal above), and adding or removing shims located between backing plate and axle housing flange (shims .003", .005", .010", .030" thick). **Endplay**—.001-.005".

SHOCK ABSORBERS

Houde (Houdaille). Double acting, hydraulic type.
Front—Houde No. A-14269, Studebaker 523646.
Rear—Houde No. A-11478 (Left), A-11477 (Right), Studebaker No. 517696 (Left), 517695 (Right).
See Shock Absorber Section for complete data.

Adjustment: Adjusting pointer on end of shaft should be lined up with scribed line on end of shaft. Turn pointer clockwise for firmer action, counter-clockwise for softer action (not more than 1/32-1/16").

Refilling: Check at 5000 mile intervals. Fill to bottom of filler plug hole. CAUTION—Use only Houdaille Shock Absorber Fluid No. L-1404 (new type fluid for shock absorbers with new circular top filler plug

FRONT SUSPENSION

Front Suspension: Planar type independent suspension with transverse spring. NOTE—Suspension system has lower control arms (with leaf spring).
See Front Suspension Section for complete data.
Kingpin Inclination—5½° crosswise.
Caster—0° to Positive 1°. Not adjustable.
Camber—½° ± ¼°. Shim adjustment (shims between upper control arm brackets and frame). One thin shim changes setting approx. ¼°. Thick shim equals 4 thin shims.
CAUTION—Add or remove shims equally at front and rear brackets when adjusting Camber.
Toe In—1/16-⅛". Adjust **right hand tie rod only** for toe in after left hand tie rod has been adjusted for wheel straight-ahead position (with steering wheel centered) and center auxiliary tie rod has been adjusted so that steering gear arm and auxiliary steering arm parallel. **RHD Car Note**—Make toe-in adjustments on left hand tie rod.

STEERING GEAR

Ross Model T-12 Cam-and-Twin Lever type.
See Steering Gear Section for complete data.

BRAKES

Service: Lockheed (Wagner Electric) Hydraulic, Self-centering, Self-adjusting type. Brakes are new design with automatic spring-loaded adjusting wedge controlled by contact plug projecting through hole in lining of forward shoe (plug contacts drum when brakes applied). Hand lever applies rear wheel service brakes. NOTE—New type actuating spring used on brake shoe contact plug on 1948 cars (replaces hairpin locks and contact plug coil spring).
See Brake Section for complete data.
Drums—Composite type. Diameter 9".
Clearance—Adjustment necessary only when new linings installed. *See Brake article in Brake Section.*
Lining—Moulded type (all shoes). Width 2". Thickness 3/16". Length per wheel 18.5".
Braking Power—57% Front. 43% Rear.

Hand Brake: See Service Brake data (above).

Hill-Holder: Optional Equipment on all models.
See Brake Section for complete data.
Adjustment—*See Studebaker Shop Notes.*

MISC. MECHANICAL

CONVERTIBLE TOP CONTROL: Electric type with motor mounted on left hand lift assembly (right hand lift assembly driven through flexible drive
See Miscellaneous Section for complete data.

HOOD LOCK, LOCK ADJUSTMENT, HOOD ASSEMBLY ALIGNMENT: *See Studebaker Shop Notes.*

MODEL IDENTIFICATION

SERIAL NUMBER: Stamped on plate on left front door lock pillar post.

	South Bend	Los Angeles
1947 Numbers	4232501 Up	4818501 Up
1948 Numbers	4287001 Up	4820501 Up

Body Symbol Letter—Used with model designation (and on body number plate) to indicate body type as follows: C, 5-Pass. Coupe; F, 2-Door Sedan; Q, 3-Pass. Coupe; S, Convertible; W, 4-Door Sedan; Y, Land Cruiser.

ENGINE NUMBER: Stamped on pad on upper front left corner of engine block.
1947 Numbers H-182001 Up. 1948 Nos. H-239001 Up

TUNE-UP

COMPRESSION PRESSURE: 105 lbs. at 150 RPM. cranking speed for Std. 6.5-1 Head.

VACUUM READING: Steady 18-20" idling at 8 MPH.

FIRING ORDER: 1-5-3-6-2-4.

SPARK PLUG GAPS: .025" Limits .0225-.0275".
Plug Type—Champion Type J7 or J9. 14 mm.

IGNITION: *See Coil, Condenser, and Distributor.*
Breaker Gap—.020". Limits .018-.022".
Cam Angle or Dwell—38° Closed, 22° Open.
Breaker Arm Spring Tension—17-20 ozs.
Automatic & Vacuum Advance—*See Distributor.*

IGNITION TIMING: 2° (9/64") BTDC.
Timing Procedure—*See Ignition Timing.*
Timing Mark—Vibration Dampener mark "IGN/" aligned with pointer on gear case cover. NOTE—Insert .020" feeler between modifier control arm and clamp arm before tightening clampscrew (to prevent binding).
Octane Selector Setting—Set to just eliminate ping when engine hot and pulling hard.

CARBURETION: *See Carburetor & Carb. Equipment.*
Idle Setting—Idle screw set for smooth idle. Turn screw out for richer mixture.
Idle Speed—8-10 MPH. at normal operating temp.
Float Level—Fuel level ⅝" below top edge of float bowl with engine idling.
Accelerating Pump—Center hole (med. stroke) Normal all-season setting. Inner hole (min.)—Summer, Outer hole (max.)—Winter used for temperature extremes.
Fuel Pump Pressure—4-5 lbs. maximum.

MANIFOLD HEAT CONTROL: Automatic thermostatic type operating in stainless steel bushings.
Setting—To test coil tension, free outer end of coil from bracket on manifold. With valve closed, hooked end of coil should be approx. 90° from bracket at 70°F. Replace coil if incorrect.
NOTE—To overcome sticking, lubricate valve shaft with kerosene and soda solution or Bendix Carburetor Cleaner. If necessary, shaft diameter can be reduced for .005" clearance in bushings.

VALVE TAPPET CLEARANCE: .016" All Valves, Cold.
Valve Timing Check—*See Valve Timing.*

STARTING: *See Battery, Starter, Generator, Regulator.*

IGNITION

IGNITION SWITCH: Mitchellock Switch Model 42-R. No. E-10336 (for Y & T lock) or E-10522.
Igniti n Lock—Yale & Towne.

COIL: Auto-Lite ('47) CE-4032, ('48) CE-6007. On eng. above distributor (under spark plug cable bracket).
Ignition Current—½-1½ amps. idling, 4-5 stopped.

CONDENSER: Auto-Lite Part No. IG-2671.
Capacity—.20-.25 microfarad

DISTRIBUTOR: Auto-Lite Model IGC-4802. Full au-
Breaker Gap—.020". Limits .018-.022".
Cam Angle—38° closed, 22° open.
Breaker Arm Spring Tension—17-20 ozs.
Rotation—Counter-clockwise viewed from above.

Distr. Degrees	Automatic Advance R.P.M.	Eng. Degrees	R.P.M.
Start	400	0	800
2	600	4	1200
5	900	10	1800
8	1200	16	2400
10	1400	20	2800

Octane Selector—Provides manual adjustment at distributor (hold-down plate marked with scale) for variation in timing depending on fuel regularly used. See Ignition Timing following for adjustment.

Vacuum Spark Control: Auto-Lite VC-4004. On hold-down plate and linked to advance plate. Provides additional advance at speeds above idling except when engine accelerated or operated with wide open throttle (spark retarded by return spring).

Vacuum Advance

Distr. Degrees	Eng. Degrees	Vacuum (" of HG)
Start	0°	3"
2°	4°	5"
3°	6°	6"
5°	10°	10"
6°	12°	12"

Distributor Removal:—Mounted on left side of engine. To remove, disconnect vacuum line, take out bolt in clamp arm, lift distributor off.
Installation Note—When installing distributor, crank engine to firing position for #1 cylinder ('IGN' on vibration dampener in line with pointer on timing gear cover), sight down distributor shaft hole (distributor out) and see that distributor drive tongue in oil pump drive gear is 30° from the horizontal and offset toward the top, turn rotor to #1

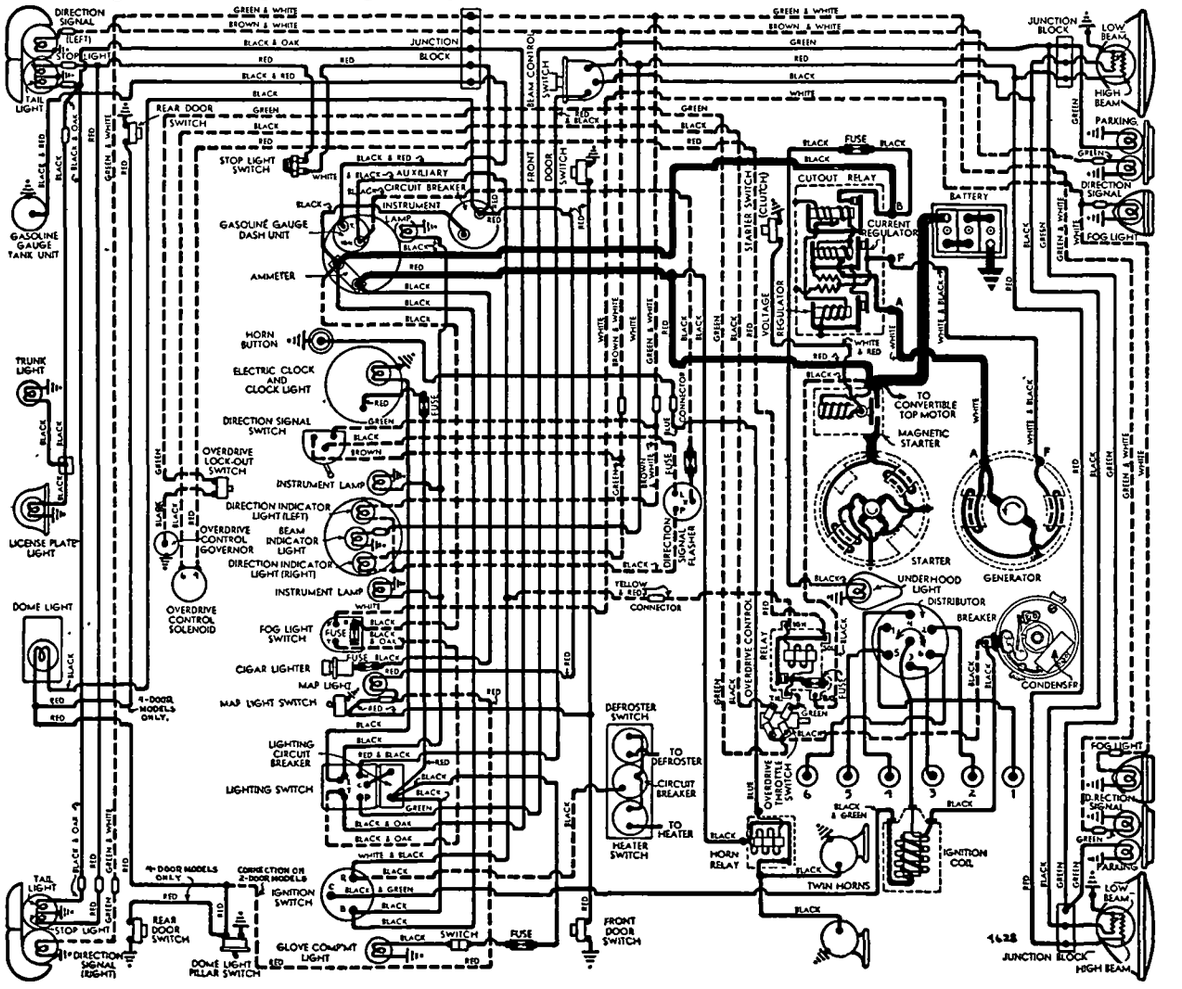

segment, install distributor (insert .020" feeler between modifier control arm and clamp arm before tightening clamp, to prevent binding), check timing.

IGNITION TIMING

Std. Setting — **Flywheel Degrees—Piston Pos.**
All Engines.....2° (9/64") BTDC.....0016" BTDC
This setting correct for regular fuel (see Octane Selector Setting for service and fuel modification)

Timing (with Neon Timing Light)—Neon Light No. 890 recommended. Clip Neon light lead in series with #1 spark plug, idle engine and direct light on vibration dampener (at pointer on timing gear cover). Loosen hold-down plate screw, center scale on pointer, tighten screw. Loosen clamp arm, rotate distributor until 'IGN' mark on vibration dampener lines up with pointer on timing gear cover. Insert .020" feeler between modifier control arm and clamp arm before tightening clamp (to insure clearance for modifier control arm). Check Octane Selector **Timing (without Neon Timing Light)**—Turn engine over to firing position for #1 piston with 'IGN' mark on vibration dampener in line with pointer on timing gear cover and distributor rotor opposite #1 segment in distributor cap. Adjust distributor.

Octane Selector Setting—After setting ignition timing (above), loosen selector hold-down screw, advance selector (move toward 'A' end of scale) until motor 'pings' when it is hot and pulling hard. Then retard until ping just disappears.

CARBURETOR

Stromberg Model BXOV-26. 1¼" Single Barrel, Downdraft, with Fast Idle & Automatic Choke.
Code No. (on bowl cover)—6-104.
See Carburetor Section for complete data.

Settings (Idle Setting, Float Level, & Accelerating Pump): *See Tune-Up data.*
Metering Jet—*Refer to Carburetor Index for Stromberg Downdraft Carburetor Jet Specification Table.*

Fast Idle: Stromberg BXOV-26 carburetor type.
See Carburetion Equipment Section for data.

Fast Idle Setting—To check, hold stopscrew against lowest step of fast idle cam, move choke valve as far as possible toward closed position, check valve opening with 11/32" drill. Adjust by bending connector

Automatic Choke:—Stromberg BXOV-26 type.
See Carburetion Equipment Section for data.

Automatic Choke Setting—'R' mark on thermostat cover in line with highest projection on housing. Shift to 'M' if engine loads up or overchokes. Use 'H' setting only if highly volatile fuels used.

CARB. EQUIPMENT

Air Cleaner: AC No. 1544024 Oil-wetted type Std. Filter Element AC #6. Oil-bath Cleaner Optl.
Servicing (Oil-wetted Type)—Clean and re-oil filter element at 1000 mile intervals or as required.
Servicing (Oil-bath Type)—Clean filter element and oil reservoir, fill reservoir to indicated level mark with SAE No. 40 or 50 engine oil at intervals as required by operating conditions.

Fuel Pump (Std. 1947): AC type. Studebaker No. 520752 (523048 for RHD cars).

►***NOTE—Oil pump vacuum booster (for windshield wiper operation) used on 1947 cars only.***
(Std. 1948—Fuel-&-Vacuum) AC type. Studebaker No. 523827.
Pressure—4-5 lbs. maximum.
See Carburetion Equipment Section for data.

Gasoline Gauge: Stewart-Warner Electric type.
Dash Unit—Studebaker No. 522177.
Tank Unit—Studebaker No. 519423.
See Carburetion Equipment Section for data.

BATTERY

Willard Type HW-1-100. 6 volt, 15 Plate, 100 Ampere Hour Capacity (20 hour rate).
Starting Capacity—120 amperes for 20 minutes.
Zero Capacity—300 amperes for 3.5 minutes. Five Second Voltage 4.3 volts.
Grounded Terminal—Positive (+) to cylinder head.
Dimensions—Length 9 3/64". Width 6 13/16". Height 8⅝".
Location—In engine compartment on left side.

STARTER

Auto-Lite MAW-4020, MAW-4020A or MCH-4001.
Armature—MAW-2091 (for MAW) or MCH-2006.
Drive—Barrel Type Bendix Drive No. A1729 (MAW Starters), No. A1792 (MCH Starter).
Rotation—Counter-clockwise at commutator end.
Brush Spring Tension—42-53 ozs. (new brushes).
Cranking Engine—130 RPM, approx. 175 amperes at 5.0-5.5 volts.

Performance Data

Torque		R.P.M.	Volts	Amperes
0	ft. lbs.	4900	5.5	65
2.75	"	1480	5.0	200
5.45	"	820	4.5	300
8.50	"	400	4.0	400
11.55	"	110	3.5	500
18.0	"	Lock	4.0	670

Removal:—Starter flange mounted on engine rear plate, on left side. To remove, take out flange mounting screws, remove starter assembly.

Starting Switch: Magnetic switch mounted on starter and controlled by Auto-Lite Model SW-4016 manual switch. Manual switch is mounted on toeboard and operated by clutch pedal when fully depressed.

GENERATOR

Auto-Lite Model GDZ-4805A. Armature No. GDZ-2006F. Two brush type with current-voltage control.
Charging Rate Adjustment—None. See Regulator.
Maximum Charging Rate—35 amperes, 8.0 volts, 2250 Gen. RPM (hot), at car speed 25.8 MPH and up with load or discharged battery (regulator setting).

Cold Amperes	Cold Volts	Cold R.P.M.	Hot Amperes	Hot Volts	Hot R.P.M.
0	6.4	925	0	6.4	1000
4	6.6	1035	4	6.6	1120
8	6.75	1140	8	6.75	1235
12	6.95	1250	12	6.95	1350
16	7.15	1370	16	7.15	1460
20	7.3	1480	20	7.3	1590
24	7.5	1590	24	7.5	1730
28	7.7	1710	28	7.7	1900
32	7.9	1820	32	7.9	2090
35	8.0	1900	35	8.0	2250

Performance Data
Rotation—Counter-clockwise at commutator end.
Brush Spring Tension—35-53 ozs. (new brushes).
Field Current—1.60-1.78 amperes at 6.0 volts.
Motoring Current—4.16-4.60 amperes at 6.0 volts.

Removal:—Pivot mounted at left front of engine. To remove, take out pivot and clamp bolts.

Belt Adjustment:—Loosen pivot and clamp bolts, move generator out until ⅜-½" belt deflection midway between generator and fan pulleys is obtained.

REGULATOR

Auto-Lite Model VRP-4004F. Voltag & Current Type. Consists of Cutout Relay and vibrating type Voltage & Current Regulators in case on dash.
See Electrical Equipment Section for complete data.
NOTE—Regulator case cover is sealed. Serviced on exchange basis if seals not broken (to remove cover).

Cutout Relay

Cuts In—6.4-7.0 volts (set to 6.4-6.6 volts), 10.4 MPH.
Cuts Out—4.1-4.8 volts (approx. 4-6 amps. disch.).
Contact Gap—.015" minimum.
Air Gap—.031-.034" with contacts open (check at hinge end of core).

Voltage Regulator

Setting—7.2-7.5 volts at 70°F. See Electrical Equipment Section for settings at other temperatures.
Checking (without breaking seal) & Adjustment—*See Electrical Equipment Section.*
Contact Gap—.012" min. (armature against stop pin).
Air Gap—.048-.052" with contacts just opening.

Current Regulator

Setting—34-36 amperes (marked '35' on the cover).
Checking (without breaking seal) & Adjustment—*See Electrical Equipment Section.*
Contact Gap & Air Gap—Same as Voltage Regulator.

LIGHTING

Headlamps: Corcoran-Brown "Sealed Beam" type.
See Electrical Equipment Section for complete data.
Adjustment—Aim upper beam straight ahead (hot spot center 3" below lamp center height at 25 ft.).
Beam Indicator—At center of speedometer dial. Lighted whenever Country (upper) beams in use.

Direction Signal: *See Electrical Equipment Section.*
Direction Signal Indicators—In face of Speedometer dial. Left or right indicator lighted when corresponding direction signal is in operation.

Switches

Lighting—Douglas. Studebaker No. 519798.
Beam Selector—Delco-Remy No. 1997008, Studebaker No. 519246.
Stop Light—Studebaker No. 666858.
Direction Signal—Studebaker No. 520304.

Bulb Specifications

Position	Candlepower	Mazda No.
Headlamps	Sealed Beam	4030
Parking	3	63
Direction Signal (Front)	21-3	1158
Beam Indicator	1	51
Direc. Signal Indicator	1.5	55
Instrument, Glove Compt.	1.5	55
Underhood, Trunk	1.5	55
Map, Dome	15	88
Stop & Tail	21-3	1158
Direction Signal (Rear)	21	1129
Rear License	3	63

MISC. ELECTRICAL

LIGHTING CIRCUIT BREAKER (On Light Switch): Studebaker No. 522014. 30-ampere thermostatic type. Protects Headlamps, Parking, Tail, & Instrument Lamps by vibrating to limit current.

Auxiliary Circuit Breaker (On Instrument Panel): Studebaker No. 519825 (1947), 523056 (1948). 15-ampere type. Protects Body & Stop Lamps.

C NTINUED ON NEXT PAGE

C NTINUED FROM PRECEDIN PA E

ACCESSORY CIRCUIT BREAKER: One 15-ampere type used on cars with Climatizer and Defroster.

FUSES: Clock—3 ampere. In clock lead.
Direction Signal—14 ampere. In Fasher lead.
Overdrive—20 ampere. On Overdrive Relay.
Glove Compt. Light—5 ampere. In lamp lead.
Under Hood Light—5 ampere. In lamp lead.
Fog Lights—20 ampere. On Fog Light Switch.

HORNS: Sparton or Delco-Remy No. 1999610 (High Note), 1999611 (Low Note). Twin Airtone type horns operated by relay. **Horn Current**—12-15 amps (ea.).

Horn Relay: Delco-Remy No. 1116775.
Contacts Close—2.75-4.0 volts.
Contact Gap—.025". **Air Gap**—.015" (contacts closed).

ENGINE

ENGINE REMOVAL for Oil Pan Removal and all major engine work: *See Studebaker Shop Notes.*

ENGINE SPECIFICATIONS: Six cylinder, "L" Head.
Bore—3 5/16". **Stroke**—4⅜".
Displacement—226.2 cu. ins. **Rated H.P.**—26.35.
Developed Horsepower—94 at 3600 RPM.
Compression Ratio—6.5-1 Std. 7.0-1 Optl. iron hds.
NOTE—7.0-1 Head for 5000 ft. & higher altitudes.
Compression & Vacuum Reading—*See Tune-up data.*

ORIGINAL BORE & PISTONS: *See Studebaker Shop Notes.*

TIGHTENING TORQUES: *See Studebaker Shop Notes.*

CYLINDER HEAD INSTALLATION: *See Studebaker Shop Notes.*

PISTONS: Lynite aluminum alloy, Cam-ground, T-slot, bearing-metal plated type. **Length 3¾".**
Weight—14.4 ozs. (stripped).
Clearance—Selective Fit (see Fitting Pistons).
Removal—Pistons and rods removed from above.
NOTE—Car manufacturer recommends that cylinders out-of-round or tapered more than .002" be reconditioned.

Fitting New Pistons: Insert .002" feeler, 1" wide, between piston and cylinder wall on camshaft side (piston pin parallel to camshaft, slot away from camshaft). Pull required to withdraw feeler should be 14-19 lbs.

Replacement Pistons: *See Studebaker Shop Notes.*

Installing Pistons: T-slot away from camshaft.

PISTON RINGS: Two compression, one oil control ring per piston, all above pin. Oil drain holes provided in oil ring groove.

Ring	Width	End Gap	Side Clearance
Comp. (#1,2)	3/32"	.009-.014"	.0015-.002"
Oil Contr. (#3)	3/16"	.009-.014"	.0015-.002"

Installing Rings: Beveled side of compression rings (Sealed Power) up.

Replacement Rings: Sets furnished Std. size and .020", .030", .040" Oversize. Single rings Std. size and .010", .020", .030", .040" Oversize.

PISTON PIN: Diameter .8741-.8745". Length 2⅞". Pin is locked in rod by tapered pin and locknut.

Installing Pins: Use Pin Assembly Tool J-1293. Install clamp bolt nut and star washer on heavy boss side of rod. NOTE—Threads on opposite end of clamp bolt used only to remove bolt from rod (install nut on this end, tighten nut to pull bolt out of rod).
Pin Fit in Piston—.0001-.0003" clearance or light finger push fit at room temperature (70°F).

Replacement Pins: Std. & .0025", .005" Oversize. Use Hone PH-1 to obtain proper piston pin fit.
NOTE—Replacement pistons fitted with pins.

CONNECTING ROD: Length 8⅛". Weight 33.3 ozs.
Crankpin Journal Diameter—2.18675-2.18775".
Lower Bearing—Interchangeable steel-backed, micro-babbitt lined type. No shims.
Clearance—.0005-.002". **Sideplay** .005-.009".

Bearing Adjustment: None (no shims). Replace bearings. Do not file rods or caps.
NOTE—Make certain that small tongue on bearing shells engage grooves. Palnuts used on bolt nuts.
Palnut Installation—*See Studebaker Shop Notes.*

Replacement Bearings: Bearings furnished Std. size and .001", .005", .010", .020" Undersize.

Installing Rods: Lower bearings "offset". Install rods with narrow portion of bearing toward front of engine (#1, 3, 5), toward rear (#2, 4, 6). Numbers on rods and bearing caps must be together and installed in same numbered cylinder with number and oil hole in lower end of rod toward camshaft

CRANKSHAFT: 4 bearing, 5 integral counterweights. Vibration dampener mounted on forward end.
Vibration Dampener—*See Studebaker Shop Notes.*
Journal Diameters—2.4995-2.5000".
Bearings—Removable steel backed, babbitt-lined type. No shims.
Clearance—.0005-.0025".
Rear Bearing Oil Seals—Consist of rubber ring, Studebaker No. 523134 (After Eng. No. H-269,723), on crankshaft; two rubber seal strips, Studebaker No. 522144, in grooves on top of bearing cap; and two specially treated wood strips, Studebaker No. 187106, in grooves on sides of bearing cap.
►*CAUTION—Install new wood oil seals (above) each time rear main bearing cap removed and re-installed.*

Bearing Adjustment: None (no shims). Replace bearings. Do not file bearing caps.

Replacement Bearings: Furnished as sets or single bearings in Std. Size and .001", .010", .030" Undersize.

End Thrust: Taken by thrust plate assembled between front main bearing and crankshaft gear. Controlled by shims between thrust plate and main bearing journal. Adjust by changing shims furnished .003", .005", .007" thick.
Endplay—.003-.006".

CAMSHAFT: Four bearing type with helical gear
Journal Diameters—#1, 1.9975-1.9980"; #2, 1.9662-1.9670"; #3, 1.9357-1.9365"; #4, 1.1232-1.1240".
Bearings—Split steel-backed, babbitted bushings.
NOTE—Oil hole in bushings must be aligned with oil holes in engine block.
Clearance—.0007-.0022" (#1), .0010-.0027" (others).

Camshaft Removal: *See "Camshaft & Bearings" in Studebaker Shop Notes.*

End Thrust: Taken by thrust plate assembled on front face of engine behind camshaft gear (spacer assembled back of gear hub).
Endplay—.004-.008" (or .004-.006" if new thrust plate and thrust spacer installed. Check thickness by which spacer exceeds plate (endplay).

Timing Gears: Crankshaft gear Cast Iron. Camshaft gear Celeron with steel hub. **Backlash**—.001-.003".
Replacement Gears—Camshaft gear furnished in three sizes: Standard (marked "S"), High Limit (marked "H"), Low Limit (marked "L"). Crankshaft gear furnished Standard size only.
Timing Gear Removal & Installation—*See "Timing Gears" in Studebaker Shop Notes.*

Camshaft Setting: Mesh marked tooth of camshaft gear between two marked teeth on crankshaft gear.

VALVES:	Head Diameter	Stem Diameter	Length
Intake	1 15/32"	11/32"	5 7/32"
Exhaust	1 9/32"	11/32"	5 7/32"

	Seat Angle	Lift	Stem Clearance
All Valves	45°	11/32"	.0015-.0035"

Valve Guides: Pressed in block from above with upper end 1 5/32" below upper edge of valve seat and stepped end down. Ream guides to inside diameter of .3425-3445". Replace worn guides when clearance exceeds .0035".

Valve Springs: Install with closed-coil end up. Replace springs if more than 10% weaker than test pressure of 125-135 lbs. at 1¾" (U-15 or other accredited tester). Spring free length 2½".

	Spring Pressure	Length
Valve Closed	54-60 lbs	2 3/32"
Valve Open	125-135 lbs	1 3/4"

NOTE—Dampeners used on top of all springs.

Valve Lifters: Mushroom type. Remove from below with camshaft out of engine. *For camshaft removal directions, see Studebaker Shop Notes.*
Valve Lifter Tension Spring—*See "Valve System" in Studebaker Shop Notes.*
Clearance—.0005-.00175".
Replacement Lifters—Std. & .0005", .001" O. S.

VALVE TIMING

Tappet Clearance: .016" All Valves, Engine Cold.

Valve Timing: See Camshaft Setting above.
Intake Valves—Open 15° BTDC. Close 49° ALDC.
Exhaust Valves—Open 54° BLDC. Close 10° ATDC.
Valve Timing Check—With .020" tappet clearance, #1 intake valve should open with #1 piston 15° or .0942" BTDC with vibration dampener mark "IN. OP. 1-6/" aligned with pointer on timing gear cover. Reset tappet clearance at .016" Cold.

LUBRICATION

Engine Oiling System: Pressure to crankshaft, connecting rod, and camshaft bearings, and to valve lifters. Timing gears lubricated by oil by-passed by pump. Oil pump mounted externally on right side
Crankcase Capacity—6 quarts.
Normal Oil Pressure—20-40 lbs. at 40 MPH.
Oil Pressure Regulator—On lower right front corner of engine. Opens at 40 lbs. Adjustable by inserting shims between outer end of spring and plug.

Oil Pan Removal: *See "Engine Removal" in Studebaker Shop Notes (recommended for pan removal).*

Oil Pump: Helical gear type mounted externally on right side of engine.
NOTE—Oil pump vacuum booster (for windshield wiper operation) used on 1947 cars.
Oil Pump Removal & Installation—*See "Oil Pump" in Studebaker Shop Notes.*

Oil Filter: Fram Model F4 or F30S. Replacement Cartridge Kit Studebaker No. 521948 (F4), 520831 (F30S).

Oil Pressure Gauge: Stewart-Warner Bourden Tube (not electric) type. Studebaker No. 522179.

Crankcase Ventilation: Filter element in oil filler cap (air intake) and in breather pipe on left rear of engine (air outlet).
Servicing—Wash both filter elements in kerosene and re-oil at regular intervals. NOTE—Filter in outlet pipe removed by taking out cotter pin.

COOLING

Cooling System: Positive circulation with water pump mounted on front of block with fan.
Capacity—13 qts. (14 qts. with Climatizer).

Water Pump: Packless type. No lubrication required.
See Water Pump Section for complete data.
Removal—Slack off drive belt, take out capscrews

in fan pulley hub and remove blades. Disconnect hose connection, take out mounting screws in pump
Belt Adjustment—*See Generator Belt Adjustment.*

Thermostat: Fulton or Bishop & Babcock. In water outlet on cylinder head.
Setting—Starts to open at 151-155°F.

Temperature Gauge: Stewart-Warner Bourden Tube type (not electric). Studebaker No. 522180.

CLUTCH

Borg & Beck Model No. 9A7 with Borglite Driven Member. Single plate, dry disc type.
NOTE—Clutch Assembly marked by number 943
See Clutch Section for complete data.
Facings—Moulded-metallic, 2 required. I.D. 6". O.D. 9¼". Thickness ⅛".

Adjustment: Pedal free travel ½ to 1". To adjust, unhook pull-back spring on outside of frame rail, loosen locknut at adjusting clevis and remove clevis pin at inner end of pedal shaft, turn clevis on rear end of pedal shaft-to-operating shaft rod for correct clearance, reassemble linkage.
Hill-Holder Note—Check setting whenever clutch pedal adjusted and adjust Hill-holder to release just as clutch engages. Adjusting nut and locknut at end of Hill-holder operating rod.
See Studebaker Shop Notes for Clutch Release Shaft Lubrication and Hill-Holder Adjustment.

Removal: Jack up rear end of car and rest on stands under rear axle. Remove transmission (see TRANSMISSION following). Disconnect one battery cable at battery take off starter and hang it clear of clutch housing. Remove clutch housing mounting capscrews and bolts at top, working through opening in front floor. Free speedometer cable from frame cross-member and wire it up out of the way. Support rear end of engine with jack placed under oil pan at rear (CAUTION—Do not damage oil pan). Disconnect rear engine mounting by taking off nuts, bolts with insulators, washers, and spacers. Disconnect parking brake cable at bracket, clutch operating shaft from release shaft, and brake pedal return spring. Loosen exhaust pipe flange nuts at manifold, take off exhaust pipe support bracket at housing, loosen clamp and turn bracket for clearance. Remove rear engine support cross member. Take out clutch housing mounting bolts and remove housing. Block clutch release levers. Remove six mounting screws in clutch cover flange, lift off clutch assembly and driven member.

TRANSMISSION

Warner Model AS1-T86E (Std.), AS2-T86E with R10B type Overdrive (Optl.). All helical gear type. Constant-mesh, synchro-mesh (Second & High), sliding gear (Low & Reverse).
See Transmission Section for complete data.

Transmission Control: Remote control type with gearshift lever mounted on steering column.
See Transmission Section for complete data.

Removal: Drain transmission. Disconnect hand brake cable and move out of way for clearance. Disconnect front universal at transmission (wire caps or use clamp to prevent losing rollers). Take out center support bearing mounting bolts. Push front shaft and support to rear (will slide on splines on rear shaft). Disconnect shift rods from levers on case and speedometer cable (remove speedometer pinion). On Overdrive transmission disconnect all control wires and cable. Take out transmission to clutch housing capscrews, pull transmission straight back and remove from car.

OVERDRIVE

Warner Type R10B (part of AS2-T86E transmission). New Governor controlled type (no centrifugal pawls) with electrical solenoid operation and throttle controlled "kick-down."
See Transmission Section for complete data.
Overdrive Control Units—*Same as Champion. See 1947-48 Studebaker Champion pages for data.*

Removal: See Std. Transmission Removal data

UNIVERSALS

Spicer Model 1268-111X (Front & Rear), 1261-102X intermediate). Needle bearing type. Three used with intermediate universal at propeller shaft support bearing on crossmember (see Propeller Shaft)
See Universals Section for complete data.

Propeller Shaft & Support Bearing: Two shafts used: 1) Front Shaft with intermediate universal yoke 2) Rear Shaft with slip-joint on forward end at intermediate universal.
Propeller Shaft & Support Bearing Removal & Servicing—*See Studebaker Shop Notes.*

REAR AXLE

Spicer Salisbury Model 41-2. Semi-floating, Hypoid Gear type with Hotchkiss Drive.
See Rear Axle Section for complete data.
Ratio—4.09-1 Std., 4.55-1 Optl. (Std. with Overdr.).
NOTE—Rear axle ratio stamped on plate attached to axle by cover capscrew.
Backlash—.005-.007" Shim adjustment.

Removal: Remove hub caps, take out cotter pin from axle nut, loosen rear wheel nuts. Place car on stands on frame just ahead of rear springs. Remove wheels, hubs and drums. Disconnect hand brake cable. Take out backing plate bolts from backing plates, free hydraulic brake line from axle housing clips (do not disconnect brake line). Backing plates and adjusting shims can then be wired to frame (do not disconnect brake line from wheel cylinders). Disconnect rear universal (wire caps or use clamp to prevent losing rollers). Remove rear spring "U" bolts, disconnect lower shock absorber links, remove rear axle assembly from car.
Axle Shaft Removal—Remove wheel, remove wheel hub (use puller J-596-A). Take out backing plate retaining bolts, remove outer oil seal. Pull backing plate out over end of axle shaft and wire plate to frame (CAUTION—do not lose adjusting shims located between backing plate and axle housing flange). Pull axle shaft assembly (Puller HM-931).

Wheel Bearing Adjustment: Use dial indicator to check axle shaft endplay. Adjust by removing backing plate (see Axle Shaft Removal above), and adding or removing shims located between backing plate and axle housing flange (shims .003", .005", .010", .030" thick). **Endplay**—.001-.005".

SHOCK ABSORBERS

Houde (Houdaille)—Double acting, hydraulic type. Adjustable type with thermostatic control on rear.
Front (All)—Houde No. A-14269, Studebaker 523646.
Rear (exc. Convt.)—Houde No. A-14174, Studebaker 523497.
Rear (Convertible only)—Studebaker No. 523538 (Right), 523539 (Left).
See Shock Absorber Section for complete data.

Adjustment (Front): Pointer on end of shaft should be lined up with scribed line on end of shaft. Turn pointer clockwise for firmer action, counter-clockwise for softer action (not more than 1/32-1/16").
(Rear Shocks)—Remove cap on end of shaft to expose adjusting screw. Slot aligned with scribe mark between "0" and "S" mark is original factory setting. Use special tool No. T-2860 (do not use screwdriver). Turn screw clockwise (toward "S") for firmer action, counter-clockwise (toward "0") for softer action (not more than 1/32" at a time).

Refilling: Check at 5000 mile intervals. Fill to bottom of filler plug hole. CAUTION—Use only Houdaille Shock Absorber Fluid No. L-1404 (new type fluid for shock absorbers with new circular top filler plug

FRONT SUSPENSION

Front Suspension: Planar type independent suspension with transverse spring. NOTE—Suspension system has lower control arms (with leaf spring).
See Front Suspension Section for complete data.
Kingpin Inclination—5½° crosswise.
Caster—(Early 1947) 0° to Pos. ½°. Not adjustable. (Late '47 & 1948) Neg. 2° to Neg. 3°. No adjustment.
►1947 Serial Nos. when Caster changed—*See "Front Suspension Notes" in Studebaker Shop Notes.*
Camber—½° ± ¼°. Shim adjustment (shims between upper control arm brackets and frame). One thin shim changes setting approx. ¼°. Thick shim equals 4 thin shims.
CAUTION—Add or remove shims equally at front and rear brackets when adjusting Camber.
Toe In—1/16-⅛". Adjust right hand tie rod only for toe in after left hand tie rod has been adjusted for wheel straight-ahead position (with steering wheel centered) and center auxiliary tie rod has been adjusted so that steering gear arm and auxiliary steering arm parallel. **RHD Car Note**—Make toe-in adjustments on left hand tie rod.

STEERING GEAR

Ross Model T-14 Cam-and-Twin Lever type.
See Steering Gear Section for complete data.

BRAKES

Service: Lockheed (Wagner Electric) Hydraulic, Self-centering, Self-adjusting type. Brakes are new design with automatic spring-loaded adjusting wedge controlled by contact plug projecting through hole in lining of forward shoe (plug contacts drum when brakes applied). Hand lever applies rear wheel service brakes. NOTE—New type actuating spring used on brake shoe contact plug on 1948 cars (replaces hairpin locks and contact plug coil spring).
See Brake Section for complete data.
Drums—Composite type. Diameter 11".
Clearance—Adjustment necessary only when new linings installed. *See Brake article in Brake Section.*
Lining—Moulded type (all shoes). Width 2". Thickness 3/16". Length per wheel 22¼".
Braking Power—57% Front, 43% Rear.

Hand Brake: See Service Brake data (above).

Hill-Holder: Std. *See Brake Section for complete data.*
Adjustment—*See Studebaker Shop Notes.*

MISC. MECHANICAL

CONVERTIBLE TOP CONTROL: Electric type with motor mounted on left hand lift assembly (right hand lift assembly driven through flexible drive
See Miscellaneous Section for complete data.

MODEL IDENTIFICATION

SERIAL NUMBER:—First number—(61) 61101 (U.S.), 61C101 (Canada); (62) 62101 (U.S.), 62C101 (Canada). Stamped on plate on dash under hood.

ENGINE NUMBER:—First number—157,000. Stamped on left side of cylinder block opposite #6 cylinder.

TUNE-UP

COMPRESSION:—Ratio 6.0-1 Std. cast-iron head, 7.0-1 Optl. high compression aluminum head. Check compression pressure by removing all spark plugs and cranking engine with throttle wide open.

Cylinder Head	Compression Pressure
Std. 6.0-1	111 lbs. at 215 R.P.M.
Optl. 7.0-1	127 lbs. at 207 R.P.M.

VACUUM READING:—Gauge should show steady reading of 18-19" of HG with engine idling at 350 RPM.

FIRING ORDER: 1-5-3-6-2-4. See diagram.

SPARK PLUGS: Champion Type J-8 (Std. 6.25-1 Eng.), Type J-9 (Optl. 7.0-1 Eng.). 14 mm. Metric type. **Gaps**—.025" (Std. Eng.), .022" (Optl. Eng.).

IGNITION: See Coil, Condenser, and Distributor.
Breaker Gap—.020". **Cam Angle**—38° (closed). **Automatic Advance**—14° max. at 1580 RPM (distr.).

IGNITION TIMING: See Ignition Timing.
Std. Setting—At TDC. with flywheel mark 'UDC.1-6/' at indicator in inspection hole in left front face of housing above starter.

CARBURETION: See Carburetor & Carb. Equipment.
Idle Setting—Idle screw ½-1 turn open (329-S), ¼-1 turn open (331-S). Idle speed 350 RPM or 7 MPH. **Float Level**—⅜" from gasket seat on cover to top of float at free end (invert to check). **Accelerating Pump**—Center hole (medium) Normal. Inner hole (Summer), Upper hole (Winter) for extreme temperatures.
Fuel Pump Pressure: 3½ lbs. maximum.

VALVES: See Valve Timing.
Tappet Clearance—.006" Int., .008" Exh., Hot.

STARTING: See Battery, Starter, Generator, and Regulator (when used).

IGNITION

Ignition Switch:—Mitchellock Model 24-B, Type 6696. Connected to coil by armored cable.
Ignition Lock—Briggs & Stratton No. 50184, Mitchell No. 6095.

COIL: Auto-Lite Model IG-4633. Resistor unit mounted on distributor terminal is connected in series with coil primary.
Resistance Unit—Part No. SP-4008.
Coil Draw—2.5 amperes idling, 4.5 stopped.

CONDENSER: Auto-Lite Part No. IGB-1025J.
Capacity—.20-.25 microfarad.

DISTRIBUTOR: Auto-Lite Model IGB-4301-B. Single breaker, 6 lobe cam, full automatic advance type.
Breaker Gap—Set at .020". Limits .018-.020".
Cam Angle or Dwell—38° closed, 22° open (distr.).
Breaker Arm Spring Tension—16-20 ounces.

Automatic Advance

Distributor Degrees	Distributor R.P.M.	Engine Degrees	Engine R.P.M.
Start	300	0	600
3	400	6	800
5	615	10	1230
10	1150	20	2300
14	1580	28	3160

Distributor Removal:—Mounted on right side of crank case. To remove, take out hold-down screw in advance arm.

IGNITION TIMING

IGNITION TIMING:—Initial setting for all engines as shown. See Final Setting Section for adjustment in accordance with octane rating of fuel used.

Flywheel Degrees	Piston Position
At TDC.	.000" TDC.

NOTE—High octane type fuel must be used in engines with high compresion 7.0-1 aluminum head.

To Set Timing (Initial Setting)—With #1 piston on compression, turn engine over until flywheel mark 'UDC.1-6/' lines up with pointer in inspection hole in left front face of flywheel housing above starter. Loosen hold-down screw in advance arm, rotate distributor clockwise to limit of advance arm slot, then slowly rotate distributor counter-clockwise until contacts begin to open, tighten hold-down screw.

Final Setting—Check ignition setting by road testing car. With engine warm and running in high gear on level road, a slight spark knock should be evident when car is accelerated from 10-15 M.P.H. with wide open throttle. Adjust by loosening hold-down screw in advance arm and rotating distributor one graduation on scale counter-clockwise (if no knock evident) or clockwise (if knock too severe). Repeat test until slight knock is evident. Final setting must not be more than ¾" on flywheel before 'UDC.1-6/' mark.

CARBURETOR

CARBURETION:—**Carburetor**—(61) Carter Mod. 331-S, (62) Carter Model 329-S. 1¼" downdraft types. See Carburetion Section for complete adjustment, overhaul and Jet Specifications.
For complete data, refer to Carburetor Index.

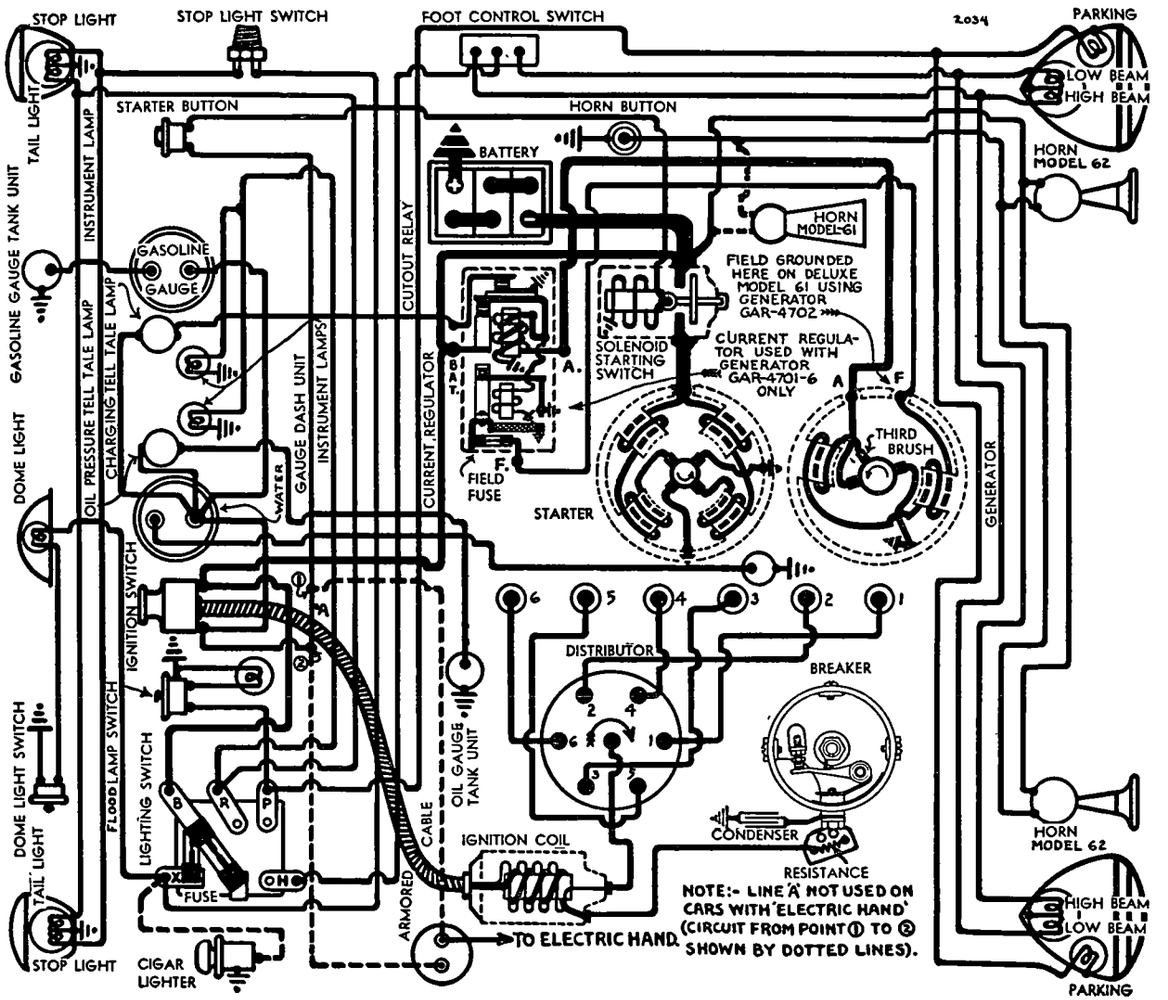

NOTE—Do not adjust carburetor until engine is warmed up so that choke valve is wide open and engine idling at slow or hot idling speed.

Idle Adjustment—Adjust throttle stopscrew so that speed is 350 R.P.M. or 7 M.P.H. Turn idle adjusting screw in until engine begins to miss, then turn screw out until engine begins to roll, finally turn screw in slowly until engine fires smoothly. Final setting should be ¼-1 (331-S), ½-1 (329-S) turn open from seated position. Readjust throttle stopscrew for correct idling speed.

Accelerating Pump Setting—Pump lever (under dust cover at top of carburetor) has three holes for pump link engagement. Change for seasonal requirements as follows:

Center Hole—Normal summer temperatures.
Inner Hole (Min. stroke)—Extreme hot weather.
Upper Hole (Max. stroke)—Extreme cold weather.

Throttle Cracking (331-S only):—Opens throttle valve .036-.040" with choke fully closed. No adjustment.

Fast Idle (329-S only):—Integral with carburetor. No adjustment required. See article on Carter Fast Idle in Carburetion Section.

For complete data, refer to Carburetion Equip. Index.

Automatic Choke (329-S only):—Carter Climatic Control. See article in Carburetion Section.

For complete data, refer to Carburetion Equip. Index.

CARB. EQUIPMENT

Air Cleaner:—AC. #1526650 Std., #1526651 on cars with Electric Hand. Heavy duty oil-bath type optl.

Fuel Pump:—AC. Type R #1521450. Diaphragm type.

See 'Servicing AC Fuel Pumps' in Carburetion Equipment Section for recommended replacement pumps.

For complete data, refer to Carburetion Equip. Index.

Gasoline Gauge:—King-Seeley Electric. K-S-No. 6190 (dash unit), No. 5835 (tank unit).

For complete data, refer to Carburetion Equip. Index.

BATTERY

BATTERY:—National, Type ST-317X. 6 volt, 17 plate, 96 ampere hour capacity (20 hour rate).

Starting Capacity—120 amperes for 20 minutes.

Zero Capacity—300 amperes for 3.2 minutes.

Grounded Terminal—Positive (+) terminal.

Location—On left hand side under front floor.

STARTER

Auto-Lite Model MAB-4075. Armature MAB-2113.

Drive—Inboard Bendix (barrel), Type A-1673.

Cranking Engine—150 R.P.M., 120-125 amps. at 5 vs.

Rotation—Counter-clockwise at commutator end.

Brush Spring Tension—42-53 ozs. (new brushes).

Performance Data

Torque		R.P.M.	Volts	Amperes
0	ft. lbs.	3700	5.5	60
.6	"	1910	5.5	100
3.4	"	1100	5.0	200
6.6	"	695	4.5	300
10.15	"	420	4.0	400
15.8	"	Lock	3.	582
22.5	"	Lock	4.	775

NOTE—Lock Torque figures correct with ut switch.

Removal:—Flange mounted on left front face f flywheel housing. To remove, take out flange m unting bolts.

Starting Switch:—Solenoid Type SS-4001. Controlled by pushbutton switch (R.B.M. Model 1800) on dash. Operative with switch turned on. On cars with Electric Hand clutch must be disengaged to operate switch.

For complete data, refer to Electrical Equipment Index.

Solenoid Switch

Closes with terminal voltage of 4 volts or less and will remain closed until voltage drops to .75-2.0 volts. Current draw 3 amperes at 6 volts.

GENERATOR

Auto-Lite Model GAR-4702 (Std. 61), GAR-4701-6 (Std. 62). Armature No. GAR-2077. Third brush control type (Current Regulator or two-rate charging control used with GAR-4701-6 only). Ventilated by fan on drive pulley.

Charging Rate Adjustment—Use test meters to check generator output. On Mod. GAR-4701-6, short out regulator by connecting jumper wire from "F" terminal on generator to ground. Take off commutator cover band, shift third brush by hand counter-clockwise to increase, or clockwise to decrease charging rate. Third brush held in position by friction. Remove jumper wire.

NOTE—Model GAR-4702 generator field terminal on generator frame is grounded by a grounding cup assembled on the terminal. If regulator is installed, this ground cup must be removed.

Performance Data—GAR-4701-6

Cold—Regulator Inoperative—Hot					
Amperes	Volts	R.P.M.	Amperes	Volts	R.P.M.
0	6.4	780	0	6.4	820
4	6.7	930	4	6.8	1000
8	6.95	1060	8	7.1	1180
12	7.25	1210	12	7.35	1400
16	7.6	1440	16	7.8	1790
22.8	8.0	2400	18.4	8.0	2700

Model GAR-4702

Cold — No Regulator — Hot					
Amperes	Volts	R.P.M.	Amperes	Volts	R.P.M.
0	6.4	860	0	6.4	830
4	6.8	1000	4	6.85	1040
8	7.2	1200	8	7.3	1300
12	7.6	1460	12	7.75	1550
16	8.0	2150	14.5	8.0	2200

Rotation—Counter-clockwise at commutator end.

Brush Spring Tension—18-22 ozs. (new brushes).

Field Current—3.51-3.89 amperes at 6.0 volts (all). **Motoring Current**—4.84-5.36 amperes (GAR-4702), 5.32-5.88 amperes (GAR-4701-6) at 6.0 volts.

Field Fuse—5 ampere in knurled cup on side of regulator case (GAR-4701-6 only).

Removal:—Pivot mounted at left front of engine, with fan belt drive. To remove, take out two pivot bolts and one clamp bolt.

Belt Adjustment:—Swing generator away from engine until slack in belt midway between fan pulley and generator pulley is 1¼" (measure from straight edge across pulleys).

CUTOUT RELAY

Auto-Lite Model CBA-4003 (With GAR-4702 Gen.). Mounted on dash. Extra set f ground contacts provided for generator charging tell-tale signal light

For complete data, refer to Electrical Equipment Index.

Cuts In—6.5-7.25 volts.

Cuts Out—1.5-4.5 amperes discharge current after charging at 16 amperes.

Contact Gap—.015-.045" (with upper or ground contacts closed—ground contacts must be open with main contacts closed).

Air Gap—.010-.030" with contacts closed.

REGULATOR

Auto-Lite Model TC-4304A (With GAR-4701-6 Gen.).

Two-Charge Type. On dash. Consists of Cutout Relay and Current Regulator (two-rate charging control). See Equipment Section for complete data. Cutout Relay has extra set of ground contacts for generator charging tell-tale signal light control.

For complete data, refer to Electrical Equipment Index.

Cutout Relay

Cuts Out—.5-2.5 ampere discharge current.
All other data same as given for CBA-4003 above.

Current Regulator

Contacts Open—8.0-8.50 volts at 70° F.

Contacts Close—1.2-1.4 volts below opening point.

Contact Gap—.005" minimum.

Air Gap—.045" with contacts closed.

LIGHTING

LIGHTING:—Headlamps—Hall, Pre-focused type. Head lamps aimed straight ahead (upper beams with lenses in place). Upper and lower beams controlled by foot selector switch.

Switches

Lighting—R.B.M. Model 1650.

Foot Selector—R.B.M. Model 1082.

Instrument Lights—Soreng-Manegold Mod K2060A.

Stop Light—Motometer Model 58012-C. Hydraulic type mounted in brake line at left frame side rail in channel at rear.

Bulb Specifications

Position	Candlepower	Mazda No.
Headlamps	32-32	2331
Parking, Instrument	1	55
Signal Lights	1	51
Stop and Tail	21-3	1158
Dome	15	87

MISC. ELECTRICAL

SIGNAL LIGHTS:—Battery Charge Tell-tale and Oil Pressure Tell-tale lights mounted on instrument panel. See Equipment Section for complete data.

For complete data, refer to Electrical Equipment Index.

FUSES:—Lighting—Two 20 ampere capacity on switch. **Generator Field**—5 ampere in regulator (on GAR-4701-6 only).

HORNS:—E. A. Vibrator type. Twin h rns on Model 62

ENGINE

ENGINE SPECIFICATIONS:—Type—6 cyl. 'L' head.

Bore—3". **Stroke**—5".

Displacement—212 cubic inches.

Rated Horsepower—21.6 (AMA).

CONTINUED ON NEXT PAGE

ENGINE

CONTINUED FR M PRECEDING PA E

Developed Horsepower—88 at 3800 R.P.M. (Std. 6.0-1 head), 100 at 3800 R.P.M. (Optl. 7.0-1 head).

Compression Ratio & Pressure—To check pressures, remove spark plugs, crank engine with throttle wide open.

Std. 6.0-1 Head	111 lbs. at 215 R.P.M.
Optl. 7.0-1 Head	127 lbs. at 207 R.P.M.

Vacuum Reading—Gauge should show steady reading of 18-19" of HG. with engine idling at 350 R.P.M. or 7 M.P.H.

NOTE—High Octane fuel must be used in engines with optional high compression 7.0-1 head.

PISTONS:—Own Lo-Ex aluminum alloy, 'T' slot, Cam ground type. Use finished replacement pistons when reconditioning engine. See Reconditioning parag'ph.

Weight—10.5 ozs. stripped. Stamped on piston head.

Length—3 3/16".

Removal—Pistons and rods removed from above.

Clearance—Top .016". Skirt .002". See Fitting New Pistons.

Reconditioning Cylinders:—Size of original bore indicated by letter stamped on lower edge of valve chamber opposite cylinder as follows: A-3.000", B-3.0005", C-3.001", D-3.0015", E-3.002", AO-3.010", BO-3.0105", CO-3.011", DO-3.0115", EO-3.012". Recondition cylinder to standard oversize for which replacement piston and rings are available (see piston and ring data below).

Replacement Pistons:—Standard and oversize pistons marked by leter on head available for cylinder bores of size indicated: 'B'-3.000&3.0005", 'D'-3.001&3.0015", 'F'-3.002 & 3.0025", 'J'-3.004", 'L'-3.005", 'BO'-3.010 & 3.0105", 'DO'-3.011 & 3.0115", 'FO'-3.012 & 3.0125", 'LO'-3.015", 'BB'-3.020", 'DD'-3.021", 'FF'-3.022". All pistons installed in engine must be of same weight as indicated by mark on head.

Fitting New Pistons:—Use .0015" feeler ½" wide on side pposite slot at right angles to pin bosses to check clearance. Tension to withdraw feeler must be 3-4 lbs.

Installing Pistons:—Slot toward left or away from camshaft.

PISTON RINGS:—Two compression, one oil ring above pin, one oil ring below pin per piston. Upper oil ring groove drilled with twelve 5/16" oil drain holes and two 5/16" holes to pins. Lower oil ring groove drilled with four 5/16" holes and two oil drain slots. Rings are straight cut and are positioned by pin in piston ring groove.

Ring	Width	End Gap	Wall Thickness
Comp.	3/32"	.005" Min.	.123"
Oil (both)	3/16"	.005" Min.	.128"

NOTE—Use standard or oversize rings of size indicated for replacement pistons (see Replacement Piston section above): 3.000"—B, D, F; 3.003"—J; 3.005"—L; 3.010"—BO, DO, FO; 3.015"—LO; 3.020"—BB, DD, FF. If rings are filed, clearance at pin must be kept uniform with end gap.

PISTON PIN:—Diameter ¾". Length 2 7/16".

Pin floats in piston and rod. Held by locking ring at each end. Pin hole in rod is bronze-bushed. Pins furnished standard, .002", .005", .010" oversize.

Pin Fit in Piston—Hand push fit with piston heated to 200° F.

Pin Fit in Rod Bushing—.0003" clearance. With this clearance rod will just turn of own weight.

CONNECTING ROD:—Weight 29.4 ozs. Length 8 3/16".

Crankpin Journal Diameter—1 15/16".

Lower Bearing—Spun-babbitt lined type. Rods serviced on 'exchange' basis.

Clearance—.001". **Sideplay**—.006-.010".

Bearing Adjustment:—Laminated shims. Do not file rods or caps.

Installing Rods:—Lower bearings are offset. Install rods with right hand offset (widest half of bearing toward rear) in cylinders #1, 2, 4, and rods with left hand offset (widest half of bearing toward front) in cylinders #3, 5, 6. Oil scoop on bearing cap must be toward camshaft on all rods.

CRANKSHAFT:—3 bearing. Integral counterweights. ***See Hudson Shop Notes for Crankshaft and Vibration Dampener removal, Main Bearing Removal, Installation and Line-Reaming data.***

Journal Diameters—#1, 2 11/32"; #2, 2⅜"; #3, 2 13/32".

Bearing Type—Removable bronze-backed, babbitt-lined. Bearings furnished for service reamed to standard size or unfinished (1/32" extra stock).

Clearance—.001".

Bearing Adjustment:—Shims. ***See Hudson Shop Notes.***

End Thrust:—Taken by flanges on #2 (center) main bearing. Endplay .006-.012". Adjusted by replacing bearing.

CAMSHAFT:—Three bearing. Gear driven.

Journal Diameters—#1, 2"; #2, 1 31/32"; #3, 1½".

Bearing Clearance—.0015".

End Thrust:—Taken by spring-loaded plunger in end of camshaft and thrust plate on gear case cover.

NOTE—If gear case cover removed, see that spring and plunger are in place when cover is replaced.

Timing Gears:—Crankshaft gear cast-iron. Camshaft gear GE. or Cont. Diamond Fibre Bakelite.

1941 Hudson Type Timing Gear Set can be installed on these models (tooth angle redesigned to provide quieter operation). See Hudson Shop Notes for data.

Camshaft Setting:—Gears are marked. Mesh marked tooth of crankshaft gear between two marked teeth on camshaft gear.

VALVES:—

	Head Diameter	Stem Diameter	Length
All valves	1⅜"	⅜"	5 11/32"

	Seat Angle	Lift	Stem Clearance
Intake	45°	11/32"	.0015-.003"
Exhaust	45°	11/32"	.003-.005"

Valve Guides:—Removable type. Pressed in block. Finish ream guides after installation to size giving correct clearance.

Valve Springs:—Dampeners originally used on bottom of all springs. Car manufacturer recommends that they be omitted when servicing valves.

	Spring Pressure	Spring Length
Valve Closed	44 lbs.	2"
Valve Open	102 lbs.	1 21/32"

Valve Lifters:—Slipper type operating in individual removable guides. Lifter is prevented from turning by pin in guide.

VALVE TIMING

Tappet Clearance:—.006" Intake, .008" Exhaust (hot).

Valve Timing:—See Camshaft Setting above.

Intake Valves—Open 10°40' BTDC. Close 60° ALDC.

Exhaust Valves—Open 50° BLDC. Close 18°44' ATDC. These figures correct with .010" tappet clearance.

To Check Timing—Set tappet clearance #1 intake valve at .010". This valve should open with piston 10°40' or .0562" before top dead center when point on flywheel approximately 3.94 teeth before 'UDC.1-6/' mark lines up with indicator in hole in left front face of flywheel housing. Reset tappet clearance at .006". hot.

LUBRICATION

LUBRICATION:—Duo-flow (splash) system. Force feed by oil pump to conecting rod troughs and timing gears. Splash to all other points from troughs.

Normal Oil Pressure—3 lbs.

Oil Presure Regulator—Operates at 3 lbs. Located on right side of crankcase. Not adjustable.

Crankcase Capacity—6 qts. refill.

Oil Pump:—Oscillating plunger type pump mounted on right side of crankcase and driven by gears from the camshaft.

Oil Pressure Indicator:—Consists of signal light on instrument panel and switch built in oil pressure regulator. See article in Equipment Section for complete data.

For complete data, refer to Electrical Equipment Index.

CLUTCH

CLUTCH:—Own Make. Single plate, cork insert type operating in oil. Driven plate can be recorked but is customarily replaced.

See Clutch Section for complete data.

Clutch Plate—Thickness .203". Inside diameter 5.375" Outside Diameter 8.625". Facing—90 cork inserts.

Adjustment:—Free movement of clutch pedal must be 1½" at all times. To adjust, remove clevis pin in clutch pedal link rod (between frame and leg of 'X' member below clutch pedal shaft), loosen locknut at top of clevis, turn clevis to shorten or lengthen rod as required, tighten locknut, replace clevis pin. On cars with automatic clutch control, check linkage whenever clutch is adjusted.

Automatic Clutch Linkage Adjustment—Hold accelerator pedal in depressed position, pull backward on clutch control power unit rod at left of engine. With rod in extreme rear position check clearance between back of slot in rod yoke and clevis pin which attaches it to operating lever. Clearance at this point must be ⅞".

Servicing:—Oil in clutch should be renewed at 5000 mile intervals. ***See Hudson Special Shop Notes for instructions.***

FRONT SUSPENSION

Front Suspension:—Conventional 'I' beam section front axle with Elliott type ends and semi-elliptic springs. Torque arm at each end of axle connected to frame at rear by rubber-bushed bolt maintains axle alignment.

Kingpin Inclination—7° crosswise.

NOTE—Kingpin end thrust taken by five loose balls in upper bushing above kingpin. Ball seat formed in bushing and on kingpin end. To install kingpin, assemble sufficient shims to allow .006-.010" endplay below spindle, insert kingpin until it enters top bushing, drop the five thrust balls through the

lubrication fitting hole on top of bushing, insert driver J-479-1 in hole to position balls, drive kingpin up into place.

Caster—3½-4½°. To adjust, loosen nut on horizontal arm attaching torque arm to axle yoke, take out capscrew between arm and yoke at top, decrease shim thickness between arm and yoke to increase caster, or increase shim thickness to decrease caster. A difference in shim thickness of .060" changes caster by 1°. Shim thickness on both sides of car must be kept equal.

Camber—1-1½°. No adjustment. Axle may be bent cold for minor camber corrections.

Toe In—⅛" (0-⅛"). Adjusted in usual manner by loosening clamp bolts and turning tie rod.

Steering Geometry—Inner wheel turned 20°, outer wheel turned 17°. Check tie rod ends and steering arms for looseness, replace steering arms if bent.

STEERING GEAR

Steering Gear: Gemmer Model. Worm-and-Sector type.

NOTE—An adjustable drag link with ¾" adjustment (made by shifting shims from front to rear of pitman arm ball seat) is used on Model 61 after #6110394 (except 6110601 to 6110650), Model 62 after #623419 (except 623506 to 623661 incl.).

See Steering Gear Section for complete data.

BRAKES

BRAKES:—Service—Bendix hydraulic, Duo-Servo, Single Anchor type. Brake pedal connected to rear wheel brakes through cable linkage for additional reserve mechanical aplication of brakes. Hand lever aplies rear wheel brakes through this same linkage.

See Brake Section for complete data.

Brake Drum Diameters—10 1/16".

Brake Lining—Moulded & Woven type. Width 1¾". Thickness 7/32". Length 22⅛" per wheel.

Brake Clearance—.010" heel and toe of each sh e.

Brake Pedal Adjustment:—For correct mechanical follow-up feature, adjust position of nut on connecting rod so that clearance between face of nut and end of push rod is 1 29/32" with equalizer against stop.

Hand Brake Adjustment:—See Service Brakes.

MISC. MECHANICAL

AUTOMATIC SHIFT (ELECTRIC HAND):—Bendix electro-pneumatic type. Optional equipment.

See Transmission Section for complete data.

MODEL IDENTIFICATION

SERIAL NUMBER:—First number 70-101 (Commercial 70), 71-101 (Deluxe 71), 72-101 (Super 72). On plate on right front door hinge pillar post.

ENGINE NUMBER:—First number 250,000 (all models). Stamped on left side of block opposite #6 cylinder.

TUNE-UP

COMPRESSION:—**Ratio**—6.25-1 Std. cast-iron head. 7.0-1 Optl. 'Super Power Dome' aluminum alloy hd. NOTE—High octane fuel must be used with this hd.

Pressure—Check pressure by removing all spark plugs and cranking engine with throttle wide open.

Cylinder Head	Compression Pressure
6.25-1	103 lbs., 170 R.P.M.
7.0-1	119 lbs., 170 R.P.M.

VACUUM READING:—18-20" steady reading with engine idling at 350 R.P.M. or 6 M.P.H.

FIRING ORDER: 1-5-3-6-2-4. See diagram.

SPARK PLUGS: Champion Type J-8 (Std. 6.25-1 Eng.), Type H-10 (Optl. 7.0-1 Eng.). 14 mm. Metric type. Gaps—.025".

IGNITION: See Coil, Condenser, and Distributor.

Breaker Gap—.020". **Cam Angle** 35° (closed).

Automatic Advance—14° max at 1580 RPM (distr.).

IGNITION TIMING: See Ignition Timing.

Std. Setting—At TDC. with flywheel mark "UDC. 1-6/" at indicator in inspection hole in left front face of housing above starter.

CARBURETION: See Carburetor & Carb. Equipment.

Idle Setting (Single Carb.)—Idle screw ¼-1 turn open. Idle speed 6 MPH.

Idle Setting (Dual Carb.)—Both idle screws ¼-¾ turn open. Idle speed 6 MPH.

Float Level (Single Carb.)—⅜" gasket seat on cover to top of float at free end (invert to check).

Float Level (Dual Carb.)—15/64" from gasket seat on cover to top of float at each end.

Accelerating Pump (Single Carb.)—Center hole (medium) Normal. Inner hole (Summer), Upper hole (Winter) for extreme temperatures.

Accelerating Pump (Dual Carb.)—Inner Hole for Summer, Outer—Winter. Requires partial dismantling of carburetor.

Fuel Pump Pressure: 4½ lbs. maximum.

VALVES: See Valve Timing.

Tappet Clearance—.006 Int., .008" Exh., Hot.

STARTING: See Battery, Starter, Generator, and Regulator (when used).

IGNITION

Ignition Switch:—Michellock Model 24-B, Type 7063. Connected to coil by armored cable.

Ignition Lock—Briggs & Stratton, Mitchell No. 6095.

COIL: Auto-Lite Model IG-4644. Service Winding (coil less Switch and Cable) IG-3224JS. Resistor unit mounted on distributor terminal connected in primary circuit. NOTE—This resistor not used when Regulator (VRD-4003A, B) used. Resistor should be removed when regulator installed.

Ignition Current—2.5 amperes idling, 4.5 stopped.

CONDENSER: Auto-Lite Part No. IGB-1025J.

Capacity—.20-.25 microfarad.

DISTRIBUTOR: Auto-Lite Model IGW-4012-A (70, 71), IGW-4013-A (72). Single breaker, 6 lobe cam, full automatic advance type.

Breaker Gap—Set at .020".

Cam Angle or Dwell—35° (closed), 25° (open).

Breaker Arm Spring Tension—16-20 ounces.

Automatic Advance

Distributor		Engine	
Degrees	R.P.M.	Degrees	R.P.M.
Start	300	0	600
3	400	6	800
7	825	14	1650
11	1255	22	2510
14	1580	28	3160

Distributor Rem val:—Mounted on right side of crankcase. To remove, take out hold-down screw in advance arm.

IGNITION TIMING

IGNITION TIMING:—Initial setting for all engines as shown. See Final Setting for adjustment dependent on Octane rating of fuel used.

Flywheel Degrees At TDC.	Piston Position
	.0000" TDC.

NOTE—High Octane fuel must be used in engines with 7.0-1 high compression aluminum head.

To Set Timing (Initial Setting)—With #1 piston on compression, crank engine over until flywheel mark 'UDC.1-6/' lines up with pointer in left front face of flywheel housing. Loosen hold-down screw in advance arm, rotate distributor clockwise to limit of slot, then slowly rotate distributor counter-clockwise until contacts begin to open, tighten hold-down screw.

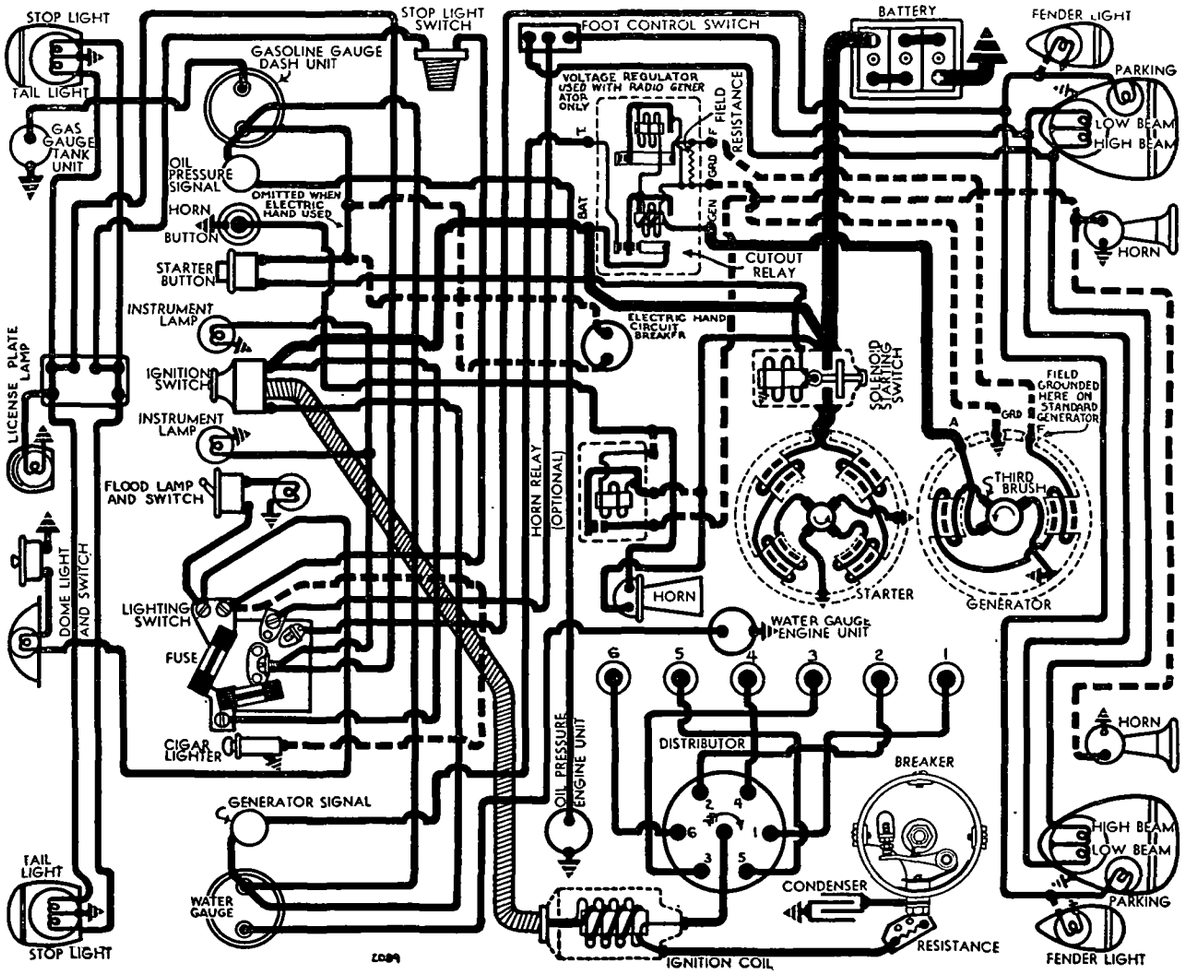

Final Ignition Setting—Road test car and note performance when accelerating from 10-15 M.P.H. with wide open throttle on level road (engine must be warm), slight spark knock should be evident. Adjust by loosening hold-down screw and rotating distributor one graduation on scale counter-clockwise (if no knock), clockwise (if knock too severe). Repeat test. Final setting must not be advanced more than ¾" before 'UDC.1-6/' mark on flywheel.

CARBURETOR

MODELS 70 & 71

Carter Model W1, Type 348-S. Single barrel, downdraft type with manual choke control.

For complete data, refer to Carburetor Index.

Idle Adjustment—Engine must be warm so that choke valve wide open and throttle cracker inoperative. Set throttle lever stopscrew so that idling speed is 6 M.P.H. Turn idle adjusting screw in until engine begins to miss, then out until engine begins to roll, finally turn screw in slowly until engine fires smoothly. Final setting should be ¼-1 turn open from inner seated position. Readjust throttle stopscrew for correct idling speed.

Float Level—⅜" from gasket seat on cover to top of float at free end with needle valve seated. Invert to check.

Accelerating Pump Setting—Pump lever (under dust cover at top of carburetor) has three holes for pump link connection. Change for seasonal requirements as follows:

Center Hole—Normal summer temperatures.

Inner (Min. stroke)—Extreme hot weather.

Upper (Max. stroke)—Extreme cold weather.

Throttle Cracker (348-S): Set to open throttle valve .036-.040" with choke valve fully closed. No adjustment provided.

CARBURETOR

SUPER MODEL 72

Carter Model WDO, Type 344-S or 377-S. Dual (double barrel), downdraft type with Fast Idle and Carter Climatic Control (automatic choke).

For complete data, refer to Carburetor Index.

Idle Adjustment—Engine must be warm so that fast idle and automatic choke control inoperative. Set throttle lever stopscrew so that idling speed is 6 M.P.H. Turn each idle adjusting screw, in succession, in until engine begins to miss, then slowly out until engine fires smoothly. Final setting should be ¼-¾ turn out from inner seated position and screws must be adjusted equally so that engine fires smoothly on all cylinders. Readjust throttle stopscrew if necessary.

Float Level—15/64" from gasket seat on cover to top of float with needle valve seated. Invert assembly and check at each side of soldered seam.

Accelerating Pump Setting—Adjustable for minimum and maximum stroke. Requires partial dismantling of carburetor to change setting.

For complete data, refer to Carburetor Index.

Fast Idle (344-S, 377-S): Integral type (part of automatic choke assembly).

For complete data, refer to Carburetion Equip. Index.

Adjustment—With choke valve closed, adjust fast idle screw for .018" throttle opening.

Automatic Choke (344-S, 377-S): Carter Climatic Control. Mounted on carburetor.

For complete data, refer to Carburetion Equip. Index.

Setting—Centered (344-S), 2 Points Rich (377-S).

CARB. EQUIPMENT

Air Cleaner: AC No. 1528159 (Std. 70, 71), 1528161 (Std. 72), 1528158 (70, 71 with Electric Hand), 1528160 (72 with Electric Hand), Oil-wetted type. Heavy duty oil-bath type Optl.

Fuel Pump:—AC. Type AK #1523289. Diaphragm type std., Type AB #1523290 combination fuel-and-vacuum type optl.

For complete data, refer to Carburetion Equip. Index.

NOTE—See 'AC Fuel Pump Servicing' in Carburetion Equipment Section for special pump gasket data.

Gasoline Gauge:—King-Seeley Electric Type. K-S No. 6190 (dash unit), 5835 (tank unit).

For complete data, refer to Carburetion Equip. Index.

BATTERY

BATTERY:—National, Type ST-317X. 6 volt, 17 plate, 96 ampere hour capacity (20 hour rate).

Starting Capacity—120 amperes for 20 minutes.

Zero Capacity—300 amperes for 3.2 minutes.

Grounded Terminal—Positive (+) terminal.

Location—In left front fender. Accessible from engine compartment by taking out 3 slotted screws in cover flange (2 top, 1 rear) and removing cover.

STARTER

Auto-Lite Model MAB-4075. Armature MAB-2113.

Drive—Inboard Barrel type Bendix No. A-1673.

Rotation—Counter-clokwise at commutator end.

Brush Spring Tension—42-53 ozs. (new brushes).

Cranking Engine—150 RPM., 120-125 amps., 5 volts.

Performance Data

Torque	R.P.M.	Volts	Amperes
0 ft. lbs.	3700	5.5	60
.6 "	1910	5.5	100
3.4 "	1100	5.0	200
6.6 "	695	4.5	300
10.15 "	420	4.0	400
15.8 "	Lock	3.0	582
22.5 "	Lock	4.0	775

NOTE—Lock torque figures correct without switch.

Removal:—Starter flange mounted on left front face of flywheel housing. To remove, take out flange mounting screws.

Starting Switch:—Type SS-4001. Magnetic solenoid type mounted on starter field frame. Controlled by pushbutton (R.B.M. Model 1815) on instrument panel. Operative only with ignition on (and clutch disengaged on cars with Electric Hand).

For complete data, refer to Electrical Equipment Index.

GENERATOR

Auto-Lite Model GCJ-4804A-1 (70, 71), GCJ-4803-A (72). Armature No. GCJ-2006. Third brush control type. Ventilated by fan on drive pulley. Cutout Relay std. on Models 70, 71. Vibrating Voltage Regulator std. on Model 72 (also Models 70,71 with radio).

NOTE—On std. 70, 71 cars (without Voltage Regulator) field terminal on generator frame is grounded by ground cup assembled on terminal stud. This ground cap must be removed if regulator installed.

Maximum Charging Rate—16 amperes (cold), 12.4 amperes (hot) without regulator, 25 amperes (cold) 22 amperes (hot) with regulator.

Charging Rate Adjustment—Remove commutator cover band, shift third brush by hand, counter-clockwise to increase or clockwise to decrease charging rate. Third brush held in position by friction. Do not exceed maximum rate as given above. Actual charging rate, on cars with regulator, determined by regulator setting and dependent upon battery condition (see Regulator Section below).

Performance Data—GCJ-4804A-1

Cold Without Regulator			Hot		
Amps.	Volts	R.P.M.	Amps.	Volts	R.P.M.
0	6.4	835	0	6.4	920
4	6.6	1025	4	6.9	1100
8	7.2	1225	8	7.4	1325
12	7.6	1460	12.4	8.0	2400
16	8.0	2250			

Performance Data—GCJ-4804A-1 & 4803-A

Cold Cars with Regulator			Hot		
Amps.	Volts	R.P.M.	Amps.	Volts	R.P.M.
0	6.4	760	0	6.4	850
4	6.65	920	4	6.7	1020
8	6.9	1080	8	7.0	1240
12	7.2	1240	12	7.3	1400
16	7.45	1400	16	7.6	1650
20	7.7	1580	20	7.9	2100
25	8.0	2500	22	8.0	2700

Rotation—Counter-clockwise at commutator end.

Brush Spring Tension—53 ozs. max. (new brushes).

Field Current—1.9-2.1 amperes at 6.0 volts.

Motoring Current—4.0-4.4 amperes at 6.0 volts.

Removal:—Generator pivot mounted at left front of engine. To remove, take out clamp bolt and pivot bolts.

Belt Adjustment:—Loosen pivot bolts and clamp bolt, swing generator out until total sideplay or deflection midway between generator and fan pulleys is ¾-1¼".

CUTOUT RELAY

Auto-Lite Model CBA-4003 (GCJ-4804A-1 Generator). Mounted on dash. Relay has extra "ground" contacts for generator charge signal control.

For complete data, refer to Electrical Equipment Index.

Cuts In—6.5-7.25 volts.

Cuts Out—1.5-4.5 amperes discharge current after charging at 16 amperes.

C NTINUED ON NEXT PA E

C NTINUED FR M PRECEDIN PA E

Contact Gap—.015-.045" with upper ground contacts closed (upper contacts must open when main contacts close).
Air Gap—.010-.030" with contacts closed.

REGULATOR

Auto-Lite Model VRD-4003-A, B (GCJ-4803-A Gen. & 4804A-1 Gen. with Radio). Voltage Type. Consists of Cutout Relay and vibrating type voltage regulator in case on the dash. Cutout Relay has extra "ground" contacts for generator charge signal control.
For complete data, refer to Electrical Equipment Index.
NOTE—Regulator cover is sealed. Serviced on exchange basis if seals unbroken. Cover must be removed to make adjustments.

Cutout Relay

Cuts In—6.4-7.0 volts Cold.
Cuts Out—.5 ampere Min., 3.0 amperes Max. Cold.
Contact Gap—.015" minimum (with ground contacts closed—ground contacts must be open with main contacts closed).
Air Gap—.034" Min., .038" Max. with contacts open. Measure at hinge end of core.

Voltag Regulator

Setting (VRD-4003-A)—7.5-7.8 volts at 70°F. (Before #8R-000001), 7.35-7.65 volts at 70°F (After #8R-000001).
Setting (VRD-4003-B)—7.8-8.1 volts at 70°F (Before #8R-000001), 7.35-7.65 volts at 70°F (After #8R-000001).
See Electrical Equipment Section for complete settings and changes on these Regulator models.
To Check—Connect ammeter in charging line at 'B' terminal on regulator (use short heavy leads), connect voltmeter between regulator 'B' and 'GD' terminals. Operate generator, charging fully charged battery, at speed equivalent to 30 M.P.H. car speed until voltage is steady. Voltmeter reading should be within limits of 7.4-7.9 volts (VRD-4003-A before #8R-000001), 7.8-8.1 volts (VRD-4003-B before #8R-000001), 7.1-7.8 volts (all models after #8R-000001). If outside these limits, regulator is defective.
To Adjust—Change regulator armature spring tension by bending lower spring hanger. See Electrical Equipment Section for complete instructions.
Contact Gap—.010" Min., .020" Max. with armature against stop pin.
Air Gap—.0595-.0625" with contacts just opening.

LIGHTING

LIGHTING:—**Headlamps.** Hall, pre-focused type. Lenses interchangeable. Aim headlamps straight ahead with top of beam 39" above floor level at 25' (car unloaded, upper beam lighted). Upper and lower beams controlled by foot selector switch with lighting switch in driving (right hand) position.

Switches

Lighting—R.B.M.
Foot Selector—R.B.M. No. 1076.
Dome Light—R.B.M. No. 1220.
Stop Light—R.B.M. No. 965.

Bulb Specifications

Position	Candlepower	Mazda No.
Headlamps	32-32	2331
Headlamps (export)	50-21	2520
Park, Instrument	1½	55
Signals, Service	1	51
Fender (Optl.) License	3	63
Stop-Tail	21-3	1158
Dome	15	87

MISC. ELECTRICAL

SIGNAL LIGHTS:—Oil Pressure Indicator and Generator Charge Indicator mounted on instrument board. Similar to design used previously except that bulb lights up word 'Not' on dials. See article in Electrical Equipment Section.
For complete data, refer to Electrical Equipment Index.

FUSES:—**Lighting**—Two 20 ampere type on back of lighting switch.

HORNS (70,71):—**Delco-Remy, Klaxon K16 Type 2010.** Vibrator type. Current draw 6.5-8.5 amperes at 6.0 volts. **Air Gap**—.025-.029".

HORNS (72):—**Delco-Remy K-33-S Std., K-33-F Optl.** Blended tone, twin horns operated by relay.

Horn	Current (6 volts)	Air Gap
K-33-S, 2051 (low note)	11-13 amps	.042-.046"
K-33-S, 2052 (high note)	10-12 "	.032-.036"
K-33-F, 2117 (low note)	11-13 "	.040-.044"
K-33-F, 2118 (high note)	9-11 "	.032-.036"

Horn Relay Model 271-A:—Contacts close at 2.7-4.0 volts.
Contact Gap—.015-.030". **Air Gap**—.010-.025".

ENGINE

ENGINE SPECIFICATIONS:—6 cyl. L head type.
Bore—3". **Stroke**—5". **Displacement**—212 cu. ins.
Rated Horsepower—21.6 A.M.A.

Developed Horsepower—	70, 71	72
Std. 6.25-1	96 @ 3900	101 @ 4000
Optl. 7.0-1 'Super Power'	102 @ 3900	107 @ 4000

Compression Ratio & Pressure—Check at cranking speed, spark plugs removed, throttle wide open.

Std. 6.25-1 head	103 lbs. at 170 R.P.M.
Optl. 7.0-1 head	119 lbs. at 170 R.P.M.

Vacuum Reading—18-21" at 350 RPM or 6 MPH.

PISTONS:—Own Lo-Ex aluminum alloy, 'T' slot, cam ground type. Use finished replacement pistons.
Weight—10.5 ozs. stripped. **Length** 3 3/16".
Removal—May be removed from above or below.
Clearance—.016" top, .002" skirt (see below).
Original Bore Size:—***See Hudson Shop Notes.***
Replacement Pistons:—***See Hudson Shop Notes.***
Fitting New Pistons:—3-4 lb. tension should be required to withdraw .0015" feeler ½" wide from between piston and cylinder wall on side opposite slot at right angles to pin bosses.
Installing Pistons:—Slot away from camshaft side.

PISTON RINGS:—Tw compression, one il ring above pin, 1 oil ring below pin. Rings positioned by pin in grooves.

Ring	Width	End Gap	Side Clearance
Compression	3/32"	.009-.011"	.001"
Oil (both)	3/16"	.009-.011"	.001"

Replacement Rings:—***See Hudson Shop Notes.***

PISTON PIN:—**Diameter**—¾". **Length**—2 7/16".
Pin floats in piston and rod, held by locking rings. Pin hole in rod bronze-bushed. Pins furnished std., .002", .005", .010" oversize.
Pin Fit in Piston—.0003" clearance or hand push fit with piston heated to 200° F.
Pin Fit in Rod Bushing—.0003" clearance.

CONNECTING ROD:—**Weight** 29.4 ozs. **Length** 8 3/16".
Crankpin Journal Diameter—1 15/16".
Lower Bearing—Spun-babbitt. Rods exchanged. Finished bearings furnished standard and undersize (special order).
Clearance—.001". **Sideplay**—.006-.010".
Bearing Adjustment:—Laminated shims. Do not file.
Installing Rods:—Offset. Install rods with widest half of bearing toward rear (#1, 2, 4), toward front (#3, 5, 6). Oil scoop on all rods toward camshaft.

CRANKSHAFT:—3 bearing, integral counterweights
See Hudson Shop Notes for Crankshaft and Vibration Dampener removal, Main Bearing Removal, Installation and Line-Reaming data.
Journal Diameters—#1, 2 11/32; #2, 2⅜"; #3, 2 13/32".
Bearing Type—Bronze-backed, babbitt-lined. Furnished std., and unfinished (1/32" extra stock—ream to desired undersize). **Clearance**—.001".
Bearing Adjustment:—Shims. ***See Hudson Shop Notes.***
End Thrust:—Taken by center bearing. Replace bearing to adjust. Endplay.006-.012".

CAMSHAFT:—Three bearing. Gear driven.
Journal Diameters—#1, 2"; #2, 1 31/32"; #3, 1½".
Bearing Clearance—.0015".
End Thrust:—Taken by thrust washer assembled between front face of crankcase and rear side of camshaft front flange, and by spring-loaded button in camshaft hub and thrust plate on gear cover. See that spring and button in place under cover.
Timing Gears:—Crankshaft gear cast-iron. Camshaft gear GE. or Continental Diamond Fibre Bakelite.
1941 Hudson Type Timing Gear Set can be installed on these models (tooth angle redesigned to provide quieter operation). See Hudson Shop Notes for data.
Camshaft Setting:—Mesh marked tooth of crankshaft gear between two marked teeth on camshaft gear.

VALVES:—	Head Diameter	Stem Diameter	Length
All Valves	1⅜"	⅜"	5 11/32"

	Seat Angle	Lift	Stem Clearance
Intake	45°	11/32"	.0015-.003"
Exhaust	45°	11/32"	.003-.005"

Valve Guides:—2 9/16" long. Top 1 1/16" below top of block. Finish ream to size after installation.
Valve Springs:—Springs are cadmium plated. Dampeners originally used on bottom of all springs, but car manufacturer recommends that they be omitted whenever valves are serviced. Spring check (out of engine)—34 lbs. min. at 2".

	Spring Pressure	Spring Length
Valve Closed	44 lbs	2"
Valve Open	102 lbs	1 21/32"

Valve Lifters:—Roller shoe type, fitted in removable guides. ***See Hudson Shop Notes for lifter removal.***

VALVE TIMING

Tappet Clearance:—.006" Int., .008" Exh., engine hot

Valve Timing:—See camshaft setting above.
Intake Valves—Open 14° 40' BTDC. Close 60° ALDC.
Exhaust Valves—Open 50° BLDC. Close 18°44' ATDC.
These figures correct with .010" tappet clearance.
To Check Timing—Set tappet clearance #1 intake valve at .010". This valve should open with piston 10°40' or .0562" BTDC. when point on flywheel approximately 3.94 teeth before 'UDC.1-6/' mark lines up with pointer in hole in left front face of flywheel housing. Reset tappet clearance at .006" hot.

LUBRICATION

LUBRICATION:—Duo-flow (pressure and positive splash) system.

Oil Pump:—Oscillating plunger type, gear driven by camshaft. Mounted on right side of crankcase.
Normal Oil Pressure—3 lbs. (no gauge).

Oil Pressure Regulator:—Located on right side of crankcase at rear. Opens at 3 lbs. Not adjustable.

Oil Pressure Indicator:—Teleflash Oil Pressure indicator. See article in Electrical Equipment Section.
For complete data, refer to Electrical Equipment Index.

Checking Oiling System:—*See Hudson Shop Notes.*

Crankcase Capacity:—5 qts. (refill), 6 qts. (dry).

COOLING

COOLING SYSTEM:—**Water Pump.** Centrifugal, belt-driven, packless type.
See Water Pump Section for complete data.
Removal—With water drained and fan belt removed, disconnect water hoses at pump, remove mounting bolts and lift fan and pump assembly off.

Thermostat:—On 72 only. In water outlet on cyl. hd.
Setting—Start to open 150-155°F. Fully open 185°F.

Water Capacity:—13 quarts.

CLUTCH

CLUTCH:—**Own make.** Single plate, cork insert type, operating in oil.
See Clutch Section for complete data.
Driven Member—Thickness .203". Inside Diameter 5.375", Outside Diam. 8.625". Facing 90 cork inserts.

Automatic Clutch Control:—Optional equipment.
See Clutch Section for complete data.

Adjustment:—Pedal free movement must be 1½". To adjust, remove clevis pin at lower end of connecting link on throw-out shaft lever, loosen locknut, turn clevis. On cars with Automatic Clutch control, check setting whenever clutch adjusted.

Clutch Oil Servicing:—*See Hudson Shop Notes for data.*

Removal:—Remove transmission (see Transmission Removal following), take out 16 clutch cover capscrews and remove clutch assembly from below.

TRANSMISSION

TRANSMISSION:—**Own make.** Constant-mesh, helical gears with synchronizing unit (second and high speeds). Sliding spur gears (low and reverse).
See Transmission Section for complete data.

Electric Hand:—Bendix type electro-pneumatic gear shift Optional Equipment.
See Transmission Section for complete data.

Removal:—Remove Electric Hand and Automatic Clutch Control units and wiring from transmission first, if car so equipped. See separate articles in Clutch and Transmission Sections for necessary adjustments on these units when reinstalling. Disconnect transmission side bumpers, interlock straps, speedometer cable and drive shaft at front universal. Take out bell housing-to-engine mounting bolts, pull transmission straight back.

UNIVERSALS

UNIVERSAL JOINTS:—Spicer. 1271 (front), 1278 (rear). Needle bearing type.
See Universals Section for complete data.

REAR AXLE

REAR AXLE:—**Own make.** Semi-floating, spiral bevel gear type.
See Rear Axle Section for complete data.
Ratio—4.11-1 Std., 4.56-1 Optl. 3.89-1, 3.56-1 Special.
Backlash—.0005-.003". Screw adjustment.

Removal:—Remove rear wheel and hub assembly (use screw type puller only), take out four nuts on bearing cap bolts, push bolts out through backing plate remove shims, pull wheel bearing and axle shaft, disconnect drive shaft at rear universal, remove 8 nuts from axle housing-to-carrier stud bolts, withdraw differential assembly.

Wheel Bearing Adjustment:—Controlled by shims under bearing cap. Measure endplay by dial indicator clamped to backing plate with plunger against end of axle shaft. To adjust, remove bearing caps (as directed above), add or remove shims equally at both wheels. **Endplay**—.004-.010".

SHOCK ABSORBERS

SHOCK ABSORBERS:—**Monroe.** 637502 (front), 635703 (rear). Hydraulic, direct acting type.
See Shock Absorber Section for complete data.

FRONT SUSPENSION

Front Suspension:—Conventional 'I' beam section front axle with Elliott type ends and semi-elliptic springs. Axle alignment maintained by torque arm at each end (71, 72—not used on 70).
Torque Arms—*See Hudson Special Shop Notes.*
Kingpin Inclination—7° crosswise. NOTE—Loose ball type thrust bearing used. See 1936 page for data.
Caster—1-2° and equal within ½° for both wheels. To adjust (71, 72), loosen capscrews at front of torque arm, insert shim between arm and axle at upper screw or remove shim at lower screw to decrease caster, remove shim at upper screw or insert shim at lower screw to increase caster. Shims .020" thick, change caster ½°. To adjust (70), install wedge shims between spring and spring seat.
Camber—1-1½°. No adjustment.
Toe In—⅛" measured 10" up from ground. Adjust by loosening clamp bolts and turning tie rod.
Steering Geometry—Inner wheel 20°. Outer 17¾°.

STEERING GEAR

Steering Gear: Gemmer Model 305. Worm-and-Roller type with "push-pull" adjustments.
See Steering Gear Section for complete data.

BRAKES

BRAKES:—**Service**—Bendix Hydraulic, Duo-servo, Single anchor type with Mechanical follow-up. Hand lever applies rear service brakes.
See Brake Section for complete data.
Drum—Alloy-steel. Diameter—10 1/16".
Lining—Moulded and woven type. Width 1¾". Thickness 7/32". Length 22⅛" per wheel.
Clearance—.010" heel and toe of each shoe.

Hand Brake:—See Service Brakes above.

Hill-Holder:—Optional on all models.
See Brake Section for complete data.

MODEL IDENTIFICATION

SERIAL NUMBER:—First number 80101 (80), 88101 (88), 81101 (81), 82101 (82)—First two figures indicate model. Stamped on plate on right front door hinge pillar post.

ENGINE NUMBER:—First number 80101 (80), 88101 (88), 81101 (81), 82101 (82). On boss on left side of block near top front or on top of block between #1 and #2 exhaust manifold flanges.

TUNE-UP

COMPRESSION:—Ratio and pressure as follows:

Ratio	Compression Pressure
6.25-1 std. C. I. hd.	103 lbs. @ 170 R.P.M.
7.0-1 Optl. Al. hd.	119 lbs. @ 170 R.P.M.

NOTE—7.0-1 aluminum head—Super Power Dome.

VACUUM READING:—Gauge should show steady reading of 18-21" idling at 350 RPM. or 6 MPH.

FIRING ORDER: 1-5-3-6-2-4. See diagram.

SPARK PLUGS: Champion Type J-8A (Std. 6.25-1 Eng.), Type H-10 (Optl. 7.0-1 Eng.). 14 mm. Metric type. Gaps—.032".

IGNITION: See Coil, Condenser, and Distributor.
Breaker Gap—.020". Cam Angle 35° (closed).
Automatic Advance—14° max at 1580 RPM (distr.).

IGNITION TIMING: See Ignition Timing.
Std. Setting—At TDC. with flywheel mark "UDC. 1-6/" at indicator in inspection hole in left front face of housing above starter.

CARBURETION: See Carburetor & Carb. Equipment.
Idle Setting (Single Carb.)—Idle screw ¼-1 turn open. Idle speed 6 MPH.
Idle Setting (Dual Carb.)—Both idle screws ¼-¾ turn open. Idle speed 6 MPH.
Float Level (Single Carb.)—⅜" gasket seat on cover to top of float at free end (invert to check).
Float Level (Dual Carb.)—15/64" from gasket seat on cover to top of float at each end.
Accelerating Pump (Single Carb.)—Center hole (medium) Normal. Inner hole (Summer), Upper hole (Winter) for extreme temperatures.
Accelerating Pump (Dual Carb.)—Inner hole Summer, Outer hole—Winter.

Fuel Pump Pressure: 4½ lbs. maximum.

MANIFOLD HEAT CONTROL:—80, 81, 88—Manual adjustment type at center of exhaust manifold behind carburetor. Make seasonal adjustments as follows: Setting—To adjust, loosen nuts on strut bar on face of valve cover, turn cover so that pointer is in line with 'W' mark on manifold (Winter temperatures), straight up (Normal Summer temperatures), toward front in line with 'S' mark (Extremely hot temperatures).
Model 82:—Automatic thermostatic type. No adjustment required.

VALVES: See Valve Timing.
Tappet Clearance—.006" Int., .008" Exh., Hot.

STARTING: See Battery, Starter, Generator, and Regulator (when used).

IGNITION

Ignition Switch:—Mitchellock Model 24-B, Type 7642.
Ignition Lock—Briggs & Stratton, Mitchell N . 6095.

COIL: Auto-Lite Model IG-4650. Service Winding (coil less switch and cable) IG-3224JS.
Ignition Current—5-6 amperes stopped.

CONDENSER: Auto-Lite Part No. IGB-1025J.
Capacity—.20-.25 microfarad.

DISTRIBUTOR: Auto-Lite Model IGW-4104-A (Std. 80, 81, 88), IGW-4103-A (Std. 82, Optl. 80, 81, 88). Single breaker, 6 lobe cam, full automatic advance type.

NOTE—Resistor unit used on IGW-4104A (mounted on distributor terminal connected in primary circuit). When voltage regulator is installed (for cars with radio), resistor should be removed or IGW-4103A type distributor installed.

Breaker Gap—Set at .020".
Cam Angle or Dwell—35° (closed), 25° (open).
Breaker Arm Spring Tension—16-20 ounces.
Rotation—Clockwise viewed from the top.

Automatic Advance

Distributor Degrees	Distributor R.P.M.	Engine Degrees	Engine R.P.M.
Start	300	0	600
3	400	6	800
7	825	14	1650
11	1255	22	2510
14	1580	28	3160

Fuel Compensator—Provides manual adjustment at distributor for octane rating of fuel used. See Fuel Compensator Setting (following).
Distributor Removal:—Mounted on right side f crankcase. To remove, take out hold-down screw in advance arm.

IGNITION TIMING

IGNITION TIMING:—Initial Setting as shown. See Fuel Compensator Setting following.

	Flywheel Degrees	Piston Position
All engines	0° TDC.	.000" TDC.

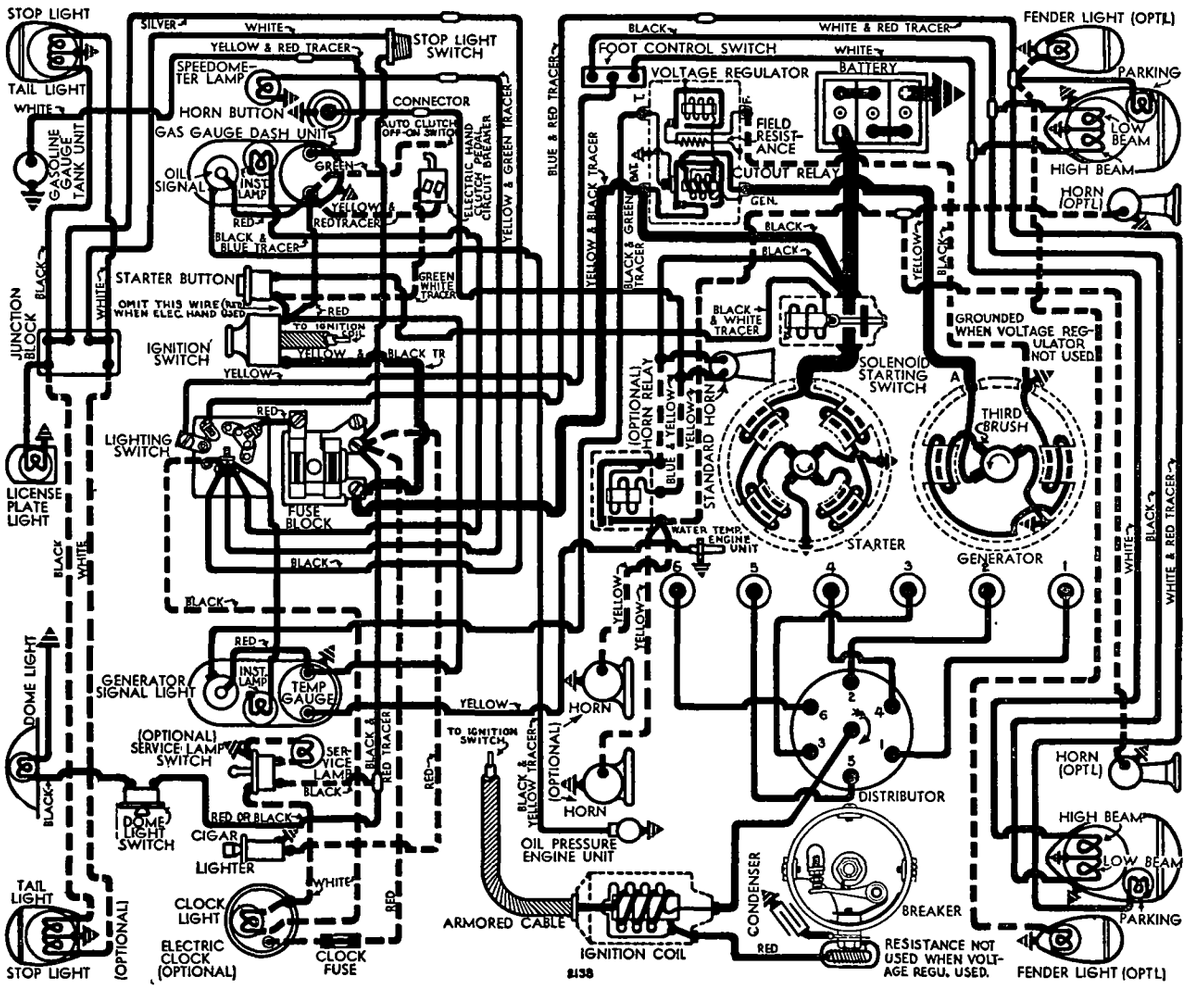

NOTE—High octane fuel must be used in engines with 7.0-1 'Super Power Dome' head.

To Set Timing—With #1 piston on compression, turn engine over until flywheel mark 'UDC.1-6/', lines up with pointer in left front face of flywheel housing. Loosen hold-down screw in advance arm, rotate distributor clockwise to limit of slot, then slowly rotate distributor counter-clockwise until contacts begin to open, tighten hold-down screw.

To Set Timing (Using Synchroscope)—Car manufacturer recommends this method. Clip lead to #6 spark plug, fill in timing mark with white chalk and direct light on flywheel through hole in housing.

Fuel Compensator Setting—Road test car and note performance when accelerating from 10-15 M.P.H. with wide open throttle on level road (engine must be warm). Slight spark knock should be evident. Adjust by loosening hold-down screw and rotating distributor one graduation on scale counter-clockwise (if no knock), clockwise (if knock too severe). Repeat test. Final setting must not be advanced beyond ¾" before 'UDC.1-6/' mark on flywheel.

CARBURETOR

MODELS 80, 81, 88

Carter Model W1 Vacumeter Type 397-S. 1¼", single barrel, downdraft type with manual choke control.

For complete data, refer to Carburetor Index.

Idle Adjustment—Engine must be warm so that choke valve is wide open and throttle cracker inoperative. Set throttle lever stopscrew to idle engine at 6 MPH. Turn idle adjusting screw in until engine begins to miss, then out until engine begins to roll, finally turn screw in slowly until engine fires smoothly. Final setting should be ¼-1 turn open from inner seated position. Readjust throttle stopscrew for correct idling speed.

Float Level—⅜" from gasket seat on cover to top of float at free end (invert to check).

Accelerating Pump Setting (397-S)—Lever under dust cover at top of carburetor) has three holes for pump link engagement. Set as follows:
Lower Hole (medium stroke)—Normal setting.
Inner Hole (min. stroke)—Hot temp., hi-test fuel.
Outer Hole (max. stroke)—Cold temp., low-test fuel.

Throttle Cracker (397-S):—With choke valve closed, throttle opening should be .036-.040".

CARBURETOR

SUPER MODEL 82

Carter Model WDO, Type 402-S. 1", Dual (double barrel), downdraft type with Fast Idle and Carter Climatic Control (automatic choke).

For complete data, refer to Carburetor Index.

Idle Adjustment—With engine warm and idling at hot or slow idle speed (automatic choke and fast idle inoperative), set throttle stopscrew to idle engine at 6 MPH., adjust both idle adjusting screws (2 used, one for each barrel) in succession until engine fires smoothly on all cylinders. Final setting of both idle screws should be ¼-¾ turn open from inner seated position. Readjust throttle stopscrew for correct idle speed.

Float Level—15/64" from gasket seat on cover to top of float with valve seated. Invert assembly to check and measure to each side of soldered seam on float.

Accelerating Pump Setting (402-S)—Adjustable for minimum and maximum stroke as follows:
Short Stroke (Inner Hole)—Hot Temperatures.
Long Stroke (Outer Hole)—Cold Temperatures.

Fast Idle (402-S):—Carter stepped-cam type.
For complete data, refer to Carburetion Equip. Index.
Adjustment—With choke valve closed, adjust fast idle screw for .018" throttle opening.

Automatic Choke (402-S):—Carter Climatic Control.
For complete data, refer to Carburetion Equip. Index.
Setting—Centered (at index).

CARB. EQUIPMENT

Air Cleaner:—AC Oil-wetted Type 1528159 (Std. 80, 81, 88), 1528161 (Std. 82), 1528158 (80,81,88 with Electric Hand), 1528160 (82 with Electric Hand). United Heavy duty oil bath type Optl. on all models.

Fuel Pump:—AC. Type AK #1523289 (LHD), #1523313 (RHD), diaphragm type, standard. Type AB #1523290 (LHD), #1523314 (RHD), combination fuel-and-vacuum pump optional.
For complete data, refer to Carburetion Equip. Index.

Gasoline Gauge:—King-Seeley Electric type. K-S No. 6783 (Dash Unit 80, 81, 88), 6756 (Dash Unit 82), 5835 Tank Unit—All models).
For complete data, refer to Carburetion Equip. Index.

BATTERY

BATTERY:—National, Type HT-17 (Original equipment), L-17-1F (Replacement). 6 volt, 17 plate, 100 ampere hour capacity (20 hour rate).
Starting Capacity—120 amperes for 20 minutes.
Zero Capacity—300 amperes for 3.5 minutes.
Grounded Terminal—Positive (+) terminal. Grounded to left front fender support bracket. Engine grounded to frame by strap at bellhousing.
Dimensions—Length 10 9/16". Width 7¼". Height 7 15/16".
Location—In left front fender under hood. Accessible from engine compartment by taking out 3 slotted screws in cover flange (2 top, 1 rear) and removing cover.

STARTER

Auto-Lite Model MAB-4075. Armature MAB-2113.
Drive—Inboard Barrel Type Bendix No. A-1673.
Rotation—Counter-clockwise at commutator end.
Brush Spring Tension—42-53 ozs. (new brushes).
Cranking Engine—150 RPM., 120-125 amperes, 5 v.

Performance Data

Torque	R.P.M.	Volts	Amperes
0 ft. lbs.	3700	5.5	60
3.4 "	1100	5.0	200
6.6 "	695	4.5	300
10.15 "	420	4.0	400
15.8 "	Lock	3.	582
22.5 "	Lock	4.	775

NOTE—Lock torque figures correct without switch.

Removal:—Starter flange mounted on left front face of flywheel housing. To remove, take out flange mounting screws.

Starting Switch:—Type SS-4001. Magnetic solenoid type mounted on starter. Controlled by pushbutton on instrument board (RBM Model 1815). Operative only with ignition on (and clutch disengaged on cars with Electric Hand).
For complete data, refer to Electrical Equipment Index.

GENERATOR

Auto-Lite Model GDF-4803A-1 (Std. 80, 81, 88), GDF-4802A (Std. 82, Optl. 80, 81, 88). Third brush control with vibrating voltage regulation (GDF-4802A only). Ventilated by fan on drive pulley.
NOTE—Generator field terminal grounded by ground cup assembled on terminal stud (on cars without regulator). This cup must be removed when regulator installed.
Maximum Charging Rate—16-18 amperes (hot), 17-19 amperes (cold) without regulator. 26.5-29.5 amperes (hot), 29-32 amperes (cold) with regulator. Use test ammeter to check output.
Charging Rate Adjustment—Remove commutator cover band, shift third brush by hand, counter-clockwise to increase, clockwise to decrease charging rate. Third brush held in position by friction. Do not exceed maximum rate given above. On cars with regulator, actual charging rate determined by regulator (dependent on battery condition).
NOTE—Standard 3rd brush setting 3¾-4 (without regulator), 2⅛ (with regulator) commutator bars from insulated (nearest) main brush.

Performance Data—GDF-4803A (Without Regulator)

Cold Amperes	Volts	R.P.M.	Hot Amperes	Volts	R.P.M.
0	6.4	860	0	6.4	1020
4	6.75	1200	4	6.8	1260
8	7.1	1450	8	7.15	1500
12	7.45	1680	12	7.55	1740
16	7.8	2020	16	7.9	2240
18	8.0	2300	17	8.0	2800

Performance Data—GDF-4802A (With Regulator)

0	6.4	920	0	6.4	1000
4	6.6	1030	4	6.6	1140
8	6.8	1140	8	6.85	1280
12	7.0	1300	12	7.1	1440
16	7.25	1460	16	7.3	1640
20	7.45	1650	20	7.55	1840
24	7.65	1880	24	7.75	2220
28	7.9	2220	28.3	8.0	3200
32	8.0	3100			

Rotation—Counter-clockwise at commutator end.
Brush Spring Tension—53 ozs. max. (new brushes).
Field Current—1.90-2.10 amperes at 6.0 volts.
Motoring Current—4.6-5.2 amperes (without regulator), 5.3-5.9 (with regulator) at 6 volts.

Removal:—Generator pivot mounted at left front of engine with fan belt drive. To remove, take out clamp and pivot bolts.

Belt Adjustment:—Loosen clamp and pivot bolts, swing generator out until slack in belt midway between generator and fan pulleys is ¾" (measured with straightedge across pulleys).

CUTOUT RELAY

Auto-Lite Model CBA-4003 (With GDF-4803A-1 Generator). Mounted on engine side of dash. Relay has extra "ground" contacts for Teleflash generator charge indicator control.
For complete data, refer to Electrical Equipment Index.
Cuts In—6.5-7.25 volts. Approx. 10 M.P.H.
Cuts Out—1.5-4.5 amperes discharge current after charging at 16 amperes.
Contact Gap—.015-.045" with upper ground contacts closed (must open when main contacts close).
Air Gap—.010-.030" with contacts closed.

C NTINUED N NEXT PAGE

CONTINUED FROM PRECEDIN PA E

REGULATOR

Auto-Lite Model VRD-4008A. Voltage Type. Cutout Relay and vibrating type Voltage Regulator in case on dash. Cutout Relay has extra "ground" contacts for Teleflash generator charge indicator control. *For complete data, refer to Electrical Equipment Index.*
NOTE—See distributor and generator notes for changes to be made when this unit installed in field.
NOTE—Regulator case cover is sealed. Serviced on exchange basis if seals not broken.

Cutout Relay

Cuts In—6.4-7.0 volts Cold. Approx. 10 M.P.H.
Cuts Out—.5 ampere min., 3.0 amperes max. cold.
Contact Gap—.015" min.—ground contacts closed (must be open with main contacts closed).
Air Gap—.034" min., .038" max. with contacts open. Measure at hinge end of core.

Voltage Regulator

Setting—7.35-7.65 volts at 70°F. (after 15 minutes operation charging at 10 amperes).
To Check (without breaking seal)—Connect ammeter in charging line at 'BAT' terminal on regulator, connect voltmeter between 'BAT' terminal and ground. Operate generator at speed equivalent to 30 MPH., charging fully charged battery until voltage is constant. Voltmeter reading should be within 7.1-7.8 volts (high limit cold, low limit hot). If outside these limits regulator is defective.
To Adjust (with cover removed)—Change regulator armature spring tension slightly by bending lower spring hanger. Check setting as directed above. See Electrical Equipment Section for complete directions.
Contact Gap—.010-.020" (armature against stop).
Air Gap—.0595-.0625" with contacts just opening.

LIGHTING

LIGHTING:—Headlamps—Hall, pre-focused type with interchangeable lenses. Upper and lower beams (lower beam deflected slightly to right) controlled by foot selector switch with lighting switch in driving (right hand) position.
Headlamp Adjustment—Aim headlamps straight ahead with top of beam 35¼" above floor level at 25' (car unloaded, upper beams lighted). Headlamps aimed by means of two screws on underside of headlamp body. Vertical movement obtained by turning both screws equally in or out, horizontal movement by turning one screw in until half desired movement obtained and completing movement by turning opposite screw out an equal amount.

Switches

Lighting—R.B.M. #1725.
Beam Selector—R.B.M. #1076.

Bulb Specifications

Position	Candlepower	Mazda No.
Headlamps	32-32	2331
Headlamps (export)	21-50	2520D
Park, Instrument, Service	1½	55
License, Fender	3	63
Stop-Tail	21-3	1158
Dash Signals	1	51
Dome	15	87

MISC. ELECTRICAL

SIGNAL LIGHTS:—Teleflash Generator Charging Indicator and Oil Pressure Indicator. *For complete data, refer to Electrical Equipment Index.*
FUSES:—Lighting—Two 20 ampere capacity mounted on fuse block on lower flange of instrument panel
HORNS:—Single horn standard. Sparton twin horns with R.B.M. relay (optl.—dash mounted).
Klaxon Model K-33-F—Type 2117 (left—low note), 2118 (right—high note), twin horns, blended tone with Delco-Remy Horn Relay Optl.
NOTE—Data below for Delco-Remy equipment.

Horn Type	Current at 6 volts	Air Gap
2117 (low note)	11-13	.040-.044"
2118 (high note)	9-11	.032-.036"

Horn Relay:—Model 271-A (with Klaxon horns' Contacts close 2.7-4.0 volts.
Contact Gap—.020". **Air Gap**—.015".
NOTE—R.B.M. #780 relay also used.

ENGINE

ENGINE SPECIFICATIONS:—6 cyl. L head type.
Bore—3". **Stroke**—5". **Displacement**—212 cu. ins.
Rated Horsepower—21.6 A.M.A.

Developed Horsepower—	80, 81, 88	82
Std. 6.25-1	96 @ 3900	101 @ 4000
Optl. 7.0-1 'Super Power'	102 @ 3900	107 @ 4000

Compression Ratio & Pressure—Check at cranking speed, spark plugs removed, throttle wide open.
Std. 6.25-1 head .....103 lbs. at 170 R.P.M.
Optl. 7.0-1 head .....119 lbs. at 170 R.P.M.
Vacuum Reading—18-21" at 350 RPM or 6 MPH.

PISTONS:—Own Lo-Ex aluminum alloy, "T" slot, cam ground type. Use finished replacement pistons.
Weight—10.5 ozs. stripped. **Length**—3 3/16".
Removal—May be removed from above or below.
Clearance—.016" top, .002" skirt (see below).
Original Bore Size:—*See Hudson Shop Notes.*
Replacement Pistons:—*See Hudson Shop Notes.*
Fitting New Pistons:—3-4 lb. tension should be required to withdraw .0015" feeler ½" wide from between piston and cylinder wall on side opposite slot at right angles to pin bosses.
Installing Pistons:—Slot away from camshaft side.

PISTON RINGS:—Two compression, one oil ring above pin, 1 oil ring below pin. Rings positioned by pin in grooves.

Ring	Width	End Gap	Side Clearance
Compression	3/32"	.005-.010"	.001"
Oil (both)	3/16"	.005"	.001"

Replacement Rings:—*See Hudson Shop Notes.*

PISTON PIN:—Diameter—¾". Length—2 7/16".
Pin floats in piston and rod, held by locking rings. Pin hole in rod bronze-bushed. Pins furnished std., .002", .005", .010" oversize.
Pin Fit in Piston—.0003" clearance or hand push fit with piston heated to 200° F.
Pin Fit in Rod Bushing—.0003" clearance.

CONNECTING ROD:—Weight 30.3 oz. Length 8 3/16". *See Hudson Shop Notes for Connecting Rod change on late cars.*
Crankpin Journal Diameter—1 15/16".
Lower Bearing—Spun-babbitt. Rods exchanged. Finished bearings furnished standard and undersize (special order).
Clearance—.001". **Sideplay**—.006-.010".
Bearing Adjustment:—None (no shims). Replace rods. *See Hudson Shop Notes for connecting rod palnut (locknut) installation instructions.*
Installing Rods:—Offset. Install rods with widest half of bearing toward rear (#1, 2, 4), toward front (#3, 5, 6). Oil scoop on all rods toward camshaft.

CRANKSHAFT:—3 bearing, integral counterweights *See Hudson Shop Notes for Crankshaft and Vibration Dampener removal, Main Bearing Removal, Installation and Line-Reaming data.*
Journal Diameter—#1, 2 11/32", #2, 2⅜", #3, 2 13/32".
Bearing Type—Bronze-backed, babbitt-lined. Furnished std., and unfinished (1/32" extra stock—ream to desired undersize). **Clearance**—.001".
Bearing Adjustment:—Shims. *See Hudson Shop Notes.*
End Thrust:—Taken by center bearing. Replace bearing to adjust. Endplay .006-.012".

CAMSHAFT:—Three bearing. Gear driven.
Journal Diameters—#1, 2"; #2, 1 31/32"; #3, 1½"
Bearing Clearance—.0025".
End Thrust:—Taken by thrust washer on front face of crankcase and by spring-loaded button in camshaft hub and thrust plate on gear cover. See that spring and button in place under cover.
Timing Gears:—Crankshaft gear cast-iron. Camshaft gear GE. or Continental Diamond Fibre Bakelite. *1941 Hudson Type Timing Gear Set can be installed on these models (tooth angle redesigned to provide quieter operation). See Hudson Shop Notes for data.*
Camshaft Setting:—Mesh marked tooth of crankshaft gear between 2 marked teeth on camshaft gear.

VALVES:—Lighter valves (smaller stem diameter) used, than on previous models. New pilot size necessary for valve tools. *See Hudson Shop Notes for data.*

	Head Diameter	Stem Diameter	Length
All valves	1⅜"	11/32"	5 11/32"

	Seat Angle	Lift	Stem Clearance
Intake	45°	11/32"	.0015-.003"
Exhaust	45°	11/32"	.003-.005"

Valve Guides: 2 9/16" long. Top 1 1/16" below top of block. Finish ream to size after installation.
Valve Springs:—Springs are cadmium plated. Dampeners originally used on bottom of all springs, but car manufacturer recommends that they be omitted whenever valves are serviced. Spring check (out of engine)—34 lbs. min. at 2".

	Spring Pressure	Spring Length
Valve Closed	44 lbs.	2"
Valve Open	102 lbs.	1 21/32"

Valve Lifters:—Roller shoe type, fitted in removable guides. *See Hudson Shop Notes for Lifter Removal.*

VALVE TIMING

Tappet Clearance:—.006" Int., .008" Exh., Hot.
Valve Timing:—See camshaft setting above.
Intake Valves—Open 10°40' BTDC. Close 60° ALDC.
Exhaust Valves—Open 50° BLDC. Close 18°44' ATDC.
These figures correct with .010" tappet clearance.
To Check Timing—Set tappet clearance #1 intake valve at .010". This valve should open with piston 10°40' or .0562" BTDC. when point on flywheel approximately 3.94 teeth before 'UDC.1-6/' mark lines up with pointer in hole in left front face of flywheel housing. Reset tappet clearance at .006" hot.

LUBRICATION

LUBRICATION:—Duo-flo (pressure & splash) system.
Oil Pump:—Oscillating plunger type, gear driven by camshaft. Mounted on right center of crankcase.
Normal Oil Pressure—3 lbs. (no gauge).
Oil Pressure Regulator:—Located on right side f crankcase at rear. Opens at 3 lbs. Not adjustable.
Oil Pressure Indicator:—Teleflash Oil Pressure Indicator. See article in Electrical Equipment Section. *For complete data, refer to Electrical Equipment Index.*
Checking Oiling System:—*See Hudson Shop Notes.*
Crankcase Capacity:—5 qts. (refill), 6 qts. (dry).
NOTE—Capacity decreased ½ qt. after car #43845.

COOLING

COOLING SYSTEM:—Water Pump. Centrifugal, belt-driven, packless type.
See Water Pump Section for complete data.

Thermostat:—Std. on 82, optl. on others. In water outlet on cylinder head.
Setting—Start to open at 150-155°F. Fully open 185°F.

Water Capacity:—12½ quarts.

CLUTCH

CLUTCH:—Own make. Single plate, cork insert type operating in oil.
See Clutch Section for complete data.

Adjustment:—Pedal free movement must be 1½". To adjust, remove clevis pin at lower end of connecting link on throw-out shaft lever, loosen locknut, turn clevis. On cars with Automatic Clutch control, check setting whenever clutch adjusted.
Driven Member—80 Utility coach, coupe and sedan, 81. Thickness .203". Inside Diameter 5.375". Outside Diameter 8.625". Facing 90 cork inserts. **All others**—Thickness .203". Inside Diam. 6.375". Outside Diameter 9.75". Facing 108 cork inserts.

Automatic Clutch Control:—Optional equipment.
See Clutch Section for complete data.

Clutch Oil Servicing:—*See Hudson Shop Notes.*

Removal:—Remove transmission (see Transmission Removal following) take out 16 clutch cover cap-screws and remove clutch assembly from below.

TRANSMISSION

TRANSMISSION:—Own make. Constant-mesh, helical gear (second & high), sliding spur (low & reverse).
See Transmission Section for complete data.

Electric Hand:—Bendix type electro-pneumatic gear shift Optional Equipment.
See Transmission Section for complete data.

Removal:—Remove Electric Hand and Automatic Clutch Control units and wiring from transmission first, if car model so equipped. See separate articles in the Clutch and Transmission Section for necessary adjustments on these units when reinstalling. Disconnect transmission side bumpers, interlock straps, speedometer cable and drive shaft at front universal. Take out bell housing-to-engine mounting bolts, pull transmission straight back.

UNIVERSALS

UNIVERSAL JOINTS:—Spicer. 1271 (front), 1278 (rear).
See Universals Section for complete data.

REAR AXLE

REAR AXLE:—Own make. Semi-floating, spiral bevel type with Hotchkiss drive.
See Rear Axle Section for complete data.

Ratio—4 1/9-1, 4 5/9-1, 5 1/8-1.

Backlash—.0005-.003". Screw adjustment.

Removal:—Remove rear wheel and hub assembly (use screw type puller only), take out four nuts on bearing cap bolts, push bolts out through backing plate remove shims, pull wheel bearing and axle shaft, disconnect drive shaft at rear universal, remove 8 nuts from axle housing-to-carrier stud bolts, withdraw differential assembly.

Wheel Bearing Adjustment:—Controlled by shims under bearing cap. Measure endplay by dial indicator clamped to backing plate with plunger against end of axle shaft. To adjust, remove bearing caps (as directed above), add or remove shims equally at both wheels. **Endplay**—.004-.010".

SHOCK ABSORBERS

SHOCK ABSORBERS:—Monroe. 156577 (front), 156578 (rear). Hydraulic, direct acting type.
See Shock Absorber Section for complete data.

FRONT SUSPENSION

Front Suspension:—Conventional 'I' beam section front axle with Elliott type ends and semi-elliptic springs. Axle alignment maintained by torque arm at each end (81, 82—not used on 80, 88).

Kingpin Inclination—7° crosswise. *See Hudson Shop Notes for Kingpin Thrust Bearing data.*

Caster—1-2° and equal within ½° for both wheels. To adjust (81, 82), loosen capscrews at front of torque arm, insert shim between arm and axle at upper screw or remove shim at lower screw to decrease caster, remove shim at upper screw or insert shim at lower screw to increase caster. Shims .020" thick, change caster ½°. To adjust (80, 88), install wedge shims between spring and spring seat.

Camber—1-1½°. No adjustment.

Toe In—⅛" measured 10" up from ground. Adjust by loosening clamp bolts and turning tie rod.

Steering Geometry—Inner wheel 20°. Outer 17¾°.

STEERING GEAR

Steering Gear: Gemmer Model 305. Worm-and-Roller type with "push-pull" adjustments.
See Steering Gear Section for complete data.

BRAKES

BRAKES:—Service—Bendix Hydraulic, Duo-servo, Single anchor type with Mechanical follow-up. Hand lever applies rear service brakes.
See Brake Section for complete data.
Drum—Alloy-steel. Diameter—10 1/16".
Lining—Moulded (primary), Woven (secondary). Width 1¾". Thickness 3/16". Lgth. 22⅛" per wheel.
Clearance—.010" heel and toe of each shoe.

Hand Brake:—See Service Brakes above.

Hill-Holder:—Optl.
See Brake Section for complete data.

CYLINDER HEAD

ALL MODELS

CYLINDER HEAD: Installation—Use a torque indicating wrench to tighten cylinder head stud nuts and capscrews, tighten in correct sequence as shown

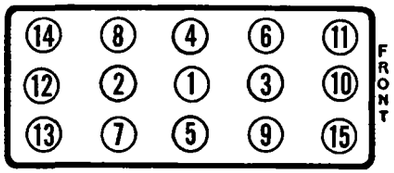

WILLYS FOUR

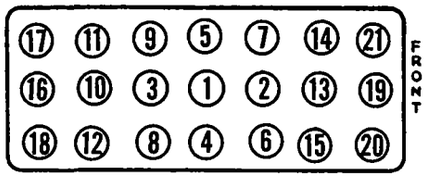

WILLYS SIX

Tightening Torque—See Tightening (Torque Wrench) Specifications below.

TIGHTENING (TORQUE WRENCH) SPECIFICATIONS

1946-47-48 MODELS

TIGHTENING TORQUES: When tightening capscrews or bolt nuts retaining the parts listed below, use a torque indicating wrench and tighten to tensions listed:

	Ft.Lbs.	In.Lbs.
Cylinder Head Capscrews	65-75	780-792
Cylinder Head Stud Nuts	60-65	720-780
Main Bearing Capscrews	65-70	780-840
Connecting Rod Bolts	50-55	600-660
Flywheel Attaching Bolts	36-40	432-480
Rear Engine Mounting Bolts	38-42	456-504
Manifold Attaching Stud Nuts (Intake & Exhaust)	31-35	372-420
Generator Bracket Bolts	31-35	372-420
Starter Mounting Capscrews	20-25	240-300
Universal Joint "U" Bolts	15-18	180-216
Spring Center Clip "U" Bolts	50-55	600-660
Spring Pivot Bolt Nut	27-30	324-360

ENGINE REMOVAL

CJ-2A JEEP

ENGINE REMOVAL: To remove engine from chassis as required for such service items as crankshaft and camshaft overhaul, perform the following operations in sequence:

1. Drain Cooling System. Drain cocks located at lower left corner of radiator and right front corner of cylinder block.

2. Remove Battery. Disconnect battery cables, remove battery from box on right side of engine.

3. Remove Radiator. Disconnect and remove upper and lower hoses, radiator stay rod, and hold-down nuts, lift radiator out. Do not lose radiator mounting pads (not necessary to remove radiator grille).

4. Remove Air Cleaner. Disconnect and remove air cleaner hose connection, remove wing nuts on mounting bracket and lift cleaner out.

CAUTION—Use care not to spill oil in cleaner.

5. Remove Starter. Disconnect cable at starter terminal. Remove two flange mounting capscrews and bolt in support bracket at commutator end, pull starter forward to clear Bendix Drive and lift out.

6. On Right Side of Engine, disconnect generator leads and ignition coil leads to distributor. Remove heat indicator bulb from cylinder head (CAUTION—Use care not to kink or break tube), disconnect engine ground strap (at right front engine mounting bracket), remove two bolts in engine mounting.

7. On Left Side of Engine, disconnect throttle and choke control rods at carburetor, and governor dash control cable at governor (if used). Disconnect and remove horn. Remove fuel tank filler cap (to relieve pressure), disconnect fuel line at fuel pump. Disconnect oil gauge lines at crankcase, remove accelerator linkage rod. Disconnect exhaust pipe at manifold. Remove two bolts in left front engine mounting.

8. Underneath Engine, disconnect rear end of engine stay cable at frame cross-member (left side), remove bell housing attaching bolts **leaving one bolt at each side to support engine weight.**

9. Remove Engine. Attach chain hoist to engine and take up on hoist just enough to support engine without binding remaining bell housing bolts, remove these bolts. Swing engine forward to withdraw clutch shaft from bushing in flywheel, lift engine out.

INSTALLATION CAUTION—Place small amount of grease in clutch shaft bushing in flywheel before installing engine.

ORIGINAL BORE & PISTONS

ALL MODELS

BORE & PISTON SIZES: Engines originally equipped at factory with special oversize pistons may be identified by code letter stamped on engine following the engine number:

"B"—Pistons are .002" Oversize.

"AB"—Pistons .002" Oversize. Main and connecting rod bearings are Undersize (see Original Bearing Sizes following).

"C"—Piston Pins .002" Undersize.

4 CYLINDER MODELS

STANDARD BORE & PISTON SIZE VARIATION: bores and pistons are graded in four .0005" steps as shown in table below and are marked as follows:

Piston—Letter stamped on piston head.

Cylinder Bore—Letter stamped on top of block between valve ports and bore at center.

4 Cylinder Bore & Piston Sizes

Letter	Cylinder Bore Size	Piston Size
A	3.1255-3.1250"	3.1235-3.1230"
B	3.1260-3.1255"	3.1240-3.1235"
C	3.1265-3.1260"	3.1245-3.1240"
D	3.1270-3.1265"	3.1250-3.1245"

6 CYLINDER MODELS

STANDARD BORE & PISTON SIZE VARIATION: Cylinder bore and pistons are graded in six .0004" steps and are marked as follows:

Piston—Letter stamped on piston head.

Cylinder Bore—Similar letter stamped on top of block between valve ports and bore.

ORIGINAL BEARING SIZES

ALL MODELS

MAIN & CONNECTING ROD BEARING SIZES: Engines originally equipped with special undersize mains and connecting rod bearings can be identified by code letter stamped on engine following the engine number:

"A"—Main & Con. Rod Bearings .010" Undersize.

"AB"—Main & Con. Rod Bearings .010" Undersize and Pistons Oversize (see Original Bore & Pistons).

"D"—Main Bearings .010" Undersize.

"E"—Connecting Rod Bearings .010" Undersize.

CRANKSHAFT & MAIN BEARINGS

1946-47-48 MODELS

CRANKSHAFT SERVICING: Bearing Replacement—Make certain that oil holes in bearings line up with oil holes in crankcase. On 4 cylinder, see that bearings fit snugly on dowel pins in crankcase and bearing caps.

Rear Bearing Oil Seal—Consists of a wick type packing installed in grooves in bearing cap and crankcase. To install new packing, insert packing in groove, use round piece of wood or steel to "roll" packing into groove, working from both ends toward center. With packing firmly seated in groove, cut off ends flush with surface. NOTE—Crankshaft must be removed to install packing in upper (crankcase) half of bearing.

Rear Bearing Cap Seal—Bearing cap sealed by cylindrical rubber packing strips inserted in holes between cap and case. When installing bearing cap, coat upper face lightly with sealing compound, insert new packing strips after cap is in place. Packing strips should protrude ¼" to provide proper compression when oil pan installed. CAUTION—Do not cut off this protruding portion of the packing.

Front (Timing Cover) Oil Seal—Braided asbestos type impregnated with graphite and oil. Seal is installed in recess in inner face of timing chain cover and retained by steel retainer. To remove seal, pry out retainer and seal assembly.
CAUTION—Always use new steel retainer when installing new seal.

►**Production Change (Starting CJ-2A Eng. No. 62054, 4-63 Eng. No. 11080, All 2T & 4T Jeep Trucks)**—New timing case cover (with double baffle and spring loaded leather seal) and new crankshaft pulley (with polished surface for seal contact) used. This new cover and pulley can be installed as an assembly on earlier engines (either chain or gear drive).

Flywheel—Mounted on crankshaft flange by two special dowel bolts and four special head bolts. Whenever flywheel removed, make certain that arrow on flywheel center lines up with arrow on crankshaft flange when re-installed (to insure correct position of timing marks), tighten bolt nuts with a torque indicating wrench to 36-40 ft.lbs. and check flywheel run-out when installed. Run-out must not exceed .008".

New Flywheel or Crankshaft Installation—Taper dowel bolts should be replaced with new special snug fitting bolts supplied to eliminate necessity of reaming the special tapered holes. Assemble new parts as follows: Install flywheel on crankshaft (lining up arrows on both parts) using the four straight bolts previously used, tighten these bolts securely. Drill out tapered bolt holes with a 35/64" drill, ream these holes with a 9/16" (.5625") straight reamer, install special bolts, Part No. 116295 (with No. 52330 Lockwasher and No. 52804 Nut), in these holes and discard the tapered dowel bolts used previously. Tighten bolts to 36-40 ft.lbs. and check flywheel run-out (.008" max.).

CAMSHAFT & BEARINGS

1946-47-48 MODELS

CAMSHAFT SERVICING: Removal—Drain radiator and cylinder block, remove radiator and grille, cylinder head, manifold, valves, and valve springs. Remove oil pump, fuel pump, oil pan, crankshaft pulley (use puller), fan and governor drive belts, and fan assembly. Remove nuts on front engine support rubber insulators. Remove timing chain cover, take out camshaft sprocket mounting screws, remove sprocket and chain. Block up all valve lifters (can be tied up by string from adjusting screw to manifold mounting studs). Place jack under crankcase (use block on jack to avoid damage to pan), raise front end of engine until camshaft will clear front cross-member, pull camshaft out.

Gear Puller Tool—Use Puller Tool No. W-172 to remove gear on engines equipped with timing gears.

Camshaft Front Bearing—Consists of a steel-backed, babbitt-lined bushing which takes thrust. When installing this bushing, make certain oil hole lines up with drilled oil hole in crankcase, stake bearing in place to prevent turning in service.

Camshaft Thrust Plunger—Plunger and spring should be installed in camshaft hub with round end out. Stationary pin on timing chain cover must be perpendicular so as to bear on spring-loaded plunger.

INSTALLATION CAUTION—Make certain that thrust washer installed in back of camshaft sprocket. Coat end of thrust pin on timing chain cover with cup grease when installing cover.

OIL PUMP

1936-42 MODELS
CJ-2A JEEP UP TO ENG. NO. 44417

PLANETARY GEAR TYPE OIL PUMP SERVICING: Pump mounted externally on left hand side of crankcase.

Pump Removal—Remove nuts and lockwashers on three mounting studs, slide pump off studs. To disassemble pump, remove one screw in pump cover, lift off cover, remove idler gear and rotor disc. To remove rotor shaft assembly, file off end of pin in drive gear hub, drive pin through shaft, using a small drift, remove gear, withdraw rotor shaft assembly from housing.

Pump Servicing & Assembly—Pump shaft clearance in housing is .001-.003" (new), .005" (service Limit). Idler gear clearance on shaft is .002-.004" (new), .006" (service limit). When assembling pump, make certain that gasket installed on shaft within pump housing and that disc in place in shaft assembly. Use new body and cover gaskets. Make certain that driving gear pin is securely installed to prevent loosening in service.

CAUTION—Prime pump by filling with engine oil through plug hole in cover before installing pump on engine.

Pump Installation—Turn flywheel to #1 piston firing position with flywheel mark "IGN" centered in inspection hole in right front face of flywheel housing below starter. Turn distributor shaft to #1 firing position with distributor rotor finger opposite #1 terminal in distributor cap. Hold oil pump in same relative position as when installed on engine, turn pump shaft until tongue offset is upward (widest part of shaft down) and line up gear retaining pin with right hand side of slot in pump body. Slide pump into place on mounting studs, recheck rotor position. NOTE—If distributor rotor not at #1 terminal with pump installed, remove pump, turn shaft as required, and re-install.

1946-47-48 MODELS
CJ-2A JEEP STARTING ENG. NO. 44417

ROTOR TYPE OIL PUMP SERVICING: Pump mounted externally on left hand side of crankcase.

Pump Removal—Remove mounting screws in pump body flange, slide pump assembly out. To disassemble pump, remove cover screws and lockwashers, lift off cover, remove pump outer rotor. To remove shaft and rotor assembly, file off end of pin in drive gear hub, drive pin through shaft using a small drift, remove gear, withdraw shaft and rotor from housing. To remove oil regulator, remove hexagonal-headed plug on side of housing, withdraw regulator spring and plunger. CAUTION—Do not lose adjusting shims located within plug above spring.

Pump Servicing & Assembly—Replace rotors if clearance between inner and outer rotor excessive, or if rotor clearance in housing excessive. Replace cover if rotor bearing surface is worn or scratched. Use new body and cover gaskets. Make certain that driving gear pin is securely installed.

Pump Installation—See installation directions for previous type planetary gear oil pump (above).

ENGINE GOVERNOR

1946-47-48 JEEP & TRUCK MODELS

GOVERNOR: Governor is mounted on bracket on left front corner of cylinder head and is belt driven from the crankshaft. Various types of Governors are used with different engaging mechanisms as listed below. All governors have a dash control by which engine speed can be set in 200 RPM. steps from 1000 RPM. to 2600 RPM. maximum.

King-Seeley—Governor is engaged by turning control on pulley hub ¼ turn in either direction from disengaged posiiton which allows pins to drop into deeper recesses in hub.

Monarch—Governor is engaged by unlatching the spring loaded control lever on top of the governor body and allowing spring to carry the engaging clutch forward.

Novi—No clutch provided (governor directly belted to engine).

Adjustment (King-Seeley & Monarch): Check throttle linkage for sticking and binding by disconnecting accelerator spring and making certain that throttle opens and closes freely (this is necessary to prevent surging when governor operating). Reconnect accelerator spring, set hand throttle in wide open position, make adjustments in order as listed below. CAUTION—Novi governors are adjusted differently (see Novi data following).

Throttle Linkage—Adjust length of governor-to-throttle rod so that rod can be installed without disturbing position of the short (lower) governor lever or the carburetor throttle lever (King-Seeley), or to provide 1/16" slack or lost motion (Monarch). Rod length between ball centers should be 6" with King-Seeley governor. NOTE—1/16" slack required with Monarch governor to cushion governor action and prevent surging (no surge adjustment).

Dash Control (Speed Adjustment)—Engage governor clutch, place the governor dash control in first (1000 RPM) notch, make certain that hand throttle fully open, start engine and allow it to run until fully warmed up, then adjust governor control as follows: Check engine speed which should be 1000 RPM (see Note below), and if not correct disconnect dash control cable at upper end of governor upper (long) lever, place lever in position giving 1000 RPM speed, adjust clevis on lever end of dash control cable so that cable can be connected without disturbing position of lever, tighten adjustment locknut and connect cable. Recheck adjustment. If engine surges when throttle opened momentarily on cars with King-Seeley governor, adjust surge screw (below). NOTE—Monarch governor does not have surge adjustment.

Engine Speed Note—If tachometer not available, speedometer can be used to gauge engine speed. Jack up rear wheels securely, make certain that front drive disengaged, engage high or direct transmission gear. Speedometer readings for adjusting purposes should be 15 MPH. (1000 Engine RPM), 39 MPH (2600 Engine RPM).

Surge Screw Adjustment—If engine surges under load when controlled by governor, loosen locknut on adjusting screw on rear of governor housing, turn adjusting screw out until engine surges when dash control is operated between Low and High governed speeds, then turn screw in until surging stops and tighten locknut. CAUTION—Do not turn surge screw in further than necessary to eliminate surging or speed control will be lost.

Adjustment (Novi Governor): Check throttle linkage for sticking and binding. Disconnect accelerator spring, see that throttle opens and closes freely (prevents surging when governor operates). Re-connect spring. Make following adjustments in order:

Throttle Linkage—Adjust length of governor to throttle rod so that it can be installed on the ball studs with the governor hand control **pulled out to last notch** and carburetor throttle **wide open**, tighten adjustment locknut and install rod. NOTE—Rod length should be approximately 7⅜" between ball stud centers.

C NTINUED N NEXT PA E

C NTINUED FR M PRECEDING PAGE

Dash Control (Speed Adjustment)—With governor dash control in closed or "in" position, start engine and allow it to run until fully warmed up. With hand throttle control fully closed, check engine idling speed and adjust throttle stopscrew for 600-650 RPM idle speed. Pull governor hand control out to first notch, check engine speed which should be 900-1000 RPM (see Note below). If not correct, disconnect dash control cable at upper end of governor upper (long) lever, place lever in position giving correct 900-1000 RPM engine speed, adjust clevis on lever end of cable so that cable can be connected without disturbing position of lever, tighten locknut and connect cable. Then push governor hand control all the way in, recheck engine idle speed. If speed greater than original setting of 600-650 RPM, loosen nut locking governor control handle on rod, unscrew handle from rod until carburetor throttle closed and throttle stopscrew against stop, tighten governor control handle locknut.

Engine Speed Note—Speedometer can be used to gauge engine speed as follows: Jack up rear wheels securely, make certain that front drive disengaged, engage transmission High or direct speed. Speedometer readings should be 13½-15 MPH for engine speed of 900-1000 RPM.

SPRING SHACKLES

1946-47-48 JEEP & TRUCK MODELS

SPRING SHACKLES: Springs are fitted with "U" type shackle (front end of front springs, rear end of rear springs on Jeep; front end of front springs only on Trucks). Opposite end of all springs fitted with bronze bushing and conventional pivot bolt (rear shackle of rear springs on Trucks has same type bushing and bolt).) CAUTION—When removing springs, remove pivot bolt first, then remove bushings from "U" shackle. Install springs as follows:

Pivot Bolt Installation—Install bolts with head and grease fitting toward outside, tighten bolt nut with a torque indicating wrench to 27-30 ft.lbs.

"U" Shackle Installation—Install grease seal retainer and grease seal on each leg of "U" shackle, insert shackle through inner face of frame hanger and spring eye (threaded bushings installed with hexagonal head toward outside), hold shackle tightly against frame and start upper bushing on shackle (see Bushing Caution below) taking care that bushing is not cross-threaded on shackle or in spring eye. Turn bushing on shackle approximately halfway, then start lower bushing similarly, turn both bushings in alternately and evenly until heads of bushings are snug against frame bracket and bushing in spring eye is 1/32" away from spring (measured from inside hexagonal head to spring). Lubricate bushing with high-pressure lubricant, check shackles for binding by flexing spring. If shackle is tight, remove and re-install bushing.

BUSHING CAUTION—Left-hand threaded "U" shackles are used at left front spring and right rear spring (Jeep), at left front spring only (Trucks) with the left-hand threaded end down (toward spring eye) and special left-hand threaded bushings must be used with these shackles. Shackles may be identified by small boss forged on lower shank and bushings identified by groove around head. Right-hand shackles and bushings are unmarked.

MODEL IDENTIFICATION

SERIAL NUMBER:—Stamped on left hand frame member near rear shackle on left front spring and on body sill at left front door opening. First No. 42000.

ENGINE NUMBER:—Stamped on right front upper corner of cylinder block. 1st no. 42,000 ('36).

TUNE-UP

COMPRESSION:—

	Ratio	Pressure
1936	5.7-1	87 lbs. at 216 R.P.M.

NOTE—Cylinder heads are cast-iron.

VACUUM READING:—Gauge should show steady reading of 18½" with engine idling at 7 M.P.H.

FIRING ORDER: 1-3-4-2. See diagram.

SPARK PLUGS: Champion Type C-7. 18 mm. Metric type.

Gaps—.025".

IGNITION: See Coil, Condenser, and Distributor.

Breaker Gap—.018". Limits .018-.020".

Cam Angle—47° (closed).

Automatic Advance—14° (distr.) maximum at 1700 distributor RPM.

Vacuum Advance (IGS-4007)—10° max. (distr.). with 15" vacuum.

IGNITION TIMING: See Ignition Timing.

Std. Setting—5° ATDC. with flywheel mark "IGN" at indicator in inspection hole in top left hand side of flywheel housing.

CARBURETION: See Carburetor & Carb. Equipment.

Idle Setting—Idle screw approximately 1-1¼ turn open and set for smooth firing. Idle speed 7 MPH.

High Speed Setting (1936 D-1E only)—High speed adjusting screw set for maximum speed and smooth running with throttle opening equivalent to 25-30 MPH. (block out idling system by turning idle screw all the way in while making high speed adjustm't).

Float Level—1 25/32" from face of gasket on cover to bottom of float with valve seated (invert to check).

Fuel Pump Pressure: 3½ lbs. maximum.

VALVES: See Valve Timing.

Tappet Clearance—.004" Int., .006" Exh., Hot.

STARTING: See Battery, Starter, and Generator.

IGNITION

Ignition Switch:—Mitchellock 17-A, Type 5159. Coil connection not armored.

Ignition Lock—Independent Lock Co. No. 4044-H, Mitchell No. 4759.

COIL: Auto-Lite Model IG-4090. Service Coil IG-4070. Mounted on right side of engine.

Ignition Current—2.5 amperes idling, 4 stopped.

CONDENSER: Auto-Lite Part No. IG-2671.

Capacity—.20-.25 microfarad.

DISTRIBUTOR: Auto-Lite Model IGS-4007. Single breaker, 4 lobe cam, full automatic advance type with auxiliary vacuum spark control.

Breaker Gap—Set at .018". Limits, .018-.020"

Breaker Arm Spring Tension—18-20 ounces.

Cam Angle—47° (closed), 43° (open).

Automatic Advance—IGS-4007

Distributor Degrees	Distributor R.P.M.	Engine Degrees	Engine R.P.M.
Start	300	0	600
4.4	420	8.8	840
7	770	14	1540
10	1165	20	2330
14	1700	28	3400

Vacuum Spark Control (IGS-4007)—Integral with distributor. Mounted on distributor housing and linked directly to breaker plate. Provides additional advance for all speeds above idling except when engine is accelerated or operated with wide open throttle when spark is retarded by return spring within unit.

Vacuum Advance—IGS-4007

Distr. Degrees	Eng. Degrees	Vacuum (" of HG)
Start	0°	3½"
2°	4°	5¾"
5°	10°	9¼"
8°	16°	12¾"
10°	20°	15"

IGNITION TIMING

IGNITION TIMING:—

	Flywheel Degs.	Piston Position
1936 Engines	5° ATDC	.0103" ATDC

Timing—Take off cover plate over inspection hole (top surface left hand side flywheel housing). Turn engine over with #1 piston on compression, stop when flywheel mark IGN lines up with pointed end of inspection plate screw, loosen advance arm clamp bolt, rotate distributor until contacts begin to open, tighten clamp bolt, see that rotor is opposite #1 segment in distributor cap, check spark plug connections (see diagram).

CARBURETOR

Tillotson Model D-1E, 1⅛" Single barrel, dawndraft type with manual choke control.

NOTE—This carburetor has High Speed as well as Low Speed adjustments.

For complete data, refer to Carburetor Index.

Adjust as follows:

High Speed Adjustment—With engine warm set throttle for 25-30 M.P.H. speed. Turn idle adjusting screw in until it is closed. Then turn High Speed Adjusting Screw (screw with cross bar) in until

CONTINUED ON NEXT PAGE

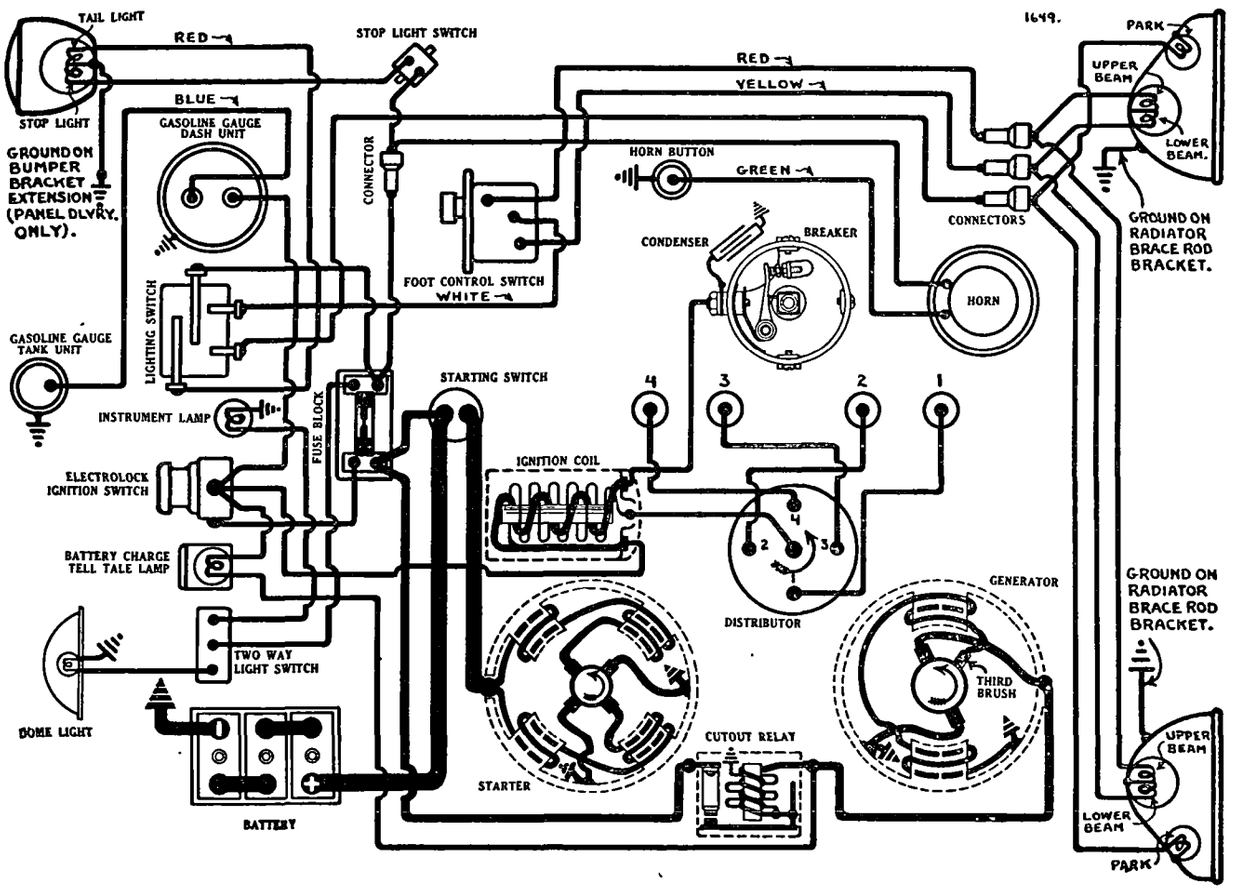

CONTINUED FR M PRECEDING PA E

engine misses, turn screw out until engine begins to roll, finally turn screw in (approximately ¾ turn) until engine fires smoothly. Then set Idle Adjustment as outlined below.

Idle Speed Adjustment—Open idle screw 1-1¼ turns and close throttle. Set throttle stopscrew for idling speed of 7 M.P.H., turn idle adjusting screw out or left until engine misses, then turn screw in until engine fires smoothly. Reset throttle stop screw if necessary for correct idling speed.

CARB. EQUIPMENT

Air Cleaner:—Monroe oil-wetted type Std.

Fuel Pump:—A.C. Type P-1521390.

For complete data, refer to Carburetion Equip. Index.

Gasoline Gauge:—Auto-Lite electric type. Dash Unit No. NG-7709D. Tank Unit No. NG-7261T.

For complete data, refer to Carburetion Equip. Index.

BATTERY

U.S.L. Type A-13-A. 6 volt, 13 plate, 78 Ampere Hour Capacity (20 hour rate).

Starting Capacity—90 amperes for 20 minutes.

Grounded Terminal—Negative (—) terminal.

Location—On "X" member under right front seat.

STARTER

Auto-Lite Model MZ-4033. Armature No. MZ-2089.

Starter Drive—Special outboard Bendix RC10HD.

Rotation—Counter-clockwise at commutator end.

Brush Spring Tension—42-53 ozs. (new brushes).

Cranking Engine—120 R.P.M., 200 amperes, 5 volts.

Performance Data

Torque	R.P.M.	Volts	Amperes
0 ft. lbs	4300	5.5	70
.65 " "	2500	5.5	100
2.55 " "	1325	5.0	200
4.95 " "	750	4.5	300
7.65 " "	220	4.0	400
7.8 " "	Lock	3.0	420
11.8 " "	Lock	4.0	560

Starting Switch:—Model SW-4001. Foot plunger type mounted on toeboard.

Mounting:—Flang mounted on right hand front face of flywheel housing. To remove, take out two flange cap screws and one cap screw in bracket on commutator end.

GENERATOR

Auto-Lite Model GAM-4504. Armature No. GAM-2055. Third brush control type.

Charging Rate Adjustment—Take off commutator cover band, shift third brush by hand by prying on brush mounting stud, counter-clockwise to increase, or clockwise to decrease charging rate. Third brush is held in position by friction.

Maximum Charging Rate—17 amperes (cold), 8.0 volts, 1950 R.P.M.

Performanse Data

Cold			Hot		
Amps.	Volts	R.P.M.	Amps	Volts	R.P.M.
0	6.4	700	0	6.4	720
4	6.8	880	4	6.9	920
8	7.2	1075	8	7.35	1160
12	7.6	1280	12	7.8	1460
16.5	8.0	1950	13.8	8.0	2000

Rotation—Counter-clockwise at commutator end.

Brush Spring Tension—18-22 ozs. (new brushes).

Field Current—3.89-4.31 amperes at 6.0 volts.

Motoring Current—4.08-5.32 amperes at 6.0 volts.

Mounting:—Pivot mounted at right front of engine. Fan belt drive. To remove, take out two pivot bolts, one clamp bolt.

Belt Adjustment—Loosen two pivot bolts and adjustment clamp bolt, pull generator away from engine until fan can just be turned with belt held stationary, tighten clamp bolt and pivot bolts.

CUTOUT RELAY

Auto-Lite Model CB-4008. Mounted on top of right hand frame side member near generator.

For complete data, refer to Electrical Equipment Index.

Cuts In—6.5-7.25 volts, 700-800 generator RPM.

Cuts out—.5-2.5 amperes discharge.

Contact Gap—.015-.045".

Air Gap—.010-.030" (contacts closed).

LIGHTING

LIGHTING:—**Headlamps**—Corcoran-Brown. Fixed focus type. Headlamps aimed straight ahead (upper beam with lenses in place). Upper and lower beams controlled by foot selector switch.

Switches

Lighting—Culver-Stearns.

Foot Selector—Clum Model 9579.

Bulb Specifications

Lamp	Candlepower	Mazda No.
Headlights	21-21	1110
Stop and Tail Light	21-2	1158
All others	3	63

MISC. ELECTRICAL

FUSES:—20 ampere capacity lighting fuse mounted on rear of dash under cowl.

HORNS:—Schwartze vibrator type disc horn.

ENGINE

ENGINE:—**Own Model 77.** Four cylinder, 'L' head type.

Bore—3⅛". **Stroke**—4⅜".

Piston Displacement—134.2 cubic inches.

Rated Horsepower—15.63.

Developed Horsepower—48 at 3200 R.P.M.

Compression Ratio—5.7-1 Std. Cast iron head.

Compression Pressure—87 lbs. at cranking speed of 216 RPM.

Vacuum Reading—Gauge should show steady reading of 18½" idling at 7 MPH.

NOTE—Cylinder bores are offset ⅛" from centerline of crankshaft toward valve side of engine.

Pistons:—Hard Grey Iron (cast-iron). Light weight type, relieved at pin bosses. Length, 3¾". **Weight**—23-25 ozs. (without rings or pin).

Removal—Pistons and rods removed at top.

Clearance—Top .007-.008". Bottom .0025-.003".

Fitting New Pistons—Use .0025" feeler stock to check clearance. Pull required to withdraw feeler from between piston and cylinder wall must be 4 lbs. plus or minus 2 lbs.

Piston Rings:—Three compression rings, one oil control ring per piston, all above pin. Oil ring groove drilled radially with oil drain holes.

Ring	Width	End Gap	Wall Thickness
Comp. (Top)	3/32"	.010-.012"	.132"
Comp. (2,3)	3/32"	.007-.012"	.132"
Oil Cont.	3/16"	.007-.015"	.140"

NOTE—Wall thickness of .140" on all 1936 rings.

Piston Pin:—Diameter .875". Length 2.713". Pin floats in piston and rod. Retained by locking rings. Pins furnished .001" and .003" oversize.

Clearance in Piston—.0002-.0004". Hand press fit.

Clearance in Rod Bushing—.0004-.0006". Thumb press fit.

Connecting Rod:—Length 9 3/16" (center-to-center).

Lower Bearing Diameter—1 15/16".

Bearing Type—Spun babbitt-lined type.

Clearance—.001-.0025". Sideplay .006-.008".

Adjustment—None (no shims). Replace rods.

Installing Rods—Connecting rod lower bearings are offset. Install rods with short side of bearing toward nearest main bearing (short side forward on #1 & #3, toward rear on #2 & 4). Oil hole in lower bearing upper half must be toward right (away from camshaft) on all rods.

Crankshaft:—Three main bearing type.

Journal Diameters—2 3/16" (all bearings).

Bearing Type—Interchangeable steel-backed, babbitt-lined type.

Clearance—.001-.0025".

Adjustment—None (no shims). Replace bearings. Do not file bearing caps.

End Thrust—Taken by #1 (front) main bearing. Endplay .004-.006". Adjustable by shims between crankshaft thrust washer and shaft.

Camshaft:—Four bearing. Non-adjustable chain drive.

Bearing Type—Removable bushing (front), machined in crankcase (all others).

Bearing Clearance—.002".

End Thrust—Taken by thrust plate behind camshaft sprocket and spring loaded plunger in forward end of camshaft bearing against thrust stud on chain case cover.

NOTE—When replacing chain case cover see that plunger and spring are in place in camshaft.

Timing Chain—Link Belt #33403-2. Width 1¼". Pitch ½". Length 23½" or 47 links.

Camshaft Setting—Sprockets are marked. With pistons #1 and 4 at TDC. marks should be adjacent and in line with a straightedge across the shaft centers. Remove camshaft sprocket to install chain.

Valves:—	Head Diameter	Stem Diameter	Length
Intake	1 17/32"	.372"	5 13/64" (5¾" over all)
Exhaust	1 15/32"	.371"	5 13/64" (5¾" over all)

	Seat Angle	Lift	Stem Clearance
Intake	45°	21/64"	.002-.004"
Exhaust	45°	21/64"	.003-.005"

ENGINE

CONTINUED FR M PRECEDIN PA E

NOTE—Hard alloy steel inserts are used for exhaust valve seats.

Valve Guides—Removable type installed with taper end up. Remove old guides from above and press in new guides until lower end extends ¾" below valve spring recess machined in block. Exhaust guide longer than intake guide.

Valve Springs—	Pressure	Length
Valve Closed	46½ lbs.	2¼"
Valve Open	85½ lbs.	1 15/16"

Valve Lifters—One piece mushroom type. Operate in guide holes reamed in block. Clearance in guides .0008". Serviced by reaming guide hole and installing lifters furnished .005" oversize.

VALVE TIMING

Tappet Clearance—.004" Int., .006" Exh. engine hot.

Valve Timing—See Camshaft Setting above.

Intake Valves—Open at TDC. Close 45° ALDC.

Exhaust Valves—Open 40° BLDC. Close 5° ATDC.

To Check Valve Timing—Set tappet clearance #1 intake and exhaust valves at .010". Intake valve opens with piston on top dead center when flywheel mark 'T.C.I.O.1-4' lines up with pointed end of inspection hole cover plate screw (top of flywheel housing on left hand side). Exhaust valve closes with piston 5° or .0103" down on intake stroke when flywheel mark 'E.C.' lines up with indicator. Reset tappet clearance at .004" (intake), .006" (exhaust) with engine hot.

LUBRICATION

Lubrication:—Pressure. Gear type oil pump located at left of crankcase.

NOTE—When installing oil pump, turn engine over until 'IGN' mark on flywheel lines up with pointed end of inspection cover screw on left top side of flywheel housing with #1 piston on compression stroke. Rotate distributor shaft so that rotor is in #1 firing position, then mesh oil pump gear so that tongue-and-slot connection to distributor shaft is engaged without changing position of distributor shaft.

Normal Oil Pressure—30 lbs. at 30 M.P.H.

Oil Pressure Relief Valve—Located under plug on oil pump cover. Operates at 30 lbs. Adjustable by adding or removing shims in plug above spring.

Crankcase Capacity—4 quarts (refill).

CLUTCH

CLUTCH:—**Rockford Cover Assembly, Borg & Beck Driven Plate.** Single plate, dry disc type.

See Clutch Section for complete data.

Clutch Facings—Molded type, 2 required, 5⅛" I.D., 7⅞" O.D., .125" thick.

Clutch Pedal Adjustment—Clutch pedal free movement should be ¾-1" (providing clearance of 1/16" between clutch release levers and clutch release bearing within housing). To adjust, loosen lock nut, turn turnbuckle on end of clutch lever link cable.

Removal:—Remove transmission (see Transmission Removal below), take out clutch mounting screws, lift out clutch cover assembly and driven member.

TRANSMISSION

TRANSMISSION:—**Own Make.** Sliding spur gear type (all speeds).

See Transmission Section for complete data.

Removal:—Remove the front seat and cowl trim pads, accelerator pedal can be pulled out from rubber connection at lower end), and floor boards. Alignment bolts (engine-to-bell housing) should enter from front, if not, they must be reversed. Turn fan so two top blades form 'V', cover with cloth to prevent injury to radiator core. Attach lifting block in #4 spark plug hole. Remove lower nuts on transmission mounting bolts, raise engine to allow removal of rubber mounting rings and mounting bracket-to-transmission capscrews, then continue to raise engine until bell housing clears brake cross shaft, remove engine-to-bell housing bolt nuts, lift transmission out from above.

NOTE—On 1936 cars, upper rebound rubber rings should be compressed to outside diameter of 1 11/16" with lower nuts drawn up tight. Adjust by upper nuts.

UNIVERSALS

UNIVERSAL JOINTS:—**'Detroit-Universal'. Series 200.** Ball and trunnion type. Two used.

See Universals Section for complete data.

REAR AXLE

REAR AXLE:—**Own**—Semi-floating, spiral bevel gear type, straddle mounted pinion, Hotchkiss drive.

See Rear Axle Section for complete data.

Ratio—4.3-1.

Backlash—.006-.012". Shim adjustment.

Removal:—Hoist rear of car, disconnect rear universal, brake cables, shock absorbers, remove spring U-bolts, disconnect rear spring shackles, pull assembly out from car.

Wheel Bearing Adjustment—Endplay controlled by shims between bearing retainer and backing plate. To adjust, remove wheel, hub assembly, oil seal and bearing retainer and add or remove shims.

SHOCK ABSORBERS

SHOCK ABSORBERS:—**Monroe**—Single acting, hydraulic.

See Shock Absorber Section for complete data.

FRONT SUSPENSION

Front Suspension:—Conventionel 'I' beam section axle with Reverse-Elliott ends and semi-elliptic springs.

Kingpin Inclination—7½° (crosswise).

Camber—2°. No adjustment.

Caster—1-2°. Adjust by inserting shims between spring and spring pad on axle.

Toe In—3/32". Adjust by loosening tie rod clamp bolts and rotating tie rod.

NOTE—Kingpin bushing diameter, .625". End thrust is taken by a taper roller bearing assembled between axle end and steering knuckle lower yoke. Tie rod ends are rubber bushed.

STEERING GEAR

Steering Gear: Lavine. Worm-and-Block type.

See Steering Gear Section for complete data.

BRAKES

BRAKES:—**Service**—Bendix Mechanical, Duo-Servo, Single anchor. Hand lever applies 4 service brakes.

See Brake Section for complete data.

Drum Diameter—9".

Lining—Moulded type. Width 1¾". Thickness 3/16". Length 19 3/ 16" per wheel.

Clearance—.010" at heel and toe f each shoe.

Hand Brake:—See Service Brakes.

MODEL IDENTIFICATION

SERIAL NUMBER: On frame front cross member at center and on right side of cowl under hood.

1937 Numbers—37-1001 Up.

1938 Numbers—65,001 Up.

1939 Numbers—91,751 Up (see Note below).

NOTE—Cars manufactured after beginning of fiscal year (9/1/38), No. 89,001 up, are 1939 cars.

ENGINE NUMBER: Stamped on right front upper corner of cylinder block.

1939 Numbers—91,751 Up.

TUNE-UP

COMPRESSION:—Ratio—5.7-1. Pressure—87 lbs. at cranking speed of 216 R.P.M.

VACUUM READING:—Steady 18½" idling at 7 M.P.H.

FIRING ORDER: 1-3-4-2. See diagram.

SPARK PLUGS: Champion Type C-7. 18 mm. Metric **Gaps—.025".**

IGNITION: See Coil, Condenser, and Distributor.

Breaker Gap—.020".

Cam Angle—(IGS) 47°, (IGW) 41° closed.

Automatic & Vacuum Advance—*See Distributor.*

IGNITION TIMING: See Ignition Timing.

Std. Setting—5° ATDC. with flywheel mark "IGN" at indicator in inspection hole in top left face of housing.

CARBURETION: See Carburetor & Carb. Equipment.

Idle Setting—Idle screw approximately 1 turn open (turn screw in from "missing" point until engine runs smoothly). Idle speed 7MPH.

High Speed (Main) Adjustment—Adjusting screw turned in approximately ⅜ turn from point where maximum speed secured with throttle opening of 25 MPH. (screw approx. 2⅜ turns open).

Float Level—Fuel level ¾" below top of bowl.

Fuel Pump Pressure: 3 lbs. maximum.

MANIFOLD HEAT CONTROL:—Manual type with three settings (depressions for valve lever setscrew engagement) as follows: 'Heatoff'—Summer operation (left hand), 'Midway'—Mild Winter operation (middle position), 'Heaton'—Extreme Winter operation (right hand). To adjust, loosen locknut, back off setscrew, move heat valve lever toward right (in direction of arrow) for more heat, opposite direction for less heat, tighten setscrew & locknut.

VALVES: See Valve Timing.

Tappet Clearance—.004" Int., .006" Exh., Hot.

STARTING: See Battery, Starter, Generator, and Regulator (when used).

IGNITION

Ignition Switch:—Douglas. Coil connection is not armored.

COIL: Auto-Lite Model IG-4090, IG-4090A (Truck). Service Coil IG-4070. On right side of engine.

Ignition Current—2.5 amperes idling, 4 stopped.

CONDENSER: Auto-Lite Part No. IG-2671G (IGS-4007 or 7A Distr.), IGB-1025 (IGW-4129A Distr.).

Capacity—.20-.25 microfarad.

DISTRIBUTOR: Auto-Lite Nos. IGS-4007, 7A or IGW-4129A. Single breaker, 4 lobe cam, full automatic advance type with auxiliary vacuum spark control.

NOTE—Vacuum unit integral type (IGS-4007, A), separate VC-4007 or VC-4010 (IGW-4129A).

Breaker Plate Identification (IGS-4007, A)—Maximum vacuum advance limited by slot and marked by number #10 stamped on plate.

Breaker Gap—.020".

Cam Angle (IGS-4007, 7A)—47° closed, 43° open.

Cam Angle (IGW-4129A)—41° closed, 49° open.

Breaker Arm Spring Tension—16-20 ozs.

Rotation—Counter-clockwise viewed from top.

Automatic Advance—IGS-4007, 7A

Distributor Degrees	R.P.M.	Engine Degrees	R.P.M.
Start	300	0	600
4.4	420	8.8	840
7	770	14	1540
10	1165	20	2330
14	1700	28	3400

Automatic Advance—IGW-4129A

Start	300	0	600
4	400	8	800
7	790	14	1580
11	1310	22	2620
14	1700	28	3400

Vacuum Spark Control (IGS-4007, A)—Mounted on distributor cup and linked to breaker plate. Provides additional advance at speeds above idling except when engine accelerated or operated with wide open throttle when spark retarded by return spring within unit.

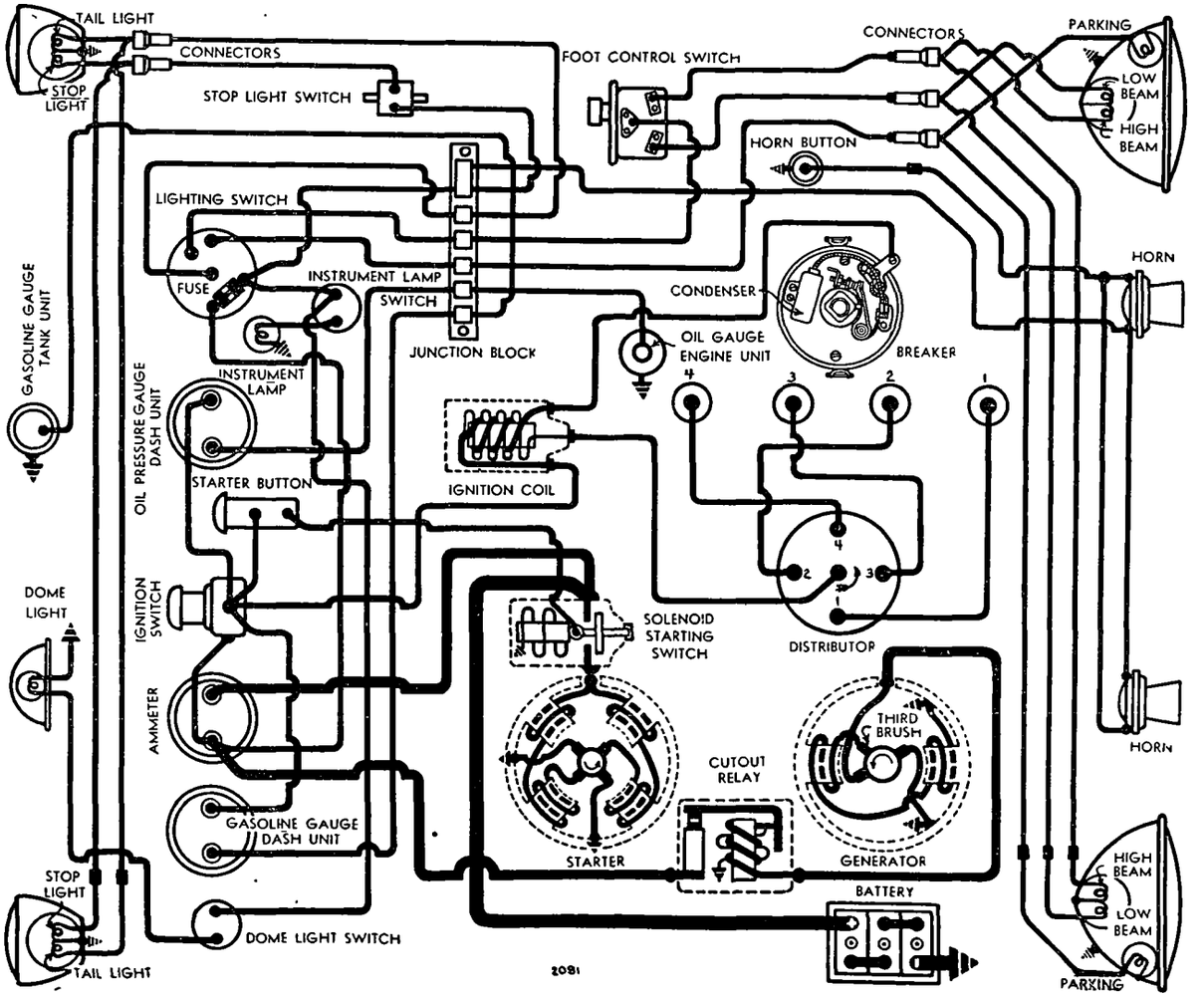

1937-38 WILLYS

Vacuum Advance—IGS-4007, 7A

Distr. Degrees	Eng. Degrees	Vacuum (" of HG)
Start	0°	3½"
5°	10°	9¼"
10°	20°	15"

Vacuum Spark Control (IGW-4129A). Type VC-4007 or VC-4010. Mounted on bracket under distributor cup and linked to advance arm. Operates in same manner as IGS-4007A type.

Vacuum Advance—VC-4007

Distr. Degrees	Eng. Degrees	Vacuum (" of HG)
Start	0°	3⅝"
4°	8°	10⅛"
7°	14°	15"

Vacuum Advance—VC-4010

Start	0°	3½"
5°	10°	9¼"
10°	20°	15"

Distributor Removal:—Mounted on right side of engine. To remove, disconnect vacuum line and take out hold-down screw in advance arm. To remove IGW-4129A without disturbing vacuum unit, loosen advance arm clamp bolt.

IGNITION TIMING

IGNITION TIMING: Flywheel Degrees Piston Position
All Engines .....5° ATDC.....0103" ATDC.

To Set Timing—Remove inspection hole cover plate in left top face of flywheel housing. With #1 piston on compression, turn engine over until piston reaches firing position when flywheel mark 'IGN' lines up with pointed end of inspection plate screw. Loosen advance arm clamp bolt, rotate distributor until contacts begin to open, tighten clamp bolt, see that rotor opposite #1 segment in distributor cap, check spark plug cable connections (see diagram).

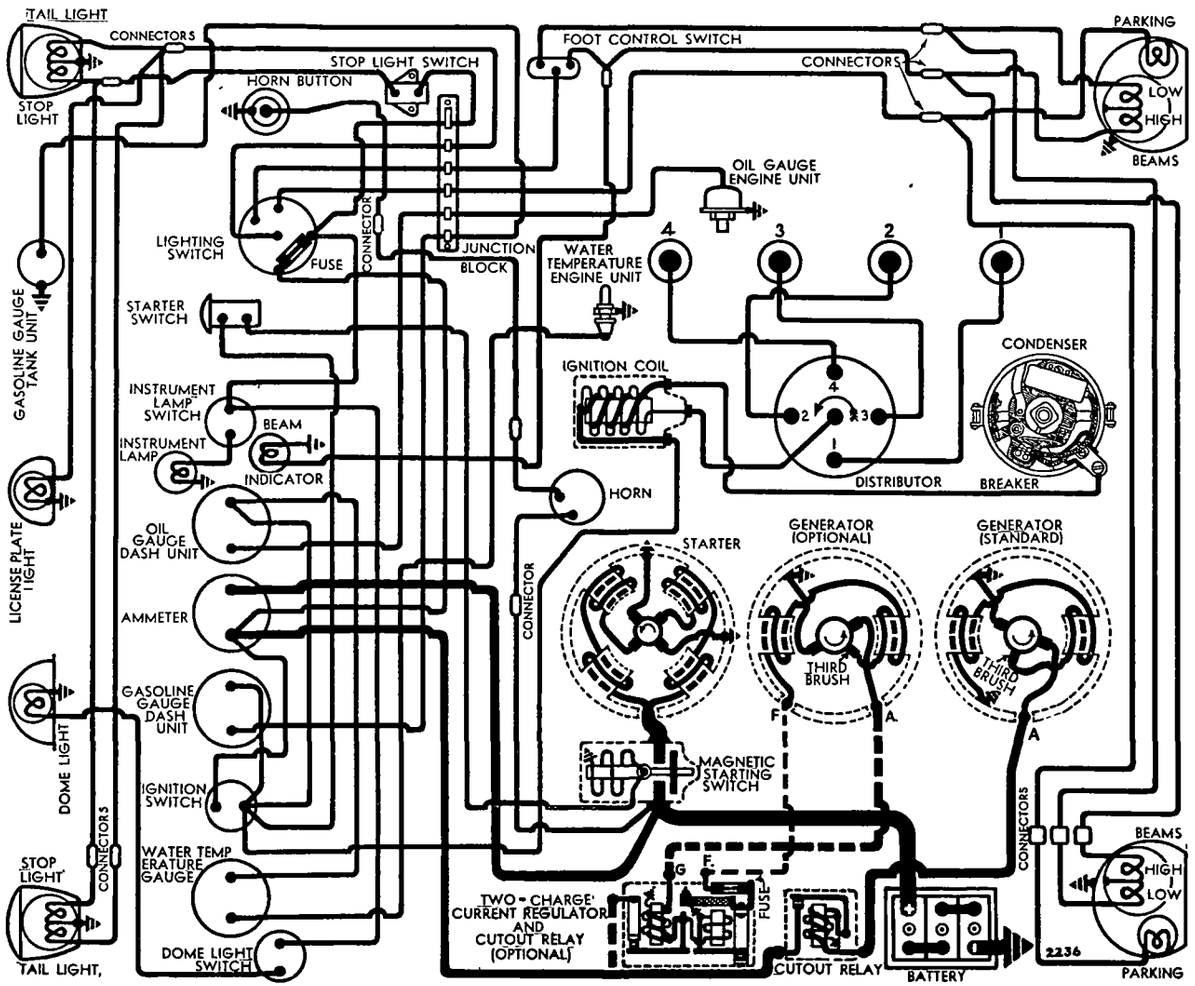

1939 WILLYS

CARBURETOR

CARBURETION:—**Carburetor**—Tillotson Model U-1A. 1⅛" single barrel, downdraft type.
For complete data, refer to Carburetor Index.

Preliminary Adjustment (If carburetor out of adjustment so that engine cannot be warmed up)—Turn main adjustment (high speed) needle valve clockwise or in until it is seated, then back off exactly 3 turns. Turn idle adjustment screw in or clockwise until seated, then back off ¾ turn. Start engine and run until warm. Then adjust as follows:

High Speed Adjustment—Set throttle so that engine runs at 25 MPH., turn main adjustment needle valve in or clockwise slowly until engine begins to slow down, then turn needle valve out until maximum speed is secured, finally turn needle valve in ⅜ turn (setting approx. 2⅜ turns open).

Idle Adjustment—Close throttle, set throttle stopscrew to idle engine slightly faster than normal, turn idle adjusting screw counter-clockwise or out until engine begins to miss, then turn screw in slowly until engine fires smoothly. Open throttle momentarily to clear manifold, close throttle, recheck idle adjustment. Final setting should be approximately 1 turn open from inner seated position. Then set throttle stopscrew for 7 MPH idle speed.

CARB. EQUIPMENT

Air Cleaner: AC #1528326 oil-wetted type Std., No. 1529167 Oil-bath type Opti.

Fuel Pump:—AC Type AF #1523306. Diaphragm type.
For complete data, refer to Carburetion Equip. Index.

Gasoline Gauge:—King-Seeley Electric. K-S No. 6270 (dash unit), No. 6280 (tank unit).
For complete data, refer to Carburetion Equip. Index.

BATTERY

BATTERY:—USL Type A-13. 6 volt, 13 plate, 78 ampere hour capacity (20 hour rate).

Starting Capacity—96 amperes for 20 minutes.

Zero Capacity—300 amperes for 1.9 minutes.

Grounded Terminal—Negative (—) grounded to right side of front cross-member. **Engine Ground**—Strap connector at left front engine mounting.

Dimensions—Length 8⅞". Width 7". Height 8⅝".

Location—Right hand side under engine hood.

STARTER

Auto-Lite Model MZ-4049. Armature No. MZ-2089.

Drive—Special Bendix No. RC10HD.

Rotation—Counter-clockwise at commutator end.

Brush Spring Tension—42-53 ozs. (new brushes).

Cranking Engine—216 RPM., 135-150 amperes, 5.35 volts.

Performance Data

Torque	R.P.M.	Volts	Amperes
0 ft. lbs.	4300	5.5	70
2.55 "	1325	5.0	200
4.95 "	750	4.5	300
7.65 "	220	4.0	400
7.8 "	Lock	3.0	420
11.8 "	Lock	4.0	560

CONTINUED ON NEXT PAGE

C NTINUED FROM PRECEDIN PAGE

Removal:—Starter flange mounted on right front face of flywheel housing. To remove, take out two flange capscrews and one capscrew in bracket at commutator end, remove starter and switch as an assembly.

Starting Switch:—Model SS-4001. Magnetic type. Mounted on starter and controlled by pushbutton switch on instrument panel.
For complete data, refer to Electrical Equipment Index.

Switch Specifications

Closes with terminal voltage of 4 volts or less and will remain closed until voltage drops to .75-2.0 volts. Current draw 3 amperes at 6 volts.

GENERATOR
STANDARD

Auto-Lite Models GAM-4504-A or 4504-B. Armature No. GAM-2055. Third brush control type.

►NOTE—If Generator Model GBM-4612-A is used on Model 48 cars, ***refer to Willys-Overland Model 39 (1939) article for complete data on this model.***

Charging Rate Adjustment—Remove commutator cover band, shift third brush by hand, counter-clockwise to increase charging rate, clockwise to decrease charging rate. Brush is held by friction.

Maximum Charging Rate—16 amperes (cold), 12.5 amperes (hot), 8.0 volts, 1950 R.P.M.

Performance Data—GAM-4504-A or B

Cold			Hot		
Amperes	Volts	R.P.M.	Amperes	Volts	R.P.M.
0	6.4	720	0	6.4	720
4	6.8	880	4	6.9	900
8	7.2	1050	8	7.4	1160
12	7.6	1280	12	7.95	1700
16.4	8.0	1950	12.5	8.0	2000

Rotation—Counter-clockwise at commutator end.

Brush Spring Tension—18-22 ozs. (new brushes).

Field Current—3.89-4.31 amperes at 6.0 volts.

Motoring Current—4.08-4.52 amperes at 6.0 volts.

Removal:—Pivot mounted at right front of engine. To remove, take out two pivot bolts, one clamp bolt.

Belt Adjustment:—Loosen pivot and clamp bolts, swing generator out from engine until fan can just be turned with belt held stationary, tighten bolts.

GENERATOR
SPECIAL EQUIPMENT

Auto-Lite Model GCS-4809A-5 (Std. on Trucks). Armature No. GCS-2049F. Third brush control type with non-vibrating type two-charge regulator.

Charging Rate Adjustment—Use test meters to check output, connect jumper between fuse cup on regulator and ground to eliminate regulator action. Shift third brush by hand counter-clockwise to increase, or clockwise to decrease output. Brush held in position by friction. **Do not exceed maximum rated output** (secured with third brush set 1⅔ commutator bars minimum, or this distance less 1 mica strip maximum, from nearest main brush.

Maximum Charging Rate—20 amperes (cold), 16.5 amperes (hot), 8.0 volts, 2000 RPM.

Performance Data—GCS-4809A-5

Cold			Hot		
Amperes	Volts	R.P.M.	Amperes	Volts	R.P.M.
0	6.4	500	0	6.4	550
4	6.75	620	4	6.8	700
8	7.1	750	8	7.2	915
12	7.4	925	12	7.6	1200
16	7.7	1200	16.5	8.0	2150
20	8.0	2000			

Rotation—Counter-clockwise at commutator end.

Brush Spring Tension—53 ozs. maximum.

Field Current—3.56-3.94 amperes at 6.0 volts.

Field Fuse—5 ampere (in knurled cup on regulator)

Motoring Current—4.99-5.51 amperes at 6.0 volts.

Removal & Belt Adjustment: Same as given above.

CUTOUT RELAY

Auto-Lite Model CB-4025 (with GAM-4504A,B Gen.). Mounted separately in engine compartment.
For complete data, refer to Electrical Equipment Index.

Cuts In—6.5-7.25 volts.

Cuts Out—.5-2.5 ampere discharge current.

Contact Gap—.015-.045".

Air Gap—.010-.030" with contacts closed.

REGULATOR

Auto-Lite Model TC-4317A (GCS-4809A-5 Gen.). Two-Charge Type. Mounted separately. Consists of Cutout Relay and Two-charge (Current) Regulator
For complete data, refer to Electrical Equipment Index.

Cutout Relay

Cuts In—6.5-7.25 volts.

Cuts Out—.5-2.5 ampere discharge current.

Contact Gap—.015-.045".

Air Gap—.010-.030" with contacts closed.

Regulator

Contact Opening Voltage—8.25-8.75 volts at 70°F.

Contact Closing Voltage—1.2-1.4 volts below opening voltage at same temperature.

Contact Gap—.005" minimum.

Air Gap—.045" with contacts closed.

LIGHTING

LIGHTING:—**Headlamps**—Corcoran-Brown Stabilite with pre-focused bulbs. Upper and lower beams controlled by Beam Selector Switch on toeboard.

Headlamp Adjustment—Aim upper beam straight ahead (hot spot center at lamp center height at 25').

Beam Indicator—At center of instrument panel. Lighted whenever upper beams in use.

Switches

Lighting—Douglas. **Beam Selector**—Douglas. **Instrument**—Douglas.

Bulb Specifications

Position	Candlepower	Mazda No.
Headlamps	32-21	2320
Parking	1.5	55
Instrument, Beam Indicator	1	51
Stop & Tail	21-3	1158
Dome, License Plate ('39)	3	63

MISC. ELECTRICAL

FUSES:—**Lighting**—20 ampere. On Lighting Switch.
Generator Field Fuse (GCS-4809A-5 Generator only)—5 ampere. In knurled cup on regulator.

HORNS:—Schwarze. Vibrator, disc type. One horn Std., Twin horns Opti.
Horn Current—10 amperes (each).

ENGINE

ENGINE SPECIFICATIONS:— 4 cylinder, 'L' head type.

Bore—3⅛". **Stroke**—4⅜".

Displacement—134.2 cubic inches.

Rated Horsepower—15.63 (A. M. A.).

Developed Horsepower—48 HP. at 3200 R.P.M.

Compression Ratio—5.7-1 cast-iron hd.

Compression Pressure—87 lbs. at 217 R.P.M.

Vacuum Reading—Steady 18½" idling at 7 M.P.H.
NOTE—Cylinder bore offset ⅛" from center line of crankshaft toward valve side of engine.

PISTONS:—Full skirt, semi-steel, light weight type.

Weight—21-23 ozs. (stripped). **Length**—3¾".

Removal—Pistons and rods removed from above.

Clearance—Top .016". Skirt .0025-.003".

Replacement Pistons:—Finished pistons furnished Std. and .003", .005", .010", .015", .020", .025", .030" oversize.

Fitting New Pistons:—Use .0025" feeler stock ⅜" wide inserted between piston and cylinder wall to check clearance. Feeler pull must be 4 lbs. ± 2 lbs.

PISTON RINGS:—Three compression, one oil control ring per piston, all above pin. Oil ring groove drilled for oil drainage.

Ring	Width	End Gap	Side Clearance
Compression	3/32"	.008-.013"	.0015"
Oil Control	3/16"	.008-.013"	.0015"

Wall Thickness—.130-.140" (Comp.), .098-.103" (oil).

Replacement Rings:—Furnished Std. and .003", .005", .010", .015", .020", .025", .030", .040" oversize.

PISTON PIN:—**Diameter**—15/16" (.9375"). **Length**—2.682". Pin floats in piston and rod. Retained by locking rings. Furnished .001", .003", .005" oversize.

Pin Fit in Piston—.0002-.0004" clearance or hand push fit with piston dry.

Pin Fit in Rod Bushing—.0004-.0006" clearance or thumb press fit.

CONNECTING ROD:—**Weight** 34 ozs. **Length** 9 3/16".

Crankpin Journal Diameter—1.9395" (1 15/16").

Lower Bearing—Spun-babbitt-lined type.

Clearance—.001-.0025". **Sideplay**—.005-.009".

Bearing Adjustment:—None (no shims). Replace or rebabbitt rods. Do not file rods or bearing caps. Rods furnished Standard and .010" undersize.

Installing Rods:—Lower bearings offset. Install rods with short side of bearing toward nearest main bearing (toward front of engine for #1 & 3, toward rear for #2 & 4) with oil squirt hole in rod toward right (away from camshaft) on all rods.

ENGINE

CONTINUED FROM PRECEDING PAGE

CRANKSHAFT:—Three main bearing type.

Journal Diameters—2.334" all bearings.

Bearing Type—Removable slip-in steel-backed, babbitt-lined type. Bearings furnished Standard and .010" undersize. **Clearance**—.001-.0025".

Bearing Adjustment:—None (no shims). Replace bearings. Do not file caps.

End Thrust:—Taken by #1 front bearing. Adjustable by adding or removing shims between crankshaft thrust washer and shaft. **Endplay**—.004-.006".

CAMSHAFT:—4 bearing. Non-adjustable chain drive.

Bearing Type—Removable bushing (front), machined in crankcase (all others).

Bearing Clearance—.002-.0035".

End Thrust:—Taken by thrust plate behind camshaft sprocket and spring-loaded plunger in forward end of camshaft bearing against thrust stud on cover.

Timing Chain:—Link-Belt #33403-2. Width 1¼". Pitch ½". Length 23½" or 47 links.

Camshaft Setting:—With #1 piston on top dead center, mesh chain so that timing marks on sprockets are adjacent and in line with a straightedge across the shaft centers.

VALVES:	Head Diam.	Stem. Diam.	Length
Intake	1 17/32"	.372"	5 13/64" (5¾" overall)
Exhaust	1 15/32"	.371"	5 13/64" (5¾" overall)

	Seat Angle	Lift	Stem Clearance
Intake	45°	21/64"	.002-.004"
Exhaust	45°	21/64"	.003-.005"

NOTE—Exhaust valve seat inserts are used.

Valve Guides:—Removable. Installed with taper end up. Remove old guides from above and press in new guides until lower end extends ¾" below valve spring seat recess in block. Exhaust guide longer

Valve Springs:—Free length 2 11/16".

	Spring Pressure	Length
Valve Closed	46½ lbs.	2¼"
Valve Open	85½ lbs.	1 15/16"

Valve Lifters:—Mushroom type. Guide holes reamed directly in block. Serviced by reaming guide hole and installing lifters furnished .005", .010", .020" oversize. **Clearance**—.0007-.001".

VALVE TIMING

Tappet Clearance:—.004" Int., .006" Exh., engine warm. NOTE—Whenever valves ground or new valves installed, car manufacturer recommends .010" setting for all valves for at least the first 100 miles.

Valve Timing:—See Camshaft Setting above.

Intake Valves—Open TDC. Close 45° ALDC.

Exhaust Valves—Open 40° BLDC. Close 5° ATDC.

To Check Timing—Set tappet clearanc #1 intake valve at .010" (cold). This valve should open with piston on top dead center when flywheel mark 'T.C. I.O.1-4' lines up with pointed end f inspection plate screw in inspection hole on left top face of flywheel housing. Reset tappet clearance at .004" warm.

LUBRICATION

LUBRICATION:—Pressure system. Gear type oil pump mounted on outer left side of crankcase.

►**Oil Pump Installation Note**—Turn engine over until 'IGN' mark on flywheel lines up with indicator (inspection hole in top left surface of flywheel housing) with #1 piston on compression stroke, turn distributor shaft so that rotor is at #1 segment in distributor cap, mesh oil pump gear so that distributor not disturbed when coupling engaged.

Normal Oil Pressure:—30 lbs. at 30 M.P.H.

Oil Pressure Regulator:—Located under plug on oil pump cover. Opens at 30 lbs. Adjustable by adding or removing shims within plug above spring.

Oil Pressure Gauge:—King-Seeley Electric. K-S No. 6275 (dash unit), No. 6425 (engine unit).
See Miscellaneous Section for complete data.

Crankcase Capacity:—4 quarts.

COOLING

COOLING SYSTEM:—Capacity—11 quarts.

Water Pump:—Adjustable packing type.
See Water Pump Section for complete data.

Thermostat:—None used. Accessory thermostat (for installation in cylinder head outlet) available.

Temperature Gauge (1938): King-Seeley Electric.

Dash Unit—K-S No. 6628 (Std., Economy & Com'l) No. 6632 (Deluxe Models).

Engine Unit—K-S No. 5700. NOTE—No. 5700 Engine Unit serviced by new type No. 7000 which must be used with new Dash Unit No. 7142 (exc. Deluxe), 7140 (Deluxe Models).
See Miscellaneous Section for complete data.

Temperature Gauge ('39 Pass.): King-Seeley Electric. K-S No. 7205 (Engine Unit). Engine unit controls Signal Light on instrument panel.

Commercial Cars—King-Seeley Electric. K-S No. 6632 (dash unit), No. 5700 (engine unit).

NOTE—Use No. 7000 Engine Unit to replace 5700 (requires new Dash Unit No. 7140).
See Miscellaneous Section for complete data.

CLUTCH

CLUTCH:—Rockford Cover Assembly (with Borg & Beck Driven Plate). Single plate, dry disc type.
See Clutch Section for complete data.

Facings—Moulded type, 2 required. Inside Diam. 5⅛". Outside Diam. 7⅞". Thickness ⅛".

Adjustment:—Pedal free movement must be ¾-1" (providing 1/16" clearance between release levers and release bearing). To adjust, loosen locknut, turn yoke on rear end of clutch control lever cable.

Removal:—Remove transmission (see Transmission Removal below) and flywheel bell housing, take out mounting screws in clutch cover evenly, lift out.

TRANSMISSION

Warner. T84-C ('37-38 Pass. Cars), T82-D (1938 Trucks), AS3-T84D ('39). Constant-mesh, synchro-mesh, helical gears (Second & High), sliding spur gears (Low & Reverse).
See Transmission Section for complete data.

Removal (1937 & 1938): Remove the front seat, gear shift lever (at retaining collar), disconnect accelerator pedal from rubber socket, remove toe boards, loosen radiator mounting bolts (at bottom) and brace rods (for fan clearance), disconnect propeller shaft at front, remove lower nuts from mounting bolts at rear of transmission, jack up rear of engine removing transmission rear mounting bracket, and raising until it clears frame cross member, remove housing to engine bolts (bolts should be driven in from front or engine side—holding motor plate in position). Lift out transmission from above.

NOTE—Upper snubbing rubber on mounting bolts should be compressed to ⅝" with lower nuts drawn up tight. Adjust to this thickness with upper nuts.

Removal (1939): Remove front seat and cover door trim; disconnect gear shift lever at retaining collar, and accelerator pedal from rubber socket, remove toeboards, loosen radiator mounting nuts and brace rod, disconnect propeller shaft at front universal, remove bell housing hand hole cover and unhook throw-out bearing retracting spring. Remove lower nuts on mounting bolts at rear of transmission, jack up rear of engine (see that fan blades do not damage radiator) to clear frame crossmember, remove transmission mounting bracket, remove bell housing bolts, pull transmission straight back.

UNIVERSALS

Detroit Universal. Ball and Trunnion types.

1937-Early '38. Series 200 (plain bushing).

Late '38-1939. Series 4100 (needle bearing).
See Universals Section for complete data.

REAR AXLE

Passenger Cars.....Own Make

1938-39 Trucks.....Spicer Model 21-1

Type. Semi-floating, spiral bevel gear types with Hotchkiss drive.
See Rear Axle Section for complete data.

Ratio—4.1 or 4.3-1 Pass. 4.7-1 Std. trucks. 5.1-1 Panel Delivery and Optional on other truck models.

Backlash—.004-.008" Shim adjustment.

Removal:—Hoist rear of car, disconnect drive shaft at rear universal, disconnect brake cables, shock absorbers, spring U bolts and rear shackles, pull assembly out.

Wheel Bearing Adjustment:—To adjust, remove wheel, hub assembly, oil seal, and bearing retainer. Remove shims between retainer and backing plate at both wheels equally. **Endplay**—.004-.006".

SHOCK ABSORBERS

Monroe. Direct acting, hydraulic.

1937—Front 152941, Rear 152942.

1938—Front 635702, Rear 635703.

1938 Pick-Up—Front 635702, Rear 636450.

1939—Front 637509, Rear 637508.

1939 Heavy Duty—Front 637645, Rear 637644.
See Shock Absorber Section for complete data.

CONTINUED ON NEXT PAGE

C NTINUED FR M PRECEDIN PAGE

FRONT SUSPENSION

Front Suspension—Conventional 'I' beam section axle with Reverse-Elliot ends and semi-elliptic springs.

Kingpin Inclination—7½° crosswise.

Camber—2° or 21/32". Not adjustable.

Caster—3°. Adjustable by using wedge shims between spring and spring pad on axle.

Toe In—1/16-1/8" (Pass. Cars), 3/32" (Trucks).

Steering Geometry (Toe Out n Turns)—Inner wheel turned 23°15', outer wheel 20°.

NOTE—Kingpin bushing diameter .750". End thrust taken by taper roller bearing assembled between axle end and steering knuckle lower yoke.

STEERING GEAR

Steering Gear: Gemmer Model 120. Worm-and-Sector type.

See Steering Gear Section for complete data.

BRAKES

BRAKES:—Service—Bendix Mechanical, duo-servo, single anchor. Hand lever applies all service brakes.

See Brake Section for complete data.

Drum—Steel—Diameter 9" (passenger cars and trucks). Alloy cast-iron—Diameter 11" (Panel).

Lining—Moulded type. Width 1¾". Thickness 3/16". Length per wheel 19 3/16" (passenger cars and trucks), 23 15/16" (panel).

Clearance—.010" at heel and toe of each shoe.

Hand Brake:—See Service Brakes above.

MODEL IDENTIFICATION

SERIAL NUMBER:—First number 39-1001. Stamped on plate on right side of cowl under engine hood and on center of front frame cross-member.

ENGINE NUMBER:—First number 39-1001. Stamped on right front corner of engine block.

TUNE-UP

COMPRESSION:—Ratio—6.35-1 (Std.), 6.81-1 (High Alt.) cast-iron heads; 7.0-1 (Optl. HC) aluminum head. Pressure—105 lbs. at 185 RPM. (Std. head).

VACUUM READING: Steady 21-23" idling at 7 MPH.

FIRING ORDER: 1-3-4-2. See diagram.

SPARK PLUGS: Champion Type J-8. 14 mm. Metric Gaps—.025".

IGNITION: See Coil, Condenser, and Distributor.
Breaker Gap—.020" Cam Angle 47° (IGS-4007B), 41° (IGW-4129) closed.
Automatic Advance—9.5° max. at 1500 RPM (distr.).
Vacuum Advance—7° distr. (IGS-4007B & IGW-4129 with VC4007 Unit), 10° distr. (IGW-4129 with VC-4010 Unit), with 15" vacuum.

IGNITION TIMING: See Ignition Timing.
Std. Setting—At TDC with flywheel mark "TC-IGN" at indicator in inspection hole in top left face of housing.

CARBURETION: See Carburetor & Carb. Equipment.
Idle Setting—Idle screw approximately ¾ turn open (turn in from "missing" point until engine fires smoothly). Idle speed 7 MPH.
Float Level—Fuel level 13/16" below top edge of float bowl.
Fuel Pump Pressure: 3 lbs. maximum.

MANIFOLD HEAT CONTROL:—Automatic thermostatic type. No adjustment required.

VALVES: See Valve Timing.
Tappet Clearance—.014" All Valves, Cold.

STARTING: See Battery, Starter, Generator, and Regulator (when used).

IGNITION

Ignition Switch:—Douglas. Coil connection not armored.

COIL: Auto-Lite Model IG-4090A. Service Coil No. IG-4070. Mounted on right side of engine.
Ignition Current—2.5 amperes idling, 4 stopped.

CONDENSER: Auto-Lite Part No. IG-2671K (IGS-4007B Distr.), IGB-1025 (IGW-4129 Distr.).
Capacity—.20-.25 microfarad.

DISTRIBUTOR: Auto-Lite Model IGS-4007B or IGW-4129. Single breaker, 4 lobe cam, full automatic advance type with auxiliary vacuum spark control. NOTE—Vacuum Unit integral type (IGS-4007B), separate Model VC-4007 or VC-4010 (IGW-4129).
Breaker Plate Identification (IGS-4007B)—Maximum vacuum advance limited by slot and marked by number (#7) stamped on plate.
Breaker Gap—.020".
Cam Angle (IGS-4007B)—47° closed, 43° open.
Cam Angle (IGW-4129)—41° closed, 49° open.
Breaker Arm Spring Tension—16-20 ounces.
Rotation—Counter-clockwise viewed from top.

Automatic Advance

Distributor Degrees	R.P.M.	Engine Degrees	R.P.M.
Start	300	0	600
2	550	4	1100
5	930	10	1860
7	1190	14	2380
9.5	1500	19	3000

Vacuum Spark Control (IGS-4007B)—Mounted on distributor cup and linked directly to breaker plate. Provides additional advance at all speeds above idling except when engine accelerated or operated with wide open throttle when spark retarded by return spring within unit.

Vacuum Advance

Distr. Degrees	Eng. Degrees	Vacuum (" of HG)
Start	0°	5"
2.5	5	9"
5	10	12.2"
7	14	15"

Vacuum Spark Control (IGW-4129)—Type VC-4007 or VC-4010. On bracket under distributor cup and linked to advance arm. Operates in same manner as IGS-4007B type above.

Vacuum Advance—VC-4007

Start	0°	3⅝"
2°	4°	6⅞"
4°	8°	10⅛"
6°	12°	13½"
7°	14°	15"

Vacuum Advance—VC-4010

Distr. Degrees	Eng. Degrees	Vacuum (" of HG)
Start	0°	3½"
2°	4°	5¾"
5°	10°	9¼"
8°	16°	12¾"
10°	20°	15"

Distributor Removal:—Mounted on right side of engine. To remove, disconnect vacuum line and take out hold-down screw in advance arm. To remove IGW-4129 without disturbing vacuum unit, loosen advance arm clamp bolt.

IGNITION TIMING

IGNITION TIMING:— Flywheel Degrees Pist. Position
All Engines .....0° At TDC.....0000" TDC

Timing—Remove inspection hole cover on top left hand side of flywheel housing. With #1 piston on compression, turn engine over until piston reaches top dead center, stop when flywheel mark "TC-IGN" lines up with pointed end of indicator screw. Loosen

CONTINUED N NEXT PAGE

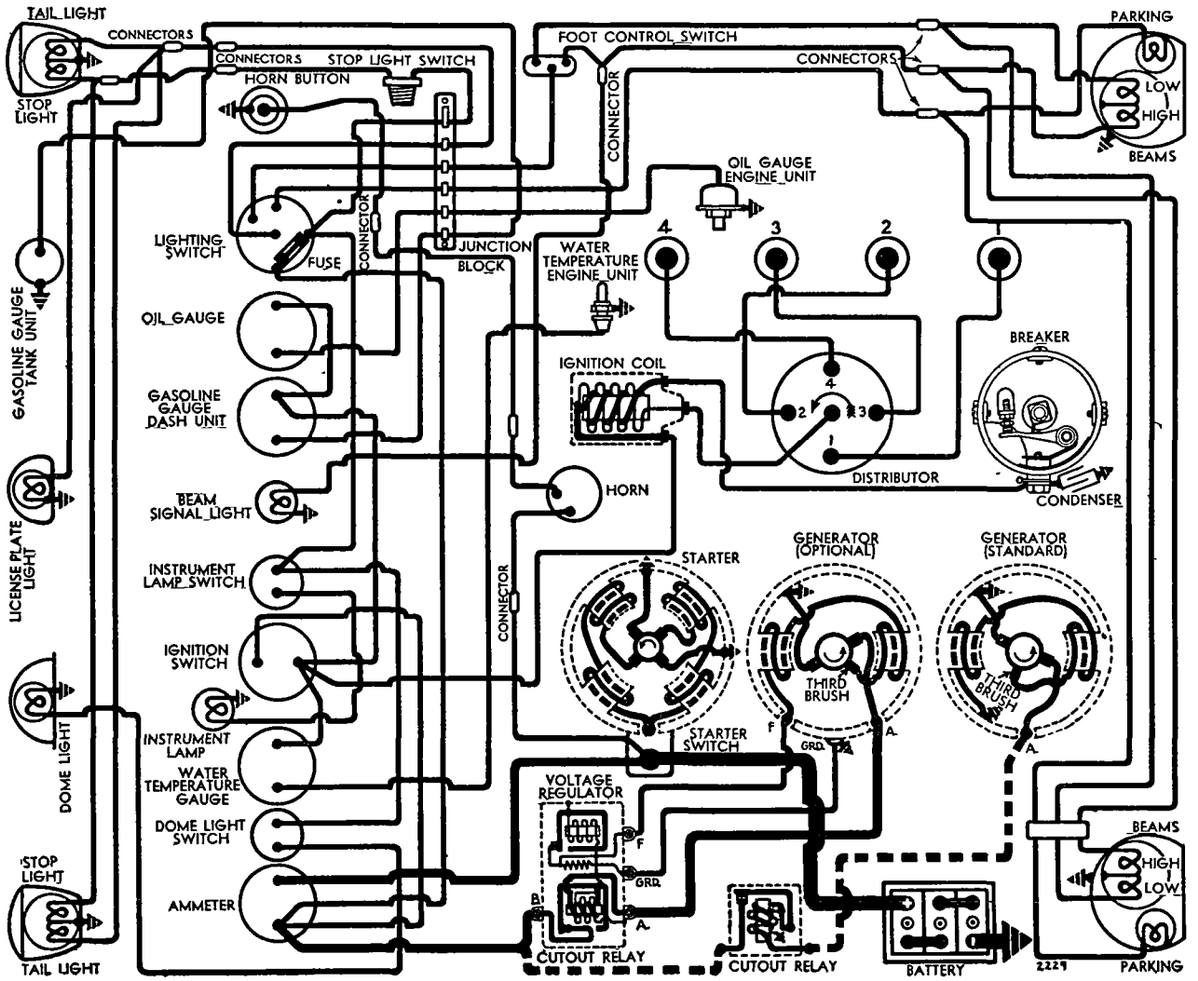

CONTINUED FROM PRECEDING PAGE

advance arm clamp bolt, rotate distributor until contacts begin to open, tighten clamp bolt and see that rotor is in line with #1 segment in distributor cap, check spark plug connections (see diagram). NOTE—Eliminate backlash in drive gears by pressing rotor clockwise when checking timing.

CARBURETOR

CARBURETION:—Carburetor—Tillotson Model U-1B, 1⅛" downdraft type with manual choke control. NOTE—No high speed adjustment on this model. *For complete data, refer to Carburetor Index.*

Idle Adjustment—If preliminary adjustment required (to warm up engine), turn idle adjusting screw in until just seated, then turn screw out ¾ turn. Warm up engine. With engine warm, adjust throttle lever stopscrew for slightly faster-than-normal idling speed, then turn idle adjusting screw out until engine begins to miss, finally turn screw in slowly until engine fires evenly. Set throttle lever stopscrew for 7 M.P.H. idling speed.

CARB. EQUIPMENT

Air Cleaner:—AC #1528326 oil-wetted type Std., #1529167 heavy-duty oil-bath type Optl.

Fuel Pump:—AC Model AF #1523306. Diaphragm type. *For complete data, refer to Carburetion Equip. Index.*

Gasoline Gauge:—King-Seeley Electric. K-S No. 7044 (dash unit), No. 6280 (tank unit). *For complete data, refer to Carburetion Equip. Index.*

BATTERY

BATTERY:—USL Type A-13. 6 volt, 13 plate, 78 Ampere Hour capacity (20 hour rate).

Starting Capacity—96 amperes for 20 minutes.

Zero Capacity—300 amperes for 1.9 minutes.

Grounded Terminal—Negative (—) terminal grounded to right end of front frame cross-member.

Engine Ground—Strap connector at front mounting.

Dimensions—Length 8⅞". Width 7". Height 8⅝".

Location—In engine compartment on right side.

STARTER

Auto-Lite Model MZ-4064. Armature No. MZ-2089.

Drive—Special Outboard Bendix No. RC10HD.

Cranking Engine—185 RPM. 150-175 amperes, 5 volts.

Rotation—Counter-clockwise at commutator end.

Brush Spring Tension—42-53 ozs. (new brushes).

Performance Data

Torque	R.P.M.	Volts	Amperes
0 ft. lbs.	4300	5.5	70
2.55 "	1325	5.0	200
4.95 "	750	4.5	300
7.65 "	220	4.0	400
7.8 "	Lock	3.0	420
11.8 "	Lock	4.0	560

Removal:—Flange mounted on right front face of flywheel housing. To remove, take out 2 flange mounting capscrews and capscrew in bracket on commutator end.

Starting Switch:—No. SW-3737S. On starter. Cable-operated by pull button on instrument panel. Pull required to close switch should be 2.3 lbs. minimum

GENERATOR

STANDARD

Auto-Lite Model GBM-4612-A (Standard). Armature GBM-2065. Third brush control type. Ventilated by fan on drive pulley.

Maximum Charging Rate—18 amperes (cold), 8 volts, 2150 R.P.M. (generator).

Charging Rate Adjustment—Remove commutator cover band, shift third brush by hand, counter-clockwise to increase, or clockwise to decrease output. Brush held in position by friction.

Performance Data

Cold Amperes	Volts	R.P.M.	Hot Amperes	Volts	R.P.M.
0	6.4	760	0	6.4	800
4	6.8	920	4	6.9	960
8	7.25	1050	8	7.35	1150
12	7.65	1240	12	7.8	1360
16	8.1	1450	16	8.3	1750
20	8.5	2150	18	8.5	2450

Rotation—Counter-clockwise at commutator end.

Brush Spring Tension—50-60 ozs. (new brushes).

Field Current—3.80-4.20 amperes at 6.0 volts.

Motoring Current—5.7-6.3 amperes at 6.0 volts.

Removal & Belt Adjustment: Same as given below.

GENERATOR

SPECIAL EQUIPMENT

Auto-Lite Model GCJ-4811-A (Deluxe). Armature No. GCJ-2006F. Third brush control in conjunction with external vibrating type voltage regulator. Ventilated by fan on driven pulley.

Maximum Charging Rate—25 amperes (cold), 22 amperes (hot), 8.0 volts, 2500 R.P.M. Actual charging rate controlled by regulator and dependent on battery condition. See Regulator data below.

Charging Rate Adjustment—See Regulator data below. Maximum output controlled by third brush and adjustable by removing commutator cover band and shifting third brush counter-clockwise to increase, clockwise to decrease output (brush held in position by friction). When checking output, ground 'F' terminal (to eliminate regulator action).

Performance Data

Cold Amperes	Volts	R.P.M.	Hot Amperes	Volts	R.P.M.
0	6.4	760	0	6.4	850
4	6.65	920	4	6.7	1020
8	6.9	1080	8	7.0	1240
12	7.2	1240	12	7.3	1400
16	7.45	1400	16	7.6	1650
20	7.7	1580	20	7.9	2100
25	8.0	2500	22	8.0	2700

Rotation—Counter-clockwise at commutator end.

Brush Spring Tension—53 ozs. max. (new brushes).

Field Current—1.9-2.1 amperes at 6.0 volts.

Motoring Current—4.0-4.4 amperes at 6.0 volts.

Removal:—Conventional pivot mounting at right front of engine. To remove, take out pivot and clamp bolts.

Belt Adjustment:—Loosen pivot and clamp bolts, swing generator out until fan can just be rotated with belt stationary.

CUTOUT RELAY

Auto-Lite Model CB-4025 (with GBM-4612-A Gen.). Mounted separately on the dash. *For complete data, refer to Electrical Equipment Index.*

Cuts In—6.5-7.25 volts.

Cuts Out—.5-2.5 amperes discharge current.

Contact Gap—.015-.045".

Air Gap—.010-.030" with contacts closed.

REGULATOR

Auto-Lite Model VRD-4004A (with GCJ-4811-A Gen.). Voltage Type. Consists of Cutout Relay and vibrating type Voltage Regulator in case mounted on the dash. *For complete data, refer to Electrical Equipment Index.*

Cutout Relay

Cuts In—6.4-7.0 volts cold.

Cuts Out—.5 ampere min., 3.0 amperes max. cold.

Contact Gap—.015" minimum.

Air Gap—.034-.038" (hinge end of core—contacts open).

Voltage Regulator

Setting—7.3-7.6 volts at 70°F.

To Check (Without Breaking Seals)—Connect ammeter in charging line at regulator 'BAT' terminal, voltmeter between 'BAT' terminal and ground. Operate generator at speed of 30 M.P.H. charging fully charged battery until voltage is constant. Voltmeter reading should be within limits of 7.3-7.6 volts (cold—70°F.), 7.1-7.4 volts (hot—140°F.). See article in Electrical Equipment Section for voltages at other temperatures.

To Adjust (With cover removed)—Change regulator armature spring tension by bending lower spring hanger slightly. Check setting as directed above. See Electrical Equipment Section for complete instructions.

Contact Gap—.010-.020" (armature against stop pin).

Air Gap—.0595-.0625" with contacts just opening.

LIGHTING

LIGHTING:—**Headlamps**—Corcoran - Brown Stabilite, Pre-focused type. Upper and lower beams controlled by beam selector switch on toeboard.

Headlamp Adjustment—Adjust by loosening clamp-screw at lower end of mounting band (on back of lense body below lamp, under fender) 3 full turns and turning lamp in socket by grasping adjusting pin at rear. Aim upper beam of each lamp straight ahead so that hot spot centered on vertical line directly ahead of lamp center with upper edge on horizontal line at lamp-center height at 25 feet.

Beam Indicator—In upper rim of speedometer dial. Lighted whenever upper or high beams in use.

Switches

Lighting—Douglas. **Beam Control**—Douglas.
Instrument—Douglas.

Bulb Specifications

Position	Candlepower	Mazda No.
Headlamps	32-21	2320
Parking	1.5	55
Instrument, Beam Indicator	1	51
Stop and Tail	21-3	1158
Dome, License Plate	3	63

MISC. ELECTRICAL

FUSES:—Lighting—20 amperes. On lighting switch.

HORN:—Schwarze. Vibrator type.

Horn Current—10 amperes.

ENGINE

ENGINE:—Own Model 39. 4 cylinder, 'L' head type.

Bore—3⅛". **Stroke**—4⅜". **Displ'mt**—134.2 cu. ins.

Rated Horsepower—15.63.

Developed Horsepower—61 at 3600 RPM. Std. Head.

Compression Ratio—6.35-1 (Std.), 6.81-1 (High Alt.), Cast-iron heads, 7.0-1 (Optl. HC.) aluminum head.

Compression Pressure—105 lbs. at 185 RPM. (Std. hd.).

Vacuum Reading—Steady 21-23" at 7 MPH. idling speed.

NOTE—Cylinders offset ⅛" from center-line of crankshaft toward camshaft side of engine.

PISTONS:—Aluminum alloy, 'T' slot, Cam Ground, Tin-plated type with narrow 'heat-dam' above top piston ring.

ENGINE

CONTINUED FROM PRECEDING PAGE

Weight—12 ozs. (stripped). **Length**—3¾".
Removal—Pistons and rods removed from above.
Clearance—.0025" skirt. See Fitting New Pistons.
Replacement Pistons:—Finished pistons furnished Std. and .002", .005", .010", .020", .030" oversize.
Fitting New Pistons:—Use .0025" feeler stock ¾" wide inserted between piston and cylinder wall on side opposite slot to check clearance. Pull required to withdraw feeler must be within 5 to 10 lbs.
Installing Pistons:—Slot toward left (valve) side.

PISTON RINGS:—Two compression, one oil control ring per piston, all above pin with narrow 'heat-dam' groove (no ring) above top ring. Oil ring groove drilled for oil drainage.

Ring	Width	End Gap	Side Clearance
Compr.	3/32"	.008-.013"	.002"
Oil Contr.	3/16"	.008-.013"	.002"

NOTE—Install taper-face compression ring with mark 'TOP' up.
Replacement Rings:—Furnished Std. and .005", .010", .020", .030" oversize.

PISTON PIN:—**Diameter** .8117-.8121". **Length** 2 25/32". Pin locked in connecting rod by clampscrew.
Pin Fit in Piston—.0001-.0009" clearance or light push fit with piston at 60° F.
Replacement Pins:—Furnished Std. and .005" oversize.

CONNECTING ROD:—**Weight** 34 ozs. **Length** 9 3/16".
Crankpin Journal Diameter—1.9395" (1 15/16").
Lower Bearing—Spun babbitt-lined type.
Clearance—.001-.0025". **Sideplay**—.005-.009".
Bearing Adjustment:—None (no shims). Replace or rebabbitt rods. Do not file rods or bearing caps. Rods furnished Standard and .010" undersize.
Installing Rods:—Lower bearings offset. Install rods with short side of bearing toward nearest main bearing (toward front of engine for #1 and 3, toward rear for #2 and 4) with oil squirt hole in rod toward right (away from camshaft) on all rods.

CRANKSHAFT:—Three main bearing type.
Journal Diameters—2.334" all bearings.
Bearing Type—Removable slip-in steel-backed, babbitt-lined type. Bearings furnished Standard and .010" undersize. **Clearance**—.001-.0025".
Bearing Adjustment:—None (no shims). Replace bearings. Do not file bearing caps.
End Thrust:—Taken by #1 front bearing. Adjustable by adding or removing shims between crankshaft thrust washer and shaft. **Endplay**—.004-.006".

CAMSHAFT:—4 bearing. Non-adjustable chain drive.
Bearing Type—Removable bushing (front), machined in crankcase (all others).
Bearing Clearance—.002-.0035".
End Thrust:—Taken by thrust plate behind camshaft sprocket and spring-loaded plunger in forward end of camshaft bearing against thrust stud on chain case cover. NOTE—Make certain that plunger and spring in place when replacing chain case cover.
Timing Chain:—Link Belt. Width 1¼". Pitch ½". Length 47 links or 23½".
Camshaft Setting:—With #1 piston on top dead center, mesh chain so that timing marks on sprockets are adjacent and in line with straightedge across shaft centers.

VALVES:—	Head Diam.	Stem Diam.	Length
Intake	1 17/32"	.373"	5¾" (overall)
Exhaust	1 15/32"	.3725"	5¾" (overall)

	Seat Angle	Lift	Stem Clearance
Intake	45°	23/64"	.0015-.00325"
Exhaust	45°	23/64"	.002-.00375"

NOTE—Separate valve seat inserts not used.
Valve Guides:—Removable. Installed with taper end up. Remove old guides from above and press in new guides until lower end extends ¾" below valve spring seat recess in block.
Valve Springs:—Free length 2.684". Cylindrical dampener installed within each spring at upper end.

	Spring Pressure	Length
Valve Closed	59.5 lbs.	2.165"
Valve Open	100 lbs.	1.814"

Valve Lifters:—Mushroom type. Guide holes reamed directly in block. Serviced by reaming guide hole and installing lifters furnished .005", .010", .020" oversize. **Clearance**—.0007-.001".

VALVE TIMING

Tappet Clearance:—.014" all valves, engine cold.
Valve Timing:—See Camshaft Setting above.
Intake Valves—Open 9° BTDC. Close 50° ALDC.
Exhaust Valves—Open 47° BLDC. Close 12° ATDC.
To Check Timing—Set tappet clearance #4 intake valve at .020" (cold). This valve should begin to open with piston 9° or .039" before top dead center when flywheel marked 'I.O.' lines up with pointed end of indicator screw in inspection hole in top left surface of flywheel housing (¼" variation of mark permissible). Reset tappet clearance at .014".

LUBRICATION

LUBRICATION:—Pressure type. Gear type oil pump mounted on outer left side of crankcase.
Oil Pump Installation Note—Turn engine over until 'TC.IGN' mark on flywheel lines up with indicator (inspection hole in top left surface of flywheel housing) with #1 piston on compression stroke, turn distributor shaft so that rotor is at #1 segment in distributor cap, mesh oil pump gear so that distributor not disturbed when coupling engaged.
Normal Oil Pressure:—30 lbs. at 30 M.P.H.
Oil Pressure Regulator:—Located under plug on oil pump cover. Opens at 30 lbs. Adjustable by adding or removing shims within plug above spring.
Oil Pressure Gauge:—King-Seeley Electric. K-S No. 7047 (dash unit), No. 6425 (engine unit).
See Miscellaneous Section for complete data.
Crankcase Capacity:—4 quarts.

COOLING

COOLING SYSTEM:—**Water Capacity**—11¾ qts.
Water Pump:—New packless type with ball-bearing shaft. *See Water Pump Section for complete data.*
Removal—Drain water, remove fan belt and fan blades, loosen radiator mounting nuts, take out mounting bolts and lift pump out.
Thermostat:—Harrison. In outlet elbow on head.
Setting—Starts to open 140-147°F. Fully open 170°F.
Temperature Gauge:—King-Seeley Electric. K-S No. 7041 (dash unit), No. 7000 (engine unit).
See Miscellaneous Section for complete data.

CLUTCH

CLUTCH:—**Long Model 8½CB-CS6 (with Borg & Beck or Long Driven Member). Single plate, dry disc type.**
See Clutch Section for complete data.
Facings—Molded type, 2 required. Inside Diam. 5⅛" (Borg & Beck), 6" (Long); Outside Diam. 7⅞" (Borg & Beck), 8½" (Long); Thickness .125" (all).
Adjustment:—Pedal free movement must be ¾-1" (providing 1/16" clearance between release levers and release bearing). To adjust, loosen locknut, turn clevis on rear end of clutch fork cable.
Removal:—Remove transmission (see Transmission Removal below) and flywheel bell housing, take out mounting screws on clutch cover rim, lift clutch assembly and driven plate out.

TRANSMISSION

TRANSMISSION:—**Warner Model AS3-T84D.** Constant-mesh, synchro-mesh, helical gears (Second & High), sliding spur gear (Low & Reverse).
See Transmission Section for complete data.
Removal:—Remove front seat cushion and cover door trim; disconnect gear shift lever at retaining collar, and accelerator pedal from rubber socket, remove toeboards, loosen radiator mounting nuts and brace rod, disconnect propeller shaft at front universal, remove bell housing hand hole cover and disconnect clutch throw-out bearing retracting spring. Remove lower nuts on mounting bolts at rear of transmission, jack up rear of engine (See that fan blades do not damage radiator) to clear frame cross-member, remove transmission mounting bracket, remove bell housing to transmission case bolts, pull transmission straight back and lift out.

UNIVERSALS

UNIVERSAL JOINTS:—**Detroit Series 4100.** Needle bearing, ball-and-trunnion type. 2 used.
See Universals Section for complete data.

REAR AXLE

REAR AXLE:—**Own Model 39.** Semi-floating, spiral bevel gear type with Hotchkiss drive.
See Rear Axle Section for complete data.
Ratio—4.3-1 Std., 4.55-1 Deluxe.
Backlash—.004-.008". Shim adjustment.
Removal:—Hoist rear of car, disconnect brake tube and cables, shock absorbers, spring U bolts and rear shackles, pull assembly out.
Wheel Bearing Adjustment:—To adjust, remove wheel, hub assembly, oil seal, and bearing retainer. Remove shims from between retainer and backing plate. **Endplay**—.004-.006" (total both shafts).

SHOCK ABSORBERS

SHOCK ABSORBERS:—**Monroe.** Model 637509—frt., 637508—rear (Std. control), 637645—frt., 637644—rear (H.D. control). Direct acting, hydraulic type.
See Shock Absorber Section for complete data.

FRONT SUSPENSION

Front Suspension:—Front axle Own Model 39. Conventional 'I' beam section with Reverse-Elliott ends.
Kingpin Inclination—7½° crosswise.
Camber—2°. Not adjustable.
Caster—3°. Adjustable by using wedge shims between spring and spring pad on axle.
Toe In—1/16-⅛". Adjustable by loosening tie rod clamp bolts and turning tie rod.
Steering Geometry (Toe out on Turns)—Inner wheel turned 23°15', outer wheel 20°.

STEERING GEAR

Steering Gear: Gemmer Model 120. Worm-and-Sector
See Steering Gear Section for complete data.

BRAKES

BRAKES:—**Service**—Wagner-Lockheed Hydraulic, Single Anchor type. Hand lever applies rear wheel service brakes.
See Brake Section for complete data.
Drums—Alloy cast-iron. Diameter 9".
Lining—Moulded type. Width 1¾", Thickness 3/16", Length per wheel 18".
Clearance—.010" toe, .006" heel for each shoe.
Hand Brake:—See Service Brakes above.

PANEL DELIVERY NOTE:—Before Engine No. 35129, Engine used was similar to Model 48 and specifications listed below as 'First' apply. After Engine No. 35129, Model 440 Engine was used (same as Pick-up Model) and specifications marked 'Later' apply.

MODEL IDENTIFICATION

SERIAL NUMBER:—First No. 440-17001 (all models). Stamped on plate on frame front cross-member (all models), and on right side of cowl under hood (Pass. cars & Pick-up), or on right front door riser (Panel Delivery).

ENGINE NUMBER:—First No. 17001. Stamped on right front upper corner of engine block.

TUNE-UP

COMPRESSION: Note—7.0-1 Head is Aluminum.

Model	Ratio	Pressure (Crk. Speed)
Pass. Cars Std.	6.48-1	111 lbs., 185 RPM.
Pass Cars High Alt.	6.81-1	111 lbs., 185 RPM.
Pass. Cars Optl. H.C.	7.0-1	111 lbs., 185 RPM.
Pick-up&Panel (later)	6.1-1	107 lbs., 185 RPM.
Panel Divry. (first)	5.7-1	87 lbs., 216 RPM.

VACUUM READING:—Steady 21-23" at 8 MPH. idling speed (exc. 18½" on First Panel Delivery).

FIRING ORDER: 1-3-4-2. See diagram.

SPARK PLUGS: Champion Type J-8 (exc. First Panel Delivery), Type C7 (First Panel Delivery only). 14 mm. Metric (J-8), 18 mm. Metric (C7). Gaps—.030".

IGNITION: See Coil, Condenser, and Distributor. Breaker Gap—.020" Cam Angle 41° (closed). Automatic Advance—9.5° max. at 1500 RPM (IGW-4129 Distr.), 14° max. at 1700 RPM (IGW-4129A Distr.). Distributor degrees and RPM. Vacuum Advance—10° distr. with 15" vacuum.

IGNITION TIMING: See Ignition Timing. Std. Setting—At TDC. (Pass. Cars—all Heads), 4° BTDC. (Pickup & Panel—6.1-1 Head), 5° ATDC. (First Panel—5.7-1 Head) with flywheel mark "TC-IGN" or "IGN" centered in inspection hole.

CARBURETION: See Carburetor & Carb. Equipment. Idle Setting (Carter Carb.)—Idle screw ½-2½ turns open. Idle speed 8 MPH. Idle Setting (Tillotson Carb.)—Idle screw approximately ¾ turn open (turn screw in from "missing" point until engine fires smoothly. Idle speed 8 MPH. Float Level (Carter Carb.)—⅜" from gasket seat on cover to top of float at free end (invert to check—do not compress spring in valve stem). Float Level (Tillotson Carb.)—Fuel level 13/16" below top edge of bowl. Accelerating Pump—Not adjustable (both models). Fuel Pump Pressure: 3 lbs. maximum.

MANIFOLD HEAT CONTROL:—Automatic thermostatic type (no adjustment) on Pass. Cars, Pick-up & Later Panel Delivery. NOTE—On first Panel Delivery, manual type with seasonal adjustment used. *See Willys 48 (1939) article for adjustment directions.*

VALVES: See Valve Timing. Tappet Clearance: .014" All Valves—Cold (except First Panel Delivery .004" Int., .006" Exh. Warm).

STARTING: See Battery, Starter, Generator, Regulator.

IGNITION

Ignition Switch:—Douglas. Coil connection not armored. Ignition Lock—Douglas No. 2975.

COIL: Auto-Lite Model IG-4090A. Service Coil No. IG-4070. Mounted on right side of engine. Ignition Current—2.5 amperes idling, 4 stopped.

CONDENSER: Auto-Lite Part No. IGB-1025. Capacity—.20-.25 microfarad.

DISTRIBUTOR: Auto-Lite IGW-4129 (Cars, Pick-up, & Later Panel Delivery), IGW-4129A (First Panel Delivery). Full automatic advance type with auxiliary Vacuum Spark Control (VC-4010).
Breaker Gap—.020".
Cam Angle or Dwell—41° closed, 49° open (distr.).
Breaker Arm Spring Tension—17-20 ounces.
Rotation—Counter-clockwise viewed from above.

Automatic Advance—IGW-4129

Distributor Degrees	R.P.M.	Engine Degrees	R.P.M.
Start	300	0	600
2	550	4	1100
5	930	10	1860
7	1190	14	2380
9.5	1500	19	3000

Automatic Advance—IGW-4129A

Start	300	0	600
4	400	8	800
7	790	14	1580
11	1310	22	2620
14	1700	28	3400

Vacuum Spark Control—Type VC-4010. Mounted on distributor bracket and linked to advance arm. Provides additional advance at all speeds above idling except when engine accelerated or operated with wide open throttle when spark retarded by return spring within unit.

Vacuum Advance

Distr. Degrees	Eng. Degrees	Vacuum (" of HG)
Start	0°	3½"
5°	10°	9¼"
10°	20°	15"

Distributor Removal:—Mounted on right side of engine. To remove (without disturbing vacuum unit), loosen advance arm clamp bolt.

Note—If oil pump removed, turn crankshaft so that #1 piston on compression and flywheel mark 'TC-IGN' at indicator on housing, turn distributor shaft so that rotor at #1 terminal in cap, install oil pump and mesh gears so that shaft engages distributor tongue-and-slot coupling without disturbing distributor shaft position. Check ignition timing.

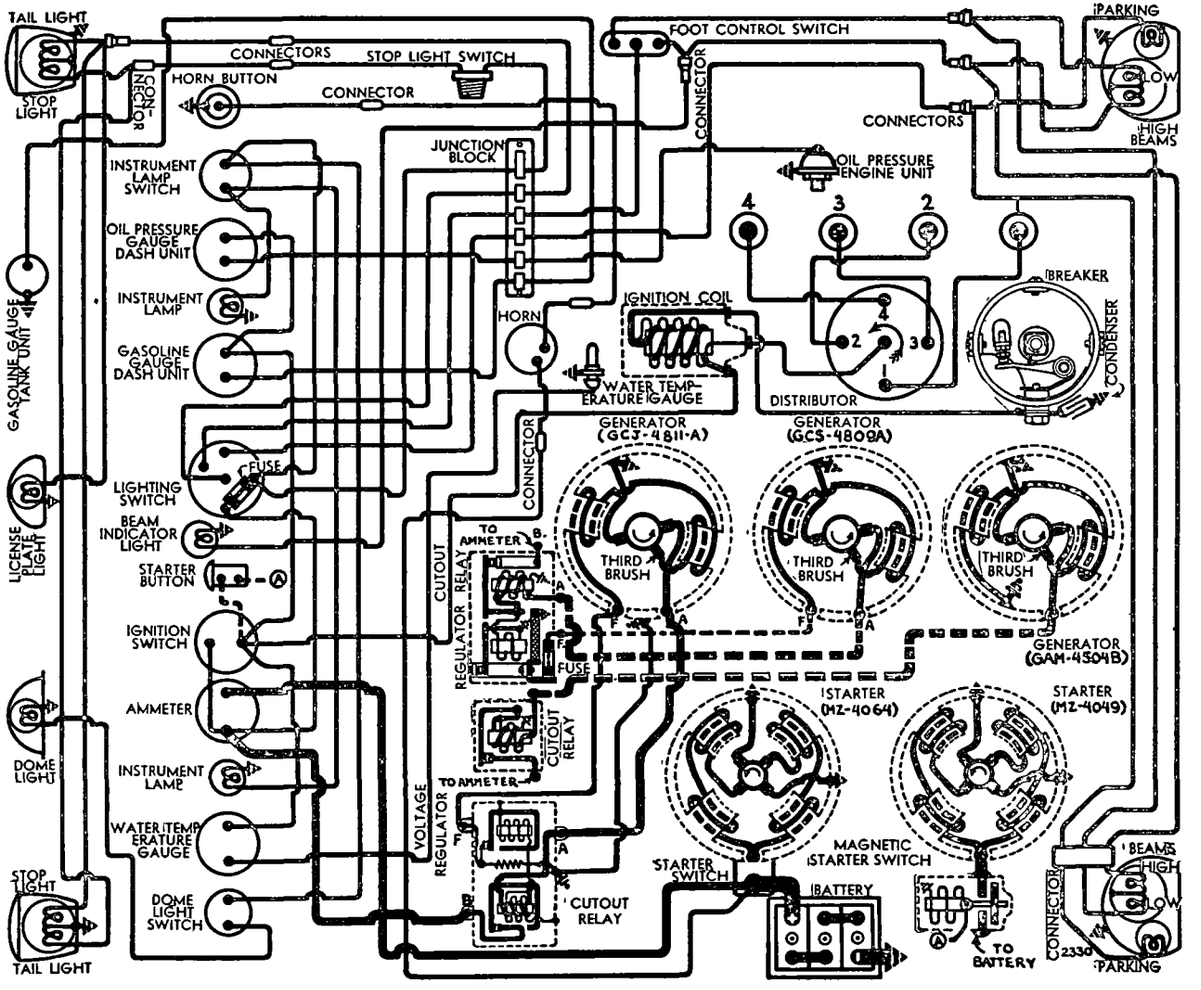

IGNITION TIMING

IGNITION TIMING:—

	Flywheel Deg.	Piston Pos.
Pass. Cars (All heads)	At TDC	.0000" TDC
Pick-up & Panel (later)	4° BTDC	.0066" BTDC
Panel Dlvry. (first 5.7-1)	5° ATDC	.0103" ATDC

Timing—With #1 piston on compression, turn engine over until piston reaches firing position (see above) with flywheel mark 'TC-IGN' or 'IGN' centered in inspection hole in front face of engine right rear support. Loosen advance arm clamp bolt, rotate distributor until contacts begin to open (eliminate backlash in drive gears by pressing on rotor in clockwise direction), tighten clamp bolt, see that rotor is at #1 terminal in distributor cap. NOTE—Ignition mark on First Panel Delivery on top of flywheel housing on left side.

CARBURETOR

CARBURETION:—Carburetor—Carter Model WO Type 450-S (Pass. Cars), Tillotson Model U-1B (Pick-up & Panel Delivery). 1⅛" downdraft type.
For complete data, refer to Carburetor Index.
Idle Adjustment—If preliminary adjustment required (to warm up engine), turn idle adjusting screw in until just seated, then turn screw out 1¼ turns (Carter), ¾ turn (Tillotson); start engine and run until warm. With engine warm, set throttle stopscrew for slightly faster than normal idling speed, turn idle adjusting screw out until engine begins to roll, then turn screw in until engine fires smoothly. Recheck adjustment and set throttle stopscrew for 8 MPH idle speed pulling in high gear. NOTE—Tillotson carburetor does not have High Speed adjustment.
Accelerating Pump (Carter & Tillotson)—No adjustment required.
Float Level (Carter)—⅜" from top of float (free end) to gasket seat on cover with needle valve seated (do not compress spring in valve stem).
Float Level (Tillotson)—Fuel level 13/16" below top edge (gasket seat) of bowl with engine running.

CARB. EQUIPMENT

Air Cleaner:—AC #1529478 oil-wetted type Std. Heavy duty oil-bath type optional.
Fuel Pump:—AC Type AF #1523306. Diaphragm type.
For complete data, refer to Carburetion Equip. Index.
Gasoline Gauge:—King-Seeley Electric. K-S Nos. 7855—first, 8112—later (Dash Unit), No. 7695 (Tank Unit). **Note**—Dials on first dash units have ivory lines, later units have ivory dots.
For complete data, refer to Carburetion Equip. Index.

BATTERY

BATTERY:—National Type HT-13. 6 volt, 13 plate, 77 ampere hour capacity (20 hour rate).
NOTE—When USL battery used, specifications same as for 1939 models (Type A-13).
Starting Capacity—90 amperes for 20 minutes.
Zero Capacity—300 amperes for 1.7 minutes.
Grounded Terminal—Negative (—) grounded to front frame cross-member. **Engine Ground**—Strap connector at front engine mounting on left side.
Location—On right side in engine compartment.
Dimensions—Length 9". Width 7". Hgt. 8 9/16".
(Pick-up Battery) Auto-Lite Type AB-13. 6 volt, 13 plate, 80 AH. Capacity (20 hour rate).
Starting Capacity—96 amperes for 20 minutes.
Zero Capacity—300 amperes for 2.0 minutes.
Dimensions—Length 9". Width 7". Hgt. 8⅝".
Grounded Terminal & Location—See above.

STARTER

Auto-Lite Model MZ-4064 & MZ-4082 (Pass. Cars & Pick-up), MZ-4049 & MZ-4083 (Panel Delivery), Armature No. MZ-2089.
Drive—Special Outboard Bendix #RC10HD.
Rotation—Counter-clockwise at commutator end.
Brush Spring Tension—42-53 ozs. (new brushes).
Cranking Engine—185 RPM, 150-175 amperes, 5 volts (Pass. Car & Pick-up), 216 RPM. 135-150 amperes, 5.35 volts (Panel Delivery).

Performance Data

Torque	R.P.M.	Volts	Amperes
0 ft. lbs.	4300	5.5	70
2.65 " "	1325	5.0	200
4.95 " "	750	4.5	300
7.65 " "	220	4.0	400
7.8 " "	Lock	3.0	420
11.8 " "	Lock	4.0	560

Removal:—Starter flange mounted on right front face of rear motor support. To remove, take out two flange capscrews and one capscrew in bracket at commutator end, remove starter and switch.
Starting Switch (MZ-4064, 4082):—SW-3737S. Mounted on starter, cable operated by button on instrument panel. Pull required to close switch should be 2.3 lbs. min. (at right angles to hole at end of lever). **(MZ-4049, 4083)**—SS-4001. Magnetic switch mounted on starter, controlled by pushbutton on instrument panel. ***See article in Electrical Equipm't Section.***

GENERATOR

PASSENGER CARS

Auto-Lite Model GCJ-4811-A. (Passenger Cars). Armature GCJ-2006-F. Third brush control in conjunction with vibrating type Voltage Regulator.
Maximum Charging Rate—25 amperes (cold), 8.0 volts, 2500 RPM. Actual charging rate controlled by voltage regulator and dependent on battery condition. See Regulator data below.
Charging Rate Adjustment—See Regulator data. Third brush setting 2 commutator bars minus 2 mica strips minimum, 2 bars minus 1 mica strip maximum from insulated (nearest) main brush. Setting adjustable by removing commutator cover band and moving third brush by hand counter-clockwise to increase, clockwise to decrease output.

Cold Performance Data			Hot Performance Data		
Amperes	Volts	R.P.M.	Amperes	Volts	R.P.M.
0	6.4	760	0	6.4	850
4	6.65	920	4	6.7	1020
8	6.9	1080	8	7.0	1240
12	7.2	1240	12	7.3	1400
16	7.45	1400	16	7.6	1650
20	7.7	1580	20	7.9	2100
25	8.0	2500	22	8.0	2700

Rotation—Counter-clockwise at commutator end.
Brush Spring Tension—53 ozs. max. (new brushes).
Field Current—1.9-2.1 amperes at 6.0 volts.
Motoring Current—4.0-4.4 amperes at 6.0 volts.
Removal:—Conventional pivot mounting at right front of engine. To remove, take out mtg. bolts.
Belt Adjustment:—Loosen pivot and clamp bolts, swing generator out until fan can be turned with belt stationary.

GENERATOR

PICK UP & PANEL DELIVERY

Auto-Lite GAM-4504-B. Armature GAM-2055. Third brush control.
Maximum Charging Rate—16.5 amperes (cold), 8.0 volts, 1950 RPM.
Charging Rate Adjustment—Remove commutator cover band, shift third brush by hand counter-clockwise to increase, clockwise to decrease output.

Cold Performance Data			Hot Performance Data		
Amperes	Volts	R.P.M.	Amperes	Volts	R.P.M.
0	6.4	720	0	6.4	720
4	6.8	880	4	6.9	900
8	7.2	1050	8	7.4	1160
12	7.6	1280	12	7.95	1700
16.5	8.0	1950	12.5	8.0	2000

Rotation—Counter-clockwise at commutator end.
Brush Spring Tension—18-22 ozs. (all brushes).
Field Current—3.89-4.31 amperes at 6.0 volts.
Motoring Current—4.08-4.52 amperes at 6.0 volts.
Removal & Belt Adjustment:—Same as above.

GENERATOR

SPECIAL EQUIPMENT

Auto-Lite GCS-4809-A. Armature GCS-2049F. Third third brush control type in conjunction with non-vibrating type two-charge Regulator. ***See Willys 48 (1939) article (preceding) for complete data***

REGULATOR

PASSENGER CARS

Auto-Lite Model VRR-4004-A (with GCJ-4811A Gen.) Voltage Regulator. Vibrating type.
For complete data, refer to Electrical Equipment Index.

Cutout Relay

Cuts In—6.4-6.6 volts.
Cuts Out—4.1-4.8 volts (approx. 4-6 amps. disch.).
Contact Gap—.015" minimum.
Air Gap—.031-.034" (hinge end of core with contacts open).

Voltage Regulator

Setting—7.3-7.6 volts at 70°F.
To Check (without breaking seal)—Connect ammeter in charging line at regulator 'BAT' terminal, voltmeter between this terminal and ground. Operate generator at speed of 30 MPH. charging battery until voltage is constant. Voltmeter reading should be within limits of 7.3-7.6 volts (Cold—70°), 7.19-7.49 volts (Hot 110°F). See Electrical Equip. Sect.
To Adjust (with cover removed)—Change regulator armature spring tension by bending lower spring hanger slightly. See Electrical Equipment Section.
Contact Gap—.012" min. (armature against stop).
Air Gap—.048-.052" with contacts just opening.

CUTOUT RELAY

PICK UP & PANEL DELIVERY

Auto-Lite Model CB-4025. (With GAM-4504B Gen.).
For complete data, refer to Electrical Equipment Index.
Cuts In—6.5-7.25 volts. **Cuts Out**— .5-2.5 ampere discharge current (after charging at 15 amperes). **Contact Gap** .015-.045". **Air Gap** .010-.030" (closed).

REGULATOR

SPECIAL EQUIPMENT

Auto-Lite Model TC-4317A (With GCS-4809A Gen.). Two-charge non-vibrating current regulator (in case with Cutout Relay). Same as used on 1939 Commercial Models. ***See Willys Model 48 (1939) article (preceding) for data on this model.***

LIGHTING

LIGHTING:—Headlamps—Corcoran-Brown pre-focused double filament type with upper and lower beams controlled by Beam Selector Foot Switch. **Headlamp Adjustment**—Aim upper beam straight ahead (hot spot center at lamp center height at 25'). **Beam Indicator**—Red jewel in upper edge of speedometer dial. Lighted when upper beams in use.

CONTINUED N NEXT PAGE

CONTINUED FROM PRECEDING PAGE

Switches

Lighting—Douglas. **Beam Selector**—Douglas.
Instrument—Douglas.
Stop Light—A-L. #100640A (hydraulic type).

Bulb Specifications

Position	Candlepower	Mazda No.
Headlamps	32-21	2320
Parking	1.5	55
Instrument, Beam Ind.	1	51
Stop & Tail	21-3	1158
Dome, License Plate	3	63

MISC. ELECTRICAL

FUSES:—Lighting—20 ampere. On lighting switch.
Generator Field—5 ampere (in knurled cup on regulator). Used on GCS-4809A generator only.
HORNS:—Schwarze. Vibrating, disc type.
Horn Current—10 amperes.

ENGINE

ALL MODELS (440P AFTER ENG. No. 35129)

PANEL DELIVERY NOTE:—Engine data given below applies to later cars beginning with Engine No. 35129 which have the Model 440 Engine (same as Pick-up model). First Panel Delivery cars (before Engine No. 35129) have the Model 440P Engine for which specifications listed separately (following).

ENGINE:—Own Model 440. 4 cylinder, 'L' head type.
Bore—3.125" (3⅛"). **Stroke**—4.375 (4⅜").
Displacement—134.2 cu. ins. **Rated HP**—15.63
Developed Horsepower—61 (Pass. Car), 58 (Pick-up & Panel Delivery) at 3600 RPM. with Std. Heads.
Compression Ratio & Pressure—For each model as follows (Heads Cast Iron exc. 7.0-1 Aluminum).

Model	Ratio	Pressure (Crk. Speed)
Pass. Car Std.	6.48-1	111 lbs., 185 RPM.
Pass. Car High Alt.	6.81-1	111 lbs., 185 RPM.
Pass. Car Optl. H.C.	7.0-1	111 lbs., 185 RPM.
Pick-up & Panel Dlvry	6.1-1	107 lbs., 185 RPM.

Vacuum Reading—Steady 21-23" idling at 8 MPH.
NOTE—Cylinders offset ⅛" from center-line of crankshaft toward camshaft side of engine.

PISTONS:—Lynite Lo-Ex aluminum alloy, 'T' slot, Cam ground, Tin-plated type with narrow 'heat-dam' groove above top piston ring.
Weight—12 ozs. (stripped). **Length**—3¾".
Removal—Pistons and rods removed from above.
Clearance—.014-.019" top, .003" skirt.
Original Bore & Piston Sizes:—Engines and pistons graded in four .0005" steps as shown in table below and marked as follows: **Piston**—Letter stamped on head, **Cylinder Bore**—Letter stamped on top of block between valve ports and bore at center.

Grade Letter	Cylinder Bore Size	Piston Size
A	3.1255-3.1250"	3.1235-3.1230"
B	3.1260-3.1255"	3.1240-3.1235"
C	3.1265-3.1260"	3.1245-3.1240"
D	3.1270-3.1265"	3.1250-3.1245"

Replacement Pistons:—Finished pistons furnished Std. and .002", .005", .010" Oversize.
Fitting New Pistons:—Use .0025" feeler stock ¾" wide inserted between piston and cylinder wall on side opposite slot to check clearance. Pull required to withdraw feeler must be within 5-10 lbs.
Installing Pistons:—Slot toward left (valve) side.

PISTON RINGS:—Two compression, one oil control ring per piston, all above pin (narrow heat-dam groove above top ring). Oil ring groove drilled for drainage.

Ring	Width	End Gap	Side Clearance
Compr.	3/32"	.008-.013"	.0015-.002"
Oil Cont.	3/16"	.008-.013"	.0015-.002"

NOTE—Install taper-faced compression ring with mark 'TOP' up toward head of piston.
Replacement Rings:—Furnished Standard and .005", .010", .020", .030" oversize.

PISTON PIN:—Diameter .8117-.8127". **Length** 2 25/32".
Pin is locked in connecting rod by clampscrew.
Pin Fit in Piston—.0001-.0009" clearance or light push fit at 60° F.
Replacement Pins:—Furnished Standard and .001", .002", .003" oversize.

CONNECTING ROD:—Weight 34 ozs. **Length** 9 3/16".
Crankpin Journal Diameter—1.9395" (1 15/16").
Lower Bearing—Spun babbitt-lined type.
Clearance—.0008-.0023". **Sideplay**—.005-.009".
Bearing Adjustment:—None (no shims). Replace or rebabbitt rods. Do not file rods or bearing caps. Rods furnished Standard and .010" undersize.
Installing Rods:—Lower bearings offset. Install rods with short side of bearing toward nearest main bearing (toward front of engine for #1 and #3, toward rear for #2 and #4) with oil squirt hole in rod toward right (away from camshaft) on all rods.

CRANKSHAFT:—Three bearing, counterweighted type.
Journal Diameters—2.334" all bearings.
Bearing Type—Removable slip-in steel-backed, babbitt-lined type. Bearings furnished Standard and .010" undersize.
Clearance—.001-.0025".
Bearing Adjustment:—None (no shims). Replace bearings. Do not file bearing caps.
End Thrust:—Taken by #1 front bearing. Adjustable by adding or removing shims between crankshaft thrust washer and shaft. **Endplay**—.004-.006".

CAMSHAFT:—4 bearing. Non-adjustable chain drive.
Bearing Type—Removable bushing (front), machined in crankcase (all others).
Bearing Clearance—.002-.0035".
End Thrust:—Taken by thrust plate behind camshaft sprocket and spring-loaded plunger in forward end of camshaft bearing against thrust stud on chain case cover. NOTE—Make certain that plunger and spring in place when replacing chain case cover.
Timing Chain:—Link-Belt #82, 1¼" (Before Engine No. 34266); #S-40936, 1" (After Engine No. 34266). Pitch ½". Length 47 links or 23½".
Camshaft Setting:—With #1 piston on top dead center, mesh chain so that timing marks on sprockets are adjacent and in line with straightedge across shaft centers.

VALVES:—	Head Diam.	Stem Diam.	Length
Intake	1 17/32"	.373"	5¾" (overall)
Exhaust	1 15/32"	.3725"	5¾" (overall)

	Seat Angle	Lift	Stem Clearance
Intake	45°	23/64"	.0015-.00325"
Exhaust	45°	23/64"	.002-.00375"

NOTE—Separate valve seat inserts not used.
Valve Guides:—Installed with taper end up. Remove old guides from above, press new guides in until lower end extends ¾" below valve spring seat recess in block.
Valve Springs:—Free length 2 11/16". Damper installed within each spring at upper end.

	Spring Pressure	Length
Valve Closed	46 lbs.	2¼"
Valve Open	85½ lbs.	1 15/16"

Valve Lifters:—Mushroom type. Guide holes reamed directly in block. Serviced by reaming guide hole and installing lifters furnished .004" oversize.
Lifter Clearance—.0005-.002".

ENGINE

PANEL DELIVERY 440P (BEFORE ENG. No. 35129)

LATER PANEL DELIVERY NOTE:—Engine data below applies to first cars only (from Engine No. 17001 to 35129). After Engine No. 35129, these models equipped with Model 440 Engine (same as used on Passenger Cars and Pick-up Models). Specifications for this model listed separately (preceding).

ENGINE:—Own Model 440P. 4 cylinder, 'L' head type.
Bore—3⅛". **Stroke**—4⅜".
Displacement—134.2 cubic inches.
Rated Horsepower—15.63 (A.M.A.).
Developed Horsepower—48 HP at 3200 RPM.
Compression Ratio—5.7-1 cast-iron hd.
Compression Pressure—87 lbs. at 216 RPM.
Vacuum Reading—Steady 18½" idling at 8 MPH.
NOTE—Cylinder bore offset ⅛" from center line of crankshaft toward valve side of engine.

PISTONS:—Full skirt, hard grey iron, light weight type.
Weight—21-23 ozs. (stripped). **Length**—3¾".
Removal—Pistons and rods removed from above.
Clearance—Top .0165-.017". Skirt .0025-.003".
Replacement Pistons:—Finished pistons furnished Std. and .003", .005", .010", .015", .020", .025", .030" oversize.
Fitting New Pistons:—Use .0025" feeler stock ¼" wide inserted between piston and cylinder wall to check clearance. Pull required to withdraw feeler must be 4 lbs. plus or minus 2 lbs.

PISTON RINGS:—Three compression, one oil contr 1 ring per piston, all above pin.

Ring	Width	End Gap	Side Clearance
Compression	3/32"	.008-.013"	.0015"
Oil Control	3/16"	.008-.013"	.0015"

Replacement Rings:—Furnished Std. and .003", .005", .010", .015", .020", .025", .030", .040" oversize.

PISTON PIN:—Diameter—15/16" (.9375"). **Length**—2.682". Pin floats in piston and rod. Retained by locking rings. Furnished .001", .003" oversize.
Pin Fit in Piston—.0002-.0004" clearance or hand push fit with piston dry.
Pin Fit in Rod Bushing—.0002-.0004" clearance or thumb press fit.

CONNECTING ROD:—Weight 34 ozs. **Length** 9 3/16".
Upper Bearing (Piston Pin Bushing)—Bronze.
Crankpin Journal Diameter—1.9395" (1 15/16").
Lower Bearing—Spun-babbitt-lined type.
Clearance—.001-.0025". **Sideplay**—.004-.009".
Bearing Adjustment:—None (no shims). Replace or rebabbitt rods. Do not file rods or bearing caps. Rods furnished Standard and .010" undersize.
Installing Rods:—Lower bearings offset. Install rods with short side of bearing toward nearest main bearing (toward front of engine for #1 & 3, toward rear for #2 & 4) with oil squirt hole in rod toward right (away from camshaft) on all rods.

CRANKSHAFT:—Three main bearing type.
Journal Diameters—2.334" all bearings.
Bearing Type—Removable slip-in steel-backed, babbitt-lined type. Bearings furnished Standard and .010" undersize. **Clearance**—.001-.0025".
Bearing Adjustment:—None (no shims). Replace bearings. Do not file caps.
End Thrust:—Taken by #1 front bearing. Adjustable by adding or removing shims between crankshaft thrust washer and shaft. **Endplay**—.004-.006".

CAMSHAFT:—4 bearing. Non-adjustable chain drive.
Bearing Type—Removable bushing (front), machined in crankcase (all others).
Bearing Clearance—.002-.0035".
End Thrust:—Taken by thrust plate behind camshaft

ENGINE

C NTINUED FR M PRECEDING PAGE

sprocket and spring-loaded plunger in forward end of camshaft bearing against thrust stud on cover.

Timing Chain:—Link-Belt #82 (Willys #S-40936). Width 1". Pitch ½". Length 23½" or 47 links.

Camshaft Setting:—With #1 piston on top dead center, mesh chain so that timing marks on sprockets are adjacent and in line with a straightedge across the shaft centers.

VALVES:	Head Diam.	Stem Diam.	Length
Intake	1 17/32"	.372"	5 13/64" (5¾" overall)
Exhaust	1 15/32"	.371"	5 13/64" (5¾" overall)

	Seat Angle	Lift	Stem Clearance
Intake	45°	21/64"	.002-.004"
Exhaust	45°	21/64"	.003-.005"

NOTE—Exhaust valve seat inserts are used.

Valve Guides:—Removable. Installed with taper end up. Remove old guides from above and press in new guides until lower end extends ¾" below valve spring seat recess in block. Exhaust guide longer

Valve Springs:—Free length 2 11/16".

	Spring Pressure	Length
Valve Closed	46½ lbs.	2¼"
Valve Open	85½ lbs.	1 15/16"

Valve Lifters:—Mushroom type. Guide holes reamed directly in block. Serviced by reaming guide hole and installing lifters furnished .005", .010", .020" versize. **Clearance**—.0007-.001".

VALVE TIMING

Tappet Clearance: .014" All Valves, Engine Cold (except first Panel Delivery with 440P Engine), .004" Intake, .006" Exhaust, Warm (First Panel Delivery). NOTE—Remove hand hole in left front fender splash shield for valve adjustment.

Valve Timing (440 Engine): See Camshaft Setting. NOTE—Does not apply to First Panel Delivery.
Intake Valves—Open 9° BTDC. Close 50° ALDC.
Exhaust Valves—Open 47° BLDC. Close 12° ATDC.
To Check Timing—Set tappet clearance #1 intake valve at .020". This valve should open with piston 9° or .039" before top dead center when flywheel mark 'I.O.' centered in inspection hole in right front face of rear motor support (¼" variation permissible. Reset tappet clearance at .014" Cold.

Valve Timing (440P Engine): See Camshaft Setting. NOTE—Applies only to First Panel Delivery
Intake Valves—Open TDC. Close 45° ALDC.
Exhaust Valves—Open 40° BLDC. Close 5° ATDC.
To Check Timing—Set tappet clearance #1 intake valve at .010" (cold). This valve should open with piston on top dead center when flywheel mark 'T.C. I.O.1-4' lines up with pointed end of inspection plate screw in inspection hole on left top face of flywheel housing. Reset tappet clearance at .004" warm.

LUBRICATION

LUBRICATION:—Pressure system. Gear type oil pump mounted on outer left side of crankcase.
Oil Pump Installation Note—Turn engine over until 'IGN' mark on flywheel lines up with indicator (inspection hole in top right surface of flywheel housing) with #1 piston on compression stroke, turn distributor shaft so that rotor is at #1 segment in distributor cap, mesh oil pump gear so that distributor not disturbed when coupling engaged.
Normal Oil Pressure:—75 lbs. (on gauge) at 30 MPH.
Oil Pressure Regulator:—Under plug on oil pump cover. Opens at 40 lbs. Adjustable by adding or removing shims within plug above spring.
Oil Pressure Gauge:—King-Seeley Electric. K-S No. **Dash Unit**—6275 (First Panel Delivery), 7860 (Other Models—with Ivory Lines), 8115 (Other Models—with Ivory Dots). **Engine Unit**—No. 6425 (All).
See Miscellaneous Section for complete data.
Crankcase Capacity—4 quarts.

COOLING

Water Capacity: 11 qts. (First Panel Delivery only), 11¾ qts. (All Other Models).
Water Pump:—Ball-bearing, packless type.
See Water Pump Section for complete data.
Removal—Drain water, remove fan belt and fan blades, loosen radiator mounting nuts, take out mounting bolts and lift pump out.
Thermostat:—Harrison. In outlet elbow on head. Starts to open 148-155°. Fully open at 173° F. NOTE Not used on First Pick-Up and Panel Delivery.
Temperature Gauge:—King-Seeley Electric. K-S No. **Dash Unit**—No. 6632 (First Panel Delivery), 7140 (Later Panel Delivery), 7850 (Other Models—with Ivory Lines), 8110 (Other Models—with Ivory Dots). **Engine Unit**—No. 5700 (First Panel Delivery with 6632 Dash Unit), No. 7000 (All Other Models).
NOTE—Engine Unit No. 5700 serviced by No. 7000 Dash Unit No. 6632 must also be replaced by No. 7140 when No. 7000 Engine Unit installed.
See Miscellaneous Section for complete data.

CLUTCH

CLUTCH:—Atwood Model TP 28-7 (Pass. Cars), Rockford UCLA-13-1098 (Pick-up & Panel Delivery). Single plate, dry disc type. No adjustment for wear required. NOTE—Borg & Beck driven member used
See Clutch Section for complete data.
Facings—Molded type (Pass. Car), Molded & Woven type (Pick-up & Panel Delivery). Inside Diam. 5⅛". Outside Diam. 7⅞". Thickness .125".
Adjustment:—Pedal free travel must be ¾-1" (providing 1/16" clearance between release bearing and release levers). To adjust, loosen locknut, turn clutch fork connecting cable.
Removal:—Remove Transmission (see Transmission Removal below) and flywheel bell housing, take out mounting screws in clutch cover, lift clutch out.

TRANSMISSION

TRANSMISSION:—Warner Model AS3-T84D (Speedway Pass. Cars, Pick-up & Panel Delivery), AS4-T84F (Deluxe Pass. Cars with Steering Column Gearshift). Constant-mesh, synchro-mesh, helical gears (Second & High), sliding spur gears (Low & Reverse). *See Transmission Section for complete data.*
Transmission Control:—Own remote control type mounted on steering column. Std. on Deluxe Pass.
See Transmission Section for complete data.
Removal:—Cover front seat cushion and door trim. On Deluxe Pass. Cars, disconnect control rods at transmission. On all other models, disconnect gearshift lever at retaining collar. Disconnect accelerator pedal from rubber socket, remove toeboards, disconnect propeller shaft at front universal, remove bell housing hand hole cover and disconnect clutch throw-out bearing retracting spring. Remove lower nuts on engine mounting bolts at rear of transmission, jack up rear of engine (Caution—see that fan blades do not damage radiator) to clear frame cross-member, remove transmission mounting bracket, remove bell housing-to-transmission bolts, pull transmission straight back and lift out.

UNIVERSALS

UNIVERSAL JOINTS:—Detroit Series 4100. Needle bearing, Ball-and-trunnion type. Two used.
See Universals Section for complete data.

REAR AXLE

REAR AXLE:—Own Model 440 (Pass. Cars), Spicer (Salisbury) Model 21-1 (Pick-up & Panel Delivery). Semi-floating, spiral bevel gear type with Hotchkiss drive. *See Rear Axle Section for complete data.*
Ratio—4.3-1 (Speedway), 4.55-1 (Deluxe), 4.7-1 (Pick-up), 5.1-1 (Panel Delivery).
Backlash—.004-.008". Shim adjustment.
Removal:—Hoist rear of car. Disconnect drive shaft at rear universal, brake tube and cables, shock absorbers, spring U-bolts, rear spring shackles. Pull axle assembly out toward rear.
Wheel Bearing Adjustment:—To adjust, remove wheel, hub assembly, oil seal and bearing retainer. Remove shims from between retainer and backing plate to decrease endplay. **Endplay**—.004-.006"

SHOCK ABSORBERS

SHOCK ABSORBERS:—Monroe or Gabriel (Pass. Cars), Monroe (Pick-up & Panel Delivery). Direct acting
See Shock Absorber Section for complete data.

FRONT SUSPENSION

Front Suspension:—Own Model 440 Front Axle. Conventional type with 'I' beam section and Reverse-Elliott ends.
Kingpin Inclination—7½° crosswise.
Caster—3°. Adjustable by installing wedge shims between spring and spring pad on axle.
Camber—2°. Not adjustable.
Toe-In—1/16-⅛". Adjustable by loosening tie rod clamp bolts and turning tie rod.
Steering Geometry (toe-out on turns)—With outer wheel turned 20°, inner wheel should turn 23°15'.

STEERING GEAR

Steering Gear: Passenger Cars—Gemmer Model 250. Worm-and-Roller type. **Pickup & Panel Delivery**—Gemmer Model 120. Worm-and-Sector type.
See Steering Gear Section for complete data.

BRAKES

BRAKES (PASS. CARS):—Service—Bendix (Lockheed) Hydraulic, double anchor type. Hand lever applies rear wheel service brakes.
See Brake Section for complete data.
Drums—Alloy cast iron. Diameter 9".
Lining—Molded type. Width 1¾". Thickness 3/16". Length 18⅝" per wheel.
Clearance—.010" toe, .005" heel for each shoe.
Hand Brake:—See Service Brakes above.

BRAKES

BRAKES (PICK-UP & PANEL DELIVERY):—Service. Bendix Mechanical, Duo-servo, Single Anchor. Hand lever applies all service brakes.
See Brake Section for complete data.
Drums—9" Pressed Steel (Pick-up), 11" alloy iron (Panel Delivery).
Lining—Molded & Woven type (Pick-up), Molded (Panel Delivery). Width 1¾". Thickness 3/16". Length per wheel 19 3/16" (Pick-up), 23 15/16" (Panel Delivery).
Clearance—.010" at heel and toe of each shoe.
Hand Brake:—See Service Brakes above.

HOOD LOCK:—Alligator type hood with instrument panel lock to left of light switch on Americar.

MODEL IDENTIFICATION

SERIAL NUMBER:—Stamped on plate on frame front cross-member (all models) and on plate on right side of cowl under hood (Americar & Pick-up), on right front door riser (Panel Delivery). First Nos. as follows:
441-50001—1941 Americar, Plainsman, Willys Pick-up.
441P-50001—1941 Willys Panel Delivery.
80,001—1942 (All Models).

ENGINE NUMBER:—Stamped on right front upper corner of engine. First No. 50001 (1941), 80301 (1942).

TUNE-UP

COMPRESSION:—Ratio—6.48-1 (Americar Std.), 6.81-1 (Americar Optl)., 6.1-1 (Pick-up & Panel Delivery). NOTE—7.0-1 Aluminum Head Optl. on 1941 Americar, Std. on 1941 Plainsman. Not used on 1942 cars. Pressure—111 lbs. (Americar), 107 lbs. (Pick-up & Panel Delivery) at cranking speed of 185 RPM.

VACUUM READING:—Steady 21-23" idling at 8 MPH.

FIRING ORDER:—1-3-4-2. See diagram.

SPARK PLUGS: Champion Type J-8 or Auto-Lite A7F (1941 except 7.0-1 Head), Champion J-9 (All 1942, & 1941 7.0-1 Head). 14 mm. Metric type.
Gaps—.030"

IGNITION: See Coil, Condenser, and Distributor.
Breaker Gap—.020". Cam Angle 41° (closed).
Automatic Advance—9.5° max. at 1500 RPM (distr).
Vacuum Advance—10° distr. with 15" vacuum.

IGNITION TIMING: See Ignition Timing.
Std. Setting—At TDC with flywheel mark "TC-IGN" centered in inspection hole in front face of right rear engine support.

CARBURETION: See Carburetor & Carb. Equipment.
Idle Setting—Idle screw 1-1½ turns open. Idle speed 8 MPH.
Float Level—⅜" from gasket seat on cover to top of float at free end (invert to check—do not compress spring in valve stem).
Accelerating Pump—Not adjustable.
Fuel Pump Pressure: 3 lbs. maximum.

MANIFOLD HEAT CONTROL:—Automatic thermostatic coil type. No adjustment required.

VALVES: See Valve Timing.
Tappet Clearance:—.014" all valves with engine cold.

STARTING: See Battery, Starter, Generator, Regulator.

IGNITION

Ignition Switch:—Douglas No. 2975. Coil connection not armored.
Ignition Lock—Yale & Towne.

COIL: Auto-Lite Model IG-4090A. Service Coil No. IG-4070. Mounted on right side of engine.
Ignition Current—2.5 amperes idling, 5 amperes at 6.4 volts stopped.

CONDENSER: Auto-Lite Part No. IGB-1025.
Capacity—.20-.25 microfarad.

DISTRIBUTOR: Auto-Lite Model IGW-4129. Single breaker, 4 lobe cam, full automatic advance type with auxiliary vacuum spark control.
Breaker Gap—.020".
Cam Angle or Dwell—41° closed, 49° open (distr.).
Breaker Arm Spring Tension—17-20 ounces.
Rotation—Counter-clockwise viewed from above.

Automatic Advance

Distributor Degrees	Distributor R.P.M	Engine Degrees	Engine R.P.M.
Start	300	0	600
2	550	4	1100
5	930	10	1860
7	1190	14	2380
9.5	1500	19	3000

Vacuum Spark Control VC-4010. Mounted on distributor bracket and linked to advance arm. Provides additional advance at all speeds above idling except when engine accelerated or operated with wide open throttle when spark retarded by return spring within unit.

Vacuum Advance

Distr. Degrees	Eng. Degrees	Vacuum (" of HG)
Start	0°	3½"
2°	4°	5¾"
5°	10°	9¼"
8°	16°	12¾"
10°	20°	15"

Distributor Removal:—Mounted on right sid of engine. To remove (without disturbing vacuum unit), loosen the advance arm clamp bolt. **Installation Note**—If oil pump removed, turn crankshaft so that #1 piston on compression and flywheel mark 'TC-IGN' at indicator on housing, turn distributor shaft so that rotor at #1 terminal in cap, install oil pump and mesh gears so that shaft engages distributor tongue-and-slot coupling without disturbing distributor shaft position. Check ignition timing.

IGNITION TIMING

IGNITION TIMING:—	Flywheel Deg.	Piston Pos.
All engines	at TDC	.0000" TDC

Timing—With #1 piston on compression, turn engine over until piston reaches firing position (see above) with flywheel mark "TC-IGN" centered in inspection hole in front face of engine right rear support. Loosen advance arm clamp bolt, rotate distributor until contacts begin to open (eliminate backlash in drive gears by pressing on rotor in clockwise direction), tighten clamp bolt, see that rotor is at #1 terminal in distributor cap.

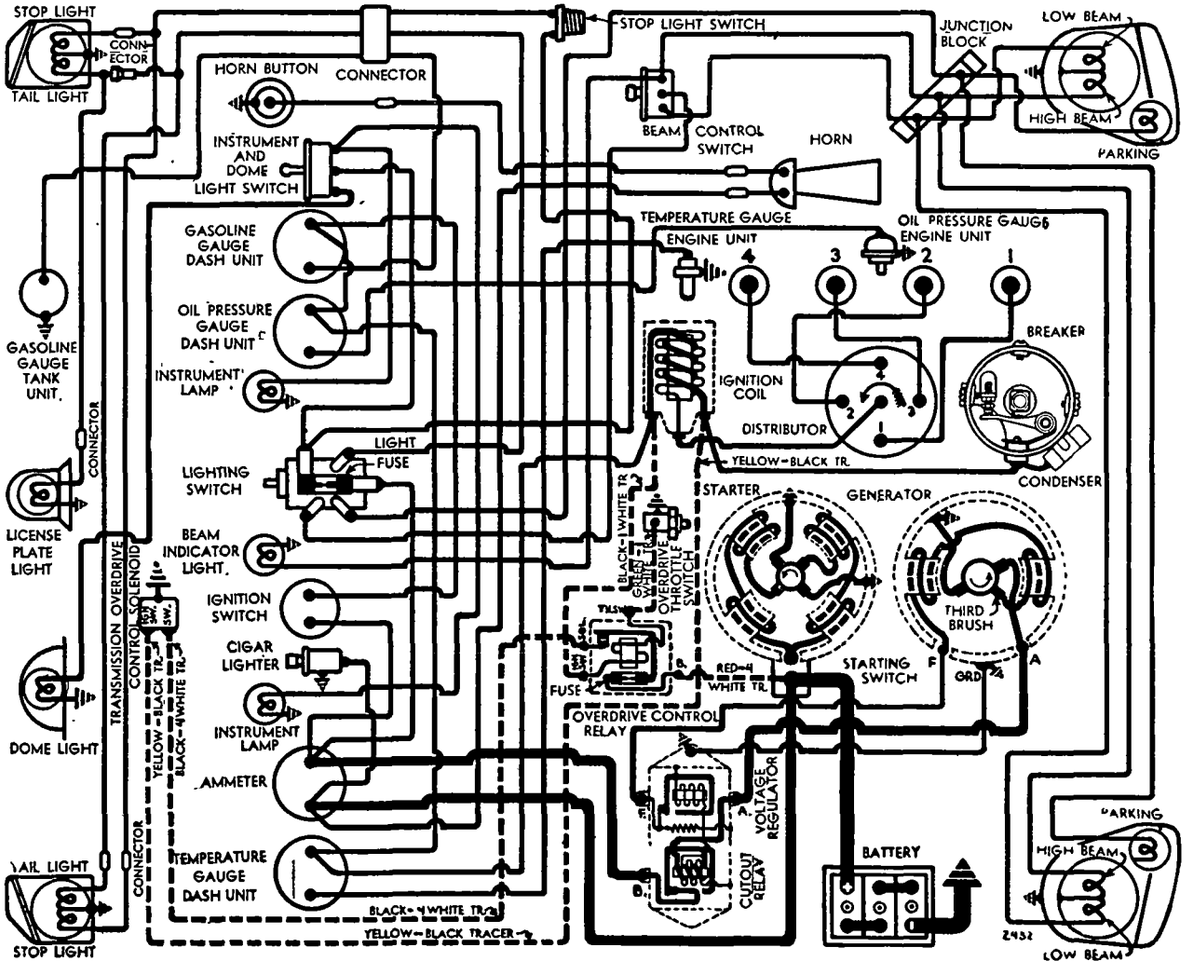

CARBURETOR

CARBURETION:—Carburetor—Carter Type WO Model 507-S (No. 229 cast on face of flange). 1¼" single barrel, downdraft type.

For complete data, refer to Carburetor Index.

Idle Adjustment—If preliminary adjustment required (to warm up engine), turn idle adjusting screw in until just seated, then turn screw out 1¼ turns, start engine and run until warm. With engine warm, set throttle stopscrew for slightly faster than normal idling speed, turn idle adjusting screw out until engine begins to roll, then turn screw in until engine fires smoothly. Final setting should be 1-1½ turns open. Adjust throttle stopscrew for 8 MPH idle speed pulling in high gear.

Accelerating Pump—No seasonal adjustment.

Float Level—⅜" from top of float to gasket seat on cover with needle valve seated (invert to check—do not compress spring in valve stem).

Metering Rods & Jets—***See Carter Jet Table in Carburetor Section for complete data.***

Fast Idle:—Choke valve inter-connected to throttle valve to open throttle to fast idle position with choke valve in use.

CARB. EQUIPMENT

Air Cleaner:—AC #1529870 oil-wetted type Std., #1529769 heavy duty oil-bath type Optl. Replacement Filter Element Assembly Type #1 (Std.). Type #9 (heavy duty).

Fuel Pump:—AC 'AF" No. 1537320. Exchange Pump Type 538. Diaphragm type.

For complete data, refer to Carburetion Equip. Index.

Gasoline Gauge:—King-Seeley Electric type. K-S Nos.

Dash Unit—No. 8186 (1941—except Panel Delivery), 40140 (1942—except Panel Delivery), 8895 (1941-42 Panel Delivery).

Tank Unit—No. 8318 (1941-42 except Panel Delivery), No. 8484 (1941-42 Panel Delivery).

For complete data, refer to Carburetion Equip. Index.

BATTERY

BATTERY:—Auto-Lite, Type AB-13. 6 volt, 13 plate, 80 ampere hour capacity (20 hour rate).

Starting Capacity—96 amperes for 20 minutes.

Zero Capacity—300 amperes for 2.0 minutes.

Grounded Terminal—Negative (—) grounded to front frame cross-member. **Engine Ground**—Strap connector at front engine mounting on left side.

Dimensions—Length 8 15/16". Width 7". Hght. 8⅝".

Location—In engine compartment on right side.

STARTER

STARTER:—Auto-Lite. For each model as follows:

Americar, Plainsman, Pickup (Early 1941)..MZ-4093
Americar, Plainsman, Pickup (Late 1941)....MZ-4099
Americar, Pickup (1942).....MZ-4109
Panel Delivery (Early 1941).....MZ-4049
Panel Delivery (Late 1941 & 1942).....MZ-4100

Armature—Auto-Lite No. MZ-2089 (All Models).

Drive—Two types used: Special Outboard Bendix No. RC10HD (MZ-4049 & MZ-4093), Special Barrel Type Bendix No. A-2233 (MZ-4099, MZ-4100, MZ-4109).

NOTE—Later type Bendix, No. A-2233, can be used in servicing starters originally equipped with the No. RC10HD Bendix Drive.

Rotation—Counter-clockwise at commutator end.
Brush Spring Tension—42-53 ozs. (new brushes).
Cranking Engine—185 RPM, 150-175 amps., 5 volts.

Performance Data

Torque		R.P.M.	Volts	Amperes
0	ft. lbs.	4300	5.5	70
.65	"	2500	5.5	100
2.65	"	1325	5.0	200
4.95	"	750	4.5	300
7.65	"	220	4.0	400
7.8	"	Lock	3.0	420
11.8	"	Lock	4.0	560

Removal:—Starter flange mounted on right front face of rear motor support. To remove, take out two flange capscrews and one capscrew in bracket at commutator end, remove starter and switch as an assembly.

Starting Switch (MZ-4093, 4099, 4109): Auto-Lite No. SW-3737S. Mounted on starter and cable operated by button on instrument panel. Pull required to close switch should be 2.3 lbs. min. (at right angles to hole at end of lever).

(MZ-4049, 4100)—Auto-Lite No. SS-4001. Magnetic switch mounted on starter and controlled by push-button on instrument panel.

For complete data, refer to Electrical Equipment Index.

GENERATOR

STANDARD

GENERATOR:—Auto-Lite GCJ-4811-A. Armature GCJ-2006-F. Third brush control in conjunction with vibrating type voltage regulator. Ventilated by fan on drive pulley.

Maximum Charging Rate—25 amperes (cold), 8.0 volts, 2500 RPM. Actual charging rate controlled by voltage regulator and dependent on battery condition. See Regulator data below. When checking generator output, ground 'F" terminal to eliminate regulator action.

Charging Rate Adjustment—See Regulator data. Third brush setting 2 commutator bars minus 2 mica strips minimum, 2 bars minus 1 mica strip maximum from insulated (nearest) main brush. Setting adjustable by removing commutator cover band and moving third brush by hand counter-clockwise to increase, clockwise to decrease output. Maximum output given above must not be exceeded.

Performance Data

Cold			Hot		
Amperes	Volts	R.P.M.	Amperes	Volts	R.P.M.
0	6.4	760	0	6.4	850
4	6.65	920	4	6.7	1020
8	6.9	1080	8	7.0	1240
12	7.2	1240	12	7.3	1400
16	7.45	1400	16	7.6	1650
20	7.7	1580	20	7.9	2100
25	8.0	2500	22	8.0	2700

Rotation—Counter-clockwise at commutator end.
Brush Spring Tension—53 ozs. max. (new brushes).
Field Current—1.9-2.1 amperes at 6.0 volts.
Motoring Current—4.0-4.4 amperes at 6.0 volts.

Removal:—Conventional pivot mounting at right front of engine. To remove, take out pivot and clamp bolts.

Belt Adjustment:—Loosen pivot and clamp bolts, swing generator out until fan can be turned with belt stationary.

GENERATOR

SPECIAL EQUIPMENT

SPECIAL GENERATOR (PICK-UP & PANEL DELIVERY):—Auto-Lite GCS-4109A-5, Armature GCS-2049-F. Used with Two-charge (non-vibrating) Regulator Model TC-4317-A. If this equipment used on 1941-42 models, ***refer to 1939 Willys Model 48 article (preceding) for data on this model.***

REGULATOR

REGULATOR:—Auto-Lite VRR-4004A. Voltage type. In single case on engine side of dash.

For complete data, refer to Electrical Equipment Index.

Cutout Relay

Cuts In—6.4-6.6 volts.
Cuts Out—4.1-4.8 volts (approx. 4-6 amps. disch.).
Contact Gap—.015" minimum.
Air Gap—.031-.034" with contacts open (check at hinge end of core).

Voltage Regulator

Setting—7.3-7.6 volts at 70° F. See Electrical Equipment Section for settings at other temperatures.
To Check (without breaking seals)—Connect ammeter in charging line at regulator 'B' terminal (use short heavy leads), voltmeter between 'B' terminal and ground. Operate generator at speed equivalent to 30 MPH., charging fully charged battery, until voltage is steady. Voltage reading should agree with setting given above.
To Adjust (with cover removed)—Change regulator armature spring tension by bending lower spring hanger slightly. See Electrical Equipment Section.
Contact Gap—.012" min. (armature against stop pin).
Air Gap—.048-.052" with contacts just opening.

LIGHTING

LIGHTING:—Headlamps—Corcoran-Brown pre-focused double filament type with upper and lower beams controlled by Beam Selector Switch on toeboard.

Headlamp Adjustment—With upper beam lighted and car 25' from screen, aim each headlamp so that beams centered on vertical line directly ahead of lamp center, and upper edge at horizontal line at lamp-center height, with lamp door and lens in place. To adjust, remove door and lens, turn 3 adjusting screws on reflector rim.

Beam Indicator—Red jewel in upper edge of speedometer dial. Lighted when upper beams in use.

Switches

Lighting—Douglas No. 5864.
Beam Selector—Douglas.
Instrument—Douglas.

Bulb Specifications

Position	Candlepower	Mazda No.
Headlamps	32-21	2320
Parking	1.5	55
Instrument, Beam Ind.	1	51
Stop & Tail	21-3	1158
Dome, License Plate	3	63

MISC. ELECTRICAL

FUSES:—Lighting—20 ampere. On lighting switch.
Overdrive Control Relay—20 ampere. On Overdrive Control Relay.

HORN:—Schwarze. Vibrating, disc type.
Horn Current—8 amperes.

C NTINUED N NEXT PA E

C NTINUED FR M PRECEDING PA E

ENGINE

ENGINE SPECIFICATIONS:—4 cylinder, 'L' head type.

Bore—3⅛". **Stroke**—4⅜".

Displacement—134.2 cu. ins. **Rated HP**—15.63.

Developed Horsepower—63 (Americar), 61 (Pick-up & Panel), 65 (441 Plainsman) at 3800-4000 RPM.

Compression Ratio—6.48-1 (Americar Std.), 6.81-1 (Americar Optl.), 6.1-1 (Pick-up & Panel Delivery). NOTE—All cylinder heads are cast-iron except 441 Plainsman which is equipped with 7.0-1 aluminum head.

Compression Pressure—At cranking speed of 185 RPM: 107 lbs. (Pick-up & Panel Del.), 111 lbs. (All others).

Vacuum Reading—Steady 21-23" idling at 8 MPH. NOTE—Cylinders offset ⅛" from center-line of crankshaft toward camshaft side of engine.

PISTONS (ALL MODEL 441, MODEL 442 Engine Nos. 80301 to 85392):—Lynite, Lo-Ex aluminum alloy, 'T' slot, cam ground, tin-plated type.

Weight—12.5 ozs. (stripped). **Length**—3¾".

Removal—Pistons and rods removed from above.

Clearance—.0205-.0225" top, .003" skirt.

Original Bore & Piston Sizes:—Engines and pistons graded in four .0005" steps as shown in table below and marked as follows: **Piston**—Letter stamped on head. **Cylinder Bore**—Letter stamped on top of block between valve ports and bore at center.

Grade Letter	Cylinder Bore Size	Piston Size
A	3.1255-3.1250"	3.1235-3.1230"
B	3.1260-3.1255"	3.1240-3.1235"
C	3.1265-3.1260"	3.1245-3.1240"
D	3.1270-3.1265"	3.1250-3.1245"

Replacement Pistons:—Finished pistons furnished Std. (see Table above), .002", .005", .010" oversize.

Fitting New Pistons:—Use .0025" feeler stock ¾" wide inserted between piston and cylinder wall on side opposite slot. Pull to withdraw feeler 5-10 lbs.

Installing Pistons:—Slot toward left (valve) side.

PISTONS (ENGINE NO. 85393 & UP):—New Molybdenum alloy iron, cam ground, tin-plated type.

Weight—24 ozs. (with pin bushings).

Removal—Pistons and rods removed from above.

Clearance—.010-.012" (top land), .002" (skirt).

Original Bore & Piston Sizes:—Graded and marked in same manner as for aluminum pistons (see above).

Replacement Pistons:—Finished Pistons furnished in following oversizes: .002", .005", .010", .020", .030".

Fitting New Pistons:—Alloy iron pistons must be fitted exactly as follows: With rings removed, wipe piston and cylinder bore clean and dry. Invert piston and insert in bore, work piston up and down full length of bore several times (slight pressure required at first due to tin-plate on piston). Remove piston, wipe piston and bore, recheck fit. Piston fit should be slight drag or just sufficient to hold piston at any point in cylinder (bore must be straight and true within .001").

PISTON RINGS:—Two compression, one oil control ring per piston, all above pin (heat dam groove above top ring). Oil ring groove drilled for drainage.

Ring	Width	End Gap	Side Clearance
Compression	3/32"	.008-.013"	.0015-.002"
Oil Control	3/16"	.008-.013"	.0015-.002"

NOTE—Install compression ring with mark TOP up.

Replacement Rings:—Std. & .005", .010", .020", .030" OS.

PISTON PIN:—**Diameter** .8117-.8119". **Length** 2 25/32". Pin locked in connecting rod by clampscrew.

NOTE—Pin holes in alloy iron pistons are provided with bushings.

Pin Fit in Piston (Aluminum)—.0001-.0009" clearance or light push fit at 60°F.

Pin Fit in Piston (Alloy Iron)—.0003-.0004" in piston bushing or slide fit at 70°F. with piston and pin dry (pin should slide through piston of own weight).

Replacement Pins:—Std. & .001", .002", .003", oversize.

CONNECTING ROD:—**Weight** 34 ozs. **Length** 9 3/16".

NOTE—New type connecting rod with removable steel-backed, babbitt-lined bearing shells used beginning with Engine No. 88769. This new type rod should be used with the alloy iron pistons.

Crankpin Journal Diameter—1.9395" (1 15/16").

Lower Bearing—Spun babbitt-lined type (First type rod before Eng. No. 88769), removable steel-backed, babbitt-lined type. (Eng. No. 88769 up).

Bearing Adjustment:—None (no shims). Replace or rebabbitt rods (first type), replace removable bearing shells (second type). Do not file rods or bearing caps. NOTE—Babbitted rods or bearing shells furnished Std. and .010" Undersize.

Installing Rods:—Short side of bearing to front (#1, #3), to rear (#2, #4). Oil hole away from camshaft. (toward right of engine) on all rods.

CRANKSHAFT:—3 bearing with 4 counterweights.

Journal Diameters—2.3340" all bearings.

Bearings—Removable slip-in steel-backed, babbitt-lined. Furnished Standard and .010" Undersize. **Clearance**—.001".

Bearing Adjustment:—None (no shims). Replace bearings. Do not file bearing caps.

End Thrust:—Taken by #1 front bearing. Adjustable by adding or removing shims between crankshaft thrust washer and shaft. **Endplay**—.004-.006".

NOTE—Crankshaft thrust washer furnished .002" thick.

CAMSHAFT:—4 bearing. Non-adjustable chain drive.

Bearing Type—Removable bushing (front), machined in crankcase (all others).

Bearing Clearance—.002-.0035".

End Thrust:—Taken by thrust plate behind camshaft sprocket and spring-loaded plunger in forward end of camshaft bearing against thrust stud on chain case cover. NOTE—Make certain that plunger and spring in place when replacing chain case cover.

Timing Chain:—Link-Belt. Width 1". Pitch ½". Length 47 links or 23½".

Camshaft Setting:—With #1 piston at TDC, mesh chain with sprocket marks adjacent and in line with a straightedge across the shaft centers.

VALVES:—	Head Diameter	Stem Diameter	Length
Intake	1 17/32"	.373"	5¾" (overall)
Exhaust	1 15/32"	.3725"	5¾" (overall)

	Seat Angle	Lift	Stem Clearance
Intake	45°	23/64"	.0015-.00325"
Exhaust	45°	23/64"	.002-.00375"

NOTE—Separate valve seat inserts not used.

Valve Guides:—Remove from above. Press new guides in (taper end up) until lower end extends ¾" below valve spring seat recess in block.

NOTE—Exhaust valve guides counter-bored on upper inner diameter to .399" diameter, 5/16" deep.

Valve Springs:—Free length 2½".

	Spring Pressure	Spring Length
Valve Closed	50 lbs.	2 7/64"
Valve Open	116 lbs.	1¾"

Valve Lifters:—Mushroom type (remove from below). Guide holes reamed in block. Serviced by reaming guide hole for .004" oversize lifter.
Lifter Diameter—.6245".
Lifter Clearance—.0005-.002".

VALVE TIMING

Tappet Clearance:—.014" all valves, with engine cold. Remove hand hole in left front fender splash shield by taking out screws for valve adjustment.

Valve Timing:—See Camshaft Setting above.
Intake Valves—Open 9° BTDC. Close 50° ALDC.
Exhaust Valves—Open 47° BLDC. Close 12° ATDC.
Valve Timing Check—With .020" tappet clearance #1 intake valve should open with #1 piston 9° or .039" BTDC with flywheel mark 'T.O' centered in inspection hole in right front side of engine rear support (¼" variation permissible). Reset tappet clearance at .014" (cold).

LUBRICATION

LUBRICATION:—Pressure (pump on left of engine).

Oil Pump Installation Note—Install pump with #1 piston on compression, 'TC-IGN' flywheel mark centered in inspection hole in right front side of engine rear support and distributor shaft turned so that rotor is at #1 segment in distributor cap.

Normal Oil Pressure:—40 lbs. (75 lbs. on instrument panel gauge) at 30 MPH.

Oil Pressure Regulator:—Under plug on oil pump cover. Opens at 40 lbs. Adjustable by adding or removing shims within plug above spring.

Oil Pressure Gauge:—King-Seeley Electric. K-S No. Dash Unit: 8190 (441 Pass. Cars), 40145 (442 Pass. Cars), 8898 (Panel Delivery). Engine Unit: 6425 (All Models).
See Miscellaneous Section for complete data.

Crankcase Capacity:—4 quarts.

COOLING

COOLING SYSTEM:—**Capacity**—11¾ quarts.

Water Pump:—Packless, sealed ball-bearing type.
See Water Pump Section for complete data.

Removal—Drain water, remove fan belt and fan blades, loosen radiator mounting nuts, take out pump mounting bolts and lift pump out.

Thermostat:—Harrison. In outlet elbow on head.
Setting—Starts to open 148-155° F. Fully open 173°.

Temperature Gauge:—King-Seeley Electric. K-S No. Dash Unit: 8184 (441 Pass. Cars), 40135 (442 Pass. Cars), 8868 (Panel Delivery), 8868-1 (Panel Delvry. —Tan Bezel). Engine Unit: No. 7000 (All Models).
See Miscellaneous Section for complete data.

CLUTCH

CLUTCH:—Atwood Model TP28-7 (Americar), TP28-7-1 (Pick-up & Panel Delivery). Single plate, dry disc type with new hydraulic type dampener.
NOTE—Atwood Driven Member with hydraulic type dampener used on all Passenger Cars and some 1941 Pick-up and Panel delivery. Borg & Beck Driven Member used on some 1941 and all 1942 Pick-up and Panel Delivery.
See Clutch Section for complete data.
Facings—Moulded, 2 required. Inside Diameter 5⅛". Outside Diameter 7⅞". Thickness .125".

Adjustment:—Pedal free travel ¾-1" (provides 1/16" clearance between release bearing & release levers). To adjust, change length of clutch fork connecting cable.

Removal:—Remove Transmission (see below) and flywheel bell housing. Take out mounting screws in clutch cover. Remove clutch assembly.

TRANSMISSION

TRANSMISSION:—Warner. Model AS5-T84G. All helical gear type with synchro-mesh (second and high), sliding gear (low & reverse). Overdrive with electrical 'kick-down' control Std. on Plainsmen, Optl. on other Americar models.
NOTE—Pick-up and Panel Delivery transmission equipped with shielded bearing on main drive gear.
See Transmission Section for complete data.

Transmission Control:—Mechanical steering col. shift.
See Transmission Section for complete data.

Removal:—Disconnect accelerator pedal from rubber socket, remove toeboards. Disconnect control rods at transmission and front universal. Remove bell housing hand hole cover and disconnect the clutch throw-out bearing retracting spring. Remove lower nuts on engine mounting bolts at rear of transmission, jack up rear of engine (CAUTION—See that fan blades do not damage radiator) to clear frame cross-member. Remove transmission mounting bracket and bell housing-to-transmission case bolts. Pull transmission straight back and lift out. **Overdrive Removal**—Same as above plus the following: Disconnect solenoid wires and overdrive control cable at transmission. Remove overdrive rear support by taking out bolts at frame ends. NOTE—When installing overdrive rear support, install equal number of shims between frame and each end of support until bottom of overdrive case just touches rubber insulator, then remove shims equal to 3/16" thickness from each end of support to give proper compression of insulator.

OVERDRIVE

Warner Type R7. Overdrive with electrical "kick-down" control. Used with special Overdrive Transmission as Optl. Equipment on 1941-42 Passenger Car models.
See Transmission Section for complete data.

Overdrive Solenoid—Delco-Remy No. 1569.

Throttle Switch—Cole-Hersee No. 9016. Adjust position of switch on bracket so that switch plunger just contacts end of accelerator rod (max. clearance 1/32") when carburetor throttle is wide open.

Overdrive Relay—Auto-Lite Model HR-4201AS.

Removal: Same as standard transmission (above) except that lock-out control and wires on transmission solenoid must be disconnected first.

UNIVERSALS

UNIVERSAL JOINTS:—Detroit Series 4100. Ball-and-trunnion type with needle bearings. 2 used.
See Universals Section for complete data.

REAR AXLE

PASSENGER CARS

REAR AXLE (AMERICAR PASS. CARS):—Own Model 441 (1941), 442 (1942). Semi-floating, hypoid gear type with Hotchkiss drive.
See Rear Axle Section for complete data.

Ratio—4.44-1 Std. No Optl. ratios.
Backlash—.006-.008". Shim adjustment.

Removal:—Hoist rear of car. Disconnect rear universal, brake tube and cables, shock absorbers, spring U-bolts, rear spring shackles. Pull assembly to rear.

Wheel Bearing Adjustment:—To adjust, remove wheel, hub assembly, oil seal and bearing retainer. Remove shims from between retainer and backing plate to decrease endplay. **Endplay**—.004-.006" total.

REAR AXLE

PICK UP & PANEL DELIVERY

REAR AXLE (PICK-UP & PANEL DELIVERY):—Spicer (Salisbury) Model 21-1 (1941 All Trucks, 1942 First 500 Trucks), Model 41-4 (1942 After first 500 Trucks). Semi-floating, spiral bevel gear (Model 21-1), hypoid gear (Model 41-4) type with Hotchkiss drive.
See Rear Axle Section for complete data.

Ratio—4.9-1 (Model 21-1), 4.82-1 (Model 41-4).
Backlash—.006-.008". Shim adjustment.

Removal & Wheel Bearing Adjustment:—Same as for Americar passenger cars (see data above).

SHOCK ABSORBERS

SHOCK ABSORBERS:—Monroe. Hydraulic (permanently sealed assembly), direct acting, adjustable type. Part No. for each model as follows:

	Front		Rear	
	Monroe No.	Willy	Monroe	Willys
Std.①	639022	11422	639008	11425
Hvy. Dty.①	639187	11429	639188	11430
Comm'l.②	639187	11429	639537	11434

①—Passenger Car. ②Pick-up & Panel Delivery.
See Shock Absorber Section for complete data.

FRONT SUSPENSION

Front Suspension:—Own Model 441 (1941), 442 (1942) Front Axle. Conventional 'I' beam section with Reverse-Elliott ends.

Kingpin Inclination—7½° crosswise.

Caster—3°. Adjustable by installing wedge shims between spring and spring pad on axle.

Camber—2°. Not adjustable.

Toe In—1/32-5/32". Adjustable by loosening tie rod clamp bolts and turning tie rod.

Steering Geometry (toe-out on turns)—With outer wheel turned 20°, inner wheel should turn 23°15'. Not adjustable (check for bent steering arms).

STEERING GEAR

Steering Gear: Ross Model T-12. Cam-and-Twin Lever type.
See Steering Gear Section for complete data.

BRAKES

BRAKES (ALL MODELS):—Service. Bendix (Lockheed) hydraulic, double anchor type. Hand lever applies rear wheel service brakes.
See Brake Section for complete data.

Drums—Nickel chromium alloy iron. Diameter 9".

Lining—Moulded type. Width 1¾". Thickness 3/16". Length per wheel 18⅝ (1941), 16 53/64" (1942).

Clearance—.008" toe (top), .005" heel, for each shoe.

Braking Power—43% rear wheels, 57% front.

Hand Brake:—See Service Brakes above.

MODEL IDENTIFICATION

SERIAL NUMBER: Stamped on plate on outside of left frame side rail at front end on Nameplate on right side of instrument panel.
1946 Numbers—10,001 Up.
1948 Numbers—148,459 Up.

ENGINE NUMBER: Stamped on boss on right front upper corner of cylinder block near water pump.

TUNE-UP

COMPRESSION PRESSURE: 111 lbs. at cranking speed of 185 RPM. for Std. 6.48-1 Head.

VACUUM READING: Steady 18-21" idling at 6 MPH.

FIRING ORDER: 1-3-4-2. See diagram.

SPARK PLUG GAPS: .030".
Plug Type—Auto-Lite AN-7 or AN-7B. 14 mm.

IGNITION: ***See Coil, Condenser, and Distributor.***
Breaker Gap—.020" Limits .020-.024" (IGW-4177-1 & IGW-4189), .018-.022" (IAD-4008).
Cam Angle or Dwell—41° closed, 49° open (distr.).
Breaker Arm Spring Tension—17-20 ounces.
Automatic & Vacuum Advance—***See Distributor.***

IGNITION TIMING: 5° BTDC (72 Octane Fuel), At TDC (Low Octane Fuel).
Timing Procedure—***See Ignition Timing.***
Timing Mark—Flywheel mark "IGN/" (5° BTDC. setting), "TC/" (TDC setting) centered in inspection hole in right front face of housing below starter.
►**Timing Mark Change**—Flywheel marked "5°" (replacing "IGN/") starting Engine No. 175402.

CARBURETION: ***See Carburetor & Carb. Equipment.***
Idle Setting—Idle screw 1-2 turns open (turn screw out for richer mixture.
Idle Speed—600 RPM. or 8 MPH.
Float Level—⅜" from top of float at free end to machined surface (gasket seat) on bowl cover. Invert to check (allow float to hang freely.
CAUTION—Do not compress spring in valve stem.
Accelerating Pump—No seasonal adjustment.

Fuel Pump Pressure: 4½ lbs. maximum.

MANIFOLD HEAT CONTROL: Automatic thermostatic type. No adjustment required. When installing assembly, see that thermostatic spring end rests on top of spring stop bracket on manifold.
CAUTION—Check valve for free operation when tuning up engine.

CRANKCASE VENTILATOR: Remove and clean Vacuum Control Valve on manifold. ***See Crankcase Ventilator (following CARB. EQUIPMENT) for data.***

VALVE TAPPET CLEARANCE: .014" All Valves, Hot or Cold. NOTE—Self-locking adjusting screws used.
Valve Timing Check—***See Valve Timing.***

STARTING: ***See Battery, Starter, Generator, Regulator.***

IGNITION

IGNITION SWITCH: Willys No. 642073 (for Yale & Towne), No. 644001 (Hurd). In base of ign. coil.
Ignition Lock—Willys No. 661949 (for Yale & Towne), No. 644000 (for Hurd).

COIL: Auto-Lite Model IG-4314 or IG-4314A. Mounted on back of instrument panel with ignition switch in base.
Replacement Coil—Auto-Lite IG-3033XS with Service Bracket CE-1248S.
Ignition Current—2.5 ampere idling, 5 stopped.

CONDENSER: Auto-Lite Part No. IGB-1025 (IGW-4177-1 & IGW-4189 Distr.), IGW-3139 (IAD-4008).
Capacity—.20-.25 mfd. (IGB-1025), .23-26 mfd. (IGW-3139).

DISTRIBUTOR: Auto-Lite Model IGW-4177-1, IAD-4008, or IGW-4189. Single breaker, 4 lobe cam, full automatic advance type (vacuum spark control may be used with IGW-4189 distributor).
Breaker Gap—.020". Limits .020-.024" (IGW-4177-1 and IGW-4189), .018-.022" (IAD-4008).
Cam Angle—41° closed, 49° open.
Breaker Arm Spring Tension—17-20 ounces.
Rotation—Counter-clockwise viewed from above.

Automatic Advance—IAD-4008 & IGW-4177-1

Degrees Distr.	R.P.M.	Degrees Eng.	R.P.M.
Start	250	0	500
3	580	6	1160
6	930	12	1860
9	1270	18	2540
11	1500	22	3000

Automatic Advance—IGW-4189

Start	350	0	700
2	560	4	1120
5	875	10	1750
8	1190	16	2380
11	1500	22	3000

Vacuum Spark Control (IGW-4189 Distr.) Auto-Lite Model VC-4010 Unit: Separate unit mounted on hold-down plate and linked to advance arm. Provides additional advance for all speeds above idling except for acceleration and wide open throttle operation when spark retarded by return spring within unit.

Vacuum Advance (for IGW-4189 Distr.)

Distr. Degrees	Eng. Degrees	Vacuum (" of HG)
Start	0°	3½"
2°	4°	5¾"
5°	10°	9¼"
8°	16°	12¾"
10°	20°	15"

Distributor Removal: Mounted on right hand side of engine. To remove, take out hold-down screw in advance arm.

Installation Note—If crankshaft has been turned with distributor off engine, install distributor as follows: Turn crankshaft to cylinder #1 firing position (see Timing), turn distributor rotor to #1 distributor cap segment position (see diagram), insert distributor drive shaft in drive housing on engine,

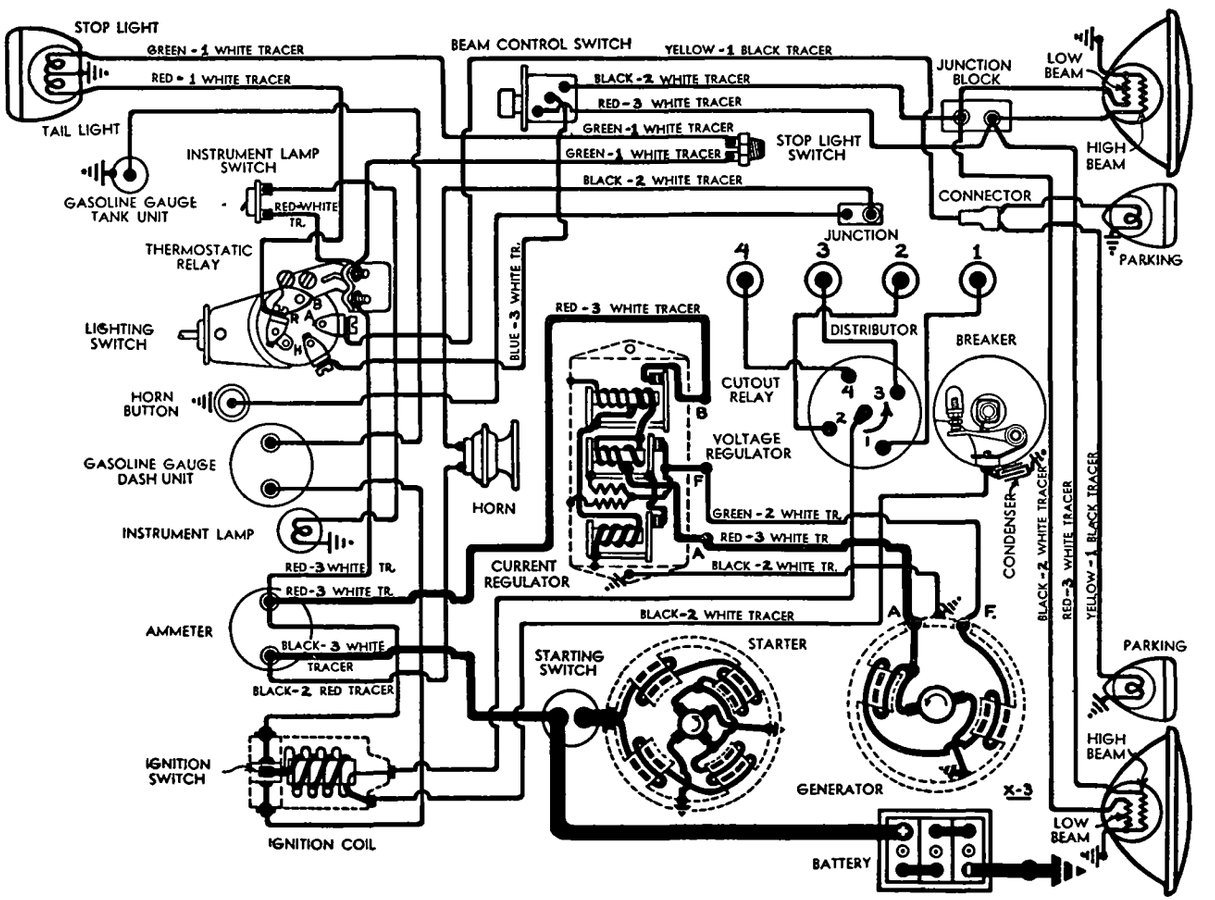

FIRST CIVILIAN JEEP

rock shaft back and forth until drive lug on end of shaft enters slot in drive coupling, push distributor down into place and install hold-down screw. Check Ignition Timing.

CAUTION—If Oil Pump removed, refer to Oil Pump Installation directions in Willys Shop Notes.

IGNITION TIMING

Std. Setting	Flywheel Degs.	Piston Position
72 Octane Fuel	5° BTDC	.010" BTDC
68 Octane Fuel	At TDC	.000" TDC

NOTE—Set timing as specified in accordance with Octane Rating of fuel customarily used.

►**Timing Mark Change**—Flywheel marked "5°" (replacing "IGN/") starting Engine No. 175402.

Timing—With #1 piston on compression, turn crankshaft until piston reaches firing position (see Timing Table above), with flywheel mark "IGN" (5° BTDC setting) or "TC" (At TDC setting) centered in inspection hole in right front face of flywheel housing below starter. Loosen advance arm clamp bolt, rotate distributor until contacts begin to open (press rotor clockwise to eliminate backlash), tighten clamp bolt. See that rotor is at #1 segment in distributor cap and check spark plug cable connections (see diagram).

Timing (Using Timing Light—Engine Idling)—This method recommended by manufacturer. Direct timing light on flywheel, idle engine (engine must be warm), adjust distributor (as directed above) until timing mark is centered in inspection hole.

CARBURETOR

Carter WO Type 636SA superseding 596S & 636S. 1⅛" Single Barrel, downdraft, with manual choke control (interconnected with throttle to provide fast idle).

NOTE—Carburetor may be identified by Casting Number 458 (596S), 505 (636S) on face of flange.

See Carburetor Section for complete data.

Idle Adjustment—With engine warm (choke valve wide open and fast idle inoperative), set throttle stopscrew for idling speed of 600 Engine RPM or 8 MPH. Turn idle adjusting screw out until engine begins to roll, then turn screw in until engine fires smoothly. Final setting of idle screw should be 1-2 turns open. Recheck idle speed.

Accelerating Pump—No seasonal adjustment.

Float Level—⅜" from top of float at free end to machined surface (gasket seat) on cover with valve seated. To check, invert assembly and allow float to hang freely. Do not compress spring in valve stem.

Metering Rods & Jets—*See Carter Jet Table in Carburetor Section for complete data.*

Fast Idle: Choke valve interconnected with throttle valve to open throttle to fast idle position when choke in use. No adjustment required.

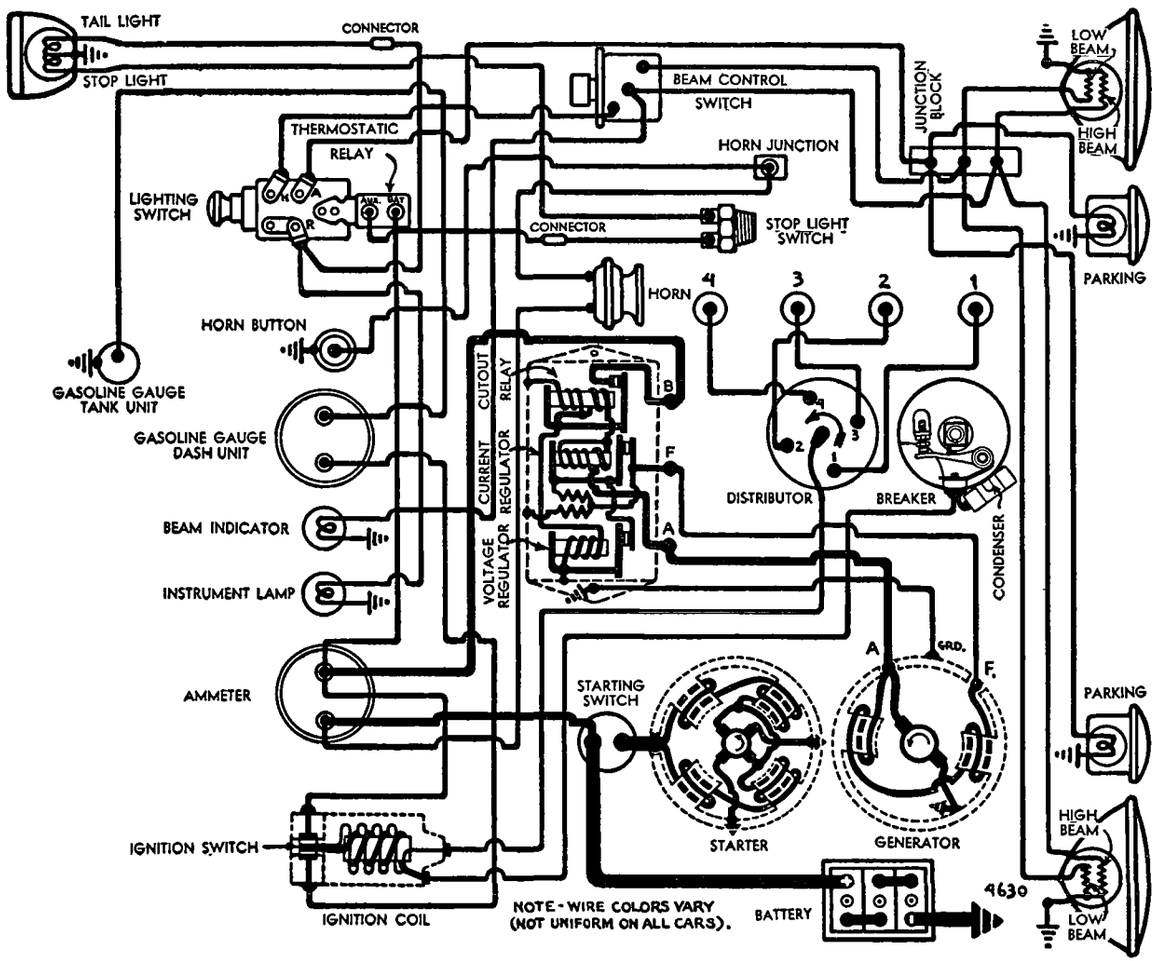

LATER CIVILIAN JEEP

CARB. EQUIPMENT

Governor (Special Equip.): King-Seeley "Handy" Model 26510-400, Monarch, or Novi Governors. Centrifugal types. Mounted on left front corner of cylinder head and driven by special belt from the crankshaft.

Setting—1000 to 2600 RPM of engine in steps of 200 RPM (in accordance with position of dash control lever which has nine settings).

Adjustment—*See Willys Shop Notes for directions.*

Air Cleaner: Oakes Model No. 613300. Oil-bath type.

Servicing—Clean and refill oil reservoir to indicated level with same grade engine oil used in crankcase at 2000 mile intervals (when crankcase drained), or more often if required by operating conditions (twice daily for extremely dust field conditions).

Fuel Pump: Carter M-587-S or AC Type AF No. 1538886 Diaphragm type (Std.), AC Type AM No. 1537409 combination fuel-and-vacuum pump (Optl.).

Replacement Pump—AC No. 572 (AF), 7409 (AM). ***See Carburetion Equipment Section for data.***

Pressure—3 lbs. (4½ lbs. max. at 1800 RPM).

Gasoline Gauge: Auto-Lite (Motometer) elec. type.

Dash Unit—Auto-Lite No. NG-10764D.

Tank Unit—Auto-Lite No. NG-10762T.

See Carburetion Equipment Section for data.

CRANKCASE VENTILATOR

Sealed Positive Ventilation Type. Consists of Air Intake Pipe from Air Cleaner to Crankcase Oil Filler (Oil Filler Cap has gasket and must seat tightly to prevent air leaks at this point) and Air Outlet Pipe from Valve Chamber Cover to Intake Manifold. There is a Vacuum Valve at the manifold connection and this valve must close at idling speed for satisfactory engine idling performance.

Servicing—Make certain that connecting pipes are tight and that oil filler cap gasket seals cap tightly. Remove and clean control valve when tuning engine or whenever system does not operate satisfactorily.

Vacuum Control Valve: Remove control valve by disconnecting pipe at valve chamber cover and unscrewing valve from manifold, clamp valve in vise and remove top of housing, withdraw valve and spring. Clean valve and valve seat thoroughly. Reassemble and re-install unit.

CONTINUED N NEXT PA E

CONTINUED FR M PRECEDING PA E

BATTERY

Auto-Lite (U.S.L.) Type PN-15. 6 volt, 15 plate, 100 Ampere Hour capacity (20 hour rate).
Starting Capacity—120 amperes for 20 minutes.
Zero Capacity—300 amperes for 3.2 minutes. Five-second voltage 4.15 volts.
Grounded Terminal—Negative (—) terminal grounded to frame at right end of front cross-member.
Engine Ground—Strap connector between right front engine mounting leg (under generator) and engine mounting bracket on frame side rail.
Dimensions—Length 8 15/16". Wid. 7⅛". Hgt. 8⅝".
Location—In engine compartment on right side.

STARTER

Auto-Lite Model MZ-4113. Armature No. MZ-2089.
Drive—Special type Bendix Drive No. A2233.
Rotation—Counter-clockwise at commutator end.
Brush Spring Tension—42-53 ozs. (new brushes).
Cranking Engine—185 RPM, 150-175 amps., 5 volts.

Performance Data

Torque		RPM	Volts	Amperes
0	ft. lbs.	4300	5.5	70
.65	"	2500	5.5	100
2.55	"	1325	5.0	200
4.95	"	750	4.5	300
7.65	"	220	4.0	400
7.8	"	Lock	3.0	420
11.7	"	Lock	4.0	560

Removal: Starter flange mounted on right front face of flywheel housing. To remove, take out two flange mounting capscrews and one bolt in bracket at commutator end.
Starting Switch: Auto-Lite Model SW-4015. Mounted under floor to right of accelerator pedal. Operated manually by button on toeboard.

GENERATOR

Auto-Lite Model GDZ-4817-A. Armature GDZ-2006F. Two brush, shunt type with external vibrating voltage and current regulation. Ventilated by fan on drive pulley.
Maximum Charging Rate—35 amperes, 8.0 volts, 1900 RPM. Actual charging rate controlled by regulator and dependent on battery condition.
Charging Rate Adjustment—None. See Regulator.

Performance Data

Cold			Hot		
Amperes	Volts	RPM	Amperes	Volts	RPM.
0	6.4	925	0	6.4	1000
5	6.65	1060	5	6.65	1150
10	6.85	1200	10	6.85	1290
15	7.05	1340	15	7.05	1430
20	7.3	1480	20	7.3	1590
25	7.55	1620	25	7.55	1750
30	7.8	1760	30	7.8	1980
35①	8.0	1900	35	8.0	2250

①—Current Regulator setting. See Regulator data.
Rotation—Counter-clockwise at commutator end.
Brush Spring Tension—35-53 ozs. (new brushes).
Field Current—1.6-1.78 amperes at 6.0 volts.
Motoring Current—4.16-4.60 amperes at 6.0 volts.
Removal: Conventional pivot mounting at right front of engine. To remove, take out clamp bolt above generator and two pivot bolts under generator. Slip off drive belt and lift generator out.
Belt Adjustment: Loosen clamp and pivot bolts, swing generator out away from engine until belt can be deflected 1" midway between generator and fan pulleys with thumb pressure.

REGULATOR

Auto-Lite Model VRP-4007C-2. Voltage-Current Type. Regulator case mounted on right side in engine compartment. Consists of Cutout Relay and vibrating type Voltage and Current Regulator units.
See Electrical Equipment Section for complete data.

Cutout Relay

Cuts In—6.4-7.0 volts (set to 6.4-6.6 volts).
Cuts Out—4.1-4.8 volts (approx. 4-6 amps. disch.).
Contact Gap—.015" minimum.
Air Gap—.031-.034" with contacts open measured at hinge end of core.

Voltage Regulator

Setting—7.35 volts (7.2-7.5) at 70°F. See Electrical Equip. Section for settings at other temperatures.
To Check—Connect ammeter in charging line at regulator "B" terminal (use short heavy leads), connect voltmeter between "B" terminal and ground. Operate generator at speed equivalent to 30 MPH. charging a full charged battery until voltage is steady (charging rate approx. 10 amperes). Note voltmeter reading which should agree with Setting given above.
To Adjust (with cover removed)—Change regulator armature spring tension by bending lower spring hanger slightly. Increase tension to increase operating voltage, decrease tension to lower voltage. See Electrical Equipment Section for complete adjustment directions.
Contact Gap—.012" min. (armature against stop pin).
Air Gap—.048-.052" with contacts just opening.

Current Regulator

Setting—34-36 amperes (marked "35" on cover).
To Check—Connect test meters as for voltage check (above). Operate generator at speed equivalent to 30 MPH. charging battery, turn on car lights and accessories or connect load (bank of headlamp bulbs, etc.) between ammeter and battery so that generator charges at peak rate and Current Regulator operates. Note ammeter reading which should agree with Setting given above.
To Adjust—Same as for Voltage Regulator above.
Contact Gap & Air Gap—Same as Voltage Regulat'r.

LIGHTING

Headlamps: Corcoran-Brown "Sealed Beam" type. Upper and lower beams controlled by Beam Selector Switch on toeboard.
See Electrical Equipment Section for complete data.
Headlamp Adjustment—Aim upper beam straight ahead (hot spot center exactly 3" below lamp center height at 25 feet).

Switches

Lighting—Willys No. 641622.
Beam Selector—Willys No. 640260.
Instrument—Willys No. 635737 (first cars only). Controlled by lighting switch on later cars.
Stop Light—Willys No. A-1271.

Bulb Specifications

Position	Candlepower	Mazda No.
Headlamps	45-35 watt	Sealed Beam
Parking	3	63
Beam Indicator	1	51
Instrument	3	63
Stop & Tail	21-3	1158

MISC. ELECTRICAL

LIGHTING CIRCUIT BREAKER: Mounted on back of lighting switch. Protects lighting circuits by limiting current to 30 amperes. Vibrating thermostatic type. No adjustment.
HORNS: Sparton Model B-10419, Schwarze, or Auto-Lite Model HA-4033, HA-4037. Micro-vibrator type. **Horn Current**—8 amperes.

ENGINE

ENGINE SPECIFICATIONS: Own Make. Four cylinder, "L" Head type. Cylinder block and crankcase cast enbloc. Cylinders offset from center-line of crankshaft toward camshaft side of engine.
Bore—3⅛" (3.125-3.127"). **Stroke**—4⅜".
Displacement—134.2 cubic inches.
Rated Horsepower (SAE)—15.63
Developed Horsepower—60 at 4000 RPM.
Compression Ratio—6.48-1 Std. Cast Iron Head.
NOTE—7.0-1 Cylinder Head is optional.
Compression & Vacuum Reading—*See Tune-up data.*
ENGINE REMOVAL: *See Willys Shop Notes.*
ORIGINAL BORE & PISTON SIZES: *See Willys Shop Notes.*
ORIGINAL BEARING SIZES: *See Willys Shop Notes.*
TIGHTENING TORQUES: *See Willys Shop Notes.*
CYLINDER HEAD INSTALLATION: *See Willys Shop Notes.*
PISTONS: Lo-Ex aluminum alloy (Lynite, Bohn, Permite, or Arrowhead), "T" slot, Cam ground, tin-plated type with heat insulation groove above top piston ring. **Length**—3¾".
Weight—12.5 ozs. without rings or pin.
Removal—Pistons and rods removed from above.
Clearance—Top Land .017-.019". Skirt .004".
Replacement Pistons: Finished pistons furnished .005", .015", .025", .035", .045" Oversize.
CAUTION—Pistons must not be "lapped in." This will destroy tin-plated surface.
Fitting New Pistons: Use .003" feeler stock, ¾" wide, inserted between piston and cylinder wall on opposite side from "T" slot. Pull required to withdraw feeler must be within 5-10 lbs. at 70°F.
Installing Pistons: "T" slot toward valve (left) side of engine (opposite side from oil spray hole in connecting rod lower end).
PISTON RINGS: Two compression, one oil control ring per piston, all above pin (piston has narrow heat insulation groove above top ring groove). Oil ring groove drilled with oil drainage holes.

Ring	Width	End Gap	Side Clearance
Compression	3/32"	.008-.013"	.0005-.001"
Oil Contr.	3/16"	.008-.013"	.001-.0015"

Installing Rings: Install compression rings with mark "TOP" (on side) toward top. Rings have taper face and must be installed correctly. Top ring inner bevel edge must be up.
Replacement Rings: For Rebored Cylinders—Furnished .005", .015", .025", .035", .045" Oversize.
Service Type Rings (for cylinders not rebored) furnished Std.—.009", .010-.019", .020-.029", .030-.039", .040-.049" Oversize.
PISTON PIN: Diameter .8117-.8119". **Length** 2 25/32". Pin is locked in connecting rod by clampscrew.
NOTE—On new pistons, pin hole is .8118-.8120" in

ENGINE

C NTINUED FROM PRECEDIN PAGE

diameter and is diamond-bored and tin-plated.
Pin Fit in Piston—.0001-.0009" clearance or light thumb push fit with piston and pin at 70°F.

Replacement Pins: Furnished Standard and .001", .002", .003" Oversize.

CONNECTING ROD: Length 9 3/16". Weight 34 ozs. Crankpin Journal Diameter—1 15/16" (1.9393"). *See "Original Bearing Sizes" in Willys Shop Notes.*

Lower Bearing—Steel-backed, babbitt-lined, replaceable type. CAUTION—Oil spray hole in upper half of bearing must line up with oil spray hole in rod.

Clearance—.0005-.0025". **Sideplay**—.005-.009".

Bearing Adjustment: None (no shims). Replace bearings. Do not file connecting rods or bearing caps. *See Willys Shop Notes for "Palnut" installation.*

NOTE—Replace bearings when clearance exceeds .005" or sideplay exceeds .013".

Replacement Bearings: Furnished Standard & .010", .020", .030" Undersize.

Installing Rods: Lower bearing offset. Install rods with short side of bearing toward nearest main bearing or toward front of engine (#1, 3), toward rear (#2, 4). Oil spray hole in lower end of rod toward right of engine (away from camshaft) on all rods.

CRANKSHAFT: Three bearing type with integral counterweights (up to CJ-2A Jeep Engine Number 55137), removable counterweights (after above no.).

Journal Diameters—2.3340" (all bearings). *See "Original Bearing Sizes" in Willys Shop Notes.*

Bearings—Steel-backed, babbitt-lined, replaceable type. Bearing shells are dowelled in bearing caps and crankcase.

Clearance—.001-.0025" (.0005-.001" new).
NOTE—Replace bearings when clearance exceeds .006" or when endplay exceeds .018".

Bearing Adjustment: None (no shims). Replace bearings. Do not file bearing caps. *See Crankshaft Servicing instructions in Willys Shop Notes.*

NOTE—Engine must be removed from chassis for bearing replacement and crankshaft servicing. *See Engine Removal Instructions in Willys Shop Notes.*

Replacement Bearings: Furnished Standard & .010", .020", .030" Undersize.

End Thrust: Taken by flanged faces of #1 (front) bearing. Adjustable by adding or removing shims between crankshaft sprocket thrust washer and sprocket. NOTE—Crankshaft sprocket must be removed with a gear puller in order to make endplay adjustments. Adjusting shims furnished .002", .004", .010" and .030" thick.

Endplay—.004-.008".

CAMSHAFT: Four bearing. Non-adjustable chain drive (first), helical gear drive (later).

Journal Diameters—#1, 2.188"; #2, 2¼"; #3, 2 3/16"; #4, 1¾".

Bearings—Removable steel-backed, babbitt-lined bushing (front), machined in crankcase (all others).

Clearance—.002-.0035". **Service limit** .006" (front), .008" (all others).

Camshaft Removal—*See Willys Shop Notes for data.*

End Thrust (for Engines with Timing Chain Drive): End thrust taken by thrust washer behind camshaft sprocket and spring loaded plunger in forward end of camshaft which bears against stationary thrust pin on chain case cover. NOTE—Make certain that plunger and spring are in place when installing chain case cover.

End Thrust (for Engines with Timing Gear Drive): Taken by thrust plate assembled behind gear with a spacer assembled behind plate. If required, a thin shim can be installed behind spacer if too little clearance, or spacer can be dressed to provide greater clearance.

Endplay—.003-.0055".

►**Timing Case Cover (& Front Oil Seal) Change:** *See "Crankshaft & Main Bearings" in Willys Shop Notes.*

►**Timing Chain (to CJ-2A Jeep Engine No. 44417):** Link-Belt, non-adjustable. Width 1". Pitch ½". Length 23½" or 47 links.

►**Timing Gears (after CJ-2A Jeep Engine No. 44417):** Crankshaft gear cast iron. Camshaft gear Fibre with steel hub.

►**CJ-2A Jeep Engines with Timing Gears carry engine mark "J" ahead of engine number.**

Timing Gear Backlash—.000-.002".

Camshaft Setting (First Cars with Timing Chain): With #1 piston on top dead center, mesh chain with marks on sprockets adjacent and in line with a straightedge across the shaft centers.

NOTE—Camshaft sprocket mounting screw holes offset to insure correct position of sprocket on shaft.

Later Cars (With Timing Gears)—Mesh gears with marked tooth of camshaft gear opposite marked space between gear teeth on crankshaft gear.

VALVES:	Head Diameter	Stem Diameter	Length
Intake	1 17/32"	.373"	5¾" (overall)
Exhaust	1 15/32"	.3725"	5¾" (overall)

	Seat Angle	Lift	Stem Clearance
Intake	45°	23/64"	.0015-.00325"①
Exhaust	45°	23/64"	.002 -.00375"②

①—New. Replace when clearance exceeds .0045"
②—New. Replace when clearance exceeds .005"

Valve Guides: Removable type. Remove guides from above with puller, install new guides with driver or press guides down in place to following dimensions:

Intake Guide—Top of guide 1 5/16" below top face of block. The shorter smaller-diameter section end of the guide should be up.

Exhaust Guide—Top of guide 1" below top face of block. Taper end (counter-bored end) of guide should be up.

Valve Springs: Install springs with closed-coil end up toward cylinder block. Spring free length 2½".

	Spring Pressure	Spring Length
Valve Closed	50 lbs.	2 7/64"
Valve Open	116 lbs.	1 3/4"

Valve Lifters: Mushroom type operating in reamed holes in block. Serviced by installing oversize lifters. Lifters furnished .004" Oversize.

Lifter Diameter—.6240-.6245".

Lifter Clearance—.0005-.002".
NOTE—Camshaft must be removed for lifter removal.
See Camshaft Removal instructions in Willys Shop Notes.

VALVE TIMING

Tappet Clearance: .014" All Valves, H t or Cold.
NOTE—Tappet adjusting screws are "self-locking" type (no locknuts).

Valve Timing: See Camshaft Setting (above).
Intake Valves—Open 9° BTDC. Close 50° ALDC.
Exhaust Valves—Open 47° BLDC. Close 12° ATDC.

►**Timing Mark Change (starting CJ-2A Jeep Engine No. 175402)**—Flywheel marked "5°" (for 5° BTDC.) and "T.C." (top dead center). "I.O." mark not carried and intake opening point on these engines must be estimated.

Valve Timing Check—Set tappet clearance #1 intake valve at .020". This valve should open with #1 piston 9° or .039" before top dead center with flywheel mark "I.O." centered in inspection hole on right front face of flywheel housing below starter. Reset tappet clearance to .014" running clearance.

LUBRICATION

Engine Oiling System: Pressure to main and connecting rod bearings, camshaft bearings, and timing chain or timing gears. Oil pump mounted externally on left hand side of crankcase.
Crankcase Capacity—4 qts. (refill), 5 qts. (dry or whenever oil filter drained).

Normal Oil Pressure—40-50 lbs. (35 lbs. at 30 MPH., 10 lbs. at idling speed of 600 RPM).

NOTE—On first Universal Jeep, 50 lbs. gauge pressure equivalent to 25 lbs. actual pressure (oil pressure relief valve opens at 25 lbs.).

►**Oil Pressure Regulator (Early Universal Jeep)**—Under plug on oil pump cover. Opens at 25 lbs. (50 lbs. gauge pressure). Adjustable by adding or removing shims located above spring in plug.

►**Oil Pressure Regulator (Later Universal Jeep)**—Under plug on side of pump housing. Opens at 40 lbs. Adjustable by adding or removing shims located above spring in plug.

►**Oil Pump (up to CJ-2A Jeep Engine No. 44417):** Planetary gear type mounted on left side of crankcase.
Oil Pump Servicing—*See Willys Shop Notes.*

►**Oil Pump (after CJ-2A Jeep Engine No. 44417):** Rotor type pump mounted on left side of crankcase.
Oil Pump Servicing— *See Willys Shop Notes.*

Oil Filter: Purolator. On cylinder head bracket at right front corner of cylinder head with oil outlet connected to top of timing chain cover.
CAUTION—Filter should be drained at each crankcase oil change (2000 mile intervals) and filter element replaced at 8000 mile intervals for normal service.

Oil Pressure Gauge: Auto-Lite No. G-10763. Bourden tube type (not electric).

COOLING

Cooling System: Pressure type with pressure valve (relief valve) in filler cap.
Capacity—11 quarts with standard radiator.
NOTE—Special "Hot Climate" radiator Optl.
Pressure Valve—AC No. 846709 (Radiator Filler Cap). Opens at 3¾ lbs. (3¼-4¼ lbs.).

Water Pump: Centrifugal, packless, ball bearing type. *See Water Pump Section for complete data.*

Pump Removal—Loosen drive belt adjustment and remove belt, disconnect hose, remove pump mount-

CONTINUED N NEXT PA E

CONTINUED FROM PRECEDING PAGE

ing screws. Lift ut pump and fan assembly.

Belt Adjustment—*See Generator Belt Adjustment.*

Thermostat: In utlet elbow on cylinder head. **Setting**—Starts to open 145-155°F. Fully open 170°F.

Temperature Gauge: Auto-Lite No. H-10765. Bourden tube type (not electric).

CLUTCH

Auburn (Atwood) Model 8501-23 (with Borg & Beck Driven Member). Single plate, dry disc type. *See Clutch Section for complete data.*

Facings—Woven (pressure plate side), Molded Asbestos (flywheel side). I.D. 5⅛". O.D. 8½". Thickness .135" (.132-.138").

Pedal Adjustment: Set pedal free travel to 1¼" (to provide 1/16" clearance between release bearing and clutch release levers). To adjust, loosen locknut on clutch fork connecting cable clevis at cross-shaft connection, screw cable end in or out of clevis, tighten locknut.

Removal: Remove Transmission & Transfer Case Assembly (see Transmission Removal below), remove flywheel bell housing. Mark clutch pressure plate and flywheel to insure re-installation in same relative position. Take out mounting screws in clutch cover flange, turning all screws out evently to relieve spring pressure, remove clutch assembly and driven member.

TRANSMISSION

Warner Model AS1-T90C (Floor Mtd. Gearshift), AS3-T90A (Steering Col. Mtd. Gearshift): Three-speed type. Constant-mesh, synchro-mesh, helical gears (Second & High), sliding spur gear (Low & Reverse). *See Transmission Section for complete data.*

Transfer Case: Spicer Model 18. Two-speed auxiliary transmission and front-wheel drive unit mounted on rear of transmission case. Separate control levers provided for Low-High range (right hand lever), and front-wheel drive engagement (left hand lever). *See Transmission Section for complete data.*

Transmission Control (AS3-T90A Transmission only): Remote control type with gearshift lever mounted on steering column. *See Transmission Section for complete data.*

Removal: Transmission and transfer case are removed as an assembly. Disconnect front and rear propeller shafts at universal joints (NOTE—If equipped with Power Take-off drive, remove front end of power take-off propeller shaft assembly). Disconnect speedometer cable at transfer case, brake cable, transmission shift rods at transmission case lev rs, and clutch release cable at cross-shaft bell-crank. Place support jacks under engine and transmission, remov transfer case rubber snubber bolt nut (on right side) and rear mounting bolt nuts at cross-member under transmission case. Remove floor board inspection plate. Drain radiator and loosen upper radiator hose. Remove transfer case shift lever pivot pin screw, remove pin and shift levers (NOTE—If Power Take-off used, remove power take-off shift lever plate screws and lift lever out). Remove bolts holding center cross-member at frame side rails and remove cross-member (CAUTION—with cross-member removed, engine and transmission weight will rest on support jacks). Remove bolts holding transmission on bell housing, force transmission to right until ball stud end can be disengaged from end of clutch control cross-shaft. Lower support jacks under engine and transmission and slide transmission and transfer case assembly to rear until clutch shaft clears bell housing, remove assembly from beneath car.

UNIVERSALS

Front & Rear Drive Propeller Shaft Joints: Spicer needle roller bearing types as follows:

1261-102X.....Transmission End—Front Drive
1261-1X.....Transmission End—Rear Drive
1268-104X ..... Axle End—Front & Rear

See Universals Section for complete data.

Front Axle Shaft Joint: Bendix or Rzeppa Constant-velocity type. One joint used at outer end of each shaft (within steering knuckle housing). *See Universals Section for complete data.*

Power Take-off Propeller Shaft Joints: Detroit Ball-and-Trunnion type. Two used (one at each end of shaft—no splined joint used). *See Universals Section for complete data.*

FRONT AXLE

Spicer (Salisbury) Model 25. Full-floating, hypoid gear type. NOTE—Differential Assembly (Ring and Pinion Gear Assembly) is identical with Full-floating Rear Axle and is serviced in same manner. *See Spicer (Salisbury) Full-Floating Rear Axle in Rear Axle Section for complete data.*

Ratio—5.38-1 Std.

Backlash—.005-.007". Shim adjustment.

Removal: Support front end of car securely with a chain hoist, remove front wheels. Disconnect front shock absorbers, front brake line (at frame connection), and steering linkage (at idler lever on frame front cross-member). Disconnect propeller shaft by removing universal joint "U" bolts at axle end of shaft. Place support jacks under axle housing so that springs relieved of weight, remove nuts on spring center clip "U" bolts, remove bolts at rear ends of springs and lower the springs, remove axle assembly from beneath the car.

INSTALLATION CAUTION—Bleed brake lines after axle re-installed and brake lines connected.

Spring Shackle & Pivot Pin Installation—*See "Spring Shackles" in Willys Shop Notes.*

Axle Shaft & Universal Joint Assy Removal: Remove wheel, hub cap, axle shaft cotter pin, nut, and washer. Remove drive flange capscrews and washers, remove flange with a puller. Bend lip on bearing nut lockwasher out and remove locknut, lockwasher, adjusting nut, and bearing lockwasher. Remove wheel hub and bearing assembly (CAUTION—use care not to damage oil seal). Disconnect brake tube, take out mounting screws on backing plate, remove backing plate and wheel spindle. Pull axle shaft and universal assembly out of axle housing.

INSTALLATION CAUTION—Adjust front wheel bearings and bleed brake line when installation completed.

Steering Knuckle Bearings: The steering knuckle is mounted on two "stub" kingpins with Timken roller bearings in ball ends of axle housing. Bearings are adjustable by adding or removing shims located under kingpin bearing caps (upper cap integral with steering arm). Disassemble bearings as follows:

Disassembly—With Axle Shaft & Universal Joint out, remove 8 screws holding oil seal retainers in place on inner face of knuckle support, remove oil seal retainer halves. Remove four nuts and lockwashers on lower bearing cap, remove bearing cap and bearing adjusting shims (under cap). Remove four nuts and lockwashers on upper bearing cap (steering arm), remove brake hose shield, steering arm, and bearing adjusting shims (under steering arm). Remove steering knuckle (CAUTION—Do not allow lower bearing cone and roller assembly to fall when knuckle is pulled off).

Bearing Adjustment—Install steering knuckle on axle housing (reverse order of disassembly directions) **without the oil seal** placing one each of the following shims under both the upper and lower bearing caps—.003", .005", .010", .030" (total shim thickness at each end .048"), tighten bearing cap stud nuts securely. Then check bearing tension by hooking spring scale in tie rod hole at end of steering arm and noting pull required to turn steering knuckle on axle end. This pull or bearing tension should be 25-35 in. lbs. with oil seals out. Adjust by adding or removing shims under bearing caps. CAUTION—Total shim thickness under upper and lower bearing caps must be equal. Shims furnished in thicknesses of 003", .005", .010", .030".

Oil Seal Replacement—Felt type mounted in metal retainers bolted on inner face of steering knuckle. When replacing oil seal, make certain that spherical surface of axle housing is not scored or scratched (smooth down any roughness with emery cloth), bolt seal retainer halves on housing using lockwashers under mounting screw heads, make certain that felts have good fit at center joint.

Wheel Bearing Adjustment: Jack up front wheel, remove hub cap, axle shaft nut and washer, driving flange capscrews, and flange (use puller on flange). Bend lip of adjusting nut lockwasher back to free nut, remove locknut. Tighten adjusting nut until wheel binds (turn wheel while tightening nut), back off nut 1/6 turn or until wheel rotates freely. Replace lockwasher and locknut, tighten locknut securely and bend ear of lockwasher up against nut to prevent loosening in service. Check adjustment of bearings by grasping front and rear of tire and shaking wheels from side to side. A barely perceptible shake should be felt in the bearings. Install flange shims and flange. On cars with Bendix Universals, check axle shaft endplay (below) before completing assembly. NOTE—On cars with Rzeppa Universals, disregard endplay note below and install shim pack of .060" under flange.

Axle Shaft Endplay Check (With Bendix Universal Joints)—Tighten the flange nut (do not install lockwasher), swing wheel to maximum left or right position with punchmark on end of axle shaft straight up or down. Back off flange nut until clearance between nut and flange is .050" (measure with feeler gauge). Tap end of shaft with a soft hammer (shaft will move in an amount equal to the endplay). Recheck clearance between nut and flange with a feeler gauge. **Subtract this measured clearance from the original .050" clearance.** If resulting figure is less than .015", add shims to shim pack under flange, if figure is more than 035", remove shims from shim pack under flange. With correct thickness of shim pack under flange, install axle shaft lockwasher, nut, and cotter pin.

REAR AXLE

FULL-FL ATIN TYPE
UP TO SERIAL NUMBER 13453

Spicer (Salisbury) Model 23-2. Full-floating, hypoid gear type with Hotchkiss Drive. NOTE—This axle used on first Universal Jeep models.

See Rear Axle Section for complete data.

Ratio—5.38-1 Std.

Backlash—.005-.007". Shim adjustment.

Removal: Support rear end of car securely with a chain hoist and support placed under frame ahead of rear springs, remove rear wheels. Disconnect rear shock absorbers, rear brake line (at frame connection), and propeller shaft by removing universal joint "U" bolts at axle end of shaft. Place support jacks under axle housing so that springs relieved of weight, remove nuts on spring center clip "U" bolts, remove pivot bolts at front end of springs and lower the springs, remove axle assembly from beneath the car.

INSTALLATION CAUTION—Bleed brake lines after axle re-installed and brake lines connected.

Spring Shackle & Pivot Pin Installation—*See "Spring Shackles" in Willys Shop Notes.*

Axle Shaft Removal: Remove six capscrews and washers holding axle shaft driving flange on wheel hub, thread two of these screws into "extra" holes (between regular mounting screw holes) and turn screws up evenly to pull axle shaft out, withdraw axle shaft from housing.

Wheel Bearing Adjustment: Remove the six axle shaft flange screws, turn two of these screws into "extra" holes in flange to start shaft, withdraw axle shaft. Adjust bearings in same manner as front wheels (above). When re-installing axle shaft, make certain that gasket installed under flange.

REAR AXLE

SEMI-FLOATING TYPE
After SERIAL NUMBER 13453

Spicer (Salisbury) Model 23-1 or 41-2. Semi-floating, hypoid gear type with Hotchkiss Drive.

See Rear Axle Section for complete data.

Ratio—5.38-1.

Backlash—.004-.008". Shim adjustment.

Removal: Support rear end of car securely with a chain hoist and supports placed under frame ahead of rear springs. Remove wheels. Disconnect rear shock absorbers, rear brake line (at frame connection), and rear brake cables and conduits. Disconnect propeller shaft at rear universal joint. Place support jacks under axle housing so that springs relieved of all weight, remove nuts on spring center clip "U" bolts, remove pivot bolts on front end of springs and lower springs, remove axle assembly from beneath car.

INSTALLATION CAUTION—Bleed brake lines after axle re-installed and brake lines connected.

Spring Shackle & Pivot Pin Installation—*See "Spring Shackles" in Willys Shop Notes.*

Axle Shaft Removal: Remove wheel, hub cap, and axle shaft nut. Use wheel puller to remove wheel hub. Disconnect brake line at wheel cylinder and parking brake cable. Take out bolts mounting backing plate, remove dust shield, oil seal and brake backing plate (CAUTION—Do not lose wheel bearing adjusting shims located between backing plate and axle housing flange). Pull axle shaft and bearing assembly out of the housing.

Wheel Bearing Adjustment: Bearing endplay controlled by shims between backing plate and axle housing flange. To adjust, remove wheel hub and backing plate (see Axle Shaft Removal above), add or remove shims between backing plate and housing flange for correct endplay. NOTE—In original production, shims used only at left hand end of axle housing. Shims may be installed at right hand end of axle housing, if required, for correct clearance with new axle shaft.

Endplay—.001-.003".

SHOCK ABSORBERS

Delco—Model 1030-K (Front), 1031-K (Rear).

Monroe—Model K-11436 (Front & Rear).
Direct acting, hydraulic types. Shock absorbers on first cars are adjustable.

See Shock Absorber Section for complete data.

Adjustment: Remove mounting bolt at lower end, fully collapse shock absorber by pressing up on lower end until adjusting key within unit engages slot in adjusting plate (can be determined by feel), turn unit in clockwise direction until limit of adjustment is reached (full range of adjustment is four turns), back off adjustment by turning unit counter-clockwise **exactly two turns** for standard setting. CAUTION—See that adjusting key does not slip out of engagement with slot while making adjustment.
NOTE—Later type shocks not adjustable.

Refilling: Requires dismantling of unit. ***See Shock Absorber article in Shock Absorber Section for data.***
NOTE—Later type shocks not refillable.

FRONT SUSPENSION

Front Axle: Spicer (Salisbury) Model 25. Special full-floating driving unit. ***See Front Axle data (above).***

Front Suspension: Special front-wheel drive unit with semi-elliptic springs. Steering knuckle mounted on taper roller bearings carried on two stub shafts in spindle housing.

Endplay—.001-.003".

Steering Knuckle Bearing Servicing & Adjustment: ***See Front Axle data (above).***

Kingpin Inclination—7½° crosswise.

Caster—3°. No adjustment. If caster incorrect, check entire front end and correct by installing new parts.

Camber—1½°. No adjustment. Correct by installing new parts. Do not attempt to correct camber by cold bending or heating of parts.

Toe In—3/64-3/32" (1/32" each wheel). To adjust, first set each front wheel straight ahead (see Note below), then set toe in by shortening each tie rod approximately ½ turn. This procedure necessary to maintain correct position of steering idler arm.

NOTE—To set front wheels straight ahead, first set tie rod end of steering bell crank (idler lever on frame front cross-member) exactly at right angles to front axle. Check front wheels by using a straight edge or sighting along rear and front wheels. Adjust each tie rod (loosen end clamp bolts and turn rod) until front wheels are exactly straight ahead. Then make toe in adjustment as directed above. Tie rod lengths between ball end centers should be 20⅞" (left), 25⅝" (right).

Steering Geometry—With inner wheel turned 20°, outer wheel should be turned exactly 18°30'.

STEERING GEAR

Steering Gear: Ross Model T-12. Cam-and-Twin Lever type.

See Steering Gear Section for complete data.

BRAKES

Service Brakes: Bendix (Lockheed) Four wheel, Hydraulic, Double anchor type. Hand lever applies independent brake on drive shaft at rear of transfer case.

See Brake Section for complete data.

Drum Diameter—9".

Lining—Width 1¾". Thickness .206-.216". Length per shoe 10 7/32" (forward shoes), 6 39/64" (rear shoes). NOTE—Manufacturer recommends use of new or replacement shoe assemblies with factory-installed linings.

Clearance—.008" toe, .005" heel, for each shoe.

Hand Brake: Mechanical type. Two-shoe, internal expanding type with drum mounted on drive shaft at rear of transfer case.

Drum Diameter—8".

Lining——Woven type. Width 1¾". Thickness .206-.216". Length per shoe 8⅛".

Hand Brake (Adjustment for Wear)—Make certain that hand brake cable and linkage operate freely. Lubricate if sticking or binding is evident. Place brake handle on instrument panel in "off" position. Rotate brake drum until one pair of adjusting holes (three pairs located on back face of drum) is opposite the adjusting screws (notched wheels) within the brake. Insert a screwdriver or adjusting tool through each hole and turn each adjusting screw equally until the brake shoes are snug against the drum (NOTE—with tool against edge of hole as a fulcrum, move outer end of tool out away from center of driveshaft to expand shoes). Back off each adjusting screw 7 notches to provide correct shoe clearance.

Linkage Adjustment—When brake shoes replaced or major adjustment required, check and adjust brake operating lever and cable as follows:

Brake Lever—The lever position is determined by adjustment of cam and will not change when new shoes or linings installed. Check clearance between closest point on lever and brake backing plate with brakes "off." This clearance should be 3/32". Adjust the special lever ball nut as required.

Brake Cable—Disconnect cable (remove clevis pin at brake operating lever. Place brake handle in "off" position. Make certain that brake operating lever position is correct (see above). Adjust clevis on brake operating lever end of cable so that clevis pin can just be inserted without changing position of brake handle or brake operating lever.

MODEL IDENTIFICATION

SERIAL NUMBER: Stamped on plate on floor riser left of driver's seat and on plate on front end of left frame side rail.
1946 Numbers: 10001 Up (4-63). 1948: 44045 Up.

ENGINE NUMBER: Stamped on water pump boss at front end of cylinder block.

TUNE-UP

COMPRESSION PRESSURE: 110 lbs. at 160 RPM.

VACUUM READING: Steady 18-21" idling at 6 MPH.

FIRING ORDER: 1-3-4-2. See diagram.

SPARK PLUG GAPS: .030".
Plug Type—Auto-Lite Type AN-7. 14 mm. Metric

IGNITION: *See Coil, Condenser, and Distributor.*
Breaker Gap—.020". Limits .020-.024".
Cam Angle or Dwell—41° closed, 49° open (distr).
Breaker Arm Spring Tension—17-20 ozs.
Automatic & Vacuum Advance—*See Distributor.*

IGNITION TIMING: 5° BTDC.
Timing Procedure—*See Ignition Timing.*
Timing Mark—Flywheel mark "IGN/" centered in hole in front face of housing below starter.
►Timing Mark Change—Flywheel marked "5°" (replacing "IGN/") starting 4-63 Engine No. 51379.

CARBURETION: *See Carburetor & Carb. Equipment.*
Idle Setting—Idle adjusting screw set for smooth idle with warm engine (on Carter Carb. ½-1½ turns open). For richer mixture, turn screw out on Carter, in on Zenith carburetors.
Idle Speed—600 RPM. or 8 MPH.
Float Level—(Carter) 5/16" from top of machined projection on bowl cover to top of soldered seam on free end of float (float inverted). CAUTION—Allow float to hang freely—do not compress spring in valve stem.
(Zenith)—1½" from top of float to gasket seat on bowl cover with needle valve seated (float inverted). CAUTION—Allow float to hang freely—do not compress spring in valve stem.
Accelerating Pump—(Carter) No seasonal adjust.
(Zenith)—3 grooves in pump plunger stem. Engage hairpin cotter as follows: Center Groove normal setting, Upper (min. stroke) Hot Weather, Lower (max.) Cold.

Fuel Pump Pressure: 3 lbs. (4½ lbs. max. at 1800 RPM).

CRANKCASE VENTILATOR: Remove and clean the vacuum control valve. *See Crankcase Ventilator (following Carb. Equipment) for directions.*

MANIFOLD HEAT CONTROL: Automatic thermostatic type. See that valve operates freely with spring end on top of manifold stop bracket.

VALVE TAPPET CLEARANCE: .014" All Valves, Hot or Cold. NOTE—Adjusting screws self-locking type.
Valve Timing Check—*See Valve Timing.*

STARTING: *See Battery, Starter, Generator, Regulator.*

IGNITION

IGNITION SWITCH: Douglas or Mitchellock Switch. Willys No. 641720.
Lock Cylinder—Briggs & Stratton No. 50184, Willys No. 664715.
Key Series—C250 to C499. Groove—No. 3.

COIL: Auto-Lite Model IG-4090A. Service Coil Model IG-4070 (with IG-1798S Service Bracket). Mounted on right side of engine near distributor.
Ignition Current—2.5 amperes idling, 5 stopped.

CONDENSER: Auto-Lite Part No. IGB-1025.
Capacity—.20-.25 microfarad.

DISTRIBUTOR: Auto-Lite Model IGW-4129 or IGW-4189. Full automatic advance type with separate vacuum spark control unit linked to breaker plate.
Breaker Gap—.020". Limits .020-.024".
Cam Angle—41° closed, 49° open.
Breaker Arm Spring Tension—17-20 ounces.
Rotation—Counter-clockwise viewed from above.

Automatic Advance—IGW-4129

Degrees Distr.	R.P.M.	Degrees Eng.	R.P.M.
Start	300	0	600
2	550	4	1100
5	930	10	1860
7	1190	14	2380
9.5	1500	19	3000

Automatic Advance—IGW-4189

Start	350	0	700
2	560	4	1120
5	875	10	1750
8	1190	16	2380
11	1500	22	3000

Vacuum Spark Control Unit: Auto-Lite Mod. VC-4010. Unit mounted on hold-down plate and linked to advance plate. Provides additional advance at all speeds above idling except for acceleration and wide open throttle (spark retarded by return spring).

Distr. Degrees	Vacuum Advance Eng. Degrees	Vacuum (" of HG)
Start	0°	3½"
2°	4°	5¾"
5°	10°	9¼"
8°	16°	12¾"
10°	20°	15"

Removal: Distributor is mounted on right side of engine. To remove, disconnect vacuum line, take out hold-down screw in mounting plate.
Installation Note—If crankshaft has been turned with distributor off engine, install distributor as follows: Turn crankshaft to Cylinder #1 firing position (see Timing), turn distributor shaft until rotor is in #1 firing position (at #1 segment in distributor cap—see diagram). Insert distributor drive shaft in housing on engine, rock shaft back and forth until drive lug on end of shaft enters drive coupling, push distributor down into place, install hold-down screw, check timing.
CAUTION—If oil pump removed, refer to Oil Pump installation directions in Willys Shop Notes.

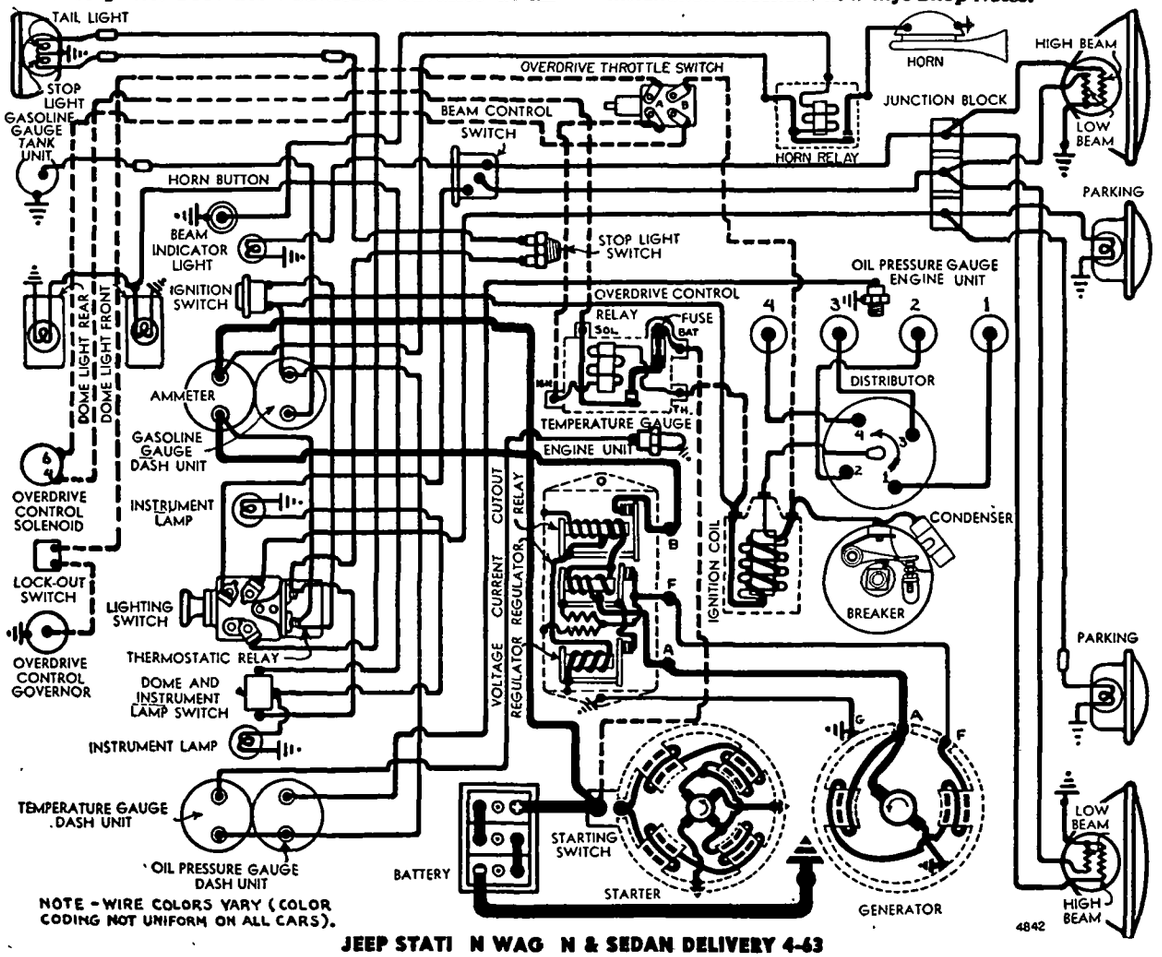

JEEP STATION WAGON & SEDAN DELIVERY 4-63

IGNITION TIMING

Std. Setting—	Flywheel Degrees	Piston Pos.
All Engines	5° BTDC.	.010" BTDC.

►**Timing Mark Change**—Flywheel marked "5°" (replacing "IGN/") starting 4-63 Engine No. 51379.

Timing—With #1 piston on compression, turn crankshaft until piston reaches firing position with flywheel mark "IGN" centered in inspection hole in right front face of flywheel housing. Loosen advance arm clampscrew, rotate distributor until contacts begin to open, tighten clampscrew. See that rotor is at #1 segment in distributor cap (see diagram), check spark plug cable connections.

Timing (Using Timing Light—Engine Idling)—This method recommended by manufacturer. Direct timing light at flywheel through inspection hole in front face of housing below starter, idle engine (engine must be warm), adjust distributor (as directed above) until timing mark is centered in inspection hole.

CARBURETOR

CARTER

Carter WA-1 No. 613S. 1¼", Single Barrel, Downdraft type with manual choke control.
Casting Number on Flange—485.
See Carburetor Section for compete data.
Settings (Idle Setting, Float Level, and Accelerating Pump): ***See Tune-Up data.***
Metering Rods & Jets—***See Carter Jet Table in Carburetor Section for complete data.***

CARBURETOR

ZENITH

Zenith Model 28BV10. Single barrel, downdraft type with manual choke control.
Outline No.—10569-A. On round metal tag riveted on top of float bowl cover. Use in ordering parts.
See Carburetor Section for complete data.
Settings (Idle Setting, Float Level, and Accelerating Pump): ***See Tune-Up data.***
Metering Jets—***See Zenith Jet Specifications in Carburetor Section.***

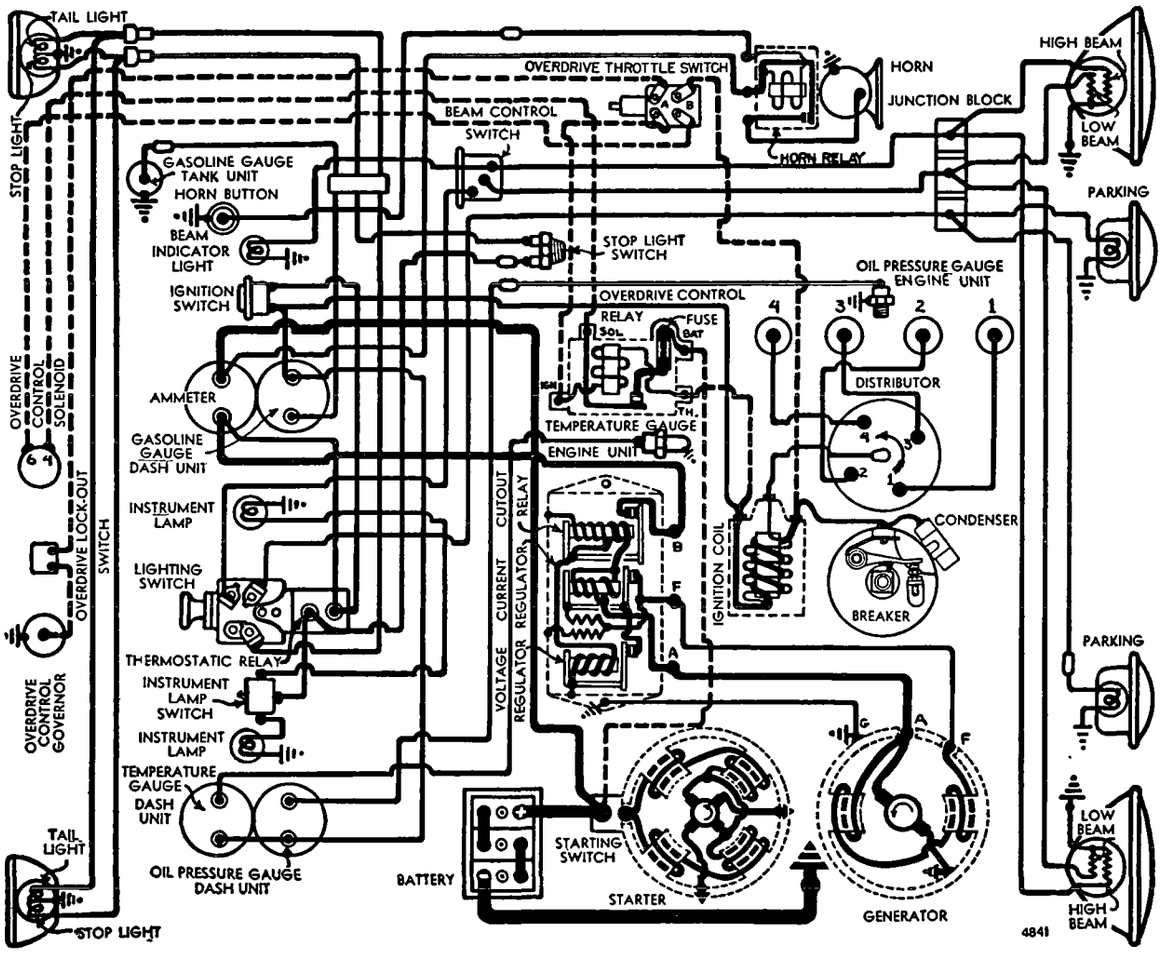

JEEPSTER M DEL VJ-2

CARB. EQUIPMENT

Fast Idle: Interconnected linkage by which choke valve lever opens throttle to fast idle position when carburetor choked for starting.
Setting—No adjustment required.

Air Cleaner: Oakes Model 616615 Oil-wetted type Std., Model X616150 Oil-bath type Optl.
Servicing (Oil-wetted type)—Clean filter element and re-oil at 2000 mile intervals or more often if required by operating conditions.
Servicing (Oil-bath type)—Clean filter and fill with same oil used in engine crankcase at 2000 mile intervals (at oil change). Capacity approx. 1¼ pts.

Fuel Pump (Std.): AC Type AF, No. 1538886.
(Optl.): AC No. 1537409 comb. fuel-and-vacuum.
Replacement Pump—AC No. 572 (for 1538886), No. 7409 (for 1537409).
See Carburetion Equipment Section for data.
Pressure—3 lbs. (4½ lbs. max. at 1800 RPM).

Gasoline Gauge: King-Seeley Electric Type.
Dash Unit—King-Seeley No. 41310.
Tank Unit—King-Seeley No. 41248.
See Carburetion Equipment Section for data.

CRANKCASE VENTILATOR

Sealed Positive Ventilation type. Air Intake Pipe (from air cleaner to oil filler pipe) furnishes clean air to crankcase and Air Outlet Pipe (from valve chamber cover to intake manifold) allows fumes from crankcase to be sucked into intake manifold. There is a vacuum control valve at the manifold connection and this valve must close at idling speed for satisfactory engine idling performance.
Servicing—Make certain that connecting pipes are tight and that oil filler cap gasket seals cap tightly. Remove and clean vacuum control valve when tuning engine or if system operating incorrectly.

Vacuum Control Valve—Remove control valve by disconnecting pipe at valve chamber cover and unscrewing valve from manifold. Disassemble valve by clamping in vise and removing top, withdraw valve and spring. Clean valve and valve seat thoroughly, reassemble and re-install unit.

BATTERY

Auto-Lite PN-15. 6 volt, 15 plate, 100 Amp. Hr.
Starting Capacity—120 amperes for 20 minutes.
Zero Capacity—300 amperes for 3.3 minutes.
Grounded Terminal—Negative (—) terminal.
Engine Ground—At left front engine mounting.
Dimensions—Lgth. 9 3/32". Wdth. 7⅛". Hgt. 8⅝".
Location—On right side of dash under hood.

STARTER

Auto-Lite Model MZ-4137. Armature MZ-2214.
Drive—Overrunning clutch and manual pinion shift
Rotation—Counter-clockwise at commutator end.
Brush Spring Tension—42-53 ozs. (new brushes).
Cranking Engine—160 RPM., 150-175 amps., 5 volts.

Performance Data

Torque	R.P.M.	Volts	Amperes
0 ft. lbs	4300	5.5	70
.65 "	2500	5.5	100
2.55 "	1325	5.0	200
4.95 "	750	4.5	300
7.65 "	220	4.0	400
7.8 "	Lock	3.0	420
11.8 "	Lock	4.0	560

CONTINUED N NEXT PA E

CONTINUED FROM PRECEDING PAGE

Starter Removal—Flange mounted on right front face of flywheel housing. To remove, disconnect starting linkage and battery cable, take out two flange mounting capscrews and bolt in bracket at commutator end.
Starting Switch—Auto-Lite SW-2677A. Mounted on starter and operated by pinion shift lever.
See Electrical Equipment Section for complete data.

GENERATOR

Auto-Lite Model GDZ-4817A. Armature GDZ-2006F. Two brush with voltage and current regulation.
Charging Rate Adjustment—None. See Regulator.
Maximum Charging Rate—35 amperes, 8.0 volts, 1900 RPM. and above. Actual charging rate controlled by regulator and dependent on the battery.

Cold Performance Data			Hot Performance Data		
Amperes	Volts	R.P.M.	Amperes	Volts	R.P.M.
0	6.4	925	0	6.4	1000
5	6.65	1060	5	6.65	1150
10	6.85	1200	10	6.85	1290
15	7.05	1340	15	7.05	1430
20	7.3	1480	20	7.3	1590
25	7.55	1620	25	7.55	1750
30	7.8	1760	30	7.8	1980
35①	8.0	1900	35	8.0	2250

①—Current Regulator setting. See Regulator data.
Rotation—Counter-clockwise at commutator end.
Brush Spring Tension—35-53 ozs. (new brushes).
Field Current—1.60-1.78 amperes at 6.0 volts.
Motoring Current—4.2-4.6 amperes at 6.0 volts.
Removal: Take out pivot and clamp bolts.
Belt Adjustment—Loosen clamp and pivot bolts, swing generator out until belt deflection midway between fan and generator pulleys is 1".

REGULATOR

Auto-Lite Model VRP-4007C-2. Voltage-Current Type. On right side in engine compartment.
NOTE—Regulator cover sealed. Warranty void if seals broken.
See Electrical Equipment Section for complete data.

Cutout Relay

Cuts In—6.4-7.0 volts (set to 6.4-6.6 volts).
Cuts Out—4.1-4.8 volts (approx. 4-6 amps. disch.).
Contact Gap—.015" minimum.
Air Gap—.031-.034" with contacts open measured at hinge end of core.

Voltage Regulator

Setting—7.35 volts (7.2-7.5) at 70°F. See Electrical Equipment Section for other temperatures.
Checking (without breaking seal) & Adjustment—*See Electrical Equipment Section.*
Contact Gap—.012" min. (armature against stop pin)
Air Gap—.048-.052" with contacts just opening.

Current Regulator

Setting—34-36 amperes (marked "35" on cover).
Checking (without breaking seal) & Adjustment—*See Electrical Equipment Section.*
Contact Gap & Air Gap—Same as Voltage Regulator.

LIGHTING

Headlamps: Corcoran-Brown "Sealed Beam" type. Upper and lower beams controlled by Beam Selector Switch on toeboard.
See Electrical Equipment Section for complete data.
Adjustment—Aim upper beam straight ahead (hot spot center 3" below lamp center height at 25').
Beam Indicator—On left side of instrument panel. Lighted when Upper Beams in use.

Switches

Lighting—Willys No. 645292.
Instrument—Willys No. 641732.
Beam Selector—Willys No. 640260.

Bulb Specifications

Position	Candlepower	Mazda No.
Headlamps	35-45 watt	Sealed Beam
Parking	1½	55
Beam Indicator	1	51
Instrument (4-63)	1	51
Instrument (Jeepster)	3	63
Stop & Tail	21-3	1158
Dome	15	87

MISC. ELECTRICAL

LIGHTING CIRCUIT BREAKER: Mounted on light ing switch. Vibrating thermostatic type. Protects lighting circuits by vibrating to limit current to 30 amperes. No adjustment.
FUSES: Overdrive—20 ampere. On control relay.
HORNS: Auto-Lite. Vibrator type single horn with relay. Dual horns Opti.
Horn Current—7-9 amperes.
Horn Relay—Willys No. 643889.

ENGINE

ENGINE SPECIFICATIONS: Own. Four Cylinder, "L" Head type.
Bore—3⅛" **Stroke**—4⅜"
Displacement—134.2 cu. ins. **Rated H.P. 15.63**
Developed Horsepower—63 at 4000 RPM.
Compression Ratio—6.48-1 Std. Cast Iron Head.
Compression & Vacuum Reading: *See Tune-up data.*
ORIGINAL BORE & PISTON SIZES: *See Willys Shop Notes.*
ORIGINAL BEARING SIZES: *See Willys Shop Notes.*
TIGHTENING TORQUES: *See Willys Shop Notes.*
CYLINDER HEAD INSTALLATION: *See Willys Shop Notes.*
PISTONS: Lo-Ex aluminum alloy (Lynite, Bohn, Permite, or Arrowhead). "T" slot, Cam ground, tin or brass plated type.
Weight—12.5 ozs. (stripped), **Length 3¾"**
Removal—Pistons and rods removed from above.
Clearance—.017-.019" top, .004" skirt.
Replacement Pistons: Finished pistons are furnished .005", .015", .025", .035", .045" Oversize.
Fitting New Pistons: Use .003" feeler gauge ¾" wide between piston and cylinder wall on side opposite slot. Pull to withdraw feeler must be 5-10 lbs.
Installing Pistons: T-slot toward valve side of engine (opposite side from oil spray hole in lower end of connecting rod).
PISTON RINGS: Two compression rings, one oil control ring per piston, all above pin. Oil ring groove has oil drainage holes.

Ring	Width	End Gap	Side Clearance
Compr. (#1, 2)	3/32"①	.008-.013"	.0005-.001"
Oil (#3)	3/16"②	.008-.013"	.001-.0015"

①—.0925-.0935" ②—.1860-.1865"
Installing Rings—Compression ring mark "TOP" (on side of rings) upward and inner bevel edge on top ring upward. Rings have taper face.
Replacement Rings (for Rebored Cyls.): Rings furnished .005", .015", .025", .035", .045" Oversize.
Service Type Rings (for Cylinders not Rebored)—Furnished 1) Std.-.009", 2) .010-.019", 3) .020-.029", 4) .030-.039", 5) .040-.049" Oversize.
PISTON PIN: Pin is locked in rod by clampscrew.
Diameter—13/16" (.8117-.8119"). **Length 2 25/32"**
Pin Fit in Piston—.0001-.0009" clearanc or light thumb push fit with piston at 70°F.
Replacement Pins: Furnished Standard size and .001", .002", .003" Oversize.
CONNECTING ROD: Length 9 3/16". Weight 34 ozs.
Crankpin Journal Diameter—1 15/16" (1.9393"). *See "Original Bearing Sizes" in Willys Shop Notes.*
Lower Bearing—Replaceable steel-backed, babbitt lined type. No shims. CAUTION—Oil spray hole in bearing upper half must line up with oil hole in rod.
Clearance—.0005-.0025" **Sideplay**—.005-.009"
Bearing Adjustment: None (replace the bearings). Do not file connecting rods or bearing caps. NOTE—Replace bearings when clearance exceeds .005" or sideplay exceeds .013".
Palnut Installation—*See Willys Shop Notes.*
Replacement Bearings: Furnished Std. size and .010", .020", .030" Undersize.
Installing Rods: Lower bearing offset. Install rods with short side of bearing toward nearest main bearing or toward front of engine (#1, 3), toward rear (#2, 4). Oil spray hole in rod toward right side of engine (away from camshaft) on all rods.
CRANKSHAFT: Three bearing type with removable counterweights.
Journal Diameters—2.3340" (all bearings). *See "Original Bearing Sizes" in Willys Shop Notes.*
Bearings—Replaceable steel-backed, babbitt lined type. No shims. Bearing shells are dowelled in bearing caps and crankcase.
Clearance—.001-.0025" (.0005-.001" new).
NOTE—Replace bearings when clearance exceeds .006" or when endplay exceeds .018".
Bearing Adjustment: None (replace bearings). Do not file bearing caps. *See Crankshaft Servicing Instructions in Willys Shop Notes.*
NOTE—Engine must be removed from chassis for bearing replacement and crankshaft servicing.
Replacement Bearings: Furnished Std. size and .010", .020", .030" Undersize.
End Thrust: Taken by flanged face of No. 1 (front bearing and thrust washer in back of crankshaft gear. Adjusted by adding or removing shims behind the thrust washer. NOTE—Crankshaft gear must be removed with a gear puller for endplay adjustment. Shims furnished .002", .004", .010", .030" thick.
Endplay—.004-.008".
CAMSHAFT: Four bearing with helical gear drive.
Journal Diameters—#1, 2.188"; #2, 2¼"; #3, 2 3/16"; #4, 1¾".
Bearings—Removable steel-backed, babbitt-lined bushing (front), machined in crankcase (all others).
Clearance—.002-.0035". Service limit .006" (front), .008" (all others).
Camshaft Removal—*See Willys Shop Notes.*
End Thrust: Taken by thrust plate assembled behind gear with a spacer assembled behind plate. If required, a thin shim can be installed behind spacer if too little clearance, or spacer can be dressed to provide greater clearance.
Endplay—.003-.0055".
Timing Gears: Crankshaft gear Cast Iron. Camshaft gear Fibre with steel hub.
Timing Gear Backlash—.000-.002".
Camshaft Setting: Mesh marked tooth of camshaft gear opposite marked space between teeth of crankshaft gear.

ENGINE

C NTINUED FR M PRECEDING PAGE

VALVES:	Head Diameter	Stem Diameter	Length
Intake	1 17/32"	.373"	5¾" (overall)
Exhaust	1 15/32"	.3725"	5¾" (overall)

	Seat Angle	Lift	Stem Clearance
Intake	45°	23/64"	.0015-.00325"①
Exhaust	45°	23/64"	.002-.00375"②

①—New. Replace when clearance exceeds .0045".
②—New. Replace when clearance exceeds .005".

Valve Guides: Removable type. Remove guides from above with puller, install new guides with driver or press guides down in place as follows:
Intake Guide—Top of guide 1 5/16" below top face of block. Smaller diameter section upward.
Exhaust Guide—Top of guide 1" below top face of block. Counter-bored end of guide upward.

Valve Springs: Install springs with closed coil end up toward cylinder block. Spring free length 2½".

	Spring Pressure	Length
Valve Closed	50 lbs.	2 7/64"
Valve open	116 lbs.	1¾"

Valve Lifters: Mushroom type. In reamed holes in block. Serviced by installing oversize lifters (furnished .004" Oversize).
NOTE—Camshaft must be removed for lifter removal. *See Camshaft Removal in Willys Shop Notes.*
Lifter Diameter—.6240-.6245". Clearance .0005-.002".

VALVE TIMING

Tappet Clearance—.014" All Valves, hot or cold.
NOTE—Tappet adjusting screws are self-locking
Valve Timing—See Camshaft Setting above.
Intake—Open 9° BTDC. Close 50° ALDC.
Exhaust—Open 47° BLDC. Close 12° ATDC.

►**Timing Mark Change (starting 4-63 Engine Number 51379)**—Flywheel marked "5°" (for 5° BTDC.) and "T.C." (top dead center). "I.O." mark not carried and intake opening point must be estimated.
Valve Timing Check—Set tappet clearance #1 intake valve at .020". This valve should open with #1 piston 9° or .039" BTDC. with flywheel mark "I.O." centered in inspection hole in right front face of flywheel housing. Reset tappet clearance at .014".

LUBRICATION

Engine Oiling System: Pressure to crankshaft, conrod, and camshaft bearings, and to timing gears.
Crankcase Capacity—4 qts. refill.
Normal Oil Pressure—35 lbs. at 30 MPH. (10 lbs. idling at 600 RPM).
Oil Pressure Regulator—Opens at 40 lbs. Located under plug on side of pump housing. Adjustable by adding or removing shims above spring within plug.

Oil Pump: New rotor type pump mounted externally on left side of crankcase.
Oil Pump Servicing—*See Willys Shop Notes.*

Oil Pressure Gauge: King-Seeley Electric type.
Dash Unit—King-Seeley No. 41305.
Engine Unit—King-Seeley No. 40767.
See Miscellaneous Section for complete data.

COOLING

Cooling System: Pressure type, relief valve in cap.
Capacity—11 quarts.
Pressure Valve—AC No. 846709 (Filler Cap). Opens at 3¾ lbs. (3¼-4¼ lbs.).

Water Pump: Centrifugal, belt-driven, packless type.
See Water Pump Section for complete data.

Removal—Loosen drive belt adjustment, remove belt, disconnect hose. Remove pump mounting screws and lift out pump and fan assembly.
Belt Adjustment—*See Generator Belt Adjustment.*

Thermostat: Harrison. In outlet on cylinder head. Starts to open at 148-155°F. Fully open at 173°F.

Temperature Gauge: King-Seeley Electric type.
Dash Unit—King-Seeley No. 41315.
Engine Unit—King-Seeley No. 7000.
See Miscellaneous Section for complete data.

CLUTCH

Auburn (Atwood) Model 8501-19. Single plate, dry disc type with Borg & Beck 11735 Driven Member.
See Clutch Section for complete data.
Facings—Moulded type. I.D. 5⅛" (5.094-5.156"), O.D. 8½" (8.520-8.480"). Thickness ⅛" (.132-.138").

Pedal Adjustment: Pedal free travel 1" (provides 1/16" clearance between release levers and bearing). To adjust, loosen locknut and turn adjusting nut on connector link at clutch fork, tighten locknut.

Removal: Remove transmission (see Transmission Removal below), remove flywheel bell housing. Mark clutch pressure plate and flywheel to insure reinstallation in same position. Take out mounting screws in clutch cover flange (turn all screws out evenly), remove clutch and driven member.

TRANSMISSION

Warner Model AS1-T90E (Std.)., AS12-T96 (Optl. 4-63), AS18-T96 (Optl. VJ-2 Jeepster). Three-speed, helical gear type. Constant-mesh, synchro-mesh (Second & High), sliding gear (Low & Reverse).
NOTE—Optl. transmissions have R10B Overdrive.
See Transmission Section for complete data

Transmission Control: Remote control type with gearshift lever mounted on steering column.
See Transmission Section for complete data

Removal: Remove floorboards, take off bell housing inspection hole cover, disconnect clutch throw-out bearing retracting spring. Disconnect transmission control rods and speedometer cable at transmission case. Disconnect propeller shaft at universal joints and remove shaft. Support engine with jack placed under bell housing, remove rear engine support bolts from cross-member under transmission case. Raise rear end of engine so transmission clears cross-member (use care that fan blades do not damage radiator), remove transmission to bell housing bolts, pull transmission straight back to clear clutch shaft and remove.

OVERDRIVE

Warner Type R10B (part of AS12-T96 & AS18-T96 Transmission Assemblies). New solenoid operated, governor controlled with throttle "kick-down".
See Transmission Section for complete data.
Control Relay—Auto-Lite Model HRT-4001.
Overdrive Governor—Auto-Lite Model TGE-4002.
Transmission Solenoid—Delco-Remy 1118132.

Removal: Remove as a unit with transmission. Removal instructions same as for regular transmission (above) after governor and solenoid wires and lockout control disconnected and overdrive case-to-cross-member bolts removed.

UNIVERSALS

Spicer Model 1261-102X (Front—All Models), 1278-101X (Rear—All Models without Overdrive & First Cars with Overdrive), 1268-111X (Rear—Later models with Overdrive). Needle roller bearing type.
See Universals Section for complete data.

REAR AXLE

Spicer (Salisbury) Model 23-1. Semi-floating, Hypoid Gear type with Hotchkiss Drive.
See Rear Axle Section for complete data.
Ratio—4.88-1 Std., 5.13-1 Optl.
Backlash—.004-.008" Shim adjustment.

Removal: Support rear end of car securely, remove rear wheels, disconnect rear shock absorbers, rear brake line (at frame connection on right side), rear brake cables, and propeller shaft at rear universal joint. Place support jacks under axle housing so that springs relieved of weight, remove nuts on spring "U" bolts, remove pivot bolt at front end of springs and lower springs, remove axle assembly

Axle Shaft Removal: Remove the wheel & hub assembly (use wheel puller), disconnect brak line at wheel cylinder, remove nuts on bolts holding backing plate and brake assembly on housing, remove dust shield, oil seal, and backing plate (with brake assembly). CAUTION—Do not lose bearing adjusting shims located between backing plate and flange on axle housing. Remove axle shaft and wheel bearing.
Wheel Bearing Adjustment—Endplay .001-.006". Adjust by adding or removing shims between backing plate and axle housing flange (at each wheel). See axle shaft removal (above).

SHOCK ABSORBERS

Delco—Model 1030-C (Front), 1031-Q (Rear).
Monroe—Model K-18004 (Front), K-18005 (Rear).
Direct acting, hydraulic, adjustable (first cars).
NOTE—Shock absorbers are sealed and cannot be refilled or serviced.
See Shock Absorber Section for complete data.

FRONT SUSPENSION

Planar Type. Independent, linked parallelogram type with transverse spring (spring acts as lower control arm).
See Front Suspension Section for complete data.
Kingpin Inclination—5½° crosswise.
Caster—1° No adjustment.
Camber—1° Shim adjustment.
Toe In—1/16-1/8".

STEERING GEAR

Ross T-12, No. 13108. Cam-and-Twin Lever type.
See Steering Gear Section for complete data.

BRAKES

Service Brakes: Bendix (Lockheed) Hydraulic, self-centering type. Hand lever applies rear wheel service brakes.
See Brake Section for complete data.
Drums—Chrome-nickel type. Diameter 9.948".
Lining—Moulded type. Width 1.760". Thickness .222". Length per wheel 19".
Clearance—.008" Toe, .005" Heel each shoe.
NOTE—No anchor pin adjustment provided. Brake shoes should be centralized by hard brake application (and then released) before adjustments made.

Hand Brake: See Service Brakes above.
Adjustment—Tighten link rod adjustment at lever on cross-member for slight drag with hand lever set two-notches "on" (must be free of drag when lever released).

HOOD LOCK: Hood is Alligator type. To raise hood, pull out lock button to left of center instrument cluster, release safety catch under front edge of hood.

MODEL IDENTIFICATION

SERIAL NUMBER: On plate on outside of left frame side rail at front end and on floor riser to left of driver's seat.
1947 Numbers—(2WD) 2T-10001 Up, (4WD) 4T-10001 Up.
1948 Numbers—(2WD) 2T-12643 Up, (4WD) 4T-12347 Up.

ENGINE NUMBER: Stamped on top of water pump boss at front of engine.
1947-48 Numbers—10001 Up.

TUNE-UP

COMPRESSION PRESSURE: 110 lbs. at cranking speed of 160 RPM.

VACUUM READING: Steady 18-21" idling at 8 MPH.

FIRING ORDER: 1-3-4-2. See diagram.

SPARK PLUG GAPS: .030".
Plug Type—Auto-Lite Type AN-7. 14 mm. Metric.

IGNITION: *See Coil, Condenser, and Distributor.*
Breaker Gap—.020" Limits .020-.024".
Cam Angle or Dwell—41° Closed, 49° Open.
Breaker Arm Spring Tension—17-20 ozs.
Automatic & Vacuum Advance—*See Distributor.*

IGNITION TIMING: 5° BTDC. (Regular Fuel), At TDC. (Low Octane Fuel).
Timing Procedure—*See Ignition Timing.*
Timing Mark—Flywheel mark "IGN/" (5° BTDC. setting), "TC/" (TDC setting) centered in inspection hole in right front face of housing below starter.

►**Timing Mark Change**—Flywheel marked "5°" (replacing "IGN/") starting 2T Engine No. 13887, 4T Engine Number 14251.

CARBURETION: *See Carburetor & Carb. Equipment.*
Idle Setting—1-2 turns open—one screw. Turn screw out for richer mixture.
Idle Speed—600 RPM. or 8 MPH.
Float Level—⅜" top of float at free end to gasket seat on cover with valve closed (invert assembly).

►***CAUTION—Do not compress spring in valve stem (allow float to hang freely on inverted cover assembly).***
Accelerating Pump—No seasonal adjustment.
Fuel Pump Pressure—4½ lbs. at 1800 RPM.

CRANKCASE VENTILATOR: Remove and clean the vacuum control valve. *See Crankcase Ventilator (following Carb. Equipment) for directions.*

MANIFOLD HEAT CONTROL: Automatic thermostatic type. Valve must operate freely (no adjustment required). When installing assembly, see that thermostatic spring end rests on top of spring stop bracket on manifold.

VALVE TAPPET CLEARANCE: .014" All Valves, Hot or Cold.
NOTE—Adjusting screws self-locking type.
Valve Timing Check—*See Valve Timing.*

STARTING: *See Battery, Starter, Generator, Regulator.*

IGNITION

IGNITION SWITCH: Douglas or Mitchellock Switch. Willys No. 641720.
Lock Cylinder—Briggs & Stratton No. 50184.
Key Series—C250 to C499. **Groove**—No. 3.

COIL: Auto-Lite Model IG-4090A. Service Coil IG-4070 (with Bracket IG-1798S). On right side of engine.
Ignition Current—5 amperes at 6.3 volts (stopped).

CONDENSER: Auto-Lite Part No. IGB-1025.
Capacity—.20-25 microfarad.

DISTRIBUTOR: Auto-Lite Model IGW-4189. Automatic advance type with separate Vacuum Spark
Breaker Gap—.020". Limits .020-.024".
Cam Angle—41° closed, 49° open.
Breaker Arm Spring Tension—17-20 ounces.
Rotation—Counter-clockwise viewed from above.

Automatic Advance

Degrees	R.P.M.	Degrees	R.P.M.
Start	350	0	700
2	560	4	1120
5	875	10	1750
8	1190	16	2380
11	1500	22	3000

Vacuum Spark Control: Auto-Lite Type VC-4010. Separate unit mounted on hold-down plate, linked to advance plate. Provides additional advance at speeds above idling except when engine accelerated or operated with wide open throttle when spark retarded by return spring.

Vacuum Advance

Distr. Degrees	Eng. Degrees	Vacuum (" of HG)
Start	0°	3½"
2°	4°	5¾"
5°	10°	9¼"
8°	16°	12¾"
10°	20°	15"

Distributor Removal: On right side of engine. To remove, disconnect vacuum line, take out hold-down screw in mounting plate.

Installation Note—If crankshaft has been turned with distributor off engine, install distributor as follows: Turn crankshaft to #1 cylinder firing position (see Timing), turn distributor shaft until rotor is at #1 segment (see diagram), install distributor on engine, rocking shaft slightly to engage drive coupling, push distributor down into place, install hold-down screw, check ignition timing.

CAUTION—If oil pump has been removed, see Oil Pump Installation under "Oil Pump" in Willys Shop Notes.

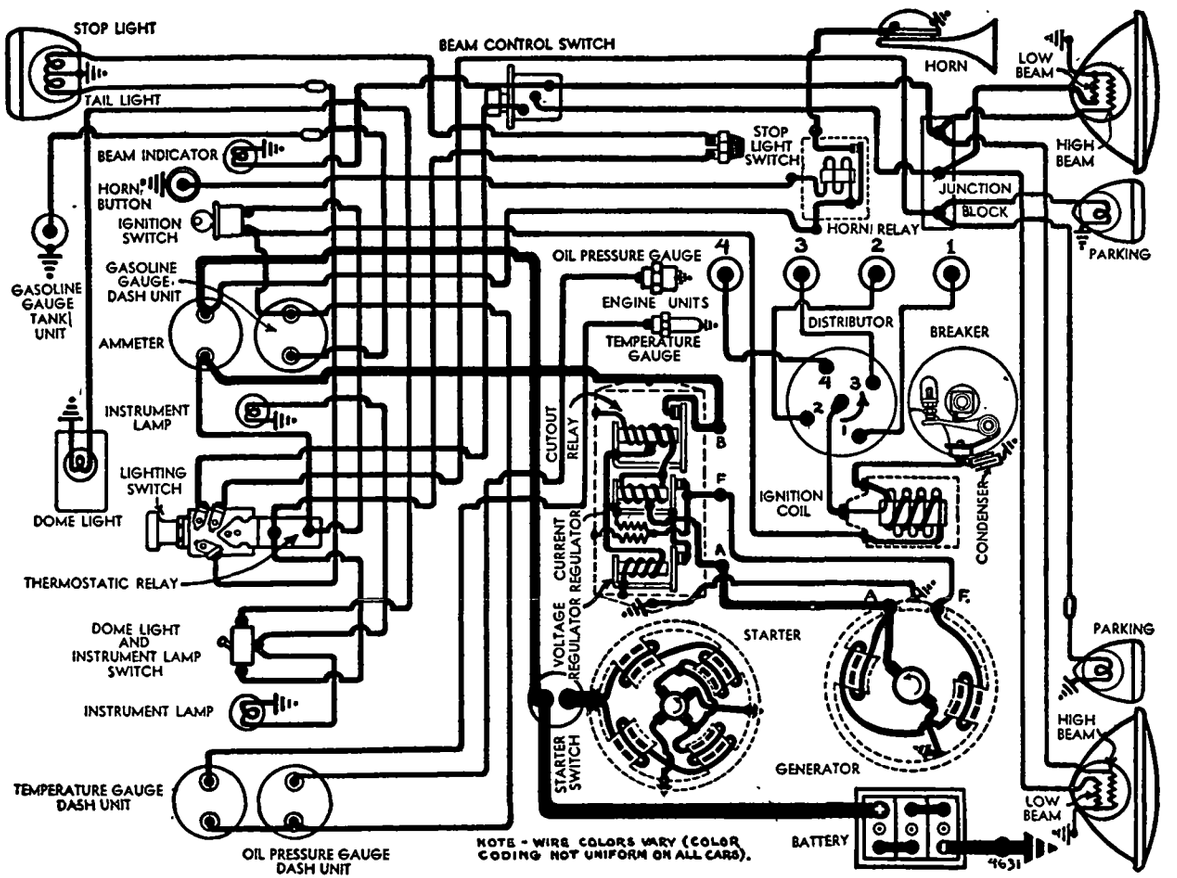

FIRST TRUCKS

IGNITION TIMING

Std. Setting (Regular Fuel) .....5° BTDC
Spec. Setting (Low Octane Fuel) .....At TDC

Timing Marks—Flywheel mark "IGN/" (5° BTDC) or "TC/" (TDC) centered in inspection hole in right front face of housing below starter (remove inspection hole cover).

►**Timing Mark Change**—Flywheel marked "5°" (replacing "IGN/") starting 2T Engine No. 13887, 4T Engine Number 14251.

Timing (Engine not Running)—With #1 piston on compression, turn engine over until piston reaches firing position (see settings above) with flywheel mark "IGN/" (5° BTDC setting), or "TC/" (TDC setting) centered in inspection hole in right front face of housing, loosen advance arm clampscrew, rotate distributor until contacts begin to open, tighten clampscrew, see that rotor at #1 segment in distributor cap (see diagram), check spark plug cable connections.

Timing Using Timing Light—Engine Running)—This method recommended by manufacturer. Direct timing light through inspection hole at flywheel, idle engine (engine must be warm), adjust distributor (as directed above) until "IGN/" (5° BTDC setting) r "TC/" (TDC setting) mark centered in inspection hole.

CARBURETOR

Carter WO Type 636SA superseding 636S. 1 3/16" Single Barrel, Downdraft type with manual choke. ***See Carburetor Section for complete data.***

Settings (Idle Setting, Float Level, and Accelerating Pump): ***See Tune-Up data.***
Metering Rods & Jets: ***See Carter Jet Table in Carburetor Section.***

Fast Idle: Interconnected linkage by which choke valve lever opens throttle to fast idle position when carburetor choked for starting.
Setting—No adjustment required.

CARB. EQUIPMENT

Governor (Special Equip.): King-Seeley "Handy" Model 26510-354, Monareh, or Novi Governors. Centrifugal types. Mounted on left front corner of cylinder head and driven by special belt from the crankshaft.

Setting—1000 to 2600 RPM of engine in steps of 200 RPM (in accordance with position of dash control lever which has nine settings).
Adjustment—***See Willys Shop Notes for directions.***

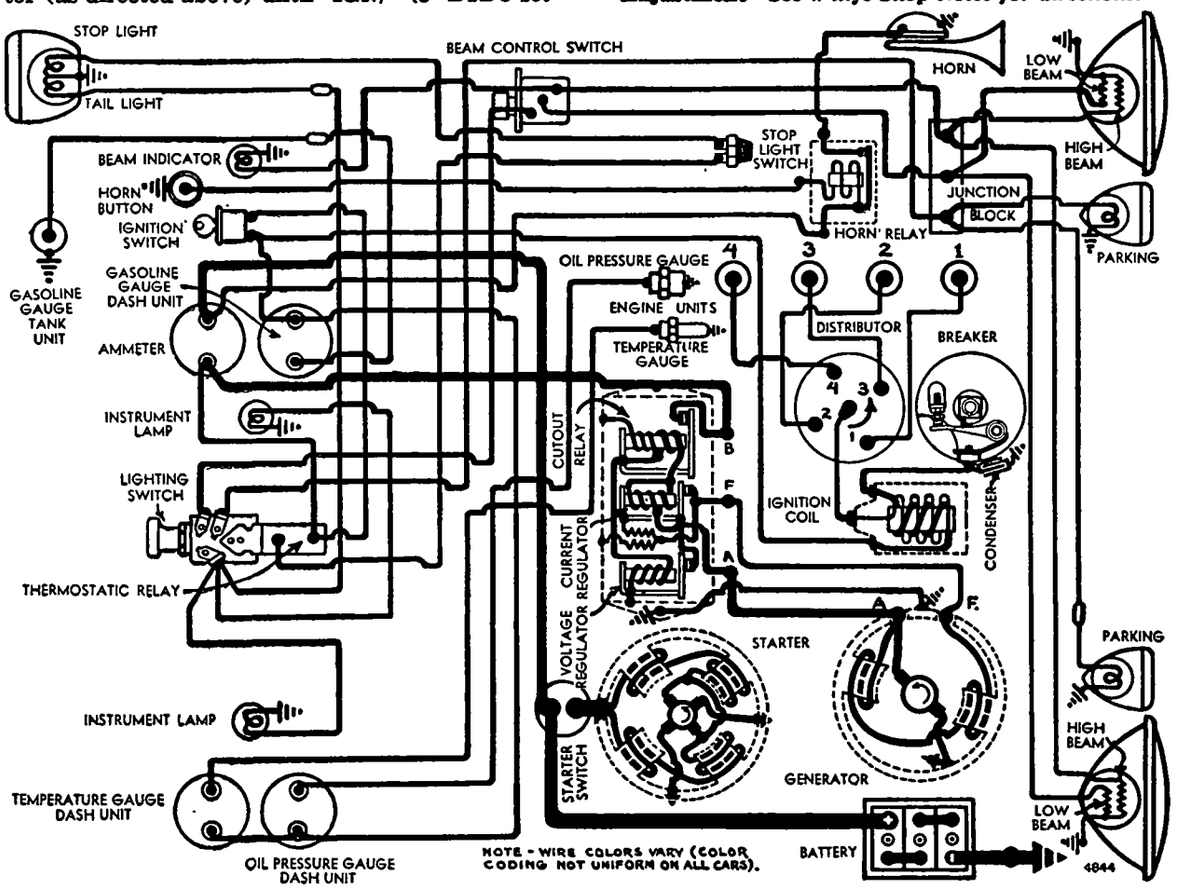

LATER TRUCKS

Fuel Pump: AC No. 1539106 Diaphragm type combination fuel-and-vacuum pump.
Replacement Pump—AC No. 9106.
Pressure—4½ lbs. max. at 1800 Eng. RPM.
See Carburetion Equipment Section for complete data.

Gasoline Gauge: King-Seeley Electric type.
Dash Unit—King-Seeley No. 41310.
Tank Unit—King-Seeley No. 41285.
See Carburetion Equipment Section for complete data.

Air Cleaner: Oakes Model 616615 Oil-wetted type Std., X616150 Oil-bath type Optl.
Servicing (Oil-wetted Type)—Clean filter element and re-oil at 2000 mile intervals or more often if required by operating conditions.
Servicing (Oil-bath Type)—Clean filter and fill to oil level mark with same oil used in engine crankcase at 2000 mile intervals (when engine oil changed) or more often if required by operating conditions.

CRANKCASE VENTILATOR

Sealed Positive Ventilation Type. Air intake pipe (from air cleaner to oil filler pipe) furnishes clean air to crankcase, air outlet pipe (from valve cover to manifold) allows fumes from crankcase to be sucked into intake manifold. Vacuum control valve at manifold connection **must close at idling speed** for satisfactory idling performance.
NOTE—Clean Vacuum Control Valve when engine tuned up.

Cleaning Vacuum Control Valve—Remove control valve by disconnecting pipe and unscrewing valve from manifold. Disassemble valve, withdraw valve and spring, clean valve and valve seat thoroughly.

Servicing—Make certain all connecting pipes tight and that oil filler cap gasket seals cap tightly. Remove and clean control valve when tuning engine or whenever system does not operate satisfactorily.

BATTERY

Auto-Lite Type PN-15. 6 volt, 15 Plate, 100 Ampere Hour capacity (20 hour rate).

Starting Capacity—120 amperes for 20 minutes.
Zero Capacity—300 amperes for 3.2 minutes.
Five-second Voltage—4.15 volts.
Grounded Terminal—Negative (—) grounded at starter.
Engine Ground—Strap at right front engine mounting.
Location—Right hand side of dash in engine compt.
Dimensions—Lgth. 8 15/16". Width 7⅛". Hgt. 8⅝".

STARTER

Auto-Lite Model MZ-4137. Armature No. MZ-2214.
Drive—Overrunning clutch and positive pinion shift actuated by starting pedal.
Rotation—Counter-clockwise at commutator end.
Brush Spring Tension—42-53 ozs. (new brushes).
Cranking Engine—185 RPM., 150-175 amps., 5 volts.

Performance Data

Torque		R.P.M.	Volts	Amperes
0	ft. lbs.	4300	5.5	70
.65	"	2500	5.5	100
2.55	"	1325	5.0	200
4.95	"	750	4.5	300
7.65	"	220	4.0	400
7.8	"	Lock	3.0	420
11.8	"	Lock	4.0	560

CONTINUED N NEXT PA E

CONTINUED FROM PRECEDIN PAGE

Removal: On right front face of flywheel housing. To remove, disconnect pedal linkage and cables, take out flange mounting capscrews and bolt in bracket on cummutator end.

Starting Switch: Auto-Lite SW-2677A. Mounted on starter and operated by pinion shift lever.
See Electrical Equipment Section for complete data.

GENERATOR

Auto-Lite Model GDZ-4817A. Armature GDZ-2006F. Two brush (shunt) type with voltage and current regulation. Ventilated by fan on drive pulley.

Maximum Charging Rate—35 amperes, 8.0 volts (cold) with discharged battery (controlled by regulator).

Charging Rate Adjustment—None (see Regulator).

Performance Data					
Cold			Hot		
Amperes	Volts	R.P.M.	Amperes	Volts	R.P.M.
0	6.4	925	0	6.4	1000
5	6.65	1060	5	6.65	1150
10	6.85	1200	10	6.85	1290
15	7.05	1340	15	7.05	1430
20	7.3	1480	20	7.3	1590
25	7.55	1620	25	7.55	1750
30	7.8	1760	30	7.8	1980
35	8.0	1900	35	8.0	2250

Rotation—Counter-clockwise at commutator end.

Brush Spring Tension—35-53 ozs. (new brushes).

Field Current—1.60-1.78 amperes at 6.0 volts.

Motoring Current—4.2-4.6 amperes at 6.0 volts.

Removal: Conventional pivot mounting at right front of engine. To remove, take out two pivot bolts and clamp bolt, slip off drive belt.

Belt Adjustment: 1" deflection (thumb pressure) midway between generator and pump pulleys. To adjust, loosen all mounting bolts, pull generator away from engine.

REGULATOR

Auto-Lite Model VRP-4007C-2. Voltage & Current type. On right side in engine compartment.
See Electrical Equipment Section for complete data.

NOTE—Regulator cover sealed. Warranty void if seals broken.

Cutout Relay

Cuts In—6.4-7.0 volts (set to 6.4-6.6 volts).

Cuts Out—4.1-4.8 volts (approx. 4-6 amps. disch.).

Contact Gap—.015" minimum.

Air Gap—.031-.034" with contacts open (measured at hinge end of core).

Voltage Regulator

Setting—7.35 (7.2-7.5) volts at 70°F. See Electrical Equipment Section for data at other temperatures.

Checking (without breaking seal) & Adjustment—*See Electrical Equipment Section.*

Contact Gap—.012" min. (armature against stop pin).

Air Gap—.048-.052" with contacts just opening.

Current Regulator

Setting—34-36 amperes (marked "35" on cover).

Checking (without breaking seal) & Adjustment—*See Electrical Equipment Section.*

Contact Gap & Air Gap—Same as Voltage Regulator.

LIGHTING

Headlamps: Corcoran-Brown "Sealed Beam" type. Upper and lower beams controlled by Beam Selector Switch on toeboard.
See Electrical Equipment Section for complete data.

Adjustment—Aim upper beam straight ahead with hot spot center 3" below lamp center height at 25 ft.

Beam Indicator—On left side of instrument panel (above Radio panel). Lighted when upper beams in use.

Switches

Lighting—Willys No. 645292.

Beam Selector—Willys No. 640260.

Instrument—Willys No. 641732.

NOTE—Separate instrument light switch used on first trucks only. On later trucks, these lights controlled by main lighting switch.

Bulb Specifications

Position	Candlepower	Mazda No.
Headlamps	Sealed Beam	4030
Parking	1½	55
Instr. & Beam Ind.	1	51
Stop & Tail	21-3	1158
Dome	15	87

LIGHTING CIRCUIT BREAKER: 30-ampere type. Mounted on lighting switch. Vibrating thermostatic type. Protects lighting circuits by vibrating to limit current. No adjustment.

HORNS: Sparks-Withington (Sparton) No. C-5992. Vibrator type single horn controlled by relay.
Horn Current—7-9 amperes.

ENGINE

►*See Willys Civilian Jeep Model CJ-2A for ALL TRUCK ENGINE DATA. All specifications same as for later type Jeep Engine (with Timing Gears).*

VALVE TIMING

Tappet Clearance: .014" All Valves, Hot or Cold.
NOTE—Adjusting screws self-locking type.

Valve Timing: See Camshaft Setting above.

Intake Valves—Open 9° BTDC. Close 50° ALDC.

Exhaust Valves—Open 47° BLDC. Close 12° ATDC.

►**Timing Mark Change (starting 2T Engine Number 13887, 4T Engine No. 14251)**—Flywheel marked "5°" (for 5° BTDC.) and "T.C." (top dead center). "I.O." mark not carried and intake opening point must be estimated.

Valve Timing Check—Set tappet clearance #1 intake valve at .020". This valve should open with piston 9° or .039" BTDC. with flywheel mark "I. O./" centered in inspection hole in right front face of housing below starter. Reset tappet clearance at .014".

LUBRICATION

Engine Oiling System: Pressure to crankshaft, connecting rod, and camshaft bearings, and to timing gears.

Crankcase Capacity—4 qts. refill.

Normal Oil Pressure—35 lbs. at 30 MPH., 5-10 lbs. with engine idling at 600 RPM.

Oil Pressure Regulator—Opens at 40 lbs. Located under plug on side of oil pump. Adjustable by adding or removing shims above spring within plug.

Oil Pump: New Internal Rotor type. Mounted externally on right side of crankcase.

Oil Pump Servicing—*See Willys Shop Notes.*

Oil Filter: Fram (Optl. equipment).
Servicing—Drain filter at each crankcase oil change. Replace filter cartridge at 8000 mile intervals.

Oil Pressure Gauge: King-Seeley Electric type.
Dash Unit—King-Seeley No. 41305.
Engine Unit—King-Seeley No. 40767.
See Miscellaneous Section for complete data.

COOLING

Cooling System: Pressure type with pressure valve (relief valve) in filler cap.

Capacity—11 qts.

Pressure Valve—AC No. 846709 (Radiator Filler Cap). Opens at 3¾ lbs. (3¼-4¼ lbs.).

Water Pump: Centrifugal, packless, ball bearing type.
See Water Pump Section for complete data.

Removal—Loosen and remove drive belt, disconnect hose. Remove pump mounting screws, lift out pump and fan assembly.

Belt Adjustment—*See Generator Belt Adjustment.*

Thermostat: Harrison. In outlet elbow on cylinder head. Starts to open at 148-155°F. Fully open at 173°F.

Temperature Gauge: King-Seeley Electric type.
Dash Unit—King-Seeley No. 41315.
Engine Unit—King-Seeley No. 7000.
See Miscellaneous Section for complete data.

CLUTCH

Auburn Model 8501-23 (with Borg & Beck Driven Member). Single plate, dry disc type.
See Clutch Section for complete data.

Facings—Molded (flywheel side), Woven (pressure plate side). I. D. 5⅛". O. D. 8½". Thickness .135"

Pedal Adjustment: Pedal free travel 1¼" (gives 1/16" clearance between release bearing and clutch levers). To adjust, loosen locknut and turn adjusting nut on connector link at clutch fork, tighten locknut.

Removal: Remove transmission (see Transmission Removal), remove flywheel bell housing. Mark pressure plate and flywheel to insure correct re-installation, take out mounting screws in clutch cover flange (turn all screws out evenly), remove clutch assembly and driven member.

TRANSMISSION

TRUCK MODEL 2T

Warner Model AS1-T90E. Constant-mesh, synchromesh (Second & High), sliding gear (Low & Reverse), all helical gear type.
See Transmission Section for complete data.

Transmission Control: Remote control type with gearshift lever on steering column.
See Transmission Section for complete data.

Removal: Remove floor boards, take off bell housing inspection hole cover, disconnect clutch throw-out bearing retracting spring. Disconnect transmission

control rods and speedometer cable at transmission case. Disconnect propeller shaft at universal joints and remove shaft. Support engine with jack placed under bell housing, remove rear engine mounting bolts from cross-member under transmission case. Raise rear end of engine so that transmission clears cross-member (CAUTION—see that fan blades do not damage radiator). Remove transmission to bell housing bolts, pull transmission straight back to clear clutch shaft, remove from truck.

TRANSMISSION

TRUCK MODEL 4T

Warner Model AS3-T90A. Constant-mesh synchro-mesh (Second & High), sliding spur gear (Low & Reverse).

See Transmission Section for complete data.

Transfer Case: Spicer Model 18.. Two-speed auxiliary transmission and front-wheel drive unit mounted on rear of transmission case. Separate control levers provided for Low-High range (right hand lever), and front-wheel drive engagement (left hand lever).

See Transmission Section for complete data.

Transmission Control: Remote control type with gearshift lever mounted on steering column.

See Transmission Section for complete data.

Removal: ***See Universal Jeep Model CJ-2A Transmission Removal instructions.***

UNIVERSALS

TRUCK MODEL 2T

Detroit Ball-and-Trunnion Type. Two used (First Trucks), three used (Later Trucks). NOTE—Later trucks have two propeller shafts with support bearing and intermediate universal joint at frame cross-member.

See Universals Section for complete data.

UNIVERSALS

TRUCK MODEL 4T

Front & Rear Drive Propeller Shaft Joints: Spicer needle roller bearing types as follows:

1261-102X .....Transmission End—Front Drive
1261-1X.....Transmission End—Rear Drive
1268-104X ..... Axle End—Front & Rear

See Universals Section for complete data.

Front Axle Shaft Joint: Bendix Constant-velocity type. One joint used at outer end of each shaft (within steering knuckle housing).

See Universals Section for complete data.

P wer Take-off Propeller Shaft Joints: Detroit Ball-and-trunnion type. Three used (additional joint at intermediate support bearing on frame cross-member).

See Universals Section for complete data.

FRONT AXLE

TRUCK M DEL 4T

Spicer (Salisbury) Model 25. Full-floating, hypoid gear type. Differential assembly (ring and pinion gear assembly) is identical with Spicer Model 23-2 Full-Floating Rear Axle and is serviced in same manner.

See Spicer (Salisbury) Full Floating Rear Axle in Rear Axle Section for complete data.

Ratio—5.38-1.

Backlash—.005-.007". Shim adjustment.

Removal: ***See Universal Jeep Model CJ-2A Front Axle Removal instructions.***

Wheel Bearing Adjustment: ***See Universal Jeep Model CJ-2A "Front Axle" for Wheel Bearing Adjustment.***

REAR AXLE

Timken Model No. 51540. Semi-floating, spiral bevel gear type with Hotchkiss Drive.

See Rear Axle Section for complete data.

Ratio—5.38-1 Std. Optl. Ratios (2T only) 4.88-1 and 6.17-1.

Backlash—.004-.018". Shim adjustment.

Removal: Support rear end of truck securely, remove rear wheels, disconnect rear shock absorbers, rear brake line (at frame connection on right side), rear brake cables and propeller shaft at rear universal. Place support jacks under axle housing to relieve springs of weight, remove nuts on spring "U" bolts, remove pivot bolt at front end of springs, lower springs to floor. Remove axle assembly.

Axle Shaft Removal: Remove wheel and hub assembly (use wheel puller), remove nuts on bolts holding backing plate and brake assembly, remove dust shield, oil seal, and backing plate. Remove axle shaft and wheel bearing. CAUTION—Do not lose bearing adjusting shims.

Wheel Bearing Adjustment—Endplay .003-.005". Adjust by adding or removing shims between backing plate and flange on axle housing. See axle shaft removal above for dismantling instructions.

NOTE—Shims installed on **left hand** end of axle housing only in production. Shims can be installed on right hand end of axle housing, if necessary, for correct endplay.

SHOCK ABSORBERS

Gabriel. Hydraulic, direct acting, adjustable type. NOTE—Shock absorbers are sealed and cannot be dismantled for servicing or refilling.

See Shock Absorber Section for complete data.

Adjustment—Remove mounting bolt at lower end, fully collapse shock absorber by pressing up on lower end until adjusting key within unit engages slot in adjusting plate (can be determined by feel), turn unit in clockwise direction until limit of adjustment is reached (full range of adjustment is 4 turns), back off adjustment by turning unit counter-clockwise **exactly one turn** for standard setting. Make certain that adjusting key does not slip out of slot while making adjustment.

CAUTION—Units on both sides must be set alike.

FRONT SUSPENSION

Front Axle (Model 2T): Clark "I" beam type with reverse-Elliott ends.

Front Axle (Model 4T): Spicer (Salisbury) Model 25. Special full-floating driving unit. See Front Axle data (above).

Front Suspension: Conventional type (see Front Axles above) with semi-elliptic springs.

Steering Knuckle Bearing Servicing & Adjustment 4T Trucks with Front-wheel Drive). ***See Universal Jeep Model CJ-2A "Front Axle" for data.***

Kingpin Inclination—7½° crosswise.

Caster—3°.

Camber—1° (2T), 1½° (4T).

Toe In—3/64-3/32".

STEERING GEAR

Ross Model T12, No. TA-13018, Cam-and-Twin Lever

See Steering Gear Section for complete data.

BRAKES

Service Brakes: Bendix (Lockheed) Hydraulic, self-centering, type. Hand lever applies rear wheel service brakes.

NOTE—These self-centering brakes do not have anchor pin adjustment.

See Brake Section for complete data.

Drums—Chrome-nickel type. Diameter 11".

Lining—Moulded type (all shoes). Width 2". Thickness .182-.192". Length per wheel 22 1/16".

Clearance—.008" toe, .005" heel, for each shoe.

NOTE—No anchor pin adjustment provided. Brake shoes should be centralized by hard brake application (and then released) before adjustments are made.

Braking Power—56% front, 44% rear.

Hand Brake: See service brakes above.

Adjustment—Tighten link rod adjustment (cable equalizer connector) at brake lever on frame cross-member for slight drag with hand lever set two notches "on". Release hand lever and mak certain that brakes free of any drag.

MODEL IDENTIFICATION

SERIAL NUMBER: On plate on outside of left frame side rail at front end and on plate on floor riser at left of driver's seat.
1948 Numbers—10,001 Up.

ENGINE NUMBER: Stamped on right front upper corner of cylinder block.
1948 Numbers—S-10001 Up.

TUNE-UP

COMPRESSION PRESSURE: 125 lbs. at 185 RPM cranking speed.

VACUUM READING: Steady 18-21" idling at 500 RPM.

FIRING ORDER: 1-5-3-6-2-4. See diagram.

SPARK PLUG GAPS: .030"
Plug Type—Auto-Lite Type A-7. 14 mm. Metric.

IGNITION: *See Coil, Condenser, and Distributor.*
Breaker Gap—.020" Limits .018-.022".
Cam Angle or Dwell—34½° Closed, 25½° Open.
Breaker Arm Spring Tension—17-20 ozs.
Automatic & Vacuum Advance—*See Distributor.*

IGNITION TIMING: TDC. (At Top Dead Center).
Timing Procedure—*See Ignition Timing.*
Timing Mark—Line on rim of vibration dampener aligned with pointer on timing gear cover on right side.
Octane Selector Setting—Set to just eliminate ping with engine pulling hard.

CARBURETION: *See Carburetor & Carb Equipment.*
Idle Setting—1-2 turns open—one screw. Turn screw out for richer mixture.
Idle Speed—600 RPM. or 6 MPH.
Float Level—5/16" from top of machined projection on bowl cover to top of soldered seam on free end of float with cover assembly inverted.
Accelerating Pump—No seasonal adjustment.
Fuel Pump Pressure—4½ lbs. max. at 1800 RPM.

CRANKCASE VENTILATOR: Remove and clean the vacuum control valve. *See Crankcase Ventilator (following Carb. Equipment) for directions.*

MANIFOLD HEAT CONTROL: Automatic thermostatic type. Valve must operate freely (no adjustment required).

VALVE TAPPET CLEARANCE: .014" All Valves, Hot or Cold.
Valve Timing Check—*See Valve Timing.*

STARTING: *See Battery, Starter, Generator, Regulator.*

IGNITION

IGNITION SWITCH: Douglas or Mitchellock Switch. Willys No. 641720.
Ignition Lock—Briggs & Stratton. B&S No. 50184.
Key Series—C250-499. Groove No. 3.

COIL: Auto-Lite IG-4090A. Service Coil IG-4070 (with bracket IG-1798S). On right side of engine to rear of distributor.
Ignition Current—2.5 amperes idling, 5 stopped.

CONDENSER: Auto-Lite No. IG-2671.
Capacity—.20-25 microfarad.

DISTRIBUTOR: Auto-Lite Model IGC-4513 or IGC-4514. Automatic advance type with Vacuum Spark Control and Octane Selector adjustment.
Breaker Gap—.020". Limits .018-.022".
Cam Angle—34½° closed, 25½° open.
Breaker Arm Spring Tension—17-20 ozs.
Rotation—Counter-clockwise viewed from above.

Automatic Advance

Degrees Distr.	R.P.M.	Degrees Eng.	R.P.M.
Start	350	0	700
1	380	2	760
7	550	14	1100
11	1300	22	2600
12	1500	24	3000

Octane Selector: 20° advance or retard adjustment at distributor. See Ignition Timing.

Vacuum Spark Control: Auto-Lite. Separate type (vacuum unit mounted on bracket, linked to quadrant on distributor). Provides additional advance at speeds above idling except when engine accelerated or operated with wide open throttle when spark retarded by return spring.

Vacuum Advance

Distr. Degrees	Eng. Degrees	Vacuum (" of HG)
Start	0°	3½"
1°	2°	5½"
3°	6°	9¼"
5°	10°	13"
6°	12°	15"

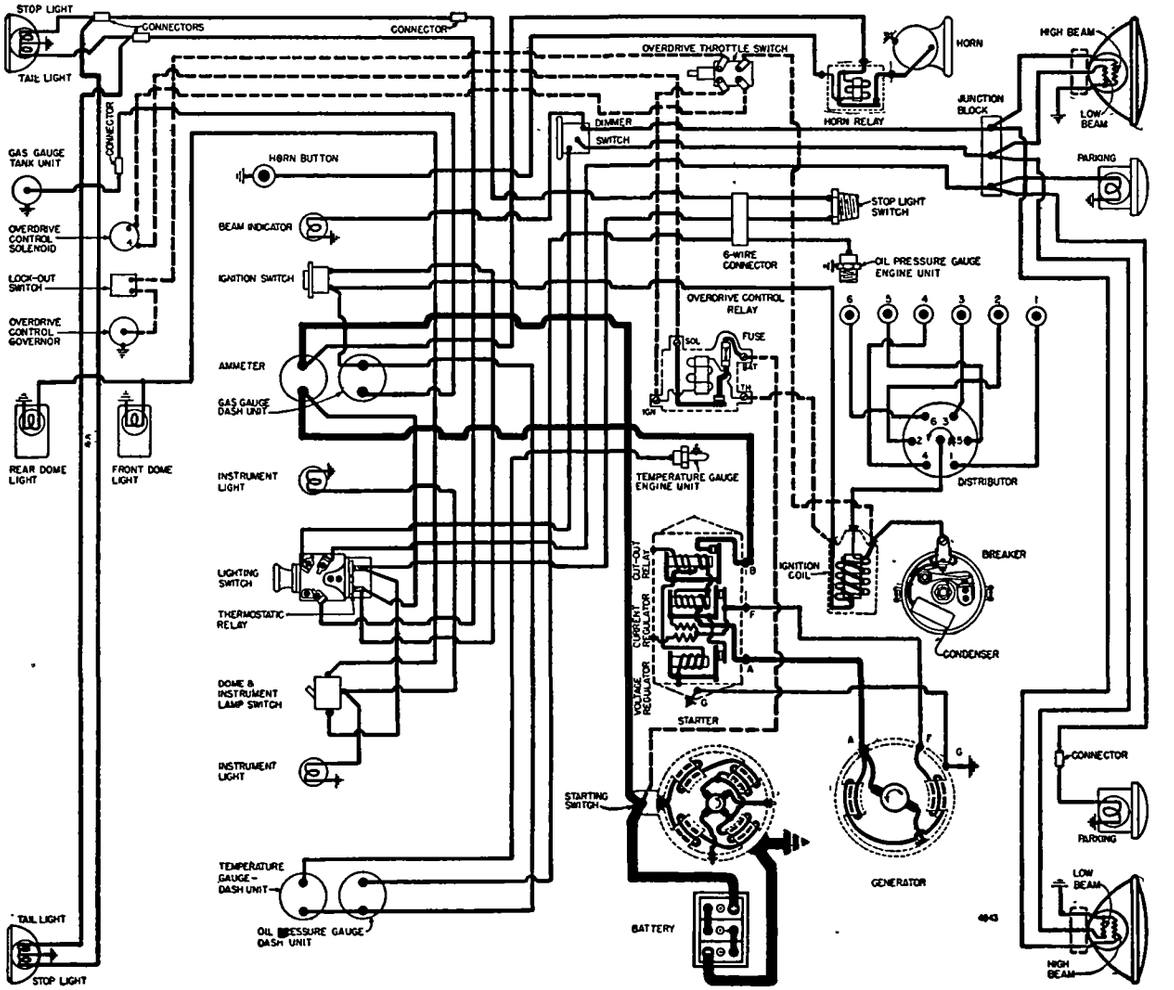

Distributor Removal: On right side of engine. To remove, disconnect vacuum line, take out hold-down screw in mounting plate (vacuum unit mounting bracket).

Installation Note—If crankshaft has been turned with distributor off engine, install distributor as follows: Turn crankshaft to #1 cylinder firing position (see Timing), turn distributor shaft until rotor opposite #1 segment in cap (see diagram), install distributor on engine, rocking shaft slightly to engage drive coupling, push distributor down into place, install hold-down screw, check ignition timing.

CAUTION—If oil pump has been removed, see Oil Pump Installation under "Oil Pump" in Willys Shop Notes.

IGNITION TIMING

Std. Setting.....At Top Dead Center
NOTE—See Octane Selector Setting to compensate for special fuel and operating conditions.
Timing Marks—Line on rim of vibration dampener

and pointer on timing gear cover. Flywheel also marked ("TC" on flywheel in line with horizontal center-line of inspection hole, right front face of housing.

Timing (Engine not Running)—With #1 piston on compression, turn engine until piston reaches firing position (TDC) with line on vibration dampener aligned with pointer on right side of timing gear cover. Loosen vacuum control link screw in distributor quadrant, center pointer on scale, tighten screw. Loosen clampscrew on hold-down plate, rotate entire distributor assembly until contacts begin to open, tighten clampscrew, see that rotor at #1 segment in distributor cap, check spark plug connections.

Timing (Using Timing Light—Engine Idling)—This method recommended by manufacturer. Direct timing light at vibration dampener, idle engine (engine must be warm), adjust distributor (as directed above) until timing mark lines up with pointer.

Octane Selector Setting—If engine pings on heavy pull, loosen vacuum control link screw at distributor quadrant, retard spark slightly by rotating distributor counter-clockwise. For High Octane Fuel, spark can be advanced by rotating distributor clockwise.

CARBURETOR

Carter WA1 No. 645S. 1¼" Single Barrel, Downdraft type with manual choke control.
See Carburetor Section for complete data.

Settings (Idle Setting, Float Level, and Accelerating Pump): *See Tune-Up data.*

Metering Rods & Jets—*See Carter Jet Table in Carburetor Section.*

Fast Idle: Interconnected linkage by which choke valve lever opens throttle to fast idle position when carburetor choked for starting.

Setting—No adjustment required.

CARB. EQUIPMENT

Fuel Pump: AC No. 1539245. Diaphragm type combination fuel-and-vacuum pump.

Replacement Pump—AC No. 9245.

Pump Pressure—4½ lbs. max. at 1800 Eng. RPM.
See Carb. Equipment Section for complete data.

Gasoline Gauge: King-Seeley Electric type.

Dash Unit—King-Seeley No. 41310.

Tank Unit—King-Seeley No. 41248.
See Carb. Equipment Section for complete data.

Air Cleaner: AC No. 1544113 Oil-wetted type (Std.), Oil-bath type (Special Equipment).

Servicing (Oil-wetted Type)—Clean filter element and re-oil at 2000 mile intervals or more often if required by operating conditions.

Servicing (Oil-bath Type)—Clean filter and fill to oil level mark with same oil used in engine crankcase at 2000 mile intervals (when engine oil changed) or more often if required by operating conditions.

CRANKCASE VENTILATOR

Sealed Positive Ventilation Type. Air intake pipe (from air cleaner to oil filler pipe) furnishes clean air to crankcase, air outlet pipe (from valve cover to manifold) allows fumes from crankcase to be sucked into intake manifold. Vacuum control valve at manifold connection **must close at idling speed** for satisfactory idling performance.

NOTE—Clean Vacuum Control Valve when engine tuned up.

Cleaning Vacuum Control Valve—Remove control valve by disconnecting pipe and unscrewing valve from manifold. Disassemble valve, withdraw valve and spring, clean valve and valve seat thoroughly.

Servicing—Make certain all connecting pipes tight and that oil filler cap gasket seals cap tightly. Remove and clean control valve when tuning engine or whenever system does not operate satisfactorily.

BATTERY

Auto-Lite PN-15 or Willard HW-1-100. 6 volt, 15 plate, 100 Ampere Hour capacity (20 hr. rate).

Starting Capacity—120 amperes for 20 minutes.

Zero Capacity—300 amperes for 3.2 minutes.

Five-second Voltage—4.15 volts.

Grounded Terminal—Negative (—) grounded at starter.

Engine Ground—Strap at left front engine mount.

Location—Right hand side of dash in engine compt.

Dimensions—Lgth. 8 15/16". Width 7⅛". Hgt. 8⅝".

STARTER

Auto-Lite Model MZ-4137. Armature No. MZ-2214. Drive—Overrunning clutch and positive pinion shift actuated by starting pedal.

Rotation—Counter-clockwise at commutator end.

Brush Spring Tension—42-53 ozs. (new brushes).

Cranking Engine—185 RPM., 150-175 amps., 5 volts.

Performance Data

Torque	R.P.M.	Volts	Amperes
0 ft. lbs.	4300	5.5	70
.65 "	2500	5.5	100
2.55 "	1325	5.0	200
4.95 "	750	4.5	300
7.65 "	220	4.0	400
7.8 "	Lock	3.0	420
11.8 "	Lock	4.0	560

Removal: On right front face of flywheel housing. To remove, disconnect pedal linkage and cables, take out flange mounting capscrews and bolt in bracket on cummutator end.

Starting Switch: Auto-Lite SW-2677A. Mounted on starter and operated by pinion shift lever.
See Electrical Equipment Section for complete data.

GENERATOR

Auto-Lite Model GDZ-4817A. Armature GDZ-2006F. Two brush (shunt) type with voltage and current regulation. Ventilated by fan on drive pulley.

Maximum Charging Rate—35 amperes, 8.0 volts (cold) with discharged battery (controlled by regulator).

Charging Rate Adjustment—None (see Regulator).

Cold Performance Data			Hot Performance Data		
Amperes	Volts	R.P.M.	Amperes	Volts	R.P.M.
0	6.4	925	0	6.4	1000
5	6.65	1060	5	6.65	1150
10	6.85	1200	10	6.85	1290
15	7.05	1340	15	7.05	1430
20	7.3	1480	20	7.3	1590
25	7.55	1620	25	7.55	1750
30	7.8	1760	30	7.8	1980
35	8.0	1900	35	8.0	2250

Rotation—Counter-clockwise at commutator end.

Brush Spring Tension—35-53 ozs. (new brushes).

Field Current—1.60-1.78 amperes at 6.0 volts.

Motoring Current—4.2-4.6 amperes at 6.0 volts.

Removal: Conventional pivot mounting at right front of engine. To remove, take out two pivot bolts and clamp bolt, slip off drive belt.

Belt Adjustment: 1" deflection (thumb pressure) midway between generator and pump pulleys. To adjust, loosen all mounting bolts, pull generator away from engine.

REGULATOR

Auto-Lite Model VRP-4007C-2. Voltage & Current type. On right side in engine compartment.
See Electrical Equipment Section for complete data.

NOTE—Regulator cover sealed. Warranty void if seals broken.

Cutout Relay

Cuts In—6.4-7.0 volts (set to 6.4-6.6 volts).

Cuts Out—4.1-4.8 volts (approx. 4-6 amps. disch.).

Contact Gap—.015" minimum.

Air Gap—.031-.034" with contacts open (measured at hinge end of core).

Voltage Regulator

Setting—7.35 (7.2-7.5) volts at 70°F. See Electrical Equipment Section for data at other temperatures.

Checking (without breaking seal) & Adjustment—*See Electrical Equipment Section.*

Contact Gap—.012" min. (armature against stop pin).

Air Gap—.048-.052" with contacts just opening.

Current Regulator

Setting—34-36 amperes (marked "35" on cover).

Checking (without breaking seal) & Adjustment—*See Electrical Equipment Section.*

Contact Gap & Air Gap—Same as Voltage Regulator.

LIGHTING

Headlamps: Corcoran-Brown "Sealed Beam" type. Upper and lower beams controlled by Beam Selector Switch on toeboard.
See Electrical Equipment Section for complete data.

Adjustment—Aim upper beam straight ahead with hot spot center 3" below lamp center height at 25 ft.

Beam Indicator—On left side of instrument panel (above Radio). Lighted when upper beams in use.

Switches

Lighting—Willys No. 645292.

Beam Selector—Willys No. 640302.

Instrument—Willys No. 641732.

Bulb Specifications

Position	Candlepower	Mazda No.
Headlamps	Sealed Beam	4030
Parking	1½	55
Instr. & Beam Ind.	1	51
Stop & Tail	21-3	1158
Dome	15	87

CONTINUED N NEXT PA E

C NTINUED FROM PRECEDING PA E

MISC. ELECTRICAL

LIGHTING CIRCUIT BREAKER: 30-ampere type. Mounted on lighting switch. Vibrating thermostatic type. Protects lighting circuits by vibrating to limit current. No adjustment.

FUSES: Overdrive—20 ampere. On control relay.

HORNS: Willys No. 645952 (Single Horn Std.), No. 645956 (Dual Horns—Optl.). Vibrator type with horn relay.

Horn Relay—Willys No. 643889.

ENGINE

ENGINE SPECIFICATIONS: Own 6-63. Six cylinder, "L" head type.

Bore—3" (3.000-3.002"). **Stroke**—3½".

Displacement—148.44 cu. ins. **Rated HP.** 21.6.

Developed Horsepower—70 at 4000 RPM.

Compression Ratio—6.42-1. Std. cast-iron head.

Compression & Vacuum Reading—*See Tune-Up.*

ORIGINAL BORE & PISTON SIZES: *See Willys Shop Notes.*

ORIGINAL BEARING SIZES: *See Willys Shop Notes.*

TIGHTENING TORQUES: *See Willys Shop Notes.*

CYLINDER HEAD INSTALLATION: *See Willys Shop Notes.*

PISTONS: Aluminum alloy, "T" slot, cam ground, tin or brass plated type. **Length**—3".

Weight—.985 lbs. (with pin and rings).

Removal—Pistons and rods removed from above.

Clearance—.016-.0185" (top), .0025" (skirt).

Replacement Pistons: Furnished .005", .015", .030" .045" Oversize.

Fitting New Pistons: Use .0025" feeler gauge ¾" wide between piston and cylinder wall on side opposite slot. Pull required to withdraw feeler must be 7-12 lbs.

Installing Pistons: T-slot toward left (valve) side of engine (opposite side from oil spray hole in rod).

PISTON RINGS: Two compression rings, one oil ring per piston, all above pin. Oil drain holes in oil ring groove.

Ring	Width	End Gap	Side Clearance
Compr. (#1)	3/32"①	.008-.018"	.002-.004"
Compr. (#2)	3/32"①	.008-.018"	.0015-.0035"
Oil (#3)	3/16"②	.008-.018"	.001-.0025"

①—.0925-.0935". ②—.1860-1865".

Installing Rings: Compression ring mark "TOP" (on side of rings) and bevel on inner edge must be UP.

Replacement Rings: Furnished .005", .015", .030", .045" Oversize.

PISTON PIN: Locked in rod by clampscrew.

Diameter—.7497". **Length**—2 17/32".

Pin Fit in Piston—.0001-.0005" or a light thumb push fit at normal room temperature.
NOTE—Pin hole in piston diamond-bored to inside diameter of .7498-.7500".

Replacement Pins: Furnished Standard size only.

CONNECTING ROD: Length—6.343-6.347".

Crankpin Journal Diameter—1.875". *See "Original Bearing Sizes" in Willys Shop Notes.*

Lower Bearing—Replaceable steel-backed, babbitt lined type. No shims. CAUTION—Oil spray hole in bearing upper half must line up with oil hole in rod.
NOTE—Palnuts used as locknuts on rod bolts.

Clearance—.0004-.0025". **Sideplay**—.004-.010".

Bearing Adjustment: None (replace bearings). Do not file rods or bearing caps.

Palnut Installation—*See Willys Shop Notes.*

Replacement Bearings: Furnished Std. size and .010", .020" Undersize.

Installing Rods: Rods not offset. Install with oil spray hole in lower end toward right (away from camshaft) on all rods.

CRANKSHAFT: Four bearing with integral counterweights. Vibration dampener on forward end.

Journal Diameters—2.250" all Bearings. *See "Original Bearing Sizes" in Willys Shop Notes.*

Bearings—Replaceable steel-backed, babbitt lined type. No shims.

►*NOTE—Bearing shells can be removed and replaced without removing crankshaft (bearings are NOT doweled on six cylinder engine).*

Clearance—.0009-.003".

Bearing Adjustment: None (replace bearings). Do not file bearing caps. Bearings can be removed and replaced without removing crankshaft.

Rear Bearing Oil Seal Servicing—*See "Crankshaft & Main Bearings" in Willys Shop Notes.*

Replacement Bearings: Furnished Std. size and .010", .020" Undersize.

End Thrust: Taken by #1 front bearing (flanged type) and thrustwasher in back of crankshaft gear. Adjusted by adding or removing shims behind thrust washer. Shims furnished .002" thick.
NOTE—Crankshaft gear must be removed with a gear puller for endplay adjustment.

Endplay—.004-.008".

CAMSHAFT: Four bearing with helical gear drive.

Journal Diameters—#1, 1.8755-1.8760"; #2, 1.8425-1.8435"; #3, 1.8110-1.8120"; #4, 1.6245-1.6250".

Bearings—Removable steel-backed, babbitt-lined bushing (Front), machined in crankcase (all others). Front bearing reamed to 1.877" diameter.

Clearance—.001-.0025".

Camshaft Removal—*See Willys Shop Notes.*

End Thrust—Taken by thrust plate assembled behind camshaft gear with a spacer assembled behind plate. If required, a thin shim can be installed behind spacer if too little clearance, or spacer can be dressed to provide greater clearance.

Endplay—.003-.0055".

Timing Gears: Crankshaft gear Cast Iron. Camshaft gear Fibre with steel hub.

Gear Backlash—.000-.002".

Camshaft Setting: Mesh marked tooth of camshaft gear with marked space (between teeth) on crankshaft gear.

VALVES:	Head Diameter	Stem Diameter	Length
Intake	1 3/8"	.340"	4½"
Exhaust	1 9/32"	.340"	4½"

	Seat Angle	Lift	Stem Clearance
Intake	45°	.2843"	.0015-.00325"
Exhaust	45°	.300"	.0025-.0045"

Valve Guides: Removable type. Remove guides from above with puller. Install new guides with driver or press guides down until upper end ⅞" below upper edge of valve seat (taper end up).

Valve Springs: Springs can be installed with either end up. Free length 1 57/64".

	Spring Pressure	Length
Valve Closed	50 lbs.	1 5/8"
Valve Open	105 lbs.	1 21/64"

Valve Lifters: Mushroom type. In reamed holes in block. Service by installing oversize lifters.
NOTE—Camshaft must be removed for lifter r - moval.

Camshaft Removal—*See Willys Shop Notes.*

Lifter Diameter—.597-.605". **Length**—2".

Clearance in Block—.0005-.002".

VALVE TIMING

Tappet Clearance: .014" All Valves, Hot or Cold.
NOTE—Adjusting screws self-locking type.

Valve Timing: See Camshaft Setting above.

Intake Valves—Open 5° BTDC. Close 44° ALDC.

Exhaust Valves—Open 47° BLDC. Close 12° ATDC.

Valve Timing Check—Set tappet clearance #1 intake valve at .020". This valve should be about to open (clearance taken up) with #1 piston 5° or .007" BTDC. with flywheel mark "5°/" centered in inspection hole in right front face of housing below starter. Reset tappet clearance to .014".

LUBRICATION

Engine Oiling System: Pressure to crankshaft, connecting rod, and camshaft bearings and to timing gears.

Crankcase Capacity—5 qts. refill.

Normal Oil Pressure—35 lbs. at 30 MPH., 10 lbs. with engine idling at 500 RPM.

Oil Pressure Regulator—Opens at 25 lbs. Located on oil pump housing. Adjustable by adding or removing shims from above spring within plug.

Oil Pump: Internal Rotor type. Mounted externally on right side of crankcase.

Oil Pump Servicing—*See Willys Shop Notes.*

Oil Pressure Gauge: King-Seeley Electric type.

Dash Unit—King-Seeley No. 41305.

Engine Unit—King-Seeley No. 40767.
See Miscellaneous Section for complete data.

Crankcase Ventilation: *See special data following "Carb. Equipment."*

COOLING

Cooling System: Pressure type with relief valve in radiator filler cap.

Capacity—8¾ qts. (9½ qts. with heater).

Pressure Valve—AC No. 846740. In filler cap. Opens at 3¾ lbs. (3¼-4¼ lbs.).

Water Pump: Centrifugal, packless type with special sealed ball bearing shaft (no lubrication required). *See Water Pump Section for complete data.*

Removal—Loosen and remove drive belt, disconnect hose, remove pump mounting screws. Lift out pump and fan assembly.

Belt Adjustment—*See Generator Belt Adjustment.*

Thermostat: Harrison. In outlet on cylinder head. Starts to open at 148-155°F. Fully open at 173°F.

Temperature Gauge: King-Seeley Electric type.

Dash Unit—King-Seeley No. 41315.

Engine Unit—King-Seeley No. 7000.
See Miscellaneous Section for complete data.

CLUTCH

Auburn Model 8501-19 (with Borg & Beck Driven Member). Single plate, dry disc type.
See Clutch Section for complete data.

Facings—Molded (flywheel side), woven (pressure plate side). I. D. 5⅛". O. D. 8½". Thickness .135".

Pedal Adjustment: Pedal free travel 1" (provides 1/16" clearance between release bearing and clutch levers). To adjust, loosen locknut and turn adjusting nut on connector link at clutch fork, tighten locknut.

Removal: Remove transmission (see Transmission Removal), remove flywheel bell housing. Mark pressure plate and flywheel to insure correct re-installation, take out mounting screws in clutch cover flange (turn all screws out evenly), remove clutch assembly and driven member.

TRANSMISSION

Warner Model AS20-T96 (with Overdrive). Constant-mesh, synchro-mesh (Second & High), sliding gear (Low & Reverse), all helical gear type.
See Transmission Section for complete data.

Transmission Control: Remote control type with gearshift lever on steering column.
See Transmission Section for complete data.

Removal: Remove floor boards, take off bell housing inspection cover, disconnect clutch throw-out bearing retracting spring. Disconnect transmission control rods and speedometer cable at transmission case. Disconnect propeller shaft at universal joints and remove shaft. Support engine with jack placed under bell housing, remove rear engine support bolts from cross-member under transmission case, raise rear end of engine so that transmission clears cross-member (CAUTION—use care that fan blades do not damage radiator). Remove transmission to bell housing bolts, pull transmission straight back to clear clutch shaft, remove from car.

OVERDRIVE

Warner Type R10B (part of AS20-T96 Transmission). New solenoid operated, governor controlled type overdrive (no centrifugal pawls) with throttle operated "kick-down."
See Transmission Section for complete data.

Control Relay—Auto-Lite Model HRT-4001.

Overdrive Governor—Auto-Lite Model TGE-4002.

Transmission Solenoid—Delco-Remy Model 1118132

Removal: Remove as a unit with the transmission. Removal instructions same as for regular transmission (above) after governor and solenoid wires and lock-out control cable disconnected, and overdrive case-to-cross-member bolts removed.

UNIVERSALS
UP TO SERIAL NO. 11494

Spicer Model 1261-102X (Front), 1268-111X (Rear). Needle roller bearing type.
See Universals Section for complete data.

UNIVERSALS
AFTER SERIAL NO. 11494

Detroit Universals Series 4100. Ball-and-trunnion type.
See Universals Section for complete data.

REAR AXLE

Spicer (Salisbury) Model 23-1. Semi-floating, Hypoid Gear type with Hotchkiss drive.
See Rear Axle Section for complete data.

Ratio—5.38-1 Std., 4.88-1 Optl.

Backlash—.004-.008". Shim adjustment.

Removal: Support rear end of car securely, remove rear wheels, disconnect rear shock absorbers, rear brake line (at frame connection on right side), rear brake cables, and propeller shaft at rear universal joint. Place support jacks under axle housing so that springs relieved of weight, remove nuts on spring "U" bolts, remove pivot bolt at front end of springs, lower springs. Remove axle assembly from beneath car.

Axle Shaft Removal: Remove wheel and hub assembly (use wheel puller), disconnect brake line at wheel cylinder, remove nuts on bolts holding backing plate and brake assembly on housing, remove dust shield, oil seal, and backing plate (with brake assembly).

CAUTION—Do not lose bearing adjusting shims located between backing plate and flange on housing. Remove axle shaft and wheel bearing.

Wheel Bearing Adjustment—Endplay .001-.006". Adjust by adding or removing shims between backing plate and axle housing flange at each wheel. See axle shaft removal (above).

SHOCK ABSORBERS

Delco—Model 1030-C (Front), 1031-Q (Rear).

Monroe—Model K-18004 (Front), K-18005 (Rear). Direct acting, hydraulic type.
See Shock Absorber Section for complete data.

NOTE—Shock absorbers are sealed and cannot be dismantled for servicing or refilling.

FRONT SUSPENSION

Planar Type. Independent, linked parallelogram type with transverse spring (spring acts as lower control arm).
See Front Suspension Section for complete data.

Kingpin Inclination—5½° crosswise.

Caster—1° No adjustment.

Camber—1° Shim adjustment.

Toe-In—1/16-1/8".

STEERING GEAR

Ross Model T-12. Cam-and-Twin Lever type.
See Steering Gear Section for complete data.

BRAKES

Service Brakes: Bendix (Lockheed) Hydraulic, self-centering type. Hand lever applies rear wheel service brakes.

NOTE—These self-centered brakes do not have anchor pin adjustment.
See Brake Section for complete data.

Wheel Cylinders—Diameter: Front 1", Rear 7/8".

Drums—Chrome-nickel type. Diameter 9.948".

Lining—Moulded type (all shoes). Width 1.760". Thickness .222". Length per shoe: 10 11/16" forward shoe, 8 5/16" reverse shoe.

Clearance—.008" toe, .005" heel, for each shoe.

NOTE—No anchor pin adjustment provided. Brake shoes should be centralized by hard brake application (and then released) before adjustments are made.

Hand Brake: See Service Brakes (above).

Adjustment—Tighten link rod adjustment (cable equalizer connector) at brake lever on frame cross-member for slight drag with hand lever set two notches "on". Release hand lever and make certain that brakes free of any drag.

EQUIPMENT INDEX

BRAKES: Page
Bendix Hydraulic 203
Bendix (Lockheed) Self-centering 205
Chevrolet (Own) Hydraulic 205
Ford Truck (Lockheed) Hydraulic 204
Ford Pass. Cars (Bendix) Hydraulic 204
Goodyear-Hawley Hydra-Disc 202
Lincoln (Bendix) Hydraulic 204
Lockheed Hydraulic Double-Anchor 203
Lockheed-Chrysler "Safe-Guard" 204
Lockheed (Wagner) Self-adjusting 203
Mercury (Bendix) Hydraulic 204

CARBURETORS:
Car Application Index 174
Carter Jet Specifications 182
Carter (B&B) Downdraft Jet Specs. 175
Carter (B&B) Updraft Jet Specs 182
Holley (Ford) Jet Specifications 188
Stromberg Jet Specifications 190
Zenith Jet Specifications 192

CLUTCHES:
Auburn 209
Borg & Beck 208
Buick (Own) 208
Chevrolet (Own) 208
Hudson (Own) 208
Inland 208
Long 209
Rockford 209

CLUTCH CONTROLS:
Hudson Vacumotive 206
Packard Electromatic 207

ELECTRICAL EQUIPMENT:
Auto-Lite Regulators
VRP, VRR, VAV, VBA 193
Delco-Remy Distributors
"Center-Bearing Breaker Plate" 201
Delco-Remy Regulators
"1118300" Series 197
Delco-Remy Starter Solenoid
(without Relay) 199
Ford & Mercury Distributors 200
Ford, Lincoln, Mercury Regulators 195

FRONT SUSPENSION:
Buick 210
Cadillac 210
Chevrolet 211
Chrysler, De Soto, Dodge 212
Frazer 213
Ford 214
Hudson 213

FRONT SUSPENSION (Cont.): Page
Kaiser 213
Lincoln 214
Mercury 214
Nash 216
Oldsmobile 210
Packard 217
Plymouth 212
Pontiac 217
Studebaker 1949 217
Studebaker 1950 218
Willys 219

FRONT WHEEL DRIVE AXLES:
Spicer (Salisbury) 229

REAR AXLES:
Buick 220
Cadillac 220
Chevrolet Pass. Cars 221
Chevrolet Truck Semi-floating 221
Chevrolet Truck Full-floating 221
Chevrolet Truck Two-speed 221
Chrysler, De Soto, Dodge 221
Crosley (See Spicer) 229
Ford Pass. Cars 225
Ford Station Wagon 226
Ford Truck Semi-floating 226
Ford Truck Full-floating 224
Ford Truck Two-speed 224
Frazer (See Spicer) 229
Hudson 223
Kaiser (See Spicer) 229
Lincoln & Mercury 226
Nash 223
Oldsmobile 227
Packard 228
Plymouth 221
Pontiac 229
Spicer (Salisbury) Semi-floating 229
Studebaker (See Spicer) 229
Timken Semi-floating 229
Willys Pass. Cars (See Spicer) 229
Willys Trucks (See Timken) 229

REAR SUSPENSION:
Buick 220
Nash 223
Oldsmobile 228

STEERING GEARS:
Chevrolet Pass. Cars 230
Ford Pass. Cars 231

TRANSMISSIONS:
See Special Index 232

1950 CAR MODEL INDEX

		Page
BUICK	Special Data & Shop Notes	3
	Series 40	10
FORD	Special Data & Shop Notes	54
	6 Cyl. Passenger Cars	56
	V8 Passenger Cars	60
HUDSON	Special Data & Shop Notes	74
	Pacemaker Six	84
MERCURY	Special Data & Shop Notes	91
	All Models	96
NASH	Special Data & Shop Notes	100
	Statesman Six	101
	Ambassador Six	105
PONTIAC	Special Data & Shop Notes	134
	Six	136
	Eight	140
STUDEBAKER	Special Data & Shop Notes	144
	Champion	154
	Commander & Land Cruiser	158

1949 CAR MODEL INDEX

►SEE 1950 MODELS BELOW

		Page
BUICK	Special Data & Shop Notes	3
	All Series	5
CADILLAC	Special Data & Shop Notes	12
	All Series	14
CHEVROLET	Special Data & Shop Notes	18
	Passenger Cars	22
	Trucks	26
CHRYSLER	Special Data & Shop Notes	31
	Six	32
	Eight	36
CROSLEY	Special Data & Shop Notes	40
	CD & Hotshot	42
DE SOTO	Special Data & Shop Notes	31
	All Models	46
DODGE	Special Data & Shop Notes	31
	All Models	50
FORD	Special Data & Shop Notes	54
	6 Cyl. Passenger Cars	56
	V8 Passenger Cars	60
	Trucks	64
FRAZER	Special Data & Shop Notes	68
	All Models	70
HUDSON	Special Data & Shop Notes	74
	Six	76
	Eight	80
KAISER	Special Data & Shop Notes	68
	All Models	87
LINCOLN	Special Data & Shop Notes	91
	All Models	92
MERCURY	Special Data & Shop Notes	91
	All Models	96
NASH	Special Data & Shop Notes	100
	600 Six	101
	Ambassador Six	105
OLDSMOBILE	Special Data & Shop Notes	110
	Six	112
	Eight	116
PACKARD	Special Data & Shop Notes	120
	Eight & Super Eight	121
	Custom Eight	126
PLYMOUTH	Special Data & Shop Notes	31
	All Models	130
PONTIAC	Special Data & Shop Notes	134
	Six	136
	Eight	140
STUDEBAKER	Special Data & Shop Notes	144
	Champion	146
	Commander & Land Cruiser	150
WILLYS	Special Data & Shop Notes	162
	Jeep Civ. CJ-3A	164
	Jeep Sta. Wagon 4X4-63	164
	Jeep Sta. Wgn. & Del. 4-63	164
	Jeepster VJ-3	164
	Jeep 6 Cyl. Sta. Sedan 6-63	170
	Jeep Truck 2-WD, 4-WD	164

← 1950 CAR MODELS

©1949 NATIONAL AUTOMOTIVE SERVICE
PRINTED IN U S. A

►IMPORTANT FACTORY PRODUCTION & RECOMMENDED CHANGES (See N xt Pag)

IMPORTANT FACTORY PRODUCTION & RECOMMENDED CHANGES FOR PREVIOUS MODELS & 1949-50 MODELS

►See Da.a Shee.s for addi.ional Changes, Cautions, & Corrections

BUICK

►**LATE 1948 & ALL 1949-50 DYNAFLOW—HYDRAULIC VALVE LIFTERS USED**—*See 1949 & 1950 Buick car pages and 1949-50 Buick Special Data.*

►**1949 MODELS AFTER 1ST 5000 ENGINES—CONNECTING ROD BEARING CHANGE**—Replaceable precision bearings used. *See 1949 Buick car pages*

►**LATE 1948 & ALL 1949-50 MODELS—REAR AXLE PINION BEARING CHANGE**—*See Buick Rear Axle in 1949 Rear Axle Section.*

CADILLAC

►**1949 MODELS—REAR AXLE PINION BEARING PRE-LOAD ADJUSTMENT & SETTINGS**—*See Cadillac Rear Axle in 1949 Rear Axle Section.*

►**LATE 1949 MODELS—CARBURETOR CHANGE TO CORRECT ACCELERATION STUMBLE**—*See Carter WCD Carburetors in 1949 Carburetor Section.*

CHEVROLET

►**1949 MODELS—NEW CARTER CARBURETOR WITH FAST IDLE & RE-DESIGNED ACCELERATING PUMP**—*See Carter (Chevrolet) W1 carburetor in 1949 Carburetor Section.*

►**LATE 1949 MODELS—NEW ROCHESTER CARBURETOR**—*See Rochester Carburetor in 1949 Carburetor Section.*

►**1949 PASS. CARS—LOWER CONTROL ARM PRODUCTION CHANGE**—*See Chevrolet Front Suspension in 1949 Front Suspension Section.*

►**1948-49 TRUCKS—GEAR DISENGAGEMENT (1ST, 2ND, REVERSE) & HIGH GEAR NOISE (15-40 MPH)**—*See Chevrolet 4-Speed Transmission in 1949 Transmission Section.*

►**1948-49 TRUCKS—SHIFTER HEAD & YOKE PRODUCTION CHANGE**—*See Chevrolet 4-Speed Transmission in 1949 Transmission Section.*

►**1948-49 TRUCKS—LOCKING IN 3RD OR 4TH GEAR CORRECTION**—*See Chevrolet 4-Speed Transmission in 1949 Transmission Section.*

►**1948-49 TRUCKS—MAINSHAFT & SLIDING GEAR PRODUCTION CHANGE**—*See Chevrolet 4-Speed Transmission in 1949 Transmission Section.*

CHRYSLER—DE SOTO—DODGE

►**ALL 1946-47-48 MODELS—SPARK PLUG GAP CHANGE**—*SHOULD BE .030" ± .002".* **This figure supersedes earlier data.** *CAUTION*—This setting is not the same and DOES NOT APPLY TO 1949 MODELS.

►**1949 MODELS—CARBURETOR CHANGES**—*See Carter (B&B) Downdraft Carburetors in 1949 Carburetor Section.*

FORD

►**1949 PASS. CARS—NEW FRONT END SPECIFICATIONS & PARTS PRODUCTION CHANGES**—*See Ford Front Suspension in 1949-50 Front Suspension Section.*

►**1949 PASS. CARS—FRONT SUSPENSION NOISE CORRECTION**—*See Ford Front Suspension in 1949-50 Front Suspension Section.*

►**1949 "V8" CARS & TRUCKS—PISTON CHANGE**—*See 1949-50 Ford V8 Pass. Car pages.*

►**1949 "V8" CARS & TRUCKS—CONNECTING ROD CHANGE**—*See 1949-50 Ford V8 Pass. Car pages.*

►**1949 "V8" CARS & TRUCKS—CAMSHAFT CHANGE**—*CAUTION*—Two types used (each require DIFFERENT TAPPET CLEARANCE. *See 1949-50 Ford V8 Pass. Car pages.*

►**1949 "V8" CARS—TIMING GEAR CHANGE**—*See Ford V8 Pass. Car pages.*

HUDSON

►**ALL 8 CYL.—NEW VALVE TAPPET CLEARANCE**—.008" Intake Valves, .010" Exhaust Valves. *This setting supersedes earlier data.* APPLIES TO ALL 8 CYLINDER ENGINES INCLUDING 1949 MODELS.

►**ALL 1948-49 MODELS—FLYWHEEL MARK CHANGE**—Cyl. U.D.C.-1 is latest marking. Indicates upper dead center position of piston in #1 cylinder.

►**1948-1949 SIX CYL.—647S CARBURETOR CHANGE TO CORRECT LEAN CONDITION**—*See Carter WDO Carburetors in 1949 Carburetor Section.*

LINCOLN

►**1949 MODELS—CARBURETOR CHANGES**—*See Lincoln Dual Concentric Carburetor in 1949 Carburetor Section.*

►**1949 MODELS—FRONT END SPECIFICATION CHANGES**—*See 1949 Lincoln Car pages for latest Kingpin Inclination and Steering Geometry settings.*

MERCURY

►**1949 MODELS—CARBURETOR CHANGES**—*See Mercury Dual Concentric Carburetor in 1949-50 Carburetor Section.*

►**1949 MODELS—TIMING GEAR CHANGE**—Fiber gear used on late '49 and available for replacement on early '49 cars. *See 1949-50 Mercury Car Pages.*

►**1949 MODELS—INTAKE VALVE GUIDE CHANGE**—Rubber seal added. *See 1949-50 Mercury Car Pages.*

►**1949 MODELS—FRONT END SPECIFICATION CHANGES**—*See 1949-50 Mercury Car Pages for latest Kingpin Inclination and Steering Geometry settings.*

NASH

►**1949 "600"—CARBURETOR CHANGE TO IMPROVE ACCELERATION PERFORMANCE**—*See Carter WA1 Carburetors in 1949-50 Carburetor Section.*

►**1949 AMBASS.—CARBURETOR METERING ROD CHANGE**—*See Carter WA1 Carburetors in 1949-50 Carburetor Section.*

OLDSMOBILE

►**LATE '49 6 & 8—DELCO-REMY DISTRIBUTOR WITH NEW "CENTER-BEARING" BREAKER PLATE**—*See Delco-Remy Distributors "Center-Bearing Breaker Plate" in 1949 Electrical Equip. Section.*

PACKARD

►**LATE 1948 MODELS—DELCO-REMY REGULATORS NEW "1118300" SERIES**—Have screw adjustment for settings and single regulator springs. *See Delco-Remy Regulators "1118300" Series in 1949 Electrical Equipment Section.*

►**LATE 1948 MODELS—WARNER R11 OVERDRIVE**—Used on some cars. *See 1949 Packard Car Pages and Warner R11 Overdrive in 1949-50 Transmission Section.*

►**1949 & EARLIER MODELS—REAR AXLE PINION BEARING PRE-LOAD SETTING CHANGE**—*See Packard Rear Axle in 1949 Rear Axle Section.*

PLYMOUTH

►**ALL 1946-47-48 MODELS—SPARK PLUG GAP CHANGE**—*SHOULD BE .030" ± .002".* **This figure supersedes earlier data.** *CAUTION*—This setting is not the same and DOES NOT APPLY TO 1949 MODELS.

PONTIAC

►**EARLY 1949—HYDRA-MATIC NEUTRAL SWITCH REPLACEMENT TO CORRECT INOPERATIVE STARTER**—*See Pontiac Hydra-Matic Drive in 1949-50 Transmission Section.*

►**1937-49 MODELS—VALVE TAPPET CLEARANCE COLD SETTING**—Set to .012-.014" COLD. *This setting should be re-checked when engine warmed-up for limits of .011" to .013".*

STUDEBAKER

►**1950 MODELS—OIL PAN REMOVAL WITH ENGINE IN CAR**—*See Studebaker 1949-50 Special Data & Shop Notes.*

WILLYS

►**LATE 1948 MODELS—CLUTCH RETURN CLIP SPRING INSTALLATION TO PREVENT RATTLING NOISE WHEN CLUTCH DISENGAGED**—*See Auburn Clutch in 1949 Clutch Section.*

►**4-63 & 6-63—TOE-IN ADJUSTMENT PROCEDURE TO PREVENT UNDUE TIRE WEAR**—*See Willys Front Suspension in 1949 Front Suspension Section.*

TIGHTENING (TORQUE WRENCH) SPECIFICATIONS

ALL MODELS

	Ft. Lbs.	In. Lbs.
Spark Plugs (14 mm. type)	22-28	264-336
Cylinder Head Capscrews	65-70	780-840
Main Bearing Bolts	90-100	1080-1200
Connecting Rod Bolts (40,50)	45-50	540-600
Connecting Rod Bolts (60,70,90)	60-65	720-780
Piston Pin Clamp Bolt	25-30	300-360
Rocker Arm Bracket Capscrew	30-35	360-420
Flywheel to Crankshaft (40,50)	35-40	420-480
Flywheel to Crankshaft (70)	45-50	540-600
Manifold Studs	25-30	300-360
Timing Chain Cover	15-20	180-240
Balancer Bolt	100-110	1200-1320
Diff. carrier to Axle Hous'g	20-25	240-300
Brake Backing Plate to Axle	35-40	420-480
Wheel Bolts	70-75	840-900
Pitman Arm Nut	70-75	840-900
Front Shock Abs. to frame	60-65	720-780
Lower Control Arm to frame	45-50	540-600
Body Bolts	25-30	300-360

CYLINDER HEAD

CYLINDER HEAD INSTALLATION: Use Torque Indicating Wrench to tighten cylinder head capscrews, tighten in correct sequence as shown in the diagram. Cast Iron heads should be tightened cold and rechecked after engine has been run sufficiently to bring all parts to normal operating temperature.

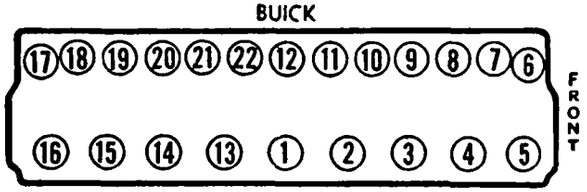

NOTE—On models using "crimped" cylinder head gaskets, cylinder head should be tightened initially and then the entire tightening procedure repeated to compensate for gradual flattening of crimping.

Tightening Torque—See Tightening (Torque Wrench) Specifications above.

ENGINE MOUNTINGS

1949-50 MODELS

"CONTROLLED FREQUENCY" ENGINE MOUNTINGS: Engine and transmission supported at 3 points on "Controlled Frequency" mountings (special synthetic rubber pads).

Front Mountings. At approximate center of crankcase at each side of engine. Mounting pads secured between brackets on frame and engine. Designed to support engine weight and provide torsional control.

Rear Mounting. At rear of transmission. Consists of: 1) Transmission Support (between legs of frame X-member), 2) Rubber Mounting Pad (on support under transmission rear bearing retainer), 3) Rubber Thrust Pad (between rear of support and thrust plate extending down from rear bearing retainer). Steel shims fitted between thrust pad and support. Mounting pad supports part of weight and thrust pad takes drive thrust from rear wheels.

Engine Mounting (and Centering) Adjustment: With torque tube disconnected from torque ball make adjustments as follows:

1) At front engine mountings. Tighten brackets at frame and crankcase, loosen front mounting pad top stud nuts at engine bracket on each side.

2) At rear mounting. Tighten at following points: a) transmission support ends at frame X-member, b) mounting pad at support and at transmission rear bearing retainer, c) thrust pad to thrust plate stud nuts **at rear.** Then loosen thrust pad to transmission support stud nuts **at front.** Remove steel shims ahead of thrust pad.

3) Then center engine as follows: Distance between front edge of crankshaft balancer (at horizontal center line) and **center** of nearest shock absorber bolt head at each side must be equal. If required, shift engine sidewise (oversize holes in engine bracket at rubber mounting permit engine movement) until distance equal at each side (engine centered in frame). Tighten front mounting pad top stud nuts at each engine bracket.

4) Shimming rear mounting. Insert steel shims from above (shim tabs UP on left side on Dynaflow UP on right side on Synchro-mesh Trans. cars) to snugly fill space between front face of rubber thrust pad and rear face of transmission support (CAUTION—Engine and transmission must be seated normally on mounting pads). Tighten thrust pad to transmission support stud nuts at front. Then retighten front engine mounting pad stud nuts at each side of engine. Connect torque tube to ball.

TORQUE BALL ADJUSTMENT

1949-50 MODELS

TORQUE BALL: Operates between an inner and outer retainer bolted to transmission rear bearing retainer. Universal joint seal provided at rear of torque ball. Shims provided between front flanged ends of inner and outer retainers for adjustment. **1949-50 Models**—Synthetic rubber boot fitted from rear of outer retainer to flange of torque ball (replaces packing and spring washer formerly used on inner rear edge of outer retainer).

Torque Ball Adjustment: Proceed as follows:

Disassembly—Disconnect rear axle, move to rear. Take off torque ball boot, thrust plate, and torque ball assembly from transmission rear bearing retainer (on 40, 50, be sure to mark top of outer retainer and use mark for reassembly). Clean all parts. Replace worn or damaged parts.

Reassembly and Adjustment—As follows:

1)—Install guide pins in upper bolt holes in transmission rear bearing retainer.

2)—Install one shim (with 3 notches in outer edge) and inner ball retainer (with oil drain hole and notch in edge down) on guide pins.

3)—Oil bearing surfaces of retainers and torque ball, and universal oil seal in torque ball with transmission lubricant.

NOTE—If universal oil seal replaced, install seal with feather edge in towards ball, use bar or flat piece of metal and press seal flush with boss on flange of ball. Leather must be soft and pliable (soaked in neatsfoot oil prior to installation).

4)—Assemble torque ball in outer retainer with "TOP" mark on ball and top of retainer (mark on 40, 50; flat portion on 70) together.

5)—Use Installing Tool J 2597 and push tool (sleeve and plug) through rear side of torque ball until leather edge of seal on plug (sleeve will drop off plug). Assemble torque ball and outer retainer (with TOP marks up) on guide pins, fill space between flanges of inner and outer retainers with shims (see Torque Ball Shims below). See that oil seal has seated on universal joint, remove tool plug.

Torque Ball Shims—Four thicknesses (marked by notches on outer edge) as follows:

3 Notches .....004-.006" 2 Notches .....009-.011"
1 Notch .....011-.013" Unmarked .....013-.015"

6)—Install thrust plate and bolts in retainers (remove guide pins and install short bolts at these holes). DO NOT TIGHTEN BOLTS.

7)—Tighten retainer bolts evenly while continually moving torque ball by means of hardwood club inserted in end of universal joint. Use soft mallet and tap outer retainer if ball binds while tightening bolts. ***CAUTION—For proper centering of ball and retainers, torque ball must be moved while tightening retainer bolts.***

8)—Torque ball should require 5 to 10 lbs. drag with 5⅝" leverage (insert hardwood club in universal, attach spring scale in groove on club 5⅝" behind the rear edge of the universal). If the torque ball not within this tension, repeat centering operation and recheck tension. If further adjustment required, add torque ball shims if too tight, or remove shims if too loose (see Torque Ball Shims above) until correct adjustment secured.

CAUTION—Always use Tool J-2597 when installing torque ball to avoid damaging universal joint oil seal.

9)—Install torque ball boot by turning large end over small end, engage small end in groove on flange of torque ball, then turn large end to front to engage rear end of outer retainer.

10)—Re-install shims between thrust plate and thrust pad and tighten thrust plate stud nuts.

11)—Re-install rear axle assembly.

PISTONS

1949-50 MODELS

PISTONS (REPLACEMENT SERVICE): Pistons are lighter weight aluminum alloy type and are fitted with pins (pistons not furnished without pins).

Series 40, 50 Replacement Pistons

Part No.	Nominal Size	Piston Diameter
1393028	Standard①	3.0910-3.0922"
1393029	.005" Oversize	3.0966-3.0972"
1393030	.010" Oversize	3.1016-3.1022"
1393032	.020" Oversize	3.1116-3.1122"
1393033	.030" Oversize	3.1216-3.1222"

Series 70 Replacement Pistons

Part No.	Nominal Size	Piston Diameter
1393034	Standard①	3.4358-3.4370"
1393035	.005" Oversize	3.4414-3.4420"
1393036	.010" Oversize	3.4464-3.4470"
1393038	.020" Oversize	3.4565-3.4570"
1393039	.030" Oversize	3.4664-3.4670"

①—Standard pistons are "High Limit" type.

PISTON RINGS

1949-50 MODELS

REPLACEMENT PISTON RINGS: Car manufacturer supplies oversize rings in sizes listed below.

Ring Oversize	For Piston Oversizes
.010"	.005" to .010"
.020"	.011" to .020"
.030"	.021" to .030"

CONTINUED N NEXT PAGE

CONTINUED FROM PRECEDING PA E

Piston Ring Tools (1940 & later)—Use Service Tool KMO-297-E (Series 40, 50), KMO-297-D (on Series 60, 70, 90) for removing and installing rings.

Ring Fitting—Fit rings to specifications listed on Buick car pages (.010" min. end gap on all rings).

Excessive Oil Consumption Note—When installing rings to correct this condition use a fine hone very lightly on all bores (just enough to dull glaze surface and not changing bore size). This will allow quicker break-in of new rings.

CRANKSHAFT & MAIN BEARINGS

1949-50 MODELS

PLASTIGAGE FOR CHECKING BEARING CLEARANCE: Consists of plastic rod material supplied in envelope marked with scale which gives bearing clearance in thousandths of an inch when used to measure flattened plastigage in bearing cap. Use Plastigage as follows:

Bearing Clearance Check—Remove bearing cap, wipe oil from the bearing insert and shaft journal (plastigage is soluble in oil). On connecting rod, turn crankshaft to place rod 30° before lower dead center (gives minimum clearance position and places oil hole away from plastigage). On main bearings, turn crankshaft to place oil hole up to avoid oil drainage on plastigage, install paper shims in adjacent bearings to take weight of crankshaft off lower bearing being checked. Place piece of plastigage rod across full width of bearing insert in cap, re-install bearing cap and tighten bolts to recommended torque (see Tightening Specifications). Remove cap, match widest width of flattened plastigage with correct graduation of scale on envelope (marking of this graduation is bearing clearance).

1949-50 MODELS

REAR MAIN BEARING OIL SEAL: Consists of oil slinger on crankshaft operating in groove to rear of rear main bearing. Slinger groove in bearing cap has oil return hole to crankcase. Braided fabric seal fitted in groove behind slinger groove in crankcase and bearing cap. Vertical joint between cap and crankcase fitted with cork seals at each side.

Installation—With crankshaft removed, place new braided fabric seal in groove in crankcase with both ends extending out from bearing parting line, force seal in groove with hammer handle or smooth piece of wood so that seal seats within 1/16" of crankcase. Cut ends of seal off **flush** with crankcase (use razor blade or sharp knife). Repeat operation for bearing cap. Coat vertical grooves in cap with gasket cement (allow to set until tacky), use new cork gasket and fit into groove with putty knife (ends will project beyond cap). Place cap in vise to lightly compress seals in grooves, cut ends of cork seals flush with cap surface. Coat cork gaskets with vaseline, install cap in crankcase.

VALVE SYSTEM

ALL DYNAFLOW 1949-50 MODELS
(including LATE 1948 DYNAFLOW)

INITIAL ADJUSTMENT OF HYDRAULIC VALVE LIFTERS: Required only when cylinder head has been removed, valves refaced, valve lifters removed, or when setting of adjusting ball stud disturbed.

►*CAUTION—Adjust only with lifter OFF CAM.*

Adjustment—Set engine in firing position for cylinder to be worked on placing lifters off cam *(if all valves being adjusted use table below to avoid setting firing position for each cylinder)*. Turn adjusting ball stud to point where all play just removed at each end of push rod and all lash clearance removed from valve train, then turn adjusting ball stud down **exactly two (2) turns.** Oil groove on ball stud must be at least halfway down in rocker arm (ball stud can be turned down one additional turn—if this does not bring oil groove down, replace push rod or lifter).

Adjusting All Valves—By using the flywheel mark "U.D.C. 1-8" and setting engine in firing position for #1 cylinder, valves in left half of table below can be adjusted, then set #8 cylinder firing position and valves in right half of table can be adjusted.

Hydraulic Valve Adjusting Table

No. 1 Cyl. Firing		No. 8 Cyl. Firing	
Valve No.	Valve	Valve No.	Valve
1	#1 Exh.	3	#2 Int.
2	#1 Int.	5	#3 Exh.
4	#2 Exh.	6	#3 Int.
7	#4 Int.	9	#5 Exh.
8	#4 Exh.	10	#5 Int.
11	#6 Int.	13	#7 Exh.
12	#6 Exh.	15	#8 Int.
14	#7 Int.	16	#8 Exh.

1949-50 MODELS

ROCKER ARMS: Mounted on tubular shaft and held against sides of shaft brackets by spring installed on shaft between adjacent rocker arms. Arm at each end of shaft held by spring washer assembled between two flat washers, and a cotter pin. Shaft retained by pilot setscrew installed in top of #2 bracket.

Series 40 & 50. Two different types of offset rocker arms used.

Series 70. Three types of rocker arms used (two offset type arms for intake valves—same as used on 40 & 50 above, one straight arm for all exhaust valves).

Engines with Hydraulic Valve Lifters. Use different rocker arms—these arms **do not** have small oil feed hole on **underside** of arm at adjusting screw end.

40 & 50 Engines without Hydraulic Lifters

Part Number	Identification Marks① Upper	Lower	Intake 40-50	Exhaust 40-50
1303840	2 Dots	0	1-3-5-7	2-4-6-8
1303841	1 Dot	1	2-4-6-8	1-3-5-7

40, 50, 70 Engines with Hydraulic Lifters

Part Number	Identification Marks① Upper	Lower	Intake 40-50-70	Exhaust 40-50
1324123	2 Dots	0	1-3-5-7	2-4-6-8
1324122	1 Dot	1	2-4-6-8	1-3-5-7
1337336	42	X	All "70"	

①—Stamped on adjusting screw end of rocker arm.

►*CAUTION—Rocker arms for engines WITHOUT Hydraulic Lifters have oil feed hole for ball stud on UNDERSIDE of arm.*

Rocker Arm Installation—Install rocker arms in the following order (numbered from front to rear):

Series	Rocker Arm Position	Identification
40 & 50	1-3-5-7-9-11-13-15	marked 1& 1 Dot
40 & 50	2-4-6-8-10-12-14-16	marked 0 & 2 Dots
70	1-4-5-8-9-12-13-16	marked X & 42
70	2-6-10-14	marked 0 & 2 Dots
70	3-7-11-15	marked 1 & 1 Dot

►*CAUTION—Rocker arms must not be interchanged between engines with or without hydraulic lifters.*

Rocker Arm Lubrication: Outlet side of oil filter connected to drilled passage in cylinder head with pipe connected to top of #1 bracket. Upper pipe fitting in cylinder head restricted to provide proper oil flow.

OIL PUMP

1949-50 MODELS

OIL PUMP OVERHAUL: With pump removed from engine, take out cotter pin and remove screen and float, wash screen in kerosene or solvent, use light air pressure at inlet tube to clean screen. Oil pressure valve must be free in body and fit hole in body through entire length (hole size should be checked for wear). Valve clearance should be .003-.006". Pump gear position on shaft should be (40, 50) 7⅝" minus .010", (70) 8" minus .010", from slotted end of shaft to inner end of gear. With gears and shaft installed in pump body (idler gear with rounded end of teeth on inside), lay straightedge on pump body across gears, clearance between straightedge and gears should be .0025-.004". Backlash between pump gears should be .003-.006". Install pump cover. Place screen and float assembly in position and secure with cotter pin (float must swing freely and stop must allow complete vertical movement). Use thin fibre gasket and assemble pump to crankcase. Pump shaft must turn freely (check by turning shaft every 180° through 2 complete revolutions—should turn freely within backlash limits). If shaft not free, loosen two attaching screws and shift slightly until shaft aligned. If shifting of pump does not relieve binding of shaft, remove pump and distributor and grind off end of distributor shaft and pump shaft (at tonge-and-slot coupling) for slight end clearance. CAUTION—Distributor gear must be removed from distributor shaft for grinding operation—make sure gear pin properly peened at both ends when re-installed.

CLUTCH NOTES

1949-50 MODELS

CLUTCH PEDAL OVER-CENTER RETURN SPRING: Used on all models. Consists of spring connected to angular link attached to lower end of pedal or equalizer shaft and anchored to frame. This design allows spring to exert pressure to hold pedal down with clutch disengaged and out with clutch engaged. NOTE—Angular link not used on 38-40.

Adjustment—Angular link is self-positioning on pedal shaft or equalizer shaft. Tighten frame mounting bolt nut as much as possible by turning nut up to limit of threads so that maximum spring tension is secured.

IMPORTANT—Spring tension must always be relieved (by backing off eye-bolt nut) before disconnecting clutch linkage.

1949-50 MODELS

CLUTCH YOKE BOOT ASSEMBLY: Consists of a flexible boot installed on release yoke to seal opening in flywheel housing. Boot is mounted on yoke at outer end by bolt which also attaches release rod nut lock and has a retainer spring at inner end which engages rim of hole in housing. When installing boot, make certain that spring fingers are properly engaged in housing and that release rod nut lock is correctly positioned.

MODEL IDENTIFICATION

SERIAL NUMBER: Stamped on plate on left front door hinge pillar post and on right side of cowl.

1949 Numbers—First number for All Series·

1-5020984 ..	Flint	5-5050001	Wilmington
2-5030001. .. .	Southgate	6-5054001	Atlanta
3-5036001 ..	Linden	7-5057001 .	Framingham
4-5043001	Kansas City		

Identification—First digit of serial number indicates assembly plant as listed above.

ENGINE NUMBER: Stamped on boss on right side of crankcase below pushrod cover.

1949 Numbers—First numbers as follows· 52209724 (for 40), 52209725 (for 50), 52209727 (70).

Identification—Last digit of engine no. indicates Series: 4—Series 40, 5—Series 50, 7—Series 70.

TUNE-UP

COMPRESSION PRESSURE: 112 lbs. (40), 114 lbs. (50), 118 lbs. (Dynaflow 50, 70), at cranking speed.

VACUUM READING: Steady 18-20" idling at 8 MPH. or 450 RPM. for all models.

FIRING ORDER: 1-6-2-5-8-3-7-4. See diagram.

SPARK PLUG GAPS: .025". Limits 023-.028".

Plug Type—AC No. 48. 14 mm. Metric.

DISTRIBUTOR: Breaker Gap—.015" (.0125-.0175").

Cam Angle—Closed 21° to 30° with .016" gap.

►*CAUTION—Use of cam angle to set point gap not recommended by car manufacturer. If dwell meter used, make final check that gap within .0125-.0175".*

Breaker Arm Spring Tension—19-23 ounces.

Automatic & Vacuum Advance—*See Ignition.*

Condenser Capacity—.18-.23 microfarad.

IGNITION TIMING: 4° BTDC. (40, 50), 6° BTDC. (70).

►*CAUTION—Ignition timing should be set within yellow band of flywheel mark for proper engine performance.*

Timing Procedure—*See Ignition Timing.*

Flywheel Mark—"ADV. 4°" (for 40, 50), "ADV. 6°" (for 70) followed by yellow knurled section on flywheel ⅛" wide which gives timing range of 1° (4-5° for 40, 50, 6-7° for 70). Index mark located on edge of timing hole under cover on housing above starter.

Final Ignition Setting—Very light "ping" may occur with part throttle on a hard pull, or during acceleration between 10-20 MPH. with wide open throtle.

CARBURETION:

Idle Setting—Both screws 1 turn open (Carter), 1¾ turns open (Stromberg). Adjust both screws exactly alike. Turning screws out gives richer mixture.

Idle Speed—450 RPM. (or 8 MPH. on level road in 3rd gear).

Float Level (Carter)—5/32" from top of each float to gasket seat on cover with valve seated (invert to check). Fuel level even with bottom of inspection hole on side of float bowl with engine idling.

(Stromberg)—Fuel level 19/32" below top edge of float bowl or even with bottom of inspection hole on side of bowl with engine idling.

Accelerating Pump (Carter)—Two holes in arm. Inner hole minimum charge, Outer hole maximum

(Stromberg)—3 holes. Center hole (med. stroke) normal setting.

Choke Setting (Carter): Centered (index mark on cover centered on reference mark on housing).

(Stromberg)—"V" mark on cover one graduation Lean or clockwise (40, 50), Centered (Series 70).

Fuel Pump Pressure: 4½-5½ lbs. at the pump outlet, 4-5 lbs. at carburetor.

MANIFOLD HEAT CONTROL: Setting—Thermostatic coil wind-up ¼ turn at 70°F. (valve closed). To prevent valve rattles, counterweight should have 1/16-1/8" movement at extreme end positions, adjust by bending anti-rattle spring lower clip.

►**VALVE TAPPET CLEARANCE (SERIES 40 & 50 ENGINES WITHOUT HYDRAULIC VALVE LIFTERS): Identified by BLUE "Buick Fireball" lettering on valve rocker arm cover.** ***CAUTION—Feeler gauge used depends on engine temperature (do not use .015" feeler). To secure .015" lash at Road Operating Temperature, following shop procedure should be used:*** Loosen radiator cap, run engine at fast idle for 20 minutes (700 RPM. minimum—lower speed will not provide proper circulation for stabilizing water temperature), then adjust tappets using .017" feeler as "Go", .018" feeler as "No Go" gauge.

►*ALCOHOL ANTI-FREEZE NOTE*—Must be drained and cooling system filled with water during shop warm-up **for above adjustment.** This anti-freeze will boil before engine temperature stabilized.

►**VALVE TAPPET CLEARANCE (SERIES 50 & 70 ENGINES WITH HYDRAULIC VALVE LIFTERS): Identified by RED "Buick Fireball" lettering on valve rocker arm cover and label reading "This Engine Equipped with Hydraulic Lifters."** ***No service adjustment required.***

Initial Adjustment of Hydraulic Valve Lifters (when installing cylinder head, or whenever adjusting ball stud setting disturbed): ***See "Valve System" in Buick Special Data.***

Valve Timing Check—*See Valve Timing.*

STARTING: *See Battery, Starter, Generator, Regulator.*

CONTINUED ON NEXT PAGE

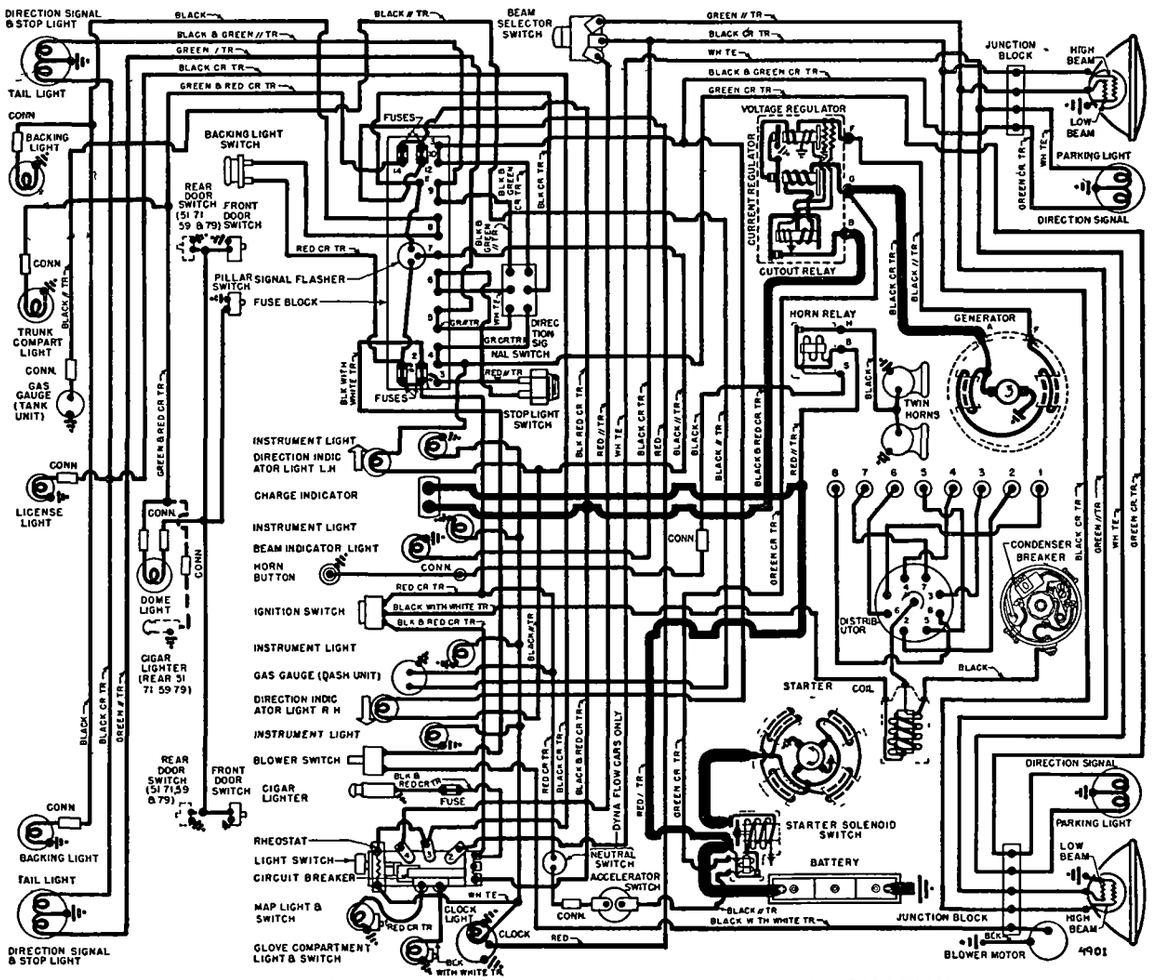

1949 SERIES 50 & 70 SH WN ABOVE (F R 1949 SERIES 40—SEE 1948 DIAGRAM)

CONTINUED FROM PRECEDIN PAGE

IGNITION

IGNITION SWITCH: Delco-Remy No. 1116359 (40 LHD), 1116297 (40 RHD), 1116452 (50 & 70).
Ignition Lock—Briggs & Stratton or Delco-Remy. Buick No. 1393108.

COIL: Delco-Remy No. 1115328 (LHD), 1115026 (RHD). Mounted on push rod cover on right side of engine.
Ignition Current—2½ amperes idling, 4½ stopped.

CONDENSER: Delco-Remy Part No. 1869704.
Capacity—.18-.23 microfarad.

DISTRIBUTOR: Delco-Remy 1110815. Automatic and vacuum advance type with new "center-bearing" breaker plate.

►**Breaker Plate Bearing Assembly**—Plate rotates on 3 bakelite buttons on support plate with spring tension adjustment (shim washers) on underside of support plate. Pull required to move plate should be 8 oz. min., 16 oz. max. with breaker plate assembly out of housing.
See "Delco-Remy Center-Bearing Breaker Plate Distributor" in Electrical Equipment Section.
Breaker Gap—.015". Limits .0125-.0175".
Cam Angle—Closed 21° to 30° with .016" gap.
►*CAUTION—Use of cam angle to set point gap not recommended by car manufacturer. If dwell meter used, make final check that gap within .0125-.0175".*
Breaker Arm Spring Tension—19-23 ounces.
Rotation—Counter-clockwise viewed from above.

Distributor Automatic Advance		Engine	
Degrees	R.P.M.	Degrees	R.P.M.
Start	250	2	500
7	400	14	800
13	1500	26	3000

Vacuum Spark Control: Delco-Remy No. 1116046.
Plunger Travel—⅛".

Vacuum Advance		
Distr. Degrees	Eng. Degrees	Vacuum (" of HG)
Start	0°	5-7"
5½°	11°	10½-12½"

Distributor Removal: Mounted on right side of crankcase. To remove, disconnect vacuum line, take out two hold-down screws in advance arm, lift out.

IGNITION TIMING

Std. Setting	Flywheel Degrees	Piston Pos.
Series 40①, 50②	4° BTDC	.0063" BTDC.
Series 70②	6° BTDC	.0149" BTDC.

①—Regular Fuel. ②—Ethyl Fuel.

►*CAUTION—Ignition timing should be set within yellow band of flywheel mark for proper engine performance.*
Flywheel Mark—"ADV. 4°" (for 40, 50), "ADV. 6°" (for 70) followed by yellow knurled section on flywheel ⅛" wide which gives timing range of 1° (4-5° for 40, 50; 6-7° for 70). Index mark located on edge of timing hole under cover on housing above starter.
Timing (With Synchroscope)—Connect synchroscope to #1 spark plug lead, direct light on flywheel through inspection hole in right front face of housing. Idle engine at **speed not greater than 350 RPM.**, loosen two distributor hold-down screws, rotate distributor until "ADV" mark on flywheel (see Flywheel Mark Note above) lines up with indicator, tighten hold-down screws. Refer to Final Ignition Setting.
Timing (Without Synchroscope)—With #1 cylinder on compression, turn engine over until "ADV" mark on flywheel lines up with indicator in inspection hole in right front face of housing. Loosen two distributor hold-down screws, rotate distributor until contacts begin to open, tighten hold-down screws.

Final Ignition Setting—*Must be within yellow band of flywheel mark (leading edge desired).* If timing advanced, engine roughness may result even with high octane fuel. If timing retarded to overcome heavy "ping", engine performance and economy will be lessened (higher octane fuel should be used). A very light "ping" may occur with part throttle on a hard pull, or during acceleraion with wide open throttle between 10-20 MPH. Do not retard timing to eliminate this light "ping."

CARBURETOR

Carter WCD (All Series) or Stromberg AAV-167 (Series 40, 50), AAV-267 (Series 70). Dual downdraft types with Automatic Choke.

	Carter	Stromberg
Series 40, 50	WCD 663S	AAV-167 Code 7-69
Series 70	WCD 664S	AAV-267 Code 7-70

Casting No. (Carter)—546 (for 663S), 573 (664S) on face of flange.
Code No. (Stromberg)—Stamped either on body or on a metal tag attached to the body.
See Carburetor Section for complete data.

Settings (Idle Setting, Float Level, and Accelerating Pump Setting): *See Tune-Up.*
Metering Jets & Rods—*See Carburetor Section for Carter & Stromberg Jet Specifications.*

Throttle Linkage Adjustment (Synchro-Mesh Transmission): Check linkage for smooth operation of throttle valve from closed to wide open position (pedal correctly secured to floor, pedal rod free in hole in floor mat, return spring proper tension for closed position). Wide open throttle stop should be accelerator pedal striking floor mat (not throttle lever stop striking boss on carburetor). Adjust as follows: With linkage disconnected at throttle operating ball joint, open throttle valve to wide open position against stop, have man press accelerator against floor mat, adjust ball joint so screw will just enter upper hole in throttle lever, turn ball joint 1 or 2 turns clockwise, connect ball joint to throttle lever. Check choke unloader operation.

►**Throttle Linkage Adjustment (Dynaflow Drive Cars):** With engine idling at 450 RPM., clearance between **edge of bracket** (attached to dash at lower end of vertical equalizer shaft) and **ear on lever** (just above shaft operating lever) should be 1/32-1/16" (adjust at ball joint end of throttle operating rod). Check wide open position of throttle valve with engine stopped and adjust at ball joint (as above) to secure wide open throttle position with pedal striking floor mat (not throttle lever stop striking boss on carburetor). Check choke unloader operation. Check Dash-Pot Setting (following).

►**Dash Pot Setting (Dynaflow Drive Cars):** Turn adjusting screw on lever ahead of dash pot plunger for 1/64-1/32" clearance between fast idle cam and fast idle screw with choke valve held closed.

Fast Idle: Carter Dual (WCD) Carburetor type or Stromberg Type (AAV-167, AAV-267 Carburetors).
See Carburetion Equipment Section for data.
Setting (Carter Carb.)—Adjust fast idle screw on throttle shaft lever for .015" (663S), .018" (664S) throttle opening with choke valve tightly closed and screw on "high" step of fast idle cam.
Setting (Stromberg)—Close choke valve on #53 (.0595") drill rod, adjust by bending fast idle cam rod so that locking lever on throttle valve shaft just clears loose lever on fast idle cam stud as throttle is opened and closed.

Automatic Choke: Carter Climatic Control (Dual Carb.) or Stromberg AAV-16, AAV-26 Type.
See Carburetion Equipment Section for complete data.
Setting (Carter Carb.)—Centered (index mark on cover centered on reference mark on housing).
Setting (Stromberg)—"V" mark on cover one graduation Lean (40, 50), Centered (70).

CARB. EQUIPMENT

Air Cleaner: AC No. 1544236 (40, 50 incl. Early Dynaflow), 1544638 (50 Later Dynaflow), 1544239 (70).
Filter Element—AC No. 19 (all).
Servicing—Clean and refill with 1 pint of SAE No. 50 engine oil at 5000 mile intervals.

Fuel Pump: AC Type AJ, No. 1537337 (40, 50), 1537338 (70), diaphragm type fuel-and-vacuum pump.
Replacement Pump—AC No. 529 (40, 50), 530 (70).
Pressure—4½-5½ lbs. at fuel pump outlet port or 4-5 lbs. at carburetor inlet.
See Carburetion Equipment Section for complete data.

Gasoline Gauge: AC Electric type.
Dash Unit—AC No. 1517078 (40), 1517040 (50, 70).
Tank Unit—AC No. 1516277 (40), 1517146 (50, 70).
See Carburetion Equipment Section for complete data.

BATTERY

Delco 15E4 (40, 50); 17E4 (70); 19E4 (Optl. 50, 70); 17K4 (Export 50, 70). 6 Volt, 15 plate (15E4), 17 plate (17E4, 17K4), 19 plate (19E4).
Grounded Terminal—Negative (—) to engine block.
Location—On right side under engine hood.

STARTER

Delco-Remy Model 1107049 (40 LHD), 1107078 (50 RHD), 1107953 (70 LHD), 1107057 (40, 50 RHD), 1107935 (70 RHD).
Armature—1867897 (Series 40, 50), 820158 (Series 70).
Drive—Overrunning clutch (solenoid pinion shift).
Rotation—Counter-clockwise at commutator end.
Brush Spring Tension—24-28 ounces.
Cranking Engine (40, 50)—90-110 RPM., 150 amps., 4.5 volts.
(70)—105 RPM., 175 amperes, 5 volts.

Performance Data—1107049, 57, 78

Torque	R.P.M.	Volts	Amperes
0 ft. lbs.	5000	5.7	80①
12 "	Lock	3.4	525

Performance Data—1107935, 53

0	ft. lbs.	5500	5.7	80①
15	"	Lock	3.0	600

①—Includes current draw of starter switch.

Removal: Starter flange mounted on right front face of flywheel housing. To remove, disconnect cables, remove flange mounting screws.

Starting Switch: Delco-Remy Solenoid Switch No. 1118019 controlled by Stromberg Starter Switch No. 385000 (Cars with Stromberg Carb.), Carter Car Starter Model 192-11U (Cars with Carter Carb.).
Starter Switch Setting—*See Stromberg or Carter Carburetors in Carburetor Section.*

►**Dynaflow Neutral Safety Switch**—Delco-Remy No. 1997838. At lower end of steering column. Connected in starter control circuit so that starter operative only with lever in "N" Neutral or "P" Parking.

►**Neutral Safety Switch Adjustment**—*See "Buick Dynaflow Drive" in Transmission Section.*

GENERATOR

Delco-Remy 1102679 (40), 1102709 (50), 1102708 (70). Two brush types with voltage & current regulation.
Armature—D-R 1877806 (1102679), 1912599 (1102708, 9).
Charging Rate Adjustment—None. See Regulator.
Maximum Charging Rate—**(1102679)** 34-36 amperes, 8.0 volts, 2600 RPM., 25 MPH. (1400 Eng. RPM), Hot. **(1102708, 9)**—40 amperes, 8.0 volts, 2400 RPM., 25 MPH. (1250 Eng. RPM.), Hot.

Performance Data—Cold

	Amperes	Volts	R.P.M.
1102679	30①	8.0	1825
1102708, 9	40	8.0	1950

①—Not maximum output. See Current Regulator.
Brush Spring Tension—25 ounces each.
Field Current—1.75-1.9 amperes (for 1102679 generator), 1.90-2.05 amperes (1102708, 9), at 6.0 volts.
Rotation—Counter-clockwise at commutator end.

Removal: Pivot mounted at left front of engine. To remove, disconnect leads, remove pivot & clamp bolts.

Belt Adjustment: ½" belt deflection with light pressure at point midway between generator and fan.

REGULATOR

Delco-Remy 1118301.....for 1102679 Generator
Delco-Remy 1118357.....for 1102708 & 9 Generators

►***NEW "1118300 SERIES"*** regulators have screw adjustment for settings and single regulator springs. ***See Electrical Equipment Section for complete data.***
CAUTION—Check generator for grounded field coils and leads before changing regulator settings to correct High Charging Rate or High Voltage.

Cutout Relay

Cuts In—5.9-6.8 volts hot (set to 6.4 volts hot).
Contact Gap—.020" (same for both contacts).
Air Gap—.020" (with contacts just closed).

Voltage Regulator

Setting—7.0-7.7 volts hot (set to 7.4 volts hot). Regulator is over-compensated for temperature. Should be checked with cover in place and hot.
Air Gap—.075" with armature pressed down to point where contacts are just touching.
Checking & Adjustm't—***See Electrical Equip. Section.***

Current Regulator

Setting (1118301)—32-40 amps. hot (set at 36). **(1118357)** 40-46 amps. hot (set at 42 amps. hot).
Air Gap—.075" with armature pressed down to point where contacts are just touching.
Checking & Adjustm't—***See Electrical Equip. Section.***

LIGHTING

Headlamps: Guide "Sealed Beam" type.
See Electrical Equipment Section for complete data.
Adjustment—Aim upper beam straight ahead (hot spot center 3" below lamp center height at 25 ft.).
Beam Indicator—In upper edge of speedometer dial. Lighted when Upper (Country) Beam in use.

Direction Signal: Buick. ***See Electrical Equip. Section.***
Direction Signal Indicators—Left and right arrows in left and right instrument clusters.

Switches

Lighting—D-R No. 1995016 (40), 1995031 (50, 70).
Beam Selector—D-R No. 1997008, 1997015 (RHD).
Instrument—**(Series 40)** Delco-Remy No. 1997762. **(Series 50 & 70)** Part of Lighting Switch. Rheostat operated by turning Light Switch Knob.
Glove Box—D-R No. 1997747 (40), 1997771 (50, 70).
Direction Signal—(40) D-R 1995537, 1995538 (RHD). **(Series 50 & 70)** D-R No. 1995529, 1995530 (RHD). **(Dynaflow)** D-R No. 1995534, 1995545 (50 RHD).
Back-Up Light—Delco-Remy No. 1997825 (synchromesh transmission), 1997847 (for Dynaflow).

MISC. ELECTRICAL

►**DASH PANEL INSPECTION HOLE FOR ACCESS TO WIRING ON BACK SIDE OF INSTRUMENTS (SERIES 50 & 70):** Located on left side of dash under hood with removable plate screwed to dash.

THERMOSTATIC RELAY: Delco-Remy. On lighting switch (protects lighting circuits). Contacts remain closed with 30 amperes, open in 3 minutes with current of 42 amperes at 70°F. Not adjustable.

SERIES 40

FUSES: Clock—3 ampere SFE. In clock lead.
Instrument Lights—14 ampere SFE. On instr. switch.
Direction Signal—14 ampere SFE. In flasher lead.
Blower—14 ampere SFE. On back of switch.
Defroster—14 ampere SFE. On back of switch.

SERIES 50 & 70

►**FUSE BLOCK:** On lower flange of instrument panel at left of steering column. Four fuses:
1)—**Direction Signal.** 15 ampere 3AG for Dir. Sig. Lamps and Back-Up & Stop Lamps.
2)—**Dome.** 30 ampere SFE for Dome Lamp, Trunk Lamp, and Rear Cigar Lighter.
3)—**Blower.** 14 ampere SFE for Heater Blower.
4)—**Clock.** 3 ampere 1AG. Clock power.

HORNS: Delco-Remy No. 1999519 (Low Note—Right Horn), 1999520 (High Note—Left Horn). Vibrator type, blended tone, twin horns operated by relay.

	Current (at 6 Volts)	Air Gap
1999519 (Low Note)	19-21 amperes	.044-.049"
1999520 (High Note)	18-20 amperes	.034-.039"

Horn Relay: Delco-Remy No. 1116775.
Contacts Close—2.75-4.0 volts (set to 3.5 volts).
Contact Gap—.027". **Air Gap** .014" (contacts closed).

ENGINE

►**ENGINES WITH HYDRAULIC VALVE LIFTERS: Used on cars with Dynaflow Drive.** These engines use different camshaft, push rods, rocker arms, ball studs, and valve springs.
Identification—By RED "Buick Fireball" lettering on valve rocker arm cover and label reading "This Engine Equipped with Hydraulic Lifters."

ENGINE SPECIFICATIONS (for SERIES 40 and 50): Eight cylinder, Overhead Valve ("I" Head) type.
►**Bore**—3.091-3.094". ***NOTE***—.010" Oversize production standard engine marked by stamped dash (—) approx. ¼" long following engine number.
Stroke—4⅛". **Displacement**—248.1 cu. ins.
Rated Horsepower—30.63.
Developed Horsepower—110 (40), 115 (50 std.), 120 (40, 50 with Dynaflow) at 3600 RPM.
Compression Ratio—6.3-1 (40), 6.6-1 (50 Synchro-Mesh), 6.9-1 (40, 50 Dynaflow). Increased ratio on Dynaflow obtained by milling cylinder head.
NOTE—.050" thick Steelbestos gasket used on 40. .015" thick lacquered steel gasket used on 50.
Compression & Vacuum Reading—***See Tune-Up.***

ENGINE SPECIFICATIONS (SERIES 70 Engines): Eight cylinder, Overhead Valve ("I" Head) type.
►**Bore**—3.436-3.439". ***NOTE***—.010" Oversize production standard engine marked by stamped dash (—) approx. ¼" long following engine number.
Stroke—4 5/16". **Displacement**—320.2 cu. ins.
Rated Horsepower—37.81.
Developed Horsepower—150 at 3600 RPM.
Compression Ratio—6.9-1.
Compression & Vacuum Reading—***See Tune-Up.***

TIGHTENING TORQUES: ***See Buick Special Data.***

CYLINDER HEAD INSTALLATION: ***See Buick Special Data.***

"CONTROLLED FREQUENCY" ENGINE MOUNTINGS: ***See Buick Special Data.***

PISTONS: Light weight, aluminum alloy, four ring, Turbulator top, cam ground, transverse slot type with Anodized finish.
Weight (stripped)—13.776 ozs. (40, 50), 17.94 ozs. (70).
Length—4 21/64" (40, 50), 4 9/16" (70).
Removal—Pistons and rods removed from above.
Clearance—See Fitting New Pistons below.

	Top Land	Top—Skirt	Bottom
Series 40, 50	.023-.030"	.0021"	.0015"
Series 70	.026-.033"	.0023"	.0017"

NOTE—Car manufacturer recommends reboring if taper exceeds .005", or out-of-round over .003".

Replacement Pistons: ***See Buick Special Data.***

Fitting New Pistons: Use feeler stock ¼" wide (for "GO" gauge), ½" wide ("NO GO" gauge) and 12" long suspended in cylinder at right angles to engine center-line, invert piston in cylinder. With piston and cylinder clean and dry and at 70°F., piston should pass through cylinder of own weight with "GO" gauge and should hold its own weight with "NO GO" gauge as follows:

	Clearance Limits Top of Skirt	Feeler Gauges "GO"	Feeler Gauges "NO GO"
Series 40, 50	.0018-.0024"	.0015"	.002"
Series 70	.0020-.0026"	.0015"	.002"

Installing Pistons: Hollow side of head to camshaft.

PISTON RINGS: Two compression (upper inner edge stepped or beveled), one slotted oil ring in #3 groove, "Flex-fit" oil ring in #4 groove. All rings above pin. #1, #2, and #4 rings are coated.

Ring	Width	End Gap	Side Clearance
①Compr. (#1, 2)	3/32"	.010-.020"	.0015-.0035"
Oil (#3)	.1875"	.010-.020"	.0015-.003"
Oil (#4)	.1860"	②	.0015-.0035"

①—Wall thickness .160" Upper (40, 50), .140" Lower (40, 50); .170" Upper (70), .150" Lower (70).
②—End Gap .0015" (segmental). No checking or fitting required on this "Flex-fit" ring.

Replacement Rings: ***See Buick Special Data.***

PISTON PIN: Clamped in rod (pin hole in new pistons diamond-bored and oil-grooved).
Diameter—.8124-.8129" (40, 50), .8744-.8749" (70).
Length—2 11/16" (40, 50), 3 1/16" (70).
Pin Fit in Piston—.0003-.0004" clearance or easy finger push fit at 70°F.
Replacement Pins: Std. and .003", .005" oversize. Pins fitted and furnished with new pistons (pistons not furnished without pins).

►**CONNECTING ROD (CAST BEARING): 1st 5000 Eng.**
Length—7⅝" (40, 50), 8¼" (70).
Weight—(40, 50) 1.779 lbs., (70) 2.224 lbs.
Crankpin Journal Diameter—**(40, 50)** 1.997-1.999". **(70)** 2.248-2.249".
Lower Bearing—Centrifugal cast (spun) babbitt.
Clearance—.0015-.002". **Sideplay**—.005-.010".
Bearing Adjustment: Shims. Do not file rods or caps. Remove shims until slight drag secured when rocking crankshaft or moving rod back and forth on

C NTINUED N NEXT PA E

ENGINE

CONTINUED FR M PRECEDING PA E

crankpin, then install 3 additional shims (shim pack should be equal on each side as near possible).

Replacement Bearings: Install replacement rods.

Installing Rods: Ridge on edge of cap and boss in web of rod must be toward rear of engine. Oil hole in rod toward camshaft.

►**CONNECTING ROD (REPLACEABLE PRECISION BEARING): After Approx. First 5000 Engines.**
Length—7⅝" (40, 50), 8¼" (70).
Weight—(40, 50) 1.804 lbs., (70) 2.224 lbs.
Crankpin Journal Diameter—**(40, 50)** 1.998-1.999". **(70)** 2.248-2.249".
Lower Bearing—Replaceable, precision type. No shims used.
Clearance—.0008-.0015" (new), .002" max. (used).
Sideplay—.005-.010".

►*PLASTIGAGE for checking bearing clearance. See "Crankshaft & Main Bearings" in Buick Special Data.*

Bearing Adjustment: None (no shims). Replace bearings. Do not file rods or caps.

Replacement Bearings: Undersize bearings marked with number on outer surface of near tang indicating size.

Installing Rods: Same as for Cast Bearing type above.

CRANKSHAFT: Five bearing, counterweighted type.
Journal Diameters—**(40, 50)** #1, 2.3105-2.3115"; #2, 2.3735-2.3745"; #3, 2.4355-2.4365"; #4, 2.4985-2.4995"; #5, 2.5605-2.5615".
(Series 70) #1, 2.5605-2.5615"; #2, 2.6235-2.6345"; #3, 2.6855-2.6865"; #4, 2.7485-2.7495"; #5, 2.8105-2.8115".
Bearing Diameters—**(40, 50)** #1, 2 5/16"; #2, 2 3/8"; #3, 2 7/16"; #4, 2 1/2"; #5, 2 9/16".
(Series 70) #1, 2 9/16"; #2, 2 5/8"; #3, 2 11/16"; #4, 2 3/4"; #5, 2 13/16".
NOTE—Car manufacturer recommends crankshaft be replaced or reground if journal out-of-round over .0015".
Bearings—Steel-backed, Durex 100-A, slip-in type.
Clearance—.0008-.0015" (new), .002" max. (used).

►*PLASTIGAGE for checking bearing clearance. See "Crankshaft & Main Bearings" in Buick Special Data.*

Bearing Adjustment: None (no shims). Replace bearings. Do not file bearing caps.

►*CAUTION*—Arrow on main bearing caps must point toward front of engine when installed.

Replacement Bearings: Single bearings in std. size, .020" and .022" undersize. Complete sets in std. size, .0012", .002", .020", .022" undersize.
Rear Bearing Oil Seal data, see Buick Special Data.

End Thrust: #3 (center bearing). **Endplay** .004-.008".

CAMSHAFT: 5 bearing Non-adjustable chain drive.
►*CAUTION—Two types of camshafts used,* one for engines with plain sleeve valve lifters, one for engines with hydraulic valve lifters (identified by ½" wide machined cut 60% around shaft between #6 & #7 cams). *Engine operation will be rough and noisy if shafts are interchanged on either engine.*
Bearing Diameters (for All Series)—#1, 2 5/32"; #2, 2 1/8"; #3, 2 3/32"; #4, 2 1/16"; #5, 1 3/4".
Bearings—Steel-backed, babbitt-lined.
Clearance—.0005-.0035". NOTE—Replacement bearings must be line reamed after installation.

End Thrust: Spacing ring between front bearing journal and thrust plate (on front of crankcase behind camshaft sprocket). **Endplay**—.004-.008".

Timing Chain: Link Belt. Width 1". Pitch .500". Length (40, 50) 49 links or 24½", (70) 50 links or 25".

Camshaft Setting: Mesh copper-plated washers on chain (10 links apart) with sprocket marks (crankshaft and camshaft turned so that marks are up).

►**VALVES:** *CAUTION*—**Engines with hydraulic valve lifters** use different camshaft, push rods, rocker arms, ball studs, and valve springs.

VALVE SPECIFICATIONS—SERIES 40 & 50

	Head Diameter	Stem Diameter	Length
Intake	1 17/32"	.3715-.3725"	5 7/64"
Exhaust	1 11/32"	.3711-.3719"	5 7/64"
	Seat Angle	**Lift**	**Stem Clearance**
Intake	45°	.348"	.0025" (.0015-.0035")
Exhaust	45°	.342"	.003" (.0021-.0039")

VALVE SPECIFICATIONS—SERIES 70

	Head Diameter	Stem Diameter	Length
Intake	1 25/32"	.3715-.3725"	5 1/4"
Exhaust	1 7/16"	.3711-.3719"	5 1/4"
	Seat Angle	**Lift**	**Stem Clearance**
Intake	45°	.347"	.0025" (.0015-.0035")
Exhaust	45°	.348"	.003" (.0021-.0039")

Valve Guides: Upper end of guide 1 5/32" above head. Finish ream replacement guides after installation to .374-.375" (use Valve Guide Reamer J129-3).

►**Valve Springs:** *CAUTION*—Engines with hydraulic valve lifters use different valve springs.
Free Length—1 29/32" (inner), 2 11/32" (outer).

VALVE SPRING SPECIFICATIONS

►**ENGINES WITH ADJUSTABLE VALVE LASH**

	Inner Spring			Outer Spring		
	Lbs. Press.		Lgth.	Lbs. Press.		Lgth.
Closed	17½-22½	—1	21/32"	29½-34½	—1	15/16"
Open	48-54	—1	5/16"	74-80	—1	19/32"

►**ENGINES WITH HYDRAULIC VALVE LIFTERS**

Closed	22-26	—1	21/32"	49-55	—1	15/16"
Open	49-55	—1	5/16"	116-124	—1	19/32"

Valve Lifters (Engines with Adjustable Valve Lash): Plain sleeve, barrel type. Diameter .9975-.9985"
Clearance in Crankcase—.0005-.0025".

►**Hydraulic Valve Lifters:** New hydraulic valve lash adjuster maintaining zero valve clearance **used on cars equipped with Dynaflow Drive.**
See Miscellaneous Section for complete data.
Identification—By RED "Buick Fireball" lettering on valve rocker arm cover and label reading "This Engine Equipped with Hydraulic Lifters."

►*CAUTION—Engines with hydraulic valve lifters are equipped with adjusting ball studs in rocker arms but these are used only for initial adjustment of hydraulic lifters (when installing cylinder head, etc.). NO SERVICE ADJUSTMENT REQUIRED.*

NOTE—Car manufacturer recommends that properly operating hydraulic valve lifters be left alone. Do not disassemble and clean when removed from engine for other work (wrap in clean paper to prevent entrance of dirt).

►**Initial Adjustment of Hydraulic Valve Lifters (required when installing cylinder head, or whenever adjusting ball stud setting disturbed):** *See "Valve System" in Buick Special Data.*

Rocker Arms: *CAUTION*—Engines with hydraulic valve lifters use different rocker arms and ball studs. Rocker arms used with hydraulic valve lifters do not have small oil hole on underside of arm. Ball studs used with hydraulic lifters have drilled oil hole through center for oil feed to lifter through push rod.
Rocker Arm Installation—*See Buick Special Data.*

VALVE TIMING

►**VALVE TAPPET CLEARANCE (SERIES 40 & 50 ENGINES WITHOUT HYDRAULIC VALVE LIFTERS): Identified by BLUE "Buick Fireball" lettering on valve rocker arm cover.** *CAUTION—Feeler gauge used depends on engine temperature (do not use .015" feeler). To secure .015" lash at Road Operating Temperature, following shop procedure should be used:* Loosen radiator cap, run engine at fast idle for 20 minutes (700 RPM. minimum—lower speed will not provide proper circulation for stabilizing water temperature), then adjust tappets using .017" feeler as "Go", .018" feeler as "No Go" gauge.

►*ALCOHOL ANTI-FREEZE NOTE*—Must be drained and cooling system filled with water during shop warm-up **for above adjustment.** This anti-freeze will boil before engine temperature stabilized.

►**VALVE TAPPET CLEARANCE (SERIES 50 & 70 ENGINES WITH HYDRAULIC VALVE LIFTERS): Identified by RED "Buick Fireball" lettering on valve rocker arm cover and label reading "This Engine Equipped with Hydraulic Lifters."** *No service adjustment required.*

Initial Adjustment of Hydraulic Valve Lifters (when installing cylinder head, or whenever adjusting ball stud setting disturbed): *See "Valve System" in Buick Special Data.*

Valve Timing: See Camshaft Setting above.

VALVE TIMING—SERIES 40 & 50
Intake Valves—Open 13° BTDC. Close 68° ALDC.
Exhaust Valves—Open 55° BLDC. Close 22° ATDC.

VALVE TIMING—SERIES 70
Intake Valves—Open 14° BTDC. Close 71° ALDC.
Exhaust Valves—Open 56° BLDC. Close 25° ATDC.
Valve Timing Check—For engines with adjustable valve lash set tappet clearance for .015" road operating lash (see above), on engines with hydraulic lifters run engine for approx. 1 minute to fill lifters with oil. #2 or #7 exhaust valve should be .145" open (Series 40 & 50), .155" open (Series 70), with #1 & #8 pistons at top dead center and flywheel mark "UDC/1&8" visible through inspection hole in right front face of housing. NOTE—This is actual valve opening and should be checked with dial indicator mounted on cylinder head.

LUBRICATION

Engine Oiling System: Pressure to main bearings, connecting rod lower bearings, camshaft bearings, and restricted flow to rocker arm bearings, push rods and hydraulic valve lifters (if used).
NOTE—Valve system feed taken from outlet side of oil filter.
Crankcase Capacity—Refill—5½ qts. (40, 50), 7 (70).
Dry Capacity—6½ qts. (40, 50), 8 qts. (70).
NOTE—If oil filter is dry add 1½ qts. to capacities.
Normal Oil Pressure—35 lbs. at 35 MPH.
Oil Pressure Regulator—Non-adjustable spring and valve type on oil pump. Opens at 35 lbs.

Oil Pump: Helical gear type in crankcase.
Oil Pump Clearances—*See Buick Special Data.*

Crankcase Ventilation: Filter in oil filler breather cap and in crankcase ventilator inlet on left side of engine. Outlet pipe mounted on right side of engine.

Cleaning—Wash **both** filter elements every 5000 miles (when carburetor air cleaner serviced).

Oil Filter: AC with by-pass valve (opens 7-9 lbs.).

Filter Element—AC No. P-127 folded paper low-restriction type. CAUTION—Element not interchangeable with 1948 type. Change element 1st 2000 & 5000 miles, then every 5000 miles.

COOLING

Cooling System: Pressure type with pressure valve and vacuum valve (relief valves) in filler cap. Re-circulation of water through engine (with thermostat closed) permitted by fixed by-pass passage between water outlet and pump inlet.

Capacity—No Heater—(Series 40 and 50) 13 qts., (40 & 50 Dynaflow) 14 qts., (70) 16¾ qts.

With Heater—Add 1¼ qts. to above capacities.

►**Pressure Valve**—***CAUTION—Two types used:***

1)—AC No. 850563—***7 lb. type.*** For all Series 40 & 50, and Series 70 after Serial Nos. below.

2)—AC No. 850559—***13 lb. type.*** For Series 70 UP TO Serial Numbers: Flint 15122924, California 25093697, Linden 35099981, Kansas City 45107724, Wilmington 55112152, Atlanta 65116047, Framingham, 75118525.

Water Pump: Packless, sealed ball-bearing type.
See Water Pump Section for complete data.

Belt Adjustment—***See Generator Belt Adjustment.***

Thermostat: Harrison. In cylinder head water outlet. Buick No. 3122282 Std. 151°, No. 3122285 Hi. T. 182°.

Setting—(151°) starts to open 148-155°F. Fully open not over 175°F.

Temperature Gauge: AC No. 1512091 (40), 1517013 (50, 70). Thermo (not electric) gauge.
See Miscellaneous Section for complete data.

CLUTCH

Own "Crown Spring" with Borg & Beck or Long Driven Member. Single plate, dry disc type.
See Clutch Section for complete data.

Facings—Woven type, 2 used. Inside diameter 6". Outside Diameter 10". Thickness .125" (⅛").

Pedal Adjustment: Free travel ¾-1". Adjust by loosening locknut and turning adjusting nut on release rod linking cross-shaft lever to clutch fork. Pedal positioned by rubber bumper under toeboard.

►**Correction of Low & Reverse Gear Clash due to Spinning Clutch Plate**—Car manufacturer permits reducing pedal lash to ½" in exceptional cases where gear clash continues (with regular ¾-1" pedal lash) beyond normal waiting period for plate to stop.

Clutch Over-Center Spring: ***See Buick Special Data.***

Removal: Remove Rear Axle and Transmission (see below), take off clutch underpan, disconnect linkage at yoke, remove clutch release bearing support by taking out spring washer in housing, pull out yoke (with release bearing) from fulcrum, mark clutch and flywheel, remove cover mounting screws.

TRANSMISSION

Own Make. All Helical Gear, constant-mesh, synchro-mesh (Second & High), sliding gear (Low & Reverse) with steering column mounted shift control. ***See Transmission Section for complete data.***

Transmission Control: Buick type remote control.
See Transmission Section for complete data.

Removal: Disconnect Rear Axle (see data following), drain transmission, fill with clean gasoline or kerosene and run approx. 15 seconds in Neutral, drain cleaner. Disconnect speedometer cable, lower shift rod, and selector rod. Take out toggle spring and extension, remove shift lever and lock washer from selector shaft—hold shift lever in neutral when removing attaching bolt—remove outer selector lever. Reinstall support bar (see Note below) under rear end of oil pan positioning left hook over frame between brake master cylinder and clutch release equalizer, tighten nuts on two hooks evenly. Remove transmission mounting as follows: Disconnect rubber thrust pad from rear of transmission support by taking off 3 nuts and bolt plate, remove shims from behind support, disconnect mounting pad on top of support by taking out 2 attaching bolts and bolt plate, raise engine by turning up on nuts on two support hooks evenly to take load off transmission support, take out transmission support (disconnect at frame ends), and remove thrust pad from thrust plate. Install guide pins J-851 in place of two top mounting bolts, remove remaining mounting bolts, pull transmission straight back and lower from car.
For instructions on shimming Rear Mounting when installing transmission, see "Engine Mounting" in Buick Special Data.

Engine Support Bar Note—Consists of length of 2 x 4 (approx. width of frame) with hole through each end to take hooked rods (hook rests on top of frame. Raise and lower support by nuts on rods.

Lubrication Note—When transmission reinstalled in car, inject ½ pint of transmission lubricant through universal joint yoke before attaching torque tube to transmission.

DYNAFLOW DRIVE

STD. ON SERIES 70, OPTL. ON SERIES 50

Own Make. Torque Converter and hydraulically operated planetary unit with manual control.
See Transmission Section for complete data.

►**Throttle Linkage Adjustment and Dash Pot Setting on Dynaflow Drive Cars**—***See CARBURETOR.***

Lubrication—Check fluid level in transmission every 1000 miles, drain and refill every 15,000 miles.

►***Use only Special Buick Oil for Dynaflow Drive or Automatic Transmission Fluid Type "A".***

Capacity—(50) 8½ quarts, (70) 10 quarts.

Draining & Refilling—***See "Buick Dynaflow Drive" in Transmission Section.***

Checking Fluid Level—Engine must be idling with selector lever at "P" (parking) & transmission oil warm. Raise right side of floor mat, take off cover in floor above transmission, lift out oil gauge rod. Add fluid to "FULL" mark level with engine idling.

►**Late 1949 Cars**—Oil gauge rod under right side of hood between battery and engine.

►***CAUTION—Engine must be idling with transmission in Parking position and transmission oil warm when checking Dynaflow Drive Fluid Level.***

UNIVERSALS

Saginaw (All Series) or Spicer (Series 40 & 50). One used (in torque ball at rear of transmission).
See Universals Section for complete data.
NOTE—New rubber seal used on torque ball.

►**Torque Ball Adjustment**—***See Buick Special Data.***

REAR AXLE

Own Make. Hypoid Gear, semi-floating type with Torque Tube Drive. ***NOTE***—Pinion rear bearing now consists of 2 roller bearings (formerly one).
See Rear Axle Section for complete data.

Ratio—4.454-1 (49:11) Std. 40 & All 50.
4.1-1 (41:10) Std. 70, Optl. 40 & 50 S-M trans.
NOTE—Stamped nos. under housing indicate ratio.

Backlash—.008-.010" (desired), .008-.012" (limits). Screw adjustment.

Removal: Raise rear end of car and set on car stands. Disconnect parking brake cable at rear brake sheave and at bracket of front end of torque tube, hydraulic brake line from pipe at frame X member and remove retainer. Disconnect lower end of shock absorber links, rear radius rod at axle end, lower end of chassis springs, and torque tube from torque ball. Hoist rear end of car and roll axle assembly out.

►***CAUTION—Torque tube should not be disconnected from carrier (except for gasket replacement).***

Axle Shaft Removal: ***See Rear Axle Section.***

Wheel Bearing Adjustment—None.

Rear Suspension: Coil springs & conventional axle.
See Rear Axle Section for complete data.

SHOCK ABSORBERS

Delco Model 1948-A (front), Model 2105-C, D (rear). Double acting, Hydraulic (parallel cylinder rear).
See Shock Absorber Section for complete data.

FRONT SUSPENSION

Front Suspension: Independent, linked parallelogram type with coil springs.
See Front Suspension Section for complete data.

Kingpin Inclination—4¼° crosswise for ⅜° Camber.

Camber—⅜° Positive (⅞° Pos. to ⅝° Neg.) and equal for both wheels within ¾ °at curb weight.

Caster—¾° Positive (1¼° Pos. to 1½° Pos.) equal for both wheels within ½° at curb weight. Adjustable.

Toe In—1/16-1/8". Adjust both tie rods equally.

►***CAUTION***—Tie rod clamps must be within ⅛" of end of tube and ear of clamp must overlap slot in tube not less than 1/16".

Steering Geometry (Toe Out on Turns)—With outer wheel turned 20°, inner wheel turns 21½° ± ¾°.

STEERING GEAR

Saginaw. Ball bearing Worm-and-Nut type.
See Steering Gear Section for complete data.

BRAKES

Service: Bendix Hydraulic, Duo-Servo, Single Anchor type **without Eccentric Adjustment.** Parking brake "Step-on" lever applies rear wheel service brakes.
See Brake Section for complete data.

Drums—Cast-iron with steel flange. Drum diameter 11.997-12.003". Max. rebore .060" O.S. (.030" cut).

Lining—Moulded. Width (40, 50) 1¾", (70) 2¼". Thickness 3/16". Length per shoe: Primary (40, 50) 9 15/16", (70) 10"; Secondary: (40, 50) 12 3/4", (70) 12 15/16".

Clearance—.015" at both ends of secondary (rear) shoe with primary shoe forced out against drum.

Step On (Parking Brake): See Service Brakes (above).

MISC. MECHANICAL

Power Operated Convertible Tops, Windows, & Front Seat: Hydro-Lectric type (hydraulic actuation with motor-driven pump supplying oil under pressure).
See Miscellaneous Section for complete data.

Windshield Wiper: Cable Operated—Vacuum type.
See Miscellaneous Section for complete data.

MODEL IDENTIFICATION

SERIAL NUMBER: Stamped on plate on left front door hinge pillar post and stamped on left front frame "X" bar extension just ahead of dash.

1950 Numbers—First numbers:

1-5360001 ..	Flint	5-5388001	Wilmington
2-5370001	Southgate	6-5393001	Atlanta
3-5374001	Linden	7-5397001	Framingham
4-5380001	Kansas City		

Identification—First digit of serial number indicates assembly plant as listed above

ENGINE NUMBER: Stamped on boss on right side of crankcase below pushrod cover.

TUNE-UP

COMPRESSION PRESSURE: 112 lbs. (std), 118 lbs. (with Dynaflow) at cranking speed.

VACUUM READING: Steady 18-20" idling at 8 MPH. or 450 RPM.

FIRING ORDER: 1-6-2-5-8-3-7-4. See Diagram.

SPARK PLUG GAPS: .025". Limits .023- 028".

Plug Type—AC No. 48. 14 mm. Metric.

DISTRIBUTOR: Breaker Gap—.015" (.0125- 0175").

Cam Angle—Closed 21° to 30° with .016" gap.

►*CAUTION—Use of cam angle to set point gap not recommended by car manufacturer. If dwell meter used, make final check that gap within .0125-.0175".*

Breaker Arm Spring Tension—19-23 ounces.

Automatic & Vacuum Advance—*See Ignition.*

Condenser Capacity— 18-.23 microfarad.

IGNITION TIMING: 4° BTDC.

►*CAUTION—Ignition timing should be set within yellow band of flywheel mark for proper engine performance.*

Timing Procedure—*See Ignition Timing.*

Flywheel Mark—"ADV. 4°" followed by yellow knurled section on flywheel ⅛" wide which gives 1° timing range of 4° to 5°. Index mark located on edge of timing hole under cover on housing above starter.

Final Ignition Setting—Very light "ping" may occur with part throttle on a hard pull, or during acceleration between 10-20 MPH. with wide open throttle

CARBURETION:

Idle Setting—Adjust both screws exactly alike for smooth idle (⅞-1⅜ turns open for Carter). Turning screws out gives richer mixture.

Idle Speed—450 RPM. (or 8 MPH. in high).

Float Level—**(Carter)** 5/32" from top of each float to gasket seat on cover with valve seated (invert to check). Fuel level even with bottom of inspection hole on side of float bowl with engine idling.

(Stromberg)—Fuel level even with bottom of inspection hole on side of bowl with engine idling.

Accelerating Pump—**(Carter)** Two holes in arm. Inner hole minimum charge, Outer hole maximum.

Choke Setting (Carter): One Notch Rich.

Fuel Pump Pressure: 4½-5½ lbs. at pump outlet, 4-5 lbs. at carburetor.

MANIFOLD HEAT CONTROL: Setting—Thermostatic coil wind-up ¼ turn at 70°F. (valve closed). To prevent rattles, counterweight should have 1/16-1/8" movement at extreme end positions, adjust by bending anti-rattle spring lower clip

►**VALVE TAPPET CLEARANCE (ENGINES WITHOUT HYDRAULIC VALVE LIFTERS): Identified by BLUE "Buick Fireball" lettering on valve rocker arm cover.** ***CAUTION—Feeler gauge used depends on engine temperature (do not use .015" feeler). To secure .015" lash at Road Operating Temperature, following shop procedure should be used:*** Loosen radiator cap, run engine at fast idle for 20 minutes (700 RPM. minimum—lower speed will not provide proper circulation for stabilizing water temperature), then adjust tappets using .017" feeler as "Go", .018" feeler as "No Go" gauge

►*ALCOHOL ANTI-FREEZE NOTE*—Must be drained and cooling system filled with water during shop warm-up **for above adjustment.** This anti-freeze will boil before engine temperature stabilized

►**VALVE TAPPET CLEARANCE (ENGINES WITH HYDRAULIC VALVE LIFTERS): Identified by RED "Buick Fireball" lettering on valve rocker arm cover and label reading "This Engine Equipped with Hydraulic Lifters."** ***No service adjustment required.***

Initial Adjustment of Hydraulic Valve Lifters (when installing cylinder head, or whenever adjusting ball stud setting disturbed): ***See "Valve System" in Buick Special Data.***

Valve Timing Check—***See Valve Timing.***

STARTING: ***See Battery, Starter, Generator, Regulator.***

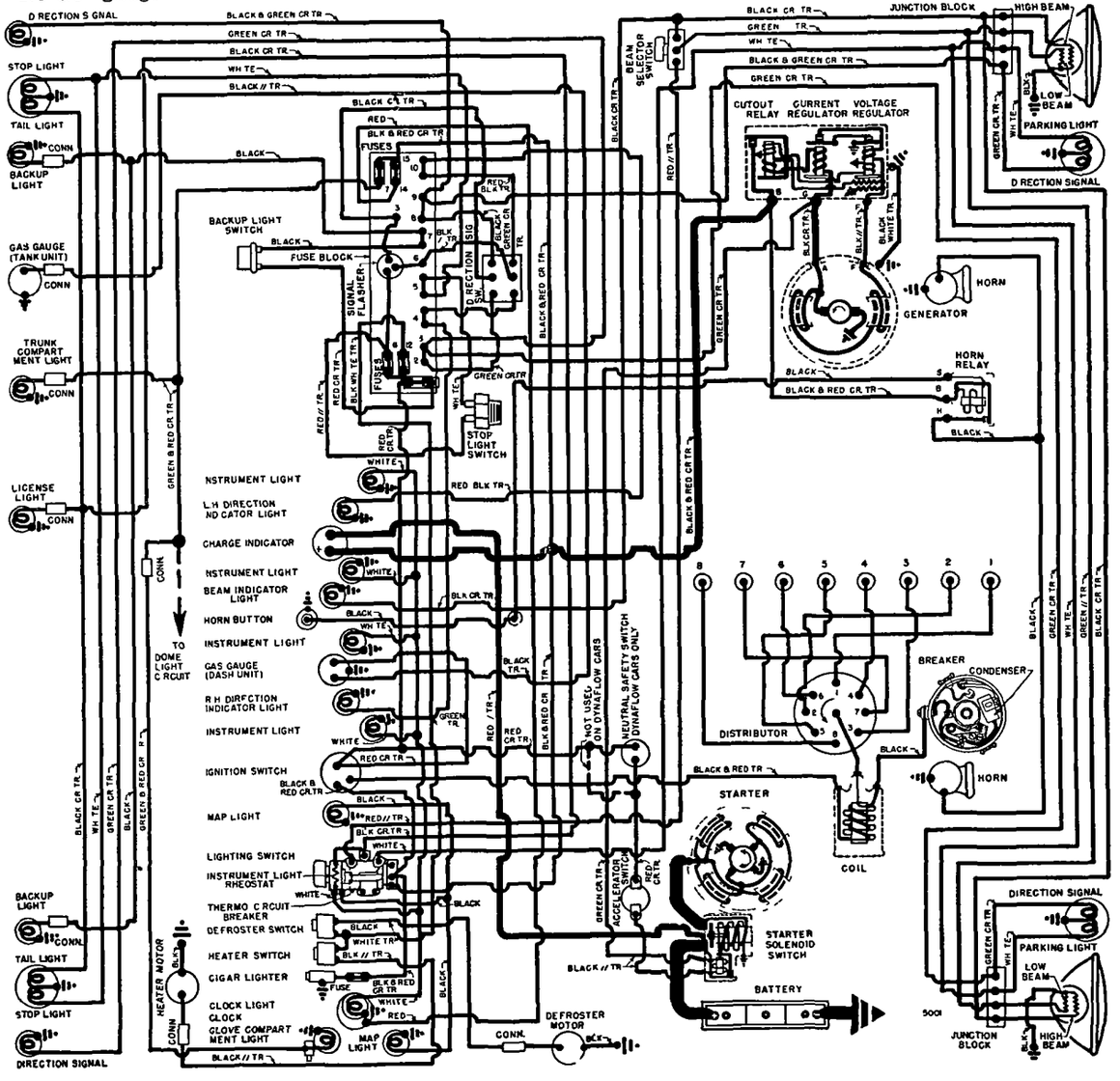

IGNITION

IGNITION SWITCH: Delco-Remy No. 1116452.
Ignition Lock—Briggs & Stratton or Delco-Remy. Buick No. 1393108.
COIL: Delco-Remy 1115328. On pushrod cover.
Ignition Current—2½ amperes idling, 4½ stopped.
CONDENSER: Delco-Remy Part No. 1869704.
Capacity—.18-.23 microfarad.
DISTRIBUTOR: Delco-Remy 1110815. Automatic and vacuum advance type with new "center-bearing" breaker plate. *See 1949 Buick pages for data.*

IGNITION TIMING

Standard Setting ..... **4° BTDC.**
See 1949 Buick car pages for Timing Procedure.

CARBURETOR

Carter WCD Model 725S or Stromberg Model AAUVB-267. 1⅛" dual downdraft types with Automatic Choke.
Casting No. (Carter)—624 on face of flange.
See Carburetor Section for complete data.
Settings (Idle Setting, Float Level, and Accelerating Pump Setting): *See Tune-Up.*
Metering Jets & Rods—*See Carburetor Section for Carter & Stromberg Jet Specifications.*
Throttle Linkage Adjustment, Dash Pot Setting (for the Dynaflow Drive Cars), Fast Idle, and Automatic Choke): *See 1949 Buick for data except as follows:*
Automatic Choke Setting (Carter): One Notch Rich.

CARB. EQUIPMENT

Air Cleaner: AC No. 1544638 oil bath type.
Filter Element—AC No. 19.
Fuel Pump: AC Type AH, fuel-and-vacuum pump.
Pressure—4½-5½ lbs. at pump outlet port or 4-5 lbs. at carburetor inlet.
See Carburetion Equipment Section for complete data.
Gasoline Gauge: AC Electric type.
See Carburetion Equipment Section for complete data.

BATTERY

Delco Type 15E4. *See 1949 Buick car pages for data.*

STARTER

Delco-Remy Model 1107078 (LHD), 1107057 (RHD). *See 1949 Buick Series 50 car pages for data.*

GENERATOR

Delco-Remy Model 1102709. Armature No. 1912599. *See 1949 Buick Series 50 car pages for data.*

REGULATOR

Delco-Remy Model 1118364. Voltage-Current type. *See 1949 Buick Series 50 car pages for data. Set to Specifications listed for Model 1118357.*

LIGHTING

Headlamps and Direction Signal—*See 1949 Buick Series 50 car pages for data except as follows:*
Direction Signal. Separate rear bulbs and new switch circuit used.

Switches

Lighting—Delco-Remy No. 1995044.
Beam Selector—D-R No. 1997008, 1995015 (RHD).
Instrument—Delco-Remy No. 1997855.
Glove Box—Delco-Remy No. 1997858.
Direction Signal—Delco-Remy No. 1995547, (Dynaflow) 1995546, (RHD) 1995553.
Back-Up Light—Delco-Remy No. (synchro-mesh transmission) 1997825, (Dynaflow) 1997847.

MISC. ELECTRICAL

►**DASH PANEL INSPECTION HOLE FOR ACCESS TO WIRING ON BACK SIDE OF INSTRUMENT PANEL:** Located on left side of dash under hood with removeable plate screwed to dash.
THERMOSTATIC RELAY: Delco-Remy. On lighting switch (protects lighting circuits). Contacts remain closed with 30 amperes, open in 3 minutes with current of 42 amperes at 70°F. Not adjustable.
FUSE BLOCK: On lower flange of instrument panel at left of steering column. Five fuses:
1)—Dome, Glove Box, & Trunk Lights. 30 ampere.
2)—Clock. 3 ampere.
3)—Defroster and Heater. 30 ampere.
4)—Direction Signal and Stop Lamp. 14 ampere.
5)—Back-Up Lights. 14 ampere.
HORNS: Delco-Remy No. 1999621 or 649 (Low Note—Right Horn), No. 1999622 or 650 (High Note—Left). Vibrator type, twin horns operated by relay.
NOTE—Nos. 1999649 & 650 are welded type.

	Current (at 6 volts)	Air Gap
Low Note	19-21 amperes	.044-.049"
High Note	18-20 amperes	.034-.039"

Horn Relay: Delco-Remy No. 1116775.
Contacts Close—2.75-4.0 volts (set to 3.5 volts).
Contact Gap—.027". **Air Gap**—.014" (contacts closed)

ENGINE

►**ENGINES WITH HYDRAULIC VALVE LIFTERS: Used on cars with Dynaflow Drive.** These engines use different camshaft, push rods, rocker arms, ball studs, and valve springs.
Identification—By RED "Buick Fireball" lettering on valve rocker arm cover and label reading "This Engine Equipped with Hydraulic Lifters."
ENGINE SPECIFICATIONS (for 1950 SERIES 40): Eight cylinder, Overhead Valve ("I" Head) type.
►**Bore**—3.091-3.094". *NOTE*—.010" Oversize production standard engine marked by stamped dash (—) approx. ¼" long following engine number.
Stroke—4⅛". **Displacement**—248.1 cubic inches.
Rated Horsepower—30.63.
Developed Horsepower—110 at 3600 RPM. (6.3-1 hd.), 120 at 3600 RPM. (6.9-1 hd. Dynaflow Drive engines).
Compression Ratio—6.3-1 (Std.), 6.9-1 (Dynaflow).
NOTE—.050" thick Steelbestos gasket for 6.3-1 hd., .015" thick lacquered steel gasket for 6.9-1 head.
Compression & Vacuum Reading—*See Tune-Up.*
►*See 1949 Buick car pages for all engine data (Pistons, Rings, Pins, Replaceable Precision Bearing Connecting Rods, Crankshaft & Bearings, Camshaft, and Valves).*

VALVE TIMING

Valve Tappet Clearance: *See Tune-Up.*
Valve Timing: *See Camshaft Setting on 1949 Buick.*
Intake Valves—Open 13° BTDC. Close 68° ALDC.
Exhaust Valves—Open 55° BLDC. Close 22° ATDC.
Valve Timing Check—*See 1949 Buick 40 car pages.*

LUBRICATION

Engine Oiling System: Pressure type. *See 1949 Buick 40 car pages for all Lubrication information.*

COOLING

Cooling System: Pressure type. *See 1949 Buick 40 car pages for all information except as folows:*
Engine Block Water Inlet—Moved from front of engine to left side with separate elbow connection
Water Pump Outlet Pipe for Dynaflow Drive—Separate pipe on right side below pump inlet. Used only on cars with Dynaflow Drive.

CLUTCH

Own "Crown Spring" with Borg & Beck or Long Driven Member. Single plate, dry disc type.
See Clutch Section for complete data.
Facings, Pedal Adjustment, Removal: *See 1949 Buick 40 car pages.*

TRANSMISSION

Own Make. All Helical Gear. *See 1949 Buick pages.*

DYNAFLOW DRIVE

OPTIONAL EQUIPMENT

Own Make. Torque Converter and hydraulically operated planetary unit with manual control.
See Transmission Section for complete data.
►**Throttle Linkage Adjustment and Dash Pot Setting on Dynaflow Drive Cars**—*See CARBURETOR on 1949 Buick car pages.*
Lubrication—Check fluid level in transmission every 1000 miles, drain and refill every 15,000 miles.
►*Use only Special Buick Oil for Dynaflow Drive or Automatic Transmission Fluid Type "A".*
Capacity—8½ quarts.
Draining & Refilling—*See "Buick Dynaflow Drive" in Transmission Section.*
Checking Fluid Level—Engine must be idling with selector lever at "P" (parking) and transmission oil warm. Raise right side of hood, lift out oil gauge rod between battery and engine. Add fluid to "FULL" mark level with engine idling.
►*CAUTION—Engine must be idling with transmission in Parking and transmission oil warm when checking Dynaflow Drive Fluid Level.*

UNIVERSALS

Saginaw or Spicer. One used (in Torque Ball at rear of transmission).
See Universals Section for complete data.
NOTE—New rubber seal used on torque ball.
Torque Ball Adjustment—*See Buick Special Data.*

REAR AXLE

Own Make. Hypoid gear type. *See 1949 Buick pages for all information except as follows:*
Rear Axle Ratio—(standard) 4.1-1 (41:10). (Dynaflow Drive) 3.9-1 (43:11).

SHOCK ABSORBERS

Delco Model 1948-A (front), Model 2105-C, D (rear). Double acting, Hydraulic (parallel cylinder rear).
See Shock Absorber Section for complete data.

FRONT SUSPENSION

Front Suspension: Independent, linked parallelogram type with coil springs. *See 1949 Buick car pages for all specifications.*
NOTE—New external adjusting sleeves used on tie rods for Toe-In adjustment.

STEERING GEAR

Saginaw. Ball bearing Worm-and-Nut.
See Steering Gear Section for complete data.

BRAKES

Service: Bendix Hydraulic, Duo-Servo, Single Anchor type without Eccentric Adjustment. *See 1949 Buick Series 40 car pages for data.*

MISC. MECHANICAL

Windshield Wiper: Cable Operated—Vacuum type.
See Miscellaneous Section for complete data.

ENGINE REMOVAL

1949 MODELS

ENGINE REMOVAL: Engine and transmission assembly can be removed as follows: Drain crankcase and cooling system Remove hood by taking out nut on center moulding-to-strainer assembly and two panel-to-hinge bolts at each side (if shims used, replace same number when re-assembling to maintain alignment). Raise front of car and place on wheel stands at each front wheel. Disconnect battery cables. Remove starter (with solenoid). Take off Backup Light switch bracket from rear of transmission. Free clutch pedal to release yoke rod (cars with synchro-mesh trans). Take out support bolts at transmission extension housing. Disconnect shift linkage at transmission, and propeller shaft at front universal Disconnect exhaust pipe from rear end of right exhaust manifold Remove generator, and fan blade and pulley. Remove radiator (see Radiator Removal). Remove carburetor and air cleaner. Disconnect ignition switch wire at coil, oil pressure gauge line at rear of block, and flexible fuel pump hose at pipe. Take off windshield washer bottle and bracket, disconnect heater hoses. Loop rope (or chain) around intake manifold. Attach rope to hoist and tighten hoist to take slack out of rope, then disconnect front engine supports (one each side). Engine and transmission can then be raised out of car.

TIGHTENING (TORQUE WRENCH) SPECIFICATIONS

1949 MODELS

	Ft. Lbs.	In. Lbs.
Cylinder Head Bolts	65-70	780-840
Main Bearing Caps	90-100	1080-1200
Connecting Rod Nuts	35-40	420-480
Flywheel to Crankshaft (H-M)	70-75	840-900
Flywheel to Crankshaft (S-M)	65-70	780-840
Manifolds to Head	25-30	300-360
Engine Rear Support	50-60	600-720
Eng. Front Support Stud Nut	80-90	960-1080
Diff. Carrier to Axle Housing	30-35	360-420
Spring U-bolts	45-52	540-624
Backing Plate to Axle (60S,61,62)	35-40	420-480
Backing Plate to Axle (75,86)	55-60	660-720
Wheel Mounting Nuts	110-120	1320-1440
Steering Gear to Frame	40-45	480-540
Steering Wheel Nut	45-50	540-600
Front Shock Absorber Bolts	85-95	1020-1140
Susp. Arm Shafts to Frame	60-70	720-840

CYLINDER HEAD

1949 MODELS

CYLINDER HEAD INSTALLATION: Use a Torque Wrench and tighten cylinder head capscrews starting from the center row of bolts and working outward and toward each end.

Cylinder Head Gasket. Install with side stamped "Top" UP.

Cylinder Head Capscrews. 8 short screws in outside row, 5 medium length screws in center row, 4 long screws at rocker arm shaft.

Tightening Torque. See Tightening (Torque Wrench) Specifications.

ORIGINAL BORE & PISTONS

1949 MODELS

ORIGINAL PRODUCTION ENGINE BORE & PISTON SIZES: Cylinder bores and pistons are graded in sizes listed below. Can be identified as follows:

Cylinder Bore Marking—Letter stamped on top of block to right or left of cylinder bore, mark to left indicating "+", to right "—".

Piston Marking—Letter stamped on piston head.

1949 Piston & Cylinder Sizes

Letter①	Piston Size	Cylinder Size
A	3.8104-3 8106"	3.8125-3.8127"
B	3.8106-3.8108"	3.8127-3.8129"
C	3.8108-3.8110"	3.8129-3.8131"
D	3.8110-3.8112"	3.8131-3.8133"
E	3 8112-3 8114"	3.8133-3.8135"
H	3.8114-3.8116"	3.8135-3.8137"
J	3.8116-3.8118"	3.8137-3.8139"
K	3.8118-3 8120"	3.8139-3.8141"
L	3.8120-3 8122"	3.8141-3.8143"
M	3 8122-3.8124"	3.8143-3.8145"

①—Cylinder bore letter to left of center of bore indicates "+", to right "—".

PISTONS

1949 MODELS

FITTING NEW PISTONS: Pistons should be fitted by Micrometer Gauge Method or Feeler Gauge Method as described below to the following Skirt Clearance (with proper allowance for temperature variation):

Year	Skirt Clearance①
1949 Engines	.0020-.0022"

①—This is proper clearance with engine block and piston at 70°F. Subtract .0001" clearance (or 2/5 lb. pull on feeler gauge) for each 6° increase in piston temperature over 70°, add .0001" clearance (or 2/5 lb. pull) for each 6° decrease in piston temperature below 70°.

Micrometer Gauge Method:—Measure cylinder bore with micrometer gauge at point 1¼" below top edge and at right angles to crankshaft. Set inside micrometer at cylinder bore size, then measure this gauge length with same outside micrometer used to measure piston. This method will eliminate any error introduced by using different gauges to measure cylinder and piston. Use outside micrometer to measure piston diameter at upper corner of "T" slot (adjacent to "T" slot and ⅛" below horizontal slot —piston must be measured at this point since skirt tapered with .0012-.0021" larger diameter at lower end). Select piston of correct size to give skirt clearance listed above.

Feeler Gauge Method:—Use ½" feeler stock .002", .0025", or .003" thick (see Feeler Gauge Note and table below) on side of piston directly over "T" slot (center feeler on slot) with lower rounded end of feeler extending ½" down on piston skirt past horizontal slot (feeler must not extend further down on piston skirt because skirt is tapered with greater diameter at bottom). Install piston and feeler in cylinder with piston right side up and feeler toward side, measure pull required to withdraw feeler. Pull will vary in accordance with thickness of feeler gauge used and with piston temperature. See table below for correct pull for each feeler gauge thickness to obtain proper skirt clearance listed above.

Feeler Pull (In lbs.)	Piston Clearance (70°F.) .002" Feeler	.0025" Feeler	.003" Feeler
1	.00225"	.00275"	.00326"
2	.002"	.00252"	.00304"
3	.00175"	.00228"	.0028"
4	.0015"	.00205"	.00258"
5	.00125"	.00182"	.00235"
6	.001"	.00157"	.00213"
7	.00075"	.00133"	.0019"

Feeler Gauge Note—Feeler gauges used for piston clearance measurement should be clean and smooth with lower end rounded. Rusted or wrinkled feelers should be discarded and rough edges should be honed to prevent scratching cylinder wall.

1949 MODELS

REPLACEMENT PISTONS (WITH RING AND PIN): Slipper skirt type pistons furnished as follows:

Nominal Size	Piston Skirt Diameter
Standard	3.8104-3.8124"
.010" Oversize	3 8204-3.8224"
.020" Oversize	3.8304-3.8324"
.030" Oversize	3.8404-3.8424"

CRANKSHAFT & MAIN BEARINGS

1949 MODELS

PLASTIGAGE FOR CHECKING BEARING CLEARANCE: Connecting rod and main bearing clearance can be checked as follows: Remove cap, wipe crankshaft journal and bearing insert free of oil, place piece of Plastigage across bearing, install cap (on connecting rods, crank pin should be at bottom dead center), tighten cap bolts to specified torque (see Tightening Specifications). Remove cap, check widest width of flattened Plastigage with scale on envelope. Replace rod bearings if over .0045", main bearings if over .005".

1949 MODELS

CRANKSHAFT REMOVAL (Engine in Car): Jack up all four wheels and install a stand at each wheel. Drain crankcase and cooling system. Remove oil pan (see Oil Pan Removal), oil pump (see Oil Pump Removal), timing chain (see Timing Chain Removal), and flywheel (see Flywheel Removal). Take off steering idler at right frame side bar and lower linkage to floor. Remove spark plugs. Take off rod caps and push rod and piston assemblies up into bores to clear shaft. Remove front and rear main bearing caps, support shaft at front and rear and remove three remaining caps, lower shaft out of engine.

1949 MODELS

MAIN BEARING REMOVAL: Upper bearing halves can be rotated out with flattened cotter pin inserted in oil hole in crankshaft and turning shaft clockwise. Crankshaft does not have to be taken out. **Installation**—Reverse removal instructions given above. *CAUTION*—Do not interchange caps. Install caps with marking numbers (not casting nos.) on left side and in order from front-to-rear of engine.

1949 MODELS

REAR MAIN BEARING OIL SEAL: Wiper seal installed in rear groove in bearing cap and block (oil slinger operates in front groove).

Oil Seal Installation—With crankshaft out of engine (see Crankshaft Removal), and bearing cap off, install length of new packing in groove in block. Use Tool J-3048 and drive seal in place. With tool in place, cut ends of packing flush at each end. Repeat operation for bearing cap.

1949 MODELS

FLYWHEEL REMOVAL: Jack up car 8" off floor, install stand at each wheel. Remove Hydra-Matic Transmission (see Cadillac Hydra-Matic Drive in Transmission Section), or transmission, clutch, and flywheel housing lower cover on cars so equipped (see Transmission and Clutch Removal on car page). Remove flywheel-to-crankshaft bolts, flywheel, and gasket.

Crankshaft Pilot Bearing and Retainer—If replacement required, Tool No. J-164 can be used for removal, and Tool J-2985 for installation. Flywheel should be attached to crankshaft for this operation.

Flywheel Installation: Reverse removal instructions given above. Use new gasket on crankshaft and dip flywheel mounting bolts in sealer before installing.

TIMING CHAIN

1949 MODELS

TIMING CHAIN REMOVAL: Set engine in firing position for #6 cylinder (this places chain sprocket marks adjacent to one another). Remove water pump (see Cooling on car page), oil pan (see Oil Pan Removal), crankshaft pulley, engine front cover (9 screws), and camshaft thrust plug and spring from front end of camshaft. Take out two camshaft sprocket screws and lock washers. Pull camshaft sprocket and chain off together using Tool No. J-3080. Remove crankshaft sprocket.

Timing Chain Installation: Reverse removal instructions given above. Timing marks on sprockets must be together and aligned with straightedge across shaft centers.

CAMSHAFT & BEARINGS

1949 MODELS

CAMSHAFT REMOVAL: Remove radiator (see Radiator Removal), radiator shroud support, timing chain (see Timing Chain Removal), valve lifters (see Valve Lifter Removal), distributor (see Ignition on car page), distributor drive gear, use Tool No. J-3080 and pull camshaft half way out, remove tool and withdraw camshaft all the way out.

CAUTION—Slide camshaft out carefully and avoid scratching camshaft bushings with cam lobes.

Camshaft Alignment Check: Place camshaft on surface plate and support at front and rear bearing journals on "V" blocks, or on centers. Mount dial indicator on surface plate over centerline of camshaft with pointer touching shaft. Check heel of each cam through 180° rotation with dial set at zero. Replace camshaft if dial reading greater than .0015".

Camshaft Installation: Reverse removal instructions given above.

VALVE SYSTEM

1949 MODELS

VALVE REMOVAL: With cylinder heads removed, take out spark plugs. Install head upside down on Cylinder Head Holding Stand Tool No. J-3064. Install Holding Strap No. J-3064-6 over heads of valves. Turn head right side up, compress valve spring with compressor bar and stirrup of Head Holding Tool, remove valve keepers. Release bar and remove valve spring retainer, also rubber seal from lower groove on valve stem. Turn head over, remove Holding Strap, take out valves. *CAUTION*—Note location of each valve, must be re-installed in same position.

Valve Installation: Reverse removal instructions given above and note the following:

Valve Spring Retainers. Install retainers with long skirts on intake valves.

Valve Stem Oil Seals. Installed in lower groove (nearest valve head) ahead of valve keepers. Check for proper sealing after keepers installed by striking ends of valve stem to seat keepers, then using suction cup (similar to type used for grinding valves), compress cup on spring retainer. If seal properly seated, cup will stick to retainer, or if cup does not stick, seal is broken and a new seal will have to be installed.

1949 MODELS

VALVE LIFTER REMOVAL: Remove rocker arm covers (hang on cowl), intake manifold, three valve compartment cover screws. Loosen crankcase ventilator pipe screw at flywheel housing, move pipe to permit removal of valve cover. Remove rocker arm assemblies and push rods. Take out lifters (use Tool No. J-3049), turn lifters while removing to remove any carbon or varnish deposit from lifter base.

CAUTION—Keep lifters in order—must be re-assembled in same holes.

Partial Removal Note—If one or two lifters only to be removed, rocker arm assembly need not be removed, proceed as follows: Compress valve spring, slide rocker arm over, withdraw pushrod.

1949 MODELS

ROCKER ARM INSTALLATION: When assembling rocker arm assemblies note the following points:

Rocker Arm Shafts. Locating notch on front end of shaft must point inward and down.

Rocker Shaft Brackets. Front and rear brackets must be assembled with rocker arm cover screw hole on top on valve end of rocker arm. Intermediate (second and third) brackets must be installed right side up (can cause shaft misalignment if upside down).

OIL PAN REMOVAL

1949 MODELS

OIL PAN REMOVAL: Remove oil level indicator, exhaust cross-under pipe nuts, pipe, gaskets, and manifold heat control valve. Take off starter and lay on frame side rail. Remove two oil pan nuts and eighteen screws, take off oil pan.

Oil Pan Installation: Cement new pan gaskets to pan, install new cork seals in rear main bearing cap and engine front cover with ends of seals seated in grooves. Coat each end of pan gaskets with chassis grease so that ends will slip over front and rear seals. Position pan over two studs on left side of crankcase, then raise right side and insert two pan screws opposite the two studs, put on washers and nuts on two studs. Tighten remaining screws, tightening two screws and nuts originally installed last.

OIL PUMP

1949 MODELS

OIL PUMP REMOVAL: Take off oil pan (see Oil Pan Removal). Remove oil pan baffle, and two nuts securing pump to rear main bearing cap. Remove pump and float and screen assembly.

Oil Pump Specifications: Backlash between gears .008-.012". Driveshaft to Body Clearance .0010-.0025" (new), .005" max. (worn). Endplay between cover and gears .001-.004" (new), .006" max. (worn). **Pressure Regulator**—Valve Plunger to Body Clearance .0020-.0035" (new), .005" (worn). Spring Free Length 2 25/64". Spring Pressure at 1 13/32"—5 3/4 to 6 1/4 lbs.

Oil Pump Installation: Reverse removal instructions given above and use new gasket between pump and bearing cap.

RADIATOR

1949 MODELS

RADIATOR CORE REMOVAL: Drain radiator, remove radiator hoses, six radiator-to-air deflector screws, and radiator anchor nut and spacers at frame bracket (check number of spacers and reinstall same number when radiator replaced). Lift out radiator.

Radiator Core Installation: Reverse removal instructions given above. NOTE—Core must be properly positioned for spacing between core and fan—this space must be ½" to 1".

MODEL IDENTIFICATION

ENGINE SERIAL NUMBER: Stamped on right front of crankcase above water pump and on right frame side member to rear of engine support bracket.
Identification—First two figures indicate year, third and fourth figures indicate model (last five figures numbered consecutively regardless of series).
1949 Numbers—First numbers as follows:

Series	First 1949 Number
49-61	496100000
49-62	496200000
49-60S Special	496000000
49-75	497500000
49-86 Commercial	498600000

ENGINE UNIT NUMBER: Stamped on lower end of rough flat surface on crankcase behind right hand block (directly above boss for clutch housing locating pin).

1949 Numbers	Engine Unit Number Std. Transmission	Hydra-Matic
49-60S, 61, 62	8-L-1 Up	9-L-1 Up
49-75, 86	2-L-1 Up	9-L-1 Up

TUNE-UP

COMPRESSION PRESSURE: 140 lbs. at cranking speed (7.25-1 Std. Cast-iron head).
VACUUM READING: Steady 20-21" idling at 375 RPM. (for Hydra-Matic), 400 RPM. (with Synchro-Mesh).
FIRING ORDER: 1-8-4-3-6-5-7-2. (Cyl. Nos. 1-3-5-7 Left Bank, 2-4-6-8 Right Bank, front-to-rear). See diagram.
SPARK PLUG GAPS: .033-.038".
Plugs—AC No. 48. 14 mm. (10 mm. insulator in 14 mm. shell providing greater heat range).
►*CAUTION—Tighten plugs to 20-25 ft. lbs. torque.*
DISTRIBUTOR: Breaker Gap—.016-.021" (new), .0125-.0175" (used points).
►*CAUTION—Set new points at .016-.021" to allow for wearing in of rubbing block.*
Cam Angle—31° (new), 28° (used) 2° closed.
►*CAUTION—Manufacturer recommends final check with feeler gauge or dial indicator if dwell-meter used to set contact gap.*
Breaker Arm Spring Tension—19-23 ozs.
Automatic & Vacuum Advance—*See Ignition.*
Condenser Capacity—.18-.25 microfarad.
IGNITION TIMING: 5° BTDC.
Timing Procedure—*See Ignition Timing.*
Timing Mark—"A/" on harmonic balancer at front of engine lined up with pointer on front cover (for fuel of 80 Octane Rating).
►*CAUTION*—If fuel of less than 80 Octane Rating used, and detonation ping noted, timing may be retarded to "/C" mark on balancer (top dead center).
CARBURETION:
Idle Setting—Both screws ½-1½ turns open (turn screws out for richer mixture) and set for smooth idle with engine warm.
Idle Speed—375 RPM (Hydra-Matic Trans.), 400 RPM (Synchro-mesh Trans.) with engine warm and Hydra-Matic selector lever in "Dr" position.
►*CAUTION—Use tachometer to set idling speed.*
Float Level—9/64" from top of each float to gasket seat on cover with valve seated (invert to check). Fuel level even with bottom of inspection plug hole on side of bowl with engine idling.
Accelerating Pump—No seasonal adjustment.
►**Choke Setting:** *CAUTION—Different setting used on each carburetor.*
(682S)—1 Point Rich.
(722S)—Centered (housing centered on scale).
Fuel Pump Pressure: 4-5¼ lbs. at carburetor.
MANIFOLD HEAT CONTROL: Automatic thermostatic type. Blocker type valve located between left bank exhaust manifold and cross-under pipe (diverts exhaust through bypass under intake manifold when valve closed).
►*CAUTION*—Valve assembly must be installed with coil toward left side and dampener weight toward rear of engine.
VALVE TAPPET CLEARANCE: None in service (automatic hydraulic type tappet take-up).
Valve Timing Check—*See Valve Timing.*
STARTING: *See Battery, Starter, Generator, Regulator.*

IGNITION

IGNITION SWITCH: Delco-Remy No. 1116462.
Ignition Lock—Briggs & Stratton or Delco.
COIL: Delco-Remy 1115380. Mounted on manifold directly in front of distributor.
Ignition Current—2.2 amperes (engine running).
CONDENSER: Delco-Remy Part No. 1869704.
Capacity—.18-.25 microfarad.
DISTRIBUTOR: Delco-Remy 1110812. Automatic and vacuum advance type with new "center-bearing" breaker plate.
►**Breaker Plate Bearing Assembly**—Plate rotates on 3 bakelite buttons on support plate with spring tension adjustment (shim washers) on underside of support plate. Pull required to move plate should be 8 ozs. min., 16 ozs. max. with breaker plate assembly out of housing.
See "Delco-Remy Center-Bearing Breaker Plate Distributor" in Electrical Equipment Section.
Breaker Gap—.016-.021" (new), .0125-.0175" (used).
►*CAUTION—Set new points at .016-.021" to allow for wearing in of rubbing block.*
Cam Angle—31° (new), 28° (used) ± 2° closed.
►*CAUTION—Car manufacturer recommends final check with feeler gauge or dial indicator if dwell-meter used to set contact gap.*
Breaker Arm Spring Tension—19-23 ozs.

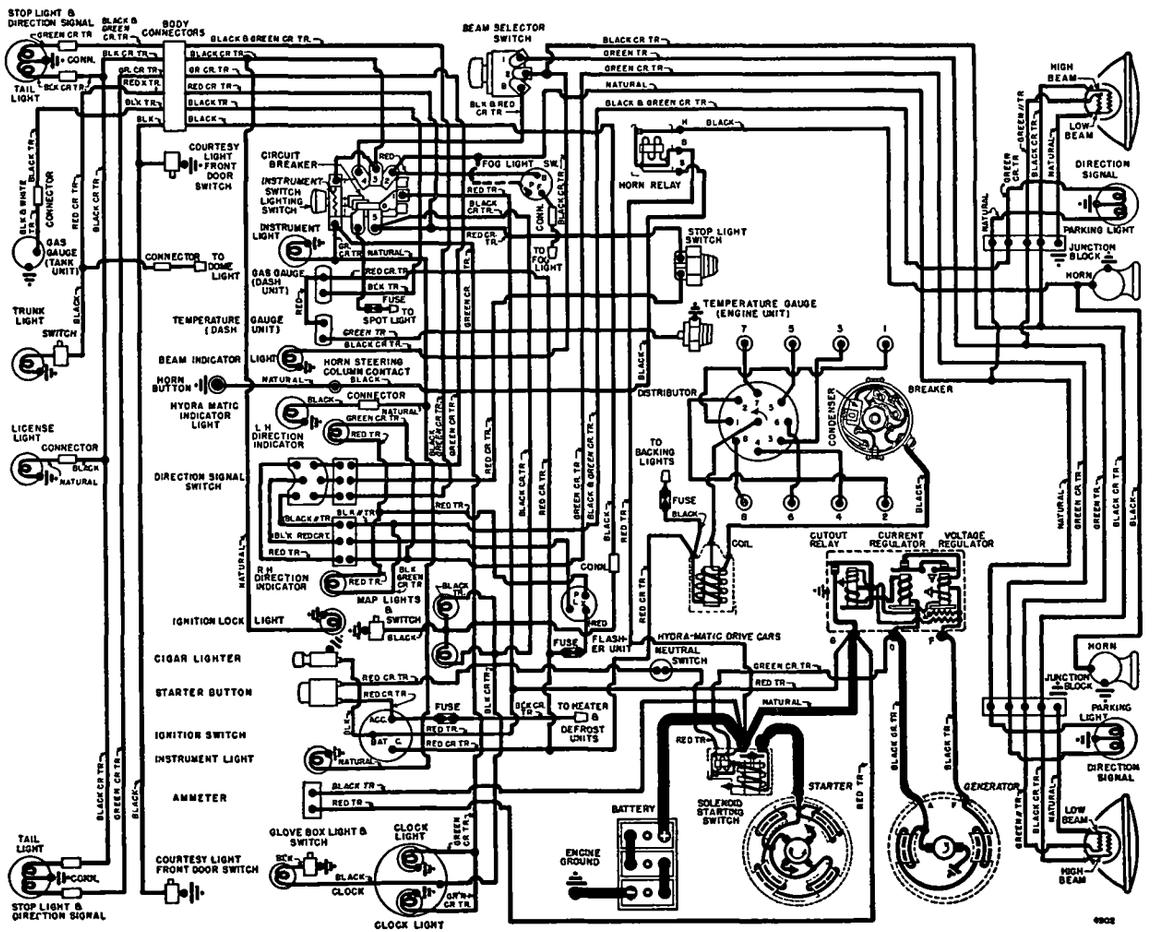

Rotation—Counter-clockwise viewed from above.

Automatic Advance

Distributor Degrees	R.P.M.	Engine Degrees	R.P.M.
Start	300	1.5	600
7.75	1000	15.5	2000
18.75	1800	37.5	3600

Vacuum Spark Control: Delco-Remy 1116047. Integral type linked directly to breaker plate. Provides additional advance at speeds above idling except when engine accelerated or operated with wide open throttle when spark retarded by return spring.

Plunger Travel—7/32" (.190-.212").

Vacuum Advance

Distr. Degrees	Eng. Degrees	Vacuum (" of HG)
Start	0°	6-8"
6°	12°	9-11"
10°	20°	13-15"

Removal: Turn crankshaft to top dead center position for #1 piston (mark "/C" on vibration balancer in line with pointer on front cover), remove distributor cap, disconnect breaker lead and vacuum line, remove nut on hold-down clamp stud, hold rotor clockwise (against direction of rotation), lift distributor straight up and out.

►*CAUTION—Use care not to nick tapered drive tongue and do not lose distributor flange-to-crankcase gasket.*

IGNITION TIMING

Flywheel Degrees

Std. Setting①.....5° BTDC.

①—For fuel of 80 Octane Rating. See Manual Adjustment (below) for other fuels.

Timing Mark—"A/" on vibration balancer (located 5° ahead of dead center mark "/C" in line with pointer on right side of engine front cover.

Timing (Using Timing Light)—Loosen distributor hold-down clamp nut just enough to permit distributor adjustment, disconnect vacuum line (to prevent vacuum advance operating), connect timing light to #1 cylinder spark plug lead, direct light on vibration balancer from right side of engine. Warm up engine. With engine idling, rotate distributor until balancer mark "A/" lines up with pointer on front cover, tighten hold-down clamp nut to 15-18 ft. lbs. Recheck timing, connect vacuum line.

Manual Adjustment—If fuel of less than 80 Octane Rating used and detonation "ping" noted with std. setting (above), timing can be retarded to "/C" mark on balancer (top dead center), by loosening hold-down clamp nut and rotating distributor counter-clockwise (in direction of rotation).

CARBURETOR

Carter WCD Model 682S (First Cars), 722S (After 6566 Cars). 1¼" Dual (double barrel) downdraft.

Casting No.—610 on face of flange (both).

See Carburetor Section for complete data.

Settings (Idle Setting, Float Level & Accelerating Pump): *See Tune-Up data.*

Hydra-Matic Throttle Linkage Adjustment: *See "Cadillac Hydra-Matic Drive" in Transmission Section.*

Metering Jets & Rods—*See "Carter Downdraft Carburetor Jet Specifications" in Carburetor Section.*

Fast Idle: Carter Dual (WCD) Carburetor type.

See Carburetion Equipment Section for complete data.

Setting—.020" throttle opening (Gauge T109-29 with choke valve tightly closed. Adjust by turning fast idle adjusting screw.

Automatic Choke: Carter Climatic Control (Dual Carburetor).

See Carburetion Equipment Section for complete data.

►**Setting**—*CAUTION—Two different settings used.*
(682S)—1 Point Rich.
(722S)—Centered (housing centered on scale).

CARB. EQUIPMENT

Air Cleaner: AC No. 1544432. Oil-bath type.

Filter Element—AC No. 20.

Servicing—Drain reservoir, clean with kerosene, refill with 1 pint engine oil every 2000 miles. Use SAE #50 oil (above 32°F.), #20 (below 32°F.).

Fuel Pump: AC No. 1539143 or 1539488. Combination fuel-and-vacuum pump.

Replacement Pump—AC No. 9143.

Pressure—4-5¼ lbs. (at carburetor).

See Carburetion Equipment Section for complete data.

Gasoline Gauge: AC. Electric type.

Dash Unit—AC No. 1517131.

Tank Unit—AC No. 1517068.

See Carburetion Equipment Section for complete data.

BATTERY

STANDARD

Delco Type 17K-4. 6 Volt, 17 Plate, 115 Ampere Hour Capacity (20 hr. rate).
Starting Capacity—137 amperes for 20 minutes.
Zero Capacity—300 amperes for 4.3 minutes.
Five Second Voltage—4.4 volts.
Grounded Terminal—Negative (—) terminal connected to engine at starter mounting flange.
Location—In engine compartment on right hand side (mounted outside frame side rail).

COMMERCIAL MODELS

Delco Type 19Q-4. 6 Volt, 19 Plate, 125 Ampere Hour Capacity (20 hour rate).
Starting Capacity—145 amperes for 20 minutes.
Zero Capacity—300 amperes for 5.0 minutes.
Five Second Voltage—4.5 volts.
Grounded Terminal & Location—Same as Std. models above.

STARTER

Delco-Remy Model 1107945. Armature No. 820158.

►**Hydra-Matic Drive Car Starter**—Starter operative only with Selector lever in Neutral (Neutral Safety Switch connected in starter solenoid relay circuit).
Drive—Overrunning clutch (solenoid pinion shift).
Rotation—Counter-clockwise at commutator end.
Brush Spring Tension—24-28 ozs. each.

Performance Data

Torque	R.P.M.	Volts	Amperes
0 ft. lbs.	5500	5.7	80①
15 "	Lock	3.0	600

①—Includes current draw of starter switch.

Removal: Starter flange mounted on right front face of flywheel housing. To remove, disconnect battery cable and control leads, take out two flange mounting screws, pull starter out.

Starting Switch: Delco-Remy Solenoid Switch No. 1118141 mounted on starter and controlled by Push-button Switch No. 1996009 on instrument panel and Neutral Saftey Switch No. 1997844 (Hydra-Matic Drive Cars).

See Electrical Equipment Section for complete data.

GENERATOR

Delco-Remy Model 1102700. Armature No. 1880550. Two brush type with voltage and current regulation.
Charging Rate Adjustment—None. See Regulator.
Maximum Charging Rate—40-46 amperes reached at 28 MPH. Actual charging rate controlled by regulator and dependent on battery condition.

Performance Data

	Amperes	Volts	R.P.M.
Cold	40①	8.0	1900

①—Not maximum output. See Current Regulator.

Rotation—Counter-clockwise at commutator end.

Brush Spring Tension—25 ozs. each.

Field Current—1.9-2.05 amperes at 6.0 volts.

Removal: Generator pivot mounted at right of engine. To remove, disconnect leads, take out two pivot bolts and clampscrew in adjusting link.

Belt Adjustment: Tighten belt to 24 in. lbs. torque measured as follows: Loosen both pivot bolts and adjusting strap screw, install Fan Belt, Adjusting Tool J-3046 on head of lower front mounting bolt, rotate tool until arm contacts edge of generator end plate. Use ⅞" socket and torque wrench on tool to pull generator out away from engine until 24 in. lb. reading secured on wrench, tighten adjusting strap screw before releasing wrench.

REGULATOR

Delco-Remy 1118300. Voltage & Current Regulator.
►*NEW "1118300 SERIES"* regulators have screw adjustment for settings and single regulator springs.
See Electrical Equipment Section for complete data.

CAUTION—Check generator for grounded field coils and leads before changing regulator settings to correct High Charging Rate or High Voltage.

Cutout Relay

Cuts In—5.9-6.8 volts hot (set to 6.4 volts hot).
Contact Gap—.020" (same for both sets).
Air Gap—.020" (with contacts just closed).

Voltage Regulator

Setting—7.0-7.7 volts hot (set to 7.4 volts hot). Regulator is over-compensated for temperature. Check with cover in place and regulator hot.
Air Gap—.075" with armature pressed down to point where contacts are just touching.
Checking & Adjustment—*See Electrical Equipment Section.*

Current Regulator

Setting—40-46 amperes hot (set to 42 hot).
Air Gap—.075" with armature pressed down to point where contacts are just touching.
Checking & Adjustment—*See Electrical Equipment Section.*

LIGHTING

Headlamps: Guide "Sealed Beam" type.
See Electrical Equipment Section for complete data.
Adjustment—Aim upper beam straight ahead (hot spot center 3" below lamp center height at 25 ft.).
Beam Indicator—At center of panel above speedometer. Lighted when country (upper) beam in use.

Direction Signal: *See Electrical Equipment Section.*
Direction Signal Indicators—Left & Right Turn Indicator located at either end of speedometer dial. Lights when direction signal on same side of car operating (Stop Light flashes at rear).

CONTINUED N NEXT PAGE

CONTINUED FROM PRECEDIN PAGE

Switches

Lighting—Delco-Remy No. 1995031.
Instrument—Part of lighting switch (rheostat operated by rotating light switch knob).
Beam Selector—Delco-Remy No. 1997008.
Map Light—Delco-Remy No. 1997848.
Direction Signal—Delco-Remy No. 1995541 (Std. Cars), 1995540 (Hydra-Matic Cars).
Back Up Light—Delco-Remy No. 1997774.

MISC. ELECTRICAL

FUSES: Direction Signal—9 ampere. On Flasher under back of instrument panel on left side.
Defroster & Heater Motor—30 ampere. In lead from "Acc" terminal on ignition switch.
Back Up Light—20 ampere. In lead from switch terminal of ignition coil.

THERMOSTATIC CIRCUIT BREAKER: Delco-Remy. On back of light switch (part of switch assy.). Contacts remain closed with 30 amperes but open in 3 minutes with 42 amperes at 70°F. Not adjustable.

HORNS: Delco-Remy No. 1999621 (Low Note), 1999622 (High Note). Vibrator type, blended tone, twin horns operated by relay.

Type	Current (at 6 volts)	Air Gap
1999621 (Low Note)	19-21 amperes	.044-.049"
1999622 (High Note)	18-20 amperes	.034-.039"

Horn Relay: Delco-Remy No. 1116775.
Contact Gap—.027". **Air Gap**—.014" (closed).
Contacts Close—2.75-4.0 volts (set to 3.5 volts).

ENGINE

ENGINE SPECIFICATIONS: New 90° V8 with Overhead Valves. Both cylinder blocks and crankcase cast Enbloc.
Bore—3 13/16" (3.8125-3.8145"). *See "Original Bore & Pistons" in Cadillac Special Data.*
Stroke—3⅝". **Displacement**—331 cu. ins.
Rated Horsepower—46.5.
Developed Horsepower—160 at 3800 RPM.
Compression Ratio—7.5-1.
Compression & Vacuum Reading—*See Tune-Up.*

TIGHTENING TORQUES: *See Cadillac Special Data.*

CYLINDER HEAD INSTALLATION: *See Cadillac Special Data.*

ENGINE REMOVAL: *See Cadillac Special Data.*

OIL PAN REMOVAL: *See Cadillac Special Data.*

PISTONS: Aluminum alloy, three-ring, T-slot, tin-plated, "slipper skirt" type (skirt cutaway at pin bosses).
Diameter (Std. Size)—3.8104-3.8124". *See "Original Bore & Pistons" in Cadillac Special Data.*
Weight—19.296 ozs. (without rings or pin).
Length—3 15/16".
Removal—Pistons and rods removed from above.
Clearance—.0020-.0022" at 70° measured ⅛" below upper cross slot and at right angles to piston pin.

Original Piston & Bore Sizes—*See Cadillac Special Data.*

Replacement Pistons: *See Cadillac Special Data.*

Fitting New Pistons: Use micrometer or feeler gauges. *See Cadillac Special Data.*

Installing Pistons: Mark "REAR" on piston pin boss toward right (#1, 3, 5, 7), toward left (#2, 4, 6, 8) of number on boss on connecting rod when facing this numbered boss end of rod. Install pistons with mark "REAR" toward rear of engine on all pistons.

PISTON RINGS: Two compression, one oil control ring per piston, all above pin. Oil ring slotted type with oil drain holes in groove.

Ring	Width	End Gap	Side Clearance
Compr. (#1, 2)	5/64"	.010-.020"	.0017-.0035"
Oil Contr. (#3)	3/16"	.010-.020"	.0013-.0026"

Installing Rings—Beveled inner edge of compression rings must be upward.

PISTON PIN: Diameter 1". Length 2¾". Floating type with lock ring at each end.

►*CAUTION*—Install lock rings with tang pointing away from pin and toward piston head at 45° angle.

Pin Fit in Piston—.00005-.0001" at 70°F. (new), .0007" (worn limit). Pin should be light push fit at 70° with no perceptible play.

Pin Fit in Rod Bushing—.00005-.000035" (new), .0007" (worn limit). Pin should be free hand-press fit at 70°F. with no perceptible play.

►*CAUTION*—Do not attempt to replace pin bushing (fit oversize pin with KMO-754 Piston Pin Hone or replace rod).

CONNECTING ROD: Length 6⅝".

Crankpin Journal Diameter—2.2488-2.2493" (out-of-round limit .00025" maximum). Connecting rod diameter (without bearing) 2.3740-2.3745".

Lower Bearing—Removable steel-backed, Moraine-Durex lined type. No shims.

Clearance—.0005-.0020" (new), .0045" (worn limit).

Sideplay—.008-.014".

►*PLASTIGAGE for checking bearing clearance—see "Crankshaft & Main Bearings" in Cadillac Special Data.*

Bearing Adjustment: None (no shims), replace bearings.

►*CAUTION*—Tang on bearings must register with grooves in rod and cap and oil spit hole register with oil groove in bearing cap (for cylinder wall lubrication).

Installing Rods: Cylinder No. mark on rod and cap (on small boss on end) must be together and installed in same numbered cylinder with piston mark "REAR" toward rear of engine (lubrication groove in rod cap will be on upper side).

CRANKSHAFT: 5-bearing, integral counterweights.
Removal & Installation—*See Cadillac Special Data.*
Journal Diameters—2.4990-2.4995" all bearings (out-of-round limit .00025" maximum).
Bearings—Removable, steel-backed, Moraine-Durex lined type. No shims.
Clearance—.0008-.0025" (new), .005" (worn limit).

►*PLASTIGAGE for checking bearing clearance—see "Crankshaft & Main Bearings" in Cadillac Special Data.*

Bearing Adjustment: None (no shims), replace bearings.
Bearing Removal & Installation—*See "Crankshaft & Main Bearings" in Cadillac Special Data.*

►*CAUTION*—Bearing caps must not be interchanged. Install caps with marking numbers (not casting nos.) on left side and in order from front-to-rear of engine.

End Thrust: Taken by flanged rear (#5) bearing.
Endplay—.001-.005" (new), .010" (worn limit).

Rear Main Bearing Oil Seal Installation: *See "Crankshaft & Main Bearings" in Cadillac Special Data.*

FLYWHEEL Removal & Installation—*See Cadillac Special Data.*

CAMSHAFT: 5-bearing, Cast-iron type with non-adjustable chain drive.

►*CAUTION*—Handle shaft with care to avoid damage or misalignment. Check alignment whenever removed.
Removal, Alignment & Installation—*See Cadillac Special Data.*
Bearing Type—Steel-backed, babbitt bushings.
Clearance—.001-.0022" (new), .004" (worn limit).

End Thrust: Spring-loaded plug in forward end of shaft bearing against thrust plate in cover.

►*CAUTION*—See that plug and spring in place when installing chain case cover.

Timing Chain: Link-Belt side-guide type. Width 11/16". Pitch .500". Length 23" or 46 links.

►*CAUTION*—Install chain "endless" and as a unit with camshaft sprocket (sprocket press fit on shaft with locating dowel and two retaining capscrews).
Timing Chain Removal—*See Cadillac Special Data.*

Camshaft Setting: Both sprockets marked "0". Mesh chain with sprockets turned so that marks adjacent and in line with straightedge across shaft centers.

VALVES:	Head Diameter	Stem Diameter	Length
Intake	1.745-1.755"	.3415-.3425"	4 5/8"
Exhaust	1.4325-1.4425"	.3405-.3415"	4 5/8"

	Seat Angle	Lift	Stem Clearance
Intake	44°②	.330"	.0005-.0025"①
Exhaust	44°②	.330"	.0015-.0035"①

①—New valves & guides. Worn limit .005" max.
②—New valves (valves in service can be refaced to 45° if seat width recommendations not exceeded).

►*CAUTION*—Do not lap new valves in so that seat width is more than 1/64" (1° difference between valve and block angle designed to provide "hairline" contact).

►**Valve Seat Width Recommendations**—3/64-1/16" (moderate speeds or city driving), 1/16-3/32" (high speed driving). Cut seat so that distance from outer edge to edge of flange on valve head is not more than 1/32".

►**Valve Stem Oil Seal**—New rubber oil seal installed in lower groove on valve stem (below valve keeper).
Oil Seal Installation—*See "Valve Removal & Installation" in Cadillac Special Data.*

Valve Removal & Installation: *See "Valves" in Cadillac Special Data.*

Valve Guides: Pressed in cylinder head with counterbored end down toward valve head. Use Remover tool J-3062 to drive old guides out toward top of head, Installer tool J-3066 to drive new guides in (tool plate serves as stop for driver to position guide).

Valve Springs: Free Length 1.968".

	Pressure	Length
Valve Closed	57.5-62.5 lbs.	1.696"
Valve Open	130-140 lbs.	1.366"

►*CAUTION*—Lower end of spring must seat in recess in cylinder head.

Valve Lifters: New hydraulic type which maintains zero tappet clearance in service. Lifters operate in guide holes integral with block.
See Miscellaneous Section for complete data.
Valve Lifter Removal—*See Cadillac Special Data.*

Rocker Arms: New rocker arm and shaft assemblies mounted on each cylinder head.
NOTE—No adjusting screws provided on rocker arms.
Rocker Arm Installation—*See Cadillac Special Data.*

VALVE TIMING

Tappet Clearance: None in service (hydraulic type lifters which maintain zero clearance).

Valve Timing: *See Camshaft Setting above.*
Intake Valves—Open 15° BTDC. Close 73°7′ ALDC.
Exhaust Valves—Open 49° BLDC. Close 39°7′ ATDC.
Valve Timing Check—#1 cylinder (front-left bank) intake valve should open with piston 15° before top dead center. Vibration dampener marked "/C" for top dead center (also carries ignition timing mark "A/" which is 5° before top dead center).

LUBRICATION

Engine Oiling System: Pressure to main bearings, connecting rod lower bearings, camshaft bearings, and hydraulic valve lifters (from right and left oil channels in block); and to rocker arms (through hollow rocker arm shafts). Timing chain lubricated by oil return from forward end of right hand cylinder head (return line from rear of right block and front and rear of left block lead directly to crankcase).

Oil Pan Removal: *See Cadillac Special Data.*

Crankcase Capacity—5 quarts.

Normal Oil Pressure—25 lbs. min. at 30 MPH. 15 lbs. with engine idling.

Oil Pressure Regulator—Located on oil pump. Opens at 30 lbs. Non-adjustable.
Pressure Regulator Spring—Free length 2 25/64". Pressure should be 5¾-6¼ lbs. compressed to 1 13/32".

Oil Pump: Gear type. Located in crankcase at rear of engine.
Pump Removal & Installation—*See Cadillac Special Data.*

Oil Pressure Gauge: AC No. 1507364. Not electrical.

Crankcase Ventilation: Air intake in oil filler cap (oil-wetted type cleaner) with outlet connection at rear of valve compartment cover and outlet pipe extending down below engine at right rear corner.
Servicing—Wash filter element in gasoline and re-oil by dipping in engine oil whenever crankcase oil changed (every 2000 miles).

COOLING

Cooling System: Pressure type with pressure valve (relief valve) in filler cap. Re-circulation with thermostat closed provided by by-pass in pump body.
Capacity—18 qts. (1 qt. addt'l with heater).
Pressure Cap—AC No. 850559. Radiator Filler Cap. Opens at 12-15 lbs.

Radiator Removal: *See Cadillac Special Data.*

Water Pump: Packless type with ball bearing shaft. *See Water Pump Section for complete data.*
Removal—Drain cooling system. Loosen and remove generator drive belt. Remove upper and lower radiator hoses (and heater hose). Take out eight capscrews mounting pump and water manifold assembly on front of engine, lift out pump and fan assembly.
NOTE—Water manifold and thermostat are part of pump body casting.
Belt Adjustment—*See Generator Belt Adjustment.*

Thermostat: Harrison. In water outlet connection on top of pump body casting.
Setting (Std. Type)—Begins to open at 162-168°F. Fully open at 190-195°F.
Setting (High Temp. Type)—Begins to open at 177-183°F. Fully open at 205-210°F.

Temperature Gauge: AC. Electric type.
Dash Unit—AC No. 1512143.
Engine Unit—AC No. 1512015.
See Miscellaneous Section for complete data.

CLUTCH

Long 11CF-10½TI (60S, 61, 62), 11CF-TI (75, 86). Semi-centrifugal, single plate, dry disc type.
See Clutch Section for complete data.
Facings—Woven type. I.D. 7" (all), O.D. 10½" (60S, 61, 62), 11" (75, 86). Thickness .137" (all).

Pedal Adjustment: Pedal free travel ⅞-1⅛". Adjust by turning nut on connector rod at clutch fork.

Removal: Remove transmission (see Transmission Removal), remove starter, remove lower flywheel housing, remove clutch release yoke-to-lever rod. Remove flywheel housing with clutch release yoke, release bearing, and bearing retainer as an assembly. Punch mark flywheel and clutch cover to insure correct re-installation. Take out six clutch cover mounting screws (CAUTION—turn all screws out evenly to relieve spring pressure), lift clutch and driven member out.

►**Driven Member Installation Caution**—Oil guard must be toward rear.

►**Replacement Clutch Caution**—Clutches furnished with locking pin or block at each release lever. ***These locking pins must be removed when clutch installed.***

TRANSMISSION

STANDARD

Own Make. Constant-mesh, synchro-mesh (Second & High), sliding gear (Low & Reverse), all helical gear type with remote shift control.
See Transmission Section for complete data.

Transmission Control: Remote control type mounted on steering column.
See Transmission Section for complete data.

Removal: Support engine on stand, Tool No. J-3068, or use jack under rear end of oil pan (use block of wood on jack to prevent damage to pan). Disconnect rear universal joint, remove propeller shaft. Disconnect speedometer cable and shift rods at levers on transmission case. Disconnect rear engine support at transmission extension housing and remove cross-member on which support mounted. Loosen transmission mounting capscrews (CAUTION—support transmission so that it does not hang on driveshaft in clutch), remove screws, move transmission straight back to free shaft from clutch (CAUTION—plug clutch connection shaft oil drain hole as soon as accessible to prevent loss of lubricant), lower front end of transmission and remove from car.

HYDRA-MATIC DRIVE

OPTIONAL EQUIPMENT

Own Make. Consists of Fluid Coupling and automatic self-shifting Four-Speed Transmission. Optional on all models.
See Transmission Section for complete data.
Lubrication—Check fluid level in transmission every month or every 1000 miles. Drain and refill after first 6000 miles and every 12000 miles thereafter. Use only "Cadillac Hydra-Matic Fluid."
Draining & Refilling—*See "Hydra-Matic Drive" in Transmission Section.*
Capacity—Approximately 11 qts. (refill).
Checking Fluid Level—Clean all sand, lint, and dirt away from sheet metal cover in floor under right front corner of front compt. rug. Run engine for approx. 1½ minutes at speed equivalent to 20 MPH. with selector lever in "Neutral". Remove sheet metal cover from floor for access to dip stick, reduce engine speed to slow idle and move selector lever to "Drive" position, measure level with dip stick, add fluid until level is at "FULL" mark with engine idling.

►***CAUTION—Engine must be running at slow idle speed with selector lever in "Drive" position when checking Hydra-Matic Drive Fluid Level.***
Linkage Adjustment—*See "Hydra-Matic Drive" in Transmission Section.*

Removal: *See "Hydra-Matic Drive" in Transmission Section.*

UNIVERSALS

Mechanics Model 3C. Needle bearing type, two used (three on Comm'l cars with center bearing).
See Universals Section for complete data.

Propeller Shaft (Pass. Cars): One shaft used (no slip joint—front universal yoke slides on transmission mainshaft in extension housing).
(Commercial Cars)—Two shafts used with center bearing at rear of front shaft. Slip joint provided at rear end of rear shaft.
Propeller Shaft Removal & Installation—*See Cadillac Special Data.*

REAR AXLE

Own Make. Hypoid gear, semi-floating type with Hotchkiss Drive.
See Rear Axle Section for complete data.

►***CAUTION***—Manufacturer recommends that Carrier Assembly be serviced by replacement. Do not disassemble this unit or attempt service work other than oil seal and universal yoke replacement.

►**Axle Identification**—Axles marked by number stamped on bottom of differential case below center of pinion shaft as indicated in ratio table below.

Ratio—	Synchro-mesh Trans. Ratio	Marking	Hydra-Matic Drive Ratio	Marking
60S, 61, 62	3.77-1	None	3.61-1	6
75, 86	4.27-1	4	3.77-1	①7

①—Series 86 axle also blue-paint marked at spring seats.

Backlash—.003-.010" Screw Adjustment.

Removal: Disconnect propeller shaft at rear universal joint, lower shaft out of the way. Drain rear axle. Remove axle shafts (see below). Remove nuts and washers on carrier mounting bolts, lift out carrier assembly.

►***CAUTION***—Do not disturb nut on end of pinion shaft retaining rear universal yoke unless yoke or oil seal being replaced. ***Pinion bearing pre-load must be adjusted whenever this nut disturbed.***

Axle Shaft Removal: Remove wheel. Take out two screws holding brake drum on axle shaft flange, remove drum. Remove nuts and lockwashers from four bolts holding bearing retainer and backing plate on axle housing, use Puller J-942-1 and Slide Hammer Tool J-2619 to remove axle shaft.

►***CAUTION***—Use care not to damage axle shaft oil seal when sliding shaft out and do not disturb position of backing plate on housing.
(Commercial Cars)—Remove wheel, remove nut and washer on end of shaft. Use puller (Snap-On No. S-4567 or similar 5-jaw type) to remove wheel hub and brake drum. Disconnect brake line. Take out retaining screws and remove dust shield (bearing retainer) and backing plate. Use Puller J-838 to pull axle shaft and bearing assembly out using care not to damage oil seal in housing.

Wheel Bearings: Sealed ball-bearing type.
Adjustment—None.
►*CAUTION*—Check bearings for loss of lubricant when shaft removed. If bearing spins freely indicating loss of lubricant, install new bearing.
Pinion Bearing Pre-load Adjustment: Should be adjusted whenever nut on end of pinion shaft disturbed (for universal yoke or oil seal replacement).
See Rear Axle Section for complete data.

SHOCK ABSORBERS

Delco. Double acting, opposed piston, hydraulic types (front & rear). Model Nos. as follows:

	Front	Rear
60S, 61 62	1946-G,H	1754-N,P
75	1946-G,H	2007-N,P
86 Comm'l	1946-G,H	1751-V,W

See Shock Absorber Section for complete data.

FRONT SUSPENSION

Front Suspension:—Independent, linked parallelogram type with coil springs.
See Front Suspension Section for complete data.
NOTE—Specifications below correct with car at curb weight (car unloaded with full gas tank).
Kingpin Inclination—5°51′ crosswise (0° Camber).
Caster—Neg. ½° to Pos. ½°. Equal within ½°.
Camber—Neg. ⅜° to Pos. ⅜°. Equal within ½°.
Toe In—1/32-3/32″ (at rest). Loosen clamp bolts, turn adjusters at outer end of each rod equally.
Steering Geometry (Toe-out on turns)—Outer wheel turned 20°. Inner wheel as follows:

	Left Turn	Right Turn
60S, 61 62	25°25′	24°42′
75, 86 Comm'l	24°7′	23°6′

STEERING GEAR

Saginaw. Ball bearing Worm-and-Nut type (re-circulating ball type).
See Steering Gear Section for complete data.

BRAKES

Service: Bendix Hydraulic, Duo-servo, Single Anchor type **without Eccentric Adjustment.** Hand lever applies rear wheel service brakes.
See Brake Section for complete data.
Drums—Centrifuse. Diameter 12″ (11.995-12.005″).
NOTE—Drum out-of-round limit is .007″ and re-machining limit (to true up drums) is .030″ max.
Lining—Molded type (all models).

	60S, 61, 62	75	Comm'l 86
Width (Front)	2¼″	2¼″	2¼″
Width (Rear)	2¼″	2½″	2½″
Thickness	3/16″	3/16″	3/16″
Length (Fwd. Shoe)	11 17/32″	11 17/32″	12 31/32″
Length (Rev. Shoe)	12 31/32″	12 31/32″	12 31/32″

Fwd.—Forward or Primary (front) shoe.
Rev.—Reverse or Secondary (rear) shoe.
Clearance—.007-.010″ at each end of each shoe or .015″ at both ends of secondary shoe with primary shoe forced out against drum.
Braking Power—55.8% Front, 44.2% Rear (60S, 61, 62, 75); 50% Front, 50% Rear (86 Comm'l).
Hand (Parking) Brake: See Service Brakes above.

MISC. MECHANICAL

Power Operated Convertible Tops, Windows, & Front Seat: Hydro-Lectric type (hydraulic actuation with motor-driven pump supplying oil under pressure for power cylinders).
See Miscellaneous Section for complete data.
Windshield Wiper: Cable Operated—Vacuum type.
See Miscellaneous Section for complete data.

CHEVROLET 1949 SPECIAL DATA & SHOP NOTES

FOR ALL MODELS

TIGHTENING (TORQUE WRENCH) SPECIFICATIONS

ALL MODELS

	Ft. Lbs.	In. Lbs.
Cylinder Head Capscrews	75-80	900-960
Main Bearing Bolts	100-110	1200-1320
Con. Rod Nuts	40-50	480-600
Rocker Arm Support Bolts	25-30	300-360
Crankcase Frt. End Plate	15-20	180-240
Timing Gear Cover Screws	6-7½	72-90
Manifold Clamp Bolts	15-20	180-240
Manifold Stud Nuts	25-30	300-360
Clutch Mounting Bolts	25-30	300-360
Clutch Housing Bolts	45-55	540-660
Flywheel Bolts	50-65	600-780
Oil Pan Flange Bolts	6-7½	72-90
Oil Pan Corner Bolts	12½-15	150-180
Oil Distr. Cover Screws	6-7½	72-90
Water Pump Mtg. Bolts	25-30	300-360
Fuel Pump Mtg. Bolts	15-20	180-240
Spark Plugs	20-25	240-300
Pitman Arm Bushing Nuts	30-40	360-480
Prop. Shaft Flange Nut	160-280	1920-3360
Axle Flange Bolts (Trucks)	85-95	1020-1140

FRONT END SHEET METAL

1949 PASSENGER CARS

FRONT END SHEET METAL REMOVAL: Front Fenders, Radiator, and Grille can be removed as a unit as follows: ***CAUTION—Where adjusting shims found, make certain same number replaced to maintain sheet metal alignment.*** Drain radiator. Cover fenders and cowl, prop hood in open position, remove hood springs (use Tool J-3181), take out two hinge support arm-to-hood bolts at each side (hold hood to prevent dropping down when bolts removed), remove hood. Remove sill mouldings (bolted to fender, clipped to body). Remove battery, and positive cable from fender skirt. Remove wiring harness from junction blocks, pull harness out of radiator support tie bar and front skirt hole. Take off horn relay and voltage regulator. Remove wiring harness and hood lock cable from left fender skirt. Remove clamp from front end of hood lock cable, loosen nut and bolt attachment of cable bracket to lower hood lock plate. Pull cable out. Turn back rubber connectors over air ducts. Remove radiator hoses and steering gear housing shield. At each side of car remove the following: fender skirt-to-dash leg nuts and bolts, rear baffle-to-cowl bolt, rear baffle extension, fender-to-frame brace, fender-to-lower baffle screws. Then disconnect radiator support to cross-member by removing nuts, lockplate, spacer and rubber cushion (bolts do not come out). Remove fender-to-cowl brace and fender-to-cowl side bolts at each side. Raise assembly at rear end (check so that assembly clears doors) until radiator support bolts free of cross-member and filler panel slips out from under top edge of bumper face bar, pull assembly toward front and remove from car.
NOTE—When re-installing assembly, tape rubber cushion and shims in place on radiator support over support bolts.

1949 TRUCKS

FRONT END REMOVAL (TRUCKS): On conventional trucks, front end sheet metal assembly can be removed as a unit as follows: Remove hood assembly, drain radiator, disconnect radiator hoses. Disconnect horn wires and all electrical wiring at junction blocks on both fender skirts, remove wiring harness from retainer clips on fender skirts and radiator core support. Relieve fender brace rod tension by backing off front hexagonal nut as necessary, disconnect brace rods by taking out capscrews attaching brace rods to dash at each side, remove rods. Take out capscrews, plate, and spacer attaching radiator core support to front frame cross-member. Remove screws on each side attaching rear of fender skirt to toeboard (accessible from inside cab by lifting floor mat). Remove bolts attaching rear of front fenders to cowl on each side (accessible from underneath). Raise front sheet metal assembly sufficiently to clear front bumper face bar and radiator grille filler panel, lift assembly out.

CYLINDER HEAD

CYLINDER HEAD INSTALLATION: Use Torque Indicating Wrench to tighten cylinder head capscrews, tighten in correct sequence as shown in diagram. Cast Iron heads should be tightened cold and rechecked after engine has been run sufficiently to bring all parts to normal operating temperature.
Tightening Torque—See Tightening (Torque Wrench) Specifications.

CHEVROLET

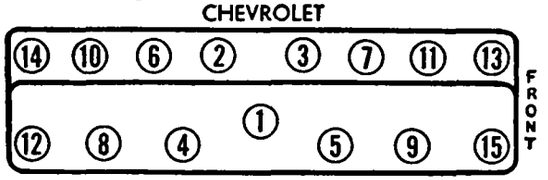

ENGINE REMOVAL

1949 PASSENGER CARS

ENGINE REMOVAL: Engine, clutch, and transmission can be removed as an assembly as follows: Drain radiator, block, oil pan, and transmission. Take off hood by disconnecting hood springs (use Tool J-3181) and removing two hinge support arm-to-hood bolts at each side (hold hood to prevent dropping down when bolts removed). Remove radiator (see Radiator Removal), battery with ground strap attached, and air cleaner. Disconnect wire harness at right junction block and pull harness through header bar. Remove header bar. Disconnect starter

and generator wires, coil lead, windshield wiper vacuum line, gas line at pump, choke and throttle cables at carburetor, line at temperature gauge and oil pressure gauge, exhaust pipe flange at manifold, accelerator pedal from rod, transmission control rods from levers on side of case (work through opening in floor), speedometer cable at transmission, and clutch link to pedal arm. Split universal joint by unbolting universal ball retainer, sliding collar and ball back, taking out bearing capscrews and removing trunnion bearings. Remove transmission-to-support bolts, engine side mounting-to-frame bracket bolts, and front engine mounting bolts. Take off rocker arm cover. Remove 4th cylinder head bolt from the rear on left side, 3rd from rear on right side and install engine lifting tool No. J-2967. Use a hoist and lift engine, clutch, and transmission assembly from car.

NOTE—When engine installed and torque tube connected, fill universal housing through speedometer connection (remove speedometer driven gear) with ½ pint SAE 90 transmission lubricant.

1949 TRUCKS

ENGINE REMOVAL (TRUCKS): Drain radiator, cylinder block, and oil pan. Remove hood assembly. Remove front end sheet metal assembly (including radiator and fenders) as a unit (see Front End Removal above). Disconnect cables at starter switch terminal (tape battery cable), disconnect coil lead and lay coil on top of dash, disconnect engine ground strap, generator leads at generator, and horn wires. Disconnect fuel line at fuel pump, choke and throttle control cables at carburetor, and remove air cleaner. Disconnect oil gauge line at engine, remove temperature gauge engine unit from cylinder head, disconnect vacuum lines (windshield wiper and Hydrovac) at manifold. Remove exhaust pipe-to-manifold bolts, remove starter pedal, disconnect accelerator pedal from rod. Remove transmission floor pan cover in cab, disconnect transmission control rods (models with steering column shift), or remove transmission cover and gearshift lever assembly and install temporary cardboard cover on case (models with floor-mounted gearshift). Remove hand brake lever, disconnect speedometer cable and clutch link to pedal arm. Drain transmission, disconnect prop. shaft. Take out bolts in rear engine mounting, remove front engine mounting. Remove third cylinder head bolt from rear on left side, install engine lifting eye bolt in this position, attach hoist. Remove engine, clutch, and transmission from the chassis as a unit. When reinstalling engine, see Engine Mounting Adjustment instructions (following).

ENGINE MOUNTINGS

1949 PASSENGER CARS

ENGINE MOUNTING REPLACEMENT: Front Mounting. Remove engine front mount bolts from engine mounting plate and frame cross-member. Raise front end of engine until front mounts can be moved out from between plate and frame. With front support mounting surfaces clean (no oil, etc.), bolt new supports to frame, lower engine, install mounting plate, bolt support to engine.

Side Mountings. Unbolt mounting from clutch housing and frame brackets and remove mounting. Install new mounting with serrated face toward frame bracket. Bolt mounting to clutch housing bracket first, then tighten mounting to frame bracket bolts (bolt hole in frame bracket slotted and serrated face of frame bracket and mounting permit proper positioning without use of shims).

Transmission Mounting. Remove mounting attaching bolts (tangs of lock plate must be bent back from bolt heads). Raise rear of engine until mounting can be moved out from between transmission and frame cross-member. Use new bolt lock plate and bolt new mounting to frame, lower engine, use new bolt lock plate and bolt mounting to transmission (transmission attaching bolt holes slotted permitting alignment between transmission and support).

1949 TRUCKS

ENGINE MOUNTINGS (Trucks): Consist of insulated type front and rear mountings as follows:

Front Mounting—Engine mounting bushings are imbedded in rubber insulator assembled between lower retainer and upper plate with a shield on top of the assembly. This mounting should be checked for clearance when installed and periodically in service.

Rear Mounting—Two insulated units. Bolted to bracket on clutch housing and bracket on frame. No adjustment required (keep mounting bolts tight).

Adjustment of Truck Engine Mountings: Check new front engine mounting, and remove and check mounting in service, as follows: With mounting removed from engine, fit insulator into lower retainer and place upper plate on top. Hold parts firmly together and make certain that rubber insulator fits tightly between retainer and plate and that engine mounting bushings project above upper plate (necessary to prevent oil shield contacting upper plate). Replace insulators which do not pass this test. Check clearance between upper edge of lower retainer and lower face of upper plate. If clearance more than 5/64", replace lower retainer. If clearance less than 3/64", grind off top edge of lower retainer. (CAUTION—do not attempt to shim the support). When installing mounting, tighten engine-to-mounting bolts tightly, mounting-to-frame bolts securely but not excessively tight (self-locking type nuts). Rear engine mountings do not require adjustment and mounting bolts should be kept tight.

PISTONS

1949 MODELS

REPLACEMENT PISTONS: Finished pistons with fitted pins and bushings furnished as follows:

Part Numbers			
216" Engine		235" Eng.	
Car	Truck	Truck	Size
605260	605276	605474	Standard
———	———	605489	.003" Oversize
609014	609015	———	.005" Oversize
605262	605278	605490	.010" Oversize
605263	605279	605491	.020" Oversize
605264	605280	605492	.030" Oversize
605265	605281	605493	.040" Oversize

CAUTION—Service Pistons carry markings stamped on head. S1, S2, etc. (size symbol), letter H, etc. (weight symbol). Marks on all pistons installed should be alike to give smooth engine performance.

CRANKSHAFT & MAIN BEARINGS

1949 MODELS

MAIN BEARING INSTALLATION (Without Removing Engine or Crankshaft from Chassis): Upper bearing halves can be replaced by following procedure (bearings doweled in place and cannot be "rotated" out):

Main Bearing Replacement (Pass. Cars): Remove radiator (see Radiator removal), remove fan belt and vibration dampener (see Vibration Dampener removal). Loosen all rocker arm screws to relieve tension on camshaft. Remove spark plugs. Raise car and support securely on stands so car is level and approximately 8" off floor. Remove transmission floor pan cover. Remove clutch housing underpan. Remove transmission rear support-to-crossmember bolts. Disconnect shift rods from transmission levers. Raise rear of engine, place 1" square bar behind flywheel and under clutch housing with ends resting on second cross-member brace (this will support engine weight). Release clutch fork from ball. Remove transmission mounting bolts, slide transmission back approximately ¾". Remove oil pan and timing gear cover. Remove oil pump and screen cover assembly. Rotate crankshaft to position allowing removal of all bearing caps. **Mark timing gears to insure re-meshing gears in same relative position.** Then install new bearings as follows:

Bearing Installation—Loosen but do not remove all main bearing cap bolts sufficiently to allow crankshaft to drop down approximately ⅜". Remove **front intermediate** and **rear** main bearing caps (other bearing caps will support crankshaft), remove old bearings from bearing cap and crankcase (if old bearings do not drop down with crankshaft, tap bearings lightly to free dowel). Install new bearings, locating dowel on back of bearing shell in hole in crankcase, and pressing bearing up in place (bearing should snap into place and hold if it has correct spread). Re-install bearing cap, using .006" shim thickness (three .002" shims) on each side of cap, tighten bearing caps just enough to support crankshaft. Repeat above procedure at **front** and **rear intermediate** bearings (NOTE—Rear intermediate bearing is close fit in crankcase and may not go up into place until crankshaft lifted up). After all bearings replaced, place a jack under rear intermediate bearing cap and carefully raise crankshaft into position. Keep crankshaft horizontal during this operation (CAUTION—Make certain that timing gears meshed in accordance with marks made before crankshaft dropped). Tighten all bearing caps snugly, then adjust main bearings as directed on car model page.

Main Bearing Replacement (Trucks): Remove radiator (see Radiator removal), remove fan belt and vibration dampener (see Vibration Dampener removal). Loosen all rocker arm screws to relieve tension on camshaft. Remove spark plugs. Take off transmission floor pan cover and clutch housing underpan and extension. Disconnect transmission control rods on side of transmission case (½ & ¾ Ton), remove hand brake lever from transmission mounting stud (Other Trucks). Remove transmission (see Transmission removal instructions for each model on car model page). Remove oil pan and timing gear cover. Romove oil pump and screen cover assembly. Rotate crankshaft to position allowing removal of

CONTINUED ON NEXT PAGE

CONTINUED FROM PRECEDIN PAGE

all bearing caps. Mark timing gears to insure re-meshing of gears in same relative position. Then install new bearings as directed for Pass. Cars

1949 MODELS

CRANKSHAFT OIL SEALS: Rear Seal. Special rear main bearing cap (mounted on four bolts with two locating dowels) with wick type oil seal installed in groove in cap and crankcase used. Seal bears on outer rim of crankshaft flange (oil slinger and check valve in oil return hole in bearing cap have been discontinued). To install new seal in bearing cap, insert packing in groove and roll firmly in place with rounded tool (roll from both ends toward center). Use round block of wood (same diameter as crankshaft flange) to hold packing in place, cut both ends off evenly and flush with bearing cap face. Install upper half of seal in crankcase in same manner with engine out of car.

Front (Timing Gear Cover) Oil Seal—Spring-loaded leather type installed in pocket in timing gear cover. To install new seal, place seal on special Oil Seal Replacer J-995 with free end of leather toward end of tool, seat seal in cover with few light hammer blows on tool. NOTE—Timing gear cover must be centered on crankshaft when installed on engine to prevent balancer damaging oil seal. To install cover, coat seal with grease, install centering guide J-966 on crankshaft, install cover and tighten cover screws.

VIBRATION DAMPENER

1949 MODELS

HARMONIC BALANCER: Furnished as a complete assembly. Part No. (216" Eng.) 605203 6 5/32" diam., (235" Engine) 605635 7¼" diameter.

Removal (Passenger Cars)—Remove radiator (see Radiator Removal), and Radiator Grille and Filler Panel Baffle as an assembly. Take off fan belt. Remove engine front mounting bolts, raise front end of engine approx. ½" (to permit balancer puller head to clear radiator support cross-member). Use puller J-1287, attach puller body to balancer by means of two capscrews screwed in tapped holes in balancer, pull balancer by turning puller screw.

Removal (Trucks)—Remove Front End Sheet Metal Assembly (see Front End Sheet Metal Assembly removal preceding). Then remove balancer with puller tool as described for Passenger Cars (above).

Installation—Place drive adapter of puller tool J-1287 in starting crank jaws of balancer, install puller body (as above), line up keyway in balancer and key in crankshaft, turn puller screw down to contact driver, then use puller screw as driver and drive balancer in place until it bottoms against crankshaft gear.

CAMSHAFT & BEARINGS

1949 MODELS

CAMSHAFT BEARINGS: Installation. Oil groove extends 70° around bearing from oil hole. To insure proper alignment with oil hole in block, mark front of bore opposite oil hole. Align oil hole in bearing with mark (with groove toward bottom of engine away from oil hole in block), press bearings in, stake in place, and line-ream (see below).

Reaming—Special reamer with four cutters on one bar recommended by car manufacturer (for proper alignment). Insert reamer through #1, #2, and #3 bearings. Start reamer cutters in all four bearings at the same time (wash metal cuttings away with liberal supply of kerosene while reaming), turn reamer slowly until cutters pass through bearings. Remove reamer by rotating in same direction as when reaming bearings and withdraw from engine. Bearing cuttings must be blown out with compressed air. Install camshaft and check bearing clearances with narrow feeler gauge. Clearance should be .002-.004". Install expansion plug to rear of rear bearing.

TIMING GEARS

1949 MODELS

TIMING GEAR ALIGNMENT: Gear alignment controlled by gaskets installed between Camshaft Thrust Plate and Crankcase Front End Plate (Front End Plate now installed with one gasket between plate and block and this gasket thickness not varied for alignment adjustment). Check gear alignment as follows:

Gear Alignment—With Front End Plate installed on block, place a new Camshaft Thrust Plate and two Thrust Plate Gaskets, No. 839100, in position over camshaft hole in end plate. Check alignment by placing straightedge on thrust plate and noting if gear shoulder on crankshaft is in alignment. If straightedge strikes shoulder, add additional gasket under thrust plate. When correct gasket thickness determined for correct alignment, note number of gaskets and install these gaskets under thrust plate when camshaft assembly installed.

1949 MODELS

TIMING GEAR INSTALLATION: Gears are press fit on crankshaft and camshaft and must be removed and installed as follows:

Crankshaft Gear—To remove gear, attach Puller T126-R by threading puller screws in tapped holes in gear, pull gear off. When installing gear, make certain that two woodruff keys installed in crankshaft keyways, drive gear on shaft until it seats against shoulder on shaft.

Camshaft Gear—To remove gear, install Gear Remover J-971 on shaft in back of gear (remover consists of support sleeve), place camshaft assembly in arbor press (CAUTION—Thrust plate must be positioned so that it will not be damaged by woodruff key in shaft as shaft pressed out), press shaft out of gear. To install gear, place shaft in arbor press (support shaft securely directly back of front bearing journal), install thrust plate, place woodruff key in shaft keyway, press gear on shaft until thrust plate just turns freely (clearance between back of thrust plate and front bearing journal must not exceed .003"). This clearance will give correct camshaft endplay of Free to .003" maximum. When installing camshaft in engine, make certain that correct gasket thickness installed in back of thrust plate (see Gear Alignment data above), tighten thrust plate capscrews through hole in camshaft gear. *CAUTION—Press on steel hub only when installing camshaft gear (pressure on composition or aluminum gears will cause damage).*

TAPPET CLEARANCE ADJUSTMENT

1949 MODELS

ENGINE NORMALIZING PROCEDURE (For Valve Tappet Clearance Adjustment): Clearance changes while engine is warming up. Adjust only after engine has been 'normalized' as follows: Run engine at 600 RPM and check oil temperature with thermometer at overflow pipe on valve rocker shaft connector until no change noted in oil temperature for period of five minutes (oil temperature will become stabilized at some point between 150-225° F.). This normalizing period will be from 5 to 30 minutes depending on engine temperature when started.

VALVE SYSTEM

1949 MODELS

VALVE STEM OIL SEAL INSTALLATION: Seal consists of a flat synthetic rubber ring installed in lower groove on valve stem (upper groove is for split type valve locks) and is retained by the valve cap (special longer type valve cap used—can be identified by 1/16" deep annular groove on top face). Install seals during valve assembly as follows: With valve in place in cylinder head, install lower spring seat, valve spring, valve cap. Compress spring and valve cap so that lower groove is exposed within cap, install seal ring in lower groove (CAUTION—seal must seat in groove and be flat), install split type locks, relieve spring tension and check to see that cap retains seal and locks properly.

NOTE—Valve cap covers or "umbrellas" not used with these new type oil seals.

1949 MODELS

VALVE GUIDE INSTALLATION: Use special valve guide drivers J-1089 (Intake), J-1090 (Exhaust) to install guides. Drivers have stop-collars which correctly position guides so that distance from cylinder head to top of guide is 1 1/16" (Intake), 61/64" (Exhaust). After guides installed, finish ream to inside diameter of .343".

Replacement Precision Valve Guide Note—Service guides furnished for replacement are precision type and require only finish reaming after installation for straightening of guide bore (formerly guides unfinished and required rough reaming also). Guides furnished under following Part Numbers:

Intake Guide No. 3688760. Exhaust Guide No. 3688761.

1949 MODELS

ROCKER ARMS: Diamond bored and "granodized" (no bushings) and fit directly on rocker arm shafts. Four different types of rocker arms are used (offset at an angle) as follows:

	Part Number	Forge Number
Intake—Left Hand	839463	839465
Intake—Right Hand	839464	839466
Exhaust—Left Hand	839459	839461
Exhaust—Right Hand	839460	839462

Identification—Number cast on side of arm thus: **Left Hand Exhaust (marked 1 or 9), Right Hand Exhaust (0 or 2), Left Hand Intake (3 or 5), Right Hand Intake (4 or 6). Number carried on side of** each arm (also indicates manufacturing plant).

Installation—Install rocker arms in the following order (numbered from front to rear) on each shaft.

Front Shaft	Rear Shaft
1—L.H. Exhaust (1 or 9)	7 —L. H. Intake (3 or 5)
2—R.H. Intake (4 or 6)	8 —R.H. Exhauset (0 or 2)
3—L.H. Intake (3 or 5)	9 —L. H. Exhaust (1 or 9)
4—R.H. Exhaust (0 or 2)	10—R.H. Intake (4 or 6)
5—L.H. Exhaust (1 or 9)	11—L.H. Intake (3 or 5)
6—R.H. Intake (4 or 6)	12—R.H. Exhaust (0 or 2)

Rocker arms installed on tubular shafts and held against side of shaft brackets by spring installed on shaft between adjacent rocker arms and locked in position by hairpin spring installed in groove in plugged end of each shaft. Rocker shafts must be

removed and installed as an assembly. Shafts should be assembled as follows: Open end of each shaft must be toward the center, stamped steel baffle in open end of rear shaft must be in vertical position, connect shafts by slipping brass oil connector over open end of each shaft.

OILING SYSTEM

1949 MODELS

OIL DISTRIBUTOR: Distributor is located in recess in left side of engine block (under cover plate).

CAUTION—Inner and outer gaskets used with valve assembly plate must not be interchanged.

Removal—To dismantle oil distributor, take out three screws in cover plate, remove cover plate, outer gasket, valve assembly plate, inner gasket.

CAUTION—Do not alter oil distributor valve spring tension (will upset proper oiling of engine). If trouble suspected in oil distributor, replace oil distributor valve assembly.

Assembly—Install cork gasket with two center holes between valve assembly plate and block, and use cork gasket with center cut out between valve assembly plate and cover, tighten cover screws.

1949 MODELS

OIL LEAD TO VALVE ROCKER ARMS: Installation. New assembly must be used whenever lead is removed from engine. To install proceed as follows: insert pipe in block, coat threads of nipple with white lead and screw in block (on right side), install nipple and sleeve nut on lower end of pipe (left side of block) and secure in place, then bend pipe in upward loop and connect to oil distributor, bend pipe on right side of engine to clear push rod cover and bend upper end so that it passes through hole in cylinder head, connect pipe to valve rocker shaft coupling. Run engine and check for leaks.

1949 MODELS

CHECKING OILING SYSTEM: Oil nozzle height, oil trough height, aiming of oil nozzles, and connecting rod dipper height should be checked whenever oil pan removed. This check requires use of special gauges. *CAUTION*—Same oil pan used on both 216" and 235" engines but require different checking gauges.

Oil Pan Trough Height—Use combination Oil Trough Depth & Connecting Rod Dipper Height Gauge No. J-969-2A (216" Eng.), J-1541 (235" Eng.). With oil pan gasket removed, place gauge on pan flanges with center pin extending down toward troughs. Slide gauge along pan so that pin passes over edges of trough at center. Pin should clear edge of trough and clearance at this point should not exceed .015". If pin strikes trough, grind edge of trough down for clearance, if clearance greater than .015", reweld any loose trough welds or replace oil pan. Check each trough in this manner.

Connecting Rod Dipper Height—Use same gauge as for Oil Pan Trough Height check (above). Turn crankshaft until connecting rod is at bottom of stroke, place gauge over connecting rod with the two gauge side pins resting on the oil pan mounting face of the crankcase, slide gauge over dipper. Low "Go" step of gauge should pass over dipper and high "No Go" step should not. If low step does not pass over dipper, tap dipper down with light hammer, if high step of gauge clears dipper, install new higher dipper. Check all dippers in this manner.

Oil Nozzle Height and Nozzle Aim—To check, with Oil Pan Target Gauge J-696-1 (for regular and Heavy Duty Engines). Install gauge and position it with dowels engaging screw holes in oil pan. Install Water Nozzle J-793-3 in main oil line. Tilt oil pan 45° so that nozzles are not covered by water in troughs. Use enough water to just straighten water streams from nozzles. Nozzle streams must hit holes in gauge. Use Oil Nozzle Wrench J-793-5 to adjust nozzles so that each water stream passes through center of its target hole. Recheck oil nozzle height

RADIATOR

1949 MODELS

RADIATOR CORE REMOVAL: Raise engine hood and block in open position. Drain cooling system by removing drain plug. Disconnect and remove inlet and outlet hoses. Remove radiator mounting bolts from radiator support, lift radiator up and out.

NOTE—On models with radiator shroud, push shroud back and down over fan blades for clearance.

PROPELLER SHAFT

1949 TRUCK MODELS

PROPELLER SHAFT SUPPORT BEARING: 1 Ton, 1½ Ton, 2 Ton Trucks (except Cab-over-Engine Short WB. Model): Support bearing is new single row permanently lubricated ball bearing in new type mounting with "grease traps" packed with water proof grease to prevent entrance of dirt and water. Propeller shaft design unchanged.

Removal & Installation: Propeller shafts are removed and installed in same manner as on previous models. Support bearing should be serviced as follows:

Removal—Split intermediate universal joint by removing two trunnion bearing "U" bolts (tape or wire bearings in place). Remove bolts attaching bearing support bracket to frame cross-member. Remove universal flange retaining nut, remove flange, pull support assembly off rear end of front propeller shaft. Place support assembly in arbor press using a piece of tubing to apply pressure on rubber cushion (tubing should clear slinger and be snug fit in bracket), press bearing and cushion assembly out of bracket. Remove cushion and grease retainers from bearing.

Servicing—Clean rubber cushion with pure denatured alcohol, replace cushion if cracked, hardened, or distorted. Check bearing by rotating inner race slowly by hand. CAUTION—Do not attempt to remove oil seal retainers from bearing and do not clean bearing with gasoline or solvent which will wash lubricant out (requiring new bearing).

Assembly & Installation—See that grease deflectors on propeller shaft and universal joint yoke are tight (staked on shaft by prick punching at two points). Assemble grease slinger on outer bearing race (one at each side), force bearing and slinger assembly into rubber cushion. Coat outer surface of rubber cushion with brake fluid, place support bracket on arbor press with flanged side up, position bearing and cushion squarely in flanged end of bracket bore, use piece of tubing to press on rubber cushion only and press assembly in bracket until face of grease retainer is flush with flanged end of bracket (CAUTION—this position important to provide clearance between grease retainers and grease deflectors, if assembly pressed too far in bracket, turn bracket over and press assembly out to correct position). Pack grease retainers on both sides of bearing with waterproof grease (grease used to keep out dirt and water—does not lubricate bearing). Install support bearing and bracket assembly on end of front propeller shaft making certain that grease slingers lined up with bearing hole and that flanged end of bracket is forward. Install intermediate universal joint yoke on end of shaft, tighten yoke retaining nut to 160-280 ft. lbs. Then check clearance between rear edge of propeller shaft dust shield and front face of bearing support bracket. This clearance should be ½" plus or minus 1/32" Install bolts, lockwashers, and nuts attaching bearing support to frame cross-member, tighten nuts.

REAR AXLE NOTES

1949 PASS. CARS & ½ TON TRUCKS

AXLE SHAFT: Shafts are heavier construction on ½ Ton Trucks than Passenger Car.

Installation—Assemble new oil deflector, gasket (coat both sides with heavy shellac or paint), line up extra hole (center hole of closely grouped three holes) with notch in hub flange on axle shaft (oil pocket in oil deflector should also be aligned with this notch), install five (Pass. Cars) or six (½ Ton Trucks) special bolts, forcing heads down to deflector, and peen shoulder on bolts into countersink around bolt holes in flange using Special Peening Tool and Anvil so that these parts are riveted together. Check endplay (below).

Axle Shaft Note—Shafts unequal in length (right shaft longer). Part numbers are as follows:

1949 Passenger Cars

	Part No.	Length	Marking
Left Axle Shaft	3687767	28 31/32"	———
Right Axle Shaft	3687768	29 31/32"	———

1949 ½ Ton Trucks

Left Axle Shaft	3683161	29½"	"GM-161"
Right Axle Shaft	3683162	30½"	"GM-162"

Endplay Adjustment—When installing shaft, select correct spacer block (see below) so that with spacer installed on pinion shaft between inner ends of axle shafts, shaft endplay will be from a Free Fit to .014" maximum clearance.

Passenger Car Spacer Blocks

Part No.	Type & Size
597251	Narrow (1.011-1.013")
597254	Medium (1.018-1.021" & 1.028-1.031")
473603	Wide (1.033-1.035")

Half-Ton Spacer Blocks

370217	Narrow (1.1485")
372515	Wide (1.1575" & 1.1675")

These dimensions are taken across ground surfaces. NOTE—Install spacers with ground surface toward axle shaft end.

CAB-OVER-ENGINE NOTES

1949 CAB-OVER-ENGINE MODELS

GEARSHIFT LEVER REMOVAL: Disconnect gearshift lever at top of engine cover, loosen wire on cloth boot, raise boot above transmission cover tower. Remove nut from stub gearshift lever and raise reverse latch Bowden cable support onto top of lever. Use gearshift lever removing tool K-353 to remove lever assembly from transmission cover.

Installation—When installing lever, see that end of reverse latch shift rod seats in upper part of "U" shaped bracket at end of reverse latch Bowden cable and that retaining nuts are tight so that rod anchored in bracket.

FRONT END SHEET METAL ASSEMBLY REMOVAL: *See Chevrolet Special Data.*

MODEL IDENTIFICATION

Series	Serial Prefix	Model Designation
1500	GJ	Special Styleline & Fleetline
2000	GK	Deluxe Styleline & Fleetline
1508	GJ	Sedan Delivery

SERIAL NUMBER: Stamped on plate on left front body hinge pillar post.
1949 Serial Numbers—First number 1001 with model prefix as indicated in model identification above.

ENGINE NUMBER: Stamped on right side of crankcase to rear of distributor.
Engine Number Prefix—Indicates manufacturing plant as follows: **GAA**—Flint, **GAM**—Tonawanda.
1949 Engine Numbers—First number 1001 with engine plant prefix as indicated above.

TUNE-UP

COMPRESSION PRESSURE: 110 lbs. minimum (with cylinders equal within 5-10 lbs.) at cranking speed.

VACUUM READING: Steady 17-21" at idling speed.

FIRING ORDER: 1-5-3-6-2-4. See diagram.

SPARK PLUG GAPS: .035".
Plugs—AC No. 46-5. 14 mm.

►*CAUTION—Tighten plugs to 20-25 ft. lbs. torque or finger tight plus one-half turn.*

DISTRIBUTOR: Breaker Gap—.018" (limits .018-.022") standard setting, or .022-.024" for new points (to allow for seating).
Cam Angle—Closed 31° to 37° with .022" gap.
Breaker Arm Spring Tension—17-21 ozs.
Automatic & Vacuum Advance—*See Ignition.*
Condenser Capacity—.18-.23 microfarad.

IGNITION TIMING: 5° BTDC.
Timing Procedure—*See Ignition Timing.*
Timing Mark—Steel ball insert in flywheel lined up with pointer in inspection hole in right front face of housing with Octane Selector set at "O". Then adjust Octane Selector as follows:
Octane Selector Setting—Set for slight ping when accelerating engine with wide open throttle.

CARBURETION:
Idle Setting—(Carter) 1-2 turns, (Rochester) 1½ turns open. One screw—turning screw out gives richer mixture.
Idle Speed—450-500 RPM. with warm engine.
Float Level (Carter)—½" top of float to gasket seat (machined surface) on cover with valve seated (invert to check).
Float Level (Rochester GM)—1 5/16" from bottom of each float to gasket seat (machined surface) on cover with cover inverted (float pin and floats must be removed to take off gasket). Check float stop by turning cover right side up—distance from gasket seat to bottom of each float should be 1 3/4-1 27/32" with floats down (needle valve open). Stop adjustment made by bending tang on upper side of lever at pivot.

►*CAUTION—When making float level adjustment on Rochester GM carburetor do not twist float arms—if arms twisted floats may contact sides of bowl.*
Accelerating Pump—No seasonal adjustment.

Fuel Pump Pressure: 4 lbs. maximum.

MANIFOLD HEAT CONTROL: Thermostatic type. Check for free operation when tuning engine. Should require ½ turn from unhooked to hooked position. *Distorted springs should be replaced.*

►**VALVE TAPPET CLEARANCE:** *CAUTION—Engine temperature must be "normalized" before adjusting. See "Tappet Clearance Adjustment" in Chevrolet Special Data.*
Setting (with Engine "Normalized")—.006-.008" Intake, .013-.015" Exhaust.

Valve Timing Check—*See Valve Timing.*

STARTING: *See Battery, Starter, Generator, Regulator.*

IGNITION

IGNITION SWITCH: Delco-Remy No. 1116452.
Ignition Lock—Chevrolet No. 3692503 less keys uncoded.
Key Series—No. 8000 to 9499. **Groove**—No. 15.

COIL: Delco-Remy No. 1115380. Above distributor.
Ignition Current—2.5 amperes idling, 4.5 stopped.

CONDENSER: Delco-Remy Part No. 1869704.
Capacity—.18-.23 microfarad.

DISTRIBUTOR: Delco-Remy 1112353. Automatic and vacuum advance with Octane Selector.
Breaker Gap—.018" standard setting, or .022-.024" for new points (to allow for seating).
Cam Angle—31° to 37° with .022" gap.
Breaker Arm Spring Tension—17-21 ozs.

Rotation—Clockwise viewed from above.

Distr. Degrees	Automatic Advance R.P.M.	Eng. Degrees	R.P.M.
Start	350	3	700
6.5	600	13	1200
12.0	1200	24	2400
19.0	1700	38	3400

Octane Selector—Adjustment on distributor provides 10° advance or retard from center "0" position. See Ignition Timing for adjustment instructions.

Vacuum Spark Control: Delco-Remy No. 1116043. On Octane Selector, linked to advance arm. Provides additional advance at speeds above idling except when engine accelerated or operated with wide open throttle when spark retarded by return spring.
Plunger Travel—17/64".

Distr. Degrees	Vacuum Advance Eng. Degrees	Vacuum (" of HG)
Start	0°	7-8.5"
10°	20°	16.5-18.5"

Removal: Distributor mounted on right side of crankcase. To remove, loosen advance arm clamp bolt (does not disturb vacuum connections).

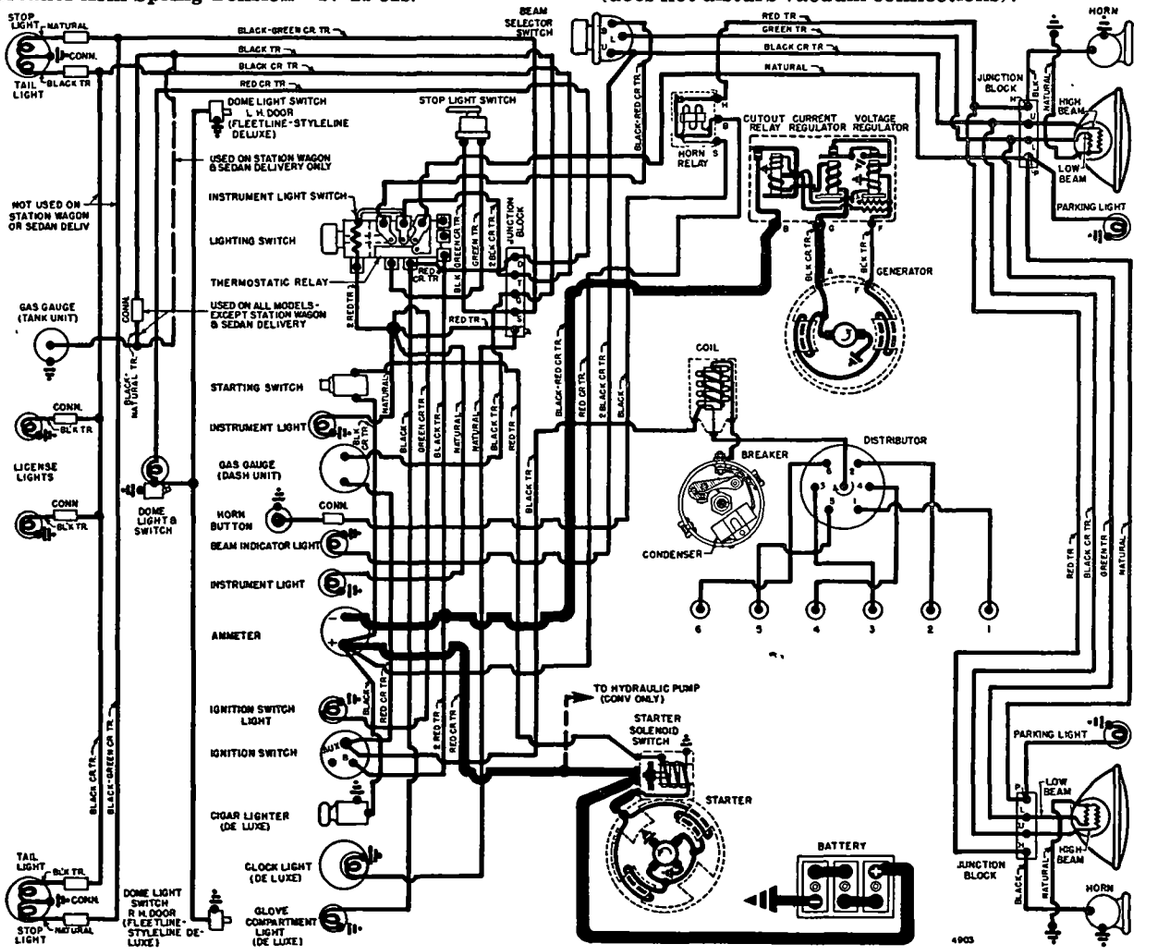

IGNITION TIMING

	Flywheel Degrees	Piston Position
Std. Setting①	5° BTDC	.0091" BTDC.

①—Adjust Octane Selector for grade of fuel being used. See Octane Selector Setting below.

Timing (Neon Light)—Recommended method. Connect neon light to #1 spark plug, direct light in flywheel through inspection hole in right front face of housing. Set Octane Selector pointer at "0". Idle engine, loosen advance arm clamp bolt, rotate distributor until ignition mark (steel ball insert in flywheel) lines up with pointer. Tighten clamp bolt and check Octane Selector Setting (see below).

Timing (without Neon Light)—With #1 piston on compression, turn engine over until piston is 5° or .0091" before top dead center with ignition mark (steel ball insert in flywheel) at pointer in inspection hole in right front face of housing. Adjust distributor as directed above.

Octane Selector Setting—Set for the grade of fuel being used to produce slight "ping" on acceleration.

CARBURETOR

CARTER (CHEVROLET) W1

Carter (Chevrolet) W1, No. 684S. 1¼" single barrel, downdraft type with manual choke control and new fast idle and accelerating pump design.

Casting No. on Flange—603.

See Carburetor Section for complete data.

Settings (Idle Setting, Float Level, and Accelerating Pump): ***See Tune-Up.***

Metering Rods & Jets—***See Carter Jet Table in Carburetor Section for complete data.***

Fast Idle: Linkage connected to choke and operates when choke closed to open throttle. No adjustment.

CARBURETOR

ROCHESTER

Rochester G.M. Model "B". Single barrel, downdraft type with concentric bowl and twin floats. Choke is manual type with throttle kicker and fast idle.

See Carburetor Section for complete data.

Settings (Idle Setting, Float Level, and Accelerating Pump): ***See Tune-Up.***

Throttle Kicker: Operates by cam on choke lever—opens throttle when choke closed—no adjustment.

CARB. EQUIPMENT

Air Cleaner: AC No. 1544448 oil-wetted type (std.). 1544498 (or 1529264 with governor) oil bath types.

Filter Element—AC #6 (std.), #22 (heavy duty), #2 (heavy duty with governor).

Servicing—Clean and re-oil std. cleaner (use SAE 50 oil) every 2000 miles. On heavy duty, clean and refill oil reservoir with SAE 50 oil (1 pint) every 2000 miles.

Fuel Pump: AC Type AF, No. 1523089. Diaphragm type.

Replacement Pump—AC No. 429.

Pressure—4 lbs. maximum.

See Carburetion Equipment Section for complete data.

Gasoline Gauge: AC Electric type.

Dash Unit—AC No. 1516931.

Tank Unit—AC 1516280 (1517100 Sta. Wn., Sed. Del.).

See Carburetion Equipment Section for complete data.

BATTERY

Delco Type 15AA-4. 6 Volt, 15 Plate, 100 Ampere Hour Capacity (20 hour rate).

Starting Capacity—120 amperes for 20 minutes.

Grounded Terminal—Negative (—) terminal.

Dimensions—Length 9". Width 7". Height 8 11/16".

Location—In engine compartment on right side.

STARTER

Delco-Remy Model 1107075. Armature No. 1867897.

►***CAUTION—Starter operates whenever pushbutton depressed.***

Drive—Overrunning clutch (solenoid pinion shift).

Rotation—Counter-clockwise at commutator end.

Brush Spring Tension—24-28 ozs. each.

Performance Data

Torque	R.P.M.	Volts	Amperes
0 ft. lbs.	5000	5.7	80①
12 "	Lock	3.4	525

①—Includes current draw of starter switch.

Removal: Flange mounted on right front face of flywheel housing. To remove, take out mounting screws.

Starting Switch: Delco-Remy Solenoid Switch No. 1118135 (no relay used) mounted on starter and controlled by Pushbutton Switch No. 1996037.

►***CAUTION***—Overrunning clutch pinion clearance must be adjusted whenever solenoid removed from starter. ***See Electrical Equipment Section for data.***

GENERATOR

	Generator—D-R Nos.	Armature
Passenger Cars	1102710	1879002
Taxi	1102729	———
Taxi & City Police	1106752 & 758	———
State Police	1106751 & 757	———

2 brush types with current and voltage regulation.

Charging Rate Adjustment—None. See Regulator.

Maximum Charging Rate (Pass. Cars)—32-40 amperes reached at car speed of 25 MPH. Actual charging rate controlled by regulator and dependent on battery condition.

Performance Data—Cold

	Amperes①	Volts	R.P.M.
1102710	30	8.0	1750
1102729	40	8.0	1900
1106751 & 757	50	7.5	1410
1106752 & 758	40	7.5	1165

①—Not maximum output. See Current Regulator.

Rotation—Counter-clockwise at commutator end.

Brush Spring Tension—25 ozs. (1102710 and 729, 1106751 and 757), 20 ozs. (1106752 and 758).

Field Current—1.75-1.9 amps. at 6 volts (1102710), 1.9-2.05 amps. at 6 volts (1102729), 1.70-1.95 amperes at 6.0 volts (1106751, 52, 57, 58).

Removal: Generator pivot mounted at left front of engine. To remove, take out pivot and clamp bolts.

Belt Adjustment: Loosen clamp bolt, swing generator out for ¾" belt deflection (light pressure) midway between generator and fan pulleys.

REGULATOR

D-R Regulator

Passenger Cars	1118301 (for 1102710 Gen.)
Taxi	1118300 (for 1102729 Gen.)
Taxi & City Police	1118343 (for 1106752, 8 Gen.)
State Police	1118334 (for 1106751, 7 Gen.)

►***NEW "1118300 SERIES"*** regulators have screw adjustment for settings and single regulator springs.

See Electrical Equipment Section for complete data.

CAUTION—Check generator for grounded field coils and leads before changing regulator settings to correct High Charging Rate or High Voltage.

Cutout Relay

Cuts In—5.9-6.8 volts hot (set to 6.4 volts hot).

Contact Gap—.020" (same for both sets).

Air Gap—.020" (with contacts just closed).

Voltage Regulator

Setting—7.0-7.7 volts hot (set to 7.4 volts hot). Regulator is over-compensated for temperature. Check with cover in place and regulator hot.

Air Gap—.075" with armature pressed down to point where contacts are just touching.

Checking & Adjust'mt—***See Electrical Equip. Section.***

Current Regulator Settings (hot):	Set to	Range
1118301	36 amps.	32-40 amps.
1118300	42 amps.	40-46 amps.
1118334	50 amps.	48-52 amps.
1118343	40 amps.	37-41 amps.

Air Gap—.075" with armature pressed down to point where contacts are just touching.

Checking & Adjust'mt—***See Electrical Equip. Section.***

LIGHTING

Headlamps: Guide "Sealed Beam" type.

See Electrical Equipment Section for complete data.

Headlamp Adjustment—Aim upper beam straight ahead (hot spot 3" below lamp center height).

Beam Indicator—Red dot below 50 figure on speedometer. Lighted when upper beams in use.

Direction Signal: Optl. ***See Electrical Equipment Section.***

Direction Signal Indicator—Pilot light on switch case. Lighted when Right or Left Dir. Signal "on".

Switches

Lighting—Delco-Remy No. 1995031.

Instrument—Part of Lighting Switch (Rheostat operated by turning light switch knob).

Beam Selector—Delco-Remy No. 1997008.

Glove Box—Delco-Remy No. 1997840.

Stop Light—D-R No. 1997901 (mechanical type).

MISC. ELECTRICAL

►**DASH PANEL INSPECTION HOLE FOR ACCESS TO WIRING ON BACK SIDE OF INSTRUMENTS:** Located on left side under hood with removable door screwed to dash.

THERMOSTATIC CIRCUIT BREAKER: Delco-Remy. On back of light switch (part of switch assy.). Contacts remain closed with 30 amperes but open in 3 minutes with 42 amperes at 70°F. Not adjustable.

HORNS: Delco-Remy No. 1999627 or 643 (Low Note, Right), No. 1999628 or 644 (High Note, Left). Vibrator types operated by relay.

NOTE—1999643 and 644 are welded.

Type	Current (at 6.0 volts)	Air Gap
1999627 (Low Note)	19-21 amperes	.044-.049"
1999628 (High Note)	17-19 amperes	.034-.039"

Horn Relay: Delco-Remy No. 1116775.

Contact Gap—.027". **Air Gap**—.014" (closed).

Contacts Close—2.75-4.0 volts (set to 3.5 volts).

ENGINE

ENGINE SPECIFICATIONS: Own 216". Six Cylinder, Valve-in-Head type.

Bore—3½" (3.4995-3.5015"). **Stroke**—3¾".

Displacement—216.5 cubic inches. **Rated HP**—29.4.

Developed Horsepower—90 at 3300 RPM.

Compression Ratio—6.6-1 Std. Cast Iron Head.

Compression & Vacuum Reading—***See Tune-Up.***

ENGINE REMOVAL: ***See Chevrolet Special Data.***

ENGINE MOUNTINGS (Installation & Adjustment): ***See Chevrolet Special Data.***

TIGHTENING TORQUES: ***See Chevrolet Special Data.***

C NTINUED ON NEXT PAGE

ENGINE

CONTINUED FROM PRECEDING PAGE

CYLINDER HEAD INSTALLATION: *See Chevrolet Special Data.*

PISTONS: Passenger Cars. Cast alloy iron, flat head, cam ground, tin plated type with slipper skirt.

Truck Pistons. Same as Pass. Cars except heavier. Truck pistons marked with small boss on underside of each pin boss. *CAUTION*—Do not interchange pistons (must be same type in one engine).

Weight—1.56 lbs. (Pass. Cars). **Length**—3.75" (min.).

Removal—Pistons and rods removed from above.

Clearance—Top: .0155-.0235". Skirt: Selective Fit. See Fitting New Pistons below.

Replacement Pistons: *See Chevrolet Special Data.*

NOTE—To install new pistons, hone cylinder for .005" oversize, rebore and hone for other sizes (rebore .002" less than piston oversize, finish by honing for piston clearance—see fit below). Cylinder bore taper and out-of-round must not exceed .001".

Fitting New Pistons: Use feeler gauge between piston and cylinder wall at right angles to pin bosses. Piston should pass through bore with light pressure on .002" feeler, and lock on .003" feeler.

PISTON RINGS: Two taper face compression rings (with greatest diameter at bottom), one slotted oil ring per piston, all above pin. Oil ring groove drilled for oil drainage.

Ring	Width	End Gap①	Side Clearance
Compr.	.1235-.1240"	.005-.015"	.0015-.003"②
Oil Cont.	.1860-.1865"	.005-.015"	.002-.0035"②

①—End Gap Worn Limit—1/32" max.

②—Side Clearance Checking—smaller feeler should be free, larger feeler should give a heavy drag.

Installing Compr. Rings—Side marked "TOP" up.

Replacement Rings: Furnished Standard size and .005", .020", .030", .040" Oversize.

Expander Type Rings—Furnished for use in cylinder bores of indicated oversizes as follows: Standard (Bore Std. to .009" Oversize), .020" Oversize (Bore .010" to .029" Oversize—(ring gaps must be filed for bores less than .020" Oversize), .030" Oversize (Bore .030" to .039" OS.), .040" OS. (Bore .040" to .049" OS.).

PISTON PIN: Diameter—.8645-.8650". **Length** 3.135-3.165". Pin locked in rod (piston bronze bushed).

Pin Fit in Piston—Thumb push fit (at room temp.).

Replacement Pins: Std. & .003", .005", .010" oversize. NOTE—New pistons fitted with bushings and pins. If bushings reamed, use piston pin bushing fixture to insure reaming at right angles to piston skirt.

CONNECTING ROD: Length—6 13/16". **Wgt.** 30.7 ozs.

Crankpin Journal Diameter—2.311-2.312".

Lower Bearing—Spun high-lead, thin-wall babbitt.

Clearance—.0003-.0013" selective fit (see Bearing Adjustment following).

Sideplay—.004-.012" at lower end (rod to crankpin), .015" minimum at upper end (rod to piston pin boss).

Bearing Adjustment: Solid shims. Remove shims equally at both sides to secure 'snap fit' (rod tight to hand but should snap from one side to the other with light tap of 8 oz. hammer), **then replace one .002" shim on one side for clearance** (if unequal number, place extra shim on camshaft side). Bearing clearance correct when rod can be snapped back and forth on crankpin with one hand (grasp bearing cap between thumb and index finger to test).

Palnut Note—Palnuts used to lock rod bolt nuts. Use new palnut (install with open side toward end of bolt), turn palnut up finger tight against rod bolt nut, then tighten palnut ½ turn additional.

Installing Rods: Numbers on rods and caps must be together and installed in same numbered cylinder with numbers and pin clamp bolt toward camshaft side. Install oil dippers on rods with mouth toward camshaft side of engine. Check dipper height.

Dipper Height Adjustment—*See "Oiling System" in Chevrolet Special Data.*

CRANKSHAFT: Four-bearing type with integral counterweights and vibration dampener.

Vibration Dampener—*See Chevrolet Special Data.*

Journal Diameters—#1, 2.6835-2.6845"; #2, 2.7145-2.7155"; #3, 2.7455-2.7465"; #4, 2.7765-2.7775".

NOTE—Journal taper or out-of-round limits .001". Run-out limits for #2 and #3 journals .002".

Bearing Type—Steel-backed "Precision" type thin-wall babbitt. *Do not require line-boring or reaming.*

►*CAUTION—#1 (front) and #2 (front intermediate) bearings similar in appearance but must not be interchanged. #2 bearing marked by letter "I" in oil groove.*

Clearance—.0007-.0024" selective fit. See Bearing Adjustment (below).

►*NOTE—Precision type bearings can be replaced singly.*

Bearing Adjustment: Solid shims. Remove shims until slight drag secured when shaft turned by hand, **then replace one .002" shim on one side for clearance** (if unequal number of shims used, place extra shim on same side for all bearings).

Replacement Bearings: New "Precision" type bearings furnished for all engines Std. size and .002", .010", .020", .030" Undersize.

►**Bearing Installation**—*Not necessary to remove crankshaft or engine from car. See "Crankshaft & Main Bearings" in Chevrolet Special Data.*

Bearing Cap Installation—Intermediate (#2 & 3) bearing caps marked for identification. Install #2 cap with mark "FRONT" toward front of engine, #3 cap with mark "REAR" toward rear of engine.

►*CAUTION—Rear intermediate (#3) bearing is special flanged type (takes end thrust).*

Crankshaft Oil Seal Servicing: *See Chevrolet Special Data for Front (Timing Gear Cover) and Rear Oil Seals.*

End Thrust: Taken by #3 (rear intermediate) bearing. To check endplay, force crankshaft to rear, check clearance at rear of #3 bearing. Adjust by replacing bearing. **Endplay**—.003-.009".

CAMSHAFT: Four bearing type. Helical gear drive.

Journal Diameters—#1, 2.0282-2.0292"; #2, 1.9657-1.9667"; #3, 1.9032-1.9042"; #4, 1.8407-1.8417".

NOTE—Journal out-of-round limits .001". Run-out limits .002" (straighten if run-out excessive).

Bearing Type—Steel-backed, babbitt-lined bushings (staked in place). NOTE—New bearings must be line-reamed. **Clearance**—.002-.004".

Bearing Installation—*See Chevrolet Special Data.*

End Thrust: Taken by thrust plate behind camshaft gear (gear position on shaft controls endplay).

Endplay Adjustment—*See Chevrolet Special Data.*

Endplay—Free fit to .003" maximum.

Timing Gears: Crankshaft gear steel. Camshaft gear Bakelite and Fabric composition.

Max. Gear Runout—.003" crankshaft, .004" camshaft.

►**235" Truck Engine Timing Gear Set**—Aluminum camshaft gear with bonded steel hub used with crankshaft gear having crowned teeth.

Replacement Timing Gears, and Gear Installation & Alignment—*See Chevrolet Special Data.*

Timing Gear Backlash—.003-.004".

Camshaft Setting: Gears punch marked. Punch marks on both gears must be lined up and directly opposite each other.

VALVES:	Head Diam.	Stem Diam.	Length
Intake	1 41/64"	.3410-.3417"	6.260-6.290"
Exhaust	1 15/32"	.3400-.3407"	4.839-4.869"

	Seat Angle	Lift	Stem Clearance
Intake	30°	.2941"	.001-.003"
Exhaust	30°	.3118"	.002-.004"

NOTE—Intake valves have flat head.

Valve Installation (with rubber Valve Stem Oil Seals): Special synthetic rubber oil seal ring installed in groove in valve stem directly below seat locks (retained by valve cap).

NOTE—Longer valve spring cap is used (interchangeable for intake & exhaust valves—may be identified by 1/16" annular groove on top surface). No cap covers used with this type assembly.

Valve Stem Oil Seal Installation—*See "Valve System" in Chevrolet Special Data.*

Valve Guides: New precision type. Pressed in head.

Valve Guide Installation—*See "Valve System" in Chevrolet Special Data.*

Valve Springs: Install springs with closed-coil end toward cylinder head. Check springs with KMO-607 Tester, replace if outside limits of 124-140 lbs. at 1½". Spring free length 2⅛".

	Spring Pressure	Length
Valve Closed	53-63 lbs.	1.821"
Valve Open	124-140 lbs.	1.505"

Valve Lifters: Barrel type with pushrod seat brazed on upper end. Lifter diameter .989-.990".

Clearance—.001" (selective free fit).

Rocker Arm Assembly: Armasteel type (no bushings). Four types of rocker arms used as follows:

Intake—No. 839463 (Left), 839464 (Right).

Exhaust—No. 839459 (Left), 839460 (Right).

Rocker Shaft Diameter—.7910-.7917" (bore diameter in rocker arm .7925-.7935").

Rocker Arm Assembly & Installation—*See "Valve System" in Chevrolet Special Data.*

VALVE TIMING

►**VALVE TAPPET CLEARANCE:** *CAUTION—Engine temperature must be "normalized" before adjusting. See "Tappet Clearance Adjustment" in Chevrolet Special Data.*

Setting (with Engine "Normalized")—.006-.008" Intake, .013-.015" Exhaust.

Valve Timing: See Camshaft Setting above.

Intake Valves—Open 1° ATDC. Close 39° ALDC.

Exhaust Valves—Open 42° BLDC. Close 9° ATDC.

Valve Timing Check—Remove all tappet clearance from #1 exhaust valve, turn engine over until this valve just starts to close and until triangular flywheel mark lines up with pointer in right front face of flywheel housing, mount dial indicator on rocker shaft support with stem contacting #1 exhaust valve adjusting screw, set indicator dial at .044". Turn crankshaft until indicator hand just stops moving. Timing is correct if indicator reading is ZERO plus or minus .004". Reset tappet clearance at correct running figure (above).

LUBRICATION

Engine Oiling System: Pressure and positive splash system. Pressure to main bearings, camshaft bearings, timing gears, and to overhead valve system (low pressure). Connecting rod bearings lubricated by oil dippers which scoop oil from troughs (low

speed) and directly from nozzles (high speed). Oil is divided between high and low pressure systems by Oil Distributor Valve on left side of engine.

CAUTION—Engine lubrication dependent upon adjustment of connecting rod dippers, oil troughs, and nozzles which must be **checked each time the oil pan is removed** (requires special gauges).

Checking Oiling System—*See "Oiling System" in Chevrolet Special Data.*

Crankcase Capacity—5½ qts. (dry), 5 qts. (refill)

Normal Oil Pressure—14 lbs. at 2000 RPM.

Oil Pressure Regulator—Located in oil pump cover Opens at 60 lbs. Non-adjustable type. Pressure normally controlled by Oil Distributor Valve on left side of engine which opens at 15 lbs.

Rocker Arm Oil Lead & Overflow Pipe Servicing: *See "Oiling System" in Chevrolet Special Data.*

Oil Pump: Located in crankcase. Driven independently through short shaft by gear on camshaft.

Oil Pump Installation—Assemble ground side of idler gear toward cover (use Chevrolet cover gasket only—controls pump clearance). Oil pump assembly mounted in crankcase by tapered setscrew. See that screw seated firmly in tapered hole in pump housing before tightening locknut.

Oil Distributor: *See "Oiling System" in Chevrolet Special Data.*

Checking Oiling System: Check entire system (Dipper Height, Oil Pan Trough Height, Oil Nozzle Height & Aim) each time oil pan removed.
See "Oiling System" in Chevrolet Special Data.

Crankcase Ventilation: Air intake through valve rocker cover (air cleaner on some models), outlet through pipe on right side of engine.

Servicing—On all models with air cleaner mounted on valve rocker cover, wash filter element with solvent and re-oil at 2000 mile intervals or more often if required by operating conditions.

COOLING

Cooling System: Positive circulation with water pump on front of engine.

Capacity—16 quarts.

Radiator Core Removal: *See Chevrolet Special Data.*

Water Pump: Double-outlet, packless type with sealed ball bearing shaft.
See Water Pump Section for complete data.
Belt Adjustment—*See Generator Belt Adjustment.*

Thermostat: Harrison. In cylinder head outlet.
Std.—No. 3121301 stamped "143". Starts to open at 140-147°F. Fully open at 170°F.

Temperature Gauge: AC No. 1511842. Not electric.

CLUTCH

Own Make—Diaphragm spring, single plate, dry disc type. NOTE—9" clutch used on all cars.
See Clutch Section for complete data.

Facings—Moulded Asbestos, 2 required as follows: 6⅛" I. D., 9⅛" O. D. .132-.138" thick.

Adjustment: Pedal free travel ¾-1". To adjust, loosen checknut and turn adjusting nut on connecting link at clutch throwout fork. NOTE—Use finger pressure only when checking pedal free travel.

Removal: Remove transmission (see Transmission Removal below). Remove throw-out bearing, remove fork by prying fork off ball, remove fork mounting (use ¾" wrench). Install Clutch Pilot Tool K-411 (to support clutch), loosen all six cover bolts evenly, remove assembly from below. CAUTION—Do not allow pressure plate to hang on retracting springs (support by hand). When installing clutch align 'X' mark on cover with 'X' mark on flywheel.

TRANSMISSION

Own Make. Three-speed, all helical gear type, Constant-mesh, synchro-mesh (Second & High), sliding gear (Low & Reverse). Similar to 1948 3-Spd. Truck.
See Transmission Section for complete data.

Transmission Control: New mechanical type with shift lever mounted on steering column. NOTE—Similar to 1948 ½ & ¾ Ton 3-Speed Truck type.
See Transmission Section for complete data.

►**Gearshift Control Lever Rattle Correction**—New spring released to correct this condition. *See "Chevrolet Pass. Car Transmission" in Transmission Section.*

Removal: Remove floor mat and floor cover over transmission. Disconnect speedometer cable, and shifter rods from levers on transmission. Drain lubricant. Disconnect hand brake pull back spring, and hand brake cable clevis from idler lever, remove idler lever. Remove universal joint collar-to-support capscrews and slide ball back on propeller shaft housing. Place jack under propeller shaft, remove 4 capscrews securing front trunnion bearings to front yoke, split joint and lower front end of propeller shaft. Remove rear transmission support-to-frame cross member bolts, install support under rear of engine. Remove two upper transmission-to-clutch housing capscrews and insert guide pins. Remove clutch underpan and two lower transmission-to-clutch housing capscrews. Slide transmission back and lift out through opening in floor.

Convertible Note—Transmission support must be removed and transmission turned for removal.

UNIVERSALS

Own Make. No. 591642. Cross type with surface treated trunnions and bearings. One used (in torque ball behind transmission rear support).
See Universals Section for complete data.

REAR AXLE

Own Make. Semi-floating, hypoid gear type with Torque Tube drive. "Revacycle" differential side gears and pinions used.
See Rear Axle Section for complete data.

Ratio—4.11-1 standard. 3.73-1 optional.

►**Axle Ratio Identification**—Prefix of axle serial number (stamped on front face of carrier flange on right side) indicates ratio as follows:
4.11-1—GA Detroit, GB Tonawanda.
3.73-1—GC Detroit, GD Tonawanda.

Backlash—.005-.007". Screw adjustment.

Removal: Raise rear of car, remove rear wheels and brake drums, install clamps on wheel brake cylinders, disconnect hand brake cables from idler lever and remove cables from cable clamps on frame, disconnect brake line at axle housing and shock absorber from rear spring 'U' bolt and anchor plate. Remove spring 'U' bolts and plate, disconnect spring shackles and drop springs. Pull axle assembly back to free front end of torque tube, withdraw assembly

Axle Shaft Removal: Wheel bolted directly on flange on outer end of axle shaft. Shaft retained by 'C' washer on inner end of differential case. To remove axle shaft, remove wheel, take out two 'zipon' nuts retaining brake drum, remove drum, install clamp on wheel brake cylinder. Remove axle housing cover, differential pinion shaft lock screw, pinion shaft and axle shaft spacer. Push axle shaft in, remove "C" washer on inner end, pull shaft out.

Axle Shaft Endplay—Free fit to .014" maximum.

Axle Shaft Installation & Endplay Adjustment: *See "Rear Axle Notes" in Chevrolet Special Data.*

SHOCK ABSORBERS

Delco. Chevrolet No. 5383591 (front), 5394330 (rear). Direct acting, non-adjustable, sealed (non-refillable) type. Serviced by replacement.
See Shock Absorber Section for complete data.

FRONT SUSPENSION

Front Suspension: New linked parallelogram type with direct acting shock within each coil spring.
See Front Suspension Section for complete data.

►**Lower Control Arm Production Change**—Two types used. *See "1949 Chevrolet" in Front Susp. Section.*

Kingpin Inclination—4° ± ½° crosswise.

Caster—Pos. ½° ± ½°. Adjustable.

Camber—Pos. ½° ± ½°. Adjustable.

Toe In—0-⅛". Loosen clamp bolts at each end of **left hand tie-rod** and turn rod, tighten clamp bolts.
CAUTION—Align tie rod ends before tightening clamp bolts (ball studs will bind if not aligned).

Steering Geometry (toe-out on turns)—Outer wheel turned 20°. Inner wheel turned 24° ± 2°.

STEERING GEAR

Saginaw. Chevrolet No. 5660113. New worm-and-roller type with push-pull lash adjustment.
See Steering Gear Section for complete data.

BRAKES

Service Brakes: Own Make, hydraulic type. Hand lever applies rear wheel service brakes.
NOTE—Bonded brake lining used.
See Brake Section for complete data.

Wheel Cylinder Bore—Front wheels 1 5/16", Rear 1 1/8". Sizes stamped under adjusting cup lock spring on wheel cylinder housing.

Drums—Cast iron rim, steel web. Diameter: 11".

Lining—Moulded type (bonded). Width 1¾". Thickness .187-.194". Length per wheel 22⅝".

Clearance—Adjusting cover (on wheel cylinder) backed off 4 Notches from slight drag position.

Braking Power—57.7% front wheels, 42.3% rear.

Hand Brake: See Service Brakes above.

MISC. MECHANICAL

Convertible Top Control: Hydro-Lectric type (hydraulic actuation with motor-driven pump supplying oil under pressure for power cylinders).
See Miscellaneous Section for complete data.

Windshield Wiper: Vacuum Link-&-Crank Arm type.
See Miscellaneous Section for complete data.

FRONT END SHEET METAL ASSEMBLY REMOVAL: *See Chevrolet Special Data.*

MODEL IDENTIFICATION

Series	Serial Prefix	Wheelbase	Type
3100	GP	116"	Half-Ton
3600	GR	125¼"	¾-Ton
3742	GT	125¼"	Forward Control
3800	GS	137"	1-Ton
3942	GU	137"	Forward Control
4100	SJ	137"	1½-Ton
4400	SK	161"	1½-Ton
4502	SL	161"	School Bus
5100	SP	110"	C.O.E. 2-Ton
5400	SR	134"	C.O.E. 2-Ton
5700	SS	158"	C.O.E. 2-Ton
5100S	SPS	110"	C.O.E. 1½-Ton
5400S	SRS	134"	C.O.E. 1½-Ton
5700S	SSS	158"	C.O.E. 1½-Ton
6100	SV	137"	2-Ton
6400	SW	161"	2-Ton
6702	SX	199"	School Bus
6100S	SVS	137"	1½-Ton
6400S	SWS	161"	1½-Ton

SERIAL NUMBER: Stamped on plate on cab left front hinge pillar (Flat Face Cowl models have plate on left hand cowl inner panel).

1949 Serial Numbers—First number 1001 with Serial Prefix for each Series as indicated in table above.

ENGINE NUMBER: Stamped on right side of crankcase to rear of distributor.

1949 Engine Numbers—First number 1001 with prefix indicating year, engine type & plant as follows:

Truck Engine Number Prefixes

Engine Type	Flint	Tonawanda
Half-Ton Truck	GBA	GBM
¾ & 1 Ton (216" Eng.)	AGCA	AGCM
1½ Ton (216" Engine)	GCA	GCM
1½ & 2 Ton (235" Eng.)	GEA	GEM
Cab-over-Engine Mdls.	GDA	GDM

TUNE-UP

COMPRESSION PRESSURE: 110 lbs. minimum (with cylinders equal within 5-10 lbs.) at cranking speed.

VACUUM READING: Steady 17-21" at idling speed.

FIRING ORDER: 1-5-3-6-2-4. See diagram.

SPARK PLUG GAPS: .035".

Plugs—AC No. 46-5. 14 mm.

►*CAUTION—Tighten plugs to 20-25 ft. lbs. torque or finger tight plus one-half turn.*

DISTRIBUTOR: Breaker Gap—.018" (limits .018-.022") standard setting, or .022-.024" for new points (to allow for seating).

Cam Angle—Closed 31° to 37° with .022" gap.

Breaker Arm Spring Tension—17-21 ozs.

Automatic & Vacuum Advance—*See Ignition.*

Condenser Capacity—.18-.23 microfarad.

IGNITION TIMING: 5° BTDC.

Timing Procedure—*See Ignition Timing.*

Timing Mark—Steel ball insert in flywheel lined up with pointer in inspection hole in right front face of housing with Octane Selector set at "O". Then adjust Octane Selector as follows:

Octane Selector Setting—Set for slight ping when accelerating engine with wide open throttle.

►**CARBURETION Downdraft Carburetors**
Conventional Trucks

Idle Setting—(Carter) 1¼-2¼ turns, (Rochester) 1½ turns open. One screw—turning screw out gives richer mixture.

Idle Speed—450-500 RPM. with warm engine.

Float Level (Carter)—½" top of float to gasket seat (machined surface) on cover with valve seated (invert to check).

Float Level (Rochester GM)—1 5/16" from bottom of each float to gasket seat (machined surface) on cover with cover inverted (float pin and floats must be removed to take off gasket). Check float stop by turning cover right side up—distance from gasket seat to bottom of each float should be 1 3/4-1 27/32" with floats down (needle valve open). Stop adjustment made by bending tang on upper side of lever at pivot.

►*CAUTION—When making float level adjustment on Rochester GM carburetor do not twist float arms—if arms twisted floats may contact sides of bowl.*

Accelerating Pump—No seasonal adjustment.

Fuel Pump Pressure: 4 lbs. maximum.

►**CARBURETION: Updraft Carburetor**
Cab-Over-Engine & Forward Control Trucks

Idle Setting—½-1¼ turns open. One screw—turning screw out gives richer mixture.

Idle Speed—450-500 RPM. with warm engine.

Float Level—Top of float 1/32-1/16" below top edge of bowl with valve seated.

Accelerating Pump—Inner hole Summer, Outer hole Winter.

Fuel Pump Pressure: 4 lbs. maximum.

MANIFOLD HEAT CONTROL: Thermostatic type. Check for free operation when tuning engine. Spring should be wound up just enough to slip end over manifold pin (approximately ½ turn).

►*CAUTION*—Excessive spring tension may cause valve to stick (causes detonation and poor performance).

►**VALVE TAPPET CLEARANCE:** *CAUTION—Engine temperature must be "normalized" before adjusting. See "Tappet Clearance Adjustment" in Chevrolet Special Data.*

Normal Operation—.006-.008" Intake. .013-.015" Exhaust, with engine "normalized."

Heavy Duty (Full Throttle) Operation—.010" Intake, .020" Exhaust, with engine "normalized."

Valve Timing Check: *See Valve Timing.*

STARTING: *See Battery, Starter, Generator, Regulator.*

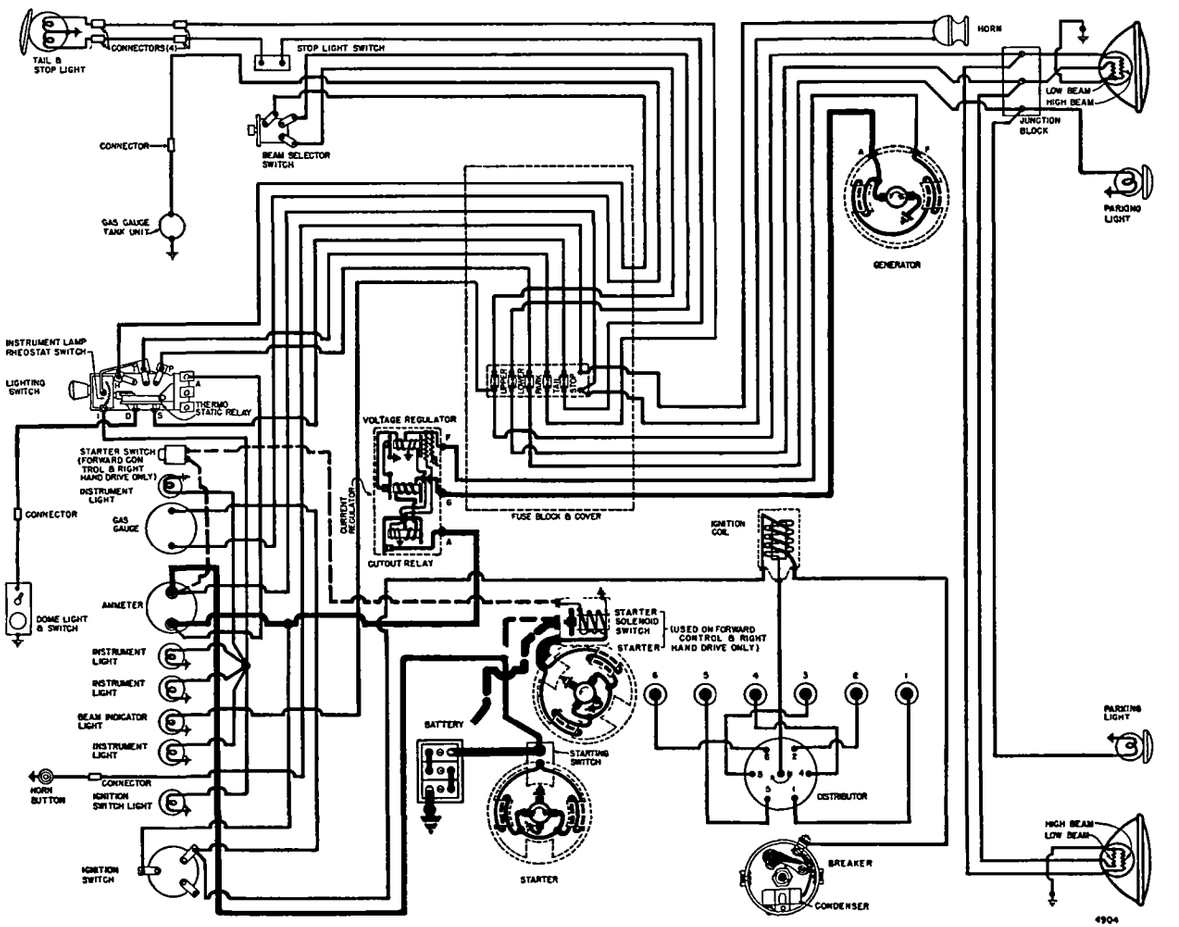

IGNITION

IGNITION SWITCH: Delco-Remy No. 1116464.
Key Series—No. 8000 to 9499. **Groove**—No. 15.
COIL: Delco-Remy No. 1115380. Above distributor.
Ignition Current—2.5 amperes idling, 4.5 stopped.
CONDENSER: Delco-Remy Part No. 1869704.
Capacity—.18-.23 microfarad.
DISTRIBUTOR: Delco-Remy 1112353. Automatic and vacuum advance with Octane Selector.
Breaker Gap—.018" standard setting, or .022-.024" for new points (to allow for seating).
Cam Angle—31° to 37° with .022" gap.
Breaker Arm Spring Tension—17-21 ozs.
Rotation—Clockwise viewed from above.

Distr. Degrees	Automatic Advance R.P.M.	Eng. Degrees	R.P.M.
Start	350	3	700
6.5	600	13	1200
12.0	1200	24	2400
19.0	1700	38	3400

Octane Selector—Adjustment on distributor provides 10° advance or retard from center "0" position. See Ignition Timing for adjustment instructions.

Vacuum Spark Control: Delco-Remy No. 1116043. On Octane Selector, linked to advance arm. Provides additional advance at speeds above idling except when engine accelerated or operated with wide open throttle when spark retarded by return spring.
Plunger Travel—17/64".

Vacuum Advance

Distr. Degrees	Eng. Degrees	Vacuum (" of HG)
Start	0°	7-8.5"
10°	20°	16.5-18.5"

Removal: Distributor mounted on right side of crankcase. To remove, loosen advance arm clamp bolt (does not disturb vacuum connections).

IGNITION TIMING

	Flywheel Degrees	Piston Position
Std. Setting①	5° BTDC	.0091" BTDC.

①—Adjust Octane Selector for grade of fuel being used. See Octane Selector Setting below.
Timing (Neon Light)—Recommended method. Connect neon light to #1 spark plug, direct light in flywheel through inspection hole in right front face of housing. Set Octane Selector pointer at "0". Idle engine, loosen advance arm clamp bolt, rotate distributor until ignition mark (steel ball insert in flywheel) lines up with pointer. Tighten clamp bolt and check Octane Selector Setting (see below).
Timing (without Neon Light)—With #1 piston on compression, turn engine over until piston is 5° or .0091" before top dead center with ignition mark (steel ball insert in flywheel) at pointer in inspection hole in right front face of housing. Adjust distributor as directed above.
Octane Selector Setting—Set for the grade of fuel being used to produce slight "ping" on acceleration.

CARBURETOR

CARTER (CHEVROLET) W1

Carter (Chevrolet) W1, No. 684S. 1¼" single barrel, downdraft type with manual choke control and new fast idle and accelerating pump design.
Casting No. on Flange—603.
See Carburetor Section for complete data.

Settings (Idle Setting, Float Level, and Accelerating Pump): ***See Tune-Up.***
Metering Rods & Jets—***See Carter Jet Table in Carburetor Section for complete data.***

Fast Idle: Linkage connected to choke and operates whenever choke closed to open throttle. No adjustment.

CARBURETOR

ROCHESTER

Rochester G.M. Model "B". Single barrel, downdraft type with concentric bowl and twin floats. Choke is manual type with throttle kicker and fast idle.
See Carburetor Section for complete data.

Settings (Idle Setting, Float Level, and Accelerating Pump): ***See Tune-Up.***

Throttle Kicker: Operates by cam on choke lever—opens throttle when choke closed—no adjustment.

CARBURETOR

CARTER (B&B) UPDRAFT

Carter (B&B) Model 517S. 1¼" single barrel, updraft type with manual choke control.
See Carburetor Section for complete data.

Settings (Idle Setting, Float Level, and Accelerating Pump): ***See Tune-Up.***
Metering Jets—***See Carter (BB) Updraft Jet Table in Carburetor Section for data.***

CARB. EQUIPMENT

Air Cleaner: AC types as follows:
1529264 oil-wetted—Std. All (exc. 2 Ton & C-O-E).
1529192 oil-bath—Optl. All (exc. 2 Ton & C-O-E).
1542078 oil-bath—Std. on 2 Ton Conventional Truck.
1543889 oil-bath—Std. on Cab-Over-Engine.
Filter Element—AC #2 (1529264), #9 (1529192), #7-S (for 1542078), None (for 1543889).
Servicing—Clean and re-oil std. cleaner (use SAE 50 oil) every 2000 miles. On heavy duty, clean and refill oil reservoir with SAE 50 oil (1 pint) every 2000 miles.
Fuel Pump: AC Type AF, No. 1523089. Diaphragm type.
Replacement Pump—AC No. 429.
Pressure—4 lbs. maximum.
See Carburetion Equipment Section for complete data.
Gasoline Gauge: AC Electric type. AC Nos.:
Dash Unit—1517169.
Tank Unit—(½ Ton) 1515466, (¾ Ton) 1516999, (All Others) 1515467.
See Carburetion Equipment Section for complete data.

BATTERY

Delco Type 15AA-4. 6 Volt, 15 Plate, 100 Ampere Hour Capacity (20 hour rate).
Starting Capacity—120 amperes for 20 minutes.
Zero Capacity—300 amperes for 3.6 minutes.
Five Second Voltage—4.2 volts.
Grounded Terminal—Negative (—) terminal.
Dimensions—Length 9". Width 7". Height 8 11/16".
Location—Under front floor on right side (Forward Control Trucks on frame on right side of engine).
School Bus—Delco Type 19Q-4. 6 Volt, 19 Plate, 125 Ampere Hour Capacity (20 hour rate).
Starting Capacity—145 amperes for 20 minutes.
Zero Capacity—300 amperes for 5.0 minutes.
Five Second Voltage—4.5 volts.
Grounded Terminal—Negative (—) terminal.
Dimensions—Length 10 3/8". W. 7". Height 8 11/16".
Location—Under hood.

STARTER

Delco-Remy 1107055 (1107075 on Forward Control Trucks). Armature No. 1867897.
Drive—Overrunning clutch with manual pinion shift (1107055), solenoid pinion shift (1107075).
Rotation—Counter-clockwise at commutator end.
Brush Spring Tension—24-28 ozs. each.

Performance Data

Torque	R.P.M.	Volts	Amperes
0 ft. lbs.	5000	5.7	65①
12 "	Lock	3.4	525

①—80 amperes on 1107075 (includes current draw of solenoid starter switch).
Removal: Flange mounted on right side of flywheel housing. To remove, take out mounting screws.
Starting Switch (1107055): Delco-Remy No. 820052. On starter. Operated by pedal.
(1107075 Starter). Delco-Remy Solenoid Switch No. 1118135 (no relay used) mounted on starter and controlled by Pushbutton Switch No. 1996037.
See Electrical Equipment Section for complete data.

GENERATOR

Generator—D-R Nos.—Armature
Regular Equip. ..... **1102710** **1879002**
Door-to-Door Del. ... **1102677 & 726** **1881309**
Optl. (50-amp.) Equip. .. **1106751 & 757** .....
2 brush types with voltage and current regulation.
Charging Rate Adjustment—None. See Regulator.
Maximum Charging Rate (Reg. Gen.)—36 amperes, 7.4 volts, 2400 RPM.

Performance Data—Cold

	Amperes①	Volts	R.P.M.
1102710	30	8.0	1750
1102677 & 726	26	8.0	1450
1106751 & 757	50	7.5	1410

①—Not maximum output. See Current Regulator.
Rotation—Counter-clockwise at commutator end.
Brush Spring Tension—25 ozs. each.
Field Current—1.75-1.9 amps. (1.70-1.95 amps. on 1106751 & 757) at 6.0 volts.
Removal: Generator pivot mounted at left front of engine. To remove, take out pivot and clamp bolts.
Belt Adjustment: Loosen clamp bolt, swing generator out for ¾" belt deflection (light pressure) midway between generator and fan pulleys.

REGULATOR

D-R Regulator
Regular Equip. ..... **1118301** (for 1102710 Gen.)
Door-to-Door Del. ..... **1118349** (for 1102677 Gen.)
Door-to-Door Del. ..... **1118361** (for 1102726 Gen.)
Optl. (50-amp.) Equip. 1118334 (for 1106751, 7 Gen.)
►***NEW "1118300 SERIES"*** regulators have screw adjustment for settings and single regulator springs.
See Electrical Equipment Section for complete data.
CAUTION—Check generator for grounded field coils and leads before changing regulator settings to correct High Charging Rate or High Voltage.

Cutout Relay
Cuts In—5.9-6.8 volts hot (set to 6.4 volts hot).
Contact Gap—.020" (same for both sets).
Air Gap—.020" (with contacts just closed).

Voltage Regulator
Setting—7.0-7.7 volts hot (set to 7.4 volts hot). Regulator is over-compensated for temperature. Check with cover in place and regulator hot.
Air Gap—.075" with armature pressed down to point where contacts are just touching.
Checking & Adjustment—***See Electrical Equipment Section.***

Current Regulator

Settings (hot):	Set to:	Range
1118301	36 amps.	32-40 amps.
1118334	50 amps.	48-52 amps.
1118349	25 amps.	23-27 amps.
1118361	25 amps.	23-27 amps.

CONTINUED ON NEXT PAGE

CONTINUED FROM PRECEDING PAGE

Air Gap—.075" with armature pressed down to point where contacts are just touching.
Checking & Adjustment—*See Electrical Equipment Section.*

LIGHTING

Headlamps: Guide "Sealed Beam" type.
See Electrical Equipment Section for complete data.
Headlamp Adjustment—Aim upper beam straight ahead (hot spot center 4½" below lamp center height).
Beam Indicator—Red dot on lower edge of speedometer. Lighted when upper beams in use.

Switches

Lighting—Delco-Remy No. 1995031.
Instrument—Part of Lighting Switch (Rheostat operated by turning light switch knob).
Beam Selector—Delco-Remy No. 1997008.
Stop Light—D-R No. 1997901 (mechanical type).
NOTE—Hydraulic switch used on some models.

MISC. ELECTRICAL

FUSES: Lighting. Five 20-ampere fuses in fuse box on engine side of dash. Protects individual light circuits as follows:

Top Fuse Upper Beams	**4th Fuse** Tail Lights
2nd Fuse Lower Beams	**5th Fuse** Stop Lights
3rd Fuse Parking Lights	

NOTE—These fuses used together with circuit breaker.

THERMOSTATIC CIRCUIT BREAKER: Delco-Remy. On back of light switch (part of switch assy.). Contacts remain closed with 30 amperes but open in 3 minutes with 42 amperes at 70°F. Not adjustable. Protects lighting circuits together with fuses listed above.

HORNS: Delco-Remy No. 1999801. Vibrator type.
Horn Current—7-9 amperes at 6.0 volts.
Air Gap—.027-.033".

ENGINE

216 CUBIC INCH ENGINE
(STD. ON ½, ¾, 1, 1½ TON TRUCKS)

ENGINE SPECIFICATIONS: Thriftmaster Model. Six cylinder, Valve-In-Head type.
Bore—3½" (3.4995-3.5015"). **Stroke**—3¾".
Displacement—216.5 cubic inches. **Rated HP**—29.4.
Developed Horsepower—90 at 3300 RPM.
Compression Ratio—6.6-1 Std. Cast Iron Head.
Compression & Vacuum Reading—*See Tune-Up.*

►*See 1949 Chevrolet Passenger Car pages for all engine data (Pistons, Rings, Pins, Connecting Rods, Crankshaft & Bearings, Camshaft, and Valves).*

ENGINE

235 CUBIC INCH ENGINE
TRUCKS (INCLUDING CAB-OVER-ENGINE)

TRUCK (235 CUBIC INCH) ENGINE: This engine is same design as smaller 216" engine and all service operations and clearances are the same except as noted in 216" Engine Section data.

Non-Interchangeable Parts: Parts interchangeable between the 216" and 235" engines except as follows: Cylinder Block and Crankcase, Cylinder Block Assembly (Short Motor), Push Rods (approx. ¾" longer on 235" Engine and identified by shoulder just below cup at top end), Valve Lifters, Camshaft, Piston and Pin Assembly, Piston Rings, Crankshaft, Oil Pan Pipe Assembly, Oil Distributor to Valve Rocker Shaft Pipe Assembly, Oil Pump Screen Cover Support Assembly.

ENGINE SPECIFICATIONS: Loadmaster Model. Six cylinder, Valve-In-Head type.
Bore—3 9/16" (3.5620-3.5640"). **Stroke**—3 15/16".
Displacement—235.5 cubic inches. **Rated HP**—30.4.
Developed HP (Conventional Tr'k)—93 at 3100 RPM.
Developed HP (Cab-Over-Engine)—90 at 3100 RPM.
Compression Ratio—6.7-1 Std. Cast Iron Head.
Compression & Vacuum Reading—*See Tune-Up.*

►*See 1949 Chevrolet Passenger Car page for all engine data (Pistons, Rings, Pins, Connecting Rods, Crankshaft & Bearings, Camshaft, and Valves).*

VALVE TIMING

►**VALVE TAPPET CLEARANCE:** *CAUTION—Engine temperature must be "normalized" before adjusting. See "Tappet Clearance Adjustment" in Chevrolet Special Data.*
Normal Operation—.006-.008" Intake, .013-.015" Exhaust, with engine "normalized."
Heavy Duty (Full Throttle) Operation—.010" Intake, .020" Exhaust, with engine "normalized."

VALVE TIMING: See Camshaft Setting also (on 1949 Chevrolet Passenger Car pages).
Intake Valves—Open 1° ATDC. Close 39° ALDC.
Exhaust Valves—Open 42° BLDC. Close 9° ATDC.
Valve Timing Check—Remove all tappet clearance from #1 exhaust valve, turn engine over until this valve just starts to close and until triangular flywheel mark lines up with pointer in right front face of flywheel housing, mount dial indicator on rocker shaft support with stem contacting #1 exhaust valve adjusting screw, set indicator dial at .044". Turn crankshaft until indicator hand just stops moving. Timing is correct if indicator reading is ZERO plus or minus .004". Reset tappet clearance at correct running figure (above).

LUBRICATION

Engine Oiling System: Pressure and positive splash system. Pressure to main bearings, camshaft bearings, timing gears, and to overhead valve system (low pressure). Connecting rod bearings lubricated by oil dippers which scoop oil from troughs (low speed) and directly from nozzles (high speed). Oil is divided between high and low pressure systems by Oil Distributor Valve on left side of engine.
CAUTION—Engine lubrication dependent upon adjustment of connecting rod dippers, oil troughs, and nozzles which must be **checked each time the oil pan is removed** (requires special gauges).
Checking Oiling System—*See "Oiling System" in Chevrolet Special Data.*
Crankcase Capacity—5½ qts. (dry), 5 qts. (refill).
Normal Oil Pressure—14 lbs. at 2000 RPM.
Oil Pressure Regulator—Located in oil pump cover Opens at 60 lbs. Non-adjustable type. Pressure normally controlled by Oil Distributor Valve on left side of engine which opens at 15 lbs.

Rocker Arm Oil Lead & Overflow Pipe Servicing: *See "Oiling System" in Chevrolet Special Data.*

Oil Pump: Located in crankcase. Driven independently through short shaft by gear on camshaft.
Oil Pump Installation—Assemble ground side of idler gear toward cover (use Chevrolet cover gasket only—controls pump clearance). Oil pump assembly mounted in crankcase by tapered setscrew. See that screw seated firmly in tapered hole in pump housing before tightening locknut.

Oil Distributor: *See "Oiling System" in Chevrolet Special Data.*

Checking Oiling System: Check entire system (Dipper Height, Oil Pan Trough Height, Oil Nozzle Height & Aim) each time oil pan removed.
See "Oiling System" in Chevrolet Special Data.
CAUTION—Special checking gauges required for each type (216" & 235") engine.

Crankcase Ventilation (All Trucks except Forward Control Models): Regular velocity type with air intake through valve rocker cover (air cleaner on some models) and outlet pipe on right side of engine.
Servicing—On all models with air cleaner mounted on valve rocker cover, wash filter element with solvent and re-oil at 2000 mile intervals or more often if required by operating conditions.

►**Positive Crankcase Ventilation (Forward Control Truck Models only):** Vacuum operated ventilator consisting of vacuum pipe from oil filler pipe to a ventilator valve in fitting on intake manifold. Valve is spring-loaded, variable opening type giving constant crankcase ventilation at all speeds. **Valve must close at idling speed to maintain proper air fuel mixture.**

Servicing. Every 5000 miles (or oftener if required), vacuum pipe and valve should be removed from engine and cleaned with solvent and blown dry with compressed air. Remove any sludge accumulation in filler pipe by taking off and burning out (all holes in baffle inside pipe must be open). Oil filler cap gasket must give tight seal, replace gasket if required. Test vacuum valve as follows:

Vacuum Valve. With valve disassembled, check spring tension—must be 7.5 ozs. with spring compressed to .418-.432". If spring not within limits, or spring tester not available, car manufacturer recommends new metering valve assembly, Part No. 1543979, be installed.

►*CAUTION*—When assembling valve, make certain end coil of spring engages groove under head of valve.

COOLING

Cooling System: Positive circulation with water pump on front of engine. Pressure type (relief valve) radiator cap used on Cab-Over-Engine Trucks.
Pressure Valve (C-O-E Trucks)—AC No. 850501 (Radiator Filler Cap). Opens at 4 lbs.
Capacity—**15 qts.** (exc. 2-Ton, C-O-E, and special heavy duty radiator).
17 qts. 2-Ton, C-O-E, and heavy duty radiator.
Radiator Core Removal: *See Chevrolet Special Data.*
Water Pump: Double-outlet, packless type with sealed ball-bearing shaft.
See Water Pump Section for complete data.
Belt Adjustment—*See Generator Belt Adjustment.*
Thermostat. Harrison. In cylinder head water outlet.
Setting—No. 3113995 stamped "143". Starts to open 140-147°F. Fully open 170°F.
Temperature Gauge: AC No. 1512148 (1512150 for C-O-E Trucks). Not electric.

CLUTCH

Own Make. Diaphragm spring, single plate, dry disc type. NOTE—Half-Ton Trucks use 9" clutch, all other models 10¾" type.
See Clutch Section for complete data.
Facings—Moulded Asbestos, 2 required as follows:

	I. D.	O. D.	Thickness
9" type	6⅛"	9⅛"	.132-.138"
10¾" type	7"	10¾"	.137-.143"

Adjustment: Pedal free travel ¾-1". To adjust, loosen checknut and turn adjusting nut on connecting link at clutch throwout fork. NOTE—Use finger pressure only when checking pedal free travel.

Removal: Remove transmission (see Transmission Removal below). Remove throw-out bearing, remove fork by prying fork off ball, remove fork mounting (use ¾" wrench). Install Clutch Pilot Tool K-411 (to support clutch), loosen all six cover bolts evenly, remove assembly from below. CAUTION—Do not allow pressure plate to hang on retracting springs (support by hand). When installing clutch align 'X' mark on cover with 'X' mark on flywheel.

TRANSMISSION
3-SPEED TRUCK TYPE

Own Make. Three-speed, all helical gear type, Constant-mesh, synchro-mesh (Second & High), sliding gear (Low & Reverse).

See Transmission Section for complete data.

Transmission Control: Mechanical type with shift lever mounted on steering column.

NOTE—Control similar to 1949 Pass. Car type.

See Transmission Section for complete data.

Removal (Half-Ton): Remove accelerator pedal, floor mat, and transmission cover on floor. Disconnect speedometer cable from rear bearing retainer, remove hand brake lever from transmission case. Drain transmission. Remove battery. Remove four capscrews holding universal joint collar on rear bearing retainer, remove bolts holding transmission support on frame cross-member. Support propeller shaft with jack, slide universal joint ball and collar back on shaft, split front universal by removing capscrews retaining front trunnion bearings on front yoke. Raise propeller shaft as far as possible with jack to provide clearance. Remove two top transmission mounting screws, install special J-1116 guide pins in these holes. Take off clutch housing underpan. Remove two lower transmission mounting screws, slide transmission straight back on guide pins until main drive gear shaft is free from clutch driven member, lift transmission up and remove through floor opening.

Removal (¾ Ton): Remove accelerator pedal, floor mat, and transmission cover on floor. Disconnect speedometer cable from rear bearing retainer, remove hand brake lever from transmission case. Drain transmission. Split intermediate universal by removing trunnion bearing "U" bolts, lower rear propeller shaft to floor. Remove four capscrews holding universal joint collar on rear bearing retainer, slide ball collar and retainer back on housing. Remove two bolts and nuts mounting intermediate universal support bracket on frame cross-member, pull front propeller shaft assembly to rear and free of front universal joint. Remove transmission in same manner as on Half-Ton (above).

TRANSMISSION
4-SPEED TRUCK TYPE

Own Make. Four-speed, constant-mesh, synchro-mesh, helical gear (2nd, 3rd, and 4th), sliding spur gear (Low & Reverse). Floor mounted gearshift.

See Transmission Section for complete data.

►**Locking in 3rd & 4th Gear Correction**—New design 3rd & 4th speed clutch hub and clutch keys used. *See Chevrolet 4-Speed Helical Gear Transmission in Transmission Section.*

Transmission Control (Cab-Over-Engine): *See Chevrolet Special Data for Removal & Installation data.*
NOTE—Floor-mtd. gearshift used on Other Trucks.

Removal (½ & ¾ Ton): See 3-speed Transmission data above. NOTE—On Forward Control Models gearshift lever and rear floor pan must also be removed.

Removal (Other Trucks): Free steering gear grommet from floor, remove accelerator pedal, floor mat, and transmission cover on floor. Disconnect speedometer cable from rear bearing retainer, remove hand brake lever from transmission case. Drain transmission. Split front universal joint by removing trunnion bearing "U" bolts (tape or wire trunnions together to prevent losing bearings), slide shaft down to one side to clear transmission. Remove two top transmission mounting capscrews, install special J-1116 guide pins in these holes. Take off clutch housing underpan. Remove 2 lower transmission mounting capscrews, slide transmission straight back on guide pins until main drive gear shaft is free from clutch driven-member, remove transmission.

UNIVERSALS

Half-Ton: Own Make. No. 591642 (3-Spd. Trans.), 605118 (4-Spd. Trans.). Same type as Pass. Car. One used (in torque ball back of transmission).
See Universal Section for complete data.

¾ Ton Truck: Front Universal—Own Make. Chevrolet No. 591642 (3 Spd. Transmission), 605118 (4 Spd. Transmis'n). Same type as used on ½ Ton (above).
Intermediate & Rear Universal—Spicer Model No. 1351-5107X (Intermediate—slip joint), 1358-5104X (rear—permanent joint). Needle bearing type.
See Universals Section for complete data.

1, 1½, 2 Ton Trucks (Regular & C-O-E): Spicer Needle bearing type. Slip-joint used at intermediate position, permanent type at transmission and rear axle.

Spicer Model Nos.	Front	Intermediate	Rear
C-O-E 110" WB	1351-5107X	①	1358-5105X
Bus 199" WB	1358-5104X	②	1358-5104X
All Others	1358-5104X	1351-5107X	1358-5104X

①—No intermediate joint used (1 propeller shaft).
②—Two intermediate universals as follows: First—1358-5104X, Second 1351-5107X (3 section shaft).
See Universal Section for complete data.

Propeller Shaft Intermediate Bearing & Support. *See "Propeller Shaft" in Chevrolet Special Data.*
NOTE—Support Bearing is sealed single-row ball bearing with "grease traps" packed with waterproof grease to prevent entrance of dirt and water.

REAR AXLE
SEMI-FLOATING TRUCK TYPE (HALF-TON)

Own Make. Semi-floating, hypoid gear type with Torque Tube drive.
NOTE—This axle same design as passenger car type.
See Rear Axle Section for complete data.
Ratio—4.11-1 Standard.
Axle Identification—Can be identified by prefix letter of axle serial number stamped on front face of carrier flange on right side as follows:

Detroit Production—GE. **Tonawanda**—GF.

Backlash—.005-.007". Screw adjustment.

Removal: Raise rear of car, remove rear wheels and brake drums, install clamps on wheel brake cylinders, disconnect hand brake cables from idler lever and remove cables from cable clamps on frame, disconnect brake line at axle housing and shock absorber from rear spring 'U' bolt and anchor plate. Remove spring 'U' bolts and plate, disconnect spring shackles and drop springs. Pull axle assembly back to free front end of torque tube, withdraw assembly from beneath car.

Axle Shaft Removal: Wheel bolted directly on flange on outer end of axle shaft. Shaft retained by 'C' washer on inner end of differential case. To remove axle shaft, remove wheel, take out two 'zipon' nuts retaining brake drum, remove drum, install clamp on wheel brake cylinder. Remove axle housing cover, differential pinion shaft lock screw, pinion shaft and axle shaft spacer. Push axle shaft in, remove "C" washer on inner end, pull shaft out.

Axle Shaft Endplay—Free fit to .014" maximum.

Axle Shaft Installation & Endplay Adjustment: *See "Rear Axle Notes" in Chevrolet Special Data.*

REAR AXLE
FULL-FLOATING TRUCK TYPE (ALL EXCEPT HALF-TON)

Own Make. Full-floating, hypoid gear (straddle mounted pinion) with Hotchkiss Drive.

►**¾ & 1 Ton Note**—"Revacycle" differential side gears and pinions used.

►**1½ & 2 Ton Note**—Axle shaft splined to wheel hubs. *See Rear Axle Section for complete data.*

►**Axle Identification**—Axles can be identified by prefix letters of axle serial number stamped on top of carrier housing between reinforcing ribs as follows:

	Ratio	Marking①
¾ Ton (exc. Fwd. Contr.)	4.57-1	GG or GH
②1 Ton (Single Tires)	5.14-1	SAB or SB
②1 Ton (Dual Tires)	5.14-1	SC or SD
1½ Ton	6.17-1	SE or SF
1½ Ton	5.43-1	SL or SM
③2 Ton & C-O-E	6.17-1	SG or SH

①—First mark—Detroit, or Second—Tonawanda.
②—¾ Ton Forward Control Models also.
③—1½ Ton Special Model also.

Backlash—.005-.008". Screw Adjustment.

Removal:—Remove differential cover and axle shafts (see below). Disconnect rear universal by removing two U-bolts from rear yoke (wire trunnions to retain bearings). Slide shaft forward and lower to floor. Remove differential carrier mounting bolts.

Axle Shaft Removal (¾ & 1 Ton): Remove 8 capscrews and lockwashers in axle shaft flange, install two ½" x 13 screws in special threaded holes in flange (between regular mounting screw holes), turn these screws up evenly to loosen the shaft, withdraw shaft from housing, remove and discard gasket. NOTE—Use new gasket when re-installing shaft.

CAUTION—Thoroughly clean all lubricant from axle shaft flange and end of wheel hub before installing axle shaft. Grease at this point **will cause loosening of axle shaft flange capscrews.**

C NTINUED N NEXT PAGE

CONTINUED FROM PRECEDING PAGE

Axle Shaft Removal (1½ & 2 Ton): Shaft flange is splined in wheel hub (tight fit) and requires special puller for removal. Remove five capscrews and lockwashers in hub cap, remove hub cap and gasket. Assemble special adapter J-1436-8 on Rear Axle Shaft Bearing & Oil Seal Remover J-1436 (remove jaws), thread adapter into hole in axle shaft flange, pull axle shaft. NOTE—When re-installing shaft, tap flange splines into engagement with wheel hub splines (if necessary, rotate wheel slightly to align splines on shaft with both wheel hub and differential side gear splines), use new hub gasket.

Axle Shaft Note—Shafts unequal length (right shaft longer) and may be identified by part number stamped on shaft or lengths as follows:

¾ & 1 Ton Truck

	Part No.	Length
Left Shaft	3680977	31 3/16"
Right Shaft	3680978	37 1/16"

1½ Ton Truck (Splined Shaft)

Left Shaft	3685191	34 3/32"
Right Shaft	3685192	40 15/32"

2 Ton & C-O-E (Splined Shaft)

Left Shaft	3685193	36 7/16"
Right Shaft	3685194	40 5/8"

Wheel Bearing Adjustment: Remove wheels and axle shafts (see above). Bend back lip of lock in locknut notch, remove locknut and adjusting nut lock. Tighten adjusting nut tight using special wrench J-2222 (¾ & 1 Ton), J-870 (1½ & 2 Ton) while turning hub by hand, then back nut off 45°, check for free turning, install adjusting nut lock (with lock tangs aligned with slots in adjusting nut), bend tang down into notch in adjusting nut, install locknut and tighten securely, bend tang of lock down into notch of locknut.

REAR AXLE

TWO-SPEED TRUCK TYPE

Own Make (2 Ton Optl.). Full-floating, Two-speed Double reduction type with Hypoid Gears (First reduction), Helical Gears (Second reduction) and new vacuum shift control.

Identification Note—Serial number prefix (on flat top of carrier on right side) is "SN" (Detroit), "SP" (Tonawanda).

See Rear Axle Section for complete data.

Ratio—6.13-1 (High), 8.10-1 (Low).

Two-Speed Shift Control: Vacuum power type with selector valve on instrument panel.

See Rear Axle data in Rear Axle Section for data.

Removal: Carrier Assembly can be removed (without disturbing axle housing) as follows: Remove axle shaft flange mounting bolts, pull both axle shafts out of housing approximately 8" (to clear differential). Drain axle lubricant and remove inspection plate. Loosen hose clamps and slip hoses off vacuum cylinder hose connections. Disconnect rear universal joint by removing trunnion bearing "U" bolts from rear flange, slide propeller shaft assembly forward, tape universal bearing trunnions in place to prevent loss of needle bearing, swing propeller shaft out of the way (tie up to frame side rail). Remove capscrews mounting carrier on axle housing (support carrier by means of long punch inserted through one upper mounting screw hole in housing before removing last mounting screw). Place support jack under carrier assembly, roll assembly straight forward until differential clears housing, remove carrier assembly from beneath truck.

Axle Shaft Removal & Wheel Bearing Adjustment: Same as for regular rear axle (see above).

SHOCK ABSORBERS

Delco. Single or double acting, hydraulic types (Std. or Optl.) as follows:

Single Acting Types

Front—1430-CA, DA (½ & ¾ Ton).

Rear—1430-MA, LA (½ Ton), 1431-Y, X (¾ Ton).

Double Acting Types

Front—1730-B, A (exc. C-O-E), 1730-C, D (C-O-E).

Rear—1731-U, T (½ Ton), 1722-D, C (¾ Ton), 1722-F, E (1 & 1½ Ton), 2000-W, V (1½ Ton & School Bus).

NOTE—Model numbers indicate Left and Right Shock Absorbers thus: 1430-CA, DA is 1430-CA (Left), 1430-DA (Right).

See Shock Absorber Section for complete data.

FRONT SUSPENSION

Front Suspension: Conventional "I" beam section front axle with Reverse Elliott ends and semi-elliptic springs.

Kingpin Inclination—7°10′±1° crosswise (All).

Camber—1°±½° (All). Bend axle for corrections (when kingpin inclination is likewise off).

Caster—See table below. All specifications ±½°. Use wedge shims for minor corrections (up to 2°), bending tools for greater corrections.

	Caster	Toe-In
½ & ¾ Ton exc. Fwd. Contr.	1¾°	1/16-3/16"
¾ Ton Fwd. Control	3¼°	1/16-1/4"
1 Ton Fwd. Control	2¼°	1/16-1/4"
1, 1½, 2 Ton exc. C-O-E	2¾°	1/16-1/4"
C-O-E Trucks	3°	1/16-1/4"

Toe-In—See table above. Adjust by turning tie rod.

CAUTION—Tie rod ends must be aligned with studs.

Steering Geometry—Outer wheel turned 20°, inner wheel 23°±2° (All Models).

STEERING GEAR

Saginaw Model. Ball bearing (re-circulating ball) Worm-and-Nut. Chevrolet Part Nos. as follows: 270927 (½ Ton & ¾ Ton with 3-Spd. Transmission), 270221 (¾, 1, 1½ Ton with 4-Spd Transmission), 270224 (2 Ton & School Bus), 270635 (C-O-E).

See Steering Gear Section for complete data.

BRAKES

Service Brakes: Own Make. Hydraulic type. Hand Lever (Pedal type on ½ & ¾ Ton and all Forward Control Models) applies rear wheel service brakes.

See Brake Section for complete data.

Wheel Cylinders—Size stamped on housing under adjusting cup lock spring as follows:

	Front Wheels	Rear Wheels
Half-Ton	1 1/4"	1 3/16"
3/4 Ton	1 1/4"	1 3/8"
1 Ton	1 3/8"	1 3/8"
All Others	1 1/4"	1 1/2"

Drums—Cast iron rim with steel web. Drum Diameters as follows:

	Front—Drum Diam.—Rear
Half-Ton	11" — 11"
3/4 Ton	11" — 12"
1 Ton	12" — 14"
All Others	14" — 16"

Lining—Moulded type (bonded type on ½ & ¾ Ton).

Width: 1¾" (11" brakes), 2" (12", 14"), 3" (16").

Thickness: .187-.194" (11"), .265-.272" (Others).

Clearance (½ & ¾ Ton)—Adjusting cover on wheel cylinder backed off **4 Notches** from slight drag position (All shoes—front and rear wheels).

Clearance (All Others)—Front Wheels: Adjusting cover on wheel cylinder backed off **4 Notches** from slight drag position.

Rear Wheels: Adjusting pinion shaft backed off **2/3 turn** from slight drag position.

HAND BRAKE

Hand Brake (Pedal Type used on ½ Ton, ¾ Ton and Forward Control Models): Pedal applies rear wheel service brakes. Release lever below instrument panel, **Adjustment**—This pedal-operated brake adjusted in same manner as other trucks (below) and release rod handle (under instrument panel) must be adjusted for ½" minimum clearance at support bracket.

Hand Brake (Lever Type used on Other Models): Place hand lever in fully released position, disconnect rear wheel cables at cross-shaft levers on frame by taking out clevis pin, loosen locknut, pull cable out of conduit by hand until a positive stop is felt, adjust clevis on cable end, tighten locknut and install clevis pin.

HYDROVAC

Hydrovac Brake System: Std. on 2 Ton, Cab-Over-Engine, and 1½ Ton Special Models. Consists of special power unit (vacuum power used to augment regular hydraulic brake actuation) in hydraulic line between master cylinder and wheel cylinders.

See Brake Section for complete data.

CYLINDER HEAD

1949 MODELS

CYLINDER HEAD INSTALLATION: Use Torque Indicating Wrench to tighten cylinder head bolt nuts and capscrews, tighten in correct sequence as shown in diagram for each car. Procedure for tightening Cast Iron and Aluminum Heads is as follows:

Cast Iron Heads—With engine cold, tighten screws or nuts to correct tension as shown in table below. Run engine until thoroughly warm, then check and retighten nuts (additional tightening necessary to bring them back to correct tension).

Aluminum Heads—With engine cold, tighten screws or nuts to correct tension as shown in table below. Run engine until thoroughly warm, then allow engine to cool off, check and retighten nuts after engine has become cool—do not tighten aluminum heads hot.

Tightening Torque—See Tightening (Torque Wrench) Specifications below.

CHRYSLER 6 - DE SOTO - DODGE - PLYMOUTH

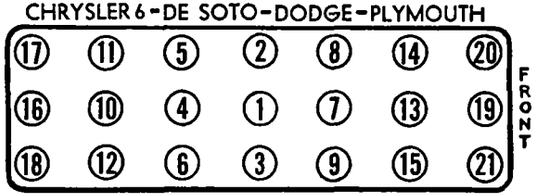

CHRYSLER 8

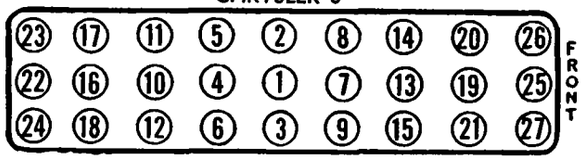

TIGHTENING (TORQUE WRENCH) SPECIFICATIONS

1949 MODELS

	Ft. Lbs.	In. Lbs.
Spark Plugs (14 MM. Type)	30-32	360-384
Cyl. Head Nuts 7/16"	52-57	624-684
Cyl. Head Nuts 1/2"	85-90	1020-1080
Cyl. Head Capscrews (Plain hd.)	65-70	780-840
Cyl. Head " (Cupped hd.)	67-72	804-864
Main Bearing Cap Nuts	75-80	900-960
Main Bearing Capscrews	80-85	960-1020
Connecting Rods Nuts 3/8"	45-50	540-600
Connecting Rods Nuts 7/16"	50-75	600-900
Flywheel Nuts	55-60	660-720
Manifold Stud Nuts	15-20	180-240
Starting Crank Jaw	108 min.	1296
Trans. to Clutch Housing Studs	45-50	540-600
Differential hous'g to axle hous'g.	25-30	300-360
Axle Shaft Nuts	142 min.	1704
Wheel Hub Bolts	58½-66½	702-898
Brake Backing Plate to Axle	30-35	360-420
Steering Gear to Frame Screws	45-50	540-600
Pitman Arm Nut	112-125	1344-1370
Lower Control Arm Bushings	165 min.	1980
Upper Control Arm Bushings	120-140	1440-1560
Axle Ring Gear Bolt Nuts	35-40	420-480
Hand Brake Anchor Sup. Screws	50-55	600-660
Bumper Bolts	60-70	720-840

ORIGINAL BORE & PISTONS

1949 MODELS

ORIGINAL PISTON & CYLINDER BORE SIZES: Original production (new engine) piston and bore sizes indicated by letter located as follows:

Piston Size—Letter stamped on piston head (number following letter on Dodge pistons is weight).

Bore Size—Letter stamped on pad on distributor side of engine at top of block. Do not confuse this letter with "Special Standard" size letter indicating oversize bore.

"Special Standard" Size Bore—Letter "A" or "AB" following engine number indicates engine has .020" larger standard cylinder bore.

'Special Standard' Pistons and Bores (.020" oversize)—Original production (new engine) piston and bore sizes which are .020" oversize (see Engine Bore Size data above) are graded in same steps as for standard sizes but these pistons and bores are marked "P", "Q", "R", "S", "T".

ORIGINAL BORE & PISTON SIZES

CHRYSLER 6 & DE SOTO

Piston & Engine Mark①	Piston Diameter	Cylinder Diameter
A	3.43625-3.43675"	3.43725-3.43775"
B	3.43675-3.43725"	3.43775-3.43825"
C	3.43725-3.43775"	3.43825-3.43875"
D	3.43775-3.43825"	3.43875-3.43925"
E	3.43825-3.43875"	3.43925-3.43975"

CHRYSLER 8 & DODGE

A	3.24875-3.24925"	3.24975-3.25025"
B	3.24925-3.24975"	3.25025-3.25075"
C	3.24975-3.25025"	3.25075-3.25125"
D	3.25025-3.25075"	3.25125-3.25175"
E	3.25075-3.25125"	3.25175-3.25225"

PLYMOUTH

A	3.2488-3.2493"	3.2500-3.2505"
B	3.2493-3.2498"	3.2505-3.3510"
C	3.2498-3.2503"	3.2510-3.2515"
D	3.2503-3.2508"	3.2515-3.2520"
E	3.2508-3.2513"	3.2520-3.2525"

①—Pistons marked AA are .0005" smaller than A pistons, EE pistons are .0005" larger than E pistons. Pistons marked P, Q, R, S, T are .020" oversize (see Note above).

ORIGINAL BEARING SIZES

1949 MODELS

ENGINE NUMBER LETTERS ('SPECIAL STANDARD BORE & BEARING SIZES):—Letters used with engine number (not in circular pads) denote following 'special standard' sizes: 'A'—.020" larger standard cylinder bore. 'B'—.010" smaller standard main and connecting rod bearings. 'AB'—Cylinder bore, main and connecting bearings 'special standard'.

1949 PLYMOUTH

►**.001" THICKER WALL MAIN & CONNECTING ROD BEARINGS:** When these bearings installed on production engines, machined surface of crankshaft center counterbalance marked as follows:

Connecting Rods—Shaft marked R1, R2, R3, R4, R5, or R6 depending on which connecting rod is fitted with a .001" thicker wall bearing.

Main Bearings—Shaft marked M1, M2, M3, or M4 depending on which journal fitted with a .001" thicker wall bearing.

►*CAUTION: These bearings used only in positions indicated by marks (not necessarily in complete sets).*

OIL PUMP

1949 MODELS

ROTOR TYPE OIL PUMP: Removal—Take off distributor cap, turn engine over until #1 cylinder is at firing position (allow engine to remain in this position while pump off engine). Remove two oil pump Allen-head screws. Take pump off engine.

Pump Servicing—Disassemble pump by taking off cover and drive gear (drive out pin and press gear off shaft). Thoroughly clean parts and dry with compressed air. Check pump parts as follows: 1)—With rotors in pump body, turn shaft so that one lobe on inner rotor pushed into notch in outer rotor, check clearance between opposite lobe of inner rotor and inner face of outer rotor. If clearance greater than .010" replace both rotors. 2)—Height (or thickness) of both rotors should be at least .748". Diameter of outer rotor should be at least 2.245". Replace if measurements are less. 3)—With rotors in pump body, turn body up, place straightedge across face of body between screw holes. Clearance between straightedge and rotors should be .004" max. If greater, replace pump body. 4)—With outer rotor pressed to one side of body, clearance at opposite side should be .008" maximum. If greater, replace pump body. 5)—Check cover by placing straightedge across inner face and if .001" feeler can be inserted between cover and straightedge, or if face is scratched or marred, replace cover.

Pump Assembly—If new rotor installed on shaft, it must be installed with rotor square to shaft and pressed on until flush with end of shaft. Pin rotor to shaft after drilling 5/32" pin hole. Drive gear should be pressed on shaft to give .003-.010" clearance between underside of gear and pump body with rotor (on opposite end of shaft) seated in pump body. Install pin. If necessary, drill new 5/32" hole at right angles to old hole. With rotors in place, install new cover gasket on body and install cover.

Pump Installation—Oil pump must be installed on engine with #1 piston in firing position with rotor on distributor opposite #1 terminal in cap.

BRAKE NOTES

1949 MODELS

HAND BRAKE ADJUSTMENT: The hand brake adjustments can be made from beneath car as follows: Fully release hand lever (cable length adjusted by means of clevis at lower end). Adjust anchor screw for .015-.020" band to drum clearance by bending back tab of anchor screw lock and turning screw (on lower right side of brake), then lock screw by bending tab against flat of screw. Loosen guide bolt locknut and adjust guide bolt adjusting nut for .015-.020" band to drum clearance (these two nuts located in front of release springs at left side), then tighten locknut. Turn large adjusting bolt nut (on lower end of bolt below springs) for .015-.020" band to drum clearance for upper half of band. Groove in upper end of this nut must contact ridge on band operating lever spacer above nut.

NOTE—Clearance between side of anchor bracket at center of band and anchor must not exceed .005" (if clearance excessive band may be distorted when brake applied). To correct, compress saddle in vise or place on block and tap lightly with a hammer.

MODEL IDENTIFICATION

SERIAL NUMBER: On left front door hinge post.

1949 Numbers	Detroit	Los Angeles
Royal	70,041,001 Up	65,002,001 Up
Windsor	70,725,001 Up	67,005,001 Up

ENGINE NUMBER: Stamped on boss on left side of cylinder block between Nos. 1 and 2 cylinders.

TUNE-UP

COMPRESSION PRESSURE: 120-150 lbs. at cranking speed of 150 RPM.

VACUUM READING: Steady 18-21" idling at 6 MPH.

FIRING ORDER: 1-5-3-6-2-4. See diagram.

SPARK PLUG GAPS: .038". Limits plus or minus .002". **Plugs**—Auto-Lite Type A5 or AR5. 14 mm. Metric.

DISTRIBUTOR: Breaker Gap—.020".
Cam Angle—34½° to 38° Closed.
Breaker Arm Spring Tension—17-20 ozs.
Automatic & Vacuum Advance—*See Ignition.*
Condenser Capacity—.25-.28 microfarad.

IGNITION TIMING: 4° or .007" ATDC.
Timing Procedure—*See Ignition Timing.*
Timing Mark—Vibration Dampener marked "DC" at top dead center position with 15-1° graduations before and after this point. Set timing with 4° graduation **after** DC mark at pointer on chain case, then set manual (octane selector) adjustment:
Manual (Octane Selector) Adjustment—Set for slight ping with 10-30 MPH. range when accelerating with wide open throttle. Do not vary initial timing more than 4° advance or retard.

CARBURETION:
Idle Setting—Set idle adjusting screw for smooth idling with warm engine (idle screw ½-1½ turns open), turn screw out for richer mixture.
Idle Speed—6 MPH. (450-475 Eng. RPM. with Hyd. Trans.).
Float Level—Top of float (not soldered seam) 5/64", plus or minus 1/64", below top edge of bowl.
Accelerating Pump—Center Hole (med. stroke) Normal. Inner Hole—Summer, Outer Hole—Winter,

Choke Setting: Adjusted by inserting a gauge pin through hole in automatic choke lever shaft and slot in base mounting flange (to position shaft) and adjusting carburetor choke valve lever so that choke valve is tightly closed.

Fuel Pump Pressure: 3½-5½ lbs.

MANIFOLD HEAT CONTROL: Automatic thermostatic type. See that valve operates freely. When installing coil, wind free end up **approx. ¾ turn,** not over one turn or under ½ turn, hook end on stop stud.

VALVE TAPET CLEARANCE: .008" Intake, .010" Exhaust, Hot.
Valve Timing Check—*See Valve Timing.*

STARTING: *See Battery, Starter, Generator, Regulator.*

IGNITION

IGNITION SWITCH: Mitchellock. Combination ignition-starter switch. Starter operates when key held fully to the right. Key automatically returns to "on" position. Coil lead protected by armored cable through fire wall.

COIL: Auto-Lite No. CR-4001 (U.S.), IG-4809 (Early & Canada). On bracket above distributor.
Ignition Current—2.25 amperes idling, 5 stopped.

CONDENSER: Auto-Lite No. IG-3927G.
Capacity—.25-.28 microfarad.

DISTRIBUTOR: Auto-Lite No. IAP-4102C-1 (U.S.), IAP-4102B-1 (Canada). Automatic advance type with Vacuum Spark Control.
Breaker Plate Identification—Maximum vacuum advance limited by slot in plate. Plate marked #9.
Breaker Gap—.020".
Cam Angle—34½° to 38° Closed.
Breaker Arm Spring Tension—17-20 ozs.
Rotation—Clockwise viewed from above.

Automatic Advance—IAP-4102B-1

Degrees Distr.	R.P.M.	Degrees Eng.	R.P.M.
Start	350	0	700
3	400	6	800
6	780	12	1560
9	1160	18	2320
12	1530	24	3060

Automatic Advance—IAP-4102C-1

Start	350	0	700
1	450	2	900
5	800	10	1600
10	1425	20	2850
11	1550	22	3100

Vacuum Spark Control: Auto-Lite Unit. Integral type (on distributor, linked directly to breaker plate). Provides additional advance at speeds above idling except when engine accelerated or operated with wide open throttle, spark retarded by return spring.

Vacuum Advance—IAP-4102B-1 & 4102C-1

Distr. Degrees	Eng. Degrees	Vacuum (" of HG)
Start	0°	5"
2°	4°	7¼"
4°	8°	9⅜"
6°	12°	11⅝"
9°	18°	15"

Manual Adjustment—Provides for minor changes in ignition timing at distributor. See Ignition Timing.

Distributor Removal: Mounted on left side of crankcase. To remove, disconnect vacuum line, take out hold-down screw in lock plate. **Installation Note**—Install distributor with #1 piston in firing position.

IGNITION TIMING

Std. Setting—Initial setting (for regular non-premium fuel) as shown below. See Manual Adjustment (following) for Final Setting.

	Flywheel Degrees	Piston Position
All Engines	4° ATDC	.007" ATDC.

NOTE—Impulse neutralizer marked 'DC' at TDC. with 15 (1°) graduations on either side.

Timing (Using Timing Light)—Connect timing light between distributor primary terminal and battery terminal on generator regulator Set #1 or #6 piston in firing position (see setting above) with correct mark on impulse neutralizer aligned with pointer on chain case cover. Loosen lock-plate hold-

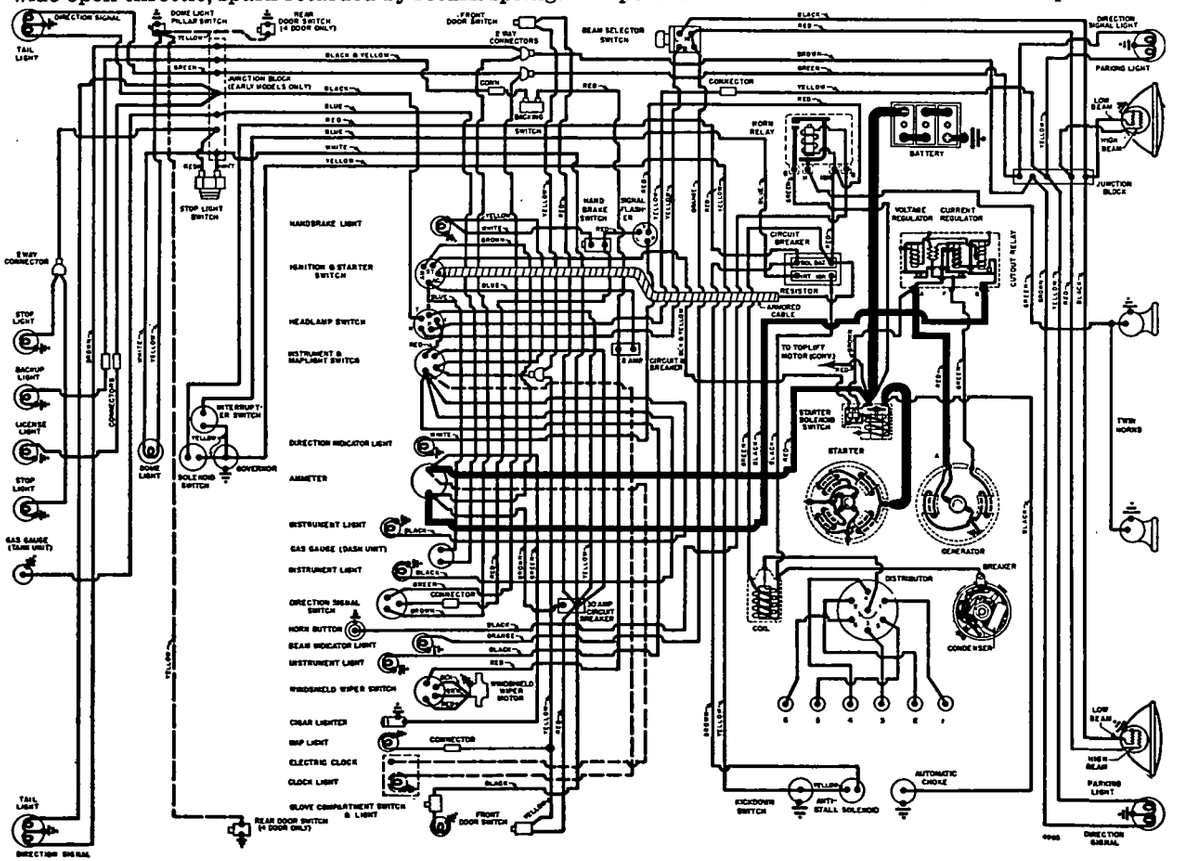

down screw, center pointer on scale, tighten screw. Loosen lock-plate clamp bolt, rotate distributor until timing light just goes out, tighten clamp bolt. Check Manual Adjustment (following).

Timing (Using Synchroscope)—Tool C-374. Clip lead to #1 spark plug, direct light on impulse neutralizer (mark correct graduation with paint), idle engine and adjust distributor as directed above.

Manual Adjustment—Set to give slight ping from 10-30 MPH acelerating with wide open throttle from 10 MPH. To adjust, loosen lock-plate hold-down screw, move plate (not more than 4° or .007" before or after initial setting) counter-clockwise (if no ping noted), clockwise to retard spark (if ping too severe), tighten screw

CARBURETOR

Carter (B&B) E7L1, L2, L3, or E7L4. 1½" Single barrel, downdraft type with Sisson automatic choke control, Slow-closing Throttle and Step-down Switch for hydraulically operated transmission.

See Carburetor Section for complete data.

►**E7L1, L2, L3 Note**—*To bring these carburetors up to latest E7L4 carburetor, see Carter (B&B) Carburetors in Carburetor Section.*

Settings (Idle Setting, Float Level, and Accelerating Pump): *See Tune-Up data.*

Metering Jet—*See Carter (B&B) Jet Table in Carburetor Section for complete data.*

Slow-closing Throttle: Solenoid type. Non-adjustable. *See Carburetion Equipment Section for complete data.*

Fast Idle: Throttle stopscrew stop dog linked to choke valve so that stop dog rotated and throttle opened to fast idle position when choke valve closed for starting. No adjustment required.

Automatic Choke: Sisson type.

See Carburetion Equipment Section for complete data.

Setting—With throttle 1/3 open, adjust by inserting gauge pin through hole in automatic choke lever shaft and slot in base mounting flange (to position shaft) and adjusting carburetor choke valve lever so that choke valve is closed tightly.

CARB. EQUIPMENT

Air Cleaner: AC No. 1544349 Heavy Duty Oil-bath type. Filter Element AC No. 21.

Servicing—Clean filter element in kerosene, clean out oil reservoir and fill to indicated level with SAE No. 50 oil (20W oil below 32°F., approx. 1 pint required). Service cleaner whenever sump is half filled with oil and dust sludge. NOTE—Crankcase ventilator air cleaner in oil filler cap should be cleaned in kerosene and re-oiled by dipping in SAE No. 50 engine oil at 1000 mile intervals.

Fuel Pump: AC No. 1539042. Diaphragm type fuel pump.

Replacement Pump—AC No. 577 or 588.

Pressure—3½-5½ lbs.

See Carburetion Equipment Section for complete data.

Fuel Tank Filter: Oilite metal filter in tank.

Servicing—If more than 2 pints water in tank, fuel will not pass filter. Remove filler cap and drain plug; draining tank. Disconnect fuel line at some point between pump and tank, blow out line and filter with air, increasing pressure as filter is cleaned. Flush tank with clean gasoline.

Gasoline Gauge: Auto-Lite Electric type.

Dash Unit—Auto-Lite No. 11821A.

Tank Unit—Auto-Lite No. 11538A.

See Carburetion Equipment Section for complete data.

BATTERY

Willard or Auto-Lite—17 Plate, 6 Volt, 120 Ampere Hour Capacity (20 hour rate).

Starting Capacity—152 amperes for 20 minutes.

Zero Capacity—300 amperes for 5.0 minutes. Five second voltage 4.4 volts.

Grounded Terminal—Positive (+) to engine.

Location—Under hood in left fender shield.

STARTER

Auto-Lite Models MCL-6101 (US), MAX-4090 (Canada after Eng. Nos. C45-1-1268C and C45-2-1619C).

Armature—Auto-Lite Nos. MCH-2039 (MCL-6101), **MAW-2213** (MAX-4090).

Drive—Solenoid pinion shift & overrunning clutch.

Rotation—Counter-clockwise at commutator end.

Brush Spring Tension—42-53 ozs. (new brushes).

Performance Data

Torque	R.P.M.	Volts	Amperes
0 ft. lbs.	5300	5.5	65
2.75 "	1630	5.0	200
8.7 "	600	4.0	400
8.0 "	Lock	2.0	410

Removal: Disconnect wires (tape battery lead), remove mounting bolts, withdraw starter (not necessary to disturb oil filter or oil lines).

Starting Switch: Auto-Lite Solenoid Type SS-4707 controlled by turning ignition switch past "on" position.

See Electrical Equipment Section for complete data.

GENERATOR

	Auto-Lite No.	Armature No.
Standard	GGW-6001A	GGW-2006F
Early Cars	GDZ-4801R	GDZ-2006F
State Police	GGJ-6001B	GGJ-2101F
	GGU-6001E	GGU-2006F
City Police & Taxi	GGJ-6001A	GGJ-2101F
	GGU-6001A	GGU-2006F

Two brush type current-voltage regulators.

Maximum Charging Rate—See table below.

Charging Rate Adjustment—None. See Regulator.

Performance Data (GGW-6001A)

Amperes	Volts	Cold—R.P.M.—Hot
0	6.4	870-970 — 950-1050
40	8.0	1800-2000 — 2150-2350

Performance Data (GDZ-4801R)

0	6.4	870-970 — 950-1050
35	8.0	1800-2000 — 2150-2350

Performance Data (GGJ-6001A, B)

50	8.0	1600 Max. —

Performance Data (GGU-6001A, E)

45	8.0	1550 Max. —

Rotation—Counter-clockwise at commutator end.

Brush Spring Tension—(GGW, GDZ, GGU) 35-53 ozs. (new brushes); (GGJ) 30-37 ozs. (new brushes).

Field Current—(GGW, GDZ, GGU) 1.6-1.8 amps., (GGJ) 1.76-1.95 amps., all at 6.0 volts.

Motoring Current—(GGW) 4.6-5.2 amps., (GDZ) 4.2-4.6 amps., (GGJ) 4.3-4.8 amps., (GGU) 5.5-6.5 amps., all at 6.0 volts.

Removal: Pivot mounted at left front of engine. To remove, take out pivot and clamp bolts.

Belt Adjustment: Loosen pivot and clamp bolts, pull out on generator until belt is snug (40-50 lbs. tension secured on scale attached to field frame) or ¼" belt deflection between generator and pump.

REGULATOR

Auto-Lite Regulator No.	for Auto-Lite Generator
VRP-4503B	GGW-6001A
VRP-4503A	GDZ-4801R
①VBA-4101A or VAV-4404A	GGJ-6001A, B
②VBA-4101B	GGU-6001A, E

①—VBA-4104A for negative ground.

②—VAV-4404B used on Early Cars, VBA-4104B for neg. grd.

See Electrical Equipment Section for complete data.

NOTE—Regulator case cover is sealed. Serviced on exchange basis if seals not broken (to remove cover)

Cutout Relay

Cuts In (VAV, VRP)—6.4-7.0 volts (set to 6.4-6.6 volts).

Cuts In (VBA)—6.35-6.75 volts (set to 6.4-6.6 volts).

Cuts Out (All)—4.1-4.8 volts (approx. 4-6 amps. dis.)

Contact Gap (All)—.015" minimum.

Air Gap (All)—.031-.034" with contacts open (check at hinge end of core).

Voltage Regulator

Setting (VAV, VRP)—7.2-7.5 volts at 70°F. **(VBA)**—7.0-7.2 volts at 70°F. See Electrical Equipment Section for settings at other temperatures.

Checking (without breaking seals) & Adjustment—*See Electrical Equipment Section.*

Contact Gap (VRP)—.012" min. (armature against stop pin).

Air Gap (All)—.048-.052" with contacts just opening.

Current Regulator

►**(Temperature Compensated Regulators)**

	Nominal Setting
VAV-4404-A, VBA-4101-A & 4-A	50
VAV-4404-B, VBA-4101-B & 4-B	45
VRP-4503-A	35
VRP-4503-B	40

►*CAUTION*—Nominal setting is approx. setting at 70°F. room temperature after regulator has been run (will be higher started cold). See Electrical Equipment Section for settings at various temperatures.

Checking (without breaking seals) & Adjustment—*See Electrical Equipment Section.*

Contact Gap (VRP)—.012" min. (armature against stop pin).

Air Gap (All)—.048-.052" with contacts just opening.

LIGHTING

Headlamps: Corcoran-Brown "Sealed Beam" type with new "Bull's-eye lens". Beam selector switch on toeboard controls upper and lower beams.

See Electrical Equipment Section for complete data.

Headlamp Adjustment—Aim upper beam straight ahead (hot spot center 3" below lamp center height).

Beam Indicator—Lighted when Country (upper) beams in use. Located on lower right corner of speedometer face.

Direction Signal Indicator—In lower left corner of speedometer dial.

Direction Signal Flasher—Chrysler No. 1257223.

Switches

Beam Selector—Chrysler No. 1253460.

Map Light—Chrysler No. 1244605.

Direction Signal—Chrysler No. 1235606.

CONTINUED N NEXT PA E

C NTINUED FROM PRECEDING PAGE

MISC. ELECTRICAL

CIRCUIT BREAKERS: Lighting—On back of lighting switch. Vibrating type, protects lighting circuits.

Direction Signal—On flasher behind instrument panel. Vibrating type. Protects direction signal

Auxiliary Circuit Breaker—8 ampere. Protects the Windshield Wipers and Back-Up Light.

Transmission Solenoid—Vibrating type mounted as an assembly with resistor unit.

FUSES: Clock—2 ampere. In clock lead.

Clock—2 ampere. In clock lead wire.

Radio—14 ampere. In fuse connector at radio.

HORNS: Auto-Lite Models HT-4011 or HW-4201 (Low Pitch), HT-4012 or HW-4202 (High Pitch). Dual horns operated by relay.

Horn Relay: Auto-Lite Models HRL-4103 or 4104. Connected through ignition switch, operates only when ignition "on".

Contacts Close—1.5-3.0 volts (seal to core with 4.0 volts maximum).

Contacts Open—.5 volt min. (open from seal).

Contact Gap—.026". **Air Gap**—.016-.020" (armature air gap with contacts closed but not sealed), .015-.018" (gap between armature leg and yoke with armature sealed to core).

ENGINE

ENGINE SPECIFICATIONS: Six cylinder, "L" head.

Bore—3 7/16". **Stroke**—4½".

Displacement—250.6 cu. ins. **Rated H.P.**—28.36.

Developed Horsepower—116 at 3600 RPM.

Compression Ratio—7.0-1 Std. cast-iron head.

Compression & Vacuum Reading—*See Tune-up data.*

ORIGINAL BORE & PISTONS: *See Chrysler Special Data.*

ORIGINAL BEARING SIZES: *See Chrysler Special Data.*

TIGHTENING TORQUES: *See Chrysler Special Data.*

CYLINDER HEAD: Tightening Torque & Cylinder Head Diagram—*See Chrysler Special Data.*

PISTONS: Aluminum alloy, U-slot, cam ground type. NOTE—Skirt cam ground (.010-.014" smaller diameter across pin bosses) and tapered (.0002-.0012" smaller diameter at top of skirt than at bottom).

Length—3⅞". **Weight**—18.5 ozs. (stripped).

Clearance—.0008" on thrust face ¾" from bottom of skirt. Ring land diameter .0305" larger than skirt.

Removal—Pistons and rods removed from above.

Fitting New Pistons: Check piston size with micrometer across large diameter at bottom of skirt. Insert .002" x ½" feeler between cylinder wall and piston (inverted, pin removed) on side opposite slot. Feeler pull 5-7 lbs. (with piston and block at 70°F).

Replacement Pistons: .005", .020", .030", .040", .060" OS.

NOTE—Cylinder recondition limits .0005" taper and .0005" out-of-round. Badly scored bores or with taper over .030" or out-of-round over .004" require reboring and honing to limits listed above.

Installing Pistons: Slot away from camshaft.

PISTON RINGS: Two compression, two slotted oil control, coated rings per piston, all above pin. Oil ring grooves drilled for oil drainage (lower groove slotted).

Ring	Width	End Gap	Side Clearance
Compr. (#1)	3/32"	.007-.015"	.0025-.004"
Compr. (#2)	3/32"	.007-.015"	.002-.0035"
Oil Contr. (#3,4)	5/32"	.007-.015"	.001-.0025"

Installing Rings—#1 Compr. with step on inner edge up. #2 Compr. with step on inner edge up or if step on outer edge install with step down.

Replacement Rings: .005" .020" .030" .040" .050" .060" OS.

PISTON PIN: Diameter—55/64". **Length**—2⅞". Floating type with locking ring at each end.

Pin Fit in Piston— —.0002" to + .0003". Thumb push fit with piston heated to 160°F.

Pin Fit in Rod Bushing—.0001-.0004". Tight thumb push fit at normal room temperature.

Replacement Pins: Standard size and .0006", .003", .008" Oversize.

CONNECTING ROD: Length—7⅞". **Weight**—32.4 ozs. with bolts less bearings. NOTE—Piston pin hole (upper bearing) bronze bushed.

Lower Bearing Diameter—2⅛". *See "Original Bearing Size" in Chrysler Special Data.*

Lower Bearing—Removable, precision type, thin babbitt on steel. No shims.

Clearance—.0005-.0015". **Sideplay**—.006-.011".

Bearing Adjustment: None (no shims). Replace bearings. Do not file rods or caps.

Replacement Bearings: .001", .002", .010", .012" U.S.

Installing Rods: Oil metering hole toward camshaft.

CRANKSHAFT: 4 bearings, 9 integral counterweights with vibration dampener on front end.

Bearing Diameter—2½". *See "Original Bearing Size" in Chrysler Special Data.*

Bearing Type—Removable, precision type, thin babbitt on steel. No shims.

Clearance—.001-.0015".

Bearing Adjustment: None (no shims). Replace bearings. Do not file bearing caps.

Replacement Bearings: .001", .002", .010", .012" U.S.

End Thrust: Taken by flange faces on rear (#4) main bearing. **Endplay**—.003-.007".

CAMSHAFT: 4 bearing. Non-adjustable chain drive. **Bearing Diameters**—#1, 2"; #2, 1 31/32"; #3, 1 15/16"; #4, 1 1/4".

Bearing Type—Removable steel-backed, babbitt-lined bushings (except #4 machined in block).

Clearance—.001-.003" (#1), .0015-.0035" (all others).

End Thrust: Taken by thrust plate behind camshaft sprocket hub. **Endplay**—.002-.006".

Timing Chain: Width 1". Pitch .500" (½"). Length 24" or 48 links.

Camshaft Setting: Sprockets marked. Mesh chain with sprockets turned so that '0' marks are adjacent and in line with a straightedge across shaft centers.

VALVES:	Head Diameter	Stem Diameter	Length
Intake	1 23/32"	.3405-.3415"	4 25/32"
Exhaust	1 17/32"	.3385-.3395"	4 25/32"

	Seat Angle	Lift	Stem Clearance
Intake	45°	3/8"	.001-.003"
Exhaust	45°	3/8"	.002-.004"

Valve Guides: Remove from above. Press new guides in (stepped end down) with upper end ⅞" below top of block (Tool CM-83), finish ream to .3425-.3435".

Valve Springs: Install with closely coiled end to top. Free Length 2".

	Spring Pressure	Length
Valve Closed	40-45 lbs.	1¾"
Valve Open	107-115 lbs.	1⅜"

Valve Lifters: Mushroom type (remove from below). Stem Diam. ⅝". Ream holes from above (pilot in valve guide). Oversizes .001", .008", .030" & .060".

Lifter Clearance in Block—.000-.001".

VALVE TIMING

Tappet Clearance: .008" Intake, .010" Exh. (hot and idling). NOTE—Tappet screws self-locking (no locknuts). Remove right front wheel and lower wheel housing panel for access to valves.

Valve Timing: See Camshaft Setting above.

Intake Valves—Open 12° BTDC. Close 44° ALDC.

Exhaust Valves—Open 50° BLDC. Close 6° ATDC.

Valve Timing Check—With .014" (cold) tappet clearance #6 intake valve should open with #6 piston within range of 5° to 17° or .011" to .122" BTDC with 5th to 17th graduation before DC mark on impulse neutralizer aligned with pointer on chain case cover. Reset tappet clearance to running clearance .008" Hot.

LUBRICATION

Engine Oiling System: Pressure through new Full-flow oil filter to main and connecting rod bearings, camshaft bearings, and timing chain. "Rotor" type oil pump used.

Crankcase Capacity—5 quarts (refill).

Normal Oil Pressure—45-60 lbs. at 45 MPH. with warm oil.

Oil Pressure Relief Valve—Under plug ahead of starter. Has bleed duct which connects with idle oil line to provide additional oil at idling speeds. Adjustable by replacing spring. 3 types: 1) Plain—unpainted. 2) Light—painted Red. 3) Heavy—painted Green. CAUTION—Install replacement spring of same color as original spring.

Oil Pump: "Rotor" type on right side of crankcase. **Servicing**—*See "Oil Pump" in Chrysler Special Data.*

Oil Filter: "Full-flow" type. All oil under full pressure passes through filter before entering oil passage. Safety valve in filter opens if element is clogged allowing oil to pass directly to engine.

Servicing—Install new filter element and cover gasket at 5000 mile intervals (or earlier if required). Change oil at same time. **Checking:** If oil pressure drops to 35-45 lbs. with warm oil, filter element may be clogged and should be replaced, to bring oil pressure to normal 45-60 lbs. above 45 MPH.

Oil Pressure Gauge: Auto-Lite No. 11823A. Not electric.

COOLING

Cooling System: Positive circulation with pump on front of engine, by-pass thermostat, and water distribution tube in cylinder block behind pump.

Capacity—17 quarts.

Water Pump: Packless type with grease fitting.

See Water Pump Section for complete data.

Removal—Drain cooling system, remove fan belt, disconnect hoses at pump, remove pump mounting studs, lift fan and pump off.

Belt Adjustment—*See Generator Belt Adjustment.*

Thermostat: By-pass type in cyl. head water outlet.

Setting—Starts to open 157-162°F. Fully open 183°F.

Temperature Gauge: Auto-Lite No. 11822A. Not elect.

CLUTCH

Borg & Beck Models 10A7 (Std.), 9A7 (With Fluid Drive), 11A6 (Taxicab). Single plate, dry disc.

Identification Note—Cover stamped 953 (9A7), 930 (10A7), 931 (11A6).

See Clutch Section for complete data.

Facings—Woven type, 2 required.

	Inside Diam.	Outside Diam.	Thickness
9A7	6"	9¼"	.125" (⅛")
10A7	7"	10"	.125" (⅛")
11A6	6½"	11"	.125" (⅛")

Pedal Adjustment: Should just clear toeboard (adjust stopscrew on lower end of pedal) and have 1" free travel (adjusting nut on connector link at fork).

Removal: Remove release fork pull-back spring, Transmission (see Transmission) and housing underpan. Pull out clutch release bearing and sleeve. Mark cover and flywheel (or driving plate on Fluid Drive). Take out cover screws, remove assembly.

FLUID DRIVE

Chrysler—Fluid coupling at rear of engine. Optl.

See Miscellaneous Section for complete data.

Oil Level: Keep to level of filler hole. Check at first 1000 miles and every 10,000 miles. Manufacturer recommends MOPAR Fluid Drive Fluid.

Removal: Remove transmission and clutch (see TRANSMISSION and CLUTCH), take off driver flange stud nuts (Tool C-589), lower fluid drive assembly out.

TRANSMISSION

STANDARD

Own Make—All helical gear, constant-mesh, synchro-mesh (Second & High), sliding gear (Low & Reverse). *See Transmission Section for complete data.*

Transmission Control: Manual steering column shift.

See Transmission Section for complete data.

Removal: Jack up front end of car, disconnect front universal (loosen companion flange nut if disassembling transmission—see Chrysler Special Data for Propeller Shaft Center Bearing Removal on 7 pass.). Disconnect speedometer cable, hand brake cable, gear-shift rods. Remove trans.-to-clutch housing capscrews and nuts. Pull unit to rear, down and out of car. NOTE—Use pilot studs when installing assembly.

TRANSMISSION

PTIONAL EQUIPMENT

Hydraulically Operated Type (with Fluid Drive). Semi-automatic, four-speed transmission with hydraulic actuation and electrical control.

See Transmission Section for complete data.

Transmission Oil—3 pints, 10-W engine oil.

Transmission Control: See Transmission article for adjustment instructions.

See Transmission Section for complete data.

Kickdown Solenoid—Auto-Lite No. SSS-4003.

Governor—Auto-Lite No. TG-4205R.

Kickdown Switch—Part of carburetor assembly.

Ignition Interrupter Switch—On right side of transmission above Governor.

Removal: Remove access cover on right rear side of floorboard under front floor mat, disconnect speedometer cable, and governor, solenoid, and interrupter switch wires at transmission. Remove governor and solenoid. Disconnect hand brake cable at brake band, remove cable and cable anchor bracket. Remove brake support band, adjusting bolt bracket and lever as an assembly. Disconnect front universal (push yoke back), and gearshift rods at transmission. Drain transmission, **replace drain plug.** Disconnect transmission mounting bolts and lower assembly out of car.

►*INSTALLATION CAUTION*—Rear face of clutch housing and lower pan must be in correct alignment. Misalignment can cause hard shifting when transmission installed.

UNIVERSALS

Detroit Universal Series 7200 (C-45-1), 7300 (C-45-2). Cross type with roller bearings.

See Universals Section for complete data.

Propeller Shaft Center Bearing: Used on 7 Passenger.

REAR AXLE

Own Make—Semi-floating, hypoid gear type with Hotchkiss Drive.

See Rear Axle Section for complete data.

Axle Ratio	Std. Trans.	Hydr. Trans.
Royal & Windsor	3.9-1 (39:10)	3.73-1 (41:11)①
Station Wagon	4.1-1 (41:10)	3.91-1 (43:11)
Long Wheelbase	4.3-1 (43:10)	3.91-1 (43:11)

①—Optl. ratio 3.54-1 (39:11).

Backlash—.006-.010". Screw adjustment.

Removal: Disconnect rear universal, remove axle shafts (see below) and carrier assembly capscrews.

Axle Shaft Removal—Remove wheel, hub, and drum assembly (use screw type hub puller—Tool C-675), block brake pedal, disconnect brake line at wheel cylinder, remove axle shaft key, install sleeve (Tool C-745) in oil seal, remove brake support (oil seal mounted in support), pull shaft and bearing (use C-499 puller). NOTE—Use puller C-293-C to remove bearing from shaft, puller C-748 or C-358 to remove inner oil seal, drift C-201 to install seal.

Axle Shaft Outer Oil Seal: New leather type mounted on brake support (backing plate).

Wheel Bearing Adjustment: Shims between backing plate and axle housing. With wheel and hub removed, check endplay with dial indicator. To adjust, remove backing plate (see above), add or remove shims (furnished .010", .0125", .015", .030" thick) equally at both wheels. **Endplay**—.003-.008".

SHOCK ABSORBERS

New "Hydra-Lizer" hydraulic, direct-acting, non-adjustable type.

See Shock Absorber Section for complete data.

FRONT SUSPENSION

Front Suspension: Independent, linked parallelogram type with coil springs and direct acting shock absorbers.

See Front Suspension Section for complete data.

Kingpin Inclination—4¾° to 6° crosswise.

Camber—0° to Pos. ¾°. (¼-½° higher on left).

Caster—Neg. 2° preferred. Limits Neg. 1° to Neg. 3°.

Toe In—0" preferred. Limits 0" to 1/16". Adjust both tie rods equally.

Steering Geometry—Inner wheel 21½° plus or minus 1°. Outer 20°.

STEERING GEAR

Own Make—3 tooth Worm-and-Roller. Similar to Gemmer model 335.

NOTE—See Gemmer 305, 335 & 375 article for data.

See Steering Gear Section for complete data.

BRAKES

Service: Chrysler "Safe-guard" Lockheed Hydraulic.

Front Wheels—Two-cylinder type (front shoe anchored at bottom and actuated by upper cylinder, rear shoe anchored at top and actuated by lower cylinder).

Rear Wheels—Double anchor type with single double-acting wheel cylinder.

See Brake Section for complete data.

Wheel Cylinders—1⅛" bore. Single acting (front), double acting (rear wheels).

Drums—Centrifuse. Diameter 11".

Lining—Molded Asbestos. 2" wide. 13/64" thick. Length per wheel 23" (front wheels), 20 3/8" (rear wheels).

Clearance—.006" at each end of all shoes.

Braking Power—60% (front wheels), 40% (rear).

Hand Brake: On drum at rear of transmission.

Adjustment—*See "Hand Brake Notes" in Chrysler Special Data.*

Drum—Cast-iron. 6" (7" on cars with Hydraulic transmission).

Lining—Width 2" (2½" on 7" type). Thickness 5/32". Length 15 3/8" (20" on 7" type).

Clearance—.015-.020" around band.

MISC. MECHANICAL

WINDSHIELD WIPER: Auto-Lite Model EWJ-4001, EWJ-4003 (Conv. Coupe). Electric type with circuit breaker mounted on control switch.

See Miscellaneous Section for complete data.

CONVERTIBLE TOP CONTROL: Auto-Lite Model EWM-4001. Electric type.

See Miscellaneous Section for complete data.

MODEL IDENTIFICATION

SERIAL NUMBER: On left front door hinge post.
1949 Numbers—6,772,001 Up (Saratoga), 7,094,001 Up (New Yorker).
ENGINE NUMBER: Stamped on boss on left side of cylinder block between Nos. 1 and 2 cylinders.

TUNE-UP

COMPRESSION PRESSURE: 120-150 lbs. at cranking speed of 150 RPM.
VACUUM READING: Steady 18-21" idling at 6 MPH.
FIRING ORDER: 1-6-2-5-8-3-7-4. See diagram.
SPARK PLUG GAPS: .038". Limits plus or minus .002".
Plugs—Auto-Lite AR-5. 14 mm. Metric.
DISTRIBUTOR: Breaker Gap—.018".
Cam Angle—27° to 30½° (closed).
Breaker Arm Spring Tension—17-20 ozs.
Automatic & Vacuum Advance—*See Ignition.*
Condenser Capacity—.25-.28 microfarad.
IGNITION TIMING: 2° or .002" ATDC.
Timing Procedure—*See Ignition Timing.*
Timing Mark—Vibration Dampener marked "DC" at top dead center position with 15-1° graduations before and after this point. Set timing with 2° graduation **after** DC mark at pointer on chain case cover, then set manual (octane selector) adjustment.
Manual (Octane Selector) Adjustment—Set for slight ping in 10-30 MPH. range when accelerating with wide open throttle. Do not vary initial timing more than 4° advance or retard.
CARBURETION:
Idle Setting—Set idle adjusting screw for smooth idling with warm engine (idle screw ½-1½ turns open), turn screw out for richer mixture.
Idle Speed—450-475 RPM with warm engine.
Float Level—Top of float 5/64", ±1/64" below top surface of carburetor body casting.
Accelerating Pump—Center hole (med. stroke) Normal. Inner hole—Summer, Outer hole—Winter, for extreme temperatures.
Choke Setting: Remove Air Cleaner and choke cover. Line up hole in armature and magnet core with shank end of ⅛" drill, holding armature tight against magnet (Tool AC-620 available for use in place of drill). Loosen automatic choke lever clamp-screw. Hold throttle open approx. 1/3 open, move choke lever to close choke tight, tighten screw.
Fuel Pump Pressure: 3½-5½ lbs.
MANIFOLD HEAT CONTROL: Automatic thermostatic type. See that valve operates freely. When installing coil, wind free end up **approx. 1¼ turns,** not over 1½ turns or under 1 turn, hook end over stop stud.
VALVE TAPPET CLEARANCE: .008" Intake, .010" Exhaust, Hot. NOTE—Self-locking tappet screws used.
STARTING: *See Battery, Starter, Generator, Regulator.*

IGNITION

IGNITION SWITCH: Mitchellock. Combination ignition-starter switch. Starter operates when key held fully to the right. Key automatically returns to "on" position. Coil lead protected by armored cable through fire wall.
COIL: Auto-Lite No. CR-4001. Mounted directly above distributor on ignition bracket.
Ignition Current—2.25 amperes idling, 5 stopped.
CONDENSER: Auto-Lite No. IG-3927F.
Capacity—.25-.28 microfarad.

DISTRIBUTOR: Auto-Lite No. IAP-4101-1. Automatic advance type with Vacuum Spark Control.
Breaker Plate Identification—Maximum vacuum advance limited by slot in plate. Plate marked #10.
Breaker Gap—.018".
Cam Angle—27° to 30½° (closed).
Breaker Arm Spring Tension—17-20 ounces.
Rotation—Clockwise viewed from the top.

Automatic Advance

Degrees	Distr. R.P.M.	Degrees	Eng. R.P.M.
Start	350	0	700
3	400	6	800
5	700	10	1400
7	1000	14	2000

Vacuum Spark Control: Auto-Lite Unit. On distributor, linked directly to breaker plate. Provides additional advance at speeds above idling except when engine accelerated or operated with wide open throttle (spark retarded by return spring in unit).

Vacuum Advance

Distr. Degrees	Eng. Degrees	Vacuum (" of HG)
Start	0°	5"
2°	4°	6¾"
5°	10°	9½"
8°	16°	12¼"
10°	20°	14"

Manual Adjustment: Provides for minor changes in ignition timing at distributor. See Ignition Timing.

Distributor Removal: Mounted on left side of crankcase. To remove, disconnect vacuum line, take out hold-down screw in lock plate. **Installation Note**—Install distributor with #1 piston in firing position and rotor opposite #1 segment in cap.

IGNITION TIMING

Std. Setting—Initial setting (for regular non-premium fuel) as shown below. See Manual adjustment (following) for Final Setting.

	Flywheel Degrees	Piston Position
All Engines	2° ATDC	.002" ATDC

NOTE—Impulse neutralizer marked at TDC with 12 (1°) graduations on either side.
Timing (Using Timing Light)—Connect timing light between distributor primary terminal and battery terminal on generator regulator. Set #1 or #8 piston in firing position (see setting above) with correct mark on impulse neutralizer aligned with pointer on chain case cover. Loosen lock-plate hold-down screw, center pointer on scale, tighten screw. Loosen lock-plate clamp bolt, rotate distributor until timing light just goes out, tighten clamp bolt. Check Manual Adjustment (following).
Timing (Using Synchroscope)—Tool C-374. Clip lead to #1 spark plug, direct light on impulse neutralizer (mark correct graduation with paint), idle engine and adjust distributor (as above).

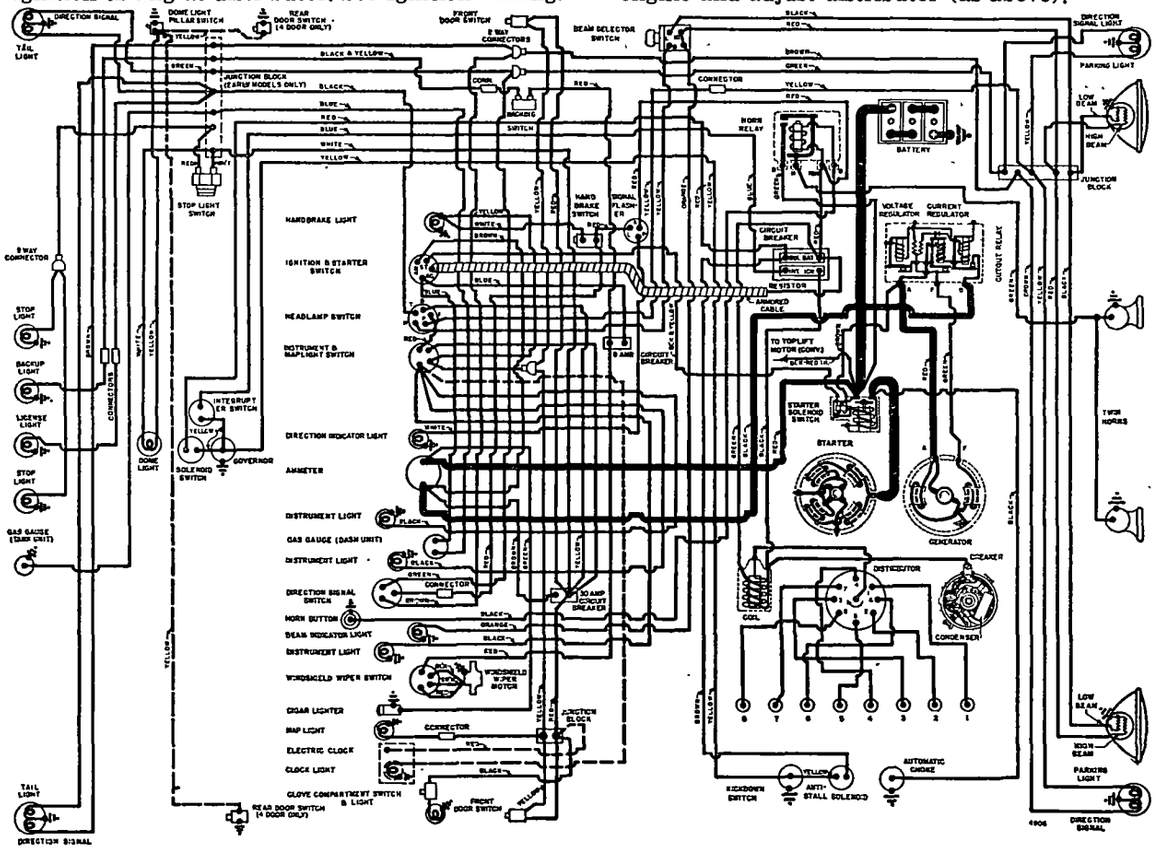

Manual Adjustment—Set to give slight ping from 10-30 MPH accelerating with wide open throttle from 10 MPH. To adjust, loosen lock-plate hold-down screw, move plate (not more than 4° or .007" before or after initial setting) counter-clockwise (if no ping), clockwise to retard spark (if too severe).

CARBURETOR

Carter (B&B) E7J1, J2, J3 or E7J4. 1½" Single barrel, downdraft type with Sisson automatic choke control, Slow-closing Throttle and Step-down Switch for hydraulically operated transmission.
See Carburetor Section for complete data.

►**E7J1, J2, J3 Note**—*To bring these carburetors up to latest E7J4 carburetor, see Carter (B&B) Carburetors in Carburetor Section.*

Settings (Idle Setting, Float Level, and Accelerating Pump): *See Tune-Up data.*
Metering Jet—*See Carburetor Section for Carter (B&B) Downdraft Carburetor Jet Specification Table.*

Slow-Closing Throttle: Solenoid type. Non-adjustable.
See Carburetion Equipment Section for complete data.

Fast Idle: Throttle stopscrew stop dog linked to choke valve so that stop dog rotated and throttle opened to fast idle position when choke valve closed for starting. No adjustment required.

Automatic Choke: Sisson type.
See Carburetion Equipment Section for complete data.
Setting—Remove Air Cleaner and choke cover. Line up hole in armature and magnet core with shank end of ⅛" drill, holding armature tight against magnet (Tool AC-620 available for use in place of drill). Loosen automatic choke lever clampscrew. Hold throttle open approx. 1/3 open, move choke lever to close choke valve tight, tighten clampscrew.

CARB. EQUIPMENT

Air Cleaner: AC No. 1544405 Heavy Duty oil-bath type. Filter Element AC No. 20.
Servicing—Clean filter element in kerosene, clean out oil reservoir and fill to indicated level with SAE No. 50 oil (20W oil below 32°F., approx. 1 pint required). Service cleaner whenever sump half-filled with oil and dust sludge. NOTE—Crankcase ventilator air cleaner in oil filler cap should be cleaned in kerosene and re-oiled by dipping in SAE No. 50 engine oil at 1000 mile intervals.

Fuel Pump: AC No. 1539215. Diaphragm type.
Replacement Pump—AC No. 514 or 590.
Pressure—3½-5½ lbs.
See Carburetion Equipment Section for complete data.

Fuel Tank Filter: Oilite metal filter in tank.
Servicing—If more than 2 pints water in tank, fuel will not pass filter. Remove filler cap and drain plug, draining tank. Disconnect fuel line at some point between pump and tank, blow out line and filter with air, increasing pressure as filter is cleaned. Flush tank with clean gasoline.

Gasoline Gauge: Auto-Lite electric type.
Dash Unit—Auto-Lite No. 11821A.
Tank Unit—Auto-Lite No. 11539A.
See Carburetion Equipment Section for complete data.

BATTERY

Auto-Lite Type 2H-135RD. 6 volt, 19 plate, 135 Ampere Hour Capacity (20 hour rate).
Starting Capacity—170 amperes for 20 minutes.
Grounded Terminal—Positive (+) to engine.
Location—Under hood in left fender shield.

STARTER

Auto-Lite Model MCL-6101. Armature MCH-2039.
Drive—Overrunning clutch (solenoid pinion shift).
Rotation—Counter-clockwise at commutator end.
Brush Spring Tension—42-53 ozs. (new brushes).
Cranking Engine—150 RPM., 175 amperes, 5.4 volts.

Performance Data

Torque	R.P.M.	Volts	Amperes
0 ft. lbs.	5300	5.5	65
2.75 "	1630	5.0	200
8.7 "	600	4.0	400
8.0 "	Lock	2.0	410

Removal: Disconnect wires (tape battery lead), remove mounting bolts, withdraw starter (not necessary to disturb oil filter or oil lines).
Starting Switch: Auto-Lite Solenoid Type SS-4707 controlled by turning ignition switch past "on" position.
See Electrical Equipment Section for complete data.

GENERATOR

	Auto-Lite No.	Armature No.
Standard (C-46)	GGU-6001A	GGU-2006F
Standard (C-47)	GGJ-6001A	GGJ-2101F
State Police (C-46)	GGJ-6001B	GGJ-2101F
City Police (C-46)	GGJ-6001A	GGJ-2101F
Cars without Hydr. Trs.	GGW-6001A	GGW-2006F

Two brush type current-voltage regulators.
Maximum Charging Rate—See table below.
Charging Rate Adjustment—None. See Regulator.

Performance Data (GGU-6001A)

Amperes	Volts	Cold—R.P.M.—Hot
45	8.0	1550 Max. ———

Performance Data (GGJ-6001A, B)

50	8.0	1600 Max. ———

Performance Data (GGW-6001A)

0	6.4	870-970	950-1050
40	8.0	1800-2000	2150-2350

Rotation—Counter-clockwise at commutator end.
Brush Spring Tension—**(GGU, GGW)** 35-53 ozs. (new brushes), **(GGJ)** 30-37 ozs. (new brushes).
Field Current—**(GGU, GGW)** 1.6-1.8 amps., **(GGJ)** 1.76-1.95 amps., all at 6.0 volts.
Motoring Current—**(GGU)** 5.5-6.5 amps., **(GGJ)** 4.3-4.8 amps., **(GGW)** 4.6-5.2 amps., all at 6.0 volts.
Removal: Pivot mounted at left side of engine at front. To remove, take out pivot and clamp bolts.
Belt Adjustment: Loosen pivot and clamp bolts, pull out on generator until belt is snug or 40-50 lbs. tension secured on scale attached to field frame.

REGULATOR

Auto-Lite Regulator No.	for Auto-Lite Generator
①VBA-4101B	GGU-6001A
②VBA-4101A or VAV-4404A	GGJ-6001A, B
VRP-4503B	GGW-6001A

①—VAV-4404B used on Early Cars, VBA-4104B for neg. grd.
②—VBA-4104A for negative ground.
See Electrical Equipment Section for complete data.
NOTE—Regulator case cover is sealed. Serviced on exchange basis if seals not broken (to remove cover).

Cutout Relay

Cuts In (VAV, VRP)—6.4-7.0 volts (set to 6.4-6.6 volts).
Cuts In (VBA)—6.35-6.75 volts (set to 6.4-6.6 volts).
Cuts Out (All)—4.1-4.8 volts (approx. 4-6 amps. disch.).
Contact Gap (All)—.015" minimum.
Air Gap (All)—.031-.034" with contacts open (check at hinge end of core).

Voltage Regulator

Setting (VAV, VRP)—7.2-7.5 volts at 70°F., **(VBA)** 7.0-7.2 volts at 70°F. See Electrical Equipment Section for settings at other temperatures.
Checking (without breaking seals) & Adjustment—*See Electrical Equipment Section.*
Contact Gap (VRP)—.012" min. (armature against stop pin).
Air Gap (All)—.048-.052" with contacts just opening.

Current Regulator
►**(Temperature Compensated Regulators)**

	Nominal Setting
VBA-4101B	45
VBA-4101A, VAV-4404A	50
VRP-4503B	40

►*CAUTION*—Nominal setting is approx. setting at 70°F. room temperature after regulator has been run (will be higher started cold). See Electrical Equipment Section for settings at various temperatures.
Checking (without breaking seals) & Adjustment—*See Electrical Equipment Section.*
Contact Gap (VRP)—.012" min. (arm against stop).
Air Gap (All)—.048-.052" with contacts just opening.

LIGHTING

Headlamps: Corcoran-Brown "Sealed Beam" type with new "Bull's-eye lens". Beam selector switch on toeboard controls upper and lower beams.
See Electrical Equipment Section for complete data.
Headlamp Adjustment—Aim upper beam straight ahead (hot spot center 3" below lamp center height).
Beam Indicator—Lighted when Country (upper) beams in use. Located on lower right corner of speedometer face.
Direction Signal Indicator—In lower left corner of speedometer face.
Direction Signal Flasher—Chrysler No. 1257223.

Switches

Beam Selector—Chrysler No. 1253460.
Map Light—Chrysler No. 1244605.
Direction Signal—Chrysler No. 1235606.

MISC. ELECTRICAL

CIRCUIT BREAKERS: Lighting—30 ampere. Vibrating type, protects lighting circuits.
Aux. Circuit Breaker—8 ampere. Protects Windshield Wipers and Back-Up Light.
Direction Signal—On flasher behind instrument panel. Vibrating type. Protects dir. signal circuit.
Transmission Solenoid—Vibrating type mounted as an assembly with resistor unit.
Window Lift—Mounted on dash alongside Window Lift Motor.
Convertible Top—Mounted near control switch. Thermostatic type. Opens at 80 amperes in 1 minute or less.
FUSES: Clock—3 ampere. In clock lead.
Radio—14 ampere. In fuse connector at radio.
HORNS: Auto-Lite Model HW-4101 (Low Pitch), HW-4102 (High Pitch). Dual horns operated by relay.
Horn Relay: Auto-Lite Model HRL-4103 (Early), 4104 (Late). Connected through ignition switch, operated only with ignition "on".
Contacts Close—1.5-3.0 volts (seal to core with 4.0 volts maximum).

C NTINUED ON NEXT PAGE

C NTINUED FR M PRECEDING PA E

Contacts Open—.5 volt min. (open from seal).

Contact Gap—.026". **Air Gap**—.016-.020" (armature air gap with contacts closed but not sealed), .015-.018" (gap between armature leg and yoke with armature sealed to core).

ENGINE

ENGINE SPECIFICATIONS: 8 cyl., "L" head type.

Bore—3¼". **Stroke**—4⅞".

Displacement—323.5 cu. ins. **Rated H.P.**—33.80.

Developed Horsepower—135 at 3200 RPM.

Compression Ratio—7.25-1 Std. cast-iron head.

Compression & Vacuum Reading—*See Tune-Up data.*

ORIGINAL BORE & PISTONS: *See Chrysler Special Data.*

ORIGINAL BEARING SIZES: *See Chrysler Special Data.*

TIGHTENING TORQUES: *See Chrysler Special Data.*

CYLINDER HEAD: Tightening Torque & Cylinder Head Diagram—*See Chrysler Special Data.*

PISTONS: Aluminum alloy, U-slot, cam ground type. *NOTE*—Skirt cam ground (.010-.014" smaller diameter across pin bosses) and tapered (.0005-.0015" smaller diameter at top of skirt than at bottom).

Length—3⅞". **Weight**—16.5 ozs. (stripped).

Removal—Pistons and rods removed from above.

Clearance—.0008" on thrust face ¾" from bottom of skirt. Ring land diameter .0305" larger than skirt.

Fitting New Pistons: Measure piston size with micrometer across thrust faces (right angles to pin bosses) ¾" from bottom of skirt. Fit piston in bore using .002" x ½" feeler, insert piston upside down in bore with feeler 90° from pin bosses on side opposite slot. Clearance correct when 5-7 lbs. pull required to withdraw feeler with bore and piston at 70°F.

NOTE—Cylinder recondition limits .0005" taper and .0005" out-of-round. Badly scored bores or with taper over .030" or out-of-round over .004" require reboring and honing to limits listed above.

Replacement Pistons: .005", .020", .030", .040", .060" OS.

Installing Pistons: "U" slot away from valves.

PISTON RINGS: Two compression, two slotted oil control, coated rings per piston, all above pin. Oil ring grooves drilled for oil drainage (lower groove slotted).

Ring	Width	End Gap	Side Clearance
Compr. (#1)	3/32"	.007-.015"	.0025-.004"
Compr. (#2)	3/32"	.007-.015"	.002-.0035"
Oil Contr. (#3,4)	5/32"	.007-.015"	.001-.0025"

Installing Rings—#1 Compr. with step on inner edge up. #2 Compr. with step on inner edge up or if step on outer edge install with step down.

Replacement Rings: .005" .020" .030" .040" .050" .060" OS.

PISTON PIN: Diameter—55/64". **Length**—2¾". Floating type with locking ring at each end.

Pin Fit in Piston— —.0002" to +.0003". Thumb push fit with piston heated to 160°F.

Pin Fit in Rod Bushing—.0001-.0004". Tight thumb push fit at normal room temperature.

Replacement Pins: Standard size and .0006", .003", .008" oversize.

CONNECTING ROD: Length—9". **Weight**—34 ozs. with bolts less bearings.

NOTE—Pin hole in rod bronze-bushed.

Lower Bearing Diameter—2 3/16". *See "Original Bearing Size" in Chrysler Special Data.*

Lower Bearing—Removable, precision type, thin babbitt on steel. No shims.

Clearance—.0005-.0015". **Endplay**—.006-.011".

Bearing Adjustment: None (no shims). Replace bearings. Do not file rods or caps.

Replacement Bearings: .001", .002", .010", .012" U.S.

Installing Rods: Offset type. Wide side of bearing to rear for #1, 3, 5, 7; to front for #2, 4, 6, 8. Oil spray hole in rod toward camshaft on all rods.

CRANKSHAFT: 5 bearing, 8 integral counterweights with vibration dampener on front end.

Bearing Diameter—2 45/64". *See "Original Bearing Size" in Chrysler Special Data.*

Bearings—Removable, precision type, thin babbitt on steel. No shims.

Clearance—.001-.0015".

Bearing Adjustment: None (no shims). Replace bearings. Do not file bearing caps.

Replacement Bearings: .001", .002", .010", .012" U.S.

End Thrust: Taken by flange faces on rear (#5) main bearing. **Endplay**—.003-.007".

CAMSHAFT: 6 bearing. Non-adjustable chain drive.

Bearing Diameters—#1, 2 1/16"; #2, 2 1/32"; #3, 2"; #4, 1 31/32"; #5, 1 15/16"; #6, 1 3/8".

Bearings—Removable, steel-backed, babbitt-lined bushings (except #6—machined in crankcase).

Clearance—.001-.003" (#1), .0015-.0035" (all others). NOTE—Replacement bearings are finished (reaming, scraping, or burnishing not required).

End Thrust: Taken by thrust plate behind camshaft sprocket hub. **Endplay**—.002-.006".

Timing Chain: Width 1¼". Pitch .500" (½"). Length 23½" or 47 links.

Camshaft Setting: Sprockets marked. Mesh chain with sprockets turned so that "0" marks are adjacent and in line with a straightedge across shaft centers.

VALVES:	Head Diameter	Stem Diameter	Length
Intake	1 17/32"	.340-.341"	5 7/8"
Exhaust	1 11/32"	.3395-.3405	5 7/8"

	Seat Angle	Lift	Stem Clearance
Intake	45°	⅜"	.0015-.0035"
Exhaust	45°	⅜"	.002-.004"

Valve Guides: Remove from above. Press new guides in with stepped end down and upper end 1" (Intake), 1 3/32" (Exhaust), below top of block. Ream guides to inside diameter of .3425-.3435" (Tool DD-849). Exhaust guides counterbored on upper end.

Valve Springs: Install springs with close-coil end to top. Spring Free Length 2".

	Spring Pressure	Spring Length
Valve Closed	40-45 lbs.	1¾"
Valve Open	107-115 lbs.	1⅜"

Valve Lifters: Mushroom type (remove from below with camshaft out of engine). Stem diameter ⅝". Service by reaming lifter holes (work from above piloting reamer Tool C-265 in valve guide) and installing oversize lifters. **Clearance**—.000-.001".

Replacement Lifters—.001", .008", .030", .060" oversize.

VALVE TIMING

Tappet Clearance: .008" Intake, .010" Exhaust, Hot. Self-locking tappet screws used. NOTE—Remove right front wheel and lower wheel housing panel for access to valves.

Valve Timing: See Camshaft Setting above.

Intake Valves—Open 12° BTDC. Close 44° ALDC.

Exhaust Valves—Open 50° BLDC. Close 6° ATDC.

Valve Timing Check—With .014" tappet clearance (Cold), #8 intake valve should open with #8 piston 5° to 17° or .011" to .122" BTDC. with 5th to 17th graduation before DC mark on impulse neutralizer aligned with pointer on chain case cover. Reset tappet clearance to .008" Hot running clearance.

LUBRICATION

Engine Oiling System: Pressure through Full-flow oil filter to main and connecting rod bearings, camshaft bearings, and timing chain. "Rotor" type oil pump on right side of engine.

Crankcase Capacity—6 quarts (refill).

Normal Oil Pressure—45-60 lbs. above 45 MPH. with warm oil. CAUTION—Pressure of 40-45 lbs. at driving speeds indicates oil filter may be clogged and should be replaced.

Oil Pressure Relief Valve—Under cap on lower left side of crankcase. Has bleed duct which connects with new idle oil passage to provide additional oil at idling speeds. Valve has screw adjustment but factory setting seldom requires changing. Opens at 40-45 lbs.

Oil Pump: "Rotor" type on right side of crankcase.
Servicing—*See "Oil Pump" in Chrysler Special Data.*

Oil Filter: "Full-flow" type. All oil under **full** pressure passes through filter before entering oil passage. Safety valve in filter opens if element is clogged allowing oil to pass directly to engine.

Servicing—Install new filter element and cover gasket at 5000 mile intervals (or earlier if required). Change oil at same time. **Checking:** If oil pressure drops to 40-45 lbs. with warm oil, filter element may be clogged and should be replaced, to bring oil pressure to normal 45-60 lbs. above 45 MPH.

Oil Pressure Gauge: Auto-Lite No. 11823A. Not electric.

COOLING

Cooling System: Pressure type with pressure valve (relief valve) in filler cap, and positive circulation with pump on front of engine, by-pass type thermostat, and water distribution tube in block.

Capacity—21 quarts.
Pressure Valve—In filler cap. Opens at 3 lbs.

Water Pump: Packless type with shaft mounted on 2 ball bearings with lubricant fitting for bearing lubrication and grease nipple for seal lubrication. *See Water Pump Section for complete data.*
Removal—Drain cooling system. Remove fan blade assembly, fan belt, by-pass hose and elbow, inlet hose, pump mounting capscrews. Take pump off. Spacer behind pump need not be taken off engine.
Belt Adjustment—*See Generator Belt Adjustment.*

Thermostat: In cylinder head water outlet.
Setting—Starts to open 157-162°F. Fully open 183°F. *INSTALLATION NOTE*—Install thermostat with 2 ports facing front, 2 ports to rear. Some thermostats

equipped with heavy shield welded on bottom (for bellows protection at high speeds), this type thermostat cannot be installed on earlier cars.

Temperature Gauge: Auto-Lite No. 11822A. Not electric.

CLUTCH

Borg & Beck Model 10A6 with "Borglite" driven member. Single plate, dry disc type. NOTE—Cover Assembly No. 961 stamped on cover
See Clutch Section for complete data.

Facings—Woven type, 2 used. Inside Diameter 6". Outside Diameter 10". Thickness .125" (⅛").

Pedal Adjustment: Set pedal to just clear toeboard by loosening locknut and turning stopscrew at lower end of pedal arm above shaft. Set pedal for 1" free travel by turning clutch release fork adjusting nut on connector link at clutch release fork.
CAUTION—Do not disturb turnbuckle on pedal link (controls pedal over-center spring tension).

Removal: Remove Transmission (see TRANSMISSION). Remove clutch housing underpan and clutch release bearing and sleeve. Mark clutch and fluid drive clutch driving plate for re-assembly. Remove all clutch cover mounting screws evenly, lower cover and driven member out through opening in housing.

FLUID DRIVE

Chrysler—Fluid coupling at rear of engine.
See Miscellaneous Section for complete data.

Oil Level: Keep to level of filler hole. Check at first 1000 miles and every 10,000 miles. Manufacturer recommends MOPAR Fluid Drive Fluid.

Removal: Remove transmission and clutch (see TRANSMISSION and CLUTCH), take off driver flange stud nuts (Tool C-589), lower fluid drive assembly out.

TRANSMISSION

STANDARD MODEL C46

Own Make—All helical gear, constant-mesh, synchro-mesh (Second & High), sliding gear (Low & Reverse). *See Transmission Section for complete data.*

Transmission Control: Manual steering column shift.
See Transmission Section for complete data.

Removal: Jack up front end of car. Disconnect front universal (loosen companion flange nut if transmission to be dismantled). Disconnect speedometer cable, hand brake cable at brake band, gearshift control rod and selector rod at transmission. Remove transmission mounting screws and nuts at clutch housing, pull transmission straight back to free clutch shaft, lower transmission and remove from under car.
NOTE—When installing transmission, use pilot studs installed in upper mounting screw holes to maintain alignment and prevent springing clutch driven member.

TRANSMISSION

STANDARD C47, OPTIONAL C46

Hydraulically Operated Type (with Fluid Drive). New design semi-automatic, four-speed transmission with hydraulic actuation and electrical control.
See Transmission Section for complete data.

Transmission Control: *See Transmission article for adjustment directions.*

Kickdown Solenoid—Auto-Lite No. SSS-4003.

Governor—Auto-Lite No. TG-4205R.

Kickdown Switch—Part of carburetor assembly.

Ignition Interrupter Switch—On right side of transmission above Governor.

Transmission Oil—3 pints, 10-W engine oil.

Removal: Remove access cover on right rear side of floorboard under front floor mat, disconnect speedometer cable, and governor, solenoid, and interrupter switch wires at transmission. Remove governor and solenoid. Disconnect hand brake cable at brake band, remove cable and cable anchor bracket. Remove brake support, band, adjusting bolt bracket and lever as an assembly. Disconnect front universal (push yoke back), and gearshift rods at transmission. Drain transmission, **replace drain plug.** Disconnect transmission mounting bolts and lower assembly out of car.
INSTALLATION CAUTION—Rear face of clutch housing and lower pan must be in correct alignment. Misalignment can cause hard shifting when transmission installed.

UNIVERSALS

Detroit Universal Series 7300—Cross type with roller bearings. Two used (3 with center bearing on C-47 and C-46 & C-47 7 passenger cars).
See Universals Section for complete data.

Propeller Shaft Center Bearing: Used on C-47 and C-46 & C-47 7 Passenger.

REAR AXLE

MODEL C46

Own Make—Semi-floating, hypoid gear type with Hotchkiss Drive.
See Rear Axle Section for complete data.

Ratio—3.54-1 (39:11).

Backlash—.006-.010". Screw adjustment.

Removal: Disconnect rear universal, remove axle shafts (see below), take out carrier capscrews, lift off carrier assembly.

Axle Shaft Removal—Remove wheel, hub, and drum assembly (use screw type hub puller—Tool C-675), block brake pedal, disconnect brake line at wheel cylinder, remove axle shaft key, install sleeve (Tool C-757) in oil seal, remove brake support (oil seal mounted in support), pull shaft and bearing (use C-499 puller). NOTE—Use puller C-293-C to remove bearing from shaft, puller C-748 or C-358 to remove inner oil seal, drift C-241 to install seal.

Axle Shaft Outer Oil Seal: New leather type mounted on brake support (backing plate).

Wheel Bearing Adjustment: Shims between backing plate and axle housing. With wheel and hub removed, check endplay with dial indicator. To adjust, remove backing plate (see above), add or remove shims (furnished .010", .0125", .015", .030" thick) equally at both wheels. **Endplay**—.003-.008".

REAR AXLE

MODEL C47

Own Make—Semi-floating, hypoid gear type with Hotchkiss drive. Barrel type differential with adjustable ring gear thrust pad used.
See Rear Axle Section for complete data.
Ratio—3.58-1 (43:12).

Ring Gear Thrust Pad Setting—Loosen locknut on left side of carrier housing, tighten thrust pad screw finger tight, back screw off ⅛ turn, tighten locknut.
ALL OTHER DATA SAME AS FOR C46 REAR AXLE.

SHOCK ABSORBERS

New "Hydra-Lizer" hydraulic, direct-acting, non-adjustable type.
See Shock Absorber Section for complete data.

FRONT SUSPENSION

Front Suspension: Independent, linked parallelogram type with coil springs and direct acting shock absorbers.
See Front Suspension Section for complete data.
Kingpin Inclination—4¾° to 6° crosswise.
Camber—0° to Pos. ¾°. (¼-½° higher on left).
Caster—Neg. 2° preferred. Limits Neg. 1° to Neg. 3°.
Toe In—0" preferred. Limits 0" to 1/16". Adjust both tie rods equally.
Steering Geometry—Inner wheel 21½°, plus or minus 1°. Outer 20°.

STEERING GEAR

Own Make—3 tooth Worm-and-Roller. Similar to Gemmer model 335.
NOTE—See Gemmer 305, 335 & 375 article for data.
See Steering Gear Section for complete data.

BRAKES

Service: Chrysler "Safe-guard" Lockheed Hydraulic.
Front Wheels—Two-cylinder type (front shoe anchored at bottom and actuated by upper cylinder, rear shoe anchored at top and actuated by lower cylinder).
Rear Wheels—Double anchor type with single double-acting wheel cylinder.
See Brake Section for complete data.
Wheel Cylinders—1¼" bore (front wheel front shoe—top cylinder), 1⅛" bore (all others). Single acting (front), double acting (rear wheels).
Drums—Centrifuse. Diameter 12".
Lining—Molded asbestos. Width 2". Thickness 13/64". Length per wheel 23" (front wheels), 20 3/8" (rear wheels).
Clearance—.006" at each end of all shoes.
Braking Power—60% front wheels, 40% rear.

Power Brake Unit (C47): Diaphragm type with internal valve.
See Brake Section for complete data.

Hand Brake: On drum at rear of transmission.
Adjustment—*See "Hand Brake Notes" in Chrysler Special Data.*
Drum—Cast-iron. Diameter 7".
Lining—Molded asbestos. Width 2½". Thickness 5/32". Length 20".
Clearance—.015-.020" around band.

MISC. MECHANICAL

WINDSHIELD WIPER: Auto-Lite Model EWJ-4001, EWJ-4003 (Conv. Coupe). Electric type with circuit breaker mounted on control switch.
See Miscellaneous Section for complete data.

CONVERTIBLE TOP CONTROL: Auto-Lite Model EWM-4001. Electric type.
See Miscellaneous Section for complete data.

WINDOW REGULATORS: Hydro-electric type.
See Miscellaneous Section for complete data.

TIGHTENING (TORQUE WRENCH) SPECIFICATIONS

1949 MODELS

Spark Plugs	225-250
Cyl. Block Hold-down Stud Nuts	125-165
Main Bearing Cap Stud Nuts	150-180
Connecting Rod Cap Stud Nuts	200-280
Camshaft Bearing Capscrew (#1 only)	90-100
Camshaft Bearing Capscrew (exc. #1)	75-100
Flywheel Mounting Capscrew	225-285
Flywheel Housing Capscrews	225-285
Clutch Mounting Capscrews	150-180
Oil Pump Housing Capscrews	50-80
Oil Pump Mounting Capscrews	125-165
Intake & Exhaust Manifold Capscrews	225-285
Carburetor Mounting Stud Nuts	125-165
Generator Bracket Bolts (5/16")	125-165
Generator Bracket Bolts (3/8")	200-250
Generator Mounting Band Bolts	200-225
Water Pump Mounting Bolts	125-165
Fan Shaft Nut	225-285
Spring Shackle Bolts	180-200

ENGINE REMOVAL

1949 MODELS

ENGINE REMOVAL (FOR SERVICING): Engine should be removed from chassis as follows:
Remove hood, drain radiator. Disconnect battery cable at battery, disconnect and remove starting switch-to-starter cable. Disconnect all ignition leads at distributor, fuel line at fuel pump, throttle and choke cables at carburetor, oil pressure gauge line at right rear corner of engine, windshield wiper hose at manifold, generator wire at Cutout Relay, hose connections at engine block outlet and water pump, exhaust pipe at manifold connection, engine ground strap at flywheel housing, clutch release cable at release lever under flywheel housing, temperature indicator cable and bulb at engine outlet connection. Remove radiator brace rod connected to top of radiator, take out two base bolts under radiator and carefully lift radiator out of engine compartment. Remove hood latch cable. Slack off fan drive belt, remove fan assembly and belt. Place support jack under engine, split front & rear flywheel housing by taking out 5 bolts, remove nut and lock washer on right front engine mounting stud (goes through frame), remove left front engine mounting bolt. Attach lifting sling to engine (loop sling under oil pan), support engine weight with sling and hoist, move engine straight forward approximately 4" (to clear clutch shaft), lift engine out tilting the front end up slightly for clearance.

1949 MODELS

CYLINDER BLOCK REMOVAL (FOR VALVE SERVICING): With the engine out of the car (see Engine Removal), remove water pump, fuel pump, carburetor, manifolds, and spark plugs. Remove camshaft cover, take out mounting bolts in all camshaft bearings and lift off camshaft and bearings (oil metering tube in upper end of towershaft at front of camshaft will come out with camshaft). Unscrew and remove towershaft adjuster, lift out towershaft upper bevel gear. Remove oil pan, connecting rod caps, and oil pump. Turn crankshaft to top center. Remove 11 elastic stopnuts holding cylinder block on crankcase, lift off cylinder block and piston assembly.

Cylinder Block Installation: Install pistons (with ring gaps staggered) and connecting rods (with upper halves of bearings in place and rod numbers on distributor side) in block. Turn crankshaft to top center. Place block on crankcase. Install 11 plain washers and elastic nuts. Install connecting rod caps (with numbers on rod on cap on distributor side of engine). Install oil pump and towershaft gear. See Towershaft Assembly Servicing following.

CRANKSHAFT & MAIN BEARINGS

1949 MODELS

CRANKSHAFT SERVICING: Crankshaft Removal—With engine out of car (see Engine Removal), remove oil pan, remove oil pump (see Oil Pump Servicing), remove gear on lower end of distributor shaft, remove all crankshaft bearing caps, lift crankshaft out (not necessary to remove clutch—crankshaft, flywheel, and clutch removes as unit).

Crankshaft Installation—Reverse removal instructions (above), tighten bearing cap nuts evenly (see Tightening Torque Wrench data), use new lockwashers, palnuts and gaskets. Replace oil seals

1949 MODELS

CRANKSHAFT OIL SEALS: Front Seal. Metal enclosed neoprene seal. To remove, take off oil pan and crankshaft pulley, slide seal off. Coat outside of new seal with Permatex No. 2, slide into position against shoulder at rear of its groove. Install crankshaft pulley, adjust lower gear backlash. Use new gaskets when installing oil pan.

Rear Seal. With crankshaft out of engine, remove old seal. Turn new one-piece seal on shaft with edge of internal lip to front. Use Permatex No. 3 in seal groove. Install crankshaft so that seal gap will be in the center of the rear bearing cap.

CAMSHAFT & BEARINGS

1949 MODELS

CAMSHAFT DRIVE (TOWERSHAFT) ASSEMBLY: Towershaft is positioned by "towershaft adjuster" (hollow hexagonal headed capscrew) installed in upper end of towershaft above upper bevel gear.

Towershaft Assembly Servicing:
Disassembly—Towershaft and lower bevel gear (integral with shaft) can be withdrawn from below after towershaft adjuster has been unscrewed from upper end of shaft and upper bevel gear lifted out.

NOTE—Crankshaft must be removed to allow towershaft to be taken out (see Crankshaft Removal).

Towershaft Assembly—Insert bushing in crankcase from below, insert towershaft, install crankshaft and mesh bevel gears (see Camshaft Drive Gear Meshing Data below), check and adjust lower bevel gear backlash. After cylinder block installed on crankcase, see that upper bushing in place in upper end of towershaft housing, install towershaft upper bevel gear, install towershaft adjuster, tighten adjuster until clearance between shoulder on upper gear and face of upper bushing is .004" (measure with feeler gauge while prying upward on adjuster). Towershaft clearance in bushings should be .0005-.002" (lower bushing), .0005-.0015" (upper gear hub in upper bushing). Backlash in gears should be .003-.005" (lower bevel gears—see Towershaft Gear Backlash Adjustment below), .003-.005" (upper bevel gears—see Camshaft Endplay Adjustment).

Towershaft Lower Gear Backlash Adjustment: To check backlash, push crankshaft forward until thrust flange is against rear main bearing. Mount dial indicator so as to measure movement of towershaft lower bevel gear, rock towershaft back and forth. Backlash .003-.005" and adjusted as follows: When installing towershaft assembly, screw the crankshaft adjuster (slotted stud in forward end of crankshaft) in until lower bevel gears are snug. Start the engine. If gears are noisy, stop engine, unscrew crankshaft adjuster slightly, repeat test. When gears run quietly, tighten nut on adjuster securely (hold adjuster with screwdriver to prevent change in adjustment).

Towershaft Upper Gear Backlash Adjustment: See Camshaft Endplay Adjustment (below).

1949 MODELS

CAMSHAFT ENDPLAY ADJUSTMENT: To check endplay with camshaft installed on engine, push camshaft forward as far as possible, measure clearance between rear face of camshaft gear hub and front bearing with a feeler gauge. Endplay should be .003-.005". Adjust camshaft endplay as follows: loosen front camshaft bearing capscrews, slip bearing strap up on capscrews for access to thrust washer, lift thrustwasher out and replace with washer of correct thickness.

CAUTION—Make certain that closed end of thrustwasher is upward (under bearing strap tab) and that bearing strap tab is forward so as to retain thrustwasher when bearing capscrews tightened.

1949 MODELS

CAMSHAFT DRIVE GEAR MESHING MARKS: With engine completely disassembled, install and mesh all gears of the valve system as follows:

Crankshaft Gear—Install gear on crankshaft splines with marked spline on shaft in line with punchmark on gear hub. NOTE—On first cars where gear hub not marked, marked spline on shaft should be on same side and in line with marked tooth on gear.

Tower Shaft Lower Gear—Gear is integral with shaft. The two punch-marked teeth on tower gear should straddle punch-marked tooth on crankshaft gear.

Tower Shaft Upper Gear—Install gear on shaft with punch marks in line. Mesh punch-marked tooth on gear between two punch-marked teeth of camshaft gear.

Camshaft Gear—Gear is keyed on shaft.

1949 MODELS

CAMSHAFT OIL METERING HOUSING ASSEMBLY: Install oil metering housing (90° fitting between upper end of towershaft and camshaft) in forward end of camshaft with camshaft off engine, then engage lower end of housing in upper end of towershaft as camshaft is placed in position on cylinder block. Housing clearance should be .0002-.0023" in camshaft and .0005-.0025" in towershaft gear adjuster. Backlash between camshaft and towershaft gears should be .003-.005".

TAPPET CLEARANCE ADJUSTMENT

1949 MODELS

TAPPET CLEARANCE ADJUSTMENT PROCEDURE: Clearance must be checked with camshaft and cam follower assemblies installed on engine. Turn camshaft until heel of cam is directly over cam follower, press valve in so that it rests firmly on seat, check clearance with feeler gauge. Select adjusting shim pack of correct thickness for correct tappet clearance, insert shims through slot in head of cam follower (above spacer washer), lock shims in place by bending up ends. Shims furnished in following sizes:

Cam Follower Shims

Thickness	Part No.	Thickness	Part No.
.010"	W-206284-1	.016"	W-206284-4
.012"	W-206284-2	.018"	W-206284-5
.014"	W-206284-3	.020"	W-206284-6

Tappet Clearance

Intake—.004-.005" **Exhaust—.005-.007".**

VALVE SYSTEM

1949 MODELS

VALVE SERVICING: With engine removed from chassis, remove cylinder block (see Cylinder Block Removal above), lift out valve lifters (cam followers) and number these to insure re-installation in same positions (CAUTION—Do not lose tappet clearance adjusting shims and spacer washers on later cars). Use special bar type valve lifter to compress valve springs, remove split locks, spring retainer, and spring from each valve, remove valve from inside cylinder. Reface valves in usual manner (see data below for refacing valve seats), reinstall assemblies, check tappet clearance.

Valve Seat Resurfacing—Special tools must be used to avoid marring cylinder walls (valve seats must be serviced from within cylinder). Use special Blue Point Stone Carrier, VG-10-2B, turned down to 1" diameter, and 5/16" pilot with following stones: SE-400-R Valve Seat Stone (Roughing), SE-400-F (finishing). Stones must be turned to **1 3/16" diameter for Intake Valves, 1 1/16" for Exhaust.**

MODEL IDENTIFICATION

SERIAL NUMBER: Stamped on plate on front face of dash panel in engine compartment.

ENGINE NUMBER: Stamped on pad on left side of crankcase.

1949 Numbers: 100,000 up.

TUNE-UP

COMPRESSION PRESSURE: 125-135 lbs. max. (110 lbs. min. hot) at cranking speed of 260 RPM. All cylinders must be equal within 10 lbs.

VACUUM READING: Steady 18-20" idling at 7 MPH.

FIRING ORDER: 1-3-4-2. See diagram.

SPARK PLUG GAPS: .025".

Plugs—Auto-Lite Type AN-7E. 14 mm. Metric.

DISTRIBUTOR: Breaker Gap—.020". Limits .020-.024".

Cam Angle—46° (closed).

Breaker Arm Spring Tension—17-20 ozs.

Automatic & Vacuum Advance—*See Ignition.*

Condenser Capacity—.20-.25 microfarad.

IGNITION TIMING: 12° BTDC.

Timing Procedure—*See Ignition Timing.*

Timing Mark—First flywheel mark (second mark is TDC) in inspection hole in right front face of flywheel housing.

CARBURETION:

Initial Setting (to warm up Engine)—Idle adjustment screw 1¼ turns open, Main (high speed) adjustment screw 2¾ turns open.

Main (High Speed) Adjustment—With engine warm and running at ½ throttle opening, turn screw in until engine begins to lose speed, then out until maximum speed and power secured (2-2⅛ turns open).

Idle Adjustment—After making Main Adjustment (above), close throttle and set stopscrew for slightly faster than normal idle speed, turn idle adjusting screw in until engine misses, then turn screw out until engine fires smoothly. Final setting 1 turn open.

Idle Speed—700 RPM or 7-8 MPH.

Float Level—Fuel level 23/32" below top edge of bowl or even with bottom of inspection plug hole on side of bowl.

►*CAUTION*—Remove idle adjusting screw, spring, and idle tube before removing air horn and float bowl cover assembly.

Accelerating Pump—None.

Choke Setting: Manual choke.

Fuel Pump Pressure: 1½-3¼ lbs.

VALVE TAPPET CLEARANCE: .004-.005" Intake, .006-.007" Exhaust, Cold.

Tappet Clearance Adjustment Procedure—*See "Valve System" in Crosley Special Data.*

Valve Timing Check—*See Valve Timing.*

STARTING: *See Battery, Starter, Generator, Regulator.*

IGNITION

IGNITION SWITCH: Crosley No. 200102.

COIL: Auto-Lite Model IG-6001. On dash.

Service Coil—IG-4070 with IG-1944 Service Bracket.

Ignition Current—2 amperes idling, 5 stopped.

CONDENSER: Auto-Lite No. IGB-1025E.

Capacity—.20-.25 microfarad.

DISTRIBUTOR: Auto-Lite Model IGW-4181-C. Single breaker, four lobe cam, full automatic advance type (no vacuum control).

Breaker Gap—.020". Limits .020-.024".

Cam Angle—46° (closed).

Breaker Arm Spring Tension—17-20 ozs.

Rotation—Counter-clockwise viewed from above.

Automatic Advance

Distributor		Engine	
Degrees	R.P.M.	Degrees	R.P.M.
15	1600	30	3200

Removal: Distributor mounted on crankcase at left front of engine. To remove distributor, drain engine oil, remove oil pan, remove distributor drive gear by removing palnut and regular nut on lower end of distributor shaft. (CAUTION—Do not lose Woodruff key in shaft). Then remove hold-down screw in advance arm, lift distributor out.

Distributor Installation Note—When installing distributor, first turn crankshaft to #1 cylinder firing position (#1 piston on compression, ignition timing mark on flywheel in center of inspection hole in right front face of housing), turn distributor shaft until rotor is at #1 segment in distributor cap (see diagram) with contacts just opening, install distributor on engine and tighten hold-down screw in advance arm. With oil pan removed, install drive gear on lower end of distributor shaft. (CAUTION—make certain that Woodruff key in place), being careful not to disturb relative position of distributor shaft and crankshaft when meshing gears, install regular nut and palnut on distributor shaft. Check Ignition Timing.

IGNITION TIMING

Std. Setting ..... 12° BTDC.

To Set Timing—With #1 piston on compression, turn engine over until piston reaches firing position when first timing mark on flywheel is in center of inspection hole in right front face of housing. Loosen advance arm clamp bolt, rotate distributor housing until contacts begin to open, tighten clamp bolt. Check rotor and make certain it is at #1 segment in distributor cap, check spark plug connections.

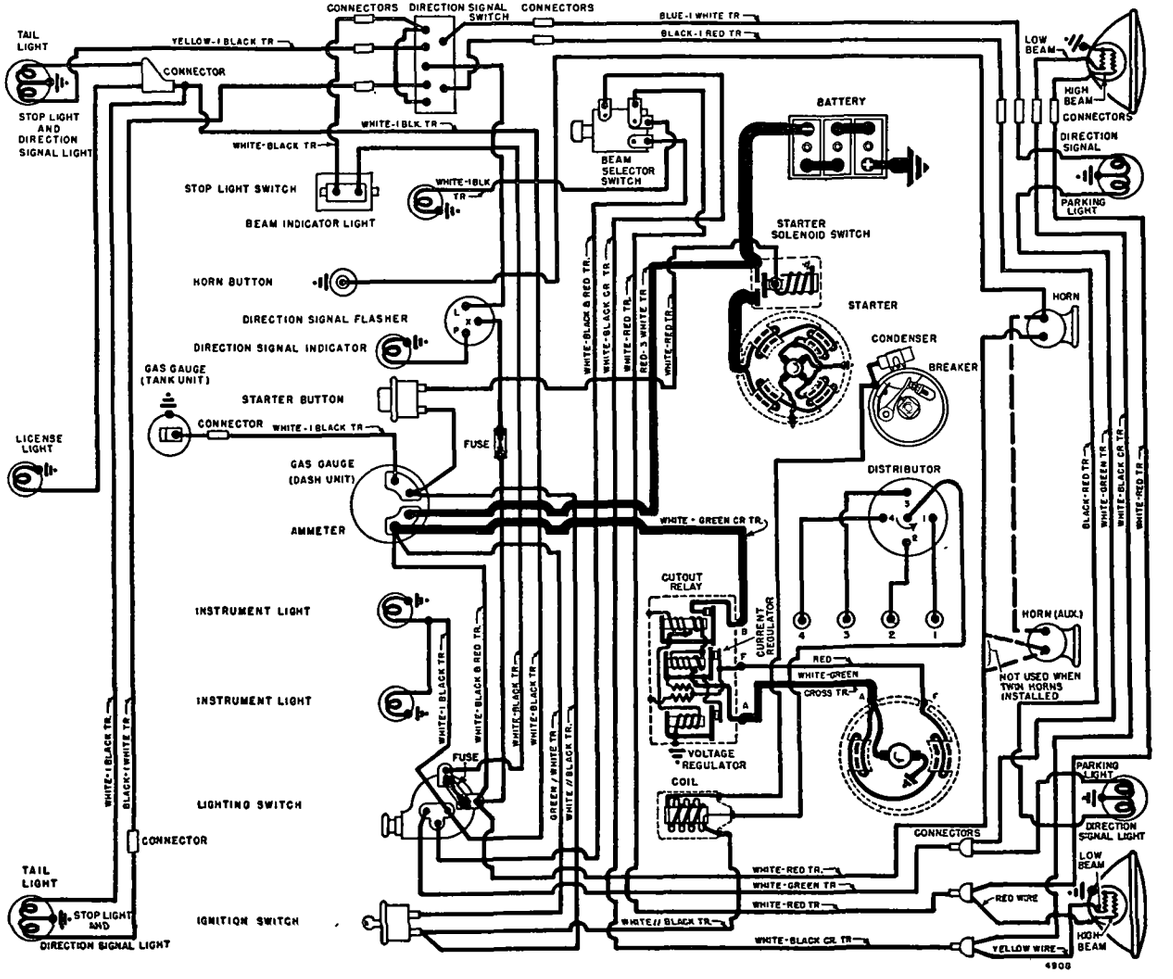

To Check Timing (with Neon Timing Light)—Attach neon timing light to #1 spark plug, direct light on flywheel through inspection hole in right front face of housing. Start engine and allow it to idle (speed must not exceed 700 RPM. to avoid automatic advance action). Loosen distributor clamp bolt in advance arm, rotate distributor until timing mark (located 12° before TDC mark) appears to be in center of inspection hole, tighten clamp bolt,

CARBURETOR

Tillotson Model DY-9C—⅞", single barrel, plain tube, downdraft type with manual choke control. ***See Carburetor Section for complete data.***

NOTE—This carburetor has Main (High Speed) adjustment as well as conventional Idling (Low Speed) adjustment.

Adjustment & Float Level—***See Tune-up for data.***

Metering Jets—***See Tillotson DY-9C Carburetor article in Carburetor Section for complete data.***

CARB. EQUIPMENT

Air Cleaner: Oil-bath type.

Servicing—Remove and disassemble cleaner, wash out with gasoline (including filter), refill reservoir with light engine oil to indicated level (approx. ¼ pint) every 5000 miles or more often if required (inspect every 1000 miles).

Fuel Pump: AC No. 1538923 (Crosley No. 300042). ***See Carburetion Equipment Section for data.***

Pressure—1½-3¼ lbs.

Gasoline Gauge: Stewart (Stewart-Warner) Electric ***See Carburetion Equipment Section for data.***

BATTERY

Auto-Lite Type 1M-80—6 volt, 13 plate, 80 Ampere Hour Capacity (20 hour rate).

Starting Capacity—96 amperes for 20 minutes.

Zero Capacity—300 amperes for 2.0 minutes. Five second voltage 3.8 volts.

Grounded Terminal—Positive (+) terminal.

Location—On left hand side in engine compartment. NOTE—Battery on **Hotshot** located under right front fender.

Dimensions—Length 9". Width 7". Height 8⅝".

STARTER

Auto-Lite Model MZ-4147. Armature No. MZ-2053.

Drive—Bendix Drive No. A2920.

Rotation—Counter-clockwise at commutator end.

Brush Spring Tension—42-53 ozs. with new brushes.

Performance Data

Torque	R.P.M.	Volts	Amperes
0 ft. lbs.	4300	5.5	70
2.55 "	1325	5.0	200
4.95 "	750	4.5	300
7.65 "	220	4.0	400
4.4 "	Lock	2.0	280

Removal: Starter flange mounted on left front face of flywheel housing. To remove, disconnect cable, take out capscrews.

Starting Switch: Auto-Lite Model SS-4007 Magnetic Switch and Pushbutton Model XA-456 or XA-456E. Switch is mounted on dash and controlled by pushbutton on instrument panel. ***See Electrical Equipment Section for complete data.***

GENERATOR

Auto-Lite Model GDZ-4806B. Armature GDZ-2079F. Two brush type with current and voltage regulation.

Maximum Charging Rate—35 amperes at 8.0 volts.

Charging Rate Adjustment—None. See Regulator.

Performance Data

Cold Amperes	Cold Volts	Cold R.P.M.	Hot Amperes	Hot Volts	Hot R.P.M.
0	6.4	925	0	6.4	1000
5	6.65	1060	5	6.65	1150
10	6.85	1200	10	6.85	1290
15	7.05	1340	15	7.05	1430
20	7.3	1480	20	7.3	1590
25	7.55	1620	25	7.55	1750
30	7.8	1760	30	7.8	1980
35①	8.0	1900	35	8.0	2250

①—Current Regulator setting. See Regulator data.

Rotation—Counter-clockwise at commutator end.

Brush Spring Tension—35-53 ozs. (new brushes).

Field Current—1.60-1.78 amperes at 6.0 volts.

Motoring Current—4.2-4.6 amperes at 6.0 volts.

Removal: Generator cradle mounted on right side of engine with fan belt drive (water pump driven by armature shaft extension). To remove generator, disconnect leads, slack off belt adjustment and remove fan belt, remove front bolt in water pump coupling. Remove two 5/16" elastic stop nuts on generator mounting band, lift generator out.

Belt Adjustment: Loosen nuts on two bolts mounting fan shaft bracket on front of engine, move fan upward (right hand bolt hole slotted) until belt deflection is ½" (thumb pressure) midway between generator and fan pulleys, tighten nuts and recheck.

NOTE—Two holes provided in bracket for left hand fan mounting bolt. Additional range of adjustment can be secured by shifting bolt to upper hole.

REGULATOR

Auto-Lite Model VRP-4004F-2. Voltage-current type. ***See Electrical Equipment Section for complete data.***

NOTE—Regulator cover sealed. Warranty void if seals broken.

Cutout Relay

Cuts In—6.4-7.0 volts (set to 6.4-6.6 volts).

Cuts Out—4.1-4.8 volts (approx. 4-6 amps. disch.).

Contact Gap—.015" minimum.

Air Gap—.031-.034" with contacts open (check at hinge end of core).

Voltage Regulator

Setting—7.2-7.5 volts at 70°F. See Electrical Equipment Section for settings at other temperatures.

Checking (without breaking seals) & Adjustment—***See Electrical Equipment Section for complete data.***

Contact Gap—.012" min. (armature against stop pin).

Air Gap—.048-.052" with contacts just opening.

Current Regulator

Setting—34-36 amperes (marked '35' on cover).

Checking (without breaking seals) & Adjustment—***See Electrical Equipment Section for complete data.***

Contact Gap—.012" min. (armature against stop pin).

Air Gap—.048-.052" with contacts just opening.

LIGHTING

Headlamps: "Sealed Beam" type. Upper and lower beams controlled by Beam Selector Switch on toboard.

Adjustment—Aim upper beams straight ahead with top of "hot spot" 3" below lamp center height at 25 feet.

Switches

Lighting—Crosley No. 205936.

Beam Selector—Crosley No. 209446.

Directional—Crosley No. 209354.

Stop Light—Crosley No. 207800.

MISC. ELECTRICAL

FUSE: Lighting—20 ampere. On lighting switch.

HORN: Sparton or Auto-Lite No. HA-4037. Vibrator type. Single horn standard, dual horns optional.

Horn Current—7 amperes each.

ENGINE

ENGINE SPECIFICATIONS: New "CIBA" cast-iron block engine. Four cylinder, Overhead Valve type with Overhead Camshaft. Cylinder block (with integral Head) is bolted on separate crankcase.

Bore—2.5". **Stroke**—2.25".

Displacement—44 cu. ins. **Rated H.P.**—10.

Developed Horsepower—26.5 at 5400 RPM.

Compression Ratio—7.8-1.

Compression & Vacuum Reading—***See Tune-up data.***

►**ENGINE SERVICE NOTE:** Cylinder Heads are integral with cylinder barrels and cylinder block must be removed from crankcase for work on Valves, Pistons, Rings, etc.

ENGINE REMOVAL and Cylinder Block Removal: ***See Crosley Special Data.***

TIGHTENING (TORQUE WRENCH) SPECIFICATIONS: ***See Crosley Special Data.***

PISTONS: Aluminum alloy, four ring type, heat treated, cam ground, with aluminum oxide finish.

Weight—6.5 ozs. stripped. **Length**—1 29/32".

Clearance—.0025-.0035" (skirt). See Fitting New Pistons.

Removal—Pistons and rods removed through lower end of cylinder when cylinder block removed from crankcase (cylinder head integral with block). ***See Crosley Special Data for Cylinder Block Removal.***

Fitting New Pistons: Use .002" feeler gauge, ½" wide, to check clearance. Place feeler gauge 90° from pin holes in piston on maximum thrust side. Pull required to withdraw feeler should be 4-6 lbs.

Replacement Pistons: Furnished Std. Size and .0025", .005", .010", .020", .030" Oversize.

PISTON RINGS: Two compression, one oil control ring above pin, additional oil control ring below pin. Drain holes provided in both oil ring grooves.

Ring	Width	End Gap	Side Clearance
Compr. (#1,2)	.0620-.0625"	.007-.017"	.0025-.005"
Oil (#3,4)	.1545-.1550"	.007-.015"	.0015-.003"

Installing Rings—Inside bevel on compression rings

C NTINUED ON NEXT PAGE

ENGINE

CONTINUED FROM PRECEDING PAGE

must be upward. Top compression ring chrome plated.

Replacement Rings: Furnished Std. Size and .010", .020", .030" Oversize.

PISTON PIN: Floating type with aluminum plug insert in each end of pin. Pin hole in rod has lead-bronze bushing.

Pin Fit in Piston—.0004" Loose to .0003" Tight at room temperature or 70°F.

Diameter—.6252". **Length**—2.260".

CAUTION—Heat piston to 160°F. when inserting pin to avoid distorting piston skirt.

Pin Fit in Rod Bushing—.000-.0005" clearance or tight thumb push fit at room temperature (70°F.).

►*NOTE*—Bushing is split leaded-bronze type and of size for press fit in connecting rod hole. Hone bushing for correct pin fit after installation (pressing bushing into place will close up gap and leave pin hole undersize).

Piston Pin Plugs—Must be snug fit in ends of pin.

Replacement Piston Pins: .001", .002", .003" Oversize.

CONNECTING ROD: Length—4.125-4.130". **Weight**—9.62 ozs. NOTE—Bearing cap bolts are forged integrally with the connecting rod.

Crankpin Journal Diameter—1.374-1.375".

Lower Bearing Type—Replaceable, precision type steel-backed, babbitt-lined. No shims.

►*NOTE*—Connecting rod bearings are interchangeable with the three intermediate **lower** main bearing halves (not interchangeable with crankshaft upper bearings).

Clearance—.0015-.003". **Sideplay**—.010-.025".

Bearing Adjustment: None (no shims). Replace bearings (precision type, no fitting required). Do not file bearing caps. NOTE—Palnuts used on connecting rod bolts. Always use new Palnuts.

Replacement Bearings: Furnished Std. Size and .001", .005", .010", .020" Undersize.

Installing Rods: Numerical marking on rod and bearing cap together on left side of engine (distributor side).

CRANKSHAFT: Five main bearing type with individually counterweighted crankpins.

Journal Diameters—1.374-1.375" (except rear bearing), 1.499-1.500" (rear bearing only).

Bearing Type—Replaceable, precision type, steel-backed, babbitt-lined. Rear bearing is flanged (for end thrust).

►*NOTE*—The three intermediate main bearings are interchangeable and these lower bearing halves are interchangeable with connecting rod bearings. **Upper and lower bearing halves are not interchangeable** (upper halves may be identified by oil holes which must register with oil channels in crankcase).

Clearance—.0015-.003".

Bearing Adjustment: None (no shims). Replace bearings. Do not file bearing caps. Engine should be removed from chassis and crankshaft removed for main bearing work.

See Crosley Special Data for Engine Removal and Crankshaft Removal Instructions.

CAUTION—When installing bearings, make certain that oil holes in bearing upper halves register with oil channels in crankcase (see Bearing Note above). Bearing caps are numbered (1 to 5) on left side of engine and cannot be interchanged.

Crankshaft Oil Seals—Replace rear main bearing oil seal whenever rear main bearing is disturbed.

Oil Seal Replacement—*See "Crankshaft & Main Bearings" in Crosley Special Data.*

Replacement Bearings: Furnished Std. Size and .001", .005", .010", .020" Undersize.

End Thrust: Taken by flanges on #5 (rear bearing). Replace rear main bearing when endplay exceeds .008". **Endplay**—.003-.008".

CAMSHAFT: Five bearing type mounted on top of engine and driven through bevel gears by vertical tower shaft at front of engine.

Bearing Type—Consist of five split aluminum bearings bolted individually on pads on top of engine. Top of all bearing upper halves are machined flat and a separate bearing strap is assembled on top of bearing under bearing capscrews. These bearing straps have stud for camshaft cover retaining nuts (except rear #5 bearing strap which is plain type).

Bearing Interchangeability—All upper and lower bearing halves except front (#1) interchangeable on all engines. Bearing straps are interchangeable on intermediate bearings (#2, 3, 4). Rear bearing strap is plain type.

Clearance—.0015-.0027".

Endplay—Taken by thrust washer between camshaft gear and front camshaft bearing. With correct endplay, backlash between camshaft gear and upper towershaft gear will be .003-.005".

Endplay Adjustment—*See "Camshaft & Bearings" in Crosley Special Data.*

Camshaft Drive (Towershaft) Assembly: *See "Camshaft & Bearings" in Crosley Special Data.*

Camshaft Setting: For correct valve timing, with **camshaft out of engine,** proceed as follows:

1) Turn engine over slowly until the following three conditions occur simultaneously: a) Top dead center mark on flywheel is in center of inspection hole in right front face of housing, b) Distributor rotor points toward #1 cylinder segment in distributor cap, c) Punch-marked tooth of upper tower gear (see below) points toward rear of engine and is in line with center-line of camshaft bearings.

2) With engine positioned as above, assemble the camshaft, pushing the oil metering housing into upper tower shaft gear and **meshing punch-marked tooth of upper tower shaft gear between two punch-marked teeth of camshaft gear.** Complete camshaft assembly by installing bearing caps.

3) Check camshaft endplay (see data above).

4) Turn engine over slowly by hand for at least two revolutions.

VALVES: Engine must be dismantled (removed from chassis, cylinder block taken off) for valve work.

Valve Servicing—*See "Valve System" in Crosley Special Data.*

	Head Diameter	Stem Diameter	Length
Intake	1 11/64"	.3135-.3140"	3.934"
Exhaust	1 3/64"	.3125-.3130"	3.934"

	Seat Angle	Lift	Stem Clearance
Intake	45°	.225"	.0015-.003"
Exhaust	45°	.225"	.0025-.0040"

►*VALVE INSTALLATION CAUTION*—Valve spring washer (intake valves), Thompson Roto Cap (exhaust valves) must be installed below valve springs with cupped side of washer and extruded lip on Roto Cap up toward camshaft.

Valve Springs: Free length 2". Install with tightly wound coil down.

	Spring Pressure	Length
Valve Closed	30 lbs.	1 1/2"
Valve Open (Intake)	46-51 lbs.	1 7/32"
Valve Open (Exhaust)	46-51 lbs.	①1 5/64"

①—With Thompson Roto-Cap.

Valve Guides: Guides are pressed in cylinder head from above. To remove guides, invert cylinder block on arbor press, use a shoulder drift pin (max. O. D. 13/32") press guide out. Press new guides in place from above until 3/4" protrudes above bottom cam follower guide. Ream guides for correct valve stem clearance. NOTE—Reface valve seats using the new guide hole to pilot the facing tool, grind valves before installing.

Valve Lifter (Cam Follower): Consists of an inverted cup operating in guide hole in cylinder block direcly above each valve assembly (cam follower spacer and tappet clearance adjusting shims located within cam follower above valve stem).

Cam Follower Clearance—.0005-.0015".

VALVE TIMING

Tappet Clearance: .004-.005" Intake; .006-.007" Exhaust, Cold.

►**Tappet Clearance Adjustment Procedure**—*See "Valve System" in Crosley Special Data.*

Valve Timing: See Camshaft Setting (above).

Intake Valves—Open 5° BTDC. Close 50° ALDC.

Exhaust Valves—Open 50° BLDC. Close 5° ATDC.

Valve Timing Check—See Camshaft setting for assembly of valve gear.

LUBRICATION

Engine Oiling System: Pressure to main bearings, connecting rod bearings, camshaft bearings, and timing gear bearings (oil flow to camshaft bearings is through hollow towershaft and hollow camshaft). Oil pump in crankcase at forward end of engine.

Crankcase Capacity—2 qts. (refill), 2.8 qts. (when filter drained or filter element replaced).

Normal Oil Pressure—35-50 lbs. at 30 MPH. (hot oil). 7 lbs. minimum with engine idling.

Oil Pressure Regulator—Located under plug on right front corner of engine. Not adjustable.

Oil Pump: Disassembly—Take out center capscrew on lower cover, remove cover, gasket, and screen. Take out four capscrews in pump cover, remove cover and

gasket, lift out idler gear and shaft. To remove pump shaft and gear, file off end of pin in pump drive gear, drive pin out and remove gear.

Reassembly—Use new gaskets. Make certain that plain washer and lockwasher used on each cover screw and that lower cover (with oil inlet pipe) is tight. See Tightening Torque Wrench data for housing and mounting screw torques.

Oil Filter: Replace filter element at 8000-10000 mile intervals. NOTE—Add .8 qt. of oil in crankcase when oil filter drained or element replaced.

Crankcase Ventilation: Oil-wetted type filter element in oil filler cap (air intake). Outlet pipe located at rear of valve chamber.

Servicing—Wash filter element in kerosene and re-oil at 2000 mile intervals or more often if required by operating conditions.

COOLING

Cooling System: Not pressurized (Pressure type Radiator Filler Cap available as accessory equipment).

Capacity—4 quarts (5 quarts with Heater).

Water Pump (No. C-207187): Adjustable Packing type. Mounted on right side of engine.
See Water Pump Section for complete data.

Removal—Disconnect drive coupling at water pump, drain cooling system by taking out drain plug at bottom of radiator, disconnect two water hoses, take out two mounting bolts in flange in front of pump, lift pump out.

Belt Adjustment—*See Generator Belt Adjustment.*

Thermostat: In engine outlet connection (blocker type). Opens at 170°F.

Temperature Gauge: Vapor pressure type (not electric).

CLUTCH

Rockford Model R-4608. Single plate, dry disc.
See Clutch Section for complete data.

Facings—Molded type. I. D. 4". O. D. 6" Thickness 7/64" (flywheel side), 9/64" (pressure plate side).

Pedal Adjustment: Pedal free travel should be 1". To adjust, turn clevis end in or out on cable.

Removal: Remove transmission (see Transmission Removal below). Working from below through the housing opening, remove two bolts in each of three release lever brackets, remove pressure plate and driven member through opening.

TRANSMISSION

Warner Model AS1-T92. Three-speed, sliding spur gear type with conventional shift lever mounted on transmission case cover.
See Transmission Section for complete data.

Removal: Raise rear of car until weight removed from rear springs, disconnect rear springs and shock absorbers from axle. Disconnect brake cable and conduit at each rear wheel backing plate (mechanical brakes) or disconnect brake line and parking brake cable (hydraulic brakes). Disconnect speedometer cable and clutch release cable clamp from bottom of transmission case. Support rear end of engine on blocks, remove rear engine mount (under transmission case at rear end). Remove floor transmission cover. Take out capscrews mounting torque tube on rear face of transmission adapter, pull rear wheels, rear axle, and propeller shaft assembly to rear and clear of the transmission case (CAUTION—Do not lose spring and washer located between propeller shaft and speedometer gear). Remove four capscrews mounting transmission on flywheel housing, pull transmission straight back to clear clutch shaft and remove from car.

UNIVERSALS

New England Products. One used. Plain bushing type. In ball housing at rear of transmission adapter.
See Universals Section for complete data.

REAR AXLE

Spicer Salisbury Model 11. Semi-floating, spiral bevel gear type with Torque Tube drive.
See Rear Axle Section for complete data.

Ratio—5.17-1 Std.

Backlash—.003-.008". Shim adjustment.

Removal: Disconnect brake cable clevis at brake cam lever and unfasten brake cable conduit at clamp on backing plate at each rear wheel (mechanical brakes), disconnect brake line and parking brake cable (hydraulic brakes). Raise rear of car until all weight removed from rear springs, disconnect rear springs and shock absorbers from axle. Take out capscrews mounting torque tube on rear face of transmission adapter, pull rear wheels, rear axle, and torque tube assembly to rear until free from transmission. CAUTION—Do not lose spring and washer located between universal joint and speedometer gear in transmission.

Axle Shaft Removal—Remove rear wheel hub cap, rear wheel, and wheel hub (use Puller M.T. 262). Disconnect brake cable from brake cam lever and free cable conduit from clamp on backing plate. Take out four capscrews mounting backing plate on axle housing, remove backing plate being careful not to lose bearing adjusting shims on housing flange. Pull axle shaft out of housing.

►*CAUTION*—On cars with hydraulic brakes, wheel brake unit must be disassembled before hub and brake disc can be removed.
See "Goodyear Hawley Hydraulic Brakes" in Brake Section.

Wheel Bearing Adjustment: Check endplay at each wheel with dial indicator. Adjust by adding or removing shims located between backing plate and flange on axle housing (see Axle Shaft Removal for dismantling instructions).

Endplay—.002-.007" total for both wheels (between inner ends of shafts and thrust block in differential).

TORQUE TUBE & PROPELLER SHAFT ASSEMBLY: Spicer No. 98-1182X. Torque tube assembly has flanged end at rear (bolted to rear axle housing flange) and thrust ball at forward end (cap assembly bolted on adapter on rear end of transmission). Propeller shaft is splined on pinion shaft (rear end) and in universal joint (forward end) and is positioned by spring located between universal joint and speedometer gear in transmission case.

NOTE—A propeller shaft center bearing is located within the torque tube and is provided with a grease fitting on the tube at this point.

Propeller Shaft Removal: Remove Rear Axle and Torque Tube Assembly (see Rear Axle Removal above), withdraw propeller shaft through forward end of tube.

CAUTION—When installing assembly in car, make certain that spring and washer installed on transmission shaft ahead of universal joint. This spring takes up endplay in propeller shaft.

SHOCK ABSORBERS

Delco Model 1438-T, U (Front), 1438-V, W (Rear). Single acting, hydraulic type.

►*NOTE*—Direct acting hydraulic shock absorbers used on Hotshot.
See Shock Absorber Section for complete data.

Adjustment—None (except by changing valves).

Refilling—Check fluid and fill to level of filler plug hole on cover plate (see Note) at 10000 mile intervals.

NOTE—If cover plate does not have filler plug, this coverplate can be replaced by cover having filler hole and plug (for filling on car) or shock absorber can be removed and refilled on the bench.

FRONT SUSPENSION

Front Suspension: Conventional axle with semi-elliptic springs.

Kingpin Inclination—6½° crosswise.

Camber—2°. No adjustment (axle may be bent for minor adjustments).

Caster—7½°. Adjust by inserting wedge shims between spring and spring pad on axle.

Toe In—3/64-1/16". Adjust in usual manner by changing length of tie rod.

STEERING GEAR

Ross Model S-12. Cam-and-Lever type.
See Steering Gear Section for complete data.

BRAKES

HAWLEY MECHANICAL

Before Serial No. 106,039

Service: Hawley. Four-wheel, mechanical, two-shoe type. Hand lever applies all four service brakes.
See Brake Section for complete data.

Drums—Cast Iron. Diameter 6".

Clearance—.006-.008" at both ends of each shoe (adjusting screw backed off approximately ¼turn from point where wheels start to drag).

Lining—Molded type. Width 31/32". Thickness 3/16". Length per wheel 14".

Hand Brake: See Service Brakes (above).
NOTE—Hand brake handle (on floor ahead of seat) is linked directly to hand brake lever on cross-shaft.

BRAKES

GOODYEAR-HAWLEY HYDRAULIC

Beginning Serial No. 106,039

Service: Goodyear-Hawley hydraulic four-wheel disc type. Hand lever applies rear wheel service brakes.
See Brake Section for complete data.

Disc Diameter—7½".

►*CAUTION*—Disc integral with wheel hub. Wheel brake unit must be disassembled before wheel hub can be removed.

Clearance—Compensating screw backed off ¼ turn from point where wheel locked.

Lining—Molded circular discs (2 used).

Hand Brake: See Service Brakes (above).

MODEL IDENTIFICATION

SERIAL NUMBER: On left front door hinge post.

1949 Numbers	Detroit	Los Angeles
Custom	50,000,001 Up	62,004,001 Up
Deluxe	6,212,001 Up	60,002,001 Up

ENGINE NUMBER: Stamped on boss on left side of cylinder block between Nos. 1 and 2 cylinders.

TUNE-UP

COMPRESSION PRESSURE: 120-150 lbs. at cranking speed of 150 RPM.

VACUUM READING: Steady 18-21" idling at 6 MPH.

FIRING ORDER: 1-5-3-6-2-4. See diagram.

SPARK PLUG GAPS: .038". Limits plus or minus .002".
Plugs—Auto-Lite Type AR5. 14 mm. Metric.

DISTRIBUTOR: Breaker Gap—.020".
Cam Angle—34½° to 38° Closed.
Breaker Arm Spring Tension—17-20 ozs.
Automatic & Vacuum Advance—*See Ignition.*
Condenser Capacity—.25-.28 microfarad.

IGNITION TIMING: 4° or .007" ATDC.
Timing Procedure—*See Ignition Timing.*
Timing Mark—Vibration Dampener marked "DC" at top dead center position with 15-1° graduations before and after this point. Set timing with 4° graduation **after** DC mark at pointer on chain case, then set manual (octane selector) adjustment:
Manual (Octane Selector) Adjustment—Set for slight ping with 10-30 MPH. range when accelerating with wide open throttle. Do not vary initial timing more than 4° advance or retard.

CARBURETION:
Idle Setting—Set idle adjusting screw for smooth idling with warm engine (idle screw ½-1½ turns open), turn screw out for richer mixture.
Idle Speed—6 MPH. (450-475 Eng. RPM. with Tip-toe Shift Trans.).
Float Level—Top of float (not soldered seam) 5/64", plus or minus 1/64", below top edge of bowl.
Accelerating Pump—Center Hole (med. stroke) Normal. Inner Hole—Summer, Outer Hole—Winter, for extreme temperatures.

Choke Setting: Adjusted by inserting a gauge pin through hole in automatic choke lever shaft and slot in base mounting flange (to position shaft) and adjusting carburetor choke valve lever so that choke valve is tightly closed.

Fuel Pump Pressure: 3½-5½ lbs.

MANIFOLD HEAT CONTROL: Automatic thermostatic type. See that valve operates freely. When installing coil, wind free end up **approx. ¾ turn,** not over one turn or under ½ turn, hook end on stop stud.

VALVE TAPPET CLEARANCE: .008" Intake, .010" Exhaust, Hot.
Valve Timing Check—*See Valve Timing.*

STARTING: *See Battery, Starter, Generator, Regulator.*

IGNITION

IGNITION SWITCH: Mitchellock. Combination ignition-starter switch. Starter operates when key held fully to the right. Key automatically returns to "on" position. Coil lead protected by armored cable through fire wall.

COIL: Auto-Lite No. CR-4001 (U.S.), IG-4809 (Early & Canada). Mounted directly above distributor on ignition cable bracket.
Ignition Current—2.25 amperes idling, 5 stopped.

CONDENSER: Auto-Lite No. IG-3927G.
Capacity—.25-.28 microfarad.

DISTRIBUTOR: Auto-Lite No. IAP-4102C-1 (U.S.), IAP-4102A-1 (Canada). Automatic advance type with vacuum Spark Control.
Breaker Plate Identification—Maximum vacuum advance limited by a slot in plate. Plate marked #6 (IAP-4102A-1), #9 (IAP-4102C-1).
Breaker Gap—.020".
Cam Angle—34½° to 38° Closed.
Breaker Arm Spring Tension—17-20 ozs.
Rotation—Clockwise viewed from above.

Automatic Advance—IAP-4102A-1

Distributor Degrees	R.P.M.	Engine Degrees	R.P.M.
Start	350	0	700
3	400	6	800
6	770	12	1540
9	1150	18	2300
11	1400	22	2800

Automatic Advance—IAP-4102C-1

Start	350	0	700
1	450	2	900
5	800	10	1600
10	1425	20	2850
11	1550	22	3100

Vacuum Spark Control: Auto-Lite Unit. Integral type (on distributor, linked directly to breaker plate). Provides additional advance at speeds above idling except when engine accelerated or operated with wide open throttle (spark retarded by return spring).

Vacuum Advance—IAP-4102C-1

Distr. Degrees	Eng. Degrees	Vacuum (" of HG)
Start	0°	5"
2°	4°	7¼"
4°	8°	9⅜"
6°	12°	11⅝"
9°	18°	15"

Vacuum Advance—IAP-4102A-1

Distr. Degrees	Eng. Degrees	Vacuum (" of HG)
Start	0°	5⅛"
1°	2°	6⅝"
3°	6°	9⅝"
5°	10°	12½"
6°	12°	14"

Manual Adjustment—Provides for minor changes in ignition timing at distributor. See Ignition Timing.

Distributor Removal: Mounted on left side of crankcase. To remove, disconnect vacuum line, take out hold-down screw in lock plate. **Installation Note**—Install distributor with #1 piston in firing position.

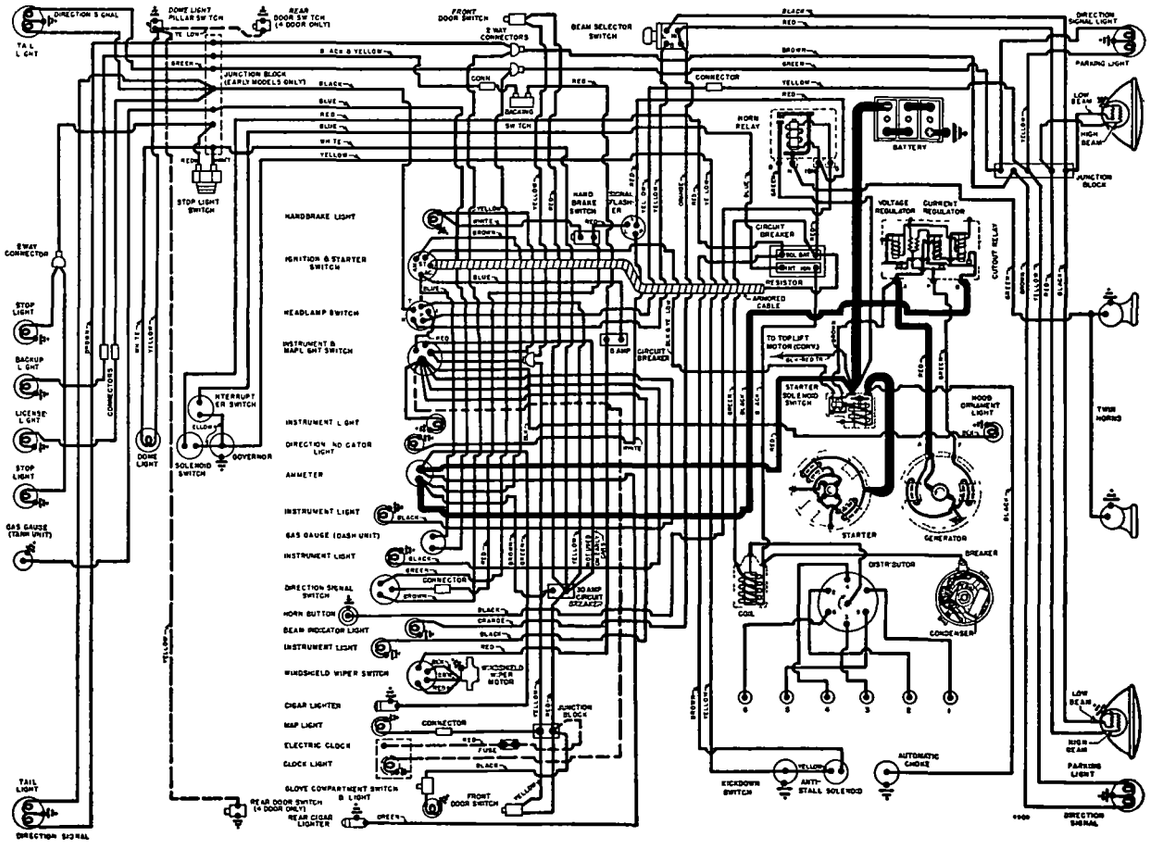

IGNITION TIMING

Std. Setting—Initial setting (for regular non-premium fuel) as shown below. See Manual Adjustment (following) for Final Setting.

	Flywheel Degrees	Piston Position
All Engines	4° ATDC	.007" ATDC

NOTE—Impulse neutralizer marked 'DC' at TDC. with 15 (1°) graduations on either side.

Timing (Using Timing Light)—Connect timing light between distributor primary terminal and battery terminal on generator regulator. Set #1 or #6 piston in firing position (see setting above) with correct mark on impulse neutralizer aligned with pointer on chain case cover. Loosen lock-plate hold-down screw, center pointer on scale, tighten screw. Loosen lock-plate clamp bolt, rotate distributor until timing light just goes out, tighten clamp bolt. Check Manual Adjustment (following).

Timing (Using Synchroscope)—Tool C-374. Clip lead to #1 spark plug, direct light on impulse neutralizer (mark correct graduation with paint), idle engine and adjust distributor as directed above.

Manual Adjustment—Set to give slight ping from 10-30 MPH accelerating with wide open throttle from 10 MPH. To adjust, loosen lock-plate hold-down screw, move plate (not more than 4° or .007" before or after initial setting) counter-clockwise (if no ping noted), clockwise to retard spark (if ping too severe), tighten screw.

CARBURETOR

Carter (B&B) E7V1 (City Traffic).....No Fluid Drive
Carter (B&B) E7L1, L2, L3, L4.....Hydr. Trans.
1½" Single barrel, downdraft type with Sisson automatic choke control, Slow-closing Throttle and Step-down Switch for hydraulically operated transmission.

See Carburetor Section for complete data.

►**E7L1, L2, L3 Note**—*To bring these carburetors up to latest E7L4 carburetor, see Carter (B&B) Carburetors in Carburetor Section.*

Settings (Idle Setting, Float Level, and Accelerating Pump): *See Tune-Up data.*

Metering Jet—*See Carter (B&B) Jet Table in Carburetor Section for complete data.*

NOTE—If lean metering jet (High Altitude calibration) used at lower altitudes for increased economy, speed and power are reduced (not recommended).

Slow-closing Throttle: Solenoid type. Non-adjustable.
See Carburetion Equipment Section for complete data.

Fast Idle: Throttle stopscrew stop dog linked to choke valve so that stop dog rotated and throttle opened to fast idle position when choke valve closed for starting. No adjustment required.

Automatic Choke: Sisson type.
See Carburetion Equipment Section for complete data.

Setting—With throttle 1/3 open, adjust by inserting gauge pin through hole in automatic choke lever shaft and slot in base mounting flange (to position shaft) and adjusting carburetor choke valve lever so that choke valve is closed tightly.

CARB. EQUIPMENT

Air Cleaner: AC No. 1544349 Heavy Duty Oil-bath type. Filter Element AC No. 21.
Servicing—Clean filter element in kerosene, clean out oil reservoir and fill to indicated level with SAE No. 50 oil (20W oil below 32°F., approx. 1 pint required). Service cleaner whenever sump is half filled with oil and dust sludge. NOTE—Crankcase ventilator air cleaner in oil filler cap should be cleaned in kerosene and re-oiled by dipping in SAE No. 50 engine oil at 1000 mile intervals.

Fuel Pump: AC No. 1539042. Diaphragm type fuel pump.
Replacement Pump—AC No. 577 or 588.
Pressure—3½-5½ lbs.
See Carburetion Equipment Section for complete data.

Fuel Tank Filter: Oilite metal filter in tank.
Servicing—If more than 2 pints water in tank, fuel will not pass filter. Remove filler cap and drain plug, draining tank. Disconnect fuel line at some point between pump and tank, blow out line and filter with air, increasing pressure as filter is cleaner. Flush tank with clean gasoline.

Gasoline Gauge: Auto-Lite Electric type.
Dash Unit—Auto-Lite No. 11607A.
Tank Unit—Auto-Lite No. 11538A.
See Carburetion Equipment Section for complete data.

BATTERY

Willard—6 volt, 17 Plate, 110 Ampere Hour Capacity (20 hour rate).

Grounded Terminal—Positive (+) to engine.
Location—Under hood in left fender shield.

STARTER

Auto-Lite Models MCH-6102 (U.S.), MAW-4055 (Canada after Eng. Nos. S13-1543C).
Armature—Auto-Lite Nos. MCH-2039 (MCH-6102), MAW-2213 (MAW-4055).
Drive—Solenoid pinion shift & overrunning clutch.
Rotation—Counter-clockwise at commutator end.
Brush Spring Tension—42-53 ozs. (new brushes).

Performance Data

Torque	R.P.M.	Volts	Amperes
0 ft. lbs.	4900	5.5	65
2.75 "	1480	5.0	200
8.50 "	400	4.0	400
6.0 "	Lock	2.0	335

Removal: Disconnect wires (tape battery lead), remove mounting bolts, withdraw starter (not necessary to disturb oil filter or oil lines).

Starting Switch: Auto-Lite Solenoid Type SS-4707 controlled by turning ignition switch past "on" position.
See Electrical Equipment Section for complete data.

GENERATOR

	Auto-Lite No.	Armature No.
Standard	GGW-6001A	GGW-2006F
Early Cars	GDZ-4801R	GDZ-2006F
State Police	GGJ-6001B	GGJ-2101F
	GGU-6001E	GGU-2006F
City Police & Taxi	GGJ-6001A	GGJ-2101F
	GGU-6001A	GGU-2006F

Two brush type current-voltage regulators.
Maximum Charging Rate—See table below.
Charging Rate Adjustment—None. See Regulator.

Performance Data (GGW-6001A)

Amperes	Volts	Cold—R.P.M.—Hot
0	6.4	870-970 950-1050
40	8.0	1800-2000 2150-2350

Performance Data (GDZ-4801R)

0	6.4	870-970 950-1050
35	8.0	1800-2000 2150-2350

Performance Data (GGJ-6001A, B)

50	8.0	1600 Max. ..... ————

Performance Data (GGU-6001A, E)

45	8.0	1550 Max. ..... ————

Rotation—Counter-clockwise at commutator end.

Brush Spring Tension—(GGW, GDZ, GGU) 35-53 ozs. (new brushes); (GGJ) 30-37 ozs. (new brushes).

Field Current—(GGW, GDZ, GGU) 1.6-1.8 amps., (GGJ) 1.76-1.95 amps., all at 6.0 volts.

Motoring Current—(GGW) 4.6-5.2 amps., (GDZ) 4.2-4.6 amps., (GGJ) 4.3-4.8 amps., (GGU) 5.5-6.5 amps., all at 6.0 volts.

Removal: Pivot mounted at left front of engine. To remove take out pivot and clamp bolts.

Belt Adjustment: Loosen pivot and clamp bolts, pull out on generator until belt is snug (40-50 lbs. tension accrued on scale attached to field frame) or ¼" belt deflection between generator and pump.

REGULATOR

Auto-Lite Regulator No.	for Auto-Lite Generator
VRP-4503B	GGW-6001A
VRP-4503A	GDZ-4801R
①VBA-4101A or VAV-4404A	GGJ-6001A, B
②VBA-4101B	GGU-6001A, E

①—VBA-4104A for negative ground.
②—VAV-4404B used on Early Cars, VBA-4104B for neg. grd.
See Electrical Equipment Section for complete data.

NOTE—Regulator case cover is sealed. Serviced on exchange basis if seals not broken (to remove cover).

Cutout Relay

Cuts In (VAV, VRP)—6.4-7.0 volts (set to 6.4-6.6 volts).

Cuts In (VBA)—6.35-6.75 volts (set to 6.4-6.6 volts).

Cuts Out (All)—4.1-4.8 volts (approx. 4-6 amps. disch.).

Contact Gap (All)—.015" minimum.

Air Gap (All)—.031-.034" with contacts open (check at hinge end of core).

Voltage Regulator

Setting (VAV, VRP)—7.2-7.5 volts at 70°F. **(VBA)**—7.0-7.2 volts at 70°F. See Electrical Equipment Section for settings at other temperatures.

Checking (without breaking seals) & Adjustment—*See Electrical Equipment Section.*

Contact Gap (VRP)—.012" min. (armature against stop pin).

Air Gap (All)—.048-.052" with contacts just opening.

Current Regulator
►(Temperature Compensated Regulators)

	Nominal Setting
VAV-4404-A, VBA-4101-A & 4-A	50
VAV-4404-B, VBA-4101-B & 4B	45
VRP-4503-A	35
VRP-4503-B	40

CONTINUED N NEXT PAGE

CONTINUED FROM PRECEDIN PA E

►*CAUTION*—Nominal setting is approx. setting at 70°F. room temperature after regulator has been run (will be higher started cold). See Electrical Equipment Section for settings at various temperatures.

Checking (without breaking seals) & Adjustment—*See Electrical Equipment Section.*

Contact Gap (VRP)—.012" min. (armature against stop pin).

Air Gap (All)—.048-.052" with contacts just opening.

LIGHTING

Headlamps: Corcoran-Brown "Sealed Beam" type with "Bull's-eye lens". Beam selector switch on toeboard controls upper and lower beams.
See Electrical Equipment Section for complete data.

Headlamp Adjustment—Aim upper beam straight ahead (hot spot center 3" below lamp center height).

Beam Indicator—Lighted when Country (upper) beams in use. Located on lower right corner of speedometer face.

Direction Signal Indicator—In lower left corner of speedometer face.

Direction Signal Flasher—DeSoto No. 1257223.

Switches

Beam Selector—De Soto No. 1253460.

Map Light—De Soto No. 1244605.

Direction Signal—De Soto No. 1235606.

MISC. ELECTRICAL

CIRCUIT BREAKERS: Lighting—30 ampere. Vibrating type, protects lighting circuit.

Aux. Circuit Breaker—8 ampere. Protects Windshield Wipers and Back-Up Light.

Direction Signal—On flasher behind instrument panel. Vibrating type. Protects direction signal circuit.

Transmission Solenoid—Vibrating type mounted as an assembly with resistor unit.

FUSES: Clock—3 ampere. In clock lead.
Radio—14 ampere. In fuse connector at radio.

HORNS: Auto-Lite Models HT-4011 or HW-4201 (Low Pitch), HT-4012 or HW-4202 (High Pitch). Dual horns operated by relay.

Horn Relay: Auto-Lite Models HRL-4103 or 4104. Connected through ignition switch, operates only when ignition "on".

Contacts Close—1.5-3.0 volts (seal to core with 4.0 volts maximum).

Contacts Open—.5 volt min. (open from seal).

Contact Gap—.026". **Air Gap**—.016-.020" (armature air gap with contacts closed but not sealed), .015-.018" (gap between armature leg and yoke with armature sealed to core).

ENGINE

ENGINE SPECIFICATIONS: Six cylinder, "L" head.
Bore—3 7/16". **Stroke**—4 1/4".
Displacement—236.6 cu. ins. **Rated H.P.**—28.36.
Developed Horsepower—112 at 3600 RPM.
Compression Ratio—7.0-1 Std. cast-iron head.
Compression & Vacuum Reading—*See Tune-up data.*

ORIGINAL BORE & PISTONS: *See Chrysler Special Data.*

ORIGINAL BEARING SIZES: *See Chrysler Special Data.*

TIGHTENING TORQUES: *See Chrysler Special Data.*

CYLINDER HEAD: Tightening Torque & Cylinder Head Diagram—*See Chrysler Special Data.*

PISTONS: Aluminum alloy, U-slot, cam ground type. *NOTE*—Skirt cam ground (.010-.014" smaller diameter across pin bosses) and tapered (.0002-.0012" smaller diameter at top of skirt than at bottom).

Length—3⅞". **Weight**—18.5 ozs. (stripped).

Clearance—.0008" on thrust face ¾" from bottom of skirt. Ring land diameter .0305" larger than skirt.

Removal—Pistons and rods removed from above.

Fitting New Pistons: Check piston size with micrometer across large diameter at bottom of skirt. Insert .002" x ½" feeler between cylinder wall and piston (inverted, pin removed) on side opposite slot. Feeler pull 5-7 lbs. (with piston and block at 70°F.).

Replacement Pistons: .005", .020", .030", .040", .060" OS. *NOTE*—Cylinder recondition limits .0005" taper and .0005" out-of-round. Badly scored bores or with taper over .030" or out-of-round over .004" require reboring and honing to limits listed above.

Installing Pistons: Slot away from camshaft.

PISTON RINGS: Two compression, two slotted oil control, coated rings per piston, all above pin. Oil ring grooves drilled for oil drainage (lower groove slotted).

Ring	Width	End Gap	Side Clearance
Compr. (#1)	3/32"	.007-.015"	.0025-.004"
Compr. (#2)	3/32"	.007-.015"	.002-.0035"
Oil Contr. (#3,4)	5/32"	.007-.015"	.001-.0025"

Installing Rings—#1 Compr. with step on inner edge up. #2 Compr. with step on inner edge up or if step on outer edge install with step down.

Replacement Rings: .005" .020" .030" .040" .050" .060" OS.

PISTON PIN: Diameter—55/64". Length 2 7/8". Floating type. Pin hole in rod bronze bushed.
Pin Fit in Piston— —.0000" to +.0005". Thumb push fit with piston heated to 160°F.
Pin Fit in Rod Bushing—.0001-.0004". Tight thumb push fit at normal room temperature.

Replacement Pins: Standard size and .0006", .003", .008" oversize.

CONNECTING ROD: Length—8". **Weight**—34.1 ozs. with bolts less bearings.
Lower Bearing Diameter—2⅛". *See "Original Bearing Size" in Chrysler Special Data.*
Lower Bearing—Removable, precision type, thin babbitt on steel.
Clearance—.0005-.0015". **Sideplay**—.003-.007".

Bearing Adjustment: None (no shims). Replace bearings. Do not file rods or caps.

Replacement Bearings: .001", .002", .010", .012" U.S.

Installing Rods: Oil metering hole toward camshaft.

CRANKSHAFT: 4 bearing, 7 integral counterweights with vibration dampener on front end.
Bearing Diameter—2½". *See "Original Bearing Size" in Chrysler Special Data.*
Bearing Type—Removable, precision type, thin babbitt on steel. No shims.
Clearance—.0005-.0015".

Bearing Adjustment: None (no shims). Replace bearings. Do not file bearing caps.

Replacement Bearings: .001", .002", .010", .012" U.S.

End Thrust: Taken by flange faces on rear (#4) main bearing. **Endplay**—.003-.007".

CAMSHAFT: 4 bearing. Non-adjustable chain drive.
Bearing Diameters—#1, 2"; #2, 1 31/32"; #3, 1 15/16"; #4, 1 1/4".
Bearing Type—Removable steel-backed, babbitt-lined bushings (except #4 machined in block).
Clearance—.001-.003" (#1), .0015-.0035" (all others).

End Thrust: Taken by thrust plate behind camshaft sprocket hub. **Endplay**—.002-.006".

Timing Chain: Width 1". Pitch .500" (½"). Length 24" or 48 links.

Camshaft Setting: Sprockets marked. Mesh chain with sprockets turned so that '0' marks are adjacent and in line with a straightedge across shaft centers.

VALVES:	Head Diameter	Stem Diameter	Length
Intake	1 23/32"	.3405-.3415"	4 25/32"
Exhaust	1 17/32"	.3395-.3405"	4 25/32"

	Seat Angle	Lift	Stem Clearance
Intake	45°	⅜"	.001-.003"
Exhaust	45°	⅜"	.002-.004"

Valve Guides: Remove from above. Press new guides in (stepped end down) with upper end ⅞" below top of block (Tool CM-83), finish ream to .3425-.3435".

Valve Springs: Install with closely coiled end to top. Free Length 2".

	Spring Pressure	Length
Valve Closed	40-45 lbs.	1¾"
Valve Open	107-115 lbs.	1⅜"

Valve Lifters: Mushroom type (remove from below). Stem diam. ⅝". Ream holes from above (pilot in valve guide). Oversizes .001", .008", .030" & .060".
Lifter Clearance in Block—.000-.001".

VALVE TIMING

Tappet Clearance: .008" Intake, .010" Exh. (hot and idling). *NOTE*—Tappet screws self-locking (no locknuts). Remove right front wheel and lower wheel housing panel for access to valves.

Valve Timing: See Camshaft Setting above.
Intake Valves—Open 12° BTDC. Close 44° ALDC.
Exhaust Valves—Open 50° BLDC. Close 6° ATDC.
Valve Timing Check—With .014" (cold) tappet clearance #6 intake valve should open with #6 piston within range of 5° to 17° or .011" to .122" BTDC with 5th to 17th graduation before DC mark on impulse neutralizer aligned with pointer on chain case cover. Reset tappet clearance to running clearance .008" Hot.

LUBRICATION

Engine Oiling System: Pressure to main and connecting rod bearings, camshaft bearings, and timing chain. "Rotor" type oil pump mounted externally on right side of crankcase.
Crankcase Capacity—5 quarts (refill).
Normal Oil Pressure—38-40 lbs.
Oil Pressure Relief Valve—Under plug below starter. Opens at 40-45 lbs. Spring painted red, green, or unmarked. If spring replaced, use same color spring.

Oil Pump: "Rotor" type on right side of crankcase.
Servicing—*See "Oil Pump" in Chrysler Special Data.*

Oil Filter: On left side of engine above starter.
Servicing—Replace element at 8000 mile intervals.

Oil Pressure Gauge: Auto-Lite No. 11609A (not elec.).

COOLING

Cooling System: Positive circulation with pump on front of engine, by-pass thermostat, and water distribution tube in cylinder block behind pump.

Capacity—17 quarts.

Water Pump: Packless type with grease fitting.
See Water Pump Section for complete data.

Removal—Drain cooling system, remove fan belt, disconnect hoses at pump, remove pump mounting studs, lift fan and pump off.

Belt Adjustment—*See Generator Belt Adjustment.*

Thermostat: In cylinder head water outlet.
INSTALLATION NOTE—Install thermostat with 2 ports facing front, and 2 ports facing rear.

Setting—Starts to open 157-162°F. Fully open 183°F.

Temperature Gauge: Auto-Lite No. 11610A (not elec.).

CLUTCH

Borg & Beck Models 10A7 (Std.), 9A7 (With Fluid Drive), 11A6 (Taxicab). Single plate, dry disc.
Identification Note—Cover stamped 952 (9A7), 957 (10A7), 994 (11A6).
See Clutch Section for complete data.
Facings—Woven type, 2 required.

	Inside Diam.	Outside Diam.	Thickness
9A7	6"	9¼"	.125" (⅛")
10A7	7"	10"	.125" (⅛")
11A6	6½"	11"	.125" (⅛")

Pedal Adjustment: Should just clear toeboard (adjust stopscrew on lower end of pedal) & have 1" free travel (adjusting nut on connector link at fork).

Removal: Remove release fork pull-back spring, Transmission (see Transmission) and housing underpan. Pull out clutch release bearing and sleeve. Mark cover and flywheel (or driving plate on Fluid Drive). Take out cover screws, remove assembly.

FLUID DRIVE

DeSoto—Fluid coupling at rear of engine. Optl.
See Miscellaneous Section for complete data.

Oil Level: Keep to level of filler hole. Check at first 1000 miles and every 10,000 miles. Manufacturer recommends MOPAR Fluid Drive Fluid.

Removal: Remove transmission and clutch (see TRANSMISSION and CLUTCH), take off driver flange stud nuts (Tool C-589), lower fluid drive assembly out.

TRANSMISSION

STANDARD

Own Make—All helical gear, constant-mesh, synchro-mesh (Second & High), sliding gear (Low & Reverse). *See Transmission Section for complete data.*

Transmission Control: Manual steering column shift.
See Transmission Section for complete data.

Removal: Jack up front end of car, disconnect front universal (loosen companion flange nut if disassembling transmission—see Chrysler Special Data for Propeller Shaft Center Bearing Removal on 7 pass.). Disconnect speedometer cable, hand brake cable, gear-shift rods. Remove trans.-to-clutch housing capscrews and nuts. Pull unit to rear, down and out of car. *NOTE*—Use pilot studs when installing assembly.

TRANSMISSION

PTIONAL EQUIPMENT

Tip-Toe Shift Type (with Fluid Drive)—Semi-automatic design, four-speed transmission with hydraulic actuation and electrical control.
See Transmission Section for complete data.

Transmission Oil—3 pints, 10-W engine oil.

Transmission Control: See Transmission article for adjustment instructions.
See Transmission Section for complete data.

Kickdown Solenoid—Auto-Lite No. SSS-4003.

Governor—Auto-Lite No. TG-4205R.

Kickdown Switch—Part of carburetor assembly.

Ignition Interrupter Switch—On right side of transmission above Governor.

Removal: Remove access cover on right rear side of floorboard under front floor mat, disconnect speedometer cable, and governor, solenoid, and interrupter switch wires at transmission. Remove governor and solenoid. Disconnect hand brake cable at brake band, remove cable and cable anchor bracket. Remove brake support band, adjusting bolt bracket and lever as an assembly. Disconnect front universal (push yoke back), and gearshift rods at transmission. Drain transmission, **replace drain plug.** Disconnect transmission mounting bolts and lower assembly out of car.

►*INSTALLATION CAUTION*—Rear face of clutch housing and lower pan must be in correct alignment. Misalignment can cause hard shifting when transmission installed.

UNIVERSALS

Detroit Universal Series 7200—Cross type with roller bearings.
See Universals Section for complete data.

Propeller Shaft Center Bearing: Used on 7 Passenger.

REAR AXLE

Own Make—Semi-floating, hypoid gear type with Hotchkiss Drive.
See Rear Axle Section for complete data.

Axle Ratio	Std. Trans.	Tip Toe Trans.
5-Passenger	3.9-1 (39:10)①	②
Station Wagon	4.1-1 (41:10)	3.91-1 (43:11)
Long Wheelbase	4.3-1 (43:10)	③

①—4.1-1 (41:10) Optl.
②—3.73-1 (41:11) or 3.9-1 (39:10) Optl.
③—3.91-1 (43:11) or 4.1-1 (41:10) Optl.

Backlash—.006-.010". Screw adjustment.

Removal: Disconnect rear universal, remove axle shafts (see below) and carrier assembly cap screws.

Axle Shaft Removal—Remove wheel ,hub, and drum assembly (use screw type hub puller—Tool C-675), block brake pedal, disconnect brake line at wheel cylinder, remove axle shaft key, install sleeve (Tool C-745) in oil seal, remove brake support (oil seal mounted in support), pull shaft and bearing (use C-499 puller). *NOTE*—Use puller C-293-E to remove bearing from shaft, puller C-748 or C-358 to remove inner oil seal, drift C-201 to install seal.

Axle Shaft Outer Oil Seal: New leather type mounted on brake support (backing plate).

Wheel Bearing Adjustment: Shims between backing plate and axle housing. With wheel and hub removed, check endplay with dial indicator. To adjust, remove backing plate (see above), add or remove shims (furnished .010", .0125", .015", .030" thick) equally at both wheels. **Endplay**—.003-.008".

SHOCK ABSORBERS

Direct-acting, hydraulic, non-adjustable type.
See Shock Absorber Section for complete data.

FRONT SUSPENSION

Front Suspension: Independent, linked parallelogram type with coil springs and direct acting shock absorbers.
See Front Suspension Section for complete data.

Kingpin Inclination—4¾° to 6° crosswise.

Camber—0° to Pos. ¾°. (¼-½° higher on left).

Caster—Neg. 2° preferred. Limits Neg. 1° to Neg. 3°.

Toe In—0" preferred. Limits 0" to 1/16". Adjust both tie rods equally.

Steering Geometry—Inner wheel 21½° plus or minus 1°. Outer 20°.

STEERING GEAR

Own Make—3 tooth Worm-and-Roller. Similar to Gemmer Model 335.
NOTE—See Gemmer 305, 335 & 375 article for data.
See Steering Gear Section for complete data.

BRAKES

Service: DeSoto "Safe-guard" Lockheed Hydraulic.

Front Wheels—Two-cylinder type (front shoe anchored at bottom and actuated by upper cylinder, rear shoe anchored at top and actuated by lower cylinder).

Rear Wheels—Double anchor type with single double-acting wheel cylinder.
See Brake Section for complete data.

Wheel Cylinders—1⅛" bore. Single acting (front), double acting (rear wheels).

Drums—Centrifuse. Diameter 11".

Lining—Molded Asbestos. 2" wide. 13/64" thick. Length per wheel 23" (front wheels), 20 3/8" (rear wheels).

Clearance—.006" at each end of all shoes.

Braking Power—60% (front wheels), 40% (rear).

Hand Brake: On drum at rear of transmission.

Adjustment—*See "Hand Brake Notes" in Chrysler Special Data.*

Drum—Cast-iron. 6" (7" on cars with Hydraulic transmission).

Lining—Width 2" (2½" on 7" type). Thickness 5/32". Length 15 3/8" (20" on 7" type).

Clearance—.015-.020" around band.

MISC. MECHANICAL

WINDSHIELD WIPER: Auto-Lite Model EWJ-4001, EWJ-4003 (Conv. Coupe). Electric type with circuit breaker mounted on control switch.
See Miscellaneous Section for complete data.

CONVERTIBLE TOP CONTROL: Auto-Lite Model EWM-4001. Electric type.
See Miscellaneous Section for complete data.

MODEL IDENTIFICATION

SERIAL NUMBER: Located on left front door hinge post.

1949 Numbers	Detroit	San Leandro
D-29	37,000,101 Up	48,000,101 Up
D-30	31,245,001 Up	45,050,001 Up

ENGINE NUMBER: Located on left side of cylinder block between #1 & #2 cylinders.
1949 Numbers—D-30-1001 Up.

TUNE-UP

COMPRESSION PRESSURE: 120-150 lbs. at cranking speed of 150 RPM.

VACUUM READING: Steady 18-21" idling at 6 MPH.

FIRING ORDER: 1-5-3-6-2-4. See diagram.

SPARK PLUG GAPS: .038" Limits plus or minus .002".
Plugs—Auto-Lite AR-5. 14mm. Metric.

DISTRIBUTOR: Breaker Gap—.020".
Cam Angle—34½° to 38° (closed).
Breaker Arm Spring Tension—17-20 ozs.
Automatic & Vacuum Advance—*See Ignition.*
Condenser Capacity—.25-.28 microfarad.

IGNITION TIMING: 2° or .002" ATDC.
Timing Procedure—*See Ignition Timing.*
Timing Mark—Second graduation after "DC" mark on vibration dempener aligned with pointer on chain case cover. Vary as follows:
Octane Selector—Set for slight ping when accelerating with wide open throttle between 10-30 MPH.

CARBURETION:
Idle Setting—With engine warm, set throttle stop-screw. Adjust idle adjusting screw for smooth idle (½-1½ turns open for Carter).
Idle Speed (Std. Trans.)—6 MPH.
Idle Speed (Gyro-Matic Drive)—450-475 RPM.
Float Level (Stromberg)—Fuel level ⅝" below top surface of float chamber.
Float Level (Carter)—Top of float (not soldered seam) 5/64" ±1/64" below top edge of bowl.
Accelerating Pump—Center hole (medium) Normal. Inner Hole—Summer, Outer Hole—Winter.

Choke Setting: The choke can be adjusted by inserting a gauge pin through hole in automatic choke lever shaft and slot in base mounting flange (to position shaft) and adjusting carburetor choke valve lever so that choke valve is tightly closed.

Fuel Pump Pressure: 3-5 lbs.

MANIFOLD HEAT CONTROL: Thermostatic coil type. See that valve operates freely. When installing coil, wind free end up approx. one turn.

VALVE TAPPET CLEARANCE: .008" Intake, .010" Exh. Hot.
Valve Timing Check—*See Valve Timing.*

STARTING: *See Battery, Starter, Generator, Regulator.*

IGNITION

IGNITION SWITCH: Mitchellock. Combination ignition-starter switch. Starter operates when key held fully to the right. Key automatically returns to "on" position. Coil lead protected by armored cable through fire wall.

COIL: Auto-Lite CR-4001 (IG-4809 Early Cars). On ignition cable bracket above distributor.
Ignition Current—2¼ amperes idling, 5 stopped.

DISTRIBUTOR: Auto-Lite—Automatic advance type with Vacuum Spark Control as follows:

D-29 (Std.)	IGS-4207B-1
D-30 (Std.), D-29 (Spec. Equip.)	IAP-4103A-1
D-30 (Canada)	IAP-4102-1

Breaker Plate Identification—Maximum vacuum advance limited by a slot in plate. Plate marked #7 (IAP-4201-1), #8 (IAP-4103A-1, IGS-4207B-1).
Breaker Gap—.020".
Cam Angle—34½° to 38° (closed).
Breaker Arm Spring Tension—17-20 ounces.
Rotation—Clockwise viewed from above.

Automatic Advance—IGS-4207B-1 & IAP-4103A-1

Degrees	Distr. R.P.M.	Degrees	Eng. R.P.M.
Start	350	0	700
1	450	2	900
5	800	10	1600
10	1425	20	2850
11	1550	22	3100

Automatic Advance—IAP-4102-1

Degrees	Distr. R.P.M.	Degrees	Eng. R.P.M.
Start	350	0	700
3	400	6	800
6	850	12	1700
9	1300	18	2600
12	1750	24	3500

Vacuum Spark Control. Auto-Lite Units. Integral type (on distributor, linked directly to breaker plate). Provides additional advance at speeds above idling except when engine accelerated or operated with wide open throttle (spark retarded by return spring).

Vacuum Advance—IGS-4207B-1 & IAP-4103A-1

Distr. Degrees	Eng. Degrees	Vacuum (" of HG)
Start	0°	4½"
1°	2°	5½"
4°	8°	9⅛"
7°	14°	12¾"
8°	16°	14"

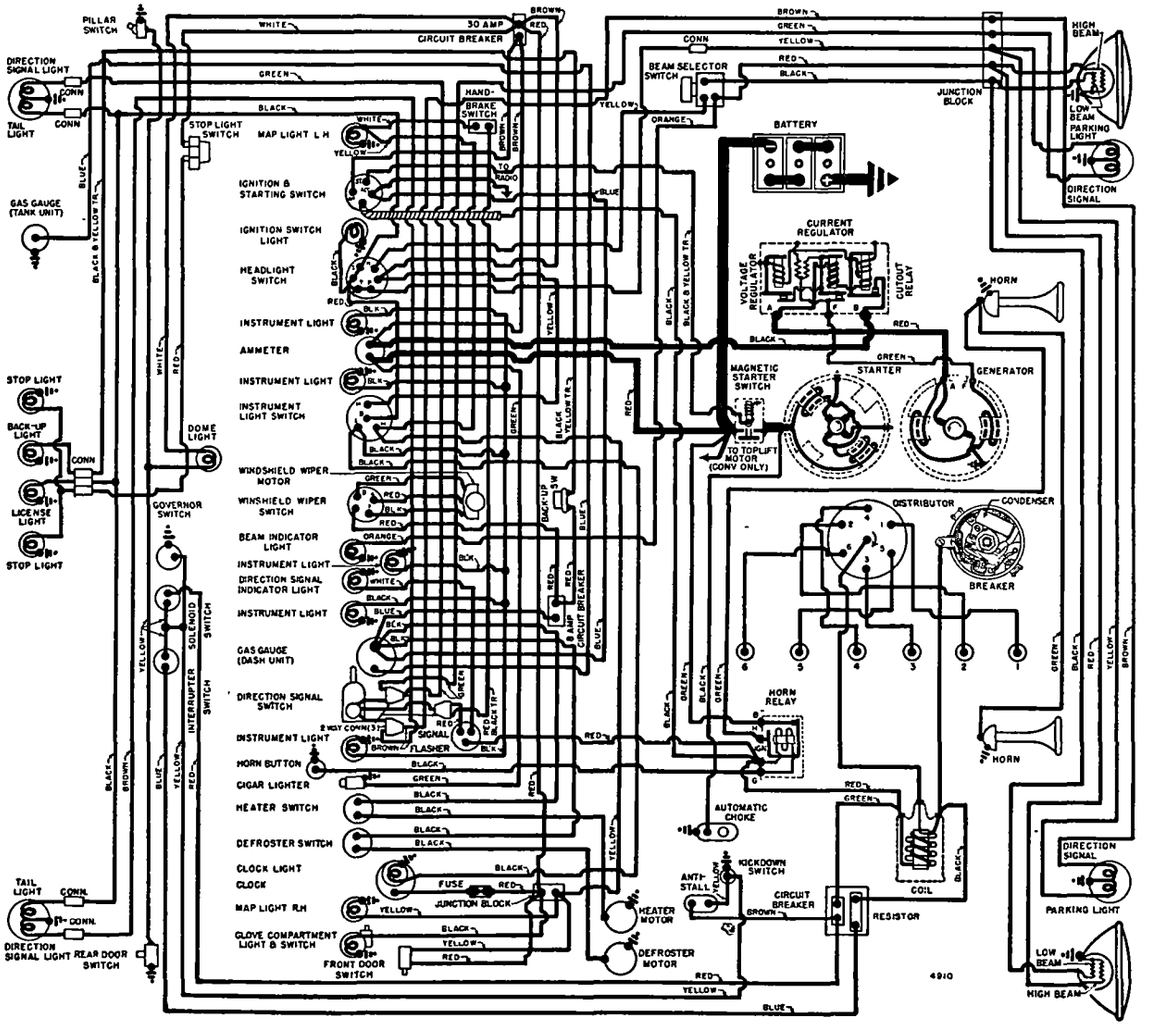

Vacuum Advance—IAP-4102-1

Distr. Degrees	Eng. Degrees	Vacuum (" of HG)
Start	0°	5"
1°	2°	6¾"
3°	6°	9¼"
5°	10°	12⅛"
7°	14°	15"

Manual Adjustment—Provides for minor changes in ignition timing at distributor. See Ignition Timing.

Distributor Removal: Mounted on left side of crankcase. To remove, disconnect vacuum line, take out hold-down screw in lock plate. **Installation Note**—Install distributor with #1 piston in firing position.

IGNITION TIMING

Std. Setting—Initial setting (for regular non-premium fuel) as shown below. See Manual Adjustment (following) for Final Setting.

	Flywheel Degrees	Piston Position
All Engines	2° ATDC	.002" ATDC.

NOTE—Impulse neutralizer marked 'DC' at TDC. with 15 (1°) graduations on either side.

Timing (Using Timing Light)—Connect timing light between distributor primary terminal and battery terminal on generator regulator. Set #1 or #6 piston in firing position (see Setting above) with correct mark on impulse neutralizer aligned with pointer on chain case cover. Loosen lock-plate hold-down screw, center pointer on scale, tighten screw. Loosen lock-plate clamp bolt, rotate distributor until timing light just goes out, tighten clamp bolt. Check Manual Adjustment (following)

Timing (Using Synchroscope)—Tool C-374. Clip lead to #1 spark plug, direct light on impulse neutralizer (mark correct graduation with paint), idle engine, adjust distributor as directed above until mark aligned with pointer on chain case cover.

Manual Adjustment—Set to give slight ping from 10-30 MPH. accelerating with wide open throttle from 10 MPH. To adjust, loosen lock-plate hold-down screw, move plate (not more than 4° or .007" before or after initial setting) counter-clockwise (if no ping), clockwise (if ping too severe), tighten screw.

CARBURETOR

STROMBERG

Stromberg Models BXVD-3 (with Fluid Drive), BXVES-3 (with Gyro-Matic Drive). Stromberg No. 380249 (BXVD-3) marked with Code No. 3-93, Stromberg No. 380251 (BXVES-3) marked with Code No. 3-95-A. 1⅜" Single barrel downdraft type with Sisson automatic choke.

NOTE—BXVES-3 type has Kick-down Switch for automatic transmission.

See Carburetor Section for complete data.

Settings (Idle Setting, Float Level, and Accelerating Pump): ***See Tune-Up data.***

Metering Jet—***See Carburetor Section for Stromberg Downdraft Carburetor Jet Specification Table.***

Slow-Closing Throttle: Adjustable Dashpot type.

Setting—With all slack removed from linkage, set adjusting screw on dash pot lever under float bowl so that piston travel is 5/16-11/32" (measured on dash pot rod on bowl cover). Turn screw out to lengthen stroke, in to shorten.

See Carburetion Equipment Section for complete data.

Fast Idle: Throttle opened to fast idle position when choke valve closed. No adjustment required.

See Carburetion Equipment Section for complete data.

CARBURETOR

CARTER (B&B)

Carter (B&B) Models D6P1 (with Fluid Drive), D6M1 (with Gyro-Matic Drive). 1½" Single barrel, downdraft type with Sisson Automatic Choke.

NOTE—D6M1 type has Kick-down Switch for automatic transmission.

See Carburetor Section for complete data.

Settings (Idle Setting, Float Level, and Accelerating Pump): ***See Tune-Up data.***

Metering Jet—***See Carburetor Section for Carter (B&B) Downdraft Carburetor Jet Specification Table.***

Slow-Closing Throttle: (D6P1) Adjustable type, **(D6M1)** Non-adjustable Solenoid type.

Setting (D6P1)—Adjusting screw on top of bowl cover, open five (5) full turns from closed position.

See Carburetion Equipment Section for complete data.

Fast Idle: Throttle opened to fast idle position when choke valve closed. No adjustment required.

See Carburetion Equipment Section for complete data.

Automatic Choke: Sisson Type.

Setting—The choke can be adjusted by inserting a gauge pin through hole in automatic choke lever shaft and slot in base mounting flange (to position shaft) and adjusting carburetor choke valve lever so that choke valve is tightly closed.

See Carburetion Equipment Section for complete data.

CARB. EQUIPMENT

Air Cleaner: AC No. 1544612 (Early), 1544714 (Late) Heavy duty oil-bath type. Filter element AC No. 21.

Servicing—Wash filter element in kerosene, drain and clean oil reservoir and refill to indicated level mark with 1 pint SAE No. 50 engine oil (SAE No. 20W for temperatures below freezing) at 1000 mile or 30 day intervals, or more often if required.

Oil Filler Cap (crankcase Ventilator) Air Cleaner: Wash filter element in cap in kerosene and re-oil by dipping in SAE No. 50 engine oil at 1000 mile or 30 day intervals or more often if required.

Fuel Pump: AC No. 1539042 or Auto-Lite No. FA-4001. Diaphragm type fuel pump.

Replacement Pump—AC No. 577 or 588 (for 1539042).

Pressure—3-5 lbs.

See Carburetion Equipment Section for complete data.

Fuel Tank Filter: Oilite metal filter in tank.

Servicing—If more than 2 pints water in tank, fuel will not pass filter. Remove filler cap and drain plug, draining tank. Disconnect fuel line at some point between pump and tank, blow out line and filter with air, increasing pressure as filter is cleaned. Flush tank with clean gasoline.

Gasoline Gauge: Auto-Lite electric type.

Dash Unit—Auto-Lite No. 11728A.

Tank Unit—Auto-Lite No. 11538A.

See Carburetion Equipment Section for complete data.

BATTERY

Auto-Lite Type 1H-105D—6 volt, 15 plate, 105 ampere hour capacity (20 hour rate).

Dimensions—Length 9". Width 7 1/16". Hgt. 9 5/16".

Grounded Terminal—Positive (+) to engine.

Location—Under hood in left fender shield.

STARTER

U. S......**Auto-Lite MCH-6101.** Arm. MCH-2028

Canada.....**Auto-Lite MAW-4041.** Arm. MAW-2128

Drive—Outboard Barrel Type Bendix No. A-2991.

Rotation—Counter-clockwise at commutator end.

Brush Spring Tension—42-53 ozs. (new brushes).

Performance Data

Torque	R.P.M.	Volts	Amperes
0 ft. lbs.	4900	5.5	65
2.75 "	1480	5.0	200
8.50 "	400	4.0	400
6.0 "	Lock	2.0	335

Removal: Disconnect wires (tape battery lead), remove mounting bolts, withdraw starter (not necessary to disturb oil filter or oil lines).

Starting Switch: Auto-Lite Model SST-4001. Magnetic type mounted on left front fender shield and controlled by turning ignition switch past "on" position.

See Electrical Equipment Section for complete data.

GENERATOR

	Auto-Lite No.	Armature No.
D-29, D-30 (Std.)	GGW-6001A	GGW-2006F
D-30 (Early)	GDZ-4801A	GDZ-2006F
D-30 (Early & Can.)	GDZ-4801R	GDZ-2006F
D-30 (St. Wg. & 7 Pass.)	GGW-6001D	GGW-2006F
City Police & Taxi	GGJ-6001A	GGJ-2101F
	GGU-6001A	GGU-2006F
State Police	GGJ-6001B	GGJ-2101F
	GGU-6001E	GGU-2006F

Two brush type current-voltage regulators.

Maximum Charging Rate—See table below.

Charging Rate Adjustment—None. See Regulator.

Performance Data (GGW-6001A, D)

Amperes	Volts	Cold—R.P.M.	Hot
0	6.4	870-970	950-1050
40	8.0	1800-2000	2150-2350

Performance Data (GDZ-4801A, R)

0	6.4	870-970	950-1050
35	8.0	1800-2000	2150-2350

Performance Data (GGJ-6001A, B)

50	8.0	1600 Max.	———

Performance Data (GGU-6001A, E)

45	8.0	1550 Max.	———

Rotation—Counter-clockwise at commutator end.

Brush Spring Tension—(GGW, GDZ, GGU) 35-53 ozs. (new brushes); (GGJ) 30-37 ozs. (new brushes).

Field Current—(GGW, GDZ, GGU) 1.6-1.8 amps., (GGJ) 1.76-1.95 amps., all at 6.0 volts.

Motoring Current—(GGW) 4.6-5.2 amps., (GDZ) 4.2-4.6 amps., (GGU) 5.5-6.5 amps., (GGJ) 4.3-4.8 amps., all at 6.0 volts.

Removal: Pivot mounted at left front of engine. To remove, take out pivot and clamp bolts.

Belt Adjustment: Loosen pivot and clamp bolts, pull out on generator until belt is snug (40-50 lbs. tension secured on scale attached to field frame) or ¼" belt deflection between generator and pump.

REGULATOR

Auto-Lite Regulator No.	for Auto-Lite Generator
①VAV-4404A or VBA-4101A	GGJ-6001A, B
②VAV-4404B or VBA-4101B	GGU-6001A, E
VRP-4503A	GDZ-4801A, R
VRP-4503B	GGW-6001A, D

①—VBA-4104A for neg. grd. ②—VBA-4104B for neg. grd.

See Electrical Equipment Section for complete data.

NOTE—Regulator case cover is sealed. Serviced on exchange basis if seals not broken (to remove cover).

CONTINUED ON NEXT PAGE

CONTINUED FROM PRECEDIN PA E

Cutout Relay

Cuts In (VAV, VRP)—6.4-7.0 volts (set to 6.4-6.6 volts).
Cuts In (VBA)—6.35-6.75 volts (set to 6.4-6.6 volts).
Cuts Out (All)—4.1-4.8 volts (approx. 4-6 amps. disch.).
Contact Gap (All)—.015" minimum.
Air Gap (All)—.031-.034" with contacts open (check at hinge end of core).

Voltage Regulator

Setting (VAV, VRP)—7.2-7.5 volts at 70°F. **(VBA)**—7.0-7.2 volts at 70°F. See Electrical Equipment Section for settings at other temperatures.
Checking (without breaking seals) & Adjustment—*See Electrical Equipment Section.*
Contact Gap (VRP)—.012" min. (armature against stop pin).
Air Gap (All)—.048-.052" with contacts just opening.

Current Regulator

►**(Temperature Compensated Regulators)**

	Nominal Setting
VAV-4404-A, VBA-4101-A & 4-A	50
VAV-4404-B, VBA-4101-B & 4B	45
VRP-4503-A	35
VRP-4503-B	40

►*CAUTION*—Nominal setting is approx. setting at 70°F. room temp. after regulator has been run (will be higher started cold). See Electrical Equipment Section for settings at various temperatures.
Checking (without breaking seals) & Adjustment—*See Electrical Equipment Section.*
Contact Gap (VRP)—.012" min. (armature against stop pin).
Air Gap (All)—.048-.052" with contacts just opening.

LIGHTING

Headlamps: Corcoran-Brown "Sealed Beam" type with new "Bull's-eye lens".
See Electrical Equipment Section for complete data.
Adjustment—Aim upper beam straight ahead (hot spot center 3" below lamp center height at 25 ft.).
Beam Indicator—Lighted when Country (upper beams in use. Located on lower face of speedometer.
Direction Signal Indicator—Located on lower face of speedometer.

Switches

Lighting—Dodge No. 1300600.
Beam Selector—Dodge No. 1253460.
Instrument—Dodge No. 1308226.
Map Light—Dodge No. 1244600.

MISC. ELECTRICAL

CIRCUIT BREAKERS: Lighting—30 ampere. Vibrating type, protects lighting circuits.
Aux. Circuit Breaker—8 ampere. Protects Windshield Wipers and Back-Up Light.
Direction Signal—On flasher behind instrument panel. Vibrating type. Protects dir. signal circuit.
Transmission Solenoid—Vibrating type mounted as an assembly with resistor unit.
Convertible Top—Mounted near control switch. Thermostatic type. Opens at 80 amperes in 1 minute or less.

FUSES: Clock—3 ampere. In clock lead.
Radio—14 ampere. In fuse connector at radio.

HORNS: Auto-Lite Model HW-4201 (Low Pitch), HW-4202 (High Pitch). Dual horns operated by relay.

Horn Relay: Auto-Lite HRL-4103 or 4104. Connected through ignition switch, operates only with ignition on.
Contact Close—1.5-3.0 volts (seal to core with 4 V.).
Contacts Open—.5 volt min. (open from seal).
Contact Gap—.026". **Air Gap**—.016-.020" (armature air gap with contacts closed but not sealed, .015-.018" (gap between armature leg and yoke with armature sealed to core).

ENGINE

ENGINE SPECIFICATIONS: 6 cylinder, "L" hd. type.
Bore—3¼". **Stroke**—4⅝".
Displacement—230.2 cu. ins. **Rated H.P.**—25.35.
Developed Horsepower—103 at 3600 RPM.
Compression Ratio—7.0-1 Std. Cast-iron Head.
Compression & Vacuum Reading—*See Tune-up data.*

ORIGINAL BORE & PISTONS: *See Chrysler Special Data.*

ORIGINAL BEARING SIZES: *See Chrysler Special Data.*

TIGHTENING TORQUES: *See Chrysler Special Data.*

CYLINDER HEAD: Tightening Torque & Cylinder Head Diagram—*See Chrysler Special Data.*

PISTONS: Aluminum alloy, "U" slot, cam ground type.
NOTE—Piston skirt is elliptical (.010-.012" smaller diameter across pin bosses than across thrust faces), and tapered (.0005-.0015" smaller diameter at top of skirt than at bottom).
Length—3 11/16". **Weight**—16.0 ozs. (stripped).
Removal—Pistons and rods removed from above.
Clearance—.0008" on thrust face ¾" from bottom of skirt. Ring land diameter .0305" larger than skirt.

Fitting New Pistons: Measure piston size with micrometer across thrust faces (right angles to pin bosses ¾" from bottom of skirt. Fit piston in bore using .002" x ½" feeler, insert piston upside down in bore with feeler 90° from pin bosses on side opposite slot. Clearance correct when 5-7 lbs. pull required to withdraw feeler (bore & piston at 70°F.).
NOTE—Cylinder recondition limits .0005" taper and .0005" out-of-round. Badly scored bores or with taper over .030" or out-of-round over .004" require reboring and honing to limits listed above.

Replacement Pistons: .005", .020", .030", .040", .060" OS.

Installing Pistons: "U" slot away from valves.

PISTON RINGS: Two compression (top ring chrome-plated), two slotted oil control, coated rings per piston, all above pin. Oil ring grooves drilled for oil drainage.

Ring	Width	End Gap	Side Clearance
Compr. (#1)	3/32"	.007-.015"	.0025-.004"
Compr. (#2)	3/32"	.007-.015"	.002-.0035"
Oil Contr. (#3,4)	5/32"	.007-.015"	.001-.0025"

Installing Rings—#1 Compr. with step on inner edge up. #2 Compr. with step on inner edge up or if step on outer edge, install with step down.

Replacement Rings: .005" .020" .030" .040" .050" .060" OS.

PISTON PIN: Diameter—55/64" **Length**—2 3/4". Pin floats in piston and rod, held by lock rings.
Pin Fit in Piston—.0000" to +.0005". Thumb push fit with piston at 70°F.
Pin Fit in Rod Bushing—+.0001" to +.0002". Thumb push fit at 70°F.

Replacement Pins: Std., .0006", .003", .008" Oversize.

CONNECTING ROD: Length—7 13/16". **Weight**—27.90 ozs. (with bolts less bearings).
NOTE—Pin hole in rod bronze bushed.
Lower Bearing Diameter—2 1/16". *See "Original Bearing Size" in Chrysler Special Data.*
Lower Bearing—Removable, precision type, steel-backed, thin babbitt-lined. No shims.
Clearance—.0005-.0015". **Sideplay**—.006-.011".

Bearing Adjustment: None (no shims). Replace bearings. Do not file rods or caps.

Replacement Bearings: .001", .002", .010", .012" U.S.

Installing Rods: Wide portion of bearing to rear (#1, 3, 5), to front (#2, 4, 6). Oil hole to camshaft.

CRANKSHAFT: 4 bearings, 7 integral counterweights, with vibration dampener on front end.
Bearing Diameter—2½". *See "Original Bearing Size" in Chrysler Special Data.*
Bearings—Removable, precision type, steel-backed, thin babbitt-lined. No shims.
Clearance—.0005-.0015".

Bearing Adjustment: None (no shims). Replace bearings. Do not file bearing caps.

Replacement Bearings: .001", .002", .010", .012" U.S.

End Thrust: Taken by flanged faces of #4 (rear) main bearing. **Endplay**—.003-.007".

CAMSHAFT: 4 bearing. Non-adjustable chain drive.
Bearing Diameters—#1, 2"; #2, 1 31/32"; #3, 1 15/16"; #4, 1 1/4".
Bearings—Removable, steel-backed, babbitt-lined bushings (except #4—machined in crankcase).
Clearance—.001-.003".

End Thrust: Taken by thrust plate behind camshaft sprocket hub. **Endplay**—.002-.006".

Timing Chain: Width 1". Pitch .500" (½"). Length 24" or 48 links.

Camshaft Setting: Sprockets marked. Mesh chain with sprockets turned so that '0' marks are adjacent and in line with a straightedge across shaft centers.

VALVES:	Head Diameter	Stem Diameter	Length
Intake	1 17/32"	.340-.341"	4 25/32"
Exhaust	1 13/32"	.340-.341"	4 25/32"

	Seat Angle	Lift	Stem Clearance
Intake	45°	23/64"	.001-.003"
Exhaust	45°	23/64"	.002-.004"

Valve Guides: Remove from above. Press new guides in with stepped end down and upper end ⅞" below top of block, ream guides to inside diameter of .342-.343" (Intake), .343-.344" (Exhaust).

Valve Springs: Install with close-coil end to top.

Free Length 2".	Spring Pressure	Length
Valve Closed	40-45 lbs.	1¾"
Valve Open	107-115 lbs.	1⅜"

Valve Lifters: Mushroom type (remove from below with camshaft out of engine). Stem diameter ⅝". Service by reaming lifter holes (work from above piloting reamer in valve guide) and installing oversize lifters furnished .001", .008", .030" Oversize.
Lifter Clearance in Block—.000-.001".

VALVE TIMING

Tappet Clearance: .008" Intake, .010" Exhaust, Hot.
NOTE—Tappet screws self-locking type.

Valve Timing: See Camshaft Setting above.
Intake Valves—Open 8° BTDC. Close 36° ALDC.
Exhaust Valves—Open 37° BLDC. Close 7° ATDC.
Valve Timing Check—With .014" tappet clearance (Cold), #6 intake valve should open with #6 piston 8° before top dead center with 8th graduation before "DC" mark on impulse neutralizer aligned with pointer on chain case cover. Reset tappet clearance to .008" Hot running clearance.

LUBRICATION

Engine Oiling System: Pressure to main and connecting rod bearings, camshaft bearings, and timing chain. "Rotor" type oil pump.
Crankcase Capacity—5 qts. (refill).
Normal Oil Pressure—40-50 lbs. at 20 MPH.
Oil Pressure Relief Valve—Under plug below starter. Opens at 40-45 lbs. Spring painted red, green, or unmarked. If spring replaced, use same color spring.
Oil Pump: "Rotor" type on right side of engine.
Servicing—*See "Oil Pump" in Chrysler Special Data.*
Oil Filter: On left side of engine above starter.
Servicing—Replace filter at 8000 mile intervals.
Oil Pressure Gauge: Auto-Lite No. 11727A (not elec.).

COOLING

Cooling System: Positive circulation with pump on front of engine, by-pass thermostat, and water distribution tube in cylinder block behind pump.
Capacity—15 quarts.
Water Pump: Packless type with grease fitting.
See Water Pump Section for complete data.
Removal—Drain cooling system, remove fan belt, disconnect hoses at pump, remove pump mounting studs, lift fan and pump off.
Belt Adjustment—*See Generator Belt Adjustment.*
Thermostat: In cylinder head water outlet.
INSTALLATION NOTE—Install thermostat with 2 ports facing front, and 2 ports facing rear.
Setting—Starts to open 157-162°F. Fully open 183-187°F.
Temeprature Gauge: Auto-Lite No. 11729A. Not elec.

CLUTCH

Borg & Beck Models 10A7 (with Fluid Drive), 9A7 (with Gyro-Matic Drive), 11A6 (7 Passenger). Single plate, dry disc type with "Borglite" driven member.
NOTE—Cover No. 952 (9A7), 957 (10A7), 931 (11A6).
See Clutch Section for complete data.
Facings—Woven type, 2 required.

	Inside Diam.	Outside Diam.	Thickness
9A7	6"	9¼"	125" (⅛")
10A7	7"	10"	125" (⅛")
11A7	6½"	11"	125" (⅛")

Pedal Adjustment: Set pedal to just clear toeboard (stopscrew on lower end of pedal) and set for 1" free travel (adjust nut on connector link at fork). NOTE—Do not disturb turnbuckle on pedal link.
Removal: Remove release fork pull-back spring, Transmission (see Transmission) and housing underpan. Pull out clutch release bearing and sleeve. Mark cover and flywheel (or driving plate on Fluid Drive). Take out cover screws, remove assembly.

FLUID DRIVE

Dodge—Fluid coupling at rear of engine. Optl.
See Miscellaneous Section for complete data.
Oil Level: Keep to level of filler hole. Check at first 1000 miles and every 10,000 miles. Manufacturer recommends MOPAR Fluid Drive Fluid.
Removal: Remove transmission and clutch (see TRANSMISSION and CLUTCH), take off driver flange stud nuts (Tool C-589), lower fluid drive assembly out.

TRANSMISSION

STANDARD

Own Make—All helical gear, constant-mesh, synchro-mesh (Second & High), sliding gear (Low & Reverse). *See Transmission Section for complete data.*
Transmission Control: Manual steering col. shift Std.
See Transmission Section for complete data.
Removal: Jack up front end of car, disconnect front universal (loosen companion flange nut if disassembling transmission—see Chrysler Special Data for Propeller Shaft Center Bearing Removal on 7 Pass.). Disconnect speedometer cable, hand brake cable, gear-shift rods, vacuum and air hose (if Power Shift used). Remove trans.-to-clutch housing capscrews and nuts. Pull unit to rear, down and out of car.
NOTE—Use pilot studs when installing assembly.

TRANSMISSION

OPTIONAL EQUIPMENT

Hydraulically Operated Type (with Fluid Drive). New design semi-automatic, four-speed transmission with hydraulic actuation and electrical control.
See Transmission Section for complete data.
Transmission Control: See Transmission article for adjustment directions.
See Transmission Section for complete data.
Kickdown Solenoid—Auto-Lite No. SSS-4003.
Governor—Auto-Lite No. TG-4205R.
Kickdown Switch—Part of carburetor assembly.
Ignition Interrupter Switch—On right side of transmission above Governor.
Transmission Oil—3 pints, 10-W engine oil.
Removal: Remove access cover on right rear side of floorboard under front floor mat, disconnect speedometer cable, and governor, solenoid, and interrupter switch wires at transmission. Remove governor and solenoid. Disconnect hand brake cable at brake band, remove cable and cable anchor bracket. Remove brake support, band, adjusting bolt bracket and lever as an assembly. Disconnect front universal (push yoke back), and gearshift rods at transmission. Drain transmission, **replace drain plug.** Disconnect transmission mounting bolts and lower assembly out of car.
INSTALLATION CAUTION—Rear face of clutch housing and lower pan must be in correct alignment. Misalignment can cause hard shifting when transmission installed.

UNIVERSALS

All exc. 7 Pass.—Detroit Universal Series 4200.
7 Pass. Models—Detroit Universal Series 7200.
Ball-and-Trunnion Type (4200), cross type (7200).
See Universals Section for complete data.
Propeller Shaft Center Bearing: Used on 7 pass. sedan.

REAR AXLE

Own Make—Semi-floating, hypoid gear type with Hotchkiss drive. *See Rear Axle Section for data.*

	No Fluid Drive	Fluid Drive	Gyromatic Trans.
D-29 3-Pass.	——	3.73-1	——
D-29 2-Door Sedan	4.1-1	3.9-1	——
D-30	3.9-1	4.1-1	3.9-1
D-30 St. Wgn. & 7-Pass.	——	4.3-1	4.1-1

Backlash—.006-.010". Screw adjustment.
Removal: Disconnect rear universal, remove axle shafts (see below) and carrier assembly cap screws.
Axle Shaft Removal—Remove wheel, hub, and drum assembly (use screw type hub puller—Tool C-675), block brake pedal, disconnect brake line at wheel cylinder, remove axle shaft key, install sleeve (Tool C-745) in oil seal, remove brake support (oil seal mounted in support), pull shaft and bearing (use C-499 puller). NOTE—Use Puller C-293-E to remove bearing from shaft, puller C-748 or C-358 to remove inner oil seal, drift C-201 to install seal.
Axle Shaft Oil Seal: New leather type mounted on brake support (backing plate).
Wheel Bearing Adjustment: Shims between backing plate and axle housing. With wheel and hub removed, check endplay with dial indicator. To adjust, remove backing plate (see above), add or remove shims (furnished .010", .0125", .015", .030" thick) equally at both wheels. **Endplay**—.003-.008".

SHOCK ABSORBERS

Hydraulic, direct acting, non-adjustable.
See Shock Absorber Section for complete data.

FRONT SUSPENSION

Front Suspension: Independent, linked parallelogram type with coil springs and direct acting shock absorbers.
See Front Suspension Section for complete data.
Kingpin Inclination—4¾° to 6° crosswise.
Camber—Pos. ¼°. Limits 0° to Pos. ¾° (¼-½° higher on left).
Caster—0° preferred. Limits Neg. 1° to Pos. 1°. No adjustment.
Toe In—0" (0-1/16"). Adjust by turning both tie rods equally.
Steering Geometry—Inner wheel 22½°. Outer 20°.

STEERING GEAR

Own Make—(Gemmer design) Model 305 (exc. 7 pass.), 335 "3-tooth" type (7 passenger).
NOTE—See Gemmer 305 & 335 articles for data.
See Steering Gear Section for complete data.

BRAKES

Service: Dodge "Safe-guard" Lockheed Hydraulic.
Front Wheels—Two-cylinder type (front shoe anchored at bottom and actuated by upper cylinder, rear shoe anchored at top and actuated by lower cylinder).
Rear Wheels—Double anchor type with single double-acting wheel cylinder.
See Brake Section for complete data.
Wheel Cylinders—Single acting type (front), double acting type with straight (1⅛") bore (rear).
Drums—Cast-iron. Diameter 10" (D-29), 11" (D-30).
Lining—Molded Asbestos. 2" Wide. 13/64" Thick.. Length per wheel: 21" (D-29), 23" (D-30) front; 18½" (D-29), 20⅜" (D-30) rear wheels.
Clearance—.006" at each end of all shoes.
Braking Power—60% front wheels, 40% rear.
Hand Brake: On drum at rear of transmission.
Adjustment—*See "Hand Brake" in Chrysler Special Data.*
Drum—Cast-iron. 6".
Lining—Width 2". Thickness 5/32". Lgth. 15 3/8".
Clearance—.015-.020" around band.

MISC. MECHANICAL

WINDSHIELD WIPER: Auto-Lite Model EWJ-4001. EWJ-4003 (Conv. Coupe). Electric type with circuit breaker mounted on control switch.
See Miscellaneous Section for complete data.
CONVERTIBLE TOP CONTROL: Auto-Lite Model EWM-4001. Electric Type.
See Miscellaneous Section for complete data.

HOOD ALIGNMENT

1949-50 FORD PASSENGER CARS

HOOD ALIGNMENT: Fore-and-Aft Adjustment—3 hood hinge bracket-to-hood screws at each hinge. Loosen screws just enough to allow hinge to hold hood in place when raised. Lower hood, shift hood fore or aft until correctly positioned. Raise hood without disturbing alignment, tighten screws. Check hood safety catch action (bend catch if necessary).

Up-and-Down Adjustment—Loosen locknut on top of latch dowel. Turn dowel with screwdriver down if hood fits too tight, up if hood loose on dowel or too much clearance at lower edge of hood. Tighten locknut.

RADIATOR GRILLE

1949 FORD PASSENGER CARS

RADIATOR GRILLE: Chrome-plated or Stainless steel type grille assemblies used (parts not interchangeable except as unit) consisting of following parts:

1—Top Moulding. 3-piece radiator grille opening.

2—Center Moulding. Radiator grille assembly consisting of right and left center bars, ornament, and vertical reinforcement (on back side).

NOTE—Stainless steel type center moulding is a spot welded and riveted assembly and **cannot be disassembled.** Chrome plated type assembled with screws and tinnerman nuts and **can be disassembled.**

3—Lower Moulding. Mounted on stone deflector with nuts and fasteners. Not attached to grille.

Grille Removal: Take out hidden screws at each end of center moulding after removing parking lights. Remove screws at top and bottom of vertical grille reinforcement behind grille. Take off center moulding. Upper moulding can then be removed. Lower moulding on stone deflector can be removed without disturbing other grille parts.

TIGHTENING (TORQUE WRENCH) SPECIFICATIONS

1949-50 MODELS

	Ft. Lbs.	In. Lbs.
Cyl. Hd. bolts	65-70	780-840
Cyl Hd. nuts	45-50	540-600
Con. Rod nuts (castellated)	35-40	420-480
Con. Rod nuts (self-locking)	40-45	480-540
Main B'g. nuts (self-locking)	80-90	960-1080
Main B'g. bolts (self-locking)	80-90	960-1080
Main B'g nuts (castellated) V8	80-90	960-1080
Main B'g. nuts (castellated) Six	75-80	900-960
Flywheel Screws (self-locking)	80	960
Flywheel Screws (lock wire)	65-70	780-840
Diff. Carrier Stud Nuts	30-35	360-420
Axle Shaft Retainer Nuts	30-35	360-420

CYLINDER HEAD

1949-50 SIX CYL. "H" ENGINE

6 **CYLINDER HEAD BOLTS & STUDS:** Studs used on engines up to 7HA-61171, bolts used after this number. Both studs and bolts furnished for service but should not be mixed. **Use all studs or bolts.**

1949-50 SIX CYL. "H" ENGINE

6 **CYLINDER HEAD GASKET:** Gasket must be installed with **large full flow passages at rear.** Late type gaskets have left front corner cut off for identification. If this type gasket with cutoff corner installed backwards, water leaks at the rear corner between head and block will occur.

ALL MODELS

CYLINDER HEAD INSTALLATION: Use Torque Indicating Wrench and tighten in following order:

FORD SIX

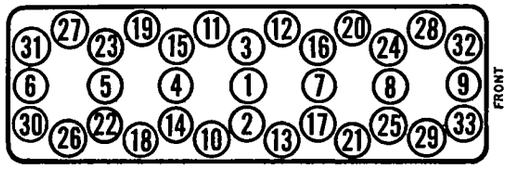

FORD V8

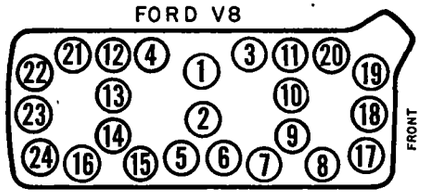

Tightening Torque—See Tightening (Torque Wrench) Specifications below.

TIMING GEARS

1949-50 SIX CYL. "H" ENGINE

NEW CAMSHAFT GEAR WITH INTEGRAL HUB: This new gear (replaces bolted-on gear with hub pressed on camshaft) has two 5/16"-24 tapped holes in hub for removal from camshaft. End of camshaft tapped permitting use of 7/16"-14 stud and flat washer to turn gear on shaft.

NOTE—When installing camshaft gear, remove spark plugs to permit crankshaft gear to turn slightly as teeth mesh.

Installing Integral Hub Gear on Engines with Bolted-On Gear. Remove gear hub with puller 6269-N. Drill 3/8" hole, 3/4" deep in end of camshaft, and tap with 7/16"-14 bottom tap. Install gear as above.

VALVE SYSTEM

1949-50 "V8" ENGINE

Valve Grinding and Tappet Clearance Note (for all V8 Models):—To perform these operations with minimum amount of hand cranking, note which valves are fully open (first column in table below), grind or check valves listed on same line of table—then turn shaft 'til next 'valve open' point reached.

Valves Open	Valves to Grind
1. 4X & 1N	3X, 8N, 6N, 7X, 3N, 2X
2. 3X & 8N	1X, 7N, 5X, 2N, 4X, 1N
3. 1X & 7N	8X, 5N, 6X, 4N
OR	
1. 8X & 5N	1X, 7N, 6N, 7X, 3N, 2X
2. 6N & 7X	5X, 2N, 4X, 1N, 8X, 5N
3. 5X & 2N	6X, 4N, 3X, 8N

NOTE—'X' Exhaust Valve. 'N' Intake Valve.

Tappet Clearance Checking (All Engines): Check tappet clearance when re-installing valves. Turn camshaft until lifter is on heel of cam, make certain that valve assembly is seated in block ("C" washer engaging the valve guide), then check the tappet clearance between the end of the valve stem and the top surface of lifter with a feeler gauge. If clearance less than minimum (see table below), install a shorter valve or grind off end of valve stem, if clearance greater than maximum, install longer valve, or reface valve or valve seat to lower the valve in the block.

Tappet Clearance

(with 8BA-6250 camshaft)

Intake Valves .....010" Min., .012" Max.
Exhaust Valves .....014" Min., .016" Max.

(with later 8BA-6250-B camshaft)①

Intake Valves .....014" (.013-.015")
Exhaust Valves .....018" (.017-.019")

①—Started part production with Eng. No. 8BA-622468. See "Tune-Up" or "Valve Timing" on 1949-50 Ford V8 car pages.

OIL PUMP

1949-50 SIX CYL. "H" ENGINE

6 **CYLINDER ROTOR TYPE OIL PUMP: Removal from 1949 Passenger Car.** Remove distributor cap, turn engine over until #1 cylinder at firing position (rotor will point to oil hole in distributor), allow crankshaft to remain in this position while pump off engine. Remove front engine mounts-to-frame bolts. Loosen rear engine mounting. **Raise front of engine 2" and move ½" to left.** Remove distributor. Take out 3 pump mounting capscrews in pump cover, pull pump out.

Pump Disassembly—Remove cover and outer rotor (rotate drive gear to free rotor from pump body). Drive out pin in drive gear and press gear off shaft. Remove shaft and inner rotor. Clean all parts and check to specifications listed below.

Pump Specifications and Clearances—As follows:

Outer Rotor. Outside Diameter 2.249" (wear limit 2.245"). Clearance in Body .005-.010" (wear limit .012").

Pump Body. Inside Diameter 2.258" (wear limit 2.260").

Inner Rotor. Clearance in Outer Rotor .006" (wear limit .010").

Shaft. Outside Diameter .5175" (wear limit .5170"). Shaft Endplay .004-.008" (wear limit .010").

Pump Assembly—If new shaft installed, assemble shaft with inner rotor in pump. Press drive gear on end of shaft to obtain .004" clearance between gear and upper end of pump body. Drill pin hole in shaft. Install pin and peen both ends. Place outer rotor in body, install cover being sure to use new cover gasket.

Pump Installation—Reverse removal instructions listed above making certain distributor correctly positioned for proper ignition timing.

1949-50 SIX CYL. "H" ENGINE

(before Pass. Car 8HA-107555, Truck 7H-219349)

OIL PUMP DRIVEN GEAR: After above nos. cast-iron gear (7HA-6652) used together with new flame-hardened camshaft (7HA-6250-C—this no. cast between second and fourth cam lobes from rear end of camshaft).

Replacement of Oil Pump Driven Gear on Engines before Pass. Car No. 8HA-107555 and Truck No. 7H-219349. Bronze gear used on these engines. If pump replaced or if gear failure encountered, manufacturer recommends installation of cast-iron gear no. 7HA-6652. If this cast-iron gear fails prematurely, new flame-hardened camshaft no. 7HA-6250-C and new cast-iron gear should be installed. *CAUTION*—If oil pump being replaced, 8HA-6600 pump will require re-working by installation of cast-iron driven gear 7HA-6652.

Gear Installation Note. Must be .004-.008" shaft endplay. See Oil Pump Installation above.

CLUTCH NOTES

1949-50 FORD V8 PASS. CARS

V8 PASS. CAR FLYWHEEL RUBBING ON HOUSING COVER WHEN CLUTCH DISENGAGED: Due to distortion of cover on front side of flywheel housing being distorted at flywheel bolt circle. Correct by taking off cover (drops straight down after removing attaching bolts) and flattening. COVER MUST BE FLAT.

OVERDRIVE NOTES

1949 FORD PASSENGER CARS

OVERDRIVE NOISE (EARLY 1949 CARS): Can be caused by Overdrive case interference at Rear Engine Support at two points as follows:

1)—**Rear Engine Support Bolt.** Head of bolt may be interfering with underside of Overdrive Case. Correct by grinding off head of bolt (do not grind head to less than ⅛" thick). Thin head bolt No. 355519-S2 used on later cars in production.

2)—**Overdrive Case.** Grooves on underside of case at engine mounting too shallow so that flanges on engine support interferes with Overdrive case at this point. Correct by filing grooves in case and cleaning up ends of grooves if casting flash evident. Later cars used matched assemblies in production.

BRAKE NOTES

1949 TRUCK SERIES F-4, F-5, F-6

HAND BRAKE ADJUSTMENT: For independent shaft brake at transmission. Set hand lever in fully released position and make certain that flat portion of cam is resting on rear of brake band upper end (if cam not flat, remove clevis pin in upper end of cam, adjust clevis rod until cam is flat when rod re-connected). Remove locking wire from brak band anchor adjusting screw (left side), turn screw clockwise until clearance between band and drum is .010" at the anchor screw, install lock wire. Loosen locknut on adjusting screw for lower position of brake band (round screw on brake mounting bracket), turn screw until clearance between lower portion of brake band and drum is .010", tighten locknut. Tighten adjusting nut at lower end of main adjusting bolt (on which band positioning springs are located) until clearance between upper portion of band and drum is .010". This completes the brake adjustment.

ELECTRICAL SYSTEM NOTES

1949-50 MODELS

STARTER MOTOR RUSTING (PASSENGER CARS & TRUCKS): Correct by enlarging drain hole to ⅜" in endplate on underside. This can be done from underneath with starter on engine. If performed on bench all drill chips must be removed from starter. Drill ⅜" hole ½" deep (DO NOT DRILL DEEPER THAN ½" OR FIELD COIL MAY BE DAMAGED).

MODEL IDENTIFICATION

VEHICLE NUMBER: Stamped on plate attached to engine side of dash and on top of right frame side rail just to rear of front suspension upper control arm.

SERIAL NUMBER: New 1950 designations as follows:

Engine Type	Model Year	Assembly Plant	Serial Number
*H	0	See below	100001 Up

Assembly Plant Designations

AT—Atlanta	**DA**—Dearborn	**MP**—Memphis
BF—Buffalo	**LU**—Louisville	**NR**—Norfolk
CS—Chester	**EG**—Edgewater	**RH**—Richmond
CH—Chicago	**KC**—Kansas City	**SR**—Somerville
DL—Dallas	**LB**—Long Beach	**SP**—Twin City
HM—Highland Park		(St. Paul)

TUNE-UP

COMPRESSION PRESSURE: 110 lbs. at cranking spd.

VACUUM READING: Steady 18-21" idling at 500 RPM.

FIRING ORDER: 1-5-3-6-2-4. See diagram.

SPARK PLUG GAPS: .030". Limits .029-.032".

Plug Type—Champion H-10. 14 mm.

DISTRIBUTOR: Breaker Gap—.024-.026".

Cam Angle—36° closed, 24° open.

Breaker Arm Spring Tension—17-20 ounces.

Advance Performance—*See Ignition.*

Condenser Capacity—.21-.25 microfarad.

IGNITION TIMING: TDC.

Timing Procedure—*See Ignition Timing.*

Dampener Mark—Circular boss or groove (depending on type of dampener used). 2 pointers on front engine cover. *Use pointer nearest to outer circumference of dampener for proper timing.*

CARBURETION:

Idle Setting—Approx. 1 turn open. One screw—turning screw out gives richer mixture.

Idle Speed—Approximately 500 RPM.

Float Level—1.322-1.353" bottom of float to underside of bowl cover with needle valve seated (use Gauge No. 9550-A).

Accelerating Pump—Center hole average setting. Inner hole for hot weather, Outer for cold weather.

Fuel Pump Pressure: 4-5 lbs.

MANIFOLD HEAT CONTROL: Automatic thermostatic type. Valve should be closed (counterweight arm against stop pin) with engine cold and should operate freely).

VALVE TAPPET CLEARANCE: .013-.015" Cold, All Valves.

►**High Speed Setting**—.002" additional exhaust valve clearance recommended by car manufacturer.

►***ADJUSTABLE SELF-LOCKING TAPPET SCREWS***

Valve Timing Check—*See Valve Timing.*

STARTING: *See Battery, Starter, Generator, Regulator.*

IGNITION

IGNITION SWITCH: Ford No. 6A-11572-A (Mitchell type), No. 6A-11572-B (Briggs & Stratton type).

Ignition Lock—Ford No. 8A-11582-A.

COIL: Ford No. 7RA-12029-A or 8BA-12029.

Location—On left side of engine above distributor.

Ignition Current—Approx. 5.2-5.7 amperes at 6 volts, stopped. Primary current resistance 1.05-1.15 ohms (75°F.).

CONDENSER: Ford No. 7RA-12300-B.

Capacity—.21-.25 microfarad.

DISTRIBUTOR: Ford No. 7HA-12127 (Less Cap and Rotor). New "Pressure" distributor with spark advance controlled by vacuum diaphragm moving breaker plate to advance spark against two breaker plate springs. Operating vacuum taken from 1 carburetor connection (2 passages inside carburetor, 1 at venturi, 1 at throttle valve). Full spark advance obtained at 18-35 MPH. with normal road load or for part throttle operation at any speed.

►***NOTE—Distributor angle-mounted on left side of engine and shaft splined to oil pump drive gear.***

Breaker Gap—.024-.026".

Cam Angle—36° closed, 24° open.

Breaker Arm Spring Tension—17-20 ounces.

Rotation—Clockwise viewed from above.

Advance Performance
►(at Wide Open Throttle)

Distributor Degrees	Vacuum	R.P.M.	Engine Degrees	Vacuum	R.P.M.
0°	0"	200	0°	0"	400
1¾-3°	0.4"	500	3½-6°	0.4"	1000
5½-6¾°	1.4"	1000	11-13½°	1.4"	2000
11½-13°	5.5"	1000	23-26°	5.5"	2000
8½-9¾°	2.9"	1500	17-19½°	2.9"	3000
10½-11½°	4.1"	2000	21-23°	4.1"	4000

Distributor Removal: Mounted on left side of engine at center. To remove, disconnect vacuum line, take out hold-down screw in timing arm, lift off.

IGNITION TIMING

Std. Setting ..... **at TDC.**

Dampener Mark—Circular boss or groove (depending on type of dampener used). 2 pointers on front engine cover. *Use pointer nearest to outer circumference of dampener for proper timing.*

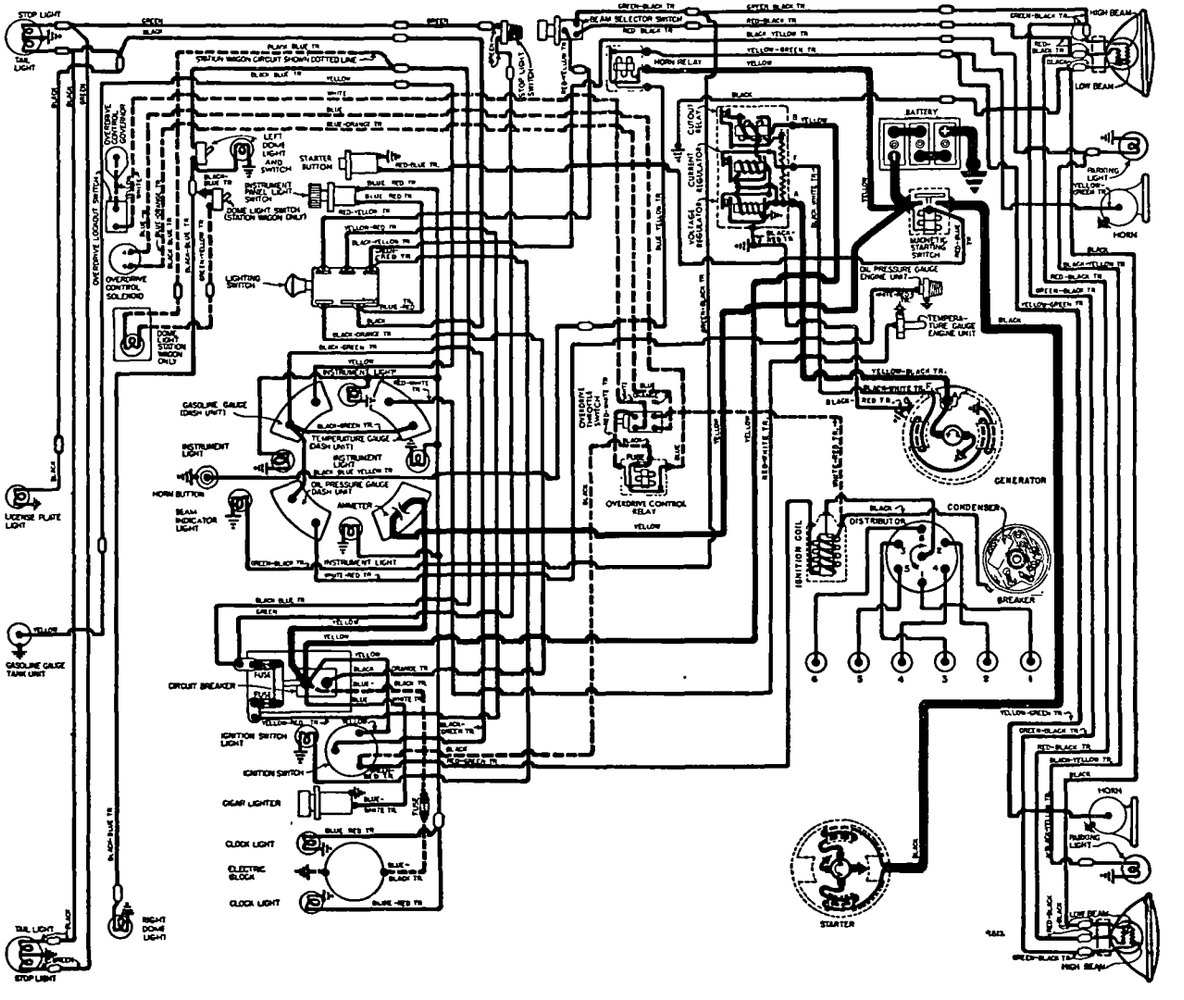

Timing—With #1 piston at firing position and timing mark aligned with pointer on front of engine, loosen clamp screw on timing arm, rotate distributor until contacts begin to open, tighten clamp screw. Check spark plug connections (see diagram), see that rotor opposite #1 terminal in cap).

►**Timing (with Neon Timing Light)**—***CAUTION—Vacuum line must be disconnected to avoid vacuum advance operating.*** Mark proper timing pointer (see Dampener Mark above) and dampener mark with white chalk. Connect timing light to #1 spark plug. Idle engine and adjust distributor (as directed above) until mark and pointer aligned when light flashes.

CARBURETOR

Holley-Ford No. 8HA-9510-A. Single barrel downdraft type with new vacuum passages for distributor operation.

See Carburetor Section for complete data.

Settings (Idle Setting, Float Level, and Accelerating Pump): ***See Tune-Up data.***

Metering Jets—***See Holley-Ford Jet Specification Table in Carburetor Section.***

Fast Idle: Integral type. Operated by choke valve lever. No adjustment required.

CARB. EQUIPMENT

Fuel Pump (std.): Ford No. 7HA-9350-B.

Optl. (Fuel-&-Vacuum)—Ford No. 8HA-9350.

Pressure—4-5 lbs.

See Carburetion Equipment Section for complete data.

Gasoline Gauge: King-Seeley Electric.

Dash Unit (Green Pointer)—Ford No. 8A-9280A.

Dash Unit (Red Pointer)—Ford No. 8A-9280B.

Tank Unit—No. 8A-9275 (Sta. Wg. 01A-9275A).

See Carburetion Equipment Section for complete data.

Air Cleaner (std.—oil-wetted): Ford No. 8HA-9600-A.

Optl. (oil bath)—Ford No. 8HA-9600-B1 (1 pint capacity), 8HA-9600-B4 (1 quart capacity).

Servicing (oil-wetted type)—Wash filter assembly in cleaning fluid and re-oil when dry every 1000 miles.

Servicing (oil bath type)—Clean and refill sump (to level mark) with same grade oil used in crankcase at 1000 mile intervals (CAUTION—Do not use lighter than SAE #30 oil in hot weather). Occasionally wash filter in cleaning fluid.

BATTERY

Ford No. 81A-10655-A. 6 Volt, 17 Plate, 100 Amp. Hr.

Zero Capacity—300 amperes for 3.3 minutes. Five Second Voltage—4.2 volts.

Grounded Terminal—Positive (+).

Location—On left side in engine compartment.

Dimensions—L. 10½". W. 7⅛". H. 7¼".

STARTER

Ford Model No. 7HA-11002. Armature No. 18-11005.

►**Starter Motor Rusting Correction**—***See "Electrical System Notes" in Ford Shop Notes.***

Drive—Ford No. 7HA-11350. New 9 tooth pinion type for use with 114 tooth flywheel ring gear.

Rotation—Counter-clockwise at commutator end.

Brush Spring Tension—20-22 ounces.

Cranking Engine—100 RPM., 190-215 amperes.

Performance Data

Torque	R.P.M.	Volts	Amperes
4 ft. lbs.	1070	4.6	200
8 "	660	4.3	340
12 "	300	3.65	465
14 "	Lock	3.5	550

Starting Switch: Ford No. 21A-11450 Magnetic Switch mounted on left front fender apron and controlled by panel pushbutton switch Ford No. 6H-11500.

Removal: On right front face of flywheel housing cover. To remove, take off right engine splash pan (if used), free starter-to-oil pan bracket, take out 2 starter through bolts.

GENERATOR

Ford No. 8BA-10002-A (less pulley and bracket).

Armature No.—Ford No. 8BA-10005-A.

2 brush type with current and voltage regulation.

Charging Rate Adjustment—None. See Regulator.

Maximum Charging Rate—36 amperes, 7 volts, reached at approximately 20 MPH. Controlled by regulator and dependent on load and battery condition.

To Check Generator Output—Connect ammeter in series with charging line at regulator "ARM" terminal, connect short insulated jumper between generator "A" and "F" terminals (to short out regulator). Run engine at approximately 1500 RPM. and note ammeter reading. If generator output equals or exceeds rate output (below) generator performance is satisfactory. Remove jumper.

►***CAUTION—Do not operate generator at higher speeds or in service with jumper connected between generator armature and field terminals. This jumper eliminates all regulator action.***

Performance Data

Amperes	Engine R.P.M.
33	1500

Rotation—Counter-clockwise at commutator end.

Brush Spring Tension—20-24 ozs.

Removal: Separate generator mounting bracket mounted on engine bracket on left side of engine at front. To remove, slack off belt by loosening mounting bracket bolts, take out mounting strap bolt, lift off generator.

Belt Adjustment: ¼" deflection midway between generator and pump pulleys. To adjust, loosen 2 mounting bracket bolts under generator and capscrew in bracket slot behind generator.

REGULATOR

Ford Numbers

Regulator	Generator	Amperes
51A-10505-A or C	8BA-10002-A (Std.)	30-33
8M-10505	8BA-10002-A (Std.)	34-38

Voltage-current 3-Unit types.

See Electrical Equipment Section for complete data.

NOTE—Separate ground wire extending to cowl must be in place when generator operated.

Cutout Relay

Cuts In—6.0-6.4 volts COLD (will be slightly higher when warm).

Cuts Out—8 ampere discharge current (maximum).

Contact Gap—.010" (armature against upper stop).

Air Gap—.014" between armature and core with contacts open.

Voltage Regulator

Voltage Setting—7.0-7.4 volts COLD (7.2-7.6 volts after 20 minutes run).

Checking & Adjustment—***See Elec. Equip. Section.***

Air Gap—.032-.035" between armature and core with contacts just closed.

►***CAUTION—Make certain gauge contacts armature and not brass rivet on underside of armature.***

Contact Spring Tension—5 ounces minimum with contacts just opening.

Current Regulator

Current Setting (51A).....30-33 amperes COLD

Current Setting (8M).....34-38 amperes COLD

Checking & Adjustment—***See Elec. Equip. Section.***

Air Gap—.032-.035" between armature and core with contacts just closed.

Contact Spring Tension—5 ounces minimum with contacts just opening.

LIGHTING

Headlamps: Ford "Sealed Beam" type.

See Electrical Equipment Section for complete data.

Adjustment—Aim upper beams straight ahead (hot spot centers 3" below lamp center height at 25 ft.).

Beam Indicator—Bulb between 50 and 60 on speedometer. Lighted with Upper Beam "on".

Direction Signal: Optl. ***See Electrical Equipment Section.***

Direction Indicators—Right and Left indicators on lower edge of speedometer.

Direction Signal Flasher—Ford No. 8L-13350-B.

Switches

Lighting—Ford ('49) 7RA-11654, ('50) 0A-11654.

Instrument—Ford ('49) 21C-13740, 1950—Part of Lighting Switch (operated by turning knob).

Beam Selector—Ford 7RA-13532 or 8A-13532.

Dome Light—Ford ('49) 8A-13752, ('50) 0A-13752.

Dome Light (Sta. Wagon)—Ford 8M-13752-A.

Door Switch—Ford ('49) 8M-13713, ('50) 0A-13713.

Stop Light—Ford No. 11A-13480.

MISC. ELECTRICAL

CIRCUIT BREAKERS: Lighting (Headlights)—Ford ('49) 8A-12258-A, ('50) 0A-12258. Behind instrument panel together with two lighting fuses (see wiring diagram).

Convertible Top—Ford No. 51A-12250-A. 30 ampere. On hydraulic pump motor or on front of dash near convertible top control switch.

FUSES: Auxiliary Lights (Parking, Tail & Instrument)—14 ampere. On circuit breaker bracket behind instrument panel (see wiring diagram).

Dome & Stop Lights—14 ampere. Next to fuse listed above.

Clock—2 ampere. In clock feed wire.

Overdrive—30 ampere. On relay on dash under hood.

Direction Signal—15 ampere. In feed from ignition switch to flasher.

HORNS: Ford No. 51A-13832-A or B (High Pitch, Right Horn), No. 51A-13833-A or B (Low Pitch, Left Horn). Dual horns operated by relay. NOTE—"A" horns are 4.28" high, "B" horns are 4.14". Horns marked "HI" or "LO" on air columns.

Air Gap—.027-.029" for high pitch (right horn), .032-.034" for low pitch (left) for Sparks-Withington. NOTE—Air Gap for Auto-Lite type horns .040" HI, .050" LO.

Horn Current—13 amperes (high pitch), 14 (low).

Horn Relay: Ford No. 7RA-13853-B. On dash.

►***CAUTION—Use only Ford type relay No. 7RA-13853-B with TAN plastic cover. If Mercury relay No. 7RA-13853-A with Black plastic cover installed, shock at button may result when blowing horn.***

Contact Gap—.015-.025".

Contact Closing Voltage—4 volts max.

C NTINUED ON NEXT PA E

CONTINUED FROM PRECEDING PAGE

ENGINE

ENGINE SPECIFICATIONS: Own 8HA. Six cylinder, "L" head type.
Bore—3.30". **Stroke**—4.40".
Displacement—226 cu. ins. **Rated HP**—26.13.
Developed Horsepower—95 at 3300 RPM.
Compression Ratio—6.8-1 cast iron head.
Compression & Vacuum Reading—*See Tune-Up.*

TIGHTENING TORQUES: *See Ford Shop Notes.*

CYLINDER HEAD AND GASKET INSTALLATION: *See "Cylinder Head" in Ford Shop Notes.*

►**CYLINDER HEAD STUD CHANGE:** *See "Cylinder Head" in Ford Shop Notes.*

CYLINDER SLEEVE: Cast iron dry type cylinder sleeves furnished for replacement service.

PISTONS: 4-ring (all above pin), flat head, aluminum alloy, steel strut, U-slot, cam ground type.
Weight—17.35 ozs.
Removal—Pistons and rods removed from above.
Clearance—See Fitting Pistons.

Replacement Pistons: Standard size and .0025", .005", .020", .030", .040", and .060" Oversize.

Fitting Pistons: Use ½" wide feeler inserted between piston and cylinder wall at right angles to pin. Feeler thickness **.002"** for New Piston in New Bore, **.004"** for New Piston in Worn Bore or Worn Piston in New or Worn Bore. Pull to withdraw feeler **6-10 lbs.**

PISTON RINGS: 2 compression, 2 slotted oil rings, all above pin. Upper oil ring groove drilled with oil drain holes, lower ring groove slotted.

Ring	Width	End Gap	Side Clearance
Compr. (#1)	.093"	.012-.017"①	.0015-.0035"②
Compr. (#2)	.093"	.012-.017"①	.001-.004"③
Oil (#3, 4)	.186"	.012-.017"①	.001-.004"③

Worn Limits—① .035", ② .0045", ③ .005".

Replacement Rings: Snap type ring sets furnished std. size and .020", .030", .040", .060" Oversize.

PISTON PIN: Diameter .8504" (maximum). Floating type (lock ring in piston at each end). Pin hole in connecting rod bronze-bushed.
Pin Fit in Piston—.0003" (new), .0015" (worn limit).
Pin Fit in Rod Bushing—.0002-.0005" (new), .0015" (worn limit).

Replacement Pins: Sizes and paint marks: Std. (green), .001" Oversize (blue), .002" Oversize (yellow).

CONNECTING ROD: Length 8¼". **Weight** 29.0 ozs.
Crankpin Journal Diameter—2.2988". Maximum wear limits—Out-of-round .0015", Taper .001".
Lower Bearing—Removable, steel-backed, copper-lead alloy lined, locked in type. No shims. Upper and lower halves interchangeable.
Clearance—.000-.0025" (new), .005" (worn limit).
►*NOTE—Replace bearing shells less than .0593" thick.*
Sideplay—.006-.014" (new), .017" (worn limit).

Bearing Adjustment: None (no shims). Do not file caps. Replace bearings. Tang on bearing must engage groove in rod and cap.
PALNUT NOTE—Tighten finger tight plus 1/3 turn.

Replacement Bearings: Standard size and .002", .010", .020", .030", .040" Undersize.

CRANKSHAFT: 4 bearing, integral counterweights.
Vibration Dampener—Viscous or rubber type.
Journal Diameters—2.8740" (all bearings). Max. wear limits—Out-of-round .0015", Taper .001".
Bearings—Steel-backed, copper-lead alloy lined, replaceable shells. Upper and lower halves alike.
Clearance—.0009-.0032" (new), .0052" (worn limit).
►*NOTE—Replace main bearing shells less than .0938" thick.*

Bearing Adjustment: None (no shims). Do not file caps. Replace bearings. Tang on bearing must engage groove in block and cap.

Replacement Bearings: Std., .002", .020", .030" U. S.

End Thrust: Taken by rear main bearing. Adjust by replacing bearing if endplay excessive.
Endplay—.003-.006" (new), .008" (worn limit).

CAMSHAFT: Four bearing with helical gear drive. Gear at center of shaft for oil pump & distributor drive.
►*NOTE*—Camshaft has phosphate coating (shows black oxide) beginning Eng. No. 8HA-2401 (Passenger Cars), 7HT-98891 (Trucks).
Bearing Diameter—1.9285" (replace bearing if diameter greater than worn limit 1.9315").
Bearings—Steel-backed, babbitt lined bushings.
Clearance—.001-.002".

Replacement Bearings: Three sizes as follows:
1—Std. size on both inside and outside diameter.
2—Std. on I.D., .080" Oversize on O.D.
3—.015" Undersize on I.D., std. size on O.D.

End Thrust: Thrust plate bolted to front of block behind camshaft hub (hub keyed on front end of shaft).

Timing Gears: *CAUTION—Two types camshaft gears used:* Aluminum type used before July '49. New Composition type released for "H" Series engines after July '49.
Crankshaft Gear—Cast Alloy Iron.
►**Installation of Integral Hub Type Camshaft Gear for Quieter Operation**—*See Ford Shop Notes.*
Replacement Camshaft Gears—Std., .006", .012" OS.

Camshaft Setting: Mesh marked tooth of crankshaft gear with marked space on camshaft gear.

VALVES:	Head Diam.	Stem Diam.	Stem Clearance
Intake	1.65"	.3410"①	.001-.0031"②
Exhaust	1.51"	.3405"③	.0015-.0035"④

	Seat Angle	Lift
All Valves	45°	.350"

Worn Limits (Stem Diam.)—① .3385", ③ .3375"
Worn Limits (Clearance)—② .0046", ④ .006"
►*NOTE—Valves are straight-stemmed type operating in one-piece valve guides.*
Sticking Valve Correction—If necessary to ream guides, use .001" oversize reamer for exhaust valve guides, .0005" oversize reamer for intake valve guides.
Valve Seat Inserts—Used for exhaust valves.

Valve Guides: One-piece type pressed in block.
Removal: Use special tool 6510-0 to remove guides.
Installation—Upper end of guide 1.18" Intake, 1.08" Exhaust below top face of block. Install with stepped end down. Use tool 6510-N to drive guides in place.

Valve Lifters: Mushroom type with self-locking adjusting screws. Removable from below with camshaft out.
Diameter—.6240" (replace if worn to less than wear limit of .6225").
Clearance—.0005-.0015" (new) .003" (worn limit).

Valve Springs: Coated springs used. Install springs with closely spaced coils toward top (against block).
Spring Test—47-53 lbs. at 2.109". Free length 2.50".

VALVE TIMING

Tappet Clearance: .013-.015" Cold, All Valves.
►**High Speed Setting**—.002" additional exhaust valve clearance recommended by car manufacturer.
►*ADJUSTABLE SELF-LOCKING TAPPET SCREWS USED.*

Valve Timing: See Camshaft Setting above.
Intake Valves—Open 11° BTDC. Close 41° ALDC.
Exhaust Valves—Open 48° BLDC. Close 10° ATDC.
Valve Timing Check—Intake valve opens 11° BTDC. Valve timing mark location on vibration dampener.

LUBRICATION

Engine Oiling System: Pressure to main, connecting rod, and camshaft bearings. Timing gears lubricated by spray past camshaft thrust plate. Rotor type oil pump mounted externally on right side of engine.
Crankcase Capacity—4 quarts (5 quarts when changing filter).
Normal Oil Pressure—45 lbs. at 30 MPH.

Oil Pressure Relief Valve: In cylinder block just to rear of oil filter mounting. Not adjustable.
Spring Tension—12.62-12.88 ozs. at 1.14".

Oil Pump: Rotor type. Mounted externally on right side of engine with drive gear at center of camshaft.
►**Oil Pump Driven Gear Replacement before Eng. No. 8HA-107555**—*See Ford Shop Notes.*
Oil Pump Removal and Installation—*See Ford Shop Notes.*

Oil Filter: Mounted directly on block (no external oil lines) on left side. Replace cartridge each 5000 miles or more often if required.
Oil Filter Cartridge—Ford No. 7HA-6731A.

Oil Pressure Gauge: King-Seeley Electric.
Dash Unit (Green Pointer)—Ford No. 8A-9273A.
Dash Unit (Red Pointer)—Ford No. 8A-9273B.
Engine Unit—Ford No. 41A-9278.
See Miscellaneous Section for complete data.

Crankcase Ventilation: Filter element in oil filler cap (inlet) with outlet pipe in rear valve chamber extending down on right side of engine.
Servicing—Wash screen in cleaning fluid and wet with engine oil when dry at oil change period (2500 miles).

COOLING

Cooling System: Pressure type with relief valve in filler cap, one belt-driven pump, and by-pass.
NOTE—Water distributing tube not used.
Capacity—16 quarts.
Pressure Valve—In radiator filler cap. Ford No. 26H-8100-B (AC #846740). Opens at 3½-4½ lbs.

Water Pump: Centrifugal, belt-driven, packless type. Shaft mounted on sealed duplex ball bearing.
See Water Pump Section for complete data.
Belt Adjustment—*See Generator Belt Adjustment.*

Thermostat: In head water outlet. Ford No. 7HA-8575-A or B. Two makes used Standard-Thompson or Fulton-Sylphon.
Setting (7HA-8575-A)—Starts to open 157-162°F.
Setting (7HA-8575-B)—Starts to open 148-153°F.

Temperature Gauge: King-Seeley Electric.
Dash Unit (Green Pointer)—Ford No. 8A-10883A.
Dash Unit (Red Pointer)—Ford No. 8A-10883B.
Engine Unit—Ford No. 8A-10884.
See Miscellaneous Section for complete data.

CLUTCH

Long Model 9½ CF-TS, Ford No. 8A-7563A. Single plate, semi-centrifugal, dry disc type.

►DISC NOTE—Softer damper springs used on cars with Overdrive (black colored springs). Cars without Overdrive have aluminum colored damper springs.
See Clutch Section for complete data.
Facings—Thickness .125". Outside diameter 9½".

Pedal Adjustment: 1" free travel. Lock nut and adjusting nut at release lever end of release rod.

Removal: Remove transmission (see TRANSMISSION Removal below). Take off flywheel housing. Install wooden wedges between each release lever and cover to hold clutch in released position, take out 6 cover capscrews, lift assembly out.

TRANSMISSION

Own Make. 3-speed, all helical gear type. Constant-mesh, synchro-mesh (Second & High), sliding gear (Low & Reverse).
See Transmission Section for complete data.

Transmission Control: Steering column mounted shift
See Transmission Section for complete data.

Removal: Disconnect rear universal, slide propeller shaft out of transmission. Disconnect clutch, transmission and speedometer linkage. Support rear of engine and disconnect rear engine mounting from frame, Take out 4 transmission-to-flywheel housing capscrews and remove transmission.

OVERDRIVE

Warner Model AS1-R10E (exc. Conv. & Sta. Wagon). Optl. equipment. Overdrive is solenoid operated type (no centrifugal pawls) with Governor Control and throttle operated "kick-down."

Warner Model AS3-R10E (Conv. & Sta. Wagon). Similar to AS1-R10E (above) except a special solenoid adapter plate used (re-locates solenoid under overdrive), "X" type frame used on these cars has insufficient clearance for solenoid in regular mounting position on side of overdrive.
See Transmission Section for complete data.

►**Overdrive Noise Correction on Early Cars**—*See "Overdrive Notes" in Ford Shop Notes.*
Solenoid—Ford No. 8M-6916A (8A-6916A or C, C is rubber coated, for Sta. Wag. & Convertible).
Control Relay—Ford No. 8M-6915. On dash.
Overdrive Fuse—30 ampere. On Control Relay.
Lock-out Switch—Ford No. 8M-6917A.
Throttle Kick-down Switch—Ford No. 8A-6918B.
Governor—Ford No. 8M-6943 (Assembly with gear).

Removal: Same as for Std. transmission (above) after disconnecting overdrive control cable and wiring.

UNIVERSALS

Mechanics Type 2CR. Needle bearing type. 2 used.
See Universals Section for complete data.
NOTE—Slip joint formed by splined yoke of front universal engaging transmission mainshaft (or overdrive shaft). One-piece propeller shaft used.

►*CAUTION (ALL CARS EXCEPT STATION WAGON)—Rear universal joint companion flange nut controls pinion bearing "pre-load" (must be adjusted whenever nut is loosened). See 1949 Ford Passenger Car Rear Axle for data.*

REAR AXLE
PASSEN ER CARS

Own Make. Semi-floating hypoid gear type with Hotchkiss drive with separate carrier. Axle ends flanged (no separate hub). Wheel bearings are sealed-ball pre-lubricated (no lubrication required).
See Rear Axle Section for complete data.

►**Excessive Axle Shaft Endplay Correction**—*See "1949 Ford Passenger Car (except Station Wagon)" in Rear Axle Section.*
Ratio—Standard: 3.73-1 (39-11). With overdrive: 4.10-1 (41-10). Optional: 3.54-1 (41-11).
Backlash—.005-.008". *Screw adjustment.*

►*NOTE—Collapsible spacer used for pinion bearing "pre-load".*

Removal: Disconnect rear universal. Remove axle shafts (see instructions below). Remove carrier from housing.

►*CAUTION—Do not loosen universal joint companion flange nut (unless rear axle to be disassembled). This nut controls pinion bearing pre-load (must be adjusted whenever nut loosened).*

Axle Shaft Removal: Remove wheel. Take off drum. Remove 4 axle retainer locking type nuts (work through opening in axle shaft flange). Use Puller No. 4235-P and pull shaft (do not disturb brake backing plate or damage wheel bearing oil seal). Replace one nut to secure backing plate.

Wheel Bearing Adjustment: None (sealed ball-bearing).

REAR AXLE
STATION WAGON

Own Make. Semi-floating, hypoid gear type with Hotchkiss drive (separate carrier not used). Axle ends flanged —(no separate hub). Wheel bearings are sealed-ball pre-lubricated (no lubrication required).

►*NOTE—AXLE NOT SAME AS FORD PASSENGER CAR, similar to Mercury.*
See Rear Axle Section for complete data.
Ratio (Standard)—3.91-1 (43-11).
Ratio (with Overdrive)—4.27-1 (47-11).
Backlash—.003-.008". *Shim adjustment.*

Removal: Raise rear of car. Disconnect rear universal. Remove axle shafts (see instructions above). Disconnect brake line at "T" on left side of axle housing, and hand brake cable. Disconnect shock absorbers, spring U-bolts and shackles. Remove axle housing assembly from car.

Axle Shaft Removal: Same as for Ford Pass. Car Rear Axle (above).

SHOCK ABSORBERS

Front—Delco Model 1037-F or Houdaille No. H-180, Ford No. 8A-18045-A (Pass. Cars), Houdaille H-210, Ford No. 8A-18045-B (Station Wagon).
Rear—Delco Model 1031-R or Houdaille No. H-190, Ford No. 8A-18080-A (Pass. Cars), Houdaille H-200, Ford No. 8A-18080-B (Station Wagon).
Direct acting, hydraulic types. Two makes are used and are interchangeable.

►*NOTE—Shock absorbers are permanently sealed and cannot be refilled or repaired.*
See Shock Absorber Section for complete data.
Rear Shock Absorber Installation—Lower tube has welded stone shield on lower end which must be installed toward front of car.

FRONT SUSPENSION

Front Suspension: Independent, linked parallelogram type with coil springs, direct acting shocks, and front stabilizer.
See Front Suspension Section for complete data.

►**Front Suspension Noise and Car Leveling Correction**—*See "1949 Ford Passenger Cars, Lincoln & Mercury" in Front Suspension Section.*

►**Pitman Arm and Idler Arm Bracket Change**—Requires 2 different Toe In Settings listed below. *For identification of parts, see 1949 Ford in Front Suspension Section.*

►*CAUTION—Specifications listed below supersede earlier 1949 Ford Front End Specifications.*

Kingpin Inclination—5¼° crosswise.

Caster (Pass. Cars)—Pos. ½° to Neg. 1°.
(Station Wagon)—Neg. ¼° preferred, Limits Neg. ¼° to Neg. 1¾°.
NOTE—½° max. variation between wheels.

Camber (All)—Pos. ¼° to Pos. ¾° preferred. Limits 0° to Pos. 1°.
NOTE—¼° max. variation between wheels.

►**Toe In**—*CAUTION: Two settings as follows:*
1)—1/8" toe out to 3/16" toe out for cars built before March 1, 1949.
2)—1/16" toe in to 1/8" toe in for cars built after March 1, 1949.

Adjustment—Adjusting sleeve on outer end of each tie rod. Adjust equally.

STEERING GEAR

Gemmer design (Model 305), Ford Make—Worm-&-Roller type.
See Steering Gear Section for complete data.

BRAKES

Service: Ford-Bendix Hydraulic, Duo-Servo, Single Anchor type without eccentric adjustment. Hand lever applies rear wheel service brakes.
See Brake Section for complete data.

Wheel Cylinders—Diameter: Front wheel 1.128" (hone limit 1.132"). Rear Wheel: .878" (hone limit .880").

Drums—Diameter 10" (11" Sta. Wagon rear drums).

Lining—Molded or Woven. Width 2¼" (front wheel), 1¾" (rear wheel). Thickness 3/16". Length per shoe: 11¾" (11 15/16" Sta. Wag. rear wheel shoes).

Clearance—.010" at each end of secondary shoe with primary shoe forced out against drum (adjusting screw in each wheel backed off 14 notches or "clicks" from point where shoes drag on drum).

Hand Brake: See Service Brakes (above).

►**Hand Brake Linkage Change (for easier application) and Cable Interference Correction**—*See "Ford-Bendix Hydraulic" in Brake Section.*

MISC. MECHANICAL

Power Operated Convertible Top: Hydro-Lectric type (hydraulic actuation with motor-driven pump supplying oil under pressure for power cylinders).
See Miscellaneous Section for complete data.

Windshield Wipers: Vacuum Link & Crank Arm Type.
See Miscellaneous Section for complete data.

MODEL IDENTIFICATION

VEHICLE NUMBER: Stamped on plate attached to engine side of dash and on top of right frame side rail just to rear of front suspension upper arm.

SERIAL NUMBER: New 1950 designations as follows:

Engine Type	Model Year	Assembly Plant	Serial Number
*B	0	See below	100001 Up

Assembly Plant Designations

AT—Atlanta	**DA**—Dearborn	**MP**—Memphis
BF—Buffalo	**LU**—Louisville	**NR**—Norfolk
CS—Chester	**EG**—Edgewater	**RH**—Richmond
CH—Chicago	**KC**—Kansas City	**SR**—Somerville
DL—Dallas	**LB**—Long Beach	**SP**—Twin City
HM—Highland Park		(St. Paul)

TUNE-UP

COMPRESSION PRESSURE: 110 lbs. at cranking spd.

VACUUM READING: Steady 18-21" idling at 500 RPM.

FIRING ORDER: 1-5-4-8-6-3-7-2. See diagram.

SPARK PLUG GAPS: .030". Limits .029-.032".
Plug Type—Champion H-10, 14 mm.

DISTRIBUTOR: Breaker Gap—.014-.016".
Cam Angle—27° closed, 18° open.
Breaker Arm Spring Tension—17-20 ounces.
Advance Performance—*See Ignition.*
Condenser Capacity—.21-.25 microfarad.

IGNITION TIMING: 2° BTDC.
Timing Procedure—*See Ignition Timing.*
Crankshaft Pulley Mark—Circular boss aligned with timing pointer on right side of engine front cover.

CARBURETION:
Idle Setting—Approx. 1 turn open. Two screws—turning screws out gives richer mixture.
Idle Speed—Approximately 500 RPM.
Float Level—1.322-1.353" bottom of float to underside of bowl cover with needle valve seated (use Gauge No. 9550-A).
Accelerating Pump—Center hole average setting. Inner hole for hot weather, Outer for cold weather.

Fuel Pump Pressure: 3½-4½ lbs.

MANIFOLD HEAT CONTROL: Automatic. No adjustment. Valve located between right end of exhaust pipe cross over and right exhaust manifold.

VALVE TAPPET CLEARANCE: *CAUTION—Different settings required for each type camshaft.*
►**First type Camshaft No. 8BA-6250①**
(no markings on Engine or Camshaft)
Intake—.010-.012", **Exhaust**—.014-.016", Cold.
①—Before Eng. No. 8BA-622468—Partial production after this number.
►**Later type Camshaft No. 8BA-6250-B②**
(Eng. marked—"GAP, in- .014", ex- .018")③
(Camshaft marked "B" on front end)
Intake—.014" (.013-.015") **Exhaust**—.018" (.017-.019"), Cold.
②—Partial production after Eng. No. 8BA-622468, and service replacement on all engines.
③—On top of block at center under valve cover.
►*CAUTION—Loss of power will result if correct tappet clearance not used on engines with "B" CAMSHAFT.*
Adjustment—*See "Valve System" in Ford Shop Notes for complete data.*
Valve Timing Check—*See Valve Timing.*

STARTING: *See Battery, Starter, Generator, Regulator.*

IGNITION

IGNITION SWITCH: Ford No. 6A-11572-A (Mitchell type), No. 6A-11572-B (Briggs & Stratton type).
Ignition Lock—Ford No. 8A-11582-A.

COIL: Ford No. 7RA-12029-A or 8BA-12029.
Location—On front lower corner of right cyl. head.
Ignition Current—Approx. 5.2-5.7 amperes at 6 volts, stopped. Primary current resistance 1.05-1.15 ohms (75°F.).

CONDENSER: Ford No. 7RA-12300-B.
Capacity—.21-.25 microfarad.

DISTRIBUTOR: Ford No. 7RA-12127-C (less Cap and Rotor). New "Pressure" distributor with spark advance controlled by vacuum diaphragm moving breaker plate to advance spark against two breaker plate springs. Operating vacuum taken from 1 carburetor connection (2 passages inside carburetor, 1 at venturi, 1 at throttle valve). Full spark advance obtained at 18-35 MPH. with normal road load or for part throttle operation at any speed.
►*NOTE—Distributor is single contact type (no "coil loading" contacts are used).*
Breaker Gap—.014-.016".
Cam Angle—27° closed, 18° open.
Breaker Arm Spring Tension—17-20 ounces.
Rotation—Clockwise viewed from above.

Advance Performance
►(at Wide Open Throttle)

Distributor Degrees	Vacuum	R.P.M.	Engine Degrees	Vacuum	R.P.M.
0°	0"	200	0°	0"	400
1¼-2¼°	0.4"	500	2½-4½°	0.4"	1000
4¼-5¼°	1.7"	1000	8½-10½°	1.7"	2000
6¼-7¼°	2.85"	1500	12½-14½°	2.85"	3000
7½-8½°	3.7"	2000	15-17°	3.7"	4000

Distributor Removal: Mounted at front of engine on right side. To remove, disconnect vacuum line, take out hold down screw, lift off.

IGNITION TIMING

Std. Setting ..... 2° BTDC.
Crankshaft Pulley Mark—Circular boss on rear edge of pulley (timing pin on right front side of engine).
Timing—With #1 piston at firing position and timing mark on pulley aligned with timing pin on front of engine, loosen hold-down screw on distributor, rotate distributor until contacts begin to open, tighten hold-down screw. Check spark plug connec-

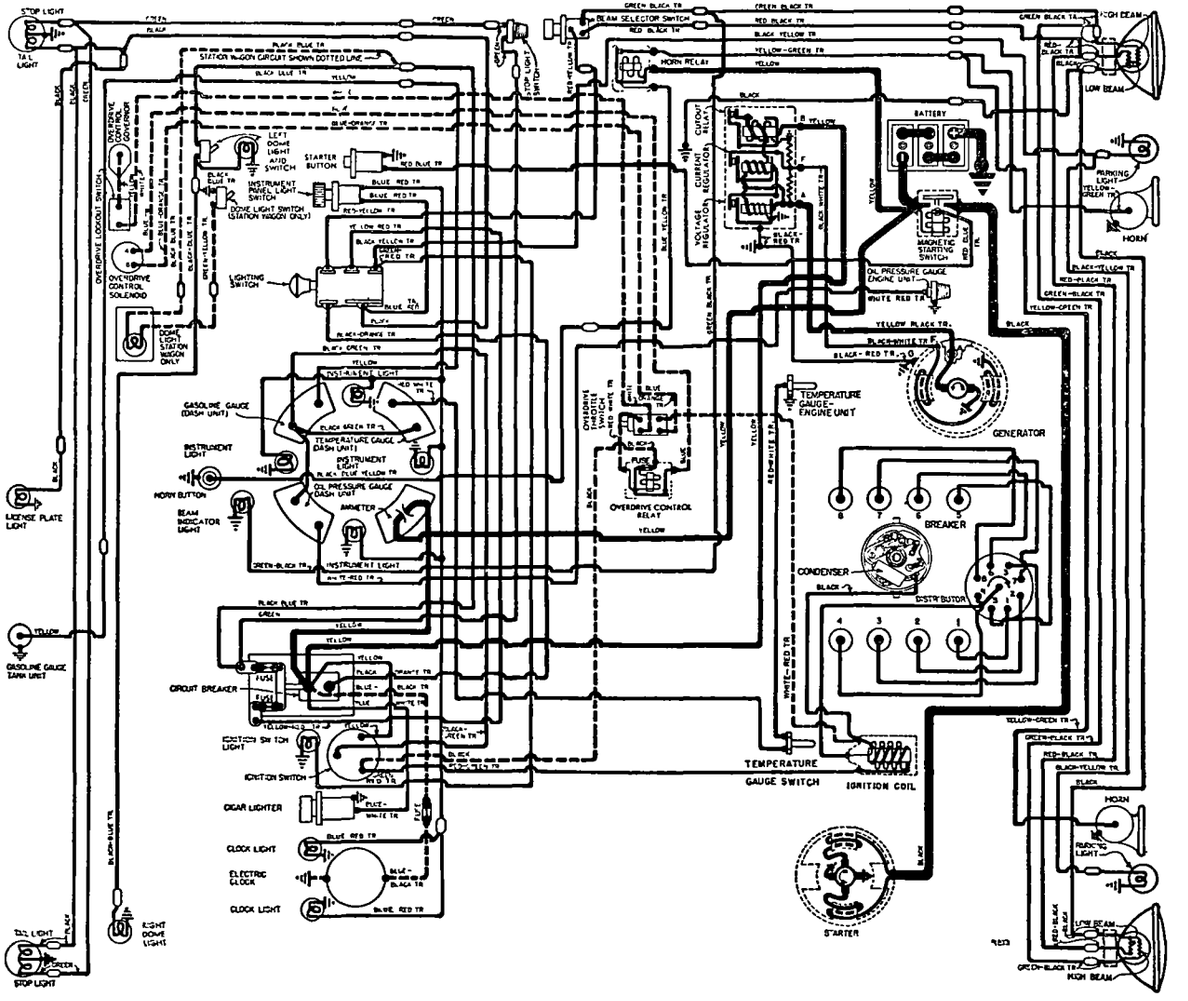

tions (see diagram), see that rotor opposite #1 terminal in cap.

►**Timing (with Neon Timing Light)**—*CAUTION—Vacuum line must be disconnected to avoid vacuum advance operating.* Mark timing pin and pulley mark with white chalk. Connect timing light to #1 spark plug. Idle engine and adjust distributor (as directed above) until mark and timing pin aligned.

CARBURETOR

Holley-Ford No. 8BA-9510-A. Dual (double barrel) downdraft type with new vacuum passages for distributor operation.

See Carburetor Section for complete data.

Settings (Idle Setting, Float Level, and Accelerating Pump): *See Tune-Up data.*

Metering Jets—*See Holley-Ford Jet Specification Table in Carburetor Section.*

Fast Idle: Integral type. Operated by choke valve lever. No adjustment required.

CARB. EQUIPMENT

Fuel Pump (std.): Ford No. 7RA-9350-C.
Optl. (Fuel-&-Vacuum)—Ford No. 7RA-9350-E.
Pressure—3½-4½ lbs. (both types).
See Carburetion Equipment Section for complete data.

Gasoline Gauge: King-Seeley Electric.
Dash Unit (Green Pointer)—Ford No. 8A-9280A.
Dash Unit (Red Pointer)—Ford No. 8A-9280B.
Tank Unit—No. 8A-9275 (Sta. Wg. 01A-9275A).
See Carburetion Equipment Section for complete data.

Air Cleaner (std.—oil-wetted): Ford No. 8BA-9600-A3.
Optl. (oil bath)—Ford No. 8BA-9600-A1 or A2 (1 pt. capacity), 8BA-9600-A6 (1 quart capacity).

BATTERY

Ford No. 81A-10655-A. 6 Volt, 17 Plate, 100 Amp. Hr. **Zero Capacity**—300 amperes for 3.3 minutes. Five Second Voltage—4.2 volts.
Grounded Terminal—Positive (+).
Location—On left side in engine compartment.
Dimensions—L. 10½". W. 7⅛". H. 7¼".

STARTER

Ford Model No. 7RA-11002. Armature No. 18-11005.
►**Starter Motor Rusting Correction**—*See "Electrical System Notes" in Ford Shop Notes.*
Drive—Bendix No. A1472 (Ford No. B-11350).
Rotation—Counter-clockwise at commutator end.
Brush Spring Tension—20-22 ounces.
Cranking Engine—100 RPM., 190-215 amperes.

Performance Data

Torque	R.P.M.	Volts	Amperes
4 ft. lbs.	1070	4.6	200
8 "	660	4.3	340
12 "	300	3.65	465
14 "	Lock	3.5	550

Starting Switch: Ford No. 21A-11450 Magnetic Switch mounted on left front fender apron and controlled by panel pushbutton switch Ford No. 6H-11500.

Removal: On right front face of flywheel housing cover. To remove, take off right engine splash pan (if used), free starter-to-oil pan bracket, take out 2 starter through bolts.

GENERATOR

Ford No. 8BA-10002-A (less pulley and bracket).
Armature No.—Ford No. 8BA-10005-A.
2 brush type with current and voltage regulation.
Charging Rate Adjustment—None. See Regulator.
Maximum Charging Rate—36 amperes, 7 volts, reached at approximately 20 MPH. Controlled by regulator (dependent on load & battery condition).

To Check Generator Output—Connect ammeter in series with charging line at regulator "ARM" terminal, connect short insulated jumper between generator "A" and "F" terminals (to short out regulator). Run engine at approximately 1500 RPM. and note ammeter reading. If generator output equals or exceeds rate output (below) generator performance is satisfactory. Remove jumper.

►*CAUTION—Do not operate generator at higher speeds or in service with jumper connected between generator armature and field terminals. This jumper eliminates all regulator action.*

Amperes	Performance Data	Engine R.P.M.
33		1500

Rotation—Counter-clockwise at commutator end.
Brush Spring Tension—20-24 ozs.

Removal: On support secured to valve chamber cover by stud and nut, driven by belt in tandem with water pumps. To remove, loosen stud nut and disengage generator belt, take out capscrew in mounting strap, lift generator off support.

Generator Belt Adjustment: Loosen 2 bolts on fan mounting bracket, loosen generator support mounting stud nut, raise generator up until side movement on belt midway between generator and water pump pulleys is ½" (thumb and finger pressure), tighten stud nut.

Fan Belt Adjustment—*See COOLING.*

REGULATOR

Ford Numbers

Regulator	Generator	Amperes
51A-10505-A or C	8BA-10002-A (Std.)	30-33
8M-10505	8BA-10002-A (Std.)	34-38

Voltage-current 3-Unit types.
See Electrical Equipment Section for complete data.
NOTE—Separate ground wire extending to cowl must be in place when generator operated.

Cutout Relay

Cuts In—6.0-6.4 volts COLD (will be slightly higher when warm).
Cuts Out—8 ampere discharge current (maximum).
Contact Gap—.010" (armature against upper stop).
Air Gap—.014" between armature and core with contacts open.

Voltage Regulator

Voltage Setting—7.0-7.4 volts COLD (7.2-7.6 volts after 20 minutes run).
Checking & Adjustment—*See Elec. Equip. Section.*
Air Gap—.032-.035" between armature and core with contacts just closed.
►*CAUTION—Make certain gauge contacts armature and not brass rivet on underside of armature.*
Contact Spring Tension—5 ounces minimum with contacts just opening.

Current Regulator

Current Setting (51A).....30-33 amperes COLD
Current Setting (8M).....34-38 amperes COLD
Checking & Adjustment—*See Elec. Equip. Section.*
Air Gap—.032-.035" between armature and core with contacts just closed.
Contact Spring Tension—5 ounces minimum with contacts just opening.

LIGHTING

Headlamps: Ford "Sealed Beam" type.
See Electrical Equipment Section for complete data.
Adjustment—Aim upper beams straight ahead (hot spot centers 3" below lamp center height at 25 ft.).
Beam Indicator—Bulb between 50 and 60 on speedometer. Lighted with Upper Beam "on".
Direction Signal: Optl. *See Electrical Equipment Section.*
Direction Indicators—Right and Left indicators on lower edge of speedometer.
Direction Signal Flasher—Ford No. 8L-13350-B.

Switches

Lighting—Ford ('49) 7RA-11654, ('50) 0A-11654.
Instrument—Ford ('49) 21C-13740. 1950—Part of Lighting Switch (operated by turning knob).
Beam Selector—Ford 7RA-13532 or 8A-13532.
Dome Light—Ford ('49) 8A-13752, ('50) 0A-13752.
Dome Light (Sta. Wagon)—Ford 8M-13752-A.
Door Switch—Ford ('49) 8M-13713, ('50) 0A-13713.
Stop Light—Ford No. 11A-13480.

MISC. ELECTRICAL

CIRCUIT BREAKERS, FUSES, AND HORNS: *See 1949-50 Ford Six car pages for all data.*

ENGINE

ENGINE SPECIFICATIONS: Own 8BA. Eight cylinder, "L" head, 90° Vee type with both cylinder banks and crankcase cast Enbloc.
Bore—3.187". **Stroke**—3.75".
Displacement—239 cu. ins. **Rated HP**—32.5.
Developed Horsepower—100 at 3600 RPM.
Compression Ratio—6.8-1 cast-iron heads.
Compression & Vacuum Reading—*See Tune-Up.*

TIGHTENING TORQUES: *See Ford Shop Notes.*

CYLINDER SLEEVE: Cast iron dry type cylinder sleeves furnished for replacement service.

PISTONS: *CAUTION—Two types used:*

►**"49T-" PISTONS (Before Pass. Car Eng. No. 8BA-641087, Truck 8R Eng. No. 195401)**—4-ring (lower ring below pin), aluminum alloy, steel strut, U-slot, cam ground, dome head type.
CAUTION—49T pistons must be used in ALL steel sleeve engines. Use "29A-" piston rings with this piston. Do not use 49T pistons to replace Autothermic pistons.

►**"8BA-" AUTOTHERMIC PISTONS (After Pass. Car Eng. No. 8BA-641087, Truck 8R Eng. No. 195401)**—4-ring (lower ring below pin), aluminum alloy, "Autothermic", closed type. **Pin hole offset 1/16".**
CAUTION—8BA Autothermic pistons must not be used on steel sleeve engines. Can be used to replace 49T pistons in sets on other engines. Use "8BA-" piston rings with this piston (29T rings must not be used).

►*CAUTION—1949 Ford and Mercury Pistons or Rings are not interchangeable.*
Weight—13.12 ozs.
Removal—Pistons and rods removed from above.
Clearance—See Fitting Pistons.

Replacement Pistons ("49T-"): Std., .005", .020", .030", .040", .060" Oversize.

Replacement Pistons ("8BA-" Autothermic): Std. (4 grades with limits 3.1879-3.1891 in .0003" steps for selective fitting), .0025", .020", .030", .040", .060" OS.

Fitting Pistons ("49T-"): Use .50" wide feeler stock of correct thickness (as listed below) inserted between piston and cylinder wall at right angles to pin to check clearance. Pull to withdraw feeler 6-10 lbs.
Feeler Thickness—.002" New Piston in New Plain Bore, .003" New Piston in New Sleeve, .004" New Piston in Worn Bore, .005" Worn Piston in Worn Bore.

Fitting Pistons ("8BA-" Autothermic): Use feeler gauge .0015" x ½" on thrust side of piston with 6-12 lb. pull.

Installing Pistons ("8BA-" Autothermic): Locating mark (small indention) on head of piston above one piston pin hole, to front on all pistons.
►*CAUTION*—Necessary since pin offset 1/16" and must be located on thrust side of bore.

C NTINUED ON NEXT PAGE

ENGINE

C NTINUED FROM PRECEDIN PAGE

PISTON RINGS: 2 compression, 2 slotted oil rings (lower oil ring below pin). Upper oil ring groove drilled with oil drain holes, lower groove slotted.

Ring	Width	End Gap	Side Clearance
Compr. (#1)	.0915-.0920"	.012-.017"①	.0015-.0035"②
Compr. (#2)	.0915-.0920"	.012-.017"①	.001-.004"③
Oil (#3, 4)	.1545-.1550"	.012-.017"①	.001-.004"③

Worn Limits—① .035" ② .0045" ③ .005"

Replacement Rings: Snap type, Expander type, or Steel Section type ring sets furnished in the following sizes: Std., .020", .030", .040", .060" Oversize.

►*CAUTION—Use "29A-" rings on first type 49T Pistons, "8BA-" rings on 8BA Autothermic Pistons.*

PISTON PIN: Diameter .7504" (maximum). Floating type (lock ring in piston at each end). Pin hole in connecting rod bronze-bushed.

Pin Fit in Piston—.0005" (new), .0015" (worn limit).

Pin Fit in Rod Bushing—.0002-.0005" (new), .0015" (worn limit).

Replacement Pins: Sizes and paint marks: Std. (green), .001" Oversize (blue), .002" OS (yellow).

CONNECTING ROD: Length 7". **Weight** 18.7 ozs.

►**Connecting Rod CAUTION**—Beginning Engine No. 8BA-628866 through 8BA-629940 and all Engines after 8BA-641087, new type connecting rod used with 5/64" squirt hole drilled on an angle into the side of the bearing flange web meeting a 3/16" hole in connecting rod bearing flange.

►*CAUTION—These new connecting rods should be used only on engines with neoprene seals on intake valve guides and increased capacity oil pump.*

Crankpin Journal Diamter—2.1390". Maximum wear limits—Out-of-round .0015", Taper .001".

►**Lower Bearing**—*Locked in (not floating type as used on earlier engines).* Steel-backed, copper-lead alloy lined, replaceable shells. Upper and lower halves interchangeable.

Clearance—.0005-.003" (new), .005" (worn limit).

►*NOTE—Replace bearing shells less than .0745" thick.*

Sideplay—.006-.014" (new), .022" (worn limit).

Bearing Adjustment: None (no shims). Do not file caps. Replace bearings. Tang on bearing must engage groove in rod and cap.

►*NOTE—Self-locking connecting rod nuts used. Tighten to 40-45 ft. lbs. Palnuts not required.*

Replacement Bearings: Standard size and .002", .010", .020", .030", .040" Undersize.

Installing Rods—Rods with squirt hole installed with squirt hole toward valve push rod assembly.

CRANKSHAFT: 3 bearing with integral counterweights.

►*SLUDGE TRAPS—Crankpin throws equipped with sludge traps having removable plugs for cleaning. Always use new plugs if old plugs disturbed and peen or stake crankshaft to hold plugs in place securely.*

Journal Diameters—2.4990" (all bearings). Max. wear limits—Out-of-round .0015", Taper .001".

Bearings—Steel-backed, copper-lead alloy lined, replaceable shells. Upper and lower halves alike.

Clearance—.000-.003" (selective fit, crankshaft to turn free). Worn limit .005" maximum.

►*NOTE—Replace main bearing shells less than .0835" thick.*

Bearing Adjustment: None (no shims). Do not file caps. Replace bearings. Tang on bearing must engage groove in block and cap.

Replacement Bearings: Standard size and .002", .010", .020", .030" Undersize. Rear mains also furnished .015" Oversize in Overall Length for taking up endplay wear.

End Thrust: Taken by rear main bearing. Adjust by replacing bearing if endplay excessive.

Endplay—.002-.006" (new), .008" (worn limit).

CAMSHAFT: *CAUTION—PASSENGER CARS use two types of camshafts (require different tappet clearance):*

8BA-6250—All engines before No. 8BA-622468 and partial production after this number.

8BA-6250-B—Partial production beginning Eng. No. 8BA-622468 and service replacement of first type Camshaft. Has new cam contours for quieter valve operation.

►*CAMSHAFT IDENTIFICATION*—New 8BA-6250-B Camshaft stamped "B" on forward end (first type not marked), and engine marked **"GAP, in- .014", ex- .018"** on top of block under valve cover at center.

►*ENGINE MARKING CAUTION*—Gap mark (see above) must be added when "B" shaft installed on unmarked block, or removed if first type shaft installed on marked block.

Bearing Diameter—1.7985" (replace bearing if diameter greater than worn limit 1.8015").

Bearings—Steel-backed, babbitt lined bushings.

Clearance—.001-.002".

Replacement Bearings: Standard size and .010", .015" Undersize (US. bearings require finish reaming).

End Thrust: Taken by front end of camshaft and thrust surface on inner face of cylinder front cover. Adjust by replacing cover. **Endplay**—.007-.016".

Timing Gears: *CAUTION—Two types camshaft gears used:* Aluminum (first), Fibre (later).

Crankshaft Gear—Cast Alloy Iron.

►*CAUTION—Camshaft gear teeth REVERSE (L.H.) providing one-way thrust to camshaft for silencing backlash.*

Replacement Camshaft Gears—Std. .006", .012" OS.

Camshaft Setting: Mesh marked tooth of crankshaft gear with marked space on camshaft gear.

VALVES:	Head Diameter	Stem Diameter	Length
All Valves	1.515"	.3410"①	4.8140"

	Seat Angle	Lift	Stem Clearance
All Valves	45°	.292"	.0015-.0035"③

Wear Limit—①—.3375". ②—.005" Int., .006" Exh.

►*NOTE—Valves are straight-stemmed type operating in one-piece valve guides.*

►**Sticking Valve Correction**—If necessary to ream guides, use .001" oversize reamer for exhaust valve guides, .0005" oversize reamer for intake valve guides.

Valve Seat Inserts—Used on all valves.

Valve Guides: One-piece type positioned and retained by "C" washer. Inside diameter .344", Outside diameter 1.031". Length 2.20". NOTE—Rubber seal used on intake guide.

Valve Lifters: Barrel type operating in guide holes in cylinder block.

Diameter—.9992" (replace if worn to less than .9977"). Length limit after resurfacing 1.700".

Clearance—.0007-.0016" (new), .003" (worn limit).

Valve Springs: Coated springs used.

Spring Pressure—37-40 lbs. (closed), 78-80 (open).

Spring Test—37-40 lbs. at 2.125". Free length 2.41".

VALVE TIMING

VALVE TAPPET CLEARANCE: *CAUTION—Different settings required for each type camshaft.*

►**First type Camshaft No. 8BA-6250①**
(no markings on Engine or Camshaft)

Intake—.010-.012", **Exhaust**—.014-.016", Cold.

①—Before Eng. No. 8BA-622468—Partial production after this number.

►**Later type Camshaft No. 8BA-6250-B②**
(Eng. marked—"GAP, in- .014", ex- .018")③
(Camshaft marked "B" on front end)

Intake—.014" (.013-.015") **Exhaust**—.018" (.017-.019"), Cold.

②—Partial production after Eng. No. 8BA-622468, and service replacement on all engines.

③—On top of block at center under valve cover.

►*CAUTION—Loss of power will result if correct tappet clearance not used on engines with "B" CAMSHAFT.*

Adjustment—*See "Valve System" in Ford Shop Notes for complete data.*

Valve Timing: See Camshaft Setting above.

Intake Valves—Open at TDC. Close 44° ALDC.

Exhaust Valves—Open 48° BLDC. Close 6° ATDC.

Valve Timing Check—Intake valve opens at TDC. Valve timing mark location on crankshaft pulley.

LUBRICATION

Engine Oiling System: Pressure to main bearings, connecting rod lower bearings, camshaft bearings, timing gears and distributor drive gear. Piston pins and valve lifters lubricated by splash. Oil pump mounted in crankcase at rear of engine.

Crankcase Capacity—4 quarts (5 quarts when changing oil filter).

Normal Oil Pressure—45 lbs. at 30 MPH.

Oil Pressure Relief Valve: In oil pump body. Not adjustable.

Spring Tension—15 lbs. 2 ozs. to 15 lbs. 6 ozs. at 1.14".

NOTE—Cylinder block oil relief valve not used.

Oil Pump: Gear type (two types: one equipped with spur gears, second helical gears). In crankcase at rear of engine.

Oil Filter: On left cylinder head. Replace cartridge each 5000 miles or more often if required.

Oil Filter Cartridge—Ford No. 7HA-6731A.

Oil Pressure Gauge: King-Seeley Electric.

Dash Unit (Green Pointer)—Ford No. 8A-9273A.

Dash Unit (Red Pointer)—Ford No. 8A-9273B.

Engine Unit—Ford No. 41A-9278.

See Miscellaneous Section for complete data.

Crankcase Ventilation: Filter element in oil filler cap (inlet) with outlet pipe extending from top of engine down behind fan and out along left side.

Servicing—Wash screen in cleaning fluid and wet with engine oil when dry at oil change period (2500 miles).

COOLING

Cooling System: Pressure type with relief valve in filler cap and two belt-driven pumps (one for each bank) with re-circulating by-pass.

Capacity—21 quarts.

Pressure Valve—In radiator filler cap. Ford No. 26H-8100-B (AC #846740). Opens at 3½-4½ lbs.

Water Pumps: Two used. Centrifugal, belt-driven packless type. Shaft mounted on pre-packed ball-bearing at front, and bushing next to seal. Oil cup provided for bushing lubrication.

►*CAUTION—WATER PUMP LUBRICATION: Oil cup provided on each pump which should be filled with SAE #20 engine oil when new and every 1000 miles. Use length of wire inserted in oil cup if necessary when oiling.*

See Water Pump Section for complete data.

Fan Belt Adjustment—Loosen 2 fan mounting bracket bolts, raise fan up until side movement of belt midway between fan and crankshaft pulleys is ½".

Generator (& Water Pump) Belt Adjustment—*See GENERATOR.*

Thermostats: Two used (one in each head water outlet). Ford No. 8BA-8575-B or 8RT-8575-A. Two makes used Standard-Thompson or Fulton-Sylphon.
Setting (8BA-8575-B)—Starts to open 157-162°F.
Setting (8RT-8575-A)—Starts to open 148-153°F.

Temperature Gauge: King-Seeley Electric.
Dash Unit (Green Pointer)—Ford No. 8A-10883A.
Dash Unit (Red Pointer)—Ford No. 8A-10883B.
Engine Unit—Ford 8A-10990 (stamped 217 in right bank), 8A-10884 (stamped 224 in left bank).
See Miscellaneous Section for complete data.

CLUTCH

Long Model 9½ CF-TS, Ford No. 8A-7563A. Single plate, semi-centrifugal, dry disc type.
See Clutch Section for complete data.

►**Flywheel Rubbing on Housing Cover when Clutch Disengaged Correction**—*See "Clutch Notes" in Ford Shop Notes.*
Facings—Thickness .125". Outside diameter 9½".

Pedal Adjustment: 1" free travel. Lock nut and adjusting nut at release lever end of release rod.

Removal: Remove transmission (see TRANSMISSION Removal below). Take off flywheel housing. Install wooden wedges between each release lever and cover to hold clutch in released position, take out 6 cover capscrews, lift assembly out.

TRANSMISSION

Own Make. 3-speed, all helical gear type. Constant-mesh, synchro-mesh (Second & High), sliding gear (Low & Reverse).
See Transmission Section for complete data.

Transmission Control: Steering column mounted shift
See Transmission Section for complete data.

Removal: Disconnect rear universal, slide propeller shaft out of transmission. Disconnect clutch, transmission and speedometer linkage. Support rear of engine and disconnect rear engine mounting from frame, Take out 4 transmission-to-flywheel housing capscrews and remove transmission.

OVERDRIVE

Warner Model AS1-R10E (exc. Conv. & Sta. Wagon). Optl. equipment. Overdrive is solenoid operated type (no centrifugal pawls) with Governor Control and throttle operated "kick-down."
Warner Model AS3-R10E (Conv. & Sta. Wagon). Similar to AS1-R10E (above) except a special solenoid adapter plate used (re-locates solenoid under overdrive), "X" type frame used on these cars has insufficient clearance for solenoid in regular mounting position on side of overdrive.
See Transmission Section for complete data.

►**Overdrive Noise Correction on Early Cars**—*See "Overdrive Notes" in Ford Shop Notes.*
Solenoid—Ford No. 8M-6916A (8A-6916A or C, C is rubber coated, for Sta. Wag. & Convertible).
Control Relay—Ford No. 8M-6915. On dash.
Overdrive Fuse—30 ampere. On Control Relay.
Lock-out Switch—Ford No. 8M-6917A.
Throttle Kick-down Switch—Ford No. 8A-6918B.
Governor—Ford No. 8M-6943 (Assembly with gear).

Removal: Same as for Std. transmission (above) after disconnecting overdrive control cable and wiring.

UNIVERSALS

Mechanics Type 2CR. Needle bearing type. 2 used.
See Universals Section for complete data.
NOTE—Slipjoint formed by splined yoke of front universal engaging transmission mainshaft (or overdrive shaft). One-piece propeller shaft used.

►*CAUTION (ALL CARS EXCEPT STATION WAGON)—Rear universal joint companion flange nut controls pinion bearing "pre-load" (must be adjusted whenever nut is loosened). See 1949 Ford Passenger Car Rear Axle for data.*

REAR AXLE
PASSENGER CARS

Own Make. Semi-floating hypoid gear type with Hotchkiss drive with separate carrier. Axle ends flanged (no separate hub). Wheel bearings are sealed-ball pre-lubricated (no lubrication required).
See Rear Axle Section for complete data.

►**Excessive Axle Shaft Endplay Correction**—*See "1949 Ford Passenger Car (except Station Wagon)" in Rear Axle Section.*
Ratio—Standard: 3.73-1 (39-11). With overdrive: 4.10-1 (41-10). Optional: 3.54-1 (41-11).
Backlash—.005-.008". *Screw adjustment.*

►*NOTE—Collapsible spacer used for pinion bearing "pre-load".*

Removal: Disconnect rear universal. Remove axle shafts (see instructions below). Remove carrier from housing.

►*CAUTION—Do not loosen universal joint companion flange nut (unless rear axle to be disassembled). This nut controls pinion bearing pre-load (must be adjusted whenever nut loosened).*

Axle Shaft Removal: Remove wheel. Take off drum. Remove 4 axle retainer locking type nuts (work through opening in axle shaft flange). Use Puller No. 4235-P and pull shaft (do not disturb brake backing plate or damage wheel bearing oil seal). Replace one nut to secure backing plate.

Wheel Bearing Adjustment: None (sealed ball-bearing).

REAR AXLE
STATION WAGON

Own Make. Semi-floating, hypoid gear type with Hotchkiss drive (separate carrier not used). Axle ends flanged —(no separate hub). Wheel bearings are sealed-ball pre-lubricated (no lubrication required).

►*NOTE—AXLE NOT SAME AS FORD PASSENGER CAR, similar to Mercury.*
See Rear Axle Section for complete data.
Ratio (Standard)—3.91-1 (43-11).
Ratio (with Overdrive)—4.27-1 (47-11).
Backlash—.003-.008". *Shim adjustment.*

Removal: Raise rear of car. Disconnect rear universal. Remove axle shafts (see instructions above). Disconnect brake line at "T" on left side of axle housing, and hand brake cable. Disconnect shock absorbers, spring U-bolts and shackles. Remove axle housing assembly from car.

Axle Shaft Removal: Same as for Ford Pass. Car Rear Axle (above).

SHOCK ABSORBERS

Front—Delco Model 1037-F or Houdaille No. H-180, Ford No. 8A-18045-A (Pass. Cars), Houdaille H-210, Ford No. 8A-18045-B (Station Wagon).
Rear—Delco Model 1031-R or Houdaille No. H-190, Ford No. 8A-18080-A (Pass. Cars), Houdaille H-200, Ford No. 8A-18080-B (Station Wagon).
Direct acting, hydraulic types. Two makes are used and are interchangeable.

►*NOTE—Shock absorbers are permanently sealed and cannot be refilled or repaired.*
See Shock Absorber Section for complete data.
Rear Shock Absorber Installation—Lower tube has welded stone shield on lower end which must be installed toward front of car.

FRONT SUSPENSION

Front Suspension: Independent, linked parallelogram type with coil springs, direct acting shocks, and front stabilizer.
See Front Suspension Section for complete data.

►**Front Suspension Noise and Car Leveling Correction**—*See "1949 Ford Passenger Cars, Lincoln & Mercury" in Front Suspension Section.*

►**Pitman Arm and Idler Arm Bracket Change**—Requires 2 different Toe In Settings listed below. *For identification of parts, see 1949 Ford in Front Suspension Section.*

►*CAUTION—Specifications listed below supersede earlier 1949 Ford Front End Specifications.*

Kingpin Inclination—5¼° crosswise.

Caster (Pass. Cars)—Pos. ½° to Neg. 1°.
(Station Wagon)—Neg. ¼° preferred, Limits Neg. ¼° to Neg. 1¾°.
NOTE—½° max. variation between wheels.

Camber (All)—Pos. ¼° to Pos. ¾° preferred. Limits 0° to Pos. 1°.
NOTE—¼° max. variation between wheels.

►**Toe In**—*CAUTION: Two settings as follows:*
1)—1/8" toe out to 3/16" toe out for cars built before March 1, 1949.
2)—1/16" toe in to 1/8" toe in for cars built after March 1, 1949.
Adjustment—Adjusting sleeve on outer end of each tie rod. Adjust equally.

STEERING GEAR

Gemmer design (Model 305), Ford Make—Worm-&-Roller type.
See Steering Gear Section for complete data.

BRAKES

Service: Ford-Bendix Hydraulic, Duo-Servo, Single Anchor type without eccentric adjustment. Hand lever applies rear wheel service brakes.
See Brake Section for complete data.
Wheel Cylinders—Diameter: Front wheel 1.128" (hone limit 1.132"). Rear Wheel: .878" (hone limit .880").
Drums—Diameter 10" (11" Sta. Wagon rear drums).
Lining—Molded or Woven. Width 2¼" (front wheel), 1¾" (rear wheel). Thickness 3/16". Length per shoe: 11¾" (11 15/16" Sta. Wag. rear wheel shoes).
Clearance—.010" at each end of secondary shoe with primary shoe forced out against drum (adjusting screw in each wheel backed off 14 notches or "clicks" from point where shoes drag on drum).

Hand Brake: See Service Brakes (above).

►**Hand Brake Linkage Change (for easier application) and Cable Interference Correction**—*See "Ford-Bendix Hydraulic" in Brake Section.*

MISC. MECHANICAL

Power Operated Convertible Top: Hydro-Lectric type (hydraulic actuation with motor-driven pump supplying oil under pressure for power cylinders).
See Miscellaneous Section for complete data.

Windshield Wipers: Vacuum Link & Crank Arm Type.
See Miscellaneous Section for complete data.

MODEL IDENTIFICATION

SERIES		MODEL "V8"①	"6 Cyl."②	WHB.
F-1	½ Ton	8RC	8HC	114"
F-2	¾ Ton	8RD	8HD	122"
F-3	¾ Heavy Duty	8RY	8HY	122"
F-3	Parcel Delivery	——	8HJ	104" & 122'
F-4	1 Ton	8RTL	8HTL	134"
F-5	1½ Ton	8RT	8HT	134"
F-5	1½ Ton	8R8T	8H8T	158"
F-5	School Bus	8R8T	8H8T	158"
F-5	School Bus	8R4T	8H4T	194"
F-5	1½ C-O-E	8ROW	8HOW	110"
F-5	1½ C-O-E	8RW	8HW	134"
F-5	1½ C-O-E	8R8W	8H8W	158"
F-6	2 Ton	8RTH	8HTH	134"
F-6	2 Ton	8R8TH	8H8TH	158"
F-6	2 C-O-E	8ROWH	8HOWH	110"
F-6	2 C-O-E	8RWH	8HWH	134"
F-6	2 C-O-E	8R8WH	8H8WH	158"

①—Rouge 239 Truck V8, 100 Horsepower.
②—Rouge 226 Truck Six, 95 Horsepower.

ENGINE NUMBER: On Rating Plate on dispatch compartment (glove box) door and on left side of frame near steering gear mounting bracket. NOTE—Engine Number is also Serial Number.

TUNE-UP

COMPRESSION PRESSURE: 110 lbs. at cranking spd.
VACUUM READING: Steady 18-21" idling at 500 RPM.
FIRING ORDER (V8): 1-5-4-8-6-3-7-2. See diagram.
FIRING ORDER (6 CYL.): 1-5-3-6-2-4. See diagram.
SPARK PLUG GAPS: .025-.028".
Plug Type—Champion H-9 Comm. 14 mm.
DISTRIBUTOR:
Breaker Gap—(6 Cyl.) .024-.026" (V8) .014-.016"
Cam Angle—(6 Cyl.) 36° closed, (V8) 27° closed.
Breaker Arm Spring Tension—17-20 ounces.
Advance Performance—*See Ignition.*
Condenser Capacity—.21-.25 microfarad.
IGNITION TIMING: 2° BTDC (V8), TDC (6 Cyl.).
Timing Procedure—*See Ignition Timing.*
V8—Crankshaft Pulley Mark—Circular boss aligned with pointer on right side of engine front cover.
6 Cyl.—Dampener Mark—Circular boss or groove (depending on type of dampener used), 2 pointers on front engine cover. ***Use pointer nearest to outer circumference of dampener for proper 6 Cyl. Timing.***
CARBURETION:
Idle Setting—Approx. 1 turn open. 2 screws used on V8—turning screws out gives richer mixture.
Idle Speed—Approximately 500 RPM.
Float Level—1.322-1.353" bottom of float to underside of bowl cover with needle valve seated (use Gauge No. 9550-A).
Fuel Level (6 Cyl. C-O-E Trucks)—1/2" ±1/32" measured from top surface of main body to fuel.
Accelerating Pump—Center hole average setting. Inner hole for hot weather, Outer for cold weather.
Fuel Pump Pressure: (V8) 3½-4½ lbs., (6) 4-5 lbs.
MANIFOLD HEAT CONTROL: Automatic.
V8 Engine—Valve located between right end of exhaust pipe cross over and right exhaust manifold.
6 Cylinder—At center of exhaust manifold just under intake manifold.

SIX CYLINDER VALVE TAPPET CLEARANCE:
All Valves—.013-.015" COLD.
►**6 Cyl. High Speed Setting**—.002" additional exhaust valve clearance recommended by manufacturer.
SIX NOTE—Adjustable, self-locking tappet screws used.

"V8" VALVE TAPPET CLEARANCE: ***CAUTION—Different settings required for each type camshaft:***
►**FIRST TYPE V8 CAMSHAFT NO. 8BA-6250-A**
(no markings on Engine or Camshaft)
Intake—.010-.012" COLD. **Exhaust**—.014-.016" COLD
►**SECOND TYPE V8 CAMSHAFT NO. 8BA-6250-B**
(Engine Marked—*"GAP, in- .014", ex- .018"*)①
(Camshaft Marked—*"B" on front end*)
Intake Valves .....014" (.013-.015") COLD
Exhaust Valves .....018" (.017-.019") COLD
①—On top of block at center under valve cover.
VALVE TIMING CHECK: *See Valve Timing.*
STARTING: *See Battery, Starter, Generator, Regulator.*

IGNITION

IGNITION SWITCH: Ford No. 6A-11572-A (Mitchell type), No. 6A-11572-B (Briggs & Stratton type).
Ignition Lock—Ford No. 6A-11582-A.
COIL: Ford No. 7RA-12029-A. Metal can type.
Location—Next to distributor.
Ignition Current—Approx. 5.2-5.7 amperes at 6 volts, stopped. Primary resistance 1.05-1.15 ohms at 70°.
CONDENSER: Ford No. 7RA-12300-B.
Capacity—.21-.25 microfarad.
DISTRIBUTOR: Less Distributor Cap and Rotor.
V8 Eng......**7RA-12127-C** **6 Cyl.**.....**7HA-12127**
Type—New "Pressure" distributor with spark advance controlled by vacuum diaphragm moving breaker plate to advance spark against two breaker plate springs. Operating vacuum taken from 1 carburetor connection (2 passages inside carburetor, 1 at venturi, 1 at throttle valve). Full spark advance

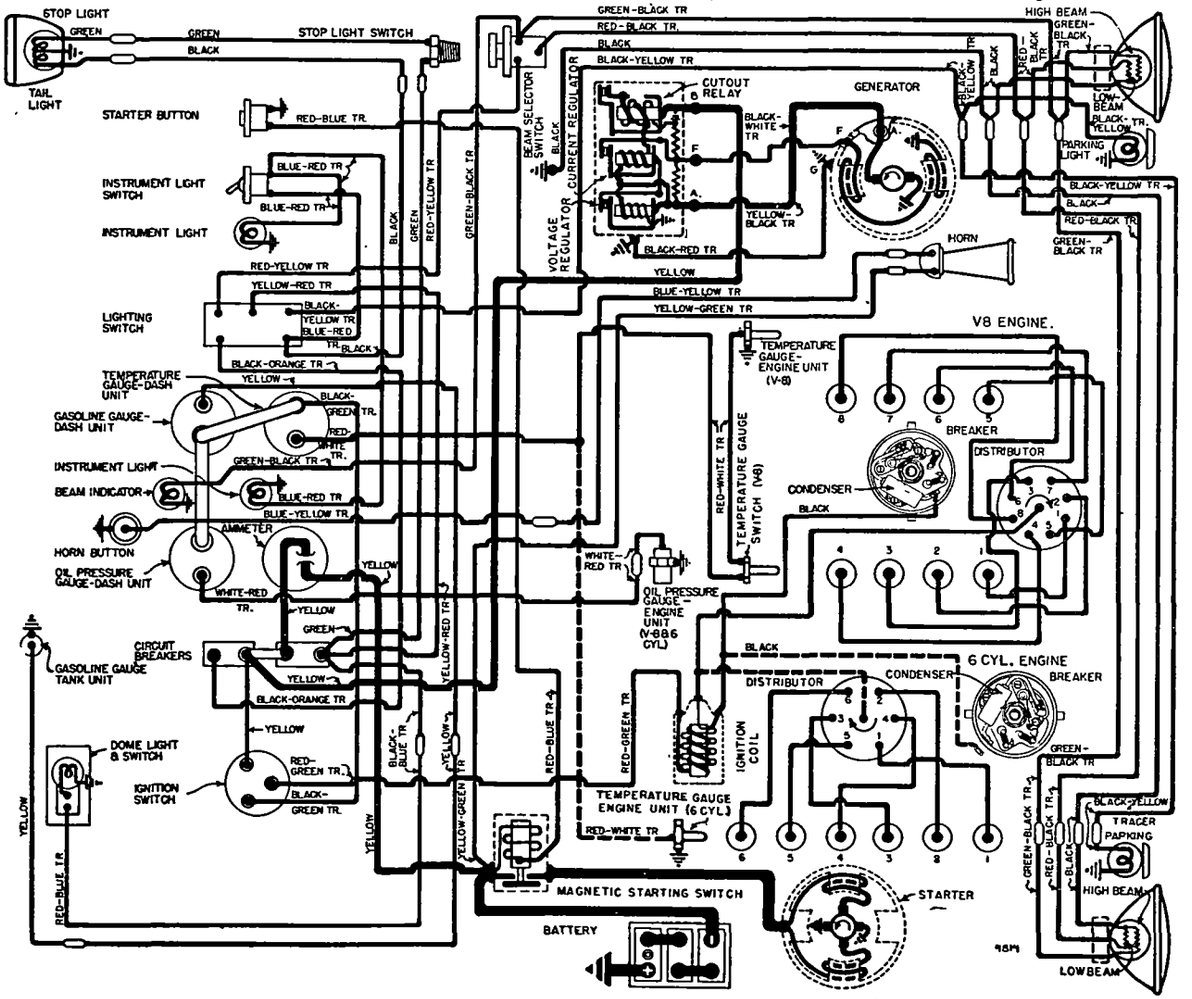

obtained at 18-35 MPH. with normal road load or for part throttle operation at any speed.

►*NOTE—Distributor is single contact type (no "coil loading" contacts are used). 6 Cylinder distributor angle-mounted on left side (shaft splined in drive gear).*

Breaker Gap—(6 Cyl.) .024-.026" (V8) .014-.016".

Cam Angle—(6 Cyl.) 36° closed, (V8) 27° closed.

Breaker Arm Spring Tension—17-20 ounces.

Rotation—Clockwise viewed from above.

V8—Advance Performance ►(at Wide Open Throttle)

Distributor			Engine		
Degrees	Vacuum	R.P.M.	Degrees	Vacuum	R.P.M.
0°	0"	200	0°	0"	400
1¼-2¼°	0.4"	500	2½-4½°	0.4"	1000
4¼-5¼°	1.7"	1000	8½-10½°	1.7"	2000
6¼-7¼°	2.85"	1500	12½-14½°	2.85"	3000
7½-8½°	3.7"	2000	15-17°	3.7"	4000

6 Cyl.—Advance Performance ►(at Wide Open Throttle)

0°	0"	200	0°	0"	400
1¾-3°	0.4"	500	3½-6°	0.4"	1000
5½-6¾°	1.4"	1000	11-13½°	1.4"	2000
11½-13°	5.5"	1000	23-26°	5.5"	2000
8½-9¾°	2.9"	1500	17-19½°	2.9"	3000
10½-11½°	4.1"	2000	21-23°	4.1"	4000

Distributor Removal: Disconnect vacuum line, take out hold-down screw, lift off. V8 distributor mounted at front of engine on right side. 6 Cylinder distributor mounted on left side of engine at center.

IGNITION TIMING

V8 Engine ..... 2° BTDC.
6 Cylinder ..... TDC.

Timing Marks—*See Tune-Up data.*

Timing—With #1 piston at firing position and timing mark aligned with pointer on front of engine, loosen distributor clamp screw, rotate distributor until contacts begin to open, tighten clamp screw. Check spark plug connections (see diagram), see that rotor opposite #1 terminal in cap.

Timing (with Neon Timing Light)—*CAUTION—Vacuum line must be disconnected to avoid vacuum advance operating.* Mark timing mark and pointer with white chalk (6 cylinder equipped with two pointers —See Dampener Mark above). Connect timing light to #1 spark plug. Idle engine and adjust distributor (as directed above) until mark and pointer aligned

CARBURETOR

V8 Engine—Holley-Ford No. 7RT-9510-A
6 Cylinder—Holley-Ford No. 7HT-9510-A

Dual or double barrel (V8), single barrel (6 Cyl.) downdraft type with new vacuum passages for distributor operation.

See Carburetor Section for complete data.

NOTE—7HW-9510 Updraft Carburetor used on 6 Cyl. Parcel Delivery & Cab-Over-Engine Trucks.

Settings (Idle Setting, Float Level, and Accelerating Pump): *See Tune-Up data.*

Metering Jets—*See Holley-Ford Jet Specification Table in Carburetor Section.*

Fast Idle: Integral type. Operated by choke valve lever. No adjustment required.

CARB. EQUIPMENT

Fuel Pump (V8—std.): Ford No. 7RA-9350-C.
6 Cyl. (std.)—Ford No. 7HA-9350-B.
V8 Optl. (fuel-&-vacuum)—Ford No. 7RA-9350-E.
Pressure—3½-4½ lbs. (V8), 4-5 lbs. (6 Cyl.).
See Carburetion Equipment Section for complete data.

Gasoline Gauge: King-Seeley Electric.
Dash Unit—Ford No. 7RC-9280 (all models).
Tank Unit (All Closed Cabs)—Ford No. 7RC-9275.
Tank Unit (F-1, 2, 3 Panels)—Ford No. 21C-9275B.
Tank Unit (F-4, 5, 6 Panels & Bus)—No. 7RT-9275.
See Carburetion Equipment Section for complete data.

Air Cleaner V8, & 6Cyl. C-O-E (oil bath): Ford No. 7RT-9600-C (1 quart capacity).
6 Cyl. exc. C-O-E (oil bath)—Ford No. 7HT-9600-A
Servicing (oil bath type)—Clean and re-fill sump (to level mark) with same grade oil used in crankcase at 1000 mile intervals (CAUTION—Do not use lighter than SAE #30 oil in hot weather). Occasionally wash filter in cleaning fluid.

BATTERY

Std.—Ford 81A-10655-A. 6 Volt, 17 Plate, 100 Amp. Hr.
Grounded Terminal—Positive (+) terminal.
Dimensions—L. 10½". W. 7⅛". H. 7¼".
Location—At rear of engine on right side (V8), left side (6 Cyl.). On right running board under separate cover on Cab-Over-Engine trucks.

School Bus (Spec. Equip. Other Models): Ford No. 01A-10655-A. 6 Volt, 17 Plate, 120 Ampere Hour
Grounded Terminal & Location—As given above.

STARTER

V8 Engine ..... **Ford Model 7RA-11002**
6 Cylinder (Early) ..... **Ford Model 7HA-11002-A①**
6 Cylinder (Late) ..... **Ford Model 7HA-11002-B②**
①—For use with B-11350 drive (10 tooth pinion).
②—For use with 7HA-11350 drive (9 tooth pinion).
Armature No.—Ford No. 18-11005.

►**Starter Motor Rusting Correction**—*See "Electrical System Notes" in Ford Shop Notes.*

Drive—10 Tooth Pinion Type (All V8, Early 6 Cyl.) Ford No. B-11350 (Bendix No. A1472) for use with 112 tooth flywheel ring gear.

Drive—9 Tooth Pinion Type (Late 6 Cyl.) Ford Part No. 7HA-11350 (with 114 tooth flywheel ring gear).

►*6 CYL. STARTER DRIVE CAUTION—Use proper type drive. Both 9 and 10 tooth pinions used as listed above.*

Rotation—Counter-clockwise at commutator end.
Brush Spring Tension—20-22 ounces.
Cranking Engine—100 RPM., 190-215 amperes.

Performance Data

Torque	R.P.M.	Volts	Amperes
4 ft. lbs.	1070	4.6	200
8 "	660	4.3	340
12 "	300	3.65	465
14 "	Lock	3.5	550

Starting Switch: Ford No. 21A-11450 Magnetic Switch mounted on front of dash next to battery (left side on 6 Cyl. Conventional Truck, right side all others) controlled by pushbutton, Ford No. 11C-11500.

Removal: On right front face of flywheel housing cover. To remove, take off right engine splash pan (if used), free starter-to-oil pan bracket, take out 2 starter through bolts.

GENERATOR

Ford Model No. 8BA-10002-A (less pulley & bracket.)
Armature No.—Ford No. 8BA-10005-A.
2 brush type with current and voltage regulation.
Charging Rate Adjustment—None. See Regulator.
Maximum Charging Rate—36 amperes, 7 volts. Controlled by regulator and dependent on load and battery condition.
To Check Generator Output—Connect ammeter in series with charging line at regulator "ARM" terminal, connect short insulated jumper between generator "A" and "F" terminals (to short out regulator). Run engine at approximately 1500 RPM. and note ammeter reading. If generator output equals or exceeds rate output (below) generator performance is satisfactory. Remove jumper.

►*CAUTION—Do not operate generator at higher speeds or in service with jumper connected between generator armature and field terminals. This jumper eliminates all regulator action.*

Performance Data

Amperes	Engine R.P.M.
33	1500

Rotation—Counter-clockwise at commutator end.
Brush Spring Tension—20-24 ozs.

Removal (V8): On support secured to valve chamber cover by stud and nut, driven by belt in tandem with water pumps. To remove, loosen stud nut and disengage generator belt, take out capscrew in mounting strap, lift generator off support.

Removal (6 Cyl.): Separate generator mounting bracket mounted on engine bracket on left side of engine at front. To remove, slack off belt by loosening mounting bracket bolts, take out mounting strap bolt, lift generator off mounting bracket.

Belt Adjustment (V8): Loosen 2 bolts on fan mounting bracket, loosen generator support mounting stud nut, raise generator up until side movement on belt midway between generator and water pump pulleys is ½" (thumb and finger pressure), tighten stud nut. Adjust fan belt in similar manner, tighten 2 fan bracket bolts.

Belt Adjustment (6 Cyl.): ½" deflection midway between generator and pump pulleys. To adjust, loosen 2 mounting bracket bolts under generator and capscrew in bracket slot behind generator.

REGULATOR

Regulator	Generator	Amperes
51A-10505-A or C	8BA-10002-A (Std.)	30-33
8A-10505	8BA-10002-A (Std.)	30-34

Voltage-current 3-Unit types.
See Electrical Equipment Section for complete data.
NOTE—Ground wire between generator and regulator must be in place.

Cutout Relay

Cuts In—6.0-6.4 volts COLD (will be slightly higher when warm).
Cuts Out—8 ampere discharge current (maximum).
Contact Gap—.010" (armature against upper stop).
Air Gap—.014" between armature and core with contacts open.

Voltage & Current Regulator

Voltage Setting—7.0-7.4 volts COLD (7.2-7.6 volts after 20 minutes run).
Current Setting (51A) ..... 30-33 amperes COLD
Current Setting (8A) ..... 30-34 amperes COLD
Checking & Adjustment—*See Elec. Equip. Section.*
Air Gap—.032-.035" between armature and core with contacts just closed.

►*CAUTION—Make certain gauge contacts armature and not brass rivet on underside of voltage armature.*

Contact Spring Tension—5 ounces minimum with contacts just opening.

LIGHTING

Headlamps: Ford "Sealed Beam" type.
See Electrical Equipment Section for complete data.
Adjustment—Aim upper beams straight ahead (hot spot centers 3" below lamp center height at 25 ft.).
Beam Indicator—Bulb between Fuel and Oil Gauges on panel. Lighted when Upper Beam in use.

C NTINUED ON NEXT PA E

C NTINUED FROM PRECEDING PAGE

Switches

Lighting—Ford No. 7RA-11654.
Beam Selector—Ford No. 7RA-13532.
Instrument—Ford No. 21C-13740.
Stop Light—Ford No. 11A-13480.

MISC. ELECTRICAL

CIRCUIT BREAKERS: Ford No. 51A-12258-A. Consists of two circuit breakers behind instrument panel: **Top Unit** Headlights. **Lower Unit** Auxiliary Lights.
HORNS: Ford No. 7RC-13833. Single horn.

ENGINE

6 CYLINDER 95 HORSEPOWER ROUGE 226

ENGINE SPECIFICATIONS: Own 7HT. Six cylinder, "L" head type.
Bore—3.30". **Stroke**—4.40".
Displacement—226 cu. ins. **Rated HP**—26.13.
Developed Horsepower—95 at 3300 RPM.
Compression Ratio—6.8-1 cast-iron head.
Compression & Vacuum Reading—*See Tune-Up data.*
TIGHTENING TORQUES: *See Ford Shop Notes.*
OTHER ENGINE DATA: *See 1949-50 FORD 6 CYL. PASSENGER CAR PAGES for Pistons, Piston Rings, Piston Pins, Connecting Rod, Crankshaft & Main Bearings, Camshaft, and Valves.*

ENGINE

V8 100 HORSEPOWER ROUGE 239

ENGINE SPECIFICATIONS: Own 8R. Eight cylinder, "L" head, 90° Vee type with both cylinder banks and crankcase cast Enbloc.
Bore—3.187". **Stroke**—3.75".
Developed Horsepower—100 at 3600 RPM.
Displacement—239 cu. ins. **Rated HP**—32.5.
Compression Ratio—6.8-1 cast-iron heads.
Compression & Vacuum Reading—*See Tune-Up data.*
TIGHTENING TORQUES: *See Ford Shop Notes.*
OTHER ENGINE DATA: *See 1949-50 FORD V8 PASSENGER CAR PAGES for Pistons, Piston Rings, Piston Pins, Connecting Rod, Crankshaft & Main Bearings, Camshaft, and Valves.*

VALVE TIMING

SIX CYLINDER VALVE TAPPET CLEARANCE:
All Valves—.013-.015" COLD.
►**6 Cyl. High Speed Setting**—.002" additional exhaust valve clearance recommended by manufacturer.
SIX NOTE—Adjustable, self-locking tappet screws used.

"V8" VALVE TAPPET CLEARANCE: *CAUTION—Different settings required for each type camshaft:*

►**FIRST TYPE V8 CAMSHAFT NO. 8BA-6250-A**
(no markings on Engine or Camshaft)
Intake—.010-.012" COLD. **Exhaust**—.014-.016" COLD

►**SECOND TYPE V8 CAMSHAFT NO. 8BA-6250-B**
(Engine Marked—"GAP, in- .014", ex- .018")①
(Camshaft Marked—"B" on front end)
Intake Valves .....014" (.013-.015") COLD
Exhaust Valves .....018" (.017-.019") COLD
①—On top of block at center under valve cover.

VALVE TIMING: *See Camshaft Setting on car pages.*

SIX CYL. "H" ENGINE
Intake Valves—Open 11° BTDC. Close 41° ALDC.
Exhaust Valves—Open 48° BLDC. Close 10° ATDC.

V8 "R" ENGINE
Intake Valves—Open at TDC. Close 44° ALDC.
Exhaust Valves—Open 48° BLDC. Close 6° ATDC.
Valve Timing Check—Intake valve opens at TDC (V8), 11° BTDC (6 Cyl.). Valve timing mark location on crankshaft pulley (V8), dampener (6 Cyl.).

LUBRICATION

Engine Oiling System: Pressure to main bearings, connecting rod lower bearings, camshaft bearings. Timing gears and distributor drive gear lubricated through drilled hole in front end of camshaft on V8. Timing gears lubricated by spray past camshaft thrust plate on 6 cylinder engine.
►***OIL PAN CLEAN-OUT PLATE—On underside of oil pan, attached by 7 nuts. Remove to clean oil pump intake and screen, and oil pan.***
Crankcase Capacity—5 quarts (6 quarts when changing filter).
Normal Oil Pressure—50 lbs. at 2000 RPM.
Oil Pressure Relief Valve (6 Cyl.): In cylinder block just to rear of oil filter mounting. Not adjustable.
Spring Tension—12.62-12.88 ozs. at 1.14".
Oil Pressure Relief Valve (V8): In oil pump body.
Spring Tension—242-246 ozs. at 1.14".
V8 NOTE—Cylinder block oil relief valve not used.
Oil Pump (6 Cylinder): Rotor type. Mounted externally on right side of engine with drive gear at center of camshaft.
►**Oil Pump Driven Gear Replacement before 6 Cylinder Engine No. 7H-219349**—*See Ford Shop Notes.*
Oil Pump (V8 Engine): Gear type (two types: one equipped with spur gears, second helical gears). In crankcase at rear of engine.
Oil Filter: On 6 cylinder, mounted directly on block (no external oil lines) on left side at rear. On V8, mounted on left cylinder head. Replace cartridge every 5000 miles or more often if required.
Oil Filter Cartridge—Ford No. 7HA-6731-A.
Oil Pressure Gauge: King-Seeley Electric.
Dash Unit—Ford No. 7RC-9273 (K-S #41360).
Engine Unit—Ford No. 41A-9278 (K-S #9530).
See Miscellaneous Section for complete data.
Crankcase Ventilation: Filter element in oil filler cap (inlet) with outlet pipe in rear valve chamber extending down on right side of 6 cylinder engine, or from top of engine down behind fan and out along left side of V8 engine.
V8 NOTE—Outlet pipe may be equipped with filter element just below upper elbow.
Servicing—Wash screen in cleaning fluid and wet with engine oil when dry every 2500 miles.

COOLING

Cooling System: Pressure type with relief valve in filler cap, by-pass in block, and belt-driven water pump (2 used on V8).
Capacity—18 quarts (6 Cyl.), 23 quarts (V8).
Pressure Valve—In radiator filler cap. Ford Nos. 41A-8100-B (with knurled edge) or 41A-8100-A (flange type grip—use with 51A-8138 radiator cap gasket). Opens at 3½-4½ lbs.
Water Pump (6 Cylinder): Centrifugal, belt-driven, packless type. Shaft mounted on sealed duplex ball bearing. No lubrication required.
See Water Pump Section for complete data.
Belt Adjustment—*See GENERATOR.*
Water Pumps (V8 Engine): Two used. Centrifugal, belt-driven, packless type. Shaft mounted on prepacked ball-bearing at front, and a bushing next to seal. Oil cup provided for bushing lubrication.
See Water Pump Section for complete data.
►***CAUTION—V8 WATER PUMP LUBRICATION: Fill oil cup in pump with SAE #20 engine oil every 1000 miles. When oiling new pump insert piece of wire down alongside wick in oiler to permit air to escape from cavity.***
Belt Adjustment—*See GENERATOR.*
Thermostat: In cylinder head water outlet (2 on V8). Ford No. 7HA-8575-A (6 Cyl.), 8RT-8575-A (V8). Two makes: Standard-Thompson or Fulton-Sylphon.
Setting (6 Cyl.)—Starts to open 157-162°F.
Setting (V8 Eng.)—Starts to open 148-153°F.
Temperature Gauge: King-Seeley Electric.
Dash Unit—Ford No. 7RC-10883 (K-S #41370).
Engine Unit—Ford No. 99A-10884 (K-S #7000).
Temp. Switch (V8 only)—Ford No. 01A-10990 (K-S No. 8355) in left cylinder head.
See Miscellaneous Section for complete data.

CLUTCH

Long Model 10CF-TI (F-1 with 3 spd. Transmission).
Long Model 11CF-CI (All Other Models).
Semi-centrifugal, single plate, dry disc types.
See Clutch Section for complete data.
Facings (10CF)—Moulded. 10" O.D. .125" thick.
Facings (11CF)—Woven (School Bus), Moulded (Others). Outside Diameter 11". Thickness .137".
Pedal Adjustment: 1-1¼" (F-1 with 3 spd. Trans.), 1½-1¾" (All Others) pedal free travel. Adjusting clevis provided at forward end of connector rod between pedal shaft and equalizer shaft.
Removal: Remove transmission (see TRANSMISSION Removal below). Install wooden wedges between each release lever and cover to hold clutch in released position, take out 6 cover capscrews, lift assembly out. NOTE—Flywheel housing may have to be removed on some models.

TRANSMISSION

3-SPEED TYPE

Own Make. 3-speed, all helical gear type. Constant-mesh, synchro-mesh (Second & High), sliding gear (Low & Reverse).
See Transmission Section for complete data.
NOTE—This transmission standard on F-1 Series. Heavy Duty 3-speed or 4-speed transmissions Optl.
Removal: Remove propeller shaft by disconnecting rear universal and sliding shaft out of transmission. Disconnect clutch linkage and speedometer cable. Remove front floor plate. Remove nuts and washers from two engine rear support bolts. Raise rear end of engine (use block of wood on jack under engine) until rear support clears mounting bolts. Remove transmission mounting capscrews, pull transmission straight back until main drive gear shaft clears clutch, lift transmission out through floor opening.

TRANSMISSION

HEAVY DUTY 3-SPEED TYPE

Own Make. Heavy duty, 3-speed. Helical gear, constant-mesh, synchro-mesh (Second & High). Sliding spur gear (Low & Reverse).
See Transmission Section for complete data.
NOTE—This transmission standard on F-2, F-3 Series, optional on F-1, F-4, F-5.
Removal: Same as for 4-Speed type following.

TRANSMISSION

4-SPEED TYPE

Own Make. 4-speed, sliding spur gear type.
See Transmission Section for complete data.
NOTE—This tranmission standard on F-4, F-5, F-6 Series, optional on F-1, F-2, F-3.
Removal: Remove seat cushion, floor mat, and transmission cover on floor. Support engine with jack under flywheel housing (use wood block on jack), raise jack until engine weight is off rear mounting. Free coupling shaft support bearing from crossmember by removing nuts on two bolts, disconnect

front universal joint by taking out four bolts mounting universal joint flange at hand brake drum and disconnect intermediate universal joint at support bearing by removing nuts on "U" bolts (tape bearing caps in place to prevent losing needle bearings), remove front shaft. Remove clutch equalizer shaft by taking out pin in clutch shaft and clevis pin at lever and pulling equalizer shaft off the bracket (CAUTION—Do not lose spring and bushing halves). Remove two bolts in engine rear support. Disconnect speedometer shaft at transmission. Remove transmission capscrews from flywheel housing, pull transmission straight back until clutch (main drive gear) shaft clears, then lift transmission out through floor opening.

NOTE—To remove brake assembly, take out 2 capscrews in hand brake lever sector on transmission case and two capscrews in brake adjusting screw bracket, disconnect hand brake link from transmission and anchor adjusting screw from brake band, remove brake band assembly and hand brake lever.

UNIVERSALS

Spicer. Needle bearing type, two used (Series F-1, and F-5, F-6 C-O-E 110"), three used with slip joint at forward end of rear shaft behind coupling shaft support bearing (All Others).

SERIES F-1 NOTE—Propeller shaft is one-piece type with slip joint provided by front universal yoke sliding on splined drive shaft in transmission.

See Universals Section for complete data.

Spicer Model Nos.

Series	Front	Center	Rear
F-1①	1278-102X	None	1278-102X
F-1②	1311-102X	None	1318-105X
F-2, F-3	1318-103X	1311-102X	1318-103X
F-4, F-5, F-6	1358-54X	1351-5107X	1358-5104X
F-5, F-6 110"	1351-517X	None	1358-5104X
F-5 194"	1358-514X	1351-5107X	1358-5107X

①—3-Speed Transmission. ②—4-Speed Trans.

Coupling Shaft Center Bearing: Consists of cushion mounted ball bearing bolted to underside of frame intermediate cross-member. Bearing is mounted on end of coupling shaft in a sleeve with felt retainer sleeve on each end and bearing baffle on front end.

REAR AXLE

F-1 SERIES—SEMI-FLOATING HYPOID TYPE

Own Make. Semi-floating, Hypoid Gear type with Hotchkiss drive (**separate carrier not used**). Axle ends flanged (no separate hub). Wheel bearings are sealed-ball pre-lubricated (no lubrication required).

►*NOTE—AXLE NOT SAME AS USED ON FORD CAR.*

See Rear Axle Section for complete data.

Ratio (Standard)—3.73-1 (41-11).

Ratio (Optional)—4.27-1 (47-11).

Backlash—.003-.006". Shim adjustment.

Removal: Raise rear of truck. Disconnect rear universal. Remove axle shafts (see instructions below). Disconnect brake line at "T" on left side of axle housing, and hand brake cable. Remove nuts on rear spring "U" bolts, drive bolts up free of housing, lower axle assembly and remove from underneath

Axle Shaft Removal: Remove wheel. Take off drum. Remove 4 axle retainer nuts (work through opening in axle shaft flange). Use Puller No. 4235 and pull shaft (do not disturb brake backing plate or damage wheel bearing oil seal).

Wheel Bearing Adjustment: None. Pre-lubricated sealed ball-bearings.

REAR AXLE

F-2, 3, 4, 5 SERIES—FULL-FL ATING TYPE

Own Make. Full-floating, Spiral Bevel Gear type with Hotchkiss drive.

See Rear Axle Section for complete data.

Ratios: Standard	Optional
F-2, F-3 4.86-1 (34-7)	4.11-1 (37-9)
F-4 5.14-1 (36-7)	5.83-1 (35-6), 6.67-1 (33-5)
F-5 6.67-1 (33-5)	5.83-1 (35-6), 5.14-1 (36-7)

Backlash—.004-.018".

Removal: Raise rear end of frame, remove axle shafts (see below), wheel and drum assemblies. Disconnect hydraulic brake line at each wheel and hose at bracket (bleed brake lines when re-connected). Remove backing plate assemblies. Disconnect rear universal. Remove nuts on rear spring "U" bolts, drive bolts up free of housing, lower axle assembly and remove from underneath truck.

Axle Shaft Removal: Remove hub cap, remove nuts on 8 hub studs holding axle shaft flange in place, turn 2 special screws (in tapped holes in flange) up evenly to break flange loose from hub, **back these screws out,** strike axle shaft flange at center to loosen centering cones on studs, remove cones, pull axle shaft out (wheel not disturbed).

Wheel Bearing Adjustment: Remove axle shaft (see above), use special bearing adjustment wrench and remove bearing locknut (outer nut), and lockwasher. Adjust bearings by turning bearing adjusting nut (inner nut) up until tight and then backing nut off ⅛ turn. Install bearing lockwasher making certain that it fits over dowel pin on adjusting nut, install bearing locknut and turn this nut up tight. NOTE—When installing axle shaft make certain that gasket in place under shaft flange, cones in place on studs and that two loosening screws backed off sufficiently so that stud nuts can be tightened securely. Turn two loosening screws in just enough to prevent loosening in service.

REAR AXLE

TWO-SPEED TYPE—STD. F-6 SERIES, OPTL. F-5 SERIES

Own Make. Vacuum Operated Shift, Two-speed, Full-floating, Spiral Bevel Gear (final drive), spur gear planetary unit (reduction gearing) with Hotchkiss drive.

See Rear Axle Section for complete data.

Ratio—5.83-1 (Direct Drive), 8.11-1 (2nd Speed).

Backlash—.004-.018".

Removal: Same as for standard axle (above) after disconnecting vacuum line at hose connection.

SHOCK ABSORBERS

Houde (Houdaille). Direct acting, hydraulic type.

►*Shocks are sealed (cannot be refilled or repaired).*

F-1, F-2, F-3—Ford No. 7RC-18045-B, Houde No. H-160 (Front). 7RC-18080-B, Houde H-170 (Rear). F-4, F-5, F-6 NOTE—Houde rotary type shocks optional equipment for front end only (Ford No. 8T-18045 Right, No. 8T-18046 Left). These shocks are adjustable and can be refilled.

See Shock Absorber Section for complete data.

FRONT SUSPENSION

Front Axle—Conventional "I" beam section with Reverse Elliott ends and semi-elliptic springs.

Kingpin Inclination—7° crosswise.

Caster—1° minimum, to 3½° maximum. Both wheels should be equal within ½°.

NOTE—Caster angle controlled by wedge shims inserted between axle pads and springs. To increase caster, insert taper shims equally at both sides.

Camber—¼° minimum, to 1° maximum. Right wheel must never exceed Left wheel. Axle may be bent cold to correct Camber providing proper tools used to prevent crushing axle flange.

Toe In—1/16". Set at 1-10 ratio to Camber. Toe In increases with load and should be set with truck empty. To adjust, loosen clamp bolts, turn tie rod.

STEERING GEAR

F-1, F-2, F-3—Ford No. 7RC-3504.

F-4, F-5, F-6—Ford No. 7RT-3504.

Cab-Over-Eng. & Parcel Del.—Ford #7RW-3504-B. Worm-and-Roller types with "push-pull" adjustment. Gemmer 305 & 335 design. See Gemmer.

See Steering Gear Section for complete data.

BRAKES

F-1 SERIES

Service—F-1: Ford-Bendix Hydraulic, Duo-Servo, Single Anchor type without eccentric adjustment. Hand lever applies rear wheel service brakes.

See Brake Section for complete data.

Wheel Cylinders—Diameter: Front wheel 1.0655" (hone limit 1.0675"). Rear 1.003" (hone limit 1.005").

Drums—11" composite (cast iron and steel).

Lining—Molded or woven. Width 2". Thickness 3/16". Length per shoe: 11 29/32".

Clearance—.010" at each end of secondary shoe with primary shoe forced out against drum (adjusting screw in each wheel backed off 14 notches or "clicks" from point where shoes drag on drum).

Hand Brake: See Service Brakes (above).

BRAKES

F-2, F-3, F-4, F-5, F-6 SERIES

Service—F-2 (All Wheels), F-3 (Front): Ford-Lockheed Hydraulic, **self-centering,** double anchor type. Hand lever applies rear wheel service brakes.

F-3 (Rear Wheels), F-4, 5, 6 (All Wheels)—Ford-Lockheed Hydraulic, double anchor type. Hand lever applies rear wheel service brakes (F-3), independent shaft brake at transmission (F-4, F-5, F-6).

►**Parcel Delivery Note**—Ford-Lockheed Hydraulic, double anchor, with 13⅛" I.D. drums and independent shaft brake at transmission.

See Brake Section for complete data.

Wheel Cylinders—Diameters: **F-2 All Wheels, F-3 Front** 1.378" (hone limit 1.382") forward shoe, 1.003" (hone limit 1.005") reverse shoe. **F-3 Rear Wheels; F-4, F-5, F-6 Front Wheels** 1.378" (hone limit 1.382"). **F-4, F-5, F-6 Rear Wheels** 1.503" (hone limit 1.507").

Drums—Diameters: 12" F-2 All, F-3 Front. 14" F-3 Rear, F-4, 5, 6 Front. 15" F-4, 5, 6 Rear Wheels.

Lining—Molded type (all shoes).

Wheels					Shoe Lgth.
Front	Rear	Width	Thick.	Pri.	Sec.
F-2, 3	F-2	1 23/32"	3/16"	13 1/2"	10 3/8"
F-4, 5, 6	F-3	2"	1/4"	15 17/32"	10 3/4"
——	F-4, 5, 6	3½"	5/16"	16 21/32"	11 9/16"

Clearance—Least possible amount without drag.

Hand Brake (F-3): Hand lever applies rear wheel service brakes. See Service Brakes above.

Hand Brake (F-4, F-5, F-6): Independent external contracting band on drum at rear of transmission.

Adjustment—*See Ford Shop Notes.*

Drum Diameter—7.81".

Lining Woven. Lgth. 24.6". Width 2½". Thick. ¼".

TIGHTENING (TORQUE WRENCH) SPECIFICATIONS

1949 MODELS

	Ft. Lbs.	In. Lbs.
Cylinder Head Bolts	30-35	360-420
Spark Plugs	30	360
Con. Rod Bearing Bolts	40-45	480-540
Main Bearing Cap Bolts	85-95	1020-1140
Flywheel Mounting Bolts	35-40	420-480
Camshaft Sprocket Nut	35-40	420-480
Camshaft Thrust Plate	12-15	144-180
Timing Gear Cover	12-15	144-180
Eng. Front End Plate 5/16"	12-15	144-180
Eng. Front End Plate 7/16"	40-50	480-600
Int. & Exh. Manifolds	30-35	360-420
Oil Pan Screws	12-15	144-180
Water Pump Mtg. Bolts	12-15	144-180
Vibration Dampener Bolt	100-130	1200-1560
Steering Wheel Nut	10-15	120-180
Steering Gear Mtg. Bolts	25-30	300-360
Pitman Arm Nut	110 min.	1320
Rear Spring "U" Bolt Nuts	45-55	540-660
Wheel Mtg. Nuts or Bolts	85-90	1020-1080
Differential Bearing Caps	38-42	456-504
Rear Axle Shaft Nut	160 min.	1920

CAUTION—Torque figures given are for clean and dry threads. If threads oiled, reduce torque approx. 10%.

CYLINDER HEAD

CYLINDER HEAD INSTALLATION: Use a Torque Indicating Wrench to tighten cylinder head bolts, tighten in correct sequence as shown in diagram. Heads should be tightened cold and rechecked after engine temperature reaches 150°F.

Tightening Torque: See Tightening Specifications.

KAISER–FRAZER

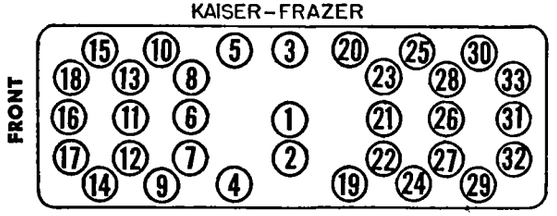

ENGINE REMOVAL

1949 MODELS

ENGINE REMOVAL: Proceed as follows:

1. Remove Hood (see Hood Assembly above).
2. Drain cooling system.
3. Disconnect windshield wiper hose at manifold (or at vacuum pump), disconnect fuel line at point where fuel pump flexible line connected to tubing at frame, disconnect exhaust pipe at manifold.
4. Remove Radiator (see Radiator removal below).
5. Remove Battery. Disconnect cables, lift out.
6. Disconnect Wiring. Disconnect ground cable near left front engine mounting, disconnect wiring at starter, generator, and distributor.
7. Remove Air Cleaner.
8. Disconnect Temperature Gauge by removing bulb from cylinder head (Frazer), disconnecting lead (Kaiser). Disconnect oil gauge by disconnecting line at flexible hose connection on left side of engine (Frazer), disconnecting lead at engine unit (Kaiser).
9. Disconnect throttle linkage at carburetor.
10. Disconnect heater inlet and outlet hoses.
11. Remove transmission (and overdrive if used). See Transmission and Overdrive Removal on car pages.
12. Disconnect clutch throw-out linkage.
13. Install lifting bracket at #7 and #28 cylinder head bolts—see cylinder head diagram (remove distributor if required). Raise engine slightly with hoist.
14. Disconnect front engine mountings.
15. Hoist engine from car with engine turned at slight angle to frame with front end of engine raised to clear shroud. *CAUTION*—Do not damage engine accessories when lifting engine from car.

ORIGINAL BORE & PISTONS

1949 MODELS

BORE & PISTON SIZES: Engines originally equipped at factory with special oversize pistons may be identified by code letter following engine number:

"N"—Pistons are .020" Oversize.

"AN"—Pistons .020" Oversize. Main and connecting rod bearings Undersize (See Original Bearing Sizes).

"NX"—Pistons .020" Oversize. Main bearings are Undersize (see Original Bearing Sizes following).

PISTONS

1949 MODELS

PISTON IDENTIFICATION: Two types of aluminum alloy pistons used which can be identified as follows:

►*CAUTION—Piston weight different on each type.*

Strut Type Piston—Has wide strut embedded within skirt at each piston pin boss and drilled oil drain holes in both #3 and #4 ring grooves.

T-Slot Type Piston—Has horizontal slot in lower (#4) ring groove and short vertical slot on one side of piston skirt. #3 oil ring groove has drilled oil drain holes.

1949 MODELS

REPLACEMENT PISTONS: See "Piston Identification" for types used. Each type piston furnished in following sizes:

	Kaiser-Frazer Part No.	
Piston Size	Strut Type	T-Slot Type
Standard	200108	201947
.005" Oversize	200357	201949
.010" Oversize	200358	201950
.020" Oversize	200359	201951
.025" Oversize	202484	202487
.030" Oversize	200360	201952
.040" Oversize		203751
.050" Oversize		203752
.060" Oversize		203753

►*CAUTION—Piston weight different on each type.*

PISTON RINGS

1949 MODELS

REPLACEMENT RINGS: Rings furnished as single rings (12 Compression, 12 Oil Rings required), or in complete sets (1 Set per car) as follows:

	Single Rings	
Ring Size	Compression—Part No.	—Oil
Standard	200111	200112
.010" Oversize	200361	200364
.020" Oversize	200362	200365
.030" Oversize	200363	200366

	Ring Sets	
Ring Size	Cyl. Size ①	Part No.
Standard	Std. to .009" OS	203145
.020" Oversize	.010" to .029" OS	203146
.040" Oversize	.030" to .049" OS	203147
.060" Oversize	.050" to .069" OS	203148

①—Use ring indicated for oversize cylinders within this range (check End Gap).

ORIGINAL BEARING SIZES

1949 MODELS

MAIN & CONNECTING ROD BEARING SIZES: Engines originally equipped with special undersize main and connecting rod bearings may be identified by code letter following engine number:

"A"—Main & Connecting Rod Bearings .010" Undersize.

"X"—Main Bearings .002" Undersize.

"AN"—Main & Connecting Rod Bearings .010" Undersize and Pistons Oversize (see Original Bore and Pistons).

"NX"—Main Bearings .002" Undersize and Pistons Oversize (see Original Bore and Pistons).

CRANKSHAFT & MAIN BEARINGS

1949 MODELS

PLASTIGAGE FOR CHECKING BEARING CLEARANCE: Consists of plastic rod material supplied in envelope marked with scale which gives bearing clearance in thousandths of an inch when used to measure flattened plastigage in bearing cap. Use Plastigage as follows:

Bearing Clearance Check—Remove bearing cap, wipe all oil from bearing insert and shaft journal (CAUTION—When checking main bearings, keep all other bearing caps tight so that crankshaft weight will not cause incorrect reading). Place piece of Plastigage Rod (⅛" shorter than width of bearing) across bearing insert in cap, re-install bearing cap and tighten to recommended torque (see Tightening Specifications). Remove cap, match widest width of flattened Plastigage with correct graduation of scale on envelope (marking of this graduation is clearance).

1949 MODELS

CRANKSHAFT ENDPLAY ADJUSTMENT: Requires removal of radiator, vibration dampener, timing gear cover, timing gears and chain (remove as an assembly), thrustplate, and shims.

NOTE—Endplay can be checked at flywheel (with clutch pan off) without further disassembly.

Endplay Adjustment: *CAUTION*—Two thrust washers (1 at each side of front bearing) must be in place when checking endplay. With front end of crankshaft disassembled as described above, re-install thrust plate **(do not install shims at this time)**, install checking sleeve No. KF-28 on end of shaft, secure sleeve on shaft with vibration dampener bolt and lockwasher. Mount dial indicator at front of engine with button against front end of shaft. Pry shaft to rear, set indicator at zero and then pry shaft forward, reading will be endplay. Select shim pack (shims furnished .002" and .008" thick) so that when installed, endplay will be .004-.006".

►***CAUTION—Make certain that clearance exists between slinger on rear end of crankshaft and upper and lower filler blocks in rear end of crankcase.***

1949 MODELS

FRONT & REAR FILLER BLOCKS: Lower filler blocks (front and rear) are bolted on lower face of crankcase to close oil pan opening (filler blocks must be removed to replace pan gasket). Rear filler blocks (additional **upper filler block guard** in crankcase) are grooved for cork oil seals which bear on polished surface of crankshaft directly behind oil slinger. Filler blocks can be removed and replaced without disturbing crankshaft as follows:

Front Filler Block (Lower) Servicing: Remove by taking out mounting capscrews and timing gear cover capscrews which enter the filler block. When installing filler block, first install oil pan side gaskets (No. 200266), install filler block (use Perma-tex), install new end gasket (No. 200267) on block.

Rear Filler Block (Lower) Servicing: Same as for the lower front block (above) except for crankshaft oil seal (square cork gasket or graphite impregnated seal). Remove and discard old gasket or seal. Install new seal (no. 204654) in same manner as described below for Rear Filler Block (Upper) Guard. Install lower filler block **after** upper filler block guard has been installed.

Rear Filler Block (Upper) Guard Servicing: Guard is seated in groove in crankcase and can be "rotated" out without disturbing crankshaft after lower filler block removed. Remove and discard old gasket or seal, clean out seal groove. Install new graphite impregnated seal (no. 204654), flatten seal slightly and use mandrel or rod to seat seal in groove by rolling from ends toward the center (ends must extend slightly above flat surface of guard). **Do not use shellac or sealing compound in groove.**

►*CAUTION*—Oil seal in both Upper Filler Block Guard and Rear Filler Block must be centered with crankshaft. If necessary, seal can be built up using 1/32" thick gasket material, 3/16" wide, as shims shellacked to groove in block or guard behind seal.

CAMSHAFT & BEARINGS

1949 MODELS

CAMSHAFT REMOVAL: Camshaft can be removed with radiator off and engine in car as follows:

1. Remove timing gears (remove both gears and chain as an assembly). This requires removal of vibration dampener and pulley, timing gear cover.
2. Remove cylinder head. 3. Remove fuel pump.
4. Remove oil pan, oil pan return tube & oil pump.
5. Lift valves, using valve spring lifter tool C-482 (see Note below), block valves up by inserting a clothespin or block of wood under each valve head. NOTE—Remove right front tire and wheel and take off splash shield under fender for access to valves.
6. Block up Valve Lifters (lift each lifter up by hand and fasten in upper position with a wire).
7. Remove Camshaft Thrustplate by taking out two screws retaining thrustplate on crankcase.
8. Pull camshaft out through front of engine.

Camshaft Bearing Replacement Note—Requires removal of engine from car for access to plug at rear of block which must be removed.

TAPPET CLEARANCE ADJUSTMENT

1949 MODELS

TAPPET CLEARANCE ADJUSTMENT PROCEDURE: Car manufacturer recommends valves be adjusted in order listed (see table below). Remove right front wheel and access cover in fender splash shield for access to valve compartment. Remove spark plugs so that engine can be turned over by moving fan or fan belt. By setting valves in fully raised position (left hand column), **valves in right hand column** will be on "low" side of cam **in position for tappet adjustment.**

Valve Tappet Adjustment Order
(numbered from FRONT of engine)

Fully Raise Valve	Then ADJUST Valve:
Nos. 1 and 3	Nos. 10 and 12
Nos. 8 and 9	Nos. 4 and 5
Nos. 2 and 6	Nos. 7 and 11
Nos. 10 and 12	Nos. 1 and 3
Nos. 4 and 5	Nos. 8 and 9
Nos. 7 and 11	Nos. 2 and 6

Tappet Clearance—.014" COLD, All Valves.

OIL PAN REMOVAL

1949 MODELS

OIL PAN REMOVAL: Raise front end of car and support it securely on stands. Disconnect steering drag link at idler arm on frame, turn wheels to right and work drag link clear of oil pan. Drain oil, remove oil pan capscrews and lockwashers, slide pan to rear.

►INSTALLATION NOTE—Lower Filler Blocks (front and rear) must be removed to install new oil pan side gaskets. See "Front & Rear Filler Blocks" under Crankshaft & Main Bearings (above) for data.

OIL PUMP

1949 MODELS

OIL PUMP SERVICING: Pump can be removed from engine (with oil pan off) by taking off retaining nut on stud on #3 main bearing cap and pulling pump straight down to disengage drive gear and distributor drive coupling. Service pump as follows:

Disassembly—Take out cotter pin and remove screen float assembly. Remove cover and gasket. Drive out pin holding upper drive gear on shaft (pin peened in place), drive out shaft from gear. Remove idler gear (remove idler shaft if required). Take off lower drive gear (press fit and keyed to shaft).

Oil Pump Clearances—Check as follows:

1)—Pump Body Bushing: if over .005" clearance between pump body and ends of lower drive gear teeth, replace bushing and ream to .500-.501".

2)—Pump Shaft: shaft diameter .4990-.4985".

3)—Lower Drive Gear: end of gear should be .001-.006" beyond gasket seat on pump body.

4)—Upper Drive Gear: .002-.004" clearance between underside of gear and upper end of pump body. Controlled by pressing lower drive gear on shaft until this clearance obtained.

NOTE—Cover plate should be replaced if worn from contact with gears, or if cracked.

Oil Pump Bushing (in Cylinder Block)—Replace if worn or loose (can restrict oil gallery if loose). Replace by using drift inserted in distributor drive shaft bore from top of block. Install new bushing from below (must be flush with bottom of block).

Reassembly—Press upper drive gear on shaft with pin hole at right angles to tongue on shaft. Insert new pin and peen ends flush with gear. Install shaft and gear in pump body. Press lower drive gear on shaft (with key in place) until .002-.004" clearance obtained between upper drive gear and upper end of pump body. Press idler gear shaft in body, install idler gear. Install cover using new gasket and pin oil screen float assembly on cover. Check shaft and gears—must rotate freely when turned by hand.

Oil Pump Installation—Set #1 piston at top dead center. Insert distributor main drive shaft from top of block. Install pump with pump drive shaft tongue engaging slot in lower end of distributor main drive shaft and in such a position that when installed, slot in upper end of distributor main drive shaft will be approx. parallel to side of block (slot pointing fore-and-aft), install lock washer, tighten mounting nut. Remove distributor shaft for cyl. head installation.

►*CAUTION—Check Ign. Timing after pump installed.*

RADIATOR

1949 MODELS

RADIATOR REMOVAL: Drain water, disconnect hose connections. Take out radiator-to-shroud screws, 6 total (3 each side). Lift core out, tilting upper end to rear as core being raised.

PROPELLER SHAFT

1949 MODELS

CENTER SUPPORT BEARING: Consists of a ball bearing on rear end of front propeller shaft mounted in rubber in steel plate mounted on frame.

Removal & Disassembly—Disconnect front and intermediate universal joints, take off nuts on center support frame mounting bolts, remove front shaft and support bearing assembly. Clamp front shaft in a vise, remove bolt, lockwasher, and plain washer on rear end of shaft (in universal joint companion flange), pull companion flange using Puller C-452. Remove rear dust shield. Pull support plate off bearing insulator, remove bearing insulator. Use jaw type puller (KF-56) and pull bearing off shaft, remove front dust shield.

►*CAUTION—Do not wash bearing in gasoline or solvent.*

Reassembly—Install front dust shield and bearing (use driver KF-11) on splined end of front propeller shaft (bearing must support shield firmly). Place rubber insulator over bearing (small diameter to rear). Coat outer surface of insulator with liquid soap and slip support plate in place over insulator (flanged end of sleeve to front, insulator bottomed against bead on inside of sleeve). Install rear dust shield, companion flange, flat washer, lock washer, and bolt. Tighten bolt until flange and dust shield bottom against shaft shoulder (25-30 ft.lbs. torque).

Bearing Support Installation: When installing front propeller shaft and support bearing assembly in car, install washers and insulators on each support stud on frame cross-member in the following order: Spacer, Bushing, Front Support Insulator (fluted end to rear), Front Support Washer (has large hole), Support Bearing Plate, Rear Support Insulator (fluted end forward), Rear Support Washer (has small hole), and nut (tighten to 15-20 ft. lbs.).

►*CAUTION—Install center bearing support on frame studs so that sleeve in which bearing seated slopes downward toward the rear to provide correct propeller shaft angularity.*

MODEL IDENTIFICATION

SERIAL NUMBER: On left front door hinge post.
1949 Numbers—Frazer F-495—F-495-001000 and up, Frazer Manhattan F-496—F-496-001000 and up.
Body Number Note—Stamped on plate on right front face of dash in engine compartment.

ENGINE NUMBER: Stamped on pad on left front upper corner of engine block and on Engine Name Plate on left side of crankcase.
NOTE—Numeral following Engine Model Designation (first part of Engine Number on Engine Name Plate) indicates Engine Plant: 4—Detroit, 8—Muskegon.

►**Engine Number Symbol (Special Bore & Bearing Sizes)** *See "Original Bore & Pistons" & "Original Bearing Sizes" in Frazer Special Data.* NOTE—Symbol consists of 1 or 2 letters following engine number.

TUNE-UP

COMPRESSION PRESSURE: 120-130 lbs. (7.3-1 Heads) at cranking speed of 70 RPM. (engine hot, all plugs out, throttle wide open). All cylinders must be equal within 10 lbs.
NOTE—7.3-1 Heads marked by "73" stamped on head directly above engine number pad on block.

VACUUM READING: 17½" steady idling at 550 RPM.

FIRING ORDER: 1-5-3-6-2-4. See diagram.

SPARK PLUG GAPS: .032".
Plug Type—Auto-Lite A-5.

DISTRIBUTOR: Breaker Gap—.022" (.018-.022").
Cam Angle—38° closed, 22° open.
Breaker Arm Spring Tension—17-20 ozs.
Automatic & Vacuum Advance—*See Ignition.*
Condenser Capacity—.20-.25 microfarad.

IGNITION TIMING: 4° BTDC.
Timing Procedure—*See Ignition Timing.*
Timing Mark—4th. graduation before top dead center "0" mark on vibration dampener.

►***CAUTION—Engine must be idling below 450 RPM when setting timing.***

Octane Selector Setting—Set for slight ping when accelerating with wide open throttle.

CARBURETION:
Idle Setting—1-1½ turns open—2 screws. Turn screws out for richer mixture.
Idle Speed—550 RPM.
Float Level—Flush to 1/32" from top of each float to gasket seat on cover with valve closed (bowl cover assembly inverted).
Accelerating Pump—Lower Hole (min.) Normal.

Choke Setting: Centered (coil housing at index mark).

Fuel Pump Pressure: 3-4¼ lbs.

►***CAUTION—Pump pressure must not exceed 4½ lbs.***

MANIFOLD HEAT CONTROL: Automatic thermostatic type. See that valve operates freely.

VALVE TAPPET CLEARANCE: .014" All Valves, Cold.

►**Adjustment Procedure**—*See Frazer Special Data.*
NOTE—Remove splash shield under right front fender for convenience in adjusting valves.
Valve Timing Check—*See Valve Timing.*

STARTING: *See Battery, Starter, Generator, Regulator.*

IGNITION

IGNITION SWITCH: Kaiser&Frazer No. 204485.
Lock Cylinder—Kaiser-Frazer No. 203885 (with key).

COIL: Auto-Lite IG-6001 or 9A. On left side of engine opposite distributor.
Ignition Current—4.8 amperes at 6.3 volts (stopped).

CONDENSER: Auto-Lite Part No. IG-2671K.
Capacity—.20-.25 microfarad.

DISTRIBUTOR: Auto-Lite Model IGS-4214. Full automatic advance type with auxiliary vacuum spark control and octane selector adjustment.
Breaker Plate Identification—Maximum vacuum advance limited by slot in plate. Plate marked #5.
Breaker Gap—.022" (.018-.022").
Cam Angle—38° closed, 22° open.
Breaker Arm Spring Tension—17-20 ozs.
Rotation—Counter-clockwise viewed from above.

Distr. Degrees	Automatic Advance R.P.M.	Eng. Degrees	R.P.M.
Start.	325	0	650
1	450	2	900
6.5	1200	13	2400
8	1475	16	2950
9	1675	18	3350

Octane Selector—Manual adjustment at distributor providing advance and retard. See Ignition Timing.

Vacuum Spark Control: Auto-Lite (integral type). Linked directly to breaker plate. Provides additional advance at speeds above idling except when engine accelerated or operated with wide open throttle when spark retarded by return spring in unit.

Vacuum Advance

Distr. Degrees	Eng. Degrees	Vacuum (" of HG)
Start	0°	10"
3	6°	13"
5	10°	15"

Distributor Removal: On cylinder head between #4 and #5 cylinders. To remove, disconnect vacuum line, take out hold-down screw in advance arm.

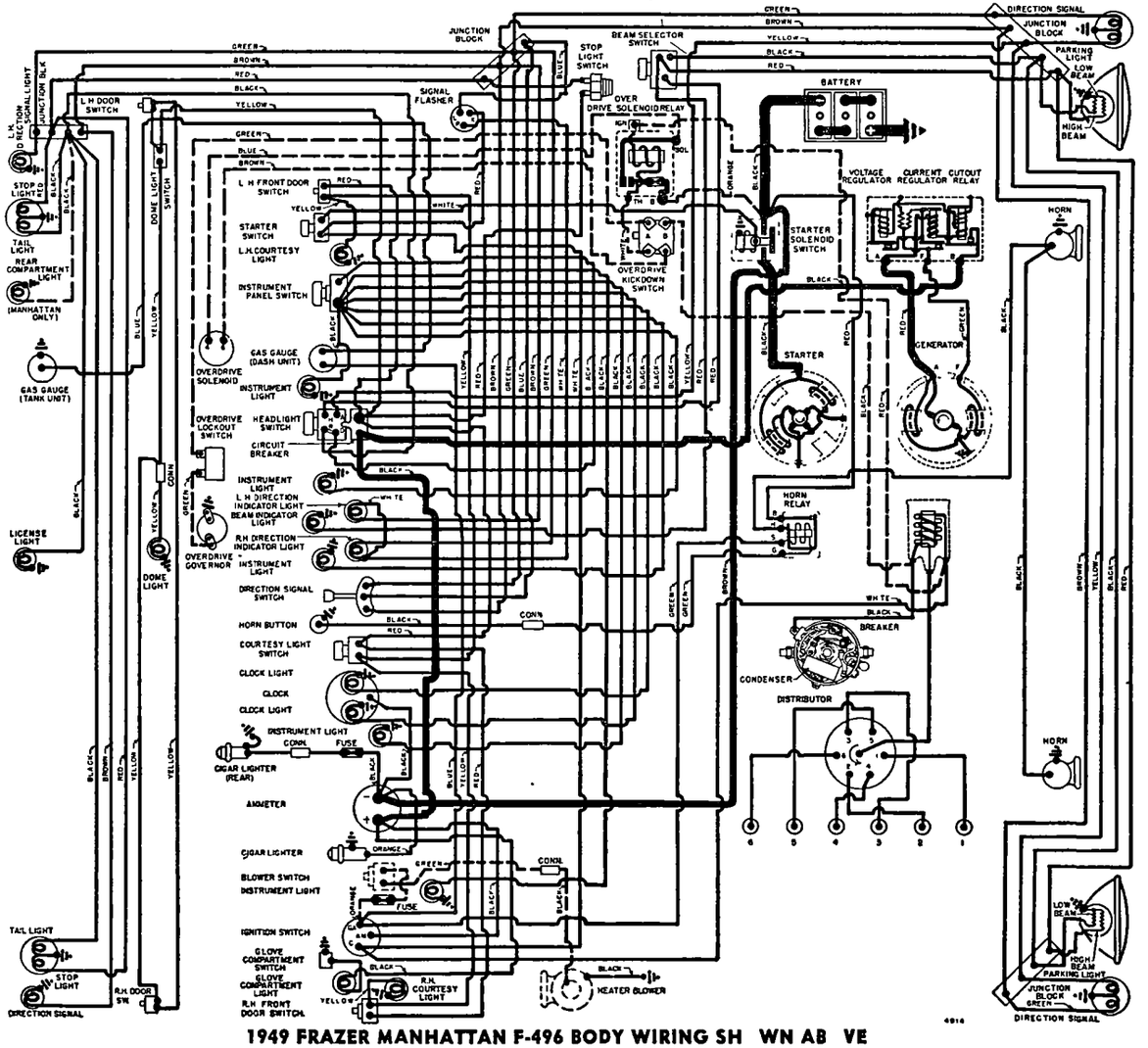

1949 FRAZER MANHATTAN F-496 BODY WIRING SH WN AB VE

IGNITION TIMING

Std .Setting .....4° BTDC.

Timing Mark—Timing mark located on vibration dampener. Consists of "0" mark at top dead center with 1° graduations before and after this point.

Timing (with Timing Light C-693)—Mark fourth degree mark before "0" top dead center mark on vibration dampener with chalk or white paint. Connect timing light to #1 spark plug terminal and direct light at timing mark. Idle engine **below 450 RPM.** (back off throttle stopscrew to decrease normal idle speed of 550 RPM). Loosen hold-down screw in advance arm, center screw in slot, tighten hold-down screw. Loosen cap screw in end of arm under distributor, rotate distributor until timing mark appears in line with pointer, tighten cap screw. Check octane selector setting.

►*CAUTION—Reset engine idling speed at 550 RPM.*

Octane Selector Setting—Set for slight ping when accelerating with wide-open throttle. To adjust, loosen hold-down screw in advance arm, rotate distributor clockwise (if no ping noted), counter-clockwise (if ping too severe).

CARBURETOR

Carter WCD Type 723S. 1¼" Dual (double barrel), Downdraft type with Fast Idle and Climatic Control.
Casting No. on Flange—550.
See Carburetor Section for complete data.

Settings (Idle Setting, Float Level, and Accelerating Pump): *See Tune-Up data.*

Metering Rods & Jets—*See Carter Jet Table in Carburetor Section.*

Fast Idle: Carter Dual (WCD) type.
See Carburetion Equipment Section for complete data.
Setting—.018" throttle opening with choke valve held closed and throttle lever stopscrew backed off.

Automatic Choke: Carter Climatic Control (Dual Carburetor Type).
See Carburetion Equipment Section for data.
Setting—Centered (coil housing at index mark).

CARB. EQUIPMENT

Air Cleaner: AC No. 1544539 Oil-bath type.
Element—AC No. 22.
Servicing—Empty and clean reservoir, wash cleaner in kerosene, refill to indicator line with SAE No. 50 engine oil (No. 20 for below freezing temp.) at 2000 mile intervals or when engine tuned.

Fuel Pump: AC No. 1539074 combination Fuel-and-Vacuum Pump.
Replacement Pump—AC No. 582.

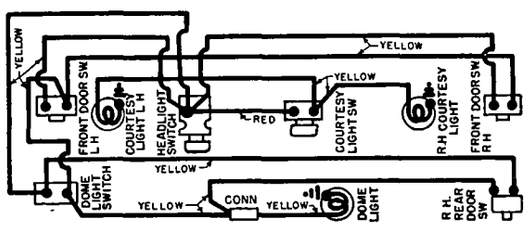

1949 FRAZER F-495 BODY WIRING

►*CAUTION—Install pump with rocker arms UNDER camshaft eccentric.*
See Carburetion Equipment Section for data.
Pressure—3-4¼ lbs.

Gasoline Gauge: Auto-Lite electric type.
Dash Unit—A-L No. 11586A.
Tank Unit—A-L No. 11571A.
See Carburetion Equipment Section for data.

BATTERY

Auto-Lite Type 1M-100D. 6 Volt, 15 Plate, 105 Ampere Hour capacity (20 hour rate).
Grounded Terminal—Positive (+) terminal grounded at left front engine support. Engine ground cable connected at same point.
Location—In engine compt. on left side.

STARTER

Auto-Lite Model MAW-4054. Armature MAW-2128.
Drive—Barrel type Bendix Drive No. A1792.
Rotation—Counter-clockwise at commutator end.
Brush Spring Tension—42-53 ozs. (new brushes).

Performance Data

Torque	R.P.M.	Volts	Amperes
0 ft. lbs.	4900	5.5	65
2.75 "	1480	5.0	200
8.50 "	400	4.0	400
6.0 "	Lock	2.0	335

Starting Switch: Magnetic switch K-F Part No. 204752 on splash shield near starter and controlled by push-button on instrument panel.
See Electrical Equipment Section for complete data.

Removal: Flange mounted on left front face of flywheel housing. To remove, disconnect cable, take out flange mounting screws.

GENERATOR

35 Amp.....Auto-Lite GDZ-4818A. Arm. GDZ-2006F.
45 Amp.....Auto-Lite GGU-6001B. Arm. GGU-2006F.
Two brush type with voltage and current regulation.
Charging Rate Adjustment—None (see Regulator).
Maximum Charging Rate—As given below.

Performance Data (GDZ-4818A)

Amperes	Volts	Cold—R.P.M.—Hot	
0	6.4	870-970	950-1050
35	8.0	1800-2000	2150-2350

Performance Data (GGU-6001B)

45	8.0	1550 Max.	———

Rotation—Counter-clockwise at commutator end.
Brush Spring Tension—35-53 ozs. (new brushes).
Field Current—(GDZ) 1.60-1.78 amperes at 6.0 volts, (GGU) 1.6-1.8 —amperes at 6.0 volts.
Motoring Current—(GDZ) 4.16-4.60 amps. at 6.0 volts, (GGU) 5.5-6.5 amperes at 6.0 volts.

Removal: Pivot mounting at left front of engine. To remove, disconnect leads, take out clamp bolt and pivot bolts. NOTE—Remove battery for access.

Belt Adjustment: Adjust by pulling generator out with 15 lb. force in line with adjuster link with all mounting bolts loose. A 6 lb. adjustment for new belt is recommended.

REGULATOR

35 Amp.—Auto-Lite VRP-4004F-2.....for GDZ Gen.
45 Amp.—Auto-Lite VAV-4002C.....for GGU Gen.
Vibrating type voltage and current regulators.
See Electrical Equipment Section for complete data.
NOTE—Regulator cover sealed. Warranty void if seals broken.

Cutout Relay
Cuts In—6.4-7.0 volts (set to 6.4-6.6 volts).
Cuts Out—4.1-4.8 volts (approx. 4-6 amps. disch.).
Contact Gap—.015" minimum.
Air Gap—.031-.034" with contacts open (check at hinge end of core).

Voltage Regulator
Setting—7.2-7.5 volts at 70°F. See Electrical Equipment Section for settings at other temperatures.
Checking (without breaking seal) & Adjustment—*See Electrical Equipment Section.*
Contact Gap—.012" min. (armature against stop pin).
Air Gap—.048-.052" with contacts just opening.

Current Regulator
Setting—As follows:
VAV-4002C 44-46 amperes (marked '45' on cover).
VRP-4004F-2 34-36 amperes (marked '35' on cover).
Checking (without breaking seal) & Adjustment—*See Electrical Equipment Section.*
Contact Gap & Air Gap—Same as Voltage Regulator.

LIGHTING

Headlamps: Hall "Sealed Beam" type. Upper and lower beams controlled by beam selector switch.
See Electrical Equipment Section for complete data.
Adjustment—Aim upper beam straight ahead (hot spot center 3" below lamp center height at 25 ft.).
Beam Indicator—Red jewel at bottom of speedometer dial. Lighted when upper (country beams) in use.

Direction Signal: Mitchell (United Specialties) type.
See Electrical Equipment Section for complete data.
Direction Indicators—Right and Left indicator lights on face of speedometer. Lighted when direction signal on same side of car in operation.

Switches
Lighting—Kaiser-Frazer No. 203830.
Beam Selector—Kaiser-Frazer No. 204545.
Instrument Panel—Kaiser-Frazer No. 203833.
Courtesy (on Instrument Panel)—K-F No. 200821.
Door—Kaiser-Frazer No. 204229.
Dome Lamp—Kaiser-Frazer No. 204779.
Stop Lamp—Kaiser-Frazer No. 201466.
Direction Signal—Kaiser-Frazer No. 204552.

MISC. ELECTRICAL

LIGHTING CIRCUIT BREAKER: Thermostatic type, 30 amperes. On back of lighting switch.

FUSES: Clock—2 ampere. In clock lead.
Overdrive—20 amperes. On control relay.
Cigar Lighter—30 amperes. In lead back of instrument panel.

HORNS: Auto-Lite or Sparton. A-L HW-4017 (Low Note), HW-4018 (High Note). Twin horns.
Horn Current—Approximately 15 amperes each at 6.2 volts.

Horn Relay: Auto-Lite Model HRL-4101. Relay connected through ignition switch (horns operative only with ignition switch "on").
Contacts Close—1.5-3.0 volts (seal to core with 4.0 volts maximum).
Contacts Open—.5 volt min. (open from seal).
Contact Gap—.026". **Air Gap**—.016-.020" (armature air gap with contacts closed but not sealed), .015-.018" (between armature leg and yoke with armature sealed to core.

CONTINUED N NEXT PAGE

CONTINUED FR M PRECEDIN PA E

ENGINE

ENGINE SPECIFICATIONS: Own (Continental). Six Cylinder, "L" head type.
Bore—3 5/16" (3.3125-3.3145"). *See "Original Bore & Pistons" in Frazer Special Data.*
Stroke—4⅜".
Displacement—226.2 cu. ins. **Rated HP.**—26.3.
Developed Horsepower—112 at 3600 RPM.
Compression Ratio—7.3-1.
NOTE—7.3-1 Heads marked by "73" stamped on left front directly above engine number on block.
Compression & Vacuum Reading—*See Tune-Up data.*

ORIGINAL BORE & BEARING SIZES: *See Frazer Special Data.*

TIGHTENING TORQUES: *See Frazer Special Data.*

CYLINDER HEAD INSTALLATION: *See Frazer Special Data.*

ENGINE REMOVAL: *See Frazer Special Data.*

PISTONS: Aluminum alloy, Cam-ground. Tin-plated, T-slot type. Length 3 9/16".
Clearance—See Fitting new pistons.
Removal—Pistons and rods removed from above.

►*CAUTION—Mark piston and rod assemblies before removal to insure re-installation in same cylinder.*

Fitting New Pistons: Use .0015" feeler stock ½" wide inserted on side opposite slot. Pull to withdraw feeler must be 5-10 lbs.

Replacement Pistons: *See Frazer Special Data.*

Installing Pistons: Slot in skirt toward left or away from camshaft.

PISTON RINGS: Two compression, two slotted oil rings, all above pin. Third ring groove drilled, fourth groove slotted for oil drainage.

Ring	Width	End Gap	Side Clearance
Comp. (#1)	.0925-.0935"	.008-.016"	.0025-.004"
Comp. (#2)	.0925-.0935"	.008-.016"	.0015-.0035"
Oil (#3,4)	.1550-.1545"	.008-.016"	.001-.0025"

Installing Rings: Side marked "TOP" (compression rings) upward.

Replacement Rings: *See Frazer Special Data.*

PISTON PIN: Diameter—.8591-.8593". **Lgth.**—2 13/16". Floating type with lock ring at each end.
Pin Fit in Piston—Push fit with piston heated to 212°F. (heat piston in water at 212°F. to install new pins).
Pin Fit in Rod Bushing—Light press fit. When installing new bushings, ream bushings with DD-82-2 Reamer to inside diameter of .8593-.8595" for new std. pins.

►**CAUTION**—Pin bushing must protrude 1/64" on each side of rod.

Replacement Pins: Std. size and .003", .005" Oversize.

CONNECTING ROD: Length—7". **Weight**—29.6 ozs.
Crankpin Journal Diameter—2.0619-2.0627".

►*CAUTION—Special bearing size used in some engines. See "Original Bearing Sizes" in Frazer Special Data.*
Lower Bearing—Removable steel-backed, babbitt-lined type. No shims.
Clearance—.0005-.0015". **Sideplay**—.006-.010".
Plastigage Note—*Can be used to check bearing clearance. See Plastigage data under "Crankshaft & Main Bearings" in Frazer Special Data.*

Bearing Adjustment: None. Replace bearings. Do not file rods or bearing caps.

Replacement Bearings: Furnished Std. Size and .001", .002", .010", .012" Undersize.
CAUTION—Install bearings with tang engaging notch in rod and cap and oil hole aligned with oil spurt hole in rod.

Installing Rods: Mark rods and bearing caps. Install with marks together and toward camshaft in same order as when removed. Oil spray hole in lower end of rod toward camshaft. NOTE—Lower bearings offset with narrow side of rod toward nearest main bearing (#1, 3, 5 toward front; #2, 4, 6 toward rear of engine).

CRANKSHAFT: Four bearing, counterweighted type with vibration dampener on forward end.
Journal Diameters—2.3744-2.3752". NOTE—Allowable taper or out-of-round .001".

►*CAUTION—Special bearing size used in some engines. See "Original Bearing Sizes" in Frazer Special Data.*
Bearings—Removable, steel-backed babbitt-lined.
Clearance—.0005-.0015".
Plastigage Note—*Can be used to check bearing clearance. See Plastigage data under "Crankshaft & Main Bearings" in Frazer Special Data.*

Bearing Adjustment: None (no shims). Replace bearings. Do not file bearing caps. Upper main bearing shells can be "rotated" out by installing tool KF-8 in crankshaft journal hole (lug on tool engages edge of bearing when crankshaft rotated).
Filler Block (Front & Rear) Removal & Installation—*See "Crankshaft & Main Bearings" in Frazer Special Data.*

Replacement Bearings: Furnished Std. size and .001", .002", .010", .012" Undersize.

End Thrust: Taken by front (#1) bearing (special thrustwasher used with unflanged bearings). Controlled by shims installed between front crankshaft thrust washer (ahead of #1 bearing) and crankshaft thrust plate (behind crankshaft sprocket).
Endplay—.004-.006".
Endplay Adjustment—*See "Crankshaft & Main Bearings" in Frazer Special Data.*

CAMSHAFT: Four bearing. Two-sprocket chain drive.
Journal Diameters—#1, 1.8725-1.8735"; #2, 1.8095-1.8105"; #3, 1.7472-1.7485"; #4, 1.2475-1.2485".
Bearing Diameters (I. D.)—#1, 1.8745-1.8755"; #2, 1.8115-1.8125"; #3, 1.7495-1.7502"; #4, 1.2495-1.2505".
Bearings—Steel-backed, babbitted bushings.
Clearance—.002-.004".

Bearing Adjustment: None. Replace bushings with camshaft removed.

Replacement Bushings: Replace as set (furnished finished line-bored and do not require reaming after installation). Use KF-4 Camshaft Bearing Remover & Replacer.

►*CAUTION—Align oil hole in bushings and block.*

End Thrust: Taken by thrust plate on front of engine (between front bearing journal and camshaft sprocket **Endplay**—.003-.007".

Camshaft Removal: *See "Camshaft & Bearings" in Frazer Special Data.*

Timing Chain: Non-adjustable type. Width 1". Pitch .500", Length 23" or 46 links.

►*Timing Chain Caution—Morse and Link Belt chains used. Interchangeable only as complete sets with both sprockets.*

Camshaft Setting: Mesh chain with 9 links (or 10 link pins inclusive of pins opposite marks) between marks on sprockets with #6 piston at top dead center on compression stroke.

VALVES:	Head Diameter	Stem Diameter	Length
Intake	1 33/64"	.3414-.3406"	5 3/16"
Exhaust	1 21/64"	.3382-.3390"	5 3/16"

	Seat Angle	Lift	Stem Clearance
Intake	30°	.3481"	.0008-.0026"
Exhaust	45°	.3315"	.0032-.0050"

Valve Guides: Pressed in block. Replace when stem clearance exceeds maximum (above). Ream new guides for correct clearance using Reamer C-249.
Valve Guide Installation—Place guide (tapered end of guide toward top) in position in bore. Use Tool KF-27 when installing guides to correct position of 1 7/32" below top face of cylinder block.

Valve Springs: Check spring with tester C-647. Pressure should be 45 ± 2½ lbs. at 1 21/32".

	Spring Pressure	Length
Valve Closed	51 lbs	1 43/64"
Valve Open	113 lbs	1 5/16"

Valve Lifters: Barrel type. Two types used and are interchangeable. One type using tappet adjusting screw with locknut, other type is self-locking.
Clearance—Selective fit. Lifter should rotate in bore with slight drag. Service by installing oversize lifter.
Replacement Lifters—Furnished Std. size and oversize. Oversize identified as follows: "A", .0005", "B", .001", "C", .0015", "D", .002", "K", .005", "S", .008".

VALVE TIMING

Tappet Clearance: .014" All Valves, Cold.

►**Adjustment Procedure**—*See Frazer Special Data.*

Valve Timing: See Camshaft Setting above.
Intake Valves—Open 10° BTDC. Close 60° ALDC.
Exhaust Valves—Open 55° BLDC. Close 10° ATDC.
Valve Timing Check—With .014" tappet clearance (running clearance), #1 exhaust valve should close with piston 10° or .045" after top dead center with ten-degree mark after dead center "0" mark on dampener aligned with pointer at front of engine.

LUBRICATION

Lubrication System: Pressure to crankshaft, connecting rod, camshaft bearings, exhaust valve lifters, timing chain. Oil pump located in oil pan.
Crankcase Capacity—5 qts. (refill), 5½ (dry).
Normal Oil Pressure—35-40 lbs., 2000 RPM., 30 MPH.
Oil Pressure Regulator—Located in right side of cylinder block below the valve chamber and toward the rear of engine. Adjustable by replacing spring or install washers No. 200272 between end of spring and plug.

Oil Pan Removal: *See Frazer Special Data.*

Crankcase Ventilation: Filter element in oil filler cap (air intake). Outlet pipe located on front valve cover plate on right side of engine. NOTE—Two types of valve cover and outlet pipe assemblies used—can be identified by angle of cut-off at lower end of tube: (Early 1949 Cars) angular cut-off faces **forward**, (Later 1949 Cars) angular cut-off faces **toward rear.**

►*CAUTION—Do not install later valve cover & outlet pipe assembly on early cars (may cause loss of oil through tube).*

Oil Pump: Gear Type. In crankcase.
Oil Pump Servicing—*See Frazer Special Data.*

Oil Filter: Replace cartridge at 10,000 mile intervals or more often if required by operating conditions.

COOLING

Cooling System: Sealed system (relief valve in filler cap) with positive circulation and thermostatic control.

Capacity—13½ qts. (13 qts. at driving level).

Pressure Valve—AC No. 850501 (Radiator Filler Cap). 3¼-4¼ lbs.

Radiator: No. 202906 (17" wide). Side mounted to shroud with six bolts.

Radiator Removal—*See Frazer Special Data.*

Water Pump: Centrifugal type with ball bearing shaft. *See Water Pump Section for complete data.*

Belt Adjustment—*See Generator Belt Adjustment.*

Thermostat: Kaiser-Frazer No. 200160 (Std.), No. 202349 (for Permanent Anti-freeze only). In water outlet elbow on cylinder head.

Setting (Std. type)—Begins to open at 149-156°F. Fully open at 176°F.

Temperature Gauge: Auto-Lite No. H-11103, Frazer No. 200453. Not electric.

CLUTCH

Auburn Model 9251-15 or Borg & Beck Model 9A7.

►**Clutch Identification**—Types can be identified by number of pressure plate springs—3 (for Auburn), 9 (for Borg & Beck—cover marked "951").

See Clutch Section for complete data.

Facings (Borg & Beck)—Woven asbestos, 2 required. Inside Diam. 6". Outside Diam. 9¼". Thickness ⅛".

Facings (Auburn)—Moulded metallic or Raybestos. 2 required. I. D. 6". O. D. 9¼". Thickness .135".

Pedal Adjustment: Pedal free travel ⅝-¾". To adjust remove return spring, clevis pin and release clevis end of adjusting link from clutch pedal shaft bellcrank. Turn clevis end in or out to obtain correct pedal free movement. Install adjusting link clevis on bellcrank, insert clevis pin, cotter pin, and return spring.

Removal: Remove transmission (see Transmission Removal below), remove housing pan. Position of clutch on the flywheel must be marked before removal. Rotate flywheel, using Flywheel Turning Tool C-771 and loosen six bolts equally before removing. Remove clutch pressure plate and cover assembly and clutch disc.

TRANSMISSION

Warner Model AS23-T86E (Std.), Model AS24-T86E with new Type R10B Overdrive (Optl.)—Constant-mesh, synchro-mesh (Second & High), sliding gear (Low and Reverse).

See Transmission Section for complete data.

Transmission Control: Remote control type with gear-shift lever mounted on steering column.

See Transmission Section for complete data.

Removal: Remove clutch pedal return spring, clevis pins at cross shaft coupling and slide coupling onto cross shaft. Disconnect gear shift rods at transmission levers. (If overdrive is installed disconnect overdrive shift rod at overdrive unit). Disconnect speedometer cable at transmission (plug hole in transmission to prevent loss of lubricant). Disconnect wiring to overdrive. Support rear of engine using Tool KF-47 or suitable jack under clutch housing, disconnect propeller shaft at front companion flange. Free engine rear support from cross-member by taking out two insulator bolts at transmission. Disconnect and remove master cylinder operating rod. Disconnect hand brake cable at equalizer and engine rear crossmember. Remove eight bolts at frame side rails and remove crossmember. Remove four bolts holding transmission to clutch housing and pull out the transmission. (If overdrive is installed it will be removed with transmission).

OVERDRIVE

Warner Type R10B (with special AS24-T86E Transmission). Optl. Equipment. New Governor controlled type (no centrifugal pawls) with electrical solenoid operation and throttle controlled "kick-down."

See Transmission Section for complete data.

Overdrive Solenoid—D-R 1118132, K-F No. 200911.

Governor—Kaiser-Frazer No. 200908.

Control Relay—Auto-Lite HRT-4001A, K-F Part No. 201636. Has 20-ampere fuse on BAT terminal.

Kick-down Switch—Kaiser-Frazer No. 203451.

Lock-out Switch—Kaiser-Frazer No. 200915.

Removal: Remove drain plug in overdrive housing and drain lubricant. Disconnect wiring at shift fork rail switch terminals. Disconnect speedometer cable at overdrive housing, control wire at control shaft lever on overdrive housing and the tie-down clips. Disconnect front propeller shaft at front companion flange and move shaft away from housing. Remove Overdrive and Transmission as a unit (see Transmission Removal above).

UNIVERSALS

Detroit Series 4200. Ball-and-Trunnion. 3 used with intermediate universal at propeller shaft support.

See Universals Section for complete data.

Propeller Shaft & Support Bearing: Two shafts used with support bearing on frame crossmember at intermediate universal.

Propeller Shaft & Support Bearing Servicing—*See "Propeller Shaft" in Frazer Special Data.*

REAR AXLE

Spicer (Salisbury) Model 41-2. Semi-floating, Hypoid Gear type with Hotchkiss Drive.

See Rear Axle Section for complete data.

Ratio (Without Overdrive)—3.91-1 Std., 3.73-1 or 4.09-1 Optl.

Ratio (With Overdrive)—4.27-1 or 4.55-1.

Backlash—.003-.006". Shim adjustment.

Removal: Hoist rear end of car and place supports under frame. Remove rear wheels and drums (use Puller C-319). Disconnect propeller shaft at rear universal flange, disconnect hydraulic brake line at connector on axle housing, disconnect rear shock absorbers and sway eliminator links (when used) at spring seat, disconnect parking brake cables. Disconnect both springs at front hanger and rear shackle, remove axle and spring assembly from beneath car. NOTE—Axle can be removed without disturbing springs by taking out spring "U" bolts. **Axle Shaft Removal**—Remove rear wheel and drum using puller C-319. Disconnect hydraulic brake line at backing plate and brake cable. Remove outer oil seal and backing plate (CAUTION—do not lose adjusting shims between backing plate and housing flange). Pull axle shaft and bearing assembly out.

Wheel Bearing Adjustment: Adjust endplay by adding or removing shims located between backing plate and axle housing flange (shims .003", .005", .010", .030" thick). Make certain that shim thickness at right wheel is .060" (to center thrust block on differential shaft), adjust endplay at left wheel.

Endplay—.001-.006".

SHOCK ABSORBERS

Monroe—Direct acting, hydraulic type. Serviced by replacement (mountings serviced separately).

See Shock Absorber Section for complete data.

FRONT SUSPENSION

Front Suspension: Independent, linked parallelogram type with coil springs.

See Front Suspension Section for complete data.

Kingpin Inclination—5½° preferred (4¾-5¾° crosswise).

Caster—0° preferred (—1° to +1°).

Camber—¼° preferred (0° to ¾°).

Toe In—1/16". Adjust by turning both tie rods.

Steering Geometry (Toe-out)—Inner wheel 23°. Outer wheel 20°. No adjustment.

STEERING GEAR

Gemmer Model 305—Worm-and-Roller type with "push-pull" adjustments.

See Steering Gear Section for complete data.

BRAKES

Service Brakes: Bendix (Lockheed) Hydraulic type with floating self-centering shoes (no anchor pin adjustment). Hand lever applies rear service brakes.

See Brake Section for complete data.

Drums—Composite (cast-iron & steel). Diameter 11"

Lining—Molded type. Width 2". Thickness 13/64". Length 12¼" (forward shoe—all wheels), 10 1/32" (rear shoe—all wheels).

Clearance—.008" at heel and toe of each shoe.

Braking Power—56% Front wheels, 44% Rear.

Hand Brake: See Service Brake data (above).

MISC. MECHANICAL

Windshield Wiper: Vacuum type, cable operated.

See Miscellaneous Section for complete data.

CYLINDER HEAD

1949-50 MODELS

CYLINDER HEAD INSTALLATION: Use Torque Indicating Wrench to tighten cylinder head stud nuts, tighten in correct sequence as shown in the diagrams. Procedure for tightening Cast Iron and Aluminum heads is as follows:

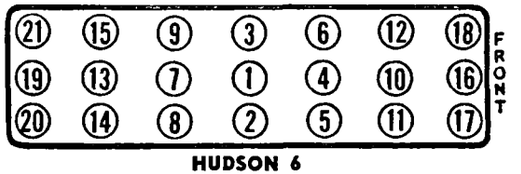

HUDSON 6

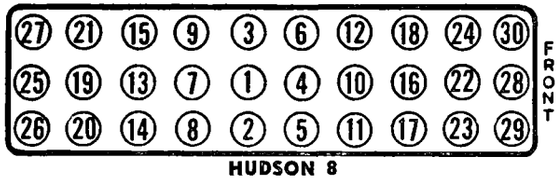

HUDSON 8

Cast Iron Heads—With engine cold, tighten all nuts evenly to correct tension. Then run engine until it is thoroughly warmed up and recheck all nuts

Aluminum Heads—With the engine cold, tighten all nuts to correct tension. Run engine until thoroughly warm, allow engine to cool off, and then recheck all nuts. Do not tighten aluminum heads when warm.

Tightening Torque—See Tightening (Torque Wrench) Specifications below.

TIGHTENING (TORQUE WRENCH) SPECIFICATIONS

1949-50 MODELS

	Ft. Lbs.	In. Lbs.
Cylinder Head Capscrews (6)	70-75	840-900
Cylinder Head Stud Nuts (8)	45-50	540-600
Main Bearing Capscrews (6)	75-80	900-960
Main Bearing Capscrews (8)	70-80	840-960
Connecting Rod Bolts	40-45	480-540
Camshaft Gear Bolt	20-30	240-360
Intake Manifold Stud Nuts	12-15	144-180
Exhaust Manifold Stud Nuts	20-30	240-360
Engine Mounting Bolts	40-45	480-540
Vibration Dampener Screw	100-120	1200-1440
Clutch Cover Bolts	20-25	240-360
Differential Carrier Bolts	35-40	420-480
Rear Axle Shaft Nut	125-200	1500-2400
Brake Anchor Pin Nut	80-90	960-1080
Steering Wheel Nut	20-30	240-360
Pitman Arm Nut	125-140	1500-1680
Strg. Center Arm Pivot Nut	50-60	600-720
Steering Gear to Frame	50-60	600-720

ORIGINAL BORE

1949-50 MODELS

ORIGINAL BORE SIZE: Original production (new engine) bore size indicated by code mark stamped on lower edge of valve chamber opposite cylinders. See table below for size and code marks.

1949-50 SIX CYLINDER BORE SIZE

Code Mark	Cylinder Diameter	Code Mark	Cylinder Diameter
Standard Size		.010" Oversize	
B	3.5625"	AO	3.572"
C	3.563"	BO	3.5725"
D	3.5635"	CO	3.573"
E	3.564"	DO	3.5735"
F	3.5645"	EO	3.574"
		FO	3.5745"
		BB	3.5825"
		DD	3.5835"
		FF	3.5845"

1949 EIGHT CYLINDER BORE SIZE

Code Mark	Cylinder Diameter	Code Mark	Cylinder Diameter
Standard Size		.010" Oversize	
A	3.000"	AO	3.010"
B	3.0005"	BO	3.0105"
C	3.001"	CO	3.011"
D	3.0015"	DO	3.0115"
E	3.002"	EO	3.012"

Note—Recondition cylinders to size for which replacement pistons and rings available (see below).

Original Piston Size—Sizes and markings for original pistons same as for Replacement Pistons. See Replacement Piston Table and Piston Markings

PISTONS

1949-50 MODELS

REPLACEMENT PISTONS: Standard and oversize pistons marked by letter stamped on head and furnished for cylinder diameter sizes listed below. See Replacement Rings (following) for ring sizes.

Piston Markings—Code marks stamped on head of piston indicate the following: **Letter** indicates piston size and cylinder size for which piston to be fitted (see table below). **Number** indicates piston weight in ounces (if 2 numbers used, one over the other, top number indicates weight in ounces, lower number ¼ ounces). All pistons in one engine should be of same weight (carry same weight marks on head). NOTE—Original factory installed pistons carry two additional numbers, one number indicates cylinder in which piston installed, second number indicates cylinder block number.

1949-50 SIX CYLINDER PISTON SIZES

Piston Mark	Piston Size	Cylinder Size
Std. Size		
B	3.560"	3.5625"
C	3.5605"	3.563"
D	3.561"	3.5635"
E	3.5615"	3.564"
F	3.562"	3.5645"
J	3.564"	
L	3.565"	
P	3.567"	
.010" Oversize		
AO	3.5695"	3.572"
BO	3.570"	3.5725"
CO	3.5705"	3.573"
DO	3.571"	3.5735"
EO	3.5715"	3.574"
FO	3.572"	3.5745"
LO	3.575"	
.020" Oversize		
BB	3.580"	3.5825"
DD	3.581"	3.5835"
FF	3.582"	3.5845"

1949 EIGHT CYLINDER PISTON SIZES

Piston Mark	Piston Size	Cylinder Size
Std. Size		
A	2.998"	3.000"
B	2.9985"	3.0005"
C	2.999"	3.001"
D	2.9995"	3.0015"
E	3.000"	3.002"
F	3.0005"	3.0025"
J	3.0025"	3.0045"
L	3.0035"	3.0055"
P	3.0055"	3.0075"
.010" Oversize		
AO	3.008"	3.010"
BO	3.0085"	3.0105"
CO	3.009"	3.011"
DO	3.0095"	3.0115"
EO	3.010"	3.012"
FO	3.0105"	3.0125"
JO	3.0125"	3.0145"
LO	3.0135"	3.0155"
PO	3.0155"	3.0175"
.020" Oversize		
BB	3.0185"	3.0205"
DD	3.0195"	3.0215"
FF	3.0205"	3.0225"
.030" Oversize		
BOOO	3.0285"	3.0305"
EOOO	3.030"	3.032"

PISTON RINGS

1949-50 MODELS

REPLACEMENT RINGS: Use Standard or Oversize rings for replacement pistons listed above. Ring size and pistons for each size as follows:

Six Cylinder		Eight Cylinder	
Ring Size	Piston Mark	Ring Size	Piston Mark
Standard	B,C,D	Standard	A,B,C,D,E,F
.003" OS	F	.003" OS	J
.005" OS	J,L	.005" OS	L,P
.010" OS	P,AO,BO	.010" OS	AO,BO,CO
.010" OS	CO,DO	.010" OS	DO,EO,FO
.015" OS	EO,FO,LO	.015" OS	JO,PO,LO
.020" OS	BB,DD,FF	.020" OS	BB,DD,FF
		.030" OS	BOOO,EOOO

Piston Ring Sets—Cast-iron or steel segment types furnished standard size, .010" and .020" oversize.

Note—If rings filed, keep clearance at pin uniform with end gap (.006-.014" desired on 6 cyl., .004-.009" on 8 cyl.).

ORIGINAL BEARING SIZES

1949-50 MODELS

CRANKSHAFT SIZE CODE: Engines built with undersize parts are identified by following marks stamped on bottom face of cylinder block to left front corner:

PU—.010" undersize connecting rod crank pins.

MU—undersize main bearing journals.

PMU—.010" undersize main and connecting rod pins.

Crankshaft Mark—Undersize dimension located on front face of #1 counterweight.

Bearing Marks—Undersize Main Bearings marked by green paint and part number stamped on back for Eight Cylinder engines, stamped on back of bearing shells only on Six Cylinder engines.

CRANKSHAFT & MAIN BEARINGS

1949 EIGHT CYLINDER

LINE REAMING OF UN-FINISHED BEARINGS: *See Main Bearing Line Reaming Data for 1948 Hudson Eight in previous release.*

1949-50 SIX CYLINDER

FRONT AND REAR OIL SEALS: (Front)—Install oil seal using Tool J-2776. Press seal tightly in place. **(Rear)**—Crowd seal material into outer groove of bearing cap by hand and with Installer J-2779, drive seal tightly into groove by tapping handle of tool with bronze hammer. Large diameter of tool cylinder should be to front of cap. After seal has been seated in cap and in the block, and while tool is still compressing seal, cut the seal off flush with top face of cap. **Do not cut seal too short.** Seal must entirely fill the groove.

CAMSHAFT & BEARINGS

1949-50 MODELS

CAMSHAFT REMOVAL: Remove radiator, cylinder head, right front wheel, fender side shield. Disconnect vacuum pump line, windshield wiper, hose and fuel pump. Remove distributor and oil pump. Remove grille center support cover, upper baffle and right hand moulding, remove grille intermediate baffle and moulding. Place block of wood between oil pan and head of jack, raise engine 1½". Remove vibration dampener, screw lock and dampener, dampener key and gear case cover. Remove coil and valve covers. Remove valve and valve springs (use Tool KMO-484). On Six Cyl. raise and secure tappets enough to permit camshaft removal. On Eight Cyl. remove tappet retainer screws, plates, washers, and lockwashers, tappets and guides. Align sprocket or gear markings and remove camshaft sprocket or gear. Remove camshaft and thrust washer.

OILING SYSTEM

1949 EIGHT CYLINDER

CHECKING OILING SYSTEM: See that oil lines securely in place and not bent or damaged. Drop oil reservoir and clean thoroughly every six months. When installing oil reservoir, check flapper valve on rear main bearing oil return tube (soldered in rear of reservoir). Valve must work freely and should be slightly open with reservoir level. Holes in gaskets between crankcase and oil dipper tray and between tray and reservoir must align with oil return tube and register with hole in bearing cap. NOTE—Beginning with 1942 engines, oil suction pipe was redesigned and lower end extended into center of oil reservoir to insure constant supply of oil to oil pump.

OIL PAN REMOVAL

1949-50 MODELS

OIL PAN REMOVAL: Raise front end of the car. Drain the oil pan. Take out Center Steering Bracket bolts and move bracket aside. Remove oil pan bolts. Slide pan out to rear and down. NOTE—No special tools required.

OIL PUMP

1949-50 SIX CYLINDER

OIL PUMP REMOVAL: Lift off distributor cap and rotate crankshaft until distributor rotor is in firing position for #1 cylinder. Keep engine in this position while pump is removed. Remove three oil pump to block attaching studs and remove oil pump.

Pump Inspection—Disassemble pump by taking off cover and drive gear (drive out pin and press gear off shaft). Thoroughly clean parts and dry with compressed air. Check pump parts as follows:

1)—With rotors in pump body, turn shaft so that one lobe on inner rotor pushed into notch in outer rotor, check clearance between opposite lobe of inner rotor and inner face of outer rotor. If clearance greater than .010" replace both rotors.

2)—Height (or thickness) of both rotors should be at least .873". Diameter of outer rotor should be at least 2.746". Replace if measurements are less.

3)—With rotors in pump body, turn body up, place straightedge across face of body between screw holes. Clearance between straightedge and rotors should be .004" max. If greater, replace pump body.

4)—With outer rotor pressed to one side of body, clearance at opposite side should be .008" maximum. If greater, replace pump body.

5)—Check cover by placing straightedge across inner face and if .002" feeler can be inserted between cover and straightedge, or if face is scratched or marred, replace cover.

Pump Assembly—Install outer rotor in pump body, slide shaft and rotor assembly into pump body. Support pump body and shaft, and rotors assembly, and press drive gear on shaft. Endplay between hub of gear and pump body should be .004-.008". Install gear pin, peening over both ends securely. Make sure pump is clean, install cover gasket, cover and tighten screws evenly and securely.

Pump Installation—Oil pump must be installed on engine with #1 piston in firing position with rotor on distributor opposite #1 terminal in cap.

CLUTCH NOTES

1949-50 MODELS

CLUTCH OIL SERVICING: Hudsonite (oil) in clutch must be renewed every 5000 miles. Remove plug using socket wrench J-472. Crank engine slowly until star on flywheel is aligned with timing pointer at timing inspection hole. This will bring drain hole to bottom of flywheel and allow drainage. Crank engine until drain hole again appears at inspection hole and insert 1/3 pint Hudsonite (use J-485 gun), replace plug.

Capacity & Oil—1/3 pt. Hudsonite Clutch Compound.

PROPELLER SHAFT

1949-50 MODELS

PROPELLER SHAFT CENTER BEARING REPLACEMENT: Remove nuts, lock plates, and "U" bolts from universal joint at front end of rear shaft and lower shaft support. Remove nut and washer attaching flange to rear of front propeller shaft. Use puller J-820 to pull companion flange from splined shaft. Remove bolt attaching center bearing and housing assembly to cushion frame support, remove center bearing and housing assembly from shaft. Remove lock rings from either side of bearing and press bearing from housing.

Installation—Reverse procedure above.

MODEL IDENTIFICATION

SERIAL & ENGINE NUMBER: Stamped on plate on right front door hinge pillar post and stamped vertically on upper right front corner of block.

1949 Numbers—491101 Up (491), 492101 Up (492).

Identification—First three figures of number indicate model: 491101 Super 6, 492101 Commodore 6.

TUNE-UP

COMPRESSION PRESSURE: 119 lbs,. min. at 125 RPM.

VACUUM READING: 18-21" idling at 540-560 RPM (Std.), 580-600 RPM (Vacumotive or Drive-Mstr.).

FIRING ORDER: 1-5-3-6-2-4. See diagram.

SPARK PLUG GAPS: .032".

Plugs for Cast-iron Head—Champion J-7. 14 mm.

Plugs for Aluminum Head—Champion H-10. 14 mm.

DISTRIBUTOR: Breaker Gap—.020". Limits .018-.022".

Cam Angle—38° Closed. 22° Open.

Breaker Arm Spring Tension—17-20 ounces.

Automatic & Vacuum Advance—*See Ignition.*

Condenser Capacity—.25-.28 microfarad.

IGNITION TIMING: TDC (top dead center).

Timing Procedure—*See Ignition Timing.*

Flywheel Mark—"UDC-1-6/" aligned with lower edge of rear support plate opening behind starter.

Fuel Compensator Setting—Slight ping at 15 MPH. when accelerating from 10 MPH. in high gear.

CARBURETION:

Idle Setting—1¼-1¾ turns open. Two screws—turn screws out for richer mixture.

Idle Speed (Std.)—540-560 RPM. or 7½-8 MPH. **(Vacumotive or Drive-Master)**—580-600 RPM.

Float Level—3/16". Measured from top of float to gasket seat (machined surface) on bowl cover with needle valve seated.

Accelerating Pump—Outer hole, max. (Normal).

Choke Setting: Coil housing one mark lean.

Fuel Pump Pressure: 3½-4½ lbs. at carburetor.

MANIFOLD HEAT CONTROL: Automatic. No adjustment. Valve must operate freely.

VALVE TAPPET CLEARANCE: .008" Int., .010" Exh. Hot.

►*CAUTION—This figure supersedes earlier data.*

NOTE—Self-locking tappet adjusting screws used. Remove apron in right front fender for access.

Valve Timing Check—*See Valve Timing.*

STARTING: *See Battery, Starter, Generator, Regulator.*

IGNITION

IGNITION SWITCH: Mitchellock. Hudson No. 300644,

Ignition Lock—Briggs & Stratton. B&S No. 50184.

Key Series—H601 to H1100. Groove No. 1.

COIL: Auto-Lite No. CE-6006-A.

Location—Left side of engine above distributor.

Ignition Current—2½ amperes idling, 4½ stopped.

CONDENSER: Auto-Lite Part No. IG-3927G.

Capacity—.25-.28 microfarad.

DISTRIBUTOR: *Two types used as follows:*

Auto-Lite IGS-4213-1.....below car no. 49133913

Auto-Lite IGS-4213A-1 .....after car no. 49133913

Automatic advance type with Vacuum Spark Control and Fuel Compensator adjustment.

Breaker Plate Identification—(IGS-4213-1) 8.5 (IGS-4213A-1) 4, stamped on breaker plate.

Breaker Gap—.020". Limits .018-.022".

Cam Angle—38° Closed, 22° Open.

Breaker Arm Spring Tension—17-20 ounces.

Rotation—Clockwise viewed from above.

Automatic Advance—IGS-4213-1

Degrees Distr.	R.P.M.	Degrees Eng.	R.P.M.
Start	400	0	800
3	800	6	1600
6	1200	12	2400
9	1600	18	3200
12	2000	24	4000

Automatic Advance—IGS-4213A-1

Start	500	0	1000
1	660	2	1320
4	1200	8	2400
8	1850	16	3700
8.5	2000	17	4000

Fuel Compensator: 10° advance or retard adjustment at distrbutor. See Ignition Timing.

Vacuum Spark Control: Auto-Lite. Integral type. Linked directly to breaker plate. Provides additional advance at speeds above idling except when engine accelerated or operated with wide open throttle when spark retarded by return spring in unit.

Vacuum Advance—IGS-4213-1

Distr. Degrees	Eng. Degrees	Vacuum (" of HG)
Start	0°	9½"
2°	4°	10½"
4°	8°	11⅝"
6°	12°	12⅝"
8.5°	17°	14"

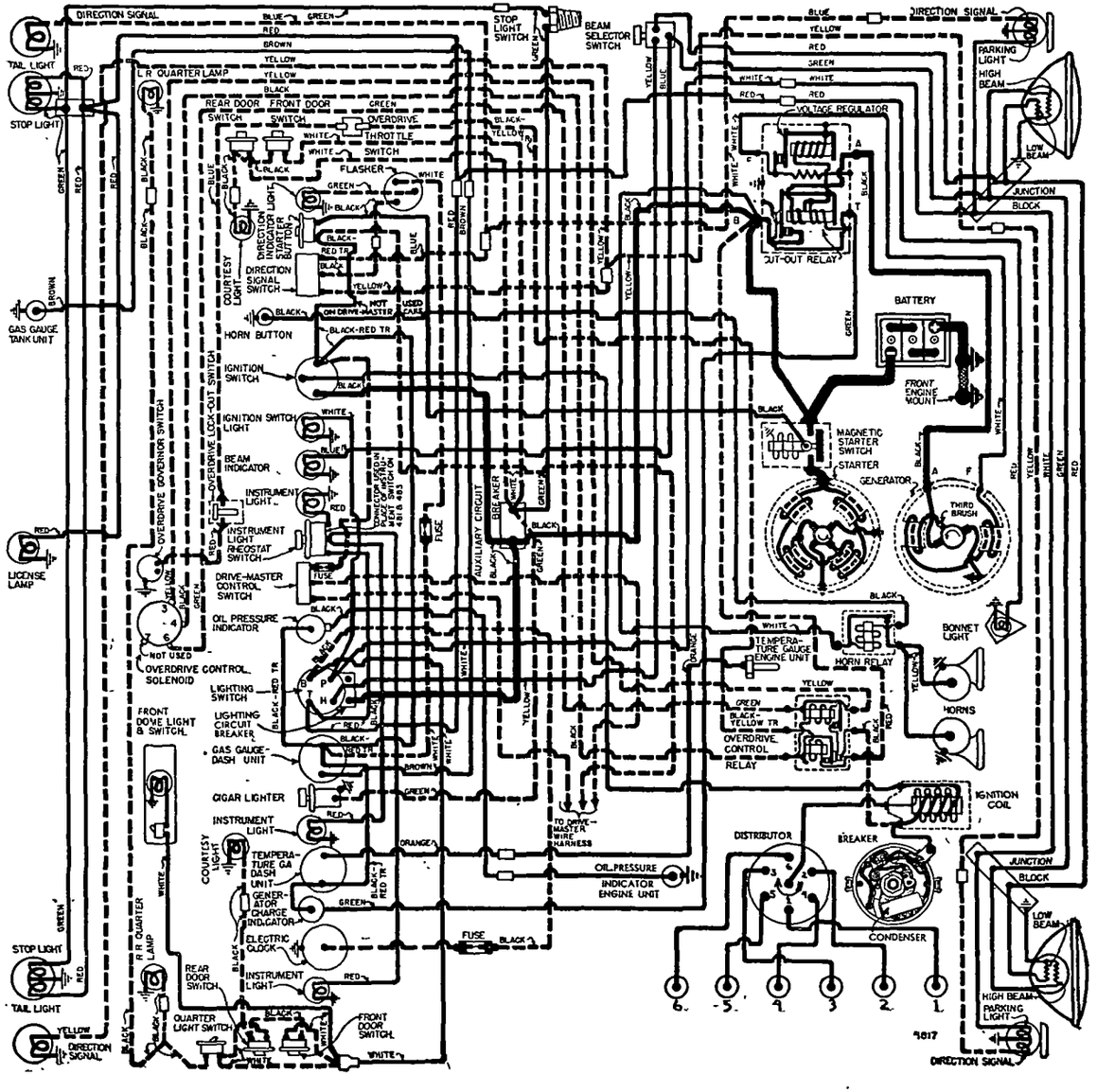

Vacuum Advance—IGS-4213A-1

Distr. Degrees	Eng. Degrees	Vacuum (" of HG)
Start	0°	12½"
1°	2°	13¼"
2°	4°	14"
3°	6°	14¾"
4°	8°	15¾"

Distributor Removal: On left side of engine. Disconnect vacuum line, take out hold-down screw in advance arm. Lift off.

►*INSTALLATION CAUTION—If oil pump removed, refer to Oil Pump Installation in Hudson Special Data.*

IGNITION TIMING

Std. Setting.....At Top Dead Center

NOTE—Modify this setting for special fuel and altitude conditions. See Fuel Compensator Setting.

Flywheel Mark—"UDC-1-6" (#1 and #6 piston top dead center position) with 4 short marks (¼" apart) ahead of this mark (opening behind starter).

Timing—With #1 piston at firing position and long line of "UDC-1-6/" flywheel mark aligned with lower edge of opening in rear engine support plate behind starter, loosen hold-down screw in Fuel Compensator. Rotate distributor until contacts begin to open, tighten hold-down screw. Check spark plug connections (see diagram), see that rotor at #1 segment in cap. Check Fuel Compensator setting.

Timing (with Neon Timing Light)—Mark long line of "UDC-1-6/" flywheel mark with white paint, connect timing light to #1 spark plug. Idle engine below 800 RPM., adjust distributor (as directed above) until mark lines up with lower edge of opening.

Fuel Compensator Setting—Set for slight ping at 15 MPH. when accelerating from 10 MPH. with wide open throttle. To adjust, loosen hold-down screw, rotate distributor counter-clockwise (if ping too severe), clockwise (if no ping). **Final setting must not be more than 1" (4th short line) ahead of "UDC-1-6/" flywheel mark.**

CARBURETOR

Carter WDO No. 647S (early), 647SA (later). 1¼" dual barrel downdraft with Carter Climatic Control.

Casting No. on Flange—542.

See Carburetor Section for complete data.

►**Lean Condition at 20 MPH. correction on 647S carburetors**—*See Carter WDO carburetors in Carburetor Section.*

Settings (Idle Setting, Float Level, and Accelerating Pump: *See Tune-Up data.*

Metering Rods & Jets—*See Carter Jet Table in Carburetor Section.*

Fast Idle: Carter Dual (WDO) Carburetor type.

See Carburetion Equipment Section for complete data.

Setting—.054" throttle opening with choke valve closed. Adjust by turning fast idle screw on high step of cam.

Automatic Choke: Carter Climatic Control (Dual Carbs.).

See Carburetion Equipment Section for complete data.

Setting—Set coil housing 1 point lean.

CARB. EQUIPMENT

Air Cleaner (std.): AC 1544265 (1544297 for Dr.-Mstr.).

(Optl. oil bath)—1544266 (1544298 Drive-Master).

Filter Element—(std.) #5, (oil bath) #7-S.

Servicing (oil-wetted type)—Clean and re-oil filter element (use same grade engine oil used in crankcase) at 2000 mile intervals or more often if required by operating conditions.

Servicing (oil-bath type)—Service same as oil-wetted type except that filter element not oiled and refill to level with engine oil.

Fuel Pump (std.): AC Type AH No. 1539109.

Optl. (Fuel-&-Vacuum)—AC Type AJ No. 1539108.

Replacement Pump—No. 584 (for AH), 583 (AJ).

Pressure—3½-4½ lbs.

RHD NOTE—AC No. 1539235 (std.), No. 1539254 (comb. fuel-&-vacuum). Repl. No. 9255 (std.), 9254 (comb.).

See Carburetion Equipment Section for complete data.

Gasoline Gauge: King-Seeley Electric.

Dash Unit—K-S 42120 (Super), 42135 (Comdre.),

Tank Unit—K-S No. 41765.

See Carburetion Equipment Section for complete data.

BATTERY

National Type S17-2HF. 6 Volt, 17 Plate, 120 Ampere Hour Capacity (20 hour rate).

Grounded Terminal—Positive (+) to frame and engine by a single strap.

Dimensions—Lgth. 10 9/16". W. 7⅛". H. 9 1/16".

Location—On left side under engine hood.

STARTER

Auto-Lite Model MCL-6006. Armature MCH-2023.

Drive—Bendix No. A-1806. Inboard Barrel type.

Rotation—Counter-clockwise at commutator end.

Brush Spring Tension—42-53 ozs. (new brushes).

Cranking Engine—Approx. 160 amperes at 150 RPM.

Performance Data

Torque	R.P.M.	Volts	Amperes
0 ft. lbs.	5300	5.5	65
8.0 "	Lock	2.0	410

Removal: On left front face of rear motor support. To remove, take out flange mounting bolts.

Starting Switch: Auto-Lite Magnetic type SS-4001 on starter with pushbutton (Hudson No. 300646) on instrument panel. Operative only with ignition "on" (clutch disengaged on Vacumotive or Drive-Mstr).

See Electrical Equipment Section for complete data.

GENERATOR

Auto-Lite Model GEC-4801A. Armature GDZ-2006F. Third brush control with voltage regulation.

Maximum Charging Rate—43 amperes (Cold), 37 amperes (Hot), at approx. 35 MPH. Ground "F" terminal when checking generator output.

Charging Rate Adjustment—See Regulator data. Third brush setting 1 commutator bar minimum, 1 commutator bar plus 1 mica strip maximum, from nearest (insulated) main brush. Adjust 3rd brush.

Cold		Performance Data	Hot		
Amperes	Volts	R.P.M.	Amperes	Volts	R.P.M.
0	6.4	960	0	6.4	1040
4	6.55	1060	4	6.6	1140
8	6.7	1160	8	6.8	1280
12	6.85	1280	12	6.95	1440
16	7.0	1400	16	7.15	1600
20	7.15	1550	20	7.35	1820
24	7.25	1700	24	7.55	2090
28	7.5	1890	28	7.75	2440
32	7.65	2100	32	7.9	3000
36	7.8	2375	34	8.0	3800
41	8.0	3350			

Rotation—Counter-clockwise at commutator end.

Brush Spring Tension—53 ozs. max. (new brushes).

Field Current—1.60-1.78 amperes at 6.0 volts.

Motoring Current—4.85-5.4 amps. at 6.0 volts.

Removal: Pivot mounted at left front of engine. To remove, take out pivot and clamp screws and nuts.

Belt Adjustment: ¾" belt deflection between generator and pump. Loosen clamp, swing generator out.

REGULATOR

Auto-Lite Model VRR-4001A. Voltage type.

NOTE—Cutout Relay has extra set of contacts for Generator "Teleflash" Indicator control.

See Electrical Equipment Section for complete data.

NOTE—Regulator cover sealed. Warranty void if seals broken.

Cutout Relay

Cuts In—6.4-6.6 volts.

Cuts Out—4.1-4.8 volts (approx. 4-6 amps. disch.).

Contact Gap—.015" min., ground contacts closed (ground contacts open when main contacts close).

Air Gap—.031-.034" at hinge end of core with contacts open (ground contacts closed).

Voltage Regulator

Voltage Setting—7.1-7.4 volts at 70°F.

Contact Gap—.012" Min. (armature against stop).

Air Gap—.048-.052" with contacts just opening.

Checking (without breaking seals) & Adjustment—*See Electrical Equipment Section for complete data.*

LIGHTING

Headlamps: Hall "Sealed Beam" type.

See Electrical Equipment Section for complete data.

Adjustment—Aim upper beams straight ahead (hot spot centers 3" below lamp center height at 25 ft.).

Beam Indicator—Red pilot bulb at lower center of speedometer dial. Lights when Upper Beam "on".

Direction Signal: Optl. *See Electrical Equipment Section.*

Direction Signal Indicator—At left end of instrument panel. Flashes when Signal in use.

Direction Signal Flasher—Hudson No. 300877.

Switches

Lighting—Hudson No. 300641 (with Circuit Breaker), No. 300642 (switch only).

Beam Selector—Hudson No. 300799.

Instrument (Commodore)—Hudson No. 160092.

Door Switch—Hudson No. 300796.

Front Dome Light—Hudson No. 211312.

Rear Quarter Pillar—Hudson No. 160091.

Stop Light—Auto-Lite 100810K.

Direction Signal—Hudson No. 300875 (with wires).

MISC. ELECTRICAL

CIRCUIT BREAKERS: Vibrating thermostatic types. **Lighting** Hudson 300643. 30 amp. On light switch. **Misc. Lighting**—Hudson No. 301853. 20 ampere. On steering support bracket behind instrument panel. **Convertible Top & Hydraulic Window Regulators**—Hudson No. 300626. 30 ampere. On steering support bracket behind instrument panel.

FUSES: Electric Clock—3 ampere. Behind clock. **Direction Signal**—10 ampere. On Direction Signal Harness behind instrument panel. **Drive-Master**—10 ampere. On Drive-Master Switch. **Weather Control**—14 ampere. On heater.

GENERATOR CHARGE SIGNAL: Red indicator on instrument panel (to right of temperature gauge). Should light when ignition turned on and should go out when generator begins to charge.

See Electrical Equipment Section for complete data.

OIL PRESSURE SIGNAL: Red indicator on instrument panel (to left of gas gauge). Should light with ignition on, go out as soon as engine started. **Oil Pressure Warning Switch**—Carter No. A658S. Hudson No. 300828. On right side of engine above oil pump. Contacts open at 11-15 lbs. Switch sealed. Not adjustable. *See Electrical Equip. Section for data.*

HORNS: *See 1949 Hudson Eight car pages for data.*

CONTINUED ON NEXT PA E

CONTINUED FR M PRECEDIN PAGE

ENGINE

ENGINE SPECIFICATIONS: Own Make. Six cylinder, "L" head type.
Bore—3 9/16". *See "Original Bore & Pistons" in Hudson Special Data.*
Stroke—4⅜".
Displacement—262 cu. ins. **Rated HP**—30.4.
Developed Horsepower—121 at 4000 RPM.
Compression Ratio (std.)—6.50-1 cast-iron head.
Compression Ratio (optl.)—7.00-1 aluminum head.
Compression & Vacuum Reading—*See Tune-Up.*
ORIGINAL BORE & PISTONS: *See Hudson Shop Notes.*
ORIGINAL BEARING SIZES: *See Hudson Shop Notes.*
TIGHTENING TORQUES: *See Hudson Shop Notes.*
CYLINDER HEAD DIAGRAM: *See Hudson Shop Notes.*
OIL PAN REMOVAL: *See Hudson Shop Notes.*
PISTONS: Aluminum alloy, Cam ground, T-slot type.
►*CAUTION*—DIFFERENT PISTONS used **starting car no. 491-95958.** Change required due to change in finishing cylinder top face.
Weight—18 ± ⅛ ozs. (stripped). **Length**—3¾".
Removal—Pistons and rods removed from above.
Clearance—.0015 to .002" (skirt).
See "Original Bore & Pistons" in Hudson Special Data.
Piston Fitting—Insert piston in cylinder with .0015" feeler gauge. Pull to withdraw feeler 3 to 4 lbs.
Replacement Pistons: *CAUTION*—Two different types required. *See Hudson Special Data.*
Installing Pistons: Slot away from camshaft.
PISTON RINGS: Two compression, two oil rings (one above pin, one below pin) per piston. Rings are square end type. Rings pinned to prevent rotation. Rings cut and notched to fit pin (clearance on pin equal to ring end gap.

Ring	Width	End Gap	Side Clearance
Compression	5/64"	.007-.012"	.001"
Oil (upper)	3/16"	.007-.012"	.001"
Oil (lower)	5/32"	.007-.012"	.001"

Installing Rings—Three top rings have offset pin notch (in relation to gap). Install rings so that alternate gaps offset.
Replacement Rings: *See Hudson Shop Notes.*
PISTON PIN: Diameter—31/32". **Length**—2 15/16". Floating type with diamond-drilled pin holes in piston and rolled steel babbitt faced bearing in connecting rod. Pin retained by lock ring at each end.
Pin Fit in Pistons—.0000-.0003" at 70°F. or hand push fit with piston at 200°F.
Pin Fit in Rod Bushing—.0003" clearance. Hand push fit at 70°F.
Replacement Pins: Std., .002", .005", .010" oversize. Select pin to fit piston. **Do not ream pin hole in piston.**
CONNECTING ROD: Length—8⅛".
Weight—34.23 ozs. (without bearings).
Crankpin Journal Diameter—2.1244-2.1254".
See "Original Bearing Size" in Hudson Special Data.
Lower Bearing—Steel-backed, babbitt-lined type with upper and lower halves alike. No shims.
Clearance—.0005-.0015". **Sideplay**—.007-.013".
Bearing Adjustment: None (no shims). Replace bearings. Do not file rods or bearing caps.
NOTE—Identifying notches on side of cap and rod must be together when cap installed on rod.
Palnuts—Tighten finger tight, plus 1/3 turn.
Replacement Bearings: Large std., small std., .010" US.
Installing Rods: Not offset. Oil spit hole in lower end of rod must be toward valve side of engine.
CRANKSHAFT: Four bearing type with integral counterweights. Vibration dampener on front end.
Journal Diameter—2.4988-2.4998".
Bearing Diameter—2.4993-2.5013".
See "Original Bearing Size" in Hudson Special Data.
Bearings—Removable steel-backed, babbitt-lined Upper and lower halves of each bearing alike.
Clearance—.0005-.0015".
Front & Rear Oil Seals—*See "Crankshaft & Main Bearings" in Hudson Special Data.*
Bearing Adjustment: None (no shims). Replace bearings. Do not file bearing caps.
NOTE—Bearing shells positioned in cap and crankcase by tang on edge of shell. Can be rotated out without removing crankshaft with Tool KMO-734.
Palnuts—Tighten finger tight, plus 1/3 turn.
Replacement Bearings: Std., optl. std., .010" US.
End Thrust: Taken by #3 bearing. Replace bearing if endplay excessive. **Endplay**—.003-.009".
CAMSHAFT: 4 bearing type. Non-adjustable chain
Bearing Diameter—#1, 2.375-2.3755"; #2, 1.997-1.9975"; #3, 1.965-1.9655"; #4, 1.497-1.4975".
Bearings—Steel-backed, babbitt-lined bushings.
Clearance—.001-.002".
Camshaft Removal—*See Hudson Special Data.*
Replacement Bearings: Furnished as follows:
Finished Reamed—Will be proper dimension when pressed in place (.0026-.0055" press fit) and no reaming required.
Unfinished—Press in place (.0026-.0055" press fit) and line ream to .001" larger than individual camshaft journals.
►*CAUTION*—Install all bearings with notch at top.
End Thrust: Steel thrust plate fitted between front end of camshaft and sprocket. Plate attached to crankcase by two capscrews and locks.
Timing Chain: Morse. Hudson No. 300186. 60 links. ⅜" pitch. Width—1¼".
Chain Tension Shoe—Fibre shoe backed by synthetic rubber plunger mounted inside timing chain cover at top. Holds chain in close mesh with sprockets and prevents whip.
Camshaft Setting: Sprockets marked. Two chain guide links marked with center holes. Mesh chain with center hole in each link opposite "O" mark on each sprocket with #1 piston at top dead center (crankshaft sprocket keyway at top with #1 piston at TDC). NOTE—With this setting, there should be 6 full links plus two half-links between marks on sprockets (half-links opposite sprocket marks).

VALVES:	Head Diameter	Stem Diameter	Length
Intake	1 53/64"	.3417"	5 47/64"
Exhaust	1 9/16"	.3407"	5 47/64"

	Seat Angle	Lift	Stem Clearance
Intake	45°	11/32"	.0015-.003"
Exhaust	45°	11/32"	.002-.004"

NOTE—Stem clearance worn limit .005" max.
Valve Guides: Removable, one-piece, cast-iron Exhaust guides counterbored at upper end. Install guides as follows:
Intake Guide—Upper end 1 7/16" below top of valve seat. Finish ream to .3432-3442".
Exhaust Guides—Upper end 1 3/32" below top of valve seat. Finish ream to .3432-.3442". Counterbored 9/16" deep to diameter of 25/64".
Valve Springs: Cadmium plated springs are used. Install springs with closely coiled end up.

	Spring Pressure	Length
Valve Closed	77 lbs.	2 3/16"

NOTE—Reject springs if pressure less than 60 lbs. Free length 2.500".
Valve Lifters: Mushroom type fitted directly in crankcase. Removed from below with camshaft out.

VALVE TIMING

Tappet Clearance: .008" Intake, .010" Exhaust, Hot.
►*CAUTION—This figure supersedes earlier data.*
Self-locking tappet screws are used. Remove right front fender apron for access to valve compartment.
Valve Timing: See Camshaft Setting above.
Intake Valves—Open 7°18' BTDC. Close 53°42' ALDC.
Exhaust Valves—Open 53°18' BLDC. Close 7°42' ATDC. These figures correct with .010" tappet clear.
Valve Timing Check: No. 1 intake valve opens 7°18' BTDC. with point on flywheel approximately 2¾ teeth before top dead center mark "UDC-1-6/" in line with lower edge of opening in rear engine support plate behind starter.

LUBRICATION

Engine Oiling System: Pressure to crankshaft, connecting rod, and camshaft bearings, piston pins, valve lifters, and timing chain.
Crankcase Capacity—7 qts. (refill), 7½ qts. (dry).
Normal Oil Pressure—40 lbs. at 30 MPH. No gauge used. See Oil Pressure Indicator below.
Oil Pressure Relief Valve—Non-adjustable release valve and spring under plug on left side of engine ahead of starter.
Oil Pan Removal: *See Hudson Shop Notes.*
Oil Pump: Rotor type consisting of inner and outer rotor, shaft, body, and cover. Angle mounted on right side of crankcase and driven from camshaft.
Removal & Overhaul—*See "Oil Pump" in Hudson Special Data.*
Oil Pressure Indicator: Hudson Signal Light with new Oil Pressure Warning Switch. Consists of light on instrument panel operated by switch as follows:
Oil Pressure Warning Switch—Carter No. A658S. Hudson No. 300828. On right side of engine above oil pump. Contacts open at 11-15 lbs. Switch sealed. No adjustment. *See Electrical Equip. Section for data.*
Crankcase Ventilation: Oil-wetted type filter element in oil filler cap (air intake). Outlet pipe in rear valve compartment cover on right side of engine.
Servicing—Wash filter element in gasoline and re-oil when changing oil.

COOLING

Cooling System: Positive circulation with pump on front of engine, by-pass type thermostat, and brass water distribution tube in cylinder block.
Capacity—17 quarts.
Water Pump: Centrifugal, belt-driven, packless type. Shaft mounted on sealed duplex ball bearing.
See Water Pump Section for complete data.
Belt Adjustment—*See Generator Belt Adjustment.*
Thermostat: Hudson No. 166272. By-pass type in water outlet on cylinder head.
Setting—Starts to open 150-155°F. Fully open 185°.
Temperature Gauge: King-Seeley Electric.
Dash Unit—K-S 42125 (Super), 42140 (Com'dre.).
Engine Unit—K-S No. 41085.
See Miscellaneous Section for complete data.

CLUTCH

Own Make. Single plate, fluid cushioned type (cork insert type driven member operating in Hudsonite oil. 10" type used on all models.
See Clutch Section for complete data.
Facings—Cork insert type. Inside Diameter 6⅜". Outside Diam. 10". 108 corks, .203" thick.
Pedal Adjustment: Clearance between undersid of toeboard and top face of pedal shank must be 1½". To adjust, loosen locknut above clevis, remove clevis

pin, turn clevis in or out of link, tighten locknut after re-connecting clevis.

Clutch Oil Servicing: *See Hudson Shop Notes.*

Removal: Remove transmission (see Transmission Removal following). Drain clutch oil by turning engine over until plug on flywheel is accessible through timing inspection hole in rear engine support plate behind starter, remove plug, turn engine over ⅓ revolution until star on flywheel visible through timing hole (drain hole then at bottom), allow lubricant to be drained. Loosen mounting bolts in clutch cover rim to release spring tension, remove bolts and lift clutch assembly off car.

VACUMOTIVE DRIVE

Vacumotive Drive: Automatic clutch control. Optl.
See Clutch Section for complete data.

TRANSMISSION

Own Make. All helical gear type. Constant-mesh, synchro-mesh (Second & High), sliding gear (Low & Reverse) with remote (steering column) shift.
Identification—Metal tag attached by a cover bolt screw carries second speed ratio 1.65:1 (std.), 1.82:1 (cars with Drive-Master).
See Transmission Section for complete data.

Transmission Control: Handy-shift remote control type with shift lever mounted on steering column.
See Transmission Section for complete data.

Transmission Removal: Remove front seat cushion, disconnect front seat from track, disconnect seat adjusting lever and remove seat back from car. Disconnect accelerator pedal at accelerator rod, brake pedal rod at lever. Remove floor mat, remove Weather Control blower unit (2 screws each side), disconnect bowden wire at control valve at cylinder head. Remove floor opening cover over transmission. Disconnect front universal joint at transmission (wire bearings on universal joint spider). Remove bolts attaching center bearing support bracket, move propeller shaft to rear to clear companion flange at transmission. Disconnect clutch pedal lever return spring, remove clutch cross-shaft and bracket, disconnect clutch control link clevis. Disconnect Handy Shift by removing shifter shaft outer lever, nut, and washer. Remove flywheel guard from bottom of clutch housing. Remove two engine rear mounting bolts and nuts, jack up rear end of engine about ½" off frame cross-member (CAUTION—use block of wood on jack to prevent damage to oil pan). Disconnect speedometer cable at transmission case, plug hole with wood plug. Remove two top screws attaching clutch housing to engine, install guide studs (headless screws) in these holes to support transmission, remove remaining screws. Remove breather pipe bracket from clutch housing and bolt attaching breather pipe and rear valve cover. Pull transmission straight back on guide studs, lift transmission out through floor opening (NOTE—Hoist J-1502 can be used to lift transmission out).

DRIVE-MASTER TRANSMISSION

Drive-Master Transmission: Optl. Conventional 3-speed transmission with automatic gear shifting between Second & High Gears. Used in conjunction with Vacumotive Drive (automatic clutch control).
Identification—Metal tag attached by a cover bolt screw carries second speed ratio 1.82:1.
See Transmission Section for complete data.

OVERDRIVE

Warner Model AS1-R10D. Optl. equip. used with the Hudson Transmission. Overdrive is solenoid operated type (no centrifugal pawls) with Governor control and throttle operated "kick-down".
See Transmission Section for complete data.

Overdrive Solenoid—Hudson No. 301757.

Lock-Out Switch—Hudson No. 301755.

Throttle Switch—Hudson No. 164438.

Governor—Hudson No. 165829 (standard), Hudson No. 165831 (cars with Drive-Master).

Relay—Hudson No. 165826. On left fender shield.

Removal: Same as standard transmission removal (above) except that overdrive control cable and wiring must also be disconnected.

UNIVERSALS

Spicer No. 1268-111X.....**Front & Rear**
Spicer No. 1268-102X.....**Intermediate**
Needle bearing types.
See Universals Section for complete data.

Propeller Shaft & Center Bearing: Two shafts used:
1) Front shaft supported by sealed ball-bearing just ahead of rear coupling flange (no slip joint).
2) Rear shaft with slip joint at forward end.

Center Bearing—Prelubricated sealed annular ball bearing fitted in cast steel housing bolted to support mounting which is secured to underside of frame cross members. Housing cradle mounted on two rubber supports and forward end of support mounting fitted with rubber cushion.

Center Bearing Removal & Installation—*See Hudson Special Data.*

REAR AXLE

Own Make. Semi-floating, hypoid gear type with Hotchkiss drive.
See Rear Axle Section for complete data.

Ratio—Std. or Drive-Master Cars: 4.1-1 standard, 4 5/9-1 Optl. Overdrive Cars: 4 5/9-1 std., 4.1-1 Optl.

Backlash—.004-.006". Screw adjustment.

Removal: Support car on stands under body frame just forward of rear springs, remove fender shields and rear wheels. Disconnect brake line at tee on axle housing, remove tee. Disconnect brake cables at equalizer bar clevis and unscrew end fittings, loosen nuts on cable conduit brackets, on cross-member and free conduits from brackets, disconnect cable conduit clips on rear springs, pull cables and conduits out through guides and clamps. Disconnect rear universal joint and lower propeller shaft. Disconnect lower end of shock absorbers, disconnect and remove rear stabilizer. Disconnect each rear spring at axle housing, and at rear shackle, lower rear end of springs, slide axle out toward rear.

Axle Shaft Removal: Hoist rear of car. Remove rear wheels. Remove axle shaft nut and washer. Remove hub and drum assembly using screw type wheel puller (Tool J-736—CAUTION—Car manufacturer recommends that screw type puller be used, if knock-out type puller is used serious damage to differential parts may result). Remove 4 nuts on bearing cap bolts, remove bearing cap and shims (without disturbing brake backing plate). Pull rear wheel bearing and axle shaft, using puller Tool J-352. Do not drag axle shaft on oil seal assembly

Wheel Bearing Adjustment: Controlled by shims (.003", .005", or .015" thick) under bearing cap. To adjust, remove bearing cap (see directions above under Axle Shaft Removal), add or remove shims equally at both wheels (necessary to keep thrust spacer centered on differential pinion shaft).
Endplay—.001-.004".

SHOCK ABSORBERS

Delco or Monroe. Direct acting, hydraulic types.

Make	Front	Rear
Light Scale		
Monroe	300350	300351
Delco	301240	301241
Heavy Scale		
Monroe	301767	301768
Delco	301769	301770
Extra Heavy Scale		
Delco	301637	301638

See Shock Absorber Section for complete data.

FRONT SUSPENSION

Front Suspension: Independent, linked parallelogram type with coil springs and lateral stabilizer.
See Front Suspension Section for complete data.

Kingpin Inclination—3°36' crosswise.

Caster—½-1½°. Eccentric adjustment. Both wheels alike within ½°.

Camber—½-1½°. Eccentric adjustment. Both wheels alike within ½°.

Toe In—1/32" ± 1/32". Center steering arm on frame must be at center of car. To adjust, loosen clamps at ends of each tie rod and adjust tubes equally (to increase toe-in turn rods in direction of wheel travel, to decrease, turn in opposite direction).

Steering Geometry—Inner wheel 30°. Outer 25°.

STEERING GEAR

Gemmer Model 335. "3-tooth" Worm-and-Roller type with "push-pull" adjustments.
See Steering Gear Section for complete data.

BRAKES

Service: Bendix Hydraulic, Duo-Servo, Single Anchor type without eccentric adjustment. Mechanical follow-up (pedal linked to hand brake cables) provided. Hand lever applies rear wheel service brakes.
See Brake Section for complete data.

Wheel Cylinders—Diameters: Front wheel 1⅛", Rear wheel 15/16".

Drums—11" centrifuse type.

Lining Molded. Width 2¼" (front whl.), 1¾" (rear). Length per shoe 11" (exc. 11 1/16" rear secondary).

Clearance—.015" at both ends of secondary shoe with primary shoe forced out against drum.

Mechanical Follow-Up (Reserve): Over-running linkage between brake pedal and parking (hand-brake) linkage which applies rear wheel brakes by pedal mechanically if hydraulic system not operating.
See Brake Section for complete data.

Setting—1¼" clearance between clevis pin and rear end of slot in pedal rod rear clevis.

Hand Brake: See Service Brakes above.

MISC. MECHANICAL

Power Operated Convertible Top & Windows: Hydro-Lectric (hydraulic actuation with motor-driven pump supplying oil under pressure for power cylinders. *See Miscellaneous Section for complete data.*

Windshield Wiper: Cable Operated—Vacuum type.
See Miscellaneous Section for complete data.

MODEL IDENTIFICATION

SERIAL & ENGINE NUMBER: Stamped on plate on right front door hinge pillar post and stamped on top of cylinder block between No. 1 and No. 2 exhaust manifold flanges.
1949 Numbers—493101 Up (493), 494101 Up (494).
Identification—First three figures of number indicate model: 493101 Super 8, 494101 Commodore 8.

TUNE-UP

COMPRESSION PRESSURE: 119 lbs. min. at 125 RPM.
VACUUM READING: 18-21" idling at 540-560 RPM. (Std.), 580-600 RPM (Vacumotive or Drive-Mstr.).
FIRING ORDER: 1-6-2-5-8-3-7-4. See diagram.
SPARK PLUG GAPS: .032".
Plugs for Cast-iron Head—Champion J-7. 14 mm.
Plugs for Aluminum Head—Champion H-10. 14 mm.
DISTRIBUTOR: Breaker Gap—.017". Limits .015-.019".
Cam Angle—27° closed with .017" gap.
Breaker Arm Spring Tension—17-20 ounces.
Automatic & Vacuum Advance—*See Ignition.*
Condenser Capacity—.20-.25 microfarad.
IGNITION TIMING: TDC (top dead center).
Timing Procedure—*See Ignition Timing.*
Flywheel Mark—"UDC-1-8/" aligned with lower edge of rear engine support plate opening behind starter.
Fuel Compensator Setting—Slight ping at 15 MPH. when accelerating from 10 MPH. in high gear.
CARBURETION:
Idle Setting—1-1½ turns open. Two screws—turn screws out for richer mixture.
Idle Speed (Standard)—540-560 RPM., 7½-8 MPH.
(Vacumotive or Drive-Master)—580-600 RPM.
Float Level—13/64". Measured from top of float to gasket seat (machined surface) on bowl cover with needle valve seated (invert when checking).
Accelerating Pump—Outer hole (Normal). Inner Hole if less charge required.
Choke Setting: Center at index.
Fuel Pump Pressure: 3½-4½ lbs. at carburetor.
MANIFOLD HEAT CONTROL: Automatic. No adjustment. Valve must operate freely.
VALVE TAPPET CLEARANCE: .006" Int., .008" Exh. Hot.
NOTE—Remove apron in right front fender for access to valve compartment.
Valve Timing Check—*See Valve Timing.*
STARTING: *See Battery, Starter, Generator, Regulator.*

IGNITION

IGNITION SWITCH: Mitchellock. Hudson No. 300644, 301826 (RHD). Ignition Lock Case and Bracket.
Ignition Lock—Briggs & Stratton. B & S No. 50184.
Key Series—H601 to H1100. Groove No. 1.
COIL: Auto-Lite No. CE-6006-A.
Location—Right side of engine above distributor.
Ignition Current—2½ amperes idling, 4½ stopped.
CONDENSER: Auto-Lite No. IG-2671G.
Capacity—.20-.25 microfarad.
DISTRIBUTOR: Auto-Lite Model IGT-4204A-1 (Early), IGT-4204B-1 (Late). Automatic advance type with Vacuum Spark Control and Fuel Compensator adjustment.
Breaker Plate Identification—No. 8.5 stamped on plate (vacuum advance limiting slot size).
Breaker Gap—.017". Limits .015-.019".
Cam Angle—27° closed with .017" gap.
Breaker Arm Spring Tension—17-20 ounces.
Rotation—Clockwise viewed from above.

Automatic Advance

Degrees Distr.	R.P.M.	Degrees Eng.	R.P.M.
Start	300	0	600
3	400	6	800
8	850	16	1700
13	1300	26	2600
17.5	1700	35	3400

Fuel Compensator: 10° adjustment at distributor. See Ignition Timing for adjustment and setting.
Vacuum Spark Control: Auto-Lite. Integral type. Linked directly to breaker plate. Provides additional advance at speeds above idling except when engine accelerated or operated with wide open throttle when spark retarded by return spring in unit.

Vacuum Advance

Distr. Degrees	Eng. Degrees	Vacuum (" of HG)
Start	0°	9½"
2°	4°	10½"
4°	8°	11⅝"
6°	12°	12⅝"
8.5°	17°	14"

Distributor Removal: On right side of engine. Disconnect vacuum line, take out hold-down screw in advance arm. Lift off.

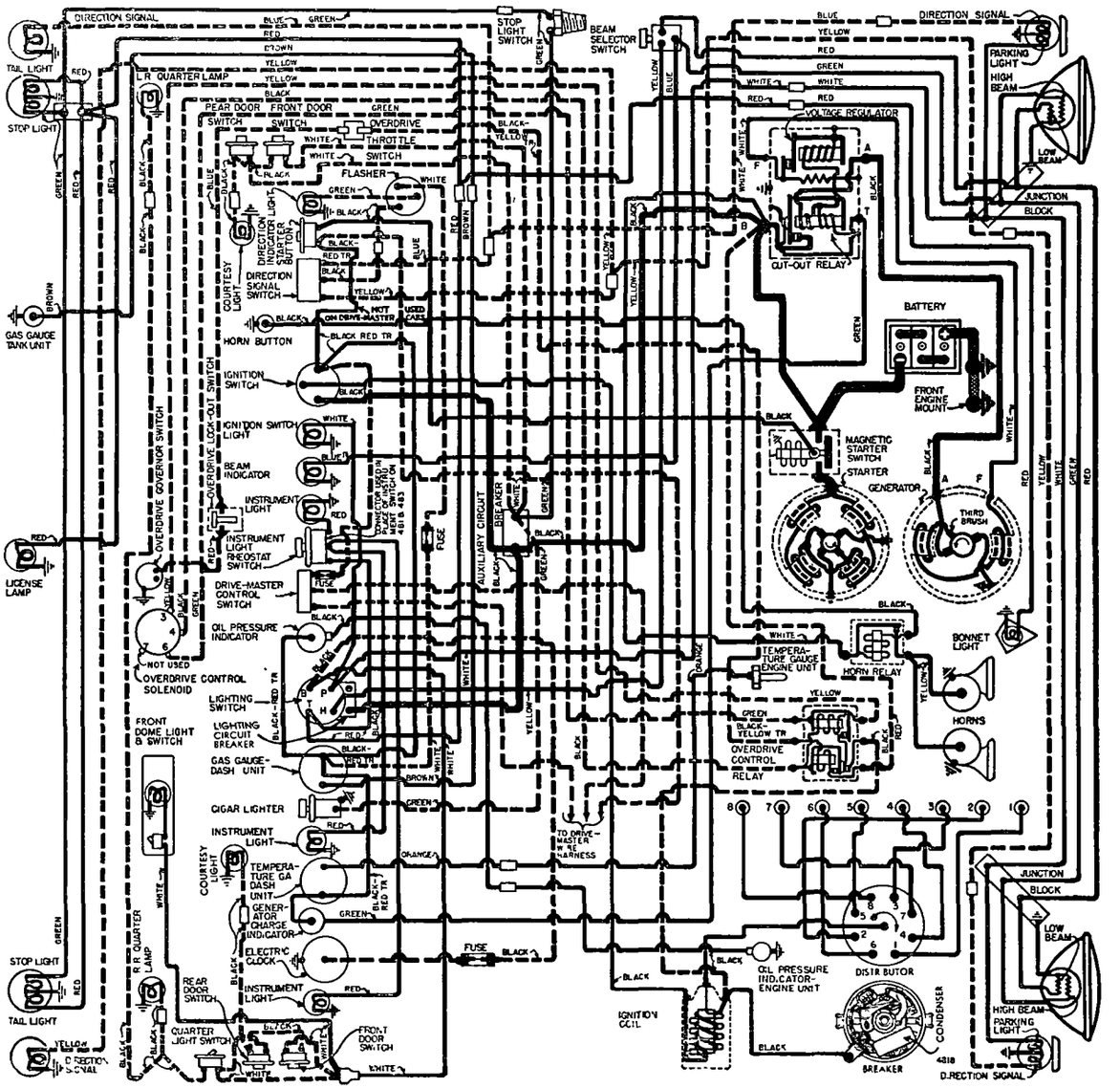

IGNITION TIMING

Std. Setting.....At Top Dead Center
NOTE—Modify this setting for special fuel and altitude conditions. See Fuel Compensator Setting.
Flywheel Mark—"UDC-1-8/" (#1 and #8 piston top dead center position) with 4 short marks (¼" apart) ahead of this mark (opening behind starter).
Timing—With #1 piston at firing position and long line of "UDC-1-8/" flywheel mark aligned with lower edge of opening in rear engine support plate behind starter, loosen hold-down screw in Fuel Compensator. Rotate distributor until contacts begin to open, tighten hold-down screw. Check spark plug connections (see diagram), see that rotor at #1 segment in cap. Check Fuel Compensator setting.
Timing (with Neon Timing Light)—Mark long line of "UDC-1-8/" flywheel mark with white paint, connect timing light to #1 spark plug. Idle engine below 600 RPM., adjust distributor (as directed above) until mark lines up with lower edge of opening.
Fuel Compensator Setting—Set for slight ping at 15 MPH. when accelerating from 10 MPH. with wide open throttle. To adjust, loosen hold-down screw, rotate distributor counter-clockwise (if ping too severe), clockwise (if no ping). **Final setting must not be more than 1" (4th short line) ahead of "UDC-1-8/" flywheel mark.**

CARBURETOR

Carter WDO, No. 648S. 1¼" dual barrel downdraft type with Carter Climatic Control.
Casting No. on Flange—542.
See Carburetor Section for complete data.

Settings (Idle Setting, Float Level, and Accelerating Pump: ***See Tune-Up data.***
Metering Rods & Jets—*See Carter Jet Table in Carburetor Section.*

Fast Idle: Carter Dual (WDO) Carburetor type.
See Carburetion Equipment Section for complete data.
Setting—.054" throttle opening with choke valve closed. Adjust by turning fast idle screw on high step of cam.

Automatic Choke: Carter Climatic Control (Dual Carbs.).
See Carburetion Equipment Section for complete data.
Setting—Coil housing centered (at index).

CARB. EQUIPMENT

Air Cleaner (std.): AC 1544265 (1544297 for Dr.-Mstr.).
(Optl. oil bath)—1544266 (1544298 Drive-Master).
Filter Element—(std.) #5, (oil bath) #7-S.
Servicing (oil-wetted type)—Clean and re-oil filter element (use same grade engine oil used in crankcase) at 2000 mile intervals or more often if required by operating conditions.
Servicing (oil-bath type)—Service same as oil-wetted type except that filter element not oiled. Refill to level with engine oil.

Fuel Pump (std.): AC Type AH No. 1539109.
Optl. (Fuel-&-Vacuum)—AC Type AJ No. 1539108.
Replacement Pump—No. 584 (for AH), 583 (AJ).
Pressure—3½-4½ lbs.
RHD NOTE—AC No. 1539255 (std.), No. 1539254 (comb. fuel-&-vacuum). Repl. No. 9255 (std.), 9254 (comb.).
See Carburetion Equipment Section for complete data.

Gasoline Gauge: King-Seeley Electric.
Dash Unit—K-S 42120 (Super), 42135 (Comdre.),
Tank Unit—K-S No. 41765.
See Carburetion Equipment Section for complete data.

BATTERY

National Type S17-2HF. 6 Volt, 17 Plate, 120 Ampere Hour Capacity (20 hour rate).
Grounded Terminal—Positive (+) to frame and engine by a single strap.
Dimensions—Lgth. 10 9/16". W. 7⅛". H. 9 1/16".
Location—On left side under engine hood.

STARTER

Auto-Lite Model MCL-6006. Armature MCH-2023.
Drive—Bendix No. A-1806. Inboard Barrel type.
Rotation—Counter-clockwise at commutator end.
Brush Spring Tension—42-53 ozs. (new brushes).
Cranking Engine—Approx. 160 amperes at 150 RPM.

Performance Data

Torque	R.P.M.	Volts	Amperes
0 ft. lbs.	5300	5.5	65
8.0 "	Lock	2.0	410

Removal: On left front face of rear motor support. To remove, take out flange mounting bolts.
Starting Switch: Auto-Lite Magnetic type SS-4001 on starter with pushbutton (Hudson No. 300646) on instrument panel. Operative only with ignition "on" (clutch disengaged on Vacumotive or Drive-Mstr).
See Electrical Equipment Section for complete data.

GENERATOR

Auto-Lite Model GEC-4801A. Armature GDZ-2006F. Third brush control with voltage regulation.
Maximum Charging Rate—43 amperes (Cold), 37 amperes (Hot), at approx. 35 MPH. Ground "F" terminal when checking generator output.
Charging Rate Adjustment—See Regulator data. Third brush setting 1 commutator bar minimum, 1 commutator bar plus 1 mica strip maximum, from nearest (insulated) main brush. Adjust 3rd brush.

Performance Data

Cold			Hot		
Amperes	Volts	R.P.M.	Amperes	Volts	R.P.M.
0	6.4	960	0	6.4	1040
4	6.55	1060	4	6.6	1140
8	6.7	1160	8	6.8	1280
12	6.85	1280	12	6.95	1440
16	7.0	1400	16	7.15	1600
20	7.15	1550	20	7.35	1820
24	7.25	1700	24	7.55	2090
28	7.5	1890	28	7.75	2440
32	7.65	2100	32	7.9	3000
36	7.8	2375	34	8.0	3800
41	8.0	3350			

Rotation—Counter-clockwise at commutator end.
Brush Spring Tension—53 ozs. max. (new brushes).
Field Current—1.60-1.78 amperes at 6.0 volts.
Motoring Current—4.85-5.4 amps. at 6.0 volts.
Removal: Pivot mounted at left front of engine. To remove, take out pivot and clamp screws and nuts.
Belt Adjustment: ¾" belt deflection between generator and pump. Loosen clamp, swing generator out.

REGULATOR

Auto-Lite Model VRR-4001A. Voltage type.
NOTE—Cutout Relay has extra set of contacts for Generator "Teleflash" Indicator control.
See Electrical Equipment Section for complete data.
NOTE—Regulator cover sealed. Warranty void if seals broken.

Cutout Relay

Cuts In—6.4-6.6 volts.
Cuts Out—4.1-4.8 volts (approx. 4-6 amps. disch.).
Contact Gap—.015" min., ground contacts closed (ground contacts open when main contacts close).
Air Gap—.031-.034" at hing end of cor with contacts open (ground contacts closed).

Voltage Regulator

Voltage Setting—7.1-7.4 volts at 70°F.
Contact Gap—.012" Min. (armature against stop).
Air Gap—.048-.052" with contacts just opening.
Checking (without breaking seals) & Adjustment—*See Electrical Equipment Section for complete data.*

LIGHTING

Headlamps: Hall "Sealed Beam" type.
See Electrical Equipment Section for complete data.
Adjustment—Aim upper beams straight ahead (hot spot centers 3" below lamp center height at 25 ft.).
Beam Indicator—Red pilot bulb at lower center of speedometer dial. Lights when Upper Beam "on".
Direction Signal: Optl. ***See Electrical Equipment Section.***
Direction Signal Indicator—At left end of instrument panel. Flashes when Signal in use.
Direction Signal Flasher—Hudson No. 300877.

Switches

Lighting—Hudson No. 300641 (with Circuit Breaker), No. 300642 (switch only).
Beam Selector—Hudson No. 300799.
Instrument (Commodore)—Hudson No. 160092.
Door Switch—Hudson No. 300796.
Front Dome Light—Hudson No. 211312.
Rear Quarter Pillar—Hudson No. 160091.
Stop Light—Auto-Lite 100810K.
Direction Signal—Hudson No. 300875 (with wires).

MISC. ELECTRICAL

CIRCUIT BREAKERS: Vibrating thermostatic types.
Lighting Hudson 300643. 30 amp. On light switch.
Misc. Lighting—Hudson No. 301853. 20 ampere. On steering support bracket behind instrument panel.
Convertible Top & Hydraulic Window Regulators—Hudson No. 300626. 30 ampere. On steering support bracket behind instrument panel.
FUSES: Electric Clock—3 ampere. Behind clock.
Direction Signal—10 ampere. On Direction Signal Harness behind instrument panel.
Drive-Master—10 ampere. On Drive-Master Switch.
Weather Control—14 ampere. On heater.
GENERATOR CHARGE SIGNAL: Red indicator on instrument panel (to right of temperature gauge). Should light when ignition turned on and should go out when generator begins to charge.
See Electrical Equipment Section for complete data.
OIL PRESSURE SIGNAL: Red indicator on instrument panel (to left of gas gauge). Should light with ignition on, go out as soon as engine started.
See Electrical Equipment Section for complete data.
HORNS: Sparton or Auto-Lite Model HW-4021 (Low HW-4022 (High). Dual horns operated by relay.
Air Gap—.027-.029" for high pitch (short horn), .032-.034" low pitch (long horn).
Horn Relay: Hudson No. 164401. On engine dash.
Contacts Close—3 volts min., 4 volts max.
Open—2 volts min. (relay upright, terminals down).

ENGINE

ENGINE SPECIFICATIONS: Own Make. 8 cylinder, "L" head type.
Bore—3". ***See "Original Bore & Pistons" in Hudson Special Data.***
Stroke—4½".
Displacement—254 cubic inches. **Rated HP**—28.8.
Developed Horsepower—128 at 4200 RPM.
Compression Ratio (std.)—6.50-1 cast-iron head.
Compression Ratio (optl.)—7.00-1 aluminum head.
Compression & Vacuum Reading—*See Tune-Up.*

C NTINUED N NEXT PAGE

ENGINE

C NTINUED FR M PRECEDING PA E

ORIGINAL BORE & PISTONS: *See Hudson Shop Notes.*

ORIGINAL BEARING SIZES: *See Hudson Shop Notes.*

TIGHTENING TORQUES: *See Hudson Shop Notes.*

CYLINDER HEAD DIAGRAM: *See Hudson Shop Notes.*

OIL PAN REMOVAL: *See Hudson Shop Notes.*

PISTONS: Aluminum alloy, Cam ground, T-slot type.
Weight—10¼ ozs. (stripped). **Length**—3 3/16".
Removal—Pistons and rods removed from above or below.
Clearance—.0015 to .002" (skirt).
See "Original Bore & Pistons" in Hudson Special Data.

Replacement Pistons: *See Hudson Shop Notes.*

Fitting New Pistons: Use .0015" feeler ½" wide inserted between piston and cylinder wall on side opposite slot at right angles to pin. Pull to withdraw feeler must be within 3-4 lbs. Use Tool J-888-A Piston Feeler Scale to measure pull.

Installing Pistons: Slot away from camshaft.

PISTON RINGS: Two compression, two oil rings (one above pin, one below pin) per piston. Rings are square end type. Rings pinned to prevent rotation. Rings cut and notched to fit pin (clearance on pin equal to ring end gap.

Ring	Width	End Gap	Side Clearance
Compression	3/32"	.004-.009"	.001"
Oil (upper)	3/16"	.004-.009"	.001"
Oil (lower)	5/32"	.004-.009"	.001"

Installing Rings—Three top rings have offset pin notch (in relation to gap). Install rings so that alternate gaps offset.

Replacement Rings: *See Hudson Shop Notes.*

PISTON PIN: Diameter—¾". **Length**—2 7/16". Floating type with diamond-drilled pin holes in piston and bronze bushing (with oil grooves at sides) in connecting rod. Lock ring used at each end of pin.
Pin Fit in Piston—.0000-.0003" at 70°F., or hand push fit with piston at 200°F.
Pin Fit in Rod Bushing—.0003" clearance. Hand push fit at 70°F.

Replacement Pins: Std., .002", .005", .010" oversize. Select pin to fit piston. **Do not ream pin hole in piston.**

CONNECTING ROD: Length—8 3/16".
Weight—31.36 ozs. (with bearings).
Crankpin Journal Diameter—1.935-1.936".
See "Original Bearing Size" in Hudson Special Data.
Lower Bearing—Babbitt-lined, spun type.
Clearance—.0003-.0006". **Sideplay**—.007-.013".

Bearing Adjustment: None (no shims). Install replacement rods furnished on exchange basis. Do not file rods or caps. Palnuts used on bolt nuts.
NOTE—Identifying notches on side of cap and rod must be together when cap installed on rod.
Palnuts—Tighten finger tight, plus 1/3 turn.

Replacement Rods: Std. size and .010" undersize.

Installing Rods: Offset. Install rods with widest half of bearing toward rear (#1, 3, 5, 7), toward front (#2, 4, 6, 8). Oil scoop on all rods toward camshaft.

CRANKSHAFT: Five bearing type with integral counterweights and vibration dampener on forward end.

►*CAUTION—Crankshaft not interchangeable with earlier 8 cylinder shaft. 1948-49 shaft longer at rear end between oil slinger and flywheel flange.*

Journal Diameter—#1, 2.279-2.280"; #2, 2.311-2.312"; #3, 2.341-2.342"; #4, 2.373-2.374"; #5, 2.404-2.405".

Bearing Diameter—#1, 2.2805-2.2815"; #2, 2.3125-2.3135"; #3, 2.3425-2.3435"; #4, 2.3745-2.3755"; #5, 2.4055-2.4065".
See "Original Bearing Size" in Hudson Special Data.

Bearings—Bronze backed, babbitt lined type. Bearings secured in cap and crankcase by brass screws.
Clearance—.001".

Bearing Adjustment: None (no shims). Replace bearings. Do not file bearing caps.

►*CAUTION—Replacement of main bearings requires removal of crankshaft. Bearing shells retained by brass screws.*

Palnuts—Tighten finger tight, plus 1/3 turn.

Replacement Bearings: Reamed bearings furnished standard size and .010" Undersize. Unfinished bearings also supplied. *For Line-Reaming of Unfinished Replacement Bearings, see "Crankshaft & Main Bearings" in Hudson Shop Notes.*

End Thrust: Taken by center (#3) bearing. Replace bearing if endplay excessive.
Endplay—.006-.012".

CAMSHAFT: Five bearing type. Helical gear drive.
Bearing Diameter—#1, 2.028-2.030"; #2, 1.997-1.999"; #3, 1.965-1.967"; #4, 1.9345-1.9365"; #5, 1.497-1.499".
Bearings—Steel-backed, babbitt-lined bushings.
Clearance—.001-.002".
Camshaft Removal—*See Hudson Special Data.*

Replacement Bearings: Furnished as follows:
Finished Reamed—Will be proper dimension when pressed in place (.0026-.0055" press fit) and no reaming required.
Unfinished—Press in place (.0026-.0055" press fit and line ream to .001" larger than individual camshaft journals.

►*CAUTION*—Install all bearings with notch at top.

End Thrust: Bakelite thrust washer between gear and crankcase. Spring loaded button in front end of camshaft bears against hardened plate on gear cover.

Timing Gears: Crankshaft gear Cast-iron, camshaft gear Aluminum. Teeth have 20° pressure angle and are slightly crowned for quiet operation.
Identification of Gears—Figure "20" on front face of gears (crankshaft gear also marked "FRONT").
Replacement Gear Caution—Camshaft gear not furnished singly (set only). Crankshaft gear furnished singly or in matched set.
Backlash—.002-.004".

Camshaft Setting: Mesh marked crankshaft gear tooth between two marked teeth on camshaft gear.

VALVES:	Head Diameter	Stem Diameter	Length
Intake	1 1/2"	.3413"	5 3/32"
Exhaust	1 3/8"	.3397"	5 3/32"

	Seat Angle	Lift	Stem Clearance
Intake	45°	11/32"	.0015-.003"
Exhaust	45°	11/32"	.003-.004"

NOTE—Stem clearance worn limit .005" max.

Valve Guides: Removable type pressed in block.
Guide Removal & Installation—Use Tool J-1188 to drive guides out. Install guides with Tool J-883-A with top of guide 15/16" below top of cylinder block. With guides installed, ream guides with Tool J-129-3 to .3437" (11/32") which will provide proper valve stem-to-guide clearance. NOTE—Car manufacturer recommends that guides be cleaned with Tool KMO-122 to remove carbon and scale out of guides (pay particular attention to carbon in counterbore at top of exhaust guide).

Valve Springs: Cadmium plated springs are used. Install springs with closely coiled end up.

	Spring Pressure	Spring Length
Valve Closed	40 lbs.	2"
Valve Open	80 lbs.	1 21/32"

NOTE—Reject springs if pressure less than 34 pounds. Free length 2.343".

Valve Lifters: Roller shoe type, fitted in removable guides in cylinder block.

VALVE TIMING

Tappet Clearance: .006" Intake, .008" Exh. Hot.
NOTE—Removable apron in right front fender.

Valve Timing:—See Camshaft Setting above.
Intake Valves—Open 10°40' BTDC. Close 60° ALDC.
Exhaust Valves—Open 50° BLDC. Close 18°44' ATDC.
Above figures correct with .010" tappet clearance.
Valve Timing Check—With .010" tappet clearance #1 intake valve should open with piston 10°40' or .0494" BTDC when a point on the flywheel approximately 3.97 teeth before 'UDC.1-8/' mark lines up with indicator in inspection hole above starter. Reset tappet clearance at .006" hot and idling.

LUBRICATION

Engine Oiling System: Duo-flow (pressure and positive splash) system. Pump delivers oil to front and rear ends of upper tray in oil reservoir. Connecting rod bearings are lubricated by dippers on caps which dip into troughs in this upper tray and also splash oil inside crankcase. Part of this oil is caught in channels inside crankcase and fed into reservoirs directly over each camshaft and crankshaft bearing from which it flows into the bearings.
Crankcase Capacity—9 qts. (dry), 7 (refill).
Oil Filling Note—Whenever pan removed, install 2 qts. in upper tray before pan installed, then 7 qts. through oil filler after pan in place on engine.

Oil Pan Removal: *See Hudson Shop Notes.*
Normal Oil Pressure—4-12 lbs. with hot oil. No gauge used (see Oil Pressure Indicator below).

Oil Check Valve:—Located on right side of crankcase at rear. Opens at 4-12 lbs. with hot oil. Operates dash signal to indicate oil flow.

Oil Pump:—Oscillating plunger type, gear driven by camshaft. Mounted on right side of crankcase.

Oil Pressure Indicator:—Hudson Teleflash Oil Pressure Indicator. *See Electrical Equipment Section for complete data.*

Checking Oiling System:—*See Hudson Shop Notes.*

Crankcase Ventilation: Outlet pipe in rear valve compartment cover on right side of engine.

COOLING

Cooling System: Positive circulation with pump on front of engine and by-pass type thermostat.
Capacity—18 quarts.

Water Pump: Centrifugal, belt-driven, packless type. Shaft mounted on sealed duplex ball bearing.
See Water Pump Section for complete data.
Belt Adjustment—*See Generator Belt Adjustment.*

Thermostat: Hudson No. 166272. By-pass type in water outlet on cylinder head.
Setting—Starts to open 150-155°F. Fully open 185°.

Temperature Gauge: King-Seeley Electric.
Dash Unit—K-S 42125 (Super), 42140 (Com'dre.).
Engine Unit—K-S No. 41085.
See Miscellaneous Section for complete data.

CLUTCH

Own Make. Single plate, fluid cushioned type (cork insert type driven member operating in Hudsonite oil. 10" type used on all models.
See Clutch Section for complete data.

Facings—Cork insert type. Inside Diameter 6⅜". Outside Diam. 10". 108 corks, .203" thick.

Pedal Adjustment: Clearance between underside of toeboard and top face of pedal shank must be 1½". To adjust, loosen locknut above clevis, remove clevis pin, turn clevis in or out of link, tighten locknut after re-connecting clevis.

Clutch Oil Servicing: *See Hudson Special Data.*

Removal: Remove transmission (see Transmission Removal following). Drain clutch oil by turning engine over until plug on flywheel is accessible through timing inspection hole in rear engine support plate behind starter, remove plug, turn engine over ⅛ revolution until star on flywheel visible through timing hole (drain hole then at bottom), allow lubricant to be drained. Loosen mounting bolts in clutch cover rim to release spring tension, remove bolts and lift clutch assembly off car.

VACUMOTIVE DRIVE

Vacumotive Drive: Automatic clutch control. Optl.
See Clutch Section for complete data.

TRANSMISSION

Own Make. All helical gear type. Constant-mesh, synchro-mesh (Second & High), sliding gear (Low & Reverse) with remote (steering column) shift.

Identification—Metal tag attached by a cover bolt screw carries second speed ratio 1.65:1 (std.), 1.82:1 (cars with Drive-Master).
See Transmission Section for complete data.

Transmission Control: Handy-shift remote control type with shift lever mounted on steering column.
See Transmission Section for complete data.

Transmission Removal: Remove front seat cushion, disconnect front seat from track, disconnect seat adjusting lever and remove seat back from car. Disconnect accelerator pedal at accelerator rod, brake pedal rod at lever. Remove floor mat, remove Weather Control blower unit (2 screws each side), disconnect bowden wire at control valve at cylinder head. Remove floor opening cover over transmission. Disconnect front universal joint at transmission (wire bearings on universal joint spider). Remove bolts attaching center bearing support bracket, move propeller shaft to rear to clear companion flange at transmission. Disconnect clutch pedal lever return spring, remove clutch cross-shaft and bracket, disconnect clutch control link clevis. Disconnect Handy Shift by removing shifter shaft outer lever, nut, and washer. Remove flywheel guard from bottom of clutch housing. Remove two engine rear mounting bolts and nuts, jack up rear end of engine about ½" off frame cross member (CAUTION—use block of wood on jack to prevent damage to oil pan). Disconnect speedometer cable at transmission case, plug hole with wood plug. Remove two top screws attaching clutch housing to engine, install guide studs (headless screws) in these holes to support transmission, remove remaining screws. Remove breather pipe bracket from clutch housing and bolt attaching breather pipe and rear valve cover. Pull transmission straight back on guide studs, lift transmission out through floor opening

DRIVE-MASTER TRANSMISSION

Drive-Master Transmission: Optl. Conventional 3-speed transmission with automatic gear shifting between Second & High Gears. Used in conjunction with Vacumotive Drive (automatic clutch control).
Identification—Metal tag attached by a cover bolt screw carries second speed ratio 1.82:1.
See Transmission Section for complete data.

OVERDRIVE

Warner Model AS1-R10D. Optl. equip. used with the Hudson Transmission. Overdrive is solenoid operated type (no centrifugal pawls) with Governor control and throttle operated "kick-down".
See Transmission Section for complete data.
Overdrive Solenoid—Hudson No. 301757.
Lock-Out Switch—Hudson No. 301755.
Throttle Switch—Hudson No. 164438.
Governor—Hudson No. 165829 (standard), Hudson No. 165831 (cars with Drive-Master).
Relay—Hudson No. 165826. On left fender shield.

Removal: Same as standard transmission removal (above) except that overdrive control cable and wiring must also be disconnected.

UNIVERSALS

Spicer No. 1268-111X.....**Front & Rear**
Spicer No. 1268-102X.....**Intermediate**
Needle bearing types.
See Universals Section for complete data.

Propeller Shaft & Center Bearing: Two shafts used: 1) Front shaft supported by sealed ball-bearing just ahead of rear coupling flange (no slip joint). 2) Rear shaft with slip joint at forward end.
Center Bearing—Prelubricated sealed annular ball bearing fitted in cast steel housing bolted to support mounting which is secured to underside of frame cross members. Housing cradle mounted on two rubber supports and forward end of support mounting fitted with rubber cushion.
Center Bearing Removal & Installation—*See Hudson Special Data.*

REAR AXLE

Own Make. Semi-floating, hypoid gear type with Hotchkiss drive.
See Rear Axle Section for complete data.
Ratio—Std. or Drive-Master Cars: 4.1-1 standard, 4 5/9-1 Optl. Overdrive Cars: 4 5/9-1 std., 4.1-1 Optl.
Backlash—.004-.006". Screw adjustment.

Removal: Support car on stands under body frame just forward of rear springs, remove fender shields and rear wheels. Disconnect brake line at tee on axle housing, remove tee. Disconnect brake cables at equalizer bar clevis and unscrew end fittings, loosen nuts on cable conduit brackets on cross member and free conduits from brackets, disconnect cable conduit clips on rear springs, pull cables and conduits out through guides and clamps. Disconnect rear universal joint and lower propeller shaft. Disconnect lower end of shock absorbers, disconnect and remove rear stabilizer. Disconnect each rear end of springs, slide axle assembly out toward rear of car.

Axle Shaft Removal: Hoist rear of car. Remove rear wheels. Remove axle shaft nut and washer. Remove hub and drum assembly using screw type wheel puller (Tool J-736—CAUTION—Car manufacturer recommends that screw type puller be used, if knock-out type puller is used serious damage to differential parts may result). Remove 4 nuts on bearing cap bolts, remove bearing cap and shims (without disturbing brake backing plate). Pull rear wheel bearing and axle shaft, using puller Tool J-352. Do not drag axle shaft on oil seal assembly

Wheel Bearing Adjustment: Controlled by shims (.003", .005", or .015" thick) under bearing cap. To adjust, remove bearing cap (see directions above under Axle Shaft Removal), add or remove shims equally at both wheels (necessary to keep thrust spacer centered on differential pinion shaft).
Endplay—.001-.004".

SHOCK ABSORBERS

Delco or Monroe. Direct acting, hydraulic types.

Make	Front	Rear
Light Scale		
Monroe	300350	300351
Delco	301240	301241
Heavy Scale		
Monroe	301767	301768
Delco	301769	301770
Extra Heavy Scale		
Delco	301637	301638

See Shock Absorber Section for complete data.

FRONT SUSPENSION

Front Suspension: Independent, linked parallelogram type with coil springs and lateral stabilizer.
See Front Suspension Section for complete data.
Kingpin Inclination—3°36' crosswise.
Caster—½-1½°. Eccentric adjustment. Both wheels alike within ½°.
Camber—½-1½°. Eccentric adjustment. Both wheels alike within ½°.
Toe In—1/32" ± 1/32". Center steering arm on frame must be at center of car. To adjust, loosen clamps at ends of each tie rod and adjust tubes equally (to increase toe-in turn rods in direction of wheel travel, to decrease, turn in opposite direction).
Steering Geometry—Inner wheel 30°. Outer 25°.

STEERING GEAR

Gemmer Model 335. "3-tooth" Worm-and-Roller type with "push-pull" adjustments.
See Steering Gear Section for complete data.

BRAKES

Service: Bendix Hydraulic, Duo-Servo, Single Anchor type without eccentric adjustment. Mechanical follow-up (pedal linked to hand brake cables) provided. Hand lever applies rear wheel service brakes.
See Brake Section for complete data.
Wheel Cylinders Diam. front wh'l. 1⅛", rear 15/16".
Drums—11" centrifuse type.
Lining Molded. Width 2¼" (front whl.), 1¾" (rear). Length per shoe 11" (exc. 11 1/16" rear secondary).
Clearance—.015" at both ends of secondary shoe with primary shoe forced out against drum.

Mechanical Follow-Up (Reserve): Over-running linkage between brake pedal and parking (hand-brake) linkage which applies rear wheel brakes by pedal mechanically if hydraulic system not operating.
See Brake Section for complete data.
Setting—1¼" clearance between clevis pin and rear end of slot in pedal rod rear clevis.

Hand Brake: See Service Brakes above.

MISC. MECHANICAL

Power Operated Convertible Top & Windows: Hydro-Lectric (hydraulic actuation with motor-driven pump supplying oil under pressure for power cylinders. *See Miscellaneous Section for complete data.*

Windshield Wiper: Cable Operated—Vacuum type.
See Miscellaneous Section for complete data.

MODEL IDENTIFICATION

SERIAL & ENGINE NUMBER: Stamped on plate on right front door hinge pillar post and stamped vertically on right side of cylinder at upper front end.
1950 Numbers—500101 Up.
Identification—First three figures of number indicate Series and Model: 500101 Pacemaker Six.

TUNE-UP

COMPRESSION PRESSURE: 100 lbs. min. Compression between cylinders should not vary more than 10 lbs.

VACUUM READING: 17-18 idling at 540-560 RPM. (Std.), 580-600 RPM. (with Vacumotive, Drive-Master or Super-Matic).

FIRING ORDER: 1-5-3-6-2-4. See diagram.

SPARK PLUG GAPS: .032".
Plugs for Cast-iron Head—Champion J-7. 14 mm.
Plugs for Aluminum Head—Champion H-10. 14 mm.

DISTRIBUTOR: Breaker Gap—.020".
Cam Angle—38° Closed. 22° Open.
Breaker Arm Spring Tension—17-20 ounces.
Automatic & Vacuum Advance—*See Ignition.*
Condenser Capacity—.20-.25 microfarad.

IGNITION TIMING: TDC (top dead center).
Timing Procedure—*See Ignition Timing.*
Flywheel Mark—"UDC.1/" aligned with lower edge of rear engine support plate opening behind starter.
Fuel Compensator Setting—Slight ping at 15 MPH. when accelerating from 10 MPH. in high gear.

CARBURETION:
Idle Setting—½-1½ turns open. Turn screw out for richer mixture.
Idle Speed (Std.)—540-560 RPM.
Idle Speed (with Vacumotive, Drive-Master or Super-Matic Drive)—580-600 RPM.
Float Level—½" from top of projection on underside of bowl cover to top of seam on free end of float (invert bowl cover and float to check level).
Accelerating Pump—Outer hole (Normal). Inner hole if less charge required.

Choke Setting: Centered at index.

Fuel Pump Pressure: (Carter)—4-5 lbs. at carburetor, **(AC)**—3-4 lbs.

MANIFOLD HEAT CONTROL: Automatic thermostatic type.

VALVE TAPPET CLEARANCE: .008" Int., .010" Exh., Hot.
NOTE—Self-locking tappet adjusting screws used. Remove apron in right front fender for access.
Valve Timing Check—*See Valve Timing.*

STARTING: *See Battery, Starter, Generator, Regulator.*

IGNITION

IGNITION SWITCH: Mitchellock.

COIL: Auto-Lite No. CR-6012-A. Located on left side of engine above distributor.
Ignition Current—1.5-2.0 amperes idling, 5 stopped.

CONDENSER: Auto-Lite.
Capacity—.20-.25 microfarad.

DISTRIBUTOR: Auto-Lite Model IAT-4002. Automatic advance type with Vacuum Spark Control and Fuel Compensator adjustment.
Breaker Gap—.020".
Cam Angle—38° Closed, 22° Open.
Breaker Arm Spring Tension—17-20 ounces.
Rotation—Clockwise viewed from above.

Automatic Advance

Degrees Distr.	R.P.M.	Degrees Eng.	R.P.M.
Start	300	0	600
1	365	2	730
3	400	6	800
9	1090	18	2180
10	1200	20	2400

Fuel Compensator: 10° advance or retard adjustment at distributor. See Ignition Timing.

Vacuum Spark Control: Auto-Lite. Integral type. Linked directly to breaker plate. Provides additional advance at speeds above idling except when engine accelerated or operated with wide open throttle when spark retarded by return spring in unit.

Vacuum Advance

Distr. Degrees	Eng. Degrees	Vacuum (" of HG)
Start	0°	9½"
1°	2°	10"
3°	6°	11"
4°	8°	11½"
5°	10°	12"

Distributor Removal: On left side of engine. Disconnect vacuum line, take out hold-down screw in advance arm. Lift off.

►***INSTALLATION CAUTION—If oil pump removed, refer to Oil Pump installation directions in Hudson Special Data.***

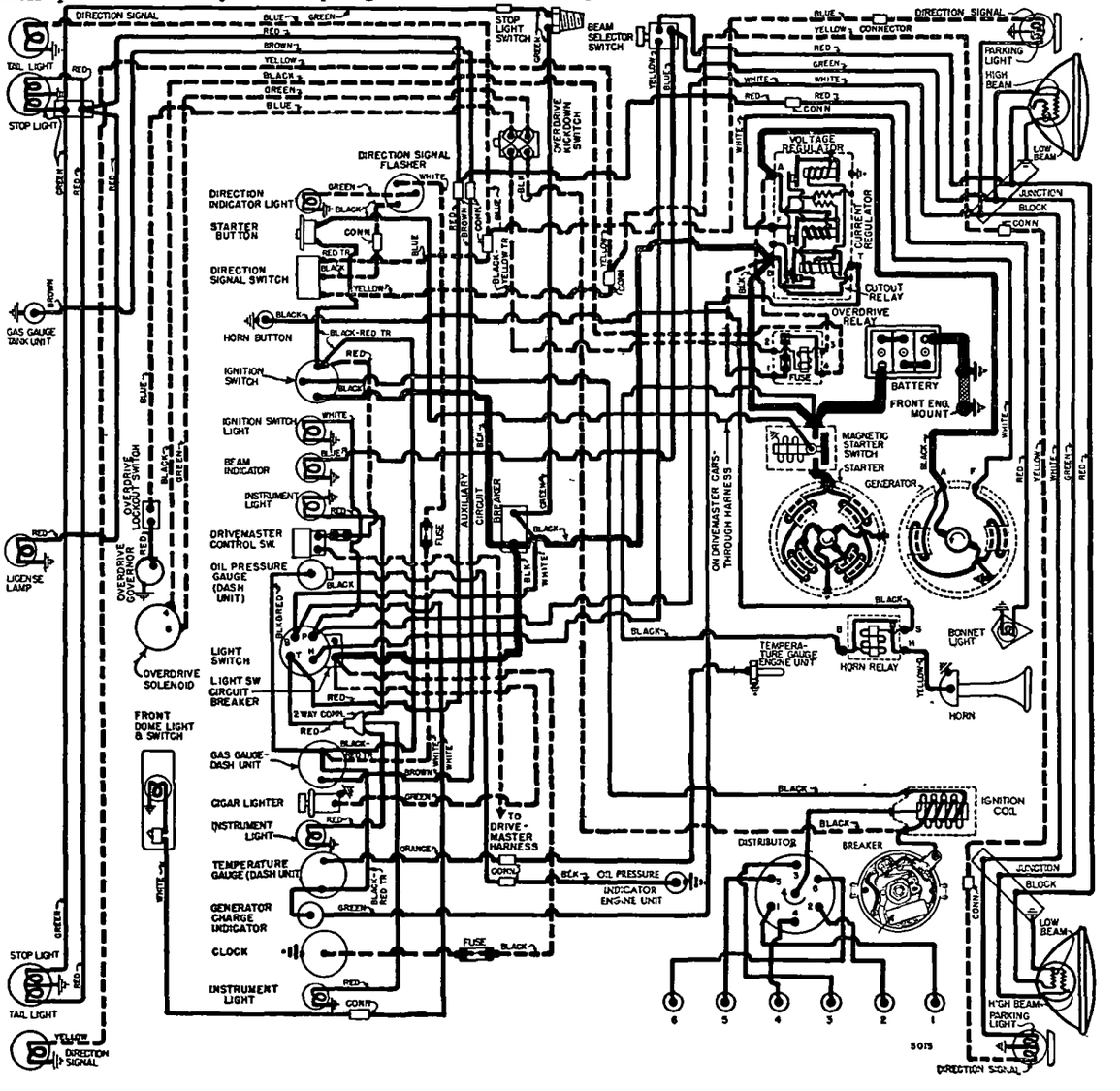

IGNITION TIMING

Std. Setting.....**At Top Dead Center**
NOTE—Modify this setting for special fuel and altitude conditions. See Fuel Compensator Setting.
Flywheel Mark—"UDC.1/" (#1 and #6 piston top dead center position) with 4 short marks (¼" apart) ahead of this mark. Visible in opening behind starter.
Timing—With #1 piston on compression stroke, crank engine until long line of flywheel mark "UDC-1/" lines up with pointer in rear engine support plate behind starter. Loosen hold-down screw in quadrant, rotate distributor clockwise to limit of hold-down slot, then rotate distributor counter-clockwise until contacts open, tighten quadrant screw. Check Fuel Compensator setting.
Timing (with Neon Timing Light)—Mark long line on flywheel with white chalk and loosen hold-down screw in distributor quadrant. Operate the engine at idle speed with timing light aimed at flywheel opening and rotate distributor until chalk mark lines up with pointer. Tighten quadrant screw.
Fuel Compensator Setting—Set for slight ping at 12 MPH. when accelerating from 10 MPH. with wide open throttle. To adjust, loosen hold-down screw, rotate distributor counter-clockwise (if ping too severe), clockwise (if no ping). **Final setting must not be more than 1" (1st short line) ahead of "UDC-1/" flywheel mark.**

CARBURETOR

Carter WA1-749S. 1¼" single barrel downdraft type with Carter Climatic Control.
Casting No. on Flange—682.
See Carburetor Section for complete data.
Settings (Idle Setting, Float Level, and Accelerating Pump): *See Tune-Up data.*
Metering Rods & Jets—*See Carter Jet Table in Carburetor Section.*
Fast Idle: Carter Single Barrel Carburetor type.
See Carburetion Equipment Section for complete data.
Setting—⅝" clearance between choke valve and air horn (Gauge T109-85) with throttle valve closed and stopscrew against (not on) first step of fast idle cam. Adjust by bending connector link at lower offset (Tool T109-41).
Automatic Choke: Carter Climatic Control (Single Barrel Carburetor).
See Carburetion Equipment Section for complete data.
Setting—Center at index.

CARB. EQUIPMENT

Air Cleaner: AC. Oil-wetted Std., Oil-bath Optl.
Servicing—*See 1949 Hudson Six.*
Fuel Pump (Std.): Carter Model M729SZ.
Optl. (Fuel & Vacuum)—AC type "AJ".
Pressure—(Carter) 4-5 lbs. at carb. **(AC)** 3-4 lbs.
See Carburetion Equipment Section for complete data.
Gasoline Gauge: King-Seeley Electric type.
See Carburetion Equipment Section for complete data.

BATTERY

National Type OE-2L-100. 6 volt, 17 Plate, 100 Ampere Hour Capacity (20 hour rate).
Grounded Terminal—Positive (+) to frame and engine by a single strap.
Location—On left side under engine hood.

STARTER

Auto-Lite Model MZ-4159.
Drive—Bendix No. A-1806. Inboard Barrel type.
Rotation—Counter-clockwise at commutator end.
Brush Spring Tension—42-53 ozs. (new brushes).
Cranking Engine—Approx. 160 amperes at 150 RPM.

Performance Data

Torque	R.P.M.	Volts	Amperes
0 ft. lbs.	4300	5.5	70
4.4 "	Lock	2.0	280

Removal: On left front face of rear motor support. To remove, take off Drivemaster mounting bracket bolts (on cars equipped with Drivemaster), disconnect linkage, and pull bracket out and forward, disconnect cables from solenoid switch, remove two starter mounting stud nuts and remove starter motor assembly.
Starting Switch: Auto-Lite No. SS-4001. On starter with pushbutton on instrument panel. Operative only with ignition "on" (and clutch disengaged on cars with Vacumotive Drive, Drive-Master or Super-Matic).
See Electrical Equipment Section for complete data.

GENERATOR

Auto-Lite Model GDZ-6001B.
Two brush (shunt) type with voltage and current regulation. Ventilated.
Maximum Charging Rate—35 amperes at 8 volts.
Charging Rate Adjustment—None (see Regulator).

Performance Data

Amperes	Volts	Cold—R.P.M.—Hot
0	6.4	870-970 950-1050
35	8.0	1800-2000 2150-2350

Rotation—Counter-clockwise at commutator end.
Brush Spring Tension—53 ozs. max. (new brushes).
Field Current—1.6-1.8 amperes at 6.0 volts.
Motoring Current—4.2-4.6 amps. at 6.0 volts.
Removal: Pivot mounted at left front of engine. To remove, take out pivot and clamp screws and nuts.
Belt Adjustment: ¾" belt deflection between generator and pump pulleys. Loosen bolts, swing generator out.

REGULATOR

Auto-Lite Model VRP-6002A. Vibrating type Voltage and current regulators (with Cutout Relay).
NOTE—Cutout Relay has extra set of contacts for Generator "Teleflash" Indicator control.
NOTE—Regulator cover sealed. Warranty void if seals broken.

Cutout Relay

Cuts In—6.4-7.0 volts (set to 6.4-6.6 volts).
Cuts Out—4.1-4.8 volts (approx. 4-6 amps. disch.).
Contact Gap—.015" min., ground contacts closed (ground contacts open when main contacts close).
Air Gap—.031-.034" at hinge end of core with contacts open (ground contacts closed).

Voltage Regulator

Voltage Setting—7.2-7.5 volts at 70°F. See Electrical Equipment Section for settings at other temperatures.
Contact Gap—.012" Min. (armature against stop pin).
Air Gap—.048-.052" with contacts just opening.
Checking (without breaking seals) & Adjustment—*See Electrical Equipment Section for complete data.*

Current Regulator

Setting—34-36 amperes (marked '35' on the cover).
Contact Gap—.012" min. (armature against stop).
Air Gap—.048-.052" with contacts just opening.
Checking (without breaking seals) & Adjustment—*See Electrical Equipment Section for complete data.*

LIGHTING

See 1949 Hudson Six pages for Lighting data.

MISC. ELECTRICAL

See 1949 Hudson Six pages for Circuit Breakers, Generator Charge & Oil Pressure Signals, and Horns.

ENGINE

ENGINE SPECIFICATIONS: Own Make. Six cylinder, "L" head type.
Bore—3 9/16". *See "Original Bore & Pistons" in Hudson Special Data.*
Stroke—3 7/8".
Displacement—232 cu. ins. **Rated HP**—30.4.
Developed Horsepower—112 at 4200 RPM.
Compression Ratio (Std.)—6.70-1 cast-iron head.
Compression Ratio (Optl.)—7.20-1 aluminum head.
Compression & Vacuum Reading—*See Tune-Up.*
ORIGINAL BORE & PISTONS: *See Hudson Special Data.*
ORIGINAL BEARING SIZES: *See Hudson Special Data.*
TIGHTENING TORQUES: *See Hudson Special Data.*
CYLINDER HEAD: *CAUTION—NOT INTERCHANGEABLE with other engines. Marked "500" to right of cylinder water outlet.*
►**Head Diagram & Tightening Torques**—*See Hudson Special Data.*
OIL PAN REMOVAL: *See Hudson Special Data.*
PISTONS: Aluminum alloy, Cam ground, T-slot type.
►*CAUTION—Pistons NOT INTERCHANGEABLE with other engines* (greater height from pin hole to top—2.310-2.314" on "500", 2.060-2.064" other Sixes).
Weight—18⅛ ozs. (stripped). **Length**—3¾".
Removal—Pistons and rods removed from above.
Clearance—.0015 "to .002" (skirt).
See "Original Bore & Pistons" in Hudson Special Data.
Piston Fitting—Insert piston in cylinder with .0015" feeler gauge. Pull to withdraw feeler 3 to 4 lbs.
Replacement Pistons: *See Hudson Special Data.*
Installing Pistons: Slot away from camshaft.
PISTON RINGS: Two compression, two oil rings (one above pin, one below pin) per piston. Rings are square end type. Rings pinned to prevent rotation. Rings cut and notched to fit pin (clearance on pin equal to ring end gap.

Ring	Width	End Gap	Side Clearance
Compression	5/64"	.006-.014"	.001"
Oil (upper)	3/16"	.006-.014"	.001"
Oil (lower)	5/32"	.006-.014"	.001"

Installing Rings—Three top rings have offset pin notch (in relation to gap). Install rings so that alternate gaps offset.
Replacement Rings: *See Hudson Special Data.*
PISTON PIN: Diameter—.9684-.9687". **Lgth.**—2.9375". Floating type with diamond-drilled pin holes in piston and rolled steel babbitt faced bearing in connecting rod. Pin retained by lock ring at each end.
Pin Fit in Piston—.0000-.0003" at 70°F. or hand push fit with piston at 200°F.
Pin Fit in Rod Bushing—Hand push fit at 70°F.
Replacement Pins: Std., .002", .005", .010" oversize. Select pin to fit piston. **Do not ream pin hole in piston.**
CONNECTING ROD: Length—8⅛".
NOTE—Connecting Rods are interchangeable with other Six Cylinder engines.
Weight—34.24 ozs. (without bearings).
Crankpin Journal Diameter—2.1244-2.1254".
See "Original Bearing Size" in Hudson Special Data.

CONTINUED N NEXT PA E

ENGINE

CONTINUED FROM PRECEDING PA E

Lower Bearing—steel-backed, babbitt-lined type with upper and lower halves interchangeable. No shims.
Clearance—.0005-.0015". **Sideplay**—.007-.013".
Bearing Adjustment: None (no shims). Replace bearings. Do not file rods or bearing caps.
NOTE—Identifying notches on side of cap and rod must be together when cap installed on rod.
Palnuts—Tighten finger tight, plus 1/3 turn.
Replacement Bearings: Large std., small std., .010" US.
Installing Rods: Not offset. Oil spit hole in lower end of rod must be toward valve side of engine.

CRANKSHAFT: Four bearing type with integral counterweights. Vibration dampener on front end.
NOTE—Crankshaft not interchangeable with other Six Cylinder engines.
Journal Diameter—2.4988-2.4998".
Bearing Diameter—2.4993-2.5013".
See "Original Bearing Size" in Hudson Special Data.
Bearings—Removable steel-backed, babbitt-lined type. Upper and lower halves of each bearing are interchangeable.
Clearance—.0005-.0015".
Front & Rear Oil Seals—*See "Crankshaft & Main Bearings" in Hudson Special Data.*
Bearing Adjustment: None (no shims). Replace bearings. Do not file bearing caps.
NOTE—Bearing shells positioned in cap and crankcase by tang on edge of shell. Can be rotated out without removing crankshaft by using Tool KMO-734.
Palnuts—Tighten finger tight, plus 1/3 turn.
Replacement Bearings: Std., optl. std., .010" US.
End Thrust: Taken by #3 bearing. Replace bearing if endplay excessive.
Endplay: .003-.009".

CAMSHAFT: 4 bearing type. Non-adjustable chain.
Bearing Diameter—#1, 2.375-2.3755"; #2, 1.997-1.9975"; #3, 1.965-1.9655"; #4, 1.497-1.4975".
Bearings—Steel-backed, babbitt-lined bushings.
Clearance—.0015-.002".
Camshaft Removal—*See Hudson Special Data.*
Replacement Bearings: Finished-reamed or unfinished.
Finished Reamed—Will be proper dimension when pressed in place (.0026-.0055" press fit) and no reaming required.
Unfinished—Press in place (.0026-.0055" press fit) and line ream to .001" larger than individual camshaft journals.
►*CAUTION*—Install all bearings with notch at top.
End Thrust: Steel thrust plate fitted between front end of camshaft and sprocket. Plate attached to crankcase by two capscrews and locks.
Timing Chain: Morse. 60 links. 3/8" pitch. Width 1¼".
Chain Tension Shoe—Fibre shoe backed by synthetic rubber plunger mounted inside timing chain cover at top. Holds chain in close mesh with sprockets and prevents whip.
Camshaft Setting: Sprockets marked. Two chain guide links marked with center holes. Mesh chain with center hole in each link opposite "O" mark on each sprocket with #1 piston at top dead center (crankshaft sprocket keyway at top with #1 piston at TDC.) NOTE—With this setting, there should be 6 full links plus two half-links between marks on sprockets (half-links opposite sprocket marks).

VALVES:

	Head Diameter	Stem Diameter	Length
Intake	1 53/64"	.3402-.3412"	5.730"
Exhaust	1 9/16"	.3402-.3412"	5.730"

	Seat Angle	Lift	Stem Clearance
Intake	45°	11/32"	.0015-.003"
Exhaust	45°	.346"	.002-.004"

NOTE—Stem clearance worn limit .005" max.
Valve Guides: Removable, one-piece, cast-iron Exhaust guides counterbored at upper end. Install guides as follows:
Intake Guide—Upper end 1 7/16" below top of valve seat. Finish ream to .3432-.3442".
Exhaust Guides—Upper end 1 3/32" below top of valve seat. Finish ream to .3432-.3442". Counterbored 9/16" deep to diameter of 25/64".
Valve Springs: Cadmium plated springs are used. Install springs with closely coiled end up.

	Spring Pressure	Length
Valve Closed	77 lbs	2 3/16"

NOTE—Reject springs if pressure less than 60 lbs. Free length 2.500".
Valve Lifters: Mushroom type fitted directly in crankcase. Removed from below with camshaft out.

VALVE TIMING

Tappet Clearance: .008" Intake, .010" Exhaust, Hot. Self-locking tappet screws are used. Remove right front fender apron for access to valve compartment.
Valve Timing: See Camshaft Setting above.
Intake Valves—Open 7°18' BTDC. Close 53°42' ALDC.
Exhaust Valves—Open 53°18' BLDC. Close 7°42' ATDC. These figures correct with .010" tappet clear.
Valve Timing Check: No. 1 intake valve opens 7°18' BTDC. with point on flywheel approximately 2¾ teeth before top dead center mark "UDC-1/" in line with lower edge of opening in rear engine support plate behind starter.

LUBRICATION

Crankcase Capacity—7 qts. (refill), 7½ qts. (dry).
Normal Oil Pressure—40 lbs. at 30 MPH. No gauge used.
See 1949 Hudson Six for all other Lubrication data.

COOLING

Capacity—17 quarts.
See 1949 Hudson Six for all other Cooling data.

CLUTCH

Own Make—Single plate, fluid cushioned type (cork insert type driven member operating in Hudsonite oil. 9" type used on standard models, 10" type used with Drive-Master.
See Clutch Section for complete data.
Facings—Cork insert type. Inside Diameter 6⅜". Outside Diam. 9" (Std.), 10" (With Drive-Master), 90 corks (9"), 108 corks (10"), .203" thick.
Pedal Adjustment, Clutch Oil Servicing, Removal: *See 1949 Hudson Six.*

VACUMOTIVE DRIVE

Vacumotive Drive: Automatic clutch control. Optl.
See Clutch Section for complete data.

TRANSMISSION

Own Make—All helical gear type. Constant-mesh, synchro-mesh (Second & High), sliding gear (Low & Reverse) with remote (steering column) shift.
Second Speed Ratio—1.82:1.
See Transmission Section for complete data.
Transmission Control & Transmission Removal: *See 1949 Hudson Six.*

DRIVE-MASTER TRANSMISSION

Drive-Master Transmission: Optl. *See 1949 Hudson Six.*

OVERDRIVE

Warner Type R10D—Optl. (with Hudson Transmission). Part of Super-Matic Drive. Has simplified control (new Solenoid, Relay & Throttle kick-down switch). *See Transmission Section for complete data.*
Removal: *See 1949 Hudson Six.*

SUPER-MATIC DRIVE

Own Make—Four-speed automatic transmission (3-speed automatic shift plus ultra-low). Optl.
See Transmission Section for complete data.

UNIVERSALS

Spicer—Needle bearing type. Three used with intermediate universal to rear of propeller shaft center bearing. *See Universals Section for complete data.*
Propeller Shaft & Center Bearing: *See 1949 Hudson Six.*

REAR AXLE

Own Make—Semi-floating, hypoid gear type with Hotchkiss drive.
See Rear Axle Section for complete data.

Ratios	Std.	Optl.
Std. Transmission	4.1-1	4.55 or 3.82-1
With Drive-Master	4.1-1	4.55 or 3.82-1
With Overdrive	4.55-1	4.1-1
With Super-Matic	4.1-1	4.55-1

Backlash—.004-.006". Screw adjustment.
Rear Axle Removal, Axle Shaft Removal & Wheel Bearing Adjustment: *See 1949 Hudson Six for data.*

SHOCK ABSORBERS

Delco or Monroe—Direct acting, hydraulic types.
See Shock Absorber Section for complete data.

FRONT SUSPENSION

Front Suspension: Independent, linked parallelogram type. *See 1949 Hudson Six car pages for data.*

STEERING GEAR

Gemmer Model 335—"3-tooth" Worm-and-Roller type with "push-pull" adjustments.
See Steering Gear Section for complete data.

BRAKES

Service: Bendix Hydraulic, Duo-Servo, Single Anchor type without eccentric adjustment. Mechanical follow-up (pedal linked to hand brake cables) provided. Hand lever applies rear wheel service brakes.
See Brake Section for complete data.
Wheel Cylinders—Diameters: Front wheel 1 1/16", Rear wheel 15/16".
Drums—11" centrifuse type.
Lining—Molded. Width 1¾" (front & rear). Length per shoe 11" (except rear secondary 11 1/16").
Clearance—.015" at both ends of secondary (rear) shoe with primary shoe forced out against drum.
Mechanical Follow-Up (Reserve): Over-running linkage between brake pedal and parking (hand brake) linkage which causes rear wheel brakes to be applied mechanically by pedal if hydraulic system not operating.
Setting—1¼" clearance between clevis pin and rear end of slot in pedal rod rear clevis.
See Brake Section for complete data.
Hand Brake: See Service Brakes above.

MISC. MECHANICAL

Power Operated Convertible Top & Windows and Windshield Wipers: *See 1949 Hudson Six for data.*

MODEL IDENTIFICATION

SERIAL NUMBER: On left front door hinge post.
1949 Numbers—Model K-1491—K-491-001000 and up, Deluxe K-492—K-492-001000 and up.
Body Number Note—Stamped on plate on right front face of dash in engine compartment.

ENGINE NUMBER: Stamped on pad on left front upper corner of engine block and on Engine Name Plate on left side of crankcase.
NOTE—Numeral following Engine Model Designation (first part of Engine Number on Engine Name Plate) indicates Engine Plant: 4—Detroit, 8—Muskegon.

►**Engine Number Symbol (Special Bore & Bearing Sizes)** *See "Original Bore & Pistons" & "Original Bearing Sizes" in Frazer Special Data.* NOTE—Symbol consists of 1 or 2 letters following engine number.

TUNE-UP

COMPRESSION PRESSURE: 120-130 lbs. (7.3-1 Heads) at cranking speed of 70 RPM. (engine hot, all plugs out, throttle wide open). All cylinders must be equal within 10 lbs.
NOTE—7.3-1 Heads marked by "73" stamped on head directly above engine number pad on block.

VACUUM READING: 17½" steady idling at 550 RPM.

FIRING ORDER: 1-5-3-6-2-4 .See diagram.

SPARK PLUG GAPS: .032".
Plug Type—Auto-Lite A-5.

DISTRIBUTOR: Breaker Gap—.022" (.018-.022").
Cam Angle—38° closed, 22° open.
Breaker Arm Spring Tension—17-20 ozs.
Automatic & Vacuum Advance—*See Ignition.*
Condenser Capacity—.20-.25 microfarad.

IGNITION TIMING: 4° BTDC.
Timing Procedure—*See Ignition Timing.*
Timing Mark—4th. graduation before top dead center "0" mark on vibration dampener.

►***CAUTION—Engine must be idling below 450° RPM. when setting timing.***
Octane Selector Setting—Set for slight ping when accelerating with wide open throttle.

CARBURETION:
Idle Setting—(WA1) ¾-1¾ turns open—one screw. (WCD) 1-1½ turns open—two screws. Turning screws out gives richer mixture.
Idle Speed—550 RPM.
Float Level (WA1 Carb.)—½" from top of projection on bowl cover to top of soldered seam on free end of float (bowl cover inverted).
Float Level (WCD Carb.)—Flush to 1/32" from top of each float to gasket seat on cover with valve closed (floats must hang free on inverted cover).
Accelerating Pump—(WA1) Lower Hole, med., Normal. (WCD) Lower Hole, short stroke, Normal.

Choke Setting: Centered (coil housing at index mark).

Fuel Pump Pressure: 3-4½ lbs. (pump mounted at front of engine).

►***CAUTION—Pump pressure must not exceed 4½ lbs.***

MANIFOLD HEAT CONTROL: Automatic thermostatic type. See that valve operates freely.

VALVE TAPPET CLEARANCE: .014" All Valves, Cold.
Adjustment Procedure—*See Frazer & Kaiser Special Data.*
NOTE—Remove splash shield under right front fender for convenience in adjusting valves.
Valve Timing Check—*See Valve Timing.*

STARTING: *See Battery, Starter, Generator, Regulator.*

IGNITION

IGNITION SWITCH: Kaiser&Frazer No. 204485.
Lock Cylinder—Kaiser-Frazer No. 203885 (with key).

COIL: Auto-Lite IG-6001 or 9A. On left side of engine opposite distributor.
Ignition Current—4.8 amperes at 6.3 volts (stopped).

CONDENSER: Auto-Lite Part No. IG-2671K.
Capacity—.20-.25 microfarad.

DISTRIBUTOR: Auto-Lite Model IGS-4214. Full automatic advance type with auxiliary vacuum spark control and octane selector adjustment.
Breaker Plate Identification—Maximum vacuum advance limited by slot in plate. Plate marked #5.
Breaker Gap—.022" (.018-.022").
Cam Angle—38° closed, 22° open.
Breaker Arm Spring Tension—17-20 ozs.
Rotation—Counter-clockwise viewed from above.

Automatic Advance

Distributor Degrees	Distributor R.P.M.	Engine Degrees	Engine R.P.M.
Start	325	0	650
1	450	2	900
6.5	1200	13	2400
8	1475	16	2950
9	1675	18	3350

Octane Selector—Manual adjustment at distributor providing advance and retard. See Ignition Timing.

Vacuum Spark Control: Auto-Lite (integral type). Linked directly to breaker plate. Provides additional advance at speeds above idling except when engine accelerated or operated with wide open throttle when spark retarded by return spring in unit.

CONTINUED N NEXT PAGE

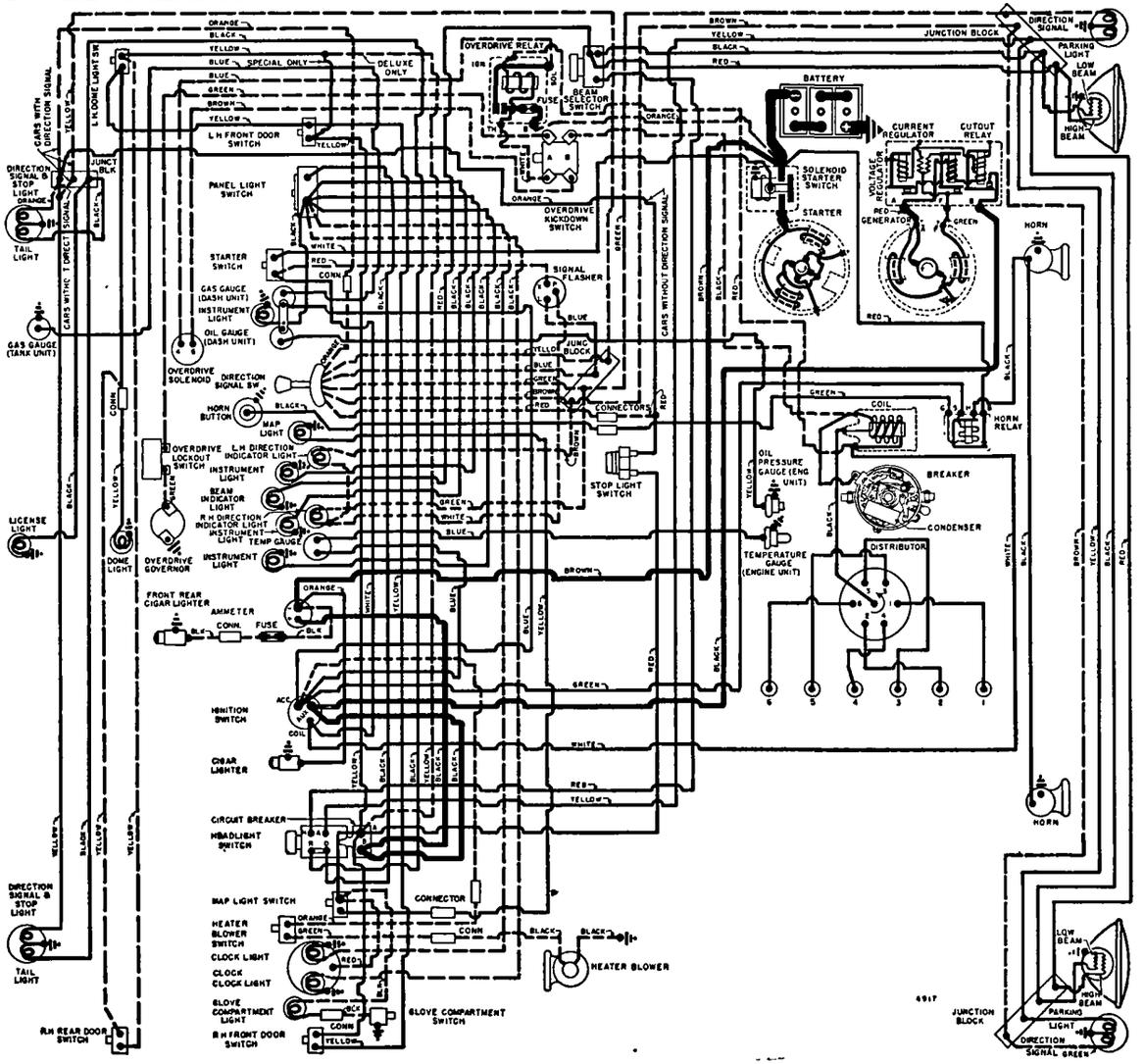

C NTINUED FR M PRECEDIN PAGE

Vacuum Advance

Distr. Degrees	Eng. Degrees	Vacuum (" of HG)
Start	0°	10"
3	6°	13"
5	10°	15"

Distributor Removal: On cylinder head between #4 and #5 cylinders. To remove, disconnect vacuum line, take out hold-down screw in advance arm.

IGNITION TIMING

Std. Setting.....4° BTDC.
Timing Mark—Timing mark located on vibration dampener. Consists of "0" mark at top dead center with 1° graduations before and after this point.
Timing (with Timing Light C-693)—Mark fourth degree mark before "0" top dead center mark on vibration dampener with chalk or white paint. Connect timing light to #1 spark plug terminal and direct light at timing mark. Idle engine **below 450 RPM.** (back off throttle stopscrew to decrease normal idle speed of 550 RPM.). Loosen hold-down screw in advance arm, center screw in slot, tighten hold-down screw. Loosen cap screw in end of arm under distributor, rotate distributor until timing mark appears in line with pointer, tighten cap screw. Check octane selector setting.
►*CAUTION—Reset engine idling speed at 550 RPM.*
Octane Selector Setting—Set for slight ping when accelerating with wide-open throttle. To adjust, loosen hold-down screw in advance arm, rotate distributor clockwise (if no ping noted), counter-clockwise (if ping too severe).

CARBURETOR

CARTER WA-1

Carter WA1 Type 622SB. (Special). 1¼" Single Barrel, Downdraft with Carter Climatic Control.
Casting No. on Flange—309.
See Carburetor Section for complete data.
Settings (Idle Setting, Float Level, and Accelerating Pump): *See Tune-Up data.*
Metering Rods & Jets—*See Carter Jet Table in Carburetor Section.*
Fast Idle (WA1 Carburetors): Carter Single Barrel.
See Carburetion Equipment Section for data.
Setting—⅝" clearance between choke valve and air horn (Gauge T109-85) with throttle valve closed and stopscrew against (not on) first step of fast idle cam. Adjust by bending connector link at lower offset (Tool T109-41).
Automatic Choke (WA1 Carburetors): Carter Climatic Control (Single Carburetor Type).
See Carburetion Equipment Section for data.
Setting—Centered (coil housing at index mark).

CARBURETOR

CARTER WCD

Carter WCD Type 723S (Deluxe)—1¼ Dual (Double barrel), Downdraft type with Fast Idle and Climatic Control.
Casting No. on Flange—550.
See Carburetor Section for complete data.
Settings (Idle Setting, Float Level, and Accelerating Pump): *See Tune-Up data.*
Metering Rods & Jets—*See Carter Jet Table in Carburetor Section.*
Fast Idle: Carter Dual (WCD) type.
See Carburetion Equipment Section for complete data.
Setting—.018" throttle opening with choke valve held closed and throttle lever stopscrew backed off.
Automatic Choke: Carter Climatic Control (Dual Carburetor Type).
See Carburetion Equipment Section for data.
Setting—Centered (coil housing at index mark).

CARB. EQUIPMENT

Air Cleaner: (Special). AC #1544029 Oil-bath type.
Element—AC No. 7-S.
Servicing—Empty and clean reservoir, wash cleaner in kerosene, refill to indicator line with SAE No. 50 engine oil (No. 20 for below freezing temp.) at 2000 mile intervals or when engine tuned.
Fuel Pump: AC No. 1539074 combination Fuel-and-Vacuum Pump.
Replacement Pump—AC No. 582.
►*CAUTION—Install pump with rocker arms UNDER camshaft eccentric.*
See Carburetion Equipment Section for data.
Pressure—3-4¼ lbs.
Gasoline Gauge: King-Seeley electric type.
Dash Unit—K-S No. 42455.
Tank Unit—K-S No. 7916.
See Carburetion Equipment Section for complete data.

BATTERY

Auto-Lite Type 1M-100D—6 Volt, 15 Plate, 105 Ampere Hour Capacity (20 hour rate).
Grounded Terminal—Positive (+) terminal grounded at left front engine support. Engine ground cable connected at same point.
Location—In engine compt. on left side.

STARTER

Auto-Lite Model MAW-4054. Armature MAW-2128.
Drive—Barrel type Bendix Drive No. A1792.
Rotation—Counter-clockwise at commutator end.
Brush Spring Tension—42-53 ozs. (new brushes).

Performance Data

Torque	R.P.M.	Volts	Amperes
0 ft. lbs.	4900	5.5	65
2.75 "	1480	5.0	200
8.50 "	400	4.0	400
6.0 "	Lock	2.0	335

Starting Switch: Magnetic switch K-F Part No. 204752 on splash shield near starter and controlled by push-button on instrument panel.
See Electrical Equipment Section for complete data.
Removal: Flange mounted on left front face of flywheel housing. To remove, disconnect cable, take out flange mounting screws.

GENERATOR

35 Amp......**Auto-Lite GDZ-4818A.** Arm. GDZ-2006F.
45 Amp......**Auto-Lite GGU-6001B.** Arm. GGU-2006F.
Two brush type with voltage and current regulation.
Charging Rate Adjustment—None (see Regulator).
Maximum Charging Rate—As given below.

Performance Data (GDZ-4818A)

Amperes	Volts	Cold—R.P.M.—Hot
0	6.4	870-970 — 950-1050
35	8.0	1800-2000 — 2150-2350

Performance Data (GGU-6001B)

45	8.0	1550 Max.	———

Rotation—Counter-clockwise at commutator end.
Brush Spring Tension—35-53 ozs. (new brushes).
Field Current—(GDZ) 1.60-1.78 amperes at 6.0 volts, (GGU) 1.6-1.8 —amperes at 6.0 volts.
Motoring Current—(GDZ) 4.16-4.60 amps. at 6.0 volts, (GGU) 5.5-6.5 amperes at 6.0 volts.
Removal: Pivot mounting at left front of engine. To remove, disconnect leads, take out clamp bolt and pivot bolts. NOTE—Remove battery for access.
Belt Adjustment: Adjust by pulling generator out with 15 lb. force in line with adjuster link with all mounting bolts loose. A 6 lb. adjustment for new belt is recommended.

REGULATOR

35 Amp.—Auto-Lite VRP-4004F-2.....for GDZ Gen.
45 Amp.—Auto-Lite VAV-4002C.....for GGU Gen.
Vibrating type voltage and current regulators.
See Electrical Equipment Section for complete data.
NOTE—Regulator cover sealed. Warranty void if seals broken.

Cutout Relay

Cuts In—6.4-7.0 volts (set to 6.4-6.6 volts).
Cuts Out—4.1-4.8 volts (approx. 4-6 amps. disch.).
Contact Gap—.015" minimum.
Air Gap—.031-.034" with contacts open (check at hinge end of core).

Voltage Regulator

Setting—7.2-7.5 volts at 70°F. See Electrical Equipment Section for settings at other temperatures.
Checking (without breaking seal) & Adjustment—*See Electrical Equipment Section.*
Contact Gap—.012" min. (armature against stop pin).
Air Gap—.048-.052" with contacts just opening.

Current Regulator

Setting—As follows:
VAV-4002C 44-46 amperes (marked '45' on cover).
VRP-4004F-2 34-36 amperes (marked '35' on cover).
Checking (without breaking seal) & Adjustment—*See Electrical Equipment Section.*
Contact Gap & Air Gap—Same as Voltage Regulator.

LIGHTING

Headlamps: Hall "Sealed Beam" type. Upper and lower beams controlled by beam selector switch.
See Electrical Equipment Section for complete data.
Adjustment—Aim upper beam straight ahead (hot spot center 3" below lamp center height at 25 ft.).
Beam Indicator—Red jewel at top of speedometer dial. Lighted when upper (country beams) in use.
Direction Signal: (Deluxe) Mitchell (United Specialties) type.
See Electrical Equipment Section for complete data.
Direction Indicators—Right and Left indicator lights on lower face of speedometer. Lighted when direction signal on same side of car in operation.

Switches

Lighting—Kaiser-Frazer No. 203830.
Beam Selector—Kaiser-Frazer No. 204545.
Instrument Panel—Kaiser-Frazer No. 203833.
Courtesy (on Instrument Panel)—K-F No. 203662.
Door—Kaiser-Frazer No. 204229.
Dome Lamp—Kaiser-Frazer No. 204779.
Stop Lamp—Kaiser-Frazer No. 201466.
Direction Signal—Kaiser-Frazer No. 204551.

MISC. ELECTRICAL

LIGHTING CIRCUIT BREAKER: Thermostatic type, 30 amperes. On back of lighting switch.
FUSES: Clock—2 ampere. In clock lead.
Overdrive—20 amperes. On control relay.
Cigar Lighter—30 amperes. In lead back of instrument panel.
HORNS: Auto-Lite or Sparton—A-L HW-4017 (Low Note), HW-4018 (High Note). Twin horns.
Horn Current—Approximately 15 amperes each at 6.2 volts.

Horn Relay: Auto-Lite Model HRL-4101—Relay connected through ignition switch (horns operative only with ignition switch "on").
Contacts Close—1.5-3.0 volts (seal to core with 4.0 volts maximum).
Contacts Open—.5 volt min. (open from seal).
Contact Gap—.026". **Air Gap**—.016-.020" (armature air gap with contacts closed but not sealed), .015-.018" (between armature leg and yoke with armature sealed to core.

ENGINE

ENGINE SPECIFICATIONS: Own (Continental). Six Cylinder, "L" head type.
Bore—3 5/16" (3.3125-3.3145"). *See "Original Bore & Pistons" in Frazer-Kaiser Special Data.*
Stroke—4⅜".
Displacement—226.2 cu. ins. **Rated HP.**—26.3.
Developed Horsepower (with Single Carb.)—100 at 3600 RPM.
Developed Horsepower (with Dual Carb.)—112 at 3600 RPM.
Compression Ratio—7.3-1.
NOTE—7.3-1 Heads marked by "73" stamped on left front directly above engine number on block.
Compression & Vacuum Reading—*See Tune-Up data.*

ORIGINAL BORE & BEARING SIZES: *See Frazer & Kaiser Special Data.*

TIGHTENING TORQUES: *See Frazer & Kaiser Special Data.*

CYLINDER HEAD INSTALLATION: *See Frazer & Kaiser Special Data.*

ENGINE REMOVAL: *See Frazer & Kaiser Special Data.*

PISTONS: Aluminum alloy, Cam-ground. Tin-plated, T-slot type. Length 3 9/16".
Clearance—See Fitting new pistons.

►*CAUTION—Mark piston and rod assemblies before removal to insure re-installation in same cylinder.*

Fitting New Pistons: Use .0015" feeler stock ½" wide inserted on side opposite slot. Pull to withdraw feeler must be 5-10 lbs.

Replacement Pistons: *See Frazer & Kaiser Special Data.*

Installing Pistons: Slot in skirt toward left or away from camshaft.

PISTON RINGS: Two compression, two slotted oil rings, all above pin. Third ring groove drilled, fourth groove slotted for oil drainage.

Ring	Width	End Gap	Side Clearance
Comp. (#1)	.0925-.0935"	.008-.016"	.0025-.004"
Comp. (#2)	.0925-.0935"	.008-.016"	.0015-.0035"
Oil (#3,4)	.1550-.1545"	.008-.016"	.001-.0025"

Installing Rings: Side marked "TOP" (compression rings) upward.

Replacement Rings: *See Frazer & Kaiser Special Data.*

PISTON PIN: Diameter—.8591-.8593". **Lgth.**—2 13/16". Floating type with lock ring at each end.
Pin Fit in Piston—Push fit with piston heated to 212°F. (heat piston in water at 212°F. to install new pins).
Pin Fit in Rod Bushing—Light press fit. When installing new bushings, ream bushings with DD-82-2 Reamer to inside diameter of .8593-.8595" for new std. pins.

►**CAUTION**—Pin bushing must protrude 1/64" in each side of rod.

Replacement Pins: Std. size and .003", .005" Oversize.

CONNECTING ROD: Length—7". **Weight**—29.6 ozs.
Crankpin Journal Diameter—2.0619-2.0627".

►*CAUTION—Special bearing size used in some engines. See "Original Bearing Sizes" in Frazer & Kaiser Special Data.*
Lower Bearing—Removable steel-backed, babbitt-lined type. No shims.
Clearance—.0005-.0015". **Sideplay**—.006-.010".
Plastigage Note—*Can be used to check bearing clearance. See Plastigage data under "Crankshaft & Main Bearings" in Frazer & Kaiser Special Data.*

Bearing Adjustment: None. Replace bearings. Do not file rods or bearing caps.

Replacement Bearings: Furnished Std .Size and .001", .002", .010", .012" Undersize.
CAUTION—Install bearings with tang engaging notch in rod and cap and oil hole aligned with oil spurt hole in rod.

Installing Rods: Mark rods and bearing caps. Install with marks together and toward camshaft in same order as when removed. Oil spray hole in lower end of rod toward camshaft. NOTE—Lower bearings offset with narrow side of rod toward nearest main bearing (#1, 3, 5 toward front; #2, 4, 6 toward rear of engine).

CRANKSHAFT: Four bearing, counterweighted type with vibration dampener on forward end.
Journal Diameters—2.3744-2.3752". NOTE—Allowable taper or out-of-round .001".

►*CAUTION—Special bearing size used in some engines. See "Original Bearing Sizes" in Frazer & Kaiser Special Data.*
Bearings—Removable, steel-backed, babbitt-lined.
Clearance—.0005-.0015".
Plastigage Note—*Can be used to check bearing clearance. See Plastigage data under "Crankshaft & Main Bearings" in Frazer & Kaiser Special Data.*

Bearing Adjustment: None (no shims). Replace bearings. Do not file bearing caps. Upper main bearing shells can be "rotated" out by installing tool KF-8 in crankshaft journal hole (lug on tool engages edge of bearing when crankshaft rotated).
Filler Block (Front & Rear) Removal & Installation—*See "Crankshaft & Main Bearings" in Frazer & Kaiser Special Data.*

Replacement Bearings: Furnished Std. size and .001", .002", .010", .012" Undersize.

End Thrust: Taken by front (#1) bearing (special thrustwasher used with unflanged bearings). Controlled by shims installed between front crankshaft thrust washer (ahead of #1 bearing) and crankshaft thrust plate (behind crankshaft sprocket).
Endplay—.004-.006".
Endplay Adjustment—*See "Crankshaft & Main Bearings" in Frazer & Kaiser Special Data.*

CAMSHAFT: Four bearing. Two-sprocket chain drive.
Journal Diameters—#1, 1.8725-1.8735"; #2, 1.8095-1.8105"; #3, 1.7472-1.7485"; #4, 1.2475-1.2485".
Bearing Diameters (I. D.)—#1, 1.8745-1.8755"; #2, 1.8115-1.8125"; #3, 1.7495-1.7502"; #4, 1.2495-1.2505".
Bearings—Steel-backed, babbitted bushings.
Clearance—.002-.004".

Bearing Adjustment: None. Replace bushings with camshaft removed.

Replacement Bushings: Replace as set (furnished finished line-bored and do not require reaming after installation). Use KF-4 Camshaft Bearing Remover & Replacer.

►*CAUTION—Align oil hole in bushings and block.*

End Thrust: Taken by thrust plate on front of engine (between front bearing journal and camshaft sprocket **Endplay**—.003-.007".

Camshaft Removal: *See "Camshaft & Bearings" in Frazer & Kaiser Special Data.*

Timing Chain: Non-adjustable type. Width 1". Pitch .500", Length 23" or 46 links.

►*Timing Chain Caution—Morse and Link Belt chains used. Interchangeable only as complete sets with both sprockets.*

Camshaft Setting: Mesh chain with 9 links (or 10 link pins inclusive of pins opposite marks) between marks on sprockets with #6 piston at top dead center on compression stroke.

VALVES:	Head Diameter	Stem Diameter	Length
Intake	1 33/64"	.3414-.3406"	5 3/16"
Exhaust	1 21/64"	.3382-.3390"	5 3/16"

	Seat Angle	Lift	Stem Clearance
Intake	30°	.3481"	.0008-.0026"
Exhaust	45°	.3315"	.0032-.0050"

Valve Guides: Pressed in block. Replace when stem clearance exceeds maximum (above). Ream new guides for correct clearance using Reamer C-249.
Valve Guide Installation—Place guide (tapered end of guide toward top) in position in bore. Use Tool KF-27 when installing guides to correct position of 1 7/32" below top face of cylinder block.

Valve Springs: Check spring with tester C-647. Pressure should be 45 ± 2½ lbs. at 1 21/32".

	Spring Pressure	Length
Valve Closed	51 lbs.	1 43/64"
Valve Open	113 lbs.	1 5/16"

Valve Lifters: Barrel type. Two types used and are interchangeable. One type using tappet adjusting screw with locknut, other type is self-locking.
Clearance—Selective fit. Lifter should rotate in bore with slight drag. Service by installing oversize lifter.
Replacement Lifters—Furnished Std. size and oversize. Oversize identified as follows: "A" .0005", "B", .001", "C", .0015", "D", .002", "K" .005", "S", .008".

VALVE TIMING

Tappet Clearance: .014" All Valves, Cold.
Adjustment Procedure—*See Frazer & Kaiser Special Data.*

Valve Timing: See Camshaft Setting above.
Intake Valves—Open 10° BTDC. Close 60° ALDC.
Exhaust Valves—Open 55° BLDC. Close 10° ATDC.
Valve Timing Check—With .014" tappet clearance (running clearance), #1 exhaust valve should close with piston 10° or .045" after top dead center with ten-degree mark after dead center "0" mark on dampener aligned with pointer at front of engine.

LUBRICATION

Lubrication System: Pressure to crankshaft, connecting rod, camshaft bearings, exhaust valve lifters, timing chain. Oil pump located in oil pan.
Crankcase Capacity—5 qts. (refill), 5½ (dry).
Normal Oil Pressure—35-40 lbs., 2000 RPM., 30 MPH.
Oil Pressure Regulator—Located in right side of cylinder block below the valve chamber and toward the rear of engine. Adjustable by replacing spring or install washers No. 200272 between end of spring and plug.

Oil Pan Removal: *See Frazer & Kaiser Special Data.*

Crankcase Ventilation: Filter element in oil filler cap (air intake). Outlet pipe located on front valve cover

C NTINUED N NEXT PA E

CONTINUED FR M PRECEDIN PAGE

plate on right side of engine. NOTE—Two types of valve cover and outlet pipe assemblies used—can be identified by angle of cut-off at lower end of tube: (Early 1949 Cars) angular cut-off faces **forward.** (Later 1949 Cars) angular cut-off faces toward **rear.**

►***CAUTION—Do not install later valve cover & outlet pipe assembly on early cars (may cause loss of oil through tube).***

Oil Pump: Gear type. In crankcase.
Oil Pump Servicing—***See Frazer & Kaiser Special Data.***

Oil Filter: Replace cartridge at 10,000 mile intervals or more often if required by operating conditions.

Oil Pressure Gauge: King-Seeley electric type.
Dash Unit—K-S No. 42460.
Engine Unit—K-S No. 40767.
See Miscellaneous Section for complete data.

COOLING

Cooling System: Sealed system (relief valve in filler cap) with positive circulation and thermostatic control.
Capacity—13½ qts. (13 qts. at driving level).
Pressure Valve—AC No. 850501 (Radiator Filler Cap). 3¼-4¼ lbs.

Radiator: No. 202906 (17" wide). Side mounted to shroud with six bolts.
Radiator Removal—***See Frazer & Kaiser Special Data.***

Water Pump: Centrifugal type with ball bearing shaft.
See Water Pump Section for complete data.
Belt Adjustment—***See Generator Belt Adjustment.***

Thermostat: Kaiser-Frazer No. 200160 (Std.), No. 202349 (for Permanent Anti-freeze only). In water outlet elbow on cylinder head.
Setting (Std. type)—Begins to open at 149-156°F. Fully open at 176°F.

Temperature Gauge: King-Seeley electric type.
Dash Unit—K-S No. 42465.
Engine Unit—K-S No. 40380.
See Miscellaneous Section for complete data.

CLUTCH

Pass. Cars.....**Auburn 9251-15 or Borg & Beck 9A7**
Taxi.....**Borg & Beck 10A7**

►**Clutch Identification**—Types can be identified by number of pressure plate springs—3 (for Auburn), 9 (Borg & Beck—cover marked 951 (9A7), 948 (10A7).
See Clutch Section for complete data.
Facings (Auburn)—Moulded metallic or Raybestos. 2 required. I. D. 6". O. D. 9¼". Thickness .135".
Facings (Borg & Beck)—Woven asbestos, 2 required. I. D. 6" (7" 10A7), O. D. 9¼" (10" 10A7). ⅛" thick.

Pedal Adjustment: Pedal free travel ⅝-¾". To adjust remove return spring, clevis pin and release clevis end of adjusting link from clutch pedal shaft bellcrank. Turn clevis end in or out to obtain correct pedal free movement. Install adjusting link clevis on bellcrank, insert clevis pin, cotter pin, and return spring.

Removal: Remove transmission (see Transmission Removal below), remove housing pan. Position of clutch on the flywheel must be marked before removal. Rotate flywheel, using Flywheel Turning Tool C-771 and loosen six bolts equally before removing. Remove clutch pressure plate and cover assembly and clutch disc.

TRANSMISSION

Warner Model AS23-T86E (Std.), Model AS24-T86E with new Type R10B Overdrive (Optl.)—Constant-mesh, synchro-mesh (Second & High), sliding gear (Low & Reverse).
See Transmission Section for complete data.

Transmission Control: Remote control type with gear-shift lever mounted on steering column.
See Transmission Section for complete data.

Removal: Remove clutch pedal return spring, clevis pins at cross shaft coupling and slide coupling onto cross shaft. Disconnect gear shift rods at transmission levers. (If overdrive is installed disconnect overdrive shift rod at overdrive unit). Disconnect speedometer cable at transmission (plug hole in transmission to prevent loss of lubricant). Disconnect wiring to overdrive. Support rear of engine using Tool KF-47 or suitable jack under clutch housing, disconnect propeller shaft at front companion flange. Free engine rear support from crossmember by taking out two insulator bolts at transmission. Disconnect and remove master cylinder operating rod. Disconnect hand brake cable at equalizer and engine rear crossmember. Remove eight bolts at frame side rails and remove crossmember. Remove four bolts holding transmission to clutch housing and pull out the transmission. (If overdrive is installed it will be removed with transmission).

OVERDRIVE

Warner Type R10B (with special AS24-T86E Transmission)—Optl. Equipment. New Governor controlled type (no centrifugal pawls) with electrical solenoid operation and throttle controlled "kick-down."
See Transmission Section for complete data.
Overdrive Solenoid—D-R 1118132, K-F No. 200911.
Governor—Kaiser-Frazer No. 200908.
Control Relay—Auto-Lite HRT-4001A, K-F Part No. 201636. Has 20-ampere fuse on BAT terminal.
Kick-down Switch—Kaiser-Frazer No. 203451.
Lock-out Switch—Kaiser-Frazer No. 200915.

Removal: Remove drain plug in overdrive housing and drain lubricant. Disconnect wiring at shift fork rail switch terminals. Disconnect speedometer cable at overdrive housing, control wire at control shaft lever on overdrive housing and the tie-down clips. Disconnect front propeller shaft at front companion flange and move shaft away from housing. Remove Overdrive and Transmission as a unit (see Transmission Removal above).

UNIVERSALS

Detroit Series 4200. Ball-and-Trunnion. 3 used with intermediate universal at propeller shaft support.
See Universals Section for complete data.

Propeller Shaft & Support Bearing: Two shafts used with support bearing on frame cross member at intermediate universal.
Propeller Shaft & Support Bearing Servicing—***See "Propeller Shaft" in Frazer & Kaiser Special Data.***

REAR AXLE

Spicer (Salisbury) Model 41-2—Semi-floating, Hypold Gear type with Hotchkiss Drive.
See Rear Axle Section for complete data.

Ratio (491)—4.09-1 Std., 3.73-1 or 3.91-1 Optl.
Ratio (492)—3.91-1 Std., 4.27-1 or 4.55-1 with O. D., 3.73-1 or 4.09-1 Optl.
Backlash—.003-.006". Shim adjustment.

Removal: Hoist rear end of car and place supports under frame. Remove rear wheels and drums (use Puller C-319). Disconnect propeller shaft at rear universal flange, disconnect hydraulic brake line at connector on axle housing, disconnect rear shock absorbers and sway eliminator links (when used) at spring seat, disconnect parking brake cables. Disconnect both springs at front hanger and rear shackle, remove axle and spring assembly from beneath car. NOTE—Axle can be removed without disturbing springs by taking out spring "U" bolts.
Axle Shaft Removal—Remove rear wheel and drum using puller C-319. Disconnect hydraulic brake line at backing plate and brake cable. Remove outer oil seal and backing plate (CAUTION—do not lose adjusting shims between backing plate and housing flange). Pull axle shaft and bearing assembly out.

Wheel Bearing Adjustment: Adjust endplay by adding or removing shims located between backing plate and axle housing flange (shims .003", .005", .010", .030" thick). Make certain that shim thickness at right wheel is .060" (to center thrust block on differential shaft), adjust endplay at left wheel.
Endplay—.001-.006".

SHOCK ABSORBERS

Monroe—Direct acting, hydraulic type. Serviced by replacement (mountings serviced separately).
See Shock Absorber Section for complete data.

FRONT SUSPENSION

Front Suspension: Independent, linked parallelogram type with coil springs.
See Front Suspension Section for complete data.
Kingpin Inclination—5½° preferred (4¾-5¾° crosswise).
Caster—0° preferred (—1° to +1°).
Camber—¼° preferred (0° to ¾°).
Toe-In—1/16". Adjust by turning both tie rods.
Steering Geometry (Toe-out)—Inner wheel 23°. Outer wheel 20°. No adjustment.

STEERING GEAR

Gemmer Model 305—Worm-and-Roller type with "push-pull" adjustments.
See Steering Gear Section for complete data.

BRAKES

Service Brakes: Bendix (Lockheed) Hydraulic type with floating self-centering shoes (no anchor pin adjustment). Hand lever applies rear service brakes.
See Brake Section for complete data.
Drums—Composite (cast-iron & steel). Diameter 11"
Lining—Molded type. Width 2". Thickness 13/64". Length 12¼" (forward shoe—all wheels), 10 1/32" (rear shoe—all wheels).
Clearance—.008" at heel and toe of each shoe.
Braking Power—56% Front wheels, 44% Rear.

Hand Brake: See Service brake data (above).

MISC. MECHANICAL

Windshield Wiper: Vacuum type, cable operated.
See Miscellaneous Section for complete data.

TIGHTENING (TORQUE WRENCH) SPECIFICATIONS

1949 LINCOLN & LINCOLN COSMOPOLITAN

ENGINE	Ft Lbs.	In. Lbs.
Cylinder Head Stud Nuts	50-55	600-660
Cylinder Head Capscrews	65-70	780-840
Main Bearing "Place Bolts"	120-130	1440-1560
Connecting Rod Nuts	52-60	624-720
Flywheel to Crankshaft	75-85	900-1020
Vib. Damper to Crankshaft	120-130	1440-1560
Engine Front Support	65-70	780-840
Eng. Rear Support to Trans.	55-60	660-720
Clutch Cover Mounting Screws	22-26	264-312
Flywheel Housing:		
To Cylinder Block	40-45	480-540
To Oil Pan Sump	45-50	540-600
To Engine Rear Plate	30-35	360-420
Trans. to Flywheel Housing	45-50	540-600
Exten. (or OvDr.) to Trans.	55-60	660-720

1949-50 MERCURY

ENGINE	Ft Lbs.	In. Lbs.
Cylinder Head Capscrews	65-70	780-840
Main Bearing Capscrews	80-90	960-1080
Connecting Rod Nuts	45-50	540-600
Flywheel to Crankshaft	75-85	900-1020
Engine Front Support	65-70	780-840
Eng. Rear Support to Trans.	55-60	660-720
Clutch Cover Mounting Screws	22-26	264-312
Flywheel Housing:		
To Cylinder Block	40-45	480-540
To lower Front Cover	15-18	180-216
Trans. to Flywheel Housing	30-35	360-420
Exten. (or OvDr.) to Trans.	40-45	480-540

1949 LINCOLN & COSMP., 1949-50 MERCURY

CHASSIS	Ft. Lbs.	In. Lbs.
Pitman Arm to Shaft	120-130	1440-1560
Steering Gear to Frame	30-35	360-420
Steering Idler Arm to Bracket	90-110	1080-1320
Idler Arm Bracket to Frame	40-45	480-540
Front Suspension:		
Upper Arm to Frame	75-80	900-960
Lower Arm to Frame	48-53	576-636
Upper Arm to Spindle	90-110	1080-1320
Lower Arm to Spindle	110-130	1320-1560
Front Brake Drum to Hub	13-15	156-180
Rear Brake Drum to Flange	12-17	144-204
Rear Shock Absorber	60-65	720-780
Rear Spring U-bolts	65-70	780-840
Rear Spring Shackles	35-40	420-480

CYLINDER HEAD

CYLINDER HEAD INSTALLATION: Use Torque Indicating Wrench to tighten cylinder head capscrews in correct sequence as shown in diagram. Tighten all screws to correct tension and recheck after engine has been run and thoroughly warmed up.

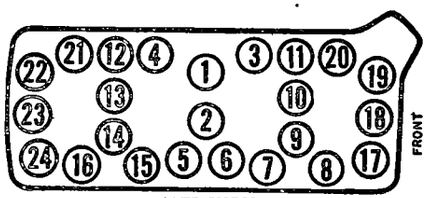

MERCURY

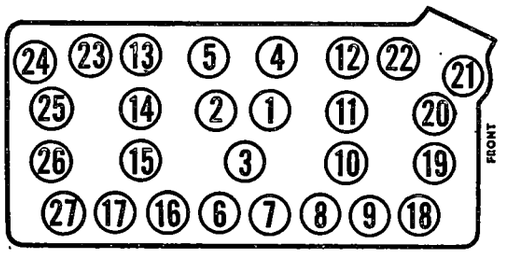

LINCOLN

Tightening Torques—See Tightening (Torque Wrench) specifications.

OIL PAN REMOVAL

1949 LINCOLN

►**OIL PAN REMOVAL (LINCOLN):** ***CAUTION—For access to oil pump and screen or for clean out, oil sump only can be removed. Oil sump secured by 4 lower capscrews on bell housing and 18 nuts to oil pan.***

Oil Pan Removal—Car manufacturer recommends following method be used:

1)—Drain oil, set #2 piston at top dead center (2nd cylinder right hand bank), turn wheels to extreme right, take off exhaust cross-over pipe (secure manifold heat valve with one nut).

2)—Remove steering idler arm bracket from right frame rail and pull down. Take off starter and oil dip stick tube.

3)—Remove oil sump (4 lower capscrews on bell housing and 18 nuts to oil pan). Take off oil pan baffle (clipped to oil pan). Disconnect filter return line on left side of pan.

4)—Remove 20 oil pan-to-block capscrews using 3/8" drive tools. Move outlet pipe to left after freeing bracket for access to front oil pan screws. Lower rear end of pan and slide out to rear.

1949 LINCOLN COSMOPOLITAN

OIL PAN REMOVAL (LINCOLN COSMOPOLITAN): Same as given for LINCOLN above except that front end of engine must be raised as follows:

1)—Drain radiator and remove lower radiator hoses.

2)—Turn fan so that wide angle between blades up.

3)—Remove fuel & vacuum pump from adapter.

4)—Take off 2 nuts from front engine mounts, raise front of engine 2¼-2⅜", block engine up by inserting blocks between brackets and engine mounts.

5)—When removing oil pan, pan should be turned so front oil seal will pass over left capscrew of front main bearing cap.

1949-50 MERCURY

OIL PAN REMOVAL (MERCURY): Car manufacturer recommends following method be used (pan can be removed without draining oil):

1)—Take off exhaust pipe cross-over (secure manifold heat valve with one nut).

2)—Remove steering idler arm bracket from right frame rail and pull down.

3)—Remove starter.

4)—Take off flywheel housing lower front cover (cover drops straight down after removing nuts and bolts). Remove oil dip stick tube from pan.

5)—Remove 16 oil pan-to-block capscrews using 3/8" drive tools. Lower rear end of pan and slide out to rear.

NOTE—Front end of engine does not have to be raised to remove pan.

CAMSHAFT & BEARINGS

1949 MERCURY

CAMSHAFT PRODUCTION CHANGE (1949 MERCURY VEHICLE NO. 9CM-826 UP): Change to REVERSE helix timing gears giving forward thrust at front end of camshaft for silencing backlash (was toward rear on early engines with normal gears). Oiling at front end modified with a change in front camshaft bearing position (same bearing used). Parts for both types are as follows:

CAMSHAFT PRODUCTION PARTS CHANGES

	Early Type	9CM-826 UP Type
Camshaft	8CM-6250	8CM-6250-B
Camshaft Gear	7RA-6256	8BA-6256-A
Crankshaft Gear	48-6306	8BA-6306
Oil Line Plug	8BA-6026	7HA-6026

Following modifications made for use of new REVERSE helix timing gears:

1)—**Timing Gears.** Reverse helical gears (L.H. teeth on camshaft gear, R.H. teeth on crankshaft gear).

2)—**Camshaft.** Oil hole in front bearing journal moved 1/16" (center of hole .440-.450" to rear of flange on shaft, was .507-.512" on early shafts). Inside diameter increased to 3/16" (was ⅛" on early shafts). Outer end of hole is at front of shaft on both types of camshafts.

►3)—**Camshaft Front Bearing Position**—***CAUTION—Same bearing used but position in block different for each type camshaft. This is important to provide correct lubrication for front end of camshaft (alignment of upper oil hole in bearing with oil hole in camshaft front bearing journal). Bearing positioned as follows:***

Bearing Position for Late (8CM-6250-B) Camshaft—Installed with front edge **flush** with front face of block to align upper oil hole in bearing with relocated hole in camshaft front bearing journal (see No. 2 above).

Bearing Position for Early (8CM-6250) Camshaft—Installed with front edge **1/16" back** from face of block for oil hole alignment.

4)—**Cylinder Block Front Oil Line Plug.** Solid plug in oil line (above camshaft). Early type plug equipped with oil hole for front end gear lubrication. With this new plug front end gears and thrust surfaces lubricated from front end of camshaft (oil fed from main oil line lead at front camshaft bearing into oil lead in shaft and out through front end of shaft).

COOLING SYSTEM

1949 LINCOLN & LINCOLN COSMOPOLITAN

►**PRODUCTION CHANGE FOR IMPROVED COOLING:** **New Cylinder Head Gasket No. 8EL-6051-D.** This gasket required for new water holes added during production, 4 holes in block (1 in upper corners of each bank) with matching holes in each cylinder head. This gasket furnished for service on **all** engines (can be used on early engines without the additional holes).

Drilling of Additional Water Passage Holes on Early Cylinder Blocks and Heads for Improved Circulation—Allowed by car manufacturer where overheating conditions cannot be corrected by regular methods. Use new gasket No. 8EL-6051-D as template, drill 5/16" additional holes as follows: 4 in cylinder block (1 in upper corner front and rear of each bank), 2 in each cylinder head (1 in upper corner front and rear).

►***CAUTION—Holes in cylinder block should not be drilled deeper than 5/8".***

HOOD LOCK: Pull T-handle under edge of instrument panel on left side, push back on safety catch under front edge of hood, raise hood.

MODEL IDENTIFICATION

VEHICLE NUMBER: Stamped on plate attached to engine side of dash and on top of right frame side rail to rear of front suspension upper control arm.

TUNE-UP

COMPRESSION PRESSURE: 110 lbs. at cranking speed. Maximum compression pressure 175 lbs.

VACUUM READING: Steady 18-21" idling at 500 RPM.

FIRING ORDER: 1-5-4-8-6-3-7-2. See diagram.

SPARK PLUG GAPS: .030". Limits .029-.032".

Plug Type—Champion H-10. 14 mm.

DISTRIBUTOR: Breaker Gap—.015-.018".

Cam Angle—28-30° (closed).

Breaker Arm Spring Tension—17-20 ounces.

Automatic & Vacuum Advance—*See Ignition.*

Condenser Capacity—.20-.25 microfarad.

IGNITION TIMING: 4° BTDC.

Timing Procedure—*See Ignition Timing.*

Dampener Mark—"/" mark aligned with timing pin on front engine cover above top of dampener.

CARBURETION:

Idle Setting—Set for highest steady vacuum reading. 2 screws (turning out gives richer mixture).

Idle Speed (standard)—Approx. 500 RPM.

Idle Speed (Hydra-Matic)—375-400 RPM.

Float Level—Fuel level ½" ± 1/32" below top edge of bowl. Use Fuel Level Gauge No. 9550-B.

Accelerating Pump—Center hole average setting. Inner hole for Hot weather, outer for cold weather.

Fuel Pump Pressure: 3½-4½ lbs.

Choke Setting: Index mark on coil cover aligned with center mark on housing (maximum variation one division either side).

MANIFOLD HEAT CONTROL: Automatic. No adjustment. Valve located between right end of exhaust pipe cross over and right exhaust manifold.

VALVE TAPPET CLEARANCE: None in service (Hydraulic type lifters).

Valve Timing Check—*See Valve Timing.*

STARTING: *See Battery, Starter, Generator, Regulator.*

IGNITION

IGNITION SWITCH: Lincoln No. 6A-11572-A.

Ignition Lock—Lincoln No. 8H-11582-A.

COIL: Lincoln No. 7RA-12029-A. Can type.

Location—On engine side of dash.

Ignition Current—5 amperes stopped, 3 amperes idling.

CONDENSER: Lincoln No. 8EL-12300-A.

Capacity—.20-.25 microfarad.

DISTRIBUTOR: Auto-Lite Model No. IGT-4302-1, Lincoln No. 8EL-12100. Automatic advance type with Vacuum Spark Control and Fuel Compensator

Breaker Plate Identification—No. 7 stamped on plate (vacuum advance limiting slot size).

Breaker Gap—.015-.018".

Cam Angle—28-30° (closed).

Breaker Arm Spring Tension—17-20 ounces.

Rotation—Clockwise viewed from above.

Automatic Advance

Degrees Distr.	R.P.M.	Degrees Eng.	R.P.M.
Start	275	0	550
1	340	2	680
2	400	4	800
7	1000	14	2000
12	1600	24	3200

Fuel Compensator: Slot in distributor timing arm permits minor timing variation adjustment. See Ignition Timing.

Vacuum Spark Control: Integral type (advances breaker plate). Provides additional advance at speeds above idling except when engine accelerated or operated with wide open throttle (spark retarded by return spring).

Vacuum Advance

Distr. Degrees	Eng. Degrees	Vacuum (" of HG)
Start	0°	9"
2°	4°	10⅜"
4°	8°	11⅞"
6°	12°	13¼"
7°	14°	14"

Distributor Removal: Mounted at rear of engine on left side. To remove, disconnect vacuum line, take out hold-down screw in timing arm.

IGNITION TIMING

Std. Setting ..... 4° BTDC.

Dampener Mark—"/" groove mark on edge of dampener with timing pin on front of engine.

Timing—With #1 piston at firing position and "/" groove mark on dampener aligned with timing pin on front of engine, loosen clamp screw in timing arm, rotate distributor until contacts begin to open, tighten clamp screw. Check spark plug connections (see diagram), see that rotor at #1 cap terminal.

Timing (with Neon Timing Light)—Mark timing pin and "/" groove mark on dampener with white chalk. Connect timing light to #1 spark plug. Idle engine below 550 RPM., adjust distributor (as directed above) until mark and timing pin aligned when light flashes.

CARBURETOR

Std. before 10/48.....**Holley-Ford 8EL-9510-A**
Std. after 10/48.....**Holley-Ford 8EL-9510-D**
Hydra-Matic 6/49 Up.....**Holley-Ford 8EL-9510-G**
Dual concentric downdraft with Automatic Choke.
See Carburetor Section for complete data.

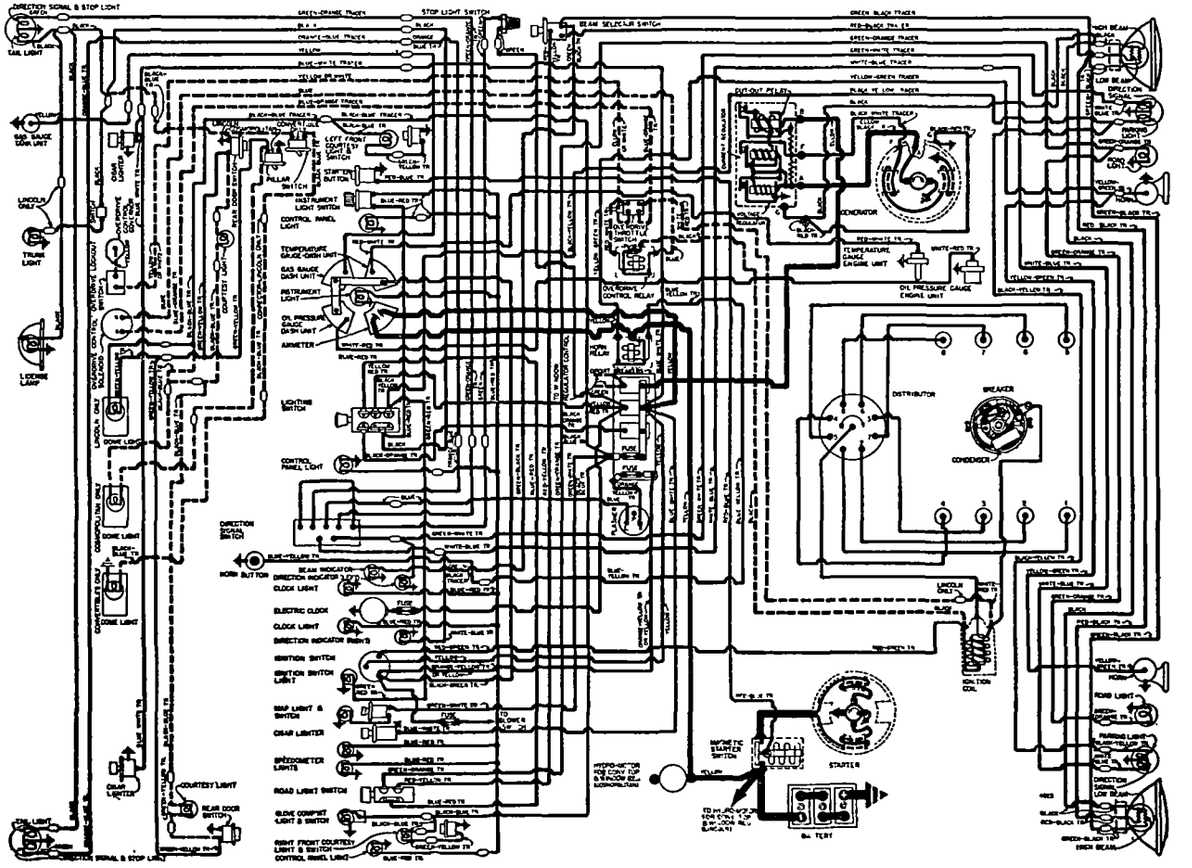

►**New Float and Float Spring change for stabilizing float level**—*See 1949 Lincoln in Carburetor Section.*

Settings (Idle Setting, Float Level, and Accelerating Pump): *See Tune-Up data.*

Metering Jets—*See Holley-Ford Jet Specification Table in Carburetor Section.*

Hydra-Matic Throttle Adjustment: *See "Lincoln Hydra-Matic Drive" in Transmission Section.*

Fast Idle: Holley-Ford Carburetor type.
See Carburetion Equipment Section for complete data.

Automatic Choke: Holley-Ford Carburetor type.
See Carburetion Equipment Section for complete data.
Setting—Index mark on coil cover aligned with center mark on housing (maximum variation one division either side).

CARB. EQUIPMENT

Fuel Pump (Fuel-&-Vacuum): Lincoln 8EL-9350-A.
Pressure—3½-4½ lbs.
See Carburetion Equipment Section for complete data.

Gasoline Gauge: King-Seeley Electric.
Dash Unit—Lincoln 8L-9280 (K-S #42235).
Tank Unit (Lincoln)—99A-9275B (K-S #7540).
Tank Unit (Cosmopolitan)—Lincoln No. 21C-9275A,
See Carburetion Equipment Section for complete data.

Air Cleaner (Oil Bath): Lincoln No. 8EL-9600.
Servicing (Oil Bath type)—Clean and re-fill sump (to level mark) with same grade oil used in crankcase at 2500 mile intervals (when crankcase drained). Occasionally wash filter in cleaning fluid.

BATTERY

Lincoln No. 06H-10655-A. 6 Volt, 17 Plate, 120 Ampere Hour Capacity (20 hour rate).
Starting Capacity—150 amperes for 20 minutes.
Zero Capacity—300 amperes for 4.3 minutes. Five Second Voltage—4.4 volts.
Grounded Terminal—Positive (+) terminal.
Location—On right side in engine compartment.
Dimensions—L. 10⅝". W. 7 5/16". H. 9 3/16".

STARTER

Standard.....**Lincoln 7EH-11002-B.** Arm. 18-11005
Hydra-Matic.....**Lincoln 8EL-11002.** Arm. 52-11005
Drive—(7EH) B-11350, (8EL) 29B-11350.
Rotation—Counter-clockwise at commutator end.
Brush Spring Tension—20-22 ounces.
Cranking Engine—100 RPM., 190-215 amperes.

Performance Data

Torque	R.P.M.	Volts	Amperes
4 ft. lbs.	1070	4.6	200
8 "	660	4.3	340
12 "	300	3.65	465
14 "	Lock	3.5	550

Starting Switch: Lincoln No. 21A-11450 Magnetic Switch mounted on right front fender apron and controlled by panel pushbutton switch Lincoln No. 6H-11500 (and 8L-15812 Neutral Safety Switch on Hydra-Matic Drive cars).
Hydra-Matic Neutral Safety Switch Adjustment—*See "Hydra-Matic Drive" in Transmission Section.*

Removal: On right front face of engine rear plate. To remove, take off right engine splash pan (if used), free starter-to-oil pan bracket, take out 2 starter through bolts.

GENERATOR

Lincoln No. 8EL-10002 (less pulley & bracket).
Armature No.—Lincoln No. 8EH-10005. Two brush type with current and voltage regulation.
Maximum Charging Rate—42 amperes, 7 volts, reached at approximately 19.5 MPH. Controlled by regulator and dependent on load and battery condition.
To Check Generator Output—Connect ammeter in series with charging line at regulator "ARM" terminal, connect short insulated jumper between generator "A" and "F" terminals (to short out regulator). Run engine at approximately 1500 RPM. and note ammeter reading. If generator output equals or exceeds rate output (below) generator performance is satisfactory. Remove jumper.
►*CAUTION—Do not operate generator at higher speeds or in service with jumper connected between generator armature and field terminals. This jumper eliminates all regulator action.*

Performance Data

Amperes	Engine R.P.M.
40	1500

Rotation—Counter-clockwise at commutator end.
Brush Spring Tension—20-24 ozs.

Removal: On support secured to intake manifold by stud nut, driven by belt in tandem with water pumps. To remove, loosen stud nut and disengage generator belt, take out capscrews in mounting strap, lift generator off support.

Generator Belt Adjustment: Loosen nut on support mounting stud, raise generator up until side movement on belt midway between generator and water pump pulley is ¾" (thumb and finger pressure).

Fan Belt Adjustment: *See COOLING.*

REGULATOR

Lincoln 5EH-10505-C or E, or 8L-10505. Voltage-Current, 3-unit type.
See Electrical Equipment Section for complete data.
NOTE—Separate ground wire extending to cowl must be in place when generator operated.

Cutout Relay

Cuts In——6.0-6.4 volts COLD (will be slightly higher when warm).
Cuts Out—8 ampere discharge current (maximum).
Contact Gap—.010" (armature against upper stop).
Air Gap—.014" between armature and core with contacts open.

Voltage Regulator

Voltage Setting—7.0-7.4 volts COLD (7.2-7.6 volts after 20 minutes run).
Air Gap—.032-.035" between armature and core with contacts just closed.
►*CAUTION—Make certain gauge contacts armature and not brass rivet on underside of armature.*
Contact Spring Tension—5 ounces minimum with contacts just opening.
Checking & Adjustment—*See Electrical Equip. Section.*

Current Regulator

Current Setting—38-42 amperes COLD.
Air Gap—.032-.035" between armature and core with contacts just closed.
Contact Spring Tension—5 ounces minimum with contacts just opening.
Checking & Adjustment—*See Electrical Equip. Section.*

LIGHTING

Headlamps: Ford "Sealed Beam" type.
See Electrical Equipment Section for complete data.
Adjustment—Aim upper beams straight ahead (hot spot centers 3" below lamp center height at 25 ft.).
Beam Indicator—Bulb above Left Direction Indicator on face of clock. Lights with Upper Beam " n"
Direction Signal: Std. *See Electrical Equipment Section.*
Direction Indicators—Right and Left indicators on lower edge of clock face.
Direction Signal Flasher—Lincoln No. 8L-13350-B.

Switches

Lighting—Lincoln No. 7RA-11654.
Beam Selector—Lincoln No. 7RA-13532.
Instrument—Lincoln No. 8L-13740.
Map Light—Lincoln No. 8L-15653.
Glove Box—Lincoln No. 8L-14413.
Dome Light (exc. Conv.)—Lincoln No. 8M-13752-A.
Dome (Convertible only)—Lincoln No. 8M-13754.
Door Switches—Lincoln No. 8M-13713.
Stop Light—Lincoln No. 91A-13480.
Trunk (with wire assy)—Lincoln No. 8M-13546.
Road Light—Lincoln No. 8L-15224.
Direction Signal—Lincoln No. 8L-13335 (for service use part No. 8L-14486—includes wire assy.).

MISC. ELECTRICAL

CIRCUIT BREAKERS: Lincoln No. 8L-12258-A (Lincoln), No. 8H-12258-A (Lincoln Cosmopolitan, Lincoln Convertible). Three used on one mounting, located on dash behind instrument panel together with two fuses (see wiring diagram for positions on bracket).
30 Ampere CB. Protects main lighting system.
15 Ampere CB. Protects speedometer light, control panel light, instrument cluster light, electric clock and clock light.
15 Ampere CB. Protects hydraulic equipment.

FUSES: Courtesy, Dome, Glove Box and Map Lights—14 ampere. Located on circuit breaker behind instrument panel (see wiring diagram).
Direction Signal—14 Ampere. Located on circuit breaker behind instrument panel (see wiring diagram).
Clock—3 ampere. In clock feed wire.
Overdrive—30 ampere. On "IGN" terminal of overdrive relay (on dash under hood).
Heater—20 ampere. In lead to heater switch.

HORNS: Lincoln No. 51A-13832-A or B (High Pitch, Right Horn), No. 51A-13833-A or B (Low Pitch, Left Horn). Dual horns operated by relay.
Air Gap—.027-.029" for high pitch (right horn), .032-.034" for low pitch (left horn).
Horn Current—13 amperes (High Pitch), 14 (Low).

Horn Relay: Lincoln No. 7RA-13853-A. On dash.
Contact Gap—.015-.025".
Contact Closing Voltage—4 volts max.

ENGINE

ENGINE SPECIFICATIONS: Own Make. Eight cylinder, "L" head, 90° Vee type with both cylinder banks and crankcase cast Enbloc.
Bore—3½". **Stroke**—4⅜".
Displacement—336.7 cu. ins. **Rated HP**—39.2.
Developed Horsepower—152 at 3600 RPM.
Compression Ratio—7.0-1 cast-iron head.
Compression & Vacuum Reading—*See Tune-Up.*

OIL PAN REMOVAL: *See Lincoln Shop Notes.*
TIGHTENING TORQUES: *See Lincoln Shop Notes.*
CYLINDER HEAD INSTALLATION: *See Lincoln Special Data.*
►*PRODUCTION CHANGE FOR IMPROVED COOLING:*
New Cylinder Head Gasket No. 8EL-6051-D—*Two additional water passage holes (one at each corner on upper edge of gasket) used to match new holes added to latest production engines. This gasket used for service on*

CONTINUED ON NEXT PAGE

ENGINE

CONTINUED FR M PRECEDIN PA E

all engines. These additional water passage holes can be added on earlier engines as described under COOLING in Lincoln Shop Notes.

CYLINDER SLEEVES: Not used.

PISTONS: Aluminum alloy, steel strut, flat head, split skirt, cam ground type.

Weight—548 grams. **Length**—3.84".

Removal—Pistons and rods removed from above.

Clearance—.0005-.001". See Fitting Pistons.

Replacement Pistons: Std. .0025", .020", .030", .040" OS.

Fitting Pistons: Use ½" wide feeler inserted between piston (on side opposite slot) and cylinder wall at right angles to pin. Feeler thickness **.0015"** for New Piston in New Bore, **.003"** for New Piston in Worn Bore or Worn Piston in New Bore, **.004"** for Worn Piston in Worn Bore. Pull to withdraw feeler **6 to 12 pounds.**

Cyl. Bore Max. Wear Limits: Out-of-round, .003", Taper .006".

PISTON RINGS: *Two types have been used:*

(Early Cars)—Top Compression, Chrome plated; Lower Compression, Black ferrox-coated (Both rings counterbored on upper inner edge). Oil rings narrow "wedge channel" slotted type.

(Later Cars)—Top Compression, Black ferrox-coated; Lower Compression, plain. (Upper ring chamfered on upper inner edge, Lower taper face). Oil Rings wide channel slotted type.

Ring	Width	①End Gap	Side Clearance
Compr. #1	.165"	.008-.016"	.002-.0035"②
Compr. #2	.165"	.008-.016"	.0015-.003"③
Oil #3 & 4	.152"	.008-.016"	.0015-.003"③

Worn Limit—①—.035", ②—.0045", ③—.004".

Ring Thickness—Compression .0933", Oil .186".

Replacement Rings: Perfect Circle ring sets (same type as used on early cars) furnished Std., .020", .030", .040", .060" Oversize. NOTE—Expander used with lower oil ring.

Installing Rings (Early Cars)—Compression rings assembled with counterbore to top.

(Later Cars)—Compression rings assembled with side marked "TOP" to face top of piston.

PISTON PIN: Diameter—.8503". **Length**—3.118". Floating type (lock ring in piston at each end). Pin hole in connecting rod bronze bushed.

Pin Fit in Piston—.0001-.00005" clearance (new), .001" (worn limit).

Pin Fit in Rod Bushing—.0001-.0002" clearance (new), .0012" (worn limit).

Replacement Pins: Std. size & .001", .002" Oversize.

CONNECTING ROD: Length—8.062".

Weight—773 grams (less bearings).

Crankpin Journal Diameter—2.400". Maximum wear limits—out-of-round .0015", taper .001".

Lower Bearing—Steel-backed, copper-lead alloy lined, replaceable shells. Upper and lower halves are interchangeable.

Clearance—.0005-.003" (new), .005" (worn limit).

Sideplay—.007-.013" (new), .022" (worn limit).

►*NOTE—Replace rod bearings less than .0745" thick.*

Bearing Adjustment: None (no shims). Do not file caps. Replace bearings. Tang on bearing must engage groove in rod and cap.

►*PALNUT NOTE—Tighten finger tight plus 1/3 turn.*

Replacement Bearings: Standard size and .002", .010" .020", .030", .040" Undersize.

CRANKSHAFT: 3 bearing with 6 integral counterweights and vibration dampener on front end.

►*SLUDGE TRAPS—Crankpin throws equipped with sludge traps having removable plugs for cleaning.*

Vibration Dampener—Viscous type (inertia ring floats in Dow-Corning fluid in damper housing). Sealed unit. Serviced by replacement only.

Main Journal Diameter—#1 & #2, 2.8740"; #3, 2.8735". Max. wear limits—out-of-round .0015", taper .001".

Bearings—Steel-backed, copper-lead alloy lined, replaceable shells. Upper and lower halves alike.

Clearance—Zero-.0025" (selective fit, crankshaft to turn free). Worn limit .0044" (#1, 2), .005" (#3).

►*NOTE—Replace main bearings less than .0938" thick.*

Bearing Adjustment: None (no shims). Do not file caps. Replace bearings. Tang on bearing must engage groove in block and cap.

►*NOTE—Self-locking bearing cap bolts used.*

Replacement Bearings: Standard size and .002", .010", .020", .030", .040" Undersize.

End Thrust: Taken by rear main bearings. Adjust by replacing bearings if clearance excessive.

Endplay—.002-.006" (new), .010" (worn limit).

CAMSHAFT: *CAUTION—Two types used and have different valve timing (see Valve Timing).*

Before Engine No. 9EL-43603—Camshaft not marked.

Beginning Engine No. 9EL-43603—Camshaft No. 8EL-6251-B marked "P" on gear attaching flange at front end. This Camshaft provides better idling characteristics.

Bearing Diameter—1.9285" (replace bearing if diameter greater than worn limit of 1.9315").

Replacement Bearings: Three sizes as follows:

1—Std. size on both inside and outside diameter.
2—Std. on I. D., .080" Oversize on O. D.
3—.015" Undersize on I. D., Std. on O. D. (must be finished reamed in assembly).

End Thrust: Thrust plate bolted on front of block.

Timing Gears: Helical cast aluminum camshaft gear bolted on camshaft, cast alloy iron crankshaft gear.

Camshaft Setting: Mesh marked tooth of crankshaft gear with space marked by line on camshaft gear.

VALVES:	Head Diameter	Stem Diameter	Length
Intake	1.800"	.3417"	5.7145"
Exhaust	1.515"	.3410"	5.7145"

	Seat Angle	Lift	Stem Clearance
Intake	45°	.350"③	.0015-.003"①
Exhaust	45°	.350"③	.0022-.0037"②

Wear Limit—①—.005", ②—.006".

③—.357" Intake, .340 Exhaust with 1st. type camshaft before Engine No. 9EL-43603.

Valve Seat Inserts—On exhaust only.

►**Oversize Replacement Intake Valve**—No. 8EL-6507-B (.070" Oversize) valve should be installed if valve seat bearing line of original valve is at extreme outer edge of head or if seat width under .065-.080" limits.

►*CAUTION—Top of valve must not be more than .030" above top face of block for head clearance.*

Valve Guides: One piece type pressed in block. Inside diameter .344". Length 2.66".

Guide Installation—Press in block from above with small diameter end down. Distance from top of valve seat to upper end of valve guide 1.30".

Valve Lifters: Mushroom type, hydraulic tappet take-up (Wilcox-Rich Zero-Lash type).

Body Diameter—.7177" (new), .7167" (wear limit).

Clearance in Block—.0003-.0018" (new), .003" (worn).

See Miscellaneous Section for complete data.

Valve Springs: Coated springs used.

Spring Pressure—62-68 lbs. (closed), 140-152 (open).

Spring Test—63-69 lbs. at 1.680". Free length 2.08".

VALVE TIMING

Tappet Clearance: None in service (hydraulic lifter).

Valve Timing: *CAUTION—Two Camshafts used and have different valve timing.*

►**Before Engine No. 9EL-43603**
(Camshaft not marked)

Intake Valves—Open 14° BTDC. Close 60° ALDC.

Exhaust Valves—Open 62° BLDC. Close 16° ATDC.

►**After Engine No. 9EL-43603**
(Camshaft stamped "P" on front end)

Intake Valves—Open 5° BTDC. Close 52° ALDC.

Exhaust Valves—Open 49° BLDC. Close 8° ATDC.

Valve Timing Check—Intake valve opens 14° BTDC. (before Eng. No. 9EL-43603), 5° BTDC. (after 43603).

LUBRICATION

Engine Oiling System: Pressure to main bearings, connecting rod lower bearings, camshaft bearings, valve lifters (hydraulic type) and timing gears. Oil pump mounted in crankcase at rear of engine.

Crankcase Capacity—6½ quarts.

Normal Oil Pressure—50 lbs. at 2000 RPM.

Oil Pressure Relief Valves: Two used as follows:

1—**Oil Pump Relief Valve**—In oil pump body and regulates pressure to 50 lbs. for engine lubrication. Spring tension 199 ozs. at 2.18".

2—**Cylinder Block Oil Relief Valve**—At front end of valve chamber and regulates pressure to 15 lbs. for hydraulic valve lifters.

Oil Pump: Gear type. In crankcase at rear of engine.

►*NOTE—Removable sump attached to oil pan for access to oil pump and screen.*

Oil Filter: On left cylinder head. Replace cartridge every 5000 miles or more often if required.

Oil Filter Cartridge—Lincoln No. 8CM-6731A Kit.

Oil Pressure Gauge: King-Seeley Electric.

Dash Unit—Lincoln No. 8L-9273.

Engine Unit—Lincoln No. 41A-9278.

See Miscellaneous Section for complete data.

Crankcase Ventilation: Filter element in oil filler breather cap (inlet), and in upper end of outlet pipe at elbow connection just below generator on left side.

Servicing—Wash screen in cleaning fluid and wet with engine oil when dry at oil change period (2500 miles).

Outlet Pipe Air Filter Cartridge—Lincoln No. 8EL-6841.

COOLING

►*PRODUCTION CHANGE FOR IMPROVED COOLING:*

New Cylinder Head Gasket No. 8EL-6051-D—*Two additional water passage holes (one at each corner on upper edge of gasket) used to match new holes added to latest production engines. This gasket used for service on*

all engines. These additional water passage holes can be added on earlier engines as described under COOLING in Lincoln Shop Notes.

Cooling System: Pressure type with relief valve in filler cap and two belt-driven pumps (one for each bank) with re-circulating by-pass.

Capacity—34½ quarts.

Pressure Valve—In radiator filler cap. Lincoln No. 26H-8100-B (AC #846740). Opens at 3½-4 lbs.

Water Pumps: Two used. Centrifugal, belt-driven, packless type. Shaft mounted on sealed duplex ball bearing.
NOTE—Bottom bolt must be installed prior to installing water pump pulley.
See Water Pump Section for complete data.

Fan Belt Adjustment—Loosen fan mounting bracket bolts, raise fan up until side movement on belt midway between fan and crankshaft pulleys is ½". **Generator (& Water Pump) Belt Adjustment**—*See GENERATOR.*

Thermostats: Two used (one in each cylinder head water outlet). Lincoln No. 8EL-8575-A (std.), B & C (optl.).

Setting (std.)—148-170° maximum.
Settings (Optl.)—158-180° (B), 178-200° (C), max.

Temperature Gauge: King-Seeley Electric.
Dash Unit—Lincoln No. 8L-10883.
Engine Unit—Lincoln No. 8A-10884 in left head.
Engine Switch—No. 8A-10990 in right hand head.
See Miscellaneous Section for complete data.

CLUTCH

Long Model 11CF-10½TI, Lincoln No. 8EL-7563. Semi-centrifugal, single plate, dry disc type.
See Clutch Section for complete data.
Facings—Moulded or Woven. Inside Diameter 7". Outside Diameter 10½". Thickness .125".

Pedal Adjustment: 1-1¼" free travel. Adjust by loosening locknut and turning adjusting screw on adjusting rod.

Removal: Remove transmission (see TRANSMISSION Removal below). Remove flywheel housing inspection cover. Remove transmission from flywheel housing, detach clutch release spring first, remove flywheel housing from engine plate and cylinder block. Take off clutch release bearing and hub. Prick punch flywheel and pressure plate so that these parts may be placed in original positions when reassembling. Use Tool 7563 to compress pressure plate. Take off 6 capscrews holding pressure plate assembly to flywheel.

TRANSMISSION

STANDARD

Warner Model AS1-T85B (Std.), AS2-T85B (with Overdrive). All helical gear type, constant-mesh, synchro-mesh (Second & High), sliding gear (Low & Reverse).
See Transmission Section for complete data.

Transmission Control: Steering column mounted shift.
See Transmission Section for complete data.

Removal: Disconnect rear universal, slide propeller shaft out of transmission. Disconnect clutch, transmission and speedometer linkage. Support rear of engine and disconnect rear engine mounting from frame. Take out four transmission-to-flywheel housing capscrews and remove transmission.

OVERDRIVE

Warner Model AS2-T85B (Transmission & Overdrive). Optl. equipment. Overdrive is solenoid operated type (no centrifugal pawls) with Governor Control and throttle operated "kick-down".
See Transmission Section for complete data.
Solenoid—Lincoln No. 8M-6916.
Control Relay—Lincoln No. 8M-6915. On engine side of dash. 30 ampere fuse at IGN terminal of relay.
Lock-Out Switch—Lincoln No. 8M-6917-A.
Throttle Kick-down Switch—Lincoln No. 8A-6918.
Governor—Lincoln No. 8M-6919.

Removal: Same as for Std. transmission (above) after disconnecting overdrive control cable and wiring.

HYDRA-MATIC DRIVE

OPTIONAL EQUIPMENT

Description—Four-speed planetary type automatic transmission and fluid coupling. Similar to other Hydra-Matic Drive installations.
See Transmission Section for complete data.
Lubrication—Check fluid level every 1000 miles. Add fluid, as required, to maintain level at "F" mark on dip stick. Drain and refill every 15,000 miles. Use Automatic Transmission Fluid Type "A", furnished under Lincoln Part No. 8L-19582.

Capacity—12 qts. (Drain oil pan and torus cover and refill).

Checking Fluid Level—Set hand brake, place selector lever in "N" position, start engine and allow it to idle until normal operating temperature is reached. Roll back front floor mat on right side, remove inspection cover in floor pan, clean all dirt and lint from floor and around oil indicator. Place selector lever in "DR" position and idle engine with lever in this position while checking level. Oil level should be between "L" and "F" marks on dip stick. If below "L", add oil as required to bring level up to "F" mark.

►***CAUTION—Do not check oil level when transmission temperature excessively high and do not fill above "F" on dip stick (will cause foaming when warm).***

Draining & Refilling—*See "Hydra-Matic Drive" in Transmission Section.*
Hydra-Matic Linkage Adjustment—*See "Lincoln Hydra-Matic Drive" in Transmission Section.*

Removal: *See "Lincoln Hydra-Matic Drive" in Transmission Section.*

UNIVERSALS

Spicer 1310. Needle bearing type. Two used.
See Universals Section for complete data.

►***NOTE—Slip joint formed by splined slip yoke of front universal engaging transmission mainshaft (or overdrive shaft). One-piece propeller shaft used.***

REAR AXLE

Own Make. Semi-floating, hypoid gear type with Hotchkiss drive (**separate carrier not used**). Axle ends flanged (no separate hub). Wheel bearings are sealed ball, pre-lubricated (no lubrication required).
See Rear Axle Section for complete data.
Ratio—3.9-1 (43:11—Std.), 4.27-1 (47:11—with O.D.).
Ratio (Hydra-Matic)—3.31-1.
Backlash—.005-.008". Shim adjustment.

Removal: Raise rear of car. Remove axle shafts, and drive shaft. Take off hydraulic line clips from axle housing and free line from differential housing clip. Disconnect shock absorbers, spring U-bolts. Remove axle housing assembly from car.

Axle Shaft Removal: Remove rear wheels. Take out 3 capscrews holding brake drum to axle shaft flange. Remove hydraulic lines from brake backing plate. Take out 4 axle retainer nuts (work through opening in axle shaft flange). Use Tool 4235-A to remove axle shaft and bearing assembly from housing. Take off gasket and backing plate. Do not damage oil seal when removing axle shaft.

SHOCK ABSORBERS

Std.—Lincoln 8M-18045-A (front), 8M-18080-A (rear).
Heavy Duty (special equip.)—Lincoln No. 8M-18045-D (front), 8M-18080-D (rear).
Direct acting, hydraulic types. Two makes are used and are interchangeable.

►***NOTE—Shock absorbers are permanently sealed and cannot be refilled or repaired.***
See Shock Absorber Section for complete data.

►**Rear Shock Absorber Installation**—Lower tube has welded stone shield on lower end which must be installed toward front of car.

FRONT SUSPENSION

Front Suspension: Independent, linked parallelogram type with coil springs, direct acting shocks, and front stabilizer.
See Front Suspension Section for complete data.

►***CAUTION—Specifications listed below supersede earlier 1949 Lincoln Front End Specifications.***
Kingpin Inclination—5° crosswise with ¾° Camber.
Caster—Pos. ½° to Neg. 1°. Threaded bushing adjustment at lower pivot pin.
Camber—0° to +¾°. Eccentric adjustment at upper pivot pin.
Toe In—3/32-5/32". Adjusting sleeve on outer end of each tie rod. Adjust equally.
Steering Geometry (toe out on turns)—Inner wheel turned 23½°±½°, outer wheel 20°.

STEERING GEAR

Gemmer Model 335. "3-tooth" Worm-and-Roller type with "push-pull" adjustment.
See Steering Gear Section for complete data.

BRAKES

Service: Lincoln-Bendix Hydraulic, Duo-Servo, Single Anchor type **without eccentric adjustment.** Hand lever applies rear wheel service brakes.
See Brake Section for complete data.
Wheel Cylinders—Diameter: Front wheel 1.128" (hone limit 1.132"). Rear wheel .940" (hone limit .942").
Drums—Diameter 12".
Lining—Molded or Woven. Width 2¼" (front wheel), 2" (rear wheel). Thickness 3/16". Length per shoe 12 15/16".
Clearance—.010" at each end of each shoe.
Braking Power—59% front wheels, 41% rear.

Hand Brake: See Service Brakes above.

MISC. MECHANICAL

Power Operated Convertible Tops, Windows & Front Seat: Hydro-Lectric type (hydraulic actuation with motor-driven pump supplying oil under pressure for power cylinders).
See Miscellaneous Section for complete data.

Windshield Wipers: Two types used:
Lincoln 9EL—Vacuum Link and Crank Arm type.
Cosmopolitan 9EH—Vacuum Cable Operated type.
See Miscellaneous Section for complete data.

MODEL IDENTIFICATION

VEHICLE NUMBER: Stamped on plate attached to engine side of dash and on top of right frame side rail to rear of front suspension upper control arm.

TUNE-UP

COMPRESSION PRESSURE: 115 lbs. at cranking speed. Maximum compression pressure 170 lbs.

VACUUM READING: Steady 18-21" idling at 500 RPM.

FIRING ORDER: 1-5-4-8-6-3-7-2. See diagram.

SPARK PLUG GAPS: .030" Limits .029-.032".

Plug Type—Champion H-10. 14 mm.

DISTRIBUTOR: Breaker Gap—.014-.016".

Cam Angle—28-30° (closed).

Breaker Arm Spring Tension—17-20 ounces.

Advance Performance—*See Ignition.*

Condenser Capacity—.21-.25 microfarad.

IGNITION TIMING: 2° BTDC.

Timing Procedure—*See Ignition Timing.*

Crankshaft Pulley Mark—Circular boss aligned with timing pin on right side of engine front cover.

CARBURETION:

Idle Setting—Approx. 1 turn open. Two screws—turning screws out gives richer mixture.

Idle Speed—Approximately 500 RPM.

Float Level—Fuel level ½" ± 1/32" below top edge of bowl. Use Fuel Level Gauge No. 9550-B.

Accelerating Pump—Center Hole average setting. Inner Hole for hot weather, Outer for cold weather.

Choke Setting: Index mark on coil cover aligned with center mark on housing (maximum variation one division either side).

Fuel Pump Pressure: 3½-4½ lbs.

MANIFOLD HEAT CONTROL: Automatic. No adjustment. Valve located between right end of exhaust pipe cross over and right exhaust manifold.

VALVE TAPPET CLEARANCE: .010-.012" Intake valves, .014-.016" Exhaust, Cold. No adjustment.

Valve Timing Check—*See Valve Timing.*

STARTING: *See Battery, Starter, Generator, Regulator.*

IGNITION

IGNITION SWITCH: Mercury No. 6A-11572-A.

Ignition Lock—Mercury No. 8H-11582-A.

COIL: Mercury No. 7RA-12029-A. Can type.

Location—On front lower corner of right cyl. hd.

Ignition Current—3 amps. idling, 4.85 stopped.

CONDENSER: Mercury No. 7RA-12300-B.

Capacity—.21-.25 microfarad.

DISTRIBUTOR: Mercury No. 7RA-12127-C (less Cap and Rotor). New "Pressure" Distributor with spark advance controlled by vacuum diaphragm moving breaker plate to advance spark against two breaker plate springs. Operating vacuum taken from 1 carburetor connection (2 passages inside carburetor, 1 at venturi, 1 at throttle valve). Full spark advance obtained at 18-35 MPH. with normal road load or for part throttle operation at any speed.

►*NOTE—Distributor is single contact type (no "coil loading" contacts are used).*

Breaker Gap—.014-.016".

Cam Angle—28-30° (closed).

Breaker Arm Spring Tension—17-20 ounces.

Rotation—Clockwise viewed from above.

Advance Performance
►(at Wide Open Throttle)

Distributor			Engine		
Degrees	Vacuum	R.P.M.	Degrees	Vacuum	R.P.M.
0°	0"	200	0°	0"	400
1¼-2¼°	0.4"	500	2½-4½°	0.4"	1000
4¼-5¼°	1.7"	1000	8½-10½°	1.7"	2000
6¼-7¼°	2.85"	1500	12½-14½°	2.85"	3000
7½-8½°	3.7"	2000	15-17°	3.7"	4000

Distributor Removal: Mounted at front of engine on right side. To remove, disconnect vacuum line, take out hold down screw, lift off.

IGNITION TIMING

Std. Setting ..... **2° BTDC.**

Crankshaft Pulley Mark—Circular boss on rear edge of pulley (timing pin above pulley on right side).

Timing—With #1 piston at firing position and timing mark on pulley aligned with timing pin on front of engine, loosen hold down screw on distributor, rotate distributor until contacts begin to open, tighten hold down screw. Check spark plug connections (see diagram), see that rotor at #1 in cap.

►**Timing (with Neon Timing Light)**—*CAUTION—Vacuum line must be disconnected to avoid vacuum advance operating.* Mark timing pin and pulley mark with white chalk. Connect timing light to #1 spark plug. Idle engine and adjust distributor (as directed above) until mark aligned with timing pin.

CARBURETOR

Holley-Ford—Mercury No. 8CM-9510-A (before Sept. 48), 8CM-9510-D (After Sept. 48). Dual concentric (double barrel) downdraft with Automatic Choke.

See Carburetor Section for complete data.

►**New Float & Float Spring change for stabilizing float level**—*See 1949 Mercury in Carburetor Section.*

►**New Main Tubes and Main Jet change to correct flat spots or stumble on acceleration**—*See 1949 Mercury in Carburetor Section.*

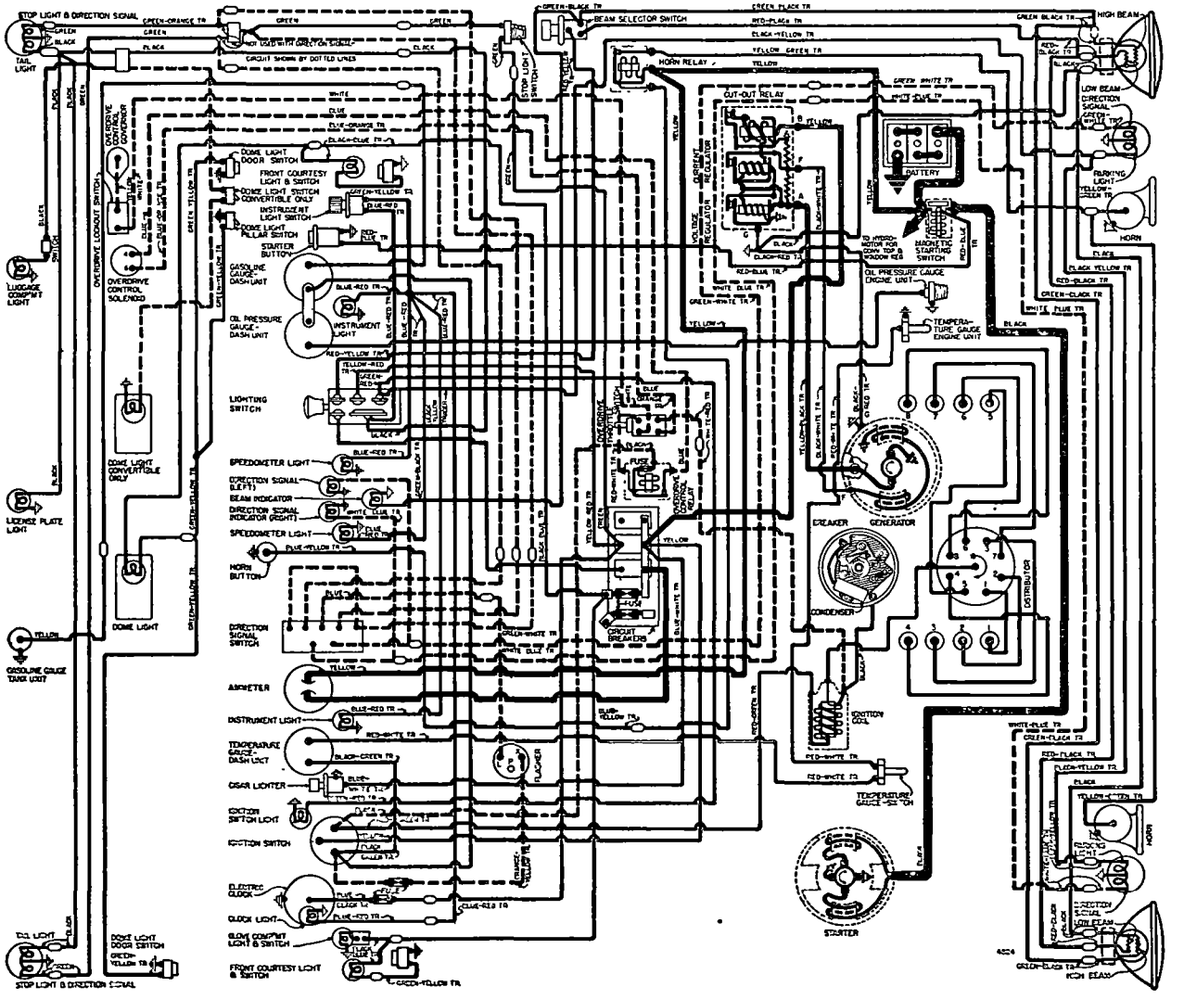

Settings (Idle Setting, Float Level, and Accelerating Pump): *See Tune-Up data.*
Metering Jets—*See Holley-Ford Jet Specification Table in Carburetor Section.*

Fast Idle: Holley-Ford Carburetor type.
See Carburetion Equipment Section for complete data.

Automatic Choke: Holley-Ford Carburetor type.
See Carburetion Equipment Section for complete data.
Setting—Index mark on coil cover aligned with center mark on housing (maximum variation one division either side).

CARB. EQUIPMENT

Air Cleaner (Oil Wetted): Mercury No. 8CM-9600-B.

Air Cleaner (Oil Bath): Mercury No. 8CM-9600-A.
Servicing (Oil Wetted type)—Wash element in solvent and drain, saturate element with engine oil every 2500 miles.
Servicing (Oil Bath type)—Clean and re-fill sump (to level mark) with same grade oil used in crankcase at 2500 miles (when crankcase drained). Occasionally wash filter in cleaning fluid.
►*CAUTION: Oil Bath Air Cleaners stamped "HH" on underside should be serviced with ½ pint of engine oil only. Disregard level mark or 1 pint specifications.*

Fuel Pump (std.): Mercury No. 7RA-9350-C.
Optl. (Fuel-&-Vacuum)—Mercury No. 8CM-9350.
Pressure—3½-4½ lbs. (both types).
See Carburetion Equipment Section for complete data.

Gasoline Gauge: King-Seeley Electric.
Dash Unit—Mercury No. 8M-9280 (K-S #42180).
Tank Unit (exc. Sta. Wgn.)—Mercury 99A-9275-B.
Tank Unit (Sta. Wagon)—Mercury No. 01A-9275-A.
See Carburetion Equipment Section for complete data.

BATTERY

Mercury No. 8M-10655-A. 6 volt, 17 plate, 100 A. H.
Zero Capacity—300 amperes for 3.3 minutes. Five Second Voltage—4.2 volts.
Grounded Terminal—Positive (+) terminal.
Location—On left side in engine compartment.
Dimensions—L. 10 9/16". W. 7¼". H. 8 1/16".

STARTER

Mercury No. 7RA-11002. Armature No. 18-11005.
Drive—Bendix No. A1472 (Mercury No. B-11350).
Rotation—Counter-clockwise at commutator end.
Brush Spring Tension—20-22 ounces.
Cranking Engine—100 RPM., 190-215 amperes.

Performance Data

Torque	R.P.M.	Volts	Amperes
4 ft. lbs.	1070	4.6	200
8 "	660	4.3	340
12 "	300	3.65	465
14 "	Lock	3.5	550

Starting Switch: Mercury No. 21A-11450 Magnetic Switch mounted on left front fender apron and controlled by panel pushbutton switch 6H-11500.

Removal: On right front face of flywheel housing cover. To remove, take off right engine splash pan (if used), free starter-to-oil pan bracket, take out 2 starter through bolts.

GENERATOR

Mercury No. 8BA-10002-A (less pulley & bracket).
Armature No.—Mercury No. 8BA-10005.
2 brush type with current and voltage regulation.
Charging Rate Adjustment—None. See Regulator.
Maximum Charging Rate—36 amperes, 7 volts, reached at approximately 18.5 MPH. Controlled by regulator (dependent on load & battery condition).

To Check Generator Output—Connect ammeter in series with charging line at regulator "ARM" terminal, connect short insulated jumper between generator "A" and "F" terminals (to short out regulator). Run engine at approximately 1500 RPM. and note ammeter reading. If generator output equals or exceeds rate output (below) generator performance is satisfactory. Remove jumper.

►*CAUTION—Do not operate generator at higher speeds or in service with jumper connected between generator armature and field terminals. This jumper eliminates all regulator action.*

Performance Data

Amperes	Engine R.P.M.
33	1500

Rotation—Counter-clockwise at commutator end.
Brush Spring Tension—20-24 ozs.

Removal: On support secured to valve chamber cover by stud and nut, driven by belt in tandem with water pumps. To remove, loosen stud nut and disengage generator belt, take out capscrew in mounting strap, lift generator off support.

Generator Belt Adjustment: Loosen 2 bolts on fan mounting bracket, loosen generator support mounting stud nut, raise generator up until side movement on belt midway between generator and water pump pulley is ¾" (thumb and finger pressure), tighten stud nut.

Fan Belt Adjustment: *See COOLING.*

REGULATOR

Mercury Numbers

Regulator	Generator	Amperes
51A-10505-A or C	8BA-10002-A (Std.)	30-33
8M-10505	8BA-10002-A (Std.)	34-38

Voltage-current 3-Unit types.
See Electrical Equipment Section for complete data.
NOTE—Separate ground wire extending to cowl must be in place when generator operated.

Cutout Relay
Cuts In——6.0-6.4 volts COLD (will be slightly higher when warm).
Cuts Out—8 ampere discharge current (maximum).
Contact Gap—.010" (armature against upper stop).
Air Gap—.014" between armature and core with contacts open.

Voltage Regulator
Voltage Setting—7.0-7.4 volts COLD (7.2-7.6 volts after 20 minutes run).
Checking & Adjustment—*See Electrical Equip. Section.*
Air Gap—.032-.035" between armature and core with contacts just closed.
►*CAUTION—Make certain gauge contacts armature and not brass rivet on underside of armature.*
Contact Spring Tension—5 ounces minimum with contacts just opening.

Current Regulator
Current Setting (51A) .....30-33 amperes COLD
Current Setting (8M) .....34-38 amperes COLD
Checking & Adjustment—*See Electrical Equip. Section.*
Air Gap—.032-.035" between armature and core with contacts just closed.
Contact Spring Tension—5 ounces minimum with contacts just opening.

LIGHTING

Headlamps: Ford "Sealed Beam" type.
See Electrical Equipment Section for complete data.
Adjustment—Aim upper beams straight ahead (hot spot centers 3" below lamp center height at 25 ft.).
Beam Indicator—Bulb between 50 and 60 on speedometer. Lighted with Upper Beam "on".

Direction Signal: Std. *See Electrical Equipment Section.*
Direction Indicators—Right and Left indicators on lower edge of speedometer.
Direction Signal Flasher—Mercury No. 8L-13350-B.

Switches
Lighting—Mercury No. 7RA-11654.
Beam Selector—Mercury No. 7RA-13532.
Instrument—Mercury No. 5EH-13740-B.
Glove Box—Mercury No. 8L-14413.
Dome Light—Mercury No. 8M-13752-A.
Dome Light (Convertible)—Mercury No. 8H-13754.
Dome Light (Sta. Wagon)—Mercury No. 5EH-13752-A.
Door Switches—Mercury No. 8M-13713.
Stop Light—Mercury No. 11A-13480.
Trunk (with wire assy.)—Mercury No. 8M-13546.
Direction Signal—Mercury No. 8L-13335 (for service use Part No. 8L-14486—includes wire assy.).

MISC. ELECTRICAL

CIRCUIT BREAKERS: Mercury No. 8M-12258-A, No. 8H-12258-A (Convertible). Three used on one mounting, located on dash behind instrument panel together with two fuses (see wiring diagram for positions on bracket).
30 Ampere CB—Protects main lighting system.
15 Ampere CB—Protects speedometer light, control panel light, instrument cluster light, electric clock and clock light.
15 Ampere CB—Protects hydraulic equipment.

FUSES: Courtesy, Dome, Glove Box and Map Lights—14 ampere. Located on circuit breaker behind instrument panel (see wiring diagram).
Direction Signal—14 ampere. Located on circuit breaker behind instrument panel (see wiring diagram).
Clock—3 ampere. In clock feed wire.
Overdrive—30 ampere. On IGN terminal of overdrive relay (on dash under hood).
Heater—20 ampere. In lead to heater switch.

HORNS: Mercury No. 51A-13832-A (High Pitch, Right Horn), No. 51A-13833-A (Low Pitch, Left Horn). Dual horns operated by relay.
Air Gap—.027-.029" for high pitch (right horn), .032-.034" for low pitch (left horn).
Horn Current—13 amperes (high pitch), 14 (low).

Horn Relay: Mercury No. 7RA-13853-A. On dash.
Contact Gap—.015-.025".
Contact Closing Voltage—4 volts max.

ENGINE

ENGINE SPECIFICATIONS: Own Make. Eight cylinder "L" head, 90° Vee type with both cylinder banks and crankcase cast Enbloc.
Bore—3 3/16". **Stroke**—4".
Displacement—255.4 cu. ins. **Rated HP**—32.5.
Developed Horsepower—110 at 3600 RPM.
Compression Ratio—6.8-1 cast-iron head.
Compression & Vacuum Reading—*See Tune-Up.*

C NTINUED N NEXT PA E

ENGINE

CONTINUED FR M PRECEDING PA E

TIGHTENING TORQUES: *See Mercury Shop Notes.*

CYLINDER HEAD INSTALLATION: *See Mercury Special Data.*

OIL PAN REMOVAL: *See Mercury Shop Notes.*

CYLINDER SLEEVES: Not used.

PISTONS: Aluminum alloy, steel strut, dome head, U-slot, cam ground type.

►*CAUTION—1949 Mercury and Ford Pistons or Rings are not interchangeable.*

Weight—370 grams. **Length**—2.89" (exclud. dome).

Removal—Pistons and rods removed from above.

Clearance—.0005-.001". See Fitting Pistons.

Cyl. Bore Wear Limits—Out-of-round .003", Taper .006".

Replacement Pistons: Std., .0025", .020", .030", .040" OS.

Fitting Pistons: Use ½" wide feeler inserted between piston and cylinder wall at right angles to pin. Feeler thickness .0015" for New Piston in New Bore, .003" for New Piston in Worn Bore or Worn Piston in New Bore, .004" for Worn Piston in Worn Bore. Pull to withdraw feeler 6 to 12 lbs.

PISTON RINGS: Two compression, two slotted oil rings per piston (lower oil ring below pin). Rings are taper faced. Upper oil ring groove slotted, lower ring groove drilled for oil drainage.
NOTE—Top compression ring Chrome plated.

►*CAUTION—1949 Mercury and Ford Piston Rings are not interchangeable (heavier rings used on Mercury).*

Ring	Width	End Gap①	Side Clearance
Compr. #1	.154"	.012-.020"	.0015-.0030"②
Compr. #2	.154"	.012-.020"	.0010-.0025"③
Oil #3 & 4	.142"	.008-.020"	.0015-.0030"②

Worn Limit—①—.035", ②—.0040", ③—.0035".
Ring Thickness—Compression .0933", Oil .186".

Installing Rings: Top compression ring assembled with counterbore to top. Lower compression ring assembled with side marked "TOP" to face top of piston.

Replacement Rings: Ring sets furnished standard size and .020", .030", .040" Oversize.
NOTE—Service Rings have expander behind top oil ring, not the bottom.

PISTON PIN: Diameter—.7503". **Length**—2.847". Floating type (lock ring in piston at each end). Pin hole in connecting rod bronze bushed.

Pin Fit in Piston and Rod Bushing—.0005" clearance (new), .0015" (worn limit).

Replacement Pins: Std. size & .001", .002" Oversize.

CONNECTING ROD: Length—7".
Weight—524 grams (less bearings).
Crankpin Journal Diameter—2.1385". Maximum wear limits—Out-of-round .0015", taper .001".

►**Lower Bearing**—*Locked in (not floating type as used on earlier engines)*, steel-backed, copper-lead alloy lined, replaceable shells. Upper and lower halves interchangeable.
Clearance—.0005-.003" (new), .005" (worn limit).
Sideplay—.006-.014" (new), .022" (worn limit).

►*NOTE—Replace bearing shells less than .0745" thick.*

Bearing Adjustment: None (no shims). Do not file caps. Replace bearings. Tang on bearing must engage groove in rod and cap.

►*PALNUT NOTE—Tighten finger tight plus 1/3 turn.*

Replacement Bearings: Standard size and .002", .010", .020", .030", .040" Undersize.

CRANKSHAFT: 3 bearing, 6 integral counterweights.

►*SLUDGE TRAPS—Crankpin throws equipped with sludge traps having removable plugs for cleaning.*

Journal Diameters—2.4990" (all main bearings).

Wear Limits: .0015" Out-of-round, .001" Taper.

Bearings—Steel-backed, copper-lead alloy lined, replaceable shells. Upper and lower halves alike.

Clearance—Zero-.0025" (selective fit, crankshaft to turn free). Worn limit .005" maximum.

►*NOTE—Replace main bearing shells when less than .0835" thick.*

Bearing Adjustment: None (no shims). Do not file caps. Replace bearings. Tang on bearing must engage groove in block and cap.

Replacement Bearings: Standard size and .002", .010", .020", .030" Undersize. Rear mains also furnished .015" Oversize in Overall length for taking up endplay wear.

End Thrust: Taken by rear main bearing. Adjust by replacing bearing if endplay excessive.

Endplay—.002-.006" (new), .008" (worn).

CAMSHAFT: Three bearing. Helical gear drive. Distributor drive gear pressed on front end of shaft, oil pump drive gear on rear end.

►*CAMSHAFT PRODUCTION CHANGE VEHICLE NO. 9CM-826 UP—Change to REVERSE helix timing gears to give forward thrust at front end of camshaft (was to rear on early engines) providing one-way thrust to camshaft for silencing backlash. Oiling at front end of shaft modified (new front camshaft bearing position, new camshaft, and new cylinder block oil line plug). See Mercury Shop Notes for data.*

Bearing Diameter—1.7985" (replace bearing if diameter greater than worn limit of 1.8015").

Replacement Bearings: Standard size and .010", .015" Undersize. Undersize bearings require finish reaming.

End Thrust: Taken by front end of camshaft and thrust surface on inner face of cylinder front cover. Adjust by replacing cover. **Endplay**—.007-.016".

Timing Gears: *CAUTION—Two types Camshaft Gears used:* Aluminum type used before Vehicle No. 145832, New type Fibre Gear used after Vehicle No. 145832.

►*CAUTION—Camshaft gear teeth REVERSE (L. H.) starting with Vehicle No. 9CM-826 (R. H. teeth used before this number).*

Replacement Camshaft Gears—As follows:

Aluminum Type—Standard and .006" OS (L. H. and R. H. teeth), .010" (R. H. teeth), .012" (L. H. teeth).

Fiber Type—Standard and .006", .012" OS.

Camshaft Setting: Mesh marked tooth of crankshaft gear with marked space on camshaft gear.

VALVES:	Head Diameter	Stem Diameter	Length
Intake	1.515"	.3410"①	4.8175"
Exhaust	1.515"	.3410"①	4.8140"

	Seat Angle	Lift	Stem Clearance
All Valves	45°	.338"	.0015-.0035"②

Wear Limit—①—.3375". ②—.005" Int., .006" Exh.

►*REPLACEMENT VALVES—Exhaust valves furnished for replacement to be used for ALL VALVES.*
Valve Seat Inserts—Used on all valves.

Valve Guides: One piece type positioned and retained by "C" washer. Inside diameter .344". Outside diameter 1.031". Distance from top of valve seat to upper end of guide 1.116".

►**NEW VALVE GUIDE BUSHINGS:** New type rubber seal around outer diameter of Intake valve guide bushings, beginning with Vehicle No. 116,518.

Valve Lifters: Barrel type operating in guide holes in cylinder block.

Diameter—.9992" (replace if worn to less than .9977"). Length limit after resurfacing end 1.728".

Clearance—.0007-.0016" (new), .003" (worn limit).

Valve Springs: Coated springs used.
Spring Pressure—37-40 lbs. (closed), 76-80 (open).
Spring Test—37-40 lbs. at 2.125". Free length 2.41".

VALVE TIMING

Tappet Clearance: .010-.012" Intake, .014-.016" Exhaust, Cold. No adjustment.

Valve Timing: See Camshaft Setting above.

Intake Valves—Open 10° BTDC. Close 50° ALDC.

Exhaust Valves—Open 50° BLDC. Close 10° ATDC.

NOTE—Clearance for checking timing .015".

Valve Timing Check—Intake valve opens 10° BTDC. Valve timing mark location on crankshaft pulley.

LUBRICATION

Engine Oiling System: Pressure to main bearings, connecting rod lower bearings, camshaft bearings, timing gears and distributor drive gear. Piston pins and valve lifters lubricated by splash. Oil pump mounted in crankcase at rear of engine.

►*CAUTION—Vehicle No. 9CM-826 and Up use solid Cylinder Block Front Oil Line plug (plug with oil hole used on early engines). See CAMSHAFT PRODUCTION CHANGE in Mercury Shop Notes for complete data.*

Crankcase Capacity—6 quarts (refill).

Normal Oil Pressure—50 lbs. at 2000 RPM.

Oil Pressure Relief Valve: In oil pump body. Not adjustable.

Spring Tension—15 lbs. 2 ozs. to 15 lbs. 6 ozs. at 1.14".

NOTE—Cylinder block oil relief valve not used.

Oil Pump: Gear type (two types: spur gear or helical gear types). In crankcase at rear of engine.

Oil Filter: On left cylinder head. Replace cartridge each 5000 miles or more often if required.

Oil Filter Cartridge—Mercury No. 8CM-18662.

Oil Pressure Gauge: King-Seeley Electric.

Dash Unit—Mercury No. 8M-9273.

Engine Unit—Mercury No. 41A-9278.

See Miscellaneous Section for complete data.

Crankcase Ventilation: Filter element in oil filler breather cap (inlet), and in outlet pipe below fan.

Servicing—Wash screen in cleaning fluid and wet with engine oil when dry at oil change period (2500 miles).

Outlet Pipe Air Filter Cartridge—Mercury No. 8CM-6841.

COOLING

Cooling System: Pressure type with relief valve in filler cap and two belt-driven pumps (one for each bank) with re-circulating by-pass.
Capacity—22.25 quarts.
Pressure Valve—In radiator filler cap. Mercury No. 26H-8100-B (AC #846740). Opens at 3½-4 lbs.

Water Pumps: Two used. Centrifugal, belt-driven packless type. Shaft mounted on pre-packed ball-bearing at front, and bushing next to seal. Oil cup provided for bushing lubrication.
NOTE—Bottom bolt must be installed prior to installing water pump pulley.
See Water Pump Section for complete data.

►*CAUTION—WATER PUMP LUBRICATION: Oil cup provided on each pump which should be filled with SAE #20 engine oil when new and every 1000 miles. Use length of wire inserted in oil cup when oiling (ordinary oil can does not reach).*
Fan Belt Adjustment—Loosen 2 fan mounting bracket bolt nuts, raise fan up until side movement of belt midway between fan and crankshaft pulleys is ½".
Generator (& Water Pump) Belt Adjustment—*See GENERATOR.*

Thermostats: Two used (one in each cylinder head water outlet). Mercury No. 8RT-8575-A.
Setting—Starts to open 148-153°F. Fully open 168-173°F.

Temperature Gauge: King-Seeley Electric.
Dash Unit—Mercury No. 8M-10883.
Engine Unit—Mercury No. 8A-10990 (switch in right bank), No. 8A-10884 (reg. unit left bank).
See Miscellaneous Section for complete data.

CLUTCH

Borg & Beck Model 10A7, Mercury No. 8CM-7563. Single plate, dry disc type with Borglite driven member.
Cover Number—988 stamped on cover.
See Clutch Section for complete data.
Facings—Moulded. Inside diameter 6¾". Outside diameter 10". Thickness .125".

Pedal Adjustment: 1-1¼" free travel. Adjust by loosening locknut and turning adjusting screw on adjusting rod.

Removal: Remove transmission (see TRANSMISSION Removal below). Remove flywheel housing. Prick punch flywheel and pressure plate so that these parts may be placed in original positions when reassembling. Compress pressure plate assembly with Tool 7563 and remove capscrews. Take off clutch assembly.

TRANSMISSION

Own Make. 3-speed, all helical gear type. Constant-mesh, synchro-mesh (Second & High), sliding gear (Low & Reverse).
See Transmission Section for complete data.

Transmission Control: Steering column mounted shift.
See Transmission Section for complete data.

Removal: Disconnect rear universal, slide propeller shaft out of transmission. Disconnect clutch, transmission and speedometer linkage. Support rear of engine and disconnect rear engine mounting from frame. Take out eight transmission-to-flywheel housing capscrews and remove transmission.

OVERDRIVE

Warner Model AS1-R10C (Overdrive only). Optl. equipment. Overdrive is solenoid operated type (no centrifugal pawls) with Governor Control and throttle operated "kick-down."
See Transmission Section for complete data.
Solenoid—Mercury No. 8M-6916.
Control Relay—Mercury No. 8M-6915. On engine of dash. 30 ampere fuse at IGN terminal of relay.
Lock-Out Switch—Mercury No. 8M-6917-A.
Throttle Kick-down Switch—Mercury No. 8A-6918.
Governor—Mercury No. 8M-6919.

Removal: Same as for Std. transmission (above) after disconnecting overdrive control cable and wiring.

UNIVERSALS

Mechanics Type 2CR. Needle bearing type. 2 used.
See Universals Section for complete data.

►*NOTE—Slip joint formed by splined yoke of front universal engaging transmission mainshaft (or overdrive shaft). One-piece propeller shaft used.*

REAR AXLE

Own Make. Semi-floating, hypoid gear type with Hotchkiss drive (**separate carrier not used**). Axle ends flanged (no separate hub). Wheel bearings are sealed-ball pre-lubricated (no lubrication required).
See Rear Axle Section for complete data.
Ratio—Standard: 3.9-1 (43-11). With Overdrive: 4.27-1 (47-11). Station Wagon: 4.55-1 (50-11).
Backlash—.003-.008". Shim adjustment.

Removal: Raise rear of car. Remove axle shafts, and drive shaft. Take off hydraulic line clips from axle housing and free line from differential housing clip. Disconnect shock absorbers, spring U-bolts. Remove axle housing assembly from car.

Axle Shaft Removal: Remove rear wheels. Take out 3 capscrews holding brake drum to axle shaft flange. Remove hydraulic lines from brake backing plate. Take out 4 axle retainer nuts (work through opening in axle shaft flange). Use Tool 4235-A to remove axle shaft and bearing assembly from housing. Take off gasket and backing plate. Do not damage oil seal when removing axle shaft.

SHOCK ABSORBERS

Std.—Mercury 8M-18045-A1, A2 (front), 8M-18080-A1, A2 (rear).
Heavy Duty (special equip.)—Mercury 8M-18045-C1, C2, D (front), 8M-18080-C1, C2, D (rear).
Direct acting, hydraulic types. Two makes are used and are interchangeable except station wagon.
See Shock Absorber Section for complete data.

►*NOTE—Shock absorbers are permanently sealed and cannot be refilled or repaired.*

Rear Shock Absorber Installation—Lower tube has welded stone shield on lower end which must be installed toward front of car.

FRONT SUSPENSION

Front Suspension: Independent, linked parallelogram type with coil springs, direct acting shocks, and front stabilizer.
See Front Suspension Section for complete data.

►*CAUTION—Specifications listed below supersede earlier 1949 Mercury Front End Specifications.*

Kingpin Inclination—5° crosswise with ¾° Camber.
Caster—Pos. ½° to Neg. 1°. Threaded bushing adjustment at lower pivot pin.
Camber—0° to +¾°. Eccentric adjustment at upper pivot pin.
Toe In—3/32-5/32". Adjusting sleeve on outer end of each tie rod. Adjust equally.
Steering Geometry (toe out on turns)—Inner wheel turned 23½° ± ½°, outer wheel 20°.

STEERING GEAR

Gemmer Model 305—"3-tooth" Worm-and-roller type with "push-pull" adjustment.
See Steering Gear Section for complete data.

BRAKES

Service: Mercury-Bendix Hydraulic, Duo-Servo, Single Anchor type without ecentric adjustment. Hand lever applies rear wheel service brakes.
See Brake Section for complete data.
Wheel Cylinders—Diameter: Front wheel 1.128" (hone limit 1.132"). Rear wheel 1.003" (hone limit 1.005").
Drums—Diameter 11".
Lining—Molded or woven. Width 2" (front wheel), 1¾" (rear wheel). Thickness 3/16". Length per shoe 11 15/16".
Clearance—.010" at each end of each shoe.
Braking Power—56% front wheels, 44% rear.

Hand Brake: See Service Brakes above.

MISC. MECHANICAL

Power Operated Convertible Tops, Windows, & Front Seat: Hydro-Lectric type (hydraulic actuation with motor-driven pump supplying oil under pressure for power cylinders).
See Miscellaneous Section for complete data.

Windshield Wipers: Vacuum Link & Crank Arm Type.
See Miscellaneous Section for complete data.

CYLINDER HEAD

1949-50 MODELS

INSTALLING CYLINDER HEAD: Use a Torque Indicating Wrench to tighten cylinder head stud nuts, tighten in correct sequence as shown in the diagrams. Cast Iron heads sould be tightened cold and rechecked after the engine has been run and thoroughly warmed up.

Cylinder Head Gasket—Always use new gasket. Coat gasket with very light application of Perfect Seal Gasket Paste to insure tight seal between head and block.

NASH '600'

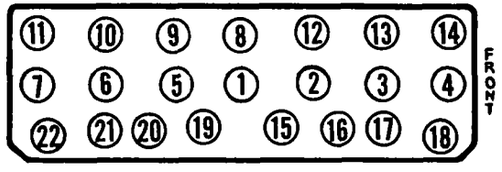

NASH 6

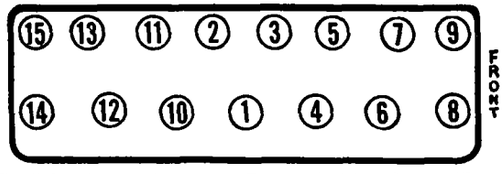

Tightening T rque—See Tightening (Torque Wrench) Specifications below.

TIGHTENING (TORQUE WRENCH) SPECIFICATIONS

1949-50 MODELS

Cylinder Head Stud Nuts:	Ft. Lbs.	In. Lbs.
'600'—Dry	61-64	732-768
'600'—Oiled	57-60	684-720
Amb. 6 & 8—Dry	65-70	780-840
Amb. 6 & 8—Oiled	60-65	720-780
Main Bearing Capscrews (Sixes)	66-70	792-840
Main Bearing Capscrews (Eight)	70-73	840-876
Connecting Rod Bolt Nuts ('600')	27-30	324-360
Con. Rod Bolt Nuts (Amb.)	50-55	600-660
Tappet Screw '600'	4 1/6	50 min.

ORIGINAL BORE & PISTONS

1949-50 MODELS

ORIGINAL BORE SIZE (ENGINE CODE) Engines factory equipped with .010" oversize bore (or undersize bearings) are marked with a three-letter code for identification. Standard size engines do not have this code mark.

Cod Mark Location—Code mark consists of three letters stamped near water temperature gauge engine unit mounting ("600" Models), on engine number pad (Amb. Models).

Letter Position—Bore (and piston) size is indicated by first letter of the three-letter code.

Siz Identification—Letters indicate following:

"A"—Standard size Bore and Pistons.

"C"—.010" Oversize Bore and Pistons.

NOTE—The ther two letters of the three-letter code designate main and connecting rod journal and bearing sizes (see Original Bearing Sizes).

1949-50 MODELS

ORIGINAL BORE AND PISTON SIZES: Original cylinder bore and piston sizes (standard size and .010" Oversize) are graded in steps listed in table below and are marked by letters. Bore and piston carry same mark. Difference in diameter between piston and cylinder bore gives the desired .0003-.0009" clearance. Marks located as follows:

Piston Mark—Letter stamped on piston head.

Cylinder Bore Mark—Letter stamped on exhaust pipe bosses on side of block (#1, 3, and 5 ahead of stud hole in bosses, #2, 4, 6 to rear of stud hole).

Standard Size Bore & Piston		.010" Oversize Bore & Piston	
Mark	Size	Mark	Size
A	0—	CA	+10—
B	0	CB	+10
C	0+	CC	+10+
D	+1—	CD	+11—
E	+1	CE	+11
F	+1+	CF	+11+
G	+2—	CG	+12—
H	+2	CH	+12
I	+2+	CI	+12+

Model "600" Note—Cylinder Bore & Piston dimensions for standard 'B' and 'CB' sizes are as follows:

Piston Diam.—3.1244-3.1247" (B), 3.1344-3.1347" (CB).

Cylinder Bore—3.125-3.1253" (B), 3.135-3.1353" (CB).

ORIGINAL BEARING SIZES

1949-50 MODELS

ORIGINAL BEARING SIZES (ENGINE CODE NOTE):—Engines factory-equipped with oversize bores or undersize main or connecting rod bearings carry a three letter code for identification. Standard engines carry no code mark.

Code Mark Location—Three letter code stamped on machined surface near water temperature gauge engine unit mounting ("600" Models), on engine number pad on upper right corner of engine block (Amb. Models).

Letter Position—Three letter code used. Position of letter indicates the following:

1st Letter—Original Bore Size.

2nd Letter—Main Bearing Journal Size.

3rd Letter—Crankpin Journal Size.

Size Identification—Letters indicate following:

'A'—Standard size (bore or bearing sizes).

'B'—.010" Undersize (main or con rod bearings).

'C'—.010" Oversize (bore size with .010" OS Pistons).

NOTE—.010" Undersize bearings fitted to .010" Undersize main bearing and crankpin journals. .010" Oversize pistons fitted to .010" oversize bores.

CRANKSHAFT & MAIN BEARINGS

1949-50 MODELS

PLASTIGAGE FOR CHECKING BEARING CLEARANCE: Consists of plastic rod material supplied in envelope marked with scale which gives bearing clearance in thousandths of an inch when used to measure flattened plastigage in bearing cap. Use Plastigage as follows:

Bearing Clearance Check—Remove bearing cap, wipe oil from bearing insert and journal (CAUTION—When checking main bearings, keep all other bearing caps tight so that crankshaft weight will not cause incorrect reading). Place piece of Plastigage rod across full width of bearing insert in cap, re-install bearing cap and tighten bolts to recommended torque (see Tightening Specifications). Remove cap, match widest width of flattened Plastigage with correct graduation of scale on envelope (marking of this graduation is clearance).

1949-50 MODELS

CRANKSHAFT REAR OIL SEALS: Install new seals with rear main bearing cap off (and crankshaft out of engine when replacing upper half) as follows:

Rear Main Bearing Oil Seal ('600)—Hemp packing fitted in groove in crankcase and cap behind oil slinger on crankshaft. Cap sealed with rubber plugs in groove on each side where cap fitted in recess in block. Use Tool J-1610 to install packing in groove in cap and block. Place packing in groove (with bearing shell removed), place small diameter of tool over packing, hit end of tool with lead hammer to seat packing, cut ends of packing flush with bearing cap seat, remove tool. Repeat operation for groove in block. Install rubber seal plugs on each side of bearing cap (where angle seal used, make certain that seal also seated in horizontal groove in block).

Rear Main Bearing Oil Seal (Amb. Six)—New type steel-backed, synthetic rubber seal. Install upper half in block, lower half in bearing cap, making certain that seal fits snugly over edge of rear bearing oil-return groove. See that surface on crankshaft to rear of oil slinger (on which seal bears) is clean and smooth. Install rubber seal key strips on either side of bearing cap (these strips overlap bearing cap and seal sides and mating surfaces of bearing cap in crankcase).

1949-50 MODELS

CRANKSHAFT END THRUST PLATE ('600'): Crankshaft end thrust taken by flanged edges of front bearing. A steel thrust plate is assembled between rear face of timing chain sprocket and flanged face of front bearing. Plate keyed to shaft by woodruff key which also secures sprocket on shaft. When plate installed, chamfered edge on inner diameter should face toward the rear for tight fit against bearing journal.

Adjustment—If endplay not correct with all parts correctly assembled, replace front main bearings or thrust plate.

CAMSHAFT & BEARINGS

1949-50 MODELS

CAMSHAFT REMOVAL: Amb. "600". Special valve tappet retaining clips (supplied in sets of 16—Tool No. J-1612) available for camshaft removal without necessity of removing valves or cylinder head. Clips should be installed on upper ends of valve lifters and will hold lifters up out of the way while the camshaft is being withdrawn.

CAMSHAFT REMOVAL: Amb. Six. Remove pushrods. Remove valve cover on side of engine, lift up each valve lifter and use rubber band to hold lifters up out of the way while the camshaft is being withdrawn.

MODEL IDENTIFICATION

SERIAL NUMBER: On plate on right side of dash under engine hood.

1949 Numbers—K-260501 Up (Kenosha, Wis.), KC-1001 Up (El Segundo, Calif.), KT-1001 Up (Canada).

1950 Numbers—K-340001 Up (Kenosha, Wis.), KC-9501 Up (El Segundo, Calif.), KT-1001 Up (Canada).

ENGINE NUMBER: Stamped on right side of engine block above exhaust pipe.

1949 Numbers—S-1001 Up. **1950 Nos.**—S-92001 Up.

TUNE-UP

COMPRESSION PRESSURE: 120 lbs. at cranking spd.

VACUUM READING: Steady 18-21", 450-500 RPM idle.

FIRING ORDER: 1-5-3-6-2-4. See diagram.

SPARK PLUG GAPS: (1949) .025", (1950) .030" ±.002".

Plugs—Auto-Lite Type A5. 14 mm. Metric.

DISTRIBUTOR: Breaker Gap—.018-.024".

Cam Angle—Closed 31° to 37° with .022" gap.

Breaker Arm Spring Tension—17-21 ozs.

Automatic & Vacuum Advance—*See Ignition.*

Condenser Capacity—.18-.23 microfarad.

IGNITION TIMING: TDC. (At Top Dead Center).

Timing Procedure—*See Ignition Timing.*

Timing Mark—"/" mark on dampener aligned with pointer on chain cover above dampener.

Octane Selector—Set to give slight ping when accelerating with wide open throttle at 10-15 MPH.

CARBURETION:

Idle Setting—Idle screw ¾-1¾ turns open. One screw—turning screw out gives richer mixture.

Idle Speed—450-500 RPM.

Float Level—½" from top of projection on underside of bowl cover to top of seam on free end of float (invert bowl cover and float to check level).

Accelerating Pump—Medium stroke (lower, outer hole) Normal. Inner hole (min.). Upper (max.).

Choke Setting: 2 points rich.

Fuel Pump Pressure: 3-4½ lbs. (5 lbs. maximum).

VALVE TAPPET CLEARANCE: .015" All Valves, Hot.

NOTE—Tappet adjusting screws self-locking type.

Valve Timing Check—*See Valve Timing.*

STARTING: *See Battery, Starter, Generator, Regulator.*

IGNITION

IGNITION SWITCH: Nash No. 3125645. (1949) on underside of steering column. (1950) on instrument panel.

COIL: Delco-Remy No. 1115328. Mounted on engine.

Ignition Current—2 amperes idling, 5 stopped.

CONDENSER: Delco-Remy Part No. 1869704.

Capacity—.18-.23 microfarad.

DISTRIBUTOR: Delco-Remy No. 1112351. Full automatic advance type with separate vacuum spark control and octane selector adjustment.

Breaker Gap—.018-.024".

Cam Angle—Closed 31° to 37° with .022" gap.

Breaker Arm Spring Tension—17-21 ozs.

Rotation—Counter-clockwise viewed from above.

Automatic Advance

Degrees	Distr. R.P.M.	Degrees	Eng. R.P.M.
Start	300	2	600
5½	400	11	800
12	1400	24	2800

Vacuum Spark Control: Delco-Remy No. 1116045. Separate unit mounted on hold-down plate and linked to advance arm. Provides additional advance at speeds above idling except when engine accelerated or operated with wide open throttle when spark retarded by return spring within unit. Plunger Travel 23/64".

Vacuum Advance

Distr. Degrees	Eng. Degrees	Vacuum (" of HG)
Start	0°	3.5"
8½°	17°	13-17"

Distributor Removal: On left side of engine. To remove, disconnect vacuum line, take out hold-down screw, lift distributor off.

IGNITION TIMING

Std. Setting ..... **At TDC.**

NOTE—Car manufacturer recommends using Neon Timing Light to set Ignition Timing.

Timing (Using Neon Timing Light)—Align ⅛" holes in clamp arm and distributor support and insert pin. Loosen distributor hold-down screw and center octane selector scale, tighten screw. Clip Neon Timing Light to #1 spark plug, direct light at vibration dampener at timing chain cover pointer. Idle engine at 450-500 RPM., loosen clamp arm bolt, rotate distributor until "/" mark on dampener aligned with pointer, tighten clamp bolt, remove ⅛" pin in support. Check Octane Selector Setting.

Octane Selector Setting—Loosen hold-down screw in distributor, adjust scale so that slight ping secured at 10-15 MPH. with wide open throttle.

CONTINUED N NEXT PAGE

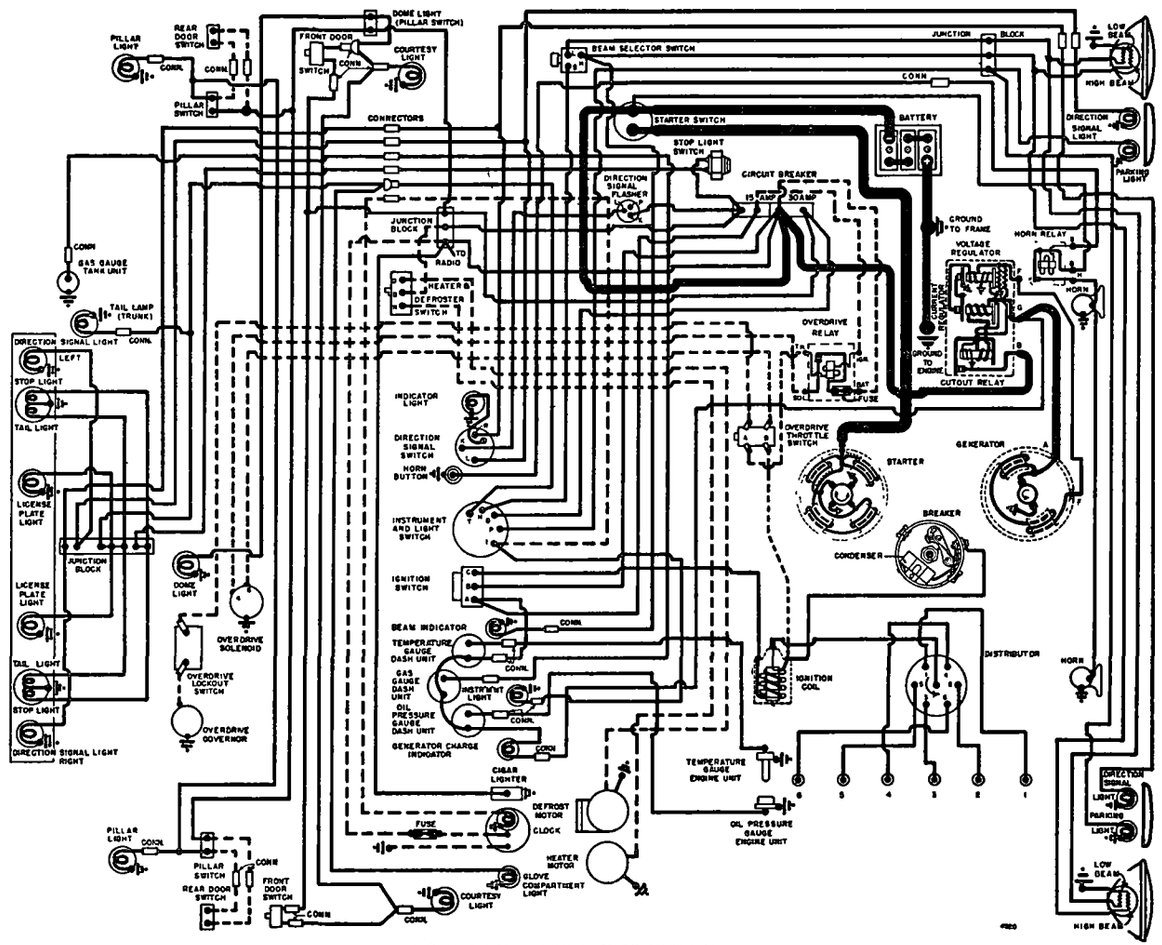

1949 NASH "600" 4940 SERIES

C NTINUED FR M PRECEDIN PAGE

CARBURETOR

Carter WA1 No. 694S—1¼" Single Barrel downdraft type with Climatic Control.
Casting No. on Flange—298.
See Carburetor Section for complete data.

Settings (Idle Setting, Float Level, and Accelerating Pump): *See Tune-Up data.*
Metering Rods & Jets—*See Carter Jet Table in the Carburetor Section.*

Fast Idle: Carter Single Barrel Carburetor type.
See Carburetion Equipment Section for complete data.
Setting—⅝" clearance between choke valve and air horn (Gauge T109-85) with throttle valve closed and stopscrew against (not on) first step of fast idle cam. Adjust by bending connector link at lower offset (Tool T109-41).

Automatic Choke: Carter Climatic Control (Single Barrel Carburetor).
See Carburetion Equipment Section for complete data.
Setting—2 points rich.

CARB. EQUIPMENT

Air Cleaner: AC No. 1542037 Oil-wetted type, Filter Element AC #1. AC No. 1544558 Oil-bath type, Filter Element AC #21.
Servicing (Oil-wetted type)—Wash filter element and re-oil with heavy engine oil every 2000 miles.
Servicing (Oil-bath type)—Wash filter element, clean out and refill oil reservoir with 1 pint SAE 50 oil (#20 for winter) every 5000 miles.

Fuel Pump (Std.): AC Type W, 1537398 or 1539413.
(Optl. & Overdrive Cars)—AC Type AJ, No. 1537406 combination fuel-and-vacuum pump.
Replacement Pumps—AC 532 (for W), 7406 (for AJ).
►*CAUTION—Install pumps with rocker arm ABOVE (W), or UNDER (AJ) eccentric on camshaft.*
See Carburetion Equipment Section for complete data.
Pressure—3-4½ lbs. (5 lbs. maximum).

Gasoline Gauge: Auto-Lite electric type.
Dash Unit—Auto-Lite No. 11578-A.
Tank Unit—Auto-Lite No. 11529-A.
See Carburetion Equipment Section for complete data.

BATTERY

Auto-Lite Type CT-1-13—6 volt, 13 plate, 90 Ampere Hour capacity (20 hour rate).
Starting Capacity—114 amperes for 20 minutes.
Zero Capacity—300 amperes for 3.0 minutes. Five second voltage—4.10 volts.
Dimensions—Lght. 9 1/16". W. 7 1/16". H. 9 1/16".
Grounded Terminal—Positive (+) grounded to wheelhouse (engine grounded at same point).
Location—Under hood at left side of engine.

STARTER

Delco-Remy 1109451 (RHD 1109458). Arm. 1882547.
Drive—Barrel type Bendix Drive No. A-2033.
Rotation—Counter-clockwise at commutator end.
Brush Spring Tension—24-28 ounces.

Performance Data

Torque	R.P.M.	Volts	Amperes
0 ft. lbs.	6000	5.7	60
11.5 "	Lock	3.3	540

Starting Switch: Delco-Remy No. 1996476. Mounted on toeboard, actuated by fully depressing clutch pedal.
Removal: Flange mounted on left front face of flywheel housing. To remove, work from above under hood, disconnect shift rods at shift levers, disconnect starter cable, take out mounting screws.

GENERATOR

Delco-Remy Model 1102702. Armature No. 1911454. Two-brush with voltage and current regulation.
Maximum Charging Rate—30 amperes, 8.0 volts.
Charging Rate Adjustment—None (see Regulator).

Performance Data

	Amperes	Volts	R.P.M.
Cold	30①	8.0	1750

①—Not maximum output. See Current Regulator.
Rotation—Counter-clockwise at commutator end.
Brush Spring Tension—25 ounces.
Field Current—1.75-1.9 amperes at 6.0 volts.

Removal: Generator cradle mounted at left side of engine with fan belt drive (water pump driven by flexible coupling from generator). To remove, disconnect water pump, loosen fan belt, remove generator clamp band, lift out generator.

Belt Adjustment: Adjust whenever belt deflection exceeds ½" either way between the fan and generator shaft pulleys. To adjust, loosen fan mounting bracket screws (pivots on one screw, other screw hole slotted), raise fan, tighten screws. Belt misalignment can be corrected by installing shims behind fan bracket.

REGULATOR

Delco-Remy 1118302. Voltage & Current Regulator.
►*NEW "1118300 SERIES"* regulators have screw adjustment for settings and single regulator springs.
See Electrical Equipment Section for complete data.
CAUTION—Check generator for grounded field coils and leads before changing regulator settings to correct High Charging Rate or High Voltage.

Cutout Relay
Cuts In—5.9-6.8 volts hot (set to 6.4 volts hot).
Contact Gap—.020" (same for both sets).
Air Gap—.020" (with contacts just closed).

Voltage Regulator
Setting—7.0-7.7 volts hot (set to 7.4 volts hot). Regulator is over-compensated for temperature. Should be checked with cover in place and hot.
Air Gap—.075" with armature pressed down to point where contacts are just touching.
Checking & Adjustment—*See Elec. Equip. Section.*

Current Regulator
Setting—32-40 amperes hot (set to 36 hot).
Air Gap—.075" with armature pressed down to point where contacts are just touching.
Checking & Adjustment—*See Elec. Equip. Section.*

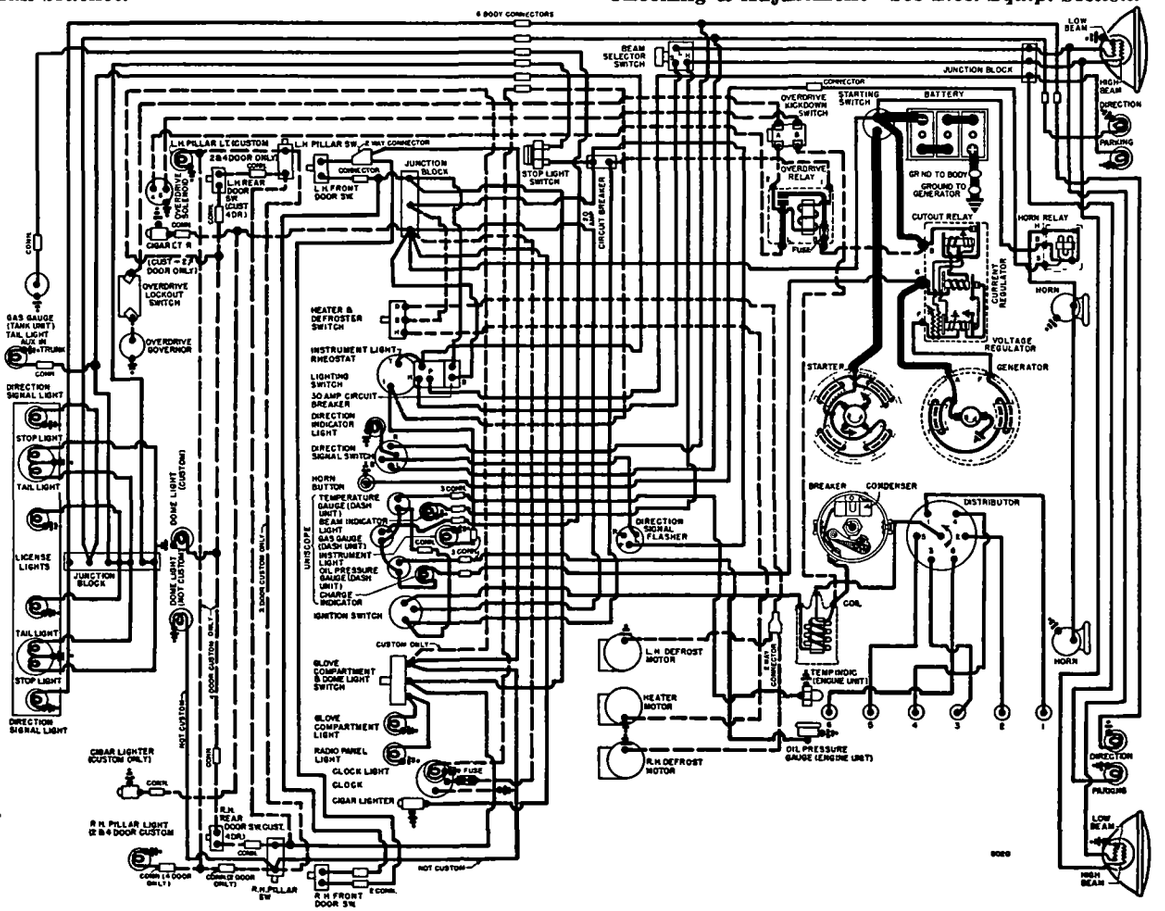

1950 NASH STATESMAN 5040 SERIES

LIGHTING

Headlamps: Hall "Sealed Beam". Upper and lower beams controlled by selector switch on toeboard.

See Electrical Equipment Section for complete data.

Adjustment—Aim upper beam straight ahead (hot spot center 3" below lamp center height at 25 ft.).

Beam Indicator—Red jewel located on right side of instrument cluster face.

Switches

Lighting (1949)—Rotary type on steering column.

Lighting (1950)—Push-pull type on instr. panel. Instrument lights controlled by turning light switch knob.

MISC. ELECTRICAL

CIRCUIT BREAKERS: Two used, side-by-side mounting (30 amp. CB to front) on left body sill brace under hood.

15 Ampere CB. Protects Stop Light Switch, Heater and Defroster Switch, and Direction Signal Flasher.

30 Ampere CB. Protects Dome Light, Pillar Light, Courtesy Light, and Main Lighting Switches.

FUSES: Electric Clock. 3 ampere in clock feed.

Overdrive—20 ampere. On overdrive relay on left body sill brace under hood.

HORNS: Auto-Lite. Model HW-4013 or HW-4025 (low note), HW-4014 or HW-4026 (high note). Twin horns.

Horn Current—15 amps. at 6.2 volts.

Horn Relay: Auto-Lite Model HRC-4001.

Contact Gap—.026".

Air Gap—.016-.020" with contacts closed but not sealed. .015-.018" air gap between armature leg and yoke with armature sealed to core.

Contacts Close—1.5-3.0 volts. Armature seals to core at 4.0 volts maximum.

Contacts Open—.5 volts minimum (open from seal).

ENGINE

ENGINE SPECIFICATIONS: 6 cylinder, "L" head type. Cylinder cast Enbloc with intake manifold cast in block (Iso-thermal fuel intake system).

Bore—3⅛". *See "Original Bore & Pistons" in Nash Special Data.*

Stroke—(1949) 3¾". (1950) 4".

Displacement—(1949) 172.6 cu. ins. (1950) 184 cu. ins.

Rated Horsepower—23.44.

Developed Horsepower (1949)—82 at 3800 RPM.

Developed Horsepower (1950)—85 at 3800 RPM.

Compression Ratio—7.0-1 std. cast-iron head.

Compression & Vacuum Reading—*See Tune-Up.*

TIGHTENING TORQUES: *See Nash Special Data.*

CYLINDER HEAD INSTALLATION: *See Nash Special Data.*

OIL PAN REMOVAL: Raise front of engine for access to front pan bolt just below generator.

PISTONS: Aluminum alloy, Cam Ground, Tin plated, strut type with solid skirt. **Length**—3⅜".

Weight—13½ ozs. stripped.

Removal—Pistons and rods removed from above.

Clearance—.001-.002". See Fitting New Pistons.

NOTE—Cylinder out-of-round and taper limits .004"

Original Piston & Bore Sizes: *See Nash Special Data.*

Fitting New Pistons: With all parts clean and dry, fit pistons so that piston will support its own weight in any portion of cylinder. If feeler gauge used, insert .002" x ½" feeler at right angles to pin bosses, pull to withdraw feeler must be 12-18 lbs.

Replacement Pistons: Furnished std. and .001", .002", .003", .005", .010", .012", .015", .020", .040" oversize.

PISTON RINGS: 2 compression, 2 slotted oil rings (expander behind lower oil ring), per piston all above pin. Oil ring grooves drilled with oil drain holes.

Ring	Width	End Gap	Side Clearance
Compression	3/32"①	.015 ± .005"	.002-.004"
Oil Control	5/32"②	.015 ± .005"	.002-.004"

①—.0930" ± .0005". ②—.15475" ± .00025".

1950 Note—#4 Oil ring is Thompson U-Flex type.

Installing Rings—Stepped inner edge of both compression rings must be UP.

PISTON PIN: Diameter—.8593-.8595". **Length**—2¾". Floating type with lock ring at each end.

Pin Fit in Piston—Thumb press fit or .0003" max. loose fit at room temperature (70°F.).

Pin Fit in Rod Bushing—Light thumb push fit at room temperature.

Replacement Pins: Standard & .001", .003" oversize.

CONNECTING ROD: Length—6⅝" (6.623-6.627").

Weight—25 ozs.

Crankpin Journal Diameter—2 3/32" (2.094-2.095"). *See "Original Bearing Sizes" in Nash Special Data.*

Lower Bearing—Removable steel-backed, babbitt lined type. No shims.

Clearance—.001-.0025". **Sideplay**—.006-.014".

►*PLASTIGAGE for checking bearing clearance—See "Crankshaft & Main Bearings" in Nash Special Data.*

Bearing Adjustment: None. Replace bearings.

NOTE—Tangs on bearing shells must engage slots in rod and cap. Palnuts used on rod bolt nuts.

Replacement Bearings: Std. & .002", .010" Undersize.

Installing Rods: Oil squirt hole in lower end of rod toward right (camshaft side) of engine.

NOTE—Rods and bearing caps should be marked before removal and replaced in same cylinder and in same relative positions.

CRANKSHAFT: Four bearing, counterweighted type with vibration dampener mounted on front end.

Journal Diameters—2 31/64" (2.479"). *See "Original Bearing Sizes" in Nash Special Data.*

Bearings—Removable, steel-backed, micro-babbitt.

Clearance—.002".

►*PLASTIGAGE for checking bearing clearance—See "Crankshaft & Main Bearings" in Nash Special Data.*

Bearing Adjustment: None. Replace bearings.

NOTE—Upper bearing halves can be rotated in and out without removing crankshaft.

Replacement Bearings: Std. & .002", .010" Undersize.

Crankshaft Oil Seal: *See "Crankshaft & Main Bearings" in Nash Special Data.*

End Thrust: Taken by front (#1) bearing (thrust plate on shaft ahead of flanged bearing).

Endplay Adjustment—*See "Crankshaft & Main Bearings" in Nash Special Data.*

Endplay—.006-.008".

CAMSHAFT: 4 bearing. Non-adjustable chain drive.

Camshaft Removal—*See Nash Special Data.*

Bearings—Steel-backed, babbitted bushings.

Clearance—.002".

End Thrust: Thrust plate assembled on front face of engine between #1 bearing and camshaft sprocket. Endplay controlled by position of timing chain sprocket (press fit on shaft).

Endplay—.004-.006".

CAUTION—Thrust plate has long oil groove on rear face which provides valve tappet lubrication from #1 camshaft bearing. Short groove on front face of plate lubricates timing chain and sprockets.

Timing Chain: Morse. Non-adjustable type. Width 1". Pitch ⅜". Length 22½" or 60 links.

Camshaft Setting: Install chain with punch mark on camshaft sprocket and inverted "V" mark on crankshaft sprocket adjacent and in line with straightedge across shaft centers. Check setting as follows: turn engine over until punch mark on camshaft sprocket at one o'clock position with crankshaft sprocket mark just beginning to mesh with chain—there should be 9½ links or 19 pins (2 pins to each link) between marks.

VALVES:	Head Diam.	Stem Diam.	Length
Intake	1 15/32"	.3407-.3412"	4 25/32"
Exhaust	1 9/32"	.3407-.3412"	4 25/32"

	Seat Angle	Lift	Stem Clearanc
All Valves	①	5/16"	.0013-.0028"

①—Valve face angle 44°. Valve angle in block 45°.

Valve Guides: Pressed in block. Remove guides using Tool J-2814. Install guides using Tool J-1429-A with adapter J-1429-4.

Valve Springs: Install springs with closed-coil end up against cylinder block and seated in counterbore in block. Spring free length 2 3/32".

►*CAUTION*—**Excessive wear of valve stems and guides will result if springs not properly seated in counterbore.**

	Spring Pressure	Length
Valve Closed	37-41 lbs.	1 3/4"
Valve Open	80-86 lbs.	1 7/16"

Valve Lifters: Mushroom type operating in reamed holes in block. Lifters removed from below with camshaft out of engine. *See "Camshaft & Bearing" in Nash Special Data for Camshaft Removal.*

VALVE TIMING

Tappet Clearance: .015" Hot, running clearance.

NOTE—Tappet adjusting screws are self-locking.

Valve Timing: See Camshaft Setting above.

Intake Valves—Open 6° BTDC. Close 50° ALDC.

Exhaust Valves—Open 46° BLDC. Close 10° ATDC.

Valve Timing Check—With tappet clearance set at .019", #1 exhaust valve should close with piston 10° after top dead center and "DC" mark on vibration dampener ⅝" past pointer on timing chain cover. Reset tappet clearance at .015" Hot.

C NTINUED N NEXT PAGE

C NTINUED FR M PRECEDIN PAGE

LUBRICATION

Engine Oiling System: Pressure to main, connecting rod, and camshaft bearings, valve tappets, and timing chain. Oil pump mounted on right side of crankcase.

Crankcase Capacity—5 quarts.

Normal Oil Pressure—50 lbs. at 30 MPH.

Oil Pressure Regulator—Spring-loaded release valve under plug to rear of oil pump on lower edge of crankcase. Non-adjustable. Opens at 50-58 lbs.

Oil Pump: Gear type pump mounted on right side of engine, driven by inclined shaft.

Oil Filter: Optional. Replace cartridge at 8000 mile intervals or more often if necessary.

Oil Pressure Gauge: Auto-Lite Electric.

Dash Unit—Auto-Lite No. 11577-A.

Engine Unit—Auto-Lite No. 11527-A.

See Miscellaneous Section for complete data.

COOLING

Cooling System: Pressure type with pressure valve and vacuum valve (relief valves) in filler cap, and positive circulation with water pump.

Capacity—14 quarts (15 quarts with heater).

Pressure Valve—AC #850501 Filler Cap. Opens 4 lbs.

Water Pump: New sealed-in, non-adjustable seal assembly. Grease fitting for bushing lubrication. Centrifugal pump driven by flexible coupling from generator.

See Water Pump Section for complete data.

Belt Adjustment—*See Generator Belt Adjustment.*

Removal—Drain cooling system, disconnect pump drive coupling (remove rear bolt), disconnect inlet hose, remove two pump mounting capscrews.

Thermostat: Dole. In cylinder head water outlet.

Setting—Starts to open 162-168°F. and should be fully open 20° above opening point.

Temperature Gauge: Auto-Lite Electric.

Dash Unit—Auto-Lite No. 11579-A.

Engine Unit—Auto-Lite No. 11528-A.

See Miscellaneous Section for complete data.

CLUTCH

Borg & Beck Model 8A7—Single plate, dry disc type.

Identification Note—Cover stamped "987".

See Clutch Section for complete data.

Facings—Woven (flywheel side). Moulded (pressure plate side). I. D. 5⅜". O. D. 8". Thickness ⅛".

Adjustment: Pedal free travel ½-¾". Adjust by loosening locknut and turning adjusting nut on connector link at clutch fork.

►*CAUTION—Do not disturb adjustment of clutch beam lever-to-pedal rod.*

Removal: Remove transmission (see below), disconnect clutch pedal linkage, remove clutch housing and pan, punchmark flywheel, clutch cover and pressure plate (reassemble to same marks), take out clutch fork and mounting screws in cover flange. Remove clutch assembly.

TRANSMISSION

Own Make. Constant-mesh, synchro-mesh (second & high), sliding gear (low & reverse), all helical gear.

See Transmission Section for complete data.

Transmission Control: Mech. steering column shift.

See Transmission Section for complete data.

Removal: Remove Rear Axle (see REAR AXLE below), disconnect transmission shift rods at levers on left side of case and speedometer cable. Support engine at rear, free rear engine mounting, take out transmission upper mounting bolts, install special guide bolts in these holes, remove lower mounting bolts, slide transmission back on guide bolts, remove from below.

OVERDRIVE

Warner Type AS6-R10B. Optional. Governor controlled type with electrical solenoid operation and throttle operated "kick-down" switch.

See Transmission Section for complete data.

Overdrive Solenoid—Delco-Remy No. 1118132.

Governor—Warner No. AR10B-72E.

Control Relay—Auto-Lite No. HRT-4101.

Overdrive Fuse—20 ampere. On BAT terminal of overdrive relay (on left body sill under hood).

Removal: Remove as a unit with transmission after disconnecting control cable and all wiring on overdrive case. See Transmission Removal (above).

UNIVERSALS

Mechanics 1½CR or Saginaw. One used (in torque tube adapter at rear of transmission). Tapered coil spring is installed ahead of joint to properly locate joint on driveshaft. NOTE—Universal is slip fit on transmission end, slight press fit on driveshaft.

See Universals Section for complete data.

Propeller Shaft: One-piece with pre-lubricated, rubber mounted center bearing installed in torque tube. Shaft splined at both ends, universal light press fit on forward end, coupling at rear end is a tight press fit.

►*CAUTION*—When connecting propeller shaft coupling to pinion shaft, coupling nut must be tightened to 300 ft. lbs. to prevent loosening in service.

See Nash Rear Axle in the Rear Axle Section for Propellor Shaft Data.

REAR AXLE

Own Make. Semi-floating, hypoid gear type with Torque Tube Drive.

See Rear Axle Section for complete data.

Ratio (without Overdrive)—4.4-1 (35:8) std.

Ratio (with Overdrive)—4.9-1 (39:8) std.

Backlash—.004-.006". Shim adjustment.

Removal: Jack up and support rear end of body. Disconnect rear brake cable at equalizer, torque tube at rear of transmission, brake hose and shock absorbers at axle end (allow shocks and brake hose to hang from body). Roll axle assembly out from under car. *For Torque Tube Trunnion Bracket Adjustment, see Nash Rear Axle in Rear Axle Section.*

Axle Shaft Removal—Remove wheel, pull drum (use hub puller J-1644). Disconnect brake line and cable. Remove backing plate mounting bolts nuts, take off oil seal retainer, backing plate, and wheel bearing adjusting shims (check thickness of shims, replace same amount when re-assembling). Withdraw axle shaft using Puller J-2498, do not drag shaft on inner oil seal.

Wheel Bearing Adjustment—Shims located between backing plate and flanged end of housing. To adjust, remove wheel and backing plate (above), add or remove shims for endplay. **Endplay**—.002-.004".

Rear Suspension: Coil spring type with conventional rear axle.

See Rear Axle Section for complete data.

SHOCK ABSORBERS

Delco or Monroe. Direct acting, Hydraulic.

See Shock Absorber Section for complete data.

FRONT SUSPENSION

Front Suspension: New design, parallelogram type with coil springs and direct acting shock absorbers. NOTE—Entire assembly mounted on box-section pressed steel cross-member attached to frame and body through 4 rubber-bushed bolts.

See Front Suspension Section for complete data.

Kingpin Inclination—8½° crosswise.

Caster—0° desired. Limits 0° to Pos. ½°. Shim adjustment ("C" washers) between upper control arm inner pivot and frame bracket.

Camber—0° desired. Limits Neg. ¼° to Pos. ¼°. Shim adjustment as for Caster (above).

Toe In—1/8-3/16". Loosen clamps at both ends of adjustable tubes in each tie rod. Turn tubes equally.

Steering Geometry—Inner wheel 23½° + ½° — 0°. Outer wheel 20°.

STEERING GEAR

Gemmer Model 305. Worm-and-roller type with "push-pull" adjustments.

See Steering Gear Section for complete data.

BRAKES

Service Brakes: Bendix (Lockheed) Hydraulic, self-centering (floating shoe) type. Hand lever applies rear wheel service brakes.

NOTE—No anchor pin adjustment on these brakes.

See Brake Section for complete data.

Wheel Cylinders—Diam.: Front wheels 1", Rear ⅞".

Drums—Cast-iron. Diameter 9".

►*Lining—CAUTION—Different width and length used on each shoe in each wheel as follows:*

Brake Shoe	Width	Length	Thickness
Forward (Primary)	2"	10"	3/16"
Rear (Secondary)	1 3/4"	7½"	3/16"

Lining is moulded type.

Clearance—All shoes just free of drag with brakes centralized (by hard brake application and releasing pedal). Eccentric adjustment for each shoe.

Braking Power—57.6% front wheels, 43.4% rear.

Hand Brake: See Service Brakes (above).

MISC. MECHANICAL

Windshield Wiper: Cable Operated—vacuum type.

See Miscellaneous Section for complete data.

MODEL IDENTIFICATION

SERIAL NUMBER: On plate on right side of dash under engine hood.

1949 Numbers—R-515501 Up (Kenosha, Wis.), RC-1001 Up (El Segundo, Calif.), RT-1001 Up (Canada).
1950 Numbers—R-556001 (Kenosha, Wisconsin), RC-3501 (El Segundo, Calif.).

ENGINE NUMBER: Stamped on pad on right side of engine block at upper front corner.

1949 Numbers—A-1001 Up (Kenosha, Wis.), A-1072 Up (El Segundo, Calif.).

1950 Numbers—A-46001 Up.

TUNE-UP

COMPRESSION PRESSURE: ('49) 125 lbs., ('50) 130 lbs. at cranking speed.

VACUUM READING: Steady 18-21", 450-500 RPM. idle. (375 RPM. on Hydra-Matic Drive cars).

FIRING ORDER: 1-5-3-6-2-4. See diagram.

SPARK PLUG GAPS: (1949) .025", (1950) .030" ±.002".

Plugs—Auto-Lite A5, or AC 44, 14 mm.

DISTRIBUTOR: Breaker Gap—.018-.024".

Cam Angle—Closed 31° to 37° with .022" gap.

Breaker Arm Spring Tension—17-21 ozs.

Automatic & Vacuum Advance—*See Ignition.*

Condenser Capacity—.18-.23 microfarad.

IGNITION TIMING: TDC. (At Top Dead Center).

Timing Procedure—*See Ignition Timing.*

Timing Mark—"/" mark on dampener aligned with pointer on chain cover above dampener.

CARBURETION:

Idle Setting—Set idle adjusting screw ½-1½ turns open. Turn out for richer mixture.

Idle Speed (standard)—450-500 RPM.

Idle Speed (Hydra-Matic)—375 RPM.

Float Level—½" from top of projection on underside of bowl cover to top of seam on free end of float (invert bowl cover and float to check level).

Accelerating Pump—Inner Hole (med. stroke) Normal, Lower Hole (max.) winter, Upper (min.) Summer.

Choke Setting: Centered (coil housing at index).

Fuel Pump Pressure: 3-4½ lbs. 5 lbs. Maximum.

VALVE TAPPET CLEARANCE: .015" Intake Valves, .018" Exhaust Valves, Hot.

Valve Timing Check—*See Valve Timing.*

STARTING: *See Battery, Starter, Generator, Regulator.*

IGNITION

IGNITION SWITCH: Nash No. 3125645. (1949) on underside of steering column. (1950) on instrument panel.

COIL: Delco-Remy No. 1115380. Mounted on engine.

Ignition Current—2 amperes idling, 5 stopped.

CONDENSER: Delco-Remy Part No. 1869704.

Capacity—.18-.23 microfarad.

DISTRIBUTOR: Delco-Remy No. 1110216. Full automatic advance type with auxiliary vacuum spark control.

Breaker Gap—.018-.024".

Cam Angle—Closed 31° to 37° with .022" gap.

Breaker Arm Spring Tension—17-21 ozs.

Rotation—Clockwise viewed from above.

Automatic Advance

Degrees	Distr. R.P.M.	Degrees	Eng. R.P.M.
Start	300	2	600
8	650	16	1300
15	1350	30	2700

Vacuum Spark Control: Delco-Remy No. 1116044. Integral type linked directly to breaker plate. Provides additional advance at speeds above idling except when engine accelerated or operated with wide open throttle when spark retarded by return spring within unit. Total plunger travel 7/64".

Vacuum Advance

Distr. Degrees	Eng. Degrees	Vacuum (" of HG)
Start	0°	4-6"
6°	12°	14-16"

Distributor Removal: On right side of engine. To remove, disconnect vacuum line, take out hold-down screw, lift distributor off engine.

IGNITION TIMING

Std. Setting ..... **At TDC.**

NOTE—Car manufacturer recommends using Neon Timing Light to set Ignition Timing.

Timing—Clip Neon Timing Light to #1 spark plug, direct light at vibration dampener at timing chain cover pointer. Idle engine at 450-500 RPM., loosen clamp arm bolt, rotate distributor until "/" mark on dampener aligned with pointer, tighten clamp bolt.

CARBURETOR

Carter WA-1, Model 683S 1949-50
Carter WA-1, Model 746S 1950①

①—After 3700 1950 cars with std. transmission.

1¼" single barrel, downdraft with Climatic Control.

Casting No. on Flange—(683S) 290.

See Carburetor Section for complete data.

Settings (Idle Setting, Float Level, and Accelerating Pump): *See Tune-Up data.*

Metering Rods & Jets—*See Carter Jet Table in the Carburetor Section.*

CONTINUED N NEXT PA E

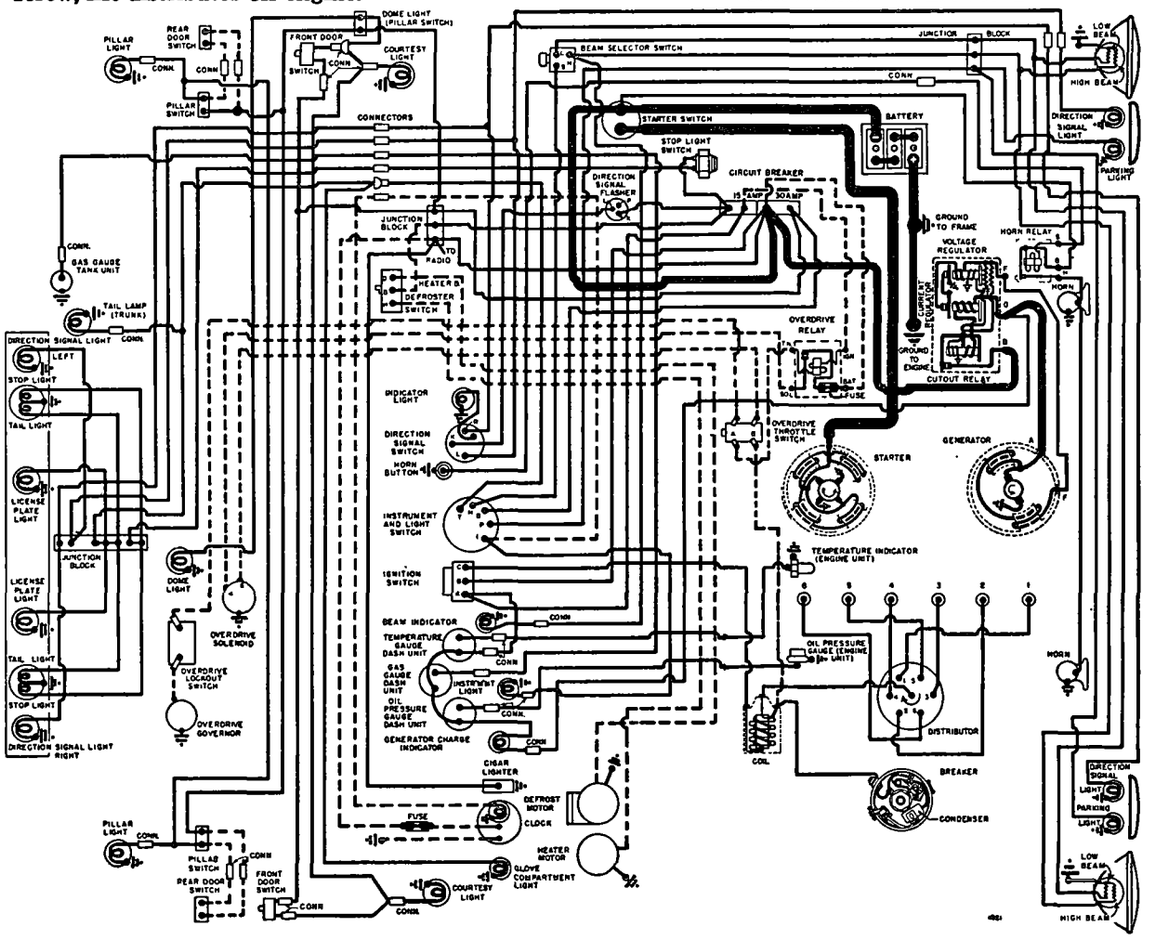

1949 NASH AMBASSAD R 4960 SERIES

C NTINUED FR M PRECEDIN PAGE

Hydra-Matic Throttle Linkage Adjustment: *See Nash Hydra-Matic Drive in Transmission Section.*

Fast Idle: Carter Single Barrel Carburetor type.

See Carburetion Equipment Section for complete data.

Setting—5/8" clearance between choke valve and air horn (Gauge T109-85) with throttle valve closed and stopscrew against (not on) first step of fast idle cam. Adjust by bending connector link at lower offset (Tool T109-41).

Automatic Choke: Carter Climatic Control (Single Barrel Carburetor).

See Carburetion Equipment Section for complete data.

Setting—Centered (coil housing at index).

CARB. EQUIPMENT

Air Cleaner: AC No. 1544443 Oil-wetted type (Std.), Filter Element #3. Oil-bath Cleaner AC No. 1544393, Element #7-S.

Servicing (Oil-wetted type)—Wash filter element and re-oil with heavy engine oil every 2000 miles.

Servicing (Oil-bath type)—Wash filter element, clean out and refill oil reservoir with 1 pint SAE No. 50 engine oil (summer), No. 20 (winter) every 5000 miles.

Fuel Pump (Std.): AC Type W, No. 1537389 or No. 1539412.

(Optl. & Overdrive Cars)—AC Type AJ, No. 1539216 combination fuel-and-vacuum pump.

Replacement Pump—AC No. 533 (for W), 585 (for AD).

►*CAUTION—Install pumps with rocker arm ABOVE (W), or UNDER (AJ) eccentric on camshaft.*

See Carburetion Equipment Section for complete data.

Pressure—3-4½ lbs. (5 lbs. maximum).

Gasoline Gauge: Auto-Lite electric type.

Dash Unit—Auto-Lite No. 11578-A.

Tank Unit—Auto-Lite No. 11529-A.

See Carburetion Equipment Section for complete data.

BATTERY

Auto-Lite Type CT-1-15—6 volt, 15 plate, 105 Ampere Hour Capacity (20 hour rate).

Starting Capacity—133 amperes for 20 minutes.

Zero Capacity—300 amperes for 3.5 minutes. Five second voltage—4.2 volts.

Dimensions—L. 9 1/16". W. 7 1/16". H. 9 1/16".

Grounded Terminal—Positive (+) grounded to wheelhouse (engine grounded at same point).

Location—Left side of engine compartment under hood.

STARTER

Standard.....**Delco-Remy 1107950. Arm. 1911832**

Hydra-Matic.....**Delco-Remy 1107965. Arm. 1867897**

RHD Cars.....**Delco-Remy 1107959. Arm. 1911832**

Drive (1107950 & 959)—Bendix No. A-2033.

Drive (1107965)—Overrunning clutch with solenoid pinion shift.

Rotation—Counter-clockwise at commutator end.

Brush Spring Tension—24-28 ozs.

Performance Data—1107950 & 959

Torque		R.P.M.	Volts	Amperes
0	ft. lbs.	5500	5.7	65
16	"	Lock	3.0	600

Performance Data—1107965

0	ft. lbs.	5500	5.7	80①
14	"	Lock	3.0	600

①—Includes current draw of starter switch.

Starting Switch (Std.): Delco-Remy No. 1996478. On toeboard, actuated by fully depressing clutch pedal.

Starting Switch (Hydra-Matic): Delco-Remy Solenoid No. 1118136 (no relay) used mounted on starter. Neutral Safety Switch provided so that starter operative only with Hydra-Matic lever at "N".

►*CAUTION*—Overrunning clutch pinion clearance must be adjusted whenever solenoid removed from starter.

See Electrical Equipment Section for complete data.

Neutral Safety Switch Adjustment—*See Nash Hydra-Matic Drive in Transmission Section.*

Removal: Flange mounted on left front face of flywheel housing. To remove, disconnect cable, take out flange mounting screws.

GENERATOR

Delco-Remy Model 1102702. Armature No. 1911454. Two-brush with voltage and current regulation.

Maximum Charging Rate—30 amperes, 8.0 volts.

Charging Rate Adjustment—None (see Regulator).

Performance Data

	Amperes	Volts	R.P.M.
Cold	30①	8.0	1750

①—Not maximum output. See Current Regulator.

Rotation—Counter-clockwise at commutator end.

Brush Spring Tension—25 ounces.

Field Current—1.75-1.9 amperes at 6.0 volts.

Removal: Generator cradle mounted at left side of engine with fan belt drive (water pump driven by flexible coupling from generator). To remove, disconnect water pump, loosen fan belt, remove generator clamp band, lift out generator.

Belt Adjustment: Adjust whenever belt deflection exceeds ½" either way between the fan and generator shaft pulleys. To adjust, loosen fan mounting bracket screws (pivots on one screw, other screw hole slotted), raise fan, tighten screws. Belt misalignment can be corrected by installing shims behind fan bracket.

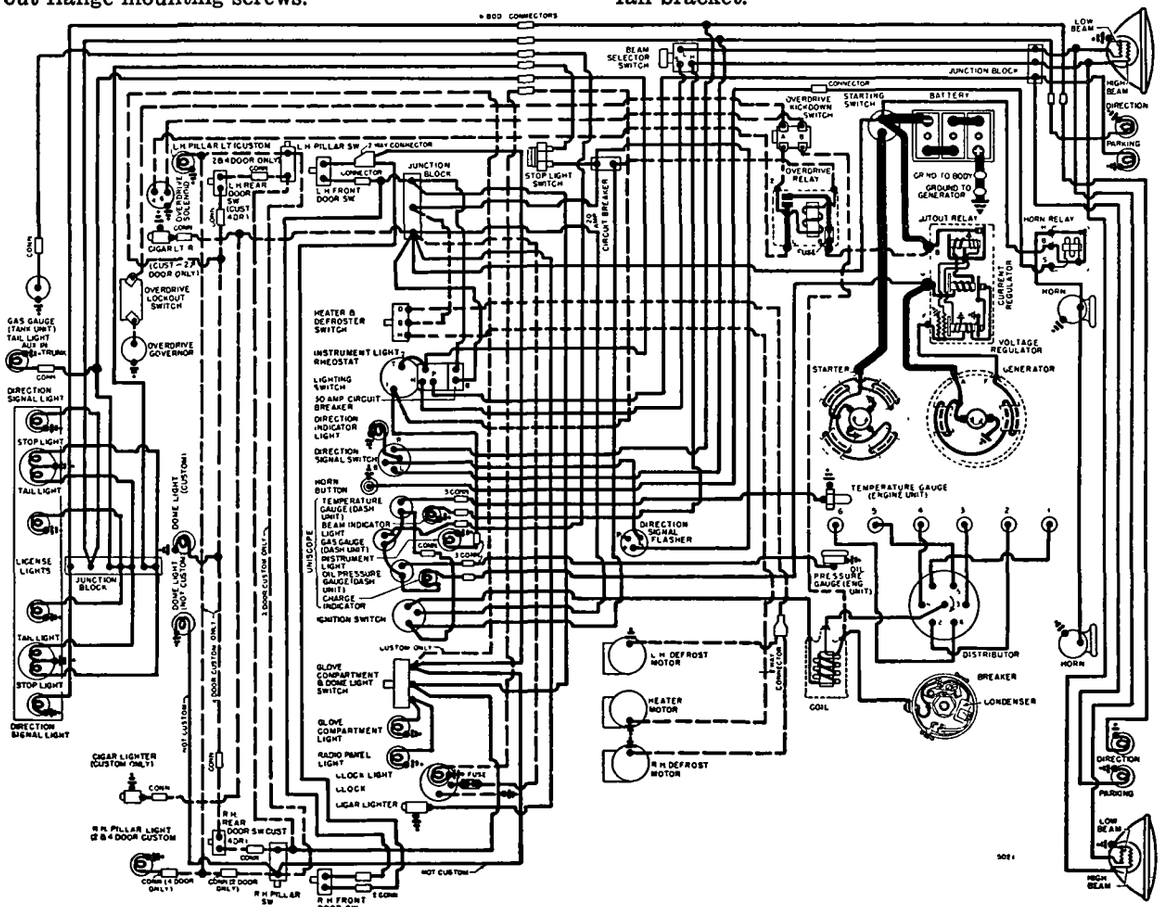

1950 NASH AMBASSADOR 5060 SERIES

REGULATOR

Delco-Remy 1118302. Voltage & Current Regulator.

►*NEW "1118300 SERIES"* regulators have screw adjustment for settings and single regulator springs. *See Electrical Equipment Section for complete data.*

CAUTION—Check generator for grounded field coils and leads before changing regulator settings to correct High Charging Rate or High Voltage.

Cutout Relay

Cuts In—5.9-6.8 volts hot (set to 6.4 volts hot).

Contact Gap—.020" (same for both sets).

Air Gap—.020" (with contacts just closed).

Voltage Regulator

Setting—7.0-7.7 volts hot (set to 7.4 volts hot). Regulator is over-compensated for temperature. Should be checked with cover in place and hot.

Air Gap—.075" with armature pressed down to point where contacts are just touching.

Checking & Adjustment—*See Electrical Equipment Section.*

Current Regulator

Setting—32-40 amperes hot (set to 36 hot).

Air Gap—.075" with armature pressed down to point where contacts are just touching.

Checking & Adjustment—*See Electrical Equipment Section.*

LIGHTING

Headlamps: Hall "Sealed Beam" type. Upper and lower beams controlled by beam selector switch on toeboard.
See Electrical Equipment Section for complete data.

Adjustment—Aim upper beam straight ahead (hot spot center 3" below lamp center height at 25 ft.).

Beam Indicator—Red jewel located on right side of instrument cluster face.

Switches

Lighting (1949)—Rotary type on steering column.

Lighting (1950)—Push-pull type on instr. panel. Instrument lights controlled by turning light switch knob.

MISC. ELECTRICAL

CIRCUIT BREAKERS: Two used, side-by-side mounting (30 amp. CB to front) on left body sill brace under hood.

15 Ampere CB. Protects Stop Light Switch, Heater and Defroster Switch, and Direction Signal Flasher.

30 Ampere CB. Protects Dome Light, Pillar Light, and Courtesy Light Switches and Main Lighting Switch.

FUSES: Electric Clock. 3 ampere in clock feed.

Overdrive—20 ampere. On overdrive relay on left body sill brace under hood.

HORNS: Auto-Lite. Model HW-4013 or HW-4025 (low note), HW-4014 or HW-4026 (high note). Twin horns.

Horn Current—15 amps. at 6.2 volts.

Horn Relay: Auto-Lite Model HRC-4001.

Contact Gap—.026".

Air Gap—.016-.020" with contacts closed but not sealed. .015-.018" air gap between armature leg and yoke with armature sealed to core.

Contacts Close—1.5-3.0 volts. Armature seals to core at 4.0 volts maximum.

Contacts Open—.5 volts minimum (open from seal).

ENGINE

ENGINE SPECIFICATIONS: 6 cylinder, valve-in-head type. Cylinders cast Enbloc with intake manifold cast in block. (Iso-thermal fuel intake system).

Bore—3⅜". *See "Original Bore & Pistons" in Nash Special Data.*

Stroke—4⅜". **Displacement**—234.8 cu. ins.

Rated Horsepower—27.34.

Developed Horsepower ('49) 112, ('50) 115 at 3400 RPM.

Compression Ratio—('49) 7.02-1, ('50) 7.3-1 iron hd. 7.52-1 ratio optional.

Compression & Vacuum Reading—*See Tune-Up data.*

TIGHTENING TORQUES: *See Nash Special Data.*

CYLINDER HEAD INSTALLATION: *See Nash Special Data.*

OIL PAN REMOVAL: Raise front of engine approx. 3" for access to front pan bolts and to provide clearance at #1 and #2 crank throws when withdrawing pan.

PISTONS: Aluminum alloy, Cam Ground, Tin plated, strut type with split skirt. **Length**—3⅞".

Weight—12½ ozs. (stripped).

Clearance—.001-.002". See Fitting New Pistons.
NOTE—Cylinder out-of-round and taper limits .004".

Removal—Pistons and rods removed from above.

Original Piston & Bore Sizes: *See Nash Special Data.*

Fitting New Pistons: With all parts clean and dry, fit pistons so that piston will support its own weight in any portion of cylinder. If feeler gauge used, insert .002" x ½" feeler at right angles to pin bosses on side opposite slot, pull to withdraw feeler must be 12-18 lbs.

Replacement Pistons: Furnished std. and .001", .002", .003", .005", .010", .012", .015", .020", .040" oversize.

Installing Pistons: Piston slot toward left side (opposite side from oil squirt hole in rod).

PISTON RINGS: 2 compression, 2 slotted oil rings per piston, all above pin. Drilled oil drain holes in oil ring grooves. Expander behind lower oil ring.

Ring	Width	End Gap	Side Clearance
Comp.	.0930±.0005"	.015±.005"	.002-.004"
Oil Control	.15475"	.015±.005"	.002-.004"

1950 Note—#4 Oil ring is Thompson U-Flex type.

Installing Rings—Top compression ring inner groove up, lower compression ring outer groove down.

PISTON PIN: Diameter—.8746". **Length**—2.824".
Floating type, with lock ring at each end.
NOTE—Pin hole in piston offset toward camshaft.
Pin Fit in Piston—Palm push fit with piston heated (heat piston in boiling water).
Pin Fit in Rod Bushing—Light thumb push fit at room temperature.

Replacement Pins: Standard & .001", .003" oversize.

CONNECTING ROD: Length—8¾". **Weight**—36¼ ozs.
NOTE—Pin hole in rod bronze-bushed.
Crankpin Journal Diameter—2.000-2.001". *See "Original Bearing Sizes" in Nash Special Data.*
Lower Bearing—Removable steel-backed, babbitt lined type. No shims.
Clearance—.001-.002". **Sideplay**—.008-.014".

►*PLASTIGAGE for checking bearing clearance—See "Crankshaft & Main Bearings" in Nash Special Data.*

Bearing Adjustment: None. Replace bearings.
NOTE—Tangs on bearing shells must engage slots in rod and cap. Palnuts used on rod bolt nuts.

Replacement Bearings: Std. & .002", .010" Undersize.

Installing Rods: Oil spray hole in lower end of rod must be toward camshaft (right) side of engine.
NOTE—Rods and bearing caps should be marked before removal and replaced in same cylinder and in same relative position.

CRANKSHAFT: Seven bearing, counterweighted type with vibration dampener mounted on front end.
Journal Diameters—2 31/64" (2.479"). *See "Original Bearing Sizes" in Nash Special Data.*
Bearings—Removable, steel-backed, micro-babbitt.
Clearance—.0018".

►*PLASTIGAGE for checking bearing clearance—See "Crankshaft & Main Bearings" in Nash Special Data.*

Bearing Adjustment: None. Replace bearings.
NOTE—Upper bearing halves can be rotated in and out without removing crankshaft.

Replacement Bearings: Std. & .002", .010" Undersize.

Crankshaft Rear Oil Seal: Rear Oil Seal is metal-backed, neoprene-lined seal. Slinger on rear journal. Seals serviced in pairs.
Oil Seal Servicing—*See "Crankshaft & Main Bearings" in Nash Special Data.*

End Thrust: Taken by Center (#4) bearing.
Endplay—.0055±.002".

CAMSHAFT: Non-adjustable 2 sprocket chain drive.
Camshaft Removal—*See Nash Special Data.*
Bearings—Steel-backed, babbitted bushings.
Clearance—.002".

End Thrust: Taken by front bearing, controlled by position of timing chain sprocket (press fit on shaft).
Endplay—.004-.006".

Timing Chain: Morse. Non-adjustable type. Width 1". Pitch ⅜". Length 22½" or 60 links.

Camshaft Setting: Install chain with punch mark on camshaft sprocket and inverted "V" mark on camshaft sprocket adjacent and in line with straightedge across shaft centers. Check setting as follows: turn engine over until punch mark on camshaft sprocket at one o'clock position with crankshaft sprocket mark just beginning to mesh with chain—there should be 9½ links or 19 pins (2 pins to each link) between marks.

VALVES:	Head Diam.	Stem Diam.	Length
Intake	1 3/4"	.3725-.3730"	5 17/32"
Exhaust	1 15/32"	.3725-.3730"	5 17/32"

	Seat Angle	Lift	Stem Clearance
Intake	①	11/32"	.0015-.003"
Exhaust	①	11/32"	.002-.0035"

①—Valve face angle 44°. Valve angle in block 45°.

►**1950 Note**—Valve length—5 31/64".

Valve Guides: Press fit in head (positioned by shoulder on guide.) Tops of guides should be ⅞" from face of cylinder head. Ream new guides for correct stem clearance.

C NTINUED ON NEXT PA E

ENGINE

CONTINUED FROM PRECEDING PAGE

Valve Springs: Single springs used. To remove springs without disturbing cylinder head, maintain pressure in cylinder at 90 lbs.

Free Length—(1949) 2 3/32", (1950) 2 1/16".

►**1949 Valve Spring Specifications**

	Spring Pressure	Spring Length
Valve Closed	53 ± 5 lbs.	1 11/16"
Valve Open	146 ± 5 lbs.	1 11/32"

►**1950 Valve Spring Specifications**

Valve Closed	53-58 lbs.	1 13/16"
Valve Open	141-151 lbs.	1 7/16"

Installing Springs—Closely coiled end of springs should be installed toward the valve seat.

Valve Lifters: Mushroom type. Lifter guide holes in block. Remove from below with camshaft out.

VALVE TIMING

Tappet Clearance: .015" Intake, .018" Exhaust, HOT.

Valve Timing: *See Camshaft Setting above.*

►**1949 Valve Timing**

Intake Valves—Open 4°32' BTDC. Close 61°28' ALDC.

Exhaust Valves—Open 49°28' BLDC. Close 16°32' ATDC.

►**1950 Valve Timing**

Intake Valves—Open 8°30' BTDC. Close 55°30' ALDC.

Exhaust Valves—Open 53°30' BLDC. Close 10°36' ATDC.

Valve Timing Check—With tappet clearance set at .0225", #1 exhaust valve should close with #1 piston ('49) 16½°, ('50) 10½° after top dead center and "DC" mark on vibration dampener slightly past pointer on timing chain cover. Reset exhaust tappet clearance to running clearance of .018" Hot.

LUBRICATION

Engine Oiling System: Pressure to main, connecting rod, and camshaft bearings, piston pins, and timing chain.

Crankcase Capacity—6 quarts.

Normal Oil Pressure—50 lbs. at 30 MPH.

Oil Pressure Regulator—Located in body of pump. Not adjustable. Opens at 50-58 lbs.

Oil Pump: Gear type in crankcase mounted on center main bearing cap.

Oil Pump Servicing—*See Nash Special Data.*

Cylinder Cover Vent: Vent located on front of cover just behind water outlet elbow to allow escape of vapors inside cover. Turn to open position at all times, especially winter, except for hot dusty driving.

Oil Filter: Replace cartridge at 8000 mile intervals or more often if necessary.

Oil Pressure Gauge: Auto-Lite Electric.

Dash Unit—Auto-Lite No .11577-A.

Engine Unit—Auto-Lite No. 11527-A.

See Miscellaneous Section for complete data.

COOLING

Cooling System: Pressure type with pressure valve and vacuum valve (relief valves) in filler cap, and positive circulation with water pump.

Capacity—17 quarts (18 quarts heater).

Pressure Valve—AC 850501 (Filler Cap). Opens at 4 lbs.

Water Pump: New sealed-in, non-adjustable seal assembly. Grease fitting for bushing lubrication. Centrifugal pump driven by flexible coupling from generator.

See Water Pump Section for complete data.

Removal—Drain cooling system, disconnect pump drive coupling (remove rear bolt), disconnect inlet hose, remove pump mounting capscrews.

Belt Adjustment: *See Generator Belt Adjustment.*

Thermostat: Dole. In water outlet on cylinder head.

Setting—Starts to open at 162-168°F. and should be fully open 20° above starting point.

Temperature Gauge: Auto-Lite Electric.

Dash Unit—Auto-Lite No. 11579-A.

Engine Unit—Auto-Lite No. 11528-A.

See Miscellaneous Section for complete data.

CLUTCH

Borg & Beck Model 10A7—Assembly No. 950 stamped on cover. Single plate, dry disc type.

See Clutch Section for complete data.

Facings—Woven type, 2 used. Inside Diameter 7". Outside Diameter 10". Thickness ⅛".

Adjustment: Pedal free travel ½-¾". Adjust by loosening locknut and turning adjusting nut on connector link at clutch fork.

►***CAUTION—Do not disturb adjustment of clutch beam lever-to-pedal rod.***

Removal: Remove transmission (see below), disconnect clutch pedal linkage, remove clutch housing and pan, punchmark flywheel, clutch cover and pressure plate (reassemble to same marks), take out clutch fork and mounting screws in cover flange. Remove clutch assembly.

TRANSMISSION

STANDARD

Warner Model AS25-T86E (Std.), Model AS26-T86E with type R10B Overdrive (Optl.). Constant-mesh, synchro-mesh (Second & High), sliding gear (Low & Reverse).

See Transmission Section for complete data.

►**Early 1949 Note**—Nash Transmission with Warner AS5-R10B Overdrive used.

Transmission Control: Mechanical steering col. shift.

See Transmission Section for complete data.

Removal: Remove Rear Axle (see REAR AXLE below), disconnect transmission shift rods at levers on left side of case and speedometer cable. Support engine at rear, free rear engine mounting, take out transmission upper mounting bolts, install special guide bolts in these holes, remove lower mounting bolts, slide transmission back on guide bolts, remove from below.

OVERDRIVE

Warner Type AS6-R10B (part of AS26-T86E Transmission). Optional. Governor controlled type with electrical solenoid operation and throttle operated "kick-down" switch.

►**Early 1949 Note**—Warner AS5-R10B Overdrive used with Nash Transmission.

See Transmission Section for complete data.

Overdrive Solenoid—Delco-Remy No. 1118132.

Governor—Warner AR10B-72 (AR10B-72J used on Early 1949 cars with AS5-R10B Overdrive).

Control Relay—Auto-Lite No. HRT-4101.

Overdrive Fuse—20 ampere. On BAT terminal of overdrive relay (on left body sill under hood).

Removal: Remove as a unit with transmission after disconnecting control cable and all wiring on overdrive case. See Transmission Removal (above).

HYDRA-MATIC DRIVE

OPTIONAL EQUIPMENT

Description—Four-speed planetary type automatic transmission and fluid coupling. Similar to other Hydra-Matic Drive installations.

See Transmission Section for complete data.

Lubrication—Check fluid level every 1000 miles. Add fluid, as required, to maintain level at "F" mark on dip stick. Drain and refill every 15,000 miles. Use Hydra-Matic Fluid (Automatic Transmission Fluid Type "A") as furnished in containers marked with approval symbol "AQ-ATF" followed by serial number in "100" series.

Capacity—Approx. 11 qts. (refilling after draining). **12 qts.** (when transmission disassembled).

Checking Fluid Level—Set hand brake, place selector lever in "N" position, start engine and idle for a minimum of two minutes after transmission has reached operating temperature. Roll back front floor mat on right side, remove inspection cover in floor pan, clean all dirt and lint from floor and around oil level indicator on left side of transmission case. Place selector lever in "D" position and idle engine with lever in this position while checking fluid level. Fluid level should be at "F" mark on dip stick, add fluid as required to bring level up to "F" mark.

►***CAUTION—Do not fill above "F" mark on dip stick.***

Draining & Refilling—*See "Hydra-Matic Drive" in Transmission Section.*

Hydra-Matic Linkage Adjustment—*See "Nash Hydra-Matic Drive" in Transmission Section.*

Removal: *See "Nash Hydra-Matic Drive" in Transmission Section.*

UNIVERSALS

Mechanics or Saginaw—Roller bearing type, 1 used.

See Univerals Section for complete data.

Propeller Shaft: One piece with pre-lubricated, rubber mounted center bearing installed in torque tube. Shaft splined at both ends, universal light press fit on forward end, coupling at rear end is a tight press fit.

See Nash Rear Axle in the Rear Axle Section for Propeller Shaft Data.

REAR AXLE

Own Make. Semi-floating, hypoid gear type with torque tube drive.

See Rear Axle Section for complete data.

Ratio—4.1-1 (41:10) Std., 4.4-1 (40:9) with Overdrive.

Backlash—.004-.006". Shim adjustment.

Removal: Raise and support rear end of car. Disconnect rear brake cable at center equalizer. Disconnect torque tube at rear of transmission. Disconnect brake hose and shock absorbers at the axle end, permitting them to hang from the body. Roll axle free from car.

Axle Shaft Removal—Remove wheel, pull drum (use hub puller J-1644). Disconnect brake line and cable. Remove backing plate mounting bolts nuts, take off oil seal retainer, backing plate, and wheel bearing adjusting shims (check thickness of shims, replace same amount when re-assembling). Withdraw axle shaft using Puller J-2498, do not drag shaft on inner oil seal.

Wheel Bearing Adjustment—Shims located between backing plate and flanged end of housing. To adjust, remove wheel and backing plate (above), add or remove shims for endplay. **Endplay**—.002-.004".

SHOCK ABSORBERS

Delco or Monroe—Direct acting, hydraulic type.

See Shock Absorber Section for complete data.

FRONT SUSPENSION

Front Suspension: Independent, linked parallelogram type with coil springs and direct acting shock absorbers.

See Front Suspension for complete data.

Kingpin Inclination—8½° crosswise.

Caster—0° desired. Limits 0° to Pos. ½°. Shim adjustment ("C" washers) between upper control arm inner pivot and frame bracket.

Camber—0° desired. Limits Neg. ¼° to Pos. ¼°. Shim adjustment as for Caster (above).

Toe-In—1/8-3/16". Loosen clamps at both ends of adjustable tubes in each tie rod. Turn tubes equally.

Steering Geometry—Inner wheel 23° plus ½°, minus 0°. Outer wheel 20°.

STEERING GEAR

Gemmer Model 305—Worm-and-roller type with "push-pull" adjustments.

See Steering Gear Section for complete data.

BRAKES

Service Brakes: Bendix hydraulic, duo-servo, single anchor type without Eccentric Adjustment. Hand lever applies rear wheel service brakes.

See Brake Section for complete data.

Wheel Cylinders—Diam.: Front wheels 1 1/16", Rear 7/8".

Drums—Cast-iron. Diameter 10".

Lining—Moulded type. Width 2". Thickness 3/16". Length 22" per wheel.

Clearance—.015" at each end of secondary (rear) shoes with primary shoes forced out against drums.

Braking Power—53% front wheels, 47% rear.

Hand Brakes: See Service Brake data (above).

MISC. MECHANICAL

Windshield Wiper: Cable Operated—vacuum type.

See Miscellaneous Section for complete data.

HOOD ASSEMBLY

1949 "76" & "88" MODELS

HOOD REMOVAL: Disconnect under-hood lamp wire and 2 hood hinge bracket-to-hood support springs (mark hood hinge support bracket location to facilitate re-installation). Remove 2 hood hinge-to-body bracket bolts at each side. Lower hood and take out one hood hinge-to-body bracket bolt from inside body at each side. See Hood Alignment below when re-installing hood.

1949 "98" MODELS

HOOD REMOVAL: Disconnect under-hood lamp wire and 2 body-to-hinge springs. Remove 2 hood prop pins. Take out hood hinge brace-to-hood hinge bracket bolt at each side. Remove 2 hood hinge-to-body bracket bolts from inside body at each side. See Hood Alignment below when re-installing hood.

ALL 1949 MODELS

HOOD ALIGNMENT: Hood-to-dash clearance should be ⅛" and must be even across rear edge of hood. Adjustments provided at hinges by means of enlarged mounting bolt holes (permits fore-and-aft or up-and-down alignment). At front end of hood, self-aligning bolt and latch spring and lower latch assembly also provided with enlarged holes for alignment.

"98" Note—Adjustable support in middle of lock support between hood hinges should be adjusted to contact hood panel with tension, but not enough tension to move panel away from cowl. Prevents hood distortion when hood raised or lowered (adjusting support does not affect hood fit).

FRONT END SHEET METAL

ALL 1949 MODELS

FRONT END SHEET METAL ASSEMBLY REMOVAL: Front fenders, radiator grille, and radiator can be removed as an assembly as follows: Drain cooling system, disconnect radiator hoses. Remove battery. Disconnect wiring harness from junction blocks and from clips on radiator tie bar. Disconnect hood latch operating cable from latch plate and from clips on baffle and left filler plate. Detach flexible air tubes at front of dash on each side. Disconnect fresh air inlet pulls (left side "76" & "88", right side "98"). Disconnect heater hose from right fender, heater motor wire, windshield washer hose from bottle and fender, antenna wire at radio and pull wire out through left side of body (antenna is not removed). Remove front bumper. Disconnect radiator dust shield and lower fender-to-frame dust shields at each side. Remove fender-to-body bolts (2 center, 1 upper, and 1 lower on "76" & "88", 2 lower on "98") at each side. Take out nut from center bolt in front frame cross-member. Remove front radiator support bolt. Remove front end assembly as a unit.

FRONT FENDERS

ALL 1949 MODELS

FRONT FENDER REMOVAL: Raise hood. Disconnect battery cables and hood latch cable from latch and baffle. Remove radiator to grille upper baffle. Remove headlight wiring from junction block on side to be removed. Detach flexible fresh air tube from dash. Disconnect fresh air inlet pulls (for left on "76" & "88", for right on "98"). Remove front wheel. Then for left or right side also detach the following:

Left Fender. Disconnect hood latch cable from fender, remove battery, and disconnect all wiring from voltage regulator, horn relay, and fender plate.

Right Fender. Remove windshield washer hose from fender and disconnect heater wire.

CYLINDER HEAD

1949 SIX CYLINDER

CYLINDER HEAD INSTALLATION: Use **new** head gasket coated on both sides with POB sealer. Apply sealer at room temperature (approx. 70°). Edges at cylinder holes must be wiped clean of all sealer. Use a Torque Wrench for head bolts (see Tightening Specifications) and tighten in order shown in head diagram.

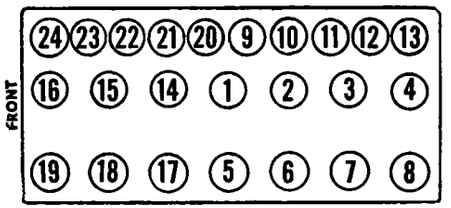

OLDSMOBILE SIX

1949 ROCKET V8 ENGINE

CYLINDER HEAD REMOVAL: Drain cooling system, disconnect upper radiator hose from water outlet. Remove air cleaner, generator, and spark plug wire retainers (name plates on valve covers). Disconnect wires at spark plugs, throttle linkage, and spark plug wire and air cleaner supports from cyl. heads. Take off distributor cap, lift off cap, high tension wire assembly and supports off engine as an assembly. Remove carburetor fuel and vacuum lines, external water by-pass (tube around lower end of oil filler pipe), valve covers, intake manifold with coil and carburetor attached. Disconnect exhaust pipe from exhaust manifold. Remove rocker arm shaft assembly, push rods. Remove cylinder head with exhaust manifold by taking out 14 cylinder head bolts.

1949 ROCKET V8 ENGINE

CYLINDER HEAD INSTALLATION: Reverse removal instructions given above and note following:

Gaskets. Use all new gaskets. Use POB No. 3 sealer and coat both sides of head and intake gaskets. Cement cover gaskets to valve covers. ***Install head gaskets with crimped side UP.***

Cylinder Head Bolts. 7/16" bolts used as follows: Four 6" bolts at rocker arm supports. Ten 4½" bolts through center of head. Four 2½" bolts at bottom. Use a Torque Wrench (see Tightening Specifications) and tighten in order shown in head diagram.

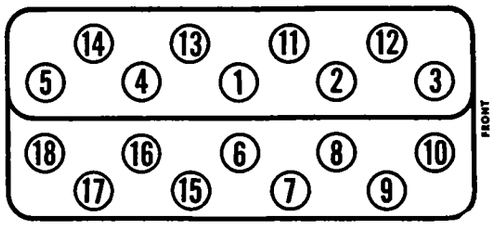

OLDSM BILE R CKET V8

Intake Manifold. ***CAUTION—Manifold must be centered between cylinder heads.*** Dip threads of six manifold bolts (two ⅜" x 1⅞" at front, and four ⅜" x 1½" at sides) in POB No. 3 sealer. Use large flat washers under manifold nuts, small flat washers on bolts. Use a Torque Wrench (see Tightening Specifications) and tighten in order shown below.

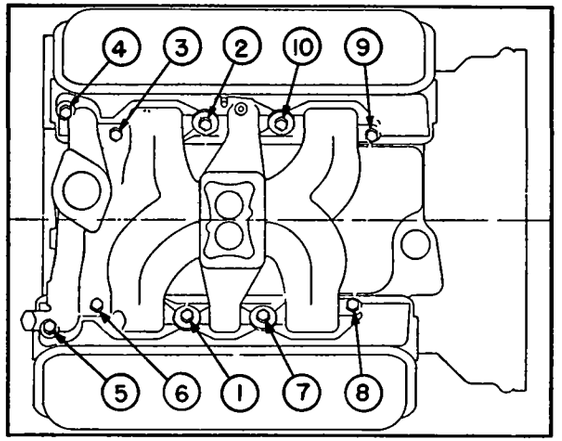

ROCKET V8 INTAKE MANIFOLD

TIGHTENING (TORQUE WRENCH) SPECIFICATIONS

1949 SIX & ROCKET V8 ENGINES

	Ft. Lbs.	In. Lbs.
Con. Rod Nuts (self-locking)	45-50	540-600
Crankshaft Front End Bolt	130-140	1560-1680
Cylinder Head Capscrews	60-70	720-840
Exh. & Int. Manifold Nuts (V8)	22-26	264-312
Exh. to Int. Manifold Bolts (6)	22-26	264-312
Flywheel to Crankshaft (6)	55-60	660-720
Flywheel to Crankshaft (V8)	65-70	780-840
Flywheel Housing to Block	50-55	600-660
Front Cover to Block (V8)	30-35	360-420
Front Plate to Block (6)	22-26	264-312
Main Bearing Capscrews (Rear)	140	1680
" " " (All Others)	100	1200
Oil Filter or Pad to Block (V8)	30-35	360-420
Oil Pan Capscrews	9-11	108-132
Oil Pump to Block (6)	30-35	360-420
Oil Pump to Bearing Cap (V8)	11-14	132-168
Rocker Shaft Sup. to Block (V8)	18-22	216-264
Spark Plugs (14 MM.)	28-35	336-420
Torus Cover (H-M) to Flywheel	30-35	360-420
Transmission to Housing	60-70	720-840

1949 CHASSIS

	Ft. Lbs.	In. Lbs.
Body Bolts (7/16")	25-30	300-360
Body Bolts (1/2")	45-50	540-600
Differential to Axle Housing	40-45	480-540
Front & Rear Eng. Mtg. to Frame	25-30	300-360
Front Shock to Frame	55-60	660-720
Pitman Arm Nut	100-110	1200-1320
Rear Axle Insulator Bolt	110-120	1320-1440
Rear Shock to Backing Plate	120-130	1440-1560
Starter to Housing	45-50	540-600
Steering Gear to Frame	25-30	300-360
Tie Rod Clamp Bolt	11-14	132-168
Track Bar Nuts (both ends)	135-140	1620-1680
Wheel Nuts	65-70	780-840

ENGINE FRONT COVER

1949 ROCKET V8 ENGINE

ENGINE FRONT COVER REMOVAL: Drain cooling system. Disconnect lower radiator hose and heater hose from front cover, external water by-pass (tube at base of oil filler pipe), and generator link at generator. Remove oil pan (see Oil Pan Removal). Take out two front motor mount-to-frame bolts. Use Tool Set BT-29 and support engine with motor mount clear of frame front cross-member. Remove radiator core and shroud, fan blades and pulleys, lower pulley and harmonic balancer, and fuel-&-vacuum pump. Take out front cover attaching screws (five 1¾" screws on outside of cover, two 4" screws through water pump housing—one each side at center, use 9/16" wrench).

1949 ROCKET V8 ENGINE

ENGINE FRONT COVER INSTALLATION: Reverse removal data given above and seal as follows: Use new front cover gasket and cement to cover with V.G. 1000 cement. Apply Fiske lubriplate to fuel pump mounting pad and to front oil seal. Coat threads of cover screws and water by-pass fittings with POB No. 3 sealer.

PISTON PINS

1949 SIX CYLINDER

PISTON PIN: Removal. Take out lockscrew, use Tool HM-535 and tap pin out (hold piston in hand).

Replacement Pins—Std. and .001", .003" oversize.

Installing Pins. Fit pins to specifications listed on car page. If reaming required to fit oversize pins, use Reamer HM-536 for piston bosses and rod bushing. Rod bushing can be removed and replaced with Tool J-1674 and Support Tool J-1649. **To install piston pin,** heat piston (not pin) in boiling water, coat inside of pin boss with graphite, insert split end of pin in piston boss (mark "V-S" on piston head and oil spit hole in lower end of rod must be on same side), use Tool HM-535 and tap pin in place, install lockscrew and tighten to 9-11 ft. lbs.

CRANKSHAFT & MAIN BEARINGS

1949 SIX CYLINDER

MAIN BEARING REMOVAL: With bearing cap removed upper half of bearing can be removed by inserting Tool HM-J-173 in oil hole in shaft, and with tang on tool engaging plain edge of bearing, rotate crankshaft in usual direction and turn bearing out. Crankshaft will not have to be removed.

Installation—Remove sharp edge from plain end of bearing, insert this end at indented side of support and rotate in place using pin in oil hole in shaft.

1949 SIX CYLINDER

CRANKSHAFT END THRUST: Taken through front (#1) main bearing. Bronze thrust plate assembled on each end of bearing with a steel thrust collar between front bronze thrust plate and sprocket.

1949 Six Note—Rear bronze thrust plate .124" thick. Front bronze thrust plate (behind steel collar) is a selective fit to obtain proper endplay (.124" thick or one of two other thicknesses).

1949 ROCKET V8 ENGINE

CRANKSHAFT FRONT OIL SEAL INSTALLATION: Remove Engine Front Cover (see removal instructions above). Drive seal out towards front of cover. Coat outer diameter of new seal with POB No. 3 sealer. Install new seal using Timing Chain Cover Seal Driver BT-20. Install Engine Front Cover.

ALL 1949 ENGINES

REAR MAIN BEARING OIL SEAL: Asbestos covered wiper seal installed in rear groove in bearing cap and block (oil slinger operates in front groove).

Six Cyl. Note—Cork strips used to seal vertical joints between bearing cap and block.

Oil Seal Installation—With crankshaft out of engine and bearing cap off, use new seal coated with graphite grease, crowd seal by hand into rear groove in cap and block. Use Compressor Tool No. J-955 (for Six Cyl. Engine), No. BT-12 (for Rocket V8 Engine), and drive seal into place. With tool resting on seal, cut ends flush at each end (for both cap and block). ***Seal must entirely fill groove and be trimmed flush to prevent oil leaks.*** When installing cap on all but Rocket V8 Engines, seal vertical joints with new cork seals.

FLYWHEEL

1949 SIX CYLINDER

FLYWHEEL INSTALLATION: Cast-iron flywheel used on cars with synchro-mesh transmission, pressed steel flywheel on Hydra-Matic. Ring gear shrunk on both flywheels. Replacement flywheels supplied with only two mounting holes requiring reaming of four additional holes (7/16") after flywheel attached to crankshaft.

1949 ROCKET V8 ENGINE

FLYWHEEL INSTALLATION: Pressed steel flywheel with integral ring gear. Flywheels supplied with all mounting holes finished (no reaming required as on six cylinder flywheels).

CAMSHAFT & BEARINGS

1949 ROCKET V8 ENGINE

CAMSHAFT REMOVAL: Drain radiator. Remove radiator hoses, heater hoses, air cleaner, fuel and vacuum lines, distributor, throttle linkage from carburetor, fan, fan pulleys, fan belts, generator, generator belt, generator bracket, spark plug wire support, external water by-pass tube, valve covers, rocker arm assembly, push rods, intake manifold, cylinder block cover, valve lifters (keep clean and in order for re-installation in same position), upper radiator baffle, radiator core, harmonic balancer and pulley as an assembly, fuel pump, exhaust pipe cross-over, steering idler arm, oil pan, front engine mounting (use Tool Set BT-29 to support engine), engine front cover, fuel pump eccentric, timing chain and sprocket, thrust plate, and camshaft.

►*CAUTION*—Withdraw camshaft carefully to prevent bearing damage as follows: Slide camshaft through each bearing while slowly rotating shaft, hold shaft at front end and guide it from the rear.

VALVE SYSTEM

1949 ROCKET V8 ENGINE

VALVE LIFTER REMOVAL: Remove intake manifold, cylinder block cover, valve covers, rocker arm shaft assemblies, push rods, and valve lifters.

►*CAUTION*—Valve lifters must be re-installed in same bores from which removed.

1949 ROCKET V8 ENGINE

ROCKER ARM SHAFT ASSEMBLIES: Identical hollow steel tube shafts (ends plugged) are used. Four removable supports for each shaft, one support doweled to shaft for oil feed (at oil line from #2 camshaft bearing on left side, from #4 camshaft bearing on right side). Three springs used to position center rocker arms against supports. End rocker arms retained by wave washer, flat washer, and cotter key.

Rocker Arm Shaft Disassembly: With assembly off engine, remove cotter key and washers from end of shaft. Remove rocker arms, supports (except doweled support which should not be removed from shaft), and springs.

►***CAUTION—Rocker arms should be stored so that they can be reassembled in their original position.***

Rocker Arm Shaft Reassembly: Assemble supports in proper position as to doweled support (oil supply). Push rod end of rocker arms must be on same side as large cylinder head bolt hole in each support.

OIL PAN REMOVAL

1949 SIX CYLINDER

OIL PAN REMOVAL: Disconnect steering idler arm from frame and drop steering relay assembly. Drain radiator, disconnect radiator hoses. Remove two front engine mounting-to-frame bolts, raise engine approx. ¾". For access to pan bolts at front end, unhook fasteners on splash guard between cross-member and radiator baffle and work through openings in cross-member. Front bolts on each side of pan must be removed with an end wrench. With pan bolts removed, rotate crankshaft to place counterweights up for clearance, remove oil pan.

Installation—Use new gasket coated with cement. Allow cement to dry for easier installation.

1949 ROCKET V8 ENGINE

OIL PAN REMOVAL: Remove starter and exhaust cross-over pipe. Disconnect idler arm from frame and drop steering relay rod. Remove oil pan capscrews and withdraw pan.

OIL PUMP

1949 SIX CYLINDER

OIL PUMP: Disassembly. With pump off engine, use an arbor press and Tool J-959 and press drive gear off shaft and take out woodruff key. Disassemble pump, take off cover, oil pump gears and shaft.

Assembling Pump. With pump gear on flat surface and woodruff key in place on shaft, press shaft through gear until flush with outer end of gear. Put idler gear on stub shaft in pump body, slide pump shaft and gear assembly into place in pump housing. Place woodruff key on upper end of shaft and press pump drive gear on shaft with Tool J-954-1 between inner face of gear hub and pump body (gives proper end clearance of pump shaft assembly). Install piston, relief spring and nut in pump cover, bolt cover to body. Use new gaskets between pump cover and body, and between pump body and cylinder block.

Installation. Set engine in firing position for #1 cylinder with rotor opposite #1 segment in distributor cap. Note position of distributor shaft tongue for proper oil pump drive gear mesh, then raise distributor and mesh pump drive gear with camshaft gear. Replace distributor in position and reset ignition timing.

RADIATOR

1949 SIX CYLINDER

RADIATOR CORE REMOVAL: Drain radiator, disconnect radiator hoses and hood latch cable. Take off upper radiator baffle. At each side, remove one shroud-to-core self-tapping screw and four core-to-core support self-tapping screws. Lift core out (rotate fan as required).

1949 ROCKET V8 ENGINE

RADIATOR CORE REMOVAL: Drain radiator, disconnect radiator hoses. Remove radiator upper baffle, radiator shroud and lift core out.

FRONT END SHEET METAL ASSEMBLY REMOVAL, HOOD REMOVAL AND ALIGNMENT, FRONT FENDER REMOVAL: *See Oldsmobile Special Data.*

MODEL IDENTIFICATION

SERIAL NUMBER: On left front door hinge post.
1949 Numbers—First number 1001 with prefix 496M, A, etc. as follows:
Serial No. Prefix Identification. First two numbers 49 indicate year, third number 6 indicates 76 Series, letter indicates assembly plant: **M**—Lansing, **A**—Atlanta, **B**—Framingham, **K**—Kansas City, **C**—South Gate, **W**—Wilmington.

ENGINE NUMBER: On left front top corner of block.
1949 Numbers—6A1001 up.
Hydra-Matic Cars. Engine number marked with letter "H" following number: 6A1001H.

TUNE-UP

COMPRESSION PRESSURE: 125 lbs. at cranking speed.

VACUUM READING: Steady 17" min. at idling speed.

FIRING ORDER: 1-5-3-6-2-4. See diagram.

SPARK PLUG GAPS: .040".
Plugs—AC No. 45. 14 mm.

DISTRIBUTOR: Breaker Gap—.021-.026" (new). .018-.024" or .020" preferred (used points).
►*CAUTION—Set new points at .021-.026" to allow for wearing in of rubbing block.*
Cam Angle—Closed 31° to 37° with .022" gap.
Breaker Arm Spring Tension—17-21 ozs.
Automatic & Vacuum Advance—*See Ignition.*
Condenser Capacity—.18-.23 microfarad.

IGNITION TIMING: Synchro-Mesh Trans.....TDC.
Hydra-Matic Drive...0005" BTDC.
Timing Procedure—*See Ignition Timing.*
Flywheel Mark—Steel ball insert aligned with pointer in inspection hole in housing beside starter.
Octane Selector—Set to give slight ping accelerating with wide open throttle below 15 MPH.

CARBURETION:
Idle Setting—½-2 turns open. One screw—turning screw out gives richer mixture.
Idle Speed (Standard)—425 RPM. or 6 MPH.
Idle Speed (Hydra-Matic)—375 RPM.
Float Level—½" from machined projection on cover to top of soldered seam at free end (invert to check).
Accelerating Pump—No seasonal adjustment.

Choke Setting: Centered (housing centered on scale).

Fuel Pump Pressure: 4-5 lbs.

MANIFOLD HEAT CONTROL: Thermostatic coil type.
Setting—Coil wind-up should be 125° (approx. 1/3 turn) at room temperature. NOTE—To check valve for correct position on shaft, use feeler gauge in slot on rear end of shaft. With valve closed, gauge should contact stop pin (slot 6° to left or toward engine from up-and-down position) with 1/8" clearance between valve tip and manifold. Valve welded to shaft in this position.

VALVE TAPPET CLEARANCE: Intake Valves .008", Exhaust Valves .011", HOT.
Valve Timing Check—*See Valve Timing.*

STARTING: *See Battery, Starter, Generator, Regulator.*

IGNITION

IGNITION SWITCH: Delco-Remy No. 1116453.
Ignition Lock—Briggs & Stratton or Delco.

COIL: Delco-Remy 1115380. On side of engine.
Ignition Current—2.0 amperes idling, 4.5 stopped.

CONDENSER: Delco-Remy Part No. 1869704.
Capacity—.18-.23 microfarad.

DISTRIBUTOR: Delco-Remy 1110214 or 1110221. Automatic and vacuum advance with Octane Selector.
1110221 Note—Has new "center-bearing" breaker plate.
►**Breaker Plate Bearing Assembly**—Plate rotates on 3 bakelite buttons on support plate with spring tension adjustment (shim washers) on underside of support plate. Pull required to move plate should be 8 oz. min., 16 oz. max. with breaker plate assembly out of housing.
See "Delco-Remy Center-Bearing Breaker Plate Distributor" in Electrical Equipment Section.
Breaker Gap—.021-.026" (new points), .018-.024" or .020" preferred (used points).
►*CAUTION—Set new points at .021-.026" to allow for wearing in of rubbing block.*
Cam Angle—Closed 31° to 37° with .022" gap.
Breaker Arm Spring Tension—17-21 ozs.
Rotation—Counter-clockwise viewed from above.

Distributor Automatic Advance		Engine	
Degrees	R.P.M.	Degrees	R.P.M.
Start	250	2.0	500
12.0	1600	24.0	3200

Vacuum Spark Control: Delco-Remy No. 1116039 (for 1110214 distributor), **1116053** (for 1110221). Integral type linked directly to breaker plate. Provides additional advance at speeds above idling except when engine accelerated or operated with wide open throttle when spark retarded by return spring.
Plunger Travel—5/32".

Vacuum Advance		
Distr. Degrees	Eng. Degrees	Vacuum (" of HG)
Start	0°	5-7"
8°	16°	(1116039) 16½-18½"
8°	16°	(1116053) 16-20"

Octane Selector—Hold-down plate permits 10° advance or retard. See Ignition Timing.

Removal: Distributor mounted on left side of engine. To remove, disconnect vacuum line, take out hold-down plate screw, lift out distributor.

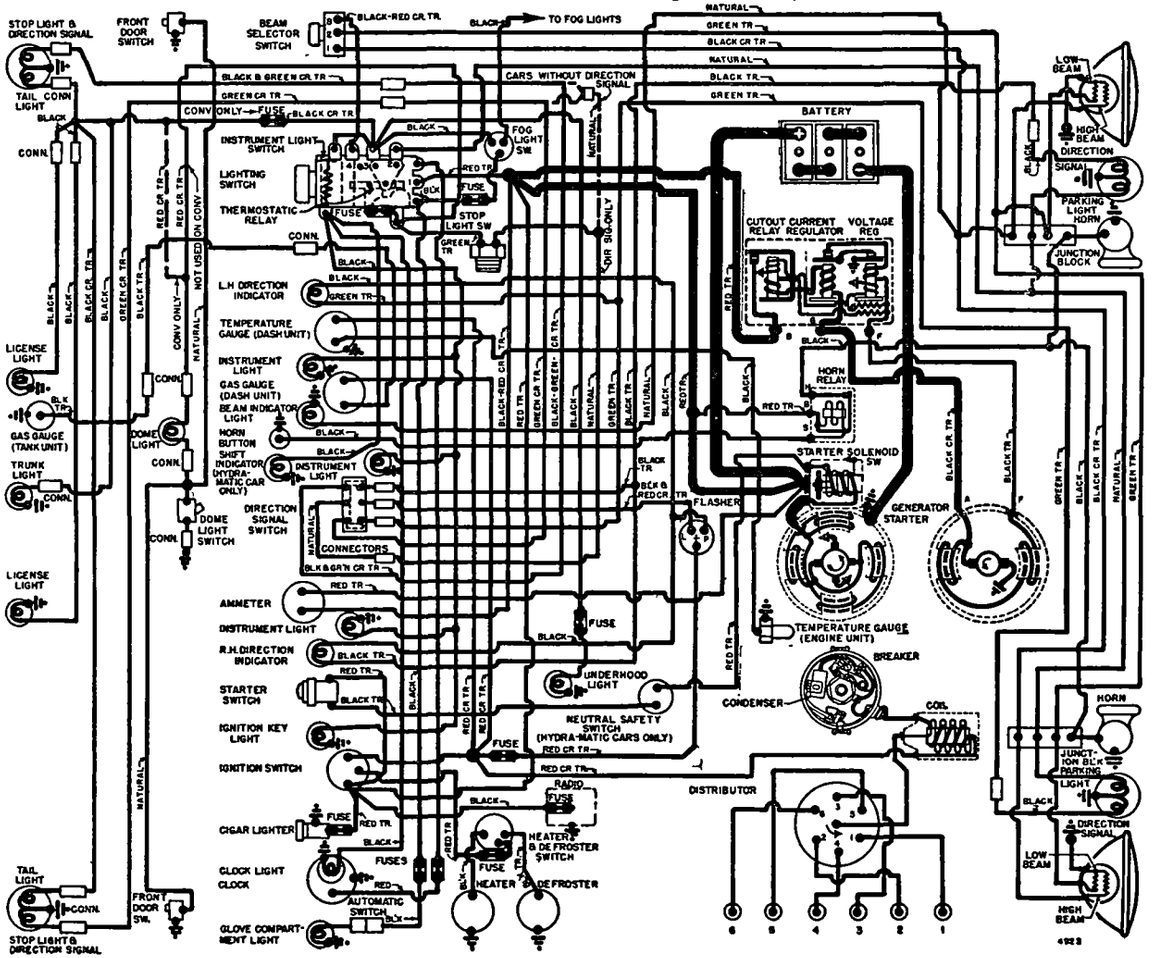

IGNITION TIMING

Std. Setting	Piston Position
Synchro-Mesh Transmission	TDC.
Hydra-Matic Drive	.0005" BTDC.

NOTE—Modify this setting for special fuel and altitude conditions. See Octane Selector Setting.

Flywheel Mark—Steel ball on flywheel (#1 and #6 piston top dead center position). Inspection hole in left front face of flywheel housing above starter.

Timing (with Synchroscope)—Use Tool HMO-161. Loosen distributor hold-down plate bolt, center hold-down plate scale ("0" at indicator line), tighten hold-down bolt. Clip synchroscope lead to #1 spark plug, direct light on flywheel through inspection hole in housing above starter. With engine idling, loosen hold-down plate clamp screw, rotate distributor until ignition mark (steel ball insert) lines up with pointer, tighten clamp screw, check Octane selector setting (below).

►**Hydra-Matic Drive Note**—Set distributor so contacts open with piston .0005" before top dead center.

Timing (without Synchroscope)—Turn engine over to firing position for #1 cylinder (steel ball on flywheel aligned with pointer in inspection hole in housing above starter). Loosen distributor hold-down plate bolt, center hold-down plate scale ("0" at indicator line), tighten hold-down bolt. Loosen hold-down plate clamp screw, rotate distributor until contacts begin to open, tighten clamp screw, check Octane Selector Setting below.

Octane Selector Setting: Set for slight ping when accelerating with wide open throttle in high gear below 15 MPH. To adjust, loosen hold-down plate bolt, move plate toward RET end of scale if no ping noted, toward ADV end if ping too severe, tighten bolt.

CARBURETOR

Carter WA-1, No. 710S.....**Synchro-Mesh Trans.**
Carter WA-1, No. 709S.....**Hydra-Matic Drive**
1½" single barrel downdraft, Carter Climatic Contr.
Casting No. on Flange—538.
See Carburetor Section for complete data.

Settings (Idle Setting, Float Level, and Accelerating Pump): ***See Tune-Up data.***
Metering Rods & Jets—***See Carter Downdraft Jet Specification Table in Carburetor Section.***

Hydra-Matic Throttle Linkage Adjustment: ***See Oldsmobile Hydra-Matic Drive in Transmission Section.***

Throttle Cracker Adjustment: .0625 to .0851" (1/16") clearance between throttle stopscrew and highest step of fast idle cam with starter button fully depressed. Adjust by loosening locknut and turning adjusting screw on accelerator bellcrank.

Fast Idle: Carter Single Barrel Carburetor type.
See Carburetion Equipment Section for complete data.
Setting—⅝" clearance between choke valve and air horn (Gauge T109-85) with throttle valve closed and stopscrew against (not on) first step of fast idle cam. Adjust by bending connector link at lower offset (use Tool T109-41).

Automatic Choke: Carter Climatic Control (single barrel carbs).
See Carburetion Equipment Section for complete data.
Setting—Centered (coil housing at index mark).

CARB. EQUIPMENT

Air Cleaner: AC No. 1544458 oil-wetted type (std.). No. 1544456 heavy duty oil-bath type (optl.).
Filter Element—AC #6 (std.), #21 (hvy. duty).
Servicing—Clean and re-oil std. cleaner every 2000 miles. On heavy duty types clean and refill reservoir with 1 pint SAE 50 (40 in winter) oil every 2500-5000 miles.

Fuel Pump: AC type AJ #1539297 fuel-&-vacuum pump.
Replacement Pump—AC No. 9297.
Pressure—4-5 lbs.
See Carburetion Equipment Section for complete data.

Gasoline Gauge: AC Electric type.
Dash Unit—AC No. 1517011.
Tank Unit—AC No. 1517086.
See Carburetion Equipment Section for complete data.

BATTERY

Delco Type 15AA-4. 6 Volt, 15 Plate, 100 Ampere Hour Capacity (20 hour rate).
Starting Capacity—120 amperes for 20 minutes.
Zero Capacity—300 amperes for 3.6 minutes. Five second voltage—4.2 volts.
Grounded Terminal—Negative (—) to Starter.
Location—In engine compartment on left side.

STARTER

Delco-Remy Model 1107955. Armature No. 1867897.

►***CAUTION—Starter operates whenever pushbutton depressed (and shift lever in neutral on Hydra-Matic) regardless of ignition switch position.***
Drive—Overrunning clutch (solenoid pinion shift).
Rotation—Counter-clockwise at commutator end.
Brush Spring Tension—24-28 ozs. each.

Performance Data

Torque	R.P.M.	Volts	Amperes
0 ft. lbs	5500	5.7	80①
14 "	Lock	3.0	600

①—Includes current draw of starter switch.

Removal: Flange mounted on left front face of flywheel housing. To remove, take out mounting screws.

Starting Switch: Delco-Remy Solenoid Switch No. 1118136 (no relay used) mounted on starter and controlled by Pushbutton Switch No. 1996038 (and Neutral Safety Switch No. 1997849 on Hydra-Matic).

►***CAUTION***—Overrunning clutch pinion clearance must be adjusted whenever solenoid removed from starter.
See Electrical Equipment Section for complete data.
Neutral Safety Switch Adjustment—***See Oldsmobile Hydra-Matic Drive in Transmission Section.***

GENERATOR

Delco-Remy 1102706 (Std.), 1102707 (Hydra-Matic). Armature No. 1880550. Two brush (shunt) types with voltage and current regulation. Ventilated by fan.
Charging Rate Adjustment—None. See Regulator.
Maximum Charging Rate—40 amperes min. reached at car speed of 22 MPH. Actual charging rate controlled by regulator and dependent on battery condition.

Performance Data

	Amperes	Volts	R.P.M.
Cold	40①	8.0	1900

①—Not maximum output. See Current Regulator.
Rotation—Counter-clockwise at commutator end.
Brush Spring Tension—25 ozs. each.
Field Current—1.9-2.05 amperes at 6.0 volts.

Removal: Pivot mounted at left front of engine. To remove, take out pivot and clamp bolts.

Belt Adjustment: Check with straightedge across pulleys. Belt deflection should be ¾".

REGULATOR

Delco-Remy 1118300. Voltage & Current Regulator.

►***NEW "1118300 SERIES"*** regulators have screw adjustment for settings and single regulator springs.
See Electrical Equipment Section for complete data.
CAUTION—Check generator for grounded field coils and leads before changing regulator settings to correct High Charging Rate or High Voltage.

Cutout Relay
Cuts In—5.9-6.8 volts hot (set to 6.4 volts hot).
Contact Gap—.020" (same for both sets).
Air Gap—.020" (with contacts just closed).

Voltage Regulator
Setting—7.0-7.7 volts hot (set to 7.4 volts hot). Regulator is over-compensated for temperature. Check with cover in place and regulator hot.
Air Gap—.075" with armature pressed down to point where contacts are just touching.
Checking & Adjustment—***See Elec. Equip. Section.***

Current Regulator
Setting—40-46 amperes hot (set to 42 amps. hot).
Air Gap—.075" with armature pressed down to point where contacts are just touching.
Checking & Adjustment—***See Elec. Equip. Section.***

LIGHTING

Headlamps: Guide "Sealed Beam" type.
See Electrical Equipment Section for complete data.
Headlamp Adjustment—Aim upper beam straight ahead (hot spot center 3" below lamp center height).
Beam Indicator—Small red indicator in upper edge of speedometer. Lighted when Upper Beams in use.

Direction Signal: ***See Electrical Equipment Section.***
Direction Signal Indicators—Left & Right Turn Indicator located at either end of instrument cluster. Lights when direction signal on same side of car operating (Stop Light flashes at rear).

Switches
Lighting—Delco-Remy No. 1995030.
Instrument—Part of Lighting Switch (Rheostat operated by turning light switch knob).
Beam Selector—Delco-Remy No. 1997008.
Direction Signal—Delco-Remy No. 1995542.
Stop Light—Delco-Remy No. 1997725.

MISC. ELECTRICAL

THERMOSTATIC CIRCUIT BREAKER: Delco-Remy. On back of light switch (part of switch assy.). Contacts remain closed with 30 amperes but open in 3 minutes with 42 amperes at 70°F. Not adjustable.

FUSES: Dome & Stop—SFE 14 amp. On light switch.
Dome & Tail (Convertible only)—AGC 20 ampere. In body feed wire to dome and tail lights.
Glove Box & Under-hood Light—AGA 5 amp. each.
Direction Signal—SFE 9 ampere. In Flasher to Ignition Switch wire behind instrument panel.
Electric Clock—AGA 2 ampere. In feed wire.
Cigar Lighter—AGC 30 ampere.

HORNS: Delco-Remy No. 1999617 or 1999647 (Low Note), 1999618 or 1999648 (High Note). Vibrator types operated by relay.
NOTE—1999647 & 8 horns are welded.

Type	Current (at 6 volts))	Air Gap
1999617 (Low Note)	19-21 amperes	.047-.052"
1999618 (High Note)	18-20 amperes	.039-.044"

Horn Relay: Delco-Remy No. 1116775.
Contact Gap—.027". **Air Gap**—.014" (closed).
Contacts Close—2.75-4.0 volts (set to 3.5 volts).

C NTINUED N NEXT PAGE

C NTINUED FR M PRECEDING PA E

ENGINE

ENGINE SPECIFICATIONS: Big Six. 6 cylinder, "L" head.

Bore—3 17/32". **Stroke**—4 3/8".

Displacement—257 cubic ins. **Rated HP.**—29.9.

Developed Horsepower—105 at 3400 RPM.

Compression Ratio—6.5-1 cast-iron head.

Compression & Vacuum Reading—*See Tune-Up.*

TIGHTENING TORQUES: *See Oldsmobile Special Data.*

CYLINDER HEAD INSTALLATION: *See Oldsmobile Special Data.*

OIL PAN REMOVAL: *See Oldsmobile Special Data.*

PISTONS: Aluminum alloy, T-slot, cam ground, oxalic sulphuric acid coated type.

Weight—18.24 ozs. (stripped). **Length**—4 1/32".

Removal—Pistons and rods removed from above.

Clearance—Top Land .023-.028". Skirt clearance Top .0025", Bottom .00075". Fitted for .0125-.00175" clearance on thrust surface. See Fitting New Pistons following.

Replacement Pistons: Finished pistons (pins fitted) .003", .005", .010", .015", .030" oversize.

Fitting New Pistons: Check piston for size with micrometer (pin removed) 90° from pin bosses 3/8" below lower ring groove and also 3/8" from bottom of skirt. Taper should be .0004" max. (larger diameter at the bottom). Then check clearance by inserting .0015 x 1/2" feeler between piston (pin removed) and cylinder wall on valve side with piston inverted and T-slot on opposite side from feeler. Pull to withdraw feeler should be 7 to 20 lbs.

Installing Pistons: Mark "V-S" on piston head toward valves.

PISTON RINGS: 2 coated compression (install with mark TOP up), 2 oil control rings, all above pin.

Ring	Width	End Gap	Side Clearance
Comp. (#1,2)	.0925-.0935"	.007-.017"	.001-.003"
Oil (#3,4)	.1860-.1865"	.007-.016"	.001-.0025"

Replacement Rings: .010", .020", .030" oversize.

PISTON PIN: Diameter .8554-.8557". **Length** 3 5/32". Pin locked in one piston boss by lockscrew (opposite end slotted). Piston bosses may be reamed for installation of oversize pins.

Pin Fit in Piston—.0001" tight to .0002" loose (plain boss end), .0003-.0006" tight (lock boss end), or a tight wring fit (with solid end of pin in boss, pin should just be able to be turned with 6" drift in pin lock screw hole—test each boss).

Pin Fit in Rod Bushing—.0003-.0006" clearance, or suck fit (pin holds on own weight but can be pushed through with slight thumb pressure).

Replacement Pins: Std., .001", .003" oversize.

Piston Pin Removal and Installation—*See "Piston Pins" in Oldsmobile Special Data.*

CONNECTING ROD: Length 7 13/16". **Wgt.** 30.72 oz.

Crankpin Journal Diameter—2.353-2.354".

Lower Bearing Diameter—2.3570-2.3575".

Lower Bearing—Removable steel-backed, Durex-babbitt overlay. No shims.

Clearance—.0005-.0025". **Sideplay**—.0055-.0105".

Bearing Adjustment: None (no shims). Replace bearings. Do not file rods or caps.

Installing Rods: Oil spit hole at lower end toward valves and grooves on rod and cap bolt boss (part number side) matched. Special ground cap bolts with self-locking nuts used. Tighten to 45-50 ft. lbs.

CRANKSHAFT: 4 bearing, 7 integral counterweights.

Journal Diameters—#1, 2.478-2.479"; #2, 2.5405-2.5415"; #3, 2.6655-2.6665"; #4, 2.6855-2.6865".

Bearings—Removable, steel-backed, Durex-babbitt overlay bearing shells. Front bearing has oil groove (to front) for thrust plate lubrication.

Clearance—.0005-.002" (rear), .001-.003" (others).

Bearing Adjustment: None (no shims). Replace bearings. Do not file caps. *NOTE*—9/16" cap bolts used on rear bearing, 1/2" on others (heads are alike).

Bearing Removal—*See "Crankshaft & Main Bearings" in Oldsmobile Special Data.*

End Thrust: At No. 1 bearing. **Endplay**—.004-.008". *See "Crankshaft & Main Bearings" in Oldsmobile Special Data for thrust collar and plate data.*

Rear Main Bearing Oil Seal Installation: *See "Crankshaft & Main Bearings" in Oldsmobile Special Data.*

FLYWHEEL: Removal & Installation—*See Oldsmobile Special Data.*

CAMSHAFT: 4 bearing. Non-adjustable chain drive.

Journal Diameters—#1, 1.9974-1.9981"; #2, 1.9349-1.9351"; #3, 1.8724-1.8731"; #4, 1.8099-1.8106".

Reamed Bushing Diameters—#1, 1.9995-2.001"; #2, 1.937-1.9385"; #3, 1.8745-1.876"; #4, 1.812-1.8135".

Bearings—Steel backed copper lead bronze bushings.

Clearance—.0014-.0036".

End Thrust: Forward thrust taken by flange on front engine support plate, rear thrust by flange on shaft bearing against front of engine block.

Timing Chain: Link-Belt. Width 15/16". Pitch .500". Length 47 links or 23 1/2".

Camshaft Setting: Mesh chain with sprocket marks adjacent and in line with a straightedge across the shaft centers (or use Tool HM-408-0).

VALVES	Head Diam.	Stem Diam.	Length
Intake	1.745-1.755"	.3415-.3425"	5.7695-5.8095"
Exhaust	1 27/64"	.3410-.3418"	5 51/64"

	Seat Angle	Lift	Stem Clearance
Intake	30°	.310"	.00175-.00375"
Exhaust	45°	.308"	.00245-.00425"

Valve Guides: Intake and exhaust guides same. Press guides in until top end 7/8" below top of block, Tool J-952 positions guide correctly in block. Ream to .34425-.34525" inside diameter (not tapered).

Length—3 7/32".

Valve Springs: Intake and exhaust springs the same. Damper installed on top of each spring. Free length 2 5/8".

	Spring Pressure	Spring Length
Valve Closed	55 lbs.	2 1/4"
Valve Open	100 lbs.	1 15/16"

Valve Lifters: Mushroom type with self-locking screws. Body Diameter .6235-.6240". Head Diam. 1.125-1.140".

Clearance—.0005-.0008".

Replacement Lifters—.001", .002", .005", .010" O. S.

NOTE—Lifter holes in block have "Bearingized" finish. If holes worn, fit oversize lifter without reaming hole when possible to preserve finish.

VALVE TIMING

Tappet Clearance: .008" INT., .011" EXH. Hot & idling. *NOTE*—Self-locking tappet screws used.

Valve Timing: See camshaft setting above.

Intake Valves—Open 5° BTDC. Close 45° ALDC.

Exhaust Valves—Open 45° BLDC. Close 5° ATDC.

Valve Timing Check—With .0125" tappet clearance #1 intake valve should open with piston 5° (.010") BTDC. with flywheel steel ball insert (TDC mark) approx. 2 teeth before indicator (hole on left front face of housing). Reset tappet clearance at .008" hot.

LUBRICATION

Engine Oiling System: Pressure to main, connecting rod, and camshaft bearings, piston pins and chain.

Crankcase Capacity—5 quarts.

Normal Oil Pressure—28-33 lbs.

Oil Pressure Regulator—On oil pump. Opens at 30 lbs. Non-adjustable.

Oil Pump: Gear type on right side of crankcase.

Oil Pump Assembly & Installation—*See "Oil Pump" in Oldsmobile Special Data.*

Oil Pressure Gauge: AC No. 1507124. Not electric.

Crankcase Ventilation: Filter element in oil filler cap (inlet breather). Outlet pipe on right side of engine. **Servicing**—Wash and re-oil filter element every 2000 miles or oftener as required in dusty areas.

COOLING

Cooling System: Pressure type with pressure valve and vacuum valve (relief valve) in filler cap. Water distribution tube installed in block. Re-circulation of water through engine (with thermostat closed) permitted by fixed by-pass from cylinder head through block to pump inlet.

Capacity—18 1/2 quarts.

Pressure Valve—AC No. 850501 Filler Cap. Opens at 4 lbs. (3 1/4-4 1/4 lbs.).

Radiator Core Removal: *See Oldsmobile Special Data.*

Water Pump: Packless, sealed ball-bearing shaft. *See Water Pump Section for complete data.*

Thermostat: Harrison. In cylinder head water outlet.

Setting—Starts to open 152°F. Fully open 173°F.

Temperature Gauge: AC Electric.

Dash Unit—AC No. 1512168.

Engine Unit—AC No. 1512015.

See Miscellaneous Section for complete data.

CLUTCH

Borg & Beck Model 10A7 (Borglite driven member). Single plate, dry disc type with pressure plate oil baffle and release bearing lubrication fitting.

Clutch Cover No.—927 stamped on cover. *See Clutch Section for complete data.*

Clutch Release Bearing Lubrication—*See Oldsmobile Special Data.*

Facings—Spiral wound (spirally grooved) molded woven, 2 used. Inside Diam. 7". O. D. 10". 1/8" thick.

Pedal Adjustment: Free travel 7/8-1¼". Turn link at fork in or out of clevis on auxiliary shaft.

Removal: Remove transmission (see data below), clutch underpan and take out 6 mounting screws in clutch cover (when installing, use 2 long shank mounting screws in 2nd hole on each side of locating dowel), lower clutch assembly out.

TRANSMISSION

STANDARD

Own Make. All helical gear, constant-mesh, synchro-mesh (2nd & high), sliding gear (low & reverse).
See Transmission Section for complete data.

Transmission Control: Oldsmobile "Handi-shift".
See Transmission Section for complete data.

Removal: Disconnect shift and selector rods from levers at transmission, speedometer cable, rear universal and slide slip yoke and propeller shaft to rear. Remove 4 transmission mounting capscrews, pull transmission straight back and remove.

HYDRA-MATIC DRIVE

OPTIONAL EQUIPMENT

Own Make. Consists of Fluid Coupling and automatic self-shifting four-speed transmission.

►**Hydra-Matic Trans. Serial Number**—Carries prefix "08" (ahead of number) stamped on BLACK serial plate on right side of transmission case.

►*CAUTION*—**NOT INTERCHANGEABLE WITH 1949 ROCKET 8 HYDRA-MATIC UNIT.** '49 Six Hydra-Matic same as 1948 and can be installed on all 1946-48 models.
See Transmission Section for complete data.

Lubrication—Check fluid level in transmission every 2000 miles. Drain and refill after first 15000 miles and every 15000 miles thereafter. Use only "Oldsmobile Hydra-Matic Drive Fluid."

Draining & Refilling—*See "Hydra-Matic Drive" in Transmission Section.*

Capacity—11 qts. (when drained and refilled with unit in car). **Approximately 11½ qts.** (when refilling after unit removed and rebuilt, and reinstalled in car).

Checking Fluid Level—Raise front floor mat at right side, remove sheet metal cover in floor, clean opening of lint, sand, etc. Set hand brake, start engine and let engine idle, move control lever to "DR" position. Take out dip stick, wipe dry and replace stick, remove stick quickly and check level. Level should be at "FULL" mark, add fluid to bring up to "FULL" if required with engine idling.

►*CAUTION—Engine must be idling and selector lever in "Drive" position when checking fluid level.*

Linkage Adjustment—*See "Hydra-Matic Drive" in Transmission Section.*

Removal: *See "Hydra-Matic Drive" in Transmission Section.*

UNIVERSALS

Mechanics 2C or 2CR. Roller bearing types.
See Universals Section for complete data.

NOTE—Slip joint formed at rear of transmission ahead of front U-joint (one-piece driveshaft used).

►*CAUTION*—Rear universal companion nut controls rear axle pinion bearing "pre-load" (must be adjusted whenever nut is loosened). *See Oldsmobile Rear Axle in Rear Axle Section for complete data.*

REAR AXLE

Own Make. Hypoid gear, semi-floating type with pinion mounted on two taper roller bearings.

►*CAUTION*—Do not use "76" series carrier and axle housing on "88" and "98" series cars. New support used on "88" and "98" series rear axles.

►*NOTE*—Rear universal companion nut controls pinion bearing "pre-load."
See Rear Axle Section for complete data.

Standard Ratios

41:10 (4.1)—Std. exc. Convertible & Sta. Wagon.

43:10 (4.3)—Std. on Convertible & Station Wagon. Optional Hilly Ratio Domestic Cars, & Export Cars.

39:10 (3.9)—Optional on Export Cars.

Hydra-Matic Ratios

40:11 (3.64)—Std. exc. Convertible & Station Wagon. Optional on Export Cars.

39:10 (3.9)—Std. on Convertible and Station Wagon. Optional on Export Cars.

41:12 (3.42)—Optional on Export Cars.

Rear Axle Ratio Marking—Ring and pinion gear ratio (39:10, etc.) and date stamped on underside of carrier right horizontal rib.

Backlash—.004-.008". Screw adjustment.

Removal: Disconnect driveshaft at rear universal (wire trunnions to avoid losing rollers), mark joint (reassemble to mark when reassembling). Remove axle shafts (see data below) and carrier capscrews.

►*CAUTION*—Rear universal joint companion flange nut controls pinion bearing "pre-load" (must be adjusted whenever nut is loosened).

Axle Shaft Removal: Remove wheel. Take off brake drum by removing two Tinnerman nuts from wheel studs (if nuts removed by turning off threads they can be re-used, if nuts damaged new nuts must be used). Remove backing plate mounting nuts, and static collector. Loosen bearing retainer (do not move backing plate or brake line may be damaged). Pull shaft and bearing with Puller J-942 (do not allow shaft to drag on oil seal), replace one backing plate nut.

Wheel Bearing Adjustment—None.

Rear Suspension: Coil spring type with support arms.
See Rear Axle Section for complete data.

SHOCK ABSORBERS

Delco. Double acting (parallel cyl. rear), hydraulic.
FRONT—Model 1947-J (right), 1947-K (left).
REAR—Model 2105-N (right), 2105-P (left).
See Shock Absorber Section for complete data.

FRONT SUSPENSION

Front Suspension: Independent, linked parallegram type with coil springs.
See Front Suspension Section for complete data.

Kingpin Inclinaion—4°29'47".

Caster—0° to Neg. ¾°. Adjustable.

Camber—Neg. ¾° to Pos. ¾° (Service Limits), Neg. ¼° to Pos. ¾° (New Car Specification).

Toe-In—1/16-1/8". Adjust each tie rod equally.

Steering Geometry Inner wheel 23° ± ½°. Outer 20°.

STEERING GEAR

Steering Gear—Saginaw Worm-and-Roller type.
See Steering Gear Section for complete data.

BRAKES

Service Brakes: Bendix Hydraulic, duo-servo, single anchor type **without eccentric adjustment.** Hand lever applies rear wheel service brakes.
See Brake Section for complete data.

Wheel Cylinder Bore—Front wheels 1⅛", Rear 1".
Drums—Cast-iron. Diameter 11". Max. rebore .060". (or .030" cut).

Lining—Moulded. Width 2" (front wheels), 1¾" (rear). Thickness 3/16". Length per shoe: 9 11/32" (primary), 11 31/32" (secondary).

Clearance—.015" at both ends of secondary (rear) shoe with primary shoe forced out against drum.

Braking Power—56% front wheels, 44% rear.

Hand Brake: See Service Brakes above.

MISC. MECHANICAL

Convertible Top Control: Hydro-lectric type (hydraulic actuation with motor-driven pump supplying oil under pressure for power cylinders).
See Miscellaneous Section for complete data.

Windshield Wiper: Vacuum Link-&-Crank Arm type.
See Miscellaneous Section for complete data.

FRONT END SHEET METAL ASSEMBLY REMOVAL, HOOD REMOVAL AND ALIGNMENT, FRONT FENDER REMOVAL: *See Oldsmobile Special Data.*

MODEL IDENTIFICATION

SERIAL NUMBER: On left front door hinge post.
1949 Numbers—First number 1001 with prefix 498M or 499M, A, etc. as follows:
Serial No. Prefix Identification. First two numbers 49 indicate year, third number 8 indicates 88 Series, or 9 for 98 Series, letter indicates assembly plant: **M**—Lansing, **A**—Atlanta, Ga., **B**—Framingham, **K**—Kansas City, **C**—South Gate, **W**—Wilmington.

ENGINE NUMBER: Stamped on front face of **Left** cylinder bank just below cylinder head. ***Number is stamped upside down, use mirror to read number, number will appear backward in mirror.***
1949 Numbers—8A1001 up.

TUNE-UP

COMPRESSION PRESSURE: 136 lbs. at cranking spd.
VACUUM READING: Steady 17" min. at idling speed.
FIRING ORDER: 1-8-7-3-6-5-4-2 (Cyl. Nos. 1-3-5-7 Left Bank, 2-4-6-8 Right Bank, front-to-rear). See wiring diagram.
SPARK PLUG GAPS: .030".
Plugs—AC No. 45. 14 mm.
DISTRIBUTOR: Breaker Gap—.016-.021" (new points), .012-.0175" or .015" preferred (used points).
►***CAUTION—Set new points at .016-.021" to allow for wearing in of rubbing block.***
Cam Angle—Closed 21° to 30° with .016" gap.
Breaker Arm Spring Tension—19-23 ozs.
Automatic & Vacuum Advance—*See Ignition.*
Condenser Capacity—.18-.23 microfarad.
IGNITION TIMING: 2½° BTDC.
Timing Procedure—*See Ignition Timing.*
Dampener Mark—Pointer on left front side of engine midway between two steel balls on dampener.
►***CAUTION***—Ignition timing very sensitive and must be set exactly midway between two steel balls. If spark must be retarded to eliminate spark ping, do not retard more than is required.
CARBURETION:
Idle Setting—Both screws ¾-1½ turns open (Carter), approx. 1 turn open (Rochester)—turning screws out gives richer mixture. Set for smooth idle.
Idle Speed—Exactly 375 RPM. use tachometer.
Float Level (Carter)—¼" from top of float to lower face of bowl cover with needle valve seated.
Float Level (Rochester)—23/32" from top of seam on free end to gasket seat on cover with cover assembly inverted and needle valve seated.
Accelerating Pump (Carter)—No seasonal adjust.
Accelerating Pump (Rochester)—3 holes:
Outer Hole—Minimum stroke (factory setting).
Center Hole—Med. stroke. Inner—Max. stroke.
Choke Setting: Centered (both Carter & Rochester).
Fuel Pump Pressure: 4-5 lbs.
MANIFOLD HEAT CONTROL: Thermostatic coil type. Valve located on left side between exhaust manifold and exhaust pipe. Stop spring should strike stop before counter-weight touches pin to prevent valve rattles when closed.
VALVE TAPPET CLEARANCE: None in service (automatic hydraulic type tappet take-up).
Valve Timing Check—*See Valve Timing.*
STARTING: *See Battery, Starter, Generator, Regulator.*

IGNITION

IGNITION SWITCH: Delco-Remy No. 1116453.
Ignition Lock—Briggs & Stratton or Delco.
COIL: Delco-Remy 1115380. Mounted on manifold just ahead of distributor.
Ignition Current—2.0 amperes idling, 4.5 stopped.
CONDENSER: Delco-Remy No. 1869704.
Capacity—.18-.23 microfarad.
DISTRIBUTOR: Delco-Remy 1110814 or 1110817. Automatic and vacuum advance with Octane Selector. **1110817 Distributor**—Uses new "center-bearing" breaker plate described below.
►**Breaker Plate Bearing Assembly**—Plate rotates on 3 bakelite buttons on support plate with spring tension adjustment (shim washers) on underside of support plate. Pull required to move plate should be 8 oz. min., 16 oz. max. with breaker plate assembly out of housing.
See "Delco-Remy Center-Bearing Breaker Plate Distributor" in Electrical Equipment Section.
Breaker Gap—.016-.021" (new points), .012-.0175" or .015" preferred (used points).
►***CAUTION—Set new points at .016-.021" to allow for wearing in of rubbing block.***
Cam Angle—Closed 21° to 30° with .016" gap.
Breaker Arm Spring Tension—19-23 ozs.
Rotation—Counter-clockwise viewed from above.

Distr. Degrees	Automatic Advance R.P.M.	Eng. Degrees	R.P.M.
Start	300	2.0	600
16.0	2000	32.0	4000

Vacuum Spark Control: Delco-Remy 1116048. Integral type linked directly to breaker plate. Provides additional advance at speeds above idling except when engine accelerated or operated with wide open throttle when spark retarded by return spring.
Plunger Travel—7/32".

Vacuum Advance		
Distr. Degrees	Eng. Degrees	Vacuum (" of HG)
Start	0°	6.5-8.5"
10°	20°	19-21"

Octane Selector—Hold-down plate permits 15° advance or retard. See Ignition Timing.

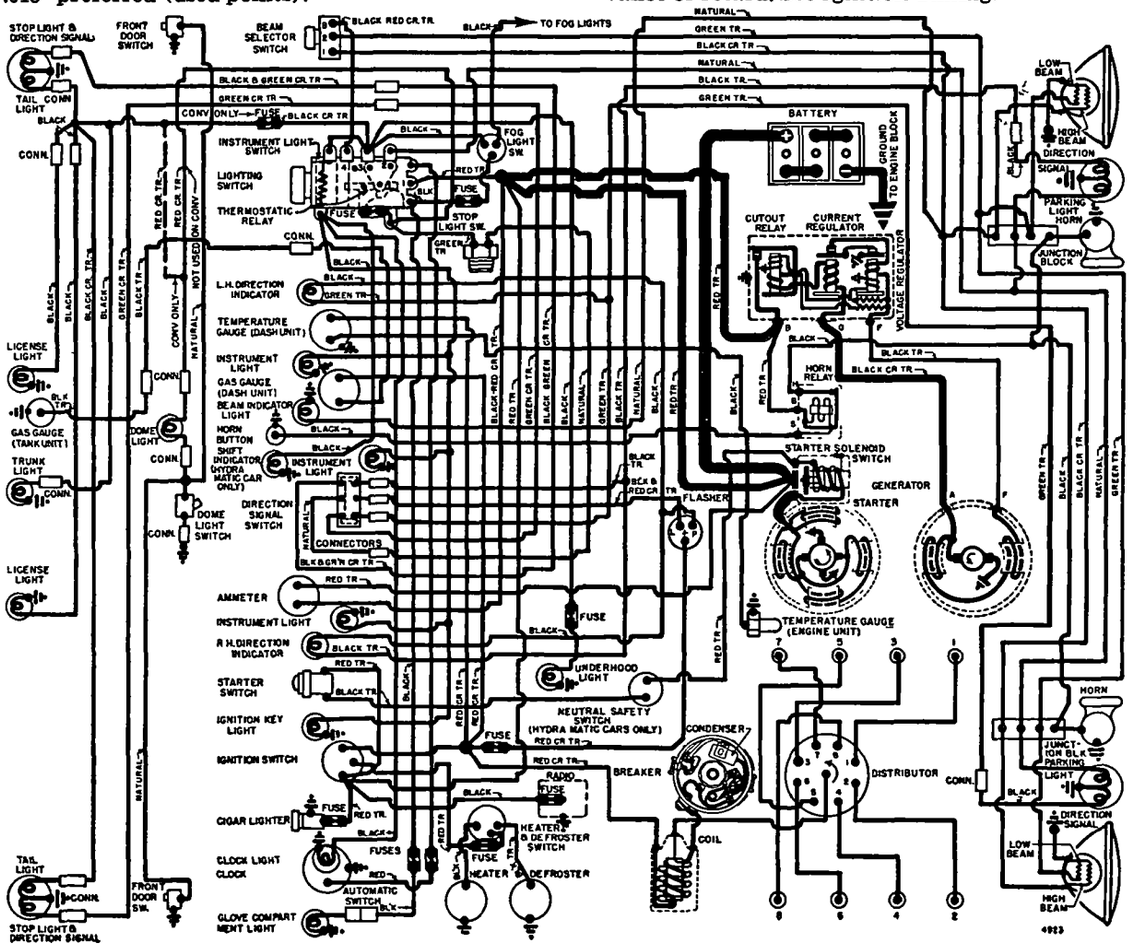

Removal: Remove distributor cap, disconnect breaker lead and vacuum line, take out 2 distributor clamp-to-block capscrews, lift distributor straight up.
Installation—Turn engine over to place #1 cylinder in firing position (#1 piston on compression and two balls on dampener midway between pin on front of engine—left side). Install distributor with flat in distributor drive gear aligned with flat on oil pump shaft, push distributor down just enough to engage oil pump shaft—drive gear must not engage camshaft gear. Align distributor clamp with holes in engine. Turn rotor and align it with breaker terminal (low tension connection). Push distributor down to engage camshaft gear (rotor will turn to No. 1 terminal). Install hold-down plate by raising distributor slightly, install 2 capscrews in plate. Connect low tension lead and vacuum line, install cap.

IGNITION TIMING

	Flywheel Degrees	Piston Position
Std. Setting①	2½° BTDC	.002" BTDC.

①—For premium gasolines.
Dampener Mark—Two steel balls on dampener. Pointer on left front side of engine should be midway between the two steel balls.
Timing (with Synchroscope)—Use Tool HMO-161. Loosen hold-down plate and center scale "0" mark on center line, tighten hold-down plate. Clip synchroscope lead to #1 spark plug, direct light on dampener at timing pointer on left side of engine. With engine idling, loosen clamp bolt, rotate distributor until point on dampener midway between two steel balls line up with pointer, tighten bolt.
Timing (without Synchroscope)—Turn engine over to firing position for #1 cylinder (midpoint between two steel balls on dampener aligned with timing pointer on left front of engine). Loosen hold-down plate and center scale "0" mark on center line, tighten hold-down plate. Loosen clamp bolt, rotate distributor until contacts open, tighten bolt.
Octane Selector Setting: Normal setting, "0" mark on scale at center line. Timing should not be retarded more than to eliminate spark ping if required.

CARBURETOR

CARTER WGD

Carter WGD No. 714S. 1¼" dual downdraft, horizontal air intake type.
Casting No.—604 on face of flange.
Carter Installation Unit No. 195-43U—Required when installing 714S carburetor on 1949 Oldsmobile 8 engines not originally Carter equipped.
See Carburetor Section for complete data.
Settings (Idle Setting, Float Level, and Accelerating Pump): *See Tune-Up data.*
Hydra-Matic Throttle Linkage Adjustment: *See "Oldsmobile Hydra-Matic Drive" in Transmission Section.*
Metering Rods & Jets—*See "Carter Downdraft Carburetor Jet Specifications" in Carburetor Section.*
Fast Idle: Carter Dual (WGD) Carburetor type.
See Carburetion Equipment Section for complete data.
►**Setting**—*CAUTION*—Two separate adjustments:
1)—**Fast Idle Linkage.** Back off fast idle screw until fast idle cam can be revolved freely. Loosen choke lever clampscrew. Insert .015" flat feeler (Gauge T109-72) between lip of fast idle cam and boss on carburetor casting, hold choke valve tightly closed, remove all slack from linkage by pressing choke lever toward closed position, tighten clampscrew while holding lever in this position.
2)—**Fast Idle Screw.** Back off throttle lever set screw closing throttle vales. Turn fast idle cam until ear on cam opposite fast idle screw (choke valve wide open). Adjust fast idle screw until it just touches ear on cam.
Automatic Choke: Carter Climatic Control (Dual Carburetor).
See Carburetion Equipment Section for complete data.
Setting—Centered (housing centered on scale).

CARBURETOR

ROCHESTER

Rochester GM Carburetor—Oldsmobile No. 7001570. Dual downdraft, concentric bowl, horizontal air intake type with diaphragm accelerating pump.
See Carburetor Section for complete data.
Settings (Idle Setting, Float Level, and Accelerating Pump): *See Tune-Up Data.*
Hydra-Matic Throttle Linkage Adjustment: *See "Oldsmobile Hydra-Matic Drive" in Transmission Section.*
Fast Idle: Rochester GM Dual Carburetor type.
See Carburetion Equipment Section for complete data.
Setting—500 RPM. engine idling speed with engine and transmission warm. Adjusted by opening throttle slightly, rotating fast idle cam by hand until fast idle screw rests on first (low) step of fast idle cam and turning screw for 500 RPM. idle speed.
Automatic Choke: Rochester GM Automatic Choke.
See Carburetion Equipment Section for complete data.
Setting—Centered (index marks aligned).

CARB. EQUIPMENT

Air Cleaner: AC types as follows:
Carter Carburetor. AC No. 1544656 (standard), No. 1544657 (optl. oil bath type).
Rochester Carburetor. AC No. 1544505 (standard), No. 1544506 (optl. oil bath type).
Filter Element—AC No .5 (std.), 21 (hvy. duty).
Servicing—Clean and re-oil std. cleaner every 2000 miles (500-1000 miles for dusty operation). On heavy duty types clean and refill reservoir with 1 pint SAE 50 (40 in winter) oil every 5000 miles (2500 miles for dusty operation).
Fuel Pump: AC No. 1539294 fuel-&-vacuum pump.
Replacement Pump—AC No. 9294.
Pressure—4-5 lbs.
►*CAUTION*—When installing fuel pump, tip pump up to place arm under fuel pump eccentric.
See Carburetion Equipment Section for complete data.
Gasoline Gauge: AC Electric type.
Dash Unit—AC 1517011. **Tank Unit**—AC 1517086.
See Carburetion Equipment Section for complete data.

BATTERY

Delco Type 17K4. 6 Volt, 17 Plate, 115 Ampere Hour
Grounded Terminal—Negative (—) to cyl. block.
Location—In engine compartment on left side.

STARTER

Delco-Remy Model 1107956. Armature No. 1867897.
Drive—Overrunning clutch (solenoid pinion shift).
►*CAUTION*—Overrunning clutch pinion clearance must be adjusted whenever solenoid removed from starter.
Rotation—Counter-clockwise at commutator end.
Brush Spring Tension—24-28 ozs. each.

Performance Data

Torque	R.P.M.	Volts	Amperes
0 ft. lbs.	5500	5.7	80①
14 "	Lock	3.0	600

①—Includes current draw of starter switch.

Removal: Flange mounted on left front face of flywheel housing. To remove, take out mounting screws.
Starting Switch: Delco-Remy Solenoid Switch No. 1118136 (no relay used) mounted on starter and controlled by Pushbutton Switch No. 1996038 and Hydra-Matic Neutral Safety Switch No. 1997849.
Neutral Safety Switch Adjustment—*See "Oldsmobile Hydra-Matic Drive" in Transmission Section.*
►*CAUTION—Starter operates whenever pushbutton depressed with shift lever in Neutral regardless of ignition switch position.*

GENERATOR

Delco-Remy Model 1102704. Armature No. 1880550. Two brush type with voltage and current regulation.
Charging Rate Adjustment—None. See Regulator.
Maximum Charging Rate—40 amperes min. reached at car speed of 22 MPH. (88), 21 MPH. (98). Actual charging rate controlled by regulator and dependent on battery condition.

Performance Data

	Amperes	Volts	R.P.M.
Cold	40①	8.0	1900

①—Not maximum output. See Current Regulator.
Rotation—Counter-clockwise at commutator end.
Brush Spring Tension—25 ozs. each.
Field Current—1.9-2.05 amperes at 6.0 volts.
Removal: Pivot mounted on manifold above left cyl. bank at front of engine. To remove, disconnect leads, take out 2 pivot and 1 clampscrew.
Generator Belt Adjustment: ¾" belt deflection midway between generator and fan pulley with 25 lbs. push against belt. To adjust, loosen screw on adj. link.
Fan Belt Adjustment: *See COOLING.*

REGULATOR

Delco-Remy 1118300. Voltage & Current Regulator.
►*NEW "1118300 SERIES"* regulators have screw adjustment for settings and single regulator springs.
See Electrical Equipment Section for complete data.
CAUTION—Check generator for grounded field coils and leads before changing regulator settings to correct High Charging Rate or High Voltage.

Cutout Relay

Cuts In—5.9-6.8 volts hot (set to 6.4 volts hot).
Contact Gap—.020" (same for both sets).
Air Gap—.020" (with contacts just closed).

Voltage Regulator

Setting—7.0-7.7 volts hot (set to 7.4 volts hot). Regulator is over-compensated for temperature. Check with cover in place and regulator hot.
Air Gap—.075" with armature pressed down to point where contacts are just touching.
Checking & Adjustment—*See Elec. Equip. Section.*

Current Regulator

Setting—40-46 amperes hot (set to 42 amps. hot).
Air Gap—.075" with armature pressed down to point where contacts are just touching.
Checking & Adjustment—*See Elec. Equip. Section.*

LIGHTING

Headlamps, Direction Signal, and Lighting Switches: *See 1949 Oldsmobile Six car pages.*

MISC. ELECTRICAL

THERMOSTATIC CIRCUIT BREAKER: Delco-Remy. On back of light switch (part of switch assy.). Contacts remain closed with 30 amperes but open in 3 minutes with 42 amperes at 70°F. Not adjustable.

CONTINUED ON NEXT PAGE

C NTINUED FROM PRECEDING PAGE

FUSES: Dome & Stop—SFE 14 amp. On light switch.
Dome & Tail (Convertible only)—AGC 20 ampere. In body feed wire to dome and tail lights.
Glove Box & Under-hood Light—AGA 5 amp. each.
Direction Signal—SFE 9 ampere. In Flasher to Ignition Switch wire behind instrument panel.
Electric Clock—AGA 2 ampere. In feed wire.
Cigar Lighter—AGC 30 ampere.

HORNS: Delco-Remy No. 1999617 or 1999647 (Low Note), 1999618 or 1999648 (High Note). Vibrator types operated by relay.
NOTE—1999647 & 8 horns are welded.

Type	Current (at 6 volts)	Air Gap
1999617 (Low Note)	19-21 amperes	.047-.052"
1999618 (High Note)	18-20 amperes	.039-.044"

Horn Relay: Delco-Remy No. 1116775.
Contact Gap—.027". **Air Gap**—.014" (closed).
Contacts Close—2.75-4.0 volts (set to 3.5 volts).

ENGINE

ENGINE SPECIFICATIONS: Rocket Engine. New 90° V8 with Overhead Valves. Both cylinder blocks and crankcase cast Enbloc.
Bore—3¾". **Stroke**—37/16".
Displacement—303 cubic inches. **Rated HP.**—45.
Developed Horsepower—135 at 3600 RPM.
Compression Ratio—7.25-1 cast iron heads.
Compression & Vacuum Reading—*See Tune-Up.*

TIGHTENING TORQUES: *See Oldsmobile Special Data.*

CYLINDER HEAD REMOVAL & INSTALLATION: *See Oldsmobile Special Data.*

OIL PAN REMOVAL: *See Oldsmobile Special Data.*

PISTONS: Aluminum alloy, three-ring, auto-thermic steel-strut, slipper skirt, cam ground, tin plated.
Length—4". **Weight**—19.88 ozs. (stripped).
Removal—Pistons and rods removed from above.
►*CAUTION*—When removing more than one piston assembly, stamp cylinder number on piston, connecting rod, and cap, before loosening assembly. Re-install to these marks.
Clearance—Top land .032-.036". Skirt clearance .0005-.001" measured ⅛" from bottom of skirt with piston pin removed.

Fitting New Pistons: Insert .0015" x ½" x 12" feeler between piston (pin removed) and cylinder wall at right angles to pin hole. Pull to withdraw feeler should be 10 to 18 lbs.
►*CAUTION*—Allow rebored cylinders to cool to normal room temperature before fitting pistons.

Installing Pistons: Mark "F" cast on each side of pin hole on front side of piston. Install pistons 1, 3, 5, 7 in left bank, 2, 4, 6, 8 in right bank with letter "F" toward front on all pistons.

PISTON RINGS: Two coated compression rings, one slotted oil ring, all above pin. Oil ring groove drilled with oil drain holes.

Ring	Width	End Gap	Side Clearance
Comp. (#1,2)	.077-.078"	.008-.020"	.001-.003"
Oil (#3)	.1860-.1865"	.008-.020"	.0018-.0033"

Installing Rings—Compression rings installed with step on inner edge UP. Oil rings marked TOP installed with mark UP, unmarked rings with either side up.

PISTON PIN: Diameter—.9803-.9807". **Length**—3". Floating type with lock ring at each end. Rods rifle drilled for pin lubrication.
►*CAUTION*—Discard old lock rings and install new service type lock rings when installing pins.
Pin Fit in Piston—.0000-.0002" loose. Pin should NOT fall through piston of own weight. Pin can be tapped in place using brass drift. Pin hole out-of-round .0005" max. Hone pin hole and install oversize pin.
Pin Fit in Rod Bushing—.0003-.0005" loose.
►*CAUTION*—If rod bushing replaced, align oil hole in bushing and rod for pin lubrication, finish to size with Piston Pin Bushing Honing Tool No. KMO-754. Standard bushing diameter .9807-.9811".

Replacement Pins: Std. size, and .001", .003", oversize.

CONNECTING ROD: Length 6.625". **Weight** 29.54 ozs.
►*CAUTION*—Use Guide Tool No. BT-22 over rod bolts to prevent damaging crankpin journals when removing and installing piston and rod assemblies.
Crankpin Journal Diameter—2.2488-2.2499".
Lower Bearing Diameter—2.3745-2.3750".
Lower Bearing—Removable, steel-backed, Durex-babbitt overlay. No shims.
Clearance—.0009-.0029". **Sideplay**—.002-.011".

Bearing Adjustment: None (no shims). Replace bearings. Do not file rods or caps.
NOTE—Tang on bearing insert must seat in notches in cap and rod.

►**Installing Rods:** *CAUTION*—Rods have plain side and boss side (two machined bosses at lower end). Install rods **#1, 3, 5, 7, with plain side to front,** and **#2, 4, 6, 8, with boss side to front** (NOTE—Pistons marked "F" on front side). Caps offset and cannot be installed incorrectly. Groove on rod and cap and pads for numbering caps and rods are on same side. Tighten self-locking nuts to 45-50 ft. lbs.
►*CAUTION*—Misaligned rods must be replaced, straightening rods in field not recommended by manufacturer.
NOTE—Oil spit hole for lubrication of opposite cylinder wall provided in rod above cap joint.

CRANKSHAFT: 5 bearing, 6 integral counterweights.
Journal Diamters #1, 2, 3, 4, 2.498-2.499"; **#5,** 2.623-2.624".
Bearings—Removable, steel-backed, Durex-babbitt overlay bearing shells. Rear bearing flanged.
Clearance—.002-.0035" (rear), .0005-.003" (others).
►*REAR BEARING SHELLS*—Marked with letter on backside of bearing tang. **Use same size bearing (indicated by letter on tang) when replacing bearing.** Rear bearings are selective fit during manufacture, 3 sizes used: "M" Medium, "T" Thin, "H" Heavy.

Bearing Adjustment: None (no shims). Replace bearings. Do not file caps.
NOTE—#1, 2, 3, 4, bearing caps numbered. Install with numbers toward right hand cylinder bank.
Bearing Removal—Bearing shells can be removed and installed without removing crankshaft. Lower flywheel housing and pan must be removed to remove rear main bearing cap.

End Thrust: Taken by flanges on rear main bearing.
Endplay—.004-.008".

Crankshaft Front Oil Seal and Rear Main Bearing Oil Seal Installation: *See "Crankshaft & Main Bearings" in Oldsmobile Special Data.*

FLYWHEEL: Removal & Installation—*See Oldsmobile Special Data.*

CAMSHAFT: 5 bearing, coated (Parco-Lubrited) shaft with non-adjustable chain drive.
Camshaft Removal & Installation—*See Oldsmobile Special Data.*
Journal Diameters—1.8724-1.8731" (all).
Reamed Bushing Diameters—1.8745-1.8760" (all).
Bearings—Steel-backed, babbitt bushings.
Clearance—.0014-.0036".

End Thrust: Forward thrust taken by thrust plate on front of engine, rear thrust at front of cyl. block.
►*CAUTION*—Thrust plate seals off two oil galleys and must be installed flat to prevent low oil pressure at idling speeds. 1/16" hole in plate at right galley provides lubrication for chain, sprockets, fuel pump lever and eccentric.

Timing Chain: Link-Belt. Width 11/16". Pitch .500". Length 48 links or 24".

Camshaft Setting: Mesh chain with sprocket marks adjacent and in line with a straightedge across the shaft centers (or use Tool BT-11).
NOTE—Fuel pump eccentric bolted to front end of camshaft ahead of sprocket. Assemble with "0" mark to front, machined step against sprocket.

VALVES:	Head Diam.	Stem Diam.	Length
Intake	1 3/4"	.3417-.3425"	4.907-4.927"
Exhaust	1.432-1.442"	.3930-.3938"	4.931-4.951"

	Seat Angle	Lift	Stem Clearance
Intake	45°	.330"	.00175-.00355"
Exhaust	45°	.330"	.00225-.00405"

►**Intake Valve Rubber Seals**—Installed in second groove from end of valve stem between lock retainer and valve stem. Always use new rubber seals.

Valve Guides: Intake guides tapered on lower end. Press guides in head until top end 53/64-27/32" above face of valve spring seat (Tool BT-13 positions guide correctly in head). Inside ream diameter .34425-.34525" Intake, .39605-.39705" Exhaust.
Length—2 11/16".

Valve Springs: Intake and exhaust springs are alike. Dampers used on lower end of all springs.
Free Length—2 3/32".

	Spring Pressure	Spring Length
Valve Closed	62-68 lbs.	1.777"
Valve Open	136-146 lbs.	1.447"

►*CAUTION*—Lower end of damper and spring must seat in recess in head.

Valve Lifters: New hydraulic type maintaining zero tappet clearance in service. Production lifters fitted in four sizes: standard, .001", .002", or .003" oversize with identification number (except standard which is unmarked) etched on lifter body and cylinder block carries size mark on rail under push rod cover. **Use proper size lifter when replacing valve lifters.** *See Miscellaneous Section for complete data.*
Valve Lifter Removal—*See Oldsmobile Special Data.*

Rocker Arms: New rocker arm and shaft assemblies mounted on each cylinder head. Intake rocker arms identified by brass pin in oil lead.
Rocker Arm Shaft Disassembly and Reassembly—*See Oldsmobile Special Data.*
►*CAUTION*—Steel plain finish push rods (alike for all valves) used on domestic engines. Longer copper finish push rods (for thicker head gaskets) used on export engines only.

VALVE TIMING

Tappet Clearance: None in service (hydraulic type lifters which maintain zero clearance).

Valve Timing: *See Camshaft Setting above.*
Intake Valves—Open 14° BTDC. Close 50° ALDC.
Exhaust Valves—Open 50° BLDC. Close 14° ATDC.
Valve Timing Check—#1 intake valve opens 14° before top dead center (#1 piston .060" before top dead center) with zero tappet clearance.

LUBRICATION

Engine Oiling System: Pressure to main bearings, camshaft bearings, connecting rod lower bearings, piston pins, hydraulic valve lifters (right bank from

main oil galley on right side, left bank from left oil galley from front main bearing); and to rocker arms (hollow shafts, left shaft fed from #2 camshaft bearing, right shaft from #4 camshaft bearing. Timing chain, sprockets, fuel pump lever and eccentric lubricated by metered hole in camshaft thrust plate over front end of right main oil galley. Distributor drive gear lubricated by metered hole in plug in rear end of left oil galley.

►*CAUTION*—If oil filter (or pad cover if filter not used) replaced, use a new gasket (coat both sides with POB No. 5 Sealer) and tighten bolts to 35-40 ft. lbs. Oil filter (or pad) mounted externally on lower right side of crankcase at rear. Oil filter is full flow type (all oil from pump delivered to oil filter) requires pad when filter not used to return oil to main oil galley.

Crankcase Capacity—5 quarts.

Normal Oil Pressure—40 lbs. at 30 MPH.

Oil Pressure Regulator—Located on oil pump. Opens at 40 lbs. Non-adjustable.

Oil Pump: Gear type. Located in crankcase and attached to rear main bearing cap by three bolts.

NOTE—Pump can be removed and installed without disturbing distributor drive (flat on upper end of oil pump shaft engages flat on distributor drive gear).

Oil Filter: AC PF-122 full-flow type optional. On lower right side of crankcase at rear.

Oil Pressure Gauge: AC No. 1507124. Not electrical.

Crankcase Ventilation: Air intake in oil filler cap (oil-wetted type cleaner) with outlet connection to a ventilating baffle at rear of block above right bank. Outlet pipe push fit at ventilator and extends down below right rear corner of engine.

Servicing—Wash and re-oil filter element in cap every 2000 miles (oftener in dusty areas).

COOLING

Cooling System: Pressure type with pressure valve and vacuum valve (relief valves) in filler cap. Two by-passes for water re-circulation with thermostat closed: 1) internal passage from cylinder head through block to pump inlet; 2) external tube from water outlet (cast as part of intake manifold) to pump inlet.

Capacity—21½ qts.

Pressure Valve—AC No. 850549 Radiator Cap. Opens at 7 lbs.

Radiator Core Removal: *See Oldsmobile Special Data.*

Water Pump: Packless, sealed ball-bearing shaft. Pump mounted in front engine cover casting.

See Water Pump Section for complete data.

Removal—Take off fan and two fan pulleys. Remove six pump mounting bolts (4 to engine cover, 2 to block). Remove pump. NOTE—When installing pump, coat one side of pump housing gasket with gasket cement, dip four housing bolts in CP No. 9 Sealer.

Fan Belt Adjustment—Idler pulley mounted on slotted arm attached to engine front cover on right side above fuel pump. Adjust fan belt for ½" belt deflection midway between fan and idler pulley with 25 lbs. push against belt.

Generator Belt Adjustment—*See GENERATOR.*

Thermostat: Harrison. In water outlet (integral with intake manifold casting).

Setting—Starts to open 152°F. Fully open 173°F.

Temperature Gauge: AC Electric.

Dash Unit—AC No. 1512168.

Engine Unit—AC No. 1512015.

See Miscellaneous Section for complete data.

HYDRA-MATIC DRIVE

Own Make. Consists of Fluid Coupling and an automatic self-shifting four-speed transmission.

►**Hydra-Matic Trans. Serial Number**—Carries prefix "09" (ahead of number) stamped on YELLOW serial plate on right side of transmission case.

►*CAUTION*—This unit not interchangeable with six cylinder type. Has greater torque capacity.

See Transmission Section for complete data.

Lubrication—Check fluid level in transmission every 2000 miles. Drain and refill after first 15000 miles and every 15000 miles thereafter. Use only "Oldsmobile Hydra-Matic Drive Fluid."

Draining & Refilling—*See "Hydra-Matic Drive" in Transmission Section.*

Capacity—11 qts. (when drained and refilled with unit in car). **Approximately 11½ qts.** (when refilling after unit rebuilt, and reinstalled in car).

Checking Fluid Level—Raise front floor mat at right side, remove sheet metal cover in floor, clean opening of lint, sand, etc. Set hand brake, start engine and let engine idle, move control lever to "DR" position. Take out dip stick, wipe dry and replace stick, remove stick quickly and check level. Level should be at "FULL" mark, add fluid to bring up to "FULL" if required with engine idling.

►*CAUTION—Engine must be idling and selector lever in "Drive" position when checking fluid level.*

Linkage Adjustment—*See "Hydra-Matic Drive" in Transmission Section.*

Removal: *See "Hydra-Matic Drive" in Transmission Section.*

UNIVERSALS

Mechanics 2C or 2CR. Roller bearing types.

See Universals Section for complete data.

NOTE—Slip joint formed at rear of transmission ahead of front U-joint (one-piece driveshaft used).

►*CAUTION*—Rear universal companion nut controls rear axle pinion bearing "pre-load" (must be adjusted whenever nut is loosened). *See Oldsmobile Rear Axle in Rear Axle Section for complete data.*

REAR AXLE

Own Make. Hypoid gear, semi-floating type with pinion mounted on two tapered roller bearings.

►*CAUTION*—New carriers (with machined surfaces on differential side bearing caps) and axle housings (with 2 welded support plates—supports bearing caps to take care of increased torque of new Rocket engine) are used. *Not interchangeable with "76" Series carrier and axle housing.* **Use only carriers and axle housings described above on 1949 "88" and "98"**

►*NOTE*—Rear universal companion nut controls pinion bearing "pre-load."

See Rear Axle Section for complete data.

"88" Series Ratios

42:13 (3.23)—Std. exc. Convertible & Sta. Wagon.

41:12 (3.42)—Std. on Convertible & Station Wagon, Optional on all other models.

39:10 (3.9)—Optl. on Export models.

"98" Series Ratios

40:11 (3.64)—Std. exc. Conv., Optl. on Export.

39:10 (3.9)—Std. on Conv., Optl. on Export

41:12 (3.42)—Optl. on Export models.

Rear Axle Ratio Marking—Ring and pinion gear ratio (39:10, etc.) and date stamped on underside of carrier right horizontal rib.

Backlash—.004-.008". Screw adjustment.

Removal: Disconnect driveshaft at rear universal (wire trunnions to avoid losing rollers), mark joint (reassemble to mark when reassembling). Remove axle shafts (see data below) and carrier capscrews.

►*CARRIER INSTALLATION CAUTION*—Due to close fit between carrier pedestal caps and support plates in housing, **special carrier installation procedure must be used.** *See Oldsmobile Rear Axle in Rear Axle Section.*

►*CAUTION*—Rear universal joint companion flange nut controls pinion bearing "pre-load" (must be adjusted whenever nut is loosened).

Axle Shaft Removal: Remove wheel. Take off brake drum by removing two Tinnerman nuts from wheel studs (if nuts removed by turning off threads they can be re-used, if nuts damaged new nuts must be used). Remove backing plate mounting nuts, and static collector. Loosen bearing retainer (do not move backing plate or brake line may be damaged). Pull shaft and bearing with Puller J-942 (do not allow shaft to drag on oil seal), replace one backing plate nut.

Wheel Bearing Adjustment—None.

Rear Suspension: Coil spring type with support arms.

See Rear Axle Section for complete data.

SHOCK ABSORBERS

Delco. Double acting (parallel cyl. rear), hydraulic.

"88" FRONT—Model 1947-K (left), 1947-J (right).

"88" REAR—Model 2105-H (left), 2105-N (right).

"98" FRONT—Model 1947-D (left), 1947-C (right).

"98" REAR—Model 2105-F (left), 2105-E (right).

See Shock Absorber Section for complete data.

FRONT SUSPENSION

Front Suspension: Independent, linked parallegram type with coil springs.

See Front Suspension Section for complete data.

Kingpin Inclinaion—4°29'47".

Caster—0° to Neg. ¾°. Adjustable.

Camber—Neg. ¾° to Pos. ¾° (Service Limits), Neg. ¼° to Pos. ¾° (New Car Specification).

Toe-In—1/16-1/8". Adjust each tie rod equally.

Steering Geometry Inner wheel 23° ± ½°. Outer 20°.

STEERING GEAR

Steering Gear—Saginaw Worm-and-Roller type.

See Steering Gear Section for complete data.

BRAKES

Service Brakes: Bendix Hydraulic, duo-servo, single anchor type **without eccentric adjustment.** Hand lever applies rear wheel service brakes.

See Brake Section for complete data.

Wheel Cyl. Bore (88) Front whl. 1 3/32", rear 15/16".

Wheel Cylinder Bore (98) Front wheel 1⅛", rear 1".

Drums—Cast-iron. Diameter 11". Max. rebore .060"

Lining—Molded. Width: Front wheel 2½", Rear wh. 2". Thickness 3/16". Length per shoe: 9 11/32" (primary), 11 31/32" (secondary shoes).

Clearance—.015" at both ends of secondary (rear) shoe with primary shoe forced out against drum.

Braking Power (88)—58% front wheels, 42% rear.

Braking Power (98)—56% front wheels, 44% rear.

Hand Brake: See Service Brakes above.

MISC. MECHANICAL

Power Operated Convertible Tops, Windows, & Front Seat: Hydro-Lectric type (motor driven pump).

98 Sedan Note—Power operated windows and front seat adjustment optional on 2-Door & 4-Door.

See Miscellaneous Section for complete data.

Windshield Wiper: (88) Vacuum Link-&-Crank Arm. **(98)** Vacuum Cable Operated type.

See Miscellaneous Section for complete data.

TIGHTENING (TORQUE WRENCH) SPECIFICATIONS

	Ft. Lbs.	In. Lbs.
Cylinder Head Stud Nuts	60-62	720-744
Main Bearing Capscrews	90-95	1080-1680
Connecting Rod Nuts (7/16)	60-65	720-780
Connecting Rod Nuts (3/8)	45-46	540-552
Camshaft Sprocket Nut	140-160	1680-1920
Timing Chain Cover	15-18	180-216
Intake & Exhaust Manifold	25-30	300-360
Vibration Dampener Screw	130-150	1560-1800
Flywheel to Crankshaft		
Screws (1/2)	70-80	840-960
Screws (7/16)	55-60	660-720
Oil Pan	15-18	180-216
Spark Plugs (10 mm)	10-14	120-168
Front Stabilizer to Frame	55-60	660-720
Rear Stabilizer to Axle	65-70	780-840
Steering Wheel Nut	55-60	660-720
Pitman Arm Nut	65-75	780-900
Steering Idler Lever Bushing	100-110	1200-1320

CYLINDER HEAD

1949 MODELS

CYLINDER HEAD INSTALLATION: Use a Torque Indicating Wrench and tighten cylinder head stud nuts in order shown in diagram Tighten cast iron heads cold. Run engine until thoroughly warmed up and recheck all nuts for correct tension.

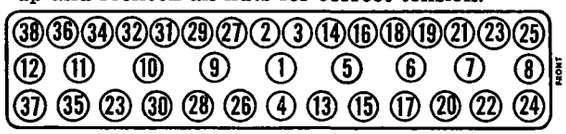

ORIGINAL BORE & PISTONS

1949 MODELS

ORIGINAL BORE & PISTON SIZES: Piston size indicated by mark stamped on head of each piston Cylinder bore size indicated by mark stamped on top left face of block (opposite #1 cylinder for Eight & Super 8, #8 cylinder (Custom Eight).

ORIGINAL PISTON AND BORE SIZES

Mark	Piston Size	Cylinder Size
AA	3.49825-3.49850"	3.49950-3.49975"
A	3.49850-3.49875"	3.49975-3.50000"
BB	3.49875-3.49900"	3.50000-3.50025"
B	3.49900-3.49925"	3.50025-3.50050"
CC	3.49925-3.49950"	3.50050-3.50075"
C	3.49950-3.49975"	3.50075-3.50100"
DD	3.49975-3.50000"	3.50100-3.50125"
D	3.50000-3.50025"	3.50125-3.50150"

►.020" **Oversize Bore Engines**—Marked by ★ following engine serial number.

PISTONS

1949 MODELS

REPLACEMENT PISTONS: Piston Oversizes—Furnished standard size and .005", .020", .030" and .040" oversize *and carries this nominal size marking on head of piston.*

Piston Letter Mark on Piston Head—Indicates size variation (in .00025" steps) **over or under** nominal size (.005", etc) as follows:

AA	.00025" under	**CC**	.00075" over
A	No variation	**C**	.001" over
BB	.00025" over	**DD**	.00125" over
B	.0005" over	**D**	.0015" over

PISTON PINS

1949 MODELS

PISTON PIN BUSHING INSTALLATION: Two-piece bushing used in rod. Use Piston Pin Bushing Replacement Set J-2555 (consists of: Remover, Replacer, Plate, Burnisher), and Piston Pin Bushing Reamer J-874-18. Press old bushings out with Remover and arbor press. *(CAUTION*—Each half of bushing must be installed and burnished separately so that oil channel formed between inner ends of bushing halves will not close up). Install one half of bushing flush with outer end of rod, then using Plate of tool under end of rod, push Burnisher through from **inner end** of bushing. Install second half of bushing and burnish in place from inner end working through bushing half already in place. Ream bushing for size-to-size fit with piston pin using Reamer J-784-18 Check pin fit as follows:

Piston Pin Fit in Rod Bushing—With lower bearing inserts and cap installed on rod, insert piston pin in rod, clamp pin in vise with lead jaws placing rod in horizontal position. Rod should hold in this position, but should fall down of own weight when tapped down by hand.

CRANKSHAFT & MAIN BEARINGS

PLASTIGAGE FOR CHECKING BEARING CLEARANCE: Consists of plastic rod material supplied in envelope marked with scale which gives bearing clearance in thousandths of an inch when used to measure flattened plastigage in bearing cap. Use Plastigage as follows:

Bearing Clearance Check—Remove bearing cap, wipe oil from bearing insert and journal (CAUTION —When checking main bearings, keep all other bearing caps tight so that crankshaft weight will not cause incorrect reading). Place piece of Plastigage rod across full width of bearing insert in cap, re-install bearing cap and tighten bolts to recommended torque (see Tightening Specifications). Remove cap, match widest width of flattened Plastigage with correct graduation of scale on envelope (marking of this graduation is bearing clearance).

1949 MODELS

CRANKSHAFT FRONT OIL SEAL: Installed on front end of crankshaft behind timing chain cover. To replace seal, remove radiator core (see Radiator Core Removal), vibration dampener (use Puller J-2582 for Friction Disc type dampener, J-2636 for Fluid type dampener), and timing chain cover. Remove old seal and install new seal over end of shaft Place Cover Aligning Arbor J-2572 over end of shaft, install cover and tighten cover screws Insert feeler gauge between arbor and hole in cover, run gauge around arbor, if clearance not uniform, loosen cover screws and shift cover until clearance uniform.

VALVE SYSTEM

1949 CUSTOM EIGHT

HYDRAULIC VALVE LIFTER CHECK: When valves ground or new valves installed, mechanical clearance at valve lifters should be checked as follows. With valves out, lift out hydraulic take-up assemblies from tappet bodies (keep assemblies in order so that they can be re-installed in same position). Install valves without springs, set #1 piston at top of compression stroke placing tappets for this cylinder on heel of cam. Check valves for #1 cylinder by inserting Plug Gauge of Hydraulic Tappet Gauge Set J-2553 in tappet body. Check clearance between Gauge Plug and valve stem (with valve held down on seat) using feeler gauge supplied with Gauge Set. **Clearance should be .030" to .070".** If under .030", grind off end of valve stem with valve refacer.

CAUTION—When checking other valves, make certain piston for that cylinder at top of compression stroke.

Hydraulic Valve Lifter Cleaning & Testing—After making check above, hydraulic take-up assemblies should be cleaned and tested before re-installing *See Wilcox-Rich "Zero-Lash" Valve Lifters in Miscellaneous Section.*

OIL PAN REMOVAL

1949 MODELS

OIL PAN REMOVAL: Place car to position hoist over engine. Disconnect steering idler lever support from frame side rail and lower steering linkage Remove flywheel housing lower cover and take out oil pan screws. Lower oil pan and if necessary, rotate crankshaft to place counterweights up for clearance (use pry bar at flywheel housing engaging teeth on flywheel). If pan requires additional clearance, attach hoist to front of engine (do not disturb front engine support bolts), raise engine just enough to relieve load on support, pan should then come out.

OIL PUMP

1949 MODELS

OIL PUMP: Removal—Set engine in firing position for #1 cylinder (6° BTDC.), remove distributor cap and mark rotor position on distributor housing. With pump cover off, mark pump driving gear position on pump body (check to this mark when re-assembling since pump must be rotated 180° on some cars to clear frame when removing pump from engine)

Oil Pump Installation: Correct engaging position of pump drive is with driving blade in pump drive gear parallel to camshaft and punch mark on end of drive gear at top. Re-assemble to marks made when removing pump (see above—engine in firing position for #1 cylinder). If pump does not engage slot in distributor shaft, remove pump and turn pump drive gear one tooth and re-install (making certain distributor rotor at #1 firing position).

CLUTCH NOTES

1949 "2300" SERIES

CLUTCH PEDAL OVER-CENTER SPRING: New adjustable type over-center (booster) spring. Adjustment provided at spring eye-bolt nut (front end of spring) and by turn buckle type pedal-to-relay lever link (controls over-center point). To adjust, proceed as follows:

Clutch Pedal Linkage Adjustment: Check over-center eye bolt (should be 1 5/8" from end of bolt to head of nut—adjust if necessary). Back off locknut and adjusting nut on rod at throwout lever and unhook pedal retracting spring from throwout lever Adjust pedal-to-relay lever link turnbuckle so that over-center spring will pull pedal down after pedal moved down one inch from toeboard (make certain throwout lever does not contact adjusting nut and locknut backed off above). Hook pedal retracting spring to throwout lever. Adjust pedal for 1¼-1⅜" free play at pedal pad. Check over-center spring hold-in position by pulling pedal to floor and hooking spring at bend in pedal arm. Adjust eye bolt nut to hold pedal down with seven lbs. pull on scale.

ELECTRICAL EQUIPMENT NOTE: Both Auto-Lite and Delco-Remy electrical equipment are used.

MODEL IDENTIFICATION

SERIAL NUMBER: On left side of cowl (use Eng. No.).

ENGINE NUMBER: Stamped on upper left side of cylinder block between #3 and #4 cylinders.

►**1949 Numbers "2200-9" Series**—Continuation of 1948 numbers—1948 starting numbers: Eight—G-200001 Up, Super Eight—G-400001 Up.

►**1949 Numbers "2300" Series**—(Eight) H-200001 and Up, (Super Eight) H-400001 and Up.

►***ENGINE NUMBER CODE: Marks following no. indicate:*** ★—Engine Bore. .020" Oversize.

TUNE-UP

COMPRESSION PRESSURE: 120 lbs. at cranking spd.

VACUUM READING: Steady 18-20" idling at 6 MPH.

FIRING ORDER: 1-6-2-5-8-3-7-4. See diagram.

SPARK PLUG GAP: .028", Limits .025-.030".
Plug Types—Auto-Lite P-4, AC No. 104, or Champion Y4A. 10 mm. Metric.

DISTRIBUTOR: Breaker Gap—.017". Limits .013-.018".
Cam Angle—(Auto-Lite)—Closed 27°, Open 18°.
Cam Angle—(Delco-Remy)—21-30° with .017" gap.
Breaker Arm Spring Tension—17-20 ounces.
Automatic & Vacuum Advance—*See Ignition.*
Condenser Capacity—.20-.25 microfarad.

IGNITION TIMING: 6° BTDC.
Timing Procedure—*See Ignition Timing.*
Vibration Dampener Mark—"#1UP.DC" with fifteen 1° graduations ahead of this point. Set ignition contacts to open at 6th graduation before "DC"
Fuel Compensator Setting—Slight ping accelerating with wide open throttle.

CARBURETION:
Idle Setting—(Eight—WDO) ⅝-1⅛ turns open, (8—WGD) 1-1½ turns open, (Super 8) ¾-1¼ turns open. Two screws—turning out gives richer mixture.
Idle Speed (standard)—6 MPH.
Idle Speed (Ultramatic Drive)—400 RPM.
Float Level—(WDO) 5/32", (WGD) 13/64" from top of float to cover with valve seated (inverted, gasket off).
Accelerating Pump (644SA only)—Inner Hole (minimum) Normal. Outer hole if more charge needed.

Choke Setting (643SA, 644SA): Centered (at index).

Choke Setting (728S & SA): One point lean.

Fuel Pump Pressure: 4-4¾ lbs.

MANIFOLD HEAT CONTROL: Automatic. No adjustment. Valve must operate freely.

VALVE TAPPET CLEARANCE: .007" Intake, .010" Exhaust, Hot.
Valve Timing Check—*See Valve Timing.*

STARTING: *See Battery, Starter, Generator, Regulator.*

IGNITION

AUTO-LITE

IGNITION SWITCH: Mitchellock Type 24.

COIL: Auto-Lite Model CE-4033.
Location—Left side of engine above distributor.
Ignition Current—2.75 amperes idling, 4.5 stopped.

CONDENSER: Auto-Lite Part No. IG-2671K.
Capacity—.20-.25 microfarad.

DISTRIBUTOR: Auto-Lite Model IGP-4502B. Automatic advance type with Vacuum Spark Control and Fuel Compensator Adjustment.
Breaker Gap—.017". Limits .013-.018".
Cam Angle—Closed 27°, Open 18°.
Breaker Arm Spring Tension—17-20 ounces.
Rotation—Counter-clockwise viewed from above.

Automatic Advance (Auto-Lite)

Degrees Start	Distr. R.P.M.	Degrees	Eng. R.P.M.
	300	0	600
1	400	2	800
3	600	6	1200
6	1200	12	2400
8	1600	16	3200

Fuel Compensator: 40° range of adjustment on quadrant at vacuum link connection. See Ignition Timing.

Vacuum Spark Control: Auto-Lite. Mounted on hold-down plate and linked to adjusting quadrant on distributor. Provides additional advance at speeds above idling except when engine accelerated or operated with wide open throttle when spark retarded by return spring.

Vacuum Advance (Auto-Lite)

Distr. Degrees	Eng. Degrees	Vacuum (" of HG)
Start	0°	6"
2°	4°	9⅜"
4°	8°	10½"
6°	12°	12⅞"
7°	14°	14"

Distributor Removal: On left side of engine. Disconnect vacuum line, take out hold-down plate screw, lift off.

CONTINUED ON NEXT PAGE

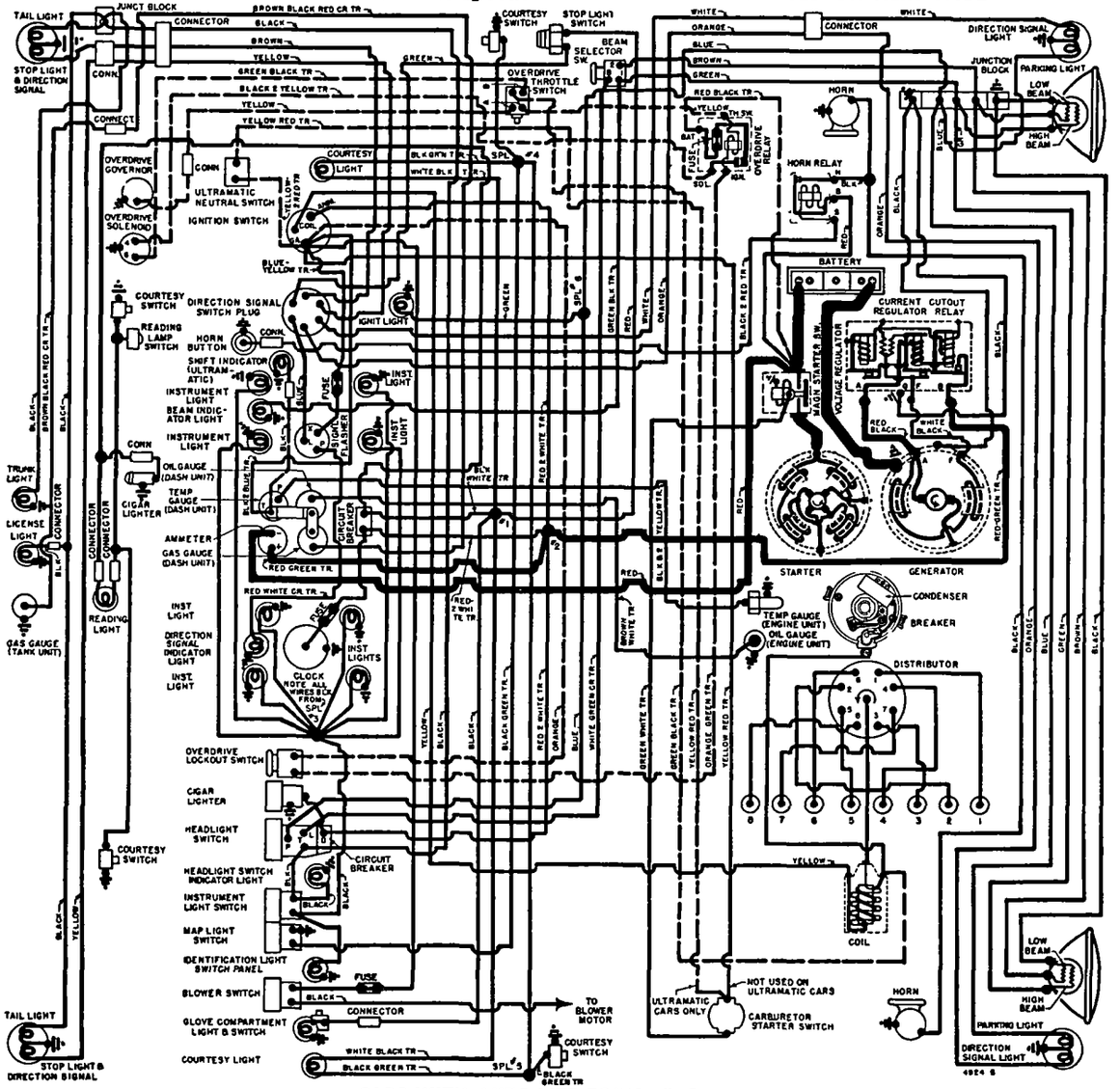

CARS WITH AUTO-LITE EQUIPMENT

C NTINUED FR M PRECEDIN PA E

IGNITION

DELC -REMY

IGNITION SWITCH: Mitchellock Type 24.

COIL: Delco-Remy No. 1115376.
Location—Left side of engine above distributor.
Ignition Current—2.75 amperes idling, 4.5 stopped.

CONDENSER: Delco-Remy Part No. 1869704.
Capacity—.20-.25 microfarad.

DISTRIBUTOR: Delco-Remy Model 1110811. Automatic advance type with Vacuum Spark Control and Fuel Compensator.
Breaker Gap—.017". Limits .013-.018".
Cam Angle—21-30° with .017" gap.
Breaker Arm Spring Tension—17-20 ounces.
Rotation—Counter-clockwise viewed from above.

Automatic Advance (Delco-Remy)

Degrees Distr.	R.P.M.	Degrees Eng.	R.P.M.
Start	300	2	600
4	600	8	1200
9	1600	18	3200

Fuel Compensator: 10° advance or retard adjustment at distributor. See Ignition Timing.

Vacuum Spark Control: Delco-Remy 1116041. Integral type mounted on distributor and linked directly to breaker plate. Provides additional advance at speeds above idling except when engine accelerated or operated with wide open throttle when spark retarded by return spring in unit. Plunger Travel—5/32" max.

Vacuum Advance (Delco-Remy)

Distr. Degrees	Eng. Degrees	Vacuum (" of HG)
Start	0°	5-7"
7°	14°	13.0-15.0"

Distributor Removal: Same as for Auto-Lite (above)

IGNITION TIMING

Std. Setting ..... **6° BTDC.**
NOTE—Modify this setting for special fuel and altitude conditions. See Fuel Compensator Setting.
Vibration Dampener Mark—"#1UP.DC" with fifteen 1° graduations ahead of mark.
Timing—With #1 piston on compression, turn engine over until piston reaches firing position with correct mark on dampener in line with pointer on chain case cover, (see table above). Loosen vacuum unit link screw in distributor quadrant. (Auto-Lite distributors), or hold-down screw in advance arm (Delco-Remy distributors), rotate distributor until contacts begin to open, tighten screw.
Timing (with Neon Timing Light)—Mark 6th line ahead of "#1UP.DC" mark on vibration dampener with white paint, clip timing light to #1 spark plug. Idle engine below 600 RPM., adjust distributor (as directed above) until mark lines up with pointer.
Fuel Compensator Setting—Should be set for slight ping when accelerating engine with wide open throttle. To adjust, loosen vacuum unit link screw in distributor quadrant (Auto-Lite Distributors), advance arm hold-down screw (Delco-Remy Distributors), rotate distributor one graduation at a time counter-clockwise (if ping too severe), clockwise (if no ping), until correct performance secured.

CARBURETOR

Eight (First Cars).....**Carter WDO, No. 644SA.**
Eight (Later Cars).....**Carter WGD, No. 728S & SA**
Super Eight.....**Carter WDO, No. 643SA.**
1¼" dual barrel downdraft types with Carter Climatic Control.
Casting No. on Flange—(WDO) 561, (WGD) 615.
See Carburetor Section for complete data.

Settings (Idle Setting, Float Level, and Accelerating Pump): ***See Tune-Up data.***
Metering Rods & Jets—***See Carter Jet Table in Carburetor Section.***

Fast Idle (WDO): Carter Dual (WDO) Carburetor.
See Carburetion Equipment Section for complete data.
Setting—.026" (643SA), .020" (644SA) throttle opening with choke valve closed. Adjust by turning fast idle screw on high step of fast idle cam.

Fast Idle (WGD): Carter Dual (WGD) Carburetor.
See Carburetion Equipment Section for complete data.
Setting—.026" throttle opening with choke valve closed (throttle must be opened first). Adjust by bending choke connector rod at lower angle.

Automatic Choke: Carter Climatic Control (Dual Carburetors).
See Carburetion Equipment Section for complete data.
Setting—(WDO) Centered, (WGD) One Point Lean.

CARB. EQUIPMENT

Air Cleaner (std.—oil-wetted): AC No. 1544276 (Type #6 element).

Optl. (oil bath)—AC. 1544277 (Type #7-S element).

Servicing (oil-wetted type)—Wash and re-oil filter element every 1000 to 2000 miles whenever crankcase oil is changed.

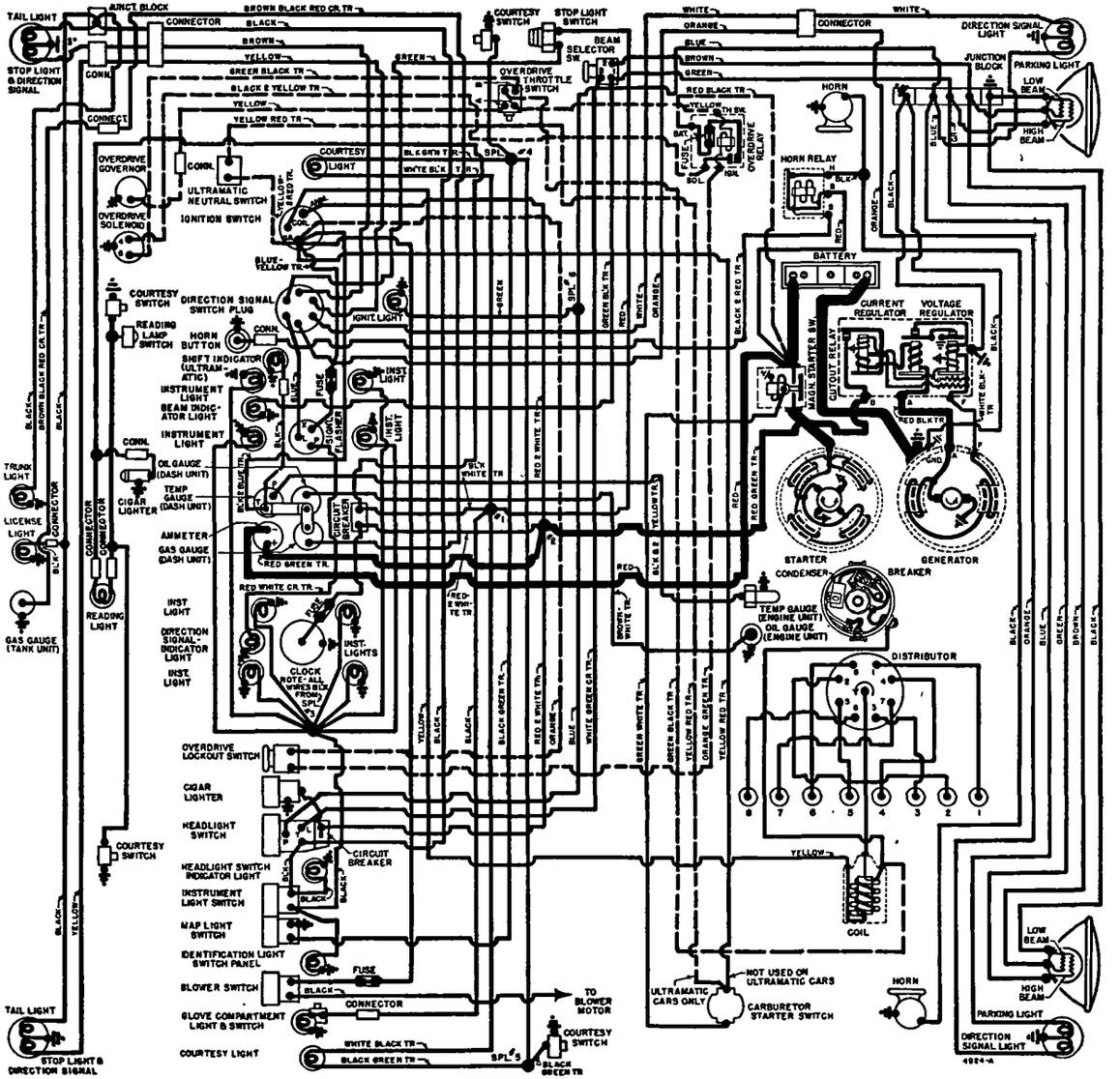

CARS WITH DELCO-REMY EQUIPMENT

Servicing (oil bath type)—Clean filter element, clean and refill oil reservoir with SAE No. 50 engine oil (Summer), No. 30 (Winter) to level of indicator line on case (approx. 1 pint) every 5000 miles or oftener if required.

Fuel Pump (Fuel-&-Vacuum): AC Type AJ. No. 1523867.
Replacement Pump—AC No. 508.
Pressure—4-4¾ lbs.
See Carburetion Equipment Section for complete data.

Gasoline Gauge: King-Seeley Electric.
"2200" Series
Dash Unit—K-S No. 41635.
Tank Unit—K-S No. 41676 (Eight), 41678 (Super 8).
See Carburetion Equipment Section for complete data.

BATTERY

Auto-Lite Type PN-15ZR or Willard SW-1D-100.
6 volt, 15 plate, 100 amp. hr. capacity (20 hr. rate).
Starting Capacity—120 amperes (Auto-Lite), 122 amperes (Willard) for 20 minutes.
Zero Capacity—300 amperes for 3.3 minutes. Five second voltage—4.2 volts.
Grounded Terminal—Positive (+) to frame.
Dimensions—Length 19¼". Width 4". Hgt. 8 29/32".
Location—Left side in engine compartment.

STARTER

AUTO-LITE

Auto-Lite Model MCL-6003. Armature No. MCH-2021
Drive—Outboard Barrel Type Bendix No. A-1915.
Rotation—Counter-clockwise at commutator end.
Cranking Engine—175-225 amperes.
Brush Spring Tension—42-53 ozs. (new brushes).

Performance Data (Auto-Lite)

Torque	R.P.M.	Volts	Amperes
0 ft. lbs	5300	5.5	65
8.0 "	Lock	2.0	410

Removal: On left front face of flywheel housing. To remove, take out flange mounting screws.

Starting Switch: Auto-Lite Model SS-4017 Magnetic Switch on starter controlled by Carter Car Starter No. 192-11U on carburetor (accelerator pedal control).
See Electrical Equipment Section for complete data.

►**Ultramatic Drive Starter Safety Switch**—Packard No. 421319. On left side of transmission case. Connected in starter control circuit so that starter operative only with lever in "N" Neutral or "P" Parking.

STARTER

DELCO-REMY

Delco-Remy Model 1107943. Armature No. 1910938.
Drive—Outboard Barrel Type Bendix No. A-1792.
Rotation—Counter-clockwise at commutator end.
Cranking Engine—175-225 amperes.
Brush Spring Tension—24-28 ozs. each.

Performance Data (Delco-Remy)

Torque	R.P.M.	Volts	Amperes
0 ft. lbs	5500	5.7	65
16 "	Lock	3.0	600

Removal: Same as Auto-Lite data (above).

Starting Switch: Delco-Remy Model 1452 Magnetic Switch on starter controlled by Carter Car Starter No. 192-11U on carburetor (accelerator pedal control).
See Electrical Equipment Section for complete data.

►**Ultramatic Drive Starter Safety Switch**—Packard No. 421319. On left side of transmission case. Connected in starter control circuit so that starter operative only with lever in "N" Neutral or "P" Parking.

GENERATOR

AUTO-LITE

Early.....**Auto-Lite GDZ-4801T.** Arm. GDZ-2006F.
Later.....**Auto-Lite GGW-6001E.** Arm. GGW-2006F.
Convt......**Auto-Lite GGU-6001C.** Arm. GGU-2006F.
Two brush types with current and voltage regulation.
Maximum Charging Rate—See table below.
Charging Rate Adjustment—None. See Regulator.

Performance Data (Auto-Lite GDZ-4801T)

Amperes	Volts	Cold—R.P.M.—Hot
0	6.4	870-970 — 950-1050
35	8.0	1800-2000 — 2150-2350

Performance Data (Auto-Lite GGU-6001C)

45	8.0	1550 Max.

Performance Data (Auto-Lite GGW-6001E)

0	6.4	870-970 — 950-1050
40	8.0	1800-2000 — 2150-2350

Rotation—Counter-clockwise at commutator end.
Brush Spring Tension—35-53 ozs. (new brushes).
Field Current—1.6-1.8 amperes at 6.0 volts.
Motoring Current—(GDZ) 4.2-4.6 amps., (GGU) 5.5-6.5 amps., (GGW) 4.6-5.2 amperes, all at 6.0 volts.

Removal: Pivot mounted at left front of engine To remove, take out strap screw and mounting bolts.

Belt Adjustment: ½" belt deflection between fan and generator. Loosen adjusting strap screw, pry the generator out for ½" setting, tighten screw.

GENERATOR

DELCO-REMY

"2200-9".....**Delco-Remy 1102705. Arm. No. 1879002**
"2300".....**Delco-Remy 1102715. Arm. No. 1912599**
Two brush types with current and voltage regulation.
Maximum Charging Rate—See tables below.
Charging Rate Adjustment—None. See Regulator.

Performance Data (Delco-Remy)

	Amperes	Volts	R.P.M.
1102705 (Cold)	30	8.0	1750
1102715 (Cold)	40	8.0	1900

Rotation—Counter-clockwise at commutator end.
Brush Spring Tension—25 ounces each.
Field Current—(1102705) 1.75-1.9 amps. at 6.0 volts. (1102715) 1.90-2.05 amperes at 6.0 volts.

Removal & Belt Adjustment: See Auto-Lite above.

REGULATOR

AUTO-LITE

Auto-Lite VAV-4401B.....for GGU-6001C Generator
Auto-Lite VRP-4402A.....for GDZ-4801T Generator
Auto-Lite VRP-4402C.....for GGW-6001E Generator
All are current-voltage types.
See Electrical Equipment Section for complete data.
NOTE—Regulator cover sealed. Warranty void if seals broken.

Cutout Relay

Cuts In—6.4-7.0 volts, (set to 6.4-6.6 volts).
Cuts Out—4.1-4.8 volts (approx. 4-6 amps. disch.).
Contact Gap—.015" minimum.
Air Gap—.031-.034" with contacts open (check at hinge end of core).

Voltage Regulator

Setting—7.2-7.5 volts at 70°F. See Electrical Equipment Section for settings at other temperatures.
Checking (without breaking seals) & Adjustment—*See Electrical Equipment Section for complete data.*
Contact Gap—.012" min. (armature against stop pin).
Air Gap—.048-.052" with contacts just opening.

Current Regulator

Setting—As follows:
VAV-4401B 44-46 amperes (marked '45' on cover).
VRP-4402A 34-36 amperes (marked '35' on cover).
VRP-4402C 39-41 amperes (marked '40' on cover).
Checking (without breaking seals) & Adjustment—*See Electrical Equipment Section for complete data.*
Contact Gap—.012" min. (armature against stop pin).
Air Gap—.048-.052" with contacts just opening.

REGULATOR

DELCO-REMY

Delco-Remy 1118331.....for 1102705 Generator
Delco-Remy 1118360.....for 1102715 Generator

►*NEW "1118300 SERIES"* regulators have screw adjustment for settings and single regulator springs.
See Electrical Equipment Section for complete data.
CAUTION—Check generator for grounded field coils and leads before changing regulator settings to correct High Charging Rate or High Voltage.

Cutout Relay

Cuts In—5.9-6.8 volts hot (set to 6.4 volts hot).
Contact Gap—.020" (same for both sets).
Air Gap—.020" (with contacts just closed).

Voltage Regulator

Setting—7.0-7.7 volts hot (set to 7.4 volts hot). Regulator is over-compensated for temperature. Should be checked with cover in place and hot.
Air Gap—.075" with armature pressed down to point where contacts are just touching.
Checking & Adjustment—*See Electrical Equipment Section.*

Current Regulator

Setting—As follows:
1118331.....32-40 amperes hot (set to 36 hot)
1118360.....40-46 amperes hot (set to 42 hot)
Air Gap—.075" with armature pressed down to point where contacts are just touching.
Checking & Adjustment—*See Electrical Equipment Section.*

LIGHTING

Headlamps: Hall "Sealed Beam" type.
See Electrical Equipment Section for complete data.
Adjustment—Aim upper beams straight ahead (hot spot center 3" below lamp center height at 25 ft.).
Beam Indicator—Light at top of speedomter dial. Lighted when Upper Beams "on".

Direction Signal: Std. *See Electrical Equipment Section.*
Direction Signal Indicator—Light at top of clock. Flashes when Signal in use.

MISC. ELECTRICAL

CIRCUIT BREAKERS: Vibrating, thermostatic types.
Lighting—30 ampere. On lighting switch.
Accessory (Stop & Body Lamps)—30 ampere. Behind instrument panel below gauges. Protects Glove Box Lamp, Courtesy Lamps, Map Lamp, Stop Lamps, Dome Lamp, and Rear Cigar Lighter.
Hydro-Lectric Power (Convertible)—On engine side of dash on pump upper bracket.

C NTINUED N NEXT PAGE

CONTINUED FROM PRECEDING PAGE

FUSES: Clock—SFE 3 ampere in lead below Clock.
Direction Signal—SFE 9 ampere. In Flasher feed wire above Ash Tray.
Overdrive—SFE 30 ampere. On Overdrive Relay (at BAT terminal) on engine side of dash.
Electromatic Clutch—9 ampere. In lead from Ignition Switch to Electromatic Clutch Switch.
Heater—SFE 30 ampere. In cable near Ign. Switch.

HORNS: Sparton. Dual horns operated by relay.
Horn Current—22-25 amperes.

Horn Relay: Delco-Remy No. 1116775.
Contacts Close—2.75-4.0 volts (set to 3.5 volts).
Contact Gap—.027". **Air Gap** .014" (contacts closed).

ENGINE

ENGINE SPECIFICATIONS: 8 cylinder, "L" head type.

	Eight	Super 8
Bore	3½"①	3½"①
Stroke	3¾"	4¼"
Displacement	288 cu. ins.	327 cu. ins.
Rated HP.	39.2	39.2
Developed HP.	135 at 3600	150 at 3600

Compression Ratio—7.0-1 std. cast iron head.
Compression & Vacuum Reading—*See Tune-Up data.*
①—*For Original Bore Sizes, see Packard Special Data.*
►*.020" OVERSIZE BORE ENGINES: Marked by star following engine number.*

OIL PAN REMOVAL: *See Packard Special Data.*

TIGHTENING TORQUES: *See Packard Special Data.*

CYLINDER HEAD: Tightening Torque & Cylinder Head Diagram—*See Packard Special Data.*

PISTONS: Aluminum alloy, autothermic strut type. *Original Piston Sizes & Markings, See Packard Special Data.*
Length—3⅞".
Weight—19½ ozs. (stripped), 25½ (with rings & pin)
►**Cyl. Bore Taper Note**—Car manufacturer recommends cylinders be re-bored and new pistons installed if cylinder taper exceeds .007-.010". If necessary, new rings only can be installed (without reboring) for taper up to .014".
Removal—Pistons and rods removed from above.
Clearance—.0005-.001". See Fitting New Pistons.
►**Piston Skirt Expander Note**—Car manufacturer recommends skirt expanders be installed if cylinder diameter over .006" greater than piston skirt diameter (measured alongside upper end of piston skirt slot).

Replacement Pistons: *See Packard Special Data.*
NOTE—Check ring grooves for wear by installing new piston ring in groove—if .006" feeler can be inserted 1/16", wear excessive and piston should be replaced. Check top groove when testing.

Fitting New Pistons: Insert .0015" feeler ½" wide between piston and cylinder wall on side opposite slot. Pull to withdraw feeler should be 12-18 lbs.
NOTE—Piston should hold in any portion of bore of own weight, but should move when one or two finger pressure applied to piston with cyl. bore vertical.

Install Pistons: Slot toward camshaft.

PISTON RINGS: Two compression rings (No. 200 top groove, No. 200 second groove), one oil control ring (No. 85) per piston, all above pin. Oil ring groove has twelve 5/32" oil drain holes.

Ring	Width	End Gap	Side Clearance
Comp. (#1, 2)	.0930-.0935"	.0054-.0233"	.0025-.003"
Oil (#3)	.186-.1865"	.0054-.0213"	.0025-.003"

Installing Rings—End gaps must be between pin holes with #2 ring on same side as skirt slot, #1 and #3 ring on side opposite slot.

Replacement Rings: Std., .020", .030", .040" oversize.

PISTON PIN Diameter—7/8". **Length**—3 1/64".
Floating type retained by lock ring at each end. Split type bushing used in upper end of rod.
Pin Fit in Piston—Palm push fit with piston at 160°F. (heat piston in water only).
Pin Fit in Rod Bushing—Finger push fit at 70°F.
Piston Pin (Connecting Rod) Bushing Installation—*See "Piston Pins" in Packard Special Data.*

Replacement Pins: Std. and .003", .006" oversize.

CONNECTING ROD: Length 7 15/16" (8), 7 11/16" (Super 8).
Weight—35.8 ozs. (Eight), 35.4 ozs. (Super 8).
Crankpin Journal Diameter—2.250".
Lower Bearing—Shimless, precision, steel backed, Moraine Durex or Federal Mogul H-24.
Clearance—.0005-.0025". **Endplay**—.003-.011".
NOTE—Plastigage can be used for checking bearing clearance. See "Crankshaft & Main Bearings" in Packard Special Data.

Bearing Adjustment: None (no shims). Replace bearings. Self-locking nuts used on cap bolts (tighten to 60-65 ft. lbs.).

Replacement Bearings: Std., .001", .002", .020" US.

Installing Rods: Oil squirt hole toward camshaft.

CRANKSHAFT: 5 bearing type with integral counterweights.
Vibration Dampener—Houde with Silicone fluid (8), Rubber Friction Disc (Super 8).
Dampener Removal Note—Use a Puller Tool No. J-2582 for Friction Disc Dampeners, or J-2636 for Fluid type Dampeners.
Journal Diameter—2.7465".
Bearings—Interchangeable, shimless, precision, steel-backed Moraine Durex or Federal Mogul H-24.
Clearance—.001-.003".
NOTE—Plastigage can be used for checking bearing clearance. See "Crankshaft & Main Bearings" in Packard Special Data.

Bearing Adjustment: None (no shims). Replace bearings (upper halves can be rotated in and out).

Replacement Bearings: Std., .001", .002", .020" US.

Crankshaft Front Oil Seal: *See "Crankshaft & Main Bearings" in Packard Special Data.*

End Thrust: At #3 bearing. **Endplay**—.0035-.0085".

CAMSHAFT: 5 bearing. Non-adjustable chain drive.
Bearings—Steel-backed, babbitt-lined bushings.
Clearance—.001-.003".

End Thrust: Taken by thrust plate in back of camshaft sprocket. **Endplay**—.004-.006".

Timing Chain: Morse. Width 1¼". Pitch .375". Length 21¾" or 58 links.

Camshaft Setting: Install chain and sprockets together with "0" marks on sprockets adjacent and in line with straightedge across shaft centers.

VALVES:	Head Diameter	Stem Diameter	Length
Intake	1 43/64"	.3417"	5 7/8"
Exhaust	1 7/16"	.3398"	5 7/8"

	Seat Angle	Lift	Stem Clearance
Intake	30°	.342"	.002"
Exhaust	45°	.342"	.004"

Valve Guides: Lubrite coated. Pressed in block from above with upper end 31/32" below top of block. Use Valve Guide Driver and Depth Gauge No. J-2577—properly positions guides when gauge seats on block. Ream guides after installation with 11/32" (.3437") reamer. Upper end of exhaust guide counterbored.
Valve Guide Removal Note—If guides to be removed with tappets in engine, use Valve Guide Remover Tool J-2580 to drive guide down to just clear tappet (with tappet on heel of cam). Score guide with chisel inserted through valve ports, then break off lower end, finally drive remainder of guide out. If tappets out, guide can be driven down and out without breaking.

Valve Springs: Intake and exhaust springs interchangeable. Anti-rotation serrated cup washers installed on top of spring and seats in recess in block.

	Spring Pressure	Spring Length
Valve Closed	60-66 lbs.	1 3/4"
Valve Open	135-145 lbs.	1 13/32"

Valve Lifters: Mushroom type. Remove from below.
Diameter—.6235-.6240". **Clearance**—.0003-.0012".
Replacement Lifters—.001", .002", .005" oversize. Use Tool S.T. 5144 (piloted in valve guide) and ream for .005" oversize lifters.

VALVE TIMING

Tappet Clearance: .007" Intake, .010" Exhaust, Hot.

Valve Timing: See Camshaft setting above.
Intake Valves—Open 15° BTDC .Close 45° ALDC.
Exhaust Valves—Open 50° BLDC. Close 9° ATDC.
Above figures for .01267" Intake, .015" Exhaust tappet clearance.
Valve Timing Check—With .01267" tappet clearance #1 intake valve should open with #1 piston 10° BTDC. with 10th graduation before top dead center mark "1UP.DC" on vibration dampener aligned with pointer. Reset tappet clearance .007" Hot.
CAUTION—If valve over 8° before or after this point in opening, camshaft setting incorrect.

LUBRICATION

Engine Oiling System: Pressure to main and connecting rod bearings, camshaft bearings, piston pins, valve lifters, and timing chain.
Crankcase Capacity—7 quarts.
Normal Oil Pressure—40 lbs. Normal Driving.
Oil Pressure Regulator—On oil pump cover. Not adjustable. Pressure regulator spring tension should be 14 lbs. ±2 ozs. at 1⅞".

Oil Pump: Gear Type. On right side of crankcase.
Oil Pump Installation—*See Packard Special Data.*

Oil Filter: Optl. Replace cartridge at 8000-10000 miles or when oil shows signs of being dirty.

Oil Pressure Gauge: King-Seeley Electric.
"2200" Series
Dash Unit—K-S No. 41640.
Engine Unit—K-S No. 40767.
See Miscellaneous Section for complete data.

Crankcase Ventilation: Oil-wetted type filter element in oil filler cap air intake). Outlet pipe in valve compartment cover at rear.

COOLING

Cooling System: Pressure type with pressure relief valve in filler cap and fan belt driven pump.
Capacity—18 qts. (Eight), 19 qts. (Super 8), with ½ quart additional for heater and defroster.
Pressure Valve—AC 850005 Filler Cap. Opens 7 lbs.

Water Pump: Centrifugal, belt-driven, packless type. *See Water Pump Section for complete data.*
Belt Adjustment—*See Generator Belt Adjustment.*

Thermostat: In cylinder head outlet.
Setting (std.)—Starts to open 148-150°F.
Setting (Optl. High Reading)—Starts to open 157-165°F. or 175-184°F.

Temperature Gauge: King-Seeley Electric.
"2200" Series
Dash Unit—K-S No. 41645.
Engine Unit—K-S No. 41085.
See Miscellaneous Section for complete data.

CLUTCH

Long (Eight) 10CF-T1, (Super Eight) 11CF-10½T1. Single plate, semi-centrifugal, dry disc type. *See Clutch Section for complete data.*
Facings—Woven (U.S. Asbestos). Thickness .125". Inside Diameter (Eight) 6¾", (Super Eight) 7". Outside Diameter (Eight) 10", (Super Eight) 10½".

Pedal Adjustment: 1¼-1⅜" free travel. Adjusting nut on rod at throwout lever.

►**Clutch Pedal Over-Center Spring:** New adjustable type. *See "Clutch Notes" in Packard Special Data for adjustment.*

Removal: Remove transmission (see Transmission Removal following) and flywheel housing lower cover. Disconnect throwout linkage and remove throwout bearing. Remove clutch cover screws (release tension evenly), lower assembly out of car.

ELECTROMATIC CLUTCH

Electromatic Clutch: Vacuum type clutch actuation with electrical control. Optional equipment. *See Clutch Section for complete data.*

TRANSMISSION

Own Make. Helical gear, constant-mesh, synchro-mesh (Second & High), constant-mesh (Low). Sliding spur gear (Reverse). Low & Second speed gears are ball bearing mounted. *See Transmission Section for complete data.*

Transmission Control: Steering column type. *See Transmission Section for complete data.*

Removal: Disconnect shifter rods, speedometer cable, hand brake cable at equalizer, engine ground strap, front universal (block driveshaft up against floor pan). Support rear of engine with jack and unbolt cross-member (at frame ends and transmission). Disconnect clutch retractor spring and fore-and-aft restraint rod. Take out transmission-to-housing mounting screws, remove transmission.

OVERDRIVE

Warner Model (Eight) AS3-R11, (Super Eight) AS4-R11. Optl. equipment used with Packard transmission. New simplified solenoid operated overdrive with Governor Control and throttle operated "kick-down".

►**Series 2200 Note**—Started part production with Engine Serial No. G-272006 (Eight), G-424978 (Super 8). Started full production with Engine Serial No. G-285157 (Eight), G-427710 (Super Eight). *See Transmission Section for complete data.*

►**Early R11 Overdrive Failure to Engage Correction**—*See "Warner R11 Overdrive" in Transmission Section.*

Overdrive Solenoid—Packard No. 403942.

Governor—Packard No. 418447.

Control Relay—Packard No. 403940.

Kick-down Switch—Packard No. 403945.

Lock-out Switch—Packard No. 354820.

Removal: Disconnect control cable and all leads to solenoid and governor. Free mounting at rear of overdrive case. Then remove overdrive and transmission (see Transmission Removal above).

ULTRAMATIC DRIVE

OPTIONAL EQUIPMENT

Own Make. Torque Converter (with hydraulically operated Direct Speed Clutch) and hydraulically operated planetary unit with manual control. *See Transmission Section for complete data.*

Linkage Adjustment on Ultramatic Drive Cars: *See Packard "Ultramatic Drive" in Transmission Section.*

Lubrication—Check fluid level every 1000 miles, drain and refill every 10,000 miles.
Recommended Fluid. Packard Ultramatic Drive or any Type "A" Automatic Transmission Fluid which has an AQ-ATF number embossed on container.
Capacity. Approximately 12 quarts.
Draining & Refilling. *See Packard "Ultramatic Drive" in Transmission Section.*
Checking Fluid Level. *CAUTION—Fluid must only be checked at normal operating temperatures and after engine has been idling at 800 RPM. for at least one minute with selector lever in "N" position.* Stop the engine, check level by removing dipstick from filler hole on left side of transmission (accessible from under car—release cap by turning ½ turn counter-clockwise). Add fluid as required to bring level up to FULL mark on dipstick.

Removal: *See "Packard Ultramatic Drive" in Transmission Section.*

UNIVERSALS

Mechanics 3CR or Spicer. Needle bearing types.
2301 Model (without Overdrive)—Use Spicer Number 1288-5101X u-joints front and rear.
NOTE—Cars without Overdrive use one-piece shaft. *See Universals Section for complete data.*

►*CAUTION*—Rear universal flange nut controls rear axle pinion bearing pre-load which **must be adjusted whenever nut is loosened.** *See "Packard Rear Axle" in Rear Axle Section for complete data.*

REAR AXLE

Own Make. Semi-floating, hypoid gear type with Hotchkiss Drive.
Model 2222-9 & 2322 (141" WB. 7-Pass. Sedan) Note—Axle is Custom 8 type with Ring Gear Idler Roller. *See Rear Axle Section for complete data.*
Ratio—Std.: 3.9-1 (39-10). OD.: 4.1-1 (41-10).
2222-9 & 2322 NOTE—Std. Ratio 4.09-1 (45-11).
Backlash—.003-.005". Screw adjustment.

Removal: Remove axle shafts (see Removal below). Disconnect rear universal (wire trunnions), wire or prop propeller shaft up against floor pan with 2 x 4 inserted inside frame X-member. Drain differential, replace drain plug. Clean off housing, take off carrier lock nuts, lift carrier out.

Axle Shaft Removal: Remove wheel, brake drum (use screw type puller J-4153—do not use knock-out type puller or thrust block may be damaged). Disconnect brake line at wheel cylinder. Remove nuts at oil seal guard and take off seal guard, gasket, retainer, oil seal, brake support plate, and bearing shims. Remove axle shaft and bearing using Puller J-2552 (do not drag shaft on inner oil seal). Use Tool J-943-B to remove inner oil seal.

Wheel Bearing Adjustment: Endplay controlled by shims between flanged end of housing and brake backing plate. Add or remove shims (furnished .005", .007", .020" thick) at one wheel for .050" or under, at both wheels if over .050" to secure .004-.007" endplay.
Endplay—.004-.007".

SHOCK ABSORBERS

Delco Model 1946-J, K (front), Delco or Monroe (rear). Double acting (front), direct acting (rear). *See Shock Absorber Section for complete data.*

Fifth Shock Absorber (Stabilizer) Super 8: Monroe direct acting, hydraulic (built-in rear stabilizer). *See Shock Absorber Section for complete data.*

FRONT SUSPENSION

Front Suspension: Packard Clipper Safe-T-Flex, independent, linked parallelogram type with coil springs and double acting shock absorbers. *See Front Suspension Section for complete data.*

Kingpin Inclination—5°50′ crosswise.

Caster—Neg. 1° ± ½°. Eccentric adjustment.
Model 2222-9 & 2322: Neg. 2° ± ½°.

Camber—0° ± ¼°. Eccentric adjustment.

Toe In—0" (plus 1/16", minus 0"). Adjust by turning adjuster at outer end of each tie rod equally.

STEERING GEAR

Packard—Gemmer Model 335. "3-tooth" Worm-and-Roller with "push-pull" adjustment. See Gemmer *See Steering Gear Section for complete data.*

BRAKES

Service: Bendix Hydraulic, Duo-Servo, Single Anchor type without eccentric adjustment. Hand lever applies rear wheel service brakes. *See Brake Section for complete data.*

Wheel Cylinder—Diam. Front 1 1/16" (1" 7-Pass.), Rear wheels 15/16".

Drums—12" centrifuse type.

Lining—Marshall 4112 (primary shoe), Marshall 9051 (secondary). Width 1 3/4". Thickness 3/16". Length per shoe 11½" (primary), 13" (secondary).
Model 2222-9 & 2322 7-Pass. Note—Lining width 2¼" front wheel shoes, 2" rear wheel shoes.

Clearance—.015" at both ends of secondary shoe with primary shoe forced out against drum.

Hand Brake: See Service Brakes above.

MISC. MECHANICAL

Power Operated Convertible Tops, Windows & Front Seat: Hydro-Lectric type (hydraulic actuation with motor-driven pump supplying oil under pressure for power cylinders). *See Miscellaneous Section for complete data.*

Windshield Wiper: Vacuum type, cable operated. *See Miscellaneous Section for complete data.*

MODEL IDENTIFICATION

SERIAL NUMBER: On left side of cowl (use Eng. No.).

ENGINE NUMBER: Stamped on upper left side of cylinder block between #3 and #4 cylinders.

►**1949 Numbers "2200-9" Series**—Continuation of 1948 numbers—1948 starting number—G-600001 Up.

►**1949 Numbers "2300" Series**—H-600001 Up.

►***ENGINE NUMBER CODE: Code marks following engine number indicate changes or differences over unmarked engines as follows:***

★—Engine Bore. .020" Oversize.

TUNE-UP

COMPRESSION PRESSURE: 135 lbs. at 300 RPM.

VACUUM READING: Steady 18-20" idling at 6 MPH.

FIRING ORDER: 1-6-2-5-8-3-7-4. See diagram.

Plug Types—Auto-Lite P-4, AC No. 104, or Champion Y4A. 10 mm. Metric.

CAUTION—Tighten plugs with plug wrench snugly with fingers. Avoid overtightening.

DISTRIBUTOR: Breaker Gap—Set at .017". Limits .013-.018".

Cam Angle—27° closed, 18° open (with .017" gap).

Breaker Arm Spring Tension—19-23 ounces.

Automatic & Vacuum Advance—*See Ignition.*

Condenser Capacity—.20-.25 microfarad.

IGNITION TIMING: 6° BTDC.

Timing Procedure—*See Ignition Timing.*

Vibration Dampener Mark—"#1UP.DC" with fifteen 1° graduations ahead of this point. Set ignition contacts to open at 6th graduation before "DC" mark.

Fuel Compensator Setting—Slight ping accelerating with wide open throttle.

CARBURETION:

Idle Setting—1½-2 turns open. Two screws—turn out for richer mixture.

Idle Speed (standard)—6 MPH.

Idle Speed (Ultramatic Drive)—400 RPM.

Float Level—5/32" from top of float to cover with valve seated (remove gasket and invert to check).

Accelerating Pump—Not adjustable.

Choke Setting: Centered (at index).

Fuel Pump Pressure: 4-4¾ lbs.

MANIFOLD HEAT CONTROL: Automatic. No adjustment. Valve must operate freely.

VALVE TAPPET CLEARANCE: None in service (hydraulic type lifters).

Valve Timing Check—*See Valve Timing.*

STARTING: *See Battery, Starter, Generator, Regulator.*

IGNITION

IGNITION SWITCH: Mitchellock Type 24.

COIL: Auto-Lite Model CE-4033.

Location—Left side of engine above distributor.

Ignition Current—2.75 amperes idling, 4.5 stopped.

CONDENSER: Auto-Lite Part No. IG-2671J.

Capacity—.20-.25 microfarad.

DISTRIBUTOR: Auto-Lite Model IGT-4203. Automatic advance type with Vacuum Spark Control and Fuel Compensator Adjustment.

Breaker Plate Identification—Maximum vacuum advance limited by slot (marked 5½) on plate.

Breaker Gap—Set at .017". Limits .013-.018".

Cam Angle—27° closed, 18° open (with .017" gap).

Breaker Arm Spring Tension—19-23 ounces.

Rotation—Counter-clockwise viewed from above.

Automatic Advance

Degrees	Distr. R.P.M.	Degrees	Eng. R.P.M.
Start	250	0	500
3	475	6	950
6	700	12	1400
9	1300	18	2600
11½	1800	23	3600

Fuel Compensator: 10° advance or retard manual adjustment at distributor. See Ignition Timing.

Vacuum Spark Control: Auto-Lite. On distributor, linked directly to breaker plate. Provides additional

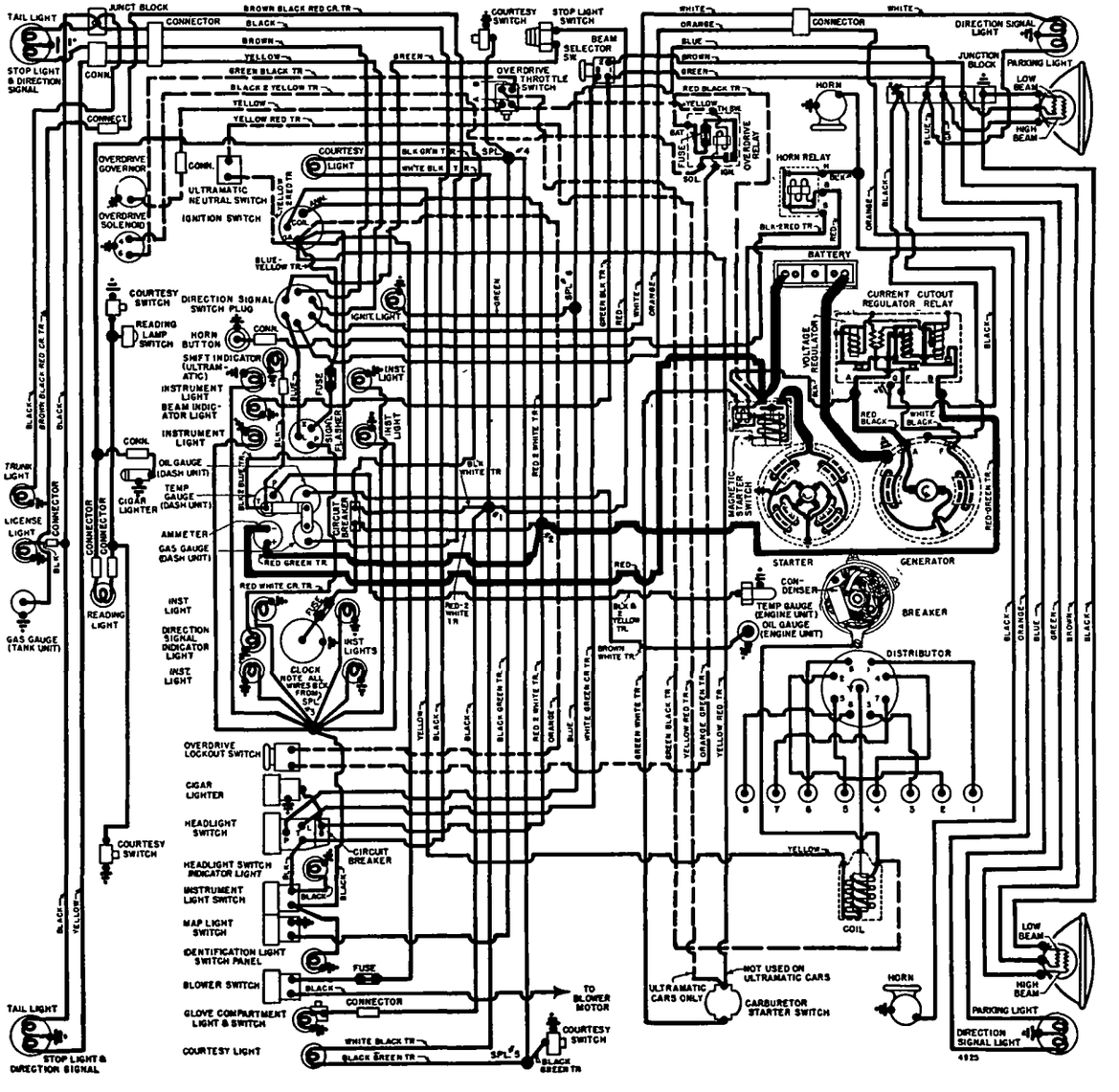

advance at speeds above idling except when engine accelerated or operated with wide open throttle when spark retarded by return spring.

Vacuum Advance

Distr. Degrees	Eng. Degrees	Vacuum (" of HG)
Start	0°	7"
1°	2°	8⅝"
3°	6°	12"
4°	8°	13½"
5½°	11°	16"

Distributor Removal: On left side of engine. Disconnect vacuum line, take out hold-down screw, lift off.

IGNITION TIMING

Std. Setting.....6° BTDC.
NOTE—Modify this setting for special fuel and altitude conditions. See Fuel Compensator Setting.

Vibration Dampener Mark—"#1UP.DC" with fifteen 1° graduations ahead of mark.

Timing—Set Fuel Compensator at "0". With #1 piston on compression, turn engine over until piston reaches firing position with correct mark on dampener in line with pointer on chain case cover (see table above). Loosen advance arm clamp bolt, rotate distributor until contacts begin to open, tighten clamp bolt. Check spark plug connections (see diagram), see that rotor opposite #1 segment in cap. Check Fuel Compensator Setting.

Timing (with Neon Timing Light)—Mark 6th line ahead of "#1UP.DC" mark on vibration dampener with white paint, clip timing light to #1 spark plug. Idle engine below 500 RPM., adjust distributor (as directed above) until mark lines up with pointer.

Fuel Compensator Setting—Should be set for slight ping when accelerating with wide open throttle. To adjust, loosen thumbnut, rotate distributor counterclockwise (if ping too severe), clockwise (if no ping noted), tighten thumbnut and recheck performance.

CARBURETOR

Carter WDO, No. 531SA. 1¼" Dual barrel downdraft type with Carter Climatic Control.
Casting No. on Flange—564.
See Carburetor Section for complete data.

Settings (Idle Setting, Float Level, and Accelerating Pump): *See Tune-Up data.*
Metering Rods & Jets—*See Carter Jet Table in Carburetor Section.*

Fast Idle: Carter Dual (WDO) Carburetor type.
See Carburetion Equipment Section for complete data.
Setting—Adjust fast idle screw for .023-.028" throttle opening (Gauge T109-189) with choke closed.

Automatic Choke: Carter Climatic Control (Dual Carburetors).
See Carburetion Equipment Section for complete data.
Setting—Centered (at index).

CARB. EQUIPMENT

Air Cleaner (std.—oil bath): AC No. 1542318.
Element—AC No. 14.
Servicing (oil bath type)—Clean filter element, clean and refill oil reservoir with SAE No. 50 engine oil (Summer), No. 30 (Winter) to level of indicator line on case (approx. 1 pint) every 5000 miles or oftener if required.

Fuel Pump (Fuel-&-Vacuum): AC Type AH. No. 1539116.
Replacement Pump—AC No. 9116.
Pressure—4-4¾ lbs.
See Carburetion Equipment Section for complete data.

Gasoline Gauge: King-Seeley Electric.

"2200" Series

Dash Unit—K-S No. 41635.
Tank Unit—K-S No. 41678.
See Carburetion Equipment Section for complete data.

BATTERY

Auto-Lite Type PN-17ZR. 6 Volt, 17 Plate, 120 Ampere Hour Capacity (20 hour rate).
Starting Capacity—138 amperes for 20 minutes.
Zero Capacity—300 amperes for 4.1 minutes. Five second voltage—4.3 volts.
Grounded Terminal—Positive (+) to frame.
Dimensions—Length 19¼". Width 4". Hgt. 8 29/32".
Location—On left side in engine compartment.

STARTER

Auto-Lite Model MAX-4052. Armature MAW-2069.
Drive—Overrunning clutch (solenoid pinion shift) through reduction gears.
Rotation—Clockwise at commutator end.
Brush Spring Tension—42-53 ozs. (new brushes).
Cranking Engine—200-250 amperes.

Performance Data

Torque	RPM①	Volts	Amperes
0 ft. lbs	2560	5.5	70
13.0 "	Lock	2.0	410

①—Pinion Shaft RPM. (reduction gear drive).

Removal: On left front face of flywheel housing. To remove, take out flange mounting screws.

Starting Switch: Auto-Lite Model SS-4205 Solenoid Switch on starter controlled by Carter Car Starter No. 192-11U on carburetor (accelerator pedal control).
See Electrical Equipment Section for complete data.

►**Ultramatic Drive Starter Safety Switch**—Packard No. 421319. On left side of transmission case. Connected in starter control circuit so that starter operative only with lever in "N" Neutral or "P" Parking.

GENERATOR

Early.....**Auto-Lite GDZ-4801V.** Arm. GDZ-2006F.
Later.....**Auto-Lite GGW-6001F.** Arm. GGW-2006F.
Convt......**Auto-Lite GGU-6001D.** Arm. GGU-2006F.
Two brush types with current and voltage regulation.

Maximum Charging Rate—See table below.
Charging Rate Adjustment—None. See Regulator.

Performance Data (Auto-Lite GDZ-4801V)

Amperes	Volts	Cold—R.P.M.—Hot
0	6.4	870-970 — 950-1050
35	8.0	1800-2000 — 2150-2350

Performance Data (Auto-Lite GGU-6001D)

45	8.0	1550 Max. — ———

Performance Data (Auto-Lite GGW-6001F)

0	6.4	870-970 — 950-1050
40	8.0	1800-2000 — 2150-2350

Rotation—Counter-clockwise at commutator end.
Brush Spring Tension—35-53 ozs. (new brushes).
Field Current—1.6-1.8 amperes at 6.0 volts.
Motoring Current—(GDZ) 4.2-4.6 amps., (GGU) 5.5-6.5 amps., (GGW) 4.6-5.2 amperes, all at 6.0 volts.

Removal: Pivot mounted at left front of engine To remove, take out strap screw and mounting bolts.

Belt Adjustment: ½" belt deflection between fan and generator. Loosen adjusting strap screw, pry the generator out for ½" setting, tighten screw.

REGULATOR

Auto-Lite VAV-4401B.....for GGU-6001D Generator
Auto-Lite VRP-4402A.....for GDZ-4801V Generator
Auto-Lite VRP-4402C.....for GGW-6001F Generator
All are current-voltage types.
See Electrical Equipment Section for complete data.
NOTE—Regulator cover sealed. Warranty void if seals broken.

Cutout Relay

Cuts In—6.4-7.0 volts, (set to 6.4-6.6 volts).
Cuts Out—4.1-4.8 volts (approx. 4-6 amps. disch.).
Contact Gap—.015" minimum.
Air Gap—.031-.034" with contacts open (check at hinge end of core).

Voltage Regulator

Setting—7.2-7.5 volts at 70°F. See Electrical Equipment Section for settings at other temperatures.
Checking (without breaking seals) & Adjustment—*See Electrical Equipment Section for complete data.*
Contact Gap—.012" min. (armature against stop pin).
Air Gap—.048-.052" with contacts just opening.

Current Regulator

Setting—As follows:
VAV-4401B 44-46 amperes (marked '45' on cover).
VRP-4402A 34-36 amperes (marked '35' on cover).
VRP-4402C 39-41 amperes (marked '40' on cover).
Checking (without breaking seals) & Adjustment—*See Electrical Equipment Section for complete data.*
Contact Gap—.012" min. (armature against stop pin).
Air Gap—.048-.052" with contacts just opening.

LIGHTING

Headlamps: Hall "Sealed Beam" type.
See Electrical Equipment Section for complete data.
Adjustment—Aim upper beams straight ahead (hot spot center 3" below lamp center height at 25 ft.).
Beam Indicator—Light at top of speedomter dial. Lighted when Upper Beams "on".

Direction Signal: Std. *See Electrical Equipment Section.*
Direction Signal Indicator—Light at top of clock. Flashes when Signal in use.

MISC. ELECTRICAL

CIRCUIT BREAKERS: Vibrating, thermostatic types.
Lighting—30 ampere. On lighting switch.
Accessory (Stop & Body Lamps)—30 ampere. Behind instrument panel below gauges. Protects Glove Box Lamp, Courtesy Lamps, Map Lamp, Stop Lamps, Dome Lamp, and Rear Cigar Lighter.
Hydro-Lectric Power (Convertible)—On engine side of dash on pump upper bracket.

CONTINUED ON NEXT PAGE

C NTINUED FR M PRECEDING PAGE

FUSES: Clock—SFE 3 ampere in lead below Clock.
Direction Signal—SFE 9 ampere. In Flasher feed wire above Ash Tray.
Overdrive—SFE 30 ampere. On Overdrive Relay (at BAT terminal) on engine side of dash.
Electromatic Clutch—9 ampere. In lead from Ignition Switch to Electromatic Clutch Switch.
Heater—SFE 30 ampere. In cable near Ign. Switch.

HORNS: Sparton. Dual horns operated by relay.
Horn Current—22-25 amperes.

Horn Relay: Delco-Remy No. 1116775.
Contacts Close—2.75-4.0 volts (set to 3.5 volts).
Contact Gap—.027". **Air Gap** .014" (contacts closed).

ENGINE

ENGINE SPECIFICATIONS: 8 cylinder, "L" head type.
Bore—3½"①. **Stroke**—4⅝".
①—*For Original Bore Sizes, See Packard Special Data.*
►*.020" OVERSIZE BORE ENGINES: Marked by star following engine number.*
Displacement—356 cubic inches. **Rated HP.**—39.2.
Developed Horsepower—160 at 3600 RPM.
Compression Ratio—7.0-1 std. cast iron head.
Compression & Vacuum Reading—*See Tune-Up data.*

OIL PAN REMOVAL: *See Packard Special Data.*

TIGHTENING TORQUES: *See Packard Special Data.*

CYLINDER HEAD: Tightening Torque & Cylinder Head Diagram—*See Packard Special Data.*

PISTONS: Aluminum alloy, autothermic strut type. *Original Piston Sizes & Markings, see Packard Special Data.*
Length—3⅞".
Weight—19½ ozs. (stripped), 25½ (with rings & pin).
►**Cyl. Bore Taper Note**—Car manufacturer recommends cylinders be re-bored and new pistons installed if cylinder taper exceeds .007-.010". If necessary, new rings only can be installed (without reboring) for taper up to .014".
Removal—Pistons and rods removed from above.
Clearance—.0005-.001". See Fitting New Pistons.
►**Piston Skirt Expander Note**—Car manufacturer recommends skirt expanders be installed if cylinder diameter over .006" greater than piston skirt diameter (measured alongside upper end of piston skirt slot).

Replacement Pistons: *See Packard Special Data.*
NOTE—Check ring grooves for wear by installing new piston ring in groove—if .006" feeler can be inserted 1/16", wear excessive and piston should be replaced. Check top groove when testing.

Fitting New Pistons: Insert .0015" feeler ½" wide between piston and cylinder wall on side opposite slot. Pull to withdraw feeler should be 12-18 lbs.
NOTE—Piston should hold in any portion of bore of own weight, but should move when one or two finger pressure applied to piston with cyl. bore vertical.

Install Pistons: Slot toward camshaft.

PISTON RINGS: Two compression rings (No. 200 top and second groove), one oil control ring (No. 85) per piston, all above pin. Oil ring groove has twelve 5/32" oil drain holes.

Ring	Width	End Gap	Side Clearance
Comp. (#1, 2)	.0930-.0935"	.0054-.0233"	.0025-.003"
Oil (#3)	.186-.1865"	.0054-.0213"	.0025-.003"

Installing Rings—End gaps must be between pin holes with #2 ring on same side as skirt slot, #1 and #3 ring on side opposite slot.

Replacement Rings: Std., .020", .030", .040" oversize.

PISTON PIN Diameter—7/8". **Length**—3 1/64".
Floating type retained by lock ring at each end. Split type bushing used in upper end of rod.
Pin Fit in Piston—Palm push fit with piston at 160°F. (heat piston in water only).
Pin Fit in Rod Bushing—Finger push fit at 70°F.
Piston Pin (Connecting Rod) Bushing Installation—*See "Piston Pins" in Packard Special Data.*

Replacement Pins: Std. and .003", .006" oversize.

CONNECTING ROD: Length 9¼". **Weight**—38.9 ozs.
Crankpin Journal Diameter—2.250".
Lower Bearing—Shimless, precision, steel backed, Moraine Durex or Federal Mogul H-24.
Clearance—.0005-.003". **Endplay**—.004-.012".
NOTE—Plastigage can be used for checking bearing clearance. See "Crankshaft & Main Bearings" in Packard Special Data.

Bearing Adjustment: None (no shims). Replace bearings. Self-locking nuts used on cap bolts (tighten to 60-65 ft. lbs.).

Replacement Bearings: Std., .001", .002", .020" US.

Installing Rods: Oil squirt hole toward camshaft.

CRANKSHAFT: 9 bearing with bolted-on counterweights. Rubber friction disc dampener on front end.
Journal Diameter—2.7465".
Bearings—Interchangeable, shimless, precision, steel-backed Moraine Durex or Federal Mogul H-24.
Clearance—.001-.003".
NOTE—Plastigage can be used for checking bearing clearance. See "Crankshaft & Main Bearings" in Packard Special Data.

Bearing Adjustment: None (no shims). Replace bearings (upper halves can be rotated in and out).

Replacement Bearings: Std., .001", .002", .020" US.

Crankshaft Front Oil Seal: *See "Crankshaft & Main Bearings" in Packard Special Data.*

End Thrust: At #5 bearing. **Endplay**—.003-.008".

CAMSHAFT: 8 bearing. Non-adjustable chain drive.
Bearings—Steel-backed, babbitt-lined bushings.
Clearance—.001-.003".

End Thrust: Taken by thrust plate in back of camshaft sprocket. **Endplay**—.004-.006".

Timing Chain: Morse. Width 1¼". Pitch .375" (⅜"). Length 23¼" or 62 links.

Camshaft Setting: Install chain and sprockets together with "0" marks on sprockets adjacent and in line with straightedge across shaft centers.

VALVES:	Head Diameter	Stem Diameter	Length
Intake	1 43/64"	.3417"	6 7/32"
Exhaust	1 7/16"	.3398"	6 7/32"

	Seat Angle	Lift	Stem Clearance
Intake	30°	.342"	.002"
Exhaust	45°	.342"	.004"

Valve Guides: Lubrite coated. Pressed in block from above with upper end 31/32" below top of block. Use Valve Guide Driver and Depth Gauge No. J-2577—properly positions guides when gauge seats on block. Ream guides after installation with 11/32" (.3437") reamer. Upper end of exhaust guide counterbored.

Valve Guide Removal Note—If guides to be removed with tappets in engine, use Valve Guide Remover Tool J-2580 to drive guide down to just clear tappet (with tappet on heel of cam). Score guide with chisel inserted through valve ports, then break off lower end, finally drive remainder of guide out. If tappets out, guide can be driven down and out without breaking.

Valve Springs: Intake and exhaust springs interchangeable. Anti-rotation serrated cup washers installed on top of spring and seats in recess in block.

	Spring Pressure	Spring Length
Valve Closed	60-66 lbs.	1 3/4"
Valve Open	135-145 lbs.	1 13/32"

Valve Lifters: Wilcox-Rich "Zero-lash" type hydraulic lifters (mushroom type). Remove from below with camshaft out of engine.
Diameter—.7177-.7182". **Clearance**—.0002" selective. *See Miscellaneous Section for complete data.*
Replacement Lifters—.001", .002", .005" oversize. Use Tool S.T. 5101 (piloted in valve guide) and ream for .005" oversize lifters.
Valve Lifter Clearance Check when Grinding Valves—*See "Valve System" in Packard Special Data.*

VALVE TIMING

Tappet Clearance: None in service (hydraulic type lifters). See Valve Lifters above.

Valve Timing: See Camshaft Setting above.
Intake Valves—Open 4° BTDC. Close 51° ALDC.
Exhaust Valves—Open 49° BLDC. Close 10° ATDC.
Valve Timing Check—Check by turning tappet plunger for No. 8 exhaust valve with fingers. Turn engine over until this valve fully open, turn engine further until valve nearly closed (plunger should not turn), continue turning engine while attempting to turn plunger, until plunger "breaks loose" or turns. This should be 10° after top dead center—check at timing mark on vibration dampener.
CAUTION—If valve over 8° before or after this point in closing, camshaft setting incorrect.

LUBRICATION

Engine Oiling System: Pressure to main and connecting rod bearings, camshaft bearings, piston pins, valve lifters, and timing chain. Oil pump mounted externally on right side of engine.
Crankcase Capacity—7 quarts.
Normal Oil Pressure—50 lbs. Normal Driving.
Oil Pressure Regulator—On oil pump cover. Not adjustable. Pressure regulator spring tension should be 17½-18½ lbs. at 1⅞".

Oil Pump: Gear type. On right side of crankcase.
Oil Pump Installation—*See Packard Special Data.*

Oil Pressure Gauge: King-Seeley Electric.
"2200" Series
Dash Unit—K-S No. 41640.
Engine Unit—K-S No. 40767.
See Miscellaneous Section for complete data.

Crankcase Ventilation: Oil-wetted type filter element in oil filler cap, air intake). Outlet pipe in valve compartment cover at rear.
Servicing—Wash filter element in gasoline and re-oil when changing oil (1000-2000 miles).

COOLING

Cooling System: Pressure type with pressure relief valve in filler cap and fan belt driven pump.
Capacity—19 qts.
Pressure Valve—AC No. 850005 pressure cap. Opens at 7 lbs.

Water Pump: Centrifugal, belt-driven, packless type.
See Water Pump Section for complete data.
Belt Adjustment—*See Generator Belt Adjustment.*

Thermostat: In cylinder head outlet.
Setting (std.)—Starts to open 145-150°F.
Setting (Optl. High Reading)—Starts to open 160-165°F. or 175-180°F.

Temperature Gauge: King-Seeley Electric.
"2200" Series
Dash Unit—K-S No. 41645.
Engine Unit—K-S No. 41085.
See Miscellaneous Section for complete data.

CLUTCH

Long Model 11CF-T1. Single plate, semi-centrifugal, dry disc type.
See Clutch Section for complete data.
Facings—Woven (U.S. Asbestos). Thickness .125". Inside Diameter 7". Outside Diameter 11".

Pedal Adjustment: 1¼-1⅜" free travel. Adjusting nut on rod at throwout lever.

►**Clutch Pedal Over-Center Spring:** New adjustable type. *See "Clutch Notes" in Packard Special Data for adjustment.*

Removal: Remove transmission (see Transmission Removal following) and flywheel housing lower cover. Disconnect throwout linkage and remove throwout bearing. Remove clutch cover screws (release tension evenly), lower assembly out of car.

ELECTROMATIC CLUTCH

Electromatic Clutch: Vacuum type clutch actuation with electrical control. Optional equipment.
See Clutch Section for complete data.

TRANSMISSION

Own Make. Helical gear, constant-mesh, synchro-mesh (Second & High), constant-mesh (Low). Sliding spur gear (Reverse). Low & Second speed gears are ball bearing mounted.
See Transmission Section for complete data.

Transmission Control: Steering column type.
See Transmission Section for complete data.

Removal: Disconnect shifter rods, speedometer cable, hand brake cable at equalizer, engine ground strap, front universal (block driveshaft up against floor pan). Support rear of engine with jack and unbolt cross-member (at frame ends and transmission). Disconnect clutch retractor spring and fore-and-aft restraint rod. Take out transmission-to-housing mounting screws, remove transmission.

OVERDRIVE

Warner Model AS4-R11. Optl. equipment used with Packard transmission. New simplified solenoid operated overdrive with Governor Control and throttle operated "kick-down".

►**Series 2200 Note**—Started part production with Engine Serial No. G-610359, full production G-611500.
See Transmission Section for complete data.

►**Early R11 Overdrive Failure to Engage Correction**—*See "Warner R11 Overdrive" in Transmission Section.*

Overdrive Solenoid—Packard No. 403942.
Governor—Packard No. 418447.
Control Relay—Packard No. 403940.
Kick-down Switch—Packard No. 403945.
Lock-out Switch—Packard No. 354820.

Removal: Disconnect control cable and all leads to solenoid and governor. Free mounting at rear of overdrive case. Then remove overdrive and transmission (see Transmission Removal above).

ULTRAMATIC DRIVE

STD. EQUIPMENT ON SERIES 2306 & 2333

Own Make. Torque Converter (with hydraulically operated Direct Speed Clutch) and hydraulically operated planetary unit with manual control.
See Transmission Section for complete data.

Linkage Adjustment on Ultramatic Drive Cars: *See Packard "Ultramatic Drive" in Transmission Section.*

Lubrication—Check fluid level every 1000 miles, drain and refill every 10,000 miles.

Recommended Fluid. Packard Ultramatic Drive or any Type "A" Automatic Transmission Fluid which has an AQ-ATF number embossed on container.

Capacity. Approximately 12 quarts.

Draining & Refilling. *See Packard "Ultramatic Drive" in Transmission Section.*

Checking Fluid Level. ***CAUTION—Fluid must only be checked at normal operating temperatures and after engine has been idling at 800 RPM. for at least one minute with selector lever in "N" position.*** Stop the engine, check level by removing dipstick from filler hole on left side of transmission (accessible from under car—release cap by turning ½ turn counter-clockwise). Add fluid as required to bring level up to FULL mark on dipstick.

Removal: *See "Packard Ultramatic Drive" in Transmission Section.*

UNIVERSALS

Mechanics 3CR or Spicer. Needle bearing types.

NOTE—Cars without Overdrive use one-piece shaft.
See Universals Section for complete data.

►***CAUTION***—Rear universal flange nut controls rear axle pinion bearing pre-load which **must be adjusted whenever nut is loosened.** *See "Packard Rear Axle" in Rear Axle Section for complete data.*

REAR AXLE

Own Make. Semi-floating, hypoid gear type with Hotchkiss drive and Ring Gear Idler Roller.
See Rear Axle Section for complete data.

Ratios—As follows:
"2200": Std. 3.92-1 (47-12). Ovdr. 4.09-1 (45-11).
"2226" 148" WB.: 4.09-1 (45-11).
"2300" Ultramatic: 3.54-1 (39-11).
"2313" 156" WB. Hearse: 4.54-1 (50-11).
Backlash—.004-.006". Screw adjustment.

Removal: Remove axle shafts (see Removal below). Disconnect rear universal (wire trunnions), wire or prop propeller shaft up against floor pan with 2 x 4 inserted inside frame X-member. Drain differential, replace drain plug. Clean off housing, take off carrier lock nuts, lift carrier out.

Axle Shaft Removal: Remove wheel, brake drum (use screw type puller J-4153—do not use knock-out type puller or thrust block may be damaged). Disconnect brake line at wheel cylinder. Remove nuts at oil seal guard and take off seal guard, gasket, retainer, oil seal, brake support plate, and bearing shims. Remove axle shaft and bearing using Puller J-2552 (do not drag shaft on inner oil seal). Use Tool J-943-B to remove inner oil seal.

Wheel Bearing Adjustment: Endplay controlled by shims between flanged end of housing and brake backing plate. Add or remove shims (furnished .005", .007", .020" thick) at one wheel for .050" or under, at both wheels if over .050" to secure .004-.007" endplay.
Endplay—.004-.007".

SHOCK ABSORBERS

Delco Model 1946-J, K (front), Delco or Monroe (rear). Double acting (front), direct acting (rear).
See Shock Absorber Section for complete data.

Fifth Shock Absorber (Stabilizer) Super 8: Monroe direct acting, hydraulic (built-in rear stabilizer).
See Shock Absorber Section for complete data.

FRONT SUSPENSION

Front Suspension: Packard Clipper Safe-T-Flex, independent, linked parallelogram type with coil springs and double acting shock absorbers.
See Front Suspension Section for complete data.
Kingpin Inclination—5°50' crosswise (2°30' on 156" wheelbase hearse).
Caster—Neg. 2° ± ½°. Eccentric adjustment.
Camber—0° ± ¼°. Eccentric adjustment.
Toe In—0" (plus 1/16", minus 0"). Adjust by turning adjuster at outer end of each tie rod equally.

STEERING GEAR

Packard—Gemmer Model 335. "3-tooth" Worm-and-Roller with "push-pull" adjustment. See Gemmer.
See Steering Gear Section for complete data.

BRAKES

Service: Bendix Hydraulic, Duo-Servo, Single Anchor type without eccentric adjustment. Hand lever applies rear wheel service brakes.
See Brake Section for complete data.
Wheel Cylinder—Front 1⅛". Rear 1" (1⅛" 156" WB.).
Drums: 12" centrifuse type.
Lining—Marshall 4112 (primary shoe). Marshall 9051 (secondary). Width 2¼" (front wheel), 2" (rear). Length per shoe 11½" (primary), 13" (secondary). Thickness 3/16".
156" WB. Hearse Note—Bonded lining used. All shoes 13" long, 2½" wide, 3/16" thick.
Clearance—.015" at both ends of secondary shoe with primary shoe forced out against drum.

Hand Brake: See Service Brakes above.

MISC. MECHANICAL

Power Operated Convertible Tops, Windows & Front Seat: Hydro-Lectric type (hydraulic actuation with motor-driven pump supplying oil under pressure for power cylinders).
See Miscellaneous Section for complete data.

Windshield Wiper: Vacuum type, cable operated.
See Miscellaneous Section for complete data.

MODEL IDENTIFICATION

SERIAL NUMBER: Stamped on plate attached to left side of dash in engine compartment.

1949 Numbers	Detroit	Los Angeles	Evansville
P-17 Deluxe	18,000,101	26,000,101	24,000,101
P-18 Deluxe	15,300,001	26,025,001	22,080,001
P-18 Spec. Del.	12,120,001	25,075,001	20,304,001

ENGINE NUMBER: Stamped on boss on left front side of cylinder block.

TUNE-UP

COMPRESSION PRESSURE: 125-150 lbs. at cranking speed of 150 RPM.
VACUUM READING: Steady 18-21" idling at 6 MPH.
FIRING ORDER: 1-5-3-6-2-4. See diagram.
SPARK PLUG GAPS: .038".
Plug Type—Auto-Lite AR-5. 14 mm.
DISTRIBUTOR: Breaker Gap—.020". Limits .018-.022".
Cam Angle—34½° to 38° Closed.
Breaker Arm Spring Tension—17-20 ozs.
Automatic & Vacuum Advance—*See Ignition.*
Condenser Capacity—.25-.28 microfarad.
IGNITION TIMING: 2° ATDC.
Timing Procedure—*See Ignition Timing.*
Timing Mark—2° after 'DC' dampener mark aligned with pointer on chain cover. Vary as follows:
Octane Selector—Set for slight ping when accelerating with wide open throttle between 10-30 MPH.
CARBURETION:
Idle Setting—½-1½ turns open. Turn screw out for richer mixture.
Idle Speed—450-500 RPM.
Float Level—Top of the float (not soldered seam) 5/64" ±1/64" below top edge of bowl.
Accelerating Pump—Center Hole Normal Setting, Outer Hole (max.) Winter, Inner (min.) Summer.
Choke Setting: Adjusted by inserting a gauge pin through hole in automatic choke lever shaft and slot in base mounting flange (to position shaft) and adjusting carburetor choke valve lever so that choke valve is tightly closed.
Fuel Pump Pressure: 3-5 lbs.
MANIFOLD HEAT CONTROL: Thermostatic coil type. Install coil so approx. one full turn (335°) required to hook free end over stop stud for correct operation.
VALVE TAPPET CLEARANCE: .008" Intake, .010" Exh., Hot.
Valve Timing Check—*See Valve Timing.*
STARTING: *See Battery, Starter, Generator, Regulator.*

IGNITION

IGNITION SWITCH: Mitchellock. Combination ignition-starter switch. Starter operates when key held fully to the right. Key automatically returns to "on" position. Coil lead protected by armoured cable through fire wall.
COIL: Auto-Lite No. CR-4001 (U.S.), IG-4809 (Canada). Mounted above distributor.
CONDENSER: Auto-Lite Part No. IG-3927G.
Capacity—.25-.28 microfarad.
DISTRIBUTOR: Auto-Lite. Automatic advance type with Vacuum Spark Control as follows:

P17 (Std.)	IGS-4207B-1
P18 (Std. Early)	IAP-4103-1
P18 (Std.), P17 (Spec. Equip.)	IAP-4103A-1
P17, P18 (Canada)	IAP-4102-1

Breaker Plate Identification—Maximum vacuum advance limited by slot in plate. Marked for identification by number: #7 (IAP-4102-1), #10 (IAP-4103-1), #8 (IAP-4103A-1 & IGS-4207B-1).

Rotation—Clockwise viewed from above.
Breaker Gap—.020". Limits .018-.022".
Cam Angle—34½° to 38° Closed.
Breaker Arm Spring Tension—17-20 ozs.

Automatic Advance—IAP-4103-1

Degrees	Distr. R.P.M.	Degrees	Eng. R.P.M.
Start	350	0	700
3	400	6	800
5	700	10	1400
7	1000	14	2000
9	1300	18	2600

Automatic Advance—IAP-4102-1

Degrees	Distr. R.P.M.	Degrees	Eng. R.P.M.
Start	350	0	700
3	400	6	800
6	850	12	1700
9	1300	18	2600
12	1750	24	3500

Automatic Advance—IGS-4207B-1 & IAP-4103A-1

Degrees	Distr. R.P.M.	Degrees	Eng. R.P.M.
Start	350	0	700
1	450	2	900
5	800	10	1600
10	1425	20	2850
11	1550	22	3100

Vacuum Spark Control: Auto-Lite Units. Integral type (on distributor, linked directly to breaker plate). Provides additional advance at speeds above idling except when engine accelerated or operated with wide open throttle, spark retarded by return spring.

Vacuum Advance—IAP-4103-1

Distr. Degrees	Eng. Degrees	Vacuum (" of HG)
Start	0°	5"
2°	4°	6¾"
5°	10°	9½"
8°	16°	12¼"
10°	20°	14"

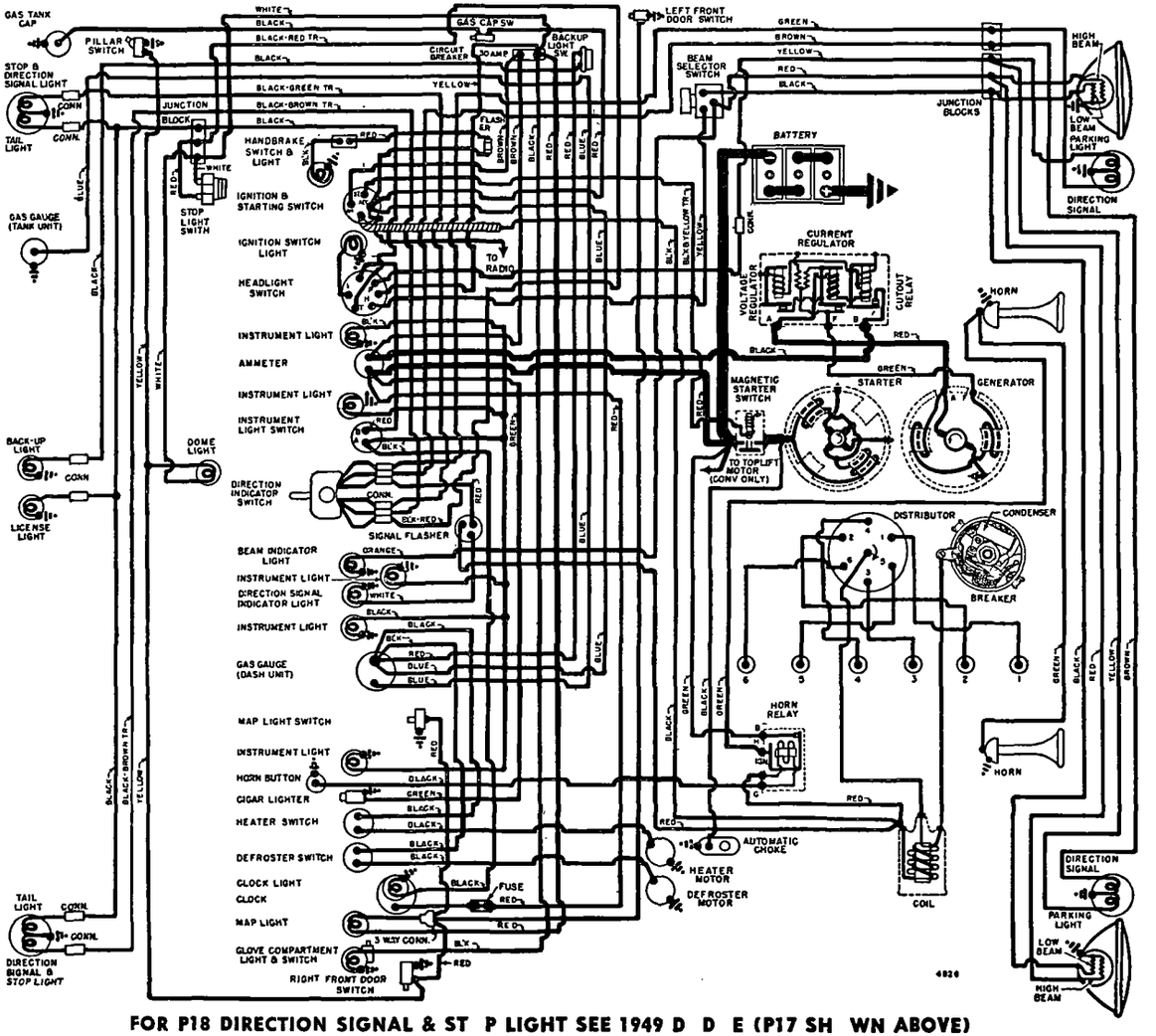

FOR P18 DIRECTION SIGNAL & ST P LIGHT SEE 1949 D D E (P17 SH WN ABOVE)

Vacuum Advance—IAP-4102-1

Distr. Degrees	Eng. Degrees	Vacuum (" of HG)
Start	0°	5"
1°	2°	6¾"
3°	6°	9¼"
5°	10°	12⅛"
7°	14°	15"

Vacuum Advance—IGS-4207B-1 & IAP-4103A-1

Start	0°	4½"
1°	2°	5½"
4°	8°	9⅛"
7°	14°	12¾"
8°	16°	14"

Manual Adjustment—Provides for minor changes in ignition timing at distributor. See Ignition Timing.

Distributor Removal: Mounted on left side of crankcase. To remove, disconnect vacuum line, take out hold-down screw in lock plate. **Installation Note**—Install distributor with #1 piston in firing position.

IGNITION TIMING

Std. Setting—Initial setting (for regular non-premium fuel) as shown below. See Manual Adjustment (following) for Final Setting.

	Flywheel Degrees	Piston Position
All Engines	2° ATDC	.002" ATDC.

NOTE—Impulse neutralizer marked 'DC' at TDC. with 15 (1°) graduations on either side.

Timing (Using Timing Light)—Connect timing light between distributor primary terminal and battery terminal on generator regulator. Set #1 or #6 piston in firing position (see Setting above) with correct mark on impulse neutralizer aligned with pointer on chain case cover. Loosen lock-plate hold-down screw, center pointer on scale, tighten screw. Loosen lock-plate clamp bolt, rotate distributor until timing light just goes out, tighten clamp bolt. Check Manual Adjustment for final setting.

Timing (Using Synchroscope)—Tool C-374. Clip lead to #1 spark plug, direct light on impulse neutralizer (mark correct graduation with paint), idle engine, adjust distributor as directed above until mark aligned with pointer on chain case cover.

Manual Adjustment—Set to give slight ping from 10-30 MPH. accelerating with wide open throttle. To adjust, loosen lock-plate hold-down screw, move plate (not more than 4° or .007" before or after initial setting) counter-clockwise (if no ping), clockwise (if ping too severe), tighten screw.

CARBURETOR

Carter (B&B) Model D6H1 (Std.), D6N1 (City Traffic)—1½" single barrel, downdraft type with Sisson automatic choke control.

See Carburetor Section for complete data.

Settings (Idle Setting, Float Level, and Accelerating Pump): *See Tune-Up data.*

Metering Jet—*See Carter (B&B) Jet Table in Carburetor Section for complete data.*

Automatic Choke: Sisson Type.

Setting—Choke can be adjusted by inserting a gauge pin through hole in automatic choke lever shaft and slot in base mounting flange (to position shaft) and adjusting corburetor choke valve lever so that choke valve is tightly closed.

Fast Idle: Throttle opened to fast idle position when choke valve closed.

Automatic Choke: Sisson type Optl.

See Carburetion Equipment Section for data.

CARB. EQUIPMENT

Air Cleaner: AC No. 1544640 Heavy duty oil-bath type. Filter Element AC No. 21.

Servicing—Wash filter element in kerosene, drain and clean oil reservoir and refill to indicated level mark with 1 pint SAE No. 50 engine oil (SAE No. 20W for temperatures below freezing) at 1000 mile or 30 day intervals, or more often if required.

Oil Filler Cap (Crankcase Ventilator) Air Cleaner: Wash filter element in cap in kerosene and re-oil by dipping in SAE No. 50 engine oil at 1000 mile or 30 day intervals or more often if required.

Crankcase Ventilator Outlet Air Cleaner—Special equipment for cars operating in dusty regions. Servicing same as given for Oil Filler Cap Cleaner.

Fuel Pump: AC No. 1539042 (Std.), AC No. 1539418 (Optl.). Diaphragm type fuel pump.

Replacement Pump—AC No. 577 (for 1539042), AC No. 9418 (for 1539418).

Pressure—3-5 lbs.

See Carburetion Equipment Section for data.

Fuel Tank Filter: Oilite metal filter in tank.

Servicing—If more than 2 pints water in tank, fuel will not pass filter. Remove filler cap and drain plug, draining tank. Disconnect fuel line at some point between pump and tank, blow out line and filter with air, increasing pressure as filter is cleaned. Flush tank with clean gasoline.

Gasoline Gauge: Auto-Lite Electric type. Dash Unit No. 11679A, Tank Unit No. 11538A (NG-11816T on Suburban).

See Carburetion Equipment Section for data.

BATTERY

Auto-Lite Type 1M-100D. 6 volt, 15 Plate, 100 Ampere Hour Capacity (20 hour rate).

Starting Capacity—120 amperes for 20 minutes.

Zero Capacity—300 amperes for 3.2 minutes. Five second voltage 4.15 volts.

Grounded Terminal—Positive (+) to engine.

Location—In left fender shield under engine hood.

Dimensions—Length 9 3/32". Width 7 1/8". Height 8 5/8".

STARTER

U.S. Cars.....**Auto-Lite MCH-6101.** Arm. MCH-2028
Canada.....**Auto-Lite MAW-4041.** Arm. MAW-2128

Drive—Outboard Barrel Type Bendix No. A-2991.

Rotation—Counter-clockwise at commutator end.

Brush Spring Tension—42-53 ozs. (new brushes).

Performance Data

Torque	R.P.M.	Volts	Amperes
0 ft. lbs.	4900	5.5	65
2.75 "	1480	5.0	200
8.50 "	400	4.0	400
6.0 "	Lock	2.0	335

Removal: Disconnect wires (tape battery lead), remove mounting bolts, withdraw starter (not necessary to disturb oil filter or oil lines).

Starting Switch: Auto-Lite Model SST-4001. Magnetic type mounted on left front fender shield and controlled by turning ignition switch past "on" position.

See Electrical Equipment Section for complete data.

GENERATOR

	Auto-Lite No.	Armature No.
Standard	GGW-6001B	GGW-2006F
Early Cars	GDZ-4801A	GDZ-2006F
State Police	GEG-4823B	GEG-2006F
	GGJ-6001B	GGJ-2101F
	GGU-6001E	GGU-2006F
City Police & Taxi	GGJ-6001A	GGJ-2101F
	GGU-6001A	GGU-2006F

Two brush type current-voltage regulators.

Maximum Charging Rate—See table below.

Charging Rate Adjustment—None. See Regulator.

Performance Data (GDZ-4801A)

Amperes	Volts	Cold—R.P.M.—Hot
0	6.4	870-970 — 950-1050
35	8.0	1800-2000 — 2150-2350

Performance Data (GEG-4823B)

40	8.0	1550 Max.

Performance Data (GGJ-6001A, B)

50	8.0	1600 Max.

Performance Data (GGU-6001A, E)

45	8.0	1550 Max.

Performance Data (GGW-6001B)

0	6.4	870-970 — 950-1050
40	8.0	1800-2000 — 2150-2350

Rotation—Counter-clockwise at commutator end.

Brush Spring Tension—(GDZ, GGU, GGW) 35-53 ozs. (new brushes); (GGJ) 30-37 ozs. (new brushes); (GEG) 64-68 ozs. (new brushes).

Field Current—(GDZ, GGU, GGW) 1.6-1.8 amps., (GEG) 1.60-1.78 amps., (GGJ) 1.76-1.95 amps., all at 6.0 volts.

Motoring Current—(GDZ) 4.2-4.6 amps., (GEG) 4.7-5.2 amps., (GGJ) 4.3-4.8 amps., (GGU) 5.5-6.5 amps., (GGW) 4.6-5.2 amps., all at 6.0 volts.

Removal: Pivot mounted at left front of engine. To remove, take out pivot and clamp bolts.

Belt Adjustment: Loosen pivot and clamp bolts, pull out on generator until belt is snug (40-50 lbs. tension secured on scale attached to field frame) or ¼" belt deflection between generator and pump).

REGULATOR

Auto-Lite Regulator No.	for Auto-Lite Generator
①VAV-4404A or VBA-4101A	GGJ-6001A, B
②VAV-4404B or VBA-4101B	GGU-6001A, E
③VRP-4401B	GEG-4823B
VRP-4503A	GDZ-4801A
VRP-4503B	GGW-6001B

①—VBA-4104A for negative ground.
②—VBA-4104B for neg. grd. ③—VRP-4403A for neg. grd.

See Electrical Equipment Section for complete data.

NOTE—Regulator case cover is sealed. Serviced on exchange basis if seals not broken (to remove cover).

Cutout Relay

Cuts In (VAV, VRP)—6.4-7.0 volts (set to 6.4-6.6 volts).

Cuts In (VBA)—6.35-6.75 volts (set to 6.4-6.6 volts).

Cuts Out (All)—4.1-4.8 volts (approx. 4-6 amps. dis.)

Contact Gap (All)—.015" minimum.

Air Gap (All)—.031-.034" with contacts open (check at hinge end of core).

C NTINUED ON NEXT PAGE

CONTINUED FROM PRECEDING PAGE

Voltage Regulator

Setting (VAV, VRP)—7.2-7.5 volts at 70°F. **(VBA)**—7.0-7.2 volts at 70°F. See Electrical Equipment Section for settings at other temperatures.

Checking (without breaking seals) & Adjustment—*See Electrical Equipment Section.*

Contact Gap (VRP)—.012" min. (arm against stop).

Air Gap (All)—.048-.052" with contacts just opening.

Current Regulator

	Setting
VRP-4401-B & 3-A	39-41

►(Temperature Compensated Regulators)

	Nominal Setting
VAV-4404-A, VBA-4101-A & 4-A	50
VAV-4404-B, VBA-4101-B & 4-B	45
VRP-4503-A	35
VRP-4503-B	40

►*CAUTION*—Nominal setting is approx. setting at 70°F. room temperature after regulator has been run (will be higher started cold). See Electrical Equip. Section for settings at various temperatures.

Checking (without breaking seals) & Adjustment—*See Electrical Equipment Section.*

Contact Gap (VRP)—.012" min. (arm against stop).

Air Gap (All)—.048-.052" with contacts just opening.

LIGHTING

Headlamps: Corcoran-Brown "Sealed Beam" type with new "Bull's-eye lens."

See Electrical Equipment Section for complete data.

Adjustment—Aim upper beam straight ahead (hot spot center 3" below lamp center height at 25 ft.).

Beam Indicator—On speedometer dial. Lighted when upper beams "on."

Direction Signal Indicator—On speedometer dial. Flashes when direction signal operating.

Switches

Lighting—Plymouth No. 1300600.

Beam Selector—Plymouth No. 1253460.

Instrument—Plymouth No. 1244997.

Map Light—Plymouth No. 625616.

MISC. ELECTRICAL

CIRCUIT BREAKER: 30 ampere. On back of instrument panel above headlight switch.

FUSES: Clock—2 ampere. In clock lead connector.

Radio—14 ampere. In fuse connector at radio.

HORNS: Auto-Lite Model HW-4201 (Low Pitch), HW-4202 (High Pitch). Dual horns operated by relay.

Horn Relay: Auto-Lite HRL-4103 or 4104. Connected thru ignition switch, operates only with ignition on.

Contact Close—1.5-3.0 volts (seal to core with 4 V).

Contacts Open—.5 volt min. (open from seal).

Contact Gap—.026". **Air Gap**—.016-.020" (armature air gap with contacts closed but not sealed), .015-.018" (gap between armature leg and yoke with armature sealed to core).

ENGINE

ENGINE SPECIFICATIONS: 6 cylinder, "L" hd. type.

Bore—3¼". **Stroke**—4⅜".

Displacement—217.8 cu. ins. **Rated H.P.**—25.35.

Developed Horsepower—97 at 3600 RPM.

Compression Ratio—7.0-1 Std. Cast Iron Head.

Compression & Vacuum Reading—*See Tune-up data.*

ORIGINAL BORE & PISTONS: *See Chrysler Special Data.*

ORIGINAL BEARING SIZES: *See Chrysler Special Data.*

TIGHTENING TORQUES: *See Chrysler Special Data.*

CYLINDER HEAD: Tightening Torque & Cylinder Head Diagram—*See Chrysler Special Data.*

PISTONS: Aluminum alloy, "U" slot, cam ground type. NOTE—Piston skirt is elliptical (.010-.012" smaller diameter across pin bosses than across thrust faces), and tapered (.0005-.0015" smaller diameter at top of skirt than at bottom).

Length—3 11/16". **Weight**—16.0 ozs. (stripped).

Removal—Pistons and rods removed from above.

Clearance—.028-.032" (Head & Ring Lands), .0002-.0012" (Skirt—across thrust faces and ¾" up from bottom). See Fitting New Pistons.

Fitting New Pistons: Measure piston size with micrometer across thrust faces (right angles to pin bosses) ¾" up from bottom of skirt with piston at 70°F. To fit pistons, with cylinder wall and piston dry and clean and at 70°F., invert piston in cylinder bore. Piston should have slight drag but should pass slowly through bore of own weight.

Replacement Pistons: .005", .020", .030", .040", .060" OS.

Installing Pistons: "U" slot away from valves.

PISTON RINGS: Two compression (top ring chrome-plated), two slotted oil control, coated rings per piston, all above pin. Oil ring grooves drilled for oil drainage.

Ring	Width	End Gap	Side Clearance
Compr. (#1)	3/32"	.007-.015"	.0025-.004"
Compr. (#2)	3/32"	.007-.015"	.002-.0035"
Oil Contr. (#3,4)	5/32"	.007-.015"	.001-.0025"

Installing Rings—#1 Compr. with step on inner edge up. #2 Compr. with step on inner edge up or if step on outer edge, install with step down.

Replacement Rings: .005" .020" .030" .040" .050" .060" OS.

PISTON PIN: Diameter—55/64". **Length**—2¾". Pin floats in piston and rod, held by lock rings.

Pin Fit in Piston—Thumb push fit (piston at 130°F.)

Pin Fit in Rod Bushing—Tight thumb push fit at 70°F.

Replacement Pins: Std., .0006", .003", .008" Oversize.

CONNECTING ROD: Length—7 15/16". **Weight**—1.941 lbs. with bolts less bearings.
NOTE—Pin hole in rod bronze bushed.

Lower Bearing Diameter—2 1/16". *See "Original Bearing Size" in Chrysler Special Data.*

Lower Bearing—Removable, precision type, steel-backed, thin babbitt-lined. No shims.

Clearance—.0005-.0015". **Sideplay**—.0055-.0115".

Bearing Adjustment: None (no shims). Replace bearings. Do not file rods or caps.

Replacement Bearings: .001", .002", .010", .012" U.S.

Installing Rods: Wide portion of bearing to rear (#1, 3, 5), to front (#2, 4, 6). Oil hole to camshaft.

CRANKSHAFT: 4 bearings, 7 integral counterweights, with vibration dampener on front end.

Bearing Diameter—2½". *See "Original Bearing Size" in Chrysler Special Data.*

Bearings—Removable, precision type, steel-backed, thin babbitt-lined. No shims.

Clearance—.005-.0015".

Bearing Adjustment: None (no shims). Replace bearings. Do not file bearing caps.

Replacement Bearings: .001", .002", .010", .012" U.S.

End Thrust: Taken by flanged faces of #4 (rear) main bearing. **Endplay**—.003-.007".

CAMSHAFT: 4 bearing. Non-adjustable chain drive.

Bearing Diameters—#1, 2"; #2, 1 31/32"; #3, 1 15/16"; #4, 1 1/4".

Bearings—Removable, steel-backed, babbitt-lined bushings (except #4—machined in crankcase).

Clearance—.001-.003".

End Thrust: Taken by thrust plate behind camshaft sprocket hub. **Endplay**—.002-.006".

Timing Chain: Width 1". Pitch .500" (½"). Length 24" or 48 links.

Camshaft Setting: Sprockets marked. Mesh chain with sprockets turned so that '0' marks are adjacent and in line with a straightedge across shaft centers.

VALVES:	Head Diameter	Stem Diameter	Length
Intake	1 17/32"	.340-.341"	4 25/32"
Exhaust	1 13/32"	.340-.341"	4 25/32"

	Seat Angle	Lift	Stem Clearance
Intake	45°	3/8"	.001-.003"
Exhaust	45°	3/8"	.002-.004"

Valve Guides: Remove from above. Press new guides in with stepped end down and upper end 7/8" below top of block, ream guides to inside diameter of .342-.343" (Intake), .344-.345" (Exhaust).

Valve Springs: Install with close-coil end to top.

Free Length 2".	Spring Pressure	Spring Length
Valve Closed	40-45 lbs.	1¾"
Valve Open	107-115 lbs.	1⅜"

Valve Lifters: Mushroom type (remove from below with camshaft out of engine). Stem diameter ⅝". Service by reaming lifter holes (work from above piloting reamer in valve guide) and installing oversize lifters furnished .001", .008", .030" Oversize.

VALVE TIMING

Tappet Clearance: .008" Intake, .010" Exhaust, Hot. NOTE—Tappet screws self-locking type.

Valve Timing: See Camshaft Setting above.

Intake Valves—Open 12° BTDC. Close 44° ALDC.

Exhaust Valves—Open 50° BLDC. Close 6° ATDC.

Valve Timing Check—With .014" tappet clearance (Cold), #6 intake valve should open with #6 piston 5° to 17° or .011" to .0125" BTDC with 5th to 17th graduation before DC mark on impulse neutralizer aligned with pointer on chain case cover. Reset tappet clearance to running clearance .008" Hot.

LUBRICATION

Engine Oiling System: Pressure to main and connecting rod bearings, camshaft bearings, and timing chain. "Rotor" type oil pump.

Crankcase Capacity—5 qts. (refill).

Normal Oil Pressure—40-45 lbs. above 30 MPH.

Oil Pressure Regulator—Under plug on left side of crankcase (below starter). Opens at 40-45 lbs. Adjustable by replacing spring (Std. spring Unpainted, Lighter spring—Red, Heavier spring—Green).

CAUTION—Install replacement spring of same color as original spring.

Oil Pump: "Rotor" type on right side of engine.

Servicing—*See "Oil Pump" in Chrysler Special Data.*

Oil Filter: On left side of engine above starter.

Servicing—Replace filter at 8000 mile intervals.

Oil Pressure Gauge: Auto-Lite No. 11678A (not elec.).

COOLING

Cooling System: Positive circulation with pump on front of engine, by-pass thermostat, and water distribution tube in cylinder block behind pump.

Capacity—15 quarts.

Water Pump: Packless type with grease fitting.

See Water Pump Section for complete data.

Removal—Drain cooling system, remove fan belt, disconnect hoses at pump, remove pump mounting studs, lift fan and pump off.

Belt Adjustment—*See Generator Belt Adjustment.*

Thermostat: In cylinder head water outlet.

INSTALLATION NOTE—Install thermostat with 2 ports facing front, and 2 ports facing rear.

Setting—Starts to open 157-162°F. Fully open 183°F.

Temperature Gauge: Auto-Lite No. 11680A. Not elect..

CLUTCH

Borg & Beck 9A7 Cover Assem. 926 (Std.), 964 (Spec)
Auburn 9251-17
Single plate, dry disc type.

See Clutch Section for complete data.

Facings—Woven type, 2 required.

	Inside Diam.	Outside Diam.	Thickness
9A7	6"	9¼"	.125" (⅛")
9251-17	6"	9¼"	.125" (⅛")

Pedal Adjustment: Set pedal to just clear toeboard (stopscrew on lower end of pedal) and set for 1" free travel (adjust nut on connector link at fork). NOTE—Do not disturb turnbuckle on pedal link.

Removal: Remove Transmission (see Transmission Removal below), remove release fork pull-back spring and clutch housing underpan. Disconnect release fork from pivot, withdraw release bearing and sleeve from housing. Mark clutch and flywheel (to insure correct re-installation), remove all clutch cover mounting screws evenly, remove clutch cover assembly and driven member through opening at bottom of housing.

TRANSMISSION

Own Make. All helical gear, constant-mesh, synchro-mesh (Second & High), sliding gear (Low & Reverse).

See Transmission Section for complete data.

Transmission Control: Remote control type with gearshift lever mounted on steering column.

See Transmission Section for complete data.

Removal: Jack up front end of car. Disconnect front universal by taking out bolts in shaft flange (if transmission to be dismantled, loosen flange retaining nut), and rear universal by removing bearing caps on rear axle yoke (wire bearing cups in place to prevent loss of bearing rollers). Disconnect speedometer cable. hand brake cable at brake band, gearshift control rod and selector rod at transmission case. Remove transmission mounting screws in clutch housing, pull transmission straight back to free clutch shaft, then lower transmission and remove from beneath car.

NOTE—When installing transmission, use pilot studs installed in upper mounting screw holes to maintain alignment and prevent springing clutch driven member.

UNIVERSALS

Detroit Universal Series 4200—Ball-and-Trunnion type (front & rear).

See Universals Section for complete data.

REAR AXLE

Own Make. Semi-floating, hypoid gear type with Hotchkiss Drive.

See Rear Axle Section for complete data.

Ratio (P17 Std.)—3.73-1, **(P18 Std. exc. Sta. Wgn.)** 3.9-1, **(Sta. Wgn.)** 4.1-1.

Ratio (P17 Optl.)—3.9-1, **(P18 Optl.)** 4.1-1.

Backlash—.006-.010". Screw adjustment.

Removal: Hoist rear end of car. Remove rear wheels. Disconnect brake hose at frame bracket, disconnect lower end of shock absorbers. Disconnect propeller shaft by removing capscrews from bearing caps on rear axle yoke (wire bearing caps in place to prevent loss of bearing rollers). Support axle housing, remove rear spring "U" bolts, lower axle assembly and remove from beneath car.

NOTE—Carrier assembly can be removed without disturbing axle housing by removing axle shafts and taking out carrier-to-housing mounting screws.

Axle Shaft Removal—Remove wheel, hub, and drum assembly (use screw type hub puller—Tool C-675), block brake pedal, disconnect brake line at wheel cylinder, remove axle shaft key, install sleeve (Tool C-745) in oil seal, remove brake support (oil seal mounted in support), pull shaft and bearing (use C-499 puller). NOTE—Use Puller C-293-E to remove bearing from shaft, puller C-748 or C-358 to remove inner oil seal, drift C-201 to install seal.

Axle Shaft Oil Seal: New leather type mounted on brake support (backing plate).

Wheel Bearing Adjustment: Shims between backing plate and axle housing. With wheel and hub removed, check endplay with dial indicator. To adjust, remove backing plate (see above), add or remove shims (furnished .010", .0125", .015", .030" thick) equally at both wheels. **Endplay**—.003-.008".

SHOCK ABSORBERS

Hydraulic, direct acting, non-adjustable.

See Shock Absorber Section for complete data.

FRONT SUSPENSION

Front Suspension: Independent, linked parallelogram type with coil springs and direct acting shock absorbers.

See Front Suspension Section for complete data.

Kingpin Inclination—4¾° to 6° crosswise.

Camber—Pos. ¼°. Limits 0° to Pos. ¾° (¼-½° higher on left).

Caster—0° preferred. Limits Neg. 1° to Pos. 1°. No adjustment.

Toe In—0" (0-1/16"). Adjust by turning both tie rods equally.

Steering Geometry—Inner wheel 22½°. Outer 20°.

STEERING GEAR

Own Make. Worm-and-roller type with "push-pull" adjustments. Same as Gemmer design Model 305.

NOTE—See Gemmer Model 305 article for data.

See Steering Gear Section for complete data.

BRAKES

Service: Chrysler "Safe-guard" Lockheed Hydraulic type as follows:

Front Wheels—Two-cylinder type (front shoe anchored at bottom and actuated by upper cylinder, rear shoe anchored at top and actuated by lower cylinder).

Rear Wheels—Double anchor type with a single double-acting wheel cylinder.

See Brake Section for complete data.

Wheel Cylinders—Single acting type (front), double acting type with straight (1⅛") bore (rear).

Drums—Centrifuse type. Diameter 10".

Lining—Molded Asbestos. Width 2". Thick. 13/64". Length per wheel 21" (front wheels), 18½" (rear wheels).

Clearance—.006" at each end of all brake shoes.

Hand Brake: Independent type. Hand lever actuates band on drum at rear of transmission.

Drum Diameter—6". Cast-iron.

Lining—Width 2". Thickness 5/32". Lgth. 16 11/16".

Clearance—.015-.020" around band.

Adjustment—*See Chrysler Special Data.*

MISC. MECHANICAL

CONVERTIBLE TOP CONTROL: Hydro-Lectric type.

See Miscellaneous Section for complete data.

Windshield Wipers: (Exc. Conv't. & Sta. Wgn.)—Vacuum controlled Link-and-Crank Arm type; **(Convt. & Sta. Wgn.)**—Vacuum Link-and-Chain type.

See Miscellaneous Section for complete data.

CYLINDER HEAD

ALL MODELS

CYLINDER HEAD INSTALLATION: Use Torque Indicating Wrench to tighten cylinder head capscrews, tighten in correct sequence as shown in the diagram. Cast Iron heads should be tightened cold and rechecked after engine has been run sufficiently to bring all parts to normal operating temperature.

Tightening Torque—See Tightening (Torque Wrench) Specifications below.

PONTIAC 6

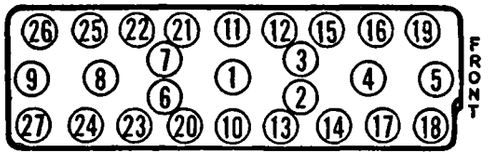

PONTIAC 8

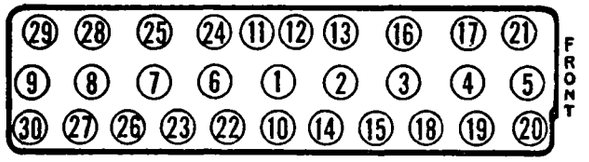

TIGHTENING (TORQUE WRENCH) SPECIFICATIONS

ALL MODELS

	Ft. Lbs.	In. Lbs.
Cylinder Head Capscrews	60	720
Main Bearing Cap Screws	85	1020
Connecting Rod Bolts	45	540
Flywheel to Crankshaft Bolts (6)	105	1260①
Flywheel to Crankshaft Bolts (8)	70	840①
Lower Control Arm Pin & Bar Bushings	200	2400

①—On 1949-50 models with self-locking bolts (no lockwashers), torque should be 100 ft. lbs. or 1200 in. lbs.

ORIGINAL BORE & PISTONS

1949-50 MODELS

ORIGINAL BORE & PISTON SIZES: Original bore sizes, and size of pistons installed in each cylinder bore, may be determined by letter stamped on piston head and on top face of cylinder block. Piston sizes graduated in .0005" steps as follows:

Six (1949-50), Eight (1949)

Piston & Engine Mark	Six	Eight
'A'	3.5605"	3.247"
'B'	3.561"	3.2475"
'C'	3.5615"	3.248"
'D'	3.562"	3.2485"
'E'	3.5625"	3.249"

PISTONS

1949-50 MODELS

REPLACEMENT PISTONS: Standard Size. Furnished in following sizes for replacement of Standard Production Pistons listed above. Sizes and part numbers for each model as follows:

Six (1949-50), Eight (1949)

Part No. — Six	Size	Part No. — Eight	Size
507554	3.5605"	503048	3.247"
507555	3.5615"	503049	3.248"
507556	3.5635"	503050	3.249"

First size covers 'A' and Low Limit 'B' production pistons. Second size covers High Limit 'B', all 'C', and Low Limit 'D' pistons. Third size covers High Limit 'D' and all 'E' pistons.

Oversize Replacement Pistons:—Finished pistons furnished in following oversizes: .005", .010", .020", .030".

NOTE—All factory replacement pistons held to uniform weight within 1/16 oz. and all oversize pistons up to .030" oversize are same weight as standard pistons.

CAUTION—Factory replacement pistons electroplated after being finished to size and must not be ground.

PISTON PINS

1949-50 MODELS

PISTON PIN FITTING: Pin case-hardened & ground (out-of-round .0002" max.). To install pins, coat inside of piston bosses with graphite grease, insert slotted end of pin in lockscrew boss and press in place. Pressure to install pin in piston should be 200-300 lbs. If necessary, pin holes in piston can be sized with expansion reamer to secure this fit.

CAUTION—Pins will be noisy if fit in piston is too loose, and pin bosses may be fractured when installing pin if fit in piston is too tight.

NOTE—Car manufacturer recommends use of the following tools (in conjunction with arbor press): hydraulic cylinder & gauge (J-1325-SA-1), piston rest block (J-1325-1), piston pin remover (J-1325-2), piston skirt plug (J-1325-3).

1949-50 MODELS

PISTON PIN BUSHING: New Type Service Bushings. New type aluminum bronze bushings which are more resistant to corrosion furnished for service as follows: Part No. 505320 (6), 505321 (8). May be distinguished from previous bronze type by lighter color and less coppery appearance (bushings darken and may require polishing or buffing to bring out difference in color).

Installation—Press bushings in place, making sure that 3/32" groove between bushings aligned with oil hole in rod. Burnish bushings securely in place with bar. Hone bushings for .0004-.0006" clearance. Car manufacturer recommends use of following tools for servicing pin bushings: J-540-1—Bushing Remover. J-540-2—Bushing Replacer (tool fitted with shoulder which prevents bushings from being pressed too far in or from collapsing while being installed), J-516 Burnisher Bar, and J-526 Burnisher Block. NOTE—These tools are used in conjunction with an arbor press using the J-526 Burnisher Block as a support for the rod on the press.

CRANKSHAFT & MAIN BEARINGS

1949-50 MODELS

PLASTIGAGE FOR CHECKING BEARING CLEARANCE: Consists of plastic rod material supplied in envelope marked with scale which gives bearing clearance in thousandths of an inch when used to measure flattened plastigage in bearing cap. Use Plastigage as follows:

Bearing Clearance Check—Remove bearing cap, wipe all oil from bearing insert and shaft journal (CAUTION—When checking main bearings, keep all other bearing caps tight so that crankshaft weight will not cause incorrect reading). Place piece of Plastigage Rod across full width of bearing insert in cap, re-install bearing cap and tighten to recommended torque (see Tightening Specifications). Remove cap, match widest width of flattened Plastigage with correct graduation of scale on envelope (marking of this graduation is clearance).

Bearing Size Check—If reading under 2½ use standard bearing, if over 2½ use .001" undersize bearing. .002" undersize bearings available where .001" undersize do not fall with 2½ reading.

1949-50 MODELS

MAIN BEARINGS: Removal. Remove the bearings with caps removed and crankshaft in place by inserting suitable tool (see NOTE following) in oil hole in shaft and rotating shaft in usual direction.

NOTE—Bearing Removal Tool can be made from ⅛"x1½" cotter key. Bend each end of key up 5/16" to make ⅝" long base. With this as a base, bend key to form 59° angle. With this tool inserted in place end will just protrude far enough to engage bearing.

Installation—Insert plain edge of bearing in indented side of bearing support, slowly rotate crankshaft until bearing seated.

1949-50 SIX CYL. MODELS

REAR MAIN BEARING OIL SEAL: Seal consists of oil slinger on crankshaft to rear of rear main bearing operating in groove formed in block and cap (drain hole in cap returns oil to crankcase) with asbestos seal fitted in separate groove at rear.

Seal Note—Edges of seal groove in cylinder block and rear main bearing cap are chamfered to reduce pressure between seal and crankshaft and prevent pinching of the seal. One end of the groove in the bearing cap is recessed and a portion of the seal should be worked into this recess to prevent the seal turning in service.

Installation—With crankshaft out of engine and bearing shells removed, press packing in rear groove in block, seat packing using Tool J-1045 (large diameter to front of engine) by tapping tool with lead or rawhide hammer. With tool in place, cut each end of seal flush with bearing cap seat. Repeat peration for cap. Install crankshaft & bearings.

CAMSHAFT & BEARINGS

1949-50 MODELS

CAMSHAFT BEARINGS: Use tool No. J-550 to remove and install camshaft bearings (rear bearing on Eight must be pulled out toward front as expansion plug at rear prevents driving on bearing from rear). Use driver to install all bearings making certain that oil hole in bearings is lined up with hole in block (holes are at bottom of bearings). Then line ream all bearings to finished sizes as follows:

Bearing Finished Size:	Six	Eight
#1 (Front)	1.9950-1.9955"	1.9950-1.9955"
#2	1.9637-1.9642"	1.9637-1.9642"
#3	1.9325-1.9330"	1.9325-1.9330"
#4	1.9012-1.9017"	1.9012-1.9017"
#5		1.8700-1.8705"

TIMING CHAIN

1949-50 MODELS

TIMING CHAIN COVER & OIL SEAL: Consists of cork seal and spring assembled on the crankshaft in front of the chain sprocket so that the cork bears against the inner face of the timing chain cover. **Installing New Cork Seal**—Coat seal with graphite lubricant, rubbing lubricant well into the face of the cork, before installing seal in engine. This lubrication necessary to prevent noise at this point. **Installing Timing Chain Cover**—Use J-546 tool to center timing chain cover before screws tightened.

OIL PUMP

1949-50 MODELS

OIL PUMP SERVICING: Pump Removal & Installation—Turn crankshaft so that #1 piston on top dead center of compression stroke with distributor rotor at #1 firing position. Remove steering idler arm and right hand engine side pan. Take out pump mounting bolts and remove pump. When installing pump, see that prick punch mark on pump is down, install pump without disturbing distributor shaft position, recheck Ignition Timing.

Pump Specifications—Pump shaft bearing clearance .0005-.002". Shaft and body end clearance .002-.006". Idler gear bearing clearance .0005-.002". Driving gear backlash .003-.004". Driving gear and idler gear backlash .006-.008". Driving gear and idler gear clearance .002-.006".

Oil Pressure Relief Valve—Assembly consists of spring loaded disc valve located in the pump body beneath the idler gear. When pressure exceeds 40 lbs., disc is forced off its seat and oil is by-passed back to inlet side. Valve is not adjustable.

OILING SYSTEM

1949-50 MODELS

CRANKCASE OIL CLEANER: Pontiac type 'Controlled flow' design consisting of settling chamber in oil inlet and filter screen housing in crankcase. **Servicing**—No servicing required but Oil Cleaner should be removed and settling chamber cleaned out when oil pan removed for other work, or if car has been upset or turned over.

Cleaner Removal and Installation. To remove oil cleaner with oil pan off engine, disconnect oil suction pipe and remove oil cleaner assembly from engine. Remove screen assembly bottom cover by taking out 2 screws in bottom plate. Remove 12 screws which mount cleaner head in housing shell, remove settling chamber from housing shell. Wash all parts in gasoline and scrape sediment from settling chamber. When re-assembling cleaner, see that all gaskets in good condition or use new gaskets, turn head and housing shell upside down, insert 2 screws and place gasket inside shell, then set settling chamber in plate and start screw threads, turn assembly right side up and install remainder of screws, tighten all screws securely, assemble all other parts. Fill cleaner with fresh oil and install

CAUTION—Fill cleaner with oil before assembling to crankcase (avoids running bearings without oil when engine first started).

CLUTCH NOTES

1949-50 MODELS

CLUTCH RELEASE BEARING & SUPPORT: Release bearing is new factory lubricated and sealed ball bearing type. Bearing is piloted on tubular support mounted in clutch housing and entirely enclosing transmission main drive gear shaft. This tubular support is installed and removed through rear face of clutch housing (with transmission off car) and a paper gasket is used between the support flange and the face of the housing. An oil slinger is provided on the main drive shaft ahead of the bearing in the transmission and a felt oil seal is installed against shoulder ahead of oil slinger retaining ring (in 1946 seal originally installed in groove on shaft).

Release Bearing Support Removal—When removing support, **do not pry on flange in clutch housing,** tap support out of housing from inside (do not strike tubular portion of support, tap bell end of support at rear lightly with soft hammer).

Bearing Servicing—Do not wash bearing in solvent or attempt to remove grease (bearing is factory-lubricated and sealed). Check fit of bearing on tubular support. Bearing should not bind or have excessive clearance.

MODEL IDENTIFICATION

SERIAL NUMBER: On left front door hinge post.
1949 Numbers—P6RS-1001 Up.....Synchro-Mesh Tr.
P6RH-1001 Up.....with Hydra-Matic Drive
1950 Numbers—P6TS-1001 Up.....Synchro-Mesh Tr.
P6TH-1001 Up.....with Hydra-Matic Drive
Prefix letter indicates Assembly Plant (below).

►**Assembly Plant Prefix Letter. P**—Pontiac, Mich., **C**—South Gate, **L**—Linden, **W**—Wilmington, **K**—Kansas City, **A**—Atlanta, **F**—Framingham.

ENGINE NUMBER: Same as Serial Number. Stamped on boss on left upper front corner of engine block.

TUNE-UP

COMPRESSION PRESSURE: 160 lbs. at 1000 RPM. or 118-120 lbs. at cranking speed (Std. 6.5-1 Head). 191 lbs. at 1000 RPM. (Optl. 7.5-1 Head).

VACUUM READING: 18-20" steady idling at 7-8 MPH. or 365-385 RPM. on Hydra-Matic cars.

FIRING ORDER: 1-5-3-6-2-4. See diagram.

SPARK PLUG GAPS: .025". Limits .023-.028".
Plugs—AC No. 45. 14 mm. Metric.

DISTRIBUTOR: Breaker Gap—.022" (new points), .020" (used points).

►*CAUTION*—Dial indicator for setting point gap recommended by car manufacturer. ***Do not use feeler gauge for setting used points.***
Cam Angle—Closed 31° to 37° with .022" gap.
NOTE—If dial indicator not available when setting Breaker Gap on Used Points, car manufacturer recommends gap be set by cam angle at 35° closed.
Breaker Arm Spring Tension—17-21 ounces.
Automatic & Vacuum Advance—***See Ignition.***
Condenser Capacity—.18-.23 microfarad.

IGNITION TIMING: 6° BTDC.
Timing Procedure—***See Ignition Timing.***
Timing Mark—First line of vibration dampener mark "/IGN.ONE/" aligned with pointer on chain cover at front of engine on left side.
Gaselector Setting—Set for barely audible ping when accelerating at 20-30 MPH., full throttle.

CARBURETION:
Idle Setting—Set idle adjusting screw 1-1¾ turns open. Turning screw out gives richer mixture.
Idle Speed (standard)—450-475 RPM. or 7-8 MPH.
Idle Speed (Hydra-Matic)—365-385 RPM.
Float Level—7/16" from machined projection on cover (inverted) to top of soldered seam at free end.
Accelerating Pump—Lower hole Normal Setting, Upper hole max. charge, Inner hole min. charge.

Choke Setting: Coil housing 3 Points Rich.

Fuel Pump Pressure: 4-4¾ lbs.

MANIFOLD HEAT CONTROL: Thermostatic coil type, non-adjustable (fixed anchor pin). Counterweight should be securely clamped to shaft in vertical position with valve closed (cold position).
NOTE—Valve shaft bushings are Stainless Steel.

VALVE TAPPET CLEARANCE: .011" to .013", Hot. .011" "Go" gauge, .013" "No Go" gauge.
High Speed Setting—.013" EXH. Hot.

►**Cold Setting with Engine Stopped**—.012" to .014" Cold (room temperature). *CAUTION*—Check setting after engine warmed-up for limits of .011" to .013".
Valve Timing Check—***See Valve Timing.***

STARTING: ***See Batery, Starter, Generator, Regulator.***

IGNITION

IGNITION SWITCH: Delco-Remy No. 1116461.
Ignition Lock—Briggs & Stratton or Delco-Remy.

COIL: Delco-Remy No. ('49) 1115380, ('50) 1115378. Mounted on engine.
Ignition Current—2.5 amperes idling, 4.5 stopped.

CONDENSER: Delco-Remy No. 1869704.
Capacity—.18-.23 microfarad.

DISTRIBUTOR: Delco-Remy Model (1949) 1110219, (1950) 1110222. Automatic and vacuum advance type with new "center-bearing" breaker plate.

►**Breaker Plate Bearing Assembly**—Plate rotates on 3 bakelite buttons on support plate with spring tension adjustment (shim washers) on underside of support plate. Pull required to move plate should be 8 oz. min., 16 oz. max. with breaker plate assembly out of housing.
See "Delco-Remy Center-Bearing Breaker Plate Distributor" in Electrical Equipment Section.

Breaker Gap—.022" (new points), .020" (used pts.).

►*CAUTION*—Dial indicator for setting point gap recommended by car manufacturer. ***Do not use feeler gauge for setting used points.***

Cam Angle—Closed 31° to 37° with .022" gap.
NOTE—If dial indicator not available when setting Breaker Gap on Used Points, car manufacturer recommends gap be set by cam angle at 35° closed.

Breaker Arm Spring Tension—17-21 ounces.

Rotation—Counter-clockwise viewed from above.

Automatic Advance

Degrees	Distr. R.P.M.	Degrees	Eng. R.P.M.
Start	300	2	600
8.25	1100	16.5	2200
8.5	1400	17	2800
14	2050	28	4100

Gaselector—Manual adjustment at distributor. 10° advance or retard. See Ignition Timing.

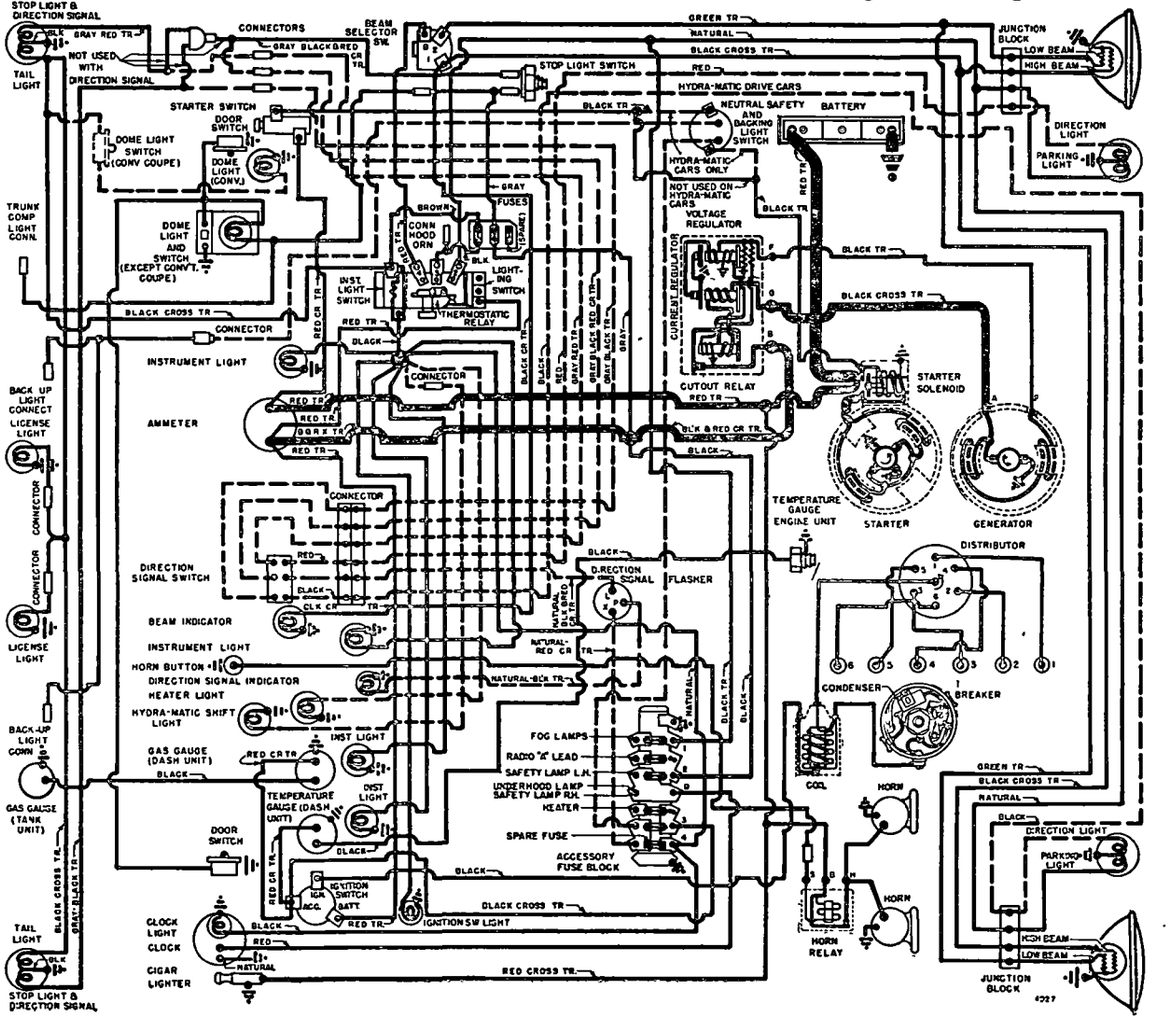

Vacuum Spark Control: Delco-Remy (part of distr.). Integral type linked directly to breaker plate. Provides additional advance at speeds above idling except when engine accelerated or operated with wide open throttle when spark retarded by return spring within unit.

Vacuum Advance		
Distr. Degrees	Eng. Degrees	Vacuum (" of HG)
Start	0°	7-9"
6.5°	13°	13-16"

NOTE—Max. 17° engine, with full vacuum.

Distributor Removal: On left side of engine. Disconnect vacuum line, take out Gaselector screw, lift out.

IGNITION TIMING

Std. Setting	Flywheel Degrees	Piston Pos.
All Engines①	6° BTDC	.0138" BTDC.

①—Regular Fuel—Std. Hd. Ethyl Fuel—7.5-1 Hd.

Timing Mark—"/IGN.ONE/" on vibration dampener. Two straight lines of mark indicates timing range of 4°. Use first (6°) line when setting ignition timing. *NOTE*—Manufacturer recommends use of KMO-318 Timing Light or J-578 Synchroscope for Timing.

Timing (with Timing Light)—Connect timing light between distributor terminal and ground, turn on ignition. With #1 piston on compression, turn engine over until piston is 6° or .0138" before top dead center with first line of ignition mark "/IGN.ONE/" aligned with pointer on chain cover at front of engine on left side. Loosen Gaselector screw, center pointer scale ("0" mark at reference line), tighten screw. Loosen advance arm clamp bolt, rotate distributor until timing light lights (contacts just opening), tighten clamp bolt. Check Gaselector Setting (see below).

Timing (with Synchroscope)—Connect at #1 spark plug. Mark first line of ignition mark with white chalk or paint, idle engine and adjust distributor as directed above until pointer and white line are aligned. Check Gaselector Setting (see below).

Gaselector Setting—Set to give best performance without spark knock or ping for fuel used. Marked "ADV" and "RET", adjust according to these marks.

CARBURETOR

Carter WA-1, No. 717S.....**Synchro-Mesh Trans.**
Carter WA-1, No. 718S.....**Hydra-Matic Drive**
1¼" single barrel downdraft types with Carter Climatic Control.
Casting No. on Flange—(717S) 388, (718S) 592.
See Carburetor Section for complete data.

Settings (Idle Setting, Float Level, and Accelerating Pump): *See Tune-Up.*
Metering Rod & Jet—*See Carter Jet Table in Carburetor Section.*
NOTE—No "throttle cracker" used.

Hydra-Matic Throttle Linkage Adjustment: *See Pontiac Hydra-Matic Drive in Transmission Section.*

Fast Idle: Carter Single Barrel Carburetor type.
See Carburetion Equipment Section for complete data.
Setting—⅝" clearance between choke valve and air horn (Gauge T109-85) with throttle valve closed and stopscrew against (not on) first step of fast idle cam. Adjust by bending connector link at lower offset (use Tool T109-41).

Automatic Choke: Carter Climatic Control (single barrel carburetors).
See Carburetion Equipment Section for complete data.
Setting—3 Points Rich.

CARB. EQUIPMENT

Air Cleaner: AC No. 1529871 oil-wetted type (std.), No. 1544486 heavy duty oil-bath type (optional).
Filter Element—AC #1 (std.), #21 (heavy duty).
Servicing—Clean and re-oil std. cleaner, or on heavy duty clean and refill reservoir with 1 pint SAE 50 (20W below freezing) oil, at 10,000 mile intervals (twice yearly) or more often if required.

Fuel Pump (std.): AC No. 1537342.
Optl. (fuel-&-vacuum)—AC No. 1537317.
Replacement Pump—AC 7342 (std.), 539 (optl.).
Pressure—4-4¾ lbs.
See Carburetion Equipment Section for complete data.

Gasoline Gauge: AC Electric type.
Dash Unit—AC 1517117. **Tank Unit**—AC 1517083.
See Carburetion Equipment Section for complete data.

BATTERY

Delco Type 15E-4. 6 Volt, 15 Plate, 100 Ampere Hour
Grounded Terminal—Negative (—) to engine.
Location—On left side of engine compartment.

Police Battery Delco Type 19E-4. 6 Volt, 19 Plate, 130 Ampere Hour Capacity (20 hour rate).
Grounded Ter. & Location—Same as 15E-4 above.

STARTER

LHD.....**Delco-Remy 1107079. Arm. No. 1867897.**
RHD.....**Delco-Remy 1107934. Arm. No. 1867897.**

►*CAUTION—LHD starter operates whenever pushbutton depressed (and shift lever in neutral on Hydra-Matic)*
Drive—Overrunning clutch (solenoid pinion shift).
Rotation—Counter-clockwise at commutator end.
Brush Spring Tension—24-28 ozs. each.

Performance Data—1107079

Torque	R.P.M.	Volts	Amperes
0 ft. lbs.	5000	5.7	80①
12 "	Lock	3.4	525

Performance Data—1107934

Torque	R.P.M.	Volts	Amperes
0 ft. lbs.	5500	5.7	80①
14 "	Lock	3.0	600

①—Includes current draw of starter switch.

Removal: Flange mounted at left front of flywheel housing. To remove, take out mounting screws.

Starting Switch (1107079): Delco-Remy Solenoid 1118140 (no relay used) mounted on starter and controlled by Pushbutton Switch No. 1996037 (and Neutral Safety Switch No. 1997846 on Hydra-Matic). *CAUTION*—Overrunning clutch pinion clearance must be adjusted if solenoid removed from starter. *See Electrical Equipment Section for complete data.*
(1107934)—Delco-Remy Solenoid 1118102 on starter and controlled by Relay No. 269-G and Pushbutton Switch No. 1996039 (and Neutral Safety Switch 1997846 on Hydra-Matic Drive cars).
See Electrical Equipment Section for complete data.
Neutral Safety Switch Adjustment—*See Pontiac Hydra-Matic Drive in Transmission Section.*

GENERATOR

Standard.....**Delco-Remy 1102711. Arm. No. 1879002**
Police.....**Delco-Remy 1106403. Arm. No. 1880252**
Two brush types with current and voltage regulation
Charging Rate Adjustment—None. *See Regulator.*
Maximum Charging Rate—36 amperes cold, at 2040 Gen. RPM. or 19-23 MPH. Actual charging rate set by regulator (dependent on battery condition).

Performance Data—Cold

	Amperes	Volts	R.P.M.
1102711	30①	8.0	1750
1106403	35	8.0	1040

①—Not maximum output. See Current Regulator.
Rotation—Counter-clockwise at commutator end.
Brush Spring Tension—25 ozs. each.
Field Current—(1102711) 1.75-1.9 amperes at 6 volts, (1106403) 1.77-2.0 amperes at 6.0 volts.

Removal: Generator pivot mounted at left front of engine. To remove, take out pivot and clamp bolts.

Belt Adjustment: Belt deflection or sideplay midway between generator & pump pulley should be 1½".

REGULATOR

Standard.....**Delco-Remy 1118301** (for 1102711 Gen.)
Police.....**Delco-Remy 1118352** (for 1106403 Gen.)

►*NEW "1118300 SERIES"* regulators have screw adjustment for settings and single regulator springs.
See Electrical Equipment Section for complete data.
CAUTION—Check generator for grounded field coils and leads before changing regulator settings to correct High Charging Rate of High Voltage.

Cutout Relay
Cuts In—5.9-6.8 volts hot (set to 6.4 volts hot).
Contact Gap—.020" (same for both contacts).
Air Gap—.020" (with contacts just closed).

Voltage Regulator
Setting—7.0-7.7 volts hot (set to 7.4 volts hot). Regulator is over-compensated for temperature. Should be checked with cover in place and hot.
Air Gap—.075" with armature pressed down to point where contacts are just touching.
Checking & Adjustment—*See Elec. Equip. Section.*

Current Regulator
Setting (1118301).....32-40 amps. hot (set at 36 hot).
Setting (1118352).....33-37 amps. hot (set at 35 hot).
Air Gap—.075" with armature pressed down to point where contacts are just touching.
Checking & Adjustment—*See Elec. Equip. Section.*

LIGHTING

Headlamps, Direction Signal, and Switches: *See 1949-50 Pontiac Eight car pages for data.*

MISC. ELECTRICAL

THERMOSTATIC CIRCUIT BREAKER: Delco-Remy. On back of light switch (part of switch assy.). Contacts remain closed with 30 amperes but open in 3 minutes with 42 amperes at 70°F. Not adjustable.

MAIN FUSE BLOCK: On left hand engine side of dash. Two fuses (plus 1 spare) as follows:
Tail Lamp—SFE 14 ampere. In gold colored fuse holder. Protects rear license, instrument, ignition key, and clock lamps (dome on convertible).
Stop Lamp—SFE 14 ampere. In gray colored fuse holder. Protects trunk light and dome light (except on Convertible).

ACCESSORY FUSE BLOCK: On dash behind instrument panel. Five fuses (plus 1 spare) as follows:
Top Fuse—SFE 20 amp. Fog Lights.
2nd Fuse—SFE 14 amp. Radio.
3rd Fuse—SFE 20 amp. Clock power, Glove Box Light, Underhood Light, Safety (Spot) Light.
4th Fuse—SFE 20 amp. Heater blower motor.
5th Fuse—SFE 20 amp. Dir. Signal & Backup.
6th Fuse—SFE 20 amp. Spare fuse.

HORNS: *See 1949-50 Pontiac Eight car pages for data.*

CONTINUED ON NEXT PAGE

C NTINUED FROM PRECEDING PAGE

ENGINE

ENGINE SPECIFICATIONS: Own. Six Cyl., "L" head. **Bore**—3 9/16". *For Original Bore Sizes and Markings, see "Original Bore & Pistons" in Pontiac Special Data.* **Stroke**—4". **Displ.**—239.2 cu. ins. **Rated HP**—30.4. **Developed Horsepower**—90 at 3400 RPM. **Compression Ratio**—Std. 6.5-1, Optl. 7.5-1, iron hds. **Compression & Vacuum Reading**—*See Tune-Up.*

TIGHTENING TORQUES: *See Pontiac Special Data.*

CYLINDER HEAD: Tightening Torque & Cylinder Head Diagram—*See Pontiac Special Data.*

PISTONS: Chrome nickel alloy, electro-plated type. Pistons have 20 oil drain holes in oil ring groove. **Length** ('49) 3 19/32", ('50) 3 37/64". **Wt.** 27.1 oz. **Removal**—Pistons and rods removed from above. **Clearance**—Top Land .015-.027". Skirt .002".

Fitting New Pistons:—Insert .0015" x ½" feeler between piston and cylinder wall. Pull to withdraw feeler must be 10-20 lbs. Taper and out-of-round limits—Piston .0005", Cylinder .0005" max. new.

Replacement Pistons: *See Pontiac Special Data.*

PISTON RINGS: Two tapered-face compression rings above pin, one slotted oil control ring below pin. Oil ring groove has 20 oil drain holes.

NOTE—Rings are cadmium-plated or tin-plated.

Ring	Width	End Gap	Side Clearance
Compr. (#1,2)	3/32"	.006-.013"	.0015-.003"
Oil (#3)	3/16"	.006-.013"	.001-.0025"

Installing Compression Rings—Mark "TOP" up.

Replacement Rings: .005", .010", .020", .030" Oversize.

PISTON PIN: Diameter 15/16". **Length** 3 1/16". Pin is shot-peened type (shot-peened before final grinding and lapping). Pin is locked in one piston boss by self-locking lockscrew and opposite boss is slotted to permit pin movement.

Pin Fit in Piston—*See Pontiac Special Data.*

Pin Fit in Rod Bushing—.0004-.0006" clearance.

Pin Removal & Installation: *See Pontiac Special Data.*

Replacement Pins:—.001" (red & brown), .003" (red), .005" (blue) oversize. Paint marked on end of pin.

CONNECTING ROD: Weight 37 ozs. **Length** 7 9/16". **Piston Pin Bushing (Upper Bearing)**—Split aluminum bronze bushings. *See Pontiac Special Data.* **Lower Bearing Diameter**—2⅛".

NOTE—Plastigage can be used for checking bearing clearance. See "Crankshaft & Main Bearings" in Pontiac Special Data.

Lower Bearing—Thin type, interchangeable, steel-backed, babbitt-lined type.

Clearance—.0001-.0021". **Sideplay**—.007-.012".

NOTE—Plastigage can be used for checking bearing clearance. See "Crankshaft & Main Bearings" in Pontiac Special Data.

Bearing Adjustment:—None (no shims).

Replacement Bearings: Standard size & .001" Undersize. *NOTE*—Bearings have small tongue which must engage groove in rod and cap.

Installing Rods: Not offset (install either way).

NOTE—Rods and bearing caps marked to insure correct reassembly (marks must be together). These marks do not indicate cylinder in which rod used.

CAUTION—Keep each connecting rod and its bearing cap together.

CRANKSHAFT: Four bearing type with integral counterweights and vibration dampener on forward end.

►**Flywheel to Crankshaft Bolts (Synchro-Mesh Transmission)**—¾" hex head bolts (No. 508463) or 1" hex head bolts (No. 510832) are used. Either type can be used for replacement but **head sizes must be alike on all bolts or engine balance will be destroyed.** **Bearing Diameters**—#1, 2½"; #2, 2 17/32"; #3, 2 19/32"; #4, 2⅝".

Bearings—Thin type, removable, steel-backed, babbitt-lined. Upper and lower bearing halves alike. **Clearance**—.0003-.0023".

NOTE—Plastigage can be used for checking bearing clearance. See "Crankshaft & Main Bearings" in Pontiac Special Data.

Bearing Adjustment:—None (no shims). *See Pontiac Special Data for Removal and Fitting of Bearings.* **Rear Main Bearing Oil Seal Renewal**—*See Pontiac Special Data.*

Replacement Bearings: Standard & .001" Undersize.

End Thrust: At #3 (rear intermediate) bearing. **Endplay**—.003-.008".

CAMSHAFT: Four bearing, non-adjustable chain.

►*CAUTION*—New camshaft used with redesigned fuel pump drive eccentric. *1949 Six Cylinder Camshaft not interchangeable with 1948 and earlier camshaft.*

Timing Chain Cover Oil Seal Installation—*See "Timing Chain" in Pontiac Special Data.*

Bearing Diameters—#1, 2"; #2, 1 31/32"; #3, 1 15/16"; #4, 1 29/32". *For Bearing Finished Sizes, see "Camshaft & Bearings" in Pontiac Special Data.* **Clearance**—.0015-.0025" (new).

End Thrust:—Steel thrust plate behind camshaft sprocket. Replace if worn. **Endplay**—.002-.005".

Timing Chain: Morse. Width 1". Pitch ⅜". Length 21" or 56 links.

Chain Installation—*See Pontiac Special Data.*

Camshaft Setting:—Sprockets marked. Mesh chain with sprockets turned so that '0' marks are adjacent and in line with a straightedge across shaft centers.

VALVES:	Head Diam.	Stem Diam.	Length
Intake	1 19/32"	.310-.311"	5.718"
Exhaust	1 15/32"	.310-.311"	5.718"

	Seat Angle	Lift	Stem Clearance
Intake	30°	19/64"	Free fit to .0006"①
Exhaust	45°	19/64"	Free fit to .0006"①

① Guides tapered (.0006" max. clearance at bottom).

Valve Guides:—Removable, tapered guides (.001" taper to the inch with greatest clearance at top). Use Tool J-2542 for removing valve guides.

Exhaust Guide Counterbore—Exhaust guides are counterbored to a depth of ¾". Use Tool Number J-2122 to clean out counterbore.

IMPORTANT—Measure clearance at bottom end. Valve should just fall through guide of own weight when started in guide. *NOTE*—Guides should be cleaned with Tool KMO-122 valve guide cleaner (blade type). Service guides straight cut, install guides and ream to provide proper stem clearance with P.R. 131 Reamer.

Valve Springs:—Intake and exhaust springs identical. Install with two closed coils at top and dampener on top of each spring. Use new dampeners whenever removed from spring. **Free Length**—2 9/16".

	Spring Pressure	Spring Length
Valve Closed	59½ lbs.	1 29/32"
Valve Open	101 lbs.	1 19/32"

Valve Lifters:—Barrel type, cast-iron. Guide holes reamed in block. Lifters furnished .005" oversize (use pilot reamer J-706-P when reaming holes to maintain alignment—valve guides must be removed, use Valve Guide Removing Tool J-2542). **Clearance**—Free fit. Lifter should just move freely with finger touch.

VALVE TIMING

Tappet Clearance: .011" to .013", All Valves, Hot. .011" "Go" gauge, .013" "No Go" gauge.

High Speed Setting—.013" EXH. Hot.

Cold Setting with Engine Stopped—.012" to .014" Cold (room temperature). *CAUTION*—Check setting after engine warmed-up for limits of .011" to .013".

Valve Timing:—*See Camshaft Setting above.*

Intake Valves—Open 5° BTDC. Close 39° ALDC.

Exhaust Valves—Open 45° BLDC. Close 5° ATDC.

Valve Timing Check—With .015" tappet clearance #6 intake valve should open with #6 piston 5° or .0096" before top dead center with first straight line of dampener mark '/IGN.ONE/' slightly past pointer on left front face of chain cover. Reset tappet clearance .011-.013" (warm).

LUBRICATION

Engine Oiling System: Pressure to main bearings connecting rod lower bearings and piston pins (rifle-drilled rods), camshaft bearings, and chain.

Crankcase Capacity—5 qts. (refill), 6 qts. (dry).

Normal Oil Pressure—35-45 lbs. at 40 MPH. with warm oil (10-30 lbs. idling).

Oil Pressure Regulator—On oil pump. Opens at 40 lbs. Non-adjustable. *NOTE*—Replace regulator spring if free length less than 2 5/16".

Oil Pump: Gear type. On right side of crankcase. **Removal & Installation**—*See Pontiac Special Data.*

Oil Cleaner: Pontiac precipitation type (mounted in crankcase). **Removal & Installation**—*See Pontiac Special Data.*

Oil Pressure Gauge: AC No. 1507350. Not electric.

Crankcase Ventilation: Filter element in oil filler cap (inlet). Outlet pipe at valve compt. cover on right rear side of engine (cars with oil bath air cleaner use 3-piece outlet pipe containing filter element). **Oil Filler (Crankcase Ventilator) Cap Cleaning**—Wash filter element and re-oil by dipping in engine oil when servicing air cleaner.

CAUTION—Filler cap must be installed with air opening in cap toward front of car and seam in line with groove in tube (may cause excessive oil consumption if installed backward).

Crankcase Ventilator Outlet Pipe—On cars with Oil-bath type Air Cleaner, special 3-piece ventilator outlet pipe used which has copper gauze type air cleaner in container section. Wash and re-oil filter element when servicing air cleaner.

COOLING

Cooling System: Pressure type with pressure valve and vacuum valve (relief valves) in filler cap. Water distribution tube installed in block.

Capacity—(1949) 18 qts., (1950) 18½ qts.

Pressure Valve—AC No. 850501 Filler Cap. Opens at 4 lbs. (3¼-4¼ lbs.).

Water Pump: Packless, sealed ball-bearing shaft.

NOTE—Fan flange reversed over previous models. Pump Body Plate and Cylinder Block-to-Pump Gasket changed during 1949 production.

See Water Pump Section for complete data.

Removal—Drain cooling system, remove hose connection at pump, remove belt, take out water pump mounting bolts and lift pump out.

Belt Adjustment—*See Generator Belt Adjustment.*

Thermostat:—Harrison. In cylinder head outlet.
Setting—Starts to open 151°F. Fully open 173°F.

Temperature Gauge: AC Electric type.
Dash Unit—AC No. 1512126.
Engine Unit—AC No. 1512015.
See Miscellaneous Section for complete data.

CLUTCH

Inland. Single Plate, "Diaphragm", dry disc type with Long Driven Member Model 9½CF-TS (except Taxicab), Model 10CF-CS (Taxicab).
See Clutch Section for complete data.

►*NOTE*—Driven Members on 6 & 1949 8 Cyl. cars are same size but **must not be interchanged.** May be identified by stenciled notation on facings and color marking of torsional springs in hub as follows:

	Facing Mark	Spring Color
1949-50 6 Cyl.	41-42 6 Cyl.	Orange & Dark Blue
1949 8 Cyl.	41-42 8 Cyl.	Brown & Blue

Facings—Molded type, 2 required. I. D. 6" (All Models); O. D. 9½" (except Taxicab), 10" (Taxicab); Thickness ⅛".

Pedal Adjustment:—Free travel ⅞-1⅛" (adjusting nut on link at clutch fork).

Removal: Remove Transmission (see Transmission Removal below), remove clutch bearing support spring washer (in rear face of clutch housing), remove clutch housing bottom cover and control shaft inner bracket. Remove release bearing support and release bearing (see Clutch Release Bearing & Support data), tapping the support from inside the clutch housing to aid in removing (*CAUTION*—avoid striking tubular portion of support). Mark flywheel and clutch cover (to insure reinstallation in same position to maintain balance), remove clutch cover mounting bolts evenly, move clutch assembly away from flywheel at bottom and withdraw Driven Member, lower cover assembly and withdraw it through bottom of housing.

►**Removal of Excess Release Bearing Lubricant to correct clutch sticking**—If recess in bore on release bearing over-lubricated when clutch assembly installed, excess lubricant may be found causing clutch sticking. Clean out excess lubricant found at the following points: transmission drive gear, driven plate hub, clutch facings, pressure plate and cover assembly, release bearing support tube, fulcrum points of release fork, and recess in bore on release bearing (do not wash bearing, bearing is "sealed" type). Lubricate clutch parts exactly as described under Installation Note following to avoid above condition.

Clutch Installation Note—Install new felt oil seal against shoulder ahead of oil slinger retaining ring on Transmission Main Drive Gear (will bear against flared end of release bearing support when installed). Lubricate seal with engine oil before transmission installed. Coat entire length of outer diameter of release bearing support tube with grease. Lubricate release fork fulcrum points with a very light coat of grease. Apply light coat of Lubriplate on main driving gear splines. Use new paper gasket between support flange and clutch housing, make certain that flange is not bent or distorted (will cause misalignment of transmission).

CAUTION—Make certain that correct type Driven Member is used (see Note above).

Clutch Release Bearing & Support: ***See Pontiac Special Data for description.***

TRANSMISSION

Own Make. All helical gear. Constant-mesh synchro-mesh (Second & High), sliding gear (Low & Reverse). ***See Transmission Section for data.***

Transmission Control: Pontiac "Safety-shift" remote control type with gearshift lever on steering column.
See Transmission Section for complete data.

Removal:—Disconnect speedometer cable, gearshift selector and control rods from transmission. Disconnect rear universal (wire trunnions) and pull out propeller shaft. Remove upper transmission mounting screws, install guide pins (J-851), remove lower screws, pull transmission to rear, down and out.
Installation Note—Use guide pins installed in two upper transmission mounting holes to assist in sliding transmission straight forward into place (to avoid damage to clutch release bearing tubular support). *NOTE*—These guide pins may be made from ½-13 American National Thread bolts by cutting heads off and reducing over-all length to 4¼".

HYDRA-MATIC DRIVE
OPTIONAL EQUIPMENT

Own Make. Consists of Fluid Coupling and automatic self-shifting 4-speed planetary transmission.

►**Hydra-Matic Transmission Serial Number**—P9-1 UP. On plate on right side of transmission.

►**Hydra-Matic Neutral Switch Replacement on First 1949 Cars to correct Inoperative Starter**—***See "Pontiac Hydra-Matic Drive" in Transmission Section.***

Lubrication—Check fluid level in transmission every 2000 miles (at lubrication period). Drain and refill every 15000 miles. Use only GM Hydra-Matic Fluid.

Draining & Refilling—***See "Hydra-Matic Drive" in Transmission Section.***

Checking Fluid Level—Roll back right side of front floor mat. Clean all sand, lint, and dirt away from sheet metal cover in floor, remove cover, clean any dirt away from dipstick cover on transmission.
Set Hand Brake. Run engine for approx. 1½ minutes at speed equivalent to 20 MPH. with selector lever in "Neutral." Reduce engine speed to **slow idle** and move selector lever to "Drive" position, measure level with dipstick, add fluid until level is at "FULL" mark with engine idling.

►***CAUTION—Engine must be idling slow and selector lever in "Drive" position when checking fluid level.***

Linkage Adjustment—***See "Hydra-Matic Drive" in Transmission Section.***

Removal: ***See "Hydra-Matic Drive" in Transmission Section.***

UNIVERSALS

Mechanics Model 2CR lock ring retainer type or **Saginaw** clamp plate retainer type.
See Universals Section for complete data.

►*CAUTION*—Rear universal companion nut controls rear axle pinion bearing "pre-load" (must be adjusted whenever nut is loosened). ***See Pontiac Rear Axle in Rear Axle Section.***

NOTE—Driveshaft is one-piece type (slip joint on transmission mainshaft ahead of front universal).

REAR AXLE

Own Make. Hypoid gear, semi-floating type with pinion mounted on two taper roller bearings.
CAUTION—Rear Universal companion nut controls pinion bearing "pre-load."
See Rear Axle Section for complete data.

►**Filler Plug Production Change**—Moved from axle cover at rear to front face of carrier on right side on late cars.

Model	Ratio	Paint Mark①
Hydra-Matic (All)	3.63-1	Violet
Synchro-Mesh (Std.)	4.1-1	Green
Synchro-Mesh (Economy)	3.9-1	Red
Synchro-Mesh (Mt.)	4.3-1	White
Synchro-Mesh (Hvy. Dty.)	4.55-1	Yellow

①—On outer end of axle shafts.

Backlash—.003-.012" (new), slightly over .012" (worn).

Removal:—Disconnect rear universal and wire trunnions (do not disengage spline joint at transmission), remove axle shafts and carrier flange capscrews. Withdraw carrier assembly from housing.

►CAUTION—Rear universal joint companion flange nut controls pinion bearing "pre-load" (must be adjusted whenever nut is loosened).

Axle Shaft Removal:—Remove wheel, brake drum, 4 backing plate bolt nuts, static collector, and loosen bearing retainer (do not move backing plate or brake line may be damaged). Pull shaft with puller J-942 —(do not drag axle shaft on oil seal).

Wheel Bearing Adjustment—None.

SHOCK ABSORBERS

Delco. Direct acting, non-adjustable, sealed (non-refillable) type. Serviced by replacement.
See Shock Absorber Section for complete data.

FRONT SUSPENSION

Front Suspension: New linked parallelogram type with direct acting shock absorber mounted within each coil spring.
See Front Suspension Section for complete data.

Kingpin Inclination—4¾° to 5¼° crosswise.
Caster—Neg. ¾°. Limits Neg. ½° to Neg. 1°. Adjustable.
Camber—0°. Limits Neg. ¼° to Pos. ¼°. Adjustable.
Toe In—0-1/16". Adjust rod sleeves equally.

STEERING GEAR

Saginaw. Worm-and-Roller type.
See Steering Gear Section for complete data.

BRAKES

Service Brakes: Bendix Hydraulic, duo-servo, single anchor type **without eccentric adjustment.** Hand lever applies rear wheel service brakes.
See Brake Section for complete data.
Wheel Cylinder Bore—Front wheels 1 1/16". Rear ⅞"
Drums—Steel & cast-iron. Diameter 11".
Lining—Molded. Width 2¼" (front wheels), 1¾" (rear). Thickness 3/16". Length per shoe: 9 11/32" (primary), 11 31/32" (secondary).
Clearance—.015" at both ends of secondary (rear) shoe with primary shoe forced out against drum.
Braking Power—60% front wheels, 40% rear.

Hand Brake: See Service Brakes above.

MISC. MECHANICAL

Convertible Top Control: Hydro-Lectric type (hydraulic actuation with motor-driven pump supplying oil under pressure for power cylinders).
See Miscellaneous Section for complete data.

Windshield Wiper: Vacuum Link-&-Crank Arm type.
See Miscellaneous Section for complete data.

MODEL IDENTIFICATION

SERIAL NUMBER: On left front door hinge post.
1949 Numbers—P8RS-1001 Up.....Synchro-Mesh Tr.
P8RH-1001 Up.....with Hydra-Matic Drive
1950 Numbers—P8TS-1001 Up.....Synchro-Mesh Tr.
P8TH-1001 Up.....with Hydra-Matic Drive
Prefix letter indicates Assembly Plant (below).

►**Assembly Plant Prefix Letter. P**—Pontiac, Mich., **C**—South Gate, **L**—Linden, **W**—Wilmington, **K**—Kansas City, **A**—Atlanta, **F**—Framingham.

ENGINE NUMBER: Same as Serial Number. Stamped on boss on left upper front corner of engine block.

TUNE-UP

COMPRESSION PRESSURE: 158 lbs. at 1000 RPM. or 118-120 lbs. at cranking speed (Std. 6.5-1 Head), 189 lbs. at 1000 RPM. (Optl. 7.5-1 Head).

VACUUM READING: 18-20" steady idling at 7-8 MPH. or 365-385 RPM. on Hydra-Matic cars.

FIRING ORDER: 1-6-2-5-8-3-7-4. See diagram.

SPARK PLUG GAPS: .025". Limits .023-.028".
Plugs—AC No. 45. 14 mm. Metric.

DISTRIBUTOR: Breaker Gap—.016" (new points), .015" (used points).

►*CAUTION*—Dial indicator for setting point gap recommended by car manufacturer. ***Do not use feeler gauge for setting used points.***
Cam Angle—Closed 21° to 30° with .016" gap.
NOTE—If dial indicator not available when setting Breaker Gap on Used Points, car manufacturer recommends gap be set by cam angle at 28° closed.
Breaker Arm Spring Tension—19-23 ounces.
Automatic & Vacuum Advance—*See Ignition.*
Condenser Capacity—.18-.23 microfarad.

IGNITION TIMING: 6 °BTDC.
Timing Procedure—*See Ignition Timing.*
Timing Mark—First line of vibration dampener mark "/IGN.ONE/" aligned with pointer on chain cover at front of engine on left side.
Gaselector Setting—Set for barely audible ping when accelerating at 20-30 MPH., full throttle.

CARBURETION:
Idle Setting—¾-1¼ turns open. Two screws—turning screws out gives richer mixture.
Idle Speed (standard)—450-475 RPM. or 7-8 MPH.
Idle Speed (Hydra-Matic)—365-385 RPM.
Float Level—3/16" from top of floats to gasket seat on bowl cover (Gauge T109-162). Sides of floats should barely touch vertical uprights on gauge (to avoid floats binding on sides of bowl).
Accelerating Pump—Lower Hole (minimum) Normal. Upper Hole (max.)—if more charge required.

Choke Setting: Centered at Index.

Fuel Pump Pressure: 4-4¾ lbs.

MANIFOLD HEAT CONTROL: Thermostatic coil type, non-adjustable (fixed anchor pin). Counterweight should be securely clamped to shaft in vertical position with valve closed (cold position).
NOTE—Valve shaft bushings are Stainless Steel.

VALVE TAPPET CLEARANCE: .011" to .013", Hot. .011" "Go" gauge, .013" "No Go" gauge.
High Speed Setting—.013" EXH. Hot.

►**Cold Setting with Engine Stopped**—.012" to .014" Cold (room temperature). *CAUTION*—Check setting after engine warmed-up for limits of .011" to .013".
Valve Timing Check—*See Valve Timing.*

STARTING: *See Batery, Starter, Generator, Regulator.*

IGNITION

IGNITION SWITCH: Delco-Remy No. 1116461.
Ignition Lock—Briggs & Stratton or Delco-Remy.

COIL: Delco-Remy No. ('49) 1115380, ('50) 1115378. Mounted on engine.
Ignition Current—2.5 amperes idling, 4.5 stopped.

CONDENSER: Delco-Remy No. 1869704.
Capacity—.18-.23 microfarad.

DISTRIBUTOR: Delco-Remy Model (1949) 1110816, (1950) 1110818. Automatic and vacuum advance type with new "center-bearing" breaker plate.

►**Breaker Plate Bearing Assembly**—Plate rotates on 3 bakelite buttons on support plate with spring tension adjustment (shim washers) on underside of support plate. Pull required to move plate should be 8 oz. min., 16 oz. max. with breaker plate assembly out of housing.
See "Delco-Remy Center-Bearing Breaker Plate Distributor" in Electrical Equipment Section.

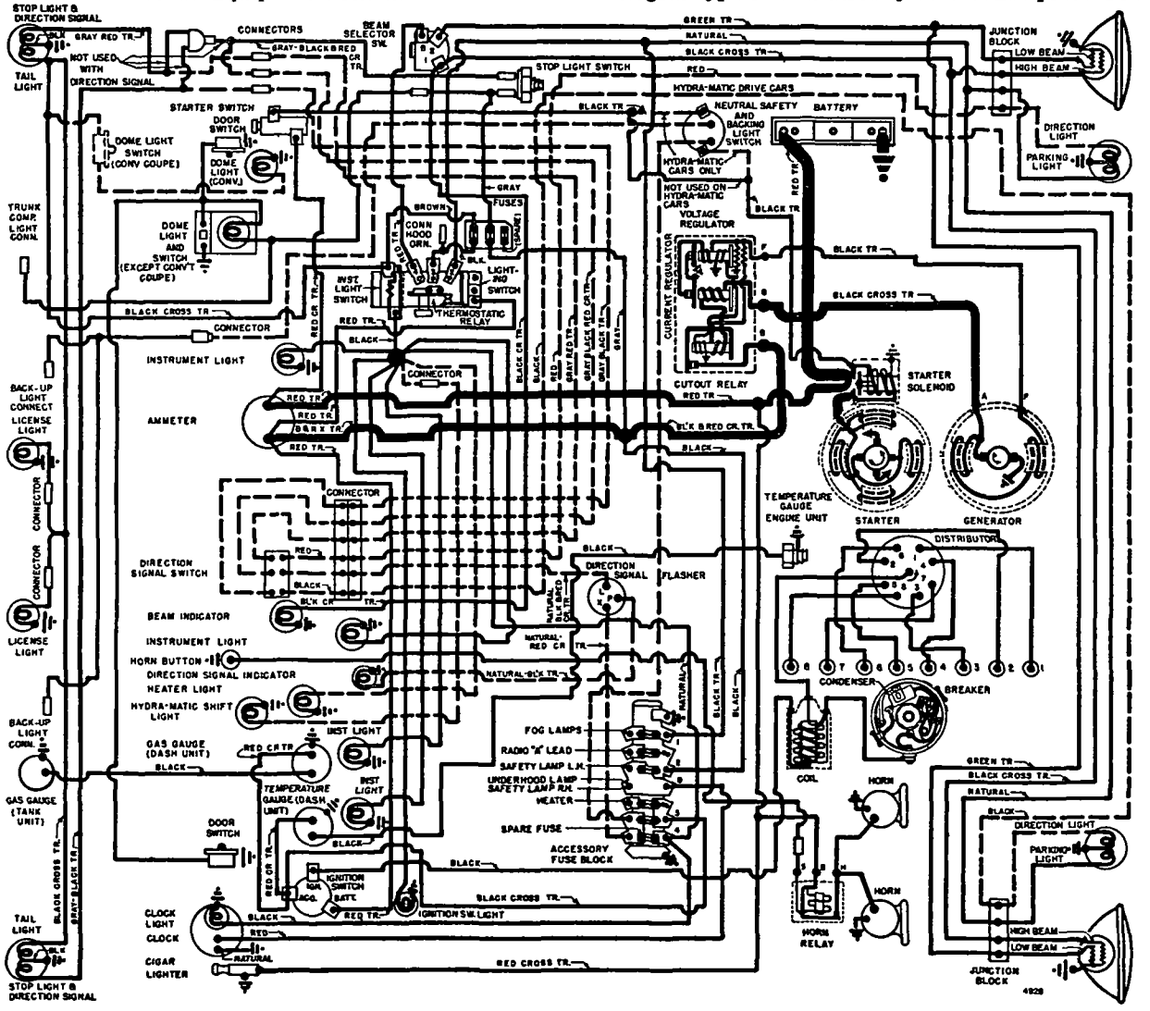

Breaker Gap—.016" (new points), .015" (used pts.).

►*CAUTION*—Dial indicator for setting point gap recommended by car manufacturer. ***Do not use feeler gauge for setting used points.***
Cam Angle—Closed 21° to 30° with .016" gap.
NOTE—If dial indicator not available when setting Breaker Gap on Used Points, car manufacturer recommends gap be set by cam angle at 28° closed.
Breaker Arm Spring Tension—19-23 ounces.
Rotation—Counter-clockwise viewed from above.

Automatic Advance

Degrees Distr.	R.P.M.	Degrees Eng.	R.P.M.
Start	250	2	500
7.5	1200	15	2400
8.25	1500	16.5	3000
13.5	2100	27	4200

Gaselector—Manual adjustment at distributor. 10° advance or retard. See Ignition Timing.

Vacuum Spark Control: Delco-Remy No. 1116050. Integral type linked directly to breaker plate. Pro-

vides additional advance at speeds above idling except when engine accelerated or operated with wide open throttle when spark retarded by return spring within unit. **Plunger Travel**—7/32".

Vacuum Advance

Distr. Degrees	Eng. Degrees	Vacuum (" of HG)
Start	0°	7-9"
10°	20°	17.5-19.5"

NOTE—Max. 22° engine, with full vacuum.

Distributor Removal: On left side of engine. Disconnect vacuum line, take out Gaselector screw, lift out.

IGNITION TIMING

Std. Setting	Flywheel Degrees	Piston Pos.
All Engines①	6° BTDC	.0128" BTDC.

①—Regular Fuel—Std. Hd. Ethyl Fuel—7.5-1 Hd.

Timing Mark—"/IGN.ONE/" on vibration dampener. Two straight lines of mark indicates timing range of 4°. Use first (6°) line when setting ignition timing.

NOTE—Manufacturer recommends use of KMO-318 Timing Light or J-578 Synchroscope for Timing.

Timing (with Timing Light)—Connect timing light between distributor terminal and ground, turn on ignition. With #1 piston on compression, turn engine over until piston is 6° or .0128" before top dead center with first line of ignition mark "/IGN.ONE/" aligned with pointer on chain cover at front of engine on left side. Loosen Gaselector screw, center pointer scale ("0" mark at reference line), tighten screw. Loosen advance arm clamp bolt, rotate distributor until timing light lights (contacts just opening), tighten bolt. Check Gaselector Setting.

Timing (with Synchroscope)—Connect at #1 spark plug. Mark first line of ignition mark with white chalk or paint, idle engine and adjust distributor as directed above until pointer and white line are aligned. Check Gaselector Setting (see below).

Gaselector Setting—Set to give best performance without spark knock or ping for fuel used. Marked "ADV" and "RET", adjust according to these marks.

CARBURETOR

Carter WCD, No. 719S.....**Synchro-Mesh Trans.**
Carter WCD, No. 720S.....**Hydra-Matic Drive**
1¼" dual barrel downdraft types with Carter Climatic Control.
Casting No. on Flange—(719S) 550, (720S) 558.
See Carburetor Section for complete data.

Settings (Idle Setting, Float Level, and Accelerating Pump): ***See Tune-Up.***
Metering Rod & Jet—***See Carter Jet Table in Carburetor Section.***

Hydra-Matic Throttle Linkage Adjustment: ***See Pontiac Hydra-Matic Drive in Transmission Section.***

Fast Idle: Carter Dual (WCD) Carburetor type.
See Carburetion Equipment Section for complete data.
Setting—.026" throttle opening (Gauge No. T109-189) with choke valve tightly closed. Adjust by turning fast idle screw.

Automatic Choke: Carter Climatic Control (Dual Carburetor).
See Carburetion Equipment Section for complete data.
Setting—Centered at Index.

CARB. EQUIPMENT

Air Cleaner: AC No. 1544256 oil-wetted type (standard), No. 1544530 heavy duty oil-bath type (optl.).
Filter Element—AC #6 (std.), #7-S (heavy duty).
Servicing—Clean and re-oil std. cleaner, or on heavy duty clean and refill reservoir with 1 pint SAE 50 (20W below freezing) oil, at 10,000 mile intervals (twice yearly) or more often if required.

Fuel Pump (Fuel-&-Vacuum): AC Type AJ, 1537317.
Replacement Pump—AC No. 539.
Pressure—4-4¾ lbs.
See Carburetion Equipment Section for complete data.

Gasoline Gauge: AC Electric type.
Dash Unit—AC 1517117. **Tank Unit**—AC 1517083.
See Carburetion Equipment Section for complete data.

BATTERY

Delco Type 15E-4. 6 Volt, 15 Plate, 100 Ampere Hour
Grounded Terminal—Negative (—) to engine.
Location—On left side of engine compartment.

Police Battery Delco Type 19E-4. 6 Volt, 19 Plate, 130 Ampere Hour Capacity (20 hour rate).
Grounded Ter. & Location—Same as 15E-4 above.

STARTER

LHD .....**Delco-Remy 1107957. Arm. No. 1867897.**
RHD .....**Delco-Remy 1107934. Arm. No. 1867897.**

►***CAUTION—LHD starter operates whenever pushbutton depressed (and shift lever in neutral on Hydra-Matic)***
Drive—Overrunning clutch (solenoid pinion shift).
Rotation—Counter-clockwise at commutator end.
Brush Spring Tension—24-28 ozs. each.

Performance Data—1107934 & 957

Torque	R.P.M.	Volts	Amperes
0 ft. lbs	5500	5.7	80①
14 "	Lock	3.0	600

①—Includes current draw of starter switch.

Removal: Flange mounted at left front of flywheel housing. To remove, take out mounting screws.

Starting Switch (1107957): Delco-Remy Solenoid 1118140 (no relay used) mounted on starter and controlled by Pushbutton Switch No. 1996037 (and Neutral Safety Switch No. 1997846 on Hydra-Matic).
CAUTION—Overrunning clutch pinion clearance must be adjusted if solenoid removed from starter.
See Electrical Equipment Section for complete data.
(1107934)—Delco-Remy Solenoid 1118102 on starter and controlled by Relay No. 269-G and Pushbutton Switch No. 1996039 (and Neutral Safety Switch 1997846 on Hydra-Matic Drive cars).
See Electrical Equipment Section for complete data.
Neutral Safety Switch Adjustment—***See Pontiac Hydra-Matic Drive in Transmission Section.***

GENERATOR

Standard.....**Delco-Remy 1102711. Arm. No. 1879002**
Police.....**Delco-Remy 1106403. Arm. No. 1880252**
Two brush types with current and voltage regulation
Charging Rate Adjustment—None. ***See Regulator.***
Maximum Charging Rate—36 amperes cold, at 2040 Gen. RPM. or 21-23 MPH. Actual charging rate set by regulator (dependent on battery condition).

Performance Data—Cold

	Amperes	Volts	R.P.M.
1102711	30①	8.0	1750
1106403	35	8.0	1040

①—Not maximum output. See Current Regulator.

Rotation—Counter-clockwise at commutator end.
Brush Spring Tension—25 ozs. each.
Field Current—(1102711) 1.75-1.9 amperes at 6 volts, (1106403) 1.77-2.0 amperes at 6.0 volts.

Removal: Generator pivot mounted at left front of engine. To remove, take out pivot and clamp bolts.

Belt Adjustment: Belt deflection or sideplay midway between generator & pump pulley should be 1½".

REGULATOR

Standard.....**Delco-Remy 1118301** (for 1102711 Gen.)
Police .....**Delco-Remy 1118352** (for 1106403 Gen.)

►***NEW "1118300 SERIES"*** regulators have screw adjustment for settings and single regulator springs.
See Electrical Equipment Section for complete data.
CAUTION—Check generator for grounded field coils and leads before changing regulator settings to correct High Charging Rate of High Voltage.

Cutout Relay

Cuts In—5.9-6.8 volts hot (set to 6.4 volts hot).
Contact Gap—.020" (same for both contacts).
Air Gap—.020" (with contacts just closed).

Voltage Regulator

Setting—7.0-7.7 volts hot (set to 7.4 volts hot). Regulator is over-compensated for temperature. Should be checked with cover in place and hot.
Air Gap—.075" with armature pressed down to point where contacts are just touching.
Checking & Adjustment—***See Elec. Equip. Section.***

Current Regulator

Setting (1118301).....32-40 amps. hot (set at 36 hot).
Setting (1118352).....33-37 amps. hot (set at 35 hot).
Air Gap—.075" with armature pressed down to point where contacts are just touching.
Checking & Adjustment—***See Elec. Equip. Section.***

LIGHTING

Headlamps: Guide "Sealed Beam" type.
See Electrical Equipment Section for complete data.
Adjustment—Aim upper beam straight ahead (hot spot center 3" below lamp center height at 25 ft.).
Beam Indicator—At speedometer. Lighted when upper beams in use.

Directional Signal: ***See Electrical Equipment Section.***
Direction Signal Indicator—Red pilot light on speedometer dial between 60 & 70. Flashes when signal in use.

Switches

Lighting—Delco-Remy No. 1995032.
Instrument—Part of Lighting Switch. Rheostat operated by turning Light Switch Knob.
Beam Selector—Delco-Remy No. 1997008.
Stop Light—Delco-Remy No. 1997725.

MISC. ELECTRICAL

THERMOSTATIC CIRCUIT BREAKER: Delco-Remy. On back of light switch (part of switch assy.). Contacts remain closed with 30 amperes but open in 3 minutes with 42 amperes at 70°F. Not adjustable.

MAIN FUSE BLOCK: On left hand engine side of dash. Two fuses (plus 1 spare) as follows:
Tail Lamp—SFE 14 ampere. In gold colored fuse holder. Protects rear license, instrument, ignition key, and clock lamps (dome on convertible).
Stop Lamp—SFE 14 ampere. In gray colored fuse holder. Protects trunk light and dome light (except on Convertible).

ACCESSORY FUSE BLOCK: On dash behind instrument panel. Five fuses (plus 1 spare) as follows:
Top Fuse—SFE 20 amp. Fog Lights.
2nd Fuse—SFE 14 amp. Radio.
3rd Fuse—SFE 20 amp. Clock power, Glove Box Light, Underhood Light, Safety (Spot) Light.
4th Fuse—SFE 20 amp. Heater blower motor.
5th Fuse—SFE 20 amp. Dir. Signal & Backup.
6th Fuse—SFE 20 amp. Spare fuse.

CONTINUED ON NEXT PAGE

C NTINUED FR M PRECEDIN PAGE

HORNS: Delco-Remy No. 1999613 or 1999645 (Low Note), 1999614 or 1999646 (High Note). Vibrator types operated by relay.

NOTE—1999645 & 6 horns are welded.

Type	Current (at 6 volts)	Air Gap
Low Note	19-21 amperes	.047-.052"
High Note	18-20 amperes	.039-.044"

Horn Relay: Delco-Remy No. 1116775.
Contact Gap—.027". Air Gap—.014" (closed).
Contacts Close—2.75-4.0 volts (set to 3.5 volts).

ENGINE

ENGINE SPECIFICATIONS: 8 cylinder, "L" head type.

	1949	1950
①Bore	3¼"	3⅜"
Stroke	3¾"	3¾"
Displacement	248.9 cu. ins.	268.2 cu.ins
Rated Horsepower	33.8	36.4
Developed HP	104 at 3800	108 at 3600

Compression Ratio—Std. 6.5-1. Optl. 7.5-1, iron hds.
Compression & Vacuum Reading—*See Tune-Up.*
①—*For Original Bore Sizes, see Pontiac Special Data.*

TIGHTENING TORQUES: *See Pontiac Special Data.*

CYLINDER HEAD: Tightening Torque & Cylinder Head Diagram—*See Pontiac Special Data.*

PISTONS: Chrome nickel alloy, electro-plated type. Pistons have 20 oil drain holes in oil ring groove.
Length—3 19/32".
Weight—(1949) 24.64 ozs., (1950) 26.7 ozs.
Removal—Pistons and rods removed from above.
Clearance—Top Land .0165-.0284". Skirt—See Fitting New Pistons.

Fitting New Pistons:—Insert .0015" x ½" feeler between piston and cylinder wall. Pull to withdraw feeler must be 10-20 lbs. Taper and out-of-round limits—Piston .0005", Cylinder .0005" max. new.

Replacement Pistons: *See Pontiac Special Data.*

PISTON RINGS: Two tapered-face compression rings above pin, one slotted oil control ring below pin. Oil ring groove has 20 oil drain holes.

NOTE—Rings are cadmium-plated or tin-plated.

Ring	Width	End Gap	Side Clearance
Compr. (#1,2)	3/32"	.008-.015"	.0015-.003"
Oil (#3)	3/16"	.007-.017"	.001-.0025"

Installing Compression Rings—Mark "TOP" up.

Replacement Rings: .005", .010", .020", .030" Oversize.

PISTON PIN: Diameter 15/16". Length 2 7/8". Pin is shot-peened type (shot-peened before final grinding and lapping). Pin is locked in one piston boss by self-locking lockscrew and opposite boss is slotted to permit pin movement.
Pin Fit in Piston—*See Pontiac Special Data.*
Pin Fit in Rod Bushing—.0004-.0006" clearance.

Pin Removal & Installation: *See Pontiac Special Data.*

Replacement Pins:—.001" (red & brown), .003" (red), .005" (blue) oversize. Paint marked on end of pin.

CONNECTING ROD: Weight 32 ozs. Length 7 9/16".
Piston Pin Bushing (Upper Bearing)—Split aluminum bronze bushings. *See Pontiac Special Data.*
Lower Bearing Diameter—2".
NOTE—Plastigage can be used for checking bearing clearance. See "Crankshaft & Main Bearings" in Pontiac Special Data.

Lower Bearing—Thin type, interchangeable, steel-backed, babbitt-lined type.
Clearance—.0001-.0021". **Sideplay**—.007-.012".
NOTE—Plastigage can be used for checking bearing clearance. See "Crankshaft & Main Bearings" in Pontiac Special Data.

Bearing Adjustment:—None (no shims).

Replacement Bearings: Standard size & .001" Undersize. *NOTE*—Bearings have small tongue which must engage groove in rod and cap.

Installing Rods: Not offset (install either way). *NOTE*—Rods and bearing caps marked to insure correct reassembly (marks must be together). These marks do not indicate cylinder in which rod used. *CAUTION*—Keep each connecting rod and its bearing cap together.

CRANKSHAFT: Five bearing type with integral counterweights and vibration dampener on forward end.
Bearing Diameters—#1, 2 3/8"; #2, 2 13/32"; #3, 2 7/16"; #4, 2 15/32"; #5, ('49) 2 1/2", ('50) 2 5/8".
Bearings—Thin type, removable, steel-backed, babbitt-lined. Upper and lower bearing halves alike.
Clearance—.0003-.0023".
NOTE—Plastigage can be used for checking bearing clearance. See "Crankshaft & Main Bearings" in Pontiac Special Data.

Bearing Adjustment:—None (no shims). *See Pontiac Special Data for Removal and Fitting of Bearings.*
Rear Main Bearing Oil Seal Renewal—*See Pontiac Special Data.*

Replacement Bearings: Standard & .001" Undersize.

End Thrust: Taken by #4 (rear intermediate) bearing. **Endplay**—.003-.008".

CAMSHAFT: Five bearing, non-adjustable chain.
Timing Chain Cover Oil Seal Installation—*See "Timing Chain" in Pontiac Special Data.*
Bearing Diameters—#1, 2"; #2, 1 31/32"; #3, 1 15/16"; #4, 1 29/32"; #5, 1 7/8". *For Bearing Finished Sizes, see "Camshaft & Bearings" in Pontiac Special Data.*
Bearings—Steel-backed, babbitt-lined bushings.
Clearance—.0015-.0025" (new).

End Thrust: Steel thrust plate behind camshaft sprocket. Replace if worn. **Endplay**—.002-.005".

Timing Chain: Morse. Width ('49) 3/4", ('50) 27/32". Pitch 3/8". Length 21" or 56 links.
Chain Installation—*See Pontiac Special Data.*

Camshaft Setting: Sprockets marked. Mesh chain with sprockets turned so that "0" marks are adjacent and in line with straightedge across shaft centers.

VALVES:	Head Diameter	Stem Diameter	Length
Intake	1 15/32"	.310-.311"	5.53"
Exhaust	1 11/32"	.310-.311"	5.53"

	Seat Angle	Lift	Stem Clearance
Intake	30°	19/64"	Free fit to .0006"①
Exhaust	45°	19/64"	Free fit to .0006"①

① Guides tapered (.0006" max. clearance at bottom).

Valve Guides:—Removable, tapered guides (.001" taper to the inch with greatest clearance at top). Use Tool J-2542 for removing valve guides.
Exhaust Guide Counterbore—Exhaust guides are counterbored to a depth of ¾". Use Tool Number J-2122 to clean out counterbore.
IMPORTANT—Measure clearance at bottom end. Valve should just fall through guide of own weight when started in guide. *NOTE*—Guides should be cleaned with Tool KMO-122 valve guide cleaner (blade type). Service guides straight cut, install guides and ream to provide proper stem clearance with P.R. 131 Reamer.

Valve Springs:—Intake and exhaust springs identical. Install with two closed coils at top and dampener on top of each spring. Use new dampeners whenever removed from spring. **Free Length**—2 9/16".

1949 Valve Spring Specifications

	Spring Pressure	Spring Length
Valve Closed	59½ lbs.	1 29/32"
Valve Open	101 lbs.	1 19/32"

1950 Valve Spring Specifications

Valve Closed	62½ lbs.	1 23/32"
Valve Open	105 lbs.	1 13/32"

Valve Lifters:—Barrel type, cast-iron. Guide holes reamed in block. Lifters furnished .005" oversize (use pilot reamer J-706-P when reaming holes to maintain alignment—valve guides must be removed, use Valve Guide Removing Tool J-2542).
Clearance—Free fit. Lifter should just move freely with finger touch.

VALVE TIMING

Tappet Clearance: .011" to .013", All Valves, Hot. .011" "Go" gauge, .013" "No Go" gauge.
High Speed Setting—.013" EXH. Hot.
Cold Setting with Engine Stopped—.012" to .014" Cold (room temperature). *CAUTION*—Check setting after engine warmed-up for limits of .011" to .013".

Valve Timing:—*See Camshaft Setting above.*
Intake Valves—Open 5° BTDC. Close 39° ALDC.
Exhaust Valves—Open 45° BLDC. Close 5° ATDC.
Valve Timing Check—With .015" tappet clearance #6 intake valve should open with #6 piston 5° or .0089" before top dead center with first straight line of dampener mark '/IGN.ONE/' slightly past pointer on left front face of chain cover. Reset tappet clearance .011-.013" (warm).

LUBRICATION

Engine Oiling System: Pressure to main bearings connecting rod lower bearings and piston pins (rifle-drilled rods), camshaft bearings, and chain.
Crankcase Capacity—5 qts. (refill), 6 qts. (dry).
Normal Oil Pressure—35-45 lbs. at 40 MPH. with warm oil (10-30 lbs. idling).
Oil Pressure Regulator—On oil pump. Opens at 40 lbs. Non-adjustable. *NOTE*—Replace regulator spring if free length less than 2 5/16".

Oil Pump: Gear type. On right side of crankcase.
Removal & Installation—*See Pontiac Special Data.*

Oil Cleaner: Pontiac precipitation type (mounted in crankcase).
Removal & Installation—*See Pontiac Special Data.*

Oil Pressure Gauge: AC No. 1507350. Not electric.

Crankcase Ventilation: Filter element in oil filler cap (inlet). Outlet pipe at valve compt. cover on right rear side of engine (cars with oil bath air cleaner use 3-piece outlet pipe containing filter element).
Oil Filler (Crankcase Ventilator) Cap Cleaning—Wash filter element and re-oil by dipping in engine oil when servicing air cleaner.
CAUTION—Filler cap must be installed with air opening in cap toward front of car and seam in line with groove in tube (may cause excessive oil consumption if installed backward).
Crankcase Ventilator Outlet Pipe—On cars with Oil-bath type Air Cleaner, special 3-piece ventilator outlet pipe used which has copper gauze type air cleaner in container section. Wash and re-oil filter element when servicing air cleaner.

COOLING

Cooling System: Pressure type with pressure valve and vacuum valve (relief valves) in filler cap. Water distribution tube installed in block.
Capacity—20 quarts.

Pressure Valve—AC No. 850501 Filler Cap. Opens at 4 lbs. (3¼-4¼ lbs.).

Water Pump: Packless, sealed ball-bearing shaft.
NOTE—Fan flange reversed over previous models. Pump Body Plate and Cylinder Block-to-Pump Gasket changed during 1949 production.
See Water Pump Section for complete data.
Removal—Drain cooling system, remove hose connection at pump, remove belt, take out water pump mounting bolts and lift pump out.
Belt Adjustment—***See Generator Belt Adjustment.***

Thermostat:—Harrison. In cylinder head outlet.
Setting—Starts to open 151°F. Fully open 173°F.

Temperature Gauge: AC Electric type.
Dash Unit—AC No. 1512126.
Engine Unit—AC No. 1512015.
See Miscellaneous Section for complete data.

CLUTCH

Inland. Single Plate, "Diaphragm", dry disc type with Long Driven Member Model 9½CF-TS (1949 exc. Taxi), Model 10CF-CS (1950, and '49 Taxi).
See Clutch Section for complete data.

►*1949 NOTE*—Driven Member same size as Six Cyl. but **must not be interchanged.** Can be identified by stenciled notation on facings and color markings of torsional springs in hub as follows:

	Facing Mark	Spring Color
1949 8 Cyl.	41-42 8 Cyl.	Brown & Blue

Facings—Molded type, 2 required. Inside Diameter 6" ('49 & Taxi), 6¾" (1950). Outside Diameter 9½" (1949), 10" (1950 & Taxi). ⅛" thick.

Pedal Adjustment:—Free travel ⅞-1⅛" (adjusting nut on link at clutch fork).

Removal: Remove Transmission (see Transmission Removal below), remove clutch bearing support spring washer (in rear face of clutch housing), remove clutch housing bottom cover and control shaft inner bracket. Remove release bearing support and release bearing (see Clutch Release Bearing & Support data), tapping the support from inside the clutch housing to aid in removing (*CAUTION*—avoid striking tubular portion of support). Mark flywheel and clutch cover (to insure reinstallation in same position to maintain balance), remove clutch cover mounting bolts evenly, move clutch assembly away from flywheel at bottom and withdraw Driven Member, lower cover assembly and withdraw it through bottom of housing.

►**Removal of Excess Release Bearing Lubricant to correct clutch sticking.** ***See 1949-50 Pontiac 6 pages.***

Clutch Installation Note—Install new felt oil seal against shoulder ahead of oil slinger retaining ring on Transmission Main Drive Gear (will bear against flared end of release bearing support when installed). Lubricate seal with engine oil before transmission installed. Coat entire length of outer diameter of release bearing support tube with grease. Lubricate release fork fulcrum points with a very light coat of grease. Apply light coat of Lubriplate on main driving gear splines. Use new paper gasket between support flange and clutch housing, make certain that flange is not bent or distorted (will cause misalignment of transmission).
CAUTION—Make certain that correct type Driven Member is used (see Note above).

Clutch Release Bearing & Support: ***See Pontiac Special Data for description.***

TRANSMISSION

Own Make. All helical gear. Constant-mesh synchro-mesh (Second & High), sliding gear (Low & Reverse). ***See Transmission Section for data.***

Transmission Control: Pontiac "Safety-shift" remote control type with gearshift lever on steering column.
See Transmission Section for complete data.

Removal:—Disconnect speedometer cable, gearshift selector and control rods from transmission. Disconnect rear universal (wire trunnions) and pull out propeller shaft. Remove upper transmission mounting screws, install guide pins (J-851), remove lower screws, pull transmission to rear, down and out.
Installation Note—Use guide pins installed in two upper transmission mounting holes to assist in sliding transmission straight forward into place (to avoid damage to clutch release bearing tubular support). *NOTE*—These guide pins may be made from ½-13 American National Thread bolts by cutting heads off and reducing over-all length to 4¼".

HYDRA-MATIC DRIVE
OPTIONAL EQUIPMENT

Own Make. Consists of Fluid Coupling and automatic self-shifting 4-speed planetary transmission.

►**Hydra-Matic Transmission Serial Number**—P9-1 UP. On plate on right side of transmission.

►**Hydra-Matic Neutral Switch Replacement on First 1949 Cars to correct Inoperative Starter**—***See "Pontiac Hydra-Matic Drive" in Transmission Section:***

Lubrication—Check fluid level in transmission every 2000 miles (at lubrication period). Drain and refill every 15000 miles. Use only GM Hydra-Matic Fluid.
Draining & Refilling—***See "Hydra-Matic Drive" in Transmission Section.***
Checking Fluid Level—Roll back right side of front floor mat. Clean all sand, lint, and dirt away from sheet metal cover in floor, remove cover, clean any dirt away from dipstick cover on transmission. **Set Hand Brake.** Run engine for approx. 1½ minutes at speed equivalent to 20 MPH. with selector lever in "Neutral." Reduce engine speed to **slow idle** and move selector lever to "Drive" position, measure level with dipstick, add fluid until level is at "FULL" mark with engine idling.
►***CAUTION—Engine must be idling slow and selector lever in "Drive" position when checking fluid level.***
Linkage Adjustment—***See "Hydra-Matic Drive" in Transmission Section.***

Removal: ***See "Hydra-Matic Drive" in Transmission Section.***

UNIVERSALS

Mechanics Model 2CR lock ring retainer type or **Saginaw** clamp plate retainer type.
See Universals Section for complete data.
►*CAUTION*—Rear universal companion nut controls rear axle pinion bearing "pre-load" (must be adjusted whenever nut is loosened). ***See Pontiac Rear Axle in Rear Axle Section.***
NOTE—Driveshaft is one-piece typ e(slip joint on transmission mainshaft ahead of front universal).

REAR AXLE

Own Make. Hypoid gear, semi-floating type with pinion mounted on two taper roller bearings.
CAUTION—Rear Universal companion nut controls pinion bearing "pre-load."
See Rear Axle Section for complete data.

►**Filler Plug Production Change**—Moved from axle cover at rear to front face of carrier on right side on late cars.

Model	Ratio	Paint Mark①
Hydra-Matic (All)	3.63-1	Violet
Synchro-Mesh ('49 Std.)	4.1-1	Green
Synchro-Mesh ('50) Std.)	3.9-1	Red
Synchro-Mesh (Mt.)	4.3-1	White
Synchro-Mesh (Hvy. Dty.)	4.55-1	Yellow

①—On outer end of axle shafts.

Backlash—.003-.012" (new), slightly over .012" (worn).

Removal:—Disconnect rear universal and wire trunnions (do not disengage spline joint at transmission), remove axle shafts and carrier flange capscrews. Withdraw carrier assembly from housing.

►CAUTION—Rear universal joint companion flange nut controls pinion bearing "pre-load" (must be adjusted whenever nut is loosened).

Axle Shaft Removal:—Remove wheel, brake drum, 4 backing plate bolt nuts, static collector, and loosen bearing retainer (do not move backing plate or brake line may be damaged). Pull shaft with puller J-942 —(do not drag axle shaft on oil seal).

Wheel Bearing Adjustment—None.

SHOCK ABSORBERS

Delco. Direct acting, non-adjustable, sealed (non-refilliable) type. Serviced by replacement.
See Shock Absorber Section for complete data.

FRONT SUSPENSION

Front Suspension: New linked parallelogram type with direct acting shock absorber mounted within each coil spring.
See Front Suspension Section for complete data.
Kingpin Inclination—4¾° to 5¼° crosswise.
Caster—Neg. ¾°. Limits Neg. ½° to Neg. 1°. Adjustable.
Camber—0°. Limits Neg. ¼° to Pos. ¼°. Adjustable.
Toe In—0-1/16". Adjust rod sleeves equally.

STEERING GEAR

Saginaw. Worm-and-Roller type.
See Steering Gear Section for complete data.

BRAKES

Service Brakes: Bendix Hydraulic, duo-servo, single anchor type **without eccentric adjustment.** Hand lever applies rear wheel service brakes.
See Brake Section for complete data.
Wheel Cylinder Bore—Front wheels 1 1/16". Rear ⅞"
Drums—Steel & cast-iron. Diameter 11".
Lining—Molded. Width 2¼" (front wheels), 1¾" (rear). Thickness 3/16". Length per shoe: 9 11/32" (primary), 11 31/32" (secondary).
Clearance—.015" at both ends of secondary (rear) shoe with primary shoe forced out against drum.
Braking Power—60% front wheels, 40% rear.

Hand Brake: See Service Brakes above.

MISC. MECHANICAL

Convertible Top Control: Hydro-Lectric type (hydraulic actuation with motor-driven pump supplying oil under pressure for power cylinders).
See Miscellaneous Section for complete data.

Windshield Wiper: Vacuum Link-&-Crank Arm type.
See Miscellaneous Section for complete data.

ENGINE REMOVAL

ALL 1949 MODELS

See Engine Removal data for 1947-48 Champion and 1947-48 Commander in previous release.

CYLINDER HEAD

ALL 1949-50 MODELS

CYLINDER HEAD INSTALLATION: Use Torque Indicating Wrench to tighten cylinder head capscrews, tighten in correct sequence as shown in the diagrams. Tighten heads as follows:

Cast Iron Heads—With engine cold, tighten all nuts evenly to correct tension. Then run engine until it is thoroughly warmed up and recheck all nuts (additional tightening may be necessary for correct tension).

Tightening Torque—See Tightening (Torque Wrench) Specifications below.

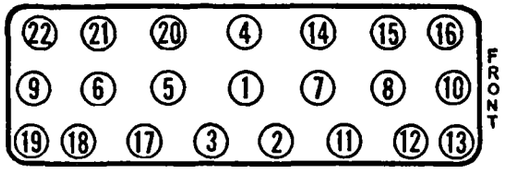

STUDEBAKER CHAMPION

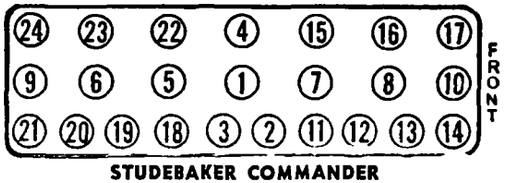

STUDEBAKER COMMANDER

TIGHTENING (TORQUE WRENCH) SPECIFICATIONS

1949-50 CHAMPION

	Ft. Lbs.	In. Lbs.
Cylinder Head Cap Screws	46-50	550-600
Connecting Rod Bolt Nuts	28-32	336-384
Vib. Dampener Cap Screw	130-140	1560-1680
Rear Spring U Bolt Nut	47-50	565-600
Front Spring U Bolt Nut	75-80	900-960
Valve Tappet Adjusting Screw		25 min.

1949-50 COMMANDER

	Ft. Lbs.	In. Lbs.
Cylinder Head Cap Screws	80-85	960-1020
Connecting Rod Bolt Nuts	52-54	624-648
Vibration Dampener Nut	160-170	1920-2040
Rear Spring U Bolt Nut	75-80	900-960
Front Spring U Bolt Nut	80-85	960-1020

1949-50 CHAMPION & COMMANDER

	Ft. Lbs.	In. Lbs.
Main Bearing Cap Screws	88-93	1050-1115
Piston Pin Clamp Screw Nut	20-25	240-300
Spark Plugs (14 mm.)	25-30	300-360
Rear Axle Shaft Nut	120-130	1440-1560
Front Susp. Arm Bushing	170	2040
Flywheel Bolt Nut	33-35	396-420
Timing Cover Bolts & Screws	13-17	156-204
Clutch Cover Mounting Screw	13-15	156-180
Rear Engine Mounting	25-30	300-360

ORIGINAL BORE & PISTONS

ALL 1949-50 MODELS

ORIGINAL BORE & PISTON SIZES: Bore Sizes. Marked by figure stamped on top face of cylinder block next to each cylinder bore as follows:

Champion Mark	Size	Commander Mark	Size
0	3.000"	25	3.3125"
05	3.0005"	3	3.313"
1	3.001"	35	3.3135"
15	3.0015"	4	3.314"
2	3.002"	45	3.3145"
25	3.0025"	5	3.315"

Original Pistons—Stamped with size of cylinder bore in which pistons are installed.

Replacement Pistons—Stamped figure on top indicates actual size of piston. Pistons furnished std. and .010", .020", .030", .040" Oversize.

PISTONS

ALL 1949-50 MODELS

REPLACEMENT PISTONS: Finished aluminum alloy pistons (with fitted piston pins) are furnished for replacement in the sizes listed below.

NOTE—Commander engine pistons are provided with a groove in the second land to reduce blow-by. Groove must be cleaned when pistons removed.

1949-50 CHAMPION

Size	Limits	Part No.
Standard	3.0000-3.0030"	524316
.010" Oversize	3.0125-3.0145"	524294
.020" Oversize	3.0215-3.0235"	524296
.030" Oversize	3.0315-3.0335"	524297
.040" Oversize	3.0415-3.0435"	522112

1949-50 COMMANDER

Standard	3.3120-3.3130"	524315
.010" Oversize		524309
.020" Oversize	3.3335-3.3355"	524311
.030" Oversize	3.3435-3.3455"	524312
.040" Oversize	3.3535-3.3555"	522119

CONNECTING ROD & BEARINGS

ALL 1949-50 MODELS

CONNECTING ROD 'PALNUT' INSTALLATION: Used on all models. Consists of a special patented locknut installed on top of regular nut instead of cotterpin. To install Palnut, tighten regular nut properly (see Torque table), install Palnut with open face out (away from regular nut), tighten Palnut until it just contacts regular nut, then tighten Palnut ⅓ turn additional to lock it in place.

VIBRATION DAMPENER

ALL 1949-50 MODELS

VIBRATION DAMPENER: Dampener consists of a flywheel mounted on two rubber discs (discs have insulating buttons at pilot rivet holes) mounted on the crankshaft pulley hub at the forward end of the crankshaft and retained by a large nut on the end of the crankshaft. Compression of rubber discs is limited by length of crankshaft pulley hub (when retaining nut drawn up securely) and no adjustment required. If dampener does not operate correctly, replace rubber discs.

CAMSHAFT & BEARINGS

ALL 1949-50 MODELS

CAMSHAFT REMOVAL (With Engine out of Car): Remove vibration dampener (Puller HM-925), remove timing gear cover, pull crankshaft gear (Puller HM-925). Remove cylinder head, valves, valve springs, and oil pump. Invert engine so that valve lifters will not interfere with camshaft removal. Remove two capscrews and lockwashers in timing gear thrust plate, pull camshaft straight out through front of engine.

ALL 1949-50 MODELS

CAMSHAFT BUSHING INSTALLATION: Use Tool J-2036-A to remove old bushings and to install new bushings.

ALL 1949-50 MODELS

CAMSHAFT ENDPLAY: Endplay regulated by thickness of spacer installed on camshaft directly behind timing gear and is equal to amount by which thickness of spacer exceeds thickness of thrust plate bolted on cylinder block. When installing new parts, measure both thrust plate and spacer with a micrometer, select parts so that endplay is .003-.006" (spacer must be .004-.006" thicker than thrust plate).

TIMING GEARS

ALL 1949-50 MODELS

TIMING GEARS: Camshaft Gears (All Models). Holes provided in gears for puller HM-925 installation to remove the gears. See Replacement Camshaft Gear Sizes (below) for size selection when replacing gears. Use gear pusher tool HM-861Y (all models) to install gears. CAUTION—Do not drive gears on with a hammer which will loosen gear at hub.

Replacement Camshaft Gear Sizes:—Furnished in three sizes: 'S'—Standard, 'H'—High Limit, 'L'—Low Limit. When replacing gear on engine with considerable service, install next largest camshaft gear size. For reconditioned engine with new camshaft and main bearings use same size gear. Crankshaft gear furnished in standard size only.

Crankshaft Gear (All Models):—Tapped holes provided in all gears for puller. Use Puller HM-925 to remove gear, Pusher HM-861Y to install gear.

VALVE SYSTEM

ALL 1949-50 MODELS

VALVE SPRING INSTALLATION: Springs should be installed with closed-coil end of spring upward.

Valve Lifter Tension Spring: Consists of "U" shaped flat spring installed so as to engage lower end of valve stem and upper end of lifter (spring tension keeps lifter on cam lobe). Make certain that tension springs in place when valves and springs installed.

ALL 1949-50 MODELS

SELF-LOCKING TAPPETS: Tappet screws slotted on lower end and require no locknuts. When tappet screws replaced, car manufacturer recommends that screws must check as follows: Pull required to move tappet screw must be 25 in. lbs. minimum (4 lbs. pull on 6" wrench).

ALL 1949-50 MODELS

VALVE CHAMBER BAFFLES: Oil baffle plates are provided to prevent excessive oil splash in valve spring chamber. One baffle is used in each half of the chamber. Baffles straddle lifters. Champion baffles are same for both halves of the chamber and are interchangeable. Commander baffles are marked front and rear (install as marked).

Installation—Insert baffle so curved portion is upward, with notch aligned with cover plate screw hole. Install cover plate, making sure notches straddle cover plate screws. With cover installed, baffle is held tightly in place against cover and cover plate screws.

OIL PUMP

1949-50 CHAMPION

OIL PUMP REMOVAL: Oil pump must be disassembled as follows for removal from engine: Remove 4 cover screws and washers, take off cover, gasket, idler gear, and drive gear. Remove woodruff key and "C" washer from driveshaft which allows pump body to be taken off engine (driveshaft stays in engine). Oil pan must be removed in order to take out oil pump driveshaft.

Oil Pump Re-Assembly and Installation: Turn engine over until #1 piston at TDC entering power stroke, and "UDC.1-6" mark aligned with pointer. Engage pump shaft with key-way in end of shaft pointing down (key way will rotate to rear when gears meshed). Install new body gasket and pump body over shaft, insert "C" washer and woodruff key on shaft, install pump drive gear and idler gear. Install cover using a new cover gasket and tighten screws securely. Prime pump with engine oil by disconnecting oil pressure gauge line fitting at pump.

1949-50 COMMANDER

OIL PUMP REMOVAL: Disconnect battery, turn crankshaft to #1 piston firing position with mark "UDC.1-6" at timing pointer. Proceed as follows:

1)—Take out starter mounting capscrews, tie starter up out of the way (not necessary to disconnect cables and wires).

2)—Use jack to raise rear end of engine just enough to remove weight from rear engine mountings, remove support mountings from cross-member, remove clutch operating shaft bracket-to-crossmember bolts.

3)—Place hydraulic jack between right frame side rail and base of engine block with ram of jack just to rear of breather tube, move rear of engine about 2" to left.

4)—Disconnect oil pressure gauge line at oil pump cover elbow.

5)—Take out four capscrews in pump cover which mount pump body on engine, remove cover and pump body assembly.

Disassembly of Pump: With pump cover off, remove cover gasket, lift out idler gear, drive out pin in pump driveshaft gear, press shaft and gear out of driving gear in an arbor press. Then press pump gear off shaft, remove thrust "C" washer and woodruff key from shaft.

Reassembly of Pump: Install thrust "C" washer on shaft and woodruff key in slot adjacent to "C" washer groove, press oil pump drive gear on shaft. Install shaft with gear in pump body. Press driveshaft gear on opposite end of shaft with pin hole in shaft and gear in alignment. Use new 3/16" pin to lock gear to shaft (peen pin securely). If new driveshaft and driveshaft gear installed, proper endplay secured by pressing shaft on gear with .003" feeler inserted between gear and upper end of pump body, drill hole in shaft using hole in gear as a guide, ream hole to 3/16", use new 3/16" pin to lock gear (peen pin securely). Use new gaskets throughout. Install pump on engine, prime pump with engine oil by disconnecting oil gauge line at elbow on pump.

Installation: Use new pump body gasket. Turn pump shaft so that pump drive gear keyway faces toward rear of car, make certain that crankshaft turned to #1 piston firing position with mark "UDC.1-6" at timing pointer, engage pump drive shaft gear with camshaft gear. With pump in position against engine block, keyway should point almost straight downward. Use new cover gasket when installing cover, reassemble all parts disconnected when removing pump.

OIL PAN REMOVAL

ALL 1949 MODELS

OIL PAN REMOVAL: Car manufacturer recommends that engine be removed from chassis. See ENGINE REMOVAL (preceding).

1949 CHAMPION

OIL PAN INSTALLATION: Check engine front plate gasket and replace if required. Install side pan gaskets with tight fit against front plate gasket. Next install oil pan filler block gasket (use only iron filler blocks on these cars). Do not tighten timing cover to block screws. Install rear oil pan gasket and guide oil pan into place using pilot screws. Tighten oil pan screws. Finally tighten oil pan filler block screws on timing gear cover.

1950 CHAMPION

►**OIL PAN REMOVAL & INSTALLATION**—*Not necessary to remove engine from car.*

Removal: Drain oil, remove oil level gauge stick. Disconnect center auxiliary tie rod from steering gear pitman arm and idler arm, remove tie rod. Remove lower exhaust pipe bracket-to-clutch housing bolt to provide clearance. Remove engine front splash pans. Remove engine front support-to-crossmember bolts. Place hydraulic jack under oil pan mounting flanges at **each side** of engine and as far forward as possible (CAUTION—do not place jack under center of pan), raise engine so that front support cushion is 1½" from top of front crossmember and insert a block of wood to hold engine in this position. Remove both jacks. Take out four lower timing gear cover screws to permit removal of oil pan filler block. Take out oil pan screws and remove pan.

Installation: Install side gaskets on block flanges, and new gasket in rear main bearing cap channel. Position filler block at front engine plate and align holes in block and timing gear cover, install timing gear cover screws loosely. Place filler block gasket on oil pan, place pan in position and install all screws. **After pan screws tightened,** tighten timing gear cover screws securely. Raise engine just enough to remove wood support block, then lower engine and reassemble disconnected parts.

1950 COMMANDER

►**OIL PAN REMOVAL & INSTALLATION**—*Not necessary to remove engine from car.*

Removal: Drain oil, remove oil level gauge stick. Disconnect and remove front stabilizer shaft by disassembling link assembly at each side and taking off shaft bushing retainer at each frame side rail. Disconnect both tie rods at steering knuckle arms, remove steering bell crank shaft and bracket assembly by loosening clamp bolt holding bellcrank on shaft and taking out bracket mounting bolts. Swing bellcrank and tie rods toward left side of car and tie up out of the way. Remove lower right clutch housing bolt for clearance in removing pan. Remove engine front support-to-crossmember bolts. Place hydraulic jack under oil pan mounting flanges at **each side** of engine and as far forward as possible (CAUTION—do not place jack under center of pan), raise engine so that front support is 1½" from top of front crossmember and insert a block of wood to hold engine in this position. Remove jacks. Take out oil pan screws and remove pan.

Installation: After installing oil pan, raise engine just enough to remove wood block, then lower engine and reassemble all disconnected parts.

PROPELLER SHAFT

ALL 1949-50 MODELS

PROPELLER SHAFT & SUPPORT BEARING ASSEMBLY: New type two-unit propeller shaft (separate Front and Rear Propeller Shafts) with intermediate Universal Joint in Support Bearing Assembly on cross-member.

Front Propeller Shaft—One piece type (no slip joint) with intermediate universal joint yoke splined on rear end and retained by capscrew in end of shaft. See Support Bearing Assembly.

Rear Propeller Shaft—Conventional type with slip joint at forward end.

Universal Joints—Spicer needle bearing type. Bearing cups are retained on yokes by "U" bolts and universals are dismantled by removing nuts from these bolts. *See Universals Section for complete Universal Joint data.*

Propeller Shaft & Support Bearing Removal: Disconnect rear propeller shaft by taking out "U" bolts mounting intermediate universal joint on rear flange of front shaft (behind support bearing assembly) and sliding universal joint and stub shaft back on slip-joint. Remove capscrew and washers retaining universal joint flange on rear of front shaft, punchmark flange and shaft to insure correct re-installation, remove flange using Puller J-2046. Remove nuts and washers on forward end of studs mounting support assembly on frame crossmember, pull assembly off splines of front propeller shaft. To dismantle support cushions, remove nuts and washers on rear end of frame mounting studs. Studs have shoulder at each end to position rubber cushion and prevent excessive compression of the cushion when stud nuts are tightened.

Installation—Re-install support bearing assembly and propeller shafts by reversing removal instruction.

Support Bearing Servicing: Bearing is sealed type (pre-packed with lubricant) and **must never be washed in gasoline or other solvents.**

CAUTION—Do not re-install support bearing which has been washed in gasoline or other liquids which will remove lubricant.

Bearing Removal & Installation—To remove bearing from support bracket, press bearing out using a piece of tubing of sufficient size to engage outer bearing race. Install new bearing in same manner and press bearing in until outer bearing race is just **flush with front edge of support bracket.** With front propeller shaft in place in car, install dust shield on the shaft, then install support bearing assembly, secure support to cross-member with lockwashers and nuts on forward ends of studs, make certain that plain washer and lockwasher installed on rear end of studs. Tighten nuts securely.

BRAKE NOTES

ALL 1949-50 MODELS

HILL-HOLDER ADJUSTMENT: On cars with Hill-Holder (optional equipment), check action whenever clutch adjusted to make certain that brakes release just before clutch engages.

Adjustment—Loosen locknut on end of Hill-holder control rod, shorten rod for earlier brake release, lengthen rod for later release, tighten locknut.

MODEL IDENTIFICATION

SERIAL NUMBER: Stamped on plate on left front door lock pillar post.

1949 Numbers—G-400510 Up (South Bend), G-839701 Up (Los Angeles), G-703101 Up (Hamilton).

Body Symbol Letter—Used with model designation (and on body number plate) to indicate body type as follows: C, 5-Pass. Coupe; F, 2-Door Sedan; Q, 3-Pass. Coupe; S, Convertible; W, 4-Door Sedan.

ENGINE NUMBER: Stamped on pad on upper front left corner of engine block.

1949 Numbers—441,001 Up (South Bend & Los Angeles), C-4101 Up (Hamilton).

NOTE—Letter "A" following engine number indicates crankshaft main bearing journals .005" Undersize.

TUNE-UP

COMPRESSION PRESSURE: 105 lbs. at 150 RPM.

VACUUM READING: Steady 17-18" idling at 8 MPH.

FIRING ORDER: 1-5-3-6-2-4. See diagram.

SPARK PLUG GAPS: .025" Limits .0225-.0275".

Plug Type—Champion Type J7 or J9. 14 mm.

DISTRIBUTOR: Breaker Gap—.020". Limits .018-.022".

Cam Angle—38° Closed, 22° Open.

Breaker Arm Spring Tension—17-20 ozs.

Automatic & Vacuum Advance—*See Ignition.*

Condenser Capacity—.20-.25 microfarad.

IGNITION TIMING: 2° BTDC.

Timing Procedure—*See Ignition Timing.*

Timing Mark—Vibration dampener mark "IGN/" aligned with pointer on left side of engine. NOTE—Insert .020" feeler between modifier control arm and clamp arm before tightening clampscrew.

Octane Selector Setting—Set to just eliminate ping when engine hot and pulling hard.

CARBURETION:

Idle Setting—½-1½ turns open. Turn screw out for richer mixture.

Idle Speed—8-10 MPH. at normal operating temp.

Float Level—⅜". Measured from top of projection on bowl cover to top of soldered seam on free end of float with needle valve seated and bowl cover assembly inverted.

Accelerating Pump—No seasonal adjustment.

Choke Setting: Centered (at index).

Fuel Pump Pressure: 4-5 lbs. maximum.

MANIFOLD HEAT CONTROL: Automatic thermostatic type operating in stainless steel bushings.

Setting—To test coil tension, free outer end of coil from anchor post. With valve closed (counterweight up), hooked end of coil should be approx. 90° from anchor post with coil at 70°F. NOTE—To overcome sticking, lubricate valve shaft with kerosene and soda solution or Bendix Carburetor Cleaner. If necessary, shaft diameter can be reduced for .005" clearance in bushings (do not ream bushings).

VALVE TAPPET CLEARANCE: .016" All Valves, Cold.

Valve Timing Check—*See Valve Timing.*

STARTING: *See Battery, Starter, Generator, Regulator.*

IGNITION

IGNITION SWITCH: Mitchellock Switch Model 42-R. No. E-10336 (for Y & T lock) or E-10522.

Ignition Lock—Yale & Towne.

COIL: Auto-Lite No. CE-6007. Mounted on the engine above distributor (under spark plug cable bracket).

Ignition Current—½-1½ amps. idling. 4-5 stopped.

CONDENSER: Auto-Lite Part No. IG-2671.

Capacity—.20-.25 microfarad.

DISTRIBUTOR: Auto-Lite Model IGC-4805. Full automatic advance type with vacuum spark control.

Breaker Gap—.020". Limits .018-.022".

Cam Angle—38° closed, 22° open.

Breaker Arm Spring Tension—17-20 ozs.

Rotation—Counter-clockwise viewed from above.

Distributor Degrees	Automatic Advance R.P.M.	Engine Degrees	Engine R.P.M.
Start	400	0	800
2	680	4	1360
4	975	8	1950
6	1265	12	2530
7	1400	14	2800

Vacuum Spark Control: Auto-Lite Model VC-4011. Unit mounted on hold-down plate and linked to advance plate. Provides additional advance at speeds above idling except when engine accelerated or operated with wide open throttle when spark retarded by return spring in unit.

Vacuum Advance			
Distr. Degrees	Eng. Degrees	Vacuum (" of HG)	
Start	0°	4"	
2°	4°	5½"	
5°	10°	7¾"	
7°	14°	11¼"	
9°	18°	14¾"	

Octane Selector—Provides manual adjustment at distributor (hold-down plate marked with scale) for variation in timing depending on fuel regularly used. See Ignition Timing following for adjustment.

Distributor Removal: —Mounted on left side of engine. To remove, disconnect vacuum line, take out bolt in clamp arm, lift distributor off.

Installation Note—When installing distributor, crank engine to firing position for #1 cylinder (dampener mark 'IGN' in line with pointer on the timing gear cover, sight down distributor shaft

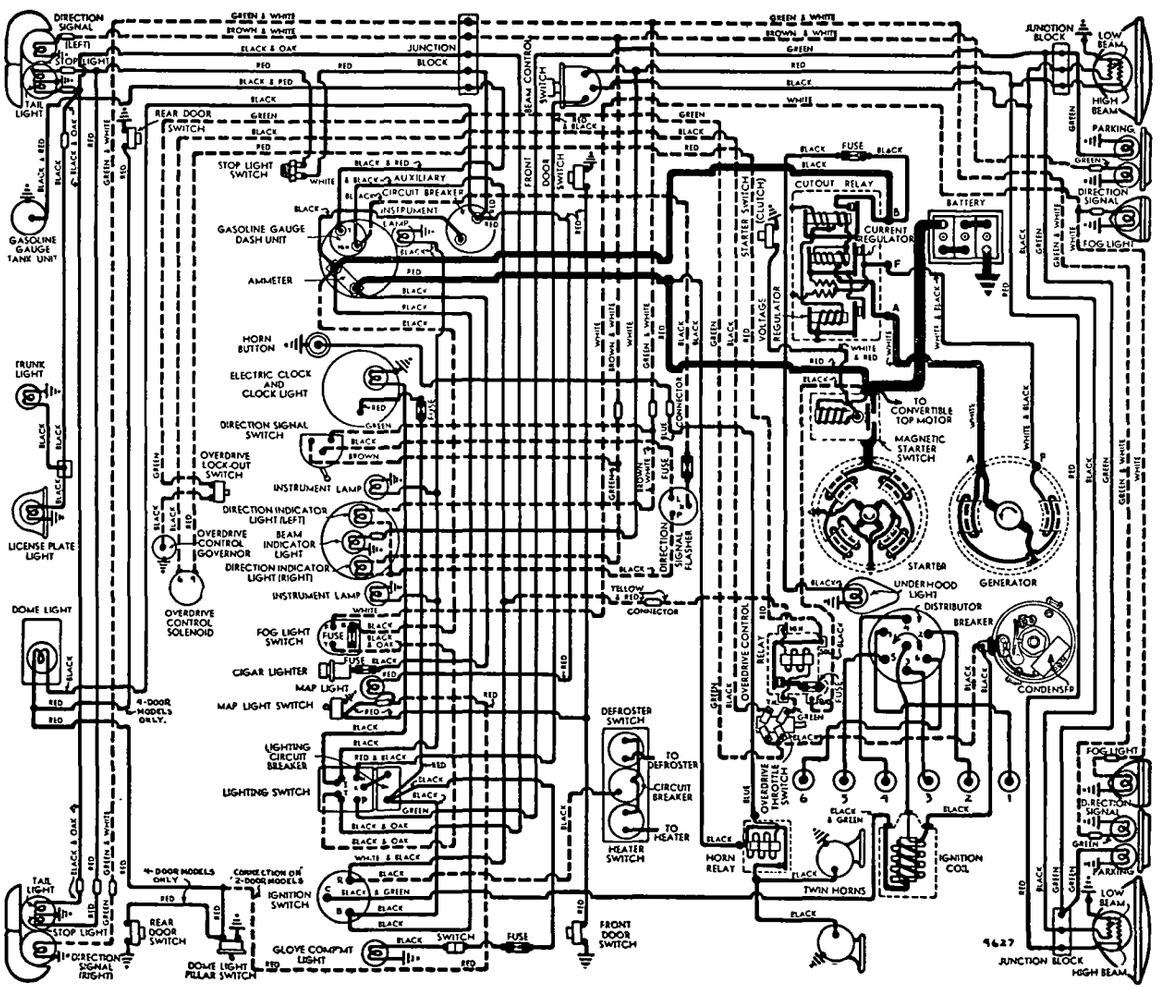

hole (distributor out) and see that distributor drive tongue in oil pump drive gear is parallel to and narrow half of offset toward camshaft, turn rotor to #1 segment, install distributor (insert .020" feeler between modifier control arm and clamp arm before tightening the clamp, to prevent binding),

IGNITION TIMING

Std. Setting	Flywheel Degrees	Piston Pos.
All Engines	2° BTDC	.0016" BTDC

This setting correct for regular fuel (See Octane Selector Setting for service and fuel modification). NOTE—Ignition marks now located on vibration dampener at front of engine.

Timing (With Neon Timing Light)—Clip timing light lead in series with #1 spark plug, direct light on vibration dampener at front of engine. Loosen hold-down plate screw, center octane selector pointer on scale, tighten hold-down screw. Run engine at idle speed, loosen clamp arm, rotate distributor until "IGN/" mark on dampener appears in line with pointer on left side of timing gear cover, tighten clamp screw. Check Octane Selector setting. CAUTION—Insert .020" feeler between modifier arm and clamp arm when tightening clamp arm

Timing (Without Neon Timing Light)—With #1 piston on compression, turn engine over until "IGN/" mark on vibration dampener lines up with pointer on left side of timing gear case. Adjust distributor as directed above.

Octane Selector Setting—After setting timing (above), loosen selector hold-down screw, advance timing by turning distributor clockwise (move pointer toward "A" end of scale) until engine "pings" when hot and pulling hard, then retard timing by turning distributor counter-clockwise (move pointer toward "R") until ping disappears.

CARBURETOR

Carter WE-715S—1¼" single barrel, downdraft, with Carter Climatic Control.
Casting No. on Flange—620.
See Carburetor Section for complete data.

Settings (Idle Setting, Float Level, & Accelerating Pump): ***See Tune-Up.***

Metering Rods & Jets—***See Carter Jet Table in Carburetor Section.***

Fast Idle: Carter Single Barrel Carburetor type.
See Carburetion Equipment Section for data.
Setting—.046" between throttle valve and bore of carburetor. To check, remove thermostatic coil housing, gasket and baffle plate. Crack throttle valve and hold choke valve closed. Close throttle. Adjust by bending connector rod at lower angle.

Automatic Choke: Carter Climatic Control (Single Carburetor type).
See Carburetion Equipment Section for data.
Setting—Centered (at index).

CARB. EQUIPMENT

Air Cleaner: AC No. 1543970 Oil-wetted type Std. Filter Element AC #1. Oil-bath Air Cleaner Optl.

Servicing (Oil-wetted type)—Clean and re-oil filter element at 1000 mile intervals.

Servicing (Oil-bath type)—Clean filter element and oil reservoir, fill reservoir to indicated level mark with SAE No. 40 or 50 engine oil at intervals as required by operating conditions.

Fuel Pump (Std.): AC #1539092 or AC #1539416.
Optl. (Fuel & Vacuum): AC #1539218.
Exchange Pump—AC No. 576 (Std.), 9218 (Optl.).
Pressure—4-5 lbs. maximum.
See Carburetion Equipment Section for data.

Gasoline Gauge: Stewart-Warner Electric type.
Dash Unit—Studebaker No. 522177.
Tank Unit—Studebaker No. 525548.
See Carburetion Equipment Section for data.

BATTERY

Willard Type HW-1-100. 6 volt, 15 plate, 100 Ampere Hour Capacity (20 hour rate).
Starting Capacity—120 amperes for 20 minutes.
Zero Capacity—300 amperes for 3.5 minutes. Five Second Voltage 4.3 volts.
Grounded Terminal—Positive (+) to cyl. head.
Dimensions—L. 9 3/64". W. 6 13/16". H. 8⅝".
Location—In engine compartment on left side.

STARTER

Auto-Lite Model MZ-4151. Armature No. MZ-2111.
Drive—Barrel type Bendix Drive No. A1792.
Rotation—Counter-clockwise at commutator end.
Brush Spring Tension—42-53 ozs. (new brushes).
Cranking Engine—150 amperes, 5.2 volts, 150 RPM.

Performance Data

Torque	R.P.M.	Volts	Amperes
0 ft. lbs.	4300	5.5	70
.65 "	2500	5.5	100
2.55 "	1325	5.0	200
4.95 "	750	4.5	300
7.65 "	220	4.0	400
7.8 "	Lock	3.0	420
11.8 "	Lock	4.0	560

Starting Switch: Magnetic switch mounted on starter and controlled by Auto-Lite Model SW-4016 manual switch on toeboard operated by clutch pedal.

Removal:—Flange mounted on engine rear plate at left side. To remove, take out flange mounting screws, take off starter and switch assembly.

GENERATOR

Auto-Lite Model GDZ-4804A, Armature No. GDZ-2006F. Two brush type with current-voltage control.
Charging Rate Adjustment—None. See Regulator.
Maximum Charging Rate—35 amperes, 8.0 volts, 2250 Gen. RPM (hot), at car speed of 24 MPH & above with load or discharged battery (regulator setting).

Performance Data

Cold Amperes	Cold Volts	Cold R.P.M.	Hot Amperes	Hot Volts	Hot R.P.M.
0	6.4	925	0	6.4	1000
4	6.6	1035	4	6.6	1120
8	6.75	1140	8	6.75	1235
12	6.95	1250	12	6.95	1350
16	7.15	1370	16	7.15	1460
20	7.3	1480	20	7.3	1590
24	7.5	1590	24	7.5	1730
28	7.7	1710	28	7.7	1900
32	7.9	1820	32	7.9	2090
35	8.0	1900	35	8.0	2250

Rotation—Counter-clockwise at commutator end.
Brush Spring Tension—35-53 ozs. (new brushes).
Field Current—1.60-1.78 amperes at 6.0 volts.
Motoring Current—4.16-4.60 amperes at 6.0 volts.

Removal:—Pivot mounted at left front of engine. To remove, take out pivot and clamp bolts.

Belt Adjustment:—Loosen pivot and clamp bolts, move generator out until ⅜-½" belt deflection midway between generator and fan pulleys is obtained

REGULATOR

Auto-Lite Model VRP-4004F. Voltage & Current Type. Consists of Cutout Relay and vibrating type Voltage & Current Regulators in case on dash.
See Electrical Equipment Section for complete data.
NOTE—Regulator case cover is sealed. Serviced on exchange basis if seals not broken (to remove cover).

Cutout Relay

Cuts In—6.4-7.0 volts (set to 6.4-6.6 volts), 10.4 MPH.
Cuts Out—4.1-4.8 volts (approx. 4-6 amps. disch.).
Contact Gap—.015" minimum.
Air Gap—.031-.034" with contacts open (check at hinge end of core).

Voltage Regulator

Setting—7.2-7.5 volts at 70°F. See Electrical Equipment Section for settings at other temperatures.
Checking (without breaking seal) & Adjustment—***See Electrical Equipment Section.***
Contact Gap—.012" min. (armature against stop pin).
Air Gap—.048-.052" with contacts just opening.

Current Regulator

Setting—34-36 amperes (marked '35' on the cover).
Checking (without breaking seal) & Adjustment—***See Electrical Equipment Section.***
Contact Gap & Air Gap—Same as Voltage Regulator.

LIGHTING

Headlamps: Corcoran-Brown "Sealed Beam" type.
See Electrical Equipment Section for complete data.

Adjustment—Aim upper beam straight ahead (hot spot center 3" below lamp center height at 25 ft.).

Beam Indicator—At center of speedometer dial. Lighted whenever Country (upper) beams in use.

Direction Signal: ***See Electrical Equipment Section.***
Direction Signal Indicators—In face of Speedometer dial. Left or right indicator lighted when corresponding direction signal is in operation.

Switches

Lighting—Douglas. Studebaker No. 519798.
Beam Selector—Delco-Remy No. 1997008, Studebaker No. 519246.
Stop Light—Studebaker No. 666858.
Direction Signal—Studebaker No. 520304.

MISC. ELECTRICAL

LIGHTING CIRCUIT BREAKER (On Light Switch): Studebaker No. 522014. 30-ampere thermostatic type. Protects Headlamps, Parking, Tail, & Instrument Lamps by vibrating to limit current.

Auxiliary Circuit Breaker (On Panel): No. 523056. 15-ampere thermostatic type. Protects Body & Stop Lamps by vibrating to limit current.

ACCESSORY CIRCUIT BREAKER: One 15-ampere type used on cars with Climatizer and Defroster.

FUSES: Clock—3 ampere. In clock lead.
Direction Signal—14 ampere. In Flasher lead.
Overdrive—20 ampere. On Overdrive Relay.
Glove Compt. Light—5 ampere. In lamp lead.
Under Hood Light—5 ampere. In lamp lead.
Fog Lights—20 ampere. On Fog Light Switch.

HORNS: Sparton or Delco-Remy No. 1999610 (High Note), 1999611 (Low Note). Twin Airtone type horns operated by relay. **Horn Current**—12-15 ams. (each).

Horn Relay: Delco-Remy No. 1116775.
Contacts Close—2.75-4.0 volts.
Contact Gap—.025". **Air Gap**—.015" (closed).

C NTINUED ON NEXT PAGE

CONTINUED FROM PRECEDING PA E

ENGINE

ENGINE REMOVAL for Oil Pan Removal and all major engine work: *See Studebaker Shop Notes.*

ENGINE SPECIFICATIONS: Six cylinder, "L" Head.
Bore—3". **Stroke**—4".
Displacement—170 cu. ins. **Rated H.P.**—21.6.
Developed Horsepower—80 at 4000 R.P.M.
Compression Ratio—6.5-1 Std. 7.0-1 Optl. iron hds.
NOTE—7.0-1 Head for 5000 ft. & higher altitudes.
Compression & Vacuum Reading—*See Tune-up data.*

ORIGINAL BORE & PISTONS: *See Studebaker Shop Notes.*

TIGHTENING TORQUES: *See Studebaker Shop Notes.*

CYLINDER HEAD INSTALLATION: *See Studebaker Shop Notes.*

PISTONS: Lynite aluminum alloy, Cam ground, T-slot, bearing-metal plated type. **Length**—2 29/32". **Weight**—8.48 ozs. (without rings or pin).
Clearance—Selective fit (see Fitting Pistons).
Removal—Pistons and rods removed from above.

Fitting New Pistons: Insert .002" feeler, 1" wide, between piston and cylinder wall on camshaft side (piston pin parallel to camshaft, slot away from camshaft). Pull required to withdraw feeler should be 11-16 lbs.

Replacement Pistons: *See Studebaker Shop Notes.*

Installing Pistons: T-slot away from camshaft.

PISTON RINGS: Two compression (Perfect Circle #200 Top, #70 —2nd), one Oil Control (#85).

Ring	Width	End Gap	Side Clearance
Compr. #1	3/32"	.007-.017"	.0015-.002"
Compr. #2	1/8"	.007-.017"	.0015-.002"
Oil Contr. (#3)	.5/32"	.007-.017"	.0015-.002"

Installing Rings: Step up top ring, step down 2nd ring.

Replacement Rings: Sets furnished Std. size and .020", .030", .040" Oversize. Single rings Std. size and .010", .020", .030", .040" Oversize.

PISTON PIN: Diameter .7491-.7495". **Length** 2⅝". **Pin** is locked in rod by tapered pin and locknut.
Pin Fit in Piston—.0001-.0003" clearance or light finger-push fit at room temperature (70°F).

Installing Pins: Use Pin Assembly Tool J-1293. Install clamp bolt nut and star washer on heavy boss side of rod. NOTE—Threads on opposite end of clamp bolt used only to remove bolt from rod (install nut on this end, tighten nut to pull bolt out of rod).

Replacement Pins: Std. & .0025". .005" oversize. Use Hone No. PH-1 to obtain proper piston pin fit.
NOTE—Replacement pistons fitted with pins.

CONNECTING ROD: Length 6⅜". **Weight** 20.48 ozs.
Crankpin Journal Diameter—1.81175-1.81275"
Lower Bearing—Interchangeable steel-backed, micro-babbitt lined type. No shims.
Clearance—.0005-.002" **Sideplay**—.005-.009".

Bearing Adjustment: None (no shims). Replace bearings. Do not file rods or bearing caps.
NOTE—Make certain that small tongue on bearing shells engage grooves. Palnuts used on bolt nuts.
Palnut Installation—*See Studebaker Shop Notes.*

Replacement Bearings: Bearings furnished Std. Size and .001", .005", .010", .020" Undersize.

Installing Rods: Lower bearings "offset". Install rods with narrow portion of bearing toward front of engine (#1, 3, 5), toward rear (#2, 4, 6). Numbers on rods and bearing caps must be together and installed in same numbered cylinder with number and oil hole in lower end of rod toward camshaft side.

CRANKSHAFT: Four bearing type with integral counterweights. Vibration dampener on front end.
Vibration Dampener—*See Studebaker Shop Notes.*
Journal Diameters—2.4370-2.4375" (All) Std.

►*CAUTION—Journals are .005" Undersize on engines with letter "A" following Engine Number.*

Bearing Type—Removable type, steel-backed, micro-babbitt lined. No shims.
Clearance—.0005-.0025".
Rear Bearing Oil Seals—Consist of rubber ring, Studebaker No. 521544 (After Eng. No. 284200), on crankshaft; two rubber seal strips, Studebaker No. 522144, in grooves on top of bearing cap; and two specially treated wood strips, Studebaker No. 197178, in grooves on sides of bearing cap.

►*CAUTION—Install new wood oil seals (above) each time rear main bearing cap removed and re-installed.*

Bearing Adjustment: None (no shims). Replace bearings. Do not file bearing caps.
NOTE—Front oil pan seal block may be removed for access to front main bearing cap by removing four lower timing gear cover retaining screws. Use only malleable iron type filler block on these cars.

►*CAUTION—Do not securely tighten timing gear cover to filler block screws until after oil pan screws tightened uniformly and securely.*

Replacement Bearings: Furnished as sets or single bearings Std. & .001", .005", .010", .020", .030" U. S.

End Thrust: Taken by thrust washer assembled between front main bearing and crankshaft gear. Controlled by shims between thrust washer and main bearing journal. Adjust by changing shims (.003", .005", .007" thick). **Endplay**—.003-.006".

CAMSHAFT: Four bearing type. Helical gear drive.
Journal Diameters—#1, 1.7475-1.7480"; #2, 1.7162-1.7170"; #3, 1.6857-1.6865"; #4, 1.6232-1.6240".
Bearings—Split, steel-backed, babbitted bushings.
Clearance—.0007-.0022" (#1), .0010-.0027" (others).

Bearing Adjustment: None. Replace bushings with camshaft removed. NOTE - Align bushing oil hole with oil hole in block.

Camshaft Removal: *See "Camshaft & Bearings" in Studebaker Shop Notes.*

End Thrust: Taken by thrust plate assembled on front face of engine block behind camshaft gear (spacer assembled on shaft behind gear hub).
Endplay—.003-.006". Tighten cap screws alternately a few turns at a time to prevent distortion of plate.

Timing Gears: Crankshaft gear Cast Iron, Camshaft gear Celoron with steel hub.
Backlash—.001-.003".
Replacement Gears—Camshaft gear furnished in three sizes: Standard (marked "S"), High Limit (marked "H"), Low Limit (marked "L"). Crankshaft gear furnished Standard size only.
Timing Gear Removal & Installation—*See "Timing Gears" in Studebaker Shop Notes.*

Camshaft Setting: Mesh marked tooth of camshaft gear between two marked teeth of crankshaft gear.

VALVES:	Head Diameter	Stem Diameter	Length
Intake	1 11/32"	5/16"	4 11/32"
Exhaust	1 9/32"	5/16"	4 11/32"

	Seat Angle	Lift	Stem Clearance
All Valves	45°	11/32"	.0015-.0035"

Valve Guides: Pressed in block from above with top of guide 1 3/16" below top of block. Finish ream guides to inside diameter of .312-3125". Use Valve Stem Guide Remover and Replacer Tool J-2034. Replace worn guides if clearance greater than .0035".

Valve Springs: Install with closed coil end up. Replace springs if more than 10% weaker than test pressure of 77-85 lbs. at 1 7/16" (U-15 or other accredited tester). Spring free length 2 3/32".

	Spring Pressure	Spring Length
Valve Closed	52-56 lbs	1 21/32"
Valve Open	93-103 lbs	1 5/16"

NOTE—Install valve spring retainer with flange engaging flat surface on lower coil and tongue on inner diameter engaging groove in spring lock.

Valve Lifters: Mushroom type. Remove from below with camshaft out of engine. *For Camshaft Removal directions, refer to Studebaker Shop Notes.*
Valve Lifter Tension Spring—*See "Valve System" in Studebaker Shop Notes.*
Clearance—.0005-.00175".
Replacement Lifters—Furnished Std. size and .0005", .001" Oversize.

VALVE TIMING

Tappet Clearance: .016" All Valves, Engine cold.
NOTE - Self-locking tappet adjusting screws used. Tappet screw tension should be 25 in. lbs. minimum.

Valve Timing: See Camshaft Setting above.
Intake Valves—Open 15° BTDC. Close 49° ALDC.
Exhaust Valves—Open 54° BLDC. Close 10° ATDC.
Valve Timing Check—With .020" tappet clearance, #1 intake valve should open with #1 piston 15° or .0893" BTDC. with vibration dampener mark "IN. OP .1-6/" in line with pointer on left side of timing gear cover. Reset tappet clearance to .016" Cold

LUBRICATION

Lubrication System: Pressure to crankshaft, connecting rod, and camshaft bearings and to valve lifters. Timing gears lubricated by oil by-passed by pump.
Crankcase Capacity - 5 qts. ("Add Oil" point on oil level indicator stick is 3 qt. level).
Normal Oil Pressure—20-40 lbs. at 40 MPH.
Oil Pressure Relief Valve—On lower right front corner of engine. Opens at 40 lbs. Adjustable by inserting shims between outer end of spring and plug.

Oil Pan Removal: *See Engine Removal in Studebaker Shop Notes (recommended for pan removal).*

Oil Pump: Helical gear type. Mounted externally on right hand side of crankcase.
Oil Pump Removal & Installation—*See "Oil Pump" in Studebaker Shop Notes.*

Oil Filter (Optl.): Fram Model F3-P2 (Std. Service), F4-P2 (Heavy Duty). Replacement Cartridge Kit Studebaker No. 520829 (F3-P2), 520830 (F4-P2).

Oil Pressure Gauge: Stewart-Warner Bourden tube (not electric) type. Studebaker No. 522179.

Crankcase Ventilation: Filter element in oil filler cap (air intake) and in breather pipe on left rear of engine (air outlet).
Servicing—Wash both filter elements in kerosene and re-oil at regular intervals. NOTE—Filter in outlet pipe removed by taking out cotter pin.

COOLING

Cooling System: Positive circulation with water pump mounted on front of block with fan.
Capacity—11 quarts.

Water Pump: Packless, sealed ball bearing type.
See Water Pump Section for complete data.

Removal—Slack off drive belt, take out capscrews in the fan pulley hub & remove fan blades. Disconnect hose connection, take out mounting screws in pump body flange, withdraw pump from engine
Belt Adjustment—*See Generator Belt Adjustment.*

Thermostat: Bishop & Babcock. In water outlet on cylinder head.
Setting—Starts to open at 151-155°F.

Temperature Gauge: Stewart-Warner Bourden tube type (not electric). Studebaker No. 522180.

CLUTCH

Borg & Beck Model 8A7 with Borglite Driven Member. Single plate, dry disc type. NOTE—Clutch assembly marked by number 980 stamped on cover.
See Clutch Section for complete data.
Facings—Moulded Metallic type, 2 required. I.D. 5⅜". O.D. 8". Thickness ⅛".

►*CAUTION—Special driven member used on cars with Overdrive. Identify each type by hub damper spring color as follows:* Damper Spring Color.
Cars with Conventional Trans.....2 Lavender, 2 Black
Cars with Overdrive Trans. ..... 4 Lavender

Pedal Adjustment: Pedal free travel ½" to 1". To adjust, unhook pull-back spring on outside of frame rail, loosen locknut at adjusting clevis and remove clevis pin at inner end of pedal shaft, turn clevis on rear end of pedal shaft-to-operating shaft rod for correct clearance, reassemble linkage.
Cars before Serial No. G-217064—Pedal free travel must be set to ½" to ¾" on these cars.
Hill-Holder Note—Check setting whenever clutch pedal adjusted and adjust Hill-holder to release just as clutch engages.

Hill-Holder Adjustment: *See Studebaker Shop Notes.*

Removal: Car manufacturer recommends Engine (with clutch attached) be removed. *See "Engine Removal" in Studebaker Shop Notes.* Block release levers. Remove six mounting screws in clutch cover flange, lift off clutch assembly and driven member.

TRANSMISSION

Warner Model AS1-T96 (Std.), AS2-T96 with R10B type Overdrive (Optl.). All helical gear type. Constant-mesh, synchro-mesh (Second & High), sliding gear (Low & Reverse).
See Transmission Section for complete data.

Transmission Control: Remote control type with gearshift lever mounted on steering column.
See Transmission Section for complete data.

Removal: Drain transmission. Disconnect hand brake cable and move out of way for clearance. Disconnect front universal at transmission (wire caps or use clamp to prevent losing rollers). Take out center support bearing mounting bolts. Push front shaft and support to rear (will slide on splines on rear shaft). Disconnect shift rods from levers on case and speedometer cable (remove speedometer pinion). On Overdrive transmission disconnect all control wires and cable. Take out transmission to clutch housing capscrews, pull transmission straight back and remove from car.

OVERDRIVE

Warner Type R10B (part of AS2-T96 Transmission). New Governor controlled type (no centrifugal pawls) with electrical solenoid operation and throttle controlled "kick-down."
See Transmission Section for complete data.

Overdrive Solenoid—Warner Model No. 3AR10B-62, Studebaker No. 521429.

Overdrive Governor—Warner Model No. AR10B-72, Studebaker No. 520454.

Control Relay—Auto-Lite HRT-4001, Studebaker No. 523297.

Throttle Kick-down Switch—Studebaker 515667.

Lock-out Switch—Studebaker No. 521436.

Fuse—20 ampere. On Overdrive Relay.

Removal: See Std. Transmission Removal data

UNIVERSALS

Spicer Model 1268-110X (Front & Rear), 1261-102X intermediate). Needle bearing type. Three used with intermediate universal at propeller shaft support bearing on crossmember (see Propeller Shaft)
See Universals Section for complete data.

Propeller Shaft & Support Bearing: Two shafts used:
1) Front Shaft with intermediate universal yoke bolted on rear end (no slip-joint).
2) Rear Shaft with slip-joint on forward end at intermediate universal.

Propeller Shaft & Support Bearing Removal & Servicing—*See "Propeller Shaft" in Studebaker Shop Notes.*

REAR AXLE

Spicer Salisbury Model 23. Semi-floating, Hypoid Gear type with Hotchkiss Drive.
See Rear Axle Section for complete data.

Ratio—4.1-1 Std. 4.56-1 Optl. (Std. with Overdrive).

NOTE—Rear axle ratio stamped on plate attached to axle by cover capscrew.

Backlash—.003-.006". Shim adjustment.

Removal: Remove hub caps, take out cotter pin from axle nut, loosen rear wheel nuts. Place car on stands on frame just ahead of rear springs. Remove wheels, hubs and drums. Disconnect hand brake cable. Take out backing plate bolts from backing plates, free hydraulic brake line from axle housing clips (do not disconnect brake line). Backing plates and adjusting shims can then be wired to frame (do not disconnect brake line from wheel cylinders). Disconnect rear universal (wire caps or use clamp to prevent losing rollers). Remove rear spring "U" bolts, disconnect lower shock absorber links, remove rear axle assembly from car.

Axle Shaft Removal—Remove wheel, remove wheel hub (use puller J-446-A). Take out backing plate retaining bolts, remove outer oil seal. Pull backing plate out over end of axle shaft and wire plate to frame (CAUTION—do not lose adjusting shims located between backing plate and axle housing flange), pull axle shaft with Puller HM-931.

Wheel Bearing Adjustment: Use dial indicator to check axle shaft endplay. Adjust by removing backing plate (see Axle Shaft Removal above), and adding or removing shims located between backing plate and axle housing flange (shims .003", .005", .010", .030" thick). **Endplay**—.001-.005".

SHOCK ABSORBERS

Houde (Houdaille). Double acting, hydraulic type.
Front—Houde No. A-14269, Studebaker 523646.
Rear—Houde No. A-11478 (Left), A-11477 (Right), Studebaker No. 517696 (Left), 517695 (Right).
See Shock Absorber Section for complete data.

Adjustment: Adjusting pointer on end of shaft should be lined up with scribed line on end of shaft. Turn pointer clockwise for firmer action, counter-clockwise for softer action (not more than 1/32-1/16").

Refilling: Check at 5000 mile intervals. Fill to bottom of filler plug hole. CAUTION—Use only Houdaille Shock Absorber Fluid No. L-1404 (new type fluid for shock absorbers with new circular top filler plug

FRONT SUSPENSION

Front Suspension: Planar type independent suspension with transverse spring. NOTE—Suspension system has lower control arms (with leaf spring).
See Front Suspension Section for complete data.
Kingpin Inclination—5½° crosswise.
Caster—+½° to +1½°.
Camber—0° to 1°. Shim adjustment (shims between upper control arm brackets and frame). One thin shim changes setting approx. ¼°. Thick shim equals 4 thin shims.
CAUTION—Add or remove shims equally at front and rear brackets when adjusting Camber.
Toe In—1/16-⅛". Adjust **right hand tie rod only** for toe in after left hand tie rod has been adjusted for wheel straight-ahead position (with steering wheel centered) and center auxiliary tie rod has been adjusted so that steering gear arm and auxiliary steering arm parallel. **RHD Car Note**—Make toe-in adjustments on left hand tie rod.

STEERING GEAR

Ross Model T-12 Cam-and-Twin Lever type.
See Steering Gear Section for complete data.

BRAKES

Service: Lockheed (Wagner Electric) Hydraulic, Self-centering, Self-adjusting type. Brakes are new design with automatic spring-loaded adjusting wedge controlled by contact plug projecting through hole in lining of forward shoe (plug contacts drum when brakes applied). Hand lever applies rear wheel service brakes. NOTE—New type actuating spring used on brake shoe contact plug on 1948-49 cars (replaces hairpin locks and contact plug coil spring).
See Brake Section for complete data.

Drums—Composite type. Diameter 9".

Clearance—Adjustment necessary only when new linings installed. *See Brake article in Brake Section.*
Lining—Moulded type (all shoes). Width 2". Thickness 3/16". Length per wheel 18.5".
Braking Power—57% Front. 43% Rear.

Hand Brake: See Service Brake data (above).

Hill-Holder: Optional Equipment on all models.
See Brake Section for complete data.
Adjustment—*See Studebaker Shop Notes.*

MISC. MECHANICAL

CONVERTIBLE TOP CONTROL: Electric type with motor mounted on left hand lift assembly (right hand lift assembly driven through flexible drive
See Miscellaneous Section for complete data.

Windshield Wiper: Vacuum type—cable operated.
See Miscellaneous Section for complete data.

MODEL IDENTIFICATION

SERIAL NUMBER: Stamped on plate on left front door lock pillar post.

	South Bend	Los Angeles
1949 Numbers	4361001 Up	4832701 Up

Body Symbol Letter—Used with model designation (and on body number plate) to indicate body type as follows: C, 5-Pass. Coupe; F, 2-Door Sedan; Q, 3-Pass. Coupe; S, Convertible; W, 4-Door Sedan; Y, Land Cruiser.

ENGINE NUMBER: Stamped on pad on upper front left corner of engine block.
1949 Numbers—H-326001 Up.

TUNE-UP

COMPRESSION PRESSURE: 105 lbs. at 150 RPM. cranking speed for Std. 6.5-1 Head.

VACUUM READING: Steady 18-20" idling at 8 MPH.

FIRING ORDER: 1-5-3-6-2-4. See diagram.

SPARK PLUG GAPS: .025" Limits .0225-.0275".
Plug Type—Champion Type J7 or J9. 14 mm.

DISTRIBUTOR: Breaker Gap—.020". Limits .018-.022".
Cam Angle—38° Closed. 22° Open.
Breaker Arm Spring Tension—17-20 ozs.
Automatic & Vacuum Advance—*See Ignition.*
Condenser Capacity—.20-.25 microfarad.

IGNITION TIMING: 2° BTDC.
Timing Procedure—*See Ignition Timing.*
Timing Mark—Vibration Dampener mark "IGN/" aligned with pointer on gear case cover. NOTE—Insert .020" feeler between modifier control arm and clamp arm before tightening clampscrew (to prevent binding).
Octane Selector Setting—Set to just eliminate ping when engine hot and pulling hard.

CARBURETION:
Idle Setting—Idle screw set for smooth idle. Turn screw out for richer mixture.
Idle Speed—8-10 MPH. at normal operating temp.
Float Level—Fuel level ⅝" below top edge of float bowl with engine idling.
Accelerating Pump—Center hole (med. stroke) Normal all-season setting. Inner hole (min.)—Summer, Outer hole (max.)—Winter used for temperature extremes.
Choke Setting: Centered (at index).
Fuel Pump Pressure: 4-5 lbs. maximum.

MANIFOLD HEAT CONTROL: Automatic thermostatic type operating in stainless steel bushings.
Setting—To test coil tension, free outer end of coil from bracket on manifold. With valve closed, hooked end of coil should be approx. 90° from bracket at 70°F. Replace coil if incorrect.
NOTE—To overcome sticking, lubricate valve shaft with kerosene and soda solution or Bendix Carburetor Cleaner. If necessary, shaft diameter can be reduced for .005" clearance in bushings.

VALVE TAPPET CLEARANCE: .016" All Valves, Cold.
NOTE—Self-locking tappet screws used.
Valve Timing Check—*See Valve Timing.*

STARTING: *See Battery, Starter, Generator, Regulator.*

IGNITION

IGNITION SWITCH: Mitchellock Switch Model 42-R. No. E-10336 (for Y & T lock) or E-10522.
Ignition Lock—Yale & T wne.

COIL: Auto-Lite No. CE-6007. Mounted on the engine above distributor (under spark plug cable bracket).
Ignition Current—½-1½ amps. idling, 4-5 stopped.

CONDENSER: Auto-Lite Part No. IG-2671.
Capacity—.20-.25 microfarad

DISTRIBUTOR: Auto-Lite Model IGC-4802. Full au-
Breaker Gap—.020". Limits .018-.022".
Cam Angle—38° closed, 22° open.
Breaker Arm Spring Tension—17-20 ozs.
Rotation—Counter-clockwise viewed from above.

Distr. Degrees	Automatic Advance R.P.M.	Eng. Degrees	R.P.M.
Start	400	0	800
2	600	4	1200
5	900	10	1800
8	1200	16	2400
10	1400	20	2800

Octane Selector—Provides manual adjustment at distributor (hold-down plate marked with scale) for variation in timing depending on fuel regularly used. See Ignition Timing following for adjustment.

Vacuum Spark Control: Auto-Lite VC-4004. On hold-down plate and linked to advance plate. Provides additional advance at speeds above idling except when engine accelerated or operated with wide open throttle (spark retarded by return spring).

Distr. Degrees	Vacuum Advance Eng. Degrees	Vacuum (" of HG)
Start	0°	3"
2°	4°	5"
3°	6°	6"
5°	10°	10"
6°	12°	12"

Distributor Removal:—Mounted on left side of engine. To remove, disconnect vacuum line, take out bolt in clamp arm, lift distributor off.
Installation Note—When installing distributor, crank engine to firing position for #1 cylinder ('IGN' on vibration dampener in line with pointer on timing gear cover), sight down distributor shaft hole (distributor out) and see that distributor drive tongue in oil pump drive gear is 30° from the horizontal and offset toward the top, turn rotor to #1

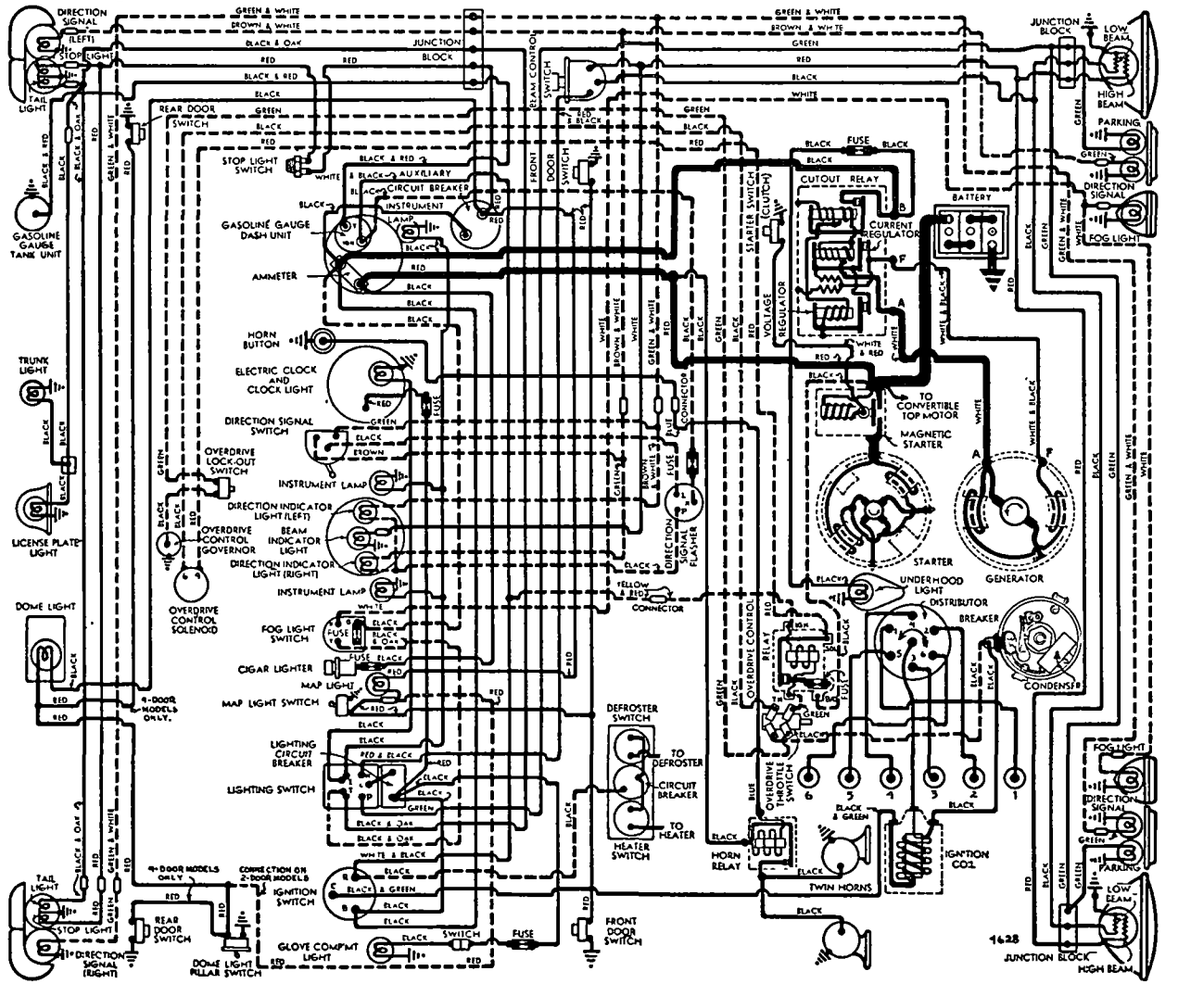

segment, install distributor (insert .020" feeler between modifier control arm and clamp arm before tightening clamp, to prevent binding), check timing.

IGNITION TIMING

Std. Setting	Flywheel Degrees
All Engines	2° BTDC.

This setting correct for regular fuel (see Octane Selector Setting for service and fuel modification)

Timing (with Neon Timing Light)—Neon Light No. 890 recommended. Clip Neon light lead in series with #1 spark plug, idle engine and direct light on vibration dampener (at pointer on timing gear cover). Loosen hold-down plate screw, center scale on pointer, tighten screw. Loosen clamp arm, rotate distributor until 'IGN' mark on vibration dampener lines up with pointer on timing gear cover. Insert .020" feeler between modifier control arm and clamp arm before tightening clamp (to insure clearance for modifier control arm). Check Octane Selector

Timing (without Neon Timing Light)—Turn engine over to firing position for #1 piston with 'IGN' mark on vibration dampener in line with pointer on timing gear cover and distributor rotor opposite #1 segment in distributor cap. Adjust distributor.

Octane Selector Setting—After setting ignition timing (above), loosen selector hold-down screw, advance selector (move toward 'A' end of scale) until motor 'pings' when it is hot and pulling hard. Then retard until ping just disappears.

CARBURETOR

Stromberg Model BXOV-26. 1¼" Single Barrel, Downdraft, with Fast Idle & Automatic Choke.
Code No. (on bowl cover)—6-104.
See Carburetor Section for complete data.

Settings (Idle Setting, Float Level, & Accelerating Pump): ***See Tune-Up data.***
Metering Jet—***Refer to Carburetor Index for Stromberg Downdraft Carburetor Jet Specification Table.***

Fast Idle: Stromberg BXOV-26 carburetor type.
See Carburetion Equipment Section for data.
Fast Idle Setting—To check, hold stopscrew against lowest step of fast idle cam, move choke valve as far as possible toward closed position, check valve opening with 11/32" drill. Adjust by bending connector

Automatic Choke:—Stromberg BXOV-26 type.
See Carburetion Equipment Section for data.
Automatic Choke Setting—'R' mark on thermostat cover in line with highest projection on housing. Shift to 'M' if engine loads up or overchokes. Use 'H' setting only if highly volatile fuels used.

CARB. EQUIPMENT

Air Cleaner: AC No. 1544024 Oil-wetted type Std. Filter Element AC #6. Oil-bath Cleaner Optl.
Servicing (Oil-wetted Type)—Clean and re-oil filter element at 1000 mile intervals or as required.
Servicing (Oil-bath Type)—Clean filter element and oil reservoir, fill reservoir to indicated level mark with SAE No. 40 or 50 engine oil at intervals as required by operating conditions.

Fuel Pump (Std.): AC #1539217 Combination fuel-and-vacuum pump.
Exchange Pump—AC No. 9217.
Pressure—4-5 lbs. maximum.
See Carburetion Equipment Section for data.

Gasoline Gauge: Stewart-Warner Electric type.
Dash Unit—Studebaker No. 522177.
Tank Unit—Studebaker No. 525548.
See Carburetion Equipment Section for data.

BATTERY

Willard Type HW-1-100. 6 volt, 15 Plate, 100 Ampere Hour Capacity (20 hour rate).
Starting Capacity—120 amperes for 20 minutes.
Zero Capacity—300 amperes for 3.5 minutes. Five Second Voltage 4.3 volts.
Grounded Terminal—Positive (+) to cylinder head.
Dimensions—Length 9 3/64". Width 6 13/16". Height 8⅝".
Location—In engine compartment on left side.

STARTER

Auto-Lite Model MCH-4001. Armature MCH-2006.
Drive—Barrel Type Bendix Drive No. A1792.
Rotation—Counter-clockwise at commutator end.
Brush Spring Tension—42-53 ozs. (new brushes).
Cranking Engine—130 RPM, approx. 175 amperes at 5.0-5.5 volts.

Performance Data

Torque		R.P.M.	Volts	Amperes
0	ft. lbs.	4900	5.5	65
2.75	"	1480	5.0	200
5.45	"	820	4.5	300
8.50	"	400	4.0	400
11.55	"	110	3.5	500
18.0	"	Lock	4.0	670

Removal:—Starter flange mounted on engine rear plate, on left side. To remove, take out flange mounting screws, remove starter assembly.

Starting Switch: Magnetic switch mounted on starter and controlled by Auto-Lite Model SW-4016 manual switch. Manual switch is mounted on toeboard and operated by clutch pedal when fully depressed.

GENERATOR

Auto-Lite Model GDZ-4805A. Armature No. GDZ-2006F. Two brush type with current-voltage control.
Charging Rate Adjustment—None. See Regulator.
Maximum Charging Rate—35 amperes, 8.0 volts, 2250 Gen. RPM (hot), at car speed 25.8 MPH and up with load or discharged battery (regulator setting).

Cold Performance Data			Hot	
Amperes	Volts	R.P.M.	Amperes	Volts	R.P.M.
0	6.4	925	0	6.4	1000
4	6.6	1035	4	6.6	1120
8	6.75	1140	8	6.75	1235
12	6.95	1250	12	6.95	1350
16	7.15	1370	16	7.15	1460
20	7.3	1480	20	7.3	1590
24	7.5	1590	24	7.5	1730
28	7.7	1710	28	7.7	1900
32	7.9	1820	32	7.9	2090
35	8.0	1900	35	8.0	2250

Rotation—Counter-clockwise at commutator end.
Brush Spring Tension—35-53 ozs. (new brushes).
Field Current—1.60-1.78 amperes at 6.0 volts.
Motoring Current—4.16-4.60 amperes at 6.0 volts.

Removal:—Pivot mounted at left front of engine. To remove, take out pivot and clamp bolts.

Belt Adjustment:—Loosen pivot and clamp bolts, move generator out until ⅜-½" belt deflection midway between generator and fan pulleys is obtained.

REGULATOR

Auto-Lite Model VRP-4004F. Voltage & Current Type. Consists of Cutout Relay and vibrating type Voltage & Current Regulators in case on dash.
See Electrical Equipment Section for complete data.
NOTE—Regulator case cover is sealed. Serviced on exchange basis if seals not broken (to remove cover).

Cutout Relay

Cuts In—6.4-7.0 volts (set to 6.4-6.6 volts), 10.4 MPH.
Cuts Out—4.1-4.8 volts (approx. 4-6 amps. disch.).
Contact Gap—.015" minimum.
Air Gap—.031-.034" with contacts open (check at hinge end of core).

Voltage Regulator

Setting—7.2-7.5 volts at 70°F. See Electrical Equipment Section for settings at other temperatures.
Checking (without breaking seal) & Adjustment—***See Electrical Equipment Section.***
Contact Gap—.012" min. (armature against stop pin).
Air Gap—.048-.052" with contacts just opening.

Current Regulator

Setting—34-36 amperes (marked '35' on the cover).
Checking (without breaking seal) & Adjustment—***See Electrical Equipment Section.***
Contact Gap & Air Gap—Same as Voltage Regulator.

LIGHTING

Headlamps: Corcoran-Brown "Sealed Beam" type.
See Electrical Equipment Section for complete data.
Adjustment—Aim upper beam straight ahead (hot spot center 3" below lamp center height at 25 ft.).
Beam Indicator—At center of speedometer dial. Lighted whenever Country (upper) beams in use.

Direction Signal: ***See Electrical Equipment Section.***
Direction Signal Indicators—In face of Speedometer dial. Left or right indicator lighted when corresponding direction signal is in operation.

Switches

Lighting—Douglas. Studebaker No. 519798.
Beam Selector—Delco-Remy No. 1997008, Studebaker No. 519246.
Stop Light—Studebaker No. 666858.
Direction Signal—Studebaker No. 520304.

MISC. ELECTRICAL

LIGHTING CIRCUIT BREAKER (On Light Switch): Studebaker No. 522014. 30-ampere thermostatic type. Protects Headlamps, Parking, Tail, & Instrument Lamps by vibrating to limit current.

Auxiliary Circuit Breaker (On Panel): No. 523056. 15-ampere type. Protects Body & Stop Lamps.

ACCESSORY CIRCUIT BREAKER: One 15-ampere type used on cars with Climatizer and Defroster.

FUSES: Clock—3 ampere. In clock lead.
Direction Signal—14 ampere. In Fasher lead.
Overdrive—20 ampere. On Overdrive Relay.
Glove Compt. Light—5 ampere. In lamp lead.
Under Hood Light—5 ampere. In lamp lead.
Fog Lights—20 ampere. On Fog Light Switch.

HORNS: Sparton or Delco-Remy No. 1999610 (High Note), 1999611 (Low Note). Twin Airtone type horns operated by relay. **Horn Current**—12-15 amps (ea.).

Horn Relay: Delco-Remy No. 1116775.
Contacts Close—2.75-4.0 volts.
Contact Gap—.025". **Air Gap**—.015" (contacts closed).

CONTINUED ON NEXT PAGE

C NTINUED FR M PRECEDIN PAGE

ENGINE

ENGINE REMOVAL for Oil Pan Removal and all major engine work: *See Studebaker Shop Notes.*

ENGINE SPECIFICATIONS: Six cylinder, "L" Head.
Bore—3 5/16". **Stroke**—4 3/4".
Displacement—245.6 cu. ins. **Rated H.P.**—26.35.
Developed Horsepower—100 at 3400 RPM.
Compression Ratio—6.5-1 Std. 7.0-1 Optl. iron hds.
NOTE—7.0-1 Head for 5000 ft. & higher altitudes.
Compression & Vacuum Reading—*See Tune-up data.*

ORIGINAL BORE & PISTONS: *See Studebaker Shop Notes.*

TIGHTENING TORQUES: *See Studebaker Shop Notes.*

CYLINDER HEAD INSTALLATION: *See Studebaker Shop Notes.*

PISTONS: Lynite aluminum alloy, Cam-ground, T-slot, bearing-metal plated type. **Length 3¾".**
Weight—14.4 ozs. (stripped).
Clearance—Selective Fit (see Fitting Pistons).
Removal—Pistons and rods removed from above.
NOTE—Car manufacturer recommends that cylinders out-of-round or tapered more than .002" be reconditioned.

Fitting New Pistons: Insert .002" feeler, 1" wide, between piston and cylinder wall on camshaft side (piston pin parallel to camshaft, slot away from camshaft). Pull required to withdraw feeler should be 14-19 lbs.

Replacement Pistons: *See Studebaker Shop Notes.*

Installing Pistons: T-slot away from camshaft.

PISTON RINGS: Two compression, one oil control ring per piston, all above pin. Oil drain holes provided in oil ring groove.

Ring	Width	End Gap	Side Clearance
Comp. (#1,2)	3/32"	.009-.014"	.0015-.002"
Oil Contr. (#3)	3/16"	.009-.014"	.0015-.002"

Installing Rings: Beveled side of compression rings (Sealed Power) up.

Replacement Rings: Sets furnished Std. size and .020", .030", .040" Oversize. Single rings Std. size and .010", .020", .030", .040" Oversize.

PISTON PIN: Diameter .8741-.8745". Length 2⅞". Pin is locked in rod by tapered pin and locknut.

Installing Pins: Use Pin Assembly Tool J-1293. Install clamp bolt nut and star washer on heavy boss side of rod. NOTE—Threads on opposite end of clamp bolt used only to remove bolt from rod (install nut on this end, tighten nut to pull bolt out of rod).
Pin Fit in Piston—.0001-.0003" clearance or light finger push fit at room temperature (70°F).

Replacement Pins: Std. & .0025", .005" Oversize. Use Hone PH-1 to obtain proper piston pin fit.
NOTE—Replacement pistons fitted with pins.

CONNECTING ROD: Length 7 15/16". Weight 33.3 ozs.
Crankpin Journal Diameter—2.18675-2.18775".
Lower Bearing—Interchangeable steel-backed, micro-babbitt lined type. No shims.
Clearance—.0005-.002". **Sideplay** .005-.009".

Bearing Adjustment: None (no shims). Replace bearings. Do not file rods or caps.
NOTE—Make certain that small tongue on bearing shells engage grooves. Palnuts used on bolt nuts.
Palnut Installation—*See Studebaker Shop Notes.*

Replacement Bearings: Bearings furnished Std. size and .001", .005", .010", .020" Undersize.

Installing Rods: Lower bearings "offset". Install rods with narrow portion of bearing toward front of engine (#1, 3, 5), toward rear (#2, 4, 6). Numbers on rods and bearing caps must be together and installed in same numbered cylinder with number and oil hole in lower end of rod toward camshaft

CRANKSHAFT: 4 bearing, 5 integral counterweights. Vibration dampener mounted on forward end.
Vibration Dampener—*See Studebaker Shop Notes.*
Journal Diameters—2.8745-2.8750".
Bearings—Removable steel backed, babbitt-lined type. No shims.
Clearance—.0006-.0027".
Rear Bearing Oil Seals—Consist of rubber ring, Studebaker No. 523134 (After Eng. No. H-269,723), on crankshaft; two rubber seal strips, Studebaker No. 522144, in grooves on top of bearing cap; and two specially treated wood strips, Studebaker No. 187106, in grooves on sides of bearing cap.
►*CAUTION—Install new wood oil seals (above) each time rear main bearing cap removed and re-installed.*

Bearing Adjustment: None (no shims). Replace bearings. Do not file bearing caps.

Replacement Bearings: Furnished as sets or single bearings in Std. Size and .001", .010", .020", .030" U.S.

End Thrust: Taken by thrust plate assembled between front main bearing and crankshaft gear. Controlled by shims between thrust plate and main bearing journal. Adjust by changing shims furnished .003", .005", .007" thick.
Endplay—.003-.006".

CAMSHAFT: Four bearing, helical gear drive.
Journal Diameters—#1, 1.9975-1.9980"; #2, 1.9662-1.9670"; #3, 1.9357-1.9365"; #4, 1.1232-1.1240".
Bearings—Split steel-backed, babbitted bushings.
NOTE—Oil hole in bushings must be aligned with oil holes in engine block.
Clearance—.0007-.0022" (#1), .0010-.0027" (others).

Camshaft Removal: *See "Camshaft & Bearings" in Studebaker Shop Notes.*

End Thrust: Taken by thrust plate assembled on front face of engine behind camshaft gear (spacer assembled back of gear hub).
Endplay—.003-.006". Tighten cap screws alternately a few turns at a time to prevent distortion of plate.

Timing Gears: Crankshaft gear Cast Iron. Camshaft gear Celeron with steel hub. **Backlash**—.001-.003".
Replacement Gears—Camshaft gear furnished in three sizes: Standard (marked "S"), High Limit (marked "H"), Low Limit (marked "L"). Crankshaft gear furnished Standard size only.
Timing Gear Removal & Installation—*See "Timing Gears" in Studebaker Shop Notes.*

Camshaft Setting: Mesh marked tooth of camshaft gear between two marked teeth on crankshaft gear.

VALVES:	Head Diameter	Stem Diameter	Length
Intake	1 15/32"	11/32"	5 7/32"
Exhaust	1 9/32"	11/32"	5 7/32"

	Seat Angle	Lift	Stem Clearance
All Valves	45°	11/32"	.0015-.0035"

Valve Guides: Pressed in block from above with upper end 1 5/32" below upper edge of valve seat and stepped end down. Ream guides to inside diameter of .3425-3445". Replace worn guides when clearance exceeds .0035".

Valve Springs: Install with closed-coil end up. Replace springs if more than 10% weaker than test pressure of 125-135 lbs. at 1¾" (U-15 or other accredited tester). Spring free length 2½".

	Spring Pressure	Length
Valve Closed	54-60 lbs.	2 3/32"
Valve Open	125-145 lbs.	1 3/4"

NOTE—Dampeners used on top of all springs.

Valve Lifters: Mushroom type. Remove from below with camshaft out of engine. *For camshaft removal directions, see Studebaker Shop Notes.*
Valve Lifter Tension Spring—*See "Valve System" in Studebaker Shop Notes.*
Diameter—.624". **Clearance**—.0005-.00175".
Replacement Lifters—Std. & .0005", .001" O. S.

VALVE TIMING

Tappet Clearance: .016" All Valves, Engine Cold.
NOTE—Self-locking tappet adjusting screws used. Tappet screw tension should be 25 in. lbs. minimum.

Valve Timing: See Camshaft Setting above.
Intake Valves—Open 15° BTDC. Close 49° ALDC.
Exhaust Valves—Open 54° BLDC. Close 10° ATDC.
Valve Timing Check—With .020" tappet clearance, No. 1 intake valve should open with No. 1 piston 15° BTDC. with the vibration dampener mark "IN. OP. 1-6/" aligned with pointer on timing gear cover. Reset tappet clearance at .016" Cold.

LUBRICATION

Engine Oiling System: Pressure to crankshaft, connecting rod, and camshaft bearings, and to valve lifters. Timing gears lubricated by oil by-passed by pump. Oil pump mounted externally on right side
Crankcase Capacity—6 quarts.
Normal Oil Pressure—20-40 lbs. at 40 MPH.
Oil Pressure Regulator—On lower right front corner of engine. Opens at 40 lbs. Adjustable by inserting shims between outer end of spring and plug.

Oil Pan Removal: *See "Engine Removal" in Studebaker Shop Notes (recommended for pan removal).*

Oil Pump: Helical gear type mounted externally on right side of engine.
Oil Pump Removal & Installation—*See "Oil Pump" in Studebaker Shop Notes.*

Oil Filter: Fram Model F4 or F30S. Replacement Cartridge Kit Studebaker No. 521948 (F4), 520831 (F30S).

Oil Pressure Gauge: Stewart-Warner Bourden Tube (not electric) type. Studebaker No. 522179.

Crankcase Ventilation: Filter element in oil filler cap (air intake) and in breather pipe on left rear of engine (air outlet).
Servicing—Wash both filter elements in kerosene and re-oil at regular intervals. NOTE—Filter in outlet pipe removed by taking out cotter pin.

COOLING

Cooling System: Positive circulation with water pump mounted on front of block with fan.
Capacity—13 qts. (14 qts. with Climatizer).

Water Pump: Packless type. No lubrication required. *See Water Pump Section for complete data.*
Removal—Slack off drive belt, take out capscrews in fan pulley hub and remove blades. Disconnect hose connection, take out mounting screws in pump
Belt Adjustment—*See Generator Belt Adjustment.*

Thermostat: Fulton or Bishop & Babcock. In water outlet on cylinder head.

Setting—Starts to open at 151-155°F.

Temperature Gauge: Stewart-Warner Bourden Tube type (not electric). Studebaker No. 522180.

CLUTCH

Borg & Beck Model No. 9A7 with Borglite Driven Member. Single plate, dry disc type.
NOTE—Clutch Assembly marked by number 943
See Clutch Section for complete data.

Facings—Moulded-metallic, 2 required. I.D. 6". O.D. 9¼". Thickness ⅛".

Adjustment: Pedal free travel ½ to 1". To adjust, unhook pull-back spring on outside of frame rail, loosen locknut at adjusting clevis and remove clevis pin at inner end of pedal shaft, turn clevis on rear end of pedal shaft-to-operating shaft rod for correct clearance, reassemble linkage.

Hill-Holder Note—Check setting whenever clutch pedal adjusted and adjust Hill-holder to release just as clutch engages. Adjusting nut and locknut at end of Hill-holder operating rod.

Hill-Holder Adjustment: *See Studebaker Shop Notes.*

Removal: Jack up rear end of car and rest on stands under rear axle. Remove transmission (see TRANSMISSION following). Disconnect one battery cable at battery take off starter and hang it clear of clutch housing. Remove clutch housing mounting capscrews and bolts at top, working through opening in front floor. Free speedometer cable from frame cross-member and wire it up out of the way. Support rear end of engine with jack placed under oil pan at rear (CAUTION—Do not damage oil pan). Disconnect rear engine mounting by taking off nuts, bolts with insulators, washers, and spacers. Disconnect parking brake cable at bracket, clutch operating shaft from release shaft, and brake pedal return spring. Loosen exhaust pipe flange nuts at manifold, take off exhaust pipe support bracket at housing, loosen clamp and turn bracket for clearance. Remove rear engine support cross member. Take out clutch housing mounting bolts and remove housing. Block clutch release levers. Remove six mounting screws in clutch cover flange, lift off clutch assembly and driven member.

TRANSMISSION

Warner Model AS1-T86E (Std.), AS2-T86E with R10B type Overdrive (Optl.). All helical gear type. Constant-mesh, synchro-mesh (Second & High), sliding gear (Low & Reverse).
See Transmission Section for complete data.

Transmission Control: Remote control type with gearshift lever mounted on steering column.
See Transmission Section for complete data.

Removal: Drain transmission. Disconnect hand brake cable and move out of way for clearance. Disconnect front universal at transmission (wire caps or use clamp to prevent losing rollers). Take out center support bearing mounting bolts. Push front shaft and support to rear (will slide on splines on rear shaft). Disconnect shift rods from levers on case and speedometer cable (remove speedometer pinion). On Overdrive transmission disconnect all control wires and cable. Take out transmission to clutch housing capscrews, pull transmission straight back and remove from car.

OVERDRIVE

Warner Type R10B (part of AS2-T86E transmission). New Governor controlled type (no centrifugal pawls) with electrical solenoid operation and throttle controlled "kick-down."
See Transmission Section for complete data.

Overdrive Control Units—*Same as Champion. See Champion 8G (1949) page for data.*

Removal: See Std. Transmission Removal data

UNIVERSALS

Spicer Model 1268-111X (Front & Rear), 1261-102X intermediate). Needle bearing type. Three used with intermediate universal at propeller shaft support bearing on crossmember (see Propeller Shaft)
See Universals Section for complete data.

Propeller Shaft & Support Bearing: Two shafts used:
1) Front Shaft with intermediate universal yoke
2) Rear Shaft with slip-joint on forward end at intermediate universal.

Propeller Shaft & Support Bearing Removal & Servicing—*See Studebaker Shop Notes.*

REAR AXLE

Spicer Salisbury Model 41-2. Semi-floating, Hypoid Gear type with Hotchkiss Drive.
See Rear Axle Section for complete data.

Ratio—4.09-1 Std., 4.55-1 Optl. (Std. with Overdr.).
NOTE—Rear axle ratio stamped on plate attached to axle by cover capscrew.

Backlash—.003-.006". Shim adjustment.

Removal: Remove hub caps, take out cotter pin from axle nut, loosen rear wheel nuts. Place car on stands on frame just ahead of rear springs. Remove wheels, hubs and drums. Disconnect hand brake cable. Take out backing plate bolts from backing plates, free hydraulic brake line from axle housing clips (do not disconnect brake line). Backing plates and adjusting shims can then be wired to frame (do not disconnect brake line from wheel cylinders). Disconnect rear universal (wire caps or use clamp to prevent losing rollers). Remove rear spring "U" bolts, disconnect lower shock absorber links, remove rear axle assembly from car.

Axle Shaft Removal—Remove wheel, remove wheel hub (use puller J-596-A). Take out backing plate retaining bolts, remove outer oil seal. Pull backing plate out over end of axle shaft and wire plate to frame (CAUTION—do not lose adjusting shims located between backing plate and axle housing flange). Pull axle shaft assembly (Puller HM-931).

Wheel Bearing Adjustment: Use dial indicator to check axle shaft endplay. Adjust by removing backing plate (see Axle Shaft Removal above), and adding or removing shims located between backing plate and axle housing flange (shims .003", .005", .010", .030" thick). **Endplay**—.001-.005".

SHOCK ABSORBERS

Houde (Houdaille)—Double acting, hydraulic type. Adjustable type with thermostatic control on rear.
Front (All)—Houde No. A-14269, Studebaker 523646.
Rear (exc. Convt.)—Houde No. A-14174, Studebaker 523497.
Rear (Convertible only)—Studebaker No. 523538 (Right), 523539 (Left).
See Shock Absorber Section for complete data.

Adjustment (Front): Pointer on end of shaft should be lined up with scribed line on end of shaft. Turn pointer clockwise for firmer action, counter-clockwise for softer action (not more than 1/32-1/16"). **(Rear Shocks)**—Remove cap on end of shaft to expose adjusting screw. Slot aligned with scribe mark between "0" and "S" mark is original factory setting. Use special tool No. T-2860 (do not use screwdriver). Turn screw clockwise (toward "S") for firmer action, counter-clockwise (toward "0") for softer action (not more than 1/32" at a time).

Refilling: Check at 5000 mile intervals. Fill to bottom of filler plug hole. CAUTION—Use only Houdaille Shock Absorber Fluid No. L-1404 (new type fluid for shock absorbers with new circular top filler plug

FRONT SUSPENSION

Front Suspension: Planar type independent suspension with transverse spring. NOTE—Suspension system has lower control arms (with leaf spring).
See Front Suspension Section for complete data.

Kingpin Inclination—5½° crosswise.

Caster—Neg. 2° to Neg. 3°. No adjustment.

Camber—0° to +1°. Shim adjustment (shims between upper control arm brackets and frame). One thin shim changes setting approx. ¼°. Thick shim equals 4 thin shims.
CAUTION—Add or remove shims equally at front and rear brackets when adjusting Camber.

Toe In—1/16-⅛". Adjust **right hand tie rod only** for toe in after left hand tie rod has been adjusted for wheel straight-ahead position (with steering wheel centered) and center auxiliary tie rod has been adjusted so that steering gear arm and auxiliary steering arm parallel. **RHD Car Note**—Make toe-in adjustments on left hand tie rod.

STEERING GEAR

Ross Model T-14 Cam-and-Twin Lever type.
See Steering Gear Section for complete data.

BRAKES

Service: Lockheed (Wagner Electric) Hydraulic, Self-centering, Self-adjusting type. Brakes are new design with automatic spring-loaded adjusting wedge controlled by contact plug projecting through hole in lining of forward shoe (plug contacts drum when brakes applied). Hand lever applies rear wheel service brakes. NOTE—New type actuating spring used on brake shoe contact plug on 1948-49 cars (replaces hairpin locks and contact plug coil spring).
See Brake Section for complete data.

Drums—Composite type. Diameter 11".
Clearance—Adjustment necessary only when new linings installed. *See Brake article in Brake Section.*
Lining—Moulded type (all shoes). Width 2". Thickness 3/16". Length per wheel 22¼".
Braking Power—57% Front, 43% Rear.

Hand Brake: See Service Brake data (above).

Hill-Holder: Std. *See Brake Section for complete data.*
Adjustment—*See Studebaker Shop Notes.*

MISC. MECHANICAL

CONVERTIBLE TOP CONTROL: Electric type with motor mounted on left hand lift assembly (right hand lift assembly driven through flexible drive
See Miscellaneous Section for complete data.

Windshield Wiper: Vacuum type—cable operated.
See Miscellaneous Section for complete data.

MODEL IDENTIFICATION

SERIAL NUMBER: Stamped on plate on left front door lock pillar post.

1950 Numbers—G-468101 Up (South Bend), G-851801 Up (Los Angeles), G-709401 Up (Hamilton).

Body Symbol Letter—Used with model designation (and on body number plate) to indicate body type as follows: C, 5-Pass. Coupe; F, 2-Door Sedan; Q, 3-Pass. Coupe; S, Convertible; W. 4-Door Sedan.

ENGINE NUMBER: Stamped on pad on upper front left corner of engine block.

1950 Numbers—521001 Up (South Bend & Los Angeles), C—10501 Up (Hamilton).

NOTE—Letter "A" following engine number indicates crankshaft main bearing journals .005" Undersize.

TUNE-UP

COMPRESSION PRESSURE: 120 lbs. at 150 RPM.

VACUUM READING: Steady 17-18" idling at 8 MPH.

FIRING ORDER: 1-5-3-6-2-4. See diagram.

SPARK PLUG GAPS: .025" Limits .0225-.0275".
Plug Type—Champion Type J7. 14 mm.

DISTRIBUTOR: Breaker Gap—.020". Limits .018-.022".
Cam Angle—38° Closed, 22° Open.
Breaker Arm Spring Tension—17-20 ozs.
Automatic & Vacuum Advance—*See Ignition.*
Condenser Capacity—.20-.24 mfd. (IGC-4805), .21-.25 mfd. (IAT-4001).

IGNITION TIMING: 2° BTDC.
Timing Procedure—*See Ignition Timing.*
Timing Mark—Vibration dampener mark "IGN/" aligned with pointer on left side of engine.

►*CAUTION*—On IGC-4805 Distr., insert .020" feeler between modifier arm and clamp arm when tightening clamp arm to prevent binding.
Octane Selector Setting—Set to just eliminate ping when engine hot and pulling hard.

CARBURETION:
Idle Setting—½-1½ turns open. Turn screw out for richer mixture.
Idle Speed—8-10 MPH. at normal operating temp.
Float Level—⅜". Measured from top of projection on bowl cover to top of soldered seam on free end of float with needle valve seated and bowl cover assembly inverted.
Accelerating Pump—No seasonal adjustment.

Choke Setting: Centered (at index).

Fuel Pump Pressure: 4-5 lbs. maximum.

MANIFOLD HEAT CONTROL: Automatic thermostatic type operating in stainless steel bushings.
Setting—To test coil tension, free outer end of coil from anchor post. With valve closed (counterweight up), hooked end of coil should be approx. 90° from anchor post with coil at 70°F. NOTE—To overcome sticking, lubricate valve shaft with kerosene and soda solution or Bendix Carburetor Cleaner. If necessary, shaft diameter can be reduced for .005" clearance in bushings (do not ream bushings).

VALVE TAPPET CLEARANCE: .016" All Valves, Cold.
Valve Timing Check—*See Valve Timing.*

STARTING: *See Battery, Starter, Generator, Regulator.*

IGNITION

IGNITION SWITCH: Mitchellock. Studebaker No. 521955.
Ignition Lock—Yale & Towne.

COIL: Auto-Lite CE-6007 or CR-6007. On engine above distributor (under spark plug cable bracket).
Ignition Current—½-1½ amps. idling, 4-5 stopped.

CONDENSER: Auto-Lite No. IG-2671 (IGC-4805).
Capacity—.20-.25 microfarad.

DISTRIBUTOR: Auto-Lite Models IGC-4805 (Before Eng. No. 531285), IAT-4001 (Beginning Eng. No. 531285). Full automatic advance type with vacuum spark control.
Breaker Gap—.020". Limits .018-.022".
Cam Angle—38° closed, 22° open.
Breaker Arm Spring Tension—17-20 ozs.
Rotation—Counter-clockwise viewed from above.

IGC-4805

Distributor Degrees	Automatic Advance R.P.M.	Engine Degrees	Engine R.P.M.
Start	400	0	800
2	680	4	1360
4	975	8	1950
6	1265	12	2530
7	1400	14	2800

Vacuum Spark Control: (IGC-4805)—Auto-Lite Model VC-4011. Unit mounted on hold-down plate and linked to advance plate. Provides additional advance at speeds above idling except when engine accelerated or operated with wide open throttle when spark retarded by return spring in unit.

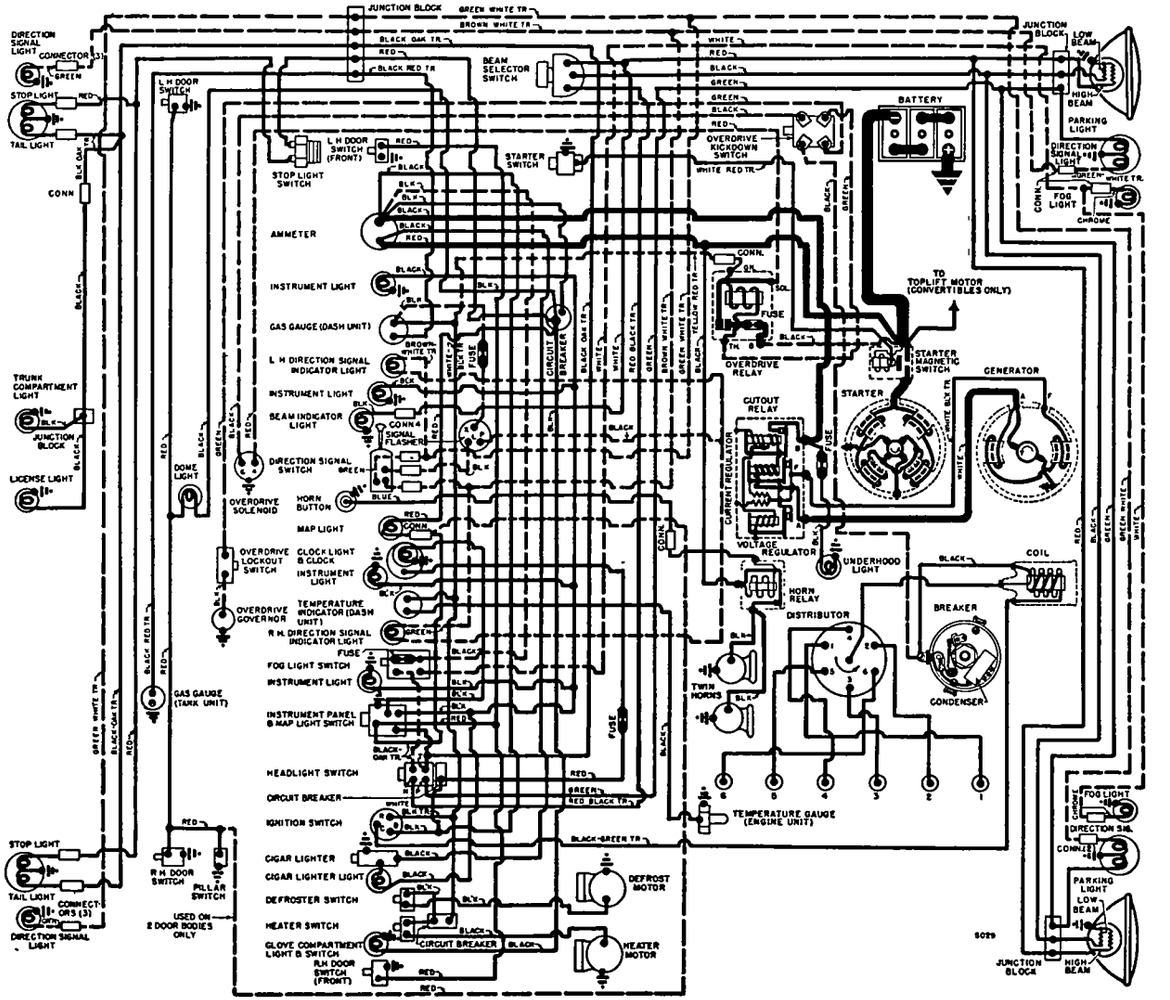

Vacuum Advance—IGC-4805

Distr. Degrees	Eng. Degrees	Vacuum (" of HG)
Start	0°	4"
1°	2°	4⅞"
4°	8°	7½"
8°	16°	11⅛"
9°	18°	12"

Octane Selector—Provides manual adjustment at distributor (hold-down plate marked with scale) for variation in timing depending on fuel regularly used. See Ignition Timing following for adjustment.

Distributor Removal:—Mounted on left side of engine. To remove, disconnect vacuum line, take out bolt in clamp arm, lift distributor off.

Installation Note—When installing distributor, crank engine to firing position for #1 cylinder (dampener mark 'IGN' in line with pointer on the timing gear cover), sight down distributor shaft hole (distributor out) and see that distributor drive tongue in oil pump drive gear is parallel to and narrow half of offset toward camshaft, turn rotor to #1 segment, install distributor.

►*CAUTION*—On IGC-4805 Distr., insert .020" feeler between modifier arm and clamp arm when tightening clamp arm to prevent binding.

IGNITION TIMING

Std. Setting	Flywheel Degrees	Piston Pos.
All Engines	2° BTDC	.0016" BTDC.

This setting correct for regular fuel (See Octane Selector Setting for service and fuel modification).

Timing (With Neon Timing Light)—Clip timing light lead in series with #1 spark plug, direct light on vibration dampener at front of engine. Loosen hold-down plate screw, center octane selector pointer on scale, tighten hold-down screw. Run engine at idle speed, loosen clamp arm, rotate distributor until "IGN/" mark on dampener appears in line with pointer on left side of timing gear cover, tighten clamp screw. Check Octane Selector setting.

►*CAUTION*—On IGC-4805 Distr., insert .020" feeler between modifier arm and clamp arm when tightening clamp arm.

Timing (Without Neon Timing Light)—With #1 piston on compression, turn engine over until "IGN/" mark on vibration dampener lines up with pointer on left side of timing gear case. Adjust distributor as directed above.

Octane Selector Setting—After setting timing (above), loosen selector hold-down screw, advance timing by turning distributor clockwise (move pointer toward "A" end of scale) until engine "pings" when hot and pulling hard, then retard timing by turning distributor counter-clockwise (move pointer toward "R") until ping disappears.

CARBURETOR

Carter WE-715S—1¼" single barrel, downdraft, with Carter Climatic Control.

Casting No. on Flange—620.
See Carburetor Section for complete data.

Settings (Idle Setting, Float Level, & Accelerating Pump): *See Tune-Up.*
Metering Rods & Jets—*See Carter Jet Table in Carburetor Section.*

Fast Idle: Carter Single Barrel Carburetor type.
See Carburetion Equipment Section for data.

Setting—.046" between throttle valve and bore of carburetor. To check, remove thermostatic coil housing, gasket and baffle plate. Crack throttle valve and hold choke valve closed. Close throttle. Adjust by bending connector rod at lower angle.

Automatic Choke: Carter Climatic Control (Single Carburetor type).
See Carburetion Equipment Section for data.

CARB. EQUIPMENT

Air Cleaner: AC No. 1543970 Oil-wetted type Std. Filter Element AC #1. Oil-bath Air Cleaner Optl.
Servicing (Oil-wetted type)—Clean and re-oil filter element at 1000 mile intervals.
Servicing (Oil-bath type)—Clean filter element and oil reservoir, fill reservoir to indicated level mark with SAE No. 40 or 50 engine oil at intervals as required by operating conditions.

Fuel Pump (Std.): AC diaphragm type.
Optl. (Fuel & Vacuum): AC #1539218.
Pressure—4-5 lbs. maximum.
See Carburetion Equipment Section for data.

Gasoline Gauge: Stewart-Warner Electric type.
Dash Unit—Studebaker No. 522177.
Tank Unit—Studebaker No. 525548.
See Carburetion Equipment Section for data.

BATTERY

Willard Type HW-1-100. 6 volt, 15 plate, 100 Ampere Hour Capacity (20 hour rate).
Starting Capacity—120 amperes for 20 minutes.
Zero Capacity—300 amperes for 3.5 minutes. Five Second Voltage 4.3 volts.
Grounded Terminal—Positive (+) to cyl. head.
Dimensions—L. 9 3/64". W. 6 13/16". H. 8⅝"
Location—In engine compartment on left side.

STARTER

Auto-Lite Models MZ-4151 (Early), MZ-4157 (Late).
Armature No.—Auto-Lite No. MZ-2211.
Drive—Barrel type Bendix No. A1792 (MZ-4151).
Rotation—Counter-clockwise at commutator end.
Brush Spring Tension—42-53 ozs. (new brushes).
Cranking Engine—150 amperes, 5.2 volts, 150 RPM.

Performance Data

Torque	R.P.M.	Volts	Amperes
0 ft. lbs.	4300	5.5	70
.65 "	2500	5.5	100
2.55 "	1325	5.0	200
4.95 "	750	4.5	300
7.65 "	220	4.0	400
7.8 "	Lock	3.0	420
11.8 "	Lock	4.0	560

Starting Switch: Magnetic switch mounted on starter and controlled by Auto-Lite Model SW-4016 manual switch on toeboard operated by clutch pedal.

Removal: Flange mounted on engine rear plate at left side. To remove, take out flange mounting screws, take off starter and switch assembly.

GENERATOR

Auto-Lite GDZ-4804A (Early), GDZ-6001A (Later).
Armature No. (GDZ-4804A)—GDZ-2006F.
Two brush type with current-voltage control.
Charging Rate Adjustment—None. See Regulator.
Maximum Charging Rate—35 amperes, 8.0 volts, 2250 Gen. RPM. (hot), at car speed of 21.2 MPH & above with load or discharged battery (regulator setting).

Performance Data

Cold Amperes	Cold Volts	Cold R.P.M.	Hot Amperes	Hot Volts	Hot R.P.M.
0	6.4	925	0	6.4	1000
5	6.65	1060	5	6.65	1150
10	6.85	1200	10	6.85	1290
15	7.05	1340	15	7.05	1430
20	7.3	1480	20	7.3	1590
25	7.55	1620	25	7.55	1750
30	7.8	1760	30	7.8	1980
35①	8.0	1900	35	8.0	2250

①—Current Regulator setting. See Regulator data.
Rotation—Counter-clockwise at commutator end.
Brush Spring Tension—35-53 ozs. (new brushes).
Field Current—1.6-1.8 amperes at 6.0 volts.
Motoring Current—4.2-4.6 amperes at 6.0 volts.

Removal: Pivot mounted at left front of engine. To remove, take out pivot and clamp bolts.

Belt Adjustment: Loosen pivot and clamp bolts, move generator out until ⅜-½" belt deflection midway between generator and fan pulleys is obtained.

REGULATOR

Auto-Lite Models VRP-4004F (Early), VRP-6001A (Later).
Voltage & Current Typ. Consists of Cutout Relay and vibrating type Voltage & Current Regulators in case on dash.
See Electrical Equipment Section for complete data.
NOTE—Regulator case cover is sealed. Serviced on exchange basis if seals not broken (to remove cover).

Cutout Relay

Cuts In—6.4-7.0 volts (set to 6.4-6.6 volts), 10.4 MPH.
Cuts Out—4.1-4.8 volts (approx. 4-6 amps. disch.).
Contact Gap—.015" minimum.
Air Gap—.031-.034" with contacts open (check at hinge end of core).

Voltage Regulator

Setting—7.2-7.5 volts at 70°F. See Electrical Equipment Section for settings at other temperatures.
Checking (without breaking seal) & Adjustment—*See Electrical Equipment Section.*
Contact Gap—.012" min. (armature against stop pin).
Air Gap—.048-.052" with contacts just opening.

Current Regulator

Setting—34-36 amperes (marked '35' on the cover).
Checking (without breaking seal) & Adjustment—*See Electrical Equipment Section.*
Contact Gap & Air Gap—Same as Voltage Regulator.

LIGHTING

Headlamps: Corcoran-Brown "Sealed Beam" type.
See Electrical Equipment Section for complete data.
Adjustment—Aim upper beam straight ahead (hot spot center 3" below lamp center height at 25 ft.)
Beam Indicator—At center of speedomter dial. Lighted whenever Country (upper) beams in use.

Direction Signal: *See Electrical Equipment Section.*
Direction Signal Indicators—In face of Speedometer dial. Left or right indicator lighted when corresponding direction signal is in operation.

Switches

Lighting—Douglas. Studebaker No. 526380.
Beam Selector—Delco-Remy No. 1997008, Studebaker No. 519246.
Stop Light—Studebaker No. 666858.
Direction Signal—Studebaker No. 520304.

CONTINUED ON NEXT PAGE

C NTINUED FROM PRECEDING PAGE

MISC. ELECTRICAL

LIGHTING CIRCUIT BREAKER (On Light Switch): Studebaker No. 522014. 30-ampere thermostatic type. Protects Headlamps, Parking, Tail, & Instrument Lamps by vibrating to limit current.

Auxiliary Circuit Breaker (On Instrument Panel): Studebaker No. 523056. 15-ampere thermostatic type. Protects Body & Stop Lamps by vibrating to limit current.

ACCESSORY CIRCUIT BREAKER: One 15-ampere type used on cars with Climatizer and Defroster.

FUSES: Clock—3 ampere. In clock lead.
Direction Signal—14 ampere. In Flasher lead.
Overdrive—20 ampere. On Overdrive Relay.
Glove Compt. Light—5 ampere. In lamp lead.
Under Hood Light—5 ampere. In lamp lead.
Fog Lights—20 ampere. On Fog Light Switch.

HORNS: Delco-Remy No. 1999656 (High Note), 1999655 (Low Note). Twin Airtone type horns operated by relay. **Horn Current**—12-15 amps. (each).

Horn Relay: Delco-Remy No. 1116775.
Contacts Close—2.75-4.0 volts.
Contact Gap—.025". **Air Gap**—.015" (closed).

ENGINE

OIL PAN REMOVAL: *See Studebaker Shop Notes.*

►*Not necessary to remove engine for pan removal.*

ENGINE SPECIFICATIONS: Six cylinder, "L" Head.
Bore—3". **Stroke**—4".
Displacement—169.6 cu. ins. **Rated H.P.**—21.6.
Developed Horsepower—85 at 4000 RPM.
Compression Ratio—7.0-1 Std.
Compression & Vacuum Reading—*See Tune-up data.*

ORIGINAL BORE & PISTONS: *See Studebaker Shop Notes.*

TIGHTENING TORQUES: *See Studebaker Shop Notes.*

CYLINDER HEAD INSTALLATION: *See Studebaker Shop Notes.*

PISTONS: Lynite aluminum alloy, Cam ground, T-slot, bearing-metal plated type. **Length**—2 29/32". **Weight**—8.48 ozs. (without rings or pin).
Clearance—Selective fit (see Fitting Pistons).
Removal—Pistons and rods removed from above.

Fitting New Pistons: Insert .002" feeler, 1" wide, between piston and cylinder wall on camshaft side (piston pin parallel to camshaft, slot away from camshaft). Pull required to withdraw feeler should be 11-16 lbs.

Replacement Pistons: *See Studebaker Shop Notes.*

Installing Pistons: T-slot away from camshaft.

PISTON RINGS: Two compression (Perfect Circle #200 Top, #70 —2nd), one Oil Control (#85).

Ring	Width	End Gap	Side Clearance
Compr. #1	3/32"	.007-.017"	.0015-.002"
Compr. #2	1/8"	.007-.017"	.0015-.002"
Oil Contr. (#3)	.5/32"	.007-.017"	.0015-.002"

Installing Rings: Step up top ring, step down 2nd ring.
Replacement Rings: Sets furnished Std. size and .020", .030", .040" Oversize. Single rings Std. size and .010", .020", .030", .040" Oversize.

PISTON PIN: Diameter .7491-.7495". **Length** 2⅝". Pin is locked in rod by tapered pin and locknut.
Pin Fit in Piston—.0001-.0003" clearance or light finger-push fit at room temperature (70°F).

Installing Pins: Use Pin Assembly Tool J-1293. Install clamp bolt nut and star washer on heavy boss side of rod. NOTE—Threads on opposite end of clamp bolt used only to remove bolt from rod (install nut on this end, tighten nut to pull bolt out of rod).

Replacement Pins: Std. & .0025". .005" oversize. Use Hone No. PH-1 to obtain proper piston pin fit.
NOTE—Replacement pistons fitted with pins.

CONNECTING ROD: Length 6⅜". **Weight** 20.48 ozs.
Crankpin Journal Diameter—1.81175-1.81275".
Lower Bearing—Interchangeable steel-backed, micro-babbitt lined type. No shims.
Clearance—.0005-.002". **Sideplay**—.005-.009".

Bearing Adjustment: None (no shims). Replace bearings. Do not file rods or bearing caps.
NOTE—Make certain that small tongue on bearing shells engage grooves. Palnuts used on bolt nuts.
Palnut Installation—*See Studebaker Shop Notes.*

Replacement Bearings: Bearings furnished Std. Size and .001", .005", .010", .020" Undersize.

Installing Rods: Lower bearings "offset". Install rods with narrow portion of bearing toward front of engine (#1, 3, 5), toward rear (#2, 4, 6). Numbers on rods and bearing caps must be together and installed in same numbered cylinder with number and oil hole in lower end of rod toward camshaft side.

CRANKSHAFT: Four bearing type with integral counterweights. Vibration dampener on front end.
Vibration Dampener—*See Studebaker Shop Notes.*
Journal Diameters—2.4370-2.4375" (All) Std.

►***CAUTION—Journals are .005" Undersize on engines with letter "A" following Engine Number.***
Bearing Type—Removable type, steel-backed, micro-babbitt lined. No shims.
Clearance—.0005-.0025".
Rear Bearing Oil Seals—Consist of rubber ring on crankshaft; two rubber seal strips in grooves on top of bearing cap; and two specially treated wood strips in grooves on sides of bearing cap.

►***CAUTION—Install new wood oil seals (above) each time rear main bearing cap removed and re-installed.***

Bearing Adjustment: None (no shims). Replace bearings. Do not file bearing caps.
NOTE—Front oil pan seal block may be removed for access to front main bearing cap by removing four lower timing gear cover retaining screws. Use only malleable iron type filler block on these cars.

►***CAUTION—Do not securely tighten timing gear cover-to-filler block screws until after oil pan screws tightened uniformly and securely.***

Replacement Bearings: Furnished as sets or single bearings Std. & .001", .005", .010", .020", .030" U. S.

End Thrust: Taken by thrust washer assembled between front main bearing and crankshaft gear. Controlled by shims between thrust washer and main bearing journal. Adjust by changing shims (.003", .005", .007" thick). **Endplay**—.003-.006".

CAMSHAFT: Four bearing type. Helical gear drive.
Journal Diameters—#1, 1.7475-1.7480"; #2, 1-7162-1.7170"; #3, 1.6857-1.6865"; #4, 1.6232-1.6240".
Bearings—Split, steel-backed, babbitted bushings.
Clearance—.0007-.0022" (#1), .0010-.0027" (others).

Bearing Adjustment: None. Replace bushings with camshaft removed. NOTE—Align bushing oil hole with oil hole in block.

Camshaft Removal: *See "Camshaft & Bearings" in Studebaker Shop Notes.*

End Thrust: Taken by thrust plate assembled on front face of engine block behind camshaft gear (spacer assembled on shaft behind gear hub).
Endplay—.003-.006". Tighten cap screws alternately a few turns at a time to prevent distortion of plate.

Timing Gears: Crankshaft gear Cast Iron, Camshaft gear Celeron with steel hub.
Backlash—.001-.003".
Replacement Gears—Camshaft gear furnished in three sizes: Standard (marked "S"), High Limit (marked "H"), Low Limit (marked "L"), Crankshaft gear furnished Standard size only.
Timing Gear Removal & Installation—*See "Timing Gears" in Studebaker Shop Notes.*

Camshaft Setting: Mesh marked tooth of camshaft gear between two marked teeth of crankshaft gear.

VALVES:	Head Diameter	Stem Diameter	Length
Intake	1 11/32"	5/16"	4 11/32"
Exhaust	1 9/32"	5/16"	4 11/32"

	Seat Angle	Lift	Stem Clearance
All Valves	45°	11/32"	.0015-.0035"

Valve Guides: Pressed in block from above with top of guide 1 3/16" below top of block. Finish ream guides to inside diameter of .312-.3125" Use Valve Stem Guide Remover and Replacer Tool J-2034. Replace worn guides if clearance greater than .0035".

Valve Springs: Install with closed coil end up. Replace springs if more than 10% weaker than test pressure of 77-85 lbs. at 1 7/16" (U-15 or other accredited tester). Spring free length 2 3/32".

	Spring Pressure	Length
Valve Closed	52-56 lbs.	1 21/32"
Valve Open	93-103 lbs.	15/16"

NOTE—Install valve spring retainer with flange engaging flat surface on lower coil and tongue on inner diameter engaging groove in spring lock.

Valve Lifters: Mushroom type. Remove from below with camshaft out of engine. *For Camshaft Removal directions, refer to Studebaker Shop Notes.*
Valve Lifter Tension Spring—*See "Valve System" in Studebaker Shop Notes.*
Clearance—.0005-.00175".
Replacement Lifters—Furnished Std. size and .0005", .001" Oversize.

VALVE TIMING

Tappet Clearance: .016" All Valves, Engine cold.
NOTE—Self-locking tappet adjusting screws used. Tappet screw tension should be 25 in. lbs. minimum.

Valve Timing: See Camshaft Setting above.
Intake Valves—Open 15° BTDC. Close 49° ALDC.
Exhaust Valves—Open 54° BLDC. Close 10° ATDC.
Valve Timing Check—With .020" tappet clearance, #1 intake valve should open with #1 piston 15° or .0893" BTDC. with vibration dampener mark "IN. OP .1-6/" in line with pointer on left side of timing gear cover. Reset tappet clearance to .016" Cold.

LUBRICATION

Lubrication System: Pressure to crankshaft, connecting rod, and camshaft bearings and to valve lifters. Timing gears lubricated by oil by-passed by pump.
Crankcase Capacity—5 qts. ("Add Oil" point on oil level indicator stick is 3 qt. level).

Normal Oil Pressure—20-40 lbs. at 40 MPH.
Oil Pressure Relief Valve—On lower right front corner of engine. Opens at 40 lbs. Adjustable by inserting shims between outer end of spring and plug.

Oil Pump: Helical gear type. Mounted externally on right hand side of crankcase.
Oil Pump Removal & Installation—*See "Oil Pump" in Studebaker Shop Notes.*

Oil Pressure Gauge: Stewart-Warner Bourden tube (not electric) type.

Crankcase Ventilation: Filter element in oil filler cap (air intake) and in breather pipe on left rear of engine (air outlet).
Servicing—Wash both filter elements in kerosene and re-oil at regular intervals. NOTE—filter in outlet pipe removed by taking out cotter pin.

COOLING

Cooling System: Positive circulation with water pump mounted on front of block with fan.
Capacity—10 quarts.

Water Pump: Packless, sealed ball bearing type.
See Water Pump Section for complete data.
Removal—Slack off drive belt, take out capscrews in the fan pulley hub & remove fan blades. Disconnect hose connection, take out mounting screws in pump body flange, withdraw pump from engine.
Belt Adjustment—*See Generator Belt Adjustment.*

Thermostat: Bishop & Babcock. In water outlet on cylinder head.
Setting—Starts to open at 151-155°F.

Temperature Gauge: Stewart-Warner electric type.

CLUTCH

Borg & Beck Model 8A7 with Borglite Driven Member. Single plate, dry disc type. NOTE—Clutch assembly marked by number 980 stamped on cover.
See Clutch Section for complete data.
Facings—Moulded Metallic type, 2 required. I. D. 5⅜". O. D. 8". Thickness .125".

►*CAUTION—Special driven member used on cars with Overdrive. Identify each type by hub damper spring color as follows:* Damper Spring Color.
Cars with Conventional Trans.....2 Lavender, 2 Black
Cars with Overdrive Trans. .....4 Lavender

Pedal Adjustment: Pedal free travel ½" to 1". To adjust, unhook pull-back spring on outside of frame rail, loosen locknut at adjusting clevis and remove clevis pin at inner end of pedal shaft, turn clevis on rear end of pedal shaft-to-operating shaft rod for correct clearance, reassemble linkage.
Hill-Holder Note—Check setting whenever clutch pedal adjusted and adjust Hill-holder to release just as clutch engages.

Hill-Holder Adjustment: *See Studebaker Shop Notes.*

Removal: Car manufacturer recommends Engine (with clutch attached) be removed. *See "Engine Removal" in Studebaker Shop Notes.* Block release levers. Remove six mounting screws in clutch cover flange, lift off clutch assembly and driven member.

TRANSMISSION

Warner Model AS1-T96 (Std.), AS2-T96 with R10B type Overdrive (Optl.). All helical gear type. Constant-mesh, synchro-mesh (Second & High), sliding gear (Low & Reverse).
See Transmission Section for complete data.

Transmission Control: Remote control type with gearshift lever mounted on steering column.
See Transmission Section for complete data.

Removal: Drain transmission. Disconnect hand brake cable and move out of way for clearance. Disconnect front universal at transmission (wire caps or use clamp to prevent losing rollers). Take out center support bearing mounting bolts. Push front shaft and support to rear (will slide on splines on rear shaft). Disconnect shift rods from levers on case and speedometer cable (remove speedometer pinion). On Overdrive transmission disconnect all control wires and cable. Take out transmission to clutch housing capscrews, pull transmission straight back and remove from car.

OVERDRIVE

Warner Type R10B (part of AS2-T96 Transmission). New Governor controlled type (no centrifugal pawls) with electrical solenoid operation and throttle controlled "kick-down."
See Transmission Section for complete data.
Overdrive Solenoid—Warner Model No. 3AR10B-62, Studebaker No. 521429.
Overdrive Governor—Warner Model No. AR10B-72, Studebaker No. 520454.
Control Relay—Auto-Lite HRT-4001, Studebaker No. 523297.
Throttle Kick-down Switch—Studebaker 515667.
Lock-out Switch—Studebaker No. 521436.
Fuse—20 ampere. On Overdrive Relay.

Removal: See Std. Transmission Removal data.

UNIVERSALS

Spicer Model 1268-110X (Front & Rear), 1261-102X (intermediate). Needle bearing type. Three used with intermediate universal at propeller shaft support bearing on crossmember (see Propeller Shaft).
See Universals Section for complete data.

Propeller Shaft & Support Bearing: Two shafts used:
1) Front Shaft with intermediate universal yoke bolted on rear end (no slip-joint).
2) Rear Shaft with slip-joint on forward end at intermediate universal.
Propeller Shaft & Support Bearing Removal & Servicing—*See "Propeller Shaft" in Studebaker Shop Notes.*

REAR AXLE

Spicer Salisbury Model 23. Semi-floating, Hypoid Gear type with Hotchkiss Drive.
See Rear Axle Section for complete data.
Ratio—4.1-1 Std. 4.56-1 Optl. (Std. with Overdrive). NOTE—Rear axle ratio stamped on plate attached to axle by cover capscrew.
Backlash—.003-.006". Shim adjustment.

Removal: Remove hub caps, take out cotter pin from axle nut, loosen rear wheel nuts. Place car on stands on frame just ahead of rear springs. Remove wheels, hubs and drums. Disconnect hand brake cable. Take out backing plate bolts from backing plates, free hydraulic brake line from axle housing clips (do not disconnect brake line). Backing plates and adjusting shims can then be wired to frame (do not disconnect brake line from wheel cylinders). Disconnect rear universal (wire caps or use clamp to prevent losing rollers). Remove rear spring "U" bolts, disconnect lower shock absorber links, remove rear axle assembly from car.

Axle Shaft Removal—Remove wheel, remove wheel hub (use puller J-446-A). Take out backing plate retaining bolts, remove outer oil seal. Pull backing plate out over end of axle shaft and wire plate to frame (CAUTION—do not lose adjusting shims located between backing plate and axle housing flange), pull axle shaft with Puller HM-931.

Wheel Bearing Adjustment: Use dial indicator to check axle shaft endplay. Adjust by removing backing plate (see Axle Shaft Removal above), and adding or removing shims located between backing plate and axle housing flange (shims .003" .005", .010", .030" thick). **Endplay**—.001-.005".

SHOCK ABSORBERS

Houde (Houdaille)—Direct acting, non-adjustable type. Front Shocks are mounted within coil springs.
►*NOTE—Shock Absorbers cannot be refilled or repaired.*
Front (All)—Studebaker No. 524787 (Std.), Studebaker No. 527169 (Heavy Duty).
Rear (All)—Studebaker No. 524816 (Std.), Studebaker No. 527170 (Heavy Duty).
See Shock Absorber Section for complete data.

FRONT SUSPENSION

Front Suspension: Independent, Coil Spring Suspension with front Shock Absorbers located within coil springs.
See Front Suspension Section for complete data.
Kingpin Inclination—5¼° crosswise.
Caster—0° to —1°. Eccentric pin adjustment.
Camber—0° to +1°. Eccentric pin adjustment.
►*NOTE*—½° more Camber favored on drivers side.
Toe-In—1/16-1/8". Adjust **right hand tie rod only** for toe-in after left hand tie rod has been adjusted for wheel straight-ahead position (with steering wheel centered) and center auxiliary tie rod has been adjusted so that steering gear arm and auxiliary steering arm parallel. **RHD Car Note**—Make toe-in adjustments on left hand tie rod.

STEERING GEAR

Ross Model T-12 Cam-and-Twin Lever type.
See Steering Gear Section for complete data.

BRAKES

Service: Lockheed (Wagner Electric) Hydraulic, Self-centering, Self-adjusting type. Brakes have automatic spring-loaded adjusting wedge controlled by contact plug projecting through hole in lining of forward shoe (plug contacts drum when brakes applied). Hand lever applies rear wheel service brakes.
See Brake Section for complete data.
Drums—Composite type. Diameter 9".
Clearance—If adjustment required, see "Lockheed (Wagner) Hydraulic Self-Adjusting Brakes" in Brake Section.
Lining—Moulded type (all shoes). Width 2". Thickness 3/16". Length per wheel 18½".
Braking Power—57% Front. 43% Rear.

Hand Brake: See Service Brake data (above).

Hill-Holder: Optional Equipment on all models.
See Brake Section for complete data.
Adjustment—*See Studebaker Shop Notes.*

MISC. MECHANICAL

CONVERTIBLE TOP CONTROL: Electric type with motor mounted on left hand lift assembly (right hand lift assembly driven through flexible drive).
See Miscellaneous Section for complete data.

Windshield Wipers: Vacuum Cable operated type.
See Miscellaneous Section for complete data.

MODEL IDENTIFICATION

SERIAL NUMBER: Stamped on plate on left front door lock pillar post.

	South Bend	Los Angeles
1950 Numbers	4398601 Up	4839001 Up

Body Symbol Letter—Used with model designation (and on body number plate) to indicate body type as follows: C, 5-Pass. Coupe; F, 2-Door Sedan; Q, 3-Pass. Coupe; S, Convertible; W, 4-Door Sedan; Y, Land Cruiser.

ENGINE NUMBER: Stamped on pad on upper front left corner of engine block.
1950 Numbers—H-370001 Up.

TUNE-UP

COMPRESSION PRESSURE: 120 lbs. at 150 RPM. cranking speed for Std. 7.0-1 Head.

VACUUM READING: Steady 18-20" idling at 8 MPH.

FIRING ORDER: 1-5-3-6-2-4. See diagram.

SPARK PLUG GAPS: .025". Limits .0225-.0275".
Plug Type—Champion Type J7. 14 mm.

DISTRIBUTOR: Breaker Gap—.022".
Cam Angle—Closed 31° to 37° with .022" gap.
Breaker Arm Spring Tension—17-21 ozs.
Automatic & Vacuum Advance—*See Ignition.*
Condenser Capacity—.18-.23 microfarad.

IGNITION TIMING: 2° BTDC.
Timing Procedure—*See Ignition Timing.*
Timing Mark—Vibration Dampener mark "IGN/" aligned with pointer on gear case cover.

CARBURETION:
Idle Setting (Stromberg)—Idle screw set for smooth idle. Turn screw out for richer mixture. **(Carter)**—½-1½ turns open. Turn screw out for richer mixture.
Idle Speed—8-10 MPH. at normal operating temp.
Float Level (Stromberg)—Fuel level ⅝" below top edge of float bowl with engine idling.
(Carter)—7/16" from top of projection on bowl cover to top of soldered seam on free end of float with needle valve seated and cover assembly inverted.
Accelerating Pump (Stromberg)—Center hole (med. stroke) Normal all-season setting. Inner hole (min.) —Summer, Outer hole (max.)—Winter used for temperature extremes.
(Carter)—No seasonal adjustment.

Choke Setting: Centered (at index).

Fuel Pump Pressure: 4-5 lbs. maximum.

MANIFOLD HEAT CONTROL: Automatic thermostatic type operating in stainless steel bushings.
Setting—To test coil tension, free outer end of coil from bracket on manifold. With valve closed, hooked end of coil should be approx. 90° from bracket at 70°F. Replace coil if incorrect.
NOTE—To overcome sticking, lubricate valve shaft with kerosene and soda solution or Bendix Carburetor Cleaner. If necessary, shaft diameter can be reduced for .005" clearance in bushings.

VALVE TAPPET CLEARANCE: .016" All Valves, Cold.
NOTE—Self-locking tappet screws used.
Valve Timing Check—*See Valve Timing.*

STARTING: *See Battery, Starter, Generator, Regulator.*

IGNITION

IGNITION SWITCH: Mitchellock. Studebaker No. 526396.
Ignition Lock—Yale & Towne.

COIL: Delco-Remy Model #1115380. On engine above distributor (under spark plug cable bracket).

CONDENSER: Delco-Remy Part No. 1869704.
Capacity—.18-.23 microfarad.

DISTRIBUTOR: Delco-Remy #1110812. Automatic and vacuum advance type with new "center-bearing" breaker plate.

►**Breaker Plate Bearing Assembly**—Plate rotates on 3 bakelite buttons on support plate with spring tension adjustment (shim washers) on underside of support plate. Pull required to move plate should be 8 ozs. min., 16 ozs. max. with breaker plate assembly out of housing.

See "Delco-Remy Center-Bearing Breaker Plate Distributor" in Electrical Equipment Section.

Breaker Gap—.022".

Cam Angle—Closed 31° to 37° with .022" gap.

Breaker Arm Spring Tension—17-21 ozs.

Rotation—Counter-clockwise viewed from above.

Automatic Advance

Degrees	Distr. R.P.M.	Degrees	Eng. R.P.M.
Start	400	2	800
11	1400	22	2800

Vacuum Spark Control: Delco-Remy No. 1116052 linked directly to breaker plate. Provides additional advance at speeds above idling except when engine accelerated or operated with wide open throttle when spark retarded by return spring.

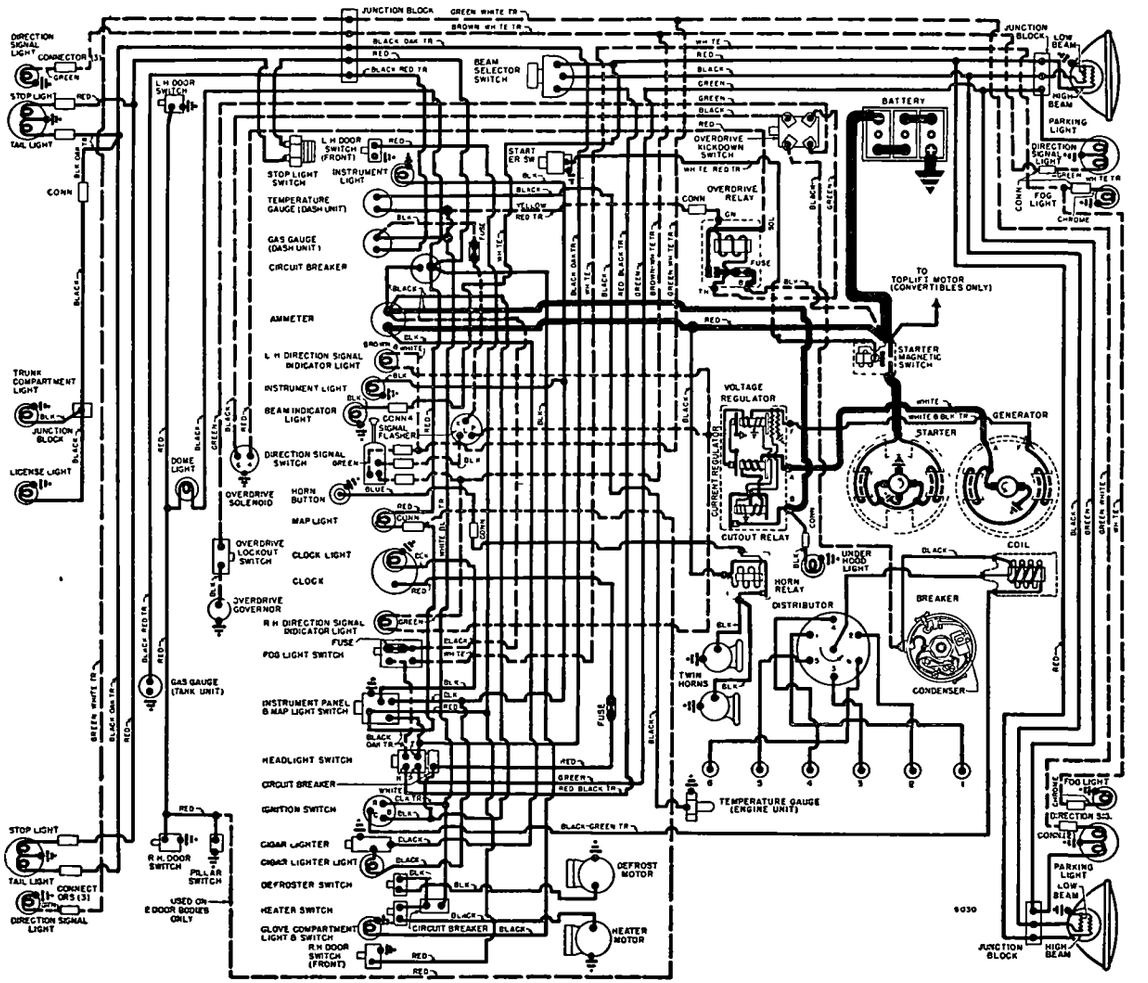

Plunger Travel—⅛" maximum.

Vacuum Advance

Distr. Degrees	Eng. Degrees	Vacuum (" of HG)
Start	0°	3-5"
6°	12°	9-14"

Distributor Removal: Mounted on left side of engine. To remove, disconnect vacuum line, take out bolt in clamp arm, lift distributor off.

Installation Note—When installing distributor, crank engine to firing position for #1 cylinder ('IGN' on vibration dampener in line with pointer on timing gear cover), sight down distributor shaft hole (distributor out) and see that distributor drive tongue in oil pump drive gear is 30° from the horizontal and offset toward the top, turn rotor to #1 segment, install distributor, check timing.

IGNITION TIMING

Std. Setting **Flywheel Degrees**
All Engines ..... 2° BTDC.
This setting correct for regular fuel.

Timing (with Neon Timing Light)—Neon Light No. 890 recommended. Clip Neon light lead in series with #1 spark plug, idle engine and direct light on vibration dampener (at pointer on timing gear cover). Loosen clamp arm, rotate distributor until 'IGN' mark on vibration dampener lines up with pointer on timing gear cover.

Timing (without Neon Timing Light)—Turn engine over to firing position for #1 piston with 'IGN' mark on vibration dampener in line with pointer on timing gear cover and distributor rotor opposite #1 segment in distributor cap. Adjust distributor.

CARBURETOR

STROMBERG

Stromberg Model BXOV-26. 1¼" Single Barrel, Downdraft, with Fast Idle & Automatic Choke.
Code No. (on bowl cover)—6-104.
See Carburetor Section for complete data.

Settings (Idle Setting, Float Level, & Accelerating Pump): *See Tune-Up data.*

Metering Jet—*Refer to Carburetor Index for Stromberg Downdraft Carburetor Jet Specification Table.*

Fast Idle: Stromberg BXOV-26 carburetor type.
See Carburetion Equipment Section for data.

Fast Idle Setting—To check, hold stopscrew against lowest step of fast idle cam, move choke valve as far as possible toward closed position, check valve opening with 11/32" drill. Adjust by bending connector.

Automatic Choke: Stromberg BXOV-26 type.
See Carburetion Equipment Section for data.

Automatic Choke Setting—'R' mark on thermostat cover in line with highest projection on housing. Shift to 'M' if engine loads up or overchokes. Use 'H' setting only if highly volatile fuels used.

CARBURETOR

CARTER WE

Carter WE-627SA (On Cars between Eng. Nos. H-376, 298 and H-386,398). 1¼" Single Barrel, Downdraft with Carter Climatic Control.
See Carburetor Section for complete data.

Settings (Idle Setting, Float Level, & Accelerating Pump): *See Tune-Up data.*

Metering Rods & Jets—*See Carter Jet Table in Carburetor Section.*

Fast Idle: Carter Single Barrel Carburetor type.
See Carburetion Equipment Section for data.
Setting—.054" throttle valve opening with choke valve closed. To check, open throttle wide to make certain fast idle cam drops into position, then with choke valve closed measure clearance between edge of throttle valve and carburetor wall on side opposite idle port (valve closed to fast idle position). To adjust, turn adjusting sleeve on connector link.

Automatic Choke: Carter Climatic Control (Single Carburetor type).
See Carburetion Equipment Section for data.
Setting—Centered (cover centered on scale).

CARB. EQUIPMENT

Air Cleaner: AC. Oil-wetted type Std., Oil-bath Cleaner Optl.
Servicing (Oil-wetted Type)—Clean and re-oil filter element at 1000 mile intervals or as required.
Servicing (Oil-bath Type)—Clean filter element and oil reservoir, fill reservoir to indicated level mark with SAE No. 40 or 50 engine oil at intervals as required by operating conditions.

Fuel Pump (Std.): AC. Combination fuel-and-vacuum pump.
Pressure—4-5 lbs. maximum.
See Carburetion Equipment Section for data.

Gasoline Gauge: Stewart-Warner Electric type.
Dash Unit—Studebaker No. 522177.
Tank Unit—Studebaker No. 525548.
See Carburetion Equipment Section for data.

BATTERY

Willard Type HW-1-100. 6 volt, 15 plate, 100 Ampere Hour Capacity (20 hour rate).
Starting Capacity—120 amperes for 20 minutes.
Zero Capacity—300 amperes for 3.5 minutes. Five Second Voltage 4.3 volts.
Grounded Terminal—Positive (+) to cylinder head.
Dimensions—Length 9 3/64". Width 6 13/16". Height 8 5/8".
Location—In engine compartment on left side.

STARTER

Delco-Remy Model 1107084. Armature No. 1878077.
Drive—Bendix Barrel type No. A1792.
Rotation—Counter-clockwise at commutator end.
Brush Spring Tension—24-28 ozs.

Performance Data

Torque	R.P.M.	Volts	Amperes
0 ft. lbs.	5000	5.7	65
12 "	Lock	3.4	525

Removal: Starter flange mounted on engine rear plate, on left side. To remove, take out flange mounting screws, remove starter assembly.

Starting Switch: Magnetic switch mounted on starter and controlled by manual switch. Manual switch is mounted on toeboard and operated by clutch pedal when fully depressed.

GENERATOR

Delco-Remy Model 1102728. Armature No. 1879002.
Two brush type with current-voltage control.
Charging Rate Adjustment—None. See Regulator.
Maximum Charging Rate—As given below.

Performance Data

	Amperes①	Volts	R.P.M.
Cold	30	8.0	1750

①—Not maximum output. See Current Regulator.

Rotation—Counter-clockwise at commutator end.
Brush Spring Tension—25 ozs. each.
Field Current—1.75-1.9 amperes at 6.0 volts.

Removal: Pivot mounted at left front of engine. To remove, take out pivot and clamp bolts.

Belt Adjustment: Loosen pivot and clamp bolts, move generator out until ⅜-½" belt deflection midway between generator and fan pulleys is obtained.

REGULATOR

Delco-Remy Model No. 1118302. Voltage & Current Regulator.
►*NEW "1118300 SERIES"* regulators have screw adjustment for settings and single regulator springs.
See Electrical Equipment Section for complete data.
CAUTION—Check generator for grounded field coils and leads before changing regulator settings to correct High Charging Rate or High Voltage.

Cutout Relay

Cuts In—5.9-6.8 volts hot (set to 6.4 volts hot).
Contact Gap—.020" (same for both sets).
Air Gap—.020" (with contacts just closed).

Voltage Regulator

Setting—7.0-7.7 volts hot (set to 7.4 volts hot). Regulator is over-compensated for temperature. Should be checked with cover in place and hot.
Air Gap—.075" with armature pressed down to point where contacts are just touching.
Checking & Adjustment—*See Electrical Equipment Section.*

Current Regulator

Setting—32-40 amperes hot (set to 36 hot).
Air Gap—.075" with armature pressed down to point where contacts are just touching.
Checking & Adjustment—*See Electrical Equipment Section.*

LIGHTING

Headlamps: Corcoran-Brown "Sealed Beam" type.
See Electrical Equipment Section for complete data.
Adjustment—Aim upper beam straight ahead (hot spot center 3" below lamp center height at 25 ft.).
Beam Indicator—At center of speedometer dial. Lighted whenever Country (upper) beams in use.

Direction Signal: *See Electrical Equipment Section.*
Direction Signal Indicators—In face of Speedometer dial. Left or right indicator lighted when corresponding direction signal is in operation.

Switches

Lighting—Studebaker No. 526350 (with circuit breaker).
Instrument—Studebaker No. 526351.
Beam Selector—Delco-Remy #1997008.
Stop Light—Studebaker No. 666858.
Direction Signal—Studebaker No. 526901P.

MISC. ELECTRICAL

LIGHTING CIRCUIT BREAKER (On Light Switch): Studebaker No. 522014.
30-Ampere thermostatic type. Protects Headlamps, Parking, Tail, & Instrument Lamps by vibrating to limit current.

CONTINUED ON NEXT PAGE

CONTINUED FROM PRECEDING PAGE

Auxiliary Circuit Breaker (On Instrument Panel): Studebaker No. 523056. 15-Ampere type. Protects Body & Stop Lamps.

ACCESSORY CIRCUIT BREAKER: One 15-ampere type used on cars with Climatizer and Defroster.

FUSES: Clock—3 ampere. In clock lead.
Direction Signal—14 ampere. In Flasher lead.
Overdrive—20 ampere. On Overdrive Relay.
Glove Compt. Light—5 ampere. In lamp lead.
Under Hood Light—5 ampere. In lamp lead.
Fog Lights—20 ampere. On Fog Light Switch.

HORNS: Sparton or Delco-Remy #1999656 (High Note), #1999655 (Low Note). Twin Airtone type horns operated by relay. **Horn Current**—12-15 amps (ea.).

Horn Relay: Delco-Remy #1116775.
Contacts Close—2.75-4.0 volts.
Contact Gap—.025". **Air Gap** .015" (contacts closed).

ENGINE

OIL PAN REMOVAL: *See Studebaker Shop Notes.*

►*Not necessary to remove engine for pan removal.*

ENGINE SPECIFICATIONS: Six cylinder, "L" Head.
Bore—3 5/16". **Stroke**—4 3/4".
Displacement—245.6 cu. ins. **Rated H.P.**—26.33.
Developed Horsepower—102 at 3200 RPM.
Compression Ratio—7.0-1 Std.
Compression & Vacuum Reading—*See Tune-Up data.*

ORIGINAL BORE & PISTONS: *See Studebaker Shop Notes.*

TIGHTENING TORQUES: *See Studebaker Shop Notes.*

CYLINDER HEAD INSTALLATION: *See Studebaker Shop Notes.*

PISTONS: Lynite aluminum alloy, Cam-ground, T-slot, bearing-metal plated type. **Length** 3¾".
Weight—14.4 ozs. (stripped).
Clearance—Selective Fit (see Fitting Pistons).
Removal—Pistons and rods removed from above.
NOTE—Car manufacturer recommends that cylinders out-of-round or tapered more than .002" be reconditioned.

Fitting New Pistons: Insert .002" feeler, 1" wide, between piston and cylinder wall on camshaft side (piston pin parallel to camshaft, slot away from camshaft). Pull required to withdraw feeler should be 14-19 lbs.

Replacement Pistons: *See Studebaker Shop Notes.*

Installing Pistons: T-slot away from camshaft.

PISTON RINGS: Two compression, one oil control ring per piston, all above pin. Oil drain holes provided in oil ring groove.

Ring	Width	End Gap	Side Clearance
Comp. (#1,2)	3/32"	.009-.014"	.0015-.002"
Oil Contr. (#3)	3/16"	.009-.014"	.0015-.002"

Installing Rings: Beveled side of compression rings (Sealed Power) up.

Replacement Rings: Sets furnished Std. size and .020", .030", .040" Oversize. Single rings Std. size and .010", .020", .030", .040" Oversize.

PISTON PIN: Diameter .8741-.8745". **Length** 2⅞". Pin is locked in rod by tapered pin and locknut.

Installing Pins: Use Pin Assembly Tool J-1293. Install clamp bolt nut and star washer on heavy boss side of rod. NOTE—Threads on opposite end of clamp bolt used only to remove bolt from rod (install nut on this end, tighten nut to pull bolt out of rod).

Pin Fit in Piston—.0001-.0003" clearance or light finger push fit at room temperature (70°F.).

Replacement Pins: Std. & .0025", .005" Oversize. Use Hone PH-1 to obtain proper piston pin fit.
NOTE—Replacement pistons fitted with pins.

CONNECTING ROD: Length 7 15/16". **Weight** 33.3 ozs.
Crankpin Journal Diameter—2.18675-2.18775".
Lower Bearing—Interchangeable steel-backed, micro-babbitt lined type. No shims.
Clearance—.0005-.002". **Sideplay**—.005-.009".

Bearing Adjustment: None (no shims). Replace bearings. Do not file rods or caps.
NOTE—Make certain that small tongue on bearing shells engage grooves. Palnuts used on bolt nuts.
Palnut Installation—*See Studebaker Shop Notes.*

Replacement Bearings: Bearings furnished Std. size and .001", .005", .010", .020" Undersize.

Installing Rods: Lower bearings "offset". Install rods with narrow portion of bearing toward front of engine (#1, 3, 5), toward rear (#2, 4, 6). Numbers on rods and bearing caps must be together and installed in same numbered cylinder with number and oil hole in lower end of rod toward camshaft.

CRANKSHAFT: 4 bearing, 5 integral counterweights. Vibration dampener mounted on forward end.
Vibration Dampener—*See Studebaker Shop Notes.*
Journal Diameters—2.8745-2.8750".

Bearings—Removable steel backed, babbitt-lined type. No shims.
Clearance—.0006-.0027".
Rear Bearing Oil Seals—Consist of rubber ring, on crankshaft; two rubber seal strips in grooves on top of bearing cap; and two specially treated wood strips in grooves on sides of bearing cap.

►*CAUTION—Install new wood oil seals (above) each time rear main bearing cap removed and re-installed.*

Bearing Adjustment: None (no shims). Replace bearings. Do not file bearing caps.

Replacement Bearings: Furnished as sets or single bearings in Std. Size and .001", .010", .020", .030" U.S.

End Thrust: Taken by thrust plate assembled between front main bearing and crankshaft gear. Controlled by shims between thrust plate and main bearing journal. Adjust by changing shims furnished .003", .005", .007" thick.
Endplay—.003-.006".

CAMSHAFT: Four bearing. Helical gear drive.
Journal Diameters—#1, 1.9975-1.9980"; #2, 1.9662-1.9670"; #3, 1.9357-1.9365"; #4, 1.1232-1.1240".
Bearings—Split steel-backed, babbitted bushings.
NOTE—Oil hole in bushings must be aligned with oil holes in engine block.
Clearance—.0007-.0022" (#1), .0010-.0027" (others).

Camshaft Removal: *See "Camshaft & Bearings" in Studebaker Shop Notes.*

End Thrust: Taken by thrust plate assembled on front face of engine behind camshaft gear (spacer assembled back of gear hub).
Endplay—.003-.006". Tighten capscrews alternately a few turns at a time to prevent distortion of plate.

Timing Gears: Crankshaft gear Cast Iron. Camshaft gear Celeron with steel hub. **Backlash**—.001-.003".
Replacement Gears—Camshaft gear furnished in three sizes: Standard (marked "S"), High Limit (marked "H"), Low Limit (marked "L"). Crankshaft gear furnished Standard size only.

Timing Gear Removal & Installation—*See "Timing Gears" in Studebaker Shop Notes.*

Camshaft Setting: Mesh marked tooth of camshaft gear between two marked teeth on crankshaft gear.

VALVES:	Head Diameter	Stem Diameter	Length
Intake	1 15/32"	11/32"	5 7/32"
Exhaust	1 9/32"	11/32"	5 7/32"

	Seat Angle	Lift	Stem Clearance
All Valves	45°	11/32"	.0015-.0035"

Valve Guides: Pressed in block from above with upper end 1 5/32" below upper edge of valve seat and stepped end down. Ream guides to inside diameter of .3425-.3445". Replace worn guides when clearance exceeds .0035".

Valve Springs: Install with closed-coil end up. Replace springs if more than 10% weaker than test pressure of 125-135 lbs. at 1¾" (U-15 or other accredited tester). Spring free length 2½".

	Spring Pressure	Length
Valve Closed	54-60 lbs.	2 3/32"
Valve Open	125-145 lbs.	1 3/4"

NOTE—Dampeners used on top of all springs.

Valve Lifters: Mushroom type. Remove from below with camshaft out of engine. *For camshaft removal directions, see Studebaker Shop Notes.*
Valve Lifter Tension Spring—*See "Valve System" in Studebaker Shop Notes.*
Diameter—.624". **Clearance**—.0005-.00175".
Replacement Lifters—Std. & .0005", .001" O. S.

VALVE TIMING

Tappet Clearance: .016" All Valves, Engine Cold.
NOTE—Self-locking tappet adjusting screws used. Tappet screw tension should be 25 in. lbs. minimum.

Valve Timing: See Camshaft Setting above.
Intake Valves—Open 15° BTDC. Close 49° ALDC.
Exhaust Valves—Open 54° BLDC. Close 10° ATDC.
Valve Timing Check—With .020" tappet clearance, No. 1 intake valve should open with No. 1 piston 15° BTDC. with the vibration dampener mark "IN. OP. 1-6/" aligned with pointer on timing gear cover. Reset tappet clearance at .016" Cold.

LUBRICATION

Engine Oiling System: Pressure to crankshaft, connecting rod, and camshaft bearings, and to valve lifters. Timing gears lubricated by oil by-passed by pump. Oil pump mounted externally on right side.
Crankcase Capacity—6 quarts.
Normal Oil Pressure—20-40 lbs. at 40 MPH.
Oil Pressure Regulator—On lower right front corner of engine. Opens at 40 lbs. Adjustable by inserting shims between outer end of spring and plug.

Oil Pan Removal: *See Studebaker Shop Notes.*

Oil Pump: Helical gear type mounted externally on right side of engine.
Oil Pump Removal & Installation—*See "Oil Pump" in Studebaker Shop Notes.*

Oil Pressure Gauge: Stewart-Warner Bourden Tube (not electric) type.

Crankcase Ventilation: Filter element in oil filler cap (air intake) and in breather pipe on left rear of engine (air outlet).
Servicing—Wash both filter elements in kerosene and re-oil at regular intervals. NOTE—Filter in outlet pipe removed by taking out cotter pin.

COOLING

Cooling System: Positive circulation with water pump mounted on front of block with fan.

Capacity—13.5 qts. (15 qts. with Climatizer).

Water Pump: Packless type. No lubrication required. *See Water Pump Section for complete data.*

Removal—Slack off drive belt, take out capscrews in fan pulley hub and remove blades. Disconnect hose connection, take out mounting screws in pump.

Belt Adjustment—*See Generator Belt Adjustment.*

Thermostat: Fulton or Bishop & Babcock. In water outlet on cylinder head.

Setting—Starts to open at 151-155°F. (Std.), 177°F. (High).

Temperature Gauge: Stewart-Warner electric type.

CLUTCH

Borg & Beck Model No. 9A7 with Borglite Driven Member. Single plate, dry disc type.
NOTE—Clutch Assembly marked by number 943
See Clutch Section for complete data.
Facings—Moulded-metallic, 2 required. I.D. 6". O.D. 9¼". Thickness ⅛".

Adjustment: Pedal free travel ½ to 1". To adjust, unhook pull-back spring on outside of frame rail, loosen locknut at adjusting clevis and remove clevis pin at inner end of pedal shaft, turn clevis on rear end of pedal shaft-to-operating shaft rod for correct clearance, reassemble linkage.
Hill-Holder Note—Check setting whenever clutch pedal adjusted and adjust Hill-holder to release just as clutch engages. Adjusting nut and locknut at end of Hill-holder operating rod.

Hill-Holder Adjustment: *See Studebaker Shop Notes.*

Removal: Jack up rear end of car and rest on stands under rear axle. Remove transmission (see TRANSMISSION following). Disconnect one battery cable at battery, take off starter and hang it clear of clutch housing. Remove clutch housing mounting capscrews and bolts at top, working through opening in front floor. Free speedometer cable from frame cross-member and wire it up out of the way. Support rear end of engine with jack placed under oil pan at rear (CAUTION—Do not damage oil pan). Disconnect rear engine mounting by taking off nuts, bolts with insulators, washers, and spacers. Disconnect parking brake cable at bracket, clutch operating shaft from release shaft, and brake pedal return spring. Loosen exhaust pipe flange nuts at manifold, take off exhaust pipe support bracket at housing, loosen clamp and turn bracket for clearance. Remove rear engine support cross-member. Take out clutch housing mounting bolts and remove housing. Block clutch release levers. Remove six mounting screws in clutch cover flange, lift off clutch assembly and driven member.

TRANSMISSION

Warner Model AS1-T86E (Std.), AS2-T86E with R10B type Overdrive (Optl.). All helical gear type. Constant-mesh, synchro-mesh (Second & High), sliding gear (Low & Reverse).
See Transmission Section for complete data.

Transmission Control: Remote control type with gearshift lever mounted on steering column.
See Transmission Section for complete data.

Removal: Drain transmission. Disconnect hand brake cable and move out of way for clearance. Disconnect front universal at transmission (wire caps or use clamp to prevent losing rollers). Take out center support bearing mounting bolts. Push front shaft and support to rear (will slide on splines on rear shaft). Disconnect shift rods from levers on case and speedometer cable (remove speedometer pinion). On Overdrive transmission disconnect all control wires and cable. Take out transmission to clutch housing capscrews, pull transmission straight back and remove from car.

OVERDRIVE

Warner Type R10B (part of AS2-T86E transmission). New Governor controlled type (no centrifugal pawls) with electrical solenoid operation and throttle controlled "kick-down."
See Transmission Section for complete data.
Overdrive Control Units—*Same as Champion. See Champion 9G (1950) page for data.*

Removal: See Std. Transmission Removal data.

UNIVERSALS

Spicer Model 1268-111X (Front & Rear), 1261-102X (intermediate). Needle bearing type. Three used with intermediate universal at propeller shaft support bearing on crossmember (see Propeller Shaft).
See Universals Section for complete data.

Propeller Shaft & Support Bearing: Two shafts used: 1) Front Shaft with intermediate universal yoke. 2) Rear Shaft with slip-joint on forward end at intermediate universal.
Propeller Shaft & Support Bearing Removal & Servicing—*See Studebaker Shop Notes.*

REAR AXLE

Spicer Salisbury Model 41-2. Semi-floating, Hypoid Gear type with Hotchkiss Drive.
See Rear Axle Section for complete data.
Ratio—4.09-1 Std., 4.55-1 Optl. (Std. with Overdr.).
NOTE—Rear axle ratio stamped on plate attached to axle by cover capscrew.
Backlash—.003-.006". Shim adjustment.

Removal: Remove hub caps, take out cotter pin from axle nut, loosen rear wheel nuts. Place car on stands on frame just ahead of rear springs. Remove wheels, hubs and drums. Disconnect hand brake cable. Take out backing plate bolts from backing plates, free hydraulic brake line from axle housing clips (do not disconnect brake line). Backing plates and adjusting shims can then be wired to frame (do not disconnect brake line from wheel cylinders). Disconnect rear universal (wire caps or use clamp to prevent losing rollers). Remove rear spring "U" bolts, disconnect lower shock absorber links, remove rear axle assembly from car.
Axle Shaft Removal—Remove wheel, remove wheel hub (use puller J-596-A). Take out backing plate retaining bolts, remove outer oil seal. Pull backing plate out over end of axle shaft and wire plate to frame (CAUTION—do not lose adjusting shims located between backing plate and axle housing flange). Pull axle shaft assembly (Puller HM-931).

Wheel Bearing Adjustment: Use dial indicator to check axle shaft endplay. Adjust by removing backing plate (see Axle Shaft Removal above), and adding or removing shims located between backing plate and axle housing flange (shims .003", .005", .010", .030" thick). **Endplay**—.001-.005".

SHOCK ABSORBERS

Houde (Houdaille)—Double acting, hydraulic type. Adjustable type with thermostatic control on rear.
Front—Studebaker No. 526092 (Right), 526093 (Left).
Rear—Studebaker No. 526148 (Right), 526149 (Left).
See Shock Absorber Section for complete data.

Adjustment (Front): Pointer on end of shaft should be lined up with scribed line on end of shaft. Turn pointer clockwise for firmer action, counter-clockwise for softer action (not more than 1/32-1/16").
(Rear Shocks)—Remove cap on end of shaft to expose adjusting screw. Slot aligned with scribe mark between "O" and "S" mark is original factory setting. Use special tool No. T-2860 (do not use screwdriver). Turn screw clockwise (toward "S") for firmer action, counter-clockwise (toward "O") for softer action (not more than 1/32" at a time).

Refilling: Check at 5000 mile intervals. Fill to bottom of filler plug hole. CAUTION—Use only Houdaille Shock Absorber Fluid No. L-1404.

FRONT SUSPENSION

Front Suspension: Independent, Coil Spring Suspension.
See Front Suspension Section for complete data.

Kingpin Inclination—5¼° crosswise.

Caster— —1½° to —2½°. Eccentric pin adjustment.

Camber—0° to +1°. Eccentric pin adjustment.

►NOTE—½° more Camber favored on drivers side.
Toe In—1/16-1/8". Adjust ***right hand tie rod only*** for toe in after left hand tie rod has been adjusted for wheel straight-ahead position (with steering wheel centered) and center auxiliary tie rod has been adjusted so that steering gear arm and auxiliary steering arm parallel. **RHD Car Note**—Make toe-in adjustments on left hand tie rod.

STEERING GEAR

Ross Model T-14 Cam-and-Twin Lever type.
See Steering Gear Section for complete data.

BRAKES

Service: Lockheed (Wagner Electric) Hydraulic, Self-centering, Self-adjusting type. Brakes are designed with automatic spring-loaded adjusting wedge controlled by contact plug projecting through hole in lining of forward shoe (plug contacts drum when brakes applied). Hand lever applies rear wheel service brakes.
See Brake Section for complete data.
Drums—Composite type. Diameter 11".
Clearance—If adjustment required, see "Lockheed (Wagner) Hydraulic Self-Adjusting Brakes" in Brake Section.
Lining—Molded type (all shoes). Width 2". Thickness 3/16". Length per wheel 22¼".
Braking Power—57% Front, 43% Rear.

Hand Brake: See Service Brake data (above).

Hill-Holder: Std. *See Brake Section for complete data.*
Adjustment—*See Studebaker Shop Notes.*

MISC. MECHANICAL

CONVERTIBLE TOP CONTROL: Electric type with motor mounted on left hand lift assembly (right hand lift assembly driven through flexible drive).
See Miscellaneous Section for complete data.

Windshield Wipers: Vacuum Cable operated type.
See Miscellaneous Section for complete data.

CYLINDER HEAD

ALL MODELS

CYLINDER HEAD: Installation—Use a torque indicating wrench to tighten cylinder head stud nuts and capscrews, tighten in correct sequence as shown

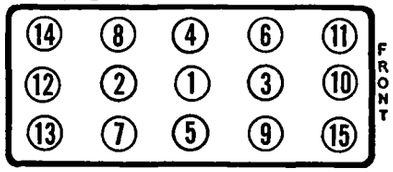

WILLYS FOUR

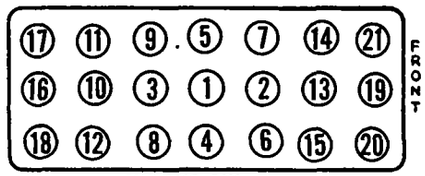

WILLYS SIX

Tightening T rque—**See Tightening (Torque Wrench) Specifications below.**

TIGHTENING (TORQUE WRENCH) SPECIFICATIONS

ALL MODELS

TIGHTENING TORQUES: When tightening capscrews or bolt nuts retaining the parts listed below, use a torqu indicating wrench and tighten to tensions listed:

	Ft.Lbs.	In.Lbs.
Cylinder Head Capscrews	65-75	780-792
Cylinder Head Stud Nuts	60-65	720-780
Main Bearing Capscrews	65-70	780-840
Connecting Rod Bolts (4 Cyl.)	50-55	600-660
Connecting Rod Bolts (6 Cyl.)	25-30	300-360
Flywheel Attaching Bolts	36-40	432-480
Rear Engine Mounting Bolts	38-42	456-504
Manifold Attaching Stud Nuts (Intake & Exhaust)	31-35	372-420
Generator Bracket Bolts	31-35	372-420
Starter Mounting Capscrews	20-25	240-300
Universal Joint "U" Bolts	15-18	180-216
Spring Center Clip "U" Bolts	50-55	600-660
Spring Pivot Bolt Nut	27-30	324-360

ORIGINAL BORE & PISTONS

ALL MODELS

BORE & PISTON SIZES: Engines originally equipped at factory with special oversize pistons may be identified by code letter stamped on engine following the engine number:

"B"—Pistons are .002" Oversize.

"AB"—Pistons .002" Oversize. Main and connecting rod bearings are Undersize (see Original Bearing Sizes following).

"C"—Piston Pins .002" Undersize.

4 CYLINDER MODELS

STANDARD BORE & PISTON SIZE VARIATION: bores and pistons are graded in four .0005" steps as shown in table below and are marked as follows:

Piston—Letter stamped on piston head.

Cylinder Bore—Letter stamped on top of block between valve ports and bor at center.

4 Cylinder Bore & Piston Sizes

Letter	Cylinder Bore Size	Piston Size
A	3.1255-3.1250"	3.1235-3.1230"
B	3.1260-3.1255"	3.1240-3.1235"
C	3.1265-3.1260"	3.1245-3.1240"
D	3.1270-3.1265"	3.1250-3.1245"

6 CYLINDER MODELS

STANDARD BORE & PISTON SIZE VARIATION: Cylinder bore and pistons are graded in six .0004" steps and are marked as follows:

Piston—Letter stamped on piston head.

Cylinder Bore—Similar letter stamped on top of block between valve ports and bore.

ORIGINAL BEARING SIZES

ALL MODELS

MAIN & CONNECTING ROD BEARING SIZES: Engines originally equipped with special undersize mains and connecting rod bearings can be identified by code letter stamped on engine following the engine number:

"A"—Main & Con. Rod Bearings .010" Undersize.

"AB"—Main & Con. Rod Bearings .010" Undersize and Pistons Oversize (see Original Bore & Pistons).

"D"—Main Bearings .010" Undersize.

"E"—Connecting Rod Bearings .010" Undersize.

CRANKSHAFT & MAIN BEARINGS

ALL MODELS

CRANKSHAFT SERVICING: Bearing Replacement—

►*CAUTION*—4 Cyl. engine must be removed from car for bearing replacement (bearings "doweled" in case and crankshaft must be taken out to remove and install bearings). 6 Cyl. bearings not doweled in this manner.

Make certain that oil holes in bearings line up with oil holes in crankcase. On 4 cylinder, see that bearings fit snugly on dowel pins in crankcase and bearing caps.

Rear Bearing Oil Seal—Consists of a wick type packing installed in grooves in bearing cap and crankcase. To install new packing, insert packing in groove, use round piece of wood or steel to "roll" packing into groove, working from both ends toward center. With packing firmly seated in groove, cut off ends flush with surface. NOTE—Crankshaft must be removed to install packing in upper (crankcase) half of bearing.

Rear Bearing Cap Seal—Bearing cap sealed by cylindrical rubber packing strips inserted in holes between cap and case. When installing bearing cap, coat upper face lightly with sealing compound, insert new packing strips after cap is in place. Packing strips should protrude ¼" to provide proper compression when oil pan installed. CAUTION—Do not cut off this protruding portion of the packing.

Front (Timing Cover) Oil Seal—On all models, timing case cover (with double baffle and spring loaded leather seal) and new crankshaft pulley (with polished surface for seal contact) used. This new cover and pulley can be installed as an assembly on earlier engines (either chain or gear drive).

FLYWHEEL

Flywheel—Mounted on crankshaft flange by two special dowel bolts and four special head bolts. Whenever flywheel removed, make certain that arrow on flywheel center lines up with arrow n crankshaft flange when re-installed (to insure correct position of timing marks), tighten bolt nuts with a torque indicating wrench to 36-40 ft.lbs. and check flywheel run-out when installed. Run-out must not exceed .008".

New Flywheel or Crankshaft Installation—Taper dowel bolts should be replaced with new special snug fitting bolts supplied to eliminate necessity of reaming the special tapered holes. Assemble new parts as follows: Install flywheel on crankshaft (lining up arrows on both parts) using the four straight bolts previously used, tighten these bolts securely. Drill out tapered bolt holes with a 35/64" drill, ream these holes with a 9/16" (.5625") straight reamer, install special bolts, Part No. 116295 (with No. 52330 Lockwasher and No. 52804 Nut), in these holes and discard the tapered dowel bolts used previously. Tighten bolts to 36-40 ft.lbs. and check flywheel run-out (.008" max.).

CONNECTING ROD & BEARINGS

PALNUT INSTALLATION: Always use new Palnuts (discard nut after removal). After regular nut correctly tightened, install palnut with flat side down toward nut, tighten finger tight, and **one-half turn additional.**

►*1949 SELF-LOCKING NUT CAUTION*—Special "Huglock" self-locking nut used on some 1949 cars instead of regular nut & Palnut. This nut discontinued on later cars to avoid possibility of stripping bolt threads when nut removed.

CAMSHAFT & BEARINGS

ALL MODELS

CAMSHAFT SERVICING: Removal—Drain radiator and cylinder block, remove radiator and grille, cylinder head, manifold, valves, and valve springs. Remove oil pump, fuel pump, oil pan, crankshaft pulley (use puller), fan and governor drive belts, and fan assembly. Remove nuts on front engine support rubber insulators (CJ-3A only). Remove timing gear cover, remove camshaft gear and thrust plate, block up all valve lifters (can be tied up with string to manifold studs). On CJ-3A only, place jack under crankcase (use block of wood on jack to avoid damage to oil pan), raise front end of engine to provide clearance for camshaft. Remove camshaft through front of engine.

Gear Puller Tool—Use Puller Tool No. W-172 to remove gear on engines equipped with timing gears.

Camshaft Front Bearing—Consists of a steel-backed, babbitt-lined bushing which takes thrust. When installing this bushing, make certain oil hole lines up with drilled oil hole in crankcase, stake bearing in place to prevent turning in service.

OIL PUMP

ALL MODELS

ROTOR TYPE OIL PUMP SERVICING: Pump mounted externally on left hand side of crankcase.

Pump Removal—Remove mounting screws in pump body flange, slide pump assembly out. To disassemble pump, remove cover screws and lockwashers, lift off cover, remove pump outer rotor. To remove shaft and rotor assembly, file off end of pin in drive gear hub, drive pin through shaft using a small drift, remove gear, withdraw shaft and rotor from housing. To remove oil regulator, remove hexagonal-headed plug on side of housing, withdraw regulator spring and plunger. CAUTION—Do not lose adjusting shims located within plug above spring.

Pump Servicing & Assembly—Replac rotors if clearanc between inner and outer rotor excessiv , r if rotor clearance in housing excessive. Replace cover if rotor bearing surface is worn or scratched. Use new body and cover gaskets. Make certain that driving gear pin is securely installed.

Pump Installation—Turn flywheel to #1 piston firing position with flywheel mark "IGN" centered in inspection hole in right front face of flywheel housing below starter. Turn distributor shaft to #1 firing position with distributor rotor finger opposite #1 terminal in distributor cap. Hold oil pump in same relative position as when installed on engine, turn pump shaft until tongue offset is upward (widest part of shaft down) and line up gear retaining pin with right hand side of slot in pump body. Slide pump into place on mounting studs, recheck rotor position. NOTE—If distributor rotor not at #1 terminal with pump installed, remove pump, turn shaft as required, and re-install.

OILING SYSTEM

6 CYLINDER MODELS

EXCESSIVE OIL CONSUMPTION CORRECTION: To correct complaints of excessive oil consumption, when not due to external leakage, excessive bearing clearance, or cracked vacuum pump diaphragm, check and correct following points:

1—On engines before Eng. No. 18121, plug holes in valve compartment floor using special synthetic rubber plugs (furnished in Kit No. 649319) exactly as directed below (CAUTION—all holes must not be plugged). Beginning Eng. No. 18121, number and location of these holes was changed and **plugs should not be installed on these later engines.**

2—If piston clearance not in excess of .005", remove glaze from cylinder walls with a hone and install set of new Service Type piston rings.

3—If piston clearance in excess of .005", install new pistons. Fit pistons to new clearance as specified on car model page.

►*CAUTION*—Coat pistons and rings with engine oil before installation, break engine in at 40 MPH. maximum for 300 miles.

Installation of Valve Compartment Plugs (Engines before No. 18121): Use Kit No. 649319 containing synthetic rubber plugs of correct size and number for installation in holes in floor of valve compartment on left side of engine as follows:

Four No. 649304 Plugs (Small)—Use to plug all four **small** holes just inside valve cover flange and immediately adjacent to lifter hole for #1, 2, 5, 6 cylinders.

Three No. 649305 Plugs (Medium)—Use to plug all three **medium** holes of innermost line between pairs of cylinders (1-2, 3-4, 5-6).

Four No. 649306 Plugs (Large)—Use to plug four large **center** holes located at side of and between lifter holes for cylinders #2, 3, 4, 5.

►*CAUTION—Do not plug end holes of this group—holes at #1 cylinder and #6 cylinder MUST BE OPEN.*

►*PLUG INSTALLATION NOTE*—Do not remove metal fins from holes when installing plugs (if opening less than ⅛" due to fins, no plug required). Taper plugs, if necessary, to fit holes, insert plugs with twisting motion to secure tight fit and leave approximately ⅜" exposed at top. Check by turning engine over several times before installing valve covers.

ENGINE GOVERNOR

UNIVERSAL JEEP & TRUCK MODELS

GOVERNOR: Governor is mounted on bracket on left front corner of cylinder head and is belt driven from the crankshaft. Various types of Governors are used with different engaging mechanisms as listed below. All governors have a dash control by which engine speed can be set in 200 RPM. steps from 1000 RPM. to 2600 RPM. maximum.

Adjustment (King-Seeley & Monarch): Check throttle linkage for sticking and binding by disconnecting accelerator spring and making certain that throttle opens and closes freely (this is necessary to prevent surging when governor operating). Reconnect accelerator spring, set hand throttle in wide open position, make adjustments in order as listed below. CAUTION—Novi governors are adjusted differently (see Novi data following).

Throttle Linkage—Adjust length of governor-to-throttle rod so that rod can be installed without disturbing position of the short (lower) governor lever or the carburetor throttle lever (King-Seeley), or to provide 1/16" slack or lost motion (Monarch). Rod length between ball centers should be 6" with King-Seeley governor. NOTE—1/16" slack required with Monarch governor to cushion governor action and prevent surging (no surge adjustment).

Dash Control (Speed Adjustment)—Engage governor clutch, place the governor dash control in first (1000 RPM) notch, make certain that hand throttle fully open, start engine and allow it to run until fully warmed up, then adjust governor control as follows: Check engine speed which should be 1000 RPM (see Note below), and if not correct disconnect dash control cable at upper end of governor upper (long) lever, place lever in position giving 1000 RPM speed, adjust clevis on lever end of dash control cable so that cable can be connected without disturbing position of lever, tighten adjustment locknut and connect cable. Recheck adjustment. If engine surges when throttle opened momentarily on cars with King-Seeley governor, adjust surge screw (below). NOTE—Monarch governor does not have surge adjustment.

Engine Speed Note—If tachometer not available, speedometer can be used to gauge engine speed. Jack up rear wheels securely, make certain that front drive disengaged, engage high or direct transmission gear. Speedometer readings for adjusting purposes should be 15 MPH. (1000 Engine RPM), 39 MPH (2600 Engine RPM).

Surge Screw Adjustment—If engine surges under load when controlled by governor, loosen locknut on adjusting screw on rear of governor housing, turn adjusting screw out until engine surges when dash control is operated between Low and High governed speeds, then turn screw in until surging stops and tighten locknut. CAUTION—Do not turn surge screw in further than necessary to eliminate surging or speed control will be lost.

Adjustment (Novi Governor): Check throttle linkage for sticking and binding. Disconnect accelerator spring, see that throttle opens and closes freely (prevents surging when governor operates). Re-connect spring. Make following adjustments in order:

Throttle Linkage—Adjust length of governor to throttle rod so that it can be installed on the ball studs with the governor hand control **pulled out to last notch** and carburetor throttle **wide open,** tighten adjustment locknut and install rod. NOTE—Rod length should be approximately 7⅜" between ball stud centers.

Dash Control (Speed Adjustment)—With governor dash control in closed or "in" position, start engine and allow it to run until fully warmed up. With hand throttle control fully closed, check engine idling speed and adjust throttle stopscrew for 600-650 RPM idle speed. Pull governor hand control out to first notch, check engine speed which should be 900-1000 RPM (see Note below). If not correct, disconnect dash control cable at upper end of governor upper (long) lever, place lever in position giving correct 900-1000 RPM engine speed, adjust clevis on lever end of cable so that cable can be connected without disturbing position of lever, tighten locknut and connect cable. Then push governor hand control all the way in, recheck engine idle speed. If speed greater than original setting of 600-650 RPM, loosen nut locking governor control handle on rod, unscrew handle from rod until carburetor throttle closed and throttle stopscrew against stop, tighten governor control handle locknut.

Engine Speed Note—Speedometer can be used to gauge engine speed as follows: Jack up rear wheels securely, make certain that front drive disengaged, engage transmission High or direct speed. Speedometer readings should be 13½-15 MPH for engine speed of 900-1000 RPM.

SPRING SHACKLES

UNIVERSAL JEEP & TRUCK MODELS

SPRING SHACKLES: Springs are fitted with "U" type shackle (front end of front springs, rear end of rear springs on Jeep; front end of front springs only on Trucks). Opposite end of all springs fitted with bronze bushing and conventional pivot bolt (rear shackle of rear springs on Trucks has same type bushing and bolt).) CAUTION—When removing springs, remove pivot bolt first, then remove bushings from "U" shackle. Install springs as follows:

Pivot Bolt Installation—Install bolts with head and grease fitting toward outside, tighten bolt nut with a torque indicating wrench to 27-30 ft.lbs.

"U" Shackle Installation—Install grease seal retainer and grease seal on each leg of "U" shackle, insert shackle through inner face of frame hanger and spring eye (threaded bushings installed with hexagonal head toward outside), hold shackle tightly against frame and start upper bushing on shackle (see Bushing Caution below) taking care that bushing is not cross-threaded on shackle or in spring eye. Turn bushing on shackle approximately halfway, then start lower bushing similarly, turn both bushings in alternately and evenly until heads of bushings are snug against frame bracket and bushing in spring eye is 1/32" away from spring (measured from inside hexagonal head to spring). Lubricate bushing with high-pressure lubricant, check shackles for binding by flexing spring. If shackle is tight, remove and re-install bushing.

BUSHING CAUTION—Left-hand threaded "U" shackles are used at left front spring and right rear spring (Jeep), at left front spring only (Trucks) with the left-hand threaded end down (toward spring eye) and special left-hand threaded bushings must be used with these shackles. Shackles may be identified by small boss forged on lower shank and bushings identified by groove around head. Right-hand shackles and bushings are unmarked.

MODEL IDENTIFICATION

SERIAL NUMBER: (2-WD & 4-WD)—On dash panel. **(4x4-63, 4-63, VJ-3)**—On floor riser to left of drivers seat.
(CJ-3A)—Above glove compartment door.
1949 Numbers—(2-WD) 2T-21011 Up, (4-WD) 4T-30576 Up, (4-63) 79716 Up, (CJ-3A) 10001 Up.

ENGINE NUMBER: Stamped on top of water pump boss at front of engine.

TUNE-UP

COMPRESSION PRESSURE: 115 lbs at cranking speed of 160 RPM.

VACUUM READING: Steady 17-21" idling at 7-10 MPH.

FIRING ORDER: 1-3-4-2. See diagram.

SPARK PLUG GAPS: .030".
Plug Type—Auto-Lite AN-7 or Champ. J-7, 14 mm.
NOTE—CJ-3A uses Auto-Lite AN-7B.

DISTRIBUTOR: Breaker Gap—.020-.024".
Cam Angle (CJ-3A)—39°-8'. **(All Others)**—50.8°.
Breaker Arm Spring Tension—17-20 ozs.
Automatic & Vacuum Advance—*See Ignition.*
Condenser Capacity—(IGB-1025) .20-.25 mfd,. (IGW-3139) .23-.26 mfd.

IGNITION TIMING: 5° BTDC. (Reg. Fuel), At TDC (for Low Octane Fuel).
Timing Procedure—*See Ignition Timing.*
Flywheel Mark—Flywheel mark "5°" (or "TC/" for TDC setting), centered in inspection hole in right front face of housing below starter.

CARBURETION:
Idle Setting—Idle adjusting screw set for smooth idle with warm engine (on Carter Carb. ½-1½ turns open). For richer mixture, turn screw **out** on Carter, **in** on Zenith carburetors.
Idle Speed—600 RPM. or 8 MPH.
Float Level (Carter WO-636SA)—⅜" top of float at free end to gasket seat on cover with valve closed (invert assembly).
Float Level (Carter WA1-613S)—5/16" from top of machined projection on bowl cover to top of soldered seam on free end of float (float inverted).
Float Level (Zenith 228AV10)—1½" from top of float to gasket seat on bowl cover with needle valve seated (float inverted).
►*CAUTION—Do not compress spring in valve stem (allow float to hang freely on inverted cover assembly).*
Accelerating Pump (Carter Pumps)—No seasonal adjustment.
(Zenith Pumps)—3 grooves in pump plunger stem. Engage hairpin cotter as follows: Center Groove normal setting, Upper (min. stroke) Hot Weather, Lower (max.) Cold.

Choke Setting: No adjustment required.

Fuel Pump Pressure: 4½ lbs. maximum.

CRANKCASE VENTILATOR: Remove and clean the vacuum control valve. *See Crankcase Ventilator (following Carb. Equipment) for directions.*

MANIFOLD HEAT CONTROL: Automatic thermostatic type. Valve must operate freely (no adjustment required). When installing assembly, see that thermostatic spring end rests on top of spring stop bracket on manifold.

VALVE TAPPET CLEARANCE: .016" All Valves, Hot or Cold.
NOTE—Adjusting screws self-locking type.
Valve Timing Check—*See Valve Timing.*

STARTING: *See Battery, Starter, Generator, Regulator.*

IGNITION

IGNITION SWITCH: (2-WD, 4-WD, 4X4-63, 4-63, VJ-3)—Douglas or Mitchellock Switch. Willys No. 641720. **(CJ-3A)**—Willys No. 642073 (for Yale & Towne, No. 644001 (Hurd). In base of ignition coil.
Lock Cylinder (2-WD, 4-WD, 4X4-63, 4-63, VJ-3)—Briggs & Stratton No. 50184. **(CJ-3A)**—Willys No. 661949 (for Yale & Towne). No. 644000 (for Hurd).
Key Series (2-WD, 4-WD, 4X4-63, 4-63, VJ-3)—C250 to C499. **Groove**—No. 3.

COIL: Auto-Lite Models. (2-WD, 4-WD, 4X4-63, 4-63, VJ-3) IG-4090A or IG-6009. Service Coil IG-6005 (with Bracket IG-1798S). **(CJ-3A)—IG-4314 or IG-4314A** with Service Coil IG-3033XS (Bracket CE-1248S). On right side of engine.
Ignition Current—2.5 amperes idling, 5 stopped.

CONDENSER: Auto-Lite—IGB-1025 (IGW-4129 & IGW-4189 Distr.), **IGW-3139** (IAD-4008).
Capacity—(IGB-1025) .20-.25 mfd, (IGW-3139) .23-.26 mfd.

DISTRIBUTOR: Auto-Lite—(2-WD, 4-WD) IGW-4189, (4X4-63, 4-63, VJ-3) IGW-4129 and IGW-4189, (CJ-3A) IAD-4008, and IGW-4189. Automatic advance type with separate Vacuum Spark control.
Breaker Gap—.020-.024".
Cam Angle (CJ-3A)—39°-8'. **(All Others)**—50.8°.
Breaker Arm Spring Tension—17-20 ozs.
Rotation—Counter-clockwise viewed from above.

Automatic Advance—IAD-4008

Degrees	Distr. R.P.M.	Degrees	Eng. R.P.M.
Start	250	0	500
3	580	6	1160
6	930	12	1860
9	1270	18	2540
11	1500	22	3000

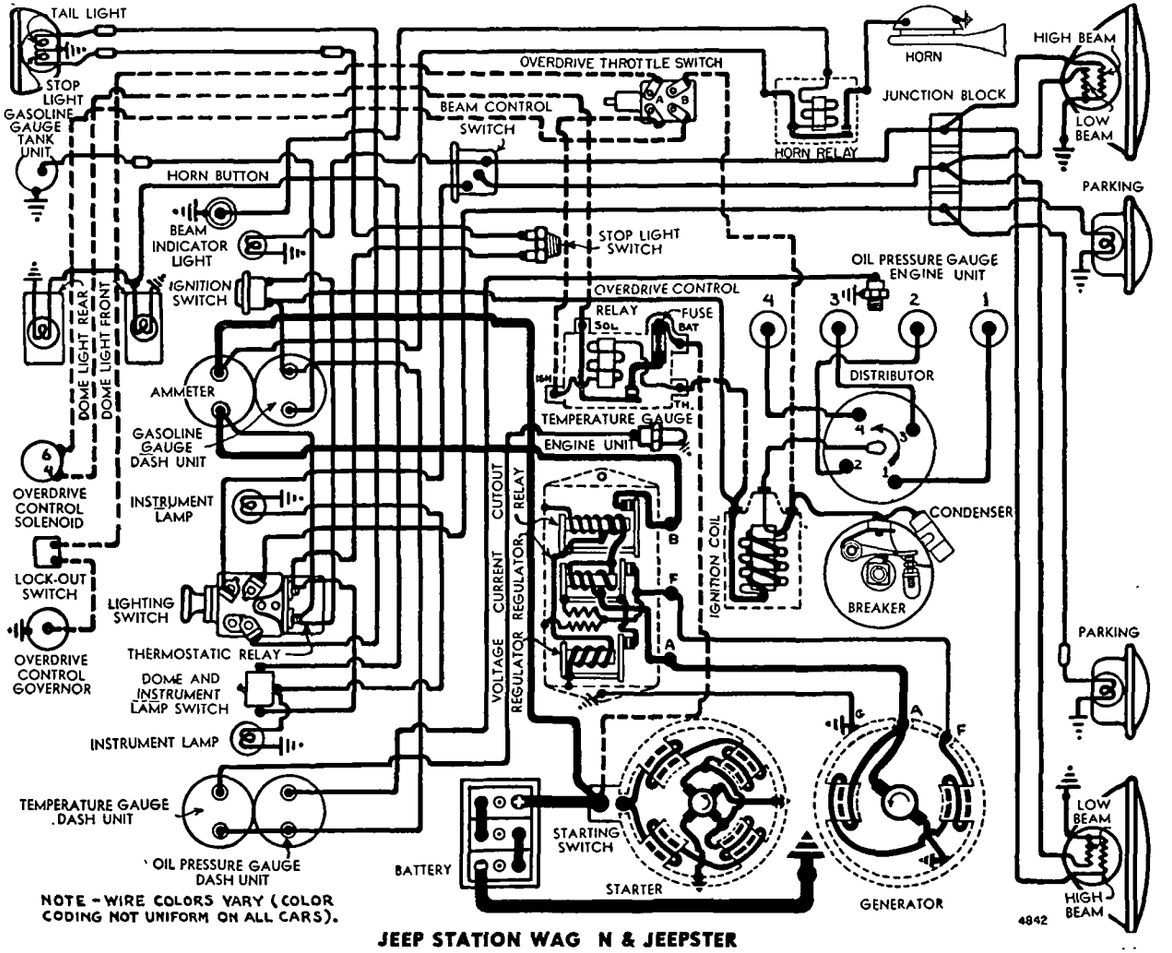

JEEP STATION WAG N & JEEPSTER

Automatic Advance—IGW-4129

Degrees	Distr. R.P.M.	Degrees	Eng. R.P.M.
Start	300	0	600
2	550	4	1100
5	930	10	1860
7	1190	14	2380
9.5	1500	19	3000

Automatic Advance—IGW-4189

Start	350	0	700
2	560	4	1120
5	875	10	1750
8	1190	16	2380
11	1500	22	3000

Vacuum Spark Control: Auto-Lite Type VC-4010. Separate unit mounted on hold-down plate, linked to advance plate. Provides additional advance at speeds above idling except when engine accelerated or operated with wide open throttle when spark retarded by return spring.

Vacuum Advance

Distr. Degrees	Eng. Degrees	Vacuum (" of HG)
Start	0°	3½"
2°	4°	5¾"
5°	10°	9¼"
8°	16°	12¾"
10°	20°	15"

Distributor Removal: On right side of engine. To remove, disconnect vacuum line, take out hold-down screw in mounting plate.

Installation Note—If crankshaft has been turned with distributor off engine, install distributor as follows: Turn crankshaft to #1 cylinder firing position (see Timing), turn distributor shaft until rotor is at #1 segment (see diagram), install distributor on engine, rocking shaft slightly to engage drive coupling, push distributor down into place, install hold-down screw, check ignition timing.

CAUTION—If oil pump has been removed, see Oil Pump Installation under "Oil Pump" in Willys Special Data.

IGNITION TIMING

Std. Setting (Regular Fuel).....**5° BTDC**
Spec. Setting (Low Octane Fuel).....**At TDC**

Timing Marks—Flywheel mark "5°" (or "TC/" (TDC setting) centered in inspection hole in right front face of housing below starter (remove inspection hole cover).

Timing (Engine not Running)—With #1 piston on compression, turn engine over until piston reaches firing position (see settings above) with flywheel mark "5°" (or "TC/" (TDC setting) centered in inspection hole in right front face of housing, loosen advance arm clampscrew, rotate distributor until contacts begin to open, tighten clampscrew, see that rotor at #1 segment in distributor cap (see diagram), check spark plug cable connections.

Timing Using Timing Light—(Engine Running)—This method recommended by manufacturer. Direct timing light through inspection hole at flywheel, idle engine (engine must be warm), adjust distributor (as directed above) until "5°" (or "TC/" (TDC setting) mark centered in inspection hole.

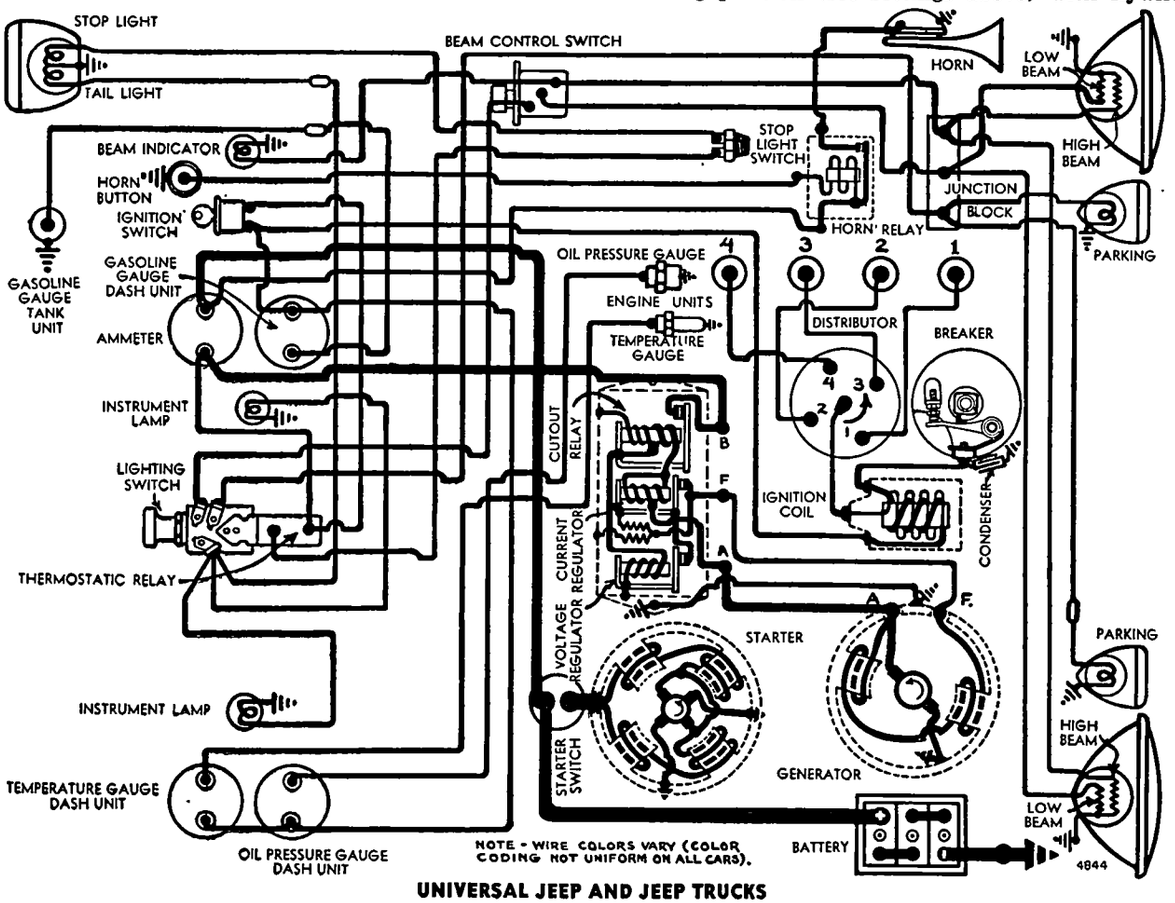

UNIVERSAL JEEP AND JEEP TRUCKS

CARBURETOR

4-63 & VJ-3 WITH CARTER WA-1

Carter WA-1 Type 613S—1¼" Single Barrel, Downdraft type with manual choke control.
Casting Number on Flange—485.
See Carburetor Section for complete data.

Settings (Idle Setting, Float Level, and Accelerating Pump): ***See Tune-Up data.***
Metering Rods & Jets—***See Carter Jet Table in Carburetor Section for complete data.***

Fast Idle: Fast idle cam which serves as stop for throttle lever stopscrew is linked to choke valve lever and rotated to fast idle position when choke valve closed for starting.
Setting—No adjustment required.

CARBURETOR

2-WD, 4-WD, 4X4-63, CJ-3A WITH CARTER WO

Carter WO Type 636SA—1" Single Barrel, Downdraft type with manual choke control.
See Carburetor Section for complete data.

Settings (Idle Setting, Float Level, and Accelerating Pump): ***See Tune-Up data.***
Metering Rods & Jets—***See Carter Jet Table in Carburetor Section for complete data.***

Fast Idle: Interconnected linkage by which choke valve lever opens throttle to fast idle position when carburetor choked for starting.
Setting—No adjustment required.

CARBURETOR

4-63 & VJ-3 WITH ZENITH

Zenith Model 228AV10—Single barrel, Downdraft type with manual choke control.
Outline No.—10760. On round metal tag riveted on top of float cover. Use in ordering parts.
See Carburetor Section for complete data.

Settings (Idle Setting, Float Level, and Accelerating Pump): ***See Tune-Up data.***
Metering Jets—***See Zenith Jet Specifications in Carburetor Section.***

Fast Idle: Fast idle cam which serves as stop for throttle lever stopscrew is linked to choke valve lever and rotated to fast idle position when choke valve closed for starting.
Setting—No adjustment required.

CARB. EQUIPMENT

Governor (Special Equip.): King-Seeley "Handy" Model 26510-354, Monarch, or Novi Governors. Centrifugal types. Mounted on left front corner of cylinder head and driven by special belt from the crankshaft.

CONTINUED N NEXT PAGE

C NTINUED FR M PRECEDING PA E

Setting—1000 to 2600 RPM of engine in steps of 200 RPM (in accordance with position of dash control lever which has nine settings).

Adjustment—*See Willys Special Data for directions.*

Air Cleaner: Oakes-Donaldson Oil Bath type. **(2-WD & 4-WD)** #616150-E653, **(4X4-63, 4-63, CJ-3A, VJ-3)** #613300-E653, **(4-63)** #616615, oil-wetted type optl. equip.

Servicing (Oil-bath Type)—Clean filter and fill to Oil level mark with same oil used in engine crankcase at 2000 mile intervals (when engine oil changed) or more often if required by operating conditions.

Servicing (Oil-wetted Type)—Clean filter element and re-oil at 2000 mile intervals or more often if required by operating conditions.

Fuel Pump: (2-WD & 4-WD)—AC #1539106, **(4X4-63 & CJ-3A)** AC #1539535, **(4-63 & VJ-3)** AC #1539306. Diaphragm type combination fuel-and-vacuum pump.

Replacement Pump—AC #9106 or 9307 (for 1539106), #9353 (for 1539353), #9306 (for 1939306).
See Carburetion Equipment Section for complete data.

Pressure—4½ lbs. maximum.

Gasoline Gauge (CJ-3A): Auto-Lite.

Dash Unit—Auto-Lite No. NG-10764D.

Tank Unit—Auto-Lite No. NG-10762T.

Gasoline Gauge (All Others): King-Seeley Electric type.

Dash Unit—King-Seeley No. 42570.

Tank Unit—King-Seeley No. 41285.
See Carburetion Equipment Section for complete data.

CRANKCASE VENTILATOR

Sealed Positive Ventilation Type—Air intake pipe (from air cleaner to oil filler pipe) furnishes clean air to crankcase, air outlet pipe (from valve cover to manifold) allows fumes from crankcase to be sucked into intake manifold. Vacuum control valve at manifold connection **must close at idling speed** for satisfactory idling performance.
NOTE—Clean Vacuum Control Valve when engine tuned up.

Cleaning Vacuum Control Valve—Remove control valve by disconnecting pipe and unscrewing valve from manifold. Disassemble valve, withdraw valve and spring, clean valve and valve seat thoroughly.

Servicing—Make certain all connecting pipes tight and that oil filler cap gasket seals cap tightly. Remove and clean control valve when tuning engine or whenever system does not operate satisfactorily.

BATTERY

Auto-Lite Type PN-15—6 Volt, 15 Plate, 100 Ampere Hour capacity (20 hour rate).
Starting Capacity—120 amperes for 20 minutes.
Zero Capacity—300 amperes for 3.2 minutes.
Five-second Voltage—4.15 volts.
Grounded Terminal—Negative (—) grounded at starter.
Engine Ground—Strap at right front engine mounting.
Location—Right hand side of dash in engine compt.
Dimensions—Lgth. 8 15/16". Width 7⅛". Hgt. 8⅝".

STARTER

Auto-Lite (2-WD, 4-WD, 4X4-63, VJ-3)—MZ-4137, (CJ-3A) MZ-4113.

Armature No.—(MZ-4137) **MZ-2214**, (MZ-4113) **MZ-2089.**

Drive (MZ-4137)—Overrunning clutch and positive pinion shift actuated by starting pedal. **(MZ-4113)**—Special type Bendix Drive No. A2233.

Rotation—Counter-clockwise at commutator end.

Brush Spring Tension—42-53 ozs. (new brushes).

Cranking Engine—160 RPM., 150-175 amps., 5 volts.

Performance Data

Torque	R.P.M.	Volts	Amperes
0 ft. lbs.	4300	5.5	70
.65 "	2500	5.5	100
2.55 "	1325	5.0	200
4.95 "	750	4.5	300
7.65 "	220	4.0	400
7.8 "	Lock	3.0	420
11.8 "	Lock	4.0	560

Removal: On right front face of flywheel housing. To remove, disconnect pedal linkage and cables, take out flange mounting capscrews and bolt in bracket on commutator end.

Starting Switch: (MZ-4137)—Auto-Lite SW-2677A. Mounted on starter and operated by pinion shift lever. **(MZ-4113)**—Auto-Lite SW-4015. Mounted under floor to right of accelerator pedal. Operated manually by button on toeboard.
See Electrical Equipment Section for complete data.

GENERATOR

Auto-Lite Model GDZ-4817A—Armature GDZ-2006F. Two brush (shunt) type with voltage and current regulation. Ventilated by fan on drive pulley.

Maximum Charging Rate—35 amperes, 8.0 volts (cold) with discharged battery (controlled by regulator).

Charging Rate Adjustment—None (see Regulator).

Performance Data

Cold			Hot		
Amperes	Volts	R.P.M.	Amperes	Volts	R.P.M.
0	6.4	925	0	6.4	1000
5	6.65	1060	5	6.65	1150
10	6.85	1200	10	6.85	1290
15	7.05	1340	15	7.05	1430
20	7.3	1480	20	7.3	1590
25	7.55	1620	25	7.55	1750
30	7.8	1760	30	7.8	1980
35①	8.0	1900	35	8.0	2250

①—Current Regulator setting. See Regulator data.

Rotation—Counter-clockwise at commutator end.

Brush Spring Tension—35-53 ozs. (new brushes).

Field Current—1.6-1.78 amperes at 6.0 volts.

Motoring Current—4.16-4.60 amperes at 6.0 volts.

Removal: Conventional pivot mounting at right front of engine. To remove, take out clamp bolt above generator and two pivot bolts under generator. Slip off drive belt and lift generator out.

Belt Adjustment: Loosen clamp and pivot bolts, swing generator out away from engine until belt can be deflected 1" midway between generator and fan pulleys with thumb pressure.

REGULATOR

Auto-Lite Model VRP-4007C-2. Voltage-Current Type. Regulator case mounted on right side in engine compartment. Consists of Cutout Relay and vibrating type Voltage and Current Regulator units.

NOTE—Regulator cover sealed. Warranty void if seals broken.
See Electrical Equipment Section for complete data.

Cutout Relay

Cuts In—6.4-7.0 volts (set to 6.4-6.6 volts).

Cuts Out—4.1-4.8 volts (approx. 4-6 amps. disch.).

Contact Gap—.015" minimum.

Air Gap—.031-.034" with contacts open measured at hinge end of core.

Voltage Regulator

Setting—7.35 volts (7.2-7.5) at 70°F. See Electrical Equip. Section for settings at other temperatures.

Checking (without breaking seals) & Adjustment—*See Electrical Equipment Section.*

Contact Gap—.012" min. (armature against stop pin).

Air Gap—.048-.052" with contacts just opening.

Current Regulator

Setting—34-36 amperes (marked "35" on cover).

Checking (without breaking seals) & Adjustment—*See Electrical Equipment Section.*

Contact Gap & Air Gap—Same as Voltage Regulat'r.

LIGHTING

Headlamps: Corcoran-Brown "Sealed Beam" type. Upper and lower beams controlled by Beam Selector Switch on toeboard.
See Electrical Equipment Section for complete data.

Headlamp Adjustment—Aim upper beam straight ahead (hot spot center exactly 3" below lamp center height at 25 feet).

Beam Indicator—On left side of instrument panel. Lighted when upper beams in use.

Switches

Lighting (2-WD, 4-WD, CJ-3A)—Douglas A-457, **(4X4-63, 4-63, VJ-3)** Culver-Stearns.

Beam Selector—Douglas #6351.

MISC. ELECTRICAL

LIGHTING CIRCUIT BREAKER: 30 ampere type. Mounted on lighting switch. Vibrating thermostatic type. Protects lighting circuits by vibrating to limit current. No adjustment.

HORNS: Sparton #C-5992 or B-10419, Auto-Lite HA-4033 or HA-4037. Vibrator type single horn controlled by relay. **Auto-Lite HW-4007** (Low Pitch), **HW-4008** (High Pitch) twin horns.

ENGINE

ENGINE SPECIFICATIONS: Own Make. Four cylinder, "L" Head type. Cylinder block and crankcase cast enbloc. Cylinders offset from center-line of crankshaft toward camshaft side of engine.

Bore—3⅛" (3.125-3.127"). *See Willys Special Data for Original Bore Sizes.*

Stroke—4⅜".

Displacement—134.2 cubic inches.

Rated Horsepower (SAE)—15.63.

Developed Horsepower—60 at 4000 RPM.

ENGINE

C NTINUED FR M PRECEDING PA E

Compression Ratio—6.48-1 Std. Cast Iron Head.

NOTE—7.0-1 Cylinder Head is optional.

Compression & Vacuum Reading—*See Tune-up data.*

ORIGINAL BORE & PISTON SIZES: *See Willys Special Data.*

ORIGINAL BEARING SIZES: *See Willys Special Data.*

TIGHTENING TORQUES: *See Willys Special Data.*

CYLINDER HEAD INSTALLATION: *See Willys Special Data.*

PISTONS: Lo-Ex aluminum alloy (Lynite, Bohn, Permite), "T" slot, Cam ground, tin-plated type with heat insulation groove above top piston ring.

Length—3¾".

Weight—12.7 ozs. without rings or pin.

Removal—Pistons and rods removed from above.

Clearance—Top Land .017-.019". Skirt .003".

Replacement Pistons: Furnished Std. to .0002", .005", .010", .015", .020", .025", .030", .035", .040", .045" Oversize.

►*CAUTION*—Pistons must not be "lapped" in (will destroy tin-plated surface).

Fitting New Pistons: Use .003" feeler stock, ¾" wide, inserted between piston and cylinder wall on opposite side from "T" slot. Pull required to withdraw feeler must be within 5-10 lbs. at 70°F.

Installing Pistons: "T" slot toward valve (left) side of engine (opposite side from oil spray hole in connecting rod lower end).

PISTON RINGS: Two compression, one oil control ring per piston, all above pin (piston has narrow heat insulation groove above top ring groove). Oil ring groove drilled with oil drainage holes.

Ring	Width	End Gap	Side Clearance
Compression	3/32"	.008-.013"	.0005-.001"
Oil Contr.	3/16"	.008-.013"	.001-.0015"

Installing Rings: Install compression rings with mark "TOP" (on side) toward top. Rings have taper face and must be installed correctly. Top ring inner bevel edge must be up.

Replacement Rings: For Rebored Cylinders—Furnished .005", .010", .015", .020", .025", .030", .035", .045" Oversize.

Service Type Rings (for cylinders not rebored) furnished Std.—.009", .010-.019", .020-.029", .030-.039", .040-.049" Oversize.

PISTON PIN: Diameter—.8117-.8119". **Lgth**—2 25"32". Pin is locked in connecting rod by clampscrew.

Pin Fit in Piston—.0001-.0005" clearance or light thumb push fit with piston and pin at 70°F.

Replacement Pins: No oversizes are available.

CONNECTING ROD: Length—9.1845-9.1905". **Weight**—39.41 ozs.

Crankpin Journal Diameter—1.9385-1.9375". *See "Original Bearing Sizes" in Willys Special Data.*

Lower Bearing—Steel-backed, babbitt-lined, replaceable type. CAUTION—Oil spray hole in upper half of bearing must line up with oil spray hole in rod.

Clearance—.0005-.0025". **Sideplay**—.004-.010".

Bearing Adjustment: None (no shims). Replace bearings. Do not file connecting rods or bearing caps.

See Willys Special Data for "Palnut" installation.

NOTE—Replace bearings when clearance exceeds .005" or sideplay exceeds .013".

Replacement Bearings: Furnished Standard & .010", .020", .030" Undersize.

Installing Rods: Lower bearing offset. Install rods with short side of bearing toward nearest main bearing or toward front of engine (#1, 3), toward rear (#2, 4). Oil spray hole in lower end of rod toward right of engine (away from camshaft) on all rods.

CRANKSHAFT: Three bearing type with removable counterweights.

Journal Diameters—2.3341" (all bearings). *See "Original Bearing Sizes" in Willys Special Data.*

Bearings—Steel-backed, babbitt-lined, replaceable type. Bearing shells are dowelled in bearing caps and crankcase.

Clearance—(CJ-3A) .0001-.0025", (All Others) .0014-.0029".

NOTE—Replace bearings when clearance exceeds .006" or when endplay exceeds .018".

Bearing Adjustment: None (no shims). Replace bearings. Do not file bearing caps. *See Crankshaft Servicing instructions in Willys Special Data.*

NOTE—Engine must be removed from chassis for bearing replacement and crankshaft servicing.

Replacement Bearings: Furnished Standard & .010", .020", .030" Undersize.

End Thrust: Taken by flanged faces of #1 (front) bearing. Adjustable by adding or removing shims between crankshaft sprocket thrust washer and sprocket. NOTE—Crankshaft sprocket must be removed with a gear puller in order to make endplay adjustments. Adjusting shims furnished .002", .004", .010" and .030" thick.

Endplay—.004-.006".

FLYWHEEL: Removal—*See Willys Special Data.*

CAMSHAFT: Four bearing, helical gear drive.

Journal Diameters—#1, 2.188"; #2, 2¼"; #3, 2 3/16"; #4, 1¾".

Bearings—Removable steel-backed, babbitt-lined bushing (front), machined in crankcase (all others).

Clearance—.002-.0035". Service limit .006" (front), .008" (all others).

Camshaft Removal—*See Willys Special Data.*

End Thrust: Taken by thrust plate assembled behind gear with a spacer assembled behind plate. If required, a thin shim can be installed behind spacer if too little clearance, or spacer can be dressed to provide greater clearance.

Endplay—.003-.0055".

►**Timing Case Cover (& Front Oil Seal) Change:** *See "Crankshaft & Main Bearings" in Willys Special Data.*

Timing Gears: Crankshaft gear cast iron. Camshaft gear Fibre with steel hub.

►**CJ-3A Jeep Engines with Timing Gears carry engine mark "J" ahead of engine number.**

Timing Gear Backlash—.000-.002".

Camshaft Setting: Mesh gears with marked tooth of camshaft gear opposite marked space between gear teeth on crankshaft gear.

VALVES:	Head Diam.	Stem Diam.	Length
Intake	1 17/32"	.373"	①
Exhaust	1 15/32"	.3725"	5 13/16"

①—**(CJ-3A) 5 3/4". (All Others) 5 57/64".**

	Seat Angle	Lift	Stem Clearance
Intake	45°	23/64"	.0015-.00325"
Exhaust	45°	23/64"	.0025-.0045"

Valve Guides: Removable type. Remove guides from above with puller, install new guides with driver or press guides down in place to following dimensions:

Intake Guide—Top of guide 1 5/16" below top face of block. The shorter smaller-diameter section end of the guide should be up.

Exhaust Guide—Top of guide 1" below top face of block. Taper end (counter-bored end) of guide should be up.

Valve Springs: Install springs with closed-coil end up toward cylinder block. Spring free length 2½".

	Spring Pressure	Spring Length
Valve Closed	53 lbs.	2 7/64"
Valve Open	120 lbs.	1 3/4"

Valve Lifters: Mushroom type operating in reamed holes in block. Serviced by installing oversize lifters. Lifters furnished .004" Oversize.

Lifter Diameter—.6240-.6245".

Lifter Clearance—.0005-.002".

NOTE—Camshaft must be removed for lifter removal.

See Camshaft Removal instructions in Willys Special Data.

VALVE TIMING

Tappet Clearance: .016" All Valves, Hot or Cold.

NOTE—Tappet adjusting screws are "self-locking" type (no locknuts).

Valve Timing: See Camshaft Setting (above).

Intake Valves—Open 9° BTDC. Close 50° ALDC.

Exhaust Valves—Open 47° BLDC. Close 12° ATDC.

►**Timing Mark Note**—No Valve Timing Mark provided but flywheel marked "TC" (top dead center) and "5°" (5° BTDC). Estimate 9° BTDC intake opening point from these marks and mark flywheel to check valve timing.

Valve Timing Check—Set tappet clearance #1 intake valve at .020". This valve should open with #1 piston 9° or .039" before top dead center with flywheel mark (see timing mark note above) centered in inspection hole on right front face of flywheel housing below starter. Reset tappet clearance to .016" running clearance.

CONTINUED ON NEXT PAGE

C NTINUED FR M PRECEDING PAGE

LUBRICATION

Engine Oiling System: Pressure to main and connecting rod bearings, camshaft bearings, and timing chain or timing gears. Oil pump mounted externally on left hand side of crankcase.
Crankcase Capacity—4 quarts.
Normal Oil Pressure—(CJ-3A) 40-50 lbs. at 30 MPH, (All Others) 35 lbs. at 30 MPH.
Oil Pressure Regulator—Under plug on side of pump housing. Opens at 35 lbs. Adjustable by adding or removing shims located above spring in plug.

Oil Pump: Rotor type pump mounted on left side of crankcase.
Oil Pump Servicing—*See Willys Special Data.*

Oil Filter: Purolator. On cylinder head bracket at right front corner of cylinder head with oil outlet connected to top of timing chain cover.
CAUTION—Filter should be drained at each crankcase oil change (2000 mile intervals) and filter element replaced at 8000 mile intervals for normal service.

Oil Pressure Gauge (CJ-3A): Auto-Lite #G-10763. Bourden tube type (not electric).
(All Others)—King-Seeley Electric type.
Dash Unit—King-Seeley No. 42565.
Engine Unit—King-Seeley No. 40767.
See Miscellaneous Section for complete data.

COOLING

Cooling System: Pressure type with pressure valve (relief valve) in filler cap.
Capacity—11 qts.
Pressure Valve—Radiator Filler Cap. Opens at 3¾ lbs. (3¼-4¼ lbs.).

Water Pump: Centrifugal, packless, ball bearing type.
See Water Pump Section for complete data.
Removal—Loosen and remove drive belt, disconnect hose. Remove pump mounting screws, lift out pump and fan assembly.
Belt Adjustment—*See Generator Belt Adjustment.*

Thermostat: Harrison. In outlet elbow on cylinder head. Starts to open at 145-155°F. Fully open at 170°F.

Temperature Gauge (CJ-3A): Auto-Lite #H10766. Bourden tube type (not electric).
(All Others)—King-Seeley Electric type.
Dash Unit—King-Seeley No. 42575.
Engine Unit—King-Seeley No. 7000.
See Miscellaneous Section for complete data.

CLUTCH

Auburn Model 8501-19 (Sta. Wgn. & Jeepster), 8501-23 (Jeep & Trucks) with Borg & Beck Driven Member. Single plate, dry disc type.
NOTE—Model 8501-19 has neoprene driving lug inserts and Return Clip Springs.
See Clutch Section for complete data.

►**Clutch Facing Change & Return Clip Spring Installation to correct Clutch Chatter & Noise**—*See "Auburn Clutch" in Clutch Section.*

►**Jeep CJ-3A Release Lever Interference Correction (causing premature clutch wear on first cars):** *See "Auburn Clutch" in Clutch Section..*
Facings—Molded (flywheel side), Woven (pressure plate side). I. D. 5⅛". O. D. 8½". Thickness .132-.138".

Pedal Adjustment: Pedal free travel (2-WD, 4-WD, 4X4-63, 4-63, VJ-3) ¾", (CJ-3A) 1¼" (gives 1/16" clearance between release bearing and clutch levers). To adjust, loosen locknut and turn adjusting nut on connector link at clutch fork, tighten locknut.

Removal: Remove transmission (see Transmission Removal), remove flywheel bell housing. Mark pressure plate and flywheel to insure correct re-installtion, take out mounting screws in clutch cover flange (turn all screws out evenly), remove clutch assembly and driven member.

TRANSMISSION
FOR 2-WHEEL DRIVE

AS12-T96 (4-63), AS18-T96 (VJ-3), AS1-T90E (2-WD before Serial No. 22536), AS1-T90D (2-WD after Serial No. 22536)—Constant-mesh, synchro-mesh (Second & High), sliding gear (Low & Reverse), all helical gear type **except spur type sliding gear on 2-WD.**
See Transmission Section for complete data.

Transmission Control (All except 2-WD after Serial No. 22536): Remote control type with gearshift lever on steering column.
See Transmission Section for complete data.

Removal: Disconnect shift rods at transmission (remote control type) or remove shift lever (floor mounted gearshift). On Overdrive cars, disconnect wires from solenoid and rail switch, disconnect overdrive control cable and conduit, remove rubber mounted saddle support at rear end of overdrive, take off overdrive governor assembly. Disconnect front universal joint at transmission. Support engine weight on jack under flywheel bell housing, remove frame cross-member with rubber insulators attached. Place jack under engine to support engine. Back out four screws holding transmission to bell housing approximately ¾". Pull transmission back to bolt heads which will provide opening between the two housings and relieve pressure on clutch release fork in bell housing. Using a long screwdriver through opening in side of bell housing, pry the clutch release fork from engagement with clutch release bearing carrier. Remove four transmission attaching screws, and pull transmission back until clutch shaft clears bell housing and remove the assembly.

TRANSMISSION
FOR 4-WHEEL DRIVE

Warner AS3-T90C (CJ-3A, 4X4-63 & 4-WD after Serial No. 34787), AS3-T90A (4-WD before Serial No. 34787).
Three-speed type. Constant-mesh, synchro-mesh, helical gears (Second & High), sliding spur gear (Low & Reverse).
See Transmission Section for complete data.

Transfer Case: Spicer Model 18. Two-speed auxiliary transmission and front-wheel drive unit mounted on rear of transmission case. Separate control levers provided for Low-High range (right hand lever), and front-wheel drive engagement (left hand lever).

Transmission Control (4-WD before Serial No. 34787 only): Remote control type with gearshift lever mounted on steering column.
See Transmission Section for complete data.

Removal: Transmission and transfer case are removed as an assembly. Disconnect front and rear propeller shafts at universal joints (NOTE—If equipped with Power Take-off drive, remove front end of power take-off propeller shaft assembly). Disconnect speedomter cable at transfer case, brake cable, transmission shift rods at transmission case levers (remote control type) or remove shift lever (floor mounted gearshift), and clutch release cable at cross-shaft bell-crank. Place support jacks under engine and transmission, remove transfer case rubber snubber bolt nut (on right side) and rear mounting bolt nuts at cross-member under transmission case. Remove floor board inspection plate. Drain radiator and loosen upper radiator hose. Remove transfer case shift lever pivot pin screw, remove pin and shift levers (NOTE—If Power Take-off used, remove power take-off shift lever plate screws and lift lever out). Remove bolts holding center cross-member at frame side rails and remove cross-member (CAUTION—with cross-member removed, engine and transmission weight will rest on support jacks). Remove bolts holding transmission on bell housing, force transmission to right until ball stud end can be disengaged from end of clutch control cross-shaft. Lower support jacks under engine and transmission and slide transmission and transfer case assembly to rear until clutch shaft clears bell housing, remove assembly from beneath car.

OVERDRIVE

Warner Type "R10" (part of transmission assembly). Solenoid operated, governor controlled with throttle "kick-down."
See Transmission Section for complete data.
Control Relay—Auto-Lite Model HRT-4001.
Overdrive Governor—Auto-Lite Model TGE-4002.
Transmission Solenoid—Delco-Remy 1118132.

Removal: Remove as a unit with transmission.

UNIVERSALS
FOR 2-WHEEL DRIVE

2-WD & 4-63 Sta. Wgn.—Detroit Series 4100. Ball & Trunnion type. NOTE—2-WD trucks have additional universal at intermediate bearing on frame cross-member.
4-63 Sed. Del.—Spicer No. 1261-102X (Front), 1268-111X (Rear). Needle roller bearing type.
See Universals Section for complete data.

UNIVERSALS
FOR 4-WHEEL DRIVE

Front & Rear Drive Propeller Shaft Joints: Spicer needle roller bearing types as follows:

	Transmission End	Axle End
Front Drive (All)	1261-102X	1268-104X
Rear Drive (CJ-3A)	1261-1X	1268-104X
Rear Drive (4-WD)	1261-102X	1268-101X

Front Axle Shaft Joint: Bendix or Rzeppa Constant-velocity type. One joint used at outer end of each shaft.
See Universals Section for complete data.

Power Take-off Propeller Shaft Joints: Detroit Series 4100 Ball-and-Trunnion type. Three used on 4-WD (additional joint at intermediate support bearing on frame cross-member).
See Universals Section for complete data.

FRONT AXLE

F R 4-WHEEL DRIVE

Spicer (Salisbury) Model 25—Full-floating, hypoid gear type. Differential assembly (ring and pinion gear assembly) is identical with Spicer Model 23-2 Full-floating Rear Axle and is serviced in same manner.

See Spicer (Salisbury) Full Floating Rear Axle in Rear Axle Section for complete data.

Ratio—5.38-1.

Backlash—.005-.007". Shim adjustment.

Removal: *See Universal Jeep Model CJ-2A (1948) Front Axle Removal instructions.*

Wheel Bearing Adjustment: *See Universal Jeep Model CJ-2A (1948) "Front Axle" for Wheel Bearing Adjustment.*

REAR AXLE

ALL (EXCEPT TRUCKS)

Spicer 23-1 (4-63 & VJ-3), Spicer 41-2 (4X4-63 & CJ-3A)—Semi-floating, Hypoid Gear type with Hotchkiss Drive.

See Rear Axle Section for complete data.

Ratio (4-63 & VJ-3)—4.88-1 Std., 4.56-1 & 5.38-1 Optl.

Ratio (4X4-63 & CJ-3A)—5.38-1.

Backlash—.004-.008". Shim adjustment.

Removal: Support rear end of truck securely, remove rear wheels, disconnect rear shock absorbers, rear brake line (at frame connection on right side), rear brake cables and propeller shaft at rear universal. Place support jacks under axle housing to relieve springs of weight, remove nuts on spring "U" bolts, remove pivot bolt at front end of springs, lower springs to floor. Remove axle assembly.

Axle Shaft Removal: Remove wheel and hub assembly (use wheel puller), remove nuts on bolts holding backing plate and brake assembly, remove dust shield, oil seal, and backing plate. Remove axle shaft and wheel bearing. CAUTION—Do not lose bearing adjusting shims.

Wheel Bearing Adjustment—Endplay .003-.005". Adjust by adding or removing shims between backing plate and flange on axle housing. See axle shaft removal above for dismantling instructions.

NOTE—Shims installed on **left hand** end of axle housing only in production. Shims can be installed on right hand end of axle housing, if necessary, for correct endplay.

REAR AXLE

TRUCKS NLY

Timken Model No. 51540—Semi-floating, spiral bevel gear type with Hotchkiss Drive.

See Rear Axle Section for complete data.

Ratio—5.38-1 Std. Optl. Ratio (2-WD only) 4.88-1 and 6.17-1.

Backlash—.004-.018". No adjustment.

Removal: *Same as for other Willys Models below.*

Wheel Bearing Adjustment: *Same as for other Willys Models below.*

SHOCK ABSORBERS

Gabriel or Monroe—Hydraulic, direct acting, adjustable type. NOTE—Shock absorbers are sealed and cannot be dismantled for servicing or refilling.

See Shock Absorber Section for complete data.

Adjustment—Remove mounting bolt at lower end, fully collapse shock absorber by pressing up on lower end until adjusting key within unit engages slot in adjusting plate (can be determined by feel), turn unit in clockwise direction until limit of adjustment is reached (full range of adjustment is 4 turns), back off adjustment by turning unit counterclockwise **exactly one turn** for standard setting. Make certain that adjusting key does not slip out of slot while making adjustment.

CAUTION—Units on both sides must be set alike.

FRONT SUSPENSION

WITH CONVENTIONAL DRIVE OR 4-WHEEL DRIVE

Conventional type (see Front Axles above for four wheel drive Models) with semi-elliptic springs.

Steering Knuckle Bearing Servicing & Adjustment —*See Universal Jeep Model CJ-2A (1948) "Front Axle" for data.*

Kingpin Inclination—7½° (All).

Caster—4¾° (2-WD), 3° (Others).

Camber—1° (2-WD), 1½° (Others).

Toe In—3/64-3/32" (All).

FRONT SUSPENSION

INDEPENDENT TYPE

Planadyne Type. Independent, linked parallelogram type with transverse spring (spring acts as lower control arm).

See Front Suspension Section for complete data.

►**Replacement Spring Caution**—*See Willys Front Suspension for recommended replacement springs.*

Kingpin Inclination—5° crosswise.

Caster—1°.

Camber—1½° (1¼-1¾°).

Toe In—1/8-3/16".

►*See Willys Front Suspension for Toe In adjusting procedure.*

STEERING GEAR

Ross Model T12, No. TA-13018—Cam-and-Twin Lever.

See Steering Gear Section for complete data.

BRAKES

Service Brakes: Bendix (Lockheed) Four Wheel Hydraulic, self-centering (except CJ-3A), Double anchor (CJ-3A). NOTE—Self-centering brakes do not have anchor pin adjustment.

See Brake Section for complete data.

Drum Diameters—(CJ-3A) 9", (4-63) 10", (2-WD & 4-WD) 11".

Lining—Molded type.

	Width	Thickness	Length Per Wheel
CJ-3A	1¾"	.206-.216"	16 53/64"
4-63	1¾"	.222"	19"
2-WD & 4-WD	2"	.182-.192"	22 1/16"

Clearance—.008" toe, .005" heel for each shoe.

NOTE—On self-centering type brakes, centralize shoes by hard brake application before making adjustment.

Hand Brake (Except CJ-3A): Hand lever applies rear wheel service brakes. See Service Brakes above.

Hand Brake (CJ-3A): Hand lever applies independent brake on drive shaft at rear of transfer case.

Drum Diameter—8".

Lining—Width 1¾". Thickness .206-.216". Length per drum 16¼".

Hand Brake Adjustment—*See Universal Jeep Model CJ-2A (1948) "Brakes" for data.*

MISC. MECHANICAL

Windshield Wiper (Except CJ-3A): Vacuum type, cable operated.

See Miscellaneous Section for data.

MODEL IDENTIFICATION

SERIAL NUMBER: On plate on outside of left frame side rail at front end and on plate on floor riser at left of driver's seat.
1949 Numbers—13,119 Up.

ENGINE NUMBER: Stamped on right front upper corner of cylinder block.

TUNE-UP

COMPRESSION PRESSURE: 120 lbs. at 160 RPM. cranking speed.

VACUUM READING: Steady 18-21" idling at 500 RPM.

FIRING ORDER: 1-5-3-6-2-4. See diagram.

SPARK PLUG GAPS: .030"
Plug Type—Auto-Lite Type A-7. 14 mm. Metric.

DISTRIBUTOR: Breaker Gap—.020". Limits .018-.022".
Cam Angle—38.5° (closed).
Breaker Arm Spring Tension—17-20 ozs.
Automatic & Vacuum Advance—*See Ignition.*
Condenser Capacity—.20-.25 microfarad.

IGNITION TIMING: TDC. (At Top Dead Center).
Timing Procedure—*See Ignition Timing.*
Timing Mark—Line on rim of vibration dampener aligned with pointer on timing gear cover on right side.
Octane Selector Setting—Set to just eliminate ping with engine pulling hard.

CARBURETION:
Idle Setting—Idle adjusting screw set for smooth idle with warm engine (on Carter Carb. 1-2 turns open). For richer mixture, turn screw **out** on Carter, **in** on Zenith carburetors.
Idle Speed—600 RPM. or 6 MPH.
Float Level (Carter)—5/16" from top of machined projection on bowl cover to top of soldered seam on free end of float with cover assembly inverted.
(Zenith)—45/64" plus or minus 1/64" from upper edge of float seam at free end of float to gasket seat on bowl cover with float and bowl cover assembly inverted.
Accelerating Pump (Carter)—No seasonal adjustment.
(Zenith)—3 grooves in pump plunger stem. Engage hairpin cotter as follows: Center Groove normal setting, Upper (min. stroke) Hot Weather, Lower (max.) Cold.

Choke Setting: No adjustment required.

Fuel Pump Pressure: 3½-4½ lbs. at 1800 RPM.

CRANKCASE VENTILATOR: Remove and clean the vacuum control valve. *See Crankcase Ventilator (following Carb. Equipment) for directions.*

MANIFOLD HEAT CONTROL: Automatic thermostatic type. Valve must operate freely (no adjustment required).

VALVE TAPPET CLEARANCE: .016" All Valves, Hot or Cold.
Valve Timing Check—*See Valve Timing.*

STARTING: *See Battery, Starter, Generator, Regulator.*

IGNITION

IGNITION SWITCH: Douglas or Mitchellock Switch. Willys No. 641720.
Ignition Lock—Briggs & Stratton. B&S No. 50184.
Key Series—C250-499. Groove No. 3.

COIL: Auto-Lite IG-4090A or IG-6009. Service Coil IG-6005 (with bracket IG-1798S). On right side of engine to rear of distributor.

Ignition Current—2.5 amperes idling, 5 stopped at 6.3 volts.

CONDENSER: Auto-Lite No. IG-2671.
Capacity—.20-25 microfarad.

DISTRIBUTOR: Auto-Lite Model IGC-4513 or IGC-4514. Automatic advance type with Vacuum Spark Control and Octane Selector adjustment.
Breaker Gap—.020". Limits .018-.022".
Cam Angle—38.5° (closed).
Breaker Arm Spring Tension—17-20 ozs.
Rotation—Counter-clockwise viewed from above.

Automatic Advance

Degrees Distr.	R.P.M.	Degrees Eng.	R.P.M.
Start	350	0	700
1	380	2	760
7	550	14	1100
11	1300	22	2600
12	1500	24	3000

Octane Selector: 20° advance or retard adjustment at distributor. See Ignition Timing.

Vacuum Spark Control: Auto-Lite. Separate type (vacuum unit mounted on bracket, linked to quadrant on distributor). Provides additional advance at speeds above idling except when engine accelerated or operated with wide open throttle when spark retarded by return spring.

Vacuum Advance

Distr. Degrees	Eng. Degrees	Vacuum (" of HG)
Start	0°	3½"
1°	2°	5½"
3°	6°	9¼"
5°	10°	13"
6°	12°	15"

Distributor Removal: On right side of engine. To remove, disconnect vacuum line, take out hold-down screw in mounting plate (vacuum unit mounting bracket).
Installation Note—If crankshaft has been turned with distributor off engine, install distributor as follows: Turn crankshaft to #1 cylinder firing position (see Timing), turn distributor shaft until rotor opposite #1 segment in cap (see diagram), install

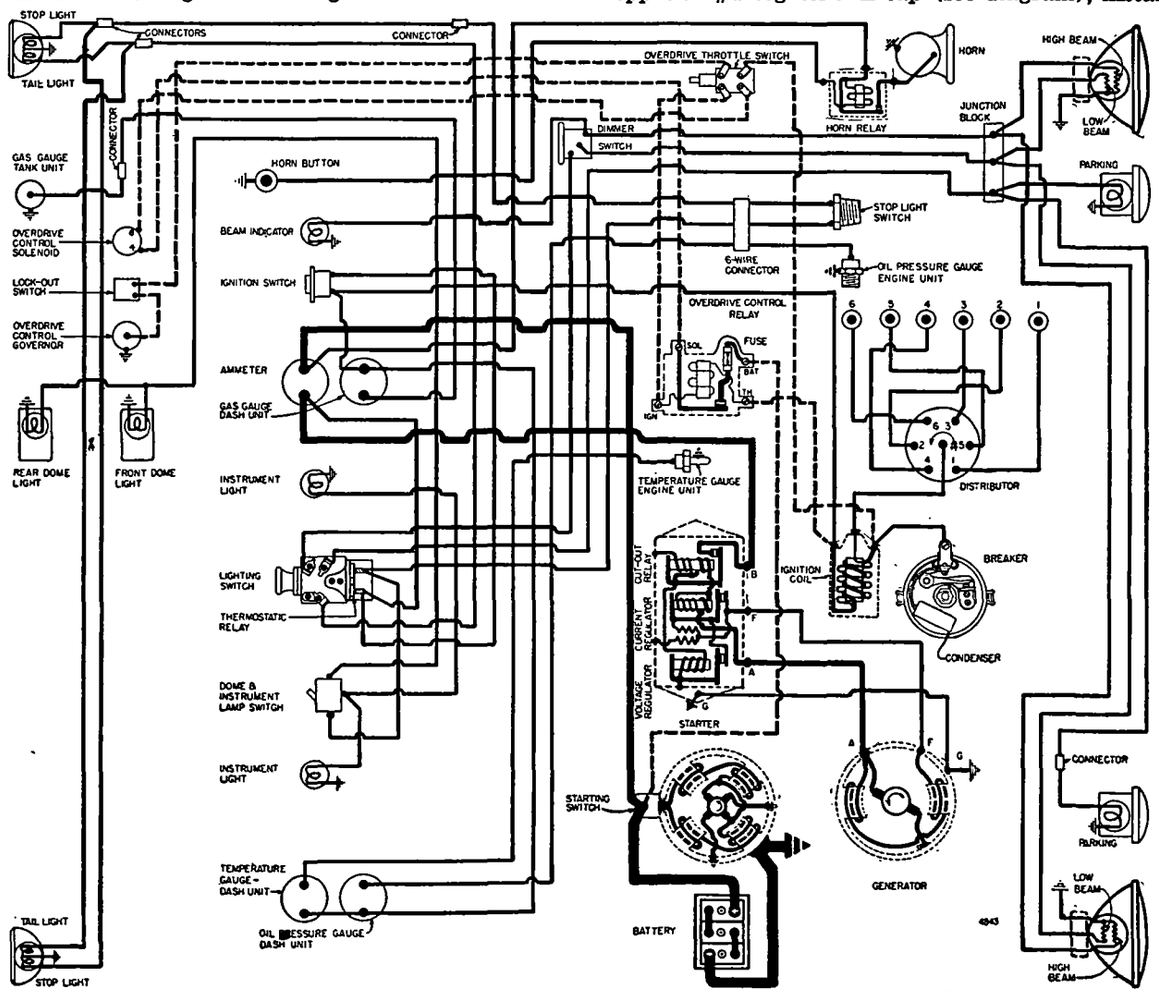

distributor on engine, rocking shaft slightly to engage drive coupling, push distributor down into place, install hold-down screw, check ignition timing.

CAUTION—If oil pump has been removed, see Oil Pump Installation under "Oil Pump" in Willys Shop Notes.

IGNITION TIMING

Std. Setting..... ....At Top Dead Center

NOTE—See Octane Selector Setting to compensate for special fuel and operating conditions.

Timing Marks—Line on rim of vibration dampener and pointer on timing gear cover. Flywheel also marked ('TC' on flywheel in line with horizontal center-line of inspection hole, right front face of housing.

Timing (Engine not Running)—With #1 piston on compression, turn engine until piston reaches firing position (TDC) with line on vibration dampener aligned with pointer on right side of timing gear cover. Loosen vacuum control link screw in distributor quadrant, center pointer on scale, tighten screw. Loosen clampscrew on hold-down plate, rotate entire distributor assembly until contacts begin to open, tighten clampscrew, see that rotor at #1 segment in distributor cap, check spark plug connections.

Timing (Using Timing Light—Engine Idling)—This method recommended by manufacturer. Direct timing light at vibration dampener, idle engine (engine must be warm), adjust distributor (as directed above) until timing mark lines up with pointer.

Octane Selector Setting—If engine pings on heavy pull, loosen vacuum control link screw at distributor quadrant, retard spark slightly by rotating distributor counter-clockwise. For High Octane Fuel, spark can be advanced by rotating distributor clockwise.

CARBURETOR

CARTER WA-1

Carter WA1 No. 645S. 1¼" Single Barrel, Downdraft type with manual choke control.

See Carburetor Section for complete data.

Settings (Idle Setting, Float Level, and Accelerating Pump): ***See Tune-Up data.***

Metering Rods & Jets—***See Carter Jet Table in Carburetor Section.***

Fast Idle: Interconnected linkage by which choke valve lever opens throttle to fast idle position when carburetor choked for starting.

Setting—No adjustment required.

CARBURETOR

ZENITH

Zenith Model 228AV10—Single barrel, downdraft type with manual choke control.

Outline No.—10760. On round metal tag riveted on top of float bowl cover. Use in ordering parts.

See Carburetor Section for complete data.

Settings (Idle Setting, Float Level, and Accelerating Pump): ***See Tune-Up data.***

Metering Jets—***See Zenith Jet Specifications in Carburetor Section.***

Fast Idle: Fast idle cam serving as stop for throttle stopscrew is linked to choke valve lever and rotated to fast idle position when choke valve closed for cold starting.

Setting—No adjustment required.

CARB. EQUIPMENT

Fuel Pump: AC No. 1539245. Diaphragm type combination fuel-and-vacuum pump.

Replacement Pump—AC No. 9245.

See Carb. Equipment Section for complete data.

Pump Pressure—3½-4½ lbs. at 1800 Eng. RPM.

Gasoline Gauge: King-Seeley Electric type.

Dash Unit—King-Seeley No. 42570.

Tank Unit—King-Seeley No. 41248.

See Carb. Equipment Section for complete data.

Air Cleaner: AC No. 1544113 Oil-wetted type, Element #1.

Servicing (Oil-wetted Type)—Clean filter element and re-oil at 2000 mile intervals or more often if required by operating conditions.

CRANKCASE VENTILATOR

Sealed Positive Ventilation Type. Air intake pipe (from air cleaner to oil filler pipe) furnishes clean air to crankcase, air outlet pipe (from valve cover to manifold) allows fumes from crankcase to be sucked into intake manifold. Vacuum control valve at manifold connection **must close at idling speed** for satisfactory idling performance.

NOTE—Clean Vacuum Control Valve when engine tuned up.

Cleaning Vacuum Control Valve—Remove control valve by disconnecting pipe and unscrewing valve from manifold. Disassemble valve, withdraw valve and spring, clean valve and valve seat thoroughly.

Servicing—Make certain all connecting pipes tight and that oil filler cap gasket seals cap tightly. Remove and clean control valve when tuning engine or whenever system does not operate satisfactorily.

BATTERY

Auto-Lite PN-15 or Willard HW-1-100. 6 volt, 15 plate, 100 Ampere Hour capacity (20 hr. rate).

Starting Capacity—120 amperes for 20 minutes.

Zero Capacity—300 amperes for 3.2 minutes.

Five-second Voltage—4.15 volts.

Grounded Terminal—Negative (—) grounded at starter.

Engine Ground—Strap at left front engine mount.

Location—Right hand side of dash in engine compt.

Dimensions—Lgth. 9". Width 6⅞". Hgt. 8⅝.

STARTER

Auto-Lite Model MZ-4137. Armature No. MZ-2214.

Drive—Overrunning clutch and positive pinion shift actuated by starting pedal.

Rotation—Counter-clockwise at commutator end.

Brush Spring Tension—42-53 ozs. (new brushes).

Cranking Engine—160 RPM., 150-175 amps., 5 volts.

Performance Data

Torque	R.P.M.	Volts	Amperes
0 ft. lbs.	4300	5.5	70
.65 "	2500	5.5	100
2.55 "	1325	5.0	200
4.95 "	750	4.5	300
7.65 "	220	4.0	400
7.8 "	Lock	3.0	420
11.8 "	Lock	4.0	560

Removal: On right front face of flywheel housing. To remove, disconnect pedal linkage and cables, take out flange mounting capscrews and bolt in bracket on cummutator end.

Starting Switch: Auto-Lite SW-2677A. Mounted on starter and operated by pinion shift lever.

See Electrical Equipment Section for complete data.

GENERATOR

Auto-Lite Model GDZ-4817A. Armature GDZ-2006F. Two brush (shunt) type with voltage and current regulation. Ventilated by fan on drive pulley.

Maximum Charging Rate—35 amperes, 8.0 volts (cold) with discharged battery (controlled by regulator).

Charging Rate Adjustment—None (see Regulator).

Performance Data

Cold Amperes	Cold Volts	Cold R.P.M.	Hot Amperes	Hot Volts	Hot R.P.M.
0	6.4	925	0	6.4	1000
5	6.65	1060	5	6.65	1150
10	6.85	1200	10	6.85	1290
15	7.05	1340	15	7.05	1430
20	7.3	1480	20	7.3	1590
25	7.55	1620	25	7.55	1750
30	7.8	1760	30	7.8	1980
35	8.0	1900	35	8.0	2250

Rotation—Counter-clockwise at commutator end.

Brush Spring Tension—35-53 ozs. (new brushes).

Field Current—1.60-1.78 amperes at 6.0 volts.

Motoring Current—4.2-4.6 amperes at 6.0 volts.

Removal: Conventional pivot mounting at right front of engine. To remove, take out two pivot bolts and clamp bolt, slip off drive belt.

Belt Adjustment: 1" deflection (thumb pressure) midway between generator and pump pulleys. To adjust, loosen all mounting bolts, pull generator away from engine.

REGULATOR

Auto-Lite Model VRP-4007C-2. Voltage & Current type. On right side in engine compartment.

See Electrical Equipment Section for complete data.

NOTE—Regulator cover sealed. Warranty void if seals broken.

Cutout Relay

Cuts In—6.4-7.0 volts (set to 6.4-6.6 volts).

Cuts Out—4.1-4.8 volts (approx. 4-6 amps. disch.).

Contact Gap—.015" minimum.

Air Gap—.031-.034" with contacts open (measured at hinge end of core).

Voltage Regulator

Setting—7.35 (7.2-7.5) volts at 70°F. See Electrical Equipment Section for data at other temperatures.

Checking (without breaking seal) & Adjustment—***See Electrical Equipment Section.***

Contact Gap—.012" min. (armature against stop pin).

Air Gap—.048-.052" with contacts just opening.

Current Regulator

Setting—34-36 amperes (marked "35" on cover).

Checking (without breaking seal) & Adjustment—***See Electrical Equipment Section.***

Contact Gap & Air Gap—Same as Voltage Regulator.

CONTINUED N NEXT PAGE

CONTINUED FR M PRECEDIN PA E

LIGHTING

Headlamps: Corcoran-Brown "Sealed Beam" type. Upper and lower beams controlled by Beam Selector Switch on toeboard.

See Electrical Equipment Section for complete data.

Adjustment—Aim upper beam straight ahead with hot spot center 3" below lamp center height at 25 ft.

Beam Indicator—On left side of instrument panel (above Radio). Lighted when upper beams in use.

Switches

Lighting—Willys No. 645292.

Beam Selector—Willys No. 640302.

Instrument—Willys No. 641732.

MISC. ELECTRICAL

LIGHTING CIRCUIT BREAKER: 30-ampere type. Mounted on lighting switch. Vibrating thermostatic type. Protects lighting circuits by vibrating to limit current. No adjustment.

FUSES: Overdrive—20 ampere. On control relay.

HORNS: Sparton Model C-5992 or Auto-Lite HW-4007 (Low Pitch), **HW-4008** (High Pitch). Vibrator type with horn relay.

Horn Current—7-9 amperes.

Horn Relay—Willys No. 643889.

ENGINE

ENGINE SPECIFICATIONS: Own 6-63. Six cylinder, "L" head type.

Bore—3" (3.000-3.002"). *See "Original Bore Sizes" in Willys Special Data.*

Stroke—3½".

Displacement—148.44 cu. ins. **Rated HP.** 21.6.

Developed Horsepower—72 at 4000 RPM.

Compression Ratio—6.42-1. Std. cast-iron head.

Compression & Vacuum Reading—*See Tune-Up.*

ORIGINAL BORE & PISTON SIZES: *See Willys Shop Notes.*

ORIGINAL BEARING SIZES: *See Willys Shop Notes.*

TIGHTENING TORQUES: *See Willys Shop Notes.*

CYLINDER HEAD INSTALLATION: *See Willys Shop Notes.*

PISTONS: Aluminum alloy, "T" slot, cam ground, tin or brass plated type. **Length**—3".

Weight—9 67 ozs., stripped.

Removal—Pistons and rods removed from above.

Clearance—.016-.0185" (top), .0015" (skirt).

Replacement Pistons: Furnished .005", .015", .020", .045" Oversize.

Fitting New Pistons: Use 0015" feeler gauge ¾" wide between piston and cylinder wall on side opposite slot. Pull required to withdraw feeler must be 7-12 lbs.

Installing Pistons: T-slot toward left (valve) side of engine (opposite side from oil spray hole in rod).

PISTON RINGS: Two compression rings, one oil ring per piston, all above pin. Oil drain holes in oil ring groove.

Ring	Width	End Gap	Side Clearance
Compr. (#1)	3/32"①	.010-.016"	.002-.004"
Compr. (#2)	3/32"①	010-.016"	.0015-.0035"
Oil (#3)	3/16"②	010-.016"	.001-.0025"

①— 0925-.0935". ②—.1860-.1865".

Installing Rings: Compression ring mark "TOP" (on side of rings) and bevel on inner edge must be UP.

Replacement Rings: Furnished in sets of Std. to .009", .010", .020", .030", 040" Oversize.

PISTON PIN: Locked in rod by clampscrew

Diameter—.7497". **Length**—2 17/32".

Pin Fit in Piston— 0001-.0005" or a light thumb push fit at normal room temperature.

NOTE—Pin hole in piston diamond-bored to inside diameter of .7498-.7500".

Replacement Pins: Furnished Standard size only.

CONNECTING ROD: Length—6 343-6.347".

Crankpin Journal Diameter—1.9797-1.9805". *See "Original Bearing Sizes" in Willys Shop Notes.*

Lower Bearing—Replaceable steel-backed, babbitt lined type. No shims. CAUTION—Oil spray hole in bearing upper half must line up with oil hole in rod.

NOTE—Palnuts used as locknuts on rod bolts.

Clearance—.0004-.0025". **Sideplay**—.004-.010".

Bearing Adjustment: None (replace bearings). Do not file rods or bearing caps.

Palnut Installation—*See Willys Shop Notes.*

Replacement Bearings: Furnished Std. size and .010", .020" Undersize.

Installing Rods: Rods not offset. Install with oil spray hole in lower end toward right (away from camshaft) on all rods.

CRANKSHAFT: Four bearing with integral counterweights. Vibration dampener on forward end.

Journal Diameters—2.250" all Bearings *See "Original Bearing Sizes" in Willys Shop Notes.*

Bearings—Replaceable steel-backed, babbitt lined type. No shims.

►*NOTE—Bearing shells can be removed and replaced without removing crankshaft (bearings are NOT doweled on six cylinder engine).*

Clearance—.0009-.003".

Bearing Adjustment: None (replace bearings). Do not file bearing caps. Bearings can be removed and replaced without removing crankshaft.

Rear Bearing Oil Seal Servicing—*See "Crankshaft & Main Bearings" in Willys Shop Notes.*

Replacement Bearings: Furnished Std. size and .010", .020" Undersize.

End Thrust: Taken by #1 front bearing (flanged type) and thrustwasher in back of crankshaft gear. Adjusted by adding or removing shims behind thrust washer. Shims furnished .002" thick.

NOTE—Crankshaft gear must be removed with a gear puller for endplay adjustment.

Endplay—.002-.006".

FLYWHEEL: Removal—*See Willys Special Data.*

CAMSHAFT: Four bearing with helical gear drive.

Journal Diameters—#1, 1.8755-1.8760"; #2, 1.8425-1.8435"; #3, 1.8110-1.8120"; #4, 1.6245-1.6250".

Bearings—Removable steel-backed, babbitt-lined bushing (Front), machined in crankcase (all others). Front bearing reamed to 1.877" diameter.

Clearance—.001-.0025".

Camshaft Removal—*See Willys Shop Notes.*

End Thrust—Taken by thrust plate assembled behind camshaft gear with a spacer assembled behind plate. If required, a thin shim can be installed behind spacer if too little clearance, or spacer can be dressed to provide greater clearance.

Endplay—.003-.0055".

Timing Gears: Crankshaft gear Cast Iron. Camshaft gear Fibre with steel hub.

Gear Backlash—.000-.002".

Camshaft Setting: Mesh marked tooth of camshaft gear with marked space (between teeth) on crankshaft gear.

VALVES:	Head Diameter	Stem Diameter	Length
Intake	1 3/8"	.340"	4½"
Exhaust	1 9/32"	.340"	4½"

	Seat Angle	Lift	Stem Clearance
Intake	45°	.2843"	.0015-.00325"
Exhaust	45°	.300"	.0025-.0045"

Valve Guides: Removable type Remove guides from above with puller. Install new guides with driver or press guides down until upper end ⅞" below upper edge of valve seat (taper end up).

Valve Springs: Springs can be installed with either end up. Free length 1 57/64".

	Spring Pressure	Length
Valve Closed	50 lbs.	1 5/8"
Valve Open	105 lbs.	1 21/64"

Valve Lifters: Mushroom type. In reamed holes in block. Service by installing oversize lifters.

NOTE—Camshaft must be removed for lifter removal.

Camshaft Removal—*See Willys Shop Notes.*

Lifter Diameter—.597-.605". **Length**—2".

Clearance in Block— 0005-.002".

VALVE TIMING

Tappet Clearance: 016" All Valves, Hot or Cold.

NOTE—Adjusting screws self-locking type.

Valve Timing: See Camshaft Setting above.

Intake Valves—Open 5° BTDC. Close 44° ALDC.

Exhaust Valves—Open 47° BLDC. Close 12° ATDC.

Valve Timing Check—Set tappet clearance #1 intake valve at .020". This valve should be about to open (clearance taken up) with #1 piston 5° or .007" BTDC. with flywheel mark "5°/" centered in inspection hole in right front face of housing below starter. Reset tappet clearance to .016".

LUBRICATION

Engine Oiling System: Pressure to crankshaft, connecting rod, and camshaft bearings and to timing gears.

►**Excessive Oil Consumption Correction**—*See "Oiling System" in Willys Shop Notes.*

Crankcase Capacity—5 qts. refill.

Normal Oil Pressure—35 lbs. at 30 MPH., 10 lbs. with engine idling at 500 RPM.

►**Low Oil Pressure Correction**—If oil pressure less than 5 lbs. at idling speed with latest type oil gauge units installed (see Oil Gauge below), check main and connecting rod bearing clearance, oil pressure relief valve for sticking open, and timing gear jet oil hole size not greater than #54 drill.

Oil Pressure Regulator—Opens at 25 lbs. Located on oil pump housing. Adjustable by adding or removing shims from above spring within plug.

Oil Pump: Internal Rotor type. Mounted externally on left side of crankcase.

Oil Pump Servicing—*See Willys Shop Notes.*

Oil Pressure Gauge: King-Seeley Electric type.

►*CAUTION*—Gauge changed in production—correct Dash and Tank units must be used together.

Before Serial No. 13291

Dash Unit—King-Seeley No. 41305 (0-30-80 dial).
Engine Unit—King-Seeley No. 40767 (80 lb. type).

Beginning Serial No. 13291

Dash Unit—King-Seeley No. 42565 (0-20-50 dial).
Engine Unit—King-Seeley No. 40790 (50 lb. type).
See Miscellaneous Section for complete data.

Crankcase Ventilation: *See special data following "Carb. Equipment."*

COOLING

Cooling System: Pressure type with relief valve in radiator filler cap.

Capacity—8¾ qts. (9½ qts. with heater).

Pressure Valve—AC No. 846740. In filler cap. Opens at 3¾ lbs. (3¼-4¼ lbs.).

Water Pump: Centrifugal, packless type with special sealed ball bearing shaft (no lubrication required).
See Water Pump Section for complete data.

Removal—Loosen and remove drive belt, disconnect hose, remove pump mounting screws. Lift out pump and fan assembly.

Belt Adjustment—*See Generator Belt Adjustment.*

Thermostat: Harrison. In outlet on cylinder head. Starts to open at 145-155°F. Fully open at 173°F.

Temperature Gauge: King-Seeley Electric type.

Dash Unit—King-Seeley No. 42575.

Engine Unit—King-Seeley No. 7000.
See Miscellaneous Section for complete data.

CLUTCH

Auburn Model 8501-19 with Borg & Beck Driven Member. Single plate, dry disc type.
NOTE—Clutch has neoprene driving lug inserts and Return Clip Springs for quieter operation.
See Clutch Section for complete data.

►**Clutch Return Clip Spring Installation to correct disengagement noise**—*See "Auburn Clutch" in Clutch Section.*

Facings—Molded (flywheel side), woven (pressure plate side). I.D. 5⅛". O.D. 8½". Thickness .132-.138".

Pedal Adjustment: Pedal free travel 1" (provides 1/16" clearance between release bearing and clutch levers). To adjust, loosen locknut and turn adjusting nut on connector link at clutch fork, tighten locknut.

Removal: Remove transmission (see Transmission Removal), remove flywheel bell housing. Mark pressure plate and flywheel to insure correct re-installation, take out mounting screws in clutch cover flange (turn all screws out evenly), remove clutch assembly and driven member.

TRANSMISSION

Warner Model AS20-T96 (with Overdrive). Constant-mesh, synchro-mesh (Second & High), sliding gear (Low & Reverse), all helical gear type.
See Transmission Section for complete data.

Transmission Control: Remote control type with gear-shift lever on steering column.
See Transmission Section for complete data.

Removal: Remove floor boards, take off bell housing inspection cover, disconnect clutch throw-out bearing retracting spring. Disconnect transmission control rods and speedometer cable at transmission case. Disconnect propeller shaft at universal joints and remove shaft. Support engine with jack placed under bell housing, remove rear engine support bolts from cross-member under transmission case, raise rear end of engine so that transmission clears cross-member (CAUTION—use care that fan blades do not damage radiator). Remove transmission to bell housing bolts, pull transmission straight back to clear clutch shaft, remove from car.

OVERDRIVE

Warner Type R10B (part of AS20-T96 Transmission). New solenoid operated, governor controlled type overdrive (no centrifugal pawls) with throttle operated "kick-down."
See Transmission Section for complete data.

Control Relay—Auto-Lite Model HRT-4001.
Overdrive Governor—Auto-Lite Model TGE-4002.
Transmission Solenoid—Delco-Remy Model 1118132

Removal: Remove as a unit with the transmission. Removal instructions same as for regular transmission (above) after governor and solenoid wires and lock-out control cable disconnected, and overdrive case-to-cross-member bolts removed.

UNIVERSALS

Detroit Universals Series 4100. Ball-and-trunnion type.
See Universals Section for complete data.

REAR AXLE

Spicer (Salisbury) Model 23-1. Semi-floating, Hypoid Gear type with Hotchkiss drive.
See Rear Axle Section for complete data.

Ratio—5.38-1 Std., 4.88-1 Optl.

Backlash—.004-.009". Shim adjustment.

Removal: Support rear end of car securely, remove rear wheels, disconnect rear shock absorbers, rear brake line (at frame connection on right side), rear brake cables, and propeller shaft at rear universal joint. Place support jacks under axle housing so that springs relieved of weight, remove nuts on spring "U" bolts, remove pivot bolt at front end of springs, lower springs. Remove axle assembly from beneath car.

Axle Shaft Removal: Remove wheel and hub assembly (use wheel puller), disconnect brake line at wheel cylinder, remove nuts on bolts holding backing plate and brake assembly on housing, remove dust shield, oil seal, and backing plate (with brake assembly).

CAUTION—Do not lose bearing adjusting shims located between backing plate and flange on housing. Remove axle shaft and wheel bearing.

Wheel Bearing Adjustment—Endplay .003-.007". Adjust by adding or removing shims between backing plate and axle housing flange at each wheel. See axle shaft removal (above).

SHOCK ABSORBERS

Monroe or Gabriel—Direct acting, hydraulic type.
See Shock Absorber Section for complete data.

NOTE—Shock absorbers are sealed and cannot be dismantled for servicing or refilling.

FRONT SUSPENSION

►**Replacement Spring Caution**—*See Willys Front Suspension for recommended replacement springs.*

Planadyne Type. Independent, linked parallelogram type with transverse spring (spring acts as lower control arm).
See Front Suspension Section for complete data.

Kingpin Inclination—5° crosswise.

Caster—1° No adjustment.

Camber—1½°. (1¼-1¾° limits).

Toe-In—1/8-3/16".

►*See Willys Front Suspension for Toe-in adjustment procedure.*

STEERING GEAR

Ross Model T-12. Cam-and-Twin Lever type.
See Steering Gear Section for complete data.

BRAKES

Service Brakes: Bendix (Lockheed) Hydraulic, self-centering type. Hand lever applies rear wheel service brakes.

NOTE—These self-centered brakes do not have anchor pin adjustment.
See Brake Section for complete data.

Wheel Cylinders—Diameter: Front 1", Rear 7/8".

Drums—Chrome-nickel type. Diameter 10".

Lining—Moulded type (all shoes). Width 1.760". Thickness .182-.192". Length per shoe: 10 11/16" forward shoe, 8 5/16" reverse shoe.

Clearance—.008" toe, .005" heel, for each shoe.

NOTE—No anchor pin adjustment provided. Brake shoes should be centralized by hard brake application (and then released) before adjustments are made.

Hand Brake: See Service Brakes (above).

Adjustment—Tighten link rod adjustment (cable equalizer connector) at brake lever on frame cross-member for slight drag with hand lever set two notches "on". Release hand lever and make certain that brakes free of any drag.

MISC. MECHANICAL

Windshield Wipers: Vacuum type, cable operated.
See Miscellaneous Section for data.

1949-50 CARBURETOR CAR APPLICATION INDEX

Car Model	Carburetor Make	Carburetor Model No.	Page No.
BUICK			
1949 40, 50	Carter WCD	663S	178
1949 70	Carter WCD	664S	178
1949 40, 50	Stromberg	AAV-167	189
1949 70	Stromberg	AAV-267	189
1950 40	Carter WCD	725S	178
CADILLAC			
1949 Early V8 All Series	Carter WCD	682S	178
1949 Late V8 All Series	Carter WCD	722S	178
CHEVR LET			
1949 Pass. Cars	Carter W1	684S	176
1949 Late Pass. Cars	Rochester	Model B	185
1949 Trucks (Downdraft)	Carter W1	684S	176
1949 Trucks (Updraft)	Carter (BB)	517S, 699S	174
CHRYSLER			
1949 Early C45 Six Auto. Trans.	Carter (B&B)	E7L1, L2	175
1949 Late C45 Six Auto. Trans.	Carter (B&B)	E7L3, L4	175
1949 Early C46, C47 "8" Auto. Tr.	Carter (B&B)	E7J1, J2	175
1949 Late C46, C47 "8" Auto. Tr.	Carter (B&B)	E7J3, J4	175
CR SLEY			
1949 CD & Hotshot	Tillotson	DY-9C	190
DE S T			
1949 S13 City Traffic	Carter (B&B)	E7L1, L2	175
1949 Early S13 Auto. Trans.	Carter (B&B)	E7L3, L4	175
1949 Late S13 Auto. Trans.	Carter (B&B)	E7L2	175
D DGE			
1949 D29, D30 Std. Trans.	Stromberg	BXVD-3	190
1949 D29, D30 Std. Trans.	Carter (B&B)	D6P1	183
1949 D30 Auto. Trans.	Stromberg	BXVES-3	190
1949 D30 Auto. Trans.	Carter (B&B)	D6M1	175
F RD			
1949-50 Pass. Cars 6 Cyl.	Holley-Ford		186
1949-50 Pass. Cars V8	Holley-Ford		186
1949 Trucks 6 Cyl.	Holley-Ford		186
1949 Trucks V8	Holley-Ford		186
FRAZER			
1949 F-495, F-496	Carter WCD	723S	178
HUDS N			
1949 491, 492 Six	Carter WDO Vacm.	647S, SA	179
1949 493, 494 Eight	Carter WDO Vacm.	648S	179
1950 Pacemaker Six	Carter WA1	749S	177
KAISER			
1949 491	Carter WA1 Vacm.	622SB	177
1949 492	Carter WCD	723S	178
LINCOLN			
1949 9EH, 9EL V8	Holley-Ford		187
MERCURY			
1949-50 V8	Holley-Ford		187
NASH			
1949 4940 '600' Six	Carter WA1 Vacm.	694S	177
1949 4960 Amb. Six	Carter WA1	683S	177
1950 5040 Stmn. Six	Carter WA1 Vacm.	694S	177
1950 5060 Amb. Six	Carter WA1	746S	177
OLDSMOBILE			
1949 76 Six Std.	Carter WA1 Vacm.	710S	177
1949 76 Six (H-D)	Carter WA1 Vacm.	709S	177
1949 88, 98 Eight (H-D)	Carter WGD Vacm.	714S	180
1949 88, 98 Eight (H-D)	Rochester		183
PACKARD			
1949 "2200" & "2300" Eight	Carter WDO Vacm.	644SA	179
1949 "2200" & "2300" Super 8	Carter WDO Vacm.	643SA	179
1949 "2200" & "2300" Cust. 8	Carter WDO Vacm.	531SA	179
1949 "2300" Eight	Carter WGD Vacm.	728S, SA	180
PLYMOUTH			
1949 P17, P18	Carter (B&B)	D6H1	175
1949 P17, P18 City Traffic	Carter (B&B)	D6N1	175
PONTIAC			
1949-50 Six Std.	Carter WA1 Vacm.	717S	177
1949-50 Six (H-D)	Carter WA1 Vacm.	718S	177
1949-50 Eight Std.	Carter WCD	719S	178
1949-50 Eight (H-D)	Carter WCD	720S	178
STUDEBAKER			
1949 8G Champion	Carter WE	715S	176
1949 16A Commander	Stromberg	BXOV-26	189
1950 9G Champion	Carter WE	715S	176
1950 17A Commander	Stromberg	BXOV-26	189
1950 Early 17A Commander	Carter WE	627SA	176
WILLYS			
1949 Jeep, Civ. CJ-3A	Carter WO	636SA	176
1949 Jeep, Sta. Wgn. 4X4-63	Carter WO	636SA	176
1949 Sta. Wgn. & Del. 4-63	Carter WA1 Vacm.	613S	177
1949 Sta. Wgn. & Del. 4-63	Zenith	228AV10	191
1949 Jeepster VJ-3	Carter WA1 Vacm.	613S	177
1949 Jeepster VJ-3	Zenith	228AV10	191
1949 Jeep, Tr. 2-WD & 4-WD	Carter WO	636SA	176
1949 Jeep, Sta. Sedan 6-63	Carter WA1 Vacm.	645S	177
1949 Jeep, Sta. Sedan 6-63	Zenith	228AV10	191

1949 CARTER (B&B) UPDRAFT CARBURETORS

Carter No.
517S—Chevrolet Cab-Over-Engine Truck Models (1949)
699S—Chevrolet Forward Control (Dubl-Duti) Delivery Trk. (1949)

►**ACCESS TO CARBURETOR ON DUBL-DUTI MODELS (for Adjustment or Removal):** Remove attaching screws in toepan, disconnect stop light switch wiring, disconnect accelerator pedal rod from throttle control rod, then remove toepan.

DESCRIPTION: Plain tube, updraft type of same design used on corresponding previous Chevrolet models.

ADJUSTMENT & SERVICING: *See complete "Carter (BB) Updraft Type" Carburetor in previous release and set these carburetors to the following specifications:*

IDLING ADJUSTMENT

Idle Screw Setting—½-1½ turns open (turn screw out for richer mixture).
Idle Speed—450-500 RPM. with warm engine.

ACCELERATING PUMP

Pump Stroke—9/16" (Short Stroke) with connecting screw in holes in pump link and throttle lever nearest throttle shaft, 1" (Long Stroke) with screw in holes farthest from shaft.
Pump Seasonal Setting—Short Stroke—Summer, Long Stroke—Winter.

FLOAT LEVEL SETTING

Float Level—1/32-1/16" (Gauge Carter No. T109-49 or Chevrolet No. J-818-13A) from top of float to top edge of bowl with needle valve seated.
Intake Needle & Seat Assembly—Carter No. 25-44S (intake hole size #38).

THROTTLE VALVE SETTING

Idle Port—.005-.009" from top of lower idle port to lower edge of throttle valve.
Vacuum Spark Port—.000-.004" from top of port to lower edge of throttle valve.
NOTE—Above specifications are with throttle valve tightly closed.

SERVICE PARTS

Gasket Set—Carter No. 170A.
Repair Pkg. (with Std. Metering Jet)—Carter No. 1327B (517S).

CARTER (B&B) DOWNDRAFT

Carter No.
①E7L1, L2, L3, L4—Chrysler Six, C45 (1949)—with Prestomatic Trans.
①E7J1, J2, J3, J4—Chrysler 8, C46 & C47 (1949)—with Prestomatic Trans.
①E7L1, L2, L3, L4—De Soto, Model S13 (1949)—with Tip-toe Shift Trans.
E7V1—DeSoto, Model S13 (1949) City Traffic.
D6P1—Dodge, Models D29 & D30 (1949) With Fluid Drive only.
D6M1—Dodge, D30 (1949) Fluid Drive & Gyromatic Trans.
D6H1—Plymouth, Models P17 & P18 (1949)
D6N1—Plymouth, Models P17 & P18 (1949) City Traffic.
①—See Production Change below.

►**CHRYSLER 6 & DE SOTO E7L1 & E7L2 PRODUCTION CHANGE:** Model E7L1 carburetor used on first cars, superseded by E7L2. These carburetors alike except for new **Air Horn Assembly** (No. 6-622S superseding No. 6-608S) with changes in idle system as follows: **Idle Passage Air Bleed (in Air Horn)**—(E7L1) .0531" (E7L2) .0465"; **Restriction in Body**—(E7L1) .0531", (E7L2) .0452". **Body Flange Assy. (both)**—No. 1-629S superseded by 1-687S. **Air Horn Assembly**—(E7L1) 6-608S, (E7L2) 6-622S. NOTE—Unitized Pkg. No. 195-42U furnished to bring Kick-down Switch up to later standards (E7L1 & L2).

►**CHRYSLER 6 & DE SOTO E7L3 & E7L4 PRODUCTION CHANGE:** Model E7L4 supersedes E7L3 and earlier carburetors. These models similar to E7L2 (above) except for following changes: **Body Flange Assy.** No. 1-687S, **Throttle Shaft & Arm Assy.** No. 3-671S. **Pump Jet** No. 48-167. **Pump Link** No. 117-141, **Dash Pot Pick-up Arm Spring** No. 61-393, **Dash Pot Valve Cage Assy.** (E7L4 only) No. 149-108S, **Valve Plunger Rod & Plate Assy.** (E7L4 only) No. 49-173S, **Kick-down Switch Terminal Block** No. 184-52 or 184-53S (with Clip Assy.).
NOTE—Accelerating pump on these models does not require adjustment other than to see that lifter arm link is at right angles to lifter link shaft.

►**CHRYSLER 8 E7J1 & E7J2 PRODUCTION CHANGE:** Model E7J1 carburetor used on first cars, superseded by E7J2. These carburetors alike except for new **Air Horn Assembly** (E7J1) No. 6-592S, (E7J2) No. 6-619S, and new **Body Flange Assembly** (E7J1) 1-600S, (E7J2) 1-631S, with changes in idle system as follows: **Idle Passage Air Bleed** (E7J1) .063", (E7J2) .0531", **Restriction in Body** (E7J1) .053", (E7J2) .057", **Kickdown Switch Terminal Block** (E7J1) No. 184-26, (E7J2) No. 184-52.

►**CHRYSLER 8 E7J3 & E7J4 PRODUCTION CHANGES:** Model E7J4 supersedes E7J3 and earlier carburetors. These models similar to E7J2 (above) except for following changes: **Body Flange Assy.** No. 1-688S (supersedes 1-631S), **Valve Plunger Rod & Plate Assy.** (E7J4 only) No. 49-173S, **Dash Pot Valve Cage Assy.** (E7J4 only) No. 149-108S, **Step-up Jet & Gasket Assy.** (E7J4 only) No. 149-110S.

►**SPECIAL BODY GASKET CAUTION:** Whenever carburetor air horn and float bowl cover removed, new gasket of correct type must be installed when carburetor reassembled to prevent air leaks at this point (float bowl vented to air horn and air leaks will interfere with correct operation of carburetor). Use correct gasket for each model as follows: No. 121-69 (D6H1), 121-90 (all others).

DESCRIPTION: Single barrel, plain tube, downdraft types of same design as used on previous models. These carburetors have transmission control kick-down switches and slow-closing throttle (anti-stall) as follows:
Throttle Kick-down Switch (E7J1, 2, 3, 4; E7L1, 2, 3, 4; D6M1 Carbs.): ***See complete "Chrysler & De Soto Kick-down Switch" in previous release.***
Slow Closing Throttle (E7J1, 2, 3, 4; E7L1. 2, 3, 4; D6M1 Carbs): Solenoid type (non-adjustable). ***See complete "Chrysler, De Soto, Dodge Slow-Closing Throttle" in previous release.***
Slow-Closing Throttle (Dodge D6P1 Carburetor)—Adjustable type (see setting below) and also ***See complete "Chrysler, DeSoto, Dodge Slow-Closing Throttle" in previous release.***

ADJUSTMENT & SERVICING: Same as for previous Carter (B&B) carburetors. ***See complete "Carter (B&B) Downdraft Type" Carburetors in previous release and set these carburetors to the following specifications:***

IDLING ADJUSTMENT

Car Model	Carburetor	Idle Screw Setting	Idle Speed
Chrysler & DeSoto②	All	½-1½ turns open	450-475 RPM
DeSoto	E7V1	½-1½ turns open	6 MPH
Dodge②	D6M1	½-1½ turns open	450-475 RPM
Dodge①	D6P1	½-1½ turns open	6 MPH
Plymouth	D6H1, D6N1	½-1½ turns open	6 MPH

①—Cars with Synchro-mesh Transmission.
②—Cars with Fluid Drive & Hydraulically controlled transmission.

ACCELERATING PUMP STROKE

Car Model	Carburetor	Pump Stroke	Pump Setting
Chrysler 6 & DeSoto	E7L1, E7L2	20/64"	Medium Stroke
Chrysler 8	E7J1, E7J2	26/64"	Medium Stroke
DeSoto	E7V1	26/64"	Medium Stroke
Dodge	D6M1, D6P1	22/64"	Medium Stroke
Plymouth	D6H1, D6N1	22/64"	Medium Stroke

►***E7L3, 4; E7J3, 4 NOTE***—No gauge required. Bend horizontal portion of pump lifter link so that lifter link arm is at right angles to lifter link shaft.

FLOAT LEVEL SETTING

Car Model	Carburetor	Float Level	Checking Gauge
Chrysler & DeSoto	All	5/64"	T109-50
Dodge	D6M1, D6P1	5/64"	T109-50
Plymouth	D6H1, D6N1	5/64"	T109-50

THROTTLE VALVE SETTING

Car Model	Carburetor	Idle Port Height①	Vacuum Spark Port
Chrysler 6 & DeSoto	E7L1, 2, 3, 4	.118-.122"	.052-.058"①
Chrysler 8 (first)	E7J1	.125-.129"	.052-.058"①
Chrysler 8 (later)	E7J2, 3, 4	.130-.134"	.052-.058"①
DeSoto	E7V1	.093-.097"	.052-.058"①
Dodge	D6M1, D6P1	.118-.122"	.021-.027"②
Plymouth	D6H1, D6N1	.118-.122"	.021-.027"②

①—Top of port above top edge of throttle valve.
②—Bottom of port above top edge of throttle valve.

DASH POT (SLOW-CLOSING THROTTLE) ADJUSTMENT

Chrysler, DeSoto, Dodge D6M1—Non-adjustable (solenoid) type.
Dodge Model D6P1—Adjusting screw located on top of bowl cover. Standard setting is five full turns of the screw out from the inner closed position.

SERVICE PARTS

Gasket Set—Carter No. 136 (D6H1), 194A (E7J1 to 4), 164A (E7L1 to 4).
Repair Package—Carter No. 1513 (D6H1), 1511A (E7J1 to 4), 1510A (E7L1, L2), 1528 (E7L3, L4).

1949 CARTER (B&B) DOWNDRAFT CARBURETOR JET SPECIFICATIONS

Car Model	Yr.	Carb. No.	Main Metering Jet: Standard Flow	Main Metering Jet: Standard Part No.	Main Metering Jet: 1 Size Lean Less	Main Metering Jet: 1 Size Lean Part No.	Main Metering Jet: 2 Sizes Lean Less	Main Metering Jet: 2 Sizes Lean Part No.	Main Vent Air Bleed Size	Tube Assem. Part No.	Stepup Jet Power Orifice Size	Stepup Jet Power Orifice Part No.	Idle Orifice Tube Size	Idle Orifice Tube Part N .	Pump Jet Assembly. Jet Size	Pump Jet Assembly. Part No.
CHRYSLER C45⑮	1949	E7L1-4	315-319cc	224-13S	—	224-14S	—	224-15S	.0315"	145-13	.0413"	149-56S	.0276"	123-31S	.0334"	48-145
CHRYSLER C46, C47⑮	1949	E7J1-4	332-336cc	224-10S	—	224-13S	—	224-14S	.0354"	145-13	.0492"㉒	149-105S	.0276"	123-31S	.0374"	48-75
DE SOTO S13 City Tr.	1949	E7V1	312-316cc	159-89S	—	159-87S	⑳159-63S		.0315"	145-13	.0315"	149-46S	.0256"	123-57S	.0334"	48-145
DE SOTO S13⑮	1949	E7L1-4	315-319cc	224-13S	—	224-14S	—	224-15S	.0315"	145-13	.0413"	149-56S	.0276"	123-31S	.0334"	48-145
DODGE D29, D30⑭	1949	D6P1	256cc	224-11S	—	224-17S	—	224-18S	.0315"	145-17	#65	149-41S	.0276"	123-31S	.0276"	48-103
DODGE D30⑮	1949	D6M1	256cc	224-11S	—	224-17S	—	224-18S	.0315"	145-17	#65	149-41S	.0276"	123-31S	.0276"	48-103
PLYMOUTH P17, P18	1949	D6H1	256cc	224-11S	—	224-17S	—	224-18S	.0315"	145-17	#65	149-41S	.0276"	123-31S	.0276"	48-103
PLYMOUTH P17, P18㉑	1949	D6N1	256cc	224-11S	—	224-17S	—	224-18S	.0315"	145-17	#71	149-50S	.0276"	123-31S	.0276"	48-103

⑭—Cars with Synchro-mesh Transmission.
⑮—Cars with Fluid Drive & Hydraulically controlled Transmission.
⑳—3 Sizes Lean—159-76S.
㉑—City Traffic.
㉒—E7J1, 2, 3 only (.0433" on E7J4).

CARTER TYPE W1 (CHEVROLET)

Carter No.
684S—Chevrolet, All Pass. Cars & Trucks exc. C-O-E & Forward Control (1949)
►**CARBURETOR IDENTIFICATION (CODE NO.):** Casting No. 603 on face of flange.

DESCRIPTION: Plain tube, downdraft type of same design as used on previous Chevrolet models except for new Fast Idle mechanism and Accelerating Pump as follows:

Fast Idle—Consists of a lever pivoted on the throttle valve shaft and serving as a stop for the throttle lever stopscrew. Slot at upper end of lever is engaged on pin on choke lever so that lever is "rocked" when choke valve closed for cold starting and warming up. Rocking of the lever opens the throttle valve to the fast idle position.

Accelerating Pump—New "submerged" type with short cylinder so that pump piston and seal are submerged in the gasoline in the float bowl at all times. Piston spring is placed above the piston so that the delivery stroke of the pump is spring-driven and independent of rate at which throttle is opened (pump link hole in countershaft is slotted and opening of the throttle allows the pump spring to actuate the pump piston). No seasonal adjustment of the pump is provided.

ADJUSTMENT, DISASSEMBLY & REASSEMBLY: Same as for previous Carter W1 (Chevrolet) carburetors.
See complete "Carter W1 (Chevrolet) Carburetor" in previous release and set this carburetor to the following specifications:

IDLING ADJUSTMENT

Idle Screw Setting—1-2 turns open.
Idle Speed—450-500 RPM. with warm engine (fast idle inoperative).

ACCELERATING PUMP

No adjustment (pump stroke does not require adjustment and no seasonal adjustment provided).

METERING ROD SETTING

Checking Gauge—Carter No. T109-25 (2.795").
NOTE—This gauge is Chevrolet No. 600996.

FLOAT LEVEL SETTING

Float Level—½" from top of float at free end to gasket seat on bowl cover with needle valve seated (invert cover and float assembly for checking).
Intake Needle & Seat Assembly—Carter No. 25-33S (#48 drill hole size).

THROTTLE VALVE SETTING

Idle Port Opening—.044-.048" top of lower port above top edge of valve.
Vacuum Spark Port—.000-.004" bottom of port above top edge of valve.
NOTE—Above specifications are with throttle valve tightly closed.

FAST IDLE

No adjustment required (fast idle throttle opening will be correct if idling speed correctly set (see Idling Adjustment).

SERVICE PARTS

Gasket Set—Carter No. 152A.
Repair Pkg. (with Std. Metering Rod)—Carter No. 1500.

CARTER TYPE WE

Carter No.
715S—Studebaker Champion, Model 8G (1949), 9G (1950)
627SA—Studebaker Commander 17A (1950)—First 10000 Cars.
►**CARBURETOR IDENTIFICATION (CODE NO.):** Casting number stamped on face of flange: (715S) 620, (627SA) 511.

DESCRIPTION: Single barrel, downdraft type of same design used on previous Studebaker Champion models.

ADJUSTMENT & SERVICING: Same as for previous Carter "WE" carburetors.
See complete "Carter WE Carburetor" in previous release and set this carburetor to the following specifications:

IDLING ADJUSTMENT

Idle Adjusting Screw Setting—½-1½ turns open.
Idle Speed—8-10 MPH.

ACCELERATING PUMP SETTING

Pump Stroke—(715S) 14/64", (627SA) 20/64", Use Gauge No. T109-117S.

METERING ROD SETTING

Operating (Upper Lip) Setting—Use Gauge No. T109-102 (2.468").
Economy (Lower Lip) Setting)—Use Gauge No. T109-28 (3/16") and adjust lower lip for this 3/16" clearance between bottom of pump arm pin and top of lower lip with throttle valve seated.

ANTI-PERCOLATOR SETTING

Setting—Use Gauge T109-29 (.030") and bend rocker arm for .025" clearance (715S), .005-.015" clearance (627SA) between rocker arm lip and pump arm with this .030" throttle opening.

FLOAT LEVEL SETTING

Float Level—(715S) 3/8"—Gauge T109-80, (627SA) 7/16" from top of seam at free end of float to top of projection on bowl cover with needle valve seated invert cover assembly to check float).

THROTTLE VALVE SETTING

Idle Port Opening—Top of port .112-.116" above top edge of valve.
Vacuum Spark Port Height—Top of port .060-.070" (715S), .065-.069" (627SA) above top edge of valve.

CLIMATIC CONTROL (CHOKE) SETTING

Setting—Centered (at index).

FAST IDLE SETTING

Throttle Opening—(715S) .046", (627SA) .054" (edge of valve to wall) with choke valve held closed and throttle valve moved toward closed position as far as possible.
►*CAUTION*—Thermostatic coil housing, gasket, and baffle plate must be removed to check and adjust fast idle.

AUTOMATIC CHOKE

Setting—Centered (cover centered on scale) for all models.

UNLOADER SETTING

Choke Valve Opening—(715S) 3/16"—Gauge T109-28, (627SA) 17/64", clearance between choke valve and air horn with throttle valve wide open.
NOTE—Use Tool T109-187 to bend arm on choke trip lever for adjustment.

SERVICE PARTS

Gasket Set—Carter No. 186A.
Repair Pkg. (with Std. Metering Rod)—Carter No. 1504.

CARTER TYPE WO

Carter No.
636SA—Willys Universal Jeep, Model CJ-3A (1949)
Willys Jeep Trucks, Models 2WD & 4WD (1949)
Willys 4-Wheel Drive Sta. Wgn., Model 4x4-63 (1949)
►**CARBURETOR IDENTIFICATION (CODE NO.):** 505 stamped on flange.

DESCRIPTION: Single barrel, downdraft type of same design as carburetor used on corresponding previous models.

ADJUSTMENT & SERVICING: Same as for other Carter "WO" carburetors.
See complete "Carter WO" carburetors in previous release and set this carburetor to the following specifications:

IDLING ADJUSTMENT

Idle Adjusting Screw Setting—1-2 turns open.
Idle Speed—600 RPM. or 8 MPH.

ACCELERATING PUMP

Pump Stroke—17/64". Use Gauge No. T109-117S.

METERING ROD SETTING

Checking Gauge—No. T109-26 (2.718").

FLOAT LEVEL

Setting—⅜" (Gauge No. T109-80) from top of float at free end to gasket seat on cover with valve seated (invert assembly to check level).
►***CAUTION—Do not compress spring in needle valve stem (allow float to hang freely). Compressing spring will result in false reading.***

THROTTLE VALVE SETTING

Idle Port Opening—.086-.090" above upper edge of valve.
Vacuum Spark Port Height—Top of port .056-.062" above top edge of valve.

SERVICE PARTS

Gasket Set—Carter No. 175A. **Repair Pkg. (Std.)**—Carter No. 1355C.

CARTER TYPE WA-1

Carter No.
749S—Hudson Pacemaker, Models 500 & 50T (1950)
622SB—Kaiser, Special & Traveler Model 491 (1949)
①694S—Nash "600", Series 4940 (1949)
Nash Statesman, Series 5040 (1950)
①683S—Nash Ambassador, Series 4960 (1949)
746S—Nash Ambassador, Series 5060 (1950)
710S—Oldsmobile 6, All Models with Synchro-mesh Trans. (1949)
709S—Oldsmobile 6, All Models with Hydra-Matic Drive (1949)
717S—Pontiac 6, All Models with Synchro-mesh Trans. (1949-50)
718S—Pontiac 6, All Models with Hydra-Matic Drive (1949-50)
613S—Willys 4, 4-63 Sta. Wgn. & Sedan Del., VJ-3 Jeepster (1949)
645S—Willys 6, 6-63 Station Sedan (1949)
①—*See Production Change Notes below.*

►**NASH "600" 694S CARBURETOR CHANGE to improve Acceleration Performance:** Accelerating pump plunger travel should be set at 25/64". This setting increased from 23/64" originally specified for this model.

►**NASH AMB. 683S CARBURETOR CHANGE (New Metering Rod):** Metering rod has been changed by increasing length of "power step" on rod but new rod has **same part no.** as original type. IDENTIFICATION NOTE—New metering rod (with increased power step) has raised dot in addition to trademark on rod flat on side opposite part number (trademark only on first rods).

►**NASH AMB. AIR CLEANER BOOT BAFFLE:** A new carburetor-to-air cleaner boot baffle, No. 3127726, has been released to prevent possibility of air turbulence in this boot restricting air flow to carburetor and causing an over-rich carburetor fuel mixture.

►**CARBURETOR IDENTIFICATION (CODE NO.):** Stamped on flange as follows: 309 (622SB), 298 (694S), 290 (683S), 538 (709S & 710S), 388 (717S), 592 (718S), 485 (613S & 645S).

DESCRIPTION: Single barrel, downdraft, vacumeter type (except Nash 683S) carburetors of same design as used on corresponding previous car models except Nash carburetors which have new Accelerating Pump System as follows:

Nash "Uniflo Jet" Carburetors (694S, 683S, 746S)—No separate pump discharge jet is used and the accelerating pump discharges fuel through the main nozzle into the primary venturi (a spring-loaded ball type check valve prevents fuel discharge except when pump in operation). Pump stroke adjustment is made in same manner as on other models.

ADJUSTMENT & SERVICING: Same as for previous Carter "WA-1" carburetors. ***See complete "Carter WA-1 Carburetor" in previous release and set these carburetors to the following specifications:***

IDLING ADJUSTMENT

Car Model	Carburetor	Idle Screw Setting	Idle Speed
Hudson	749S	½-1½ turns open	7½-8 MPH
Kaiser	622SB	¾-1¾ turns open	550 RPM
Nash "600"	694S	¾-1¾ turns open	7 MPH
Nash Amb.	683S, 746S	½-1½ turns open	③
Oldsmobile 6	709S, 710S	½-2 turns open	①
Pontiac 6	717S, 718S	1-1¾ turns open	②
Willys 4	613S	½-1½ turns open	600 RPM, 6 MPH
Willys 6	645S	1-2 turns open	600 RPM, 6MPH

①—425 RPM. or 6 MPH. (Synchro-mesh Trans.), 375 RPM. (Hydra-Matic Drive).
②—450-475 RPM. (Synchro-mesh Trans.), 365-385 RPM. (Hydra-Matic Drive).
③—7 MPH. (Synchro-mesh Trans. Cars), 375 RPM. (Hydra-Matic Drive Cars).

ACCELERATING PUMP STROKE

Car Model	Carburetor	Pump Stroke①	Pump Setting
Hudson	749S	16/64"	Short Stroke
Kaiser	622SB	18/64"	Medium Stroke
Nash "600"	694S	25/64"②	Medium Stroke
Nash Amb.	683S, 746S	27/64"	Long Stroke
Oldsmobile 6	709S, 710S	16/64"	Non-Adjustable
Pontiac 6	717S, 718S	17/64"	Medium Stroke
Willys 4 & 6	613S, 645S	11/64"	Non-Adjustable

①—Use Pump Stroke Gauge No. T109-117S.
②—Supersedes 23/64" originally specified for this model.

METERING ROD SETTING

Checking Gauge—No. T109-102 (2.468") for all carburetors listed above.

ANTI-PERCOLATOR SETTING

Car Model	Carburetor	Checking Gauge	Throttle Opening
Hudson	749S	T109-29	.020"
Kaiser	622SB	T109-29	.030"
Nash "600"	694S	T109-29	.030"
Nash Amb.	683S, 746S	T109-29	.020"
Oldsmobile 6	709S, 710S	T109-29	.020"
Pontiac 6	717S, 718S	T109-29	.030"
Willys 4 & 6	613S, 645S	T109-29	.030"

NOTE—Gauge No. T109-29 used for both .020" and .030" settings.

FLOAT LEVEL SETTING

Car Model	Carburetor	Float Level
Hudson	749S	½"
Kaiser	622SB	½"
Nash (all)	694S, 683S, 746S	½"
Oldsmobile 6	709S, 710S	½"
Pontiac 6	717S, 718S	7/16"
Willys 4 & 6	613S, 645S	5/16"

►*WILLYS CAUTION*—On Willys carburetors, use care not to compress spring in needle valve stem (allow float to hang freely on inverted cover when checking float level). Compressing spring will cause false reading.

THROTTLE VALVE SETTING

Car Model	Carburetor	Idle Port Opening	Vacuum Port
Hudson	749S	.136-.140"②	.020"④
Kaiser	622SB	.133-.137"①	.033-.043"③
Nash "600"	694S	.153-.157"③	.021-.029"④
Nash Amb.	683S, 746S	.137-.141"②	.020-.030"④
Oldsmobile 6	709S, 710S	.136-.140"②	.050"③
Pontiac 6	717S, 718S	.160-.170"③	.022-.027"④
Willys 4 & 6	613S, 645S	.198-.202"②	⑤

①—Idle Port Opening below valve. ②—Idle Port Opening above valve.
③—Top of Port above valve. ④—Bottom of Port above valve.
⑤—(613S) .020-.028", (645S) .036-.044"—Top of Port above valve.

CLIMATIC CONTROL (CHOKE) SETTING

Car Model	Carburetor	Choke Setting
Nash "600"	694S	2 Points Rich
Pontiac 6	717S, 718S	3 Points Rich
All Others		Centered (At Index)

NOTE—No Climatic Control used on Willys 613S and 645S carburetors.

FAST IDLE SETTING

Checking Gauge—No. T109-85 for all models. Set for 5/8" choke valve opening with throttle valve closed and fast idle cam rotated so that first step is against (but not on) throttle stopscrew.

NOTE—This setting does not apply to Willys 613S and 645S carburetors (no adjustment required on these models).

UNLOADER SETTING

Car Model	Carburetor	Checking Gauge	Choke Valve Clearance
Hudson	749S	T109-80	7/16"
Kaiser	622SB	T109-81	7/16"
Nash "600"	694S	T109-81	7/16"
Nash Amb.	683S, 746S	T109-80	7/16"
Oldsmobile 6	709S	T109-80	3/8"
Oldsmobile 6	710S	T109-81	7/16"
Pontiac 6	717S, 718S	T109-107	5/16"

NOTE—No Unloader used on Willys 613S and 645S carburetors.

SERVICE PARTS

Gasket Sets—Carter No. 139A (622SB, 683S, 694S), No. 146 (717S, 718S), No. 157 (709S, 710S), No. 159A (613S, 645S).

Repair Pkgs. (with Std. Metering Rods)—Carter No. 1362B (622SB), No. 1399A (683S), No. 1501A (694S), No. 1383A (709S), No. 1097A (710S), No. 1366A (717S), No. 1388A (718S), No. 1360B (613S), No. 1385A (645S).

CARTER DUAL TYPE WCD

Carter No.
663S—Buick, Series 40, 50 (1949)
664S—Buick, Series 70 (1949)
725S—Buick, Special Series 40 (1950)
682S—Cadillac V8, All Series (1949)—Before Eng. No. 06566.
①722S—Cadillac V8, All Series (1949)—Beginning Eng. No. 06566.
723S—Frazer & Manhattan, Models F-495 & F-496 (1949)
Kaiser Deluxe, Model K-492 (1949)
719S—Pontiac 8, All Models with Synchro-mesh Trans. (1949-50)
720S—Pontiac 8, All Models with Hydra-Matic Drive (1949-50)
①—See Production Change Notes following.

►**CADILLAC 722S CARBURETOR JET CHANGE to correct slight Acceleration Stumble at 20-35 MPH.**—On carburetors dated before February 1949, this condition can be corrected by installation of following parts furnished in Carter Unitized Package No. 75-680U: **Low Speed Jets** No. 11-196S (identified by 5/8" long hexagonal collar integral with tube), and **Metering Rods** No. 75-670 (identified by additional raised dot of same size as trademark on rod flat opposite part number).

NOTE—These new parts installed in production on all 722S carburetors after February 1949.

►**CARBURETOR IDENTIFICATION (CODE NO.):** Stamped on face of flange as follows: 546 (663S), 573 (664S), 624 (725S), 610 (682S & 722S), 550 (723S & 719S), 558 (720S).

DESCRIPTION: Dual (double barrel), downdraft type of same design as used on corresponding previous car models.

ADJUSTMENT, DISASSEMBLY & REASSEMBLY: Same as for other Carter "WCD" carburetors.

See complete "Carter Dual Type WCD" Carburetors in previous release and set these carburetors to the following specifications:

IDLING ADJUSTMENT

Car Model	Carburetor	Idle Screw Setting	Idle Speed
Buick (all '49)	663S, 664S	3/4-1 1/4 turns open	450 RPM, 8 MPH
Buick 40 ('50)	725S	7/8-1 3/8 turns open	450 RPM, 8 MPH
Cadillac	682S, 722S	1/2-1 1/2 turns open	①
Frazer & Kaiser	723S	1-1 1/2 turns open	550 RPM
Pontiac 8	719S, 720S	3/4-1 1/4 turns open	②

①—Synchro-mesh Trans. Cars—400 RPM. Hydra-Matic Drive Cars—375 RPM.
②—Synchro-mesh Trans. Cars—450-475 RPM. or 7-8 MPH.
Hydra-Matic Drive Cars—365-385 RPM.

ACCELERATING PUMP

►***CAUTION—Pump stroke on all carburetors except Buick 663S and 664S must be checked by new methods (two optional methods) as follows:***

Pump Stroke Checking & Adjustment—Install pump connector link in hole of pump arm which provides correct stroke for checking (see table), back out throttle lever stopscrew so that throttle valves are tightly closed (CAUTION—see that fast idle cam does not hold throttle valves open). Then use scale or Pump Gauge T109-117S to check pump as follows:

(1) Gauge T109-117S Method—Invert gauge on edge of dust cover boss of bowl cover at pump plunger shaft (CAUTION—hold gauge vertical to insure correct reading). Turn knurled nut on gauge until gauge finger just touches upper end of plunger shaft. Number indicated on gauge should agree with "Gauge" figure in table below. Adjust by bending throttle connector rod at upper angle.

(2) Scale Method—Use a scale to measure distance from top of pump plunger shaft to top of dust cover boss on bowl cover. This distance should agree with "Scale" figure in table below. Adjust by bending throttle connector rod at upper angle.

ACCELERATING PUMP STROKE

Car Model	Carburetor	Gauge—Reading—Scale	Pump Setting
Buick ('49)	663S, 664S	①	Long Stroke
Buick ('50)	725S	33—20/64"	Short Stroke
Cadillac	682S	24—7/32"	Non-Adj.
Cadillac	722S	32—5/16"	Long Stroke
Frazer & Kaiser	723S	29—9/32"	Short Stroke
Pontiac 8	719S, 720S	32—20/64"	Short Stroke

①—On Buick 663S & 664S carburetors, use Gauge T109-117S and record gauge reading with plunger at rest (throttle stopscrew backed off and throttle valves closed tight), then open throttle just enough so that pump plunger bottoms in pump cylinder (approx. 1/2 throttle opening), again record gauge reading. Difference between these two readings should be 21 (21/64" pump stroke).

METERING ROD SETTING

Car Model	Carburetor	Metering Rod Gauge	Length
Buick (all)	663S, 664S, 725S	No Gauge req'd (See Note)	
Cadillac	682S	T109-163	2.940"
Cadillac	722S	No Gauge req'd (See Note)	
Frazer & Kaiser	723S	T109-163	2.940"
Pontiac 8	719S, 720S	T109-163	2.940"

Buick 663S, 664S, 725S & Cadillac 722S Metering Rod Checking Note—No gauge is required and metering rods should be checked and adjusted as follows: Back off throttle lever stopscrew so that throttle valves tightly closed, loosen metering rod arm clampscrew (on countershaft under dust cover on bowl cover), press down on vacumeter link until both metering rods just bottom in carburetor casting, rotate metering rod arm until finger on arm contacts lip on vacumeter link, tighten clampscrew (CAUTION—do not disturb arm position).

FLOAT LEVEL SETTING

►***CAUTION—Floats must be adjusted laterally (parallel to gauge uprights) as well as vertically (Float Level specification below).***

Car Model	Carburetor	Float Level	Checking Gauge
Buick (all)	663S, 664S, 725S	5/32"	T109-196
Cadillac	682S, 722S	9/64"	T109-160
Frazer & Kaiser	723S	①	
Pontiac 8	719S, 720S	3/16"	T109-162

①—Allow floats to hang freely on inverted cover so that spring in valve stem is not compressed. Floats should be Flush to 1/32" above edge of bowl cover. CAUTION—Compressing valve stem spring will result in false float reading.

THROTTLE VALVE SETTING

Car Model	Carburetor	Idle Port Opening	Vacuum Spark Port
Buick 40, 50 ('49)	663S	.067-.073"③	.046-.050"①
Buick 40 ('50)	725S	.062-.068"③	.046-.050"①
Buick 70	664S	.082-.088"③	.060-.064"②
Cadillac	682S, 722S	.115-.121"③	.033-.043"②
Frazer & Kaiser	723S	.122-.128"③	.033-.038"②
Pontiac 8	719S, 720S	.122-.128"③	.052-.056"②

①—Bottom of port above throttle valve. ②—Top of port above valve.
③—Port Opening above top edge of throttle valve.

CLIMATIC CONTROL (CHOKE) SETTING

Car Model	Carburetor	Choke Setting
Buick (All '49)	663S, 664S	Centered
Buick 40 ('50)	725S	1 Point Rich
Cadillac	682S	1 Point Rich
Cadillac	722S	Centered
Frazer & Kaiser	723S	Centered
Pontiac 8	719S, 720S	Centered

FAST IDLE SETTING

►***CAUTION—Two different settings required as noted below.***

Car Model	Carburetor	(1)—Setting & Gauge No.—(2)	
Buick (All)	663S, 664S, 725S	.020" T109-29	①T109-44
Cadillac	682S, 722S	.010" T109-200	.020" T109-29
Frazer & Kaiser	723S	.010" T109-200	.018" T109-44
Pontiac 8	719S, 720S	.040" T109-143	.026" T109-189

①—(40, 50)—.015", (70)—.018". Same gauge used for both settings.

(1) Fast Idle Cam Clearance—Loosen choke valve lever clampscrew on choke shaft, insert gauge of correct thickness (See Checking Gauge (1) in table above) between lip of fast idle cam and boss on flange casting, hold choke valve tightly closed, remove all slack from linkage by pressing choke valve lever toward closed position, tighten choke valve lever clampscrew.

(2) Fast Idle Screw Setting—Hold choke valve tightly closed, tighten fast idle adjusting screw against high step of fast idle cam until throttle valve opening or clearance between edge of valve and carburetor bore on side opposite idle ports is correct (see Checking Gauge (2) in table above).

CONTINUED N NEXT PA E

CARTER DUAL TYPE WCD (C nt.)

UNLOADER SETTING

►*CAUTION—Fast Idle Cam Clearance (Fast Idle Setting (1) above) must be adjusted before Unloader Setting is adjusted.*

Car Model	Carburetor	Throttle Opening	Checking Gauge
Buick (All)	663S, 664S, 725S	3/16"	T109-28
Cadillac	682S, 722S	3/16"	T109-28
Frazer & Kaiser	723S	1/8"	T109-36
Pontiac 8	719S, 720S	1/8"	T109-36

CAR STARTER SETTING

Buick 663S, 664S, 725S Carburetors—Switch should make contact within 30° to 45° throttle opening range (check with Gauge T109-155S). Adjust by varying shim thickness on guide block under contact spring.

►*CAUTION—Do not use less than one No. 153-11 (.018") Shim or more than three No. 153-11 (.018") Shims plus two No. 153-12 (.006") Shims.*

SERVICE PARTS

Gasket Sets—Carter No. 189 (for all carburetors listed above).
Repair Pkg. (with Std. Metering Rods)—Carter No. 1391 (663S), No. 1392 (664S), No. 1506A (722S), No. 1508 (682S), No. 1512 (723S), No. 1507 (719S & 720S).

CARTER DUAL TYPE WDO

Carter No.
①647S, SA—Hudson Six, Models 491, 492 (1949)
648S—Hudson Eight, Models 493, 494 (1949)
644SA—Packard Eight, "2200" & "2300" Series (1949)
643SA—Packard Super 8, "2200" & "2300" Series (1949)
531SA—Packard Custom 8, "2200" & "2300" Series (1949)
①—*See Production Change Notes following.*

►**HUDSON SIX 647S CARBURETOR CHANGE to correct complaint of Lean Condition at 20 MPH.** On cars with new Intake Manifold (which mounts carburetor in vertical position) and new No. IGS-4213A-1 Distributor, new parts listed below can be installed in 647S carburetors which will bring them up to 647SA standards (CAUTION—If air horn removed with carburetor on car, do not open throttle valve which may cause pump check needle to drop down in manifold).

Unitized Package No. 75-700U

Metering Rods (2 furnished)	Carter No. 75-686
Bypass Bleeder Screw Plugs (2 furnished)	Carter No. 11B-159
Identification Tag (647SA)	Carter No. 107-30

►**HUDSON SIX LATER 647SA CARBURETOR:** This carburetor used in production on later cars and has new parts as listed above for Model 647S.

►**CARBURETOR IDENTIFICATION CASTING NO.:** Stamped on face of flange as follows: **542** (647S, 647SA, 648S), **561** (643SA, 644SA), **564** (531SA).

DESCRIPTION: Dual (double barrel), plain tube downdraft type of same design as carburetors used on corresponding previous models.

ADJUSTMENT & SERVICING: Same as for other "WDO Vacumeter" carburetors. *See complete "Carter Dual Type WDO Vacumeter Type Carburetors" in previous release and set these carburetors to the following specifications:*

IDLING ADJUSTMENT

Car Model	Carburetor	Idle Screw Setting	Idle Speed
Hudson 6	647S, SA	1¼-1¾ turns open	①
Hudson 8	648S	1-1½ turns open	①
Packard 8	644SA	⅝-1⅛ turns open	6 MPH.
Packard Super 8	643SA	¾-1¼ turns open	6 MPH.
Packard Cust. 8	531SA	1½-2 turns open	②

①—540-560 RPM. (Std.), 580-600 RPM. (With Vacumotive Drive or Drivemaster).
②—6 MPH. (Synchro-mesh Trans.), 400 RPM. (Ultramatic Drive).

ACCELERATING PUMP STROKE

Car Model	Carburetor	Pump Stroke①	Pump Setting
Hudson 6	647S, SA	18/64"	Long Stroke
Hudson 8	648S	14/64"	Long Stroke
Packard 8	644SA	14/64"	Short Stroke
Packard Super 8	643SA	28/64"	Non-Adjustable
Packard Cust. 8	531SA	26/64"	Short Stroke

①—Use Pump Stroke Gauge T109-117S.

METERING ROD SETTING

Checking Gauge—No. T109-113 (2.280") for all carburetors listed above.

ANTI-PERCOLATOR SETTING

Car Model	Carburetor	Checking Gauge
Hudson (all)	647S, 647SA, 648S	None
Packard (all)	644SA, 643SA, 531SA	T109-72 (.015")

FLOAT LEVEL SETTING

Car Model	Carburetor	Float Level	Checking Gauge
Hudson 6	647S, SA	3/16"	T109-28
Hudson 8	648S	13/64"	T109-39
Packard (all)	644SA, 643SA, 531SA	5/32"	T109-154

THROTTLE VALVE SETTING

Car Model	Carburetor	Idle Port Opening	Vacuum Port
Hudson 6 & 8	647S, 647SA, 648S	.157-.163"②	.030-.040"①
Packard 8 & Super 8	644SA, 643SA	.127-.133"②	.060"①
Packard Cust. 8	531SA	.152-.158"②	.050-.054"①

①—Top of port above throttle valve. ②—Port opening above throttle valve.

CLIMATIC CONTROL (CHOKE) SETTING

Car Model	Carburetor	Choke Setting
Hudson 6	647S, 647SA	1 Point Lean
Hudson 8	648S	Centered
Packard 8 & Super 8	644SA, 643SA	Centered
Packard Cust. 8	531SA	1 Point Rich

FAST IDLE SETTING

Car Model	Carburetor	Throttle Opening	Checking Gauge
Hudson 6 & 8	647S, 647SA, 648S	.054"	①T109-193
Packard 8	644SA	.020"	T109-29
Packard Super 8	643SA	.026"	②T109-189
Packard Cust. 8	531SA	.023-.028"	②T109-189

①—Gauge T109-193 used for both .040" and .054" settings.
②—Gauge T109-189 used for both .023" and .026" settings.

UNLOADER SETTING

Car Model	Carburetor	Choke Valve Clearance	Checking Gauge
Hudson (all)	647S, 647SA, 648S	1/4"	T109-31
Packard (all)	644SA, 643SA, 531SA	11/64"	T109-166

CAR STARTER SETTING

Packard (644SA, 643SA, 531SA Carbs.)—Switch must make contact within 30 to 45° throttle opening (check with protractor Gauge No. T109-155S). Adjust by varying shim thickness under contact spring.

►*CAUTION—Do not use less than one No. 153-11 (.018") Shim or more than three No. 153-11 (.018") Shims plus two No. 153-12 (.006") Shims.*

SERVICE PARTS

Gasket Sets—Carter No. 149 (647S, 647SA, 648S), No. 156 (643S, 644S, 531SA).
Repair Pkgs. (with Std. Metering Rods)—Carter No. 1381 (647S), No. 1382 (648S), No. 1375 (643SA), No. 1376A (644SA).

CARTER DUAL TYPE WGD

Carter No.
714S—Oldsmobile Futuramic 8, 88 & 98 (1949)
①728S, SA—Packard 8, "2300" Series (Late 1949)
①—See Production Change Note following.

►**PACKARD 728S & 728SA PRODUCTION CHANGE:** Model 728SA has changes in calibrations as follows:

Metering Rod (Std.)—(728S) No. 75-679, (728SA) No. 75-707.

Main Nozzle—(728S) #38 drill I.D., (728SA), #30 drill I.D. NOTE—Nozzle is installed permanently and should not be removed.

DESCRIPTION: Dual downdraft, horizontal air intake type (Oldsmobile), vertical air intake (Packard) type with vacuum controlled metering rods (vacumeter), spring-loaded piston type accelerating pump operated by throttle lever, well type non-adjustable anti-percolator, and Automatic Choke and Fast Idle.

Fuel System: Consists of Idle (Low Speed) Fuel System, Main (High Speed) Fuel System, and Accelerating Fuel System which operate as follows (Idle & Main Fuel Systems duplicated for each carburetor barrel):

Idle Fuel System—Fuel for idling is taken from main nozzle well up through the Idle Tube which meters the fuel and is then mixed with air admitted through idle air bleed opening in air horn. Fuel mixture passes through restricted horizontal passage and additional air is admitted through idle passage bleed opening in air horn. Fuel mixture then flows down through passage to idle discharge ports at throttle edge. For closed throttle idling, all fuel is discharged through lower port below throttle and is controlled by the Idle Adjusting Screw (upper port serves as additional air bleed). As soon as the throttle is cracked open, additional fuel is discharged through upper port also. At higher car speeds idle system drops out and all fuel is discharged by main fuel system.

Main Fuel System—Fuel enters main well through metering jet and is metered by the metering rod in this jet. Fuel then flows up through main well and is discharged through Main Discharge Nozzle located in throat of primary venturi. Anti-percolator well acts as an air bleed for the main nozzle and this air bleed action is controlled by the size and location of the anti-percolator well vents so that at high speeds practically all back bleeding of air into the system is eliminated.

Anti-Percolator Well Vents—Well is vented through pocket formed by flat on nozzle in high speed passage at inner wall of primary venturi and by restricted opening in air horn at top of well. Additional side vent opening into top of idle well prevents accumulation of vapor in this well which might cause rough idle at higher than normal operating temperatures.

IDLING ADJUSTMENT: Adjust only with engine warmed up so that choke valve wide open and engine idling at hot or slow idle speed (Automatic Choke and Fast Idle inoperative). Set throttle stopscrew for correct idle speed, adjust both idle adjusting screws (one for each barrel) so that engine idles smoothly. Screws control fuel mixture and should be turned in for leaner mixture, out for richer mixture. See car model page for complete tune-up data.

IDLE SETTING

	Idle Screw	Idle Speed
Oldsmobile	¾-1½ turns open	①375 RPM.
Packard		②6 MPH.

①—Use tachometer (Hydra-Matic Drive).
②—400 RPM. on cars with Ultramatic Drive.

PERFORMANCE: Should be satisfactory if idling adjustment correctly made and metering rods adjusted.

ACCELERATING PUMP: No seasonal adjustment provided. Pump stroke should be checked and adjusted before metering rods are adjusted as follows:

Adjustment (Oldsmobile)—Remove dust cover (on bowl cover) by taking out two screws. Back off throttle lever stopscrew so that throttle valves tightly closed. Place straightedge across dust cover boss at pump arm on countershaft. Bend connector rod linking throttle lever and pump arm at upper bend in arm until upper flat surface of pump arm is parallel to straightedge.

Adjustment (Packard)—Remove dust cover (on bowl cover) by taking out two screws. Back off throttle lever stopscrew so that throttle valves tightly closed, wedge choke valve in wide open position. Place Universal Pump Gauge T109-117S on edge of dust cover flange, turn knurled nut on gauge until finger at end of gauge extension just touches top of pump plunger shaft, Gauge reading should be 42 (indicating 15/32" distance from top of plunger to top edge of flange). Adjust by bending pump connector rod at upper angle near countershaft lever using tool T109-41.

►*CAUTION—Check Metering Rod Adjustment after adjusting Pump.*

►**Pump Vent Note**—Pump jet cluster pocket is vented to outside of carburetor body casting to prevent pump jet discharge when engine operated at constant-throttle. If accelerator pedal is depressed repeatedly with engine not running, fuel will be forced out vent and appear on outside of carburetor.

METERING ROD ADJUSTMENT: Metering rods are controlled by a single spring-loaded vacuum piston (rods held down in jets for maximum economy by vacuum piston, and lifted out of jets by spring for acceleration and full power operation when vacuum decreases as throttle is opened). A lip on the metering rod arm (on pump countershaft which is linked to throttle lever) acts as a stop for the vacuum piston link and insures correct metering rod position for all throttle positions.

►*CAUTION—Check accelerating pump before adjusting metering rod (pump adjustment disturbs metering rod setting). No metering rod gauge required.*

Adjustment—Remove dust cover (on bowl cover) by taking out two cover screws. Back off throttle lever stopscrew so that throttle valves are tightly closed. Loosen clampscrew on metering rod arm on countershaft, press down on vacumeter arm until metering rods just bottom in carburetor casting, hold rods and arm in this position, see that throttle valves closed, position metering rod arm so that lip on arm just contacts vacumeter arm, tighten clampscrew.

►*CAUTION—Reset throttle stopscrew for correct idling speed after metering rod adjustment completed.*

►**Countershaft Lubrication Note**—Lubricate shaft with light graphite grease through hole in center shaft support and outer dust cover screw hole before installing dust cover.

FLOAT LEVEL: Remove the bowl cover and air horn (CAUTION—use extreme care not to damage float and jets when lifting off bowl cover), remove gasket, invert cover and allow float to hang freely. Use correct checking gauge (see table below) between

CONTINUED ON NEXT PAGE

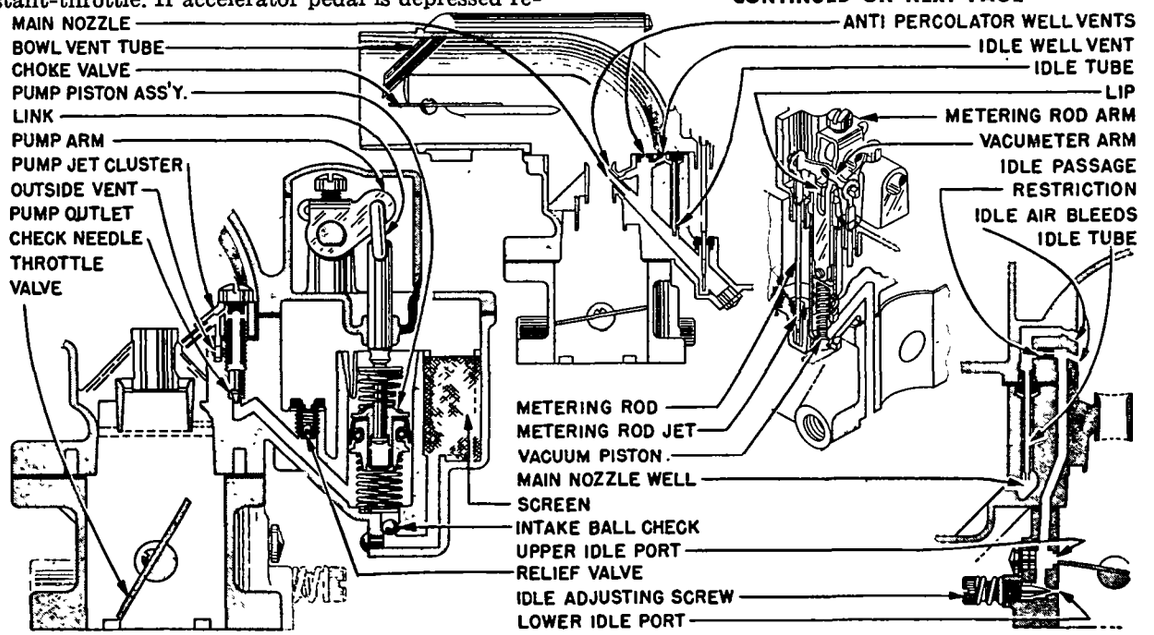

CARTER DUAL TYPE WGD CARBURET R

CARTER DUAL TYPE WGD (C nt.)

gasket face of bowl cover and nearest point on float (top center of float). Adjust by bending lip on float arm near pivot point.

►*CAUTION—Do not bend float arm.*

	FLOAT LEVEL Checking Gauge	Float Level
Oldsmobile	T109-31	1/4"
Packard	T109-39	13/64"

Needle Valve & Seat—Furnished as matched set only. Install both parts together.

FAST IDLE: Oldsmobile fast idle consists of a fast idle screw on the throttle lever and a fast idle cam linked to the choke valve lever. On Packard, fast idle cam and lever assembly is mounted on choke valve shaft within automatic choke housing and is linked to throttle lever by a flat connector link.

Adjustment (Oldsmobile)—*CAUTION—Two separate adjustments required as follows:*

Fast Idle Linkage—Back off fast idle screw on throttle lever until fast idle cam can be revolved freely with throttle valves closed. Loosen clampscrew on choke lever to which fast idle cam connected, use .015" feeler Gauge T109-72 between lip on fast idle cam and boss on carburetor casting, hold choke valve tightly closed, remove all slack from linkage by pressing choke lever toward closed position, tighten lever clampscrew while holding lever in this position.

Fast Idle Screw—Back off throttle lever stopscrew so that throttle valves tightly closed, revolve fast idle cam until raised projection (narrow separate step) on cam lines up with fast idle screw, turn screw in or out until it just touches this projection *NOTE*—This adjustment can also be made by closing the throttle valves against a special .015" round feeler gauge (insert feeler between edge of valve and carburetor wall). Close choke valve tightly, so that high step of fast idle cam is opposite fast idle screw. Turn fast idle screw in against step on fast idle cam until feeler gauge just falls free of throttle valve (CAUTION—Carburetor must be upright and gauge free to fall out when making this adjustment).

Adjustment (Packard)—Remove thermostatic coil and housing assembly, gasket and baffle plate (to expose fast idle mechanism). Open throttle valve to release fast idle, then close choke valve, hold choke valve closed and close throttle valve. Invert carburetor and check clearance between edge of throttle valve and carburetor wall with gauge T109-189 (.026"). If throttle opening not correct, adjust by bending choke connector rod at lower angle near throttle lever. Adjust Unloader (below).

CHOKE: Carter Climatic Control.

Setting (Oldsmobile)—Centered (index mark on cover centered on scale on housing).

Setting (Packard)—1 Point Lean.

UNLOADER: On Oldsmobile, unloader consists of a lip on the throttle lever which engages fast idle cam and opens choke valve when throttle valve opened wide to correct flooding. On Packard, unloader consists of a lip on the fast idle cam which engages a trip lever arm on the choke valve lever within the automatic choke housing.

Setting (Oldsmobile)—Hold throttle valve in wide open position, check choke valve opening with Gauge T109-31 (1/4"). Adjust by bending lip on throttle lever using tool J109-41.

Setting (Packard)—With thermostatic coil and housing assembly, gasket, and baffle plate removed, hold throttle valves wide open, close choke valve as far as possible, check choke valve opening with Gauge T109-36 (1/8"). Adjust by bending choke trip lever arm (on choke lever) using tool T109-187.

CARBURETOR OVERHAUL: With carburetor removed from engine, disassemble, clean, and inspect all parts as follows:

Disassembly: Remove dust cover on bowl cover by taking out two attaching screws, disconnect fast idle connector rod and pump connector rod at both ends. Take out eight bowl cover and air horn attaching screws, lift air horn straight up and remove from main body casting (CAUTION—use extreme care not to damage float and jets installed in cover). Disassemble these parts as follows:

Air Horn & Bowl Cover—Remove float by taking out float hinge pin and unhooking intake needle pull clip, remove intake needle seat. Loosen setscrews on metering rod arm and pump arm, slide countershaft out of housing. Lift out metering rod arm, pump arm, pump plunger assembly, vacumeter piston and link, and metering rods, remove cover gasket. Unscrew low speed jets (Idle Tubes). Loosen clampscrew and remove choke shaft lever, take out attaching screws and remove choke valve. Take out three attaching screws, remove automatic choke cover and thermostatic coil assembly (rotate cover counterclockwise to free coil hook), remove gasket and baffle plate. Revolve choke shaft until piston clears vacuum cylinder, remove shaft and piston assembly. Take out three self-tapping screws and remove piston housing assembly from air horn casting, lift out piston housing gasket.

Main Body Casting—Take out attaching screw and remove pump jet cluster and gasket. Invert casting and catch vacumeter spring, pump discharge needle, and lower pump spring. Remove metering jets, pump relief valve assembly, and pump intake strainer. Use tool T109-56 to remove retainer ring from bottom of pump cylinder, remove pump intake check ball (under retainer ring). Take out attaching screws and remove throttle flange assembly.

►*CAUTION—Do not attempt to remove main nozzles from body casting (permanently installed in casting).*

Throttle Flange Casting—Take out attaching screw and remove pump lever from throttle shaft, remove throttle shaft retaining ring, take out attaching screws and remove throttle valves. Slide throttle shaft and lever assembly out. Remove fast idle cam assembly. Remove idle adjusting screws and springs, and idle port plugs.

Cleaning & Inspection: Wash all parts in solvent or approved carburetor cleaner, dry with air, blow out all channels and passages with compressed air. Remove carbon from flange casting bore with sandpaper (CAUTION—do not use emery cloth). Examine vacuum cylinder in automatic choke housing for dirt and carbon accumulation (if necessary, remove welch plug from base of vacuum cylinder by drilling small hole in plug and using nozzle puller T109-178 to remove plug, install new plug after cleaning cylinder). Replace all worn or damaged parts. Use all new gaskets when reassembling carburetor.

Reassembly: Reassemble carburetor by reversing disassembly directions and note the following important instructions:

Throttle Valve Installation—Back off throttle lever stopscrew, install throttle valves with trademark (small "C") toward idle ports when viewed from manifold side of casting, insert screws loosely, hold valves firmly in place with fingers and tap valves lightly to centralize them in bores, hold lever end of shaft against flange casting boss, tighten valve screws securely. Then install new retaining ring on shaft.

Pump Jet Assembly—Install pump discharge needle first (insert with point downward), use new gasket under pump jet cluster, tighten retaining screw securely. Install pump relief valve assembly. Drop pump intake ball into recess in pump cylinder, use tool T109-122U to install retainer ring.

Pump Plunger & Arm Assembly—Assemble pump link on pump countershaft arm and install pin spring retainer. Insert pump plunger stem in place in bowl cover, slide lower end of link through hole in upper end of plunger stem and revolve ½ turn. When installing bowl cover and air horn, see that lower spring installed in pump cylinder, insert pump plunger, hold pump arm in place while inserting countershaft.

Float Assembly—Make certain that intake needle is attached to float arm with pull clip when installing float. Check float level before installing bowl cover and air horn on main body casting.

Metering Rod Jets—Do not use a gasket under these jets.

Metering Rod & Vacumeter Assembly—Install metering rod spring in vacuum piston link and install vacuum piston spring in cylinder in main body casting. Install vacuum piston link through slot in bowl cover with lip on link pointing toward air horn. Install vacumeter piston on link with pin extending toward air horn. When installing bowl cover and air horn on body casting guide vacumeter piston into vacuum cylinder in body casting. Hold pump arm in position and slide countershaft in through arm and support in casting, then hold metering arm in position with lip on arm extending through slot in vacumeter link and slide countershaft through arm. Install throttle connector rod and retainers. Install both metering rods (CAUTION—see that rods enter metering jets), connect metering rod spring. Check assembly for free movement by pressing down on vacumeter link (should not bind in any position).

Choke Assembly—Make certain that new gasket installed in hot air passage in air horn, install piston housing assembly (CAUTION—attaching screws are self-tapping type and must be pulled down securely but with care not to strip threads). Install choke valve shaft and piston, rotating shaft to enter piston in cylinder. See that tapered edges of choke valve seat in air horn, hold valve with fingers and tap with screwdriver to centralize valve before tightening attaching screws. Check valve for free movement (valve should open freely of own weight). When assembling automatic choke mechanism, install flat baffle plate first (with choke lever prong extending through slot in plate), then install extruded baffle plate, gasket, cover and thermostatic coil assembly.

Adjustments—After carburetor assembled, check and adjust Accelerating Pump, Metering Rods, Fast Idle, Choke Setting, and Unloader. After carburetor installed on engine, adjust Idle setting. See adjustment instructions listed under each heading above.

1949-50 CARTER DOWNDRAFT CARBURETOR JET SPECIFICATIONS

Car Model	Yr.	Carb. No.	Marking	Metering Rod: Standard Part No.	1 Size Lean Marking	1 Size Lean Part No.	2 Sizes Lean Marking	2 Sizes Lean Part No.	Met. Rod Jet Size	Met. Rod Jet Part No.	Main Nozzle Size	Main Nozzle Part No.	Low Spd. Size	Jet Tube Part No.	Pump Jet Size	Pump Jet Part No.
BUICK 40, 50	1949	663S	—	75-614	—	75-633	—	75-634⑪	.082"	120-158	—	⑩	#65	11-177S	#71	48-132S
BUICK 70	1949	664S	—	75-615	—	75-635	—	75-636⑪	.082"	120-158	—	⑩	#65	11-185S	#72	48-140S
BUICK 40	1950	725S	—	75-685	—	—	—	— ⑪	.082"	120-158	—	⑲	#65	11-185S	#74	48-165S
CADILLAC	Early 1949	682S	—	75-673	—	—	—	—	.089"	120-103S	—	⑩	#68	11-183S	#70	48-138S
CADILLAC	Late 1949	722S	㊿	75-670	—	—	—	—	.089"	120-159	—	⑩	#68	11-196S㊾	#70	48-138S
CHEVROLET	1949	684S	—	75-485	—	75-517	—	—	.093"	120-115S	⑮	⑧12-274S	.035"	11-173S	#72	48-43
FRAZER	1949	723S	—	75-669	—	75-694	—	75-695	.0846"	120-125S	—	⑩	#66	11-191S	#74	48-158S
HUDSON Six	1949	647S, SA	—	75-686	—	75-623	—	75-624	.086"	120-121S	⑫	12-248	#67	11-168S	#74	—
HUDSON Eight	1949	648S	—	75-607	—	75-627	—	75-628	.086"	120-121S	.061"	12-312	—	11-160S	#74	—
HUDSON Pacemkr.	1950	749S	—	75-704	—	—	—	—	.1015"	120-15S	⑥	⑧12-280S	#65	11-165S	#72	48-72
KAISER	1949	622SB	—	75-642	—	—	—	—	.099"	120-95S	㊱	12-268	#68	11-160S	#67	48-89
KAISER	1949	723S	—	75-669	—	75-694	—	75-695	.0846"	120-125S	—	⑩	#66	11-191S	#74	48-158S
NASH "600"	1949	694S	—	75-646	—	75-660	—	75-661	.103"	120-117S	.086"	12-307	#69	11-162S	—	—
NASH Amb.	1949	683S	㊿	75-650	—	75-658	—	75-659	.0995"	120-133S	㉚	12-326	#64	11-174S	—	—
NASH Stmn.	1950	694S	—	75-646	—	75-660	—	75-661	.103"	120-117S	.086"	12-307	#69	11-162S	—	—
NASH Amb.	1950	746S	㊿	75-650	—	75-658	—	75-659	.0995"	120-133S	㉚	12-326	#64	11-174S	—	—
OLDSMOBILE 6	1949	710S	—	75-651	—	—	—	—	.1015"	120-15S	⑥	⑧12-280S	#70	11-170S	#72	48-72
OLDSMOBILE 6⑱	1949	709S	—	75-651	—	—	—	—	.1015"	120-15S	⑥	⑧12-280S	#70	11-170S	#72	48-72
OLDSMOBILE 8⑱	1949	714S	—	75-682	—	—	—	—	.096"	120-160	—	⑩	#70	11-199S	#70	48-157S
PACKARD Eight	1949	644SA	—	75-638	—	75-519	—	75-520	.0846"	120-125S	⑫	12-262	#70	11-162S	#70	—
PACKARD Eight	1949	728S	—	75-679	—	75-709	—	75-710	—	120-159	—	⑩	—	11-198S	—	48-169S
PACKARD Super 8	1949	643SA	—	75-606	—	75-620	—	75-621	.09055"	120-139S	⑲	12-311	#70	11-163S	#72	—
PACKARD Cust. 8	1949	531SA	—	75-616	—	75-639	—	75-640	.09055"	120-139S	㊳	12-259	#70	11-163S	#72	—
PONTIAC 6	1949-50	717S	—	75-528	—	75-582	—	75-583	.0995"	120-133S	㊽	12-286	#67	11-168S	#72	48-72
PONTIAC 6⑱	1949-50	718S	—	75-528	—	75-582	—	75-583	.0995"	120-133S	㊽	12-286	#67	11-168S	#72	48-72
PONTIAC 8	1949-50	719S	—	75-664	—	—	—	—	.082"	120-65S	—	⑩	#68	11-183S	#74	48-143S
PONTIAC 8⑱	1949-50	720S	—	75-664	—	—	—	—	.082"	120-65S	—	⑩	#68	11-183S	#74	48-143S
STUDEBAKER Ch.	1949	715S	—	75-652	—	75-666	—	75-667	.095"	120-129S	㉜	12-263	.02925"	11-186S	#73	48-161
STUDEBAKER Ch.	1950	715S	—	75-652	—	75-666	—	75-667	.095"	120-129S	㉜	12-263	.02925"	11-186S	#73	48-161
STUDEBAKER Comm.	1950	627SA	—	75-698	—	75-689	—	75-690	.098"	120-67S	㊲	12-271	#67	11-167S	#71	48-90
WILLYS CJ-3A, 4X4-63	1949	636SA	—	75-547	—	75-548	—	—	.070"	120-151S	—	12-323	.026"	11-186S	#73	48-84
WILLYS 2-WD, 4-WD	1949	636SA	—	75-547	—	75-548	—	—	.070"	120-151S	—	12-323	.026"	11-186S	#73	48-84
WILLYS 4-63, VJ-3	1949	613S	—	75-589	—	75-601	—	—	.098"	120-67S	.086"	12-307	#68	11-160S	#72	48-61
WILLYS 6-63	1949	645S	—	75-609	—	—	—	—	.098"	120-67S	.086"	12-307	#68	11-160S	#72	48-61

⑥—Inner (screw) Nozzle #31 or .120", Outer (slip) Nozzle .110".
⑧—Nozzle assembly (Inner & Outer Nozzles).
⑩—Nozzle assembled permanently in carburetor. **Do not remove.**
⑪—High Altitude only.
⑫—Closed Tip. Top hole .028" (45° angle), Lower hole .0635" (60° angle).
⑮—Inner Nozzle .120", Outer Nozzle .125".
⑱—Used only on cars with Hydra-Matic Drive.
⑲—Closed Tip. Top hole .0292" (45° angle), Lower hole .0635" (60° angle).
㉚—Closed Tip. Top hole .020" (45° angle), Lower hole .081" (70° angle).
㉜—Closed Tip. Top hole .035" (45° angle), Lower hole .089" (60° angle).
㊱—Closed Tip. Top hole .021" (45° angle), Lower hole .0945" (70° angle).
㊲—Closed Tip. Top hole .035" (45° angle), Lower hole .0945" (60° angle).
㊳—Closed Tip. Top hole .037" (45° angle), Lower hole .071" (60° angle).
㊽—Closed Tip. Top hole .020" (45° angle), Lower hole .070" (60° angle).
㊾—Supersedes 11-181S & 11-183S (Identified by ⅝" long hex. collar on tube).
㊿—Use only latest type (Identified by raised dot above trademark).

1949 CARTER (B&B) UPDRAFT CARBURETOR JET SPECIFICATIONS

Car Model	Yr.	Carb. No.	Flow	Main Metering Screw: Standard Part No.	1 Size Lean Part No.	2 Sizes Lean Part No.	Main Nozzle Size	Main Nozzle Part No.	Stepup Jet Power Orifice Size	Stepup Jet Power Orifice Part No.	Idle Orifice Tube Size	Idle Orifice Tube Part No.	Idle Passage Tube	Pump Size	Valve Part No.
CHEVROLET Trk.①	1949	517-S	366-70cc.	159-98 5%	159-99 10%	159-100	#33	12-283	.055"	162-24	.0236"	123-16	123-45	.0635"	149-65S
CHEVROLET Trk.①	1949	699-S	352-56cc.	159-99 5%	159-100 10%	159-129	.125"	12-330	.043"	162-26	.025"	123-55	123-45	.0635"	149-65S

①—Cab-over-Engine & Forward Control Models.

ROCHESTER (OLDSMOBILE) DUAL CARBURETOR

Oldsmobile Part No.
7001570—Oldsmobile 8, 88 & 98 (1949)

DESCRIPTION: Dual downdraft, concentric bowl, horizontal air intake type with vacuum controlled power jet and positively operated diaphragm type accelerating pump operated by throttle lever through a rack-and-pinion engagement. The circular float bowl is mounted on the underside of the carburetor cover and is suspended in the air stream so that it is cooled by the air entering the carburetor.

Fuel System: Consists of Idle (Low Speed) Fuel System, Main (High Speed) Fuel System, Power Fuel System, and Accelerating Fuel System which operate as follows (Idle & Main Systems duplicated for each carburetor barrel):

Idle Fuel System—Fuel for idling is taken from the main jet well up through a brass Idle Tube which meters the fuel and is then mixed with air admitted through Idle Air Bleed in cover passage above tube. Fuel mixture then flows through horizontal passage in cover and additional air is admitted through Idle Channel Bleed opening into air horn. Fuel mixture is then taken down through passage to idle ports at throttle edge. For closed throttle idling, all fuel is discharged through lower port below throttle and is controlled by the Idle Adjusting Screw. As the throttle is opened, additional fuel is discharged through Secondary Idle Port and Top Idle Port also. Idle system supplies all fuel up to approximately 25-30 MPH.

Main Fuel System—Fuel is metered by Main Metering Jet in bottom of float bowl and flows up through vertical passage to Discharge Nozzle in small venturi. This fuel is mixed with air admitted through Main Well Air Bleed in cover. This air bleed action is controlled by the brass Main Well Tube in the upper end of the main well or vertical passage. Main Well Tube has calibrated holes on one side which control the fuel/air ratio through the driving range. Main discharge nozzles supply all fuel through the 30-60 MPH. driving range and this fuel is metered by the main metering jets.

Power Fuel System—Consists of a power valve controlled by a spring-loaded vacuum diaphragm assembly which bypasses fuel directly to the main Discharge Nozzles. Valve is normally closed (diaphragm and stem held up against spring tension by manifold vacuum) but is opened by the stem whenever manifold vacuum drops off (wide open throttle or full-power operation, or sudden acceleration) permitting fuel flow through Power Restriction.

Accelerating Fuel System—Consists of a diaphragm type pump assembly mounted on the side of the bowl and pump jets mounted in the pump housing which are aimed to discharge fuel across the throat of each carburetor barrel when throttle valve opened for acceleration. Pump is positively actuated through a rack-and-pinion drive by an actuating spring on the pump shaft which is wound up by the closing of the throttle. Return spring bearing on inner side of diaphragm is calibrated to take up all play and lost motion in the pump linkage. Pump intake strainer screen, intake ball check and outlet check needle located in bowl casting.

IDLING ADJUSTMENT: Adjust only with engine warmed up so that choke valve wide open and engine idling at hot or slow idle speed (Automatic Choke & Fast Idle inoperative). Set throttle stopscrew for correct idle speed, adjust both idle adjusting screws (one for each barrel) so that engine idles smoothely. Screws control fuel mixture and should be turned in for leaner mixture, out for richer mixture. Recheck idle speed.

Idle Setting—Screws approximately 1 turn open.
Idle Speed—Exactly 375 RPM (use tachometer).

PERFORMANCE: Should be satisfactory if idling adjustment and accelerating pump seasonal setting correct. All jets are fixed non-adjustable type.

POWER VALVE ASSEMBLY: Not adjustable. Valve remains closed with manifold vacuum greater than 8" of HG. and opens when vacuum drops below 8".

ACCELERATING PUMP: Pump is controlled by throttle lever through connector rod and pump shaft lever with pump adjustment on pump shaft lever (3 holes for connector rod) as follows:
Outer Hole—Minimum stroke (factory setting).
Center Hole—Medium stroke.
Inner Hole—Maximum stroke.

►**Other Pump Adjustments**—***Pump Actuating Lever adjustment and Pump Jet Targeting adjustment should be made after carburetor has been overhauled:***

Pump Actuating Lever Adjustment—See that pump connector rod installed in recommended hole (outer) of pump shaft lever, disconnect rod from throttle lever. Back off throttle lever stopscrew and fast idle screw so that throttle valves close tightly. Hold throttle lever in closed throttle position, pull down on pump connector rod so that pump shaft and lever in closed position, check rod length. TOP edge of rod end should be flush with BOTTOM edge of hole in throttle lever (rod should be "too long" by thickness of rod diameter). Adjust by bending rod at center bend. Connect rod.

►***CAUTION***—Fast Idle and Engine Idle Speed must be readjusted after pump adjustment completed.

Pump Jet Targeting—Pump jets must be aimed so that discharge stream from jet strikes housing venturi on opposite side of carburetor throat at point just below deflector boss on casting. To check pump jets with carburetor completely assembled and filled with fuel, note fuel discharge visible in air horn while operating pump slowly by hand. Fan-shaped spray should be noted and spray should not come out end of air horn. Adjust by bending pump jet slightly.

►***CAUTION—Use care not to damage pump jet.***

FLOAT LEVEL: ***CAUTION***—Float Balance Spring tension must be checked and adjusted whenever the float level is adjusted.

Float Level—23/32" from top of seam on free end of float to gasket seat on cover with cover assembly inverted and needle valve seated. To check, remove and invert cover assembly, remove gasket, use scale or Carburetor Gauge BT-17 (see note) to measure from cover to top of float seam with float hanging freely. To adjust, bend float arm at point between needle valve and float (CAUTION—do not bend front of float, float must be parallel to cover).

►**BT-17 Gauge Note**—Marked line near square end of gauge is float measurement (23/32" from end).

Float Balance Spring Tension—Balance spring at back of float hinge pin assists float and also acts

CONTINUED N NEXT PAGE

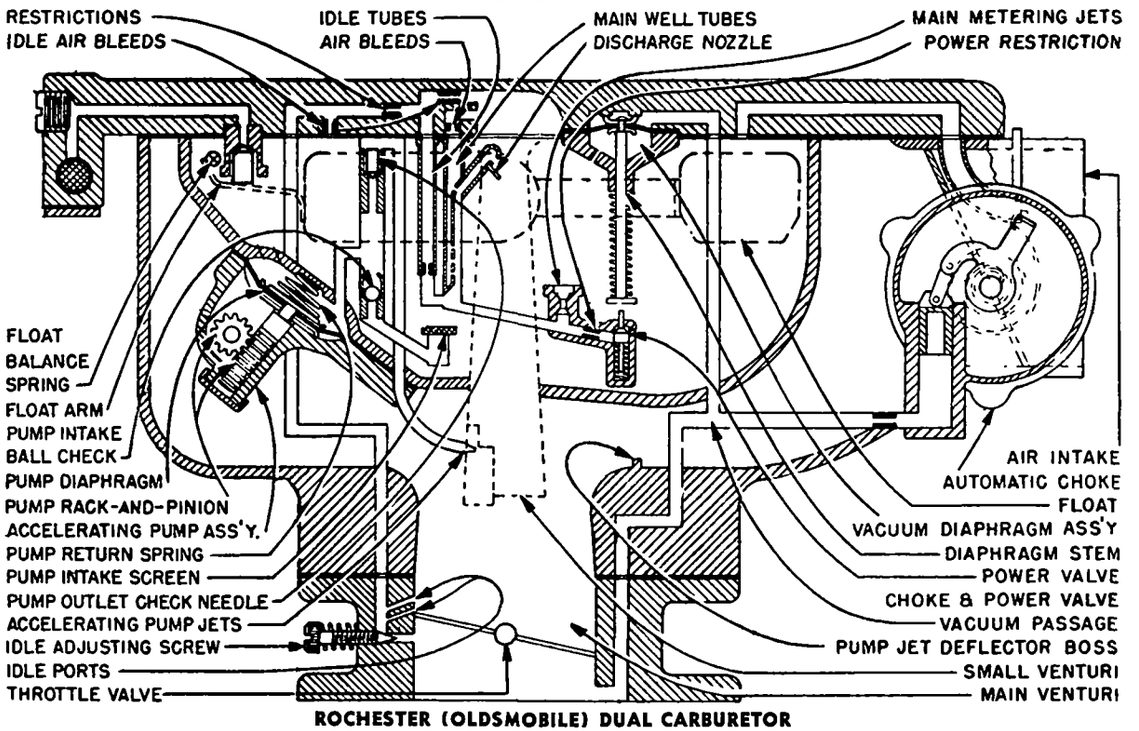

ROCHESTER (OLDSMOBILE) DUAL CARBURETOR

ROCHESTER (OLDSMOBILE) DUAL CARB. (Cont.)

as a dampener. To check float tension, hold cover assembly right side up and horizontal so that float drops of own weight against balance spring tension. Bottom of float at free end should be even with bottom of power valve stem. To check, place scale on bottom surface of valve stem. To adjust, bend tang on float arm which engages balance spring against spring to lessen float drop, away from spring to increase drop.

Float Intake Needle & Seat—Furnished only as matched set—Oldsmobile No. 7001846.

CHOKE: Rochester Automatic Choke.

►*CAUTION*—Choke Rod adjustment must be made whenever carburetor disassembled and overhauled

Choke Setting—Centered (index mark on cover aligned with index mark on housing).

Choke Rod Adjustment—To check, hold throttle valve closed, move fast idle cam so that fast idle screw is against (not on) first step of cam, see that choke trip lever is in contact with counterweight on choke shaft, measure choke valve opening or clearance between lower edge of valve and air horn wall with Carburetor Gauge BT-17 (see Note below). Choke valve opening should be .147". To adjust, use Bending Tool BT-18 to bend connector rod between fast idle cam and choke lever slightly. Check to see that rod does not rub or bind on housing.

►**BT-17 Gauge Note**—This .147" opening is equal to the first or "C" step of the gauge.

UNLOADER: Consists of a tang on the throttle lever which engages the fast idle cam and opens the choke valve slightly when the throttle valve opened

Setting—.238" choke valve opening with throttle valve wide open. To check, hold throttle lever in wide open throttle position, see that choke trip lever is in contact with counterweight tang on choke shaft, measure choke valve opening or clearance between lower edge of valve and air horn wall with Carburetor Gauge BT-17 (see Note below). Adjust by using Bending Tool BT-18 to bend tang on throttle lever slightly.

►**BT-17 Gauge Note**—This .238" opening is equal to the second or "D" step of the gauge.

FAST IDLE: Consists of a fast idle cam serving as a stop for the fast idle screw (upper screw) on the throttle lever. Cam is linked to choke valve lever and is rotated so that the fast idle screw rests on the first (highest step) when choke valve closed.

Setting (Carburetor on Engine)—500 RPM. engine idling speed. To adjust, with engine and transmission warm, idle engine, open throttle partially and rotate fast idle cam by hand so that fast idle screw rests on first (low step) of fast idle cam. Adjust screw so that engine idling speed is 500 RPM.

Setting (Carburetor on Bench)—.020" throttle valve opening with choke valve closed and fast idle screw on highest (starting) step of fast idle cam. To check, move connector rod so that choke valve fully closed, close throttle so that fast idle screw rests on high step of fast idle cam. Check throttle valve opening or clearance between edge of valve and carburetor wall with Carburetor Gauge BT-17 (.020" opening equal to wire gauge "E" section of tool).

►*CAUTION*—If stalling experienced during warm-up with above setting (equivalent to engine speed of 1200-1250 RPM. with engine and transmission warm), increase this engine speed to 1600-1650 RPM. by turning fast idle screw in further.

CARBURETOR OVERHAUL: With carburetor removed from engine, proceed as follows:

Disassembly: Take out eight screws (outer circle of screws) retaining cover on carburetor housing, **hold throttle lever in FULL open position** (to free pump actuating lever from pump yoke inside housing), lift cover and bowl assembly straight up and out of housing. Take out six screws retaining bowl on cover, lift cover and float assembly off bowl.

Carburetor Bowl—Remove power valve and fibre gasket from bottom of bowl (use 5/16" width screwdriver), remove two main metering jets, remove retaining ring and pump strainer screen (use thin blade screwdriver or pointed tool to free ring). Invert bowl and catch two main well tubes, two idle tubes, and pump outlet check valve which should drop out (tap bowl lightly or use toothpick or other wooden wedge to lift tubes out if necessary—**do not use metal tool to remove these tubes**). Use small flexible wire hooked in outside hook of pump actuating spring to unwind spring three full turns to free position (CAUTION—use care not to distort or stretch spring). Take out five pump housing attaching screws, lift pump housing off (CAUTION—use care not to disturb pump jets which are aimed for proper targeting of pump discharge). Lift out conical pump return spring. Unscrew and remove pump intake ball check plug (use ¼" width screwdriver).

►*CAUTION—Do not attempt to remove Main Discharge Nozzles from bowl.*

Bowl Cover—Remove float hinge pin, lift float off, remove intake needle valve. Take out three retaining screws and lift out power valve diaphragm and stem. Remove float intake needle seat and gasket Remove fuel inlet nut and strainer screen.

Carburetor Housing & Throttle Body—Lift out balance tube in air horn. Take out three attaching screws and remove automatic choke cover and thermostatic coil as an assembly (CAUTION—use care not to distort coil). Take out choke valve attaching screws and remove valve. Disconnect and remove pump rod using care not to bend rod. Disconnect and remove choke rod. Take out choke shaft counterweight attaching screw, remove collar, washer, and counterweight. Revolve choke shaft until vacuum piston free from cylinder, withdraw piston and shaft as an assembly. Take out three throttle body attaching screws and lift off throttle body. Remove nut and lockwasher on pump shaft, remove pump yoke from within housing (CAUTION—do not lose small felt packing washer in housing counterbore at outer end of shaft).

Throttle Body—Take out fast idle cam attaching screw, remove fast idle cam. Remove both idle adjusting screws and springs.

►*CAUTION*—Do not remove throttle valves or shaft unless these parts require replacement (channels in throttle body can be cleaned with valves in place).

Accelerating Pump Housing—Lift off conical return spring, pull diaphragm and rack out (allow pump lever to rotate—necessary to disengage rack from pinion). Remove cotterpin and washer from end of pump shaft, tap shaft out of housing and pinion gear, lift pinion gear out.

►*CAUTION*—Do not lose felt washer on shaft at each side of housing.

Cleaning & Inspection: Clean all parts (EXCEPT Pump & Diaphragm Assembly and Power Valve Diaphragm Assembly) in carburetor cleaning solvent, blow out all fuel channels and passages with air, dry parts with air. Check all parts for wear or damage.

►*CAUTION—Do not use wire or drills to clean or gauge jets and other calibrated parts.*

Reassembly: Use all new gaskets (see Service Parts data below). Reassemble carburetor by reversing disassembly directions and note the following important instructions:

Float Assembly—Install float over power valve stem with tang on float arm on outside of balance spring. See that balance spring not distorted, replace spring if free length greater than 9/16". Adjust float level and balance spring tension before installing cover assembly on carburetor housing.

Pump Housing Assembly—Parts must be assembled and installed exactly as follows to insure correct pump operation: Place steel washer and felt washer on pump shaft, assemble actuating spring on shaft with small hooked end against actuating lever, place pinion gear in gear slot in housing, insert pump shaft, sliding shaft through gear until knurled section of shaft is against gear, then tap shaft lightly through gear, assemble felt washer and flat washer on end of shaft, install cotter pin. Check to see that shaft rotates freely. Install pump diaphragm, engaging rack teeth with pinion gear (pinion will turn as rack inserted in housing), in such a position that when the diaphragm is in the "pump refill" or "cocked" position, the flat side of the pump lever arm will be parallel to the mounting face of the pump housing (NOTE—this may require lifting of rack and rotating of pump shaft and lever until correct position is secured). Install conical return spring on diaphragm retaining cup (spread last spring coil slightly so that spring is retained in cup). Install housing assembly on bowl, insert five mounting screws loosely, see that diaphragm not pinched or distorted, tighten all five screws evenly and securely. Check assembly for free movement. Return spring should cause arm to rotate freely from "discharge" point to "cocked" position (NOTE—if pump binds, tap end of shaft lightly to free it in housing). Turn actuating spring so that free end is against housing, use light wire engaged in spring hook to "wind up" spring 2½ turns, hook end of spring over pump lever. Check to see that pump operates freely from "cocked" to "discharge" position by hand.

Main Well Tubes—See that flat on head of each tube is aligned with flat in housing counterbore.

Balance Tube—Tube is curved and open end must face open end of air horn.

Cover & Bowl Assembly Installation—When installing assembly in housing, hold throttle valve in wide open position and make certain that pump actuating lever engages pump yoke in housing. After installation completed, check for free operation by moving throttle lever from closed to open position.

►*NOTE*—Pump spring will partially open throttle valves in closed position.

Carburetor Adjustments: After reassembly completed, check and adjust: Pump Actuating Lever, Pump Jet Targeting or Aim, Automatic Choke Setting, Choke Rod adjustment, Unloader & Fast Idle setting.

SERVICE PARTS: Gasket Set—Oldsmobile No. 7001849. **Repair Kit**—Oldsmobile No. 7001353.

ROCHESTER (CHEVROLET) CARBURETOR

MODEL B

Chevrolet—Partial Production (Late 1949)

DESCRIPTION: Plain tube, downdraft type of new design with concentric fuel bowl, double float, vacuum controlled power system, and fast idle and throttle kicker linkage for starting and warming up.

Fuel System: Metering jets are located in support assembly on underside of bowl cover and are suspended in the fuel in the bowl which minimizes accumulation of vapors in fuel passages. Fuel system operates as follows:

Idle Fuel System—Fuel is drawn from main nozzle cross-bar in air horn and mixed with air admitted through three air bleeds in cross-bar. Fuel mixture is then metered by idle tube (in end of cross-bar) and taken down through passage to idle ports at throttle edge. For closed throttle idling, fuel is discharged through lower port and controlled by idle adjusting screw. As soon as throttle valve is opened for low speed operation, additional fuel is discharged through secondary ports above throttle.

Main Fuel System—As throttle valve is opened and suction increases at main discharge nozzle under cross-bar, fuel mixture is discharged through this nozzle and idle system drops out. This fuel is metered by Main Metering Jet and mixed with air admitted through air bleeds in cross-bar. Main fuel system delivers all fuel required for normal operation in 25-70 MPH. range.

Power System—Consists of a ball type Power Valve controlled by a spring-loaded vacuum piston which permits additional fuel to flow to main nozzle when valve is open. Vacuum piston is normally held up by manifold vacuum so that power valve is closed by spring below ball. Whenever manifold vacuum drops below 5" (for full power or high speed operation), spring forces piston down and plunger stem opens valve. Fuel admitted through valve is metered by Power Restriction in fuel passage.

Accelerating Pump System—Spring-loaded piston type which provides sustained discharge regardless of rate of throttle opening (link hole in pump plunger slotted and actuating spring located above pump piston). Fuel is drawn into pump cylinder through intake ball check in bottom of cylinder and is discharged through pump jet which sprays the fuel on the lower edge of the small venturi.

Pump Vapor Vent—Consists of a ball check valve in the piston head which allows any fuel vapor in cylinder to escape through passage in pump plunger opening into bowl. This check valve is closed during normal pump operation.

IDLE ADJUSTMENT: If carburetor out of adjustment, turn idle adjusting screw in until it is seated, then back screw out 1½ turns. Start engine and allow it to idle until thoroughly warmed up. With engine warm (choke valve wide open, fast idle inoperative), adjust as follows:

Idle Screw Setting—Set for smooth idle. Final setting should not be more than ½ turn in or out from initial 1½ turns open position.

Idle Speed—450-500 RPM. with warm engine.

ACCELERATING PUMP: Not necessary to check pump. No seasonal adjustment provided.

POWER JET: Valve opens when manifold vacuum drops below 5" of mercury. No adjustment required.

FLOAT LEVEL: *CAUTION—Two adjustments required:*

Float Level—1 5/16" from bottom of each float to machined surface (gasket seat) on bowl cover with needle valve closed (float and cover assembly inverted). To check float level, remove air horn and float assembly, remove float hinge pin and lift floats out, remove gasket. Re-install floats. Hold assembly in inverted position, measure from gasket seat on cover to bottom of **each float.** If this distance not 1 5/16" and equal for both floats, adjust by bending float arms (CAUTION—do not twist arms which may cause floats to contact sides of bowl). Then check float travel.

CONTINUED ON NEXT PAGE

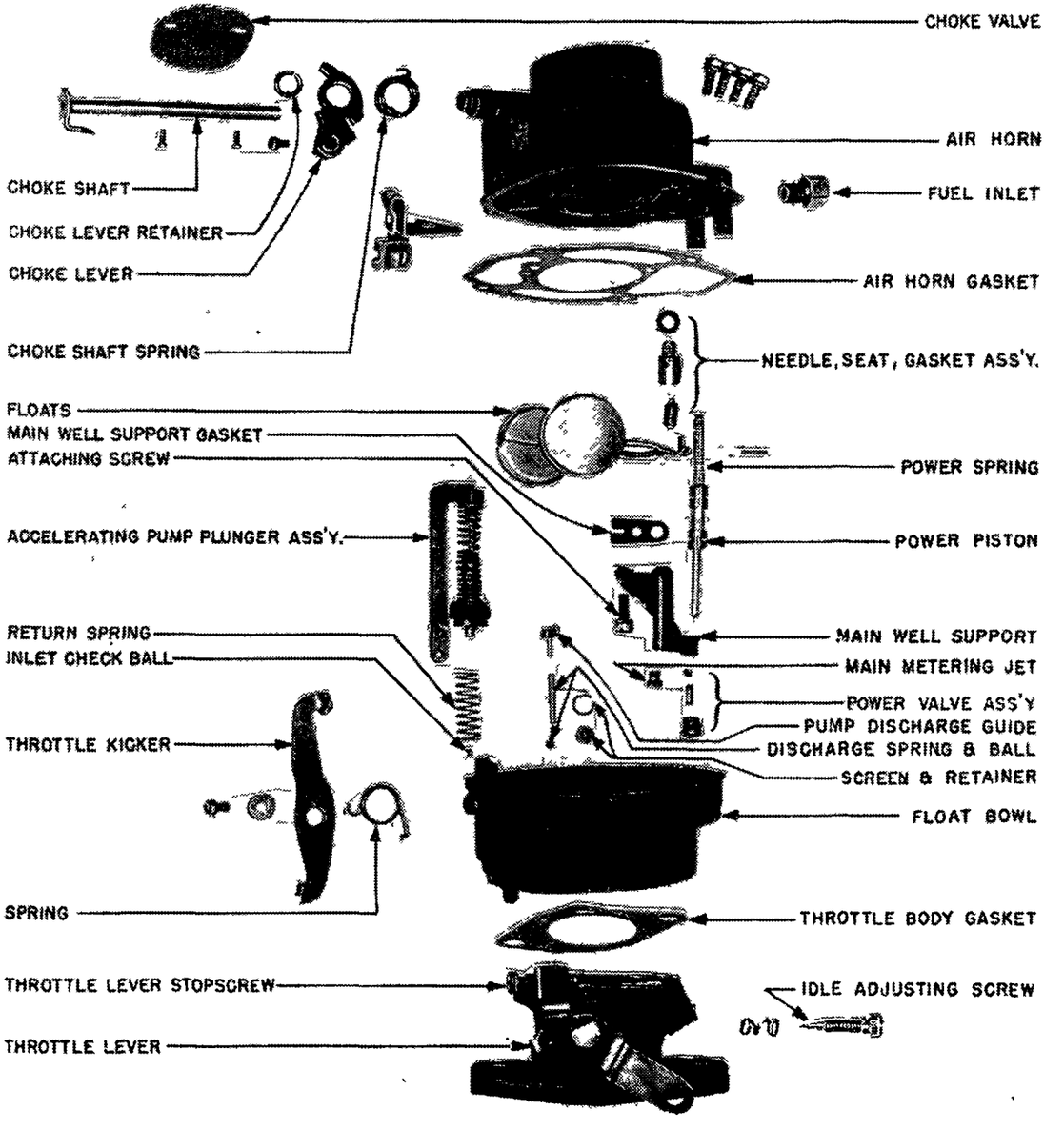

ROCHESTER (CHEVROLET) CARBURETOR

ROCHESTER (CHEVROLET) CARBURETOR (C nt.)

►*CAUTION—Both floats must be set exactly alike.*

Float Travel—1 3/4-1 27/32" from gasket seat on cover to bottom of each float with valve open and floats in extreme lower position. To check, hold assembly in upright position so that floats drop to bottom of travel, measure from gasket seat on cover to bottom of floats. If distance not within limits, adjust by bending float tang on float lever.

►*INSTALLATION CAUTION*—Before re-installing air horn assembly, remove floats and install **new gasket**, hold throttle kicker in vertical position (against spring tension) when lowering air horn assembly on carburetor bowl.

FAST IDLE (THROTTLE KICKER): Consists of a spring-loaded kicker lever mounted on the side of the bowl casting. Lower end of kicker lever acts as a stop for the throttle lever stopscrew and upper end bears against fast idle cam which is integral with the choke valve lever. Rotation of cam as choke valve is closed for cold starting rocks the kicker lever and opens the throttle valve to a fast idle position.

Adjustment—Not required. Operation will be satisfactory if parts correctly assembled.

CHOKE: Choke valve is offset semi-automatic type (shaft is spring-loaded on lever so that valve is free to assume correct position during warming up period).

Adjustment—With control wire retainer screw on choke lever loosened, see that choke button on instrument panel pushed all the way in, hold choke valve wide open, tighten retainer screw. Check operation to see that choke valve fully closed when button pulled out.

CARBURETOR OVERHAUL: With carburetor removed from engine, disassemble, clean, and inspect all parts as follows:

Disassembly: Take out four air horn and bowl cover attaching screws, remove choke control bracket. Hold throttle kicker in vertical position (free of fast idle cam), lift air horn and bowl cover assembly straight up using care not to damage floats. Disassemble these parts as follows:

Air Horn & Bowl Cover—Remove float hinge pin and float assembly, lift off gasket, remove float needle, needle seat, and gasket. Remove main metering jet and power valve from main well support (CAUTION—do not lose ball and spring when removing power valve). Take out main well support attaching screw, lift off support, remove gasket, lift out power piston and spring.

Choke Mechanism—If choke parts require servicing or replacement, remove choke valve screws, lift valve out. Remove retainer ring from groove in shaft boss on air horn, slide shaft, spring, and lever assembly out of air horn casting.

Float Body—Take out pivot screw and remove throttle kicker lever and spring. Hold pump plunger down in cylinder, remove cotter pin or hairpin retainer from pump link, remove link from throttle lever and pump plunger, lift pump plunger from bowl, lift out return spring. Remove ball check from bottom of pump cylinder. Turn pump discharge guide until it can be removed, remove discharge spring and ball check by inverting assembly and allowing these parts to fall out. Remove pump intake screen retainer and screen.

Throttle Body—After disassembling float body, take out two throttle body attaching screws, lift throttle body off. Unscrew idle adjusting screw and remove screw and spring.

►*CAUTION—Do not remove throttle valve* (valve is close fit and idle discharge holes are drilled in correct relationship to valve which will be disturbed if valve and shaft removed).

Cleaning & Inspection: Wash all parts thoroughly in carburetor solvent, dry with air. Blow out all passages with air and inspect for carbon deposits (CAUTION—Do not use wire or drills to clean out drilled passages or calibrated holes). Inspect all parts for wear or damage.

►*NOTE*—Replace Throttle Body Assembly if throttle arm or shaft excessively worn or damaged. Do not attempt to remove and replace throttle valve.

Reassembly: Use new gaskets. Reassemble carburetor by reversing disassembly directions and note the following important points:

Choke Valve Installation—Install valve with letters "RP" facing upward, center valve in air horn before tightening attaching screws. Turn choke shaft spring clockwise until outer hooked end engages upper end of choke lever (loose lever to which choke control attached), wind up inner end of spring approximately ½ turn and hook over end of choke shaft lever.

Accelerating Pump Ball Checks—Install aluminum intake check ball in bottom of pump cylinder, see that ball lifts freely from its seat. Install steel outlet check ball in outlet passage in bowl casting, tap ball lightly with hard fibre or brass rod to seat it, then make certain that ball lifts freely from its seat. Install bronze spring on top of outlet ball, index end of discharge guide in spring and press guide down until top is flush with bowl surface.

Float Assembly—Install air horn and bowl cover gasket before installing floats. Make certain that tang on the float lever faces up toward cover. Adjust float level and float travel before installing air horn on float body.

Adjustment—When carburetor assembled, set idle adjusting screw 1½ turns open. After carburetor installed and engine warmed up, adjust idle as directed under "Idle Adjustment."

1949-50 FORD (HOLLY) CARBURETORS

Ford No.
8HA-9510-A—Ford 6 Cyl. Passenger Cars (1949-50)
8BA-9510-A—Ford V8 Passenger Cars (1949-50)
7HT-9510-A—Ford 6 Cyl. Trucks (1949)
7RT-9510-A—Ford V8 Trucks (1949)

►*THROTTLE BODY GASKET CAUTION*—New type gasket, Part No. 7HA-9516 (6 Cyl.), 7RA-9516 (V8), which has hole for distributor vacuum passage, must be used when assembling these carburetors. **Do not use previous type gaskets.**

NOTE—These gaskets furnished in Repair Kits listed under Service Parts below.

DESCRIPTION: These carburetors are plain tube downdraft types of same design used on corresponding previous models except for vacuum connection for distributor advance control as follows:

Distributor Vacuum Connection: This connection located on the side of carburetor main body casting. Channel in carburetor casting terminates at two ports (1) in throat of main venturi, (2) in carburetor wall directly above throttle valve and resultant vacuum is combination of suction at these two points which provides correct advance for all engine operating conditions and speeds (see distributor advance data on car model page).

ADJUSTMENT & SERVICING: *See complete "Holley (Ford) Six Cylinder Type" and "Holley (Ford) V8, Lincoln & Mercury Type" Carburetors in previous release and set these carburetors to the following specifications:*

IDLING ADJUSTMENT

Idle Screw Setting—Warm up engine (choke valve must be wide open and fast idle inoperative). Turn screw out until engine begins to roll, then turn screw in just enough for smooth running (one screw only on 6 Cyl. engines, two screws on all others—adjust both screws alike).

NOTE—Initial setting of screws (for warming up engine) 1 turn open.
Idle Speed—500 RPM.

ECONOMIZER (POWER VALVE)

Power valve opens when manifold vacuum drops to approximately 8½-9".
No adjustment required.

ACCELERATING PUMP

Seasonal Adjustment—Engage pump link in proper hole in throttle lever:
Center Hole (Medium Stroke)—Normal operation.
Inner Hole (Minimum Stroke)—Hot weather.
Outer Hole (Maximum Stroke)—Cold weather.

FLOAT LEVEL

Float Level (Ford 6 & V8 Models): 1.322-1.353" from bottom of float to gasket seat on cover with needle valve seated (using 9550-A Gauge). To check float, with bowl cover and float assembly off carburetor, invert cover allowing float to hang on needle valve. With gauge 9550-A resting on bowl cover, the "GO" end of gauge (1.353") should pass over the float while the "NO GO" end of the gauge (1.322") should not.

SERVICE PARTS

►*REPAIR KIT NOTE*—Repair kits listed below include all necessary gaskets, jets, and other parts required for carburetor overhaul. Jets furnished are correct size for particular altitude ranges noted.

Repair Kit No.	Carburetor on which used:
7HA-9590-A	8HA-9510-A (0 to 5000 ft. Altitudes)
7HA-9590-B	8HA-9510-A (5000 to 10000 ft. Altitudes)
8BA-9590-A	8BA-9510-A (0 to 5000 ft. Altitudes)
8BA-9590-B	8BA-9510-A (5000 to 10000 ft. Altitudes)

1949-50 LINCOLN & MERCURY DUAL CONCENTRIC CARBURETOR

①8CM-9510—Mercury Model 9CM (1949-50)
①8EL-9510—Lincoln & Cosmopolitan (1949)
①—See Production Change Notes below.

►FIELD & PRODUCTION CHANGES

►**Lincoln & Mercury Carburetor Model Production Changes**—Various models used as follows:

Altitude	Lincoln Carburetors ①9-48 & Earlier	10-48 & Later
Sea Level	8EL-9510-A	②8EL-9510-D
5000 ft.	8EL-9510-B	②8EL-9510-E
10000 ft.	8EL-9510-C	②8EL-9510-F
	Mercury Carburetors	
Sea Level	③8CM-9510-A	④8CM-9510-D
5000 ft.	③8CM-9510-B	④8CM-9510-E
10000 ft.	③8CM-9510-C	④8CM-9510-F

①—Stamping date on pump boss on air horn.
②—Have modified Main Well Tubes (cannot be installed on earlier models). Beginning 1-49, have Float Control Spring (can be installed on earlier carbs.—see "Carburetor Float & Spring Change").
③—Have original Main Well Tubes & Main Metering Jets (see "Mercury Carburetor Jet Change").
④—Have new type Main Well Tubes (cannot be installed on earlier carbs.) and second type Main Metering Jets. Beginning 1-49, have Float Control Spring (can be installed on earlier carbs.—see "Carburetor Float & Spring Change" below).

►**Lincoln & Mercury Carburetor Float & Spring Change to improve float level stability**—On carburetors prior to date 1-49 (stamped on top of air horn directly above accelerating pump), install new Float and Float Spring, as furnished in Carburetor Float Kit Part No. 8CM-99525, as follows:

Float & Float Spring Installation—Completely disassemble and clean carburetor (see Disassembly data) and when reassembling carburetor, install new float and spring as follows: Insert float needle valve and see that needle move freely, tilt carburetor to prevent needle dropping out. Place straight end of float spring in hole in arm of float and lever assembly, position float in carburetor main body so that free end of spring drops over rounded boss in bottom of bowl, insert hinge pin through bowl and float lever hinge, screw pin securely in place. Check to see that float and needle move freely and that spring is properly positioned. **Change stamping date on carburetor to 1-49** (Carbs. dated 10-48 to 12-48—do not stamp this date on Mercury carburetors dated 9-48 and prior unless Kit 8CM-99524 also installed).

►**Lincoln & Mercury Carburetor Flooding Correction** See Float & Spring installation (above). Flooding and unsatisfactory performance may also be caused by clogged channels or excessive fuel pump pressure (must not exceed 4 lbs.).

►**Mercury Carburetor Jet Changes to Correct Flat Spot or Stumble on Acceleration**—On carburetors prior to date 10-48 (stamped on top of air horn directly above accelerating pump), install new Main Well Tubes and Main Jets, furnished in Carburetor Kit, Part No. 8CM-99524 **for Mercury carburetors only.** To install these jets, disassemble and clean carburetor (see Disassembly data), discard old parts and install new parts. **Change stamping date on carburetor to 10-48.**
IDENTIFICATION NOTE—New parts can be distinguished by following markings:

Main Well Tubes—Marked by letter "S" stamped on top. Side holes are 66 (upper), 70 (lower) and both holes are 3/32" lower than corresponding (68 upper and lower) holes on old type main well tube.
Main Jet—Marked "49" on side (previous type marked "48").

►**Lincoln & Mercury Carburetor Acceleration Stumble Correction**—See Mercury jet changes (above). May also be caused by dirt restricting carburetor channels or improper seating of accelerating pump intake ball check or discharge needle valve (clean all channels and reseat ball check and needle).

►**Lincoln & Mercury Fuel Filter Change**—First type (copper screen) filter in combination fuel-and-vacuum pump should be replaced by later "Edge Type Filter" when servicing carburetor (type of filter can be determined by inspection).
FILTER PARTS KIT—New "Edge Type Filter" furnished in kits containing strainer and cork gasket Lincoln—#8EL-99360, Mercury—#8CM-99360.

DESCRIPTION: These "Dual Concentric" carburetors are plain tube, dual (double barrel), downdraft types with automatic choke and fast idle control. Air in-

CONTINUED N NEXT PA E

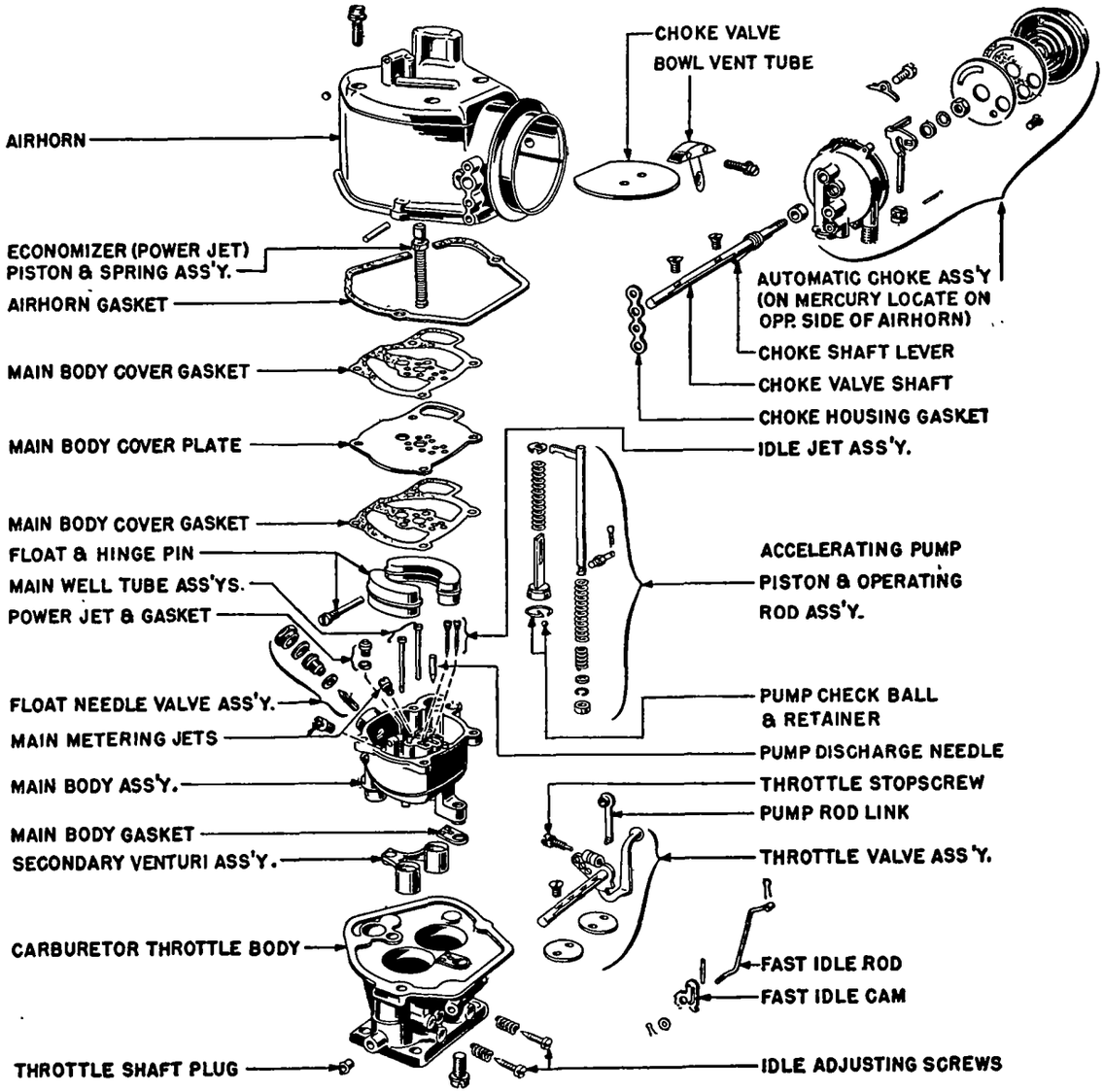

1949-50 LINCOLN & MERCURY DUAL CONCENTRIC CARBURETOR

1949-50 LINCOLN & MERCURY DUAL CONCENTRIC CARBURETOR (C nt.)

take is on side of air horn and circular float bowl (main body) is mounted on throttle body casting within air horn so that air flow is directed around the bowl to cool the fuel. All metering jets are located in this main body casting and air bleeds and vents consist of openings in the main body cover plate which open into the air horn.

ADJUSTMENT & OVERHAUL

IDLING ADJUSTMENT: Idle adjusting screws control fuel mixture discharge from lower idle ports and should be turned out for richer mixture. Adjust only when engine warm (automatic choke and fast idle inoperative) and set for highest steady vacuum reading (use vacuum gauge).

Idle Speed—500 RPM. hot or slow idle speed.
Idle Speed (Lincoln Hydra-Matic)—375-400 RPM.

METERING JETS: All jets are fixed non-adjustable type. See Holley (Ford) Jet Specification Table.

►***CAUTION—See Mercury Carburetor Jet Change data under "Field & Production Changes" above.***

POWER VALVE (ECONOMIZER): Valve remains closed in the normal speed range and is opened by the vacuum piston spring (when manifold vacuum falls off) to permit additional fuel flow to the main nozzles. No adjustment required.

Setting—Valve opens when manifold vacuum decreases to 5-7" of mercury.

ACCELERATING PUMP: Positively operated by throttle lever with spring-loaded piston for prolonged discharge. Stroke is adjustable by engaging pump rod link in correct hole of throttle shaft lever
Center Hole—Normal operation (medium stroke).
Inner Hole—Extreme hot weather (min. stroke).
Outer Hole—Extreme cold weather (max. stroke).
NOTE—Accelerator link length decreased 1/16" (Lincoln), 1/32" (Mercury) beginning 10-48.

FLOAT LEVEL: Fuel Level—½" ± 1/32" (0.500" ± 0.032") below top edge of bowl with intake valve seated. To check level, remove air horn and main body cover plate (see Disassembly directions), use Gauge 9550-B to check fuel level.
Adjustment—Bend tab at rear of float which contacts intake needle **down** to raise float level, or **up** to lower float level.

CAUTION—Double floats are used and must be set alike.

AUTOMATIC CHOKE: Consists of a thermostatic coil and vacuum piston assembly in a housing mounted on air horn and hooked to choke valve shaft lever.

Setting—Thermostat cover mark centered on scale

Adjustment—Not required. The standard setting can be adjusted to compensate for fuel and operating conditions by rotating housing clockwise (for more choke and richer warming up mixture) or counter-clockwise (for less choke action and leaner warming up mixture).

FAST IDLE: Consists of a fast idle cam linked to the choke valve and serving as a stop for the throttle stopscrew (idle speed adjusting screw). With choke valve closed, cam is rotated to position with throttle stopscrew resting on highest step for fast or cold idle. As choke valve opens, fast idle cam is rotated so that at normal operating temperature stopscrew is on lowest step for hot or slow idling speed.

CARBURETOR OVERHAUL: With carburetor removed from engine, proceed as follows:

Disassembly: Disconnect fast idle connector rod at fast idle cam. Take out five screws and lockwashers on top of air horn, carefully lift air horn off carburetor bowl. Remove main body cover plate and both gaskets from top of bowl. Invert carburetor (place hand over bowl to prevent parts falling out), take out both Main Well Tubes and Pump Discharge Needle. Unscrew float hinge pin, lift out float assembly and intake needle. Remove Main Jets, Idling Jets, and Power Jet Valve assembly. Remove accelerating pump piston assembly, spring retainer and pump check valve ball from cylinder.

►***CAUTION—Do not remove power valve piston unless new piston being installed (cannot be re-installed).***

Cleaning & Inspection: Clean out all passages and blow out with air (CAUTION—Do not use wire to clean jets and passages or wire brush to clean parts). Inspect all parts for wear or damage, note following points particularly:

Bowl & Cover Plate Mating Surfaces—These surfaces must not be burred or scratched (will permit leaks between drilled passages). **Do not file these surfaces** (if surfaces not smooth and flat, replace bowl). Check cover plate for correct type. Each plate stamped with number indicating size of air bleed holes directly over main wells (.073"—Lincoln, .067"—Mercury).

Main Jet & Well Jet Tubes—Check for correct size. ***See Mercury Carburetor Jet Change data under "Field & Production Changes" above.***

Accelerating Pump Check—Should be checked for leakage. Install pump discharge needle, pump check ball and spring retainer, and pump piston assembly. Fill bowl with fuel to normal level (½" below top). Hold discharge needle on seat with a blunt tool, operate pump and check for leakage at the following points:
(1) At Pump Discharge Needle. Fuel leakage at this point can be corrected by reseating needle (tap lightly using a brass drift and light hammer).
(2) At Pump Piston. Leakage past the piston indicates worn or damaged piston leather or loose pump rod. Inspect piston and replace if required.
(3) At Pump Intake Ball Check. Leakage at this point permitting fuel to flow back into bowl can be corrected by reseating ball. Tap ball lightly using a brass drift and light hammer.
CAUTION—Do not use steel drift which will flatten ball and permit leakage.

Float & Float Spring—***See Lincoln & Mercury Carburetor Float & Spring Change under "Field & Production Changes" above for parts and instructions.***

Reassembly: Install Main Jets, Idling Jets, accelerating pump check ball and spring retainer, pump piston (CAUTION—use care not to damage piston leather), float needle, float and spring assembly, main well tubes. Then install carburetor on engine and crank engine to fill bowl with fuel. Check float level (see Float Level data). Install bowl cover plate using **new gaskets** below and above plate. Place new air horn gasket on throttle body flange, use two Aligning Pins, No. 9524, to install air horn. Tighten air horn screws securely.

1949-50 HOLLEY (FORD) CARBURETOR JET SPECIFICATIONS

Car Model	Year	Carburetor Model	Venturi Size	Main Metering Jet Size	Main Metering Jet Part No.	Main Discharge Nozzle Part Number Left Hand	Main Discharge Nozzle Part Number Right Hand	Nozzle Air Bleed Plug Part No.	Economizer Assembly Part No.	Idle Tube Size	Idle Tube Part No.	Pump Nozzle Size	Pump Nozzle Part N .
FORD V8 "100" Car	1949-50	8BA-9510A		.051"⑧	59A-9533A	91A-9923B	91A-9922B	78-9924	78-9904	54cc.	78-9542	#69	78-9577
FORD 6 "H" Car	1949-50	8HA-9510A		.065"⑦	5GA-9533A	7HA-9920		1GA-9924	1GA-9904⑫		1GA-9542B		
FORD V8 '100' Truck	1949	7RT-9510A		.051"⑧	59A-9533A	91A-9923B	91A-9922B	78-9924	78-9904	54cc.	78-9542	#69	78-9577
FORD 6 "H" Truck	1949	7HT-9510A		.065"⑦	5GA-9533A	1GA-9920		1GA-9924	1GA-9904⑫		1GA-9542B		
LINCOLN 9EH, 9EL	1949	⑯		⑯	⑯			8EL-9991⑪	8CM-9904⑬	54cc.	8CM-9542	#70	
MERCURY 9CM	1949-50	⑰		⑰	⑰			8CM-9991B⑮	8CM-9904⑭	54cc.	8CM-9542	#70	

⑦—Use 5GA-9533B (.063") for 5,000-10,000 ft. altitude.

⑧—Use 59A-9533B (.049") for 5,000-10,000 ft. altitude. Use 59A-9533C (.047") for 10,000-15,000 ft. altitude

⑪—Carbs. marked "10-48" & later. 8CM-9991A on Carbs. Marked "9-48" & earlier. 8EL-9991 and 8CM-9991A not interchangeable.

⑫—Power Jet No. 7HA-9594.

⑬—Power Jet No. 8EL-9594.

⑭—Power Jet No. 8CM-9594.

⑮—Carbs. marked "10-48" & later. 8CM-9991C on Carbs. marked "9-48" & earlier. 8CM-9991B and 8CM-9991C not interchangeable.

⑯—See carburetor data for models used. Main Metering Jets: .055" No. 8EL-9533A (Sea Level), .053" No. 8EL-9533B (5000 ft. Alt.), .051" No. 8EL-9533C (10000 ft. Alt.).

⑰—See carburetor data for models used. Main Metering Jets: .048" early, .049" later (Sea Level), .046" early, .047" later (5000 ft. Alt.), .044" early, .045" later (10000 ft. Alt.).

STROMBERG MODELS AAV-167 & AAV-267

MODEL AAV-167

Part No.
Stromberg No.
380225—Buick, Series 40, 50 (1949)①

MODEL AAV-267

380226—Buick, Series 70 (1949)①
①—Carter "WCD" carburetors also used on these series.

►**CARBURETOR IDENTIFICATION (CODE) NOTE:** Code number stamped on bowl cover above fuel level inspection plug as follows: 7-69 (Buick 40, 50 AAV-167), 7-70 (Buick Series 70 AAV-267).

DESCRIPTION: Dual barrel, downdraft type of same design as used on corresponding previous models. All carburetors have Fast Idle, Automatic Choke, and vacuum controlled starting switch mounted on carburetor.

IDLING ADJUSTMENT

Idle Screw Setting—Both screws approximately 1¾ turns open or midway between inner missing point and outer rolling point (turn screws out for richer mixture).

Idle Speed—450 RPM. or 8 MPH. in Third Gear.

ACCELERATING PUMP

Car Model	Carburetor	Pump Capacity	Pump Setting
Buick 40, 50	AAV-167	11-15 cc. (F), 15-19 cc. (S)	Medium
Buick 70	AAV-267	10-14 cc. (F), 15-19 cc. (S)	Medium

NOTE—Pump capacity as shown is for 10 strokes, Fast (F), Slow (S).

Recommended Setting—Center Hole (medium stroke).

ECONOMIZER SETTING

Valve opens with manifold vacuum of 5-6" corresponding to a car speed of 65-70 MPH.

FLOAT LEVEL SETTING

Car Model	Type Float②	Float Setting①	Checking Tool
Buick (all)	Brass	3/64" Above	T-24971
Buick (all)	Steel	1/32" Below	T-24971

①—Tops of floats above or below tops of vertical guides on checking tool (sides of floats should be parallel to tool guides without any drag).
②—Floats may be either brass or steel type marked "5".

►*CAUTION—Only floats stamped "5" on float lever should be used (designed for 5 lb. fuel pump pressure).*

Fuel Level—19/32" below top edge of float bowl or even with bottom of threads in fuel level inspection plug hole on side of bowl with 5 lbs. pressure (engine idling).

THROTTLE VALVE SETTING

Car Model	Carburetor	Idle Port① Setting — Drill	Vacuum Port① Setting — Drill
Buick 40, 50	AAV-167	.022"—#60	.080"—#58
Buick 70	AAV-267	.022"—#60	.055"—#58

①—Drill rod inserted in ports (settings are distance from edge of valve to drill rod plus or minus .004").

►*CAUTION—Two small holes in throttle valves must be toward idle port side.*

FAST IDLE SETTING

►*CAUTION—Two settings required as follows:*

Fast Idle Cam—Close choke valve against #26 drill (.147"), see that fast idle cam spring holds cam upward against end of fast idle rod. Close throttle until stopscrew contacts fast idle cam. If screw does not just clear edge of highest step on cam and bear against second step, adjust by bending fast idle rod at the large curve.

Lever Clearance—Close choke valve against #53 drill, adjust clearance between ear on locking lever on throttle valve shaft and lug on loose lever on fast idle cam stud so that these levers just clear as throttle valv is opened and closed.

UNLOADER (CHOKE RELEASE) SETTING

Setting—11/64" or .173" (#17 drill rod) choke valve opening with throttle valve wide open. To check, open throttle valve wide so that stop on lever is against boss on throttle body, check choke valve opening with drill rod. To adjust, bend ear on throttle lever which contacts lug on fast idle cam.

AUTOMATIC CHOKE SETTING

(Series 40, 50)—1 Point Lean ("V" mark on cover one graduation to right or clockwise from projection on housing).
(Series 70)—Centered ("V" mark on cover in line with projection on housing).
Thermostat Cover Identification—Stamped "6" (all series).

SERVICE PARTS

Gasket Set—Stromberg No. 382373 (Buick AAV-167), No. 382372 (Buick AAV-267).
Repair Parts Kit—Stromberg No. RK-140 (Buick AAV-167), No. RK-141 (Buick AAV-267).

STARTING SWITCH (BUICK MODELS)

See complete "Stromberg Starting Switch" in previous release.
Checking Switch Timing (On Car)—Check and set hot or slow idle speed at 8 MPH. With engine not running, insert #65 drill or small wire through center of screen to operate vacuum piston (CAUTION—Do not remove screen). Close throttle, push vacuum piston in to inner position, hold piston in while opening throttle (will lock piston in inner position). While holding throttle open, remove wire used to operate piston, place 5/64" spacer between idle stopscrew and fast idle cam (hold cam in cold idle position). Close throttle so that spacer holds cam in position. Turn ignition "On". Open throttle (hold spacer in position to prevent it dropping out as throttle opened). **Engine should not crank.** Install 3/64" spacer in place between idle stopscrew and fast idle cam (hold cam in cold idle position) and close throttle against spacer. Turn ignition "On". Open throttle. **Engine should crank.** If engine does not crank with 3/64" spacer, or if engine does crank with 5/64" spacer, adjust by bending lip on operating lever on throttle shaft.

STROMBERG MODEL BXOV-26

Part No.
380178—Studebaker Commander & Land Cruiser 16A (1949) 17A (1950)

►**CARBURETOR IDENTIFICATION (CODE) NOTE:** Code number stamped on bowl: 6-104.

DESCRIPTION: Plain tube downdraft type of same design as used on corresponding previous car models.

ADJUSTMENT & SERVICING: Same as for previous Stromberg "BXOV-26" carburetors. *See complete "Stromberg BXOV-26" Carburetor article in previous release and set this carburetor to the following specifications:*

Idle Adjustment—Idle screw set for smooth running (between inner Lean or missing point, and outer Rich or rolling point).
Idle Speed—8-10 MPH. in high gear.

Accelerating Pump Capacity—5-8 cc. per 10 fast strokes, 11-14 cc. per 10 slow strokes with pump set for medium stroke (middle setting).

Economizer Setting—Valve opens with manifold vacuum of 4-6".

Float Level—Fuel level 5/8" below top edge of bowl with 3 lbs. pressure. NOTE—Use Tool T-24733 to adjust float.

Throttle Valve Setting—Edge of valve .010" ± .004" from #60 drill in idle port, and Flush with #56 drill in upper vacuum spark port.

Fast Idle Setting—With fast idle screw on lowest step of fast idle cam, move choke valve toward closed position as far as possible (do not force beyond position where screw contacts second step of cam), measure choke valve opening with 11/32" drill rod between edge of valve and wall. If opening not correct, adjust by bending connector rod.

Automatic Choke Setting—Mark "R" on coil housing cover in line with projection on housing. NOTE—Set at mark "M" if carburetor loads up or overchokes with std. "R" setting. Use setting "H" only for highly volatile fuels.

Service Parts—Gasket Set No. J-5652-G. Repair Parts Kit No. RK-112.

STROMBERG MODELS BXVD-3 & BXVES-3

Part No. **MODEL BXVD-3**
380249—Dodge, Models D29 & D30 (1949)—With Synchro-mesh Trans.

MODEL BXVES-3
380248—Dodge, Model D30 (1949)—With Gyromatic Transmission.

►**CARBURETOR IDENTIFICATION (CODE) NOTE:** Code number stamped on bowl as follows: 3-93 (BXVD-3), 3-95A (BXVES-3).

DESCRIPTION: Single barrel downdraft types of same design as carburetors used on previous models except for new Kick-down Switch (BXVES-3 only).

Slow-Closing Throttle (Dashpot)—Dashpot and piston in float bowl linked to throttle lever with adjusting screw on control lever under float bowl. See complete "Dodge Slow-Closing Throttle" in previous release and note adjustment directions below.

Kick-down Switch (Model BXVES-3 only)—Same design as switch used on Chrysler cars with Stromberg carburetors. See complete "Chrysler & DeSoto Kick-down Switch" in previous release and note adjustment directions below.

ADJUSTMENT & SERVICING: *See complete "Stromberg Models BXV-3, BXVD-3" Carburetors in previous release and set these carburetors to the following specifications:*

Idle Adjustment: Idle screw set for smooth running (between inner Lean or Missing point and outer Rich or Rolling point).
Idle Speed (BXVD-3—Synchro-mesh Cars)—6 MPH.
Idle Speed (BXVES-3—Gyromatic Cars)—450-475 Engine RPM.

Accelerating Pump Capacity: 11-14 cc. per 10 slow strokes (pump travel ¼-9/32") with pump set for medium stroke (middle setting).

Recommended Setting—Center hole (medium stroke) summer, outer hole (maximum stroke) winter.

Economizer Setting—Valve opens with manifold vacuum of 3-5" corresponding to car speed of 65-70 MPH.

Float Level: Fuel level 5/8" below top edge of bowl with 3 lbs. pressure. NOTE—Use Tool T-24733 to adjust float.

Throttle Valve Setting: Edge of valve Flush (plus .006", minus .000") from #58 drill in idle port, and flush with two #58 drills in vacuum spark ports.

Fast Idle Setting: No adjustment required.

Slow-Closing Throttle (Dashpot) Setting: (BXVD-3) 5/16-11/32", (BXVES-3) 13/32-7/16" piston travel with all slack removed from linkage.

Adjustment—Turn adjusting screw in lever under float bowl OUT to lengthen stroke or IN to shorten stroke.

Kick-down Switch Setting (BXVES-3): 5/32" min. switch plunger travel up to point where throttle valve is wide open, and 1/16" min. over-travel of the plunger in this position.

Adjustment—Bend tang on throttle lever which contacts switch plunger.

TILLOTSON MODEL DY-9C

Crosley, Model CD & Hotshot Roadster (1949)

DESCRIPTION: Plain tube, downdraft type similar to design used on corresponding previous car models except for new Fast Idle mechanism as follows:

Fast Idle—Consists of an adjustable rod linking the fast idle lever on the choke valve shaft with the throttle lever so that the throttle valve is opened to fast idle position when choke valve closed for cold starting and warming up.

ADJUSTMENT & SERVICING: *See complete "Tillotson Models DY-9A, DY-9B" Carburetor in previous release and set this carburetor to the following specifications:*

ADJUSTMENT

Preliminary Adjustment—To warm up engine, set Main Adjustment Screw 2¾ turns open, Idle Adjustment Screw 1¼ turns open. After engine thoroughly warm, readjust as follows:

Main (Power Range) Adjustment—2-2⅛ turns open. Adjust with throttle approximately half-open. Turn screw in until engine begins to lose speed, then turn screw out until speed and power are at maximum.

Idle Adjustment—Approximately 1 turn open. Adjust with engine idling slightly faster than normal. Turn screw in until engine begins to lose speed and miss, then turn screw out until engine runs smoothly.

Idle Speed—700 RPM. or 7-8 MPH.

FLOAT LEVEL

►*CAUTION*—Before removing Upper Body Assembly to check or adjust float level, take out Idle Adjustment Screw and remove Idle Tube from adjustment screw hole. Idle Tube and Main Nozzle will be damaged by disassembly if this is not done.

Float Level—1 27/64" from face of air horn gasket to bottom of float with needle valve seated (remove air horn and float assembly and invert to check). NOTE—Clearance between air horn gasket and top of float will be 3/16" with this setting.

Fuel Level—23/32" below top edge of bowl or just below lower edge of fuel level inspection plug hole on side of bowl.

FAST IDLE

Adjustment—Back off throttle lever stopscrew so that throttle valve tightly closed. Hold throttle valve in this position, hold choke valve wide open, loosen setscrew on adjusting collar on fast idle connector rod (at throttle lever trunnion), position collar on rod so that it is against the trunnion, tighten setscrew.

►*CAUTION*—Reset idle speed after making this adjustment.

SERVICE PARTS

Gasket Set—Tillotson No. 07144. **Repair Parts Kit**—Tillotson No. 08613.

1949-50 STROMBERG DOWNDRAFT CARBURETOR JET SPECIFICATIONS

Car Model	Year	Carb. No.	Venturi Size	Main Metering Jet Size	Main Metering Jet Part No.	By-Pass Jet Size	By-Pass Jet Part No.	Main Discharge Jet Size	Main Discharge Jet Part No.	H.S. Bldr.	Idle Tube Size	Idle Tube Part No.	Idle Air Bld. Jet Size	Idle Air Bld. Jet Part No.	Pump Discharge Nozzle Size	Pump Discharge Nozzle Part No.
BUICK 40, 50	1949	AAV-167	1 1/32"	.045"	P-24773	#60	P-24674	#32-28	P-24670	#70⑭	#70	P-19424	#42㉖	P-24683	#68	P-24594
BUICK 70	1949	AAV-267	1 1/8"	.051"	P-24673	#54	P-21197	#32-28	P-24670	#70⑭	#70	P-19424	#42㉖	P-24683	#68	P-24594
DODGE D29, D30	1949	BXVD-3	1 7/32"	.061"	P-19442	#58	385056	#28-36	382897	#68㉓	#70	P-21778	#54	P-20470⑱	#70	——
DODGE D30 Auto. Trans.	1949	BXVES-3	1 7/32"	.061"	P-19442	#58	385056	#28-36	382897	#68㉓	#70	P-21778	#54	P-20470⑱	#70	——
STUDEBAKER Com. 16A	1949	BXOV-26	1 3/16"	.057"	P-19442	#54	P-21197	#28-36	382492	#70⑭	#70	P-21778	#54	P-20470	#70	P-24067
STUDEBAKER Com. 17A	1950	BXOV-26	1 3/16"	.057"	P-19442	#54	P-21197	#28-36	382492	#70⑭	#70	P-21778	#54	P-20470	#70	P-24067

⑭—Part No. P-23985.
⑱—Pump By-pass Jet 2#56, Part No. P-24062.
㉓—Part No. P-24315.
㉖—#70 in Main Body also.

ZENITH MODEL 228AV-10

Outline No. 10760①

Willys Jeep 4 Cyl. Station Wagon 4-63, Jeepster VJ-3, 6 Cyl. Station Sedan 6-63 (1948-49)

①—This Outline No. stamped on metal identification disc pinned on bowl cover (2nd. number on disc is car manufacturers part number). Use in ordering parts.

DESCRIPTION: Single barrel, plain tube, downdraft type with double venturi. Carburetor has vacuum controlled power jet valve system and positively operated accelerating pump linked to throttle lever.

►*CARBURETOR IDENTIFICATION*—These "228 Series" carburetors similar to "28 Series" except for two-hole idle system with idle adjusting screw located in throttle body which controls fuel discharge from lower (closed throttle) idle port.

Fuel System: Consists of an Idle Fuel System, High Speed System (Main Jet System & Power Jet System), and Accelerating Pump System which operate as follows:

Idle Fuel System—Supplies fuel for idling and driving up to approximately one-fourth throttle opening. Fuel is taken from main jet well (below main discharge jet) and is metered by calibrated hole in side of Idling Jet. At this point it is mixed with air admitted through permanent air bleed opening in carburetor air horn. Fuel mixture is then taken down through passage to idle discharge ports at throttle edge. Idle adjusting screw controls fuel mixture discharge through lower (closed throttle) idle port. As soon as throttle is cracked open, additional fuel is discharged through upper idle port also.

High Speed System—Supplies fuel for driving range above approximately one-fourth throttle opening. Consists of a discharge nozzle or ring slot in throat of secondary venturi through which fuel mixture is discharged into the airstream. This fuel mixture is supplied by Main Jet System (¼ to ¾ throttle opening) and is supplemented by Power Jet System (¾ to full throttle opening) as follows:

Main Jet System—Fuel is metered by Main Jet in bottom of float bowl and flows through Main Discharge Jet where it is mixed with air admitted through Well Vent Jet opening in carburetor air horn. Air enters fuel stream through bleed holes in side of main discharge jet. Fuel mixture then goes to discharge nozzle.

Power Jet System—Consists of a power valve controlled by a spring-loaded vacuum piston assembly which by-passes fuel directly to the main discharge jet. Valve is normally closed (piston held up against spring tension by manifold vacuum) but is opened by the piston stem whenever manifold vacuum drops off (sustained high speed, wide open throttle full-load operation, or sudden acceleration) permitting fuel to flow directly to the main discharge jet. This fuel is metered by calibrated hole in lower end of power jet valve.

Accelerating Pump System—Pump arm and plunger stem are positively operated by throttle lever (pump piston is spring-loaded on plunger stem to prolong discharge on sudden throttle openings). Fuel is drawn into pump cylinder through intake check valve in bottom of cylinder when throttle is closed, and is discharged through outlet ball check valve and Accelerating Jet into the throat of the primary (large) venturi when the throttle is opened. This fuel flow through the pump passages closes the Air Vent Check Valve (disc valve directly above outlet ball check) which vents the pump system when it is not in operation.

IDLING ADJUSTMENT: Adjust only when engine is warm (choke valve wide open, fast idle inoperative). Set throttle lever stopscrew for idling speed of 600 RPM. or 8 MPH. Adjust Idle Adjusting Screw for smooth idle, recheck idle speed.

►*CAUTION*—Idle screw controls fuel mixture and should be turned out (counter-clockwise) for richer mixture, in (clockwise) for leaner mixture.

PERFORMANCE: Should be satisfactory if idling adjustment correctly made. Main metering jet is fixed type and should not be changed for normal operating conditions. See Jet Calibration Table below.

ACCELERATING PUMP: Pump stroke is adjustable for seasonal requirements by engaging hairpin cotter in correct groove of pump plunger stem (directly above pump rod arm—accessible by removing air horn and bowl cover assembly) as follows:

Upper Groove—Minimum Stroke (hot weather).

Center Groove—Medium Stroke (normal operation).

Lower Groove—Maximum Stroke (cold weather).

CONTINUED ON NEXT PAGE

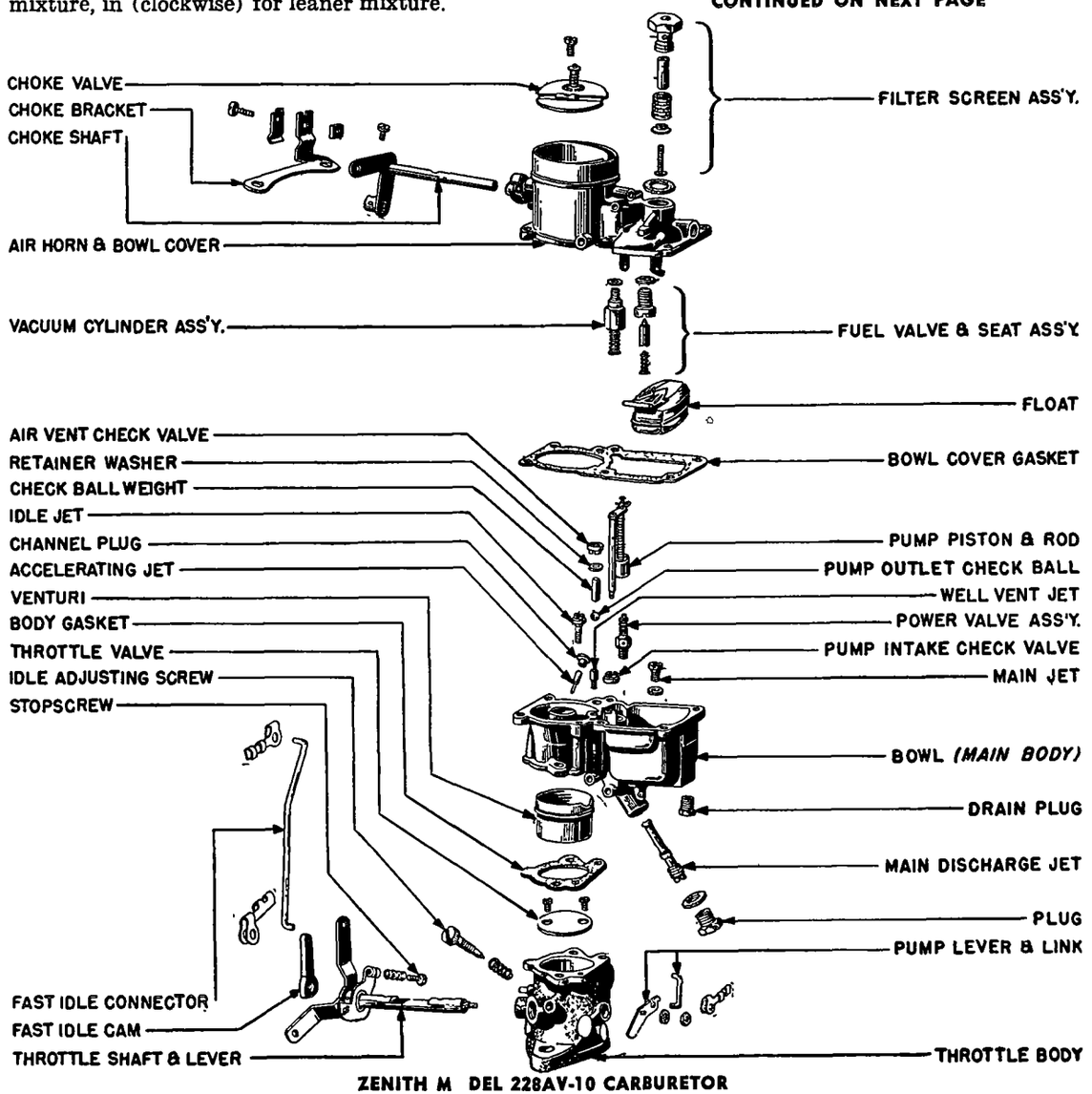

ZENITH MODEL 228AV-10 CARBURETOR

ZENITH 228AV-10 (C nt.)

FLOAT LEVEL: 45/64" plus or minus 1/64" from upper edge of float seam at free end of float to gasket seat on bowl cover with float and bowl cover assembly inverted. When checking float level, remove gasket, invert assembly and allow float to hang freely. Adjust by bending float lever at point next to float body (hold hinge lever firmly with thin-nosed pliers while bending).

►*CAUTION—Do not compress spring in valve stem which will cause incorrect float setting. Allow float to hang freely on inverted cover when checking float level.*

FAST IDLE: Consists of a fast idle cam linked to the choke valve lever. Cam serves as the stop for the throttle lever stopscrew and opens the throttle valve to a fast idle position when choke valve is closed for starting. No adjustment is required—see choke valve data below.

►*CAUTION—Fast idle cam must be in hot or slow idle position (stopscrew resting on flat of cam) when idle speed is adjusted.*

CHOKE: Choke valve is manually controlled and has poppet type relief valve. Adjust control cable so that choke valve is fully closed when choke button is pulled out, and fully open when button pushed in. Check fast idle rod and make certain that fast idle lever on choke valve shaft is positioned so that it allows choke valve to close fully with fast idle cam in fast idle position.

FUEL FILTER: Consists of a filter screen assembled on filter head (large hexagonal plug on bowl cover). Filter screen can be removed for cleaning by taking out screw in lower screen retainer.

DISASSEMBLY OF CARBURETOR: Each section should be separated and disassembled as follows:

Air Intake Body (Air Horn & Bowl Cover): Remove fuel filter assembly by taking out large hexagonal plug on bowl cover, disconnect fast idle connector rod, remove six screws attaching air intake body to fuel bowl assembly. Lift air intake body up slightly, loosen gasket from fuel bowl, lift air intake body straight up to avoid damage to float, remove gasket. Remove float axle (use screwdriver to press against axle at slotted side of hinge bracket, force axle through bracket), remove float, lift out needle valve. Remove fuel valve seat and fibre washer (C161-85 wrench). Remove vacuum cylinder assembly and fibre washer (C161-10 wrench). Take out choke valve attaching screw (CAUTION—file riveted end of screw flat before turning screw out to avoid stripping threads), lift out choke valve, slide choke valve shaft and lever assembly out.

Fuel Bowl (Main Body Casting): Remove main discharge jet plug and gasket on bottom of fuel bowl, disconnect accelerating pump link retainer and remove pump link, remove accelerating pump piston and rod assembly from pump cylinder (CAUTION—file burrs and rough spots off link connector end of pump rod before attempting to remove assembly). Take out two screws attaching fuel body to throttle body and separate these sections. Lift out venturi and gasket. Remove all jets, check valves, and channel plugs as follows:

Idling Jet—Use a screwdriver.

Well Vent Jet—Use special wrench C161-80.

Main Jet & Washer—Use a screwdriver.

Power Jet Valve Assy.—Use wrench C161-9.

Main Discharge Jet—Use wrench C161-1.

Pump Intake Check Valve—Bend back ears on upper end of valve, remove valve disc, screw special check valve tool, C161-5, securely into check valve body, remove valve by moving sliding weight on tool up against stop bar sharply.

Pump Air Vent Check Valve & Outlet Check Valve—Remove air vent check valve with tool C161-5 (see intake check valve removal above), invert assembly and remove retainer washer, weight, and ball.

Fuel Channel Plugs—Remove four lead channel plugs and accelerating jet channel plug by center-punching each plug and drilling #46 hole through plug (CAUTION—use care not to damage casting when drilling), pull plugs with special extractor tool C161-21 (lead plugs), C161-15 (accelerating jet channel plug).

►*CAUTION*—Do not remove idle channel bushing or nozzle bushing (these parts pressed in and need not be removed for carburetor servicing).

Throttle Body: Remove pump lever nut on end of throttle shaft, pull lever off shaft. Take out two screws in throttle valve (CAUTION—File riveted end of screws flat before turning screws out to avoid stripping threads), remove valve, slide throttle shaft and lever assembly out. Remove idle adjusting screw and spring.

CLEANING & INSPECTION OF PARTS: Remove corrosion and dirt from passages in fuel bowl casting with a 1/8" drill (grind cutting edge blunt to avoid damaging casting). Clean all metal parts thoroughly with cleaning solution and rinse in solvent. Blow out all passages with air. Inspect all parts for wear and damage, check jets and other calibrated parts for correct size (see Zenith Jet Specifications), use NEW PARTS as listed below when reassembling carburetor.

►*CAUTION—Do not use wire or drills to clean jets.*

New Parts—Install following new parts each time carburetor is overhauled (in addition to other parts being replaced because of wear or damage): Fuel Valve & Seat Assy., Power Jet Valve, Vacuum Cylinder Assy., Pump Intake Check Valve and Air Vent Check Valve, all Gaskets. NOTE—These parts included in Service Parts Kit.

REASSEMBLY OF CARBURETOR: After cleaning and inspecting all parts, reassemble carburetor by reversing disassembly directions and note following important points:

Throttle Shaft Bushing Replacement—Special tools must be used to install and line-ream bushings as follows: Counterbore Reamer C161-73-2, Bushing Driver C161-72-3, Line Reamer C161-71-3.

Throttle Valve Installation—Install valve attaching screws with heads upward (away from mounting flange), turn screws in loosely, close valve, tap valve lightly on mounting flange side to centralize it in bore, maintain pressure on valve while screws are tightened securely. Do not attempt to rivet ends of screws.

►*CAUTION—Above procedure necessary to insure correct flush fit of beveled edges of valve in bore.*

Pump Intake Check Valve Installation—Place new check valve on formed end of special tool C161-53. Invert fuel bowl assembly, insert tool in pump cylinder with guide bar in pump rod passage, press on tool to start check valve, then turn assembly over and drive check valve down to seat by striking tool with light hammer.

Pump Air Vent & Outlet Check Valve Installation—Insert valve ball, weight, retainer washer in passage in fuel bowl casting, start air vent check valve evenly in counterbore above retainer washer by hand (CAUTION—flat head of valve must face upward toward top surface of casting), fit machined end of stop bar on special tool C161-5 into upper end of check valve, drive check valve down into place. See that valve seats evenly in counterbore and is not cocked.

Accelerating Pump Check—After completing pump installation, check assembly for leaks by filling bowl with gasoline and forcing pump piston downward in cylinder. Fuel should be discharged through accelerating jet and no leakage should be noted at air vent check valve or intake check valve (leak at this point would result in fuel flowing back into bowl).

SERVICE PARTS: Gasket Set—Zenith No. C181-94.
Repair Kit—Zenith No. K-746.

ZENITH JET SPECIFICATIONS
Carb. Model 228AV-10, Outline No. 10760

Part	Size	Part No.
Venturi	#28	C38-72—8
Main Jet	#26	C52-7—26
Main Discharge Jet	#80	C66-70-2—80
Well Vent Jet	#28	C77-14—28
Accelerating Jet	#13	C55-8—13
Power Jet Valve	#17	C97-12—17
Idle Jet	#12	C56-3—12
Fuel Valve & Seat①	#35	C81-53—35

①—Matched Valve & Seat Assy. (spring-loaded type needle valve).

AUTO-LITE VRP, VRR, VAV, VBA REGULATORS

VOLTAGE & CURRENT REGULATORS

Car Model	Regulator	Generator	Grd. Ter.
Chrysler Six, C45 (1949)	VRP-4503A	GDZ-4801A,R	Pos.
	VRP-4503B	GGW-6001A,B,D	Pos.
	VAV-4404A	GGJ-6001A,B	Pos.
	VAV-4404A	GGJ-6001A,B	Pos.
	VBA-4101A①	GGJ-6001A,B	Pos.
	VBA-4101B	GGU-6001A,E	Pos.
Chrysler Eight, C46, C47 (1949)	VAV-4404B	GGU-6001A	Pos.
	VRP-4503B	GGW-6001A	Pos.
	VAV-4404B	GGU-6001A,E	Pos.
	VBA-4101B②	GGU-6001A	Pos.
	VBA-4101A①	GGJ-6001A,B	Pos.
Crosley, CD & Hotshot (1949)	VRP-4004F-2	GDZ-4806B	Pos.
DeSoto, S13 (1949)		See Chrysler Six above.	
Dodge, D29 & D30 (1949)		See Chrysler Six above.	
Frazer & Kaiser, All Models (1949)	VRP-4004F-2	GDZ-4818A	Pos.
	VAV-4002C	GGU-6001B	Pos.
Nash "600" 4940, Amb. 4960 (1949)	VRP-4004F	GDZ-4806A	Pos.
Packard "2200" 8 & Super 8 (1949)	VRP-4402A	GDZ-4801F,T	Pos.
Packard "2200" Cust. 8 (1949)	VRP-4402A	GDZ-4801G,V	Pos.
	VRP-4402B	GEG-4823F	Pos.
Packard "2300" 8 & Super 8 (1949)	VRP-4402C	GGW-6001E	Pos.
	VAV-4401B	GGU-6001C	Pos.
Packard "2300" Cust. 8 (1949)	VRP-4402C	GGW-6001F	Pos.
	VAV-4401B	GGU-6001D	Pos.
Plymouth, P17 & P18 (1949)		See Chrysler Six above.	
Studebaker Champ. 8G ('49), 9G ('50)	VRP-4004F	GDZ-4804A	Pos.
Studebaker Champ. 9G (1950)	VRP-6001A	GDZ-6001A	Pos.
Studebaker Comm. 16A (1949)	VRP-4004F	GDZ-4805A	Pos.
Willys, All 4 & 6 Cyl. (1949)	VRP-4007C-2	GDZ-4817A	Neg.

VOLTAGE REGULATORS

Hudson 6 & 8, All Models (1949)	VRR-4001A	GEC-4801A	Pos.

①—For Negative Ground, use VBA-4104A.
②—For Negative Ground, use VBA-4104B.

►FIELD & PRODUCTION CHANGES

►**REGULATOR PRODUCTION CHANGES & NEW SPECIFICATIONS:** Changes made in production on various units as follows:

►"VRP" SERIES

Current Regulator Air Gap—Setting changed to .048-.052" (after regulator serial No. 5U-000001), was .034-.038" before this number.

Cutout Relay Armature Springs—Changed to 10¾ turns (after Serial No. 12X-000001), was 12¾ turns before this number.

Current Regulator Armature Springs—Latest springs are 14½ turns (beginning Serial No. 8B-). Springs with 10¾ turns used from Serial No. 12X- to Serial No. 8B-, springs with 12¾ turns used before No. 12X-.

Voltage Setting—Setting changed and should be set to latest figures as shown in specification tables following.

►**"VRP" SERIES REGULATOR WIRING CHANGE**—New type current regulator winding (single heavy winding—see illustration) used on following regulators:

Beginning Dec. 1947 (Serial #12B Up)—VRP-4002B; 4004B, 4C, 4C-1, 4CX, 4D, 4E, 4G, 4H, 4K; 4005B, 5C, 5D; 4006A, 6AP, 6B, 6C, 6D, 6E, 6G; 4007A, 7D; 4009A, 9B, 9D; 4010A.

Beginning Sept. 1948 (Serial #9C Up)—VRP- 4001A, 1AX, 1B, 1C, 1D, 1E, 1F, 1G; 4002A, 2C, 2D; 4003A; 4004E, 4F, 4F-1, 4F-2, 4FX, 4J; 4007B, 7C, 7C-1, 7C-2; 4008A, 8B, 8C, 8D; 4009C; 4011; 4301AM; 4401C; 4402A, 2B; 4403A; 4404A; 4501C; 4502A, 4503A, 3AX.

All units of following models—VRP-4103A, 3B; 4104A, 4B, 4B-1; 4105A, 5AM; 4107A; 4302AM, 2BM; 4303AXM, 3BM; 4304AM; 4402C; 4405A; 4503B, 3BX, 3C; 6001A, 1B; 6002A.

All units f following models (with Single Resistor "R1")—VRP-4101A, 4102A, 4102AX, 4106A, 4106B.

►"VRR" SERIES

Cutout Relay Air Gap—Setting changed to .031-.034" (was .034-.038").

Cutout Relay Contact Opening—Setting changed to 4.2-4.8 volts (was 4.8-5.6).

Cutout Relay Closing Voltage—All units should be set at 6.4-6.6 volts but closing voltage in service varies (see Cutout Relay Setting specifications).

Cutout Relay Armature Spring—Beginning with Serial No. 12X-, spring has 10¾ turns (12¾ turns before this serial number).

Voltage Setting Change—Voltage setting for VRR-4002A, 2B, 3A, 4A, 4B, 5A changed. See Voltage Regulator Setting specifications for latest data.

►**VRR-4006A, 7A Regulator Voltage Setting Caution**—Before testing or adjusting voltage regulator on these models, regular TC-51 resistor (1.85 ohms) should be replaced by TC-51T (20 ohm). CAUTION—Replace the regular TC-51 (1.85 ohm) resistor after adjustments completed.

►"VAV" SERIES

►**"VAV" SERIES REGULATOR WIRING CHANGE**—New type current regulator winding (single heavy winding—see illustration) used on all "VAV" regulators beginning Sept. 1948 (Serial #9C Up).

►**CURRENT REGULATOR ARMATURE SPRING CHANGE:** Springs used on all units after Serial No. 8B- have 14½ turns, where 10¾ turns before this number.

DESCRIPTION

DESCRIPTION: These two-unit (VRR), and three-unit (VRP, VAV, VBA) regulators are similar in design to previous type regulators except for production changes (noted above) and following new features:

Temperature-Compensated Current Regulator Units (Some VRP & VAV, all VBA Regulators)—On these units, current setting changes as temperature increases during operation and units must be checked exactly as specified.

Resistor "R2" and Rectifier Connection (All VBA Regulators)—On these models, a rectifier (dry type) is connected in series with the "R2" resistor and these units are connected to cutout relay frame instead of current regulator frame as on other models (see illustration).

►*CAUTION*—Rectifier polarity depends on regulator ground polarity (connections reversed when negative terminal grounded instead of positive terminal).

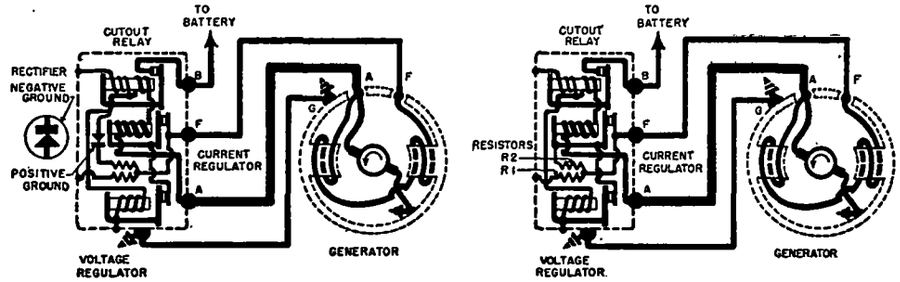

"VBA" SERIES (WITH RECTIFIER) "VRP" & "VAV" SERIES

AUTO-LITE REGULATOR WIRING (NEW TYPE CURRENT REGULATOR)

CHECKING & ADJUSTMENT

CHECKING & ADJUSTMENT: *See complete "Auto-Lite Regulators VRP, VRR, VRS, VRT, VRU, VRV, VRW, VRX Types" Regulator in previous release and set these regulators to the following specifications:*

CUTOUT RELAY

Air Gap—.031-.034" (all models). Use flat gauge Tool ST-281-9 (.031-.034") to measure clearance between magnet core and the armature core as close to armature hinge as possible with contacts open. Adjust by bending armature stop and make certain that stop does not rub against edge of armature.

NOTE—Armature 'seals' against yoke after contacts close and air gap must be measured with contacts open.

Contact Gap—.015" Min. (all models). Gap must not be less than .015" but may exceed this figure in service. With correct adjustment, contacts will close and armature will then 'seal' against yoke. CAUTION—If contact gap too large, contacts will not close before armature seals against yoke (armature must have further travel to effect this sealing).

C NTINUED N NEXT PAGE

AUTO-LITE VRP, VRR, VAV, VBA REGULATORS (C nt.)

CUTOUT RELAY SETTING

Model	Contacts Close—Setting—Contacts Open
All "VRP" Series	①6.4-6.6 volts—⑤4.1-4.8 volts
All "VRR" Series	②6.4-6.6 volts—⑤4.1-4.8 volts
All "VAV" Series	③6.4-6.6 volts—⑤4.1-4.8 volts
All "VBA" Series	④6.4-6.6 volts—4.1-4.8 volts

①—Operating range 6.4-7.0 volts except 6.35-6.75 volts on following:

VRP-4001AX, 4004CX 4004FX, 4102AX, 4303AXM, 4401AX, 4501AX, 4503AX, 4503BX.

②Operating range 6.4-7.0 volts except 6.35-6.75 volts on following: VRR-4008A & VRR-5008.

③—Operating range 6.4-7.0 volts on all VAV regulators.

④—Operating range 6.35-6.75 volts on all VBA regulators.

⑤—Opening from sealed position with approx. 4-6 amperes discharge current.

Closing Voltage—Connect ammeter in charging line at regulator 'B' terminal, connect voltmeter between 'A' terminal and ground. Operate generator and increase speed slowly until contacts just close but without sealing against yoke, note voltmeter reading at this point (NOTE—a 2000 ohm earphone connected between 'B' terminal and ground may be used to check closing, a click will be heard as the contacts close). To adjust, use tool ST-283 and adjust armature spring tension by bending lower spring hanger. Increase spring tension to increase closing voltage, lower spring tension to decrease voltage. CAUTION—Closing voltage must always be set .5 volts less than Voltage Regulator setting

Opening Voltage or Amperage—Connect meters as for Closing Voltage Check (above), decrease generator speed slowly and note voltmeter (or ammeter) reading as contacts open. Adjust by changing contact gap (see above).

VOLTAGE REGULATOR

Air Gap (All Series)—.048-.052" (pin gauge ST-281-7). Measure at stop pin on contact side with contacts just opening. Test air gap by connecting test lamp and battery between 'F' terminal and ground. Insert low limit pin gauge, depress armature by hand, lamp should dim or go out. Repeat test with high limit pin gauge. Lamp should remain lighted. To adjust air gap, loosen screw holding upper contact bracket, use tool ST-282 to raise bracket (to increase gap), tap top of bracket to lower contact (to decrease gap), tighten screw. See that contact spring is straight and parallel with armature.

Contact Gap (VRP & VRR Series)—.012" min. holding armature down against stop pin (CAUTION—do not press on contact spring, press down on armature evenly on both sides of spring). Gap may vary in service, if gap variation too great stop pin is wrong length and unit should be replaced.

Voltage Setting Check—Connect ammeter in charging line at regulator 'B' terminal (ammeter must read to 1 ampere and internal resistance must not exceed .01 ohm, use short heavy leads for connections), connect voltmeter between regulator 'B' terminal and ground (meter must read to .1 volt). Make certain that car battery is fully charged with gravity reading of 1.275-1.280 (substitute fully charged battery if car battery run down). Run engine at speed equivalent to 30 MPH for at least 15 minutes with generator charging battery to bring regulator up to operating temperature. Then note voltmeter reading which should agree with table below. NOTE—Single earphone of 2000 ohm or greater resistance connected between 'F' terminal and ground is recommended in checking regulator operation.

Adjustment—Use tool ST-283 to vary armature spring tension by bending arm at lower end of spring. Increase spring tension to increase voltage, decrease tension to decrease voltage. Replace cover and recheck performance.

VOLTAGE REGULATOR SETTING

Model	Voltage Setting Table
VAV-4001A, 2A, 2B, 2C	#3
VAV-4401A, 1B, 2A, 3A, 4A, 4B	#3
VAV-4405A	#3
VBA-4001A	#5
VBA-4101A, 1B, 2A, 3A, 4A, 4B	#5
VRP-4001A,B,C,D,E,F,G	#3
VRP-4001AX, 4CX, 4FX	#5
VRP-4002A,B,C,D; 3A	#3
VRP-4004A, B, C, D, E, F, F-1, F-2	#3
VRP-4004G, H, J, K	#3
VRP-4005A,B,C,D,E	#3
VRP-4006A,AP,B,C,D,E,F,G,H,J	#3
VRP-4007A,B,C,C-1,C-2,D	#3
VRP-4008A,B,C,D	#2
VRP-4009A,B,C,D	#3
VRP-4010A,11	#3
VRP-4101A,2A,3A,3B,4A,4B,4B-1	#3
VRP-4102AX	#5
VRP-4105A, 5AM, 6A, 6B, 7A	#3
VRP-4201A-1, 2A-1	#4
VRP-4301AM, 2AM, 2BM, 4AM	#3
VRP-4303AXM, 4401AX	#5
VRP-4401A, 1B, 1C, 1D, 2A, 2B	#3
VRP-4403A, 4A	#3
VRP-4501A, 1C, 2A, 3A	#3
VRP-4501AX, 3AX, 3BX	#5
VRP-4501A, 1C, 2A, 3A, 3B, 3C	#3
VRP-6001A, 1B, 2A	#3
VRR-4001A, 1B, 6A, 7A	#2
VRR-4002A, 2B, 3A, 4A, 4B, 5A	#3
VRR-4008A, 5008	#5

VOLTAGE SETTING TABLES

Table 2.		Table 3.		Table 4.		Table 5	
Temp.	Volts	Temp.	Volts	Temp.	Volts	Temp.	Volts
50°	7.63	50°	7.41	50°	7.44	50°	7.16
60°	7.57	60°	7.38	60°	7.39	60°	7.13
70°	7.50	70°	7.35	70°	7.35	70°	7.10
80°	7.43	80°	7.32	80°	7.31	80°	7.07
90°	7.38	90°	7.29	90°	7.27	90°	7.04
100°	7.31	100°	7.27	100°	7.22	100°	7.02
110°	7.24	110°	7.24	110°	7.18	110°	6.99
120°	7.17	120°	7.21	120°	7.14	120°	6.96

NOTE—Allowable variation ±.15 volt (Tables 2, 3, 4), ±.10 volt (Table 5).

CURRENT REGULATOR

Air Gap (All Series)—.048-.052" (pin gauge ST-281-7). Check and adjust gap in same manner as on Voltage Regulator (above).

Contact Gap (VRP Series)—.012" min. Check in same manner as on Voltage Regulator (above).

CURRENT REGULATOR SETTING

Model	Max. Amperes
VAV-4001A, 2A, 2B	49-51
VAV-4002C	44-46
VAV-4401A	49-51
VAV-4401B	44-46
VAV-4402A, 3A, 4A, 4B, 5A	See Note
VBA-4001A	48-52
VBA-4100 Series	See Note
VRP-4001A, 1AX	34-36
VRP-4001B	31-33
VRP-4001C	27-29
VRP-4001D	29-31
VRP-4001E	24-26
VRP-4001F, 1G	39-41
VRP-4002A, 2C, 2D	34-36
VRP-4002B	27-29
VRP-4003A, 4A	34-36
VRP-4004B, 4H	29-31
VRP-4004C, 4C-1, 4CX	31-33
VRP-4004D	27-29
VRP-4004E, 4J	39-41
VRP-4004F, 4F-1,4F-2,4FX	34-36
VRP-4004G, 4K	24-26
VRP-4005A	34-36
VRP-4005B	31-33
VRP-4005C	24-26
VRP-4005D	27-29
VRP-4005E	39-41
VRP-4006A, 6AP, 6D	29-31
VRP-4006B, 6G	24-26
VRP-4006C	27-29
VRP-4006E	31-33
VRP-4006F, 6J	39-41
VRP-4006H	34-36
VRP-4007A	31-33
VRP-4007B	39-41
VRP-4007C, 7C-1, 7C-2	34-36
VRP-4007D	29-31
VRP-4008A	39-41
VRP-4008B, 8D	34-36
VRP-4008C	31-33
VRP-4009A	29-31
VRP-4009B	27-29
VRP-4009C, 11	39-41
VRP-4009D	24-26
VRP-4010A	31-33
VRP-4101A, 2A, 2AX	21-23
VRP-4103A,3B,4A,4B,4B-1	19-21
VRP-4105A, 5AM, 6A, 7A	19-21
VRP-4106B	21-23
VRP-4201A-1, 2A-1; 4301AM	34-36
VRP-4302AM, 2BM, 4AM	16-18
VRP-4303AXM	31-33
VRP-4401A, 1AX	34-36
VRP-4401B, 1C, 2B, 3A, 4A	39-41
VRP-4401D	31-33
VRP-4402A	34-36
VRP-4500 Series	See Note
VRP-6001A, 2A	34-36
VRP-6001B	39-41

CONTINUED ON NEXT PA E

AUTO-LITE VRP, VRR, VAV, VBA REGULATORS (C nt.)

VRP-4500, VAV-4400, VBA-4100 Series Note—These current regulators temperature compensated and setting should be checked at two points as follows:

Test #1—After 15 minutes run with 10 ampere output. Test #2—After additional 15 minutes run with current regulator operating (add load to battery so that voltage is 6.8-7.0 volts which will cause current regulator to operate).

TEMPERATURE COMPENSATED CURRENT REGULATOR SETTINGS

Model	Current Setting Table
VRP-4501A, 4501AX, 4503A, 4503AX, 4503C	Table #1 (35 Amperes)
VRP-4501C, 4502A, 4503B, 4503BX	Table #2 (40 Amperes)
VAV-4402A, 4403A, 4404A, 4405A	Table #4 (50 Amperes)
VAV-4404B	Table #3 (45 Amperes)
VBA-4101A, 4102A, 4103A, 4104A	Table #6 (50 Amperes)
VBA-4101B, 4104B	Table #5 (45 Amperes)

Table #1 (35 Amperes)

Temp.	Test #1—Amperes—Test #2
40°F.	45 Max. 36-39
60	43 Max. 34-38
70	42 Max. 33-37
80	41 Max. 32-36
100	39 Max. 30-34

Table #2 (40 Amperes)

Temp.	Test #1—Amperes—Test #2
40°F.	49 Max. 41-45
60	47 Max. 39-43
70	46 Max. 38-42
80	45 Max. 37-41
100	43 Max. 35-39

Table #3 (45 Amperes)

Temp.	Test #1—Amperes—Test #2
40°F.	53 Max. 46-50
60	51 Max. 44-48
70	50 Max. 43-47
80	49 Max. 42-46
100	47 Max. 40-44

Table #4 (50 Amperes)

Temp.	Test #1—Amperes—Test #2
40°F.	58 Max. 51-55
60	56 Max. 49-53
70	55 Max. 48-52
80	54 Max. 47-51
100	52 Max. 45-49

Table #5 (45 Amperes)

Temp.	Test #1—Amperes—Test #2
40°F.	54 Max. 46-50
60	52 Max. 44-48
70	51 Max. 43-47
80	50 Max. 42-46
100	48 Max. 40-44

Table #6 (50 Amperes)

Temp.	Test #1—Amperes—Test #2
40°F.	59 Max. 51-55
60	57 Max. 49-53
70	56 Max. 48-52
80	55 Max. 47-51
100	53 Max. 45-49

Current Setting Check—Connect test meters and heat regulator as directed for Voltage Regulator Check (above). Then connect load in excess of rated capacity of regulator at point between regulator and battery (use bank of headlamp bulbs, or turn on all lights and accessories). Note ammeter reading with Current Regulator operating. Generator output must be within 5% of rated capacity stamped on regulator cover as shown in table above.

Adjustment—Same as Voltage Regulator (above). Use ST-283 tool.

FINAL 'FLASH' TEST:—After adjusting Cutout Relay, Voltage Regulator, or Current Regulator, final flash test should be made after regulator cover replaced, by operating generator and noting regulator performance immediately.

1949-50 FORD, LINCOLN, MERCURY REGULATORS

Model	Generator	Regulator
Ford 6 & V8 Pass. Cars (1949-50) Std.	8BA-10002-A	51A-10505-A or C
	8BA-10002-A	8M-10505
Ford 6 & V8 Trucks (1949) Std.	8BA-10002-A	51A-10505-A or C
	8BA-10002-A	8A-10505
Ford 6 & V8 All Models (1949) H.D.	8BA-10002-B	5EH-10505-C or E
Lincoln & Cosmopolitan (1949)	8EL-10002	5EH-10505-C or E
	8EL-10002	8L-10505
Mercury, All Models (1949-50) Std.	8BA-10002-A	51A-10505-A or C
	8BA-10002-A	8M-10505
Mercury, All Models (1949) H.D.	8BA-10002-B	5EH-10505-C or E

►NOTES, CAUTIONS, & CHANGES

►**REGULATOR CONTACT DESIGN CHANGES:** Contacts on early regulators can be replaced with later design contacts listed below.

Current Regulator Later Design Contacts: Following parts required:
No. 01A-10551-A—Armature with silver contact.
No. 01A-10653-A—Contact screw with silver contact (screw .41" long).
No. 01A-10568-A—Spacer (additional spacer installed bet. armature & frame).

Voltage Regulator Later Design Contacts: Following parts required:
No. 01A-10551-B—Armature with tungsten contact (brass rivet under arm).
No. 01A-10653-B1 or B2—Contact screw with platinum contact.
No. 01A-10568-B—Spacer (replaces original spacer on box type shunt regulators, or used together with old spacer on old type voltage regulators).

See "CONTACT REPLACEMENT" following for installation of these parts.

►**GROUND CAUTION:** Make certain regulator and generator ground in place when these units operating. See car page wiring diagram for ground locations.

DESCRIPTION

DESCRIPTION: 3 unit (Cutout Relay, Voltage Regulator, Current Regulator) regulator with separate voltage and current regulator units (these units were combined on previous 2-unit regulators). Regulators are vibrating type and charging rate is normally controlled by Voltage Regulator. Current Regulator operates when current reaches value in excess of rated capacity and limits current to this figure. Both regulators operate in the same manner by cutting the resistance in and out of the field circuit and control the generator output by regulating the field current. Cutout Relay is compensated for temperature by means of a bi-metal clip on the armature spring.

►*CAUTION*—Ford Generators and Ford Regulators are not wired in the same manner as units of other makes and cannot be operated in conjunction with units of other makes. Always operate Ford Generators & Regulators together.

CHECKING GENERATING CIRCUIT

CHECKING GENERATING CIRCUIT: Preliminary check of Battery, Charging Circuit Resistance, and Generator Output should be made to locate trouble if generating circuit faulty.

Battery: If specific gravity below 1.250, recharge battery or install fully charged battery.

Generator Output: Connect jumper between "A" and "F" generator terminals. Connect ammeter in charging line at generator (disconnect lead at generator "A" terminal, connect ammeter between this lead and the terminal). Gradually increase engine speed to 1500 RPM. and note ammeter reading which will be maximum output of generator and should be at least 33 amperes (Ford & Mercury), 40 amperes (Lincoln). If output less than this figure, repair or replace generator.

►*CAUTION—After Generator Output Test completed, disconnect ammeter before stopping engine. Disconnect jumper on generator after engine stopped. Engine should be stopped as soon as possible to prevent overheating generator.*

Charging Circuit: Check entire crcuit for high resistance as follows:

Charging Circuit Resistance—Connect ammeter in charging line at generator (disconnect lead at generator "A" terminal, connect ammeter between this lead and the terminal), connect voltmeter between charging lead disconnected from generator (same point ammeter connected) and ungrounded battery terminal post. Run engine until generator charges at exactly 20 amperes. Voltmeter reading should be 0.5 volt or less. If reading too high, localize cause of high resistance by checking voltage drop between following points (touch voltmeter test leads to these points and note voltmeter reading):
1—Negative battery post and starter switch terminal—0 volt.
2—Starter switch terminal and regulator "BAT" terminal—0.2 volt.
3—Regulator "BAT" terminal & regulator "ARM" terminal—0.2 volt.
4—Generator "A" terminal and regulator "ARM" terminal—0.1 volt.

Ground Circuit Resistance—Connect ammeter in charging line at regulator (disconnect lead at regulator "BAT" terminal, connect ammeter between this lead and the terminal), connect voltmeter between grounded battery post and generator frame. Run engine at speed required for generator output of 20 amperes. Voltmeter reading should be 0 volts. If higher reading noted (indicating voltage drop in ground circuit), check generator mounting on bracket and bracket mounting on engine for poor electrical contact, check generator, regulator, and battery ground connections.

CHECKING & ADJUSTING REGULATOR

CHECKING & ADJUSTMENT OF REGULATOR: Use special test set (with an adjustable resistor) or ¾ ohm resistance capable of carrying 10 amperes and which does not change in value due to temperature changes. A special Heyer

C NTINUED N NEXT PA E

FORD, LINCOLN, MERCURY REGULATORS (C nt.)

'DABAE' ¾ ohm resistance unit available for this purpose. To install resistor, disconnect charging line at regulator 'B' terminal (leave this lead disconnected while tests being made), connect ¾ ohm resistor to regulator 'B' terminal and ground opposite end of resistor. Then check and adjust regulator as directed below. NOTE—With this ¾ ohm resistor connected between regulator and ground, generator output is approximately 10 amperes.

►*NOTE*—Regulator should be at normal operating temperature when checking regulator settings.

►*CAUTION*—Ground connection must be in place when generator and regulator are operated. If ground wire disturbed by removal of regulator cover, **make certain that regulator is grounded whenever generator and regulator are being operated.**

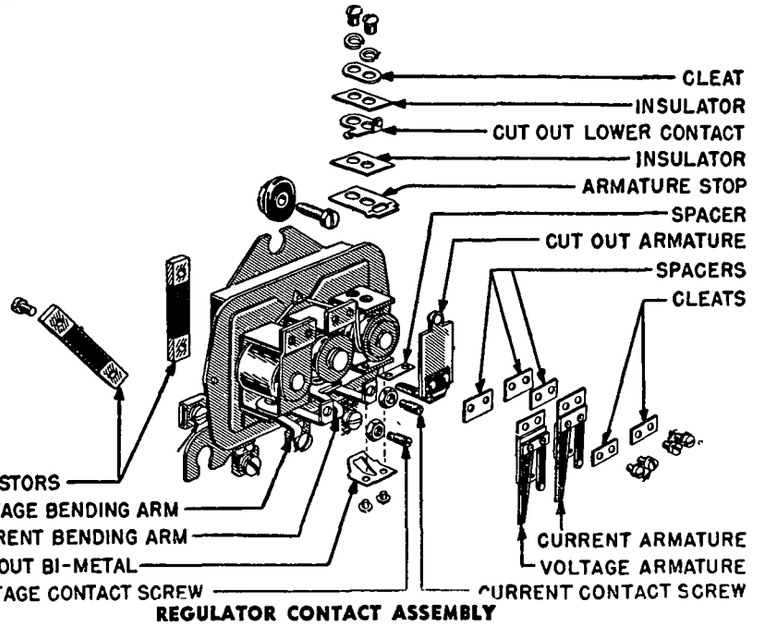

REGULATOR CONTACT ASSEMBLY

Relay Cut-in Voltage—6.0-6.4 volts cold (slightly higher when at operating temperature). To check, connect the voltmeter between regulator "A" terminal and ground. Start engine and slowly increase speed until cut-out relay contacts close (pointer will drop back slightly). Cut-in voltage should be within limits listed above. To adjust, remove regulator cover, bend bi-metal at lower end of cutout relay armature spring in to increase tension and raise cut-in voltage, bend out to decrease tension and lower cut-in voltage.

CAUTION—Cut-in voltage reading should be noted on first test and test should not be repeated as residual magnetism of the relay will cause subsequent cut-in voltage figures to be slightly lower.

►*IDLE SPEED NOTE*—If higher than cut-in point, it will be necessary to back off throttle stopscrew and lower idling speed below cut-in point before the above test can be made. If idling speed changed in this manner, make certain that speed is reset at 500 Eng. RPM. (5-7 MPH.) after tests completed.

Voltage Regulator Setting—7.0-7.4 volts cold, 7.2-7.6 volts after 20 minutes operation. Must be checked with cover in place and at temperature of 70-80°F. Connect ammeter in charging line at regulator "BAT" terminal (disconnect lead on this terminal, connect ammeter to this lead and to the terminal), connect voltmeter between regulator "ARM" terminal and ground. Run engine at 1500 RPM., adjust charging rate to 8-10 amperes (if less than 8 amperes, turn on lights or other load; if more than 12 amperes, cut in resistance of the test set). Note voltmeter reading with generator output of 8-10 amperes (CAUTION —cover must be in place when making this reading). To adjust, remove regulator cover, bend spring adjustment (bending arm—see illustration) upward to increase spring tension and voltage setting, or down to decrease spring tension and voltage setting. Re-install cover and repeat test.

►*CAUTION*—Voltage will drop approx. 0.2 volt when steel cover installed and should be allowed for when adjusting (aluminum covers do not change setting).

Current Regulator Setting—After checking Voltage Regulator (above) re-install regulator cover if removed. Proceed as for voltage regulator check with engine running at 1500 RPM. (approx. 30 MPH.), use Battery-Starter Tester to inlrease load (or press starter button), note ammeter reading which should agree with settings given below. To adjust, remove regulator cover, bend spring adjustment (bending arm—see illustration) upward to increase spring tension and current setting, or down to decrease tension and current setting.

Regulator Type	Current Setting	Amperes
51A-10505A		30-33
8M-10505		34-38
8A-10505		30-34
5EH-10505C (Ford—with 40 Amp. Generator)		30-33
5EH-10505C (Ford Truck—with 35 Amp. Generator)		34-36
5EH-10505C & 8L-10505 (Lincoln)		40-42

Cutout Relay Reverse Current—8 amperes maximum reverse current. After checking Current Regulator (above), reduce engine speed to obtain approx. 5 ampere reading, then reduce engine speed until negative reading secured (just before cut-out points open). Negative reading should be within limits listed above.

►*CAUTION*—After testing completed, remove meters, connect charging line to regulator "B" terminal.

CONTACT REPLACEMENT

CONTACT REPLACEMENT: Cutout Relay and Voltage and Current Regulator Contacts can be replaced as follows:

Cutout Relay: *CAUTION*—Lower cutout contacts replaceable only on regulators where contact mounting secured by screws (if contact secured by rivets, regulator must be replaced if contacts damaged).

Removal of Cutout Relay Contacts—Remove cover. Take out cutout armature, bi-metal, and spacer by removing 2 screws directly above "B" terminal. Disconnect two cutout winding wires from lower contact by softening solder. Remove cleat, insulator, lower contact, and armature stop by taking out 2 screws in lower contact.

Installation of Cutout Relay Contacts—Assemble in following: Install armature stop, insulator, lower cutout contact, insulator, and cleat, and hold in place with 2 screws (do not tighten). Solder 2 cutout winding wires to lower contact. Install armature with spacer under hinge and bi-metal outside hinge, and secure with 2 screws. Set Air Gap, and Contact Gap, and align contacts as described below.

Cutout Relay Contact Gap—.010" with armature against stop.

Cutout Relay Air Gap—.014" between armature and core with contacts open.

Contact Gap and Air Gap Setting—Insert .014" feeler between armature and core. Then set contact gap to .010" using a feeler gauge, by lowering armature stop and raising the lower contact, tighten 2 lower contact screws.

►*CAUTION*—Heel of armature must not touch relay frame.

Aligning Cutout Relay Contacts—Contacts must make and break squarely. If adjustment necessary, bend lower contact up or down, then check Air Gap and Contact Gap (may be disturbed by movement of lower contact).

Voltage and Current Regulator: Remove and install contacts as follows:

Removal of Regulator Contacts—With cover removed, remove cleat, armature, and spacer by taking out 2 screws in armature. Loosen contact screw locknut and remove contact screw.

Installation of Regulator Contacts—*CAUTION—Where Later Design Contacts being installed, see parts list at beginning for necessary replacements or additions required.* Install parts on regulator frame in following order: Spacer, armature, and cleat, tighten 2 screws, align contacts if necessary by bending upper contact arm.

Regulator Air Gap—.032-.035" between armature and core (contacts closed).

Setting Air Gap—Bend the spring adjustment (bending arm)—see illustration —to clear armature spring. Insert .035" gauge (round stock) between armature and core *(CAUTION*—On voltage regulator make certain gauge does not contact rivet on underside of armature). Press armature down, turn contact screw down to just touch armature contact, set contact screw with locknut. Realign contacts if required.

Regulator Contact Spring Tension—5 ozs. minimum with contacts just opening.

Checking Contact Spring Tension—Use a spring scale to measure tension just as contacts open. Adjust upper contact screw after loosening locknut if pressure below limits listed above.

►***Check Relay and Regulator Settings after completing above adjustments.***

DELCO-REMY "1118300" SERIES REGULATORS

	Generator	Regulator
BUICK		
40 (1949)	1102679	1118301
50, 70 (1949)	1102708, 9	1118357
40 (1950)	1102709	1118364
CADILLAC		
V8 Series (1949)	1102700	1118300
CHEVROLET		
Cars & Trucks (1949)	1102710	1118301
Door-to-Door Trks.	1102677	1118349
	1102726	1118361
Taxicabs	1102729	1118300
State Police & Trks.	1106751, 7	1118334
City Police & Cabs	1106752, 8	1118343
Canadian Cars (1949)	1102667	1118301
NASH		
Series 4940, 4960 (1949)	1102702	1118302
Series 5040, 5060 (1950)	1102702	1118302
OLDSMOBILE		
All 6 Cyl. (1949)	1102706, 7	1118300
All 8 Cyl. (1949)	1102704	1118300
PACKARD		
"2200" 8 & Super 8 ('49)	1102705	1118331
"2300" 8 & Super 8 ('49)	1102715	1118360
PONTIAC		
6 & 8 Cyl. (1949-50)	1102711	1118301
Police Cars	1106403	1118352
STUDEBAKER		
Comm. 17A (1950)	1102728	1118302

►**GROUND TERMINAL CAUTION**—Correct polarity (battery ground terminal) for each regulator is stamped on end of regulator base (together with regulator model number). Regulator polarity and battery ground must correspond.

►*CAUTION—Regulator contacts will pit and will have short life if wrong polarity regulator is used.*

►**GENERATOR REPOLARIZING CAUTION**—Whenever regulator or generator leads disconnected, generator must be repolarized **after leads reconnected but before engine is run** as follows: Connect jumper wire between "GEN" and "BAT" terminals on regulator momentarily to allow generator to assume correct polarity.

►*CAUTION—Failure to repolarize generator may cause severe damage (reversed polarity will cause vibration and arcing or burning of relay contact points).*

DESCRIPTION: These two-unit (Cutout Relay and Voltage Regulator) and three-unit (additional Current Regulator unit) regulators differ from previous Single-Core type regulators mainly in the following particulars:

Cutout Relay—Has adjusting screw (with Phillips type slot) for closing or cut-in voltage setting adjustment.

Voltage & Current Regulators—Armatures have a **single** spring with an adjusting screw to regulate the spring tension (voltage or current setting).

Regulator Resistances—Resistances are connected differently than on previous series (see diagram). One resistor is connected in series with the field circuit when either the Voltage or Current Regulator is operating. The second resistor is connected in parallel with field circuit (connected between regulator field terminal and cutout relay frame) and acts to reduce arcing when regulator contacts open.

TROUBLE SHOOTING: If generator and regulator operating satisfactorily, generator charging rate will be low when battery fully charged, and high when battery is discharged. If performance not correct, make the following quick checks to determine cause of trouble:

Fully Charged Battery & High Charging Rate—May be caused by 1) Incorrect Voltage Regulator Setting, 2) Defective Voltage Regulator, 3) Grounded generator field circuit (field coils, leads, or regulator grounded), 4) Regulator ground connection poor (regulator is grounded through mounting—see that base and mounting surface on dash are clean and mounting screws tight), 5) High temperature (will reduce battery resistance and permit high charging rate with normal voltage regulator setting).

NOTE—If trouble not apparent from above table, disconnect lead at regulator "F" terminal momentarily with generator operating at medium speed. If output remains high, generator field is grounded. If output drops off, regulator is grounded or setting is too high.

Discharged Battery & Low Charging Rate or No Generator Output—May be caused by 1) Loose connections, broken or damaged wires, 2) Defective battery, 3) High resistance in charging circuit, 4) Low regulator setting or burnt regulator contacts, 5) Defective generator.

NOTE—If trouble not apparent from above table, ground regulator "F" terminal momentarily while operating generator and increase generator speed. If output does not increase, generator is defective and should be checked. If output increases, regulator setting is too low, regulator contacts are burnt, or field circuit is open within regulator (connections or regulator winding broken).

Burnt Resistance, Windings, or Contacts—Caused by open circuit operation, open-circuited or broken resistance units, or high resistance in charging circuit.

►*CAUTION—Do not replace regulator until above conditions have been corrected (will cause failure of replacement regulator also).*

Burnt Relay Contacts—May be caused by reversed generator polarity. See "Generator Repolarizing Caution" above.

CHECKING & ADJUSTMENT (CUT-OUT RELAY): Air Gap and Contact Gap should be checked and adjusted with battery disconnected. Closing voltage is checked and adjusted with regulator and generator connected and operating together.

Air Gap: Press on armature directly above core until contacts just close (CAUTION—both sets of contacts must close simultaneously—see Contact Gap data below), measure air gap between armature and center of core with a feeler gauge.

CUT-OUT RELAY AIR GAP

Models 1118318, 1118346, 1118347	.017"
All other "1118300 Series" Regulators	.020"

Adjustment—Loosen two screws on armature hinge bracket at back of relay, raise or lower armature as required.

Contact Gap: Check contact gap for each set of contacts with armature at rest and up against armature stop. Contact gap must be correct as shown in table below and equal for both sets of contacts (both sets must close simultaneously).

CUT-OUT RELAY CONTACT GAP

Models 1118318, 1118346, 1118347	.032"
All other "1118300 Series" Regulators	.020"

Adjustment—Bend upper armature stop up or down as required (use special bending tool). Equalize contact gaps by bending contact fingers.

Cut-In (Closing) Voltage: Connect regulator to proper generator and to battery with voltmeter connected between regulator "GEN" terminal and ground on regulator base, and ammeter in series in charging circuit at regulator "BAT" terminal. Increase generator speed slowly and note voltage at instant relay contacts close. Decrease generator speed until contacts have opened. Adjust and recheck.

CONTINUED ON NEXT PA E

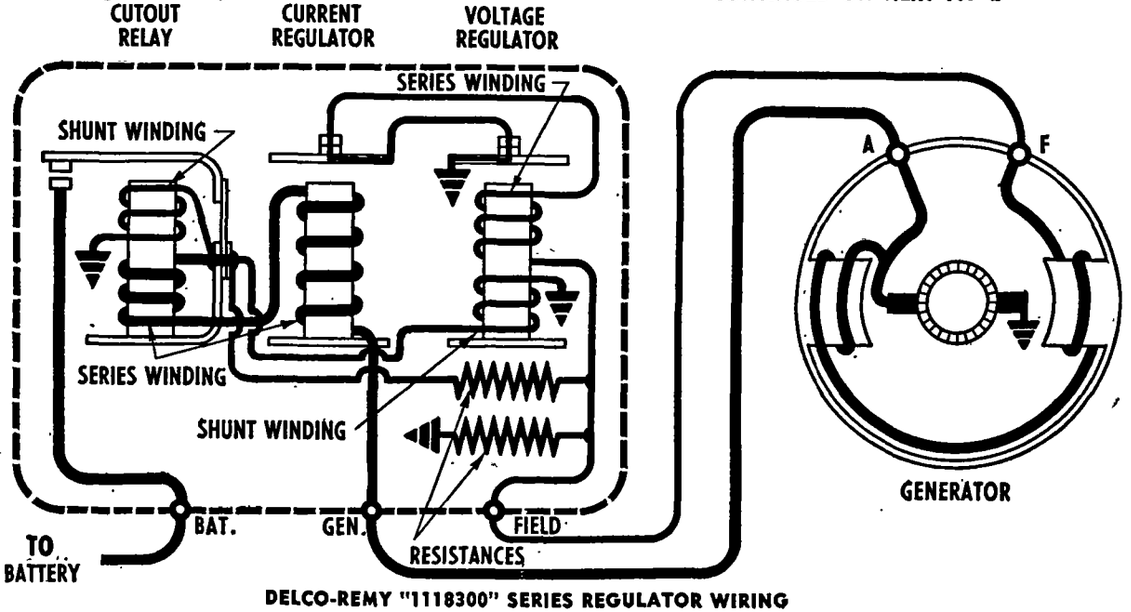

DELCO-REMY "1118300" SERIES REGULATOR WIRING

DELCO-REMY "1118300" SERIES REGULATORS (C nt.)

Adjustment—Use Phillips type screwdriver to turn adjusting screw under outer end of armature spring at top of relay. Turn screw clockwise to increase spring tension and closing voltage, or counter-clockwise to decrease spring tension and closing voltage.

CUT-OUT RELAY SETTING

Regulator	Setting	Cut-In Voltage Operating Range
1118300 thru 03	6.4	5.9-6.8
1118304	12.8	11.8-13.6
1118307, 09 thru 11	6.4	5.9-6.8
1118312	12.8	11.8-13.6
1118313 thru 15	6.4	5.9-6.8
1118316 thru 23	12.8	11.8-13.6
1118324, 26	6.4	5.9-6.8
1118325	12.8	11.8-13.6
1118327	6.6	6.1-7.1
1118328 thru 30	12.8	11.8-13.6
1118331 thru 36	6.4	5.9-6.8
1118337 thru 42	12.8	11.8-13.6
1118343 thru 45	6.4	5.9-6.8
1118346, 47	25.5	24.0-27.0
1118348	12.8	11.8-13.6
1118349 thru 52	6.4	5.9-6.8
1118353 thru 55	12.8	11.8-13.6
1118356	10.5	9.0-11.5
1118357	6.4	5.9-6.8
1118358	12.8	11.8-13.6

CHECKING & ADJUSTMENT (VOLTAGE REGULATOR:) Examine condition of regulator contacts and resurface if necessary (see Servicing data). Check and adjust Air Gap with battery disconnected (regulator preferably off car). Then check and adjust Voltage Setting.

Air Gap: Press armature down toward core as far as possible, then allow armature to move upward until contacts just close. Measure air gap between armature and center of core (use wire feeler gauge).

REGULATOR AIR GAP

All "1118300 Series" Regulators.....075"

Adjustment—Loosen two stationary contact mounting screws (on front side of regulator frame), move contact bracket up or down as required.

►*CAUTION—Keep contacts in alignment (do not cock contact bracket).*

Voltage Setting: *CAUTION—Two different methods can be used to check voltage setting as follows:*

(1) Fixed Resistance Method—Disconnect charging line at regulator "BAT" terminal, connect special fixed resistance (see Note below) between this terminal and ground on regulator base, connect voltmeter between these same two points. With generator and **regulator at operating temperature, and with regulator cover in place,** run generator at speed 25% in excess of rated output speed (see generator data on individual car model pages), note voltmeter reading. If not within "operating range" figure in table below, adjust as directed under "Variable Resistance Method" following.

►**Resistance Note**—Resistance used when checking regulator by "fixed resistance method" above must be capable of carrying 10 amperes without change in resistance due to temperature increases and should have the following values:

Type of Regulator	Resistance Value
6 Volt (less than 15 amp. rating)	1½ Ohms
6 Volt (more than 15 amp. rating)	¾ Ohms
12 Volt (less than 15 amp. rating)	2¼ Ohms
12 Volt (more than 15 amp. rating)	1½ Ohms

(2) Variable Resistance Method—Connect ammeter and ¼-Ohm Variable Resistance in series in charging line at regulator "BAT" terminal (CAUTION—do not connect these units at "Gen" terminal which will affect generator output), connect voltmeter between regulator "BAT" terminal and ground on regulator base. With generator and **regulator at operating temperature, and with regulator cover in place,** run generator at speed 25% in excess of rated output speed (see generator data on individual car model pages). If output less than 8 amperes (4 amperes on units rated less than 15 amperes), turn on car lights which will increase output, then increase variable resistance until output is reduced to 8-10 amperes (4-6 amperes on units rated less than 15 amperes). With regulator at operating temperature, "cycle" generator by decreasing speed until cutout relay contacts open, then increase speed to former figure. Note voltmeter reading. If not within "operating range" figure in table below, adjust as follows:

Voltage Setting Adjustment—Use Phillips type screwdriver to turn adjusting screw located on armature spring bracket at back of regulator frame. Turn screw clockwise to increase voltage setting, or counter-clockwise to decrease voltage setting (CAUTION—when decreasing voltage, turn screw counter-clockwise until voltage lower than desired setting, then turn screw clockwise to increase voltage until desired setting obtained). After exact setting secured as noted in "setting" column of table below, replace regulator cover, "cycle" generator, and recheck voltage setting.

►*ADJUSTING SCREW CAUTION*—If screw turned down (clockwise) to point where spring support is sprung and does not return when screw backed off, correct this condition by turning screw counter-clockwise for clearance between head of screw and spring support, then bend support upward carefully until it contacts screw head.

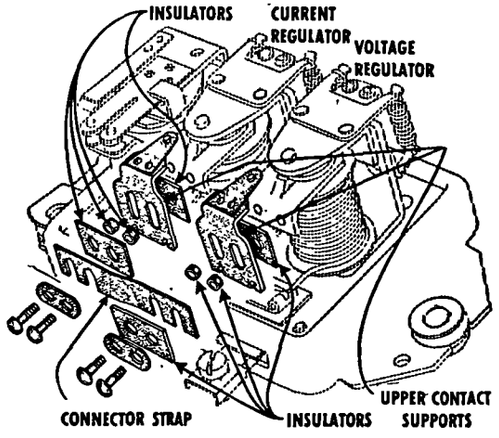

REGULAT R C NTACT ASSEMBLY

VOLTAGE REGULATOR SETTING

Regulator	Setting	Regulator Voltage Operating Range
1118300 thru 03	7.4	7.0-7.7
1118304	14.3	13.9-14.9
1118307, 09 thru 11	7.4	7.0-7.7
1118312	14.3	13.9-14.9
1118313 thru 15	7.4	7.0-7.7
1118316 thru 23	14.3	13.9-14.9
1118324, 26	7.4	7.0-7.7
1118325	14.3	13.9-14.9
1118327	7.5	7.2-7.9
1118328 thru 30	14.3	13.9-14.9
1118331 thru 36	7.4	7.0-7.7
1118337 thru 42	14.3	13.9-14.9
1118343 thru 45	7.4	7.0-7.7
1118346, 47	28.5	27.5-29.5
1118348	14.3	13.9-14.9
1118349 thru 52	7.4	7.0-7.7
1118353 thru 55	14.3	13.9-14.9
1118356	14.0	13.5-14.9
1118357	7.4	7.0-7.7
1118358	14.3	13.9-14.9

CHECKING & ADJUSTMENT (CURRENT REGULATOR):

NOTE—Current regulator used only with "three-unit" type regulators (two-unit regulators use generator third-brush current control).

Air Gap: Checked and adjusted in same manner as Voltage Regulator (above).

REGULATOR AIR GAP

All "1118300 Series" Regulators.....075"

Current Setting: ***CAUTION—Voltage regulator must be prevented from operating while checking current regulator. "Short out" voltage regulator as follows:***

Shorting Out Voltage Regulator—May be done by any of following methods (first method can be used for quick check and does not require removing cover):

(1) Insert screwdriver blade through slot in base of regulator (keep screwdriver at right angles to base) so that blade makes firm contact with base and with shield which protects resistor unit. This will short out voltage regulator.

(2) Remove regulator cover, connect short jumper across voltage regulator contacts (from armature to stationary contact bracket).

(3) Partially discharge battery by cranking engine for 30 seconds with ignition turned off (CAUTION—do not crank engine continuously for more than 30 seconds at one time—will overheat and damage starter).

(4) Connect load approximately equal to current regulator setting across battery (use carbon pile rheostat, bank of lamp bulbs, etc.). This load will reduce voltage sufficiently so that voltage regulator will not operate.

Checking Current Setting—With voltage regulator shorted out (use any of above methods), connect ammeter in charging line at regulator "BAT" terminal, turn on car lights and accessories to prevent high voltage during test. With generator and **regulator at operating temperature,** run generator at speed 50% in excess of rated output speed (see generator data on individual car model pages), note ammeter reading. If not within "operating range" figure in table below, adjust as follows:

C NTINUED ON NEXT PA E

DELCO-REMY "1118300" SERIES REGULATORS (C nt.)

Current Setting Adjustment—Same as for Voltage Setting Adjustment (above). Turn screw clockwise to increase current setting, counter-clockwise to decrease current setting.

CURRENT REGULATOR SETTING

Regulator	Regulator Amperes Setting	Operating Range
1118300	42	40-46
1118301, 02	36	32-40
1118303, 11	30	28-32
1118304, 12	17	15.5-18.5
1118313, 14	40	37-41
1118316, 17, 18	25	23-27
1118321	8.5	7-10
1118322, 23	12	10.5-13.5
1118324	19	17-21
1118325	35	33-37
1118326	27	25-29
1118327	13	11.5-14.5
1118328, 29	31	29-33
1118330	15	13.5-16.5
1118331	36	32-40
1118333, 34, 35, 36	50	48-52
1118337, 38	40	37-41
1118339, 40, 41	50	48-52
1118342, 48	17	15.5-18.5
1118343, 44	40	37-41
1118345	15	13-17
1118346	20	18-22
1118347, 53	10	8.5-11.5
1118349, 50, 58	25	23-27
1118351, 52	35	33-37
1118354, 55	19.5	17.5-21.5
1118357	42	40-46

CLEANING REGULATOR CONTACTS: Clean up contacts when required with a contact file. Use a **spoon or riffler file on the flat contact** (flat contact is located on armature on all negative-ground regulators, on stationary contact bracket on all positive-ground regulators). Access to contacts is secured by loosening contact adjusting screws on stationary contact bracket and tilting or removing bracket. Adjust air gap after cleaning contacts.

►*CAUTION—Do not use emery cloth or sandpaper to clean contacts and do not use a flat file on the flat contact.*

REGULATOR SPRING REPLACEMENT: When installing new springs, first hook lower end of spring on lower spring support, then stretch spring until upper end can be hooked over armature lug. Check and adjust regulator setting after spring installed.

►*CAUTION—Do not pry spring into place—this may distort or damage spring support.*

CONTACT SUPPORT BRACKET REPLACEMENT: Assemble brackets, insulators and bushings in order as shown on illustration. Always use new bushings. Make certain that connector strap is **insulated** from voltage regulator bracket mounting screws, and **connected** to current regulator bracket mounting screws.

DELCO-REMY STARTER SOLENOID (WITHOUT RELAY)

Car Model	Starter	Solenoid
Chevrolet Pass. Cars (1949)	1107075	1118135
Chevrolet RHD Trks. (1949)	1107075	1118135
Nash Amb. 5060 (1950)①	1107965	1118136
Oldsmobile 6 Cyl. (1949)	1107955	1118136
Oldsmobile 8 Cyl. (1949)	1107956	1118136
Pontiac 6 Cyl. (1949)	1107079	1118140
Pontiac 8 Cyl. (1949)	1107957	1118140

①—Hydra-Matic Drive Cars only.

DESCRIPTION: This solenoid type combined Starting Switch and Pinion Shift is similar to type used on other cars except that solenoid link is non-adjustable and no solenoid relay is used.

►*CAUTION—See special Pinion Clearance Adjustment directions below.*

OPERATION: When the pushbutton is pressed, both solenoid windings are energized (pushbutton is special heavy-duty type designed to handle entire solenoid current). Solenoid plunger is drawn into coil, meshing starter pinion, and closing starting switch contacts (if teeth butt and prevent pinion meshing with flywheel, spring on shaft behind pinion is compressed and meshes the pinion as soon as starter armature shaft begins to rotate). Closing of the starter switch short-circuits the heavy solenoid winding (pull-in coil) and the lighter solenoid winding (hold-in coil) keeps the pinion in mesh until the pushbutton is released when the pinion is withdrawn by the return spring. An overrunning clutch directly behind the pinion prevents the starter being driven at excessive speed by the engine when it begins to fire.

PERFORMANCE: Current draw as listed below is measured from starter button terminal on solenoid to ground (see illustration). "Both-Coil" specification is with starting switch contacts open, "Hold-in Coil" specification with starting switch contacts closed and pull-in coil short-circuited.

Both-Coils Current Draw—85-90 amperes, 5 volts.

Hold-in Coil Current Draw—14-16 amperes, 5 volts.

ADJUSTMENT: *CAUTION—It is recommended that starter be removed from engine for adjustment (will provide easier access to solenoid mounting screws).*

Pinion Clearance—3/16" from outer face of pinion to face of housing with pinion in operating position.

Pinion Clearance Adjustment—Remove starter from engine and clamp in a vise. Disconnect solenoid to starter strap to prevent motor operating. Place a gauge or piece of 3/16" bar stock between pinion and housing. Connect battery between switch terminal of solenoid and ground (solenoid base) and push solenoid plunger in by hand so that pinion is moved out against gauge or bar (battery current will hold solenoid in while adjustment being made). Loosen solenoid mounting screws, pull solenoid away from pinion shift lever until all play in lever and clutch mechanism taken up, tighten solenoid mounting screws. NOTE—Moving solenoid away from shift lever will decrease pinion clearance, moving solenoid towards shift lever will increase clearance.

►*CAUTION—Do not compress spring on shaft behind overrunning clutch when making above adjustment.*

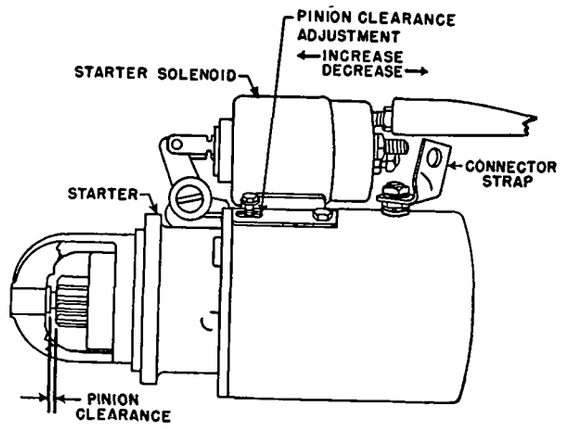

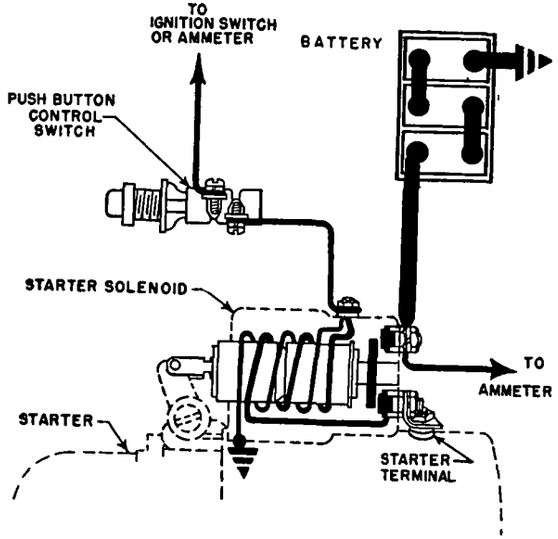

DELCO-REMY STARTER SOLENOID (WITH UT RELAY)

FORD & MERCURY DISTRIBUTOR

Car Model	Distributor①
Ford 6 Cyl. Pass. Cars (1947-50)②	7HA-12127
Ford 6 Cyl. Trucks (1947-49)②	7HA-12127
Ford V8 Pass. Cars (1949-50)	7RA-12127-C
Ford V8 Trucks (1948-49)	7RA-12127-C
Mercury V8 Models (1949-50)	7RA-12127-C

①—Distributor less Terminal Housing & Rotor.
②—All models with "H" Engine.

►NOTES, CAUTIONS, & CHANGES

►**Contact Installation Caution**—Paper tape on underside of stationary contact assembly (part no. marking) **must be removed** when contacts are installed. If tape left on, good ground between contact plate and breaker plate cannot be secured, primary resistance will be increased, and ignition will not be satisfactory.

►**Excessive Pinging Correction**—May be caused by obstructions in vacuum passages in carburetor interfering with correct operation of distributor advance mechanism. Correct by disconnecting vacuum line and cleaning out all passages. *See "Checking Distributor Spark Advance" data below.*

►**Mercury Distributor Timing Caution**—Clearance between distributor vacuum diaphragm housing and water pump outlet or fan belt on engine should be ¼" to preclude interference in service. Distributors with less clearances should be replaced.

CAUTION—When timing engine, initial timing should be set as near as possible to specified setting (see car model page for instructions) but at least ⅛" CLEARANCE must be maintained between vacuum diaphragm and outlet or fan belt.

►**Retarded Spark Complaints on First Mercury Cars**—On cars before Engine No. 9CM-826, with first type timing gears, excessive backlash in gears may cause retarding of ignition timing. Check for this complaint as follows:

Checking for Retarded Spark—Disconnect distributor vacuum line (to prevent automatic advance functioning). Idle engine, direct neon timing light on timing mark at front of engine, increase engine speed and note if definite retarding of spark occurs (timing button width is 2.2 engine degrees and can be used to estimate amount of retarding action). Correct by advancing initial timing to compensate for this retarding action.

►***CAUTION—Timing must not be advanced so far as to cause excessive pinging.***

DESCRIPTION: This "Loadomatic" or Pressure Type distributor is a full-automatic advance type in which the entire advance is provided by action of the vacuum diaphragm unit linked to the breaker plate (no centrifugal weights used). This advance action is controlled by the two diaphragm springs on the breaker plate which oppose diaphragm movement. Springs are of unequal weight, but act together to produce the desired advance curve.

NOTE—Distributors used on 6 Cyl. and V8 engines are same design and differ only in minor details (number of cam lobes, location of primary terminal, type of mounting, etc.).

OPERATION: The diaphragm vacuum line is connected to the carburetor and terminates in two separate ports: 1) Upper Port in carburetor venturi tube, 2) Lower Port in carburetor throat just above throttle valve edge. Vacuum at these ports, and consequent suction in line, varies in accordance with engine operating conditions to provide correct advance as follows:

Idling Speed (Closed Throttle)—Vacuum is at minimum at both carburetor ports (lower port above throttle valve) and breaker plate is retarded by springs. Spark occurs at the initial timing point with no automatic advance.

Normal Driving (Part Throttle)—Vacuum is high at both carburetor ports and vacuum diaphragm unit advances timing progressively until maximum advance point is reached at 18-35 MPH.

Acceleration—Vacuum at upper (venturi) port is high but vacuum at lower (carburetor throat) port decreases under these conditions. This results in a lower vacuum at the diaphragm unit and timing is retarded by breaker plate springs from the normal road load point.

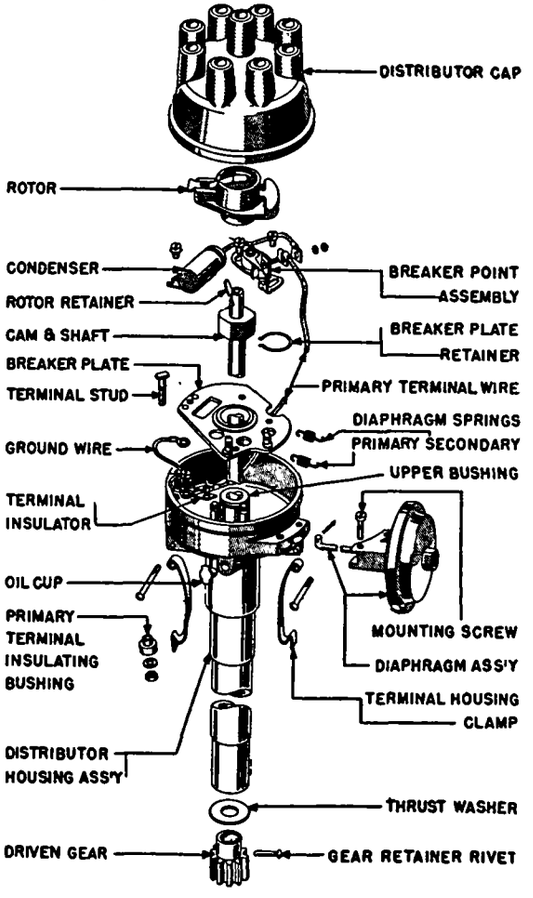

FORD V8 & MERCURY DISTRIBUT R
(FORD 6 CYL. SIMILAR)

ADJUSTMENT: Distributor Breaker Gap & Contact Dwell, Spring Tension, Ignition Timing—*See individual car model pages in Car Model Section.*

Automatic Advance: Adjustment of breaker plate spring tension requires use of special Stroboscope to check performance. Spring tension is set at factory for desired advance performance and should not be disturbed unless this special equipment available.

►***CAUTION—Do not disturb spring tension adjustment (slotted eccentric spring posts on breaker plate) unless Stroboscope used to check advance performance.***

CHECKING SPARK ADVANCE (to detect restrictions in Carburetor vacuum passages resulting in incorrect advance & unsatisfactory engine performance): Use a vacuum gauge and tachometer and proceed as follows:

1) Set ignition timing using a Timing Light.

2) Disconnect vacuum line at carburetor. Use ⅜"x24 adapter fitting to connect vacuum gauge at carburetor.

3) Connect Tachometer to engine.

4) Run engine and measure vacuum at indicated engine speeds. Vacuum (in " of HG) should be as follows:

	Vacuum at Carburetor①	
Engine Speed	8HA (6 Cyl.)	8BA (V8)
800 RPM.	0.6"	2.5"
1000 RPM.	1.4"	4.15"

①—These figures are plus or minus 15%.

►*NOTE*—If gauge indicates full manifold vacuum, venturi passage is plugged. If gauge readings are low, throttle body passage is defective.

5) Increase engine speed and measure vacuum at following speeds:

	Vacuum at Carburetor①	
Engine Speed	8HA (6 Cyl.)	8BA (V8)
2200 RPM.	5.7"	5.55"
2400 RPM.	5.8"	5.40"

①—These figures are plus or minus 15%.

►*NOTE*—If vacuum gauge reading drops to less than 2", lower vacuum passage is plugged.

LUBRICATION: ***CAUTION—Oil or grease on contacts usually caused by use of wrong type or excessive amount of lubricant (see Distributor Upper Bushing Note below).***

Ford Distributors—Few drops engine oil in oiler every 1000 miles. Light film of M-4601 distributor grease on face of cam every 5000 miles or when contacts serviced.

Mercury Distributor—Few drops engine oil in oiler and light film of 8L-19575 grease on face of cam every 5000 miles.

►**Ford Distributor Upper Bushing Note**—Upper bushing is sintered (powder metal) type and upper surface is ordinarily finished smooth or becomes burnished in service which prevents excessive oil seepage through bushing (seepage at this point will cause oil to be thrown off in distributor by breaker cam). If this condition not corrected by wearing in (burnishing) of bushing and **if excessive oil seepage continues, replace bushing** (using bushing which has machined upper surface).

DELCO-REMY "CENTER-BEARING BREAKER PLATE" DISTRIBUTOR

Car Model	Distributor
Buick, All Models (1949-50)	1110815
Cadillac V8 (1949)	1110812
Oldsmobile 6 Cyl. (Late 1949)	1110221
Oldsmobile 8 Cyl. (Late 1949)	1110817
Pontiac 6 Cyl. Models (1949)	1110219
Pontiac 6 Cyl. Models (1950)	1110222
Pontiac 8 Cyl. Models (1949)	1110816
Pontiac 8 Cyl. Models (1950)	1110818
Studebaker Comm. 17A (1950)	1110220

DESCRIPTION: These vacuum spark control type distributors have new "center-bearing" breaker plate assembly which supersedes earlier type mounted on three balls. Breaker plate assembly consists of a support plate rigidly mounted in the distributor housing and a separate breaker plate on which the contact assembly and condenser are mounted. Breaker plate rests on three bakelite buttons which slide on support plate when breaker plate is rotated by vacuum control. An oil-soaked felt between the plates provides lubrication for the buttons and plates are held together by a breaker plate post which extends down through a slot in the support plate with washers and tension adjusting shims on the post below the support plate. An additional side spring in the inner rim of the support plate assists in preventing tipping of the breaker plate in service.

►***REPLACEMENT NOTE***—Breaker plate and support plate are not serviced separately and entire Breaker Plate Assembly should be replaced if either part worn or damaged.

LUBRICATION: In addition to normal distributor lubrication, apply 3-4 drops of light engine oil (SAE 10W) to felt between plates at 5000 mile intervals.

DISASSMBLY OF BREAKER PLATE: With assembly removed from distributor housing, remove stop washer ("C" washer) from post extending through support plate, remove adjusting shim (see Adjustment data), spring washer and bearing washer. Separate breaker plate from support plate (CAUTION—do not lose side spring located in recess in support plate inner hole), lift off lubricating felt. Examine parts for wear of the bakelite buttons or grooving of the support plate under the buttons.

►***REASSEMBLY CAUTION***—Make certain that side spring is in place in support plate recess, lubricate felt with light engine oil, install all parts in correct order (see illustration). Check breaker plate tension.

BREAKER PLATE TENSION: Breaker plate must have sufficient tension on support plate to prevent tipping or side movement of the plate but friction between plates must not be excessive (will interfere with correct operation of vacuum control). Whenever distributor being serviced or breaker plate reassembled, check and adjust tension as follows:

Checking—With breaker plate assembly out of distributor housing, support assembly in hand, hook spring scale to vacuum unit link connector post on breaker plate, measure pull required to rotate breaker plate on support plate. Pull should be not less than 8 ozs. or more than 16 ozs. If not within these limits, adjustment is required.

►***CAUTION—Spring scale must be held parallel to plane of breaker plate for true reading of breaker plate tension.***

Adjustment—Remove stop washer ("C" washer) from breaker plate post on underside of support plate, add one or more adjusting shims on post, reinstall stop washer and recheck breaker plate tension.

►***NOTE***—Adjusting shims are .010" thick (Delco-Remy Part No. 1912225).

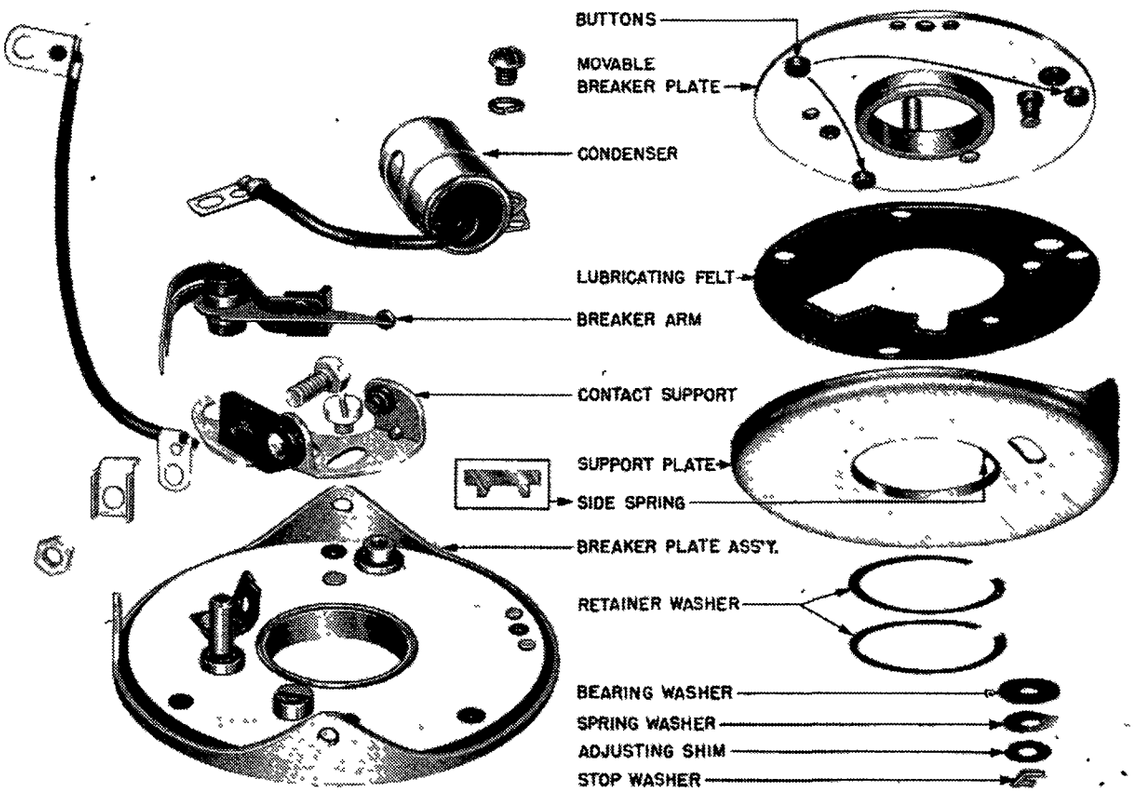

DELCO-REMY "CENTER-BEARING" BREAKER PLATE DISTRIBUTORS

GOODYEAR-HAWLEY HYDRA-DISC HYDRAULIC

Crosley Model CD & Hotshot (1949)

►**WHEEL HUB REMOVAL CAUTION**—Wheel brake unit must be disassembled before wheel hub and brake disc can be removed. See Wheel Brake disassembly data below.

DESCRIPTION: Goodyear-Hawley hydraulic disc have new type wheel brakes as follows:

Wheel Brakes: Consists of an inboard housing containing the single acting hydraulic cylinder with circular lining mounted directly on the end of the hydraulic cylinder piston, and an outboard housing on which a second circular lining is mounted directly. These housings are bolted together by tie bolts and mounted on the dust cover so that they straddle the brake disc which is integral with the wheel hub. In operation, the piston moves out to bring the lining in contact with the disc and the reaction in the opposite direction causes the entire assembly to move inward so that the outer lining is likewise brought into contact with the drum and the disc is gripped between the two linings. When brakes are released, return springs return the piston and entire assembly to their original positions.

Hand Brake: Consists of a cam lever in each rear wheel brake which applies the brakes mechanically (operation is similar to hydraulic actuation). These levers are linked to the hand lever at the driver's seat by a rod and cable linkage.

Master Cylinder: Conventional type. Similar to design used with other hydraulic brake systems.

ADJUSTMENT: Wheel Brakes. Jack up all four wheels, loosen locknut on compensating screw on inner housing (CAUTION—locknut has left-hand threads). Turn compensating screw clockwise until wheel is locked, then back off compensating screw ¼ turn. Tighten locknut (CAUTION—see that compensating screw does not turn while tightening locknut). Adjust all four wheels in this manner.

Hand (Parking) Brake Adjustment: Should not require adjustment (automatically taken up when wheel brakes adjusted). If hand lever travel excessive, tighten clevis at rear end of hand lever rod or tighten clevis at left wheel end of wheel cable.

►*CAUTION*—Do not move parking brake cam lever (in rear wheel brakes) away from released position when adjusting hand brake cable.

Brake Pedal Adjustment: Pedal should have ¼" free travel in released position with master cylinder pushrod against its stop. Adjust by loosening locknut and turning pushrod.

BLEEDING BRAKE SYSTEM: Loosen brake hose at wheel unit ½ turn (CAUTION—do not attempt to disconnect hose without removing brake unit). Tighten hose after bleeding operation completed. *See "Hydraulic Brake Servicing" in previous release for bleeding instructions.*

►*CAUTION*—Use only Lockheed #21 Brake Fluid.

REMOVAL & INSTALLATION OF WHEEL UNIT: *Necessary for servicing of unit and for wheel hub removal.*

Removal: Loosen brake hose at wheel cylinder (CAUTION—do not attempt to remove hose). Take out tie bolt lockplate screw (Phillips head screw on outer housing), remove lockplate, unscrew both tie bolts, lift off outer housing. Remove four Phillips head screws in torque plate, slide inner housing assembly out. Hold brake hose and unscrew brake unit from hose.

Installation: Screw inner housing unit on brake hose snugly. Position unit on mounting bracket and install four torque plate screws. Install outer housing, screw both tie bolts in finger-tight (see Compensating Screw Setting below) and back screws off to nearest flat which will allow lockplate to be installed, install tie bolt lockplate and lockplate screw. Bleed brakes, then tighten brake hose, and adjust brakes.

►**Compensating Screw Setting**—Compensating screw must contact outer housing with approximately 1/16" clearance between lining and disc. Adjust by turning compensating screw before tie bolts are started in threads.

DISASSEMBLY & REASSEMBLY OF WHEEL UNIT: *For replacement of Pulsator or other service operations.*

Front Wheel Unit: With wheel unit removed from car, remove return springs by taking out attaching screws, remove piston. Insert a screw in the threaded hole on the side of the cylinder, remove lockring from groove in cylinder. Remove nut on back of inner housing, push piston plate, pulsator, and pulsator backing plate out of cylinder. Remove pulsator from backing plate and wash all parts in alcohol. When reassembling, place new pulsator on backing plate and install these parts in cylinder (CAUTION—Keep oil and grease off pulsator and make certain it does not catch in lockring groove and peel back over backing plate), tighten backing plate nut on housing loosely. Install piston plate and lockring, position lockring gap approximately 1" from threaded hole in cylinder. Install piston and return springs, then tighten backing plate nut securely.

Rear Wheel Unit: With wheel unit removed from car, remove return springs by taking out attaching screws, remove piston. Lift out parking brake cam and lever assembly. Remove nut on back of inner housing, push piston plate, pulsator, and backing plate out of cylinder. Remove pulsator from backing plate and wash all parts in alcohol. When reassembling, place new pulsator on backing plate, install in cylinder (CAUTION—Keep oil and grease off pulsator), tighten backing plate nut on housing loosely. Install piston plate, insert parking brake cam and lever (see illustration for correct position), install piston making certain that groove engages parking brake cam. Install return springs, then tighten backing plate nut securely.

RELINING BRAKES: Lining is riveted to piston and on outer housing. When installing new lining, make certain that lining is seated on lockpin.

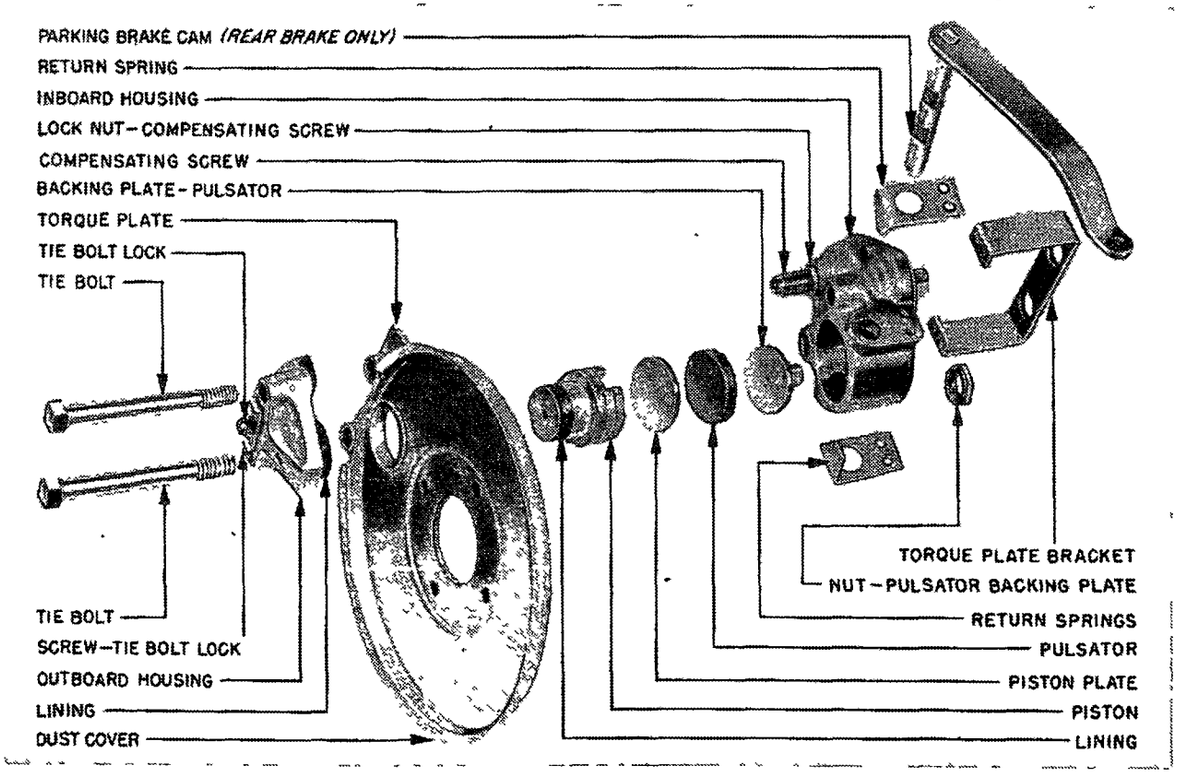

GO DYEAR-HAWLEY HYDRA-DISC BRAKE (REAR BRAKE SH WN—
FR NT BRAKE SAME EXCEPT PARKING BRAKE CAM MITTED)

BENDIX HYDRAULIC

Buick Series 40, 50, 70 (1949), Series 40 (1950)
Cadillac V8, All Series (1949)
Hudson 6 & 8, All Models (1949)
Nash Ambassador, Series 4960 (1949), 5060 (1950)
Oldsmobile 6 & 8, All Models (1949)
Packard "2200" Series, All Models (Early 1949)
Packard "2300" Series, All Models (Late 1949)
Pontiac 6 & 8, All Models (1949-50)

►*PONTIAC BRAKE NOTE*—1949 brakes are "No-Eccentric" type same as on other car models above. Eccentric adjustment used on 1948 models has been discontinued.

DESCRIPTION: Single anchor, "no-eccentric," hydraulic type of same design as used on corresponding previous models (except Pontiac—see note above).

ADJUSTMENT & SERVICING: ***See complete "Bendix Hydraulic Type, single Anchor (Without Eccentric Adjustment)" in previous release and adjust these brakes to the following specifications:***

Minor Wear Adjustment: Expand shoes by turning adjusting screw up until wheel can just be turned by hand, then back adjusting screw off the following number of notches or "clicks" (wheel must be free of any drag after screw backed off):

Adjusting Screw Setting

Buick ..... 15 Notches
Cadillac, Packard ..... ①
Hudson, Nash, Pontiac ..... 14 Notches
Oldsmobile ..... 16 Notches

①—Manufacturer recommends that feeler gauge be used and shoe clearance set as for Major Adjustment below.

Major or New Lining Adjustment: With primary (forward) shoe forced out against drum, adjust secondary shoe clearance by turning adjusting screw (and anchor pin, if necessary, to secure correct clearance at both ends of shoe):

Secondary Shoe Clearance①

All Models ..... .015" (both ends of shoe)

①—With primary shoe against drum (zero clearance).

Parking (Hand Brake) Adjustment: With rear brake shoes expanded so that wheels can just be turned, remove slack from rear wheel brake cables (see special directions on each car model below), then back off adjusting screws as directed for Minor Adjustment above, check rear wheels for freedom from dragging and equalization of braking.

Buick—Back off nut on rod at cable sheave under car, check cables for free movement in sheave and conduits, then tighten nut to remove slack from cables (hold rod to prevent it turning while tightening nut).

Cadillac—Do not expand rear brake shoes. Loosen locknut on rod at rear wheel cable equalizer at cross-member on frame, turn up nut on rear end of rod until cables are taut, tighten locknut. Check adjustment by using spring scale hooked to hand brake lever to apply brakes with 50-60 lbs. pull. In this position, measure distance hand lever has traveled from released position which should be 2¼". If not correct, readjust cables at equalizer.

Hudson—Pull hand lever "on" two notches so that control lever (to which rear wheel cables attached) moved ⅛" from released position. Adjust both wheel cables by loosening locknut and turning cable clevis so that all slack removed when cables reconnected.

Nash—Pull hand lever "on" one notch, loosen two clamp bolts in rear brake cable equalizer, remove all slack from cables, tighten clamp bolts.

Oldsmobile—With hand lever in released position, disconnect wheel cables at equalizer link on intermediate lever in frame cross-member, adjust each wheel cable by loosening locknut and turning clevis so that all slack removed from cable and equalizer link is parallel to propeller shaft when cables reconnected.

Packard—Pull hand lever "on" one notch, loosen locknut and tighten adjusting nut on rear of cable equalizer under car until all slack removed from cables (approximately 20 lbs. tension on cables).

Pontiac—Check adjustment and equalization by applying brakes with hand lever (brake shoes must not be expanded by adjusting screw). If hand brake lever movement required to lock wheels is more than ⅝", adjust cables as follows: With hand lever released, remove cable equalizer pin and shift pin to correct hole in equalizer so that slack removed from cables (fine adjustment can be secured by loosening clevis nut and turning clevis on forward cable end at intermediate lever). With correct adjustment, clevis pin at equalizer should move up and down with thumb and finger pressure. To equalize brakes, loosen clampscrews at cable spreader (open clamp with screwdriver to permit cable to move), apply brakes several times with hand lever.

Brake Pedal Adjustment: See that pedal has correct clearance or free travel in released position as follows:

Buick—Clearance between pedal shank and underside of toeboard should be 1" with master cylinder pushrod back against its stop.

Cadillac—Rubber grommet on pedal under toeboard should be compressed to not less than ¾" with pedal rod against stop in master cylinder. This will permit ⅛" free play between end of pedal rod and master cylinder piston.

Hudson—Pedal shank clearance at toeboard should be exactly ¼". Adjust by loosening pedal link clevis nut and turning clevis. See that master cylinder piston rod is against stop after setting pedal.

Nash—¼-½" pedal free travel in released position. Adjust by loosening locknut and turning pedal rod.

Oldsmobile—Sponge rubber bumper on pedal under toeboard should be compressed not more than 3/16" with master cylinder pushrod against stop. Adjust by loosening locknut and turning pushrod.

Packard—¼-½" pedal free travel in released position. Adjust by loosening locknut and turning pedal rod.

Pontiac—Distance from floor mat to underside of brake pedal pad should be 4½" with brakes released and master cylinder pushrod against stop.

Clutch Pedal Adjusting Note—On Synchro-mesh transmission cars, adjust clutch pedal to same height as brake pedal.

LOCKHEED (WAGNER) HYDRAULIC SELF-ADJUSTING

Studebaker Champion, 8G (1949), 9G (1950)
Studebaker Commander & Land Cruiser, 16A (1949) 17A (1950)

DESCRIPTION: Two-shoe, hydraulic type with "self-centering" shoes and "self-adjusting" mechanism for forward shoes only. Same design as used on corresponding previous models.

ADJUSTMENT & SERVICING: ***See complete "Lockheed (Wagner) Hydraulic Self-Adjusting" Brakes in previous release and adjust these brakes to following specifications:***

Brake Shoe Adjustment: ***If required in service (noted by loss of pedal reserve), adjust each shoe as follows:***
Reverse Shoes—Turn eccentric out until brake shoe drags, then back eccentric off until wheel just turns freely. If adjustment of all reverse shoes does not provide adequate pedal reserve, then check and adjust forward shoes.

Forward Shoes—Check self-adjusting mechanism for correct operation first. Disconnect shoe return spring, pull shoe out so that self-adjusting lever clears eccentric, manually depress contact plug and fully retract adjusting wedge. Hold wedge in retracted position and see that contact plug moves up and down freely. Release wedge, depress contact plug and check to see that adjusting wedge advances upward. If self-adjusting mechanism operates correctly, reconnect shoe return spring, **set contact plug by depressing plug until it is flush or one notch below** surface of lining. Adjust shoe by turning eccentric outward until brake shoe drags, then back eccentric off until wheel just turns freely.

►***CAUTION—Contact plug must be depressed (flush or one notch below lining surface) when adjusting forward shoes (will cause over-adjustment of brake shoe on first application otherwise).***

Brake Pedal Adjustment: ⅛" minimum, ¼" maximum, pedal free travel with brakes released and master cylinder pushrod against its stop.

Hand Brake Adjustment: Pull hand lever "on" 4-5 notches, back off front nut and tighten rear nut on cable clip under car until heavy drag noted at rear wheels, tighten front nut. Release hand lever and check wheels for freedom from drag.

LOCKHEED HYDRAULIC DOUBLE ANCHOR

Willys Jeep, Universal Model CJ-3A (1949)

ADJUSTMENT & SERVICING: ***See complete "Lockheed Hydraulic, Double Anchor Type" in previous release and adjust these brakes to following specifications:***

Minor (Wear) Adjustment: Loosen locknut on adjusting eccentric for each brake shoe, turn eccentric up until shoe contacts drum, then back eccentric off until wheel turns freely, tighten eccentric locknut.

Major (New Lining) Adjustment: Use feeler gauges inserted through slot in drum, adjust eccentric and anchor pin for each shoe to following clearances:

Brake Shoe Clearance

Willys CJ-3A Jeep..... .005" (heel), .008" (toe)

Hand Brake Adjustment: Hand brake is independent type on drive shaft at rear of transmission.

See Willys Jeep CJ-3A car model page for data.

LOCKHEED-CHRYSLER "SAFE-GUARD" HYDRAULIC

Chrysler 6 & 8, Models C45, C46, C47 (1949)
De Soto, Model S13 (1949)
Dodge, Models D29 & D30 (1949)
Plymouth, Models P17 & P18 (1949)

DESCRIPTION: Two-cylinder (front), single double-acting cylinder (rear), hydraulic type of same design used on corresponding previous models.

ADJUSTMENT & SERVICING: *See complete "Lockheed-Chrysler 'Safe-Guard' Hydraulic" Brake in previous release and adjust these brakes to following specifications:*

Minor (Wear) Adjustment: Turn eccentric for each shoe out until shoe is solid against drum and wheel is locked, then back eccentric off until wheel is free.

Major (New Lining) Adjustment: Use adjusting gauge MT-19-C, or feeler gauges and cutaway drum, adjust eccentric and anchor pin for each shoe to following clearances:

Brake Shoe Clearance
(Heel & Toe—All Front & Rear Shoes)
Chrysler, DeSoto, Dodge, Plymouth.....006"

Hand Brake Adjustment: Hand brake is independent type on driveshaft at rear of transmission. *See car model pages & Chrysler Special Data.*

Brake Pedal Adjustment: ⅛-¼" free travel with brakes released and master cylinder pushrod against its stop.

FORD-LOCKHEED HYDRAULIC

¾ Ton Series F-2 & Heavy Duty F-3 (1949)
1 Ton Series F-4 (1949)
1½ Ton Series F-5 (1949)
2 Ton Series F-6 (1949)

DESCRIPTION: Brakes are same design used on corresponding previous models as follows:

Series F-2 (Front & Rear), F-3 (Front)—Lockheed "self-centering" hydraulic type without anchor pin adjustment (eccentric adjustment only).

Series F-3 (Rear only), F-5 & F-6 (Front & Rear): Lockheed double-anchor hydraulic type with eccentric and anchor pin adjustments.

ADJUSTMENT & OVERHAUL: *See complete "Ford-Lockheed Hydraulic" Brake in previous release and note the following special data:*

Major Adjustment For Relined Brakes (All Models with "Self-centering" Brakes): No anchor pin adjustment provided on these models and major adjustment is same as Minor (Wear) Adjustment, all adjustments made at the eccentric adjusting cams.

Parking Brake Adjustment (F-2 & F-3): Place hand brake lever in fully released position. Use pedal jack to depress brake pedal until rear brake shoes are applied firmly. Adjust each wheel cable at equalizer lever on frame cross-member by taking out clevis pin, loosening locknut, and turning clevis on cable end fitting until all slack is removed from cables and mounting bolt is centered in slot in equalizer plate. Adjust hand lever cable by taking out clevis pin, loosening locknut, and turning clevis on cable end fitting until hand lever has approximately ½" movement (with brake shoes applied as above). Release pedal, make certain rear wheels free of drag.

Parking Brake Adjustment (F-4, F-5, F-6): Parking brake on these models is an independent shaft type. *See Ford Special Data for adjustment instructions.*

FORD-BENDIX HYDRAULIC (FORD, LINCOLN, MERCURY)

Ford Pass. Cars, 6 Cyl. & V8 (1949-50)
Ford Half-Ton Truck, Series F-1 (1949)
Lincoln & Cosmopolitan, 9EH & 9EL (1949)
Mercury, Model 9CM (1949-50)

►NOTES, CAUTIONS, & CHANGES

►**FORD HAND BRAKE LINKAGE CHANGE (To lessen effort required to set hand brake):** On first cars, pull required to set brake can be decreased by drilling new hole in equalizer lever and shifting wheel cable connector to this new hole. Locate new holes as follows:

Passenger Cars—Drill new 5/16" hole at point 13/32" from center of existing hole toward pivot end of lever.

Station Wagon & Convertible—Drill new 5/16" hole at point 9/16" from center of existing hole toward pivot end of lever (new hole center will be 1¼" from center of pivoting notch in lever).

►*NOTE—This change made in production on later cars.*

►*CAUTION*—If above procedure does not correct complaints of hand brake being hard to apply, remove hand lever assembly, check for burrs on hand brake shaft, clean up shaft with round file, apply light film of lubricant when reassembling.

►**FORD HAND BRAKE CABLE INTERFERENCE CORRECTION:** If cable or conduit rubs on frame or tires, check and correct following points:

Cable rubbing on intermediate cross-member—Bend rear edge of lower flange on cross-member slightly at point just above cable to provide clearance.

Cable Conduit rubbing on tires or striking carrier plate—Remove cable conduit clip on frame, revolve conduit toward center of car (twist conduit at carrier plate if necessary), re-install clip.

Cable Equalizer twisting—If equalizer twists on adjustment bolt, install additional nut on adjustment bolt in front of equalizer, tighten this nut after hand brake adjustment completed so that equalizer is clamped firmly on bolt between front and rear nuts.

►*NOTE—This clamp nut installed on later cars in production.*

►**LINCOLN & MERCURY HAND BRAKE LINKAGE CHANGE (for improved operation):** To lessen effort required to set brake on first cars, make following changes:

Re-route Brake Cable. Disconnect cable at lever, remove all clips down to spring clip at center of frame "X" member (do not disturb this clip), re-route cable and install new clips as follows: Install No. E.D. 11A-17278 clip at transmission case bottom rear shifter cover bolt, E.D. 353364-SB at brake master cylinder front bolt, route cable over top of steering column tube, install clip E.D. 353364-SA at upper rear corner of front fender apron (on Lincoln 121" WB, use clip 11A-14598 installed on fender apron 1½" to rear of wiring harness clip), route cable through hole in dash (use 91A-14602-A1 rubber grommet) and attach cable to hand lever. Adjust hand brake.

►*CAUTION—Avoid all sharp bends and kinks when installing the brake cable. Tape brake cable and hood latch control cables together to prevent rattles.*

Re-locate Cable Connection on Hand Lever (Mercury only)—Drill new 5/16" hole in hand brake lever at point 1.38" from center of pivot hole in lever and shift cable connection to this new hole to improve leverage.

Lubricate Hand Brake Control—Lubricate following points with Lubriplate or equivalent (use sparingly): 1. Lever Pivot at ratchet bar, 2. Ratchet Bar, 3. Dash Hinge Bracket, 4. hand lever and body bracket Bolt & Contact Surface.

Align Hand Brake Control—To insure alignment, first attach hand brake lever at body bracket, second attach ratchet bar housing assembly to instrument panel with **hand lever in fully released position.**

DESCRIPTION: Single anchor, "no-eccentric", hydraulic type of same design as used on other car models.

ADJUSTMENTS

ADJUSTMENT & SERVICING: *See complete "Ford-Bendix Hydraulic (Ford, Lincoln, Mercury)" Brake in previous release and adjust these brakes to the following specifications:*

Minor (Wear) Adjustment: *CAUTION—Recommended procedure for Ford is not same as Lincoln & Mercury.*

Ford—Turn up adjusting screw for each wheel (accessible through slot in backing plate) until brake drum can just be turned by hand, then back off adjusting screw 14 notches or "clicks" until shoes are just free and wheel revolves without drag.

Lincoln & Mercury—Use feeler gauge to set shoe clearance at .010". See Major Adjustment for data.

Major (New Lining) Adjustment: *CAUTION—Recommended setting for Ford is not same as Lincoln & Mercury.*

Ford—Wedge primary shoe out against drum by inserting .010" feeler through slot in drum at center of secondary shoe and expanding shoes by turning adjusting screw. Then adjust adjusting screw and anchor pin (slotted type) for .010" clearance at each end of secondary shoe (measure 1½" from each end of shoe).

Lincoln & Mercury—Shoe clearance should be .010" at all points. Check by inserting .010" feeler through slot in brake drum and measuring clearance at several points. Adjust by turning adjusting screw accessible through slot in backing plate and by shifting anchor pin if necessary (pin hole is slotted and pin can be tapped out after locknut loosened).

Brake Pedal Adjustment: Pedal must have more than ¼", but less than ½", free travel measured at pedal pad before master cylinder piston begins to move. Adjust as follows:

Ford—Loosen locknut and turn eccentric bolt linking brake pedal to master cylinder piston rod.

Lincoln & Mercury—Loosen locknut on master cylinder end of pedal rod, turn connecting link.

Hand (Parking) Brake Adjustment: *CAUTION—See Production Change Notes above.*

CHEVROLET HYDRAULIC

Styleline & Fleetline Pass. Cars (1949)
All Truck Models (1949)

►**TRUCK BRAKE BOOSTER NOTE:** Hydrovac Power Unit is Std. or Optl. on 1½ Ton and 2 Ton Trucks. *See "Hydrovac Power Unit" in previous release.*

DESCRIPTION: Two-shoe, hydraulic type of same design as used on corresponding previous models.

ADJUSTMENT, RELINING BRAKES, & SERVICING: *See complete "Chevrolet Hydraulic" Brake in previous release and adjust brakes to following specifications:*

Brake Shoe Adjustment: Turn eccentric adjusting wheel for each shoe (on ends of wheel cylinder accessible through slot in backing plate) up until brakes drag slightly, then back wheel off **four notches** for running clearance. On Truck rear wheels, with adjusting pinion shaft on backing plate, turn hexagonal head of shaft clockwise until shoe drags slightly, then back shaft off **2/3 turn** (four sides of the hexagonal head) for running clearance.

Hand (Parking) Brake Adjustment: Remove all slack from cables as follows:

Pass. Cars—Place hand lever in fully released position, loosen check nut (rear nut) on cable end fitting at idler lever on frame cross-member, pull wheel cable forward out of conduit until a positive stop is felt, hold cable and tighten forward nut against clevis plate, tighten rear check nut. Check rear brakes for freedom from drag and equal braking.

Half-Ton & ¾-Ton Truck—This pedal-operated brake adjusted in same manner as other trucks (below) and release rod handle (under instrument panel) must be adjusted for ½" minimum clearance at support bracket.

Other Trucks—Place hand lever in fully released position, disconnect rear wheel cables at cross-shaft levers on frame by taking out clevis pin, loosen lock nut, pull cable out of conduit by hand until a positive stop is felt, adjust clevis on cable end, tighten locknut and install clevis pin.

Brake Pedal Adjustment: 7/16" (Pass. Cars), 13/16" (Trucks) clearance between pedal shank and bottom of toeboard depression at pedal with brakes released and master cylinder pushrod against its stop. Adjust as follows:

Pass. Cars—Loosen check nut on eccentric pedal bolt, turn bolt, tighten check nut to 20-25 ft. lbs.

►*CAUTION*—If correct 7/16" clearance cannot be secured by turning eccentric bolt, adjust by installing shims under front or rear master cylinder mounting bolts.

Trucks—Loosen locknut at pushrod clevis, turn pushrod (knurled section provided on rod for adjustment), tighten locknut.

BENDIX (LOCKHEED) HYDRAULIC SELF-CENTERING

Frazer & Manhattan, F-495 & F-496 (1949)
Kaiser Special & Deluxe, K-491 & K-492 (1949)
Nash "600", Series 4940 (1949)
Nash Statesman, Series 5040 (1950)
Willys Sta. Wgn & Sedan Del. 4-63 (1949)
Willys Jeepster, Model VJ-3 (1949)
Willys Station Sedan, 6 Cyl. 6-63 (1949)
Willys Jeep Trucks, Models 2WD & 4WD (1949)

DESCRIPTION: "Self-centering" (non-adjustable anchor), hydraulic type of same design as used on corresponding previous models.

Brake Shoe "Self-centering" Device—Each brake shoe fitted with rounded rocker on lower (anchor) end which bears against a solid block on the backing plate. This bearing block is machined with the rocker bearing surface aligned radially to the drum center so that shoes move radially out against the drum when brakes are applied and are automatically "centered with each brake application." Both shoes are held against the bearing block by a plain spring hooked in holes in each brake shoe web.

ADJUSTMENT & SERVICING: *See complete "Bendix (Lockheed) Hydraulic Self-centering" Brakes in previous release and adjust as follows:*

Brake Shoe Adjustment (For Wear or New Linings):

►*CAUTION—Brake shoes must be "centralized" by several hard brake applications before adjusting.*

Adjust eccentric for each brake shoe (see Frazer & Kaiser Note below), turn eccentric out until brake shoe firmly applied and wheel is locked, then back eccentric off until wheel just rotates freely without drag. With this adjustment, shoe clearance will be approximately .010".

►**Frazer & Kaiser Adjustment Note**—Eccentric cams have locknuts which must be loosened before adjustment can be made. After adjustment completed, hold eccentric from turning, tighten locknut.

Hand Brake Adjustment: Remove all slack from rear wheel brake cable as follows:

Frazer & Kaiser—With hand lever in released position, back off locknut on front cable end fitting in front of wheel cable connector under car, tighten adjusting nut (back of wheel cable connector) to remove all slack from cables, tighten locknut.

Nash—Pull hand lever "on" one notch, loosen two clamp bolts in rear brake cable equalizer under car, remove all slack from cables, tighten clamp bolts.

Willys—Pull hand lever "on" three notches, tighten adjusting screw on connector link at wheel cable equalizer until rear brakes drag slightly, release hand lever, see that wheels free from drag.

Brake Pedal Adjustment: Adjust master cylinder pushrod by loosening locknut and turning rod for following pedal free travel with master cylinder piston and pushrod back against stop:

Brake Pedal Free Travel

Frazer & Kaiser	½-¾"
Nash "600"	¼-½"
Willys	½" min.

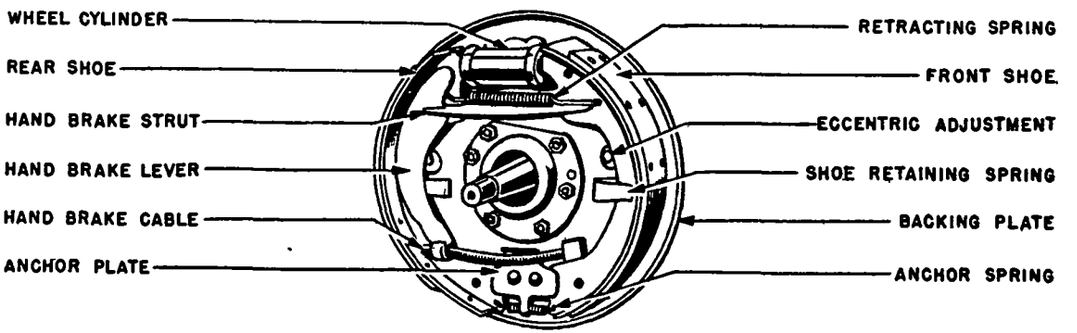

REAR BRAKE ASSY. (FRONT SAME EXCEPT HAND BRAKE LINKAGE OMITTED)

1949-50 HUDSON VACUMOTIVE DRIVE

Hudson 6 & 8, All Models (1949)
Hudson Pacemaker, Model 500 (1950)

DRIVE-MASTER NOTE: Vacumotive Drive is also part of Drive-Master installation and when used with Drive-Master is similar to separate unit below except for additional Throttle Lock unit (mounted on Vacumotive power cylinder).

See "Hudson Drive-Master" in Transmission Section for Throttle Lock data.

DESCRIPTION & OPERATION: Vacumotive Drive on these cars is similar to design used on previous models except for relocation of units and linkage (see illustration) and new type wiring harness with plug connectors at each unit (plug-and-socket connectors eliminate possibility of wrong connections).

ADJUSTMENT: *Before adjusting Vacumotive Drive units, make all "Engine Adjustments" listed below, then make "Vacumotive Drive Adjustments in order and exactly as listed:*

Engine Adjustments: Make sure that engine properly tuned up, and clutch linkage adjusted, by checking and adjusting following points:

Engine Idle Speed—Must be set at 580-600 RPM. hot or slow idle speed. NOTE—Check with Vacumotive Drive control button on instrument panel "on".

Clutch Free Play—Clearance between lower face of clutch pedal and floor board must be 1½", with clutch engaged, to insure full disengagement of clutch when pedal depressed.

Accelerator Linkage—See that entire linkage (both accelerator and vacumotive drive) works freely without binding. Adjust accelerator pedal rod (adjusting nut at forward end of rod) so that clearance between underside of pedal and floor mat is 4 31/32" with pedal released. See that throttle valve is wide open when accelerator pedal fully depressed (if not, recheck above adjustments).

Accelerator Switch Linkage—With accelerator pedal released, see that accelerator bellcrank is against stop (see illustration), loosen accelerator switch mounting screws and position switch on mounting bracket so that switch arm is solidly against stop on switch, tighten mounting screws.

Vacumotive Drive Adjustments: Set brakes (to prevent car moving while making adjustments), place shift lever in neutral position, depress clutch pedal and start engine, hold clutch pedal down until Vacumotive Drive takes over and holds clutch disengaged. Run engine until normal operating temperature reached and engine idles at 580-600 RPM., then make following adjustments in order given:

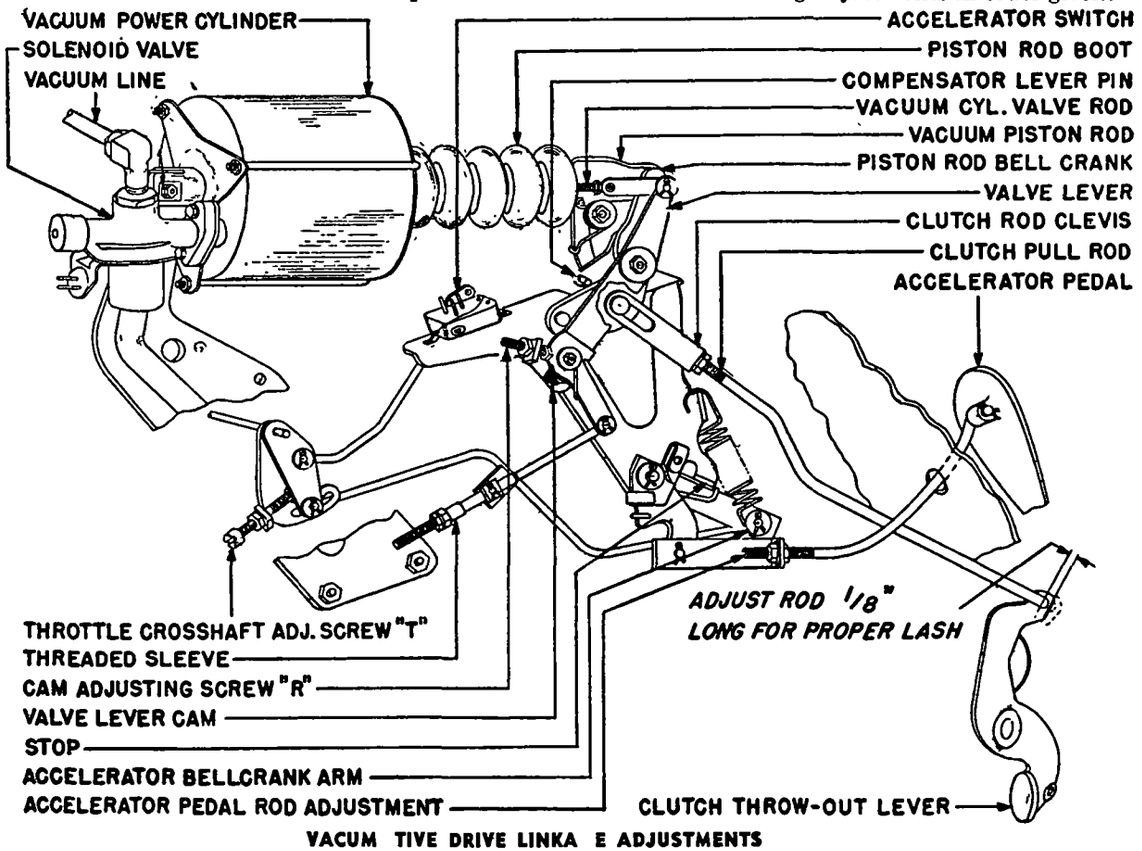

VACUM TIVE DRIVE LINKA E ADJUSTMENTS

►*CAUTION—Compensator lever must be in upward position (starting position) when making adjustments. Lever will be correctly positioned for each adjustment if adjustments made exactly as follows:*

1) Piston Travel—With engine idling to provide vacuum, check piston position by pressing in on valve lever and then releasing lever. Piston should be ½" back from extreme forward position and should return to this position when lever released. Adjust by loosening locknut and turning threaded sleeve (see illustration).

►*NOTE*—Pushing lever down to normal running position will cause piston to move forward (if piston moves backward, eccentric is upside down).

2) Clutch Pull-rod Lash—Back out Cam Adjusting Screw "R" until clearance between screw and cam is ½" (this screw adjusted later in (4) below). With engine not running, push vacuum piston rod out fully (to rear), check clutch pull-rod for required ⅛" free play or lash by pulling rod forward and up. With correct lash, forward end of pull-rod clevis will just contact compensator lever pin. Adjust by loosening locknut and adjusting clevis on forward end of pull-rod.

3) Throttle Cross-shaft Screw—Depress clutch pedal manually and start engine. Engage transmission Second Gear, release brakes. Rotate accelerator bellcrank slowly until clutch drags, adjust Throttle Cross-shaft Adjusting Screw "T" until increase in engine speed to 800-1000 RPM. is noted as car begins to move.

4) Cam Adjusting Screw (Cushion Point)—Stop the engine. Depress clutch pedal manually and start engine. Engage transmission Second Gear, set brakes firmly to prevent car moving. Turn Cam Adjusting Screw "R" in fully, press valve lever cam forward against the cam adjusting screw and back screw out until engine stalls. NOTE—Final adjustment of this screw is made during "Fast Start" part of Final Road Test following.

5) Final Road Test—Check performance by road testing car and make necessary re-adjustments for Slow & Fast Starts as follows:

Slow Start—Start car up normally except that accelerator pedal should be depressed very slowly to put car in motion. Engine speed should increase slightly just before car starts to move. Adjust throttle cross-shaft adjusting screw "T" as necessary (see adjustment 3 above).

Fast Start—Start car up normally except that accelerator pedal should be rapidly pressed halfway to floor. Car should move forward smoothly without excessive clutch slippage. Turn cam adjusting screw "R" in or out as necessary (see adjustment 4 above).

►*CAUTION—Do not turn screw in more than 2 turns from initial setting (4 above) when making this final adjustment.*

LUBRICATION: Linkage and power cylinder should be lubricated at regular intervals as follows:

1000 Miles—Oil all pivot points in Vacumotive Clutch Mechanism with light engine oil.

CAUTION—Make certain that several drops of oil placed in piston rod bellcrank oil hole.

10000 Miles—Remove pipe plug in end of power cylinder, spray one oz. of Hudson Shock Absorber fluid through this hole.

1949 PACKARD ELECTROMATIC

Packard Eight, Super Eight, & Custom Eight, All "2200" & "2300" Series (1949)

DESCRIPTION & OPERATION: Electromatic clutch on these cars is similar to design used on previous models except for simplified control mechanism (see illustration) and operates as follows:

Power Cylinder: Diaphragm type mounted on left side of engine and linked to clutch relay lever by pulley and cable mechanism (pulley mounted on lever, free end of cable anchored to bracket on starter). Rear chamber in cylinder is open to atmospheric pressure (through air cleaner) at all times. Front chamber is controlled by Control Valve and is connected to manifold vacuum (for clutch disengagement) or to the atmospheric pressure (for clutch engagement).

Control Valve Assembly: Consists of a hollow piston type valve controlling air-and-vacuum admission to forward chamber of power cylinder. A regulating diaphragm unit and accelerating linkage connection control the valve piston through a fulcrum lever linkage to provide correct clutch engagement under all operating conditions.

Lockout Solenoid Valve: This valve controls the vacuum line between the manifold and the Electromatic Clutch so that electromatic clutch is operative only with valve open. Valve is spring-loaded so that it is closed when solenoid is not energized (Lockout Switch "off"). Pressing the lockout switch (switch "on") energizes the solenoid and opens the valve whenever the circuit is completed to ground through the Direct Speed Switch, Accelerator Switch or Governor.

ADJUSTMENT: ***CAUTION—Make all adjustments in order and exactly as follows:***

1) Clutch Pedal Free Play—Check and adjust free play to 1½" (see car model pages for instructions).

2) Power Cylinder Operating Cable—Check adjustment by depressing clutch pedal to toeboard (engine must be running and Electromatic clutch "on"). Pressure required to depress pedal should be very light to within ½" of toeboard, and pressure for final ½" movement of pedal should be same as required with Electromatic Clutch "off". If this ½" final travel with increased pressure not noted, adjust cable by backing off adjusting nut at anchor bracket on starter (see Note), tighten second nut on cable fitting, recheck operation.

►**Adjusting Note**—If range of adjustment on cable fitting insufficient, grind off face of cable eye on bracket (Eight & Super Eight), shift bracket on starter (Custom Eight).

3) Accelerator Linkage—Adjust to remove excessive free play in linkage between accelerator pedal and carburetor throttle. Adjust carburetor-to-cross shaft link clevis for 1/16" clearance between throttle operating lever and stop on electromatic control valve bracket with carburetor throttle stopscrew against stop with fast idle cam in slow or hot idle position. Adjust accelerator-to-electromatic clutch operating lever rod (adjusting nut at control valve end of rod) so that pin enters hole in operating lever. Check to make certain that the valve operating lever rotates clockwise to the wide-open throttle position when accelerator pedal is depressed to point where accelerator bellcrank contacts overdrive kick-down switch plunger.

4) Control Valve Engine Speed Screw & Operating Rod—Operating rod requires adjustment only if engine speed screw adjustment not sufficient.

Engine Speed Screw—Engine must be thoroughly warmed up and idling at hot or slow idle speed for this adjustment. With engine idling, place car on level floor, engage transmission Second Gear. Adjust engine speed screw so that car will just move when valve operating lever is brought up against the engine speed screw. If screw does not have sufficient range for correct adjustment (turns completely in or out before correct setting secured), adjust operating rod as follows:

Operating Rod—Engine must be warmed up and idling at hot or slow idle speed for this adjustment. Turn engine speed adjusting screw in to midpoint of travel, disconnect valve rod link at valve operating lever, hold throttle operating lever against stop on bracket. Position valve operating lever so that clearance between lever and stop is ⅛" and **hold lever in this position.** Move valve rod in slowly until power cylinder operating cable just starts to move out and hold valve rod in this position. Adjust clevis on forward end of valve rod until operating link can be engaged, secure link with spring clip lock. Then check and adjust Engine Speed Screw.

5) Direct Speed Switch—Disconnect lead at switch terminal, connect test light and battery between this terminal and ground. Place gear shift lever in High Gear position. **Lamp should not light.** Move gearshift lever toward neutral. **Lamp should light** when lost motion in linkage is taken up but before transmission shifter fork moves out of detent. Adjust switch by loosening clamp bolt and shifting bracket on mounting stud until correct performance secured.

6) Accelerator Switch—Disconnect both leads at switch terminals, ground one terminal, connect test lamp and battery to other terminal. With accelerator pedal released, **lamp should be lighted.** Depress accelerator pedal slowly until valve operating lever just contacts engine speed screw, **lamp should go out at this point.** If lamp remains lighted, loosen locknut and turn adjusting screw on face of switch until lamp goes out. Release accelerator pedal, lamp should light. Recheck setting, tighten adjusting screw locknut.

7) Governor—No adjustment provided. Governor should be replaced if operation unsatisfactory. See Testing of Control Switches (below).

8) Road Test & Fast Start at Full Throttle Setting: After preceding adjustments completed, road test car and make necessary adjustments for special fast starting with full throttle performance as follows:

Fast Start-with-Full Throttle Setting—Check performance by making fast starts (full throttle) in second gear. Clutch should engage as rapidly as possible without causing engine to stumble. To adjust, turn valve rod stop screw (on rear face of control valve diaphragm cover) out until screw head extends 1¼" from diaphragm cover (will cause very rapid clutch engagement on fast starts), then turn screw in or clockwise ¼ turn at a time and repeat

CONTINUED ON NEXT PAGE

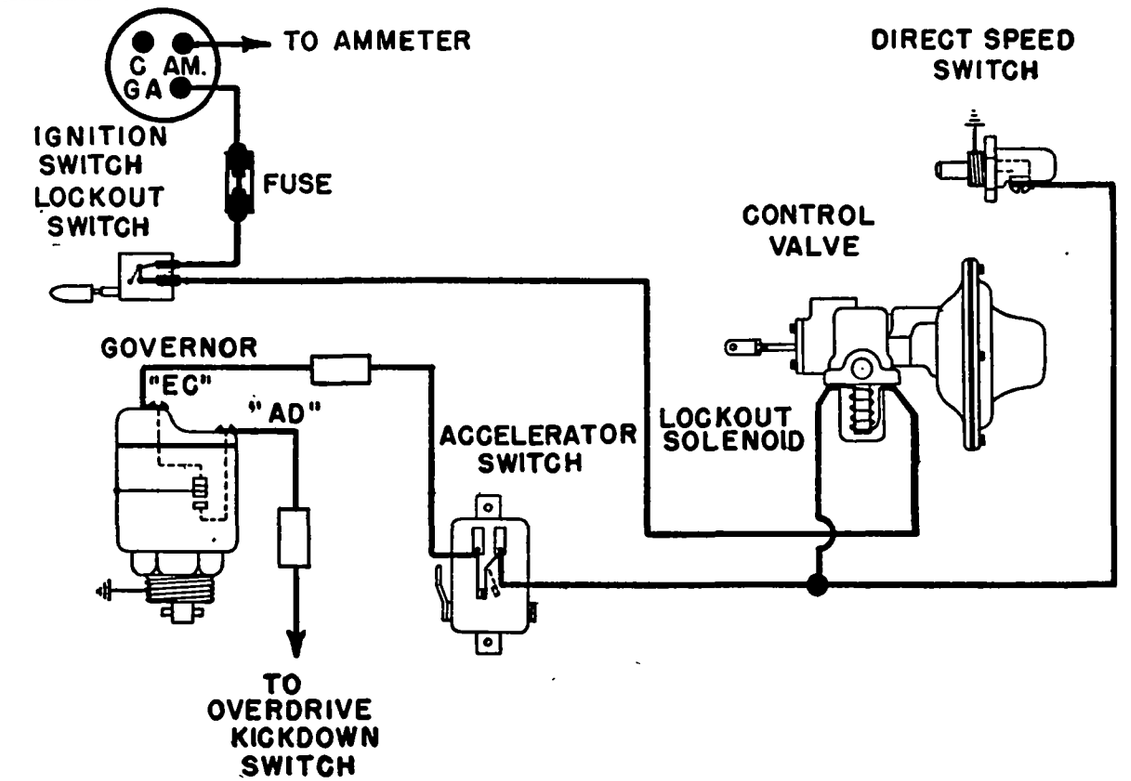

ELECTR MATIC CLUTCH WIRING DIAGRAM

1949 PACKARD ELECTROMATIC (C ntinued)

tests until satisfactory clutch engagement is secured without excessive slippage.

►*CAUTION—Do not allow clutch to become overheated through excessive slippage while adjusting.*

Final Road Test Check—Test electromatic clutch operation under normal driving conditions. Readjust as required if clutch slippage is excessive or if engagement too severe under driving conditions.

TESTING ELECTRICAL UNITS: To check switches and other control units, use test lamp as directed

►*CAUTION—Check Electromatic Clutch Fuse first (in line between ignition switch and lockout switch) before making additional tests.*

Direct Speed Switch: See 5) under Adjustm't (above).

Accelerator Switch: See 6) under Adjustm't (above).

Lockout Switch: Disconnect red wire at Lockout Solenoid, connect one test lamp lead to this wire, ground other test lamp lead. Turn ignition switch "on". Press Lockout Switch knob for alternate "on" and "off" positions. Lamp should light with switch on, and should not be lighted with switch off. If lamp does not light with switch on, check for blown fuse and check line between ignition switch and lockout switch for open-circuits, replace switch. If lamp does not go out with switch off, switch is shorted and should be replaced.

Lockout Solenoid: Disconnect both wires at Lockout Solenoid terminals. Ground one terminal. Connect one test lamp lead to other terminal, connect other test lamp lead to ungrounded terminal of battery. Lamp should light. If lamp does not light, solenoid winding is open.

Governor: Connect one test lamp lead to ungrounded terminal of battery. Connect other test lamp lead to each governor terminal in turn. Lamp should light when connected to "EC" terminal (electromatic clutch contacts), and should not light when connected to "AD" terminal (Overdrive contacts).

INLAND CLUTCH

Pontiac 6 & 8, All Models (1949-50) with Synchro-mesh Trans. (no Clutch with Hydra-Matic Drive)

DESCRIPTION: Single plate "diaphragm spring" type of same design used on previous models.

SERVICING: *See complete "Inland" Clutch in previous release.*

DRIVEN MEMBER: Long or Borg & Beck type. See Long 9½CF & 10CF and Borg & Beck clutch data.

HUDSON CLUTCH

Hudson Six & Eight, All Models (1949)
Hudson Pacemaker, Model 500 (1950)

DESCRIPTION: Single plate, cork insert disc operating in oil. NOTE—9" clutch Std. on Pacemaker, (10" with Drive-Master). 10" type on all others.

►*CAUTION—Different springs used on these clutches.*

SERVICING, INSTALLATION & ADJUSTMENT: *See complete "Hudson (Own)" Clutch in previous release and note following new specifications:*

1949 6 & 8 Spring Specifications

Outer Springs (12 used)	180-190 lbs. @ 1⅝"
Inner Springs (3 used)	135-145 lbs. @ 1⅝"

1950 Pacemaker Spring Specifications

Outer Springs①	130-140 lbs. @ 1⅝"
Inner Springs②	75-85 lbs. @ 1⅝"

①—9 used (9" Clutch), 12 used (10" Clutch).
②—6 used (9" Clutch), 3 used (10" Clutch).

BORG & BECK MODELS 8A7, 9A7, 10A6, 10A7, 11A6

Model No.	Assy. No.	
10A7	930	Chrysler Six, C45 (1949)①
9A7	953	Chrysler Six, C45 (1949)②
11A6	929	Chrysler Six, Fleet & Taxi (1949)
10A6	961	Chrysler Eight, C46 & C47 (1949)②
10A7	957	De Soto, Model S13 (1949)①
9A7	952	De Soto, Model S13 (1949)②
11A6	994	De Soto, Taxicab (1949)
10A7	957	Dodge, Models D29 & D30 (1949)①
9A7	952	Dodge, Model D30 (1949)②
11A6	931	Dodge, Taxicab (1949)
9A7	951	Frazer & Kaiser, All (1949)
10A7	948	Kaiser, Model 491 Taxicab (1949)
10A7	988	Mercury V8 Models (1949-50)
8A7	987	Nash "600", Series 4940 (1949) Nash Statesman, 5040 (1950)
10A7	950	Nash Amb. 4960 ('49), 5060 ('50)③
10A7	927	Oldsmobile 6, All Models (1949)③
9A7	926	Plymouth, Models P17 & P18 (1949)
9A7	964	Plymouth, Spec. Equip. (1949)
8A7	980	Studebaker Champ. 8G ('49), 9G ('50)
9A7	943	Studebaker Com. 16A ('49), 17A ('50)

①—Cars with Synchro-mesh Transmission.
②—Cars with automatic transmission.
③—Except Hydra-Matic Drive (no clutch used).

►**CLUTCH ASSEMBLY NOTE**—This number stamped on cover and can be used to identify each model.

►**BORG & BECK DRIVEN MEMBER (Other Cars)**—Borg & Beck driven member used with clutches of other makes on following cars:

Borg & Beck Driven Member

Car Model	Borg & Beck Part No.
Buick Series 40 & 50	11776
Willys Jeep, CJ-3A (1949)	11623
Willys 4 Cyl. Sta. Wgn. & Truck (1949)	11735
Willys 6 Cyl. Sta. Wgn. & Sedan (1949)	11777

DESCRIPTION: Single plate, dry disc type of same design as used on corresponding previous models.

SERVICING & DRIVEN MEMBER DATA: *See complete "Borg & Beck Models 8A7, 9A6, 9A7, 10A6, 10A7, 11A6" Clutch in previous release and note the following specifications:*

Clutch Spring Specifications

Clutch Assy.	Spring No. & Color	Pressure & Lgth.
926	9—Lavender	150 lbs. @ 1½"
927	9—Light Green	175 lbs. @ 1 11/16"
929	(6—Purple	135 lbs. @ 1 11/16"
	(6—No color	155 lbs. @ 1 11/16"
930, 948	9—Light Blue	165 lbs. @ 1 11/16"
931, 994	(8—Purple	135 lbs. @ 1 11/16"
	(4—Green	110 lbs. @ 1 11/16"
943	9—Yellow	140 lbs. @ 1½"
951, 952	9—Tan	160 lbs. @ 1½"
953	9—Orange	170 lbs. @ 1½"
950, 957, 988	9—No color	155 lbs. @ 1 11/16"
961	12—Light Blue	165 lbs. @ 1 11/16"
964	(3—Orange	170 lbs. @ 1½"
	(6—Red	195 lbs. @ 1½"
980	(3—Orange	170 lbs. @ 1½"
	(3—Red	195 lbs. @ 1½"
987	6—Red	195 lbs. @ 1½"

Spring pressures are plus or minus 5 lbs.

Release Lever Settings
(For use with Borg-Warner UF-300 Fixture)

Clutch Assy.	Lever Height
926, 930, 943	2 3/16"
927	See Note
929, 931	2 1/4"
948, 964, 994	2 1/8"
950, 951, 952, 953	2 3/16"
957	2 5/32"
961, 988	2 3/16"
987	2 9/32"

BUICK CLUTCH

Buick Series 40, 50 (1949)—exc. Dynaflow Cars
Buick Special 40 (1950)—exc. Dynaflow Cars

DESCRIPTION: Single plate "Crown Spring" type is same design used on corresponding previous models.

SERVICING & DRIVEN MEMBER DATA: *See complete "Buick (Own) Crown Spring" Clutch in previous release and note following important data:*

Clutch Cover Inspection—Check height of spring retainer ears by placing cover on flat surface and measuring from surface to top surface of each ear. Distance should be 1 5/8". Correct by bending the ears (CAUTION—use care not to crack or distort cover). Replace cover if cracked or distorted.

Crown Spring Inspection—Check for excessive flattening of the spring due to taking on a permanent set by placing spring on flat surface and measuring height of top surface of spring at inner rim. Normal height is 1 13/16" and height should not be less than 1 11/16".

CHEVROLET CLUTCH

Chevrolet No.
838995①—Pass. Cars & ½ Ton Comm'l (1949)
838956—All Trucks (Optl. on ½ Ton) (1949)
①—838956 Optl. for Heavy Duty on these cars.

DESCRIPTION: Single plate "Diaphragm Spring" type of same design used on corresponding previous models. NOTE—Two different clutch sizes used and parts not interchangeable between these models.

Clutch Part Numbers

Assy No.	Clutch Cover	Pressure Plate
838955 (9" type)	838953①	838948③
838956 (11" type)	838954②	838949③

Driven Member (Disc & Facings)

9" Clutch Type (9" O.D.)	839608
11" Clutch Type (10¾" O.D.)	3835452④

①—O.D. 11 7/16". ②—O.D. 13 1/16".
③—This part no. cast in plate.
④—Identified by green or white paint on entire rear face of hub or two spots of green or white paint on rear face of spring retainer.

SERVICING & DRIVEN MEMBER DATA: *See complete "1938-48 Chevrolet (Own)" Clutch in previous release.*

LONG 9½CF, 10CF, 11CF

Clutch Model	Cover Assy. No.	
11CF-10½TI	L5167	Cadillac 60S, 61, 62 ('49)①
11CF-TI	L5167	Cadillac Series 75 ('49)①
11CF-TI	L5152	Cadillac Comm'l 86 ('49)①
9½CF-TS	268594	Ford 6 & V8 Pass. Cars ('49-50)
10CF-TI	L5222	Ford Police & Taxicab ('49)
		Ford ½-Ton F-1 (1949)②
		Ford ¾ & 1 Ton 6 Cyl. ('49)
11CF-CI	L1440	Ford ½ & ¾ Ton Pkg. Del. ('49)
		Ford Other Trks Std. ('49)
11CF-CI	L1478	Ford Trks. Optl. ('49)
11CF-10½TI	267044	Lincoln & Cosmpltn. ('49)①
10CF-TI	267954	Packard 8, All Models ('49)
11CF-10½TI	268349	Packard Super 8, All ('49)③
11CF-TI	267953	Packard Cust. 8, All ('49)③
11CF-TI	268349	Packard Taxicab (1949)

①—Not used with Hydra-Matic Drive.
②—3-Speed Trans. only.
③—Not used with Ultramatic Drive.

►**LONG DRIVEN MEMBER (Other Cars):** Long Driven Member used with clutches of other makes on following cars:

Long Driven Member

Car Model	Type	Long Part No.
Buick Series 40 & 50	10CF-TS	CD890
Pontiac 6	9½CF-TS	CD874
Pontiac 6 Taxicab	10CF-CS	CD682
Pontiac 8	9½CF-TS	CD875
Pontiac 8 Taxicab	10CF-CS	289232

DESCRIPTION: Single plate, dry disc, "semi-centrifugal" type of same design as used on corresponding previous models.

SERVICING & DRIVEN MEMBER DATA: *See complete "Long 9CF, 9½CF, 10CF, 11CF" Clutch in previous release and note the following specifications:*

Release Lever Settings
(For use on Borg-Warner UF-300 Fixture)

Clutch Model	Lever Height
9½CF No. 268594	2 1/4"
10CF No. L5222, 11CF No. 267044	1 3/4"
10CF No. 267954	1 31/32"
11CF No. L5152 & L5167	1 7/8"
11CF No. L1440 & L1478	2 7/32"
11CF No. 267953 & 268349	1 15/16"

Clutch Spring Specifications

Cover Assy.	Spring No. & Color	Pressure①
L1440	9—Gray	115 lbs.
L1478	9—Pink	135 lbs.
L5152	9—Orange	180 lbs.
L5167	9—Yellow	147½ lbs.
L5222	9—Blue	130 lbs.
268594	9—Green	175 lbs.
267954	9—Pink	155 lbs.
268349	9—Tan	163 lbs.
267953	12—Orange	175 lbs.

①At length of 1 9/16". All pressures are plus or minus 5 lbs.

ROCKFORD (CROSLEY)

Model & Assy. No.
6TS—R-4608 Crosley, CD & Hotshot (1949)

DESCRIPTION: Single plate type of same design used on previous Crosley models.

SERVICING & DRIVEN MEMBER DATA: *See complete "Rockford (Crosley)" Clutch in previous release.*

AUBURN CLUTCHES

Auburn No.
9251-15—Frazer, All Models (1949)①
9251-15—Kaiser, All Models (1949)①
9251-17—Plymouth, Models P17 & P18 (1949)①
8501-19—Willys 4 Cyl. Sta. Wgn. & Del. (1949)
8501-19—Willys 6 Cyl. Sta. Wgn. & Sedan (1949)
8501-19—Willys Jeepster Model VJ-3 (1949)
8501-23—Willys Jeep Universal CJ-3A (1949)
8501-23—Willys Jeep Trucks 2WD & 4WD (1949)
①—Some cars—Borg & Beck Clutches also used.

►**CLUTCH FACING CHANGE (4-63, 2WD, 4WD)**—New softer facing used to reduce tendency of clutch to chatter on engagement. Clutch Driven Plate & Hub Assembly with this new facing is Part No. 648404, superseding No. 645699, beginning with following Engine Nos. 4-63—No. 82311, 2WD—No. 21573, 4WD—No. 31371.

►**WILLYS RETURN CLIP SPRING INSTALLATION (to prevent rattling or fizzing noise when clutch disengaged)**—This flat spring, Part No. 649337, should be installed on cars after November 29, 1948 with new type Pressure Plate Assembly (equipped with neoprene rubber inserts at sides of pressure plate driving lugs) to insure clean clutch release and prevent gear grinding when shifting into Low or Reverse, and can also be installed on earlier clutches to prevent above noise. See Servicing data below for spring installation.

►**RELEASE LEVER INTERFERENCE (causing premature clutch wear on first CJ-3A Jeeps)**—On these cars and other models, check for interference between edges of clutch release lever and lever opening in bell housing which prevent full clutch engagement and cause premature wear of the clutch facings. If interference noted, enlarge opening in bell housing by using a 1/8" or 3/16" drill to drill line of holes vertically 3" forward of rear edge of original opening, and horizontally 3/16" above top edge, and 1/8" below lower edge of original opening, joining the vertical line of holes with the original opening. Break out section of metal within this area with a wrench or drift.

DESCRIPTION: Single plate dry disc type of same design used on corresponding previous models except for new Pressure Plate Assembly used on some Willys models as follows:

Willys Pressure Plate Assembly (8501-19 Clutch). Has neoprene rubber inserts at sides of pressure plate driving lugs (to prevent rattling or fizzing noise when disengaged) and flat Return Clip Spring on each release lever (to insure full disengagement).

SERVICING & DRIVEN MEMBER DATA: *See complete "Auburn (Atwood)" Clutch in previous release and note the following new specifications and service data:*

Clutch Spring Specifications

Car Model	Spring Pressure & Length
Frazer & Kaiser	239-263 lbs. @ 1 13/16"
Plymouth	225-240 lbs. @ 1 13/16"
Willys	180-195 lbs. @ 1 9/16"

Release Lever Settings

Car Model	Release Lever Height
Frazer & Kaiser	1 15/16" ±1/32"
Plymouth	1 15/16" ±1/32"
Willys	1 15/16" ±1/64"

Willys Return Clip Spring Installation—Engage slot on flat end of spring under head of release lever adjusting screw, engage loop on curved end of spring over ridge on outer end of release lever.

►*INSTALLATION ON CLUTCHES IN SERVICE*—Clips can be installed by working through inspection hole in bell housing without dismantling clutch. CAUTION—Use string attached to clip to prevent it dropping down into bell housing during installation.

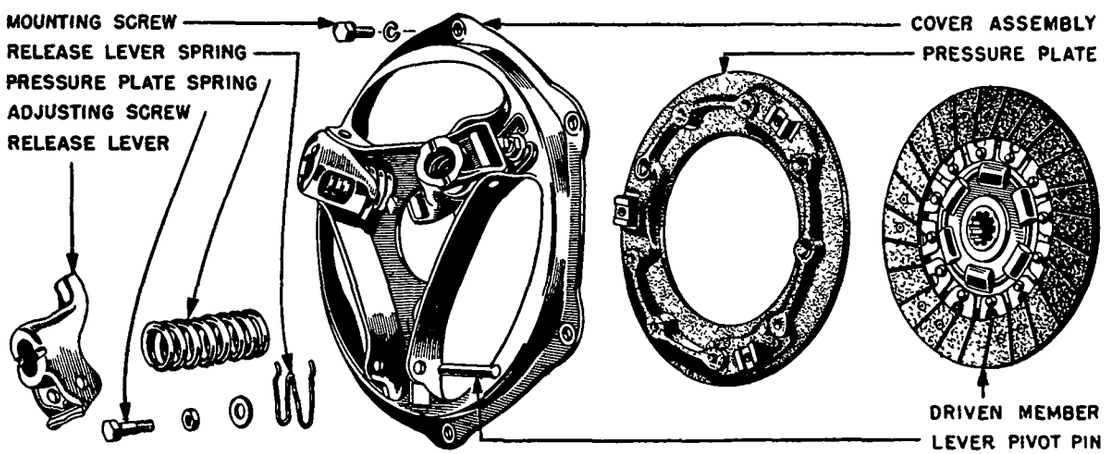

AUBURN CLUTCH (FRAZER & KAISER TYPE)

1949-50 BUICK

Series 40, 50, 70 (1949)
Special Series 40 (1950)

►**1949 Type Upper Pivot Pin & Bushing Installation on 1937-48 Series 40, 50, 70 Cars**—New type pivot pin with greater eccentricity, providing 50% greater range of Camber adjustment, can be installed on these earlier cars as **complete set** with bushings.

►***CAUTION—1949 Pivot Pin and Bushings must be used together (not interchangeable separately with previous type parts).***

DESCRIPTION: Independent, parallelogram type of same design as used on previous Buick models except for new type Upper Pivot Pin (with greater eccentricity providing 50% greater range of camber adjustment) and new bushings which must be used with this new type pivot pin.

CHECKING & ADJUSTMENT: ***See complete "Buick 1946-48" Front Suspension in previous release and set 1949 cars to the following specifications:***

Tire Inflation: Check and inflate to correct pressures before checking front end specifications:
Series 40—26 lbs. (Cold), 29 lbs. (Warm).
Series 50—35 lbs. (Cold), 27 lbs. (Warm).
Series 70—22 lbs. (Cold), 25 lbs. (Warm).

Trim (Front Spring) Dimension: Bounce front end of car up and down several times to check for binding in suspension system, allow springs to assume natural position. With car at curb weight, measure from lower edge of frame cross-member (at bumper bracket) vertically to top edge of lower control arm. If trim dimension not within limits, install special shims on low springs or replace springs (see Spring data).

	Front Trim Dimension Regular Spring	Optl. High Exp. Springs
50 exc. 56C	3¾-4¼"	4-4½"
70 exc. 76C	3¾-4¼"	4-4½"
56C & 76C	3½-4"	3¾"-4¼"

Kingpin Inclination: 4¼° crosswise with ⅜° Camber.

Caster: Pos. ⅜° (limits Pos. 1¼° to Pos. 1½°) and equal on both sides of car within ½°.
Adjustment—Remove lubricant fitting from bushing at outer end of upper suspension arm, (front bushing on right side, rear bushing on left side of car), loosen clamp bolt in upper end of knuckle support, insert Allen wrench through lubricant fitting hole, turn pivot pin to adjust caster (CAUTION—Camber will be changed unless pin rotated in complete turns only, check camber after adjusting caster). Check toe-in if caster changed more than ¼° (¼ turn of pivot pin).

Camber: Pos. ⅜° (limits Pos. ⅞° to Neg. ⅝°) and equal on both sides of car within ¾°.
Adjustment—Adjust in same manner as Caster (above) except that eccentric pin should be turned only slightly from point where correct caster secured. (entire range of adjustment secured in ½ revolution of the pin).

Toe-In: 1/16" to 1/8".
Adjustment—Loosen clamp bolt at outer end of each tie rod, turn adjusting sleeve in outer end of **each tie rod equally** (⅜ turn of adjusting sleeve on each side changes toe-in ⅛").

►***CAUTION***—When tightening clamp bolts, see that clamps are within ⅛" of rod ends and that ear of clamp overlaps slot in tube by not less than 1/16".

Steering Geometry (toe-out on turns): With outer wheel turned exactly 20°, inner wheel should be turned 21½° ± ¾°.

SPRINGS:

	Regular	Optl. High	Export
41, 46S	1314950	1335808	1335808
51, 56C, 56S①	1314950	1335808	1335808
51, 56C, 56S②	1314950	1335808	1335808
59	1314950		1314950
71, 76C, 76S	1337574	1335809	1335809
79	1337574		1337574

①—Cars with Synchro-mesh Transmission.
②—Cars with Dynaflow Drive.

Identification Note—Spring part no. is stamped on one end coil of spring.

Spring Height Correction—If spring too low (trim dimension not within limits), not more than three special shims (⅛" thick) may be installed between upper end of spring and frame.

►***CAUTION***—If more than three shims required to correct spring height, replace spring.

CADILLAC

V8, Series 60S, 61, 62, 75, 86 Comm'l (1949)

DESCRIPTION: Same design as used on previous Cadillac models.

ADJUSTMENT & SERVICING: ***See complete "Cadillac 1936-48" Front Suspension in previous release and also note following new specifications:***

Tire Inflation: Check and inflate to correct pressures before checking front end specifications:
60S, 61, 62 (Front & Rear)—24 lbs.
75—(Front) 24 lbs., (Rear) 32 lbs.
86 Comm'l—(Front) 34 lbs., (Rear) 36 lbs.

Kingpin Inclination: 5°51' crosswise (steering knuckle pin-to-wheel spindle angle 95°51').

Caster: Limits Neg. ½° to Pos. ½° and equal on both sides of car within ½°.
Adjustment—Remove lubricant fitting from front bushing at outer end of upper suspension arm, loosen clampscrew in upper end of knuckle support, insert 5/16" Allen wrench through lubricant fitting hole, turn wrench clockwise to increase caster, counterclockwise to decrease caster, in **complete turns only** to avoid disturbing Camber adjustment.

►***ADDITIONAL RANGE OF ADJUSTMENT***—If correct caster cannot be secured by above adjustment, greater range of adjustment can be secured by disconnecting lower support arm inner mounting shaft at frame cross-member and turning shaft in arms. Turn shaft to rear (moving support arms forward) to increase Caster.

Camber: Limits Pos. ⅜° to Neg. ⅜° and equal on both sides of car within ½°.
Adjustment—Adjust in same manner as Caster (above) except that eccentric pin should be **turned not more than ½ revolution** (entire range of adjustment secured in ½ turn of the pin).

Toe-In: 1/32-3/32" toe-in with car at rest.
Adjustment—Loosen clamp bolts and turn adjuster at outer end of **each tie rod** equally.

Steering Geometry (toe-out on turns): With outer wheel turned exactly 20°, inner wheel should be turned as follows:

	Right Turn	Left Turn
60S, 61, 62	24°42'	25°25'
75, 86 Comm'l	23°6'	24°7'

Springs:

	Identifying Color & Part No.
61, 62 except Conv't	None—1455406
60S, 62 Conv't	Gray—1455407
75	Pink—1428434
86 Comm'l	Yellow—1428429

Spring Heights—4½-5¼" measured from center of lower rivet on front side of bumper bracket on frame cross-member to top of lower spring seat adjacent to lower bumper. Springs on both sides of car should be equal within ⅜". Correct by installing spacer under low spring.

►***CAUTION***—New springs may be high to allow for normal settling. Do not replace springs because of excessive heights until springs run for at least 2000 miles.

OLDSMOBILE

Six & Eight Series 76, 88, 98 (1949)

DESCRIPTION: Independent, parallelogram type of same design as used on previous models except for following changes:
Series 76, 88 Upper Control Arm (Shock Absorber Arm)—Arms on these 1949 models are 7/16" shorter than on previous cars.

CHECKING, ADJUSTMENT & SERVICING: ***See complete "Oldsmobile & Pontiac 1940-48" Front Suspension in previous release and set these 1949 cars to following specifications:***

Tire Inflation: Check and inflate tires to correct pressure for tire size installed on car:
7.10x15 & 7.60x15 Tires—24 lbs. front & rear.
8.20x15 Tires—22 lbs. front & rear.

Kingpin Inclination: 4°29'47" crosswise.

Caster: 0° to Neg. ¾° (machined boss on top of knuckle support 0" to 5/64" forward of boss on lower end of support).
Adjustment—Loosen clamp bolt in upper end of knuckle support, remove lubricant fitting from front bushing at outer end of upper control arm, use Allen wrench (Tool J-720) inserted through fitting hole to turn eccentric pivot pin (turn pin clockwise to increase caster), turning pin **in complete revolutions only** to avoid disturbing camber adjustment.

Camber: Neg. ¾° to Pos. ¾° (new car limits Neg. ¼° to Pos. ¾°).
Adjustment—Same as for Caster (above) except that eccentric pivot pin should be turned not more than ½ revolution from point where correct caster secured (entire range of adjustment secured in ½ revolution of the pin).

Toe-In: 1/16" to 1/8".
Adjustment—Loosen clamp bolts at each end of adjusting tube on outer end of each tie rod, turn adjusting tubes on **both tie rods** equally.

Steering Geometry (Toe-out on turns): With outer wheel turned exactly 20°, inner wheel should be turned 23° ± ½°. No adjustment.

SPRINGS:

	Color Mark & Part No.
76 exc. Sta. Wgn. & Convt.	Red—509040
76 Sta. Wgn. & Convt.	Grey & Yellow—511138
88 exc. Sta. Wgn. & Convt.	Grey & Yellow—511138
88 Sta. Wgn.	Red & Blue—419540
88 Convt.	Green—419534
98 exc. Convt.	Green—419534
98 Convt.	Yellow & Brown—554995

Color Mark—Consists of one or two paint daubs on one spring coil.

CHEVROLET

Styleline & Fleetline Models GJ & GK (1949)

►**FRONT SUSPENSION UNIT ASSEMBLY REMOVAL:** Entire assembly is mounted on special cross-member bolted to frame side rails and can be removed as a unit for servicing and overhaul by taking out these mounting bolts.

►**LOWER CONTROL ARM PRODUCTION CHANGE:** Two types of arms used on 1949 cars can be identified as follows:

First Type—Does not have re-inforced control shaft bushing hole at inner end. Special bushings and locknuts must be used with this arm.

Later Type—Has welded re-inforcement plate on inner face of arm at each control shaft bushing hole (locknuts not used with bushings with this type arm). Replacement arms have burnished threads for bushings and control shaft used with this arm has thread starts matched with those in arm.

NOTE—Second type control shaft can be used with first type control arm and bushings but other parts are not interchangeable.

►*REPLACEMENT PARTS PACKAGE CAUTION*—Different parts packages required for cars with each type control arm as follows:

Service Pkg. No. 3690685
(For First Type Control Arm)

Lower Control Arm Shaft	3687664
Shaft Bushing (2 used)	3687638
Bushing Locknut (2 used)	3687637
Bushing Seal (2 used)	599180

Service Pkg. No. 3693459
(For Later Type Control Arm)

Lower Control Arm Shaft	3687664
Shaft Bushing (2 used)	3691454
Bushing Seal (2 used)	599180

DESCRIPTION: New design, independent, linked parallelogram type with direct acting shock absorbers, coil springs, and new type upper control arm (not part of shock absorber assembly). Crossmember on which suspension unit mounted has new "tower type" bracket at each end for spring housing, shock absorber mounting, and upper control arm shaft mounting.

CHECKING & ADJUSTMENT: First check entire front end for excessive play and wear, check steering gear adjustment, wheel bearing adjustment, tire inflation pressure (see data below), wheel balance and run-out (run-out should not exceed 1/16"), then place car on level floor and check front end specifications as follows:

Tire Inflation Pressure: For each type tire (Cold): **Pass. Cars** (6.70x15—4 ply)—24 lbs. frt. & rear. **Station Wagon & Sedan Delivery** (6.70x15—6 ply) 24 lbs. front, 30 lbs. rear.

Riding (Spring) Height: Rock car sidewise several times and allow it to settle, then measure vertical distance from center of pivot pin at each end of lower control arm to floor. Difference between these two measurements should be 1⅝" ± ¼". If difference between measurements less than this amount, or if unequal on both sides of car, install spring shims or replace springs (see Spring data).

Kingpin Inclination: 4° ± ½° crosswise.

Caster: Pos. ½° ± ½°.

Adjustment—Loosen clamp bolt in upper end of knuckle support, remove lubricant fitting from rear bushing at outer end of upper control arm, insert Allen wrench through hole, turn pivot bolt until exact caster setting secured, then adjust camber.

►*CAUTION—Caster adjustment will change camber unless pivot bolt rotated in full turns only.*

Camber: Pos. ½° ± ½°.

Adjustment—After adjusting Caster (above), rotate pivot bolt not more than ½ turn in either direction to secure correct camber. Entire range of adjustment is secured in ½ turn of the pivot bolt.

Toe-In: 0 to ⅛".

Adjustment—Loosen clamp bolts at each end of **left hand tie rod** and turn rod (right hand tie rod is one-piece non-adjustable type), tighten clamp bolts to 8-12 ft. lbs.

►*CAUTION—Align tie rod ends before tightening clamp bolts (ball studs will bind if not aligned).*

Steering Geometry (Toe-out on Turns): With outer wheel turned 20°, inner wheel should be turned 24° ± 2°. No adjustment (replace steering arm if incorrect).

SHOCK ABSORBER REPLACEMENT: *Not necessary to disturb Front Suspension Assembly.* Remove nut on shock absorber upper threaded end while holding stem from turning with ¼" wrench (this nut located on top of spring housing tower), lift off grommet retainer and grommet. Remove nut and lockwasher from shock absorber lower mounting bracket stud (on underside of lower spring seat), lower shock absorber and mounting bracket assembly down and out through hole in spring seat.

►**Installation Note**—When installing rubber grommet assemblies on shock absorber threaded ends, hold end from turning with a ¼" open-end wrench, tighten nut on stem until it bottoms on shoulder. This will provide correct compression of grommets.

COIL SPRING REPLACEMENT: Disconnect stabilizer link at lower control arm bracket, remove shock absorber on side on which spring being removed. Support car on jack stands placed under frame side rails. Place hydraulic jack under lower control arm inner shaft, remove nuts and lockwashers from control shaft bracket bolts, drive out bolts, lower arm slowly to relieve spring pressure, lift spring out (CAUTION—remove all shims used with old spring). Install spring by reversing this procedure.

►**Spring Installation Caution**—Service replacement springs are checked for height and are furnished with necessary shims wired to the spring.

►*CAUTION—These shims must be installed on top of the spring to insure correct riding height of the car.*

LOWER CONTROL ARM REPLACEMENT: Lower control arm assembly must be removed from the car for replacement of arm, inner shaft, or shaft bushings. Other operations can be performed without removing the assembly.

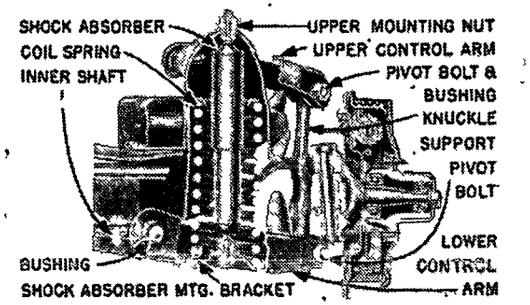

CHEVROLET FRONT SUSPENSION

Removal—Remove wheel and tire assembly, remove front spring (see Coil Spring Replacement), disconnect tie rod from steering arm, remove nut on forward end of lower control arm pivot bolt, unscrew pivot bolt, lift control arm assembly out.

1st. Type Lower Control Shaft & Bushing Installation: Hold control shaft in vise, place new seals on each end of shaft (push seals onto shaft shoulders to permit bushing installation), install bushing locknuts on shaft ends with chamfered side of nuts out toward ends of shaft. Position control arm on shaft, thread bushings on shaft and through control arm, turn locknuts loosely on bushing ends. Install Lower Control Arm Assembly Gauge J-3184 on shaft within arm (tool pin should index with bolt hole in shaft), tighten bushing until inner face of arm contacts end of gauge. Tighten locknut securely, then hold locknut with wrench and tighten bushing to 150-200 ft. lbs. using a torque wrench. Slip seals off shaft shoulders and down into their seats.

Later Type Lower Control Shaft & Bushing Installation: Hold control shaft in vise, place new seals on each end of shaft (push seals up onto shaft shoulders). Position control arm on shaft using a scale to center arm on shaft (CAUTION—Gauge J-3184 cannot be used due to welded re-inforcement plate on inner face of arms). Thread bushings on shaft and into control arm making certain that threads on bushing index with threads in arm and engage properly. Tighten bushings to 85-100 ft. lbs. using a torque wrench. Slip seals down into place.

Lower Pivot Bolt & Bushings: Bushing in lower end of knuckle support should be installed from rear-to-front and tightened to 150-170 ft. lbs. Place new seals over exposed ends of bushing, position control arm so that knuckle support is centered in outer end of arm, start pivot bolt through arm from rear-to-front, thread bolt through knuckle support bushing using care not to disturb centered position of support in control arm, continue to screw pivot bolt in and through opposite eye of control arm until bolt head firmly contacts rear face of arm (NOTE—If bolt threads do not index properly with threads in opposite eye of arm, use "C" clamp to compress ends of arm slightly until threads index and bolt can be turned through arm freely). Tighten pivot bolt to 100-200 ft. lbs., then install locknut on end of bolt and tighten nut to 90-120 ft. lbs. Use wire hook to slip seals down off ends of bushing into their seats.

UPPER CONTROL ARM REPLACEMENT: Control arm should be assembled on control shaft in crossmember tower bracket and checked for free movement throughout entire range before connecting knuckle support.

Removal—Support car on jack stand placed under lower spring seat (to keep spring compressed and lower control arm in place), remove wheel and tire assembly. Take out lubricant fitting in rear bushing at outer end of control arm, unscrew both front and rear bushings from arm, remove seals from pivot pin ends. Take out clamp bolt in upper end of knuckle support, slide pivot pin out (use ¼" Allen wrench in pin recess to assist in removal), swing knuckle support out and free of upper control arm. Unscrew front and rear bushings from control arm at inner control shaft (NOTE—On left side of car, remove sheet metal splash guard over steering gear housing for access to rear bushing), lift control arm off

C NTINUED N NEXT PAGE

CHEVROLET (C nt.)

shaft. To remove shaft from frame bracket, use Remover & Replacer Tool J-2958 and pull shaft out toward front of car.

►**Replacement Control Arm Note**—Arms furnished with threads in bushing holes slightly undersize to insure snug bushing fit when new arm installed.

►**Replacement Control Shaft Note**—New shafts are marked by "F" on end to insure correct installation ("F" end toward front of car) and diameter of threads which screw into spring housing tower are oversize to insure correct fit (CAUTION—these threads must be lubricated when installing new shaft to avoid tearing threads).

Upper Control Shaft & Bushing Installation: Lubricate threads on new shaft to avoid tearing during installation, see that shaft end marked "F" (larger diameter end) toward front of car, use Remover & Replacer Tool J-2598 to install shaft from front-to-rear of spring housing until rear end **projects exactly 1⅛"** back of housing (CAUTION—Do not back shaft out which will leave shaft loose in housing—rear end is smaller diameter and threads are tapered). Install new seals on ends of shaft, position control arm on shaft using a scale. Start both front and rear bushings on shaft and into arm (CAUTION—see that control arm not moved out of position more than necessary to start bushing threads—see Caster Adjustment Caution below), turn bushings in until head seats against arm ,then tighten bushings to 45-60 ft. lbs. See that seals seated on seats, install lubricant fittings in bushings, lubricate arm, check installation for free movement throughout entire range with rubber bumper removed (arm should fall of own weight).

►**Caster Adjustment Caution**—The thread starting points for control arm and shaft are not controlled and it may be necessary to move arm out of centered position by ½ thread pitch or 3/64" to start bushings in arm. This will require correction by Caster Adjustment after suspension assembly completed.

Upper Pivot Pin & Bushings: Position control arm on upper end of knuckle support, install pivot bolt through arm and knuckle support with Allen wrench hole **toward rear of car,** center bolt in support, install lock bolt in support and tighten to 30-35 ft. lbs. Place new seal on each end of pivot bolt. Thread front bushing on pivot bolt, center knuckle support in arm, thread bushing into arm (CAUTION—carefully index threads on bushing and arm and see that support does not move out of centered position when starting therads in arm). Install rear bushing similarly. Screw both bushings in until heads seat against arm, then tighten bushings to 45-60 ft. lbs.

KINGPIN BUSHING REPLACEMENT: ***Not necessary to remove knuckle support from car (bushings are "floating" type).*** New bushings are machined to finished size and do not require reaming.

Removal—Support car with jack under lower spring seat, remove wheel and tire assembly. Remove kingpin lock pin, upper bearing plug cover, upper and lower lock rings, and lubrication fittings. Drive sharp drift punch through lower plug, drive kingpin up until upper plug is forced out, then drive kingpin down and remove from below. Lift off steering knuckle and thrust bearing, remove floating bushings from knuckle support.

Installation—Install new bushings in knuckle support (CAUTION—oil grooves in bushing must line up with lubricant fitting hole in knuckle and bushings must be free in knuckle support and on kingpin). Install thrust bearing between lower yoke of steering knuckle and support **with shield on bearing upward,** install kingpin from below lining up lockpin slot with hole in support. Check knuckle endplay with a feeler gauge, install steel shim between support and top of steering knuckle if this clearance exceeds .006". Install kingpin lock pin, bearing plugs, lock rings, and bearing plug cover.

SPRINGS: Springs have one end ground flat which should be placed at top with shim (when used) between top of spring and spring seat in cross-member. Lower end is not ground and should be fitted in recess in spring seat on lower control arm.

1949 Spring Specifications

	Color Mark	Part No.
All Pass. Cars	Yellow	5807732

Spring Height Correction—If spring height too low (riding height less than 1⅝"), install not more than two No. 599810 Shims (1/16" thick) on top of the spring.

►***CAUTION***—If more than two shims required to secure correct riding height, replace spring (additional shims will cause spring coils to bottom before rubber bumper on lower control arm stops arm movement).

►***REPLACEMENT SPRING CAUTION***—Shims furnished with new springs (wired to spring) must be installed with the spring (riding height will not be correct if shims omitted).

CHRYSLER, DE SOTO, DODGE, PLYMOUTH

All Chrysler, DeSoto, Dodge, Plymouth Models (1949)

DESCRIPTION: Independent, parallelogram type of same design as used on corresponding previous models.

CHECKING, ADJUSTMENT & SERVICING: ***See complete "Chrysler 1940-48" Front Suspension and set 1949 cars to the following specifications:***

Tire Inflation: Check and inflate tires to 24 lbs. (Cold), 27 lbs. (warm) on all models before checking front end specifications.

Kingpin Inclination: 4¾-6° crosswise.

Caster: ***CAUTION—All models not set alike.***

Chrysler 6 & 8, DeSoto—Neg. 2° preferred, Limits Neg. 1° to Neg. 3°. This is **reverse** caster.

Dodge & Plymouth—0° preferred, Limits Neg. 1° to Pos. 1°.

NOTE—Caster is not adjustable (controlled by amount upper pivot pin bushing screwed on upper control arm). See Camber adjustment.

Camber: Pos. ¼° (Limits 0° to Pos. ¾°) with camber on left side ¼-½° **greater** than on right side of car.

Adjustment—Loosen clampscrew in upper end of knuckle support, turn eccentric bushing not more than ½ revolution from point where correct caster secured (entire range of adjustment secured in ½ turn of eccentric bushing).

►***CAUTION***—Bushing must not be turned so as to bind against either side of upper control arm (keep bushing centered in control arm as nearly as possible).

Toe-In: 0" preferred, limits 0" to 1/16".

Adjustment (Chrysler & DeSoto)—Check tie rods for equal length (22¾" between ball centers on DeSoto), adjust toe-in by loosening clamp bolt at both ends of each tie rod and turning **both tie rods equally.** Before tightening clamp bolts, make certain that rod is against same side of ball stud at each end of rod (to prevent binding on turns).

Adjustment (Dodge & Plymouth)—Loosen clamp bolt at both ends of each tie rod, adjust toe-in by turning **both tie rods equally.** NOTE—One long (right hand) and one short (left hand) tie rod are used, connected directly to steering gear pitman arm.

Steering Geometry (toe-out on turns): With outer wheel turned exactly 20°, inner wheel should be turned as follows:

Chrysler & DeSoto—21½ ± 1°.

SPRINGS: Part number is stamped on springs for identification (last digit of number indicated by like number of grind marks).

1949 SPRING SPECIFICATIONS

Car Model	CHRYSLER	Part No.
C45S,W 4-Dr. Sdn. & Club Coupe ①		1134312
Above Models②	(RH) 1318185, (LH)	1318186
C45 Convertible③		1140283
C45 Convertible④		1140286
C45 Convertible⑤	(RH) 1140283, (LH)	1140284
C45 7-Pass. & Limo.		1139007
C45 Station Wagon	(RH) 1141014, (LH)	1141015
C45 Heavy Duty (4-Dr., Coupe, Convt.)		1141016
C45 Heavy Duty (7-Pass. & Limo.)		1138944
C46 4-Dr. Sdn. & Club Coupe⑥		1127985
C46 4-Dr. Sdn. & Club Coupe⑦		1127983
C46 Convt. & T&C. Convt.⑧		1134324
C46 Convt. & T&C. Convt.⑨		1139007
C46 T&C. Club Coupe		1127983
C46 Heavy Duty (4-Dr., Coupe, T&C.)		1138943
C46 Heavy Duty (Convt. & T&C. Convt.)		1138944
C47 Std.		1134327
C47 Heavy Duty		1138947
DE SOTO		
S13 4-Dr. Sdn. & Club Coupe		1141014
S13 Club Coupe Comm'l & H.D.		1141015
S13 7-Pass., Comm'l & H.D.		1138943
S13 Station Wagon		1141015
S13 Convertible		1134313
DODGE		
D29 & D30 4-Dr. Sdn., D30 Club Coupe		864845
D29 & D30 4-Dr., Club Coupe Comm'l & H.D.		1139002
D30 Convertible		1134312
D30 Comm'l & H.D.		1141014
D30 7-Pass.		1140286
D30 Station Wagon		1141014
PLYMOUTH		
Std.		1123244
Heavy Duty		1139001

①—Before No. (C45S) 70045592 (C45W) 70747768.
②—After above Serial Numbers.
③—Before Serial No. 70737891.
④—Serial No. 70737891 to 70748355.
⑤—After Serial No. 70748355.
⑥—Before No. (C46K) 6772870, (C46N) 7071928.
⑦—After above Serial Numbers.
⑧—Before No. (Convt.) 7102223, (T&C) 7410003.
⑨—After above Serial Numbers.

FRAZER & KAISER

All Frazer & Kaiser Models (1949)

CHECKING & ADJUSTMENT: *See complete "Frazer & Kaiser" Front Suspension in previous release and set 1949 cars to the following specifications:*

Tire Inflation: Check and inflate tires to following pressures (Cold) before checking front end:
6.50x15 Tires—28 lbs. front & rear.
7.10x15 Super Cushion—24 lbs. front & rear.

Spring Deflection (Frame Height): Bounce front end of car up and down several times to check for binding in suspension system, then measure from top edge of lower control arm vertically upward to lower face of frame side rail at same point on each side of car. Measurements must be equal within ⅜". If difference more than ⅜", install shim on low spring or replace springs (see Spring data).

Kingpin Inclination: 5½°. Limits 4¾-5¾° crosswise.

Caster: 0° desired, limits Neg. 1° to Pos. 1°.
Adjustment—Loosen clamp bolt in upper end of knuckle support, remove lubricant fitting from front bushing at outer end of upper control arm, use wrench KF-25 (Allen wrench) inserted through fitting hole to turn upper pivot pin in **complete revolutions only** (to avoid disturbing camber adjustment). Check Camber.

►*CAUTION*—After adjusting, check control arm for clearance at each side of support. This clearance necessary to prevent binding.

Camber: Pos. ¼° desired, limits 0° to Pos. ¾°.
Adjustment—Same as for Caster (above) except that eccentric pivot pin should be turned not more than ½ revolution from point where correct caster secured (entire range of adjustment secured in ½ revolution of the pin).

Toe-In: 0" desired, Limits 0" to 1/16".
Adjustment—Loosen clamp bolts at each end of both tie rods, turn **both tie rods equally.**

Steering Geometry (Toe-out on turns): With outer wheel turned 20°, inner wheel should be turned exactly 23°. No adjustment.

SPRINGS: 1949 springs have higher load rate than previous types (can be installed on 1947-48 cars if special instructions given below are followed).

1949 Spring Specifications

Model	Color Mark	Part No.
All 4-Dr. Sdn.	Green	204354
Heavy Duty & Exp.	Yellow	203466
Convertible	Orange	205776
Utility & Virginian	Brown	206363
Taxicab	Yellow	203466

Heavy Duty 1949 Springs—Marked by yellow paint mark on center coil and **must be used in pairs.**

►*CAUTION*—Heavy Duty front shock absorbers must be used with these heavy duty springs.

Spring Installation: 1949 service replacement springs paint marked on end coil to indicate load rating and special precautions should be taken when installing these springs as follows:
Red Paint Mark—Heavier than standard.
White Paint Mark—Lighter than standard.
Red & White Springs used together—Install red marked spring on left side, white spring on right.
Two Red or Two White Springs used together—If any difference in load rating noted, install heavier spring on left side. Check spring deflection after installation completed and switch springs or install spacer on low spring if deflection not equal on both sides of car.

►**Installation of 1949 Springs on 1947-48 Cars**—1949 higher load rate springs can be installed on these cars **in pairs** without other change. If one spring installed, car will appear to sag on opposite side (due to greater stiffness of 1949 spring). This condition can be corrected by installing 1949 type modified upper spring seat and spacer on upper end of original spring.

►*CAUTION*—Spacer can not be used on spring on 1947-48 cars unless new 1949 type upper spring seat installed (will allow upper end of spring to slip out of position on spring seat).

Spacer Installation (to correct Spring Height): Spacer can be installed between upper end of spring and spring seat of low springs to correct spring deflection on **1949 cars only** (these cars have modified upper spring seat).

►*CAUTION*—Use of spacer on 1947-48 cars will allow upper end of spring to slip out of position on seat unless new type 1949 spring seat installed.

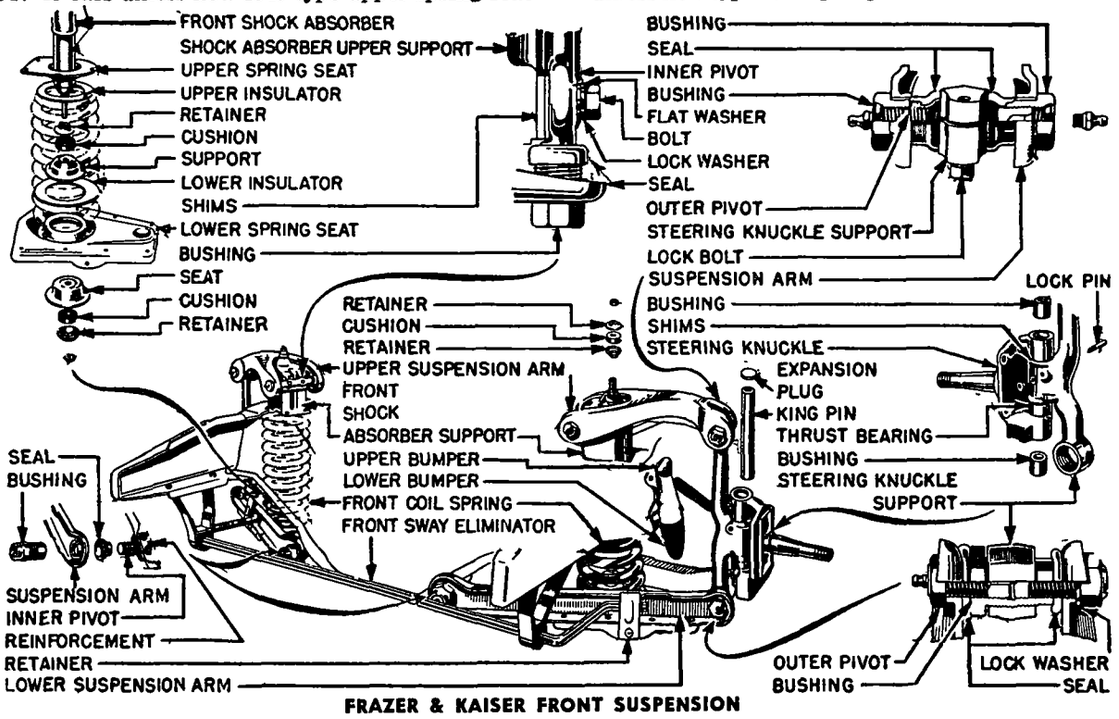

FRAZER & KAISER FRONT SUSPENSION

1949-50 HUDSON

Six & Eight, All Models (1949)
Pacemaker Model 500 (1950)

CHECKING, ADJUSTMENT, & SERVICING: *See complete "Hudson" Front Suspension in previous release and set these cars to following specifications:*

Riding Height—Check if car does not appear to be level or if spring sag suspected. Rock car several times sideways, allow car to settle, measure from top of rubber bumper seat on lower control arm to bottom of upper rebound bumper bracket on each side of car. This dimension should be 4¼". If not equal on both sides within ½", replace spring on low side.
Tire Inflation—24 lbs. front and rear.
Kingpin Inclination—3°6′ crosswise.

Camber: Set to Pos. ½° (limits Pos. ½° to Pos. 1½°). Must be equal on both sides of car within ½°.
Adjustment—Use special KMO-366 thin wrench to turn eccentric bushing on pivot pin at outer end of upper control arm after clamp bolt in upper end of knuckle support loosened. Entire range of adjustment secured in ½ turn of bushing.

►*CAUTION—Set camber with least possible change in caster.*

Caster: Set to Pos. 1° (limits Pos. ½° to Pos. 1½°). Must be equal on both sides of car within ½°.
Adjustment—Same as for Camber (above). One complete turn of eccentric bushing changes caster ½°.

►*CAUTION—Caster adjustment will affect camber unless bushing rotated in complete turns only.*

Toe-In: 1/32" (limits 0" to 1/16").
Adjustment—Adjust both tie rods equally. Use tool J-2953 to position center steering arm.

Steering Geometry (Toe-out on turns): With inner wheel turned 30°, outer wheel should be turned 25°.

SPRINGS: Paint-marked for identification by daub of paint on center coils. Additional mark on lower coil indicates Low Limit Springs (White), High Limit Springs (Red).

1949 Spring Specifications

Car Model	Color & Part No.
6 & 8 Std. (Light Scale)	Pink—300442
6 & 8 Optl. (Heavy Scale)	Red—301621

FORD PASSENGER CARS, LINCOLN, AND MERCURY

Ford 6 Cyl. & V8 Pass. Cars (1949-50)
Lincoln & Cosmopolitan, 9EL & 9EH (1949)
Mercury V8 Models (1949-50)

►NOTES, CAUTIONS, & CHANGES

►**FORD PARTS PRODUCTION CHANGE & NEW FRONT END SPECIFICATIONS:** Ford cars after March 1, 1949 have new design IDLER ARM BRACKET and PITMAN ARM which require new Front End Specifications (Toe-In) as listed below.

►***CAUTION—These new design parts must be used together. Under no circumstances should the new and old design parts be used together on the same car.***

►**New Parts Identification:** Can be distinguished by differences in dimensions when compared with old design parts as follows:

New Idler Arm Bracket No. 8A-3351-C. Supersedes old design bracket 8A-3351-B. New design bracket **is longer** (5¼" overall changed from 5 1/16"), **thinner** (5/16" thick changed from 3/8"), and has nut at lower mounting hole (old design had capscrew thread at this mounting hole).

New Pitman Arm No. 8A-3590-B. Supersedes old design arm No. 8A-3590-A. New design arm has **greater offset of ½"** between flat surfaces of the bolt holes in the ends of the arm (changed from 3/16" offset of old design).

►**New Front End Specifications:** New Toe-In setting required for all cars with new design parts as listed above. ***See Camber, Caster, and Toe-In data following.***

►**FORD FRONT SUSPENSION NOISE CORRECTION: Popping Noise (when brakes applied) or chucking noise in Front End** may be caused by incorrect Caster Adjustment resulting in caster adjusting bushing striking lower support arm. ***See Caster Adjustment instructions.***

►**FORD RIDING HEIGHT & CAR LEVELING CORRECTION:** Incorrect height or list to one side may be caused by use of unmatched springs or incorrect spring height. ***Check Spring Height (see "Spring Height") and springs (see "Spring") following for specifications and correction procedure.***

►**MERCURY FRONT SPRING PRODUCTION CHANGE:** Springs changed after first 2600 cars as follows:

First 2600 Cars—Spring Part No. 8M-5310-A with **two No. 8M-5355 wax-impregnated paper shims** installed on top of spring to raise front end of car.

After 2600 Cars—Spring Part No. 8M-5310-C used. This spring is longer and **no paper shims needed.**

►***SPRING REPLACEMENT CAUTION—When using 8M-5310-C spring to replace 8M-5310-A, remove and discard the paper shims. It is not necessary to replace both front springs (8M-5310-C and 8M-5310-A with two 8M-5355 shims can be used together).***

DESCRIPTION

DESCRIPTION: Independent, linked parallelogram type with coil springs and independent shock absorbers. Suspension system is made up of the following units:

Upper (Short) Control Arm—Pivoted at inner end on short mounting shaft bolted on inner side of bracket on top of cross-member at frame side rail with threaded bushing and rubber seal on each end of shaft. Arm is pivoted at outer end on a bolt threaded through control arm eyes and through an eccentric bushing (camber adjustment) in upper end of wheel spindle support. Bushing is locked in wheel spindle support by a clampscrew and rubber seal is used on bolt at each side of bushing.

Lower (Long) Control Arm—Pivoted at inner and outer ends in exactly same manner as upper control arm (above). Bushing in lower arm is not eccentric (caster adjustment).

Coil Spring—Mounted on spring seat on lower control arm with upper end seated in pocket in frame side rail.

Shock Absorber—Direct acting hydraulic type mounted within coil spring with upper end bolted to upper control arm inner shaft mounting bracket and lower end bolted to mounting plate on lower control arm spring seat.

NOTE—Shock absorbers can be removed without disturbing front suspension assembly.

CHECKING & ADJUSTMENT: First check wheel bearing adjustment, wheel spindle wear, tire inflation pressure (see data below), wheel run-out and balance (run-out should not exceed ⅛"), steering linkage and steering gear for excessive looseness or play, then place car on level floor and check front end specifications with car at curb weight as follows:

Tire Inflation Pressure: For each tire size (Cold):
Ford 6.00x16—Front 28 lbs., Rear 25 lbs.
Ford 6.70x15—Front 24 lbs., Rear 21 lbs.
Ford Sta. Wagon 7.10x15 6 Ply—Front 25 lbs., Rear 30 lbs.
Mercury 7.10x15 4 Ply—Front & Rear 24 lbs.
Mercury Sta. Wagon 7.10x15 6 Ply—Front & Rear 30 lbs.
Lincoln 8.20x15—Front & Rear 24 lbs.

Ford Riding Height (Frame Height at Curb Weight): Before checking front end specifications, check frame height on level floor at curb weight (full tank of fuel but no passenger load) as follows:

Front End Height—Lightly jounce **rear** end of car several times to allow car to assume natural position. Measure from floor to center of lower support arm pivot pins at inner and outer ends of arm on each side of car. Height at inner end of arm should be ⅛" to 1" greater than height at outer end. **If inner end ⅛" greater to ¼" less than outer end,** install shim on spring (see Springs). **If inner end more than ¼" less than outer end,** replace spring (see Springs).

Rear End Height—Lightly jounce **front** end of car several times to allow car to assume natural position. Measure vertical distance from top of axle inner "U" bolt to underside of frame alongside

CONTINUED ON NEXT PAGE

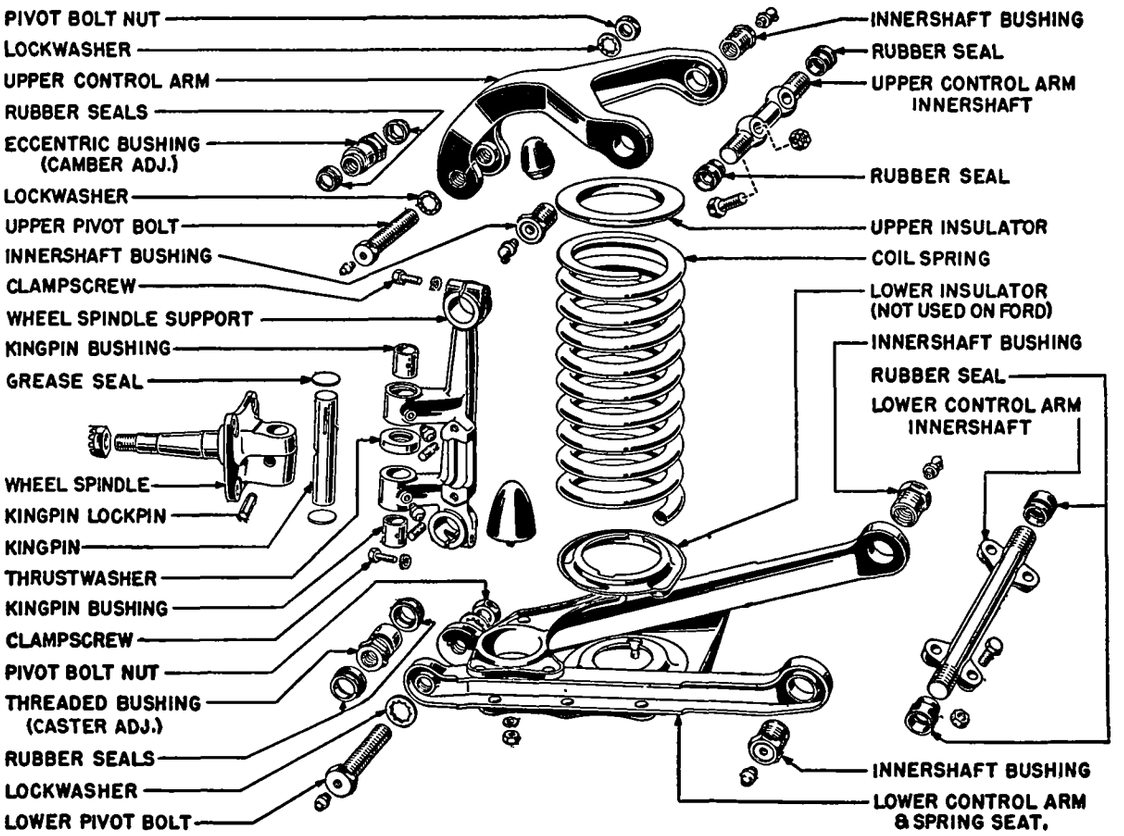

1949-50 FORD, LINCOLN, MERCURY FRONT SUSPENSION

1949-50 FORD, LINCOLN, MERCURY (C ntinued)

bumper on each side of car (see "Frame Height" in table below). If distance not correct, check for correct spring (Part No. stamped on bottom of shortest leaf under clip plate) and replace spring if it has developed a "set".

Rear Frame Height

Model	Frame Height	Spring No.
3-Pass. Coupe	4 7/8"-6 1/16"	8A-5560-B
5 Pass. Coupe & Sedans	5 7/8"-7 3/8"	8A-5560-D
Convertible	5½"-7"	8A-5560-D
Station Wagon	7 7/8"-7 3/8"	8A-5560-F

Lincoln & Mercury Riding Height: With car at curb weight, measure distance from floor to center of lower control arm pivot pins at inner and outer ends of arm. Height at outer end of arm should be 1" less than at inner end of arm and measurement should be same on both sides of car. If distance not correct, or unequal, correct by shimming or replacing springs (see Springs).

Kingpin Inclination:
(Ford)—5¼° crosswise.
(Lincoln & Mercury)—5° with ¾° camber.

Camber: (Ford) Pos. ¼° to Pos. ¾° preferred (limits 0° to Pos. 1°) with maximum variation between wheels of ¼°.
(Lincoln & Mercury)—0° to Pos. ¾° with maximum variation between wheels of ¼°.

►***FORD CAMBER NOTE—Above specifications correct for old and new design parts (see Ford Production Change Note) and supersede earlier specifications.***

Adjustment—Must be made exactly as follows to avoid possibility of binding and noise in front suspension system (as stated in Noise Correction Note above):

1) Back off clampscrew in **upper** end of spindle support one turn to free the bushing.
2) Install tool No. 3046-N on hexagonal head of bushing in **upper end** of spindle support, use wrench engaging boss on tool to turn bushing for desired camber.
3) See that support is against shoulder on bushing. When making minimum or maximum camber adjustment, back bushing off slightly to permit free-floating of clampscrew in groove in bushing.
4) Tighten clampscrew to 25-32 ft. lbs.

►***CAUTION—Clampscrew must not bind on side of groove in bushing (will prevent bushing being held securely and kept from moving in service).***

NOTE—Bushing is eccentric and entire range of adjustment should be secured within ½ turn.

►***CAUTION—If correct setting not obtained within range of camber bushing movement (½ turn), check all suspension parts for misalignment or wear.***

Caster: (Ford exc. Sta. Wgn.) Pos. ½° to Neg. 1° with maximum variation between wheels of ½°.
(Ford Station Wagon) Neg. ¼° preferred (limits Neg. ¼° to Neg. 1¾°) with maximum variation between wheels of ½°.
(Lincoln & Mercury) Pos. ½° to Neg. 1° with maximum variation between wheels of ½°.

►***FORD CASTER NOTE—Above specifications correct for old & new design parts (see Ford Production Change Note) and supersede earlier specifications.***

Adjustment—Must be made exactly as follows to avoid possibility of binding and noise in front suspension system (as stated in Noise Correction Note above):

1) Back off clampscrew in **lower** end of spindle support one turn to free the bushing.
2) Install tool No. 3089-N on hexagonal head of bushing in **lower end** of spindle support, use wrench engaging boss on tool to turn bushing for desired caster.
3) See that support is against shoulder on bushing and that clearance between bushing and arm is at least .045" (if bushing strikes arm when making maximum caster adjustment, back off bushing a minimum of ½ revolution for above clearance).
4) Tighten clampscrew to 25-32 ft. lbs.

►***CAUTION—Clampscrew must not bind on side of groove in bushing (binding will prevent clampscrew gripping bushing securely to prevent movement of bushing when screw tightened to recommended 25-32 ft. lbs.).***

►***CAUTION—If correct setting not obtained within range of caster bushing movement (⅛" either way), check all suspension parts for misalignment or wear.***

►**Toe-In:** ***CAUTION—Two settings used on Ford as follows:***
Ford (With Old Design Parts—Before Mar. 1, 1949) 1/8" Toe-out to 3/16" Toe-out.
Ford (With New Design Parts—After Mar. 1, 1949) 1/16" Toe-in to 1/8" Toe-in.
Lincoln & Mercury—3/32" to 5/32" Toe-in.

►***FORD TOE-IN CAUTION—Correct setting must be used for cars with OLD and NEW design parts (as listed in Ford Production Change Note). Settings listed above supersede earlier specifications.***

Adjustment—With steering wheel turned to center position and with both front wheels positioned "straight-ahead", loosen clamp bolts on adjusting sleeve at outer end of each tie rod, **turn both adjusting sleeves equally to set toe-in.**

Steering Geometry (Toe-out on Turns): On Lincoln & Mercury, with outer wheel turned exactly 20°, inner wheel should be turned 23½° ± ½°. No adjustment provided. Check suspension system for bent parts if incorrect.

SHOCK ABSORBER REPLACEMENT: ***Not necessary to disturb front suspension assembly.*** Remove two capscrews (Ford), nuts on two mounting studs (Lincoln & Mercury) which hold shock absorber mounting plate on underside of spring seat on lower control arm. Remove nut on mounting stud at upper end of shock absorber, lower unit through hole in spring seat.

COIL SPRING REPLACEMENT: Support car on jack under frame. Remove shock absorber (see above). Disconnect stabilizer by removing end clip. Use a jack under the lower control arm inner shaft to hold shaft against cross-member, take out four mounting bolts in shaft. Lower jack slowly until spring tension is relieved, with spring fully extended, lift spring out. Install spring in same manner. See that flat end of spring is up, install insulator on top of spring (all models), and bottom of spring (Lincoln & Mercury only). Make certain that bottom of spring is properly seated in recess in spring seat on lower control arm. See "Springs" (below) for specifications.

LOWER CONTROL ARM REPLACEMENT: Remove coil spring (see above), remove nut on bolt linking control arm to wheel spindle support, unscrew bolt from arm and support bushing. Install arm in same manner. Hold support and bushing assembly centered in control arm while screwing bolt through bushing. Install new rubber seals on bolt (each side of support).

►**Lincoln & Mercury Lower Support Arm Frame Mounting Bolt Nut Change**—Nuts on bolts mounting inner shaft on frame were MARSDEN type (Part No. 34397-S) on first cars and **should be changed** to HUGLOCK type (Part No. 34447-S) whenever found in service.

UPPER CONTROL ARM REPLACEMENT: Raise car with a jack under the lower control arm spring seat. Remove wheel. Wire upper end of wheel spindle support to frame (to avoid movement of the support and damage to brake line when arm removed). Remove two capscrews mounting pivot shaft at inner end of control arm on frame. Remove nut on bolt linking upper arm to upper end of wheel spindle support, unscrew bolt from arm and support bushing, lift arm out. Install control arm in same manner. Hold support and bushing assembly centered in control arm while screwing bolt through bushing. Install new rubber seals on bolt (each side of support).

WHEEL SPINDLE SUPPORT REPLACEMENT: Raise car with a jack under the lower control arm spring seat. Remove wheel and brake drum assembly. Take out mounting bolts in backing plate, hang backing plate up on frame (to avoid disconnecting brake line). Drive out kingpin locking pin. Pry out grease seal plug in support above kingpin, drive kingpin down and out of support and wheel spindle (pin will force out lower grease seal plug). Remove nuts on bolts at upper and lower ends of support, unscrew bolts from control arms and support bushings. Lift out support. Bushings can be removed from support by removing clampscrew and pressing bushings out. Install support in same manner.

KINGPIN BUSHING REPLACEMENT: Bushings can be replaced without removing wheel spindle support from the car. Remove wheel spindle (see Wheel Spindle Support Removal), press old bushings out, press new bushings in and ream bushings to size listed below.
Kingpin Bushing—Maximum inside diameter of new bushings: (Ford) .8125-.8135", (Lincoln & Mercury) .9380-.9385". Wear limit inside diameter of old bushings: (Ford) .8185", (Lincoln & Mercury) .9435".
Kingpin—Maximum diameter of new kingpin: (Ford) .8115-.8120", (Lincoln & Mercury) .9365-.9370". Wear limit diameter of old kingpin: (Ford) .8170", (Lincoln & Mercury) .942".
Kingpin Clearance in Bushing—New limits (Ford) .0005-.002", (Lincoln & Mercury) .001-.002". Worn limits .009" for all models.

SPRINGS: Springs have upper end ground flat and are marked for identification as follows:
Part No. & Color Marks—Part number marked on outer diameter of flat end of spring coil and spring also paint marked (one or more daubs of special color) as listed in Spring table below.

►**Ford Spring Production Change Mark**—No. 8A-5310-B spring used on first cars has loaded height of 9.2" and is marked by 2-daubs of white paint. Spring used on later cars has loaded height of 9.5" and is marked by 4-daubs of white paint.

►***CAUTION—These springs must not be mixed (use springs with same marking on both sides of car).***

Low & High Limit Spring Marks—Springs are graded in low and high limit groups and marked by GRIND MARK on flat end of spring as follows:
Low Limit Spring—1 Grind Mark.
High Limit Spring—2 Grind Marks.

►***SPRING INSTALLATION CAUTION—Springs on both sides of car must be matched (both springs same—Low***

C NTINUED N NEXT PA E

1949-50 FORD, LINCOLN, MERCURY (C ntinu d)

Limit or High Limit). Car will have visible list toward low limit spring side and camber adjustment will be difficult if unlike springs used.

Ford Spring Shim Installation (to correct Riding Height): If riding height not correct (see Riding Height data) but within limits which can be corrected by installation of shim, install one shim (Part No. 8A-5355) between top of spring and spring insulator on low side of car.

►***CAUTION—Do not install more than ONE shim on the spring (spring will not be held in place if more than one shim used).***

1949 Spring Specifications

Car Model	Spring Part No.	Color Mark
Ford (exc. Convt.)	8A-5310-B	3 White
Ford (Convt. only)	8A-5310-C	4 Blue
Lincoln (Std.)	8L-5310-A	Red
Lincoln (H. D.)	8L-5310-B	Blue
Mercury (Std.)①	8M-5310-A	Yellow
Mercury (Std.)②	8M-5310-C	Yellow
Mercury (H. D.)①	8M-5310-B	Green
Mercury (H. D.)②	8M-5310-D	Green

①—First 2600 cars (used with two 8M-5355 shims).
②—After 2600 cars (no shims used).
③—First type marked by 2-daubs of white paint (loaded height 9.2"), Later type marked by 4-daubs of white paint (loaded height 9.5").
④—First springs marked by Yellow paint, changed to 2-daubs of BLUE paint to avoid confusion with Mercury springs.

1949-50 NASH

"600" Series 4940 (1949)
Statesman Series 5040 (1950)
Ambassador Series 4960 (1949), 5060 (1950)

►**FRONT SUSPENSION ASSEMBLY UNIT REMOVAL:** If required for overhaul or repair, entire front suspension assembly can be removed as a unit by taking out four bolts which hold the unit on the right and left body sills.

►*CAUTION*—All parts of the rubber insulated mounting bolts must be correctly assembled when installing suspension assembly.

CHECKING & ADJUSTMENT: First check wheel bearing adjustment, steering gear adjustment, tire inflation pressure (see data below), wheel and tire balance and run-out, then place car on level floor and check following specifications:

Tire Inflation Pressure: 24 lbs. front & rear.

Kingpin Inclination: 8½° crosswise.

Caster: 0° to Pos. ½°. NOTE—Machined bosses provided on steering knuckle pin for mounting of J-1377 Caster & Camber Gauge.

Adjustment—Loosen nuts at inner ends of upper control arm pivot bar frame mounting bolts, insert "C" washers between frame bracket and pivot bar at front bolt to decrease caster, or at rear bolt to increase caster. Check camber after completing adjustment.

►**Adjusting "C" Washer Note**—These washers furnished 1/16" and 1/8" thick. One 1/16" washer will change caster approximately 1/3°.

Camber: 0° desired, limits Neg. ¼° to Pos. ¼°. NOTE—Machined bosses provided on steering knuckle pin for mounting of J-1377 Caster & Camber Gauge.

Adjustment—Adjust in same manner as Caster (above) except that washers should be added (to increase Camber) or removed (to decrease Camber) **equally at front and rear pivot bar bolts** to avoid disturbing caster setting.

Toe-In: 1/8 to 3/16".

Adjustment—Loosen clamp bolt at each end of adjusting sleeves on both tie rods, turn adjusting sleeves on **both tie rods equally.**

Steering Geometry (Toe-out on turns): With outer wheel turned 20°, inner wheel should be turned 23½° (600), 23° (Amb.) plus ½° minus 0°. Check for bent steering arm if incorrect.

Steering Arm Check—Place straightedge across back of brake support plate, measure from this straightedge to center of steering arm ball stud. Should be 4 3/16" (600), 4 5/16" (Amb.). Replace arm if incorrect.

SHOCK ABSORBER REPLACEMENT: ***Not necessary to disturb Front Suspension Assembly.*** Remove nut on shock absorber upper threaded end (on top of cross-member), remove grommet collar and rubber grommet. Remove two bolts from shock absorber lower mounting bracket (on lower control arm below spring seat), lower shock absorber and mounting bracket assembly down and out through hole in spring seat.

COIL SPRING REPLACEMENT: Disconnect stabilizer arm link at lower control arm (Amb. only), remove shock absorber (see data above). Install jack under spring seat on lower control arm. Disconnect lower control arm from cross-member at inner control shaft. Raise car by means of a chain hoist until spring pressure relieved. Remove jack under spring seat, lower the lower control arm and lift spring out.

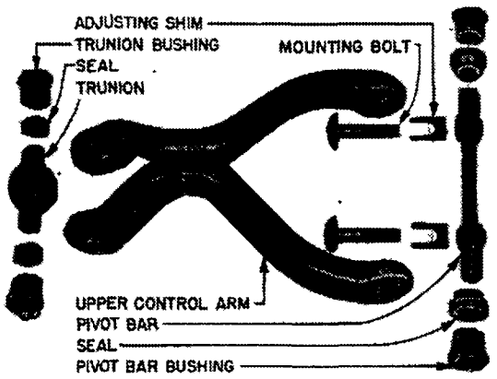

UPPER CONTROL ARM ASSEMBLY

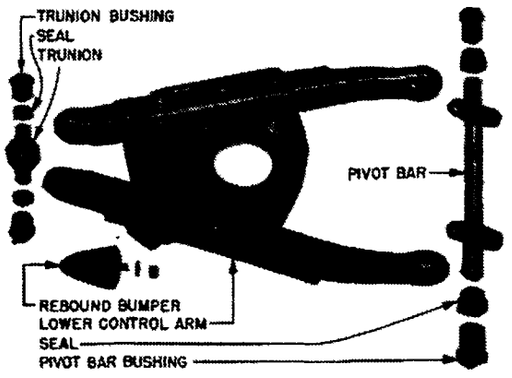

L WER C NTR L ARM ASSEMBLY

UPPER & LOWER CONTROL ARM REPLACEMENT: Pivot bar at inner end and trunnion at outer end of each arm have threaded bushings and rubber seals which should be installed as follows:

Outer Trunnion: Install new rubber seal on each end of trunnion, center trunnion in outer end of control arm (use Gauge J-2625 to center trunnion in lower control arm), thread bushings in through eyes in control arm and on trunnion ends, use extreme care that trunnion does not move out of centered position, tighten bushings to 125 ft. lbs.

Inner Pivot Bar: Install new rubber seal on each end of pivot bar, center pivot bar in inner end of control arm, thread bushings in through eyes of control arm and on bar ends, use care that bar does not move out of centered position, tighten bushings to 125 ft. lbs.

STEERING KNUCKLE PIN REPLACEMENT: Can be removed without disturbing caster and camber adjustment or other parts of suspension assembly as follows:

Removal: Install spring holding hooks J-2981 to keep front spring compressed (pull car down until hook can be engaged in hole in front suspension extension and in lower control arm). Support front end of car, remove wheel assembly, brake backing plate, and wheel spindle. Remove nut on lower end of knuckle pin, remove large washer, seal, and thrust bearing. Lift knuckle pin up and free of lower control arm, unscrew upper end from upper trunnion.

►***CAUTION—Do not lose spring in upper trunnion above knuckle pin.***

Installation: Use new rubber seals and position knuckle pin as follows:

Upper End—Place seal on pin with open cupped end upward, see that spring in place in trunnion, screw pin in trunnion until distance from top face of seal shoulder on pin to lower face of trunnion is ¼".

►***CAUTION—This ¼" clearance necessary to prevent binding and compression of the grease seal.***

Lower End—Place new seal ring on knuckle pin, insert lower end of pin down through lower trunnion bushing, install thrust bearing, large washer (with new seal ring in groove on rim of washer), and nut. Secure nut with cotter pin.

SPRINGS: ***CAUTION—Springs used on each series have special load rating and are not interchangeable between series.***

1949 Spring Specifications

	Free Height	Loaded Height①
"600" 4940	13 1/16"	9" (1640 lbs.)
Amb. 4960	13 3/8"	9" (1830 lbs.)

1950 Spring Specifications

Statesman 5040	13 1/16"	9"②
Amb. 5060	13 5/8"	9"③

①—Indicated loads are plus or minus 40 lbs.
②—Load of 1640 lbs. (RH), 1830 lbs. (LH) ± 40 lbs.
③—Load of 1830 lbs. (RH), 1990 lbs. (LH) ± 45 lbs.

Spring Marking Note—Springs are graded and marked by grind mark on end coil as follows:

Low Limit—1 grind mark.
High Limit—2 grind marks.

►***INSTALLATION CAUTION***—If one Low Limit, and one High Limit spring, installed on same car, install High Limit spring on left (driver's) side of car.

1949-50 PONTIAC

Pontiac 6 & 8, All Models (1949-50)

►**REBOUND NOISE CORRECTION**—If upper control arm strikes frame on extreme rebounds (causing loud metallic noise), standard steering knuckle support upper control arm rubber bumper can be replaced by special higher bumper which will prevent this contact (NOTE—Change bumpers on both sides of car).

Upper Control Arm Bumper

Standard (1¾" long).....Part No. 1298323
Special (2¼" long).....Part No. 3687670

DESCRIPTION: New design, independent, linked parallelogram type with direct acting shock absorbers mounted within the coil springs, and new type upper control arm (not part of shock absorber assembly). Cross-member on which suspension unit mounted has separate brackets for upper control arm shaft mounting and for shock absorber mounting.

CHECKING & ADJUSTMENT: First check entire front end for wear and excessive play, inflate tires to correct pressures (see data below), check steering gear adjustment, wheel bearing adjustment, wheel and tire balance and run-out (run-out should not exceed ⅛"), then place car on level floor and check front end specifications as follows:

Tire Inflation Pressure: 24 lbs. min. Cold.

Kingpin Inclination: 5° (4¾-5¼°) crosswise.

Caster: Neg. ¾° preferred, limits Neg. ½° to Neg. 1°. **Adjustment**—Loosen clamp bolt in upper end of knuckle support, use special wrench J-2998 to engage hexagonal head of bushing on pivot bolt in upper end of support, adjust caster by turning bushing in **complete turns only** to avoid disturbing camber.

►*CAUTION*—Clearance must be maintained between ends of bushing and control arm throughout suspension unit travel. Check for binding when adjusting caster.

Camber: 0° preferred, limits Neg. ¼° to Pos. ¼°. **Adjustment**—Same as for Caster (above) except that eccentric bushing should be turned not more than ½ revolution from point where correct caster secured (entire range of adjustment secured in ½ revolution of the bushing).

►*ADDITIONAL RANGE OF ADJUSTMENT*—If correct camber cannot be secured by above adjustment, greater range of adjustment can be secured by taking out mounting capscrews in upper control arm shaft (on frame bracket at inner end of arm) and turning shaft over so that offset mounting holes tend to move shaft and control arm outward. This will provide approximately 2/3° additional camber.

►*NOTE*—Control arm shaft is installed at factory with notch on side of shaft toward engine. When shaft turned over for increased camber, notch will be outward or toward wheel.

Toe-In: 0" to 1/16".

Adjustment—Loosen clamp bolts at each end of adjusting sleeve at outer end of each tie rod, turn adjusting sleeves on **both tie rods equally.**

Steering Geometry (Toe-out on turns): With outer wheel turned 20°, inner wheel should be turned 22½-23½°. No adjustment.

SHOCK ABSORBER REPLACEMENT: ***Not necessary to disturb Front Suspension Assembly.*** Shock absorbers can be removed from below or above as desired.

Removal (from below)—Remove locknut and retainer nut on shock absorber upper stem at mounting bracket on frame, lift off upper grommet retainer and upper grommet (NOTE—If shock absorber turns when removing retainer nut, remove unit from above—see directions below). Remove three screws holding shock absorber lower mounting bracket on underside of spring seat on lower control arm, lower shock absorber and mounting bracket assembly out through hole in spring seat.

Removal (from above)—Jack up car, remove locknut and retainer nut from shock absorber lower stem at mounting bracket on underside of lower control arm (use pliers inserted through spring coil to keep shock absorber from turning), remove lower grommet retainer and lower grommet. Remove two nuts on shock absorber upper mounting bracket studs, lift shock absorber and upper mounting bracket assembly up and out through opening in frame above front wheel.

►*INSTALLATION CAUTION*—Hold shock absorber from turning (with pliers inserted between spring coils) when tightening mounting nuts on shock absorber stem.

COIL SPRING REPLACEMENT: Disconnect lower end of stabilizer link and remove shock absorber on side on which spring being removed. Lift front end of car with chain hoist or with jacks placed under frame side rails. Place additional jack under lower spring seat on control arm. Disconnect lower control arm from knuckle support by removing locknut and unscrewing lower pivot bolt. Lift car slowly (or lower jack under control arm) to relieve spring tension, lift spring out.

►*INSTALLATION CAUTION*—Install spring with flatted end at top and centered within positioning lugs on cross-member. See that end coil at bottom is fitted into spring recess in lower spring seat.

PACKARD

All "2200" Series (Early 1949)
All "2300" Golden Anniversary Series (Late 1949)

DESCRIPTION: Independent, parallelogram type of same design as used on corresponding previous models.

CHECKING, ADJUSTMENT & SERVICING: ***See complete "Packard 1941-48 Clipper" Front Suspension in previous release and set these cars to the following specifications:***

Tire Inflation: 24 lbs. (all models except Super 8 7-Pass.), 26 lbs. (Super 8 7-Pass. only).

Kingpin Inclination: 5°50' crosswise.

Frame Height: Car must be loaded or pulled down to following riding height when checking front end:

Front End—3½" from top of lower control arm at center to lower face of frame side rail.

Rear End—5" from top of rear axle housing to lower face of frame side rail.

Caster: CAUTION—All models not set alike.
(Eight & Super 8 exc. 7-Pass.)—Neg. 1° ±½°.
(Custom 8 & Super 8 7-Pass.)—Neg. 2° ±½°.

Adjustment—Loosen clamp bolt in upper end of knuckle support, remove lubricant fitting from front bushing at outer end of upper control arm, insert Allen wrench (Tool KMO-487) through fitting hole, turn pivot pin to adjust caster, turning pin in **complete revolutions only** to avoid disturbing camber.

Camber: 0° ± ¼°.

Adjustment—Same as for Caster (above) except that eccentric pivot pin should be turned not more than ½ revolution from point where correct caster secured (entire range of adjustment secured in ½ revolution of the pin).

Toe-In: 0" plus 1/16", minus 0" (0" to 1/16" range).

Adjustment—Loosen clamp bolts at each end of adjusting sleeve at outer end of each tie rod, turn adjusting sleeves on **both tie rods** equally.

Steering Geometry (Toe-out on turns): With outer wheel turned 20°, inner wheel should be turned 23° ±½°. No adjustment.

1949 STUDEBAKER

Champion, Model 8G (1949)
Commander & Land Cruiser 16A (1949)

DESCRIPTION: Independent, Planar type of same design as used on corresponding previous models.

CHECKING & ADJUSTMENT: ***See complete "Studebaker 1947-48 Planar" Front Suspension in previous release and set 1949 cars to following specifications:***

Tire Inflation Pressures: Check and inflate tires before checking front end specifications.

Champion (6.40x15)—28 lbs. front, 24 lbs. rear.

Commander & Land Cruiser (6.50x15)—26 lbs. front, 22 lbs. rear.

Kingpin Inclination: 5½° crosswise.

Caster: ***CAUTION—All models not set alike.***

Champion—Pos. ½° to Pos. 1½°.

Commander & Land Cruiser—Neg. 2° to Neg. 3°.

Adjustment—No adjustment provided.

Camber: 0° to Pos. 1° with ½° greater camber for left wheel than right wheel.

►*NOTE*—This unequal camber (½° greater on left side of car) is recommended by manufacturer.

Adjustment—Add or remove shims equally from between front and rear frame mounting brackets of upper control arm.

Toe-In: 1/16" to 1/8".

Adjustment—Set toe-in by adjusting entire steering linkage in following sequence:

(1) Left Hand Tie Rod—Set steering wheel in center "straight-ahead" position with levers on high midpoints of cam. Adjust left hand tie rod so that left wheel points straight ahead.

(2) Right Hand Tie Rod—Adjust right hand tie rod to same length as left hand rod (on Champion, measure between ball stud centers at ends of rod; on Commander, measure between lubricant fittings on ends of rod).

(3) Center (Auxiliary) Tie Rod—Adjust toe-in by loosening clamp bolts and turning this center rod.

1950 STUDEBAKER

Champion, Model 9G (1950)
Commander & Land Cruiser, 17A (1950)

DESCRIPTION: New type independent suspension with Coil Springs. Shock absorbers on Champion are new Direct Acting type mounted within the coil springs. On Commander, rotary type shock absorbers are mounted on inner end of upper control arm.

►*CASTER & CAMBER ADJUSTMENT NOTE*—Both Caster and Camber are adjustable on this new type suspension.

CHECKING & ADJUSTMENT: First check (and adjust if necessary) front wheel bearings, steering gear, shock absorber action, steering arm and tie rod ends for looseness. Inflate tires to correct pressure. Place car on level floor when checking following specifications:

Tire Inflation: Champion 6.40x15—26 lbs. front, 24 lbs. rear. Commander 7.60x15—24 lbs. front, 20 lbs. rear.

Kingpin Inclination: 5¼° crosswise. Check camber if kingpin inclination not correct.

Caster: Champion —½° (limits 0° to —1°). Commander —2° (limits —1½° to —2½°).

Adjustment—Loosen clamp bolt in kingpin (knuckle support) at upper control arm pivot pin, remove lubrication fitting from front bushing of upper control arm outer pivot pin, insert Allen wrench through fitting hole and turn pivot pin until exact caster setting secured. Then adjust camber.

►*CAUTION—Camber will be disturbed by caster adjustment unless pivot pin rotated in complete turns only.*

Camber: All Models 0 to +1°.

►*CAUTION—Manufacturer recommends ½° more camber on driver's side of car than on opposite side.*

Adjustment—After adjusting Caster (above), rotate pivot pin not more than ½ turn in either direction to secure correct camber. Recheck caster after camber adjusted (caster will be slightly changed but should be within limits specified).

►*CAUTION—Entire range of camber adjustment secured within ½ turn of pivot pin.*

Toe-In: All models 1/16" to 1/8".

►*CAUTION—Tie rods must be adjusted in following order when making toe-in adjustment.*

(1) Left Hand Tie Rod (Wheel straight-ahead position). Turn steering wheel so that cam lever shaft is on "high" mid-point of cam (midway between end positions). If steering wheel spokes not horizontal in this position, remove and reposition wheel on shaft. Check left hand front wheel for straight ahead position by stretching string between front and rear bumpers on left side of car with 1 7/32" block (Champion), ¾" block (Commander) between rear tire and string to compensate for difference in tread of rear wheel. If string does not contact tire sidewall at front and rear of front wheel, **adjust left tie rod** as required until wheel points straight ahead.

(2) Right Hand Tie Rod (Toe-In adjustment)—Without disturbing position of left hand wheel, check toe-in and **adjust right tie rod** for correct 1/16-1/8" toe-in.

►*RHD. CAR NOTE*—On right hand drive cars, reverse above instructions, setting right wheel in straight ahead position, and adjusting toe-in on left wheel.

SHOCK ABSORBER REPLACEMENT: Can be removed and installed without disturbing other parts of front suspension system as follows:

Champion: To remove shock absorber, remove locknut and retaining nut from shock absorber upper mounting shaft using wrench on slats on end of shaft to prevent shock absorber turning (these nuts located on top of upper mounting bracket within arch of upper control arm). Lift off grommet retainer, rubber grommet and grommet seat. Remove nuts from three bolts retaining lower mounting plate on underside of lower control arm, pull shock absorber and mounting plate down and out of spring as an assembly. Install shock absorber in same manner using care that rubber grommets, grommet seats and retainers correctly installed on upper and lower mounting shafts.

Commander: To remove shock absorber, remove nut at lower end of link arm (on inner side of frame side rail), free link from bolt and remove washers, rubber grommets, spacer, and grommet retainers (CAUTION—note location of these parts to insure re-installation in same order). Remove two bolts mounting shock absorber on end of upper control arm, remove shock absorber and cork grease seal. Install shock absorber in same manner.

COIL SPRING REPLACEMENT: To remove spring, raise front end of car and support it on jacks under frame side rails to rear of engine support cross-member. Place a hydraulic jack under mounting shaft at inner end of lower control arm. Disconnect stabilizer shaft at lower control arm, remove rubber bumper from arm (to prevent interference with spring). On Champion models only, remove front shock absorber (see Shock Absorber Replacement above). Take out four bolts mounting lower control arm shaft on cross-member (jack will hold arm in place), lower the jack until spring tension is relieved, remove jack, swing lower control arm out of the way, remove spring. Remove upper and lower spring pads. Install spring in same manner.

SPRINGS: Springs are installed with rubber pad in spring seat recess in front cross-member (upper) and lower control arm (lower).

Spring Specifications

	Free Length	Road-load Length
Champion	14¼"	9 1/8"
Commander	15¼"	10 5/32"

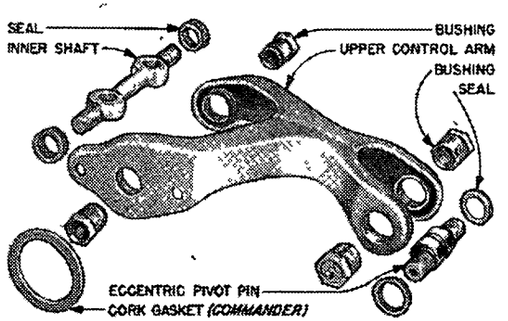

UPPER CONTROL ARM ASSEMBLY

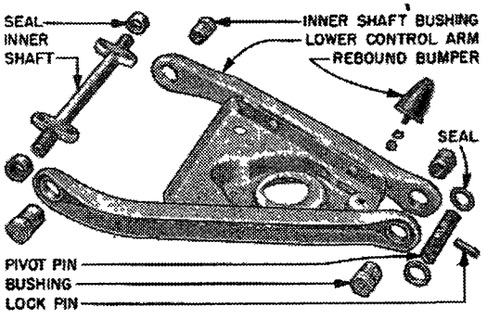

LOWER CONTROL ARM ASSEMBLY

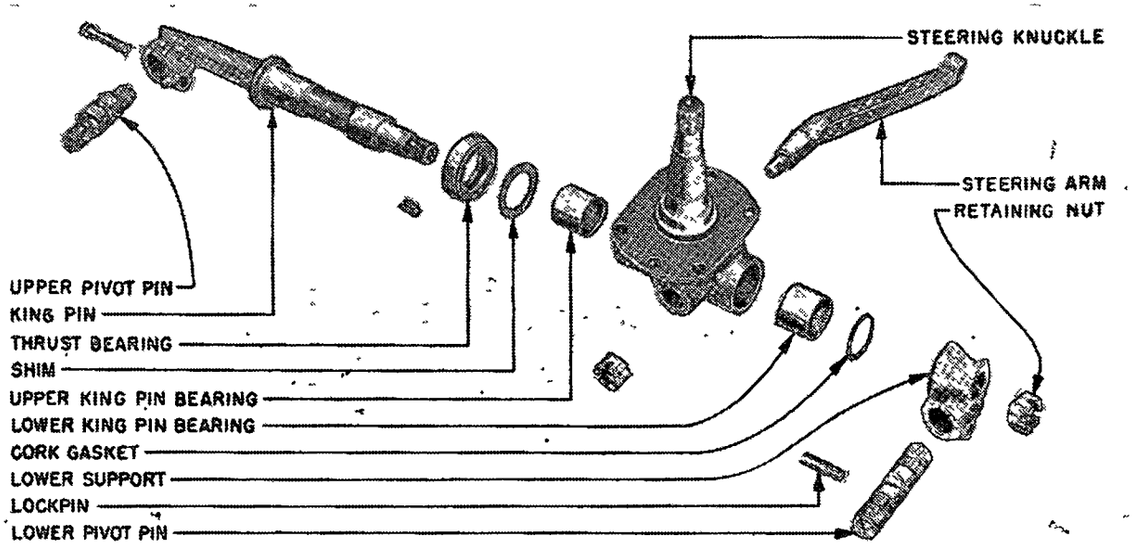

KIN PIN (KNUCKLE SUPP RT) ASSEMBLY

WILLYS PLANADYNE

Jeep Station Wagon & Sedan Del. 4-63 (1949)
Jeepster, Model VJ-3 (1949)
Jeep Station Sedan, 6 Cyl. 6-63 (1949)

►**REPLACEMENT SPRING CAUTION (4-63 & 6-63):** Manufacturer recommends that whenever front spring replacement required, special **Heavy Duty Spring** be installed on assumption that car is subjected to overloads or operated on rough roads. When these springs installed, other parts should also be installed as follows:

Replacement Spring Parts

Heavy Duty (Export) Front Spring	No. 646855
Spring Clip (2 required)	No. 646813
Spring Bumper (2 required)	No. 645763
Spring Clip Plate (2 required)	No. 641020
Front Shock Absorber	See Note

Shock Absorber Note (4-63)—On cars before Serial No. 27465, original shock absorbers should be replaced with later type, No. 645606 or 647202, longer stroke type when this heavy duty front spring installed (original type shock absorbers have shorter travel and will not operate satisfactorily with the new spring). NOTE—Model 4-63 cars after Serial No. 27645, and all Model 6-63 cars, have long stroke shock absorbers and these need not be replaced if in good condition.

►**TOE-IN CAUTIONS TO PREVENT UNDUE TIRE WEAR:** Excessive tire wear may be caused by incorrect toe-in due to following causes:

Bent Tie-Rods—May be caused by tie rods contacting rails of "free-wheel type" lift and weight of wheels hanging on tie rods in this position.

CAUTION—Wheels should be blocked up when car raised on this type lift.

Incorrect Toe-In Adjustment Procedure—Toe-in changes with load and must be set exactly as specified under Toe-in below.

►**KNUCKLE SUPPORT INSTALLATION CAUTION:** on right & left side similar in appearance but must **not be interchanged** (results in wrong camber causing unstable steering). These parts marked for identification as follows:

Left Knuckle Support—Has part number—641026 (early cars) or letter "L" stamped on front face at center (later cars).

Right Knuckle Support—Has part number—641027 (early cars) or letter "R" stamped on front face at center (later cars).

DESCRIPTION: Planadyne independent suspension with transverse spring serving as lower control arm (spring is "Dow" type with second leaf wrapped around spring eye in main leaf for safety). Short upper control arm is mounted at frame end on rubber bushings (movement of arm on frame bracket shaft permitted by flexing of rubber bushings). Direct acting type shock absorber is linked to spring pivot pin (lower end) and special mounting stud at midpoint of upper control arm (upper end).

CHECKING & ADJUSTMENT: Check front wheel bearing adjustment, tire inflation pressure, steering gear adjustment, shock absorber action, and steering linkage for correct adjustment and freedom of movement first, then check front suspension system as follows:

Tire Inflation: Check and inflate each size tire as follows:
(6.00x15 & 6.50x15)—24 lbs. frt., 28 lbs. rear.
(6.70-15)—20 lbs. front, 24 lbs. rear.

Kingpin Inclination: 5° crosswise.

Caster: 1°. No adjustment (determined by design of front suspension units—correct by replacing necessary parts).

Camber: 1½° (1¼-1¾°). Controlled by shims under each control arm mounting bracket.

►*CAUTION*—Number and thickness of shims under both brackets on same side of car must be equal.

To Adjust—Loosen upper control arm frame bracket mounting screws, remove shims from between bracket and frame (to decrease camber), add shims (to increase camber) **equally at each bracket.** Shims are furnished in thicknesses of .060" and .120" and are slotted to facilitate adjustment (bolts need not be completely removed).

Toe-In: 1/16-1/8" at curb weight (car ready for road with full tank of fuel and spare tire, but without load).

►*CAUTION—Toe-in varies slightly with load and should be checked and adjusted exactly as follows:*

To Check Toe-In: Jack up front wheels, chalk center of tread over entire circumference of both front tires, use pencil to scribe a line at exact center of tread over entire circumference of tires (hold pencil on steady rest while rotating tire). Turn wheels to straight ahead position with steering gear on high midpoint of cam and steering wheel spoke parallel to windshield, lower car so that weight rests on wheels and load or weight down the front end of the car so that the **front spring main leaf is flat** (measure with straightedge below leaf). Roll car forward and backward to allow all parts to assume natural position. Check distance between marks on tires at front and rear of wheels and adjust to ZERO TOE-IN (equal distances at front and rear) under these conditions. NOTE—With toe-in set at ZERO under above loading conditions, toe-in will be 1/8-3/16" when load removed (dependent on arch of front spring).

To Adjust Toe-In: Loosen clamps on adjusting sleeve on each tie rod and turn adjusting sleeves on **both tie rods equally** when setting toe-in.

SPRINGS: *CAUTION—See "Replacement Spring Caution" above for recommended replacement spring and other changes necessary when this spring installed.*

Standard Spring—"Dow" type with rubber inserts in forged cups at ends of spring leaves (spring movement flexes these rubber inserts).

►*CAUTION—Do not lubricate "Dow" type springs.*

Heavy Duty (Export) Springs—Not "Dow" type (no rubber inserts) but spring assembled with graphited compound between spring leaves. Both first and second leaves are wrapped around spring eyes for greater safety, and four additional clips are used to distribute rebound stress of main leaf throughout spring. NOTE—This spring is recommended as replacement for standard spring above.

►*CAUTION—Do not lubricate this type spring (will thin out graphite compound and allow this to work out from between leaves).*

SUSPENSION ASSEMBLY: When disassembling suspension system for renewal of parts, assemble as follows:

Upper Support Arm & Knuckle Support: Upper support arm is mounted on rubber bushings at inner (frame) end and on pivot bolt threaded through eyes in arm and in bushing in knuckle support at outer end.

Frame Support Bushings—Install bushing half in each side of frame bracket, install plain washer, lockwasher, and nut on support arm bar, tighten nut securely (shoulder on bar limits compression of rubber bushings).

Knuckle Support Pivot Bolt—Install threaded bushing in support with head toward front, tighten bushing to 175 ft. lbs. Place rubber seal on each end of bushing, hold knuckle support centered in end of support arm and thread pivot bolt in from front through support arm eye and knuckle support bushing, install nut on rear end of bolt and secure with cotter pin.

Knuckle Support & Spring Pivot Bolt: When installing support on car, hold support centered on spring eye while installing pivot bolt.

►*CAUTION—Knuckle support must be centered on spring (at bottom) and on support arm (at top) to insure correct Caster specification.*

BUICK REAR AXLE

Series 40, 50, 70 (1949), Series 40 (1950)

►**LATE 1948 PINION BEARING CHANGE:** Late 1948 cars (and all 1949 cars) have two pinion roller bearings (rear bearing) installed side by side on rear end of pinion shaft. See data on these bearings below.

►*IDENTIFICATION NOTE*—1948 axles with two pinion roller bearings stamped "BB" on bottom center of axle housing.

DESCRIPTION: Semi-floating hypoid type with Torque Tube Drive. Same design as used on corresponding previous Buick models except for two pinion roller bearings (see 1948 Change note above).

REMOVAL OF AXLE: *See Rear Axle on car model page.*

OVERHAUL: *See complete "Buick Hypoid" Axle in previous release and note following new procedures and specifications:*

Pinion Rear Roller Bearings—Clearance between bearing rollers and pinion shaft should be .0005" (desired), .0014" (maximum allowable). Check bearings for wear by measuring thickness of roller and outer race at four or five points around bearing (use a micrometer and make certain bearing is absolutely clean). Micrometer reading should be .6756" min., .67605" max. Replace bearing if less than .6756". Bearing can also be checked for wear by using paper strip .0015" (measure with micrometer) between pinion shaft and one roller of the bearing. Bearing should hang on paper strip and strip should not pull out (if bearing drops off strip of own weight or if strip can be pulled out, bearing should be replaced.

►*CAUTION*—If roller bearings worn excessively, inspect front ball bearing carefully for wear and replace if loose.

Ring Gear Replacement—To remove old gear, drill old rivets ½" deep with ¼" drill **on ring gear side,** drive rivets out with a punch inserted in drilled hole. Check gear mounting face of case for burrs, check run-out which must not exceed .002". Mount new ring gear on case with 11 5/16" x 1½" bolts with 3/8" SAE nuts placed in rivet hole counterbores to act as spacers. Check bolted assembly for runout with dial indicator on back face of ring gear. If run-out less than .003", use Riveting Jig J-2196-A to install rivets. Use correct rivets (which allow 5/16" shank length for heading), install rivets from gear side, use 8 tons pressure to head rivets cold. Install rivets in diametrically opposite progression, removing only one bolt at a time. Recheck run-out after all rivets installed. Run-out must not exceed .003".

Pinion Setting—Shims furnished for pinion adjustment in thicknesses of .010" to .019" in .001" steps. Correct thickness of shims (for installation in housing ahead of pinion front bearing) is determined in same manner as on previous models using J-681-A or J-2197 Pinion Setting Gauge.

Standard Pinion Setting

J-681-A Gauge	.379"
J-2197 Gauge	.802"

Ring & Pinion Gear Backlash—.008-.010".

Differential Bearing Pre-load—2½-3 Notches tight.

BUICK REAR SUSPENSION

Series 40, 50, 70 (1949), Series 40 (1950)

DESCRIPTION: Coil spring type of same design used on previous models except that lower spring seat is welded on axle housing and spring is retained on seat by spring clamp and bolt.

TRIM DIMENSION: Before measuring rear spring trim dimensions, bounce rear end of car up and down several times to make certain suspension is not binding and to allow springs to assume natural position. Then measure from top of axle housing to top of bumper clip on frame siderail to rear of bumper. If trim dimension not correct with car at curb weight, replace spring.

Rear Trim Dimension

Series 50 & 70 (exc. 56C & 76C)	5 13/16-6 9/16"
56C & 76C	5 9/16-6 5/16"

SPRING SPECIFICATIONS: If standard springs bottom excessively with normal loads, optional high or export spring can be installed (shock absorber calibrations need not be changed but ride and handling will be improved if this is done).

Special Overload Rear Springs—Furnished in 200 lb. and 500 lb. type for use with trailers or with heavy loads in rear compartment.

1949 Rear Springs

Model	Standard	Optl. (High)
41	1324554	1312433
46S	1324553	1315047
51, 56C	1334699	1334700
56S	1324554	1324561
59, 79	1315233	
71, 76C	1324561	1334701
76S	1334699	1334700

Model	200 lb. Overload	300 lb. Overload
41	1310399	1315233
46S	1312433	1315233
51, 56S, 56C		1315233
71, 76S, 76C		1315233

CADILLAC HYPOID

Cadillac V8, All Series (1949)

►**REAR AXLE SERVICE CAUTION**—Manufacturer recommends that all service on the Differential Carrier Assembly other than oil seal or universal joint yoke replacement (and necessary pinion bearing pre-load adjustment) be handled by replacement of the complete assembly. ***No disassembly or adjustment of this unit should be attempted in the field.***

►*CAUTION*—Loosening or removal of the pinion shaft nut (for oil seal or yoke replacement) will disturb pinion bearing pre-load and exact procedure detailed below must be followed to avoid overloading bearings or collapsing bearing spacer.

REMOVAL OF AXLE: *See Rear Axle on car model page.*

PINION OIL SEAL OR UNIVERSAL YOKE REPLACEMENT:

►*CAUTION—Pinion bearing pre-load (turning torque) must be measured before pinion shaft nut loosened.*

Pinion Bearing Pre-load Measurement: With rear wheels and brake drums removed and propeller shaft disconnected at rear universal, drain axle lubricant, measure inch-pounds torque required to turn pinion shaft using a 50-inch pound torque wrench with special socket J-2571-1 and Adapter J-2571-2 on pinion shaft nut. Before taking a torque wrench reading, rotate pinion shaft ¼ turn in each direction (to free pinion and overcome initial high starting torque), then note torque reading while rotating shaft at least ½ turn and **record this torque reading.** Repeat above check at least eight times to insure accurate check over entire circumference of ring gear, calculate the **average of all torque readings for use when retightening nut.**

Removal of Yoke & Oil Seal: Mark yoke and pinion shaft with a punch for re-installation of yoke in same position on shaft. Install Yoke Holding Tool J-2659, insert special socket J-2571-1 through hole in holding tool, use ¾" drive wrench to remove pinion nut. Drive yoke off pinion shaft splines. Use Oil Seal Remover Tool J-2623 to remove oil seal. Remove staking burrs from pinion shaft with small file or ⅞" x 14 thread die (CAUTION—protect bearing from chips by wrapping cloth around shaft). Try new pinion nut for free turning.

Installation of Oil Seal: Coat outer edge of seal and retainer with good sealer, use Oil Seal Installer Tool J-1357 to drive seal into carrier. Install yoke (CAUTION—line up marks made before disassembly), install new pinion nut. Hold yoke with tool J-2659, tighten pinion nut to 200 ft. lbs., measure and adjust bearing pre-load or turning torque as follows:

Pinion Bearing Pre-load Adjustment: After pinoin nut tightened to 200 ft. lbs. (above), measure pinion bearing pre-load in exactly the same manner as followed before pinion nut loosened (see directions above). Average turning torque (for all readings) at this time should be 5 inch-pounds ±2 lbs. greater than average turning torque recorded before nut loosened. If turning torque too low, tighten nut approximately 30° (½ one flat), and again measure turning torque. Repeat this procedure until correct torque obtained, then stake pinion shaft into nut.

►*CAUTION—Do not overtighten pinion nut and never back off nut to reduce the pre-load.*

Pinion Bearing Pre-load
(Pinion shaft Turning Torque)

New Assembly	50 in. lbs. max.
After 1000 miles (used Oil Seal)	15 in. lbs. max.
After 1000 miles (new Oil Seal)	20 in. lbs. max.

CHEVROLET SEMI-FLOATING (PASSENGER CARS)

Passenger Cars, All Models (1949)
Half-Ton Truck, Model GP (1949)

DESCRIPTION: Semi-floating, hypoid gear type with torque tube. Same design as used on corresponding previous models.

REMOVAL OF AXLE: *See Rear Axle on car model page.*

SERVICING & OVERHAUL: *See complete "Chevrolet Hypoid Semi-floating" Rear Axle in previous release and note the following new specifications:*

Axle Shaft Endplay—Spacer block should be free fit to .014" maximum clearance at axle shaft end. These blocks now furnished in following sizes:

Passenger Car Spacer Blocks

Part No.	Type & Size
597251	Narrow (1.011-1.013")
597254	Medium (1.018-1.021" & 1.028-1.031")
473603	Wide (1.033-1.035")

Half-Ton Spacer Blocks

370217	Narrow (1.1485")
372515	Wide (1.1575" & 1.1675")

Ring Gear Replacement—Tighten mounting bolts to 40-60 ft. lbs. Runout at rear face of ring gear (after installation) .0035" maximum.

Differential Bearing Cap Capscrews—Tighten to 65-80 ft. lbs. (Pass. Cars), 115-135 ft. lbs. (Trucks).

CHEVROLET FULL-FLOATING (TRUCKS)

All ¾, 1, 1½, 2 Ton Trucks (1949)

DESCRIPTION: Full-floating, hypoid gear type with Hotchkiss Drive. Same design as used on corresponding previous truck models.

REMOVAL OF AXLE: *See Rear Axle on car model page.*

AXLE SHAFT, PROPELLER SHAFT, & AXLE DISASSEMBLY & REASSEMBLY: *See complete "Chevrolet Truck Hypoid Full-floating" Rear Axle in previous release.*

CHRYSLER, DE SOTO, DODGE, PLYMOUTH

Chrysler 6 & 8, Models C45, C46, C47 (1949)
DeSoto, Model S13 (1949)
Dodge, Models D29 & D30 (1949)
Plymouth, Models P17 & P18 (1949)

DESCRIPTION: Semi-floating hypoid gear type of same design used on corresponding previous models. **C47 Note**—This axle has "barrel type" differential case of same design used previously.

REMOVAL OF AXLE: *See Rear Axle on car model page.*

OVERHAUL: *See complete "Chrysler Hypoid" and "Chrysler (Crown Imperial)" Rear Axle in previous release and set these axles to the following specifications:*

Axle Shaft Endplay—.003-.008".
Ring & Pinion Gear Backlash—.006-.010".
Pinion Bearing Adjustment—.0015-.0025" tight or pre-load equivalent to 10-15 in. lbs. turning torque with pinion shaft nut properly tightened.
Differential Bearing Adjustment—Tighten bearings to point where ring gear rotates with slight drag in backlash position (without any pinion drag).

CHEVROLET TRUCK TWO-SPEED HYPOID GEAR

1½ & 2 Ton Trucks (1949)—Optl. Equipment.

►**REPLACEMENT REDUCTION GEAR INSTALLATION CAUTION:** Reduction gear mounting bolt holes in replacement differential case and cover are drilled undersize (35/64" drill) and must be reamed at assembly with a 9/16" reamer using the gear as a pilot. Ream one hole, then install bolt to hold gear and case or cover in correct position while reaming remaining holes. **When replacing reduction gear,** install all bolts which can be inserted without forcing, then ream remaining holes with 9/16" reamer, using gear holes as pilot for reamer.

REMOVAL OF AXLE: *See "Rear Axle" on car model page for removal of carrier assembly from truck.*

AXLE SHAFT REPLACEMENT & WHEEL BEARING ADJUSTMENT: Same as for full-floating truck axle. *See "Chevrolet Truck Hypoid (Full-floating)" Rear Axle.*

VACUUM SHIFT CONTROL: Following operations can be performed without disassembling rear axle:

Vacuum Cylinder Diaphragm Replacement: Disconnect hoses at fittings on vacuum cylinder. Remove bolts holding two cylinder halves together, lift off outer half. Remove outer nut on pushrod **while holding inner nut stationary** with ½" wrench. Remove diaphragm plates and diaphragm. Reassemble new diaphragm in same manner using Permatex around pushrod hole in diaphragm plates to insure a good seal at this point. Check shifting operation in "Lo" and "Hi" range after unit reassembled.

►*CAUTION—Do not transpose hose connections.*

Oil Seal Replacement: Dismantle vacuum cylinder and remove diaphragm (see above). Remove nuts and washers on two mounting studs, lift inner half of vacuum cylinder off axle housing, drive old oil seal out. Soak new seal in engine oil, coat outer diameter of seal with permatex and install in cylinder with free side of leather down (in), press seal in place with tool J-968. Install inner half of cylinder on axle housing, reassemble diaphragm.

Shifter Spring Replacement: Dismantle vacuum cylinder and remove diaphragm (see Diaphragm Re-

CONTINUED N NEXT PAGE

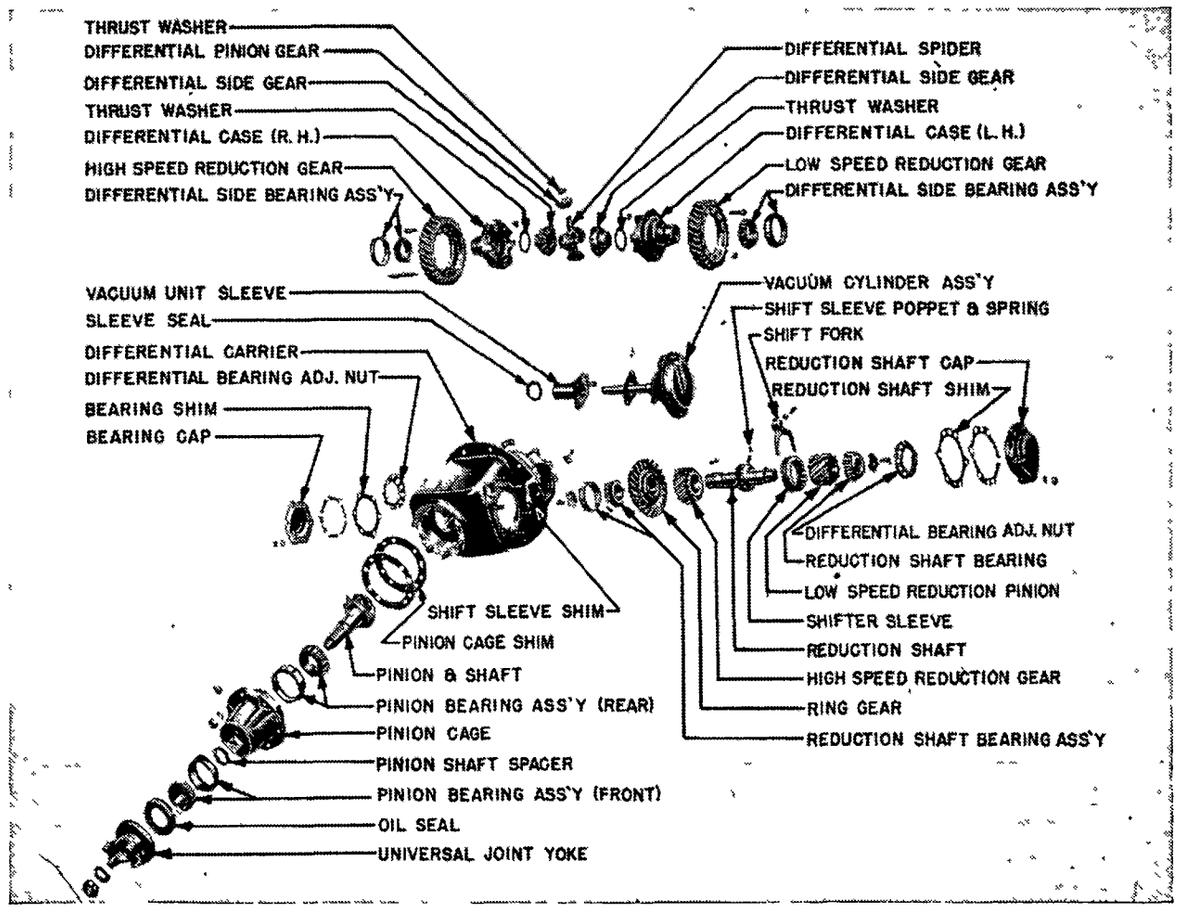

CHEVR LET TRUCK TW -SPEED HYP ID GEAR AXLE—WITH VACUUM C NTR L

CHEVROLET TRUCK TWO-SPEED HYPOID GEAR (C nt.)

placement above). Press in on end of pushrod to relieve spring pressure, remove snap ring from inner rim of piston rod, withdraw pushrod assembly. Clamp head of pushrod bolt in vise, remove two nuts, short spacer, stop washer, spring, long spacer, and stop washer from pushrod bolt. Reinstall parts in same order using a new spring. Tighten adjusting nut on pushrod until distance between outer faces of stop washers is 3½", install and tighten locknut being careful not to change adjustment. Lubricate inside of piston rod with engine oil, install pushrod and replace snap ring. Reassemble vacuum control.

DIFFERENTIAL CARRIER DISASSEMBLY: Mark differential bearing caps and carrier to insure reassembly in same position. Remove adjusting nut locks, adjusting nuts, and bearing caps, lift differential assembly out of carrier. Remove nuts on pinion cage mounting studs, take out lubrication plug. Install two 3/8" bolts in tapped holes in pinion cage flange, turn nuts up evenly to remove cage assembly. **Note number and thickness of shims under carrier flange** (these shims control pinion mesh). Loosen locknut on bolt attaching shifter fork to vacuum control piston rod, remove bolt. Remove nuts on vacuum cylinder mounting studs, remove cylinder, piston rod, mounting sleeve and shims (tap on end of piston rod to free it from shifter fork). Remove nuts on double reduction shaft bearing caps, remove caps and shims (use two 3/8" capscrews in tapped holes in left bearing cap to remove cap), **note number and thickness of shims removed at each bearing cap** (these shims control ring-and-pinion gear backlash and bearing adjustment). Slide double reduction shaft assembly to left and pull ring gear end to rear to clear differential bearing support, remove shaft assembly. Remove right bearing outer race by driving race through into carrier with driver J-872-1. Do not remove left bearing race (race is pressed in bearing cap and these parts furnished as an assembly). Disassemble and service the major sub-assemblies as follows:

Pinion Cage Disassembly & Reassembly: Remove nut on end of pinion shaft, remove universal joint flange. Support carrier end of pinion cage in arbor press, press pinion and rear bearing out of cage, remove bearing spacer from pinion shaft. Press front bearing and oil seal out of cage. To remove bearing from pinion shaft, use Pinion Bearing Remover J-2228 to prevent damage to bearing while pressing shaft out. Use long drift to drive bearing outer races out of pinion cage. Install new races in cage using special driver J-1322 (front race), J-2227 (rear race). Lubricate all parts before re-installing, make certain that bearing spacer in place on shaft between bearings, install universal flange but **do not install oil seal** until after bearing pre-load adjusted, tighten pinion nut to 75-150 ft. lbs., check and adjust bearing pre-load as directed below. After pre-load adjusted, soak new oil seal in engine oil, install oil seal with driver J-971 with free edge of seal toward bearing. Re-install universal flange, washer, and nut, tighten nut to 75-150 ft. lbs. and install cotter pin (CAUTION—do not back nut off to align cotter pin hole, stop tightening the nut at point where slot lines up with hole).

Pinion Bearing Pre-load Adjustment—Check pre-load by clamping pinion cage flange in vise and using spring scale and rod to measure torque required to turn pinion (pinion nut must first be correctly tightened to 75-150 ft. lbs.). Turning torque should be **12-18 in. lbs.** (or 1-1½ ft. lbs.). Adjust by installing spacer or shims of correct thickness on shaft between bearings (thinner shims will increase turning torque, thicker shims decrease turning torque). These adjusting shims furnished in seven thicknesses as listed below and combinations of two shims will provide necessary range of adjustment from .316" to .354" in .002" steps.

Adjusting Shim Part Nos.—3847424—.157", 3847425—.159", 3847426—.163", 3847427—.167", 3847428—.171", 3847429—.175", 3847430—.177".

Double Reduction Shaft Disassembly & Reassembly: Remove capscrew and bearing retainer washer on each end of shaft, support tooth side of ring gear on hardwood blocks in arbor press, press shaft out of ring gear and bearing. Remove high speed pinion, shifter sleeve and poppet balls and springs (CAUTION—balls and springs will fly out as sleeve is removed). Replace sleeve on shaft with tapered side against pinion, support sleeve on hardwood blocks in arbor press, press shaft out of bearing, lift off bearing and low speed pinion. When reassembling, lubricate all parts for initial lubrication, install high speed pinion with clutch teeth toward splines on shaft, see that ring gear key in place in shaft, press shaft in gear until shoulder on shaft is against gear, press bearing on shaft against gear, install bearing retainer washer and capscrews, tighten capscrews to 37-46 ft. lbs. and secure with lockwire. Install poppet springs and balls in shaft holes, install shifter sleeve on shaft with **heavy tapered end of sleeve toward ring gear and three tapered teeth on sleeve in line with poppet balls.** Install low speed pinion, press bearing on shaft firmly against shoulder, install bearing retainer washer and capscrews, tighten capscrews to 37-46 ft. lbs. and secure with lockwire.

Bearing Adjustment & Ring-and-pinion Gear Mesh Adjusted as part of Carrier Reassembly (below).

Differential Disassembly & Reassembly: Mark halves of case to insure correct reassembly. Remove nuts on eight long through-bolts, separate differential case halves, remove differential side gears, pinions, and thrust washers. To remove side bearing cone and roller assemblies, install J-1318 Differential Bearing Puller on bearing, support differential case in arbor press with bearing puller down, use drift inserted through case to press puller and bearing down off case hub. Press new bearings on hub firmly against shoulder on case using J-1312 Bearing Replacer. To replace double reduction gears, remove gear mounting nuts and bolts, tap gear off case, make certain that mating flanges of case and new gear are clean and smooth, tap gear in place, tighten mounting bolt nuts evenly to 70-110 ft. lbs. and secure with lockwire.

CAUTION—Double reduction gear mounting bolt nuts should be at inner face of differential case halves, nuts on long through-bolts should be on left side or AWAY from ring gear.

Differential Bearing Adjustment—Part of Carrier Reassembly (following).

DIFFERENTIAL CARRIER REASSEMBLY: Reverse disassembly directions and make the following adjustments during the reassembly operations:

Double Reduction Shaft Bearing Adjustment: Install assembly with same thickness of shims under each bearing cap as were removed during disassembly (install left cap first, tighten mounting stud nuts securely). With correct bearing adjustment, shaft should rotate with slight drag (bearing pre-load only—pinion must be out so that no pinion drag added). Adjust by adding or removing shims at right or left bearing cap (shims will be transferred from one side to the other during ring-and-pinion gear backlash adjustment). **After backlash adjusted,** tighten all bearing cap nuts to 75-95 ft. lbs.

Ring-and-Pinion Gear Mesh (Pinion Setting Adjustment): Install pinion cage in carrier with same thickness of shims under cage flange as were removed during disassembly, install nuts on 3 equally spaced mounting studs and tighten nuts securely. Check gear mesh by painting ring gear teeth with red lead or Prussian blue, rotate pinion by hand in both directions while pressing on back of ring gear to apply a load. Make necessary adjustment of pinion position for correct mesh by adding shims (to move pinion out), or removing shims (to move pinion in) from beneath pinion cage flange. These shims furnished .003", .005" thick. After adjusting pinion position and backlash (see below), install all pinion cage mounting stud nuts and tighten evenly to 115-130 ft. lbs.

Ring-and-Pinion Gear Backlash: Check backlash with dial indicator mounted on carrier. Backlash should be .008-.013". Adjust by transferring shims from under one double reduction shaft bearing cap to the other keeping total shim thickness constant to avoid disturbing bearing adjustment (move shims from left to right side to increase backlash, from right to left side to decrease backlash). These shims furnished .003", .005" thick. After adjustments completed, tighten bearing cap nuts to 75-95 ft. lbs.

Two-speed Shifter Mechanism Installation: With shifter sleeve in low-speed position, install shifter fork in sleeve with lock bolt hole toward rear of carrier. Place rubber oil seal on vacuum unit mounting sleeve and install sleeve in carrier with same thickness of shims under sleeve flange as were removed when unit disassembled. Use new gasket on vacuum cylinder piston rod, insert rod and cylinder assembly in sleeve, enter end of rod in shifter fork and line up hole in rod and fork, install taper bolt and tighten locknut securely. Tighten cylinder mounting stud nuts. Check assembly as follows:

Shifter Mechanism Adjustment—With shifter sleeve in low-speed position, check clearance at each side of shifter fork with a feeler gauge. If clearance less than .010" at either side of fork, loosen vacuum cylinder mounting nuts, add or remove shims from under mounting sleeve flange (shims slotted, not necessary to remove cylinder or sleeve), tighten nuts and recheck shifter fork clearance.

Differential Bearing Adjustment: When installing differential assembly, assemble adjusting nuts and bearing caps in accordance with marks. Tighten bearing cap stud nuts just snug. Shift differential to right or left (by turning up one adjusting nut and backing off opposite nut) until double reduction gears and pinions are centered. Position one adjusting nut in a locking position (slot in line with lock tang), tighten opposite adjusting nut until all clearance or endplay just removed, then **tighten each adjusting nut one additional notch** for correct bearing pre-load. Tighten bearing cap stud nuts evenly to 150-170 ft. lbs., install adjusting nut locks, secure bearing cap nuts with lockwire.

HUDSON HYPOID

Hudson 6 & 8, All Models (1949)
Hudson Pacemaker, Model 500 (1950)

DESCRIPTION: Hypoid gear semi-floating type of same design used on corresponding 1948 models.

REMOVAL OF AXLE: *See Rear Axle on car model page.*

DISASSEMBLY & OVERHAUL: *See complete "Hudson Hypoid" Rear Axle in previous release and set these axles to following specifications:*

Axle Shaft Endplay—.001-.004".

Ring & Pinion Gear Backlash—.004-.006".

Pinion Bearing Adjustment—17-32 in. lbs. bearing pre-load or turning torque with pinion shaft nut tightened to 200 ft. lbs.

Pinion Setting—Check gear mesh by painting ring gear teeth with red lead and rotating gears by hand.

Differential Bearing Adjustment—Adjusting nut tightened one notch from point where all endplay has been taken up (will provide correct "spread" of .008-.012" of carrier).

NASH REAR SUSPENSION

Nash "600", 4940 Series (1949)
Nash Statesman, 5040 Series (1950)
Nash Ambassador, 4960 (1949), 5060 (1950)

DESCRIPTION: Special coil spring type with springs insulated by rubber cushions at top (in body) and at lower end (at spring seat on axle housing). Direct acting shock absorbers are mounted within springs and a Stabilizer (track bar) is used to maintain rear axle alignment.

REMOVAL OF SPRING & SHOCK ABSORBER: Lift rear of body until all weight removed from springs, remove two nuts on shock absorber bolts at rear axle. Lift rear of body sufficiently to free shock absorber bolts from axle housing, remove lower spring saddle. Swing spring, shock absorber, and lower spring seat to one side, lower spring and lift out. To remove shock absorber after spring removed, remove nuts and rubber grommets on upper mounting stud within body, lower shock absorber and remove from below.

INSTALLATION OF SPRING & SHOCK ABSORBER: Install grommets and nuts on upper end of shock absorber in body, assemble bolts, bushings and spacer on lower end of shock absorber. Install upper rubber cushion on spring by placing projection or tab on cushion between stationary end coil of spring and first movable coil and rotating cushion until flat end of stationary coil is tight against shoulder of tapered projection on spring (CAUTION—positioning necessary to prevent contact between first closed coils of spring in operation). Install lower spring cushion similarly. Complete installation in reverse order of removal instructions.

SPRINGS: Springs are ground flat at upper and lower ends. Same type springs used on all models.

Rear Spring Specifications

	Free Height	Loaded Height①
Standard	16¾"	9 13/16"
Export	15½"	10 17/32"

①—With load of 870 lbs. ±25 lbs.

NASH HYPOID

Nash "600", 4940 Series (1949)
Nash Statesman, 5040 Series (1950)
Nash Ambassador, 4960 (1949), 5060 (1950)

►**REAR AXLE IDENTIFICATION TAG:** Ring and pinion gear ratio stamped on tag attached to axle housing by one differential housing cover bolt.

►*CAUTION—Tag should be kept with axle parts and re-installed when axle reassembled. Install new tag (furnished with gear sets) when axle ratios changed.*

DESCRIPTION: Semi-floating, hypoid gear, Torque Tube Drive type with rear coil springs. Axles on both models are similar in design except for differential bearing and ring-and-pinion gear adjustment (shims on "600", shims and adjusting nut on Amb.), propeller shaft coupling, and torque tube connection for which data is given below.

AXLE REMOVAL: *See "Rear Axle" on car model page.*

AXLE SHAFT REPLACEMENT & WHEEL BEARING ADJUSTMENT: Remove rear wheel hub with puller J-1644 (CAUTION—do not use "knock-out" puller). Take off nuts on bearing retainer bolts, remove oil seal, retainer plate, backing plate, and adjusting shims (CAUTION—save shims carefully for re-installation). Use special puller J-2498 to remove axle shaft and bearing. Slip bearing cup off, press bearing cone and roller assembly off in an arbor press. When installing shaft, adjust endplay as follows:

►*CAUTION—Always install new inner and outer oil seals when replacing axle shaft.*

Wheel Bearing Adjustment—If original shim pack (between end of housing and backing plate) not available, install .030" shim thickness at this point on each side of axle to insure thrust block being centered (CAUTION—line up drain hole in shims with hole in case). Check endplay with a dial indicator, add or remove shims until endplay is .002-.004".

►*CAUTION*—Shims must be divided between both ends of housing so that thrust shaft block is approximately centered on differential pinion shaft (at least 1/16" clearance on each side).

TORQUE TUBE & PROPELLER SHAFT OVERHAUL: These units are not same design on all models and are serviced differently as follows:

Removal ("600" & Statesman): Disconnect truss rods at center bracket, pry universal joint off splines at forward end of propeller shaft (joint is light press fit). Disconnect torque tube from rear axle housing by removing nuts from mounting studs, move tube forward to expose rear coupling nut, loosen coupling nut, disconnect coupling from pinion shaft, lift off torque tube and propeller shaft. Remove propeller shaft through **rear end** of torque tube.

Removal (Ambassador): Disconnect truss rods at axle housing and at center bracket on torque tube, pry universal joint off forward end of propeller shaft (joint is light press fit on shaft). Disconnect torque tube from rear axle housing by taking off nuts on mounting studs, move tube forward to expose propeller shaft coupling flange. Remove bolts from coupling flange, lift off torque tube and propeller shaft. Remove propeller shaft through **front end** of torque tube.

Propeller Shaft Center Bearing (All Models): Prelubricated type ball bearing retained on propeller shaft by snap ring on each side and rubber-mounted in torque tube. To remove bearing, take out snap ring, drive bearing off **toward front end** of shaft (forward end of shaft .003" undersize to facilitate bearing removal and installation). Install new bearing in same manner and see that new snap rings properly seated to hold bearing in position.

Propeller Shaft Coupling Nut Installation: When assembling propeller shaft to pinion shaft, align both shafts and **support propeller shaft for its full length to maintain this alignment** while coupling nut is being tightened. This is necessary to prevent coupling binding and to insure nut being properly tightened.

►*CAUTION—Make certain new type coupling used (see Propeller Shaft Coupling Change above) and coupling nut tightened exactly as directed to prevent coupling failure in service.*

Torque Tube Trunnion Bracket ("600" & Statesman): On front end of torque tube and must be properly installed and adjusted when rear axle installed on car as follows:

Trunnion Bracket Adjustment—With axle completely assembled (rear end of propeller shaft against pinion shaft, torque tube assembled on housing), position trunnion bracket on torque tube so that front end of propeller shaft projects ⅛" to ¼" beyond the face of trunnion bracket. After bracket properly positioned, adjust clampscrew on underside of bracket to remove all excess clearance between threads on bracket and tube without setting up excessive friction. Bracket must be free to move on threaded tube. Lock clampscrew nut with cotter pin. Rubber boot must be installed behind bracket to protect threads on tube from road dirt. Threaded parts require no lubrication except at time of assembly. Lubricate these parts sparingly.

►*CAUTION—If propeller shaft extends less than ⅛" beyond face of trunnion bracket, universal joint slinger may rub on bracket. If shaft extends more than ¼", effectiveness of slinger will be reduced.*

Trunnion Bracket Installation on Car: After bracket position adjusted (above), torque tube and rear axle justed as directed above, torque tube and rear axle assembly can be assembled to transmission as follows: Thread 2 special trunnion bracket studs (with tapered ends to rear) on trunnion bracket and lock with nuts and lock washers. Assemble plain stamped steel retainer, rubber cushion block (with small extension to front), steel retainer with pilot flange over extension on rubber block, on each stud. Install torque tube and rear axle assembly with trunnion bracket studs passing through holes in transmission (or overdrive) rear bearing retainer. Assemble steel retainer with pilot flange to rear, rubber block with extension to rear, and plain steel retainer on front end of studs. Tighten retainer nuts on studs until rubber cushions held under slight tension. Lock nuts with 'palnuts'.

REAR AXLE OVERHAUL: With torque tube and propeller shaft removed (see above), use stand to support axle and proceed as follows:

C NTINUED ON NEXT PA E

NASH HYPOID (C nt.)

Disassembly: On Ambassador models, one differential bearing adjusting nut is used (right hand side) and adjusting nut should be backed off before the differential assembly is removed. On other models, no adjusting nut is provided and the differential assembly is positioned in axle housing by shim between differential bearing cup and housing at each side. To disassemble differential, mark bearing caps to insure correct reassembly, remove bearing cap bolts and caps, pry differential assembly out using care not to damage bearings or shims. When reassembling, place bearing cups and shims in position on bearings, tilt bearing cups slightly so that they enter seat in housing, force assembly into place in housing which will cause bearing cups to straighten on bearing rollers. If shims project, tap shims into place, install bearing caps and tighten bolts securely.

Pinion Bearing Assembly: Before pinion and bearings can be removed, propeller shaft must be disconnected by loosening coupling nut on rear end of shaft. Then remove the oil seal from housing, bend back lip of pinion nut locking plate, loosen nut. On Ambassador models, remove nut on forward end of pinion shaft at coupling flange, pull coupling flange from shaft, lift off oil seal (held in place by torque tube flange).

Pinion Disassembly—Tap on pinion shaft with soft hammer to loosen front bearing cone, remove bearing cone and roller assembly, remove shims located behind bearing cone, **note number and thickness of these shims** which control bearing adjustment. Remove pinion and rear bearing assembly through rear of housing. Use long drift to drive pinion bearing cups from housing (recess provided behind each cup for this purpose). Use pinion bearing tool J-2244 (600 & Statesman), tool J-2245 (all Amb. models) to remove rear bearing from pinion shaft, **note number and thickness of washer or shims on shaft behind bearing** which control pinion setting (gear mesh). To remove differential side bearing cone and roller assemblies, use special puller J-2497 being careful that puller does not contact roller cage or damage shims in back of left hand bearing (these shims control ring and pinion gear backlash).

Pinion Bearing Assembly:—Bearing adjustment controlled by shims located on pinion shaft between spacer and forward bearing cone. When installing pinion, install correct washer and shim pack for correct pinion mesh (see Pinion Setting below) on shaft against pinion, install rear bearing cone and bearing spacer. Install sufficient shims on shaft in front of spacer to insure positive endplay of shaft when installed in housing, install front bearing cone, shaft coupling flange (Ambassador) or special tool (splined sleeve) and tighten nut on shaft securely. Then check bearing adjustment as directed below. NOTE—Do not install oil seal until after bearing adjustment has been made.

Pinion Bearing Adjustment: Use a dial indicator to check pinion shaft endplay with coupling flange nut securely tightened (oscillate shaft in both directions while applying end pressure to insure bearings seated). Disassemble pinion shaft and remove shims from between spacer and front bearing cone equal to the observed endplay **plus .003" to insure correct bearing pre-load or set (.003" tight).**

Pinion Bearing Pre-load Adjustment with Tool J-2496: With pinion installed in axle housing (make certain that spacer and bearing adjusting shims in place on shaft between bearing cones), install tool on end of shaft in place of the coupling flange, tighten pinion shaft nut securely. Attach spring scale to exact center of tool handle (will provide 6" arm), check torque required to turn pinion shaft. See table below for desired torque reading. If **less than lower figure,** remove shims from between spacer and front bearing cone, if **greater than higher figure,** add shims at this same point. When bearing adjustment completed, install new oil seal, install coupling flange (Ambassador), see that pinion nut tightened to 105-110 ft. lbs.

Pinion Bearing Pre-load

Model	Pinion Shaft Turning Torque
600 & Statesman	12-14 in. lbs.
Ambassador	15-18 in. lbs.

Pinion Setting: Pinion depth and consequent ring and pinion gear mesh is controlled by spacer washer or shims installed on pinion shaft between rear bearing cone and pinion. Must be adjusted when new gears or other parts installed.

Pinion Setting without Gauge—If new pinion being installed and pinion setting gauge not available, note washer and shim thickness used for old pinion, secure standard washer thickness for this housing by adding (if pinion marked +), subtracting (if pinion marked —) shims equal to figure following this plus or minus mark on the old pinion, finally correct this standard washer thickness in accordance with new pinion marking as directed under Pinion Setting above.

Pinion Setting using Rear Axle Drive Pinion Gauge No. J-2499: With rear pinion bearing cup installed in housing, place bearing cone and roller assembly in cup, press in and revolve bearing cone so that rollers are properly seated. Bolt special gauge plate on bearing cone (thread bolt through housing and secure in place with cross-piece and thumbnut at forward end), make certain **that gauge plate does not contact housing** at any point. Mount dial indicator on tool with indicator button on top of gauge pin, set dial indicator at Zero with tension on gauge pin. Install tool in axle housing with **larger** diameter of adapter rings seated in side bearing seats (install adapters on tool with larger diameter rings outward for Ambassador, small diameter outward for 600). Swing gauge point across gauge plate and note highest reading of dial indicator, **subtract this reading from .140"** and resulting figure will be washer thickness required for a standard "0" pinion. If pinion is not standard (marked by — or + figure on end), add (if pinion marked —), or subtract (if pinion marked +) from the standard washer thickness an amount equal in thousandths to the figure following this — or + sign.

Differential Bearing Assembly: Use special puller J-2497 to remove bearing cone and roller assemblies from differential case. Note number and thickness of shims located behind each bearing cone (On Ambassador, no shims used on right hand side). These shims control ring and pinion gear backlash (and bearing adjustment on "600") and must be re-installed in same position when bearings replaced. If new parts installed, adjust bearings and gear backlash by varying shim thickness as follows:

Differential Bearing Adjustment (600 & Statesman): Bearing pre-load should be .004-.006" and this is controlled by shims between the side bearing cups and axle housing at each side. To determine shim thickness, install carrier in housing with one .075" shim at each side, check endplay. If endplay noted, install next thicker shim on each side and recheck. With endplay just taken up, **install .005" thicker shim on right hand side** which will provide correct bearing pre-load of .004-.006". Tighten bearing cap screws to 55-60 ft. lbs. Check ring gear backlash with a dial indicator, finally check gear mesh by painting gear teeth with red lead and rotating gears.

Differential Bearing Adjusting Shim Note—These shims furnished in thicknesses of .075", .080", .085", .090", .095".

Differential Bearing Adjustment (Ambassador): Install differential assembly in housing (with correct shims in place between left hand bearing and case), install bearing caps and tighten screws to point where they just grip lockwashers (right hand bearing cap must not prevent turning of adjusting nut), turn adjusting nut up until all bearing endplay has just been removed and notch on nut is in line with adjusting nut lock, then tighten adjusting nut **1-2 notches additional** to provide correct bearing pre-load of .004-.006". Tighten bearing capscrews to 105-110 ft. lbs. and install adjusting nut lock.

Ring & Pinion Gear Adjustment: Gear mesh should be correct if pinion setting properly made (see above). Check gear mesh after all adjustments made by painting 8-10 teeth of ring gear with red lead and rotating gears by hand (turn pinion shaft with wrench while supplying drag on ring gear with the hand). Check backlash and adjust as follows:

Ring Gear Backlash Adjustment—Should be .004-.006". Measure with dial indicator. Adjust by adding or removing shims located between left hand differential bearing cup and housing (600), bearing cone and case (Ambassador). On 600 & Statesman, **total shim thickness must not be changed** and any shim change on left hand side (to adjust backlash) must be offset by corresponding shim change on right hand side (to maintain differential bearing pre-load).

FORD TRUCK FULL-FLOATING

¾-Ton F-2 & Heavy Duty ¾-Ton F-3 (1949)
1-Ton Truck, Series F-4 (1949)
1½-Ton Truck, Series F-5 (1949)

DESCRIPTION: Full-floating, spiral bevel gear type with Hotchkiss Drive. Same design as used on corresponding previous models.

REMOVAL OF AXLE: *See Rear Axle on car model page.*

AXLE SHAFT REPLACEMENT, WHEEL BEARING ADJUSTMENT, & AXLE OVERHAUL: *See complete "Ford Truck Full-Floating (Hotchkiss Drive)" Rear Axle in previous release.*

FORD TRUCK TWO-SPEED

1½-Ton Truck, Series F-5 (1949)—Optl.
2-Ton Truck, Series F-6 (1949)—Std.

DESCRIPTION: Full-floating, spiral bevel gear type with two-speed planetary gears. Same design as used on previous models.

ALXE SHAFT REPLACEMENT, WHEEL BEARING ADJUSTMENT, & AXLE OVERHAUL: *See complete "Ford Truck Two-Speed" Rear Axle in previous release.*

FORD PASSENGER CARS (EXCEPT STATION WAGON)

6 Cyl. & V8 Pass. Cars exc. Sta. Wgn. (1949-50)
6 Cyl. & V8 Sedan Delivery (1949-50)

►NOTES, CAUTIONS, & CHANGES

►**PINION BEARING PRE-LOAD CAUTION**—When necessary to adjust pinion bearing pre-load on bearings which have been run-in (after 1000 miles or more of service), pre-load should be set at 10-15 in.lbs. instead of new bearing specification of 22-28 in.lbs. (used when new bearings being installed). *See Pinion Bearing Adjustment instructions.*

►**PINION GEAR PRODUCTION CHANGE:** New type pinion gear with provision for installation of pinion adjusting shims on pinion shaft (between gear shoulder and rear bearing cone) used on late cars and furnished for replacement on all cars as listed below. These Ring-and-Pinion Gear Sets are interchangeable with previous type gears but are installed and adjusted differently as described below.

New Type Ring-and-Pinion Gear Sets

Ratio	Part Number
3.73-1	8A-4208-A
4.10-1	8A-4208-B

►*CAUTION*—Special adjusting shims furnished for use with above gears (fit on pinion shaft between gear and rear bearing cone).

►**CARRIER-TO-HOUSING BOLT TIGHTENING CAUTION:** Special self-locking bolts, No. 350584-S, and self-locking nuts, No. 34445-S8, used to mount carrier in axle housing. These nuts should be tightened to 30-35 ft.lbs. and must not be tightened excessively.

►*LEAK CORRECTION CAUTION*—If leaks occur at carrier mounting flange, correct by using Permatex on both sides of gasket, **do not tighten mounting bolts excessively** (will not correct leaks).

►**EXCESSIVE AXLE SHAFT ENDPLAY CORRECTION (Causing "Clunk" when car in motion):** Check for excessive endplay (use depth gauge through hole in axle shaft flange). If endplay more than .030", correct by installing special shim between bearing outer race and bearing seat in housing (endplay must be not less than .005").

►**Shim Note**—Shims can be made up from shim stock with I.D. 2.54-2.56", O.D. 2.820-2.800", .015" thick.

DESCRIPTION: Semi-floating, hypoid gear, Hotchkiss Drive type with **separate Differential Carrier Assembly** which can be removed for work.

AXLE SHAFT REPLACEMENT: Remove wheel, remove brake drum (retained by Tinnerman nuts on wheel studs). Remove nuts on axle retainer plate bolts (work through hole in flange), use Axle Shaft Puller 4235-P to pull axle shaft and bearing assembly out. Use care not to damage oil seal or dislodge backing plate (install one nut to retain backing plate). Check wheel bearing and oil seal in housing.

►***CAUTION—Do not disturb wheel bearing or retainer unless replacement required (cannot be reinstalled).***

Wheel Bearing Replacement: Use special Axle Bearing Retainer Remover No. 2240-N to loosen bearing retainer, remove retainer from shaft. Use puller to remove bearing, or grind through both races and lift off bearing (NOTE—bearing cannot be re-used, always install new bearing). To install bearing, place retainer plate on shaft, use tool No. 1225-N to press NEW bearing firmly in place against shoulder on shaft, press retainer ring firmly against bearing.

►***CAUTION—Use extreme care not to damage oil seal bearing surface on axle shaft.***

Oil Seal Replacement: Soak new seal in engine oil for at least one-half hour. Use tool No. 4235-N to drive seal in place against shoulder in housing. Check fit of seal in housing to prevent oil leaks around seal.

REMOVAL OF AXLE: *See "Rear Axle" on car model page.*

AXLE DISASSEMBLY: Remove axle shafts (see above), remove nuts on carrier mounting bolts, lift carrier out of housing. Mark right and left hand differential bearing caps and adjusting nuts to insure correct reassembly. Remove bearing cap screws, lift off bearing caps, remove adjusting nuts, lift differential assembly out of carrier. To remove drive pinion, take off nut on pinion shaft at universal joint flange, pull flange off shaft. Remove pinion, rear bearing, and bearing spacer through rear of carrier. Discard spacer (new spacer must be used in reassembly). Use puller No. 4628-P to remove front and rear bearing cups from carrier bore (CAUTION Save and re-install pinion adjusting shims.

Pinion Bearing Assembly (First Type Pinion with Shims in Carrier behind Bearing Cup): Lubricate bearings and thrust washers with hypoid gear oil. Install the front and rear bearing cups in carrier using Replacer No. 4628-N to seat cups firmly against shoulders in housing (CAUTION—Re-install shims in housing behind rear bearing cup—these shims control pinion setting). Press rear bearing cone and roller assembly on pinion shaft, install NEW bearing spacer on shaft, insert assembly in carrier. On front end of shaft, install front bearing cone and rollers, oil seal, universal joint flange, washer, and nut. Adjust pinion bearings and check pinion setting (gear mesh).

Pinion Setting (First Type Pinion)—Check when new parts installed or if same number and thickness of shims, as removed from behind rear bearing cup, not re-installed. To check setting with pinion installed in carrier mount Pinion Depth Gauge Tool No. 4610-P on carrier (mount pinion plate on carrier so that plate contacts face of pinion, see that semi-circular supports on flat plate seat evenly in differential side bearing seats), use micrometer to measure distance from underside of pinion plate to boss on top of bearing plate. This distance should be 2.000" plus or minus .002". If not correct, remove pinion and add or remove shims (furnished .003", .005", .010", .020" thick) behind rear bearing cup.

Pinion Bearing Assembly (Later Type Pinion with Shims on Pinion Shaft behind Bearing Cone): Install front and rear bearing cups in carrier using Replacer No. 4648-N to seat cups firmly against shoulders in carrier (NOTE—no shims installed behind rear bearing cup with this pinion). Measure distance from face of pinion to rear face of shoulder on back of gear with a micrometer (do not place micrometer on etched portion of pinion face) and **record this measurement** for use in pinion setting. Press rear bearing on pinion shaft (do not install shims at this time), insert pinion in carrier, install front bearing, universal joint flange, washer and nut, tighten nut for bearing pre-load of 15-20 in.lbs. (special checking pre-load). Check pinion setting (see below) to determine correct shim thickness required. Remove pinion assembly from carrier, remove rear bearing using tool 4221-N, install correct shim thickness on pinion shaft against shoulder on gear with **ears on shims facing shoulder** on gear. Re-install pinion in carrier (CAUTION—same bearings must be installed as were used in determining correct pinion shim thickness), install NEW bearing spacer, front bearing, oil seal, universal joint flange and nut. Adjust pinion bearing pre-load.

Pinion Setting (Later Type Pinion)—Use tool 4610-A or 4610-P to check pinion depth (NOTE—add .5" to micrometer reading if 4610-P used). With pinion installed in carrier **without shims**, measure pinion depth with above tool, **add** this figure to distance from face of pinion-to-face of shoulder as recorded before pinion installed in carrier (above), and **subtract** 4.095 from this sum. Then add or subtract a

CONTINUED N NEXT PA E

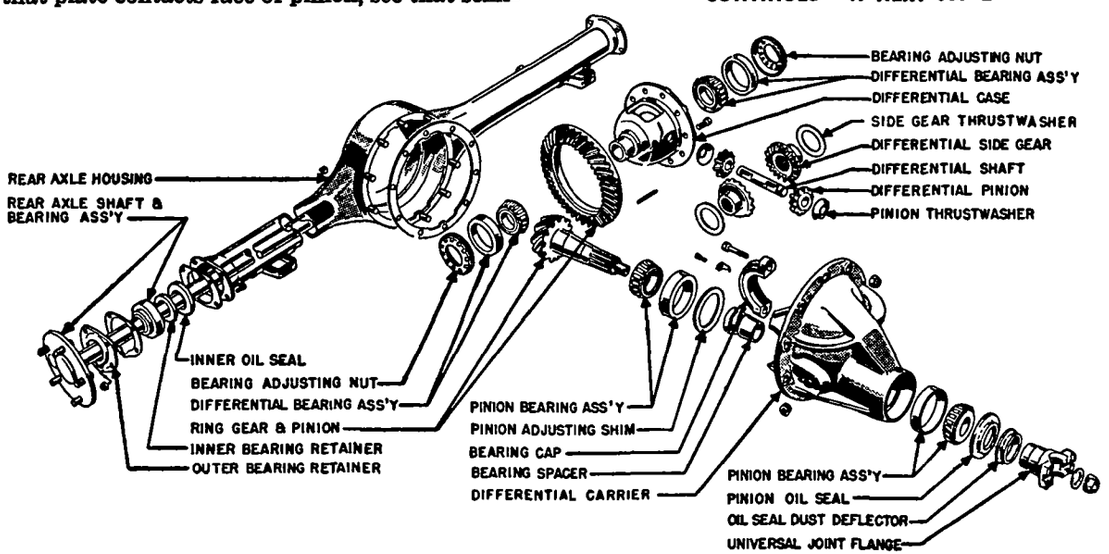

FORD PASSENGER CAR REAR AXLE

FORD PASS. CARS (C nt.)

figure dependent on pinion marking as detailed below, and the final result will be the correct shim thickness required for installation between the pinion gear shoulder and the rear bearing cone.

Pinion Marking under 15—If number etched on face of pinion is less than 15 (.015"), **subtract this number from 15,** and **add** the result in determining the pinion shim thickness (above).

Pinion Marking Over 15—If number etched on face of pinion is greater than 15 (.015"), **subtract 15 from this number,** and **subtract** the result in determining the pinion shim thickness (above).

►*ADJUSTING SHIM NOTE*—These shims furnished in .002" steps from .020" to .038" thick. Use next size smaller shim if exact thickness not available.

Pinion Bearing Pre-load Adjustment: See table below for settings. Tighten nut on end of pinion shaft and **rotate pinion shaft while tightening nut** to insure proper seating of bearings. When bearing spacer is felt to begin to collapse, rotate pinion shaft several times, then measure turning torque required to turn pinion shaft, tighten nut until correct torque is secured as follows:

Pinion Bearing Pre-load (turning torque)

New Bearings	22-28 in.lbs.
Old Bearings (First Pinion) ①	10-15 in.lbs.
Old Bearings (Later Pinion) ①	13-18 in.lbs.

①—After 1000 miles or more of service.

►*CAUTION—Install a new pinion bearing spacer each time the pinion nut is tightened to specified torque.*

Differential Assembly: If assembly being dismantled, remove ring gear mounting capscrews, tap ring gear off case with a brass hammer. Drive differential pinion shaft lockpin out **from ring gear side of case,** slide shaft out, remove side gears, pinions, and thrust washers. Use Puller 4221-N to remove differential side bearing cone and roller assemblies. When reassembling, install differential side gears and pinions with thrust washer behind each gear, stake pinion shaft lockpin to prevent pin working out. Tighten ring gear mounting screws evenly to 35-40 ft. lbs. Use Driver 4222-N to install side bearings.

Differential Bearing & Ring Gear Backlash Adjustment: When installing differential assembly in carrier, move ring gear toward pinion until all backlash taken up, place adjusting nuts squarely against bearing cups and make certain they are properly meshed in carrier threads, install bearing caps (note markings), tighten bearing cap screws just enough to hold caps in place. Turn **left** hand adjusting nut in until ring gear backlash is zero (turn gear while securing this setting). Turn **right** hand adjusting nut in until it is snug, then **tighten** adjusting nut additional 1½-2½ notches for correct bearing preload. Check ring gear backlash and gear mesh (below), then tighten bearing cap screws to 70-80 ft. lbs., install adjusting nut locks.

Ring Gear Backlash & Gear Mesh: Differential bearing adjustment (above) should give correct gear backlash of .005-.008". Measure backlash with a dial indicator. If less than .005", back off left hand adjusting nut and tighten right hand nut exactly same number of notches to avoid disturbing bearing pre-load adjustment. If backlash more than .008", back off right hand adjusting nut and tighten left hand nut in same manner. After all adjustments completed, paint gear teeth with red lead and rotate gears in both directions to check tooth contact.

LINCOLN, MERCURY, & FORD STATION WAGON & F-1 TRUCK

Ford 6 Cyl. & V8 Station Wagon (1949-50)
Ford Half-Ton Truck, Series F-1 (1949)
Lincoln & Cosmopolitan, 9EL & 9EH (1949)
Mercury, V8 Models (1949-50)

►NOTES, CAUTIONS, & CHANGES

►**REAR AXLE IDENTIFICATION NOTE**—Metal tag attached to one axle housing cover screw stamped with no. of ring gear and pinion teeth as follows: 43-11 (3.91-1 Ratio), 47-11 (4.27-1 Ratio), 50-11 (4.55-1 Ratio).

►*CAUTION—Re-install identification tag when housing cover replaced.*

►**MERCURY RING GEAR MOUNTING BOLT CHANGE:** New type 3135 steel bolts, No. 350634-S, used to mount ring gear on differential case beginning January 1949. When installing new parts on axles prior to this date, change ring gear bolts to new type (can be done by working through inspection cover hole and changing two bolts at a time), tighten new bolts to 40-50 ft.lbs. torque.

►*MOUNTING BOLT IDENTIFICATION NOTE*—New type bolts (above) can be identified by following marks on head: "A" or "F" in a circle, "H" (plain letter). All other marked bolts are old type.

►**MERCURY PINION SHAFT NUT CHANGE:** Beginning with 1949, new "Huglock" type nut, No. 34424-S, used on pinion shaft at universal joint companion flange to insure proper pre-loading of pinion bearings. Tighten this nut to 120-140 ft.lbs. torque.

DESCRIPTION: Semi-floating, hypoid gear, Hotchkiss drive type. This axle **does not have a separate Differential Carrier Assembly.**

AXLE SHAFT REPLACEMENT: Same as for Ford (see preceding data) except that special tools required: Axle Shaft Puller #4235, Bearing Remover and Replacer #4234, Bearing & Oil Seal Replacer #4245B.

REMOVAL OF AXLE: *See "Rear Axle" on car model page.*

REAR AXLE DISASSEMBLY & OVERHAUL: Remove axle shafts (see Axle Shaft data), remove cover assembly and gasket, install special Spreader Tool No. 4000-A on housing and **spread housing not more than .015"** (CAUTION—do not spread housing excessively). Remove bearing cap screws, mark bearing caps and posts to insure correct reassembly, lift caps out, lift out differential assembly. To remove drive pinion, take off nut on pinion shaft at universal joint flange, pull flange using tool 4858-D (Lincoln & Mercury), 4858 (Ford). Drive pinion shaft toward rear of housing with tool 4201, withdraw pinion and rear bearing cone and roller assembly as a unit. Use tool 4628-D to remove rear bearing cup from housing (CAUTION—do not lose shims located in housing back of bearing cup—these shims control pinion setting). Remove oil seal from front of housing with tool 1175-B, lift out ring gasket, wick, slinger, front bearing cone and roller assembly, shims, and spacer (spacer not used on Lincoln). Remove front bearing cup from housing with tool 4628-B. Wash all parts with solvent, overhaul and reassemble all sub-assemblies as follows:

►*CAUTION—When using spreader tool to spread axle housing, do not spread housing more than necessary for differential assembly removal and remove spreader immediately to avoid housing taking on permanent "set."*

CONTINUED ON NEXT PAGE

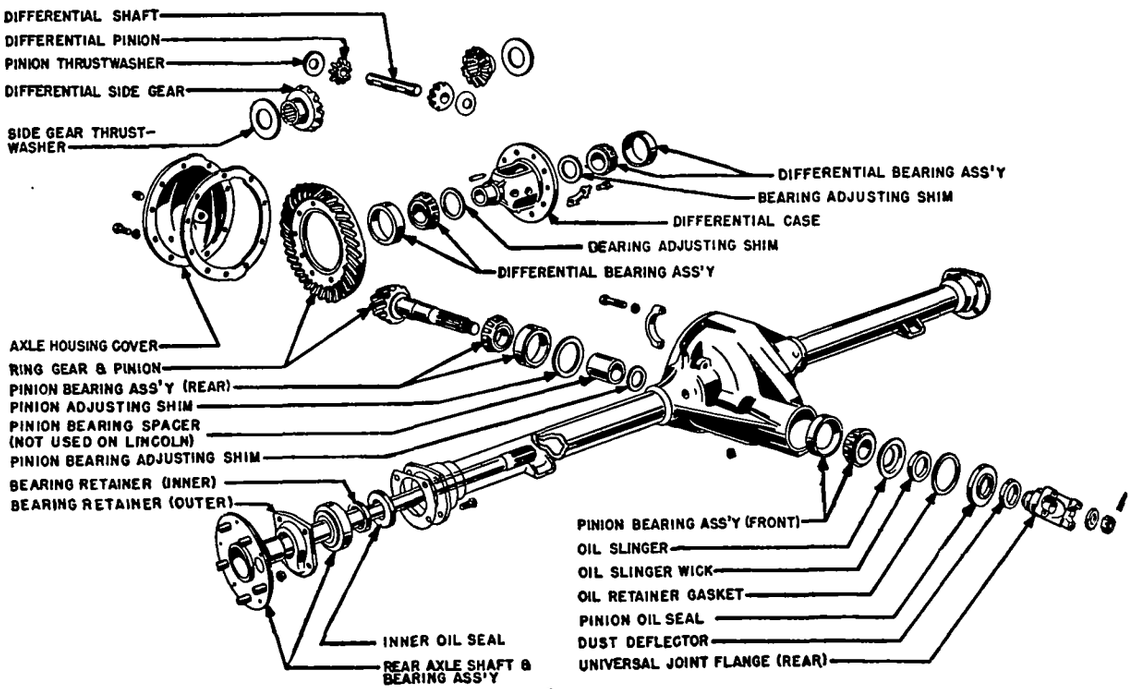

LINC LN & MERCURY, F RD STATI N WAG N (& F-1 TRUCK) REAR AXLE

LINCOLN, MERCURY, & FORD STA. WGN. & F-1 TRK. (C nt.)

Pinion Bearing Assembly: Lubricate all bearings and thrust washers with hypoid gear oil before installation. Install front and rear bearing cups in housing using Replacer No. 4616 (Lincoln & Mercury) for front bearing cup, No. 4628-A (Lincoln & Mercury) for rear bearing cup (CAUTION—re-install shims in housing behind rear bearing cup—if new parts being used, install approximately .030" shim thickness to check pinion setting). Install rear bearing cone and roller assembly on pinion shaft, insert pinion in housing and check pinion setting (below) to determine correct shim thickness required. If correction required, remove rear bearing cup from housing and re-install with correct number and thickness of shims behind bearing cup. Lubricate bearing and insert pinion in housing, place bearing spacer on shaft (spacer not used on Lincoln), re-install bearing adjusting shims on shaft (same shim thickness as removed unless new parts being used in which case install approximately .065" shim thickness to check bearing adjustment). Install pinion shaft front bearing cone and roller assembly with tool 4858-B and tighten tool nut to 140-180 ft.lbs. Check bearing pre-load (see below) and add or remove shims from shaft behind front bearing cone until correct pre-load secured. Then remove tool, install oil slinger, wick, and gasket, and oil seal (use tool 4676). See that oil deflector on companion flange is in good condition (new deflector can be installed with tool 4859), install companion flange with tool 4858-B (use two heavy washers under tool on Mercury), tighten companion flange nut to 140-180 ft.lbs. (120-140 ft.lbs. for Mercury "Huglock" type nut).

Pinion Bearing Pre-load: 8-12 in.lbs. turning torque with pinion rotating (disregard torque required to START pinion) and nut on end of pinion shaft properly tightened to 140-180 ft.lbs. (regular type nut and nut on 4858-B tool), 120-140 ft.lbs. (Mercury "Huglock" nut). To check pre-load, position axle so that pinion shaft is vertical, use Torque Indicator 4209 (with tool 4858-B) and note indicator reading while shaft is turning.

Adjustment—If torque reading low, remove shims from shaft behind front bearing cone; if reading in excess of 12 in.lbs., add shims at this point. These shims furnished in thicknesses of .003", .005", .010", .030".

►***CAUTION—Bearing adjustment will be affected by pinion setting adjustment (change of shim thickness in housing under rear bearing cup).***

Pinion Setting: Pinion position must be checked when new parts installed or when same number and thickness of shims, as removed from behind rear bearing cup, not re-installed. Check pinion position with Pinion Depth Gauge 4020-B as follows: With pinion inserted in housing, install gauge in housing with **larger** diameter of gauge rings (Lincoln), **smaller** diameter of gauge rings (Mercury) in differential side bearing bores, install bearing caps and torque cap screws to 60-70 ft.lbs. Bolt anvil clamp on axle housing flange directly over pinion, install anvil under clamp so that anvil rests on face of pinion and contacts gauge micrometer. Check micrometer reading which should agree with table below for all **standard** pinions marked "0". If micrometer reading greater than figure in table, **subtract** equal thickness of shims from .030" shim pack installed behind pinion rear bearing cup; if micrometer reading less than figure in table, **add** equal thickness of shims as above; and finally correct this shim thickness for all pinions other than standard "0" pinions as follows:

Pinion Marking Note—Standard pinions are marked "0". When installing a "—" pinion, **add** shims equal in thousandths to the figure following this minus sign on the pinion; for "+" pinions, **subtract** shims similarly from the standard shim thickness (for pinions marked "0"). These shims furnished in thicknesses of .003", .005", .010" (Ford & Mercury), .0025-.0035", .0045-.0055", .009-.011" (Lincoln).

►***CAUTION—Changing shim thickness to adjust pinion position will disturb bearing adjustment unless same shim thickness is added or removed from shaft at front bearing cone (add or remove shims equally at both points).***

Pinion Gauge Reading
(For standard pinions marked "0")

Axle Ratio	Gauge Reading
Lincoln 4.27-1, 3.91-1, 3.31-1	.562
Mercury 4.27-1, 4.55-1	.500
Mercury 3.91-1	.593

Differential Assembly: If assembly being dismantled, remove ring gear mounting capscrews, tap ring gear off case with a brass hammer, drive differential pinion shaft lockpin out from ring gear side of case, slide shaft out, remove side gears, pinions, and thrust washers. Use puller No. 4221-C (Lincoln & Mercury) to remove side bearing cone and roller assemblies. Note number and thickness of shims behind each bearing cup and **re-install same thickness at each point when axle reassembled** unless new parts being installed in which case shims should be omitted until differential bearing and ring gear backlash is adjusted (see below). When reassembling, install differential side gears and pinions with thrust washer behind each gear, stake pinion shaft lockpin to prevent pin working out. Tighten ring gear mounting screws evenly to 30-40 ft. lbs. (Ford & Mercury), 50-60 ft. lbs. (Lincoln). Use driver 4221-J (Lincoln), FLM-4221 (Mercury) to install side bearing cone and roller assemblies **without shims** and adjust bearings and ring gear backlash as directed below. After correct shim thickness for installation at each side determined, remove bearing cone and rollers and re-install with correct shims behind each bearing cone.

Differential Bearing & Ring Gear Backlash Adjustment: Install assembly in the axle housing with pinion out, use dial indicator to measure **total end-play** of assembly and note this figure. Select shims (furnished .003", .005", .010", .030" thick for Ford & Mercury; .0025-.0035", .0045-.0055", .009-.011", .027-.033" thick for Lincoln) equal to this amount **plus shims equal to desired bearing pre-load** (.005-.009") which is correct TOTAL SHIM PACK for the axle (total for installation on both sides of case). After pinion installed in housing, re-install carrier assembly **without shims** and measure endplay from point where ring gear and pinion backlash is zero to point where differential assembly is solidly against left hand bearing (mount dial indicator at back face of ring gear, slide carrier back and forth). Select shims equal to this indicator reading **less** .005" for desired backlash from the total shim pack (above), install these shims on carrier behind **left hand** bearing cone, install remaining shims of total shim pack on carrier behind **right hand** bearing cone. Place carrier in housing, install bearing caps (note markings), tighten bearing cap screws to 60-70 ft. lbs. torque. Recheck ring gear backlash and gear mesh as follows:

Ring Gear Backlash & Gear Mesh: Measure backlash with a dial indicator. If not within limits of .003-.006" (Ford Truck), .003-.008" (Others), adjust by shifting shims behind side bearing cups from one side of the carrier to the other but **do not change total shim thickness** which would affect bearing pre-load above. Check backlash at four equally spaced points around ring gear. Backlash must be within .003-.008" and must not vary more than .002" between these checking points.

OLDSMOBILE HYPOID

Oldsmobile Six, Series 76 (1949)
Oldsmobile Eight, Series 88, 98 (1949)

►NOTES, CAUTIONS, & CHANGES

►**SPECIAL AXLE CARRIER & HOUSING ASSEMBLIES (On 8 Cyl. Series 88 & 98):** Differential Carrier has machined diameter at differential bearing pedestal caps which pilots in welded supports in Axle Housing. These carriers and housing must be used together and **only Carriers with machined pedestal caps and Housings with welded supports must be used on 8 cyl. cars.**

►***CARRIER & HOUSING INSTALLATION CAUTION—On 8 Cyl. cars with above type carrier and housing, special differential side bearing adjustment and carrier installation procedure is required. See data below.***

►**AXLE IDENTIFICATION NOTE:** ***CAUTION—Carrier Assemblies and Axle Housings not interchangeable between 6 & 8 Cyl. models (see 8 Cyl. description above) and can be identified as follows:***

Carrier Assembly—Axle ratio (and date) stamped on underside of housing at right horizontal bottom rib:

Model	Carrier No.	Ratio & Marking
76① (Std. S-M Trans.)	512061	41:10 (4.1)
76② (Std. S-M Trans.)	512062	43:10 (4.3)
76① (Std. H-D Drive)	512059	40:11 (3.64)
76② (Std. H-D Drive)	511664	39:10 (3.9)
76① (Optl. H-D Drive)	511664	39:10 (3.9)
88① (Std.)	512536	42:13 (3.23)
88② (Std.)	511662	41:12 (3.42)
88① (Optl. Exp.)	511662	41:12 (3.42)
98③ (Std.)	511663	40:11 (3.64)
98④ (Std.)	511664	39:10 (3.9)
98③ (Optl. Exp.)	511664	39:10 (3.9)

①—Exc. Convt. & Sta. Wgn. ②—Convt. & Sta. Wgn. ③—Except Convertible. ④—Convertible.

Axle Housing—8 Cyl. housings can be distinguished from 6 Cyl. type by pedestal cap support plates (welded on inner face of carrier mounting flange at each side) which are not used on 6 Cyl. axles and by different overall lengths as follows:

Model	Axle Housing	Overall Length
76 (NO Support Plates)		54 27/32"
88 (WITH Support Plates)		54 27/32"
98 (WITH Support Plates)		57 11/32"

►**PINION BEARING PRE-LOAD CAUTION**—Pinion bearing pre-load controlled by universal joint companion flange nut on pinion shaft and bearing adjustment will be disturbed when this nut loosened.

C NTINUED N NEXT PA E

OLDSMOBILE HYPOID (C nt.)

Pinion bearings must be adjusted each time companion flange nut is disturbed.

DESCRIPTION: Semi-floating hypoid gear type of same design used on previous models except for following changes to take care of increased engine torque:

Pedestal Cap Support Plates (8 Cyl.)—See note.

Carrier Assembly Mounting Capscrews—Increased to 7/16" (were 3/8") and must be tightened to torque of 40-45 ft.lbs. NOTE—New gasket, No. 556042, with larger bolt holes must be used.

Pedestal Bearing Cap Screw Lockwashers—NO lockwashers used on 1949 axles (to insure more permanent setting of capscrews). Screws should be tightened to torque of 70-75 ft.lbs.

Differential Side Gears—Have two oil holes located between teeth to provide additional lubrication.

REMOVAL OF AXLE: *See Rear Axle on car model page.*

DISASSEMBLY & REASSEMBLY: *See complete "1947-48 Oldsmobile & Pontiac" Rear Axle in previous release and note following important data:*

Pinion Bearing Pre-load Adjustment: Use J-2933 Companion Flange Holding Tool on flange, tighten nut on pinion shaft until bearing endplay is taken up (companion flange is felt to contact spacer), then tighten nut slowly (not more than 1/6 turn at a time), turning pinion shaft frequently to seat bearing rollers, and check bearing pre-load by measuring the pull required to turn the pinion shaft in inch-pounds (use torque indicating wrench or spring scale J-544-A attached to companion flange holding tool). **Tighten nut only until correct bearing pre-load is secured** as listed below. After completing pre-load adjustment, secure the nut by staking end of pinion shaft into nut recesses.

Pinion Bearing Pre-load Setting

Pinion Bearings	Bearing Pre-load
New Bearings	27-37 in.lbs.
Old Bearings①	15-20 in.lbs.

①—After several thousand miles usage.

►*CAUTION*—Do not exceed maximum (37 in.lbs.) specification when adjusting pre-load. If this figure exceeded by tightening nut excessively, disassemble axle and **install new spacer.**

►**Two-piece Pinion Bearing Spacer Installation**—When installing two-piece pinion bearing spacer, first install the smaller rear spacer (No. 510524) with lighter end section (adjacent to collapsible portion of sleeve) against rear pinion bearing cone, install front spacer (No. 510525) with end on which chamfer is on outer diameter against front pinion bearing cone (end on which chamfer is on inner diameter should be against rear spacer). This installation will insure spacers seating solidly against each other and bearing cones.

NOTE—On 1949 cars, front half of spacer No. 510424 is Park-O-Lubrized to eliminate snap in drive line.

►**Pinion Bearing Spacer Shim Note**—A shim (.037" to .045" thick) is used between spacer and front bearing cone on some axles. This **shim must be reinstalled** if same spacer is re-used (discard shim if new spacer used). A new spacer must be used when: 1) New Ring Gear & Pinion set installed, 2) Any part of either pinion bearing is changed, 3) New Carrier casting installed, or 4) Pinion adjusting shim thickness increased.

Differential Bearing Adjustment (6 Cyl.): Same as for previous models—2½-4 notches "tight". Turn adjusting nut in this amount from point where endplay taken up and bearing cup just begins to turn with nut.

Differential Bearing Adjustment (8 Cyl. 88 & 98):

►*CAUTION—Must be adjusted and checked exactly as follows to insure carrier fit in axle housing:*

Bearing Adjustment—With differential assembly installed in carrier, tighten bearing cap screws (CAUTION—no lockwashers used with these screws) so that adjusting nuts can just be turned, turn nuts in to original markings, or if not marked proceed as follows: Back off right hand nut 4 turns, tighten left hand nut until all backlash removed from ring and pinion gear, then back this left hand nut off 4 turns to position where slot in nut lines up with screw hole for lock. Tighten right hand adjusting nut slowly until bearing race just starts to turn with nut, tighten nut **additional 2-4 notches** for correct bearing pre-load and see that slot in nut lines up with screw hole for lock. Tighten all bearing cap screws to 70-75 ft.lbs. Check gear backlash with a dial indicator. If backlash not .004-.008", adjust by backing off one adjusting nut and tightening opposite nut exactly equal amount to avoid disturbing bearing pre-load. Check pedestal spread (see below) and if clearance not correct, adjust right hand adjusting nut one notch at a time (loosen or tighten as necessary), repeating check each time until correct clearance is secured. **Adjusting nut must not be tightened less than 2, or more than 4 notches.**

►*CAUTION*—Bearing cap screws must be loosened to allow adjusting nuts to be turned and must always be tightened to 70-75 ft.lbs. before checking clearance.

Pedestal Cap Clearance Check—With differential bearings adjusted, and bearing cap screws tightened to 70-75 ft.lbs., install special ring gauge, Tool BT-23, over pedestal caps so that it rests on machined surface at outer side of each cap. Hold gauge against one cap, measure clearance between gauge and opposite cap with a feeler gauge. Clearance at this point must be .005". Correct by re-adjusting differential bearings (above).

NOTE— If correct clearance of .005" cannot be secured within range of bearing adjusting nut (2-4 notches tight), loosen bearing cap screws and tap bearing caps lightly in or out with a soft hammer.

►*CAUTION*—Bearing cap screws must always be tightened to 70-75 ft.lbs. before checking pedestal cap clearance.

Carrier Installation in Housing (8 Cyl. 88 & 98):

►*CAUTION—8 Cyl. carriers must be installed as follows due to close fit between carrier pedestal caps and support plates in housing:*

1—Carefully clean mounting face of carrier and housing, install new gasket (No. 556042).

2—Install three pilot studs, Tool BT-24, in two bottom holes and one top hole of housing.

3—Install carrier over pilot studs. Use four 7/16"—20x1½" capscrews (install two on each side of housing) to draw carrier into place in housing.

4—Remove pilot studs, install six regular 7/16"x1" carrier mounting capscrews, then remove temporary screws and install four regular capscrews in these holes.

5—Tighten all mounting screws evenly to 40-45 ft.lbs.

OLDSMOBILE REAR SUSPENSION

Oldsmobile 6 & 8, All Models (1949)

DESCRIPTION: Coil spring type with support arms to align axle housing. Same design as used on previous models.

SERVICING (Spring Removal & Installation): *See complete "Oldsmobile Rear Suspension (1941-48)" in previous release and note following new specifications:*

1949 Rear Springs—May be identified by paint daub or part number on outside of one end coil.

NOTE—Spring may require removal for identification (mark or number may be at top or bottom of spring and may not be visible with spring installed).

1949 Rear Spring Specifications

Car Model	Part Number	Color Mark
76 & 88 Club Coupe & Sedan	417865	Green-Orange
76 & 88 Sedans & Convt.	557585	Yellow-Brown
76 & 88 Station Wagon	1310399	Red
98 Club Sedan	415472	Green-Yellow
98 Sedan & Convt.	416401	Green-Gray

PACKARD HYPOID

Eight, "2200" & "2300" Series (1949)
Super Eight, "2200" & "2300" Series (1949)
Custom Eight, "2200" & "2300" Series (1949)

►**PINION BEARING PRE-LOAD CHANGE (1948 & Earlier Models):** Manufacturer recommends that pinion bearing pre-load specification be 30-35 in.lbs. (was 25-30 in.lbs.) and that when adjusting axle, pre-load be set at high limit or 35 in.lbs. to compensate for any slight drop in pre-load when axle returned to service. See Pinion Bearing Adjustment data below.

DESCRIPTION: Semi-floating, hypoid gear type of same design used on previous Packard models.

REMOVAL OF AXLE: *See Rear Axle on car model page.*

DISASSEMBLY & OVERHAUL: *See complete "Packard Hypoid" Rear Axle in previous release and note following specifications and new procedures:*

Pinion Bearing Pre-load Adjustment—Recommended pre-load 30-35 in.lbs. (set at 35 in.lbs. to allow for any slight drop in service). Adjust by tightening universal joint flange nut on end of pinion shaft until turning torque required to turn shaft is 30-35 in.lbs. (preferably 35 in.lbs.).

►*CAUTION*—If new pinion bearing sleeve being installed, it will be necessary to buckle the sleeve first by tightening nut until turning effort suddenly falls off, before checking and adjusting bearing pre-load.

Differential Side Bearing Adjustment—.010-.012" tight. Adjust by tightening adjusting nut until differential bearing pedestals "spread" .010-.012".

Ring Gear Support Roller (Custom Eight)—.005" clearance between roller and back face of ring gear.

Ring and Pinion Gear Backlash—.003-.005".

Axle Shaft Endplay—.004-.007".

PONTIAC HYPOID

Pontiac 6 & 8, All Models (1949-50)

►**AXLE HOUSING FILLER PLUG LOCATION CHANGE:** Beginning approximately June 1949, axle housings without filler plug and carrier assemblies with filler plug located on right side just forward of carrier mounting flange were used.

►***CAUTION—First type housing (with filler plug) must be used with carriers which do not have filler plug (at least housing or carrier must have this plug).***

►**AXLE IDENTIFICATION NOTE**—Axle ratios indicated by paint mark on axle shaft ends as follows:

Axle Ratio	Color Mark
4.1-1 (Synchro-mesh Trans.—Std.)	Green
3.9-1 (Synchro-mesh Trans.—Econ.)	Red
4.3-1 (Synchro-mesh Trans.—Mtn.)	White
3.63-1 (Hydra-Matic Drive—Std.)	Violet

►**PINION BEARING PRE-LOAD CAUTION**—Pinion bearing pre-load is controlled by universal joint companion flange nut on pinion shaft and bearing adjustment will be disturbed when this nut is loosened. **Pinion bearings must be adjusted each time companion flange nut is disturbed.**

REMOVAL OF AXLE: *See Rear Axle on car model page.*

DISASSEMBLY & REASSEMBLY: *See complete "1947-48 Oldsmobile & Pontiac Rear Axle" in previous release and note particularly following important data:*

►**Two-piece Pinion Bearing Spacer Installation**—When installing two-piece pinion bearing spacer, first install the smaller rear spacer (No. 510524) with lighter end section (adjacent to collapsible portion of sleeve) against rear pinion bearing cone; install front spacer (No. 510525) with end on which chamfer is on outer diameter against front pinion bearing cone (end on which chamfer is on inner diameter should be against rear spacer). This installation will insure spacers seating solidly against each other and bearing cones.

►**Pinion Bearing Spacer Shim Note**—A shim (.037" to .045" thick) is used between spacer and front bearing cone on some axles. **This shim must be re-installed** if the same spacer is re-used (discard shim if new spacer is used). A new spacer must be used when: 1) New Ring Gear & Pinion set installed, 2) Any part of either pinion bearing is changed, 3) New Carrier casting installed, 4) Pinion adjusting shim thickness increased.

Pinion Bearing Pre-load Adjustment: Use J-2933 Companion Flange Holding Tool on flange, tighten nut on pinion shaft until bearing endplay is taken up (companion flange is felt to contact spacer), then tighten nut slowly, turning pinion shaft frequently to seat bearing rollers, and check bearing pre-load by measuring the pull required to turn the pinion shaft in inch-pounds (use torque indicating wrench or spring scale attached to companion flange holding tool). **Tighten nut only until correct bearing pre-load is secured** as listed below. After completing pre-load adjustment, secure the nut by staking end of pinion shaft into nut recesses.

Pinion Bearing Pre-load Setting

Pinion Bearings	Bearing Pre-load
New Bearings	27-37 in. lbs.
Old Bearings①	②10-12 in. lbs.

①—After several thousand miles usage.
②—Supersedes original specification of 15-20 in. lbs.

►***CAUTION***—When adjusting bearing pre-load, do not exceed maximum (37 inch-pound) specification. If this figure exceeded by tightening nut excessively, disassemble axle and install new spacer.

Differential Bearing Adjustment: 2½-4 notches of adjusting nut "tight" (adjusting nut turned in this amount from point where endplay taken up and bearing cup just begins to turn with nut.

Ring-and-Pinion Gear Backlash: .003-.012".

SPICER (SALISBURY) REAR AXLES

►**LINCOLN, MERCURY, FORD COMM'L & STATION WAGON REAR AXLES:** *See "1949 Lincoln & Mercury, Ford Station Wagon & F1 Truck" Rear Axle.*

Spicer Model — HYPOID TYPE

41-2—Frazer & Kaiser, All Models (1949)
23 —Studebaker Champ. 8G (1949), 9G (1950)
41-2—Studebaker Comm., 16A (1949) 17A (1950)
23-1—Willys 4 Cyl. Sta. Wgn. & Del. 4-63 (1949)
23-1—Willys Jeepster, Model VJ-3 (1949)
23-1—Willys 6 Cyl. Sta. Wgn. & Sdn. 6-63 (1949)
41-2—Willys Jeep Model CJ-3A (1949)
41-2—Willys Sta. Wgn. Model 4x4-63 (1949)

SPIRAL BEVEL TYPE

11—Crosley, Model CD & Hotshot (1949)

DESCRIPTION: Hypoid (except Crosley), semi-floating type of same design as used on corresponding previous models.

REMOVAL OF AXLE: *See Rear Axle on car model page.*

OVERHAUL (Disassembly & Reassembly): *See complete "Spicer (Salisbury) Hypoid Semi-floating" and "Spicer (Salisbury) Spiral Bevel" Rear Axles in previous release and set these axles to the following specifications:*

Axle Shaft Endplay: (Crosley) .002-.007", (Frazer, Kaiser, Willys) .001-.006", (Studebaker) .001-.005".

Ring & Pinion Gear Backlash: (Crosley) .003-.008", (Frazer, Kaiser, Studebaker) .003-.006", (Willys) .004-.009".

Pinion Bearing Adjustment: (All Models) Slight drag when rotated by hand (NOTE—ring gear should be removed so that there is no load on pinion.

►**Frazer & Kaiser Note**—Above setting will be secured with .003" tight fit of pinion bearings (.003" additional thickness of shims after all endplay removed from pinion bearings).

Pinion Setting: (Frazer, Kaiser, Studebaker, & Willys) .719" Gauge Reading for standard pinions (pinions marked "0").

►**W-99 Pinion Setting Gauge (For Frazer, Kaiser, & Willys)**—This gauge consists of a dial indicator and mounting fixture designed to be mounted on rear face of pinion (held in place by "C" clamp which is part of gauge). Before using this gauge, dial indicator must be set at zero through use of a "master gauge" supplied with this equipment. Set the dial indicator at zero with gauge pin resting on correct lobe of master gauge and with one-half turn tension on the gauge pin (master gauge table below). With pinion installed in axle housing (spacer tool W-126-6 can be installed on shaft in place of universal joint yoke), and with pinion setting gauge in place, dial reading should be ZERO for pinions marked "O", and should read PLUS (for pinions marked +) or MINUS (for pinions marked —) by an amount equal to the figure following this + or — sign on the pinion. Adjust by adding or removing shims from behind rear bearing cup in housing and repeat test until correct dial reading is secured.

Pinion Gauge Zero Setting

Rear Axle on:	Master Gauge Lobe
Frazer & Kaiser	B
Willys 4-63, 6-63, VJ-3	D
Willys CJ-3A, 4x4-63	B

►**Crosley Pinion Setting**—Gauge cannot be used on this model. Check gear mesh by painting gears and rotating them by hand.

Differential Side Bearing Adjustment: (Frazer, Kaiser, Studebaker, Willys)—.008" tight bearing pre-load (.008" additional shim thickness after all side play removed from differential bearings).

Crosley Note—.003-.006" tight bearing pre-load. With this adjustment, ring gear should rotate with fairly heavy drag when rotated by hand.

SPICER (SALISBURY) FRONT AXLE

Spicer No.
25—Willys Jeep, Universal CJ-3A (1949)
Willys Jeep Truck, Model 4WD (1949)
Willys Sta. Wgn. Model 4x4-63 (1949)

DESCRIPTION: This Model 25 Differential Assembly is same as that used on Spicer Model 23-2 Full-Floating Rear Axle and is serviced in same manner.

REMOVAL OF AXLE: *See Rear Axle on car model page.*

SERVICING & OVERHAUL: *See complete "Spicer (Salisbury) Full-Floating" Rear Axle in previous release.*

TIMKEN REAR AXLE

Timken No.
51540—Willys Jeep Trucks, 2WD & 4WD (1949)

DESCRIPTION: Spiral bevel, semi-floating type of same design used on corresponding previous models.

REMOVAL OF AXLE: *See Rear Axle on car model page.*

DISASSEMBLY & REASSEMBLY: *See complete "Timkin Semi-floating" Rear Axle in previous release and set these axles to following specifications:*

Axle Shaft Endplay—.003-.005".

Ring & Pinion Gear Backlash—.004-.018".

Pinion Bearing Pre-load—12-18 in. lbs. turning torque (adjusted by tightening pinion bearing adjusting nut).

Pinion Setting—Not adjustable.

CHEVROLET (PASS. CARS)

Chevrolet Pass. Car Models (1949)

DESCRIPTION: Hour-glass worm and roller sector type with worm gear on steering column shaft meshing with double-tooth roller on cross-shaft (sector shaft). Worm gear and shaft are mounted on taper roller bearings with bearing adjuster cup threaded in lower end of steering gear housing. Roller sector is mounted on double-row ball bearing on cross-shaft which is mounted in anti-friction bushing in housing and in housing cover at opposite end (straddle-mounted). Worm and roller mesh or backlash adjustment is provided by "push-pull" type adjusting screw in housing cover.

ADJUSTMENT: Make all adjustments in order and exactly as follows:

Worm Shaft Endplay: Remove sheet metal splash guard covering steering gear housing, disconnect connecting rod from pitman arm (CAUTION—note relative positions of connecting rod end parts to insure correct reassembly). Loosen adjusting screw locknut on housing cover, back off lash adjuster screw several turns to provide clearance between worm and roller. Turn steering wheel to **within one turn of either end position** (turn wheel as far as possible, then turn wheel in opposite direction about one turn). Use spring scale (J-544-A Checking Scale) hooked to wheel spoke at rim to measure pull required to keep wheel in motion.

►***CAUTION—Spring scale must be tangent to wheel rim.***

Bearing Pre-load—⅜-⅝ lb. turning pull (above).

Adjustment—Loosen large adjusting cup locknut on lower end of steering gear housing, turn adjusting cup in until worm shaft has no perceptible endplay. Check pull required to turn wheel (above), tighten locknut when correct turning pull of ⅜-⅝ lb. is secured.

►***CAUTION—Recheck turning pull after locknut is tightened.***

Worm & Roller Mesh (Backlash): Place steering wheel in exact center of travel with roller on minimum-lash point of worm (count number of turns of wheel from one end position to the other, then turn wheel back ½ this number of turns, remove horn button and make certain that mark on end of shaft points upward, mark steering wheel for reference while making adjustments). Turn lash adjuster screw on housing cover clockwise until all lash removed from worm and roller (NOTE—this screw was loosened in making worm shaft endplay adjustment above), then tighten adjuster screw locknut to 10-15 ft. lbs. Check adjustment by turning wheel one half turn off center "high" spot, attach spring scale at wheel rim and note pull required to turn wheel through the center position.

Backlash Setting—⅞-1⅞ lbs. pull to turn steering wheel through center position (measured as above).

Adjustment—With steering wheel turned one-half turn off center "high" position, loosen lash adjuster screw locknut, turn lash adjuster screw on housing cover clockwise to decrease backlash (and increase required pull), or counter-clockwise to increase backlash (and decrease required pull), tighten locknut, connect steering connecting rod.

CAUTION—Final steering gear setting must be within ⅞-1⅞ lbs. pull (measured as above).

Steering Wheel Position Correction: If steering wheel not centered with front wheels in "straight-ahead" position, see Steering Linkage data below.

REMOVAL OF STEERING GEAR: Remove horn button or cap in center of steering wheel, remove wheel retainer nut and washer from upper end of shaft. If car equipped with horn blowing ring, take out screws holding pivot ring, remove pivot ring, lock ring, and horn blowing spring washer. Use Puller J-2927 (has anchor screws which thread into holes in wheel hub) to remove steering wheel. Remove upper control shaft clamp bolt from shaft connector, remove toeboard grommet and seal. Remove instrument panel mast jacket clamp by taking out nuts and lockwashers. Remove two clutch-head screws attaching gearshift control upper support to mast jacket, pull upper control shaft and support up to disengage shaft connector and remove these parts. Remove clamp bolt nuts and clamp retaining shifter housing on mast jacket, rotate shifter housing assembly away from mast jacket. Remove sheet metal splash guard over steering gear housing, remove steering gear mounting bolts. Remove air duct by taking out sheet metal screws attaching duct to left fender skirt. Rotate steering gear to clear fender skirt, then raise assembly up and forward and remove it from engine compartment.

►**Installation Note**—Reverse removal directions given above and note following points:

Steering Gear Mounting Bolts—Tighten housing to frame side rail bolts to 27-40 ft. lbs.

Steering Wheel Position—Turn shaft to center "high" point with mark on end of shaft upward, install steering wheel with spokes horizontal, tighten retainer nut on shaft to 25-30 ft. lbs.

OVERHAUL OF STEERING GEAR: With assembly removed from car and clamped in bench vise:

Disassembly: Remove nut and lockwasher on end of sector shaft, use Puller J-1025 to remove pitman arm. Loosen lash adjuster screw locknut and turn adjuster screw several turns counter-clockwise, loosen worm bearing adjuster cup locknut and turn adjuster cup several turns counter-clockwise to remove load from bearings. Take out housing side cover attaching bolts, remove cover as an assembly with the sector shaft and roller (NOTE—If roller does not clear opening in housing, turn worm shaft by hand until roller lines up with notch). Remove worm bearing adjuster cup, withdraw lower bearing, pull worm and shaft out through lower end of housing (CAUTION—protect worm from damage). Remove locknut from lash adjuster screw, remove screw from side cover, slide screw out of slot in end of sector shaft (CAUTION—do not lose adjusting shims which may be found in this slot).

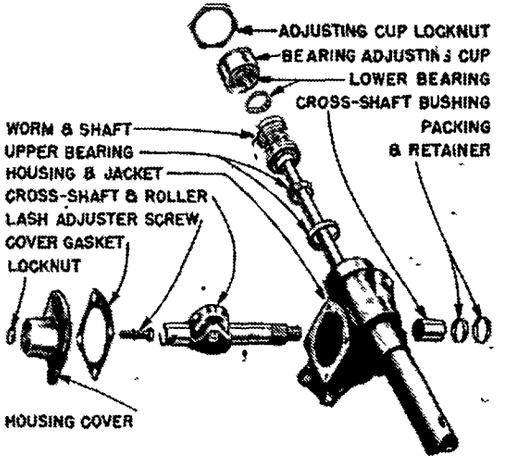

CHEVROLET PASS. CAR STEERING GEAR

Inspection & Repair: Wash all parts in cleaning solvent. Inspect roller bearings, bearing cups, worm, and roller for cracks, pits, roughness and wear.

Sector Shaft Bushing & Packing Replacement—To replace bushing, press bushing, packing, and retainer out of housing in an arbor press using J-1614 driver. Press new bushing in place using same driver. Soak new packing in engine oil, install packing in retainer, press assembly into housing.

►***NOTE***—Bushings are diamond-bored to size and do not require reaming.

Wormshaft Bearing Cup Replacement—Use Mainshaft Bearing Cup Remover J-3183 to pull cup from steering gear housing and from worm bearing adjuster cup. Install new bearing cups with Bearing Cup Replacer J-3182 (install cup on tool and drive into place using great care not to crack cups).

Lash Adjuster Screw Clearance Adjustment—With screw and shim assembled in slot in end of sector shaft, check end clearance of screw in slot with a feeler gauge. If clearance greater than .002", adjust by installing shim of correct thickness.

►**Adjusting Shim Note**—These shims furnished in Unit Part No. 605142 containing four shims .063", .065", .067", .069" thick.

Reassembly: Reverse disassembly directions given above. Steering gear can be adjusted on the bench before installation in the car (see Adjustment data).

STEERING LINKAGE: New design with intermediate idler & third arm mounted on frame cross-member and linked to each front wheel by separate tie rods (adjustable rod on left side, non-adjustable rod on right side). Idler arm is linked to steering gear pitman arm by steering connecting rod which is adjustable to correct steering wheel position.

Steering Linkage Adjustment: If tie rod ends removed from adjustable tie rod, see that both ends threaded equal distance in ends of tie rod and that they are in the same plane. After adjusting toe-in (see Front Suspension data), tighten tie rod end clamps to 8-12 ft. lbs., check steering wheel position with wheels in straight ahead position and adjust as follows:

Steering Wheel Position (Connecting Rod Adjustment): Check position with front wheels turned to straight ahead position (can be determined by measuring from lubrication fitting on lower control arm to wheel rim on each side and turning wheel until these distances are equal). Steering wheel spokes should be horizontal and mark on upper end of shaft (visible with horn button or cap removed) should be upward, if marks not correct, indicating that wheel is off center, check and adjust connecting rod ball socket ends (see below), then loosen clamp bolts on connecting rod adjusting sleeve, turn sleeve until steering wheel position is correct, tighten clamp bolts to 8-12 ft. lbs.

Steering Idler & Third Arm Bracket Assembly: Arm pivots on shaft mounted in bushings in bracket. Replace bushings as follows:

Removal—Jack up front end of car, disconnect steering connector rod and both tie rods from idler

CONTINUED ON NEXT PAGE

CHEVROLET (PASS. CARS) C ntinu d

arm (use Tool J-2963 to press ball studs from arm). Take out three bolts mounting idler arm bracket on front cross-member, remove assembly from car.

Disassembly—Clamp bracket in vise, remove lubrication fittings, drive out pivot shaft lock pin. Remove pivot shaft plugs by using a sharp punch to drive through one plug and against pivot shaft until other plug has been driven out of bracket, remove shaft and second plug. Lift idler arm and shim out. If bushings require replacement, remove old bushings with K-318 steering knuckle bushing driver.

Bushing Replacement—Press new bushings in place using K-318 steering knuckle bushing driver (CAUTION—oil grooves in bushings must line up with lubrication fitting holes in bracket). Ream bushings to diameter of .922-.923" with J-3189 bushing reamer (reamer must pilot in one bushing while reaming other bushing to maintain alignment.

Reassembly—Replace rubber dust seals if required, install idler arm in bracket with shim between lower face of idler arm and bracket, insert pivot pin. Check clearance between idler arm and bracket with a feeler gauge. If clearance exceeds .006", install shim, Part No. 3687657, between lower face of arm and bracket. After this end clearance adjusted, install pivot shaft lock pin, shaft plugs and stake plugs securely at four places.

Installation—Place assembly in position on front cross-member, install two lower bolts and one upper bolt, tighten all bolts **finger tight** only, then tighten **two lower bolts** to 30 ft. lbs. minimum torque. With lower bolts tightened, remove upper bolt and check clearance between bracket and cross-member at upper bolt hole with a feeler gauge. If clearance exceeds .008", install shims as necessary to reduce this clearance to less than .008" (.010" shim furnished, can be used in any combination to reduce clearance). Install upper bolt and tighten to 65 ft. lbs. minimum torque. Connect tie rods and steering connecting rod. Install rubber dust cover over idler arm ball with short end to rear.

►***CAUTION—Misalignment and stripping of threads on upper bracket bolt may result if assembly not installed exactly as directed above.***

FORD (6 & V8 PASS. CARS)

Ford 6 Cyl. & V8 Pass. Car Models (1949-50)

►**STEERING LINKAGE PRODUCTION CHANGE (New Idler Arm Bracket & Pitman Arm) On Cars After March 1, 1949:** ***See "1949 Ford Passenger Cars, Lincoln and Mercury" Front Suspension for Identification of these Parts and NEW Front Suspension Settings required when they are used.***

►***CAUTION—These new parts must be used together.***

►**STEERING IDLER ARM LOOSENESS COMPLAINTS:** May be caused by incorrect adjustment. ***See Idler Arm Adjustment under Steering Linkage.***

DESCRIPTION: Worm-and-roller type with worm gear on steering column shaft meshing with double-tooth roller on cross-shaft (sector shaft) on which the pitman arm is mounted. Worm gear and shaft are mounted on taper roller bearings with bearing adjusting shims between housing and top cover at lower end of jacket tube. Cross-shaft is mounted on needle roller bearings in bottom cover on housing. Cross-shaft endplay is controlled by "sector shaft adjusting screw" on top of housing (and thrust-washers installed in cover which bear against shoulder on cross-shaft). Worm and roller mesh or backlash adjustment is provided in the eccentricity of the bottom cover (rotating cover moves roller in or away from worm).

ADJUSTMENT: Adjust exactly as follows:

Worm Shaft Endplay (Bearing Pre-load): Before checking, disconnect steering linkage at pitman arm and back off cross-shaft (sector shaft) adjustment (see below) so that the true bearing pre-load can be measured. Attach spring scale to wheel spoke at steering wheel rim, check turning pull.

Bearing Pre-load—½-1¼ lbs. turning pull.

Adjustment—Loosen steering column jacket clamp at bottom of instrument panel. Remove capscrews in top cover on steering column housing. Work cap and column jacket upward sufficiently to provide access to adjusting shims located between cap and housing, carefully separate first shim from remainder of shim pack, clip and remove shim (see Shim Note below). Work cap down on housing, re-install capscrews, recheck bearing pre-load. Repeat adjustment until correct bearing pre-load secured.

►***CAUTION—Do not exceed bearing pre-load specifications and see that wheel turns freely throughout travel without binding or stiffness.***

►**Adjusting Shim Note**—These shims furnished in four thicknesses as follows: Part B-3593A (.002"), B-3593B (.005"), B-3593C (.010"), B-3593D (.020").

Worm-and-Roller Mesh (Backlash): Check with steering wheel turned to center "straight-ahead" position (mid-point of travel at which backlash is at a minimum). Attach spring scale to wheel spoke at wheel rim, check pull required to turn wheel.

Backlash Setting—1¾-2 lbs. measured as above (this figure includes worm bearing pre-load of ½-1¼ lbs. adjusted previously).

Adjustment—Loosen sector shaft housing (bottom cover) capscrews (NOTE—not necessary to remove screws—screw holes slotted to permit this adjustment). Rotate housing in a clockwise or **right hand direction** until all backlash is just removed, tighten cover screws, recheck backlash setting (above). Repeat adjustment, as required, until correct backlash setting is secured. Make certain that square washer (adjusting slot cover plate) and lockwasher in place on cover screws and screws securely tightened.

►***CAUTION—See that wheel turns freely through entire travel without binding or stiffness.***

Cross-shaft (Sector Shaft) Endplay: Loosen locknut on sector shaft adjusting screw (on top of housing), turn screw in (clockwise) until all endplay in shaft has been taken up without causing any binding as shaft is rotated, tighten locknut.

STEERING WHEEL REMOVAL: Remove horn button and ring assembly (see below), remove nut on steering column shaft, pull wheel.

Installation—Shaft and wheel hub have "master spline" so that wheel can only be installed in correct position. Pitman arm and steering gear cross-shaft have similar master spline to insure correct positioning of arm.

Horn Button & Ring Assembly Removal: Press down evenly on horn button and turn assembly in either direction to release retainer, then lift assembly out.

STEERING LINKAGE: Consists of an intermediate rod linked between the steering gear pitman arm and an idler arm pivoted on a bracket on the right side of the frame with individual tie rods extending from this intermediate link to each wheel. An adjusting sleeve is provided at the outer end of each tie rod for toe-in or toe-out adjustments. ***See "1949 Ford, Lincoln, Mercury Front Suspension" for front end specifications and adjustment data.***

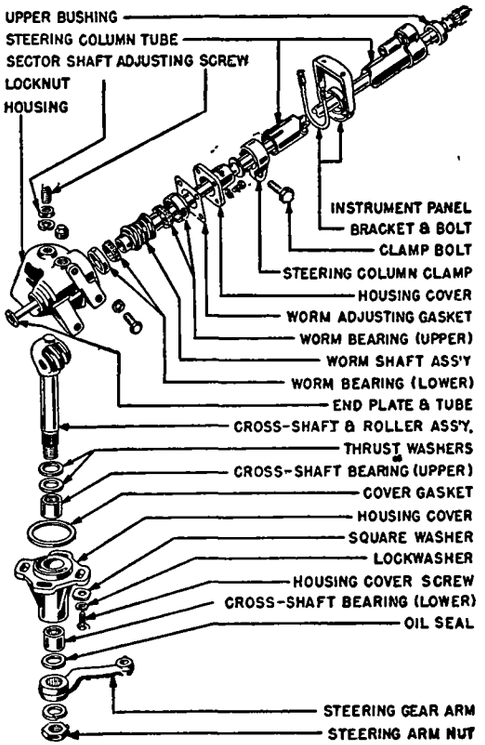

FORD PASS. CAR STEERING GEAR

Steering Linkage Adjustment: If linkage disconnected or out of adjustment, set linkage up as follows to insure correct steering wheel position: With linkage connected, and idler arm correctly adjusted (see below), turn steering wheel to center mid-point of travel (turn wheel from one end position to the other, counting the turns, then turn wheel back from end position one-half this number of turns) with spokes horizontal. Loosen clamp bolts on each tie rod and turn each tie rod adjuster, as necessary, so that both front wheels are in "straight-ahead" position. Then adjust toe-in or toe-out by turning each tie rod adjuster **equally.**

Steering Idler Arm Adjustment: Check idler arm for excessive looseness and adjust as follows: Remove bolts mounting idler arm bracket on frame. Tighten idler arm bushing in bracket to 85-100 ft. lbs. Turn idler arm bracket and bushing assembly down on arm until it is tight (this is left hand thread), then **back arm and bushing off** approximately 1 turn, re-install bracket mounting bolts.

CAUTION—Idler arm will bind in bushing unless bracket and bushing backed off as above.

1949-50 TRANSMISSION INDEX

BUICK
Synchro-mesh . . 240
Dynaflow Drive 236

CADILLAC
Synchro-mesh 240
Hydra-Matic Drive . . 238

CHEVROLET
Pass. Cars 241
Truck (3-Speed) .. 241
Truck (4-Speed) 240

CHRYSLER
Synchro-mesh 241
Prestomatic 241

CROSLEY
All Models (Warner T92) 232

DE SOTO
Synchro-mesh 241
Tip-Toe Shift 241

D DGE
Synchro-mesh 241
Gyromatic .. 241

FORD
Pass. Car Trans. 246
Pass. Car Overdrive 247
Pass. Car O. D. Control 235
Truck (3-Speed) . 250
Truck (4-Speed) 250

FRAZER
Transmission (No O. D.) 232
Transmission (With O. D.) 233
Overdrive (Warner R10) 234
Overdrive Control. 235

HUDSON
Synchro-mesh Trans. .. 244
Drive-Master Trans. ... 244
Super-Matic Drive 244
Overdrive (Warner R10) 234
Overdrive Control. 235

KAISER
Transmission (No O. D.) 232
Transmission (With O. D.) 233
Overdrive (Warner R10) 234
Overdrive Control 235

LINCOLN
Synchro-mesh Trans. 246
Overdrive (Warner R10)... 247
Overdrive Control 235
Hydra-Matic Drive 248

MERCURY
Transmission 246
Overdrive (Warner R10) 247
Overdrive Control . . 235

NASH
"600" & Statesman Trans. . . 250
Amb. Trans. (No O. D.)..... . . . 232
Amb. Trans. (With O. D.)... 233
Overdrive (Warner R10) 234
Overdrive Control. 235
1950 Hydra-Matic Drive .. . 251

OLDSMOBILE
Synchro-mesh 240
Hydra-Matic Drive 238

PACKARD
Synchro-mesh Trans. 256
Overdrive (Warner R11) . 234
Overdrive Control 235
Ultramatic Drive 252

PLYMOUTH
All Models 241

PONTIAC
Synchro-mesh 240
Hydra-Matic Drive .. .. .238

STUDEBAKER
Transmission (No O. D.) .. . 232
Transmission (With O. D.) 233
Overdrive (Warner R10) 234
Overdrive Control 235

WILLYS
Transmission (No O. D.) 232
Transmission (With O. D.)... . .. 233
Overdrive (Warner R10) 234
Overdrive Control .. .. .235
Transfer Case (Spicer) 256

SPICER
Transfer Case (4-Whl. Drive) . 256

WARNER
Transmissions (No O. D.) 232
Transmissions (With O. D.) . .. 233
Transmission (T85—Lincoln) 246
Overdrive (R10, R11). 234
O. D. (Ford, Lincoln, Mercury). 247
Overdrive Control 235

1949-50 TRANSMISSIONS

WARNER (NO OVERDRIVE)

Car Model	Warner Model
Crosley, All Models (1949).	...AS1-T92
Frazer, All Models (1949)	.AS23-T86E
Kaiser, All Models (1949)	..AS23-T86E
Nash Amb. 4960 (1949), 5060 (1950)	..AS25-T86E
Studebaker Champ. 8G ('49), 9G ('50).. .. .	.AS1-T96
Studebaker Com. 16A ('49), 17A ('50)	..AS1-T86E
Willys Jeep, Universal CJ-3A (1949) . ..	AS1-T90C
Willys Truck, 2WD (1949)	④AS1-T90E,D
Willys Truck, 4WD (1949)	..④AS3-T90A,C
Willys Sta. Wgn. 4x4-63 (1949)	AS1-T90C

③—AS1-T90D (with floor-mtd. gearshift lever) used beginning Serial No. 22536.

④—AS1-T90C (with floor-mtd. gearshift lever) used beginning Serial No. 34787.

►**Steering Column Mtd. Gearshift**—Used on all cars except Crosley & Willys Jeep. ***See individual "Transmission Control" data.***

►**Overdrive Transmission Note**—Optl. on all cars. See "Warner Overdrive Transmission" data.

►**Willys 4-Wheel Drive Transfer Case**—Two-speed (Spicer Model 18) Transfer Case on transmission with transmission mainshaft rear bearing mounted in transfer case housing. See Spicer Transfer Case for data.

►***CAUTION—Transfer case must be partly dismantled (drive gear removed from mainshaft) before it can be removed from transmission.***

DESCRIPTION: 3-speed, all helical gear type (except Crosley & Willys — See Notes). Constant-mesh, synchro-mesh (Second & High), sliding gear (Low & Reverse). Synchronizers are Double-Blocker, Double-Spring type. Transmissions are similar design to types used on corresponding previous car models.

Crosley Transmission—Similar to other types except that no synchronizing mechanism is used (second-speed gear shifted forward to engage clutch teeth on main drive gear for High) and gears are spur type. Torque tube is bolted on rear end of case with adapter for universal joint. This transmission disassembled in same manner as other types after torque tube or adapter removed (disregard all synchronizer data).

Willys 4-Whl. Drive & Truck Note—Transmission has spur type sliding gear and floor-mounted gearshift (entire gearshift mechanism lifts off as unit with top cover). Transfer case is mounted on rear end (see Willys Transfer Case Note above).

REMOVAL OF TRANSMISSION: ***See "Transmission" on car model page.***

DISASSEMBLY OF TRANSMISSION: Take out cover screws, remove cover and gasket. Mark synchronizer parts (rings, sleeve, hub) to insure reassembly in same relative positions. Take out capscrews and remove bearing retainer on front of case. On Studebaker & Nash, take out bearing snap rings on bearing and shaft, install special Synchronizer Ring Protector J-3042 (Nash), J-2040 (Champ.), J-2039 (Comm.) to prevent damage to synchronizer, use Puller J-1298N (Nash), Plate J-1298 and Puller HM-925 (Studebaker) to remove bearing from shaft. (NOTE—on other cars, gear and bearing assembly can be removed after countergear cluster has been dropped to provide clearance). Take out rear bearing retainer capscrews, remove bearing retainer from shaft (on models where bearing mounted in recess in retainer, pry retainer out so that puller can be engaged, use puller to remove retainer). Slide speedometer gear off mainshaft (if gear does not come out with retainer and bearing assembly). Tip mainshaft toward right as far as possible (on models where rear bearing mounted directly in case, move shaft to rear until bearing clears case), disengage Second & High Shift Fork and Low & Reverse Shift Shoe and lift these parts out. On models where opening in rear of case permits, withdraw complete mainshaft assembly through this rear opening. On other models, remove main drive gear (lift gear through top of case if bearing removed previously, otherwise tap gear and bearing assembly out through front of case using a soft drift and taking care not to damage gear teeth). If mainshaft cannot be removed as an assembly, remove snap ring from groove at forward end of shaft, slide synchronizer assembly, second speed gear, and sliding gear off shaft (lift these parts out through top of case), remove mainshaft through rear of case. Lift out countergear assembly. Drive reverse idler shaft out at rear of case (use brass drift), lift gear and bushing out. To remove shifter shaft assemblies, remove levers on outer ends of shafts, drive out lockpins in shaft bosses on side of case, push shaft and lever assemblies through and remove from case (CAUTION—do not lose detent balls, spring and interlock plunger located in boss in case between lever sectors).

►**Nash Mainshaft & Bearing Retainer Disassembly Note**—To remove shaft from retainer (extension housing), remove bearing snap ring from groove in retainer, press shaft out toward front (bearing and speedometer gear will come out with shaft). To remove bearing from shaft, remove snap ring at rear of speedometer gear, remove gear, remove woodruff key from slot in shaft, then press bearing off shaft. If shaft bushing in retainer requires replacement, see Reassembly data.

REASSEMBLY OF TRANSMISSION: Reverse the disassembly directions given above and note special data on all sub-assemblies as follows:

Shift Mechanism: Install complete detent and interlock assembly (plunger, spring, poppet balls, and spacer pin on Frazer & Kaiser) in boss in case, insert shift shaft and levers from within, insert shift shaft lockpins loosely in holes in case to hold levers

CONTINUED ON NEXT PAGE

WARNER (NO OVERDRIVE) C nt.

in place, check and adjust interlock plunger clearance (see below), then drive shaft lockpins down into place, install new oil seal on outer end of each shaft, install outer levers.

Interlock Plunger Clearance—.001-.007" (Willys & Nash), .001-.005" (All Others) clearance between end of plunger and shift lever sector with one lever in neutral and other lever in any gear. To check, place one lever in neutral, move other lever to any gear position, use feeler gauge between end of plunger and lever sector. Adjust by installing plunger of correct length. Plunger furnished in five lengths and marked for identification as follows: Unmarked —1.299", A—1.295", B—1.291", C—1.287", D—1.303".

Reverse Idler Gear & Shaft: Position gear with offset (longer end of hub) toward front of case, drive shaft in until lockplate slot lines up with rear face of case.

Countergear Cluster: To assemble, install dummy shaft and spacer in gear cluster, install bearing rollers and bearing retainer washer in each end of gear, using grease to retain parts (see Willys note below), install bronze thrust washer on each end with tongue of front washer forward (to engage notch in case), tongue of rear washer forward (to engage notch in gear), install steel thrust washer on rear and install entire assembly in case. Drive countershaft in from rear (pushing dummy shaft out at forward end) until lockplate slot lines up with rear face of case. Check countergear endplay which should be .002-.006" (Frazer & Kaiser), .012-.018" (Willys Jeep & Trucks). Install lockplate to retain countershaft and reverse idler shaft.

Willys Jeep & 4T Truck Bearings—Countershaft has double bearings (two sets of bearing rollers in tandem) at each end of countergear. Install one set of bearing rollers, bearing washer, second set of rollers, second bearing washer, at each end.

Main Drive Gear Assembly: If removed and installed as an assembly, this assembly must be re-installed before countershaft inserted (countergear cluster at bottom of case to provide clearance). Use driver to install bearing on shaft. On Nash & Studebaker, install gear without bearing using Synchronizer Protector Ring J-3042 (Nash), J-2040 (Champ.), J-2039 (Comm.) when driving bearing on shaft and into case. Select snap rings (large ring on bearing, small ring on shaft) for snug fit without endplay. Bearing snap ring furnished .086", .089", .092", .095" thick. With main drive gear installed in case, select gasket of correct thickness (furnished in four thicknesses) so that retainer will be tight fit on case when installed.

►*CAUTION—Bearing must not have endplay on shaft or in case.*

Mainshaft Assembly: When installing mainshaft in case, make certain that pilot bearing rollers in place in recess of main drive gear (use cup grease to hold rollers until shaft inserted). Install sliding gear with shift fork channel toward rear (Studebaker Champion and Willys 4-63 & 6-63) toward front (All others), engage shifter shoe in gear (shifter shoe offset should be in same direction as gear channel above). Install second speed gear with clutch teeth toward front, install synchronizer (see data below) with clutch sleeve offset toward front, install snap ring in shaft groove to retain these assemblies. Engage second-high shifter fork in channel in sychronizer sleeve.

Synchronizer Assembly—If synchronizer dismantled, assemble parts according to marks made previously. Install spring in each end of hub with free end of each spring engaging the same strut and springs pointing in opposite directions. Make certain that struts engage slots in synchronizer rings. Install snap ring in groove at forward end of shaft. Check endplay of synchronizer and second speed gear assembly with a feeler gauge between back face of gear and shoulder on shaft. Endplay should be .003-.014" (Frazer & Kaiser), .003-.010" (Nash) and is controlled by snap ring thickness.

Rear Bearing Retainer: On models where rear bearing mounted in retainer, bearing can be lifted out after snap ring removed (speedometer gear accessible with bearing out). Oil seal should be replaced with special driver. When reassembling, make certain that bearing snap ring is snug fit in groove (furnished .086", .089", .092", .095" thick). When installing retainer, use new gasket, tap retainer in place on shaft with special driver (see special Nash Note below), install universal joint companion flange, flat washer, lockwasher, and nut. Tighten nut securely.

►*CAUTION—Speedometer drive gear will slip if companion flange nut not securely tightened.*

►**Nash Bearing Retainer Note**—Bearing retainer has extension housing with additional driveshaft bearing (Oilite bushing) in front of oil seal at rear end of housing. To replace bushing (with oil seal removed), assemble felt oil ring on bushing, press bushing in from rear end of housing until shoulder on bushing is ¼" from shoulder in bearing cap (CAUTION—this clearance necessary to prevent compressing oil ring). To assemble retainer, install bearing on mainshaft, install speedometer gear (CAUTION—see that woodruff key in place in shaft groove within gear), install snap ring in shaft groove selecting ring for snug fit so that bearing is tight on shaft. Install shaft assembly in bearing retainer and install snap ring to retain bearing selecting snap ring for snug fit so that shaft and bearing do not have any endplay in retainer.

Transmission Cover & Gasket Installation: Some transmissions are vented by means of holes in cover gasket and hole in cover. These parts must be installed as follows:

Nash—Gasket and cover marked "FRONT". Install with marks toward engine.

Studebaker—Install gasket with two holes toward rear of case, cover with single hole toward front.

►*CAUTION—Gasket and cover must be correctly installed to prevent lubricant loss through this vent.*

WARNER (WITH OVERDRIVE)

Car Model	Warner Model
Frazer, All Models (1949)	AS24-T86E
Kaiser, Deluxe 492 (1949)	AS24-T86E
Nash Amb. 4960 (1949), 5060 (1950)	AS26-T86E
Studebaker Champ. 8G ('49), 9G ('50)	AS2-T96
Studebaker Comm. 16A ('49), 17A ('50)	AS2-T86E
Willys Sta. Wgn. 4 Cyl. 4-63 (1949)	AS12-T96
Willys Sta. Wgn. 6 Cyl. 6-63 (1949)	AS20-T96
Willys Jeepster, VJ-3 (1949)	AS18-T96

►**WILLYS MAINSHAFT BEARING CHANGE:** On late 1949 cars, mainshaft rear bearing changed from shielded type to non-shielded type (same as used in transmissions without Overdrive). Non-shielded bearing is Part No. 646568 (supersedes No. 641447).

DESCRIPTION: Three-speed, all helical gear type. Constant-mesh, synchro-mesh (Second & High), sliding gear (Low & Reverse). Synchronizers are Double-Blocker, Double-Spring type. Transmission case has a top cover for access to gears, and shifter mechanism is located in side of case (individual shifter shaft assembly for Low-Reverse and for Second-High).

Overdrive Unit: Type R10 used on all transmissions. *See "Warner R10 Overdrive" (following) for data.*

REMOVAL OF TRANSMISSION: *See "Transmission" on car model page.*

DISASSEMBLY: Remove Overdrive case and disassemble Overdrive (see "Warner R10 Overdrive" following). Take out transmission case cover screws, remove cover and gasket. Mark synchronizer parts (rings, sleeve, hub) to insure reassembly in same relative positions. Take out capscrews and remove bearing retainer on front of case. Take out bearing snap rings (large ring on bearing, small ring on shaft), use special puller to remove bearing from shaft on Nash and Studebaker models using special Synchronizer Ring Protector J-3042 (Nash), J-2040 (Champ.), J-2039 (Comm.) to prevent damage to synchronizer (NOTE—on other cars, main drive gear and bearing assembly can be removed as a unit after countergear cluster has been dropped to provide clearance). Remove countershaft and the reverse idler shaft locking key, drive countershaft out through rear of case using an arbor or dummy shaft (leave arbor within gear cluster to retain bearings until the countershaft re-installed. Pull the adapter plate and mainshaft to rear and tip shaft toward right side of case to disengage Second & High Shift Fork and Low & Reverse Shift Shoe and lift these parts out, then withdraw adapter and mainshaft assembly (including gears and synchronizer) through rear of case. Lift main drive gear out through top of case. Lift the countergear and the thrustwasher assembly out through top of case. Use brass drift to drive reverse idler shaft out through rear of case, lift out gear and bushing. To remove shifter shaft assemblies, remove levers on outer end of shafts, drive out lockpins in shaft bosses on side of case, push shafts through and remove from within case.

►*CAUTION—When removing shifter shafts, do not lose detent balls, springs, and interlock plunger (in boss in case between lever sectors).*

REASSEMBLY: Reverse disassembly directions given above and note special data on sub-assemblies as follows:

Shift Mechanism: *Same as "Warner (No Overdrive)" preceding.*

Second Speed Gear: Retained on mainshaft as an assembly with synchronizer unit by snap ring at forward end of shaft. To remove gear, use snap ring pliers to take out snap ring, slide synchronizer unit off shaft (as an assembly), slide gear off. Install second speed gear with clutch teeth and synchronizer hub end forward (toward synchronizer).

Low & Reverse (Sliding) Gear: Can be removed from shaft after synchronizer unit and second speed gear removed (above). See Mainshaft Assembly (below).

C NTINUED ON NEXT PAGE

WARNER (WITH OVERDRIVE) (C ntinu d)

Reverse Idler Gear & Shaft: Position gear with offset (longer end of hub) toward front of case, drive shaft in until lockplate slot lines up with rear face of case.

Countergear Cluster: *Same as "Warner (No Overdrive)" preceding.*

Main Drive Gear Assembly: *Same as "Warner (No Overdrive)" preceding.*

Mainshaft Assembly: If synchronizer and gears removed from shaft, install sliding gear with shift fork channel toward rear (Studebaker Champion & Willys), toward front (Studebaker Commander & Frazer). Install second speed gear with clutch teeth toward front, install synchronizer (see data below) with clutch sleeve offset toward front, install snap ring in shaft groove to retain these assemblies, check endplay with a feeler gauge inserted between back face of second speed gear and shoulder on shaft. Endplay should be .003-.014" (Frazer & Kaiser), .003-.010" (Nash) and is controlled by snap ring thickness.

Synchronizer Assembly—If synchronizer dismantled, assemble parts according to marks made previously. Install spring in each end of hub with free end of each spring engaging the same strut and springs pointing in opposite directions. Make certain that struts engage slots in synchronizer rings.

Transmission Mainshaft Rear Bearing—To remove mainshaft and rear bearing from adapter plate, remove bearing snap ring from groove in front face of adapter, use soft hammer on rear end of shaft to tap shaft and bearing out, lift off oil baffle, remove bearing snap ring from groove in shaft, use puller to remove bearing from shaft.

Mainshaft Installation: When installing mainshaft in case, make certain that pilot bearing rollers in place in recess in main drive gear (use grease to hold rollers until mainshaft inserted). Engage Low & Reverse Shifter Shoe in sliding gear with offset in same direction as channel in gear (see above), engage Second & High Shifter Fork in synchronizer sleeve channel.

Transmission Cover & Gasket Installation: Some transmissions are vented by means of holes in cover gasket and hole in cover. These parts must be installed as follows:

Nash—Cover and gasket marked "FRONT". Install with these marks toward front of case.

Studebaker—Install gasket with two holes toward rear of case, cover with single hole toward front.

►***CAUTION—Gasket and cover must be correctly installed to prevent lubricant loss through this vent.***

Overdrive Reassembly: See "Warner R10 Overdrive" (following).

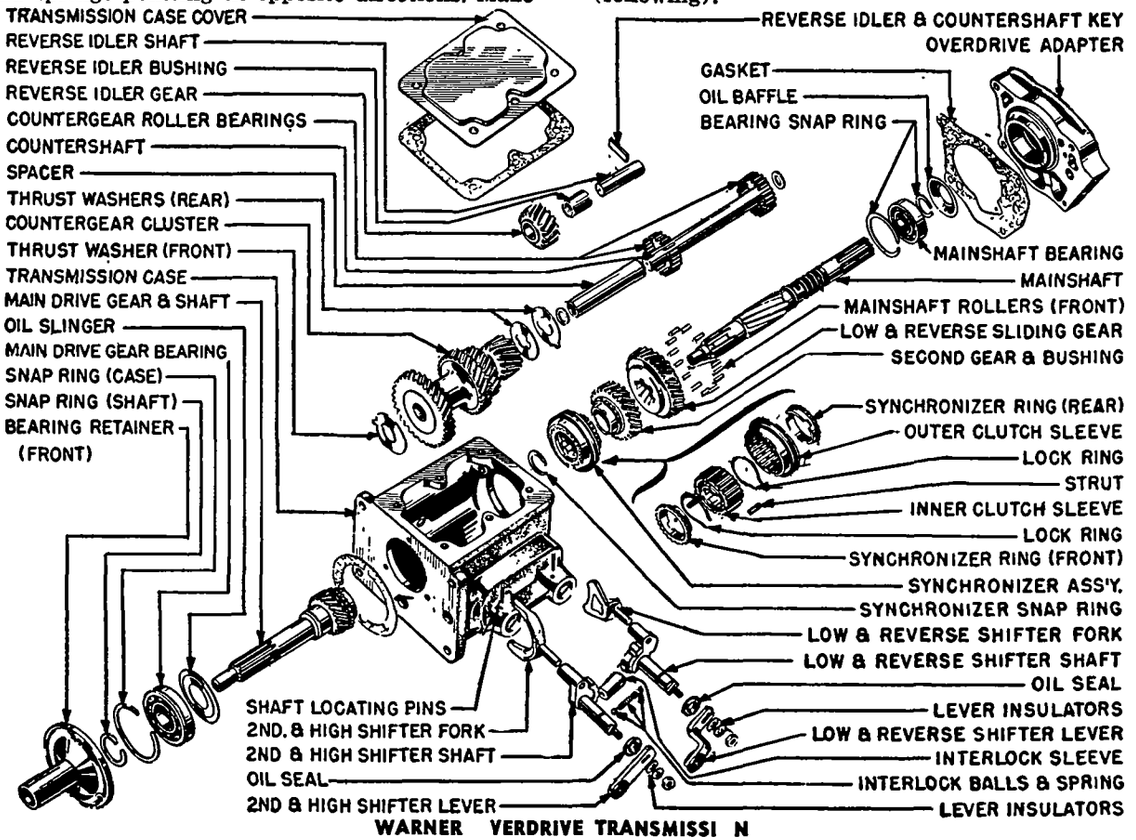

WARNER VERDRIVE TRANSMISSI N

WARNER R10, R11 OVERDRIVE

►**1949-50 FORD, LINCOLN, MERCURY**—*See Page 247 "Ford, Lincoln, Mercury (Warner R10)."*

WARNER TYPE R10

Car Model	Warner Model
Frazer, All Models (1949)	①AS24-T86E
Hudson 6 & 8, All Models (1949)	②AS1-R10D
Hudson Pacemaker Six (1950)	②R10D
Kaiser, Deluxe Model 492 (1949)	①AS24-T86E
Nash "600", 4940 ('49), 5040 ('50)	②AS6-R10B
Nash Amb., 4960 ('49), 5060 ('50)	①AS26-T86E
Studebaker Champ. 8G ('49), 9G ('50)	①AS2-T96
Studebaker Comm. 16A ('49), 17A ('50)	①AS2-T86E
Willys Sta. Wgn. 4 Cyl. 4-63 (1949)	①AS12-T96
Willys Sta. Sedan 6 Cyl. 6-63 (1949)	①AS20-T96
Willys Jeepster, VJ-3 (1949)	①AS18-T96

WARNER TYPE R11

Packard 8, "2200" & "2300" Series (1949)	②AS3-R11
Packard Super 8, "2200" & "2300" (1949)	②AS4-R11
Packard Cust. 8, "2200" & "2300" (1949)	②AS4-R11

①—Transmission with Type R10 Overdrive unit.
②—Overdrive unit only (used with car manufacturer's own transmission).

►NOTES, CAUTIONS, & CHANGES

►**OVERDRIVE DRIVESHAFT BEARING CHANGE**—On all Studebaker and Willys models listed below, overdrive does not have driveshaft front bearing (see illustration for location) and driveshaft is piloted at the planetary ring gear in a machined flange which is integral with the overdrive case. A spacer is used on the shaft in place of the bearing.

Overdrives without Front Bearing

Studebaker Champion	All 1949-50 cars.
Studebaker Commander	All 1949-50 cars.
Willys 4-63	Beginning Serial No. 91904.
Willys 6-63	Beginning Serial No. 14822.
Willys VJ-3	All 1949 cars.

►**PACKARD OVERDRIVE FAILURE TO ENGAGE (First cars with R11 Overdrive)**—Caused by incorrect length of Overdrive Reverse Plunger (Overdrive will not engage in 2nd. or High—may be engaged in Low), or of Overdrive Shift Rail (Overdrive will not engage in Low). After determining exact cause by road-testing car (make certain that electrical control system not at fault if overdrive will not engage in any gear), correct trouble as follows:

Will not engage in 2nd. & High—Remove transmission case cover, grind approximately .020" from face of left hand pad on Low-Reverse Shifter Fork to permit full forward travel of overdrive reverse plunger.

Will not engage in Low—If this condition not caused by failure of electrical control system, disassemble overdrive and check overdrive shifter rail to make certain that rail moves far enough forward so that undercut in rail aligns with solenoid pawl (to permit pawl to operate). If not, grind approximately .020" off end of shifter rail.

DESCRIPTION: Overdrive is solenoid operated type (no centrifugal pawls) with governor control and accelerator controlled "kick-down." Engagement and disengagement is effected by movement of the sun gear pawl, the solenoid plunger pushing the pawl in to engage the sun gear for overdrive, and withdrawing the pawl for direct drive (direct drive below the cut-in speed and "kick-down" direct drive). See Overdrive Control section below for data All models are similar except as follows:

CONTINUED ON NEXT PAGE

WARNER R10, R11 OVERDRIVE (C ntinued)

Hudson R10 Overdrive—Has sun gear pawl interlock plunger which engages notch in pawl to prevent pawl movement when overdrive locked out (on other R10 overdrives, pawl locked out directly by shifter rail).

Studebaker & Willys R10 Overdrives—See "Driveshaft Bearing Change Note" above for latest type overdrive without driveshaft front bearing.

Packard R11 Overdrive—Similar in design to R10 Overdrives except that pinion cage assembly and free-wheel cam retained on mainshaft by conventional snap rings fitted in grooves in shaft (instead of "C" washer clips used on R10) and special reverse plunger with offset arm installed on shifter rail.

REMOVAL OF OVERDRIVE: *See "Overdrive" on car model page.*

DISASSEMBLY OF OVERDRIVE: Remove Lock-out Switch, remove governor by unscrewing it from housing. On Nash models, take out mounting screws and remove Torque Tube Adapter, remove oil seal with Puller J-2497, then remove snap ring from shaft directly in back of driveshaft rear bearing. On all other cars, remove nut on rear end of shaft, use puller to remove universal joint companion flange. Drive out tapered pin holding control lever shaft in overdrive case, pull shaft out as far as possible to disengage operating cam from shift rail. Remove four mounting screws holding overdrive case on transmission case, withdraw case while tapping n rear end of shaft with a soft hammer to prevent the shaft coming off with the housing (this would allow free-wheel rollers to drop out). Then disassemble each part of the overdrive as follows:

Overdrive Solenoid—Remove mounting capscrews and lockwashers at mounting flange, rotate solenoid clockwise ¼ turn to disengage plunger from pawl, withdraw solenoid and plunger assembly.

Overdrive Case (incl. control parts)—Remove reverse lock-up spring from housing, take off nut and remove control lever from shaft, remove control shaft from within case, remove shaft oil seal. If both bearings remain within case (see "Driveshaft Bearing Change" above), use brass drift to tap front bearing out, lift out speedometer and governor drive gears, remove oil seal from rear of case, take out rear bearing rear snap ring, use brass drift to tap bearing out at rear of case.

NOTE On Nash, speedometer and governor gears are keyed on shaft and these gears will remain on the shaft with the front bearing when overdrive case is removed leaving rear bearing to be removed as directed above.

Driveshaft & Planetary Gears—Install one screw to hold adapter plate in position on transmission case. Pull driveshaft off to rear (CAUTION—catch free-wheel rollers as they fall out). Ring gear can be removed from driveshaft by taking out snap ring at rear end of gear. Remove retaining clip ("C" washer) from shaft at rear of free-wheel cam, slide free-wheel unit and pinion cage assembly off rear of shaft (these units can be separated by taking ut retaining clip or "C" washer at rear of pinion cage). Remove overdrive sun gear and shift rail assembly as a unit by sliding them off rear of shaft.

►**Packard Note**—To remove free-wheel cam and pinion cage assemblies, remove snap ring from shaft groove, slide free-wheel cam and pinion cage assembly off shaft, remove and tag snap ring in groove directly ahead of pinion cage assembly (CAUTION—this snap ring must not be interchanged with snap ring which retains free-wheel cam).

Adapter Plate Sun Gear Parts—Remove large snap ring from adapter plate (in front of sun gear cover plate), withdraw sun gear cover plate, sun gear blocker assembly (with balk ring), and solenoid pawl. NOTE—Adapter plate is removed as a unit with transmission mainshaft, gears, and synchronizer. Do not disturb adapter plate unless transmission being disassembled.

REASSEMBLY OF OVERDRIVE: Assemble parts in reverse order from disassembly directions (above) and note the following important points:

Transmission Mainshaft Rear Bearing Installation—After installing bearing on shaft, select proper thickness snap ring so that bearing will have no endplay when snap ring installed in shaft groove. Insert baffle in adapter, install mainshaft and bearing, select snap ring of correct thickness (furnished in various thicknesses) so that there will be no clearance between ring and bearing when snap ring installed in adapter groove.

►*CAUTION—Bearing must not have endplay on shaft or in adapter plate.*

Sun Gear Blocker, Pawl & Solenoid—Install pawl with notched side upward, rotate blocker assembly so that opening in balk ring is opposite pawl. When installing solenoid, insert plunger stem with solenoid turned 90° from mounting position, then rotate solenoid 90° counter-clockwise to engage pawl and install mounting screws.

►**Hudson Interlock Plunger Note**—Interlock plunger must engage notch on side of pawl. This plunger furnished in six lengths for selective fitting so that clearance between end of plunger and side of pawl should be .008-.021" with opposite end of plunger contacting shifter rail (not sleeve). Check with pawl fully engaged in slot in sun gear.

Free-Wheel Assembly—If free-wheel cam retainer and springs removed from free-wheel cam, first note position of springs and replace in exactly same positions. Springs must place tension on cam so that it is held normally in a counter-clockwise position (viewed from rear) in retainer with rollers on "high" ends of cam ramps (outward or engaged position).

Overdrive Pinion & Free-Wheel Installation—With these parts installed on shaft, and retaining clips ("C" washers) properly installed, insert free-wheeling rollers in cage and use heavy grease to hold them in position, turn cage and rollers counter-clockwise to low or disengaged position (use a rubber band looped around assembly to provide sufficient pressure on rollers to hold them in this position against the spring tension), then install driveshaft and ring gear assembly.

►**Packard Note**—If new snap ring installed in groove in shaft ahead of pinion cage assembly, this ring must be .062"±.002" thick (not variable). After installing pinion cage and free-wheel cam, select snap ring of correct thickness for installation in groove back of free-wheel cam so that these parts have no endplay on shaft. This snap ring furnished .062", .068", .074" thick.

Overdrive Case and Control Mechanism—Make certain that rear bearing snap rings are properly seated and snug in grooves (rear snap ring furnished in various thicknesses). On Nash, install front bearing and speedometer and governor drive gears on driveshaft (CAUTION—make certain that woodruff key in place in shaft to position both gears). On other cars, install speedometer and governor gears in rear end of case, then tap front bearing in place. Install new shifter shaft oil seal in recess in case, then install shifter shaft from within case. When installing case, see that shift fork properly engaged in sun gear shifting collar and that shift rail parts correctly assembled. After case installed, push shifter shaft in to engage notch in shift rail, install shifter shaft lockpin, check operation of shift mechanism for correct operation without binding. On Nash, install snap ring in driveshaft groove directly back of rear bearing, install oil seal. On all models except Nash, install universal companion flange, tighten nut on end of shaft securely.

►*CAUTION—Universal companion flange nut must be securely tightened to prevent governor and speedometer drive gears slipping on shaft.*

OVERDRIVE CONTROL: *See Warner Type R10 & R11 Overdrive control data (following).*

TRANSMISSION DISASSEMBLY & REASSEMBLY: *See Warner Overdrive Transmission data.*

WARNER OVERDRIVE CONTROL

Ford 6 Cyl. & V8 Models (1949 & 1950)
Frazer, All Models (1949)
Hudson 6 & 8 (1949), Pacemaker 6 (1950)
Kaiser, Deluxe Model 492 (1949)
Lincoln & Cosmopolitan, All Models (1949)
Mercury, All Models (1949 & 1950)
Nash, All Series (1949 & 1950)
Packard, All Series (1949)
Studebaker Champ. & Comm. (1949 & 1950)
Willys 4 Cyl. & 6 Cyl. Models (1949)

DESCRIPTION: Control units consist of a Governor (cut-in speed controlled by closing of governor contacts, cut-out speed by opening of contacts), Solenoid (solenoid pushes pawl in to engage overdrive, return spring on solenoid plunger pulls pawl out to disengage overdrive). Throttle Kick-down Switch (switch breaks solenoid circuit when accelerator pedal fully depressed causing overdrive to disengage for "kick-down" direct drive), Control Relay, and Lock-out Switch (switch mounted on overdrive case and actuated by control shaft to open governor circuit when overdrive "locked out" by control button on instrument panel. Adjust units as follows:

Governor: Various types used as follows:

	Cut-in Speed	Warner Part No.
Ford	26 MPH.	①AR11-72
Frazer & Kaiser	26.5 MPH.	AR10B-72B
Hudson	18.5-21 MPH.	②
Lincoln & Mercury	26 MPH.	①AR11-72
Nash 600	29 MPH.	AR10B-72E
Nash Amb	29 MPH.	③AR10B-72
Packard	22 MPH.	⑤AR9-72D
Studebaker Champ	27-30 MPH.	④AR10B-72
Studebaker Comm	31.5 MPH.	④AR10B-72
Willys	29 MPH.	AR10B-72E

①—Ford-Lincoln-Mercury No. 8M-6919.
②—Cars without Drive-Master—Hudson No. 165829 (Auto-Lite TGA-4002). Cars with Drive-Master—(1949—Auto-Lite TGB-4003, 1950—TGB-4001).

C NTINUED ON NEXT PAGE

WARNER OVERDRIVE CONTROL (C ntinued)

③—With Warner Overdrive Transmission AS26-T86E (Governor AR10B-72J used with AS5-R10B Overdrive & Nash Transmission on first 1949 cars).
④—AR10B-72 Governor is Auto-Lite Model TGE-4003. No. AR10B-72D Governor is Optl.
⑤—Auto-Lite Model TGA-4004 (Packard No. 418447).
Adjustment—Governor should be replaced if overdrive cut-in speed is not correct (see table above).

►***CAUTION—Before replacing governor*** (if overdrive does not engage, or if cut-in and cut-out speeds not correct, make certain that universal joint companion flange nut on rear end of overdrive driveshaft is tight. Looseness of this nut will allow governor and speedometer drive gears to slip on overdrive shaft.

Solenoid: Delco-Remy or Auto-Lite types with Warner Part Nos. as follows:

Car Model	Solenoid Part No.
Ford exc. Sta. Wgn. & Convt.	①D-R. 1118132
Ford Sta. Wgn. & Convt.	②D-R. 1118138
Frazer & Kaiser	③D-R. 1118132
Hudson 1949	④D-R. 1118134
Lincoln & Mercury	①D-R. 1118132
Nash	③D-R. 1118132
Packard	③D-R. 1118132
Studebaker	③D-R. 1118132
Willys	③D-R. 1118132

①—Ford-Lincoln-Mercury No. 8M-6916 (Warner No. 3AR10B-62).
②—Special Ford No. 8A-6916 (Warner No. 3AR10E-62) for offset mounting on adapter. ***See Ford Overdrive data.***
③—Warner No. 3AR10B-62.
④—Special three-terminal type not similar to other Solenoids (Warner No. AR10D-62).

►***SOLENOID REMOVAL CAUTION***—Solenoid must be disengaged from pawl for removal as follows: Take out two mounting capscrews, rotate solenoid clockwise ½-turn to disengage plunger from pawl (will align plunger flats with pawl slot), withdraw solenoid and plunger assembly.

Control Relay: All relays except 1949 Hudson are single unit type as listed below. 1949 Hudson relay is special two-unit type.
See car wiring diagram on individual car model pages for relay connections and circuits.

Car Model	Control Relay Part No.
Ford (all models)	Ford No. 8M-6915
Frazer & Kaiser	Auto-Lite HRT-4001A
Hudson 1949	Hudson No. 165826
Lincoln & Mercury	L-M No. 8M-6915
Nash	Auto-Lite HRT-4101
Packard	RBM. Model 3600-2
Studebaker	Auto-Lite HRT-4001
Willys	Auto-Lite HRT-4001

HRT-4001, 4001A, 4101 Specifications
Contacts Close—4.0 volts maximum. Adjust by bending lower spring hanger to change armature spring tension.
Contacts Open—.6-1.0 volt. Adjust by varying height of stationary contact (these relays designed to open slowly).
Contact Gap—.015" minimum.
Air Gap—.031-.034" with contacts open. Adjust by bending armature stop.

Throttle Kick-down Switch: Switch is mounted so that switch plunger is actuated by accelerator pedal or by throttle linkage (contacts plunger in wide open position, additional movement of pedal actuates switch by depressing plunger).
Adjustment—Loosen locknut on threaded switch stem, turn switch up or down so that accelerator pedal (or linkage) just contacts switch plunger with accelerator linkage and carburetor throttle valve in wide open position. Make certain that accelerator pedal has sufficient additional travel to actuate switch.

Lock-out Switch: Does not require adjustment. Switch contacts should be open (governor circuit broken) when overdrive locked out by pulling out button on instrument panel, and contacts should be closed when control button pushed in for overdrive operation (except when transmission shifted into Reverse).

Overdrive Fuse: In cartridge type holder or on fuse block attached to control relay on all cars except 1949 Hudson (no fuse used on 1949 Hudson).

Fuse Capacity	
Ford, Lincoln, Mercury	30 amperes
Frazer, Kaiser, Nash	20 amperes
Hudson 1950	30 amperes
Packard	30 amperes
Studebaker, Willys	20 amperes

Overdrive Wiring Diagram: ***See individual car wiring diagrams on car model pages for complete circuits.***

BUICK DYNAFLOW DRIVE

Super Series 50 (1949)—Optl. Equipment
Roadmaster Series 70 (1949)—Std. Equipment
Special Series 40 (1950)—Optl. Equipment

►**STARTING OF ENGINE BY TOWING OR PUSHING CAR:** On Dynaflow cars, place control lever in neutral "N" position until car reaches a speed of 15 MPH. and then move lever to "L" position, or when car reaches a speed of 30 MPH. move lever to "D" position, to crank engine. Place lever in neutral "N" position to warm up engine.

►**USE OF EMERGENCY LOW FOR ADDITIONAL BRAKING ON GRADES:** Car speed should be reduced to below 40 MPH. before control lever is moved from Drive "D" to Low "L".

►**TOWING DYNAFLOW CARS:** If Dynaflow Drive disabled, **car must not be towed with control lever in any driving range.** Car can be towed with lever in Neutral "N" position only at speeds **under 30 MPH.** but long distance tows not recommended.
Neutral Safety Strap Installation—Can be installed over shift lever to lock transmission in neutral for towing when neutral position cannot be obtained or held by means of regular transmission control.

DESCRIPTION: Dynaflow Drive consists of a Torque Converter and planetary gear unit providing automatic gear shifting in the Driving Range and an Emergency Low, Reverse, Neutral and Parking position controlled by the operator. Design is same as used on previous Buick Drivemaster models.

CHECKING & CHANGING DYNAFLOW DRIVE OIL: Check oil level and add oil as required at 1000 mile intervals, drain and refill at 15000 mile intervals.

►***CAUTION—Oil must be warm and engine must be idling when checking oil level, warm up oil before draining.***

Checking Oil Level: With oil warm and engine idling with control lever in Parking "P" position, check oil level as indicated on oil level rod in filler hole (see locations below). If level more than 1" below "FULL" mark, add recommended oil to bring level up to FULL mark on rod. Distance between upper FULL mark on rod and lower (1949) LOW or (1950) ADD OIL mark is 1" or approximately 1 pint of oil.

►***CAUTION—Oil level must never be above "FULL" mark.***
1948 & Early 1949 Oil Gauge Rod—On right side of transmission case under front floor, accessible by lifting floor mat and removing floor pan cover.
Late 1949 & 1950 Oil Gauge Rod—Between battery and engine on right side, accessible by raising right side of engine hood.

►***CAUTION—Do not confuse Dynaflow Oil Gauge Rod with Engine Oil Gauge Rod located near this same point.***

Draining & Refilling: With oil warm, drain transmission case by removing drain plug in oil pan, drain torque converter, after removing bell housing cover for access to drain plugs, by loosening one plug and turning converter until second plug is downward and removing this plug. Re-install and tighten all drain plugs. Install 3 quarts of recommended oil through filler opening in case. Start engine and allow it to idle with control lever in Parking "P" position, add additional oil to bring level up to point 1¾" below "FULL" mark on oil gauge rod. Recheck oil level after transmission warmed up. Oil level should then be at full mark on rod.
Capacity—(40, 50) 8½ qts., (70) 10 qts.
Recommended Oil—Use only "Special Buick Oil for Dynaflow Drive" or "Automatic Transmission Fluid, Type A."

LINKAGE ADJUSTMENT: Adjust all units in order and exactly as follows:

Manual Control Linkage: Transmission must be thoroughly warmed up (driven approximately 20 miles under traffic conditions with frequent starts and stops) and oil level must be correct. Then proceed as follows:
(1) Place shift control level in Neutral "N" with detent plunger centered in detent notch, move lever until stop pin is against stop in dial housing, note movement of dial pointer. Repeat this operation in Low "L" position. Dial pointer movement should be approximately equal in both positions. If not, loosen control detent mounting bolts on steering column jacket, shift detent until dial pointer travel is equal. Place lever in Low "L" position, carefully bend dial pointer, if necessary, so pointer is in line with "L" on dial.
(2) Check parking mechanism by placing car on ramp or steep grade with control lever in Parking "P". Parking lock should hold securely. Place control lever in Neutral "N" and allow car to roll. If "clicking" ratchet noise heard, or if parking lock did not hold car on grade, adjust as follows: Place control lever in Parking "P" position, disconnect shift rod from shift idler lever on steering column, pull forward on rod and move car slightly to make certain locking pawl fully engaged (CAUTION—do not jerk on rod). Check movement at lower end of shift lever on left side of transmission case by pressing forward on lever (against spring tension) until definite stop is felt. This movement should be 1/8-3/16" beyond the parking "P" position. If spring travel not within these limits, control valve is out of adjustment (re-

CONTINUED N NEXT PAGE

BUICK DYNAFLOW DRIVE (C nt.)

quires removal of torque ball). If spring travel correct, pull shift rod forward against stop, adjust shift rod clevis until clevis pin can just be entered in hole in idler lever with control detent engaged in Parking "P" position, then **lengthen rod by unscrewing clevis 3 full turns,** connect rod temporarily (may require readjustment in next step).

(3) Place shift control lever in Neutral "N" position with detent fully engaged, install Shift Control Linkage Adjustment Gauge No. J3085 on dial housing with line under "N" centered on dial pointer. With transmission warm and engine idling at 600 RPM., move control lever from Neutral "N" to Drive "D" position slowly. Clutch should engage (noted by immediate decrease in engine speed) when tip of dial pointer is behind long gauge mark midway between "N" and "D" on speed ratio dial (width of mark is allowable variation in shift point). Move control lever from Drive "D" to Neutral "N" position slowly. Clutch should disengage (noted by immediate increase in engine speed) when tip of pointer is behind midway mark on gauge. If clutch engagement and disengagement points not correct, readjust clevis on shift rod at shift lever (see (2) above), being careful not to disturb Parking adjustment. Do not connect shift rod permanently until adjustment (4) completed.

►*CAUTION—When making above adjustment, do not change shift rod length so much that parking lock fails to hold or pawl contacts ratchet wheel in Neutral (check as directed in (2) above).*

(4) Check operation in Low "L" and Reverse "R" positions. Detents should be engaged and shift points should occur when tip of dial pointer is directly behind mark midway between "D" & "L" (Low), midway between "L" & "R" (Reverse). If shifts do not occur at correct points, check for bent transmission shift lever, bent valve operating upper lever, or lever loose or incorrectly seated on shaft.

(5) After above adjustments completed, tighten clevis nut on shift rod clevis and permanently install clevis pin with plain washer and spring washer on each side of clevis.

►*CAUTION—Neutral Safety Switch and Back-up Light Switch must be checked after changing control detent and shift rod adjustments.*

Throttle Linkage & Dash Pot—Must work freely and smoothly. *See adjustment data under "Carburetor" on 1949 Buick car model page.*

Starter Vacuum Switch: If operation not correct after carburetor linkage and dash pot adjustments made, *see Carter WCD and Stromberg AAV-167 & AAV-267 carburetor data for checking and adjustment of switch.*

Neutral Safety Switch: Located on control lever linkage at lower end of steering column and connected in starter control circuit so that starter operative only with Dynaflow control lever in Neutral "N" or park "P" position. Switch should be closed in neutral and should remain closed until lever moved toward park position far enough to move outer end of control lever pointer 5/32" (if switch opens with less than ⅛" pointer travel, starter may not operate in neutral; if more than 3/16" pointer travel required to open switch, starter may operate in Drive "D" position and cause starter to move car). Check and adjust switch as follows:

Checking Neutral Switch—Ground coil terminal on distributor so that engine can be cranked without starting. Firmly set parking brake. Place Dynaflow control lever in neutral "N" position (check to see that detent firmly engaged). Install Shift Control Linkage Adjustment Gauge J3085 on dial housing so that short line under "N" is centered on dial pointer. Move control lever to Driving "D" position, turn ignition on, depress accelerator pedal to close starter vacuum switch. Move control lever slowly from "D" toward "N", note position of center of dial pointer at instant starter begins to operate, release accelerator pedal. Center of dial pointer should be within limits of short line to right of "N" mark on gauge (provides required limits of 1/8-3/16" out of neutral). If not within these limits, adjust as directed below.

►*NOTE—If gauge not available, see 1948 Dynaflow Drive data in previous release for other method of checking switch.*

Adjust Neutral Switch—Place control lever so dial pointer centered on short line to right of "N" mark on gauge J3085 and hold the lever in this position while adjusting. Loosen the two mounting bolts on switch bracket at lower end of steering column, raise switch up as far as possible. With ignition switch turned on and accelerator pedal depressed, tap switch down until starter just begins to operate, then tighten switch mounting bolts being careful not to change switch position. Recheck switch adjustment.

Back-up Light Switch: Check and adjust after transmission control detent adjusted as follows:

1948 Switch—Place control lever in Reverse "R" position, check clearance between switch operating arm and nearest edge of switch mounting bracket. If this clearance not 15/32", loosen two switch mounting screws and shift switch on bracket (screw holes are slotted).

1949-50 Switch—Place control lever in Low "L" position, check clearance between switch operating arm and lower edge of control shaft lower lever. If this clearance not 0" to 1/16", loosen two switch mounting screws and shift switch on bracket (screw holes slotted).

LOW & REVERSE BAND ADJUSTMENT: Adjust only if chatter or slip in low and reverse severe or objectionable, (slight chatter as car starts in reverse, disappearing when car in motion, is normal). Adjust bands as follows:

(1) Remove front floor mat, insulation pad, and transmission opening cover from floor pan.

(2) Use tool J2655 to remove band adjusting cover and gasket (Covers are shallow sheet metal cups on upper right (Low), left (Reverse) of transmission case.

(3) Loosen locknut and turn adjusting screw clockwise until considerable resistance felt indicating that band in full contact with drum or ring gear.

(4) Back off screw until trace of endplay noted when prying up on locknut with screwdriver, then **back off screw additional six complete turns,** hold screw from turning and tighten locknut snug.

(5) Note position of adjusting screw slot, use torque wrench to tighten locknut to 20-25 ft. lbs., check screw slot to make certain that screw position not changed.

(6) Install band adjusting cover **using new gasket.** *NOTE*—Both Low and Reverse Bands adjusted alike as directed above.

DYNAFLOW REMOVAL & OVERHAUL: Manufacturer recommends that these operations be performed by factory trained personnel.

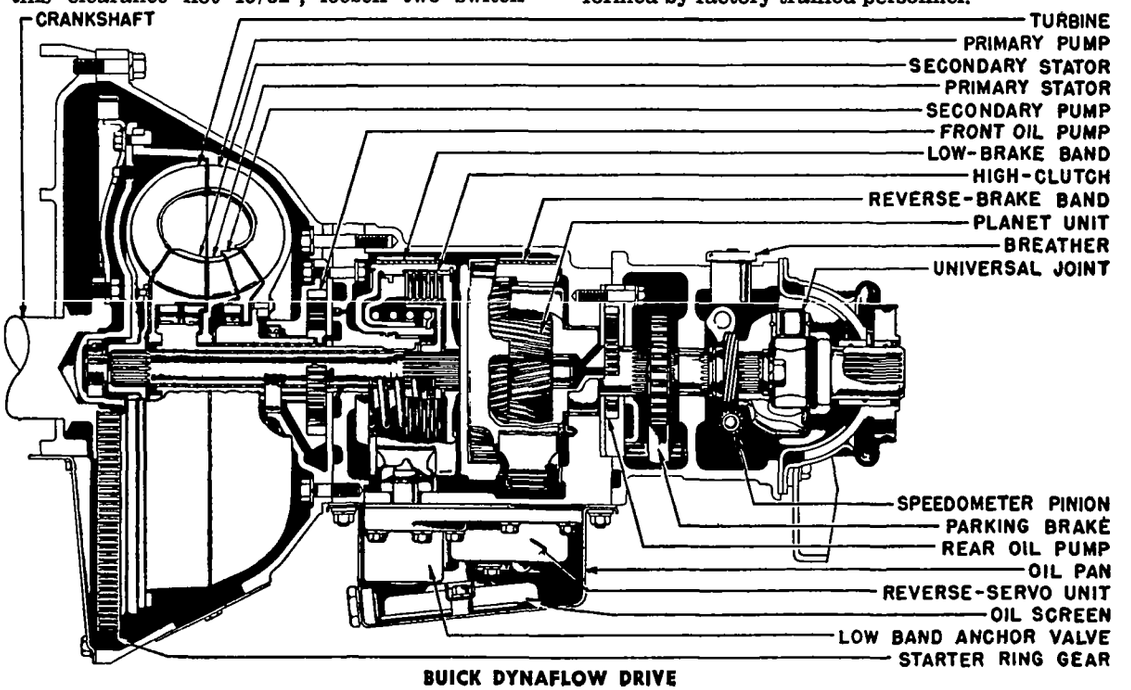

BUICK DYNAFLOW DRIVE

CADILLAC, OLDSMOBILE, PONTIAC HYDRA-MATIC DRIVE

Cadillac V8, All Series (1949)
Oldsmobile 6 & 8, All Models (1949)
Pontiac 6 & 8, All Models (1949 & 1950)

►**OLDSMOBILE TRANSMISSION CAUTION**—Different transmissions used on 6 Cyl. and 8 Cyl. models (heavier transmission on 8 Cyl. to take care of greater engine torque). Can be identified by different serial number plate on right side of case as follows:

6 Cyl. Transmission—Has BLACK plate and "08-" serial number prefix. Numbers are continuous from 1948.

8 Cyl. Transmission—Has YELLOW plate and "09-" serial number prefix. First 1949 number is 09-1.

►*CAUTION—Transmissions not interchangeable on 1949 6 and 8 cylinder cars.*

►**PONTIAC NEUTRALIZER SWITCH REPLACEMENT ON FIRST CARS (to correct Inoperative Starter with Selector Lever in "N" Position)**—On cars before Serial No. P6RH-1063 (6 Cyl.), P8RH-1384 (8 Cyl.), if starter does not operate when starter button depressed (with selector lever in "N"), check neutralizer switch for backing light terminal posts having been pushed into switch body when making connections, and interfering with operation of switch arm (posts not properly staked to prevent this on some early switches). If this condition noted, install new Neutralizer Switch No. 1997846, and adjust switch as directed under Pontiac Adjustment, item (7) below.

DESCRIPTION: Four-speed planetary type automatic transmission and fluid coupling. Design is same as used on corresponding previous models except for minor changes as follows:

1949 Cadillac—Clutch in rear unit now has seven steel plates and seven composition plates. Rear oil pump is internal-external gear type. Valve Body changed (one shift valve orifice reduced, compensator valve spring added, new throttle valve) for smoother upshifting. Control linkage has been simplified (see illustration).

1949 Oldsmobile 8 Cyl. Transmission—Additional plates used in front & rear unit clutches (Front—4 steel and 4 composition plates, Rear—7 Steel and 7 composition plates), Front & Rear Unit Annular Pistons thinner to allow for additional clutch plates, Transmission output shaft has 4 pinions (increased from 3), Torus cover has larger dampener springs and two different size dowel holes (3/8" and 13/32"), Speedometer drive gear has 8 teeth and larger diameter.

►*NOTE*—6 Cyl. Oldsmobile transmission is same as 1948 type.

1949 Pontiac—Transmission has various changes in control valve assembly. New Starter Neutralizer Switch mounted on control on steering column.

►*NOTE*—Serial number (on nameplate on right side of transmission case) starts with P9-1 for 1949.

LUBRICATION: Check fluid level at monthly lubrication periods or every 1000 miles (Cadillac), 2000 miles (Oldsmobile & Pontiac), add fluid as required to maintain level at FULL mark on dip stick. Drain and replace fluid at intervals of 12000 miles (Cadillac), 15000 miles (Oldsmobile & Ponitac).

Checking Fluid Level—Raise right side of front compartment floor mat, remove inspection hole cover over dip stick in transmission filler hole, clean all dirt from floor and transmission around dip stick opening. Set hand brake and block front wheels securely. Place selector lever in "N" position, start engine and run engine at speed of 20 MPH. for approximately 1½ minutes. Reduce engine speed to slow idle (fast idle inoperative) and allow engine to run while checking fluid level. Place selector lever in "DR" position. Check fluid level and add fluid, as required, to bring level up to "FULL" mark on dip stick. NOTE—Approximately 1½ pints required to raise level from "L" or LOW mark to "F" or FULL mark.

►*CAUTION—Always check fluid level with engine idling and do not fill above "F" mark on dip stick (will cause foaming when warm).*

Draining & Replacing Fluid—Fluid should be warm. Remove inspection plate at bottom of flywheel housing (Cadillac & Oldsmobile 8), or lower flywheel cover (Oldsmobile 6 & Pontiac), drain fluid coupling by turning flywheel until hexagonal-head drain plug in torus cover is at bottom and remove plug. Drain transmission case by removing drain plug at rear end of transmission oil pan. Replace both plugs. Install approximately 8 qts. of Hydra-Matic Fluid through dip stick hole in top of case. Run engine for several minutes, check fluid level (see Checking directions above), add fluid to bring level up to "F" or FULL mark on dipstick. This will require approximately 2½-3 qts. (Cadillac), 3 qts. (Oldsmobile), 3½ qts. (Oldsmobile—after unit has been rebuilt).

►*CAUTION—Correct fluid level is determined by dipstick mark rather than exact amount of fluid added.*

Recommended Fluid—Use only Hydra-Matic Fluid as furnished or recommended by car manufacturer.

CADILLAC ADJUSTMENT: Make adjustments in order and exactly as follows:

(1) Manual Control Linkage—Disconnect manual control rod from control lever on transmission case. Move control lever to drive position (move lever fully forward, then move lever toward rear until first detent position is reached). Place slecetor lever on steering column against stop in "DR" position. Adjust clevis on transmission end of control rod until clevis pin can just be inserted freely through clevis and lever. Connect control rod.

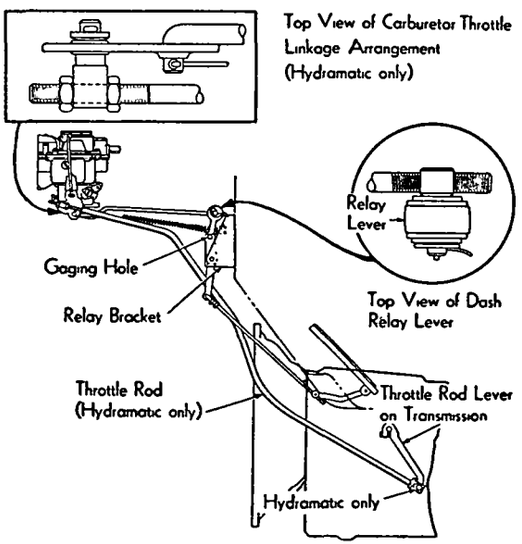

CADILLAC HYDRA-MATIC DRIVE C NTR L THROTTLE LINKA E

(2) Throttle Lever Position—Disconnect throttle rod at throttle lever on transmission case. Check lever position by installing checking gauge, Tool J-3065, on rear face of transmission case with long leg of tool extending forward along left side of case. Move throttle lever to extreme rear position. Insert clevis pin through hole in lever and hole in checking gauge. If pin does not enter hole in gauge freely, bend lever as required using bending tool J-2029. Remove gauge and reconnect throttle rod to throttle lever.

(3) Throttle Control Linkage—Disconnect carburetor throttle rod at dash relay lever by removing spring clip and freeing trunnion from lever. Install ¼" drill rod through hole in relay lever and hole in bracket to position lever. See that carburetor throttle lever in correct hot or slow idle position (stopscrew against stop and set for correct 375 RPM. idling speed), adjust trunnion on rear end of throttle rod until trunnion enters relay lever freely, connect trunnion and install spring clip. Back off both nuts on throttle rod at carburetor throttle lever, push on end of rod so that transmission throttle lever and valve is against its stop, turn rear nut on throttle rod up against the carburetor throttle lever trunnion, **then back nut off three complete turns**, tighten front nut on rod securely against trunnion. Check to see that linkage moves freely. Remove drill rod from relay lever. Check and adjust accelerator pedal position.

(4) Accelerator Pedal Position—Depress pedal fully and see that it touches floor mat with slight pressure when carburetor throttle valve wide open (NOTE—if floor mat removed, allow ½" clearance between pedal and floor in wide open position). Adjust pedal position, as required, by changing length of pedal to relay lever rod (adjusting trunnion located at pedal end of rod).

(5) Neutral Switch—Adjust position of switch so that starter operative (switch closed) only when selector lever in "N" position.

►*CAUTION*—Do not move switch so far in neutral position that travel of lower lever is limited by switch arm in the reverse position.

OLDSMOBILE 6-CYL. ADJUSTMENT: Make adjustments in order and exactly as follows:

(1) Manual Control Linkage—Same as for 8 Cyl. models (following).

(2) Throttle Control Linkage—See that carburetor set for hot or slow idling speed of exactly 375 RPM. Adjust each part of linkage in following order:

Transmission Throttle Lever—Disconnect lower throttle rod from lever on side of transmission case. Install checking tool J-2195 on machined surface on rear face of transmission case with gauging rod extending forward toward lever. Hold throttle lever back against stop. If small end of tool does not enter hole in lever freely in this position, bend lever as required using tool J-2029. Do not connect throttle rod to lever at this point.

C NTINUED N NEXT PA E

CADILLAC, OLDSMOBILE, PONTIAC HYDRA-MATIC DRIVE (C nt.)

Carburetor Throttle Rod (B)—Disconnect rod (B) at carburetor throttle valve lever. Align bellcrank (C) with index plate (D) by inserting Gauge BT-25 through holes in lever and plate. Hold carburetor throttle lever in slow idle position, bend rod (B) using tool GA-38 so that it can be connected without disturbing lever positions. Connect rod. Gauge BT-25 should now slip in and out of holes in lever and index plate freely. Remove gauge.

Lower Throttle Rod (A)—See that carburetor in slow idle position (throttle lever against stop), hold transmission throttle lever fully back against its stop, adjust length of rod (A) by loosening locknut and turning clevis until clevis pin enters hole in lever freely, then **shorten rod by one full turn of the clevis,** tighten locknut and connect rod.

Intermediate Throttle Rod (E)—Disconnect accelerator spring, disconnect rod (E) by removing clevis pin at forward end. Insert Gauge BT-25 through hole in lever (F) and hole in bracket. Adjust clevis on forward end of rod (E) so that gauge BT-25 will enter holes in lever and bracket freely with rod connected. Connect rod and remove gauge.

Accelerator Pedal Rod (G)—Disconnect accelerator pedal rod (G) by removing clevis pin at lever (F). Hold carburetor throttle lever in wide open throttle position, push down lightly on rod (G) so that pedal stop touches floor mat (CAUTION—floor mat must be flat against floor cover). Adjust clevis on end of rod (G) so that clevis pin enters hole in lever (F) freely, then **shorten clevis by six full turns,** connect rod. This will provide approximately ¼" clearance between pedal stop and floor mat when carburetor throttle in wide open position.

(3) Throttle Cracker Linkage—Disconnect coil to distributor lead (to prevent starting engine), press starter button to fully engage starter drive (solenoid pinion shift). With starter fully engaged, loosen locknut and turn adjusting screw (T) on lever on side of engine for clearance of .062-.085" between carburetor throttle stopscrew and high step of fast idle cam (cam turned to cold or fast idle position).

(4) Bellcrank & Index Plate Clearance—Bend stop lug on index plate (D) so that clearance between lug and lip on bellcrank (C) is 1/32-1/16" with bellcrank in full open position as limited by transmission throttle lever.

(5) Starter Safety Switch Adjustment—Same as for 8 cyl. models (following).

OLDSMOBILE 8 CYL. ADJUSTMENT: Make adjustments in order and exactly as follows:

(1) Manual Control Linkage—Loosen clevis locknut at rear end of lower control rod (from steering column to intermediate lever on frame cross-member) and rear end of lower control relay rod (from intermediate lever to transmission control lever), disconnect rods at intermediate lever and transmission. Adjust each rod as follows:

Lower Control Relay Rod—Move transmission control lever all the way back into Reverse position (rotate propeller shaft by hand until reverse anchor engages and lever is against stop). Position intermediate lever on cross-member so that gauging hole in lever lines up with hole in bracket, insert Gauge BT-25 through both holes to maintain lever position. Adjust clevis on rear end of relay rod so that rod can be connected without disturbing position of levers. Connect rod and remove gauge from intermediate lever.

Lower Control Rod—Place transmission control lever in "LO" position (move lever all the way forward to Neutral, then move lever back to the second detent "LO" position). Place steering column selector lever at end of Lo range against stop which prevents movement into Reverse without raising lever (pull down on lower control rod until stop is felt). Adjust clevis on lower end of lower control rod until rod can just be connected without lower control rod so that clevis pin slips freely through clevis and intermediate lever without disturbing lever positions, then **lengthen rod by turning clevis one full turn,** tighten locknut and connect rod.

(2) Throttle Control Linkage—See that carburetor set for hot or slow idle speed of exactly 375 RPM. Adjust each part of linkage in following order:

Transmission Throttle Lever—Disconnect lower throttle rod from lever on side of transmission case. Install checking tool J-2195 on machined surface on rear face of transmission case with gauging rod extending forward toward lever. Hold throttle lever back against stop. If small end of tool does not enter hole in lever freely in this position, bend lever as required using tool J-2029. Do not connect rod to lever at this point.

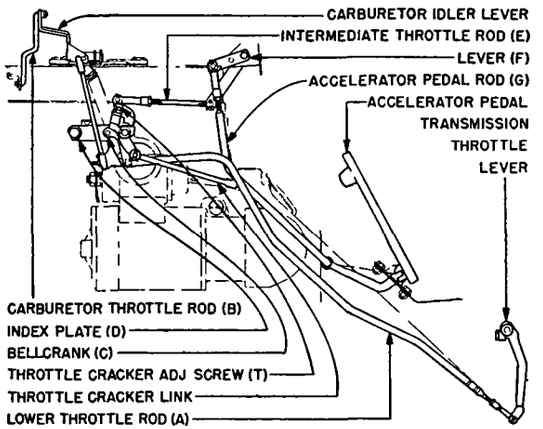

OLDSMOBILE 6 HYDRA-MATIC DRIVE CONTROL THROTTLE LINKAGE

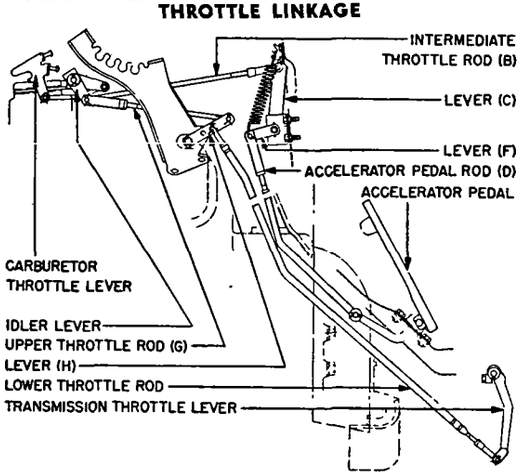

OLDSMOBILE 8 HYDRA-MATIC DRIVE CONTROL THROTTLE LINKAGE

Intermediate Throttle Rod (B)—Disconnect rod at lever (C) on dash. See that carburetor throttle lever in hot or slow idle position (throttle lever against stop), adjust clevis on rod so that distance from rear face of lever (C) to bottom of depression in dash is 5/16-3/8" (88), 7/32-9/32" (98), tighten clevis locknut and connect rod.

Accelerator Pedal Rod (E)—Unhook accelerator spring at lever (F), disconnect rod (E) from lever by sliding clevis off lever pin. Hold accelerator pedal down lightly against floor mat but do not push down on rod (CAUTION—floor mat must be flat on floor). Adjust clevis on upper end of rod (E) until it just slides freely on lever pin, then **shorten clevis by six full turns,** connect rod, install spring. This will provide approximately ¼" clearance between pedal stop and floor mat when carburetor throttle in wide open position.

►***CAUTION—Clevis on upper end of rod (E) must be installed with open side facing toward engine.***

Upper Throttle Rod (G)—Disconnect rod (G) from lever (H) Insert gauge BT-25 through hole in lever and bracket. Adjust rod (G) by turning it in or out of clevis at forward end until rod can be connected without moving carburetor throttle lever from its hot or slow idle position. Tighten clevis locknut, connect rod, remove gauge from lever.

►***CAUTION—If clevis at forward end of rod (G) disconnected, this clevis must be installed with open side facing away from engine.***

Lower Throttle Rod (A)—See that carburetor in slow idle position (throttle lever against stop), hold transmission lever fully back against its stop, adjust length of rod (A) by loosening locknut and turning clevis until clevis pin enters hole in lever freely, then **shorten rod by one full turn of the clevis,** tighten locknut and connect rod.

►**Throttle Cracker Note**—No throttle cracker (as used on 6 cyl. cars) is used. When starting cold engine, first opening of throttle allows fast idle cam to rotate so that special starting step of cam holds throttle open for starting. When starting hot engine, open throttle approximately 1/3 by depressing accelerator pedal.

(3) Starter Safety Switch Adjustment—Loosen switch bracket locking screw just enough so that slotted bracket can be moved. Place selector lever on steering wheel in "N" neutral position. Adjust switch by moving bracket so that clearance between lever and stop is 1/16-1/32", tighten bracket screw.

PONTIAC ADJUSTMENT: Make adjustments in order and exactly as follows:

(1) Carburetor Throttle Rod—Disconnect control rod at throttle lever (outer lever) on side of transmission case. Check engine idle speed and set for 365-385 RPM. hot or slow idle speed with engine temperature at 150-165°F., transmission warm and selector lever in neutral "N". Loosen checknuts at trunnion on carburetor throttle rod at throttle control intermediate lever (6 cyl.), cross-shaft lever (8 cyl.) on cylinder head, install adjusting pin J-2544

C NTINUED ON NEXT PA E

CADILLAC, OLDSMOBILE, PONTIAC HYDRA-MATIC DRIVE (C nt.)

through holes in lever and bracket on left side of cylinder head. Tighten trunnion checknuts being careful not to move carburetor throttle stopscrew away from its stop. Do not remove adjusting pin.

►*CAUTION—On 6 cyl. cars, position carburetor throttle rod upward and away from ignition cables.*

(2) Transmission Throttle Front Rod—Check adjustment by inserting second adjusting pin J-2544 through holes in transmission throttle idler lever and bracket (on left side of crankcase **below** starter). If pin does not enter both holes freely, adjust rod length by disconnecting rod at upper (cylinder head lever) end of rod and screwing end fitting in or out Connect rod but do not remove adjusting pins.

(3) Throttle Control (Accelerator Pedal) Rear Rod—Loosen front checknut at trunnion on forward end of rod (at idler lever on left side of crankcase **above** starter), tighten rear checknut until accelerator pedal rocker lever lug just contacts lever bracket on dash, then **back off rear checknut three full turns,** tighten front checknut so that trunnion is locked on rod. Remove adjusting pins from intermediate lever on cylinder head and from idler lever on left side of crankcase.

(4) Transmission Throttle Lever Position—See that clamp bolt on transmission throttle lever securely tightened, check position of lever by installing Checking Gauge J-2545 flat on machined rear face of transmission case with edge of gauge against side cover. Install trunnion pin in lever, hold lever in extreme rear position. Move gauge upward. Notch in gauge should pass over pin in lever and inside face of lever should just touch outer face of gauge. If not, bend lever with tool J-2807, and recheck lever

(5) Transmission Throttle Rear Rod—Hold transmission throttle lever in rear position against stop, adjust trunnion position on rod by backing off one checknut and tightening opposite nut until trunnion pin enters hole in lever freely, then **shorten rod one full turn** (back off front nut, tighten rear nut one turn), connect rod.

(6) Manual Control Linkage—Hold selector lever under steering wheel down in "LO" position firmly, tighten control shaft upper bracket clampscrew securely. Back off both trunnion checknuts at forward end of manual control rod (at steering column control shaft lever), place manual control lever on transmission case in "LO" (move lever forward from extreme rear to second position where detent is felt to engage). With both levers held in "LO" position, tighten rear (lower) nut against trunnion finger tight, then **lengthen rod by turning nut up one additional turn,** tighten forward checknut against trunnion securely.

(7) Starter Neutralizer Switch—Place selector lever in "DR" position. Loosen switch bracket clampscrew (on steering column at lower end of selector shaft), shift switch and bracket (screw hole is slotted) until starter does not operate when starter button depressed. Move selector lever to "N" position. Check to see that switch arm does not touch stop on switch bracket, and that starter operates when starter button depressed. Tighten switch bracket clampscrew.

►**Neutralizer Switch Replacement (first cars)**—On cars before Serial No. P6RH-1063 (6 Cyl.), P8RH-1384 (8 Cyl.), if backing light terminal posts pushed into switch case and interfering with operation of switch arm, install new No. 1997846 switch which has posts staked to prevent this occurrence.

screw until engine speed increases, finally tighten

CADILLAC TRANSMISSION REMOVAL: Same as for previous Cadillac models except that new engine support stand, No. J-3068, required for 1949 engine.

OLDSMOBILE TRANSMISSION REMOVAL: *CAUTION —New 1949 engines require different transmission removal procedure as follows:* Disconnect accelerator pedal rod at bellcrank, remove floor mat and center floor pan. Remove upper transmission to bell housing capscrews. Raise car approximately 8" off floor and securely support all four wheels. Drain fluid coupling and transmission case. On 8 cyl. cars, remove engine side pans, disconnect starter wiring, remove starter, remove lower flywheel housing (necessary to remove exhaust pipe bracket and crankcase ventilator bracket from housing first). Install Rear Engine Support, Tool No. BT-28, to support rear end of engine. Remove engine mount to cross-member bolts (left side), capscrews (right side), and two capscrews attaching engine mount to flywheel housing (right side only). Remove bolts attaching intermediate lever bracket to cross-member, and bolts attaching cross-member to frame (3 bolts on each side). Lift engine approximately ½" and remove cross-member (CAUTION—do not lift engine more than necessary to remove cross-member). Then remove transmission in same manner as on previous Oldsmobile models.

PONTIAC TRANSMISSION REMOVAL: Same as for 1948 Pontiac models.

DISASSEMBLY & REASSEMBLY OF TRANSMISSION: *See complete "Cadillac, Oldsmobile, Pontiac 1946-48 Hydra-Matic Drive" in previous release.*

BUICK, OLDSMOBILE, PONTIAC SYNCHRO-MESH

Buick Series 40, 50 (1949), Series 40 (1950)
Oldsmobile Six, Series 76 (1949)
Pontiac 6 & 8, All Models (1949-50)

►**OPTL. TRANSMISSION NOTE:** Dynaflow Drive (Buick), Hydra-Matic Drive (Oldsmobile & Pontiac) Optl. on these models. *See separate Dynaflow and Hydra-Matic Drive data.*

DESCRIPTION: Three-speed, constant-mesh, synchro-mesh type of same design used on corresponding previous models.

REMOVAL OF TRANSMISSION: *See "Transmission" on car model page.*

DISASSEMBLY & REASSEMBLY: *See complete "1940-48 Buick-Oldsmobile-Pontiac Synchro-mesh" Transmission in previous release.*

CADILLAC SYNCHRO-MESH

V8, All Series (1949)—Std. Equipment

►**HYDRA-MATIC DRIVE**—Optl. on these models. *See separate Hydra-Matic Drive Data.*

DESCRIPTION: Three-speed, constant-mesh, synchro-mesh type of same design used on previous Cadillac models.

REMOVAL OF TRANSMISSION: *See "Transmission" on car model page.*

DISASSEMBLY & REASSEMBLY: *See complete "Cadillac 1937-48 Synchro-mesh" Transmission in previous release.*

CHEVROLET TRUCK 4-SPEED

1, 1½, 2 Ton Truck Models (1949)

►NOTES, CAUTIONS, & CHANGES

►**GEAR DISENGAGEMENT (1ST, 2ND, REVERSE) & HIGH GEAR NOISE (15-40 MPH):** May be caused by excessive clearance between splines of First & Reverse Sliding Gear and mainshaft. Check clearance when this trouble experienced, or when new parts installed, as follows: Disassemble transmission, re-install universal joint yoke on rear end of mainshaft and tighten attaching bolt. Clamp yoke in vise with shaft vertical. Slide gear on shaft splines, shifting gear on shaft to obtain best possible fit, position gear in approximate first-speed position on shaft (CAUTION—see that energizing lugs are not touching mainshaft), place a supporting block of wood under one side of gear. Mount dial indicator so that it contacts upper edge of gear at shifter yoke groove on opposite (unsupported) side of gear. Hold supported side of gear tightly against block, lift gear at point under dial indicator so that total play or rocking motion of gear indicated. This play or movement must not exceed .017". If gear fit satisfactory, mark matching splines on gear and shaft to insure installation in this position. *See also Mainshaft & Sliding Gear Production Change below.*

►**MAINSHAFT & SLIDING GEAR PRODUCTION CHANGE:** Beginning Transmission No. SM-73563, new type mainshaft and sliding gear used with "skip-tooth" splines (alternate teeth on gear shorter and bear on wide splines on shaft) to provide closer fit. **Parts must be installed as a unit as follows:**

Mainshaft ..... No. 3692608
First-&-Reverse Sliding Gear ..... No. 3692598

►**SHIFTER HEAD & YOKE PRODUCTION CHANGE:** Beginning Transmission No. RC-53869, mating tongues and grooves in Reverse Shifter Head and First-&-Second Shifter Yoke were removed and new type parts used as follows:

Reverse Shifter Head ..... No. 591905
First-&-Second Shifter Yoke ..... No. 591906

INTERCHANGEABILITY OF PARTS—New type yoke can be used in earlier transmissions with first type shifter head. If new type shifter head installed, **new type yoke must also be used.**

►**LOCKING IN 3RD OR 4TH GEAR (Transmission before Serial No. SC-103207):** Caused by overshift condition permitting clutch keys to cock and ride up on bronze synchronizer cone. Correct by installing new design 3rd. & 4th. Speed Clutch Hub and Clutch Keys as listed below. On these parts, key slots in hub are machined at outer edges to provide shoulders to retain keys and prevent endwise cocking. Keys used with this hub do not have hump at sides and new square section retainer spring is also used. **Install all new type parts as an assembly as follows:**

Clutch Hub ..... No. 591912
Clutch Key (3 used) ..... No. 591913
Clutch Key Retainer Spring (2 used) ..... No. 591914

NOTE—Started in prod. with Trans. No. SC-103207.

DESCRIPTION: Four-speed, constant-mesh, synchro-mesh (2nd, 3rd, 4th) type of same design used on 1948 trucks. See Production Change Notes above.

REMOVAL OF TRANSMISSION: *See "Transmission" on car model page.*

TRANSMISSION DISASSEMBLY & REASSEMBLY: *See complete "Chevrolet Truck 4-Speed Helical Gear (Synchro-mesh)" Transmission in previous release and note all Production Change Notes above.*

CHEVROLET PASS. CAR & TRUCK 3-SPEED

Model GJ & GK Passenger Car Models (1949)
½ & ¾ Ton Truck Models (1949)
Forward Control ¾ Ton Truck (1949)

DESCRIPTION: Three-speed, constant-mesh, synchro-mesh type of same design used on previous models except for new design shifter mechanism on Pass. car models as follows:

Passenger Car Gearshift Control & Shifter Mechanism: Gearshift control is manual type (no vacuum cylinder) of same design as used on truck models. Control levers on lower end of steering column unit are linked directly to shifter levers on transmission case and no idler bell crank used. Shifter mechanism on transmission case is new type with individual shifter levers and shafts for Low-Reverse and Second-High speeds for which data is given below.

½ & ¾ Ton Gearshift Control & Shifter Mechanism: Same design as used on previous models with steering column mounted gearshift lever. Control rod for Second-High lever is two-piece type with idler bell crank on left side of flywheel housing.

Forward Control Truck Gearshift Control & Shifter Mechanism: Same design as other trucks (above) except that both control rods have idler bell cranks mounted on flywheel housing.

GEARSHIFT CONTROL ADJUSTMENT: Adjust all models as follows:

►**Dubl-Duti (Forward Control) Adjustment Note**—Front floor pan must be removed for access to control rod swivels as follows: Take out pan attaching screws, disconnect wiring to stop light switch, disconnect accelerator pedal rod, remove pan.

1—Clearance between lower edge of steering col. shift lever and top edge of upper support below lever should be 3/32"—1/8". To adjust, remove upper bolt from shaft clamp on steering column (connecting upper and lower control shafts), take out two screws in upper support just below lever, remove shift lever and upper control shaft assembly. Screw upper support up or down for correct 3/32"—1/8" clearance, re-install assembly on steering column.

2—Clearance between end of gearshift lever and underside of steering wheel rim is shown in table below. To adjust, loosen two housing assembly clamp bolts at lower end of steering column mast jacket, raise or lower assembly (with control shafts and gearshift lever at upper end) until clearance is correct, tighten clamp bolts.

Gearshift Lever-&-Wheel Clearance

1949 Pass. Cars	2 3/4" ± 1/4"
1949 Trucks	2 13/16" ±1/8"

3—Gearshift lever should be horizontal with transmission in neutral. To adjust, disconnect 2nd & 3rd control rod swivel from housing outer lever (lower lever at lower end of steering col.). Move this lever to set gearshift lever in horizontal position, then adjust swivel on end of rod so that lever position not disturbed when rod connected.

4—Check shifter gate alignment on inner levers in housing with cover removed. To adjust, disconnect 1st & Reverse control rod swivel from housing outer lever (upper lever at lower end of steering col.). Move the outer lever to align upper shifter gate with lower shifter gate in housing, then adjust swivel on end of rod so that lever position not disturbed when rod connected.

REMOVAL OF TRANSMISSION: *See "Transmission" on car model page.*

TRANSMISSION DISASSEMBLY & REASSEMBLY: Same as for previous models except for new side cover and shifter mechanism. *See complete "1940-48 Chevrolet Three-Speed" Transmission in previous release and note following NEW shifter mechanism data:*

TRANSMISSION SHIFTER DISASSEMBLY: Cover on side of transmission case must be removed as follows: Disconnect shifter rods, drain lubricant, take out shift lever lock bolts, and pull lever off each shifter shaft. Remove cover from transmission. Take out shifter interlock retainer capscrews or nuts and locks on studs, remove retainer. This will permit removal of shifter shafts and fork assemblies, shaft seals, poppets, springs, and interlock from cover.

Cover Installation—Hump on side of First and Reverse Shifter Fork must be toward rear of transmission. Install cover (using new cover gasket) with gears and shifter forks in neutral. Install shift lever on each shifter shaft and tighten lock bolts.

DUBL-DUTI (FORWARD CONTROL) CONTROL RODS: Consist of upper rods (from steering column to idler levers on flywheel housing), and lower rods (from idler levers to transmission case shifter shaft levers).

Disassembly of Control Rods: Remove front floor pan (take out attaching screws, disconnect wiring to stop light switch, disconnect accelerator pedal rod, remove pan). Disconnect rods by removing cotter pins, flat washers, and springs at each end (remove upper rods and swivels as an assembly).

►***CAUTION—Note position of each rod and re-install in exact same location.***

CHRYSLER, DE SOTO, DODGE AND PLYMOUTH SYNCHRO-MESH

Chrysler 6 & 8, Models C45 & C46 (1949)
De Soto, Model S13 (1949)
Dodge, Models D29 & D30 (1949)
Plymouth, Models P17 & P18 (1949)

►**CHRYSLER, DE SOTO, DODGE, OPTL. TRANSMISSIONS:** Four-speed, hydraulically controlled, automatic transmission optional on these models.

DESCRIPTION: Three-speed, constant-mesh, synchro-mesh type of same design used on previous models.

REMOVAL OF TRANSMISSION: *See "Transmission" on car model page.*

DISASSEMBLY & REASSEMBLY OF TRANSMISSION: *See complete "Chrysler, De Soto, Dodge, Plymouth 1940-48 Synchro-mesh" Transmission in previous release.*

CHRYSLER PRESTOMATIC DE SOTO TIP-TOE SHIFT DODGE GYROMATIC

Chrysler 6, Royal & Windsor C45 (1949)
Chrysler 8, Saratoga & New Yorker C46 (1949)
Chrysler 8, Crown Imperial C47 (1949)
DeSoto, Model S13 (1949)
Dodge, Models D29 & D30 (1949)

►**STARTING ENGINE BY PUSHING OR TOWING CAR:** Turn ignition on, place gearshift lever in Low Range, disengage clutch and do not engage clutch until car speed is approximately 10 MPH. At this speed, transmission will automatically shift into 2nd Speed and engine will be cranked.

DESCRIPTION: Own make, semi-automatic, 4-speed transmission with hydraulic actuation and electrical control. Transmission is similar to design used on corresponding previous models but control units (hydraulic and electrical) have been simplified and operate as follows:

Hydraulic Shift Mechanism: Spring-loaded, hydraulically actuated piston of same design as used previously except that piston acts as the oil pump pressure relief valve by uncovering two 3/8" relief holes in cylinder wall when in forward (2nd. or 4th. Speed) position thus limiting oil pressure to approximately 38-40 lbs.

Hydraulic Control Units: Hydraulic system has been simplified with new type pump and valves as follows:
Oil Pump—Gerotor type (concentric gears) mounted on mainshaft in transmission case extension housing and driven directly by a pin in the rear end of the mainshaft. Pump is accesible after extension housing and mainshaft bearing retainer removed.
Shuttle Valve—Located in extension housing. Prevents long periods of ignition interruption which might be caused by failure of solenoid to open main control valve on downshifts. Under these conditions, spring under shuttle valve forces valve upward so that oil trapped behind direct speed piston is returned to transmission case, permitting return spring to move piston back.
Main Control Valve—Spring-loaded ball type which is held off its seat by solenoid plunger when solenoid is energized (1st. or 3rd. Speed) so that oil from pump is by-passed directly back into the transmission case. When solenoid de-energized (2nd. or 4th. Speed), ball is held on seat by spring and oil pressure directed to direct speed piston for automatic shift.

Electrical Control Units: No control relay is used and new control circuits and units operate as follows:
Main Control Valve Solenoid—Solenoid plunger opens valve when solenoid energized, and permits spring to close valve when solenoid de-energized.
Governor—Centrifugal weight type driven from transmission countershaft. Contacts are closed with governor at rest so that solenoid circuit completed to ground (solenoid energized). When contacts open, circuit is broken and solenoid de-energized. Contact opening (for upshifts) and closing (for downshift) occur at following car speeds:

Automatic Shifting Speeds

Upshifts①		Downshifts②	
1st. to 2nd	8 MPH.	2nd. to 1st	6 MPH.
3rd. to 4th	14 MPH.	4th. to 3rd	12 MPH.

①—Governor contacts open.
②—Governor contacts close.

C NTINUED ON NEXT PAGE

CHRYSLER PRESTOMATIC, DE SOTO TIP-TOE SHIFT, DODGE GYROMATIC (C nt.)

Kickdown Switch—On carburetor. Contacts are normally open but can be closed by fully depressing accelerator pedal. Closing of contacts completes solenoid circuit to ground, energizing solenoid, and causing transmission to downshift (from 4th. to 3rd., or 2nd. to 1st.). This "kickdown" downshift only occurs at car speeds below 40 MPH. (4th. Speed) or correspondingly lower speed in 2nd. Speed (at higher car speeds, switch contact is held up out of engagement by manifold vacuum).
See "Chrysler & DeSoto Kickdown Switch" in Carburetion Equipment Section.

Ignition Interrupter Switch—Mounted on transmission and operated by direct speed piston. Switch momentarily grounds ignition coil and interrupts ignition to permit downshifts to be completed. Resistor connected in switch circuit prevents ignition circuit energizing solenoid when switch closed momentarily during upshifts (which would prevent completion of automatic upshift).

Circuit Breaker & Resistor—Thermostatic vibrating type circuit breaker connected in transmission control circuit feed (line from ignition switch side of coil) to protect circuit from overload (replaces fuse used on previous models). Resistor is 12 ohm type and is connected in Interrupter Switch circuit to prevent ignition circuit energizing solenoid when contacts closed (see Ignition Interrupter Switch).

LUBRICATION: Check oil level in transmission every 1000 miles or 30 days, drain and refill every 10000 miles or once each year, maintain oil level even with bottom of filler plug hole.

Recommended Oil—Use only 10W Engine Oil.

Capacity—3 pints (refill).

►***CAUTION—Add additional ½ pint (3½ pints total) whenever transmission extension housing removed and drained (additional oil will work back into extension housing in service).***

REMOVAL OF TRANSMISSION: ***See "Transmission" on individual car model pages.***

DISASSEMBLY OF TRANSMISSION: With transmission off car and Governor, Solenoid, and Interrupter Switch removed, proceed as follows:

1) Remove governor drive pinion from case using long-nosed pliers.

2) Place gearshift controls in Neutral, remove capscrews, lift off Gearshift Housing assembly.

3) Slide manual clutch gear sleeve and reverse idler gear backward so that mainshaft is locked, remove nut, lockwasher, and washer from rear end of shaft (in hand brake drum), use Puller C-452 to remove propeller shaft flange and drum assembly.

4) Take out capscrews attaching extension housing on back of transmission case, remove extension housing and mainshaft as an assembly (Direct Speed Clutch will slide off Third & Direct Speed Gear and remain in case—note that sleeve and gear are paint-marked to insure correct reassembly), remove housing gasket.

5) Use Puller C-604 to remove reverse idler gear shaft through rear of case (CAUTION—do not lose shaft key), lift gear out.

6) Remove direct speed blocker ring from forward end of direct speed clutch sleeve, take out upper plug on right side of transmission case, insert a screwdriver in this hole and pry fork backward just enough to allow direct speed clutch sleeve to be withdrawn. Loosen locking screw in fork, work direct speed gearshift rail backward and out of case, remove fork and spring.

7) Remove snap ring retaining direct speed gearshift rail guide (on front of case), remove guide. Install spring tool (C-714) to compress piston return spring, remove spring retaining snap ring (use long-nosed pliers through guide hole in front of case), relieve spring tension and remove tool, withdraw spring retainer, spring, piston, and rail ring through front of case.

8) Drive countershaft out through rear of case using Arbor C-716 (leave arbor within gear cluster to retain bearing rollers), allow countergear cluster to drop down in case. Remove main drive gear bearing retainer and gasket by taking out capscrews on front of case. Pull drive gear and bearing assembly out toward front.

9) Lift countergear cluster up and remove through rear of case (CAUTION—do not lose thrustwashers on ends of cluster).

10) Disassemble the various sub-assemblies:

Mainshaft Disassembly—Remove speedometer driven gear, press mainshaft assembly out toward front of extension housing. Remove direct speed blocker spring and washer from forward end of shaft, remove snap ring, slide 3rd.-&-Direct speed gear off end of shaft (CAUTION—Use care not to lose bearing rollers, spacer, bearing front thrustwasher, and needle bearing washer), remove rear thrustwasher. Remove clutch gear synchronizer snap ring and front stop ring, remove clutch gear sleeve assembly as a unit, remove rear stop ring. Remove 1st. speed gear front thrustwasher, slide gear off, remove rear thrustwasher. Remove oil pump drive pin from rear end of shaft, remove rear bearing snap ring, press ring bearing and reverse gear off rear end of shaft.

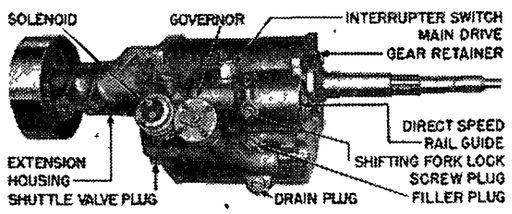

TRANSMISSION ASSEMBLY

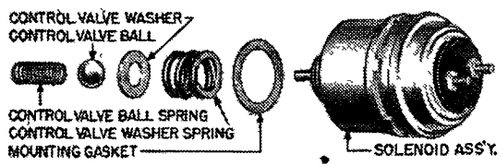

SOLENOID ASSEMBLY

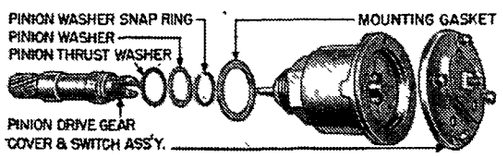

SOLEN ID & G VERN R ASSEMBLY

Extension Housing Disassembly—Remove capscrews holding mainshaft bearing retainer in front face of housing, lift off bearing retainer and oil pump inner and outer rotors. Remove shuttle valve retainer plug (on bottom of housing), withdraw valve parts (guide pin, spring, and valve). Remove oil seal, take out rear bearing snap ring, drive rear bearing out at rear of housing.

Countergear Cluster Disassembly—Stand assembly on end with free-wheeling gear upward. Remove bronze thrustwasher and steel bearing washer. Slide free-wheeling control sleeve up and remove gear. Remove cam roller thrustwasher, gear bearing rollers and free-wheeling cam rollers, cam roller retainer, cam roller retainer springs (CAUTION—use extreme care not to distort springs), free-wheeling control sleeve and key. If countergear bearing rollers being replaced, remove arbor from within gear cluster, remove front and rear bearing rollers and bearing spacer.

REASSEMBLY OF TRANSMISSION: Reverse the disassembly data above and note the following important points:

Countershaft Free-wheeling Gear Assembly—Install key and free-wheeling control sleeve on forward end of gear cluster, hook anchor ends of both springs in holes in gear cluster so that springs wrap around in right hand direction from anchor end. Place roller cage over gear with lugs over spring anchors, rotate cage clockwise until lugs are over slots in control sleeve, make certain that spring ends have snapped into grooves in cage. Slide control sleeve forward until cage lugs fully engage sleeve. Install free-wheeling rollers (use cup grease to hold rollers in position), install thrustwasher, slide free-wheeling gear on gear cluster, install gear bearing rollers (45 rollers), install steel thrustwasher and bronze thrustwasher (steel washer next to gear).

Countergear Cluster Installation—Place assembly in bottom of case making certain that steel and bronze thrustwashers in place at each end of assembly (steel washer next to gear, bronze washer next to case). **After main drive gear has been installed,** lift assembly up and insert countershaft from rear (pushing arbor out through front of case), make certain that thrustwashers in place and that countershaft locking key installed in slot in rear end of shaft. Check gear cluster endplay which should be .002-.008". Adjust by installing bronze thrustwashers of correct thickness (.087", .090", .093", .096" thick).

Main Drive Gear Installation—Install main drive gear assembly in case, then install bearing retainer **without any gasket,** tighten retainer capscrews. Measure clearance between retainer flange and face of case with a feeler gauge, select a **gasket of same thickness as measured clearance** (or nearest oversize), remove retainer and re-install with this gasket under the flange, use rubber gasket on each retainer capscrew.

►***CAUTION—Rubber gaskets must be used on retainer capscrews and these screws securely tightened to prevent oil leaks at this point.***

Mainshaft Assembly—Note following points when assembling parts on shaft:

Rear Bearing Snap Ring—Select thickest snap ring which can be installed to obtain minimum endplay.

C NTINUED ON NEXT PAGE

CHRYSLER PRESTOMATIC, DE SOTO TIP-TOE SHIFT, DODGE GYROMATIC (C nt.)

This snap ring furnished .087", .093", .098" thick.

3rd.-&-Direct Speed Gear Assembly—Install rear thrust washer with recess side toward rear of shaft and indexed with shaft splines. Assemble bearings in gear as follows: insert thrust bearing in gear race with largest hole first with grooved end toward front of shaft, then install set of 36 bearing rollers in forward end of gear (use cup grease to hold rollers in place), insert bearing spacer, install second set of 36 bearing rollers, install needle bearing thrust-washer. Install gear and bearing assembly on shaft, install thrust bearing, washer, and snap ring (use thimble tool C-717 to install snap ring, drive ring into position with driver portion of tool and soft mallet). Then check gear endplay as follows:

3rd.-&-Direct Speed Gear Endplay—Check clearance between bearing thrust washer and snap ring with a feeler gauge. If not within .003-.008", select snap ring of correct thickness to give this endplay. Ring furnished .087", .092", .097", .101" thick.

Extension Housing—If oil seal being replaced, use puller C-748 to remove old seal, drive new oil seal into housing until it protrudes 3/32" beyond rear face of housing. When installing extension housing on mainshaft, see that oil pump drive pin aligned with slot in oil pump inner rotor.

Mainshaft & Extension Housing Installation—See that free-wheel control sleeve is back toward rear of case and engaged in groove of direct speed clutch sleeve. Position blocker ring in direct speed clutch sleeve with large end of taper forward and anchor lugs back, install blocker spring and blocker spring washer (coat lightly with grease to hold in place). Insert mainshaft assembly through rear of case, align paint marks on clutch sleeve and gear (see Note below), and index teeth on gear hub with center tooth in sleeve. See that lugs on blocker ring are aligned with slots in gear hub.

►***CAUTION—Do not force mainshaft assembly into place (shaft should enter freely if parts aligned as above).***

►**Direct Speed Clutch Sleeve & Gear Marks**—These marks are made in production after selective matching for approximately .005" min. backlash.

Direct Speed Shift Rail Installation—Install shaft with offset screwdriver slot in rear end horizontal and smallest shoulder toward side of case. This is necessary to position setscrew hole in rail properly

TESTING: Before checking transmission, make certain that engine tuned up so that it idles smoothly at 450-475 RPM. and that throttle linkage operates freely. Check oil level in transmission case (see LUBRICATION above). Raise right side of front floor mat, remove floor panel access cover over transmission. Inspect all control wiring and tighten connections. Use test lamp with insulated leads and make following tests in order given:

1) Circuit Breaker & Wiring—Connect test lamp, between ignition coil side of circuit breaker and ground. Lamp should light when ignition turned on. If not, check connections and replace wire. Connect test lamp between solenoid side of circuit breaker and ground. Lamp should light when ignition switch turned on. If not, replace circuit breaker (NOTE—if circuit breaker clicks indicating a ground, check solenoid and slow-closing throttle unit and wires connecting these units for short-circuit or ground). Connect test lamp between red-wire terminal of solenoid and ground. Lamp should light when ignition turned on. If not, replace this red wire. Connect test lamp between brown-wire terminal of slow-closing throttle unit and ground. Lamp should light when ignition turned on. If not, replace wire.

2) Slow-closing Throttle (Anti-Stall)—Turn ignition switch on. Place a steel screwdriver on peened rivet head on coil (on top of carburetor). If no magnetic "pull" noted, replace slow-closing throttle.

3) Solenoid—Connect test lamp between two solenoid terminals. Lamp should light with ignition on (indicates that circuits to and from solenoid are operating). Hold steel screwdriver or other steel tool against solenoid body. Turn ignition on and off. If no magnetic "pull" noted with ignition on, remove solenoid and test as follows: Connect solenoid to a battery independently of the car wiring. Solenoid plunger should move outward and force of 25 lbs. should be required to push plunger in. If not, replace solenoid.

4) Governor—Connect test lamp between governor terminal and red-wire (feed) terminal on solenoid. Lamp should light with ignition on (if not, governor contacts are open). Raise rear end of car and securely block car so that engine can be run with transmission engaged. Start engine, place gearshift lever in High Range, accelerate engine to 14 MPH. and note test lamp. Lamp should go out at approximately 14 MPH. (governor contacts opening) and should come on again when speed dropped to approximately 12 MPH. (governor contacts closing). If governor does not operate correctly, remove and examine governor cover and switch assembly. Leave car blocked up and transmission in High Range for tests (5) and (6) following.

►**Replacement Governor Note**—Governor Cover & Switch Assembly, No. 1126639, furnished separately for replacement (not necessary to replace entire unit if trouble found in switch).

5) Kickdown Switch—With test lamp connected as for governor test (above), run engine at car speed between 15 MPH. and 40 MPH., push kickdown switch plunger in by hand. Lamp should light with plunger in (contacts closed) and should go out when plunger released (contacts open).
See "Chrysler & DeSoto Kickdown Switch" in Carburetion Equipment Section.

6) Ignition Interrupter Switch—Disconnect blue-wire at interrupter switch terminal, connect test lamp between this switch terminal and red-wire terminal on solenoid. Run engine with gearshift lever in High Range, accelerate engine to 15 MPH., then slowly decelerate to 8 MPH. On deceleration, from approximately 12 MPH. to 10 MPH., test lamp should show a faint glow (switch contacts closed).

7) Ignition Interrupter Resistor—With engine running, ground blue wire at resistor or at interrupter switch terminal. Engine should stall. If engine continues to run, check resistor and wires from resistor to coil and to interrupter switch for open-circuit.

Hydraulic System Test: Disconnect both wires at interrupter switch, remove switch. Block up rear of car so that engine can be run with transmission engaged. Place gearshift control in Low Range. Operate engine and slowly accelerate while watching direct speed piston through interrupter switch hole. Piston should move forward just enough to cover this hole at 8 MPH. indicating that oil pressure is correct (38-40 lbs.). If piston does not move forward at approximately 8 MPH., piston is stuck or worn or oil pump is not functioning.

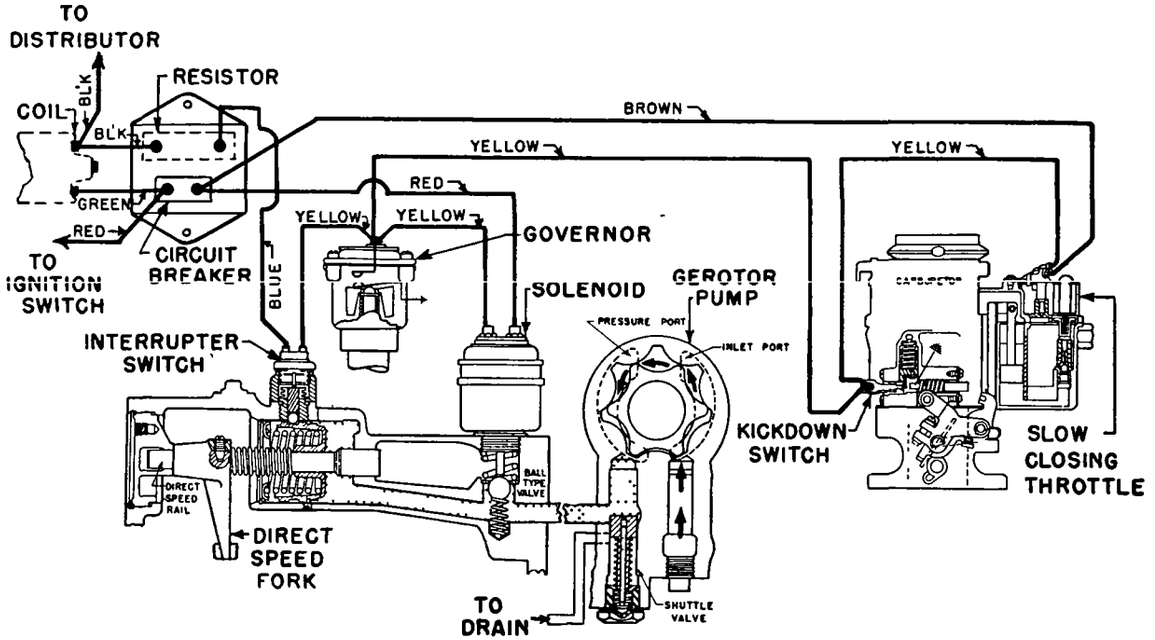

TRANSMISSION CONTROL UNIT WIRING DIAGRAM

HUDSON SUPER-MATIC DRIVE

Hudson Pacemaker, Model 500 (1950)

DESCRIPTION: Super-Matic Drive consists of a three-speed transmission and overdrive unit with automatic shift mechanism and automatic clutch control. With this installation, whenever Super-Matic "On" button is pushed in, and Automatic 4th-Speed Button pushed in, operation is entirely automatic and controlled by the accelerator pedal (shifts up-and-down through 2nd-3rd-4th automatically and dependent on accelerator pedal position and car speed). An ultra-low gear is also provided and is engaged manually when required. *NOTE*—Fourth speed can be locked out when desired by pulling out Automatic 4th-Speed Button (provides automatic 2nd-3rd up-and-down shifts) or entire automatic shifting can be cut out by pressing Super-Matic "Off" button (car is then operated conventionally by using clutch pedal and gearshift lever).

Upshift Speeds

2nd-to-3rd①	Above 14 MPH.
3rd-to-4th①	Above 22 MPH.

Downshift Speeds

4th-to-3rd (Normal)	18 MPH.
4th-to-3rd (Kick-down)	..②
3rd-to-2nd	12 MPH.

①—Engaged by releasing accelerator pedal momentarily.

②—At any speed above 18 MPH. by fully depressing accelerator pedal.

DISASSEMBLY & OVERHAUL: Super-Matic Drive units can be serviced separately as follows:

Clutch Control: *See "Hudson Vacumotive Drive" data on Page 206.*

Automatic Shift Control: *See "Hudson Drive-Master" data on this page.*

Transmission: *See "Hudson Transmission" data on this page (following).*

Overdrive: *See "Warner Type R10" Overdrive data on Page 234.*

HUDSON SYNCHRO-MESH

Hudson 6 & 8, All Models (1949)
Hudson Pacemaker, Model 500 (1950)

►**OVERDRIVE TRANSMISSION NOTE:** Warner Type R10D Overdrive Optl. and used in conjunction with this transmission. *See "Warner Type R10 Overdrive" for overdrive data.*

►**DRIVE-MASTER & SUPER-MATIC DRIVE TRANSMISSION NOTE:** Data on this Std. transmission applies to transmissions used in Drive-Master or Super-Matic installations. *See separate Drive-Master and Super-Matic Drive data also.*

DESCRIPTION: Three-speed, constant-mesh, synchro-mesh type of same design used on 1948 models.

DISASSEMBLY & REASSEMBLY: *See complete "1948 Hudson" Transmission in previous release.*

HUDSON DRIVE-MASTER

Hudson 6 & 8, All Models (1949)
Hudson Pacemaker, Model 500 (1950)

►**OVERDRIVE TRANSMISSION NOTE:** Overdrive is separate option and may be found installed on cars with Drive-Master Transmission. Overdrive unit is Warner Type R10D. *See Warner Type R10 Overdrive data.*

DESCRIPTION: Drive-Master transmission consists of a conventional 3-speed transmission with automatic controls as follows:

Vacumotive Drive: Automatic clutch control similar to type used on cars without Drive-Master except for Throttle Lock for which adjustments are given below. *See Hudson Vacumotive Drive data.*

Drive-Master Control Units: Similar to design used on previous Hudson models except for different mounting of units and necessary linkage changes as follows:

Transmission Power Unit—Complete unit (Power Cylinder, Transfer Diaphragm Cylinder, and Solenoid Valves) mounted on bracket bolted on left side of engine block.

Transmission Switch—Mounted on power unit mounting bracket on left side of engine.

Transfer Mechanism—Mounted on bracket on rear of power unit mounting. Unit is new design three-lever type with power lever (inner) linked to power cylinder by non-adjustable strap, manual lever (outer) linked to gearshift lever on steering column, and center gear engagement lever linked to shift lever on transmission case by new adjustable rod. This center lever has transfer key (operated by Transfer Diaphragm Cylinder) by which lever is locked to inner lever (for automatic shifting), or outer lever (for manual shifting). Detent ball and spring is provided for both inner and outer levers to positively locate them in each gear position.

Instrument Panel Control Switch (1949 6 & 8): Rotary type on instrument panel.
Center "Off" Position—Manual gear shifting and clutch operation.
Left "On" Position—Manual gear shifting with automatic clutch operation (Vacumotive Drive on).
Right "On" Position—Automatic gear shifting and clutch operation (Drive-Master & Vacumotive Drive on).

Instrument Panel Control Switch (1950 Pacemaker): Two-button type on instrument panel.
Left "OFF" Button—Pressing button in provides manual gearshifting and clutch operation.
Right "HDM" Button—Pressing button in provides automatic gearshifting and clutch operation.

Drive-Master Fuse: Located on back of switch (1949), in cartridge type holder in switch lead (1950).
Fuse Capacity (1949)—10 ampere.
(1950) Pacemaker)—15 ampere.

CONTINUED ON NEXT PAGE

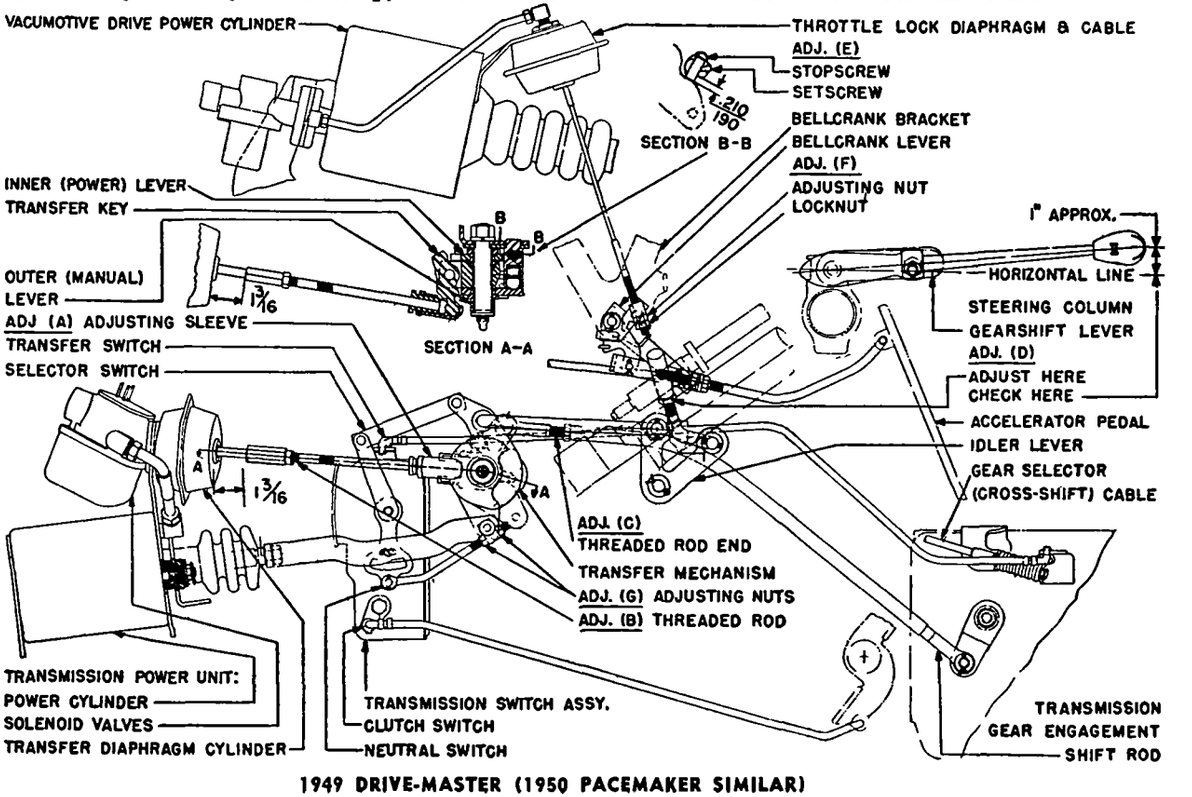

1949 DRIVE-MASTER (1950 PACEMAKER SIMILAR)

DRIVE-MASTER (C nt.)

OPERATION: All units operate in exactly same manner as on previous models. Shifting limits are as follows:

Automatic Second-to-High Shift—9.5 to 14 MPH.

Automatic High-to-Second Shift—9 to 12 MPH.

Vacumotive Drive Cutout (In High Gear)—16 MPH. (minimum), 21 MPH. (maximum) and must be inoperative at all higher speeds.

CHECKING & ADJUSTMENT: Check all of the following points before making any Drive-Master adjustments:

1. Engine Performance—Engine vacuum reading should be 17-18" to insure proper engine performance and Drive-Master operation.

2. Vacuum Connections—Check lines for leaks.

3. Battery—In good condition and not discharged (gravity reading of not less than 1225).

4. All Electrical Connections Clean & Tight—Check following plug connectors particularly: Clutch Power Unit Solenoids, Accelerator Switch, Transmission Power Unit, Transmission Switch, Governor, and Shift Rail Terminal.

5. Accelerator Linkage—Must work freely and return solidly against stop on accelerator switch when accelerator pedal is released. This is important to insure clutch release (necessary for Drive-Master operation).

6. Clutch Pedal Free Travel—Must be 1½". Starter switch must become operative before pedal is within 2" of floor.

7. Vacumotive Drive Operation—Check operation and make all necessary Vacumotive Drive adjustments.
See Hudson Vacumotive Drive data.

8. Drive-Master Adjustment—After all above points checked, adjust Drive-Master units in following order:

(A) Transfer Key Ball Joint: Joint at transfer key end of diaphragm cylinder rod must operate freely without any perceptible endplay. To adjust, loosen locknut on rod, turn adjusting sleeve inward to take up all play. Ball joint must work freely.

Lubrication Note—Lubricate with viscous chassis lubricant through grease fitting on transfer key (pull diaphragm rod forward for clearance).

(B) 1949 Transfer Diaphragm Rod: With steering column shift lever and outer lever of transfer mechanism in neutral, check distance from rear face of diaphragm cylinder to front face of rod end (round portion of rod), which should be 1 3/16". To adjust, **hold diaphragm rod from turning** with wrench on hexagonal end, loosen locknut, turn outer rod in or out (knurled section provided for gripping with pliers).

1950 Pacemaker—With engine not running, place steering column shift lever in High Gear, adjust length of selector diaphragm rod by loosening locknut and turning rod (knurled section provided for gripping rod with pliers) until selector key bottoms solidly in slot in hand shift lever. Check this adjustment by starting engine and shifting transmission to Neutral—selector key should bottom solidly in slot in power shift lever.

►***CAUTION—Do not allow diaphragm rod to turn when adjusting (will damage diaphragm).***

(C) 1949 Transmission Shift Rod: With transmission in neutral, disconnect shift rod front end (center lever connection at transfer mechanism). Push or pull slightly on rod until neutral cross-over action is free, see that gear engagement lever is in neutral position (jiggle lever to engage neutral detent), adjust rod length by loosening locknut and turning end fitting so rod can be connected without disturbing position of transmission shift lever or transfer gear engagement lever. Connect rod and recheck cross-over action. Re-adjust by shortening or lengthening rod ½-turn at a time until action is free.

1950 Pacemaker—Check rod in same manner as 1949 models (above), adjust by backing off one nut and tightening opposite nut at end fitting on forward end of rod.

(D) Manual Lever (Gearshift Lever Position): Adjust rod linking shifter shaft on steering column to idler lever at lower end of column (loosen locknut and turn rod in end fitting) until gearshift lever under steering wheel is approximately 1" above a horizontal position in neutral.

(E) Power Lever Stop: Run the engine for vacuum, place control switch in HDM position (right hand "on" position), shift to second gear. Turn stopscrew on transfer mechanism down until it just contacts power lever (inner lever), then **turn stopscrew down additional ½-turn,** tighten Allen head setscrew to lock stopscrew in this position.

(F) Throttle Lock: Run engine and connect jumper wire from battery negative post or other hot terminal to either of the two upper throttle lock solenoid terminal pins (lower pin not used) to cause throttle lock to operate. Loosen locknut and turn adjusting nut on threaded fitting at lower end of throttle lock cable until accelerator pedal bellcrank lever is held solidly against stop on bellcrank bracket when accelerator pedal is depressed, tighten locknut.

►***CAUTION—Cable must not be adjusted so short that accelerator cross-shaft is deflected when throttle lock operates.***

(G) Neutral Switch: Run engine with control switch HDM position, shift transmission to neutral. Disconnect transmission shift rod at forward end (center lever of transfer mechanism), move gear shift lever on steering column to Second Gear position, then back to Neutral position. Jiggle shift rod until cross-over action in transmission is free. Check length of shift lever rod in relation to position of transfer mechanism lever from which it was disconnected but **do not change adjustment of this rod.** Adjust neutral switch rod length (see below), then repeat test procedure (move gearshift lever to Second, back to Neutral, check rod length), until gear shift rod can be connected without disturbing position of levers.

►***CAUTION—Do not change transmission shift rod length when making this adjustment.***

Neutral Switch Rod Adjustment—Adjust by backing off one nut, and tightening opposite nut, on threaded end of neutral switch rod at transfer mechanism center lever. If transmission shift rod appeared to be too short when making above test, **shorten** neutral switch rod by turning up rear nut, if shift rod appeared to be too long, **lengthen** neutral switch rod by turning up front nut. Tighten opposite nut to lock adjustment in each case.

Final Performance Check: After all adjustments completed, check for free cross-over action (gear shift lever must return to second-high side from any position in neutral) and transfer key should move from engagement with power lever to engagement with manual lever as steering column gear shift lever is moved upward in neutral.

►*NOTE*—If cross-over action not free, recheck Transmission Shift Rod Adjustment (C) and Power Lever Stop Adjustment (E) above. See that cross-over switch rod is centered in clip at clutch housing.

DRIVE-MASTER SERVICING: All units which do not operate satisfactorily after adjustment should be replaced.

TRANSMISSION SERVICING: See Hudson std. transmission article.

REMOVAL & INSTALLATION OF DRIVE-MASTER: Units can be removed separately as follows:

Power Cylinder & Transfer Diaphragm: Disconnect diaphragm engaging rod from rod end, disconnect shift strap by removing bolt attaching strap to power cylinder. Disconnect battery cables, remove battery and battery tray and support. Disconnect vacuum lines at transfer diaphragm solenoids. Remove cotter pins, nuts, ferrules, washers, and rubber bushings from power cylinder mounting studs, remove power cylinder and diaphragm assembly.

►*INSTALLATION CAUTION*—Adjust Transfer Key Ball Joint (Adjustment A), and Transfer Diaphragm Rod (Adjustment B) after unit re-installed.

Transmission Control Switch: Remove distributor (6 Cyl. models only). Disconnect clutch operating rod, transfer switch rod, neutral and limit switch rod, and selector switch rod. Disconnect wiring harness plug. Remove bolt, lockwasher, and nut at top and bottom of switch, remove switch from mounting bracket.

Drive-Master Shift Shaft & Shift Shaft Levers: Remove shift shaft nut at rear of support bracket (disconnect transfer switch rod at switch for wrench clearance). Disconnect power shift rod by taking out cotter pin and clevis pin. Slide shift shaft out toward fender (CAUTION—use care not to lose detent balls and springs which may fall out of retainers).

►*INSTALLATION CAUTION*—When re-installing shift shaft, lubricate detent balls with water-resistant grease and make certain detent ball springs correctly positioned as follows:

Hand Shift Lever Detent Ball Spring—Part No. 163442 (19 pound tension when compressed to 11/16"). Install this spring in Drive-Master mounting bracket pin for hand shift lever assembly.

Power Shift Lever Detent Ball Spring—Part No. 41236 (30 pound tension when compressed to 13/16"). Install this spring in shift shaft mounting bracket recess.

►*TRANSFER KEY HUB BUSHING REPLACEMENT*—If replacement of this bushing necessary, remove old bushing with driver having .625" pilot. Install new bushing (bushing inside diameter after assembly must be .625-.626").

NOTE—Shift shaft bushings also have inside diameter of .625-.626" to allow shaft clearance of .0025-.0035".

FORD, LINCOLN, MERCURY TRANSMISSIONS

Ford 6 & V8 Pass. Car Models (1949-50)
Lincoln & Cosmopolitan, 9EL & 9EH ('49)—See Note
Mercury, V8 Models (1949-50)

►NOTES, CAUTIONS, & CHANGES

►**Lincoln Transmission Note**—Transmission is Warner Type AS1-T85B (No Overdrive), AS2-T85B (With Overdrive).

Data below applies to these transmissions.

►**Ford Transmission Locking In Reverse Complaints (Transmission without Overdrive)**—May be caused by mainshaft drive gear snap ring or mainshaft rear bearing snap ring not correctly installed (see illustration). Correct by disassembling transmission (remove mainshaft assembly from extension housing) and checking these snap rings.

See Disassembly & Reassembly data below.

►**Ford Overdrive Transmission on First Cars Inoperative in Reverse (Reverse Lock-out Inoperative)**—May be due to use of wrong Reverse Shifter Fork Cam & Shaft (8A-7282-A instead of 8A-7282-B). Check and correct this condition as follows:

To Check—Place gearshift lever in Reverse position. Release hand brake. Push car **forward**. If car rolls freely, this indicates wrong cam installed.

To Correct—Disassemble Overdrive and install new No. 8A-7282-B Reverse Shifter Fork Cam & Shaft which provides automatic lock-out for Reverse Gear.

See "Ford, Lincoln, Mercury Overdrive" (following) for disassembly directions.

►**Ford Overdrive Transmission Noisy in Operation**—May be caused by interference between overdrive case and rear engine support. Correct this as follows:

(1) Interference between Rear Engine Support Bolt and Overdrive Case—Correct by grinding off head of bolt for clearance. Thin head bolt No. 355519-S2 used at this point on later cars.

►***CAUTION—Bolt head thickness must not be less than ⅛".***

(2) Interference between Rear Engine Support & Overdrive Case—Case is grooved for clearance at flanges on support. If grooves in case not deep enough (particularly at ends where casting flash protrudes), clean up this flash and deepen grooves by filing.

DESCRIPTION: Three-speed, all helical gear type with constant-mesh, synchro-mesh (Second & High), sliding gear (Low & Reverse). Overdrive is optional. Std. transmission has extension housing at rear which has rear engine mounting. Mainshaft extends through extension housing with splines at rear end for propeller shaft engagement (front universal yoke hub slides on shaft—no slip-joint used on propeller shaft).

REMOVAL OF TRANSMISSION: ***See "Transmission" on car model page.***

OVERDRIVE SERVICING NOTE: On transmission with Overdrive, overdrive unit can be disassembled and serviced separately without disturbing transmission.

See "Ford, Lincoln, Mercury Overdrive" (following).

TRANSMISSION DISASSEMBLY: Take out mounting screws and remove gearshift housing (side cover) assembly. Drive countershaft and reverse idler shaft pin out through case side (Ford & Mercury, Lincoln shafts locked by separate key in rear end of each shaft). Take out extension housing screws, rotate extension housing ¼ turn to expose end of countershaft, drive countershaft to rear until it clears front of case, use Tool 7121-N (or counter shaft cut to length of countergear cluster) to push countershaft out through rear of case (leave tool or dummy shaft in gear cluster to retain bearing rollers), drop gear cluster to bottom of case. Tap lightly on extension housing to loosen it from case, withdraw housing and mainshaft assembly from case (CAUTION—use care not to lose mainshaft pilot bearing rollers). Lift countergear cluster and thrustwashers from case, remove tool and take out bearing retainers, rollers, and spacer. Take out capscrews in bearing retainer on front of case, remove retainer and gasket. Tap main drive gear assembly out through front of case, using a soft hammer. To remove reverse idler gear, use brass drift to drive shaft out, lift gear out. Disassemble and service subassemblies as follows:

Mainshaft & Extension Housing Assembly: Remove snap ring in front of rear bearing in extension housing, use a soft hammer to tap mainshaft and bearing out of housing. Remove snap ring on forward end of mainshaft, pull or press synchronizer assembly, 2nd speed gear, and sliding gear off shaft. On Lincoln, remove speedometer gear snap rings, remove speedometer gear and woodruff key. On all models, remove bearing snap ring from groove in shaft (on Ford & Mercury, this snap ring retains speedometer gear also—note position of shoulder on gear to insure correct reassembly—remove gear and woodruff key). Press rear bearing off shaft.

Extension Housing Oil Seal & Bushing: Oil seal and bushing can be replaced after mainshaft removed from housing.

TRANSMISSION REASSEMBLY: Assemble all subassemblies as noted below and install in transmission by reversing the disassembly directions given above.

Reverse Idler Gear: Ford & Mercury gear has bushing, Lincoln gear has 25 bearing rollers and thrust washer at each end. Install gear with chamfered end of teeth forward, see that locking pin hole in line with hole in case (Ford & Mercury), install key in slot in rear end of shaft (Lincoln).

Countergear Cluster: Place bearing spacer in gear cluster, insert tool 7121-N (or dummy countershaft cut to length of gear cluster), install bearing rollers in each end (on Lincoln, two sets of 20 bearing rollers used at each end with retainer washer at outer end of each set). Coat thrustwashers with grease to hold them in position, install bearing retainer in each end of gear cluster. Install front thrust washer so that tongue will enter groove in case when assembly installed, place rear thrust washer with slotted hole on gear cluster with babbitted face out toward steel washer which must be next to case. Place this assembly in the case and **after** mainshaft installed, raise assembly and insert

CONTINUED ON NEXT PAGE

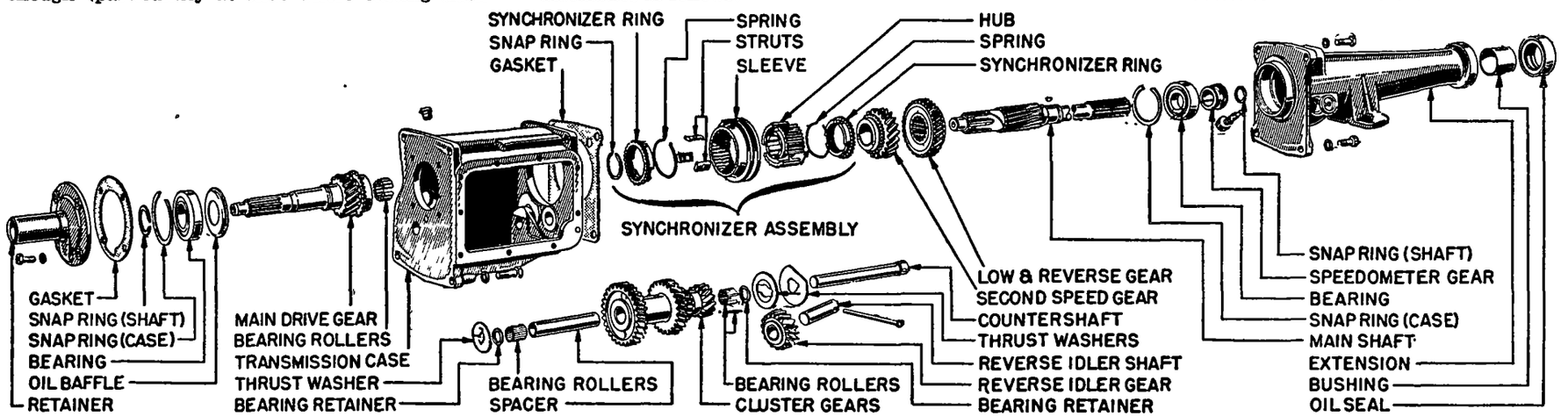

FORD & MERCURY TRANSMISSI N (LINC LN SIMILAR)

FORD, LINCOLN, MERCURY TRANSMISSIONS (C nt.)

countershaft from rear, pushing dummy shaft out at front of case. On Ford & Mercury, align locking pin hole in shaft with hole in case, install locking pin through reverse idler and countershafts. On Lincoln, install locking key in slot in rear end of shaft before shaft fully inserted in case. On Ford & Mercury, countergear endplay should be .0045-.0085" (new), .0265" (worn limit).

Main Drive Gear Assembly: Install oil baffle and drive gear bearing on shaft, press bearing in place firmly, install snap ring in shaft groove (see Lincoln Note below). Install snap ring in groove in bearing. Install main drive gear in case. Use new gasket with retainer (Lincoln gasket furnished in thicknesses of .010", .015", .020", .025" for selective fitting), make certain oil drain groove in retainer is at bottom.

Lincoln Snap Ring Note—This shaft snap ring furnished in thicknesses of .086-.088", .089-.091", .092-.094", .095-.097" for selective fitting).

Synchronizer Assembly: Install synchronizer springs at each end of hub with spring openings staggered. Install three struts on hub, slide outer clutch sleeve over the assembly. Place synchronizer ring on each end of assembly making certain that struts engage slots in rings.

Mainshaft Assembly: Use special press tool 7699-N to install new bushing in rear end of extension housing, install oil seal. Press rear bearing in place on mainshaft. On Ford & Mercury, install speedometer gear key and gear (on Lincoln, speedometer gear is mounted separately on shaft). Select snap ring of correct thickness and install in groove in shaft. This snap ring furnished in following thicknesses: (Ford & Mercury) .090", .093", .096", .100". On Lincoln, install speedometer gear on shaft with woodruff key in gear and snap ring in shaft groove. Install sliding gear, 2nd. speed gear, and synchronizer assembly on shaft, install snap ring in shaft groove to retain assemblies. Check 2nd. speed gear endplay which should be .003-.011" (new), .023" (worn limit) on Ford & Mercury.

Mainshaft & Extension Housing Installation: Install mainshaft assembly in extension housing, seating rear bearing firmly in housing recess (Ford and Mercury), against bearing rear snap ring (Lincoln). Select snap ring for correct fit—this ring furnished in following sizes (Ford & Mercury) Thin .086-.088", Medium .089-.091", Thick .092-.094", Extra Thick .095-.097", (Lincoln) .087-.089", .090-.092", .093-.095", .096-.098", .099-.101" for selective fitting, install ring in housing to retain bearing. Make certain pilot bearing rollers in place in recess in main drive gear (use cup grease to hold rollers in place), use new gasket on extension housing, insert mainshaft assembly through rear of case and enter shaft in pilot bearing. Turn extension housing to permit countershaft to be installed (see Countergear Cluster above), install extension case washers and capscrews.

►*CAUTION—On Ford & Mercury, use lead washers on two lower extension case capscrews and secure these screws with lockwire.*

FORD, LINCOLN, MERCURY-WARNER OVERDRIVE

Car Model	Warner Model
Ford 6 & V8 Pass. Cars (1949-50)	①AS1-R10E
Ford Sta. Wgn. & Convt. (1949-50)	①AS3-R10E
Lincoln, Models 9EH, 9EL (1949)	②AS2-T85B
Mercury, V8 Models (1949-50)	①AS1-R10C

①—Overdrive unit only (Ford Transmission).
②—Transmission with Type R10 Overdrive.

►NOTES, CAUTIONS, & CHANGES

►**PROLONGED SHORTING OF IGNITION CORRECTION:** If shorting out of ignition during Overdrive Kick-down is prolonged (normal shorting out period is very brief), correct by installing insulator inside solenoid cover as follows: Make up insulator strip from treated paper .03" thick, .76" wide, 2.38" long with hole for cover screw .25" from each end. To install insulator, remove terminal screws, nuts, and lockwashers on side of cover, remove cover, place insulator over cover studs, re-install cover.

►**OVERDRIVE SOLENOID SHORTING OUT (Convertible Models):** Correct by installing new RUBBER-COATED solenoid, No. 8A-6916-C, which will prevent this shorting out in wet weather.

►**OVERDRIVE NOT ENGAGING CORRECTION (Convertible Models):** Check sliding pawl operating rod lever (in adapter) for binding or sticking. If this condition noted, remove solenoid and adapter, disassemble linkage, polish pins and pawl operating rod to provide free movement of rod through seals in plate.

►**OVERDRIVE GOVERNOR PRODUCTION CHANGE:** New type governor used which is interchangeable with first type **except on Convertibles.** Governors can be distinguished as follows:

First Type—Unpainted Body with Bakelite Top.

Later Type—Body painted Black, Top unpainted.

►*CAUTION—Later type governor cannot be installed on Convertible models (will not clear X-member).*

DESCRIPTION: Solenoid operated type similar in design to other Warner Type R10 Overdrives except for different overdrive case and rear bearing construction which requires different disassembly directions as given below. Overdrive used on Ford Station Wagons and Convertible models has special solenoid and adapter as follows:

Ford Solenoid Assemblies: Special type Solenoid, Ford No. 8A-6916 (used with 8A-6925 Adapter on AS3-R10E Overdrives) can be distinguished from std. solenoid Ford No. 8M-6916 (used with AS1-R10E Overdrive) by location of pawl flats on solenoid plunger as follows:

8A-6916—Flats are 5° counter-clockwise from line at right angles to center line through mounting screw holes.

CONTINUED N NEXT PAGE

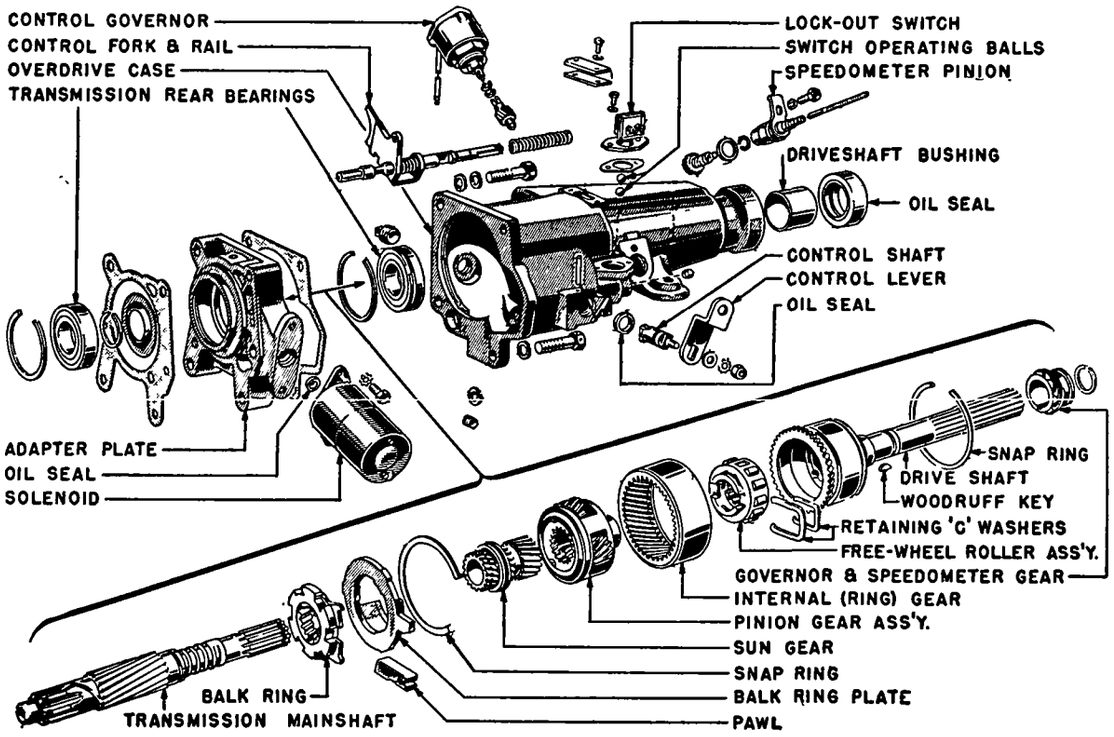

FORD & MERCURY WARNER OVERDRIVE (LINCOLN SIMILAR)
►FORD CONVERTIBLE & STATION WAGON HAVE OFFSET MOUNTED SOLENOID

FORD, LINCOLN, MERCURY
WARNER OVERDRIVE (Con..)

8M-6916—Flats are 35° counter-clockwise from center-line through mounting screw holes.

►*CAUTION—These solenoids not interchangeable.*

Ford Solenoid Adapter (AS3-R10E Overdrive): Ford No. 8A-6925. Consists of a case bolted on the overdrive housing providing for offset mounting of solenoid (for clearance in special "X" type frame). Adapter has idler lever and plunger which engages sun gear pawl (solenoid actuates lever).

REMOVAL OF OVERDRIVE: *See "Overdrive" on car model page.*

DISASSEMBLY OF OVERDRIVE: Remove Lock-out Switch and switch operating balls, remove governor and speedometer drive pinion. Remove solenoid by taking out mounting screws and rotating solenoid 55° clockwise (85° on Convertible & Station Wagon) to disengage plunger from pawl, then pull solenoid and plunger out. Drive out tapered pin holding control lever shaft in overdrive case, pull shaft out as far as possible to disengage operating cam from shift rail. Take out four mounting screws holding overdrive case and adapter on transmission case. Remove small rectangular cover plate on top of case by taking out two screws. Working through slot under this plate, spread bearing snap ring with special pliers 7059-N to free rear bearing. Withdraw overdrive case while pressing forward on rear end of shaft to prevent shaft coming off with housing (this would allow free-wheeling rollers to drop out). CAUTION—Do not allow adapter plate to separate from transmission case. Disassemble overdrive parts as follows:

Overdrive Case & Control Mechanism: Remove reverse lock-up spring from case. Remove lever on end of control shaft, push shaft through and remove from within housing, remove shaft oil seal from case. Compress rear bearing snap ring (insert pliers through slot in case), remove ring. Bushing and oil seal at rear end of case are similar to regular transmission. *See Extension Housing data in Ford-Lincoln-Mercury Transmission article.*

Driveshaft & Gear Assembly: Install one screw to retain adapter plate on transmission case, pull driveshaft off to rear (CAUTION—catch free-wheel rollers as they drop out). If bearing to be removed from shaft, take out snap ring and remove speedometer gear taking care not to lose woodruff key from gear (on Lincoln, remove both speedometer gear snap rings and additional snap ring at rear of bearing), remove bearing. Take out retaining clip ("C" washer) at rear of free-wheel cam, withdraw free-wheel unit and pinion assembly (these two parts can be separated by removing "C" washer ahead of free wheel cam). Remove overdrive sun gear and shift rail assembly as a unit by sliding them off rear of shaft.

Adapter Plate & Sun Gear Mounting: Remove large snap ring from adapter plate, withdraw sun gear cover plate, balk ring blocker assembly, and solenoid pawl.

NOTE—Adapter plate is removed as a unit with transmission mainshaft. Do not disturb unless transmission being disassembled.

REASSEMBLY OF OVERDRIVE: Assemble in reverse order of disassembly directions above. Note the following important points:

Sun Gear Balk Ring, Pawl & Solenoid: After balk ring installed, insert pawl with notch on side downward (Ford), upward (Lincoln & Mercury—on Mercury, interlock plunger engages this notch), position cover plate with tongue over pawl, install large snap ring (this ring furnished in three thicknesses for selective fitting). When installing solenoid (after assembly completed), insert plunger stem with solenoid rotated clockwise 55° (85° on Convertible & Station Wagon) from mounted position to align plunger flats with pawl slot, then rotate solenoid counter-clockwise until mounting screw holes aligned. This will engage plunger in pawl.

Free-wheel Assembly: If free-wheel roller retainer and springs removed from cam, first note position of springs and replace in exact same positions. Springs must place tension on cam so that it is normally rotated counter-clockwise in retainer (viewed from rear) with rollers on "high" ends of cam ramps (outward or engaged position).

Overdrive Pinion & Free-wheel Assemblies: With these parts installed and retaining clips in place, insert free-wheel rollers in retainer and use rubber band to hold them in place while mainshaft being installed.

Overdrive Mainshaft: Bearing should be installed on shaft with snap ring groove toward front (Ford & Mercury), toward rear (Lincoln), speedometer and governor drive gear must be keyed on shaft and placed with long shoulder on gear toward bearing (Ford & Mercury only—gear installed separately on Lincoln). Snap ring behind gear (directly behind bearing on Lincoln) must be tight fit and prevent all endplay in shaft. This snap ring furnished in four thicknesses for selective fit. When installing shaft over free-wheel cam & roller assembly, rotate shaft counter-clockwise to move rollers to low or disengaged position.

Overdrive Case & Control Mechanism: Install bearing outer snap ring in groove in case with lugs on ring toward slot in housing and expand ring with pliers inserted through slot while case is being pushed on over mainshaft. Insert control shaft in case before case installed on shaft but do not install shaft lock-pin until after assembly completed and cam on shaft engaged in slot in shift rail. Install new oil seal on control shaft and position control lever upward (Ford & Lincoln), downward (Mercury). When installing mounting bolts, carefully align adapter plate and transmission case bolt holes.

OVERDRIVE CONTROL: *See Warner Type R10 Overdrive Control article.*

TRANSMISSION DISASSEMBLY & REASSEMBLY: *See Ford-Lincoln-Mercury Transmission article.*

LINCOLN HYDRA-MATIC DRIVE

Lincoln 9EL & Cosmopolitan 9EH (1949) Optl.

►**STARTING ENGINE BY PUSHING CAR**—Place selector lever in "N" position. When car speed reaches approximately 20 MPH., turn ignition on, move selector lever to "DR" position and car will crank engine.

►*CAUTION—Do not push car faster than 25 MPH. or for more than a short distance to prevent damage to transmission (see towing car below).*

►**TOWING OF CAR:** Disconnect propeller shaft at rear universal joint whenever necessary to tow car. Do not tow or coast car with engine shut off and selector lever in "N" position except when starting engine (above). This type operation requires that rear oil pump supply all oil pressure for transmission lubrication and release of rear band.

►*CAUTION—Serious damage to transmission may result under these conditions if oil pressure low for any reason.*

DESCRIPTION: Four-speed planetary type automatic transmission and fluid coupling. Similar to other Hydra-Matic installations.

LUBRICATION: Check fluid level every 1000 miles. Add fluid, as required, to maintain level at "F" mark on dip stick. Drain and replace fluid at 15000 mile intervals.

Checking Fluid Level—Set hand brake, place selector level in "N" position, start engine and allow it to idle until normal operating temperature is reached. Roll back front floor mat on right side, remove inspection cover in floor pan, clean all dirt and lint from floor and around oil indicator. Place selector lever in "DR" position and idle engine with lever in this position while checking level. Oil level should be between "L" and "F" marks on dip stick. If below "L", add oil as required to bring level up to "F" mark.

►*CAUTION—Do not check oil level when transmission temperature excessively high and do not fill above "F" on dip stick (will cause foaming when warm).*

Draining & Replacing Fluid—Drain oil only when warm (immediately after operation). Remove flywheel housing lower cover, drain fluid coupling (turn flywheel until hexagonal-head pipe plug on torus cover at lowest point, remove plug), drain transmission case (remove drain plug at back of pan). Replace both drain plugs. Install 8 qts. of Hydra-Matic Fluid through indicator hole on top of case, start engine and allow it to idle for several minutes, then check oil level (see directions above), add oil (approx. 4 qts.) to bring level to "F" mark on dip stick.

►*CAUTION—Correct fluid level is determined by dip stick mark rather than exact amount of fluid added.*

Capacity—Approximately 12 qts.
Recommended Fluid—Automatic Transmission Fluid Type "A". Furnished under Lincoln Part No. 8L-19582.

LINKAGE ADJUSTMENT: Make all linkage adjustments in order and exactly as follows:
(1) **Manual Control Linkage**—Disconnect manual control rod at transmission case by taking out clevis pin in manual control lever. Move manual control lever on transmission to "LO" position and make certain that detent is engaged. Move selector lever on steering column to "LO" position against the LO Range stop. Adjust clevis on transmission end of

CONTINUED N NEXT PA E

LINCOLN HYDRA-MATIC (C nt.)

control rod until clevis pin can just be inserted freely through clevis and control lever, **then lengthen rod by turning clevis one complete turn,** connect rod by installing clevis pin and cotter pin. NOTE—Bend control rod slightly, if necessary, to align clevis and control lever.

(2) **Throttle Linkage**—Make certain that engine idle speed set at 375-400 RPM. hot or slow idle speed with selector lever in "N" position. Disconnect carburetor throttle rod at clevis on rear end of rod at upper cross-shaft, disconnect lower throttle rod at lever on transmission case. Check position of transmission throttle lever with Gauge J-3298 and bend lever as necessary to align it with gauge. Insert linkage adjusting pin, Tool J-2544, through holes in lever and support bracket on throttle linkage lower cross-shaft. Adjust both rods as follows:

Carburetor Throttle Rod—Hold the carburetor throttle closed in the hot or slow idle speed position, adjust clevis on rear end of carburetor throttle rod so that clevis pin will just enter rod connection on upper cross-shaft freely, connect throttle rod (CAUTION—center line of clevis pin holes on rod must be in same plane as nibs on rod).

Transmission Throttle Rod—Hold transmission throttle lever back against its stop, adjust clevis on rear end of lower throttle rod until clevis pin can just be inserted freely through clevis and throttle lever, **then shorten rod by turning clevis one complete turn,** connect rod by installing clevis pin and cotter pin.

Remove linkage adjusting pin from lower cross-shaft lever. Check shift points by road-testing car after all adjustments completed.

(3) **Neutral Safety Switch**—Loosen switch mounting bracket clampscrews (on lower end of steering column at gearshift control lever). Place transmission selector lever in "DR" position. Rotate switch bracket on steering column so that starter circuit (switch contacts) are open in all selector lever positions except "N" neutral range, tighten bracket clampscrews.

SERVO BAND ADJUSTMENT: ***NOTE—Oil pan need not be removed if bands adjusted EXTERNALLY as follows:***

Adjustment (Externally using Tool J-2681 & Tachometer): ***CAUTION—Do not attempt to adjust bands by this method unless Tool J-2681 and accurate Tachometer available.***

1) Block front wheels securely and set hand brake firmly to prevent car moving while adjusting.
2) Remove front floor mat and adjusting hole cover over adjusting screws on left side of transmission.
3) Run engine until temperature is normal and engine idles at hot or slow idle speed of 375-400 RPM.
4) Connect and adjust tachometer for accurate recording of engine speed.
5) Place selector lever in "DR" position.
6) Adjust carburetor throttle stopscrew so that engine idles at exactly 700 RPM. Then adjust bands as follows:

Front Band (After steps 1 through 6)

7F) Install adjusting tool J-2681 on front band adjusting screw, loosen adjusting screw locknut (turn long handle while holding short handle stationary).

8F) Loosen band adjusting screw (turn short handle) until engine speed increases to 900-1000 RPM.

►***NOTE***—If no increase in engine speed noted when adjusting screw loosened, band has probably been slipping in service. Remove oil pan and inspect band and drum. With pan off, adjust band using gauge J-1693 and disregard following steps.

9F) Tighten band adjusting screw slowly until engine speed drops to 700 RPM., loosen adjusting screw until engine speed increases, then tighten adjusting screw until engine speed again drops to exactly 700 RPM., watch tachometer for 30 seconds to note any increase in engine speed. If increase noted, tighten adjusting screw 1/10 turn. Repeat this procedure until engine speed remains at 700 RPM. for at least 30 seconds,

10F) Set counter on adjusting tool to 00. Hold locknut stationary, **tighten adjusting screw exactly 5½ turns until tool counter reads 5.5,** hold adjusting screw from turning, tighten locknut securely.

Rear Band (After Steps 1 through 6)

7R) Install adjusting tool J-2681 on rear band adjusting screw, loosen adjusting screw locknut (turn long handle while holding short handle stationary).

8R) Loosen band adjusting screw (turn short handle) until engine speed increases to 900-1000 RPM.

NOTE—If no increase in engine speed noted when adjusting screw loosened, band has probably been slipping in service. Remove oil pan and inspect band and drum. With pan off, adjust band using gauge J-5071 and disregard following steps.

9R) Tighten band adjusting screw slowly until engine speed drops to 700 RPM., loosen adjusting screw until engine speed increases, then tighten adjusting screw until engine speed again drops to exactly 700 RPM., watch tachometer for 30 seconds to note any increase in engine speed. If increase noted, tighten adjusting screw 1/10 turn. Repeat this procedure until engine speed remains at 700 RPM. for at least 30 seconds.

10R) Place selector lever in "N" position.

11R) Set counter on adjusting tool to 00. Hold locknut stationary, **tighten band adjusting screw exactly 2 turns until tool counter reads 2.0.**

12R) Place selector lever in "DR" position. Hold band adjusting screw from turning, tighten locknut securely.

After Front & Rear Bands Adjusted.

Reset engine idle speed at 375-400 RPM. with selector lever in "N" position.

Adjustment (With Transmission Oil Pan off—using Gauges J-1693 & J-5071): Procedure is same as for other Hydra-Matic transmissions. *See "Cadillac, Oldsmobile, Pontiac Hydra-Matic Drive."*

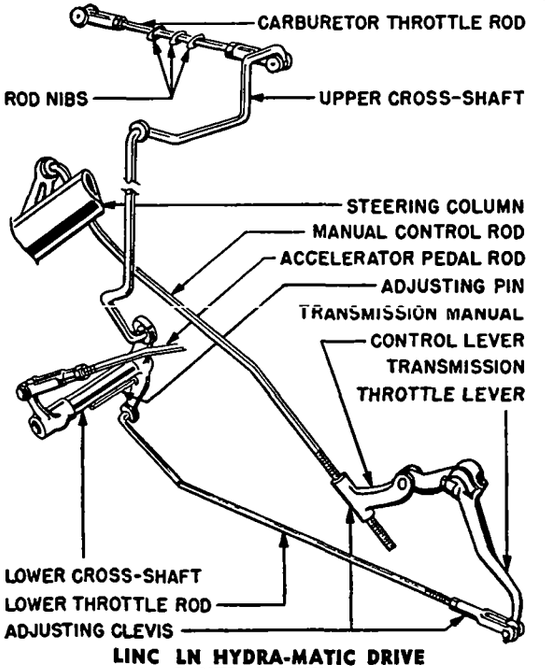

LINC LN HYDRA-MATIC DRIVE
C NTR L LINKA E

REMOVAL OF TRANSMISSION FROM CAR:

1) Jack up all four wheels approximately 8" and securely support car.
2) Remove front seat and front floor carpet, disconnect throttle rod at accelerator pedal, remove front floor pan cover.
3) Disconnect propeller shaft at rear universal joint, remove propeller shaft and universal joint from transmission spline shaft.
4) Remove flywheel housing pan and engine plate. Drain transmission case (drain plug at rear of pan) and fluid coupling (drain plug in torus cover).
5) Disconnect rear motor mount from frame cross-member and remove the bottom half of the rubber mount.
6) Place jack under rear end of engine oil pan with wooden block on jack to prevent damage to pan, raise engine sufficiently to install engine support.
7) Remove detachable cross-member from frame X-member. Lower jack under engine until engine rests on support.
8) Install transmission lifting hoist over floor pan opening in front compartment (adjust legs of hoist to fit car and attach cables to floor pan to prevent tipping of hoist). Screw eyebolt securely in tapped hole in top of transmission case, attach cable hook, take up slack in cable so that weight of transmission and fluid coupling taken off engine support.
9) Disconnect manual control rod and lower throttle rod at levers on transmission case, remove both levers. Disconnect speedometer cable at rear of transmission.
10) Remove spark plugs from engine. Disconnect and remove starter motor.
11) Take out 30 5/16" capscrews mounting torus cover on flywheel, push cover toward rear of car to disengage locating dowel pins.

►***CAUTION—Do not pry cover away from flywheel (will damage gasket surface on cover and flywheel).***

12) Take out 6 bolts mounting flywheel housing on engine.
13) Remove transmission and flywheel housing as an assembly by moving unit toward rear of car until flywheel housing dowels and main shaft are disengaged, then lower assembly (tilt front end down and move it forward to free transmission bearing extension from frame cross-member) and remove from beneath car.

DISASSEMBLY OF TRANSMISSION: Same as for other Hydra-Matic transmissions. *See "Cadillac, Oldsmobile, Pontiac Hydra-Matic Drive."*

FORD TRUCK 3-SPEED

Half-Ton Series F-1 (1949)
¾-Ton Series F-2 & Heavy Duty F-3 (1949)

►**OPTL. TRANSMISSION:** Ford 4-Speed Transmission Optl. on these models.

DESCRIPTION: Three-speed, constant-mesh, synchro-mesh type of same design used previously.

DISASSEMBLY & REASSEMBLY: ***See complete "1936-48 Ford, Lincoln, Mercury 3-Speed" Transmission in previous release.***

FORD TRUCK 4-SPEED

Half-Ton F-1, ¾-Ton F-2 & F-3 (1949)—Optl.
1-Ton F-4, 1½-Ton F-5, 2-Ton F-6 (1949)—Std.

DESCRIPTION: Four-speed, sliding spur gear type of same design used on previous models.

DISASSEMBLY & REASSEMBLY: ***See complete "Ford Truck 4-Speed" Transmission in previous release.***

NASH "600" & STATESMAN SYNCHRO-MESH

"600" Series 4940 (1949)
Statesman Series 5040 (1950)

OVERDRIVE TRANSMISSION NOTE: These transmissions serviced in same manner as standard type (below) except for Overdrive (Warner R10B). *See "Warner R10 Overdrive."*

DESCRIPTION: Three-speed, all helical gear type with constant-mesh, synchro-mesh (Second & High), sliding gear (Low & Reverse).

Synchronizer Unit—Special design spring-and-ball type. Outer clutch sleeve (shifting collar) is centered on inner hub by six poppet balls and springs fitted in holes in hub. Synchronizing rings are loose in ends of sleeve and are driven by the Clutch Ring Driver splined on shaft (installed at rear of hub with notched lugs in recesses in hub which engage prongs on synchronizer rings).

REMOVAL OF TRANSMISSION: ***See "Transmission" on car model page.***

TRANSMISSION DISASSEMBLY: Remove transmission case cover and gasket. Remove shifter shaft nut, washer, and lever from Low & Reverse shifter shaft, drive lockpin out to free shaft (drive pin up), drive shaft out of case as far as possible (use brass drift on inner end) to provide clearance for gear removal (NOTE—Not necessary to drive out Second & High shifter shaft). Remove capscrews in rear bearing retainer, move retainer, mainshaft and gear assembly to rear until synchronizer unit completely disengaged from shaft, remove low & reverse shifter fork, then withdraw retainer and shaft through rear of case (on overdrive transmissions, lower left stud must be removed to permit complete assembly to be withdrawn). Drive the countershaft lock out to free shaft. Use Countershaft Aligning Tool J-2632 to drive countershaft out through rear of case allowing countergear cluster to drop down on small diameter of aligning tool. Take out capscrews in bearing retainer on front of case, remove retainer, withdraw main drive gear assembly through front of case, lift out front synchronizer ring through top opening of case. Turn synchronizer assembly at right angles and lift it from case (CAUTION—Shifter shoes will drop out as synchronizer removed from fork—remove shoes from case). If reverse idler gear being removed, drive shaft out through rear of case using a long punch (CAUTION—do not damage shaft or gear), lift gear out. Remove forks from shifter shaft quadrants. Remove lever on outer end of Second & High shift shaft, drive out lockpin. Remove both shifter shaft assemblies from within case. Remove Second & High speed finder poppet (plunger & spring) from within case, Low & Reverse speed finder poppet from plug hole at bottom of case. Remove Interlock poppet from boss in case between shifter shaft holes. Lift out countergear cluster and thrustwashers. Dismantle and service sub-assemblies as follows:

Main Drive Gear: Remove snap ring from shaft groove in front of bearing, press bearing off shaft. Check mainshaft pilot bearing rollers in gear recess for wear (jar gear lightly on block of wood, if rollers fall out, install new rollers and make certain that retainer ring installed in recess). Press bearing on shaft with snap ring groove toward front, install ring in this groove (ring .077" thick—not variable). Install snap ring in shaft groove making certain that snap ring is snug fit in groove (selective fit—this ring furnished .092", .095", .098" thick).

Mainshaft & Gears: Remove clutch ring driver from front end of shaft, rotate 2nd. speed gear thrust washer until tongues on washer line up with spline grooves, remove washer, slide synchronizer ring, 2nd. speed gear, and low-reverse sliding gear off shaft. Remove snap ring from rear bearing retainer (in front of bearing), tap shaft and bearing out of retainer toward front using a brass drift. To remove bearing, remove snap ring from shaft at rear of speedometer gear, remove gear, lift out gear woodruff key, press bearing off. Inspect all parts for wear.

Mainshaft Rear Bearing—Press bearing on shaft with closed end forward and tight against shoulder on shaft. Install speedometer gear (and woodruff key) install snap ring in shaft groove, selecting ring for snug fit (this ring furnished .087", .090", .093" thick). Install shaft and bearing assembly in rear bearing retainer with bearing seated firmly in retainer recess, install snap ring in retainer groove, selecting ring for snug fit so that shaft has no endplay (furnished .062", .065", .068", .071" thick).

Low-reverse Sliding Gear—Shift collar must be toward rear and gear must slide freely on splines.

Second Speed Gear—Gear synchronizer cone must be forward and gear turn freely on shaft. Push thrust washer on shaft against gear, revolve washer until tongues engage groove in shaft splines so that washer is locked in place (washer will be held in place by clutch ring driver). Check gear endplay with feeler between rear face of gear and shoulder on shaft. Endplay should be .002-.010".

Synchronizer Ring & Driver—Engage synchronizer ring in gear cone (prongs forward), engage Clutch Ring Driver on shaft splines with short lugs toward 2nd. speed gear and in line with notches in gear thrust washer. Turn synchronizer ring so that prongs line up with notches in driver, push driver in place against gear (locks thrustwasher in place).

Synchronizer Assembly: If necessary to dismantle these parts, mark hub and clutch sleeve to insure reassembly in same position, slide sleeve off hub being careful not to lose six poppet balls and springs which will fly out of hub holes. When reassemblying, use piston ring compressor to retain springs and balls in hub, slide sleeve on hub with chamfered side of sleeve toward long end of hub.

Rear Bearing Retainer Mainshaft Bushing & Oil Seal: Bushing and oil seal installed in rear end of retainer extension housing. Oilite bushing can be replaced with oil seal out as follows:

Bushing Replacement—Remove old bushing through rear of housing. Assemble felt oil ring on new bushing, press bushing in housing until shoulder on bushing is ¼" from shoulder in housing.

►***CAUTION***—Felt oil ring must not be compressed.

Oil Seal Installation—Use driver J-1556 to install oil seal in recess at rear of housing.

►***CAUTION***—Seal must be inserted with lip on leather toward front.

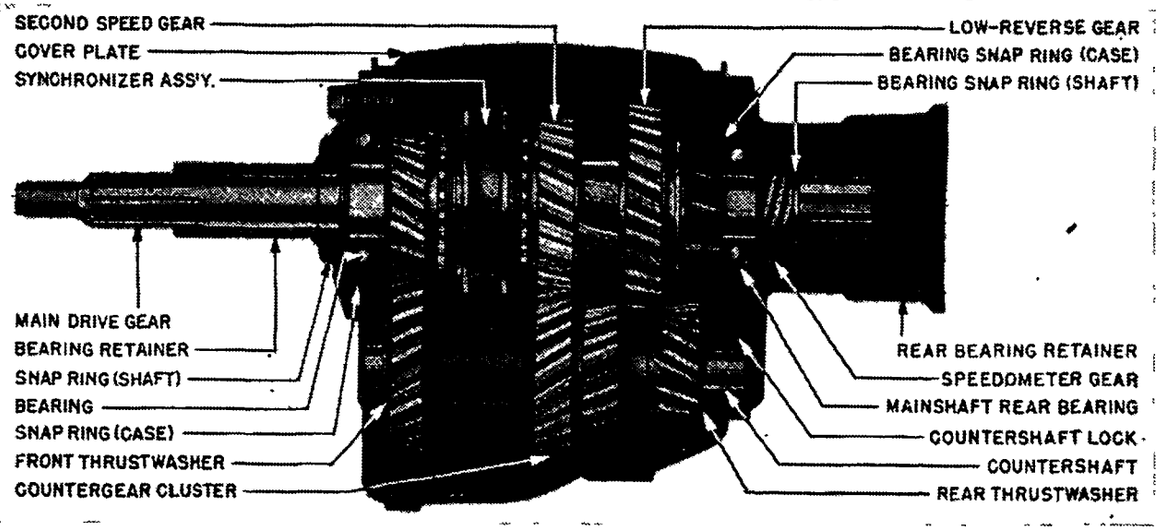

NASH '600" & STATESMAN TRANSMISSION (N OVERDRIVE)

CONTINUED ON NEXT PAGE

NASH SYNCHRO-MESH (C nt.)

TRANSMISSION REASSEMBLY: After all sub-assemblies serviced as above, reassemble transmission by reversing disassembly directions and note the following important points:

Reverse Idler Gear: Beveled side of gear teeth must be forward. Drive the shaft in from rear until lock slot is flush with rear face of case (slot should face countershaft).

►*CAUTION*—Low & Reverse Shifter Shaft must be installed before reverse idler gear installed.

Countergear Cluster: Use heavy lubricant on thrustwashers, insert gear cluster and front thrustwasher in case (lip on washer lined up with slot in case), install rear thrustwasher through hole in case, insert J-2632 aligning tool to retain parts while remainder of transmission assembled. **After** all parts installed, tap countershaft in through rear of case (take care not to damage thrustwashers) until lock slot flush with rear face of case, install lock plate in slots in countershaft and reverse idler shaft.

Shifter Shaft Assemblies: Inspect needle bearings in case before installing second-high shifter shaft, replace nedle bearings, if necessary, with special driver. After installing speed finder poppets and springs, and interlock poppet, insert shaft from inside case but do not install lock pins and levers until transmission completely reassembled. Install synchronizer assembly in second-high fork (use heavy grease to retain fork shoes).

Main Shaft & Rear Bearing Retainer: Place standard .010" shim (with gasket on each side) on face of rear bearing retainer, insert assembly through rear of case and work shaft through synchronizer assembly hanging in shift fork, being careful to **line up clutch hub recesses with clutch ring driver prongs.** Line up low & reverse shift fork with collar on low-reverse gear. **After main drive gear installed,** check synchronizer ring clearance by inserting special clearance gauge, Tool J-1542, at each end of synchronizer sleeve while holding rear bearing retainer tight against case. If clearance not equal to gauge thickness (.105"), adjust by increasing or decreasing shim thickness at rear bearing retainer. Rear bearing retainer capscrews can be installed after this adjustment completed.

►*CAUTION*—Gasket must be installed on each side of the shim.

Main Drive Gear: When installing gear in case, line up synchronizer ring prongs with slots in clutch ring driver. Install bearing retainer with new gasket and line up oil return holes in retainer and case. When tightening capscrews, note whether retainer contacts bearing before contacting case and correct this condition by **installing additional gaskets under retainer.** Main drive gear endplay must not exceed .005" and should preferably be .000".

Shifter Fork Alignment: After assembly completed, shift transmission into Second Gear and make certain that gear fully engaged. Measure clearance between rear face of synchronizer clutch shift collar and front face of second speed gear which must not be less than .028". If less, shifter fork or quadrant has been distorted and should be replaced.

Transmission Cover Plate: Install gasket on case with vent hole to rear (mark FRONT forward), install cover with vent hole forward and see that this vent is clean and open.

NASH HYDRA-MATIC DRIVE

Nash Ambassador, Series 5060 (1950)

►**STARTING ENGINE BY PUSHING CAR**—Place selector lever in "N" position. When car speed reaches approximately 20 MPH., turn iginition on, move selector lever to "D" position and car will crank engine.

►***CAUTION—Do not push car faster than 25 MPH. or for more than short distance to prevent damage to transmission (see towing car below).***

►**CAUTION WHEN TOWING CAR**—Car should not be pushed or towed with selector lever in "N" position for more than two miles and **if transmission has not been functioning properly,** always tow car with rear wheels lifted to prevent damage to transmission through lack of lubrication (under these conditions rear oil pump required to supply all oil pressure for transmission lubrication and for release of rear band).

►***CAUTION—Serious damage to transmission may result under these conditions if oil pressure low.***

DESCRIPTION: Four-speed planetary type automatic transmission and fluid coupling. Similar to other Hydra-Matic Drive installations.

LUBRICATION: Check fluid level every 1000 miles, and add fluid, as required, to maintain level at "F" mark on dip stick. Drain and replace fluid at 15000 mile intervals.

Checking Fluid Level—Set hand brake, place selector lever in "N" position, start engine and allow it to idle for a minimum of two minutes after transmission fluid has reached operating temperature. Roll back front floor mat on right side, remove inspection cover in floor pan, clean all dirt and lint from floor and around oil level indicator on left side of transmission case. Place selector lever in "D" position and idle engine with lever in this position while checking fluid. Fluid level should be at "F" mark on dip stick, add fluid as required to bring level up to this "F" mark.

►***CAUTION—Do not fill above "F" mark on dip stick.***

Draining & Replacing Fluid—Drain oil only when warm (immediately after operation). Remove flywheel housing lower cover, drain fluid coupling (turn flywheel until hexagonal-head pipe plug on torus cover is at lowest point, remove plug), drain transmission case (remove drain plug at back of pan). Replace both drain plugs. Install 7 qts. of Hydra-Matic Fluid through oil level indicator hole on top of case, start engine and allow it to idle for several minutes. Then check fluid level (see checking directions above), add fluid (approximately 3-4 qts.) to bring level up to "F" mark on dip stick.

►***CAUTION—Correct fluid level is determined by dip stick mark rather than exact amount of fluid added and level should always be checked with fluid hot, engine idling, and selector lever in "D" position.***

Capacity—Approximately 11 qts. (refilling after draining), 12 qts. (when transmission disassembled).

Recommended Fluid—Hydra-Matic Fluid (Automatic Transmission Fluid Type "A") as furnished in containers marked with approval symbol "AQ-ATF" followed by serial number in "100" series.

LINKAGE ADJUSTMENT: Make all linkage adjustments in order and exactly as follows:

(1) Throttle Control Linkage—Make certain that engine idle speed set at 375 RPM. with engine warm (150-160°F), transmission fluid warm, and selector lever in "N" position. Disconnect rear throttle rod at lever on left side of transmission case, disconnect carburetor throttle lever link at upper bellcrank on left side of cylinder head. Adjust throttle control rods as follows:

Carburetor Throttle Link Rod—Install adjusting pin J-4158 through holes in upper bellcrank and mounting bracket on left side of cylinder head. Adjust clevis on bellcrank end of carburetor throttle lever link so that clevis pin enters clevis and bellcrank without moving throttle lever stopscrew away from its stop, tighten locknut and connect rod. Do not remove adjusting pin from bellcrank.

Front Throttle Rod—With upper bellcrank locked by adjusting pin (above), check position of lower bellcrank on left side of crankcase below starter by inserting a second J-4158 adjusting pin through holes in bellcrank and support bracket. If pin does not enter holes freely, disconnect throttle rod at upper bellcrank, install adjusting pin in lower bellcrank, adjust rod length by loosening locknut and turning trunnion end on upper end of rod. Tighten locknut and connect rod. Do not remove adjusting pins until following adjustments have been completed.

Transmission Throttle Lever Position—See that clamp bolt on throttle lever on transmission case is tight, place Throttle Lever Checking Gauge J-2545 flat against machined surface on back of case with gauging leg extending forward along transmission side cover. Install clevis pin in hole at outer end of throttle lever, hold lever against stop in extreme rear position. Move guage upward. Notch on gauge should pass over pin in lever and inner face of lever should just touch outer face of gauge. Bend lever as required using Bending Tool J-3310.

►***CAUTION—Do not twist lever or spring shaft when adjusting.***

Rear Throttle Rod—With bellcranks locked by adjusting pins (above), hold throttle lever on transmission case in extreme rear position against the stop, adjust trunnion on transmission end of rear throttle rod by backing off one trunnion nut and tightening opposite nut until trunnion pin enters hole in throttle lever freely, then **back off forward trunnion nut two complete turns,** tighten rear nut securely (this will "shorten" rod), connect rod to throttle lever, remove adjusting pins from upper and lower bellcranks.

(2) Manual Control (Selector Lever) Linkage—Place selector lever under steering wheel in "L" position and see that operating lever on steering column at lower end of selector lever shaft is against low range stop (right side) on neutral safety switch bracket. Disconnect control rod at shift lever on left side of transmission case. Move shift lever to "L" position (place lever in extreme rear "R" position, then move lever forward until next detent position is reached), adjust clevis on transmission end of control rod until clevis pin enters hole in lever freely, then **lengthen rod by turning clevis off one complete turn,** tighten locknut and connect rod.

(3) Neutral Safety Switch—Place selector lever in "D" position. Loosen safety switch mounting screws (on bracket on steering column at selector lever shaft lower end), position switch so that switch contacts are open and starter will not operate when starter button depressed, tighten mounting screws.

C NTINUED N NEXT PAGE

NASH HYDRA-MATIC (C nt.)

Move selector lever to "N" position and make certain that starter will operate (in this position there should be some clearance between pin on operating lever and end of slot in neutral safety switch lever).

SERVO BAND ADJUSTMENT: ***NOTE—Oil pan need not be removed if bands adjusted EXTERNALLY as follows:***

Adjustment (Externally using Tool J-2681 & Tachometer): ***CAUTION—Do not attempt to adjust bands by this method unless Tool J-2681 and accurate Tachometer available.***

1) Block front wheels securely and set hand brake firmly to prevent car moving while adjusting.
2) Remove front floor mat and adjusting hole cover over adjusting screws on left side of transmission.
3) Run engine until temperature is normal and engine idles at hot or slow idle speed of 375 RPM.
4) Connect and adjust tachometer for accurate recording of engine speed.
5) Place selector lever in "D" position.
6) Adjust carburetor throttle stopscrew so that engine idles at exactly 700 RPM. Then adjust bands

Front Band (After steps 1 through 6)

7F) Install adjusting tool J-2681 on front band adjusting screw, loosen adjusting screw locknut (turn long handle while holding short handle stationary).

8F) Loosen band adjusting screw (turn short handle until engine speed increases to 900-1000 RPM.

►*NOTE*—If no increase in engine speed noted when adjusting screw loosened, band has probably been slipping in service. Remove oil pan and inspect band and drum. With pan off, adjust band using gauge J-1693 and disregard following steps.

9F) Tighten band adjusting screw slowly until engine speed drops to 700 RPM., loosen adjusting screw until engine speed increases, then tighten adjusting screw until engine speed again drops to exactly 700 RPM., watch tachometer for 30 seconds to note any increase in engine speed. If increase noted, tighten adjusting screw 1/10 turn. Repeat this procedure until engine speed remains at 700 RPM. for at least 30 seconds.

10F) Set counter on adjusting tool to 00. Hold locknut stationary, **tighten adjusting screw exactly 5½ turns until tool counter reads 5.5,** hold adjusting screw from turning, tighten locknut securely.

Rear Band (After Steps 1 through 6)

7R) Install adjusting tool J-2681 on rear band adjusting screw, loosen adjusting screw locknut (turn long handle while holding short handle stationary).

8R) Loosen band adjusting screw (turn short handle) until engine speed increases to 900-1000 RPM.

NOTE—If no increase in engine speed noted when adjusting screw loosened, band has probably been slipping in service. Remove oil pan and inspect band and drum. With pan off, adjust band using gauge J-5071 and disregard following steps.

9R) Tighten band adjusting screw slowly until engine speed drops to 700 RPM., loosen adjusting screw until engine speed increases, then tighten adjusting screw until engine speed again drops to exactly 700 RPM., watch tachometer for 30 seconds to note any increase in engine speed. If increase noted, tighten adjusting screw 1/10 turn. Repeat this procedure until engine speed remains at 700 RPM. for at least 30 seconds.

10R) Place selector lever in "N" position.

11R) Set counter on adjusting tool to 00. Hold locknut stationary, **tighten band adjusting screw exactly 2 turns until tool counter reads 2.0.**

12R) Place selector lever in "D" position. Hold band adjusting screw from turning, tighten locknut

After Front & Rear Bands Adjusted

Reset engine idle speed at 375 RPM. with selector lever in "N" position.

Adjustment (With Transmission Oil Pan off—using Gauges J-1693 & J-5071): Procedure is same as for other Hydra-Matic transmissions. ***See "Cadillac, Oldsmobile, Pontiac Hydra-Matic Drive."***

REMOVAL OF TRANSMISSION FROM CAR:

1) Raise car and support securely on jack stands (support rear of car at body side sills and place hydraulic jack under rear axle assembly).
2) Drain transmission case and fluid coupling (remove flywheel lower cover for access to torus cover drain plug).
3) Remove accelerator pedal and front compartment floor mat, take out screws in floor hole cover and remove cover.
4) Disconnect hand brake cable at adjusting yoke, disconnect speedometer cable and housing at transmission adapter, disconnect rear throttle rod and manual control rod at levers on left side of transmission case, remove rear brake hydraulic hose bracket from floor pan to prevent damage to lines.
5) Disconnect torque tube from rear bearing retainer by taking out flange mounting bolts, disconnect propeller shaft by sliding universal joint yoke to rear and free of transmission driveshaft, move torque tube out of the way.
6) Place jack under rear end of engine oil pan (use block of wood on jack to prevent damage to pan), support engine weight on jack so that all weight removed from rear engine support cross-member.

►***CAUTION—Do not raise engine more than necessary to remove engine support cross-member.***

7) Remove rear engine support cross-member (take out bolts in rear bearing retainer so that rubber cushion removed as unit with cross-member).
8) Loosen clamp bolt and remove throttle control lever (longer lever) from left side of transmission
9) Remove 30 capscrews and lockwashers mounting torus cover on rear face of flywheel.
10) Lower engine slightly so that upper housing attaching bolts accessible through floor pan opening. Install special transmission holding tool J-2808 on hydraulic jack (CAUTION—tool must be securely fastened to jack pad), place jack under transmission with tool securely engaging transmission case oil pan, lift transmission just enough to remove weight from mounting bolts in flywheel housing.
11) Remove attaching bolts, nuts, and lockwashers holding rear flywheel housing on front housing, take out upper rear stud on each side, use two 9/16" USS bolts to disengage dowels (screw one bolt evenly into each of above stud holes until dowels are free of front housing, then remove bolts).
12) Move transmission to rear until it is free, then lower assembly (CAUTION—turn flywheel so that end of mainshaft passes between two of the flywheel-to-crankshaft bolts), remove transmission from beneath car.

DISASSEMBLY OF TRANSMISSION: Same as for other Hydra-Matic transmissions. ***See "Cadillac, Oldsmobile, Pontiac Hydra-Matic Drive."***

PACKARD ULTRAMATIC DRIVE

Super 8, "2300" Series (Late 1949) Optl.
Custom 8, "2300" Series (Late 1949) Std.

►**STARTING ENGINE BY PUSHING CAR:** If this procedure necessary on Ultramatic Drive cars, place selector lever in neutral "N" position, turn on ignition. When car has attained speed of 25 MPH., move selector lever to high range "H" position. The car will then crank the engine.

DESCRIPTION: "Ultramatic Drive" consists essentially of the following two units:

Torque Converter & Direct Speed Clutch: This assembly is contained in a case mounted on the rear face of the flywheel and consists of the units listed below. Torque converter and direct speed clutch action is automatic and is controlled by the hydraulic system (see Operation—below, and Hydraulic Circuit illustration).

Converter Pump (Driving Member)—Integral with rear section of torque converter case bolted directly on flywheel and positively driven at crankshaft speed. Pump is supported at rear end on hollow shaft carried in babbitted bearing in the bell housing (front oil pump is splined on rear end of shaft and shaft is grooved to provide oil channel into converter).

Turbine (Driven Member)—Two-section type consisting of a First Turbine bolted on a flanged hub which is splined on forward end of converter shaft (direct speed clutch driven member also bolted to this flanged hub), and a Second Turbine bolted to the first turbine with clearance between the two in which the Reactor is located.

Reactor (Stationary Member)—Consists of a set of curved vanes placed between the first and second turbines. Reactor is mounted on a short tubular shaft with an overrunning clutch in the mounting flange at the rear end of the shaft. Reactor is locked or held stationary when unit is operating as a Torque Converter but the overrunning clutch allows the reactor to "free-wheel" or rotate freely at steady car speeds so that the torque converter acts as a fluid coupling except when Direct Drive Clutch locks the entire unit for positive drive.

Direct Speed Clutch—Consists of a hydraulically operated oil-cushioned single plate clutch in forward section of torque converter housing. Clutch driven member is bolted to turbine mounting flange and clutch driving plates are locked in torque converter housing (lugs on plates engage slots in housing), so that the torque converter pump and turbine are positively locked together for positive drive when clutch is engaged. Clutch is engaged hydraulically by admitting oil into housing in front of forward driving plate (plate acts as a hydraulic piston).

Planetary Gear Unit: This assembly is contained in the transmission case directly behind the torque converter and is controlled by the driver through a selector lever directly below the steering wheel. It provides Emergency Low, Reverse, Neutral, and Parking (see Operation below). Operation and control of the transmission is through a hydraulic system for which oil pressure is supplied by two oil pumps built in the transmission (forward oil pump in recess in bell housing and driven by converter

CONTINUED N NEXT PAGE

PACKARD ULTRAMATIC (C nt.)

pump shaft, rear oil pump in recess at rear of transmission case and driven by output shaft). An oil cooler built in the lower tank of the radiator controls the temperature of the oil. Planetary assembly consists of the following units:

Sun Gears—Consist of two helical gears in tandem on drive (input) shaft with a ball thrust bearing between the gears. Front Sun Gear (Low Range Reaction Gear) is integral with a flange splined in the Low Range Drum so that the gear is locked to the shaft when the clutch is engaged (High Range) and is held stationary to serve as a reaction member for the short planetary pinoins which mesh with it when the low range drum band is applied (Low Range). Rear Sun Gear (Driving Sun Gear) is splined directly on the input shaft and meshes with the long planetary pinions.

Planetary Pinions—Consist of three short large gears and three long smaller gears mounted alternately around the planetary cage and all meshing together. The short pinions mesh with the forward sun gear (Low Range Reaction Gear) and with the Planetary Ring Gear which is integral with the Reverse Drum. The long pinions mesh with the rear sun gear (Driving Sun Gear). Planetary cage is integral with the output shaft.

Low Range Drum & High Range Clutch Assembly—Mounted on input shaft directly in front of planetary pinion cage. Inner clutch member is splined on input shaft and rotates with the shaft. Outer clutch member incorporates the Low Range Drum and front sun gear as well as the clutch engaging hydraulic piston and disengaging spring. Clutch driving plates (with facings) are waved to assist disengagement and spring-controlled oil vents in the hydraulic piston are also uncovered when clutch is disengaged.

Low Range Brake Band & Engaging Mechanism—Band holds Low Range Drum and front sun gear stationary when it is applied by the Low Range Brake Piston acting through a lever and strut engaging one end of the band. Opposite end of band is anchored by adjusting screw on side of case.

Reverse Drum Band & Engaging Mechanism—Same design as Low Range Band (above). Band holds reverse drum and Planetary Ring Gear Stationary when it is applied.

Parking Brake Mechanism: Consists of a gear splined on the transmission output shaft at the rear of the transmission case and a pawl which engages the gear to prevent rotation of the shaft when the selector lever placed in "P" parking position. Pawl is operated by a locking lever actuated by the control valve cross-shaft and lever in the transmission case.

OPERATION: Torque Converter automatically provides a torque multiplication ranging from approximately 2 1/3 to 1 (for Starting & Heavy Loads) to an equivalent "High" 1 to 1 ratio (for Steady Driving & Light Loads) and is locked out by the Direct Speed Clutch at speeds above 15 MPH. in High Range operation under normal driving conditions (can be unlocked or "kicked down" at car speeds under 50 MPH. at the will of the operator). Planetary Unit is controlled by the operator and provides definite gear ratios (in addition to the varying ratio of the Torque Converter) depending upon the selector lever position. This control is effected through the hydraulic control system (see illustration) by means of oil pressure supplied by the two oil pumps in the transmission case.

LUBRICATION: Check fluid level every 1000 miles and add fluid, as required, to maintain level at full mark on dip stick. Drain and replace fluid at 10000 mile intervals.

►*CAUTION—Fluid must only be checked at normal operating temperatures and after engine has been idling at 800 RPM. for at least 1 minute with selector lever in "N" position.*

Checking Fluid Level—With fluid at normal operating temperature, place selector lever in "N" position, idle engine at 800 RPM. for at least 1 minute, check level by removing dip stick from filler hole on left side of transmission (accessible from beneath car—turn cap ½ turn counter-clockwise before withdrawing it). Add fluid as required to bring level up to FULL mark on stick.

Draining & Replacing Fluid—Remove front lower flywheel housing. Loosen one converter drain plug (to act as a vent), then rotate flywheel 180° to bring second drain plug to lowest point, remove this plug and drain converter case. Remove transmission case drain plug (at forward end of transmission oil pan), drain case. Replace and tighten all drain plugs, replace flywheel housing. Install 7 qts. of fluid through dip stick opening using curved oil gun (or through plug hole in top of case at rear, accessible by removing cover in transmission floor cover). Idle engine at 800 RPM. for at least 2 minutes with selector lever in "N" neutral (to fill converter case). Check fluid level as directed above, add sufficient fluid to bring level up to FULL mark on dip stick (capacity is approximately 12 qts.). Run engine at 800 RPM. for one minute, recheck level.

►*CAUTION—Amount of fluid installed should be determined by dip stick reading rather than actual number of quarts.*

Recommended Fluid—Packard Ultramatic Drive Fluid or any Type "A" Automatic Transmission Fluid which has an AQ-ATF number embossed on container.

LINKAGE ADJUSTMENT: First check entire gearshift control and throttle linkage for free operation without binding or lost motion due to wear. Replace all worn or damaged parts. Warm up engine and transmission. See that engine idles at 400 RPM. hot or slow idle speed, then adjust linkage as follows:

Gearshift Control: Disconnect control rod clevis at outer lever on left side of transmission case. Place selector lever on steering column in "L" Low Range position, move transmission control lever to low range position and make certain that detent plunger engages detent well (can be determined by feel). Adjust clevis on control rod so that clearance between steering column stop lever and low range stop is .031", connect rod, tighten clevis locknut. Check by shifting into other positions and making certain that shifts to "N" and "P" are possible without permanent over-travel when contacting stops.

Throttle Linkage: Must be adjusted as follows:

Carburetor Throttle Rod—Adjust throttle cross-shaft to carburetor rod by loosening locknut and turning the spring-loaded throttle over-ride until cross-shaft bellcrank at manifold end of shaft leans forward 13½° at top from a perpendicular through the shaft center-line.

Transmission Control Rod—Disconnect throttle cross-shaft to transmission link rod on right side of

CONTINUED ON NEXT PAGE

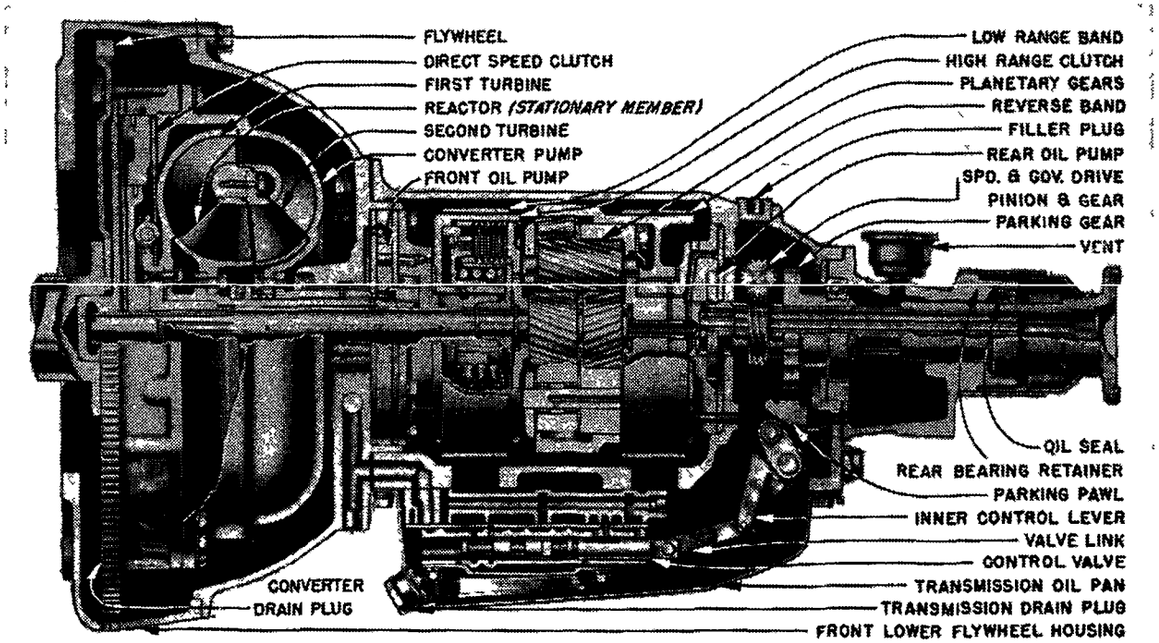

PACKARD ULTRAMATIC DRIVE

PACKARD ULTRAMATIC (C nt.)

engine. Push the rod down lightly to seat transmission throttle valve plunger against its stop. Adjust clevis on rod so that link rod is 5/32" short of lining up with pin hole in throttle cross-shaft, tighten clevis locknut, connect rod. The 5/32" movement of the rod necessary to line up the clevis pin holes should move throttle valve plunger .050" from its stop.

Accelerator Relay Lever Rod—Adjust length of relay lever to throttle cross-shaft rod so that accelerator pedal pushrod lever comes within .050" of the spring-loaded stop when carburetor throttle valves are wide open.

Starter Safety Switch: Mounted on left side of transmission case. Circuit through switch should be completed (so that starter can be operated) with gearshift selector lever in "N" or "P" position.

BAND ADJUSTMENT: Adjusting screw and locknut for each band located on outside of transmission case—left side (Low Range Band), right side (Reverse Band).

Low Range Band: Loosen locknut, turn adjusting screw on left side of transmission case in until band is felt to be engaging, then **back screw off 1½ complete turns,** tighten locknut to 25-30 ft. lbs. torque.

Reverse Band: Loosen locknut, turn adjusting screw on right side of case in until band is felt to be engaging, then **back screw off 2 complete turns,** tighten locknut to 25-30 ft. lbs. torque.

TESTING OF HYDRAULIC UNITS: Before making systematic hydraulic tests outlined below, check fluid level in transmission, road test car by driving under conditions simulating heavy traffic and highway operation (frequent stops and starts, low speed, medium speed, and accelerating). If transmission does not operate satisfactorily after engine and transmission thoroughly warmed up, make the hydraulic test outlined below exactly as directed.

NOTE—Hydraulic pressure gauge with 0-100 psi. scale and flexible line 48" long with ⅛" male pipe fitting are required for these tests (except Reverse Application Test for which 0-200 psi. gauge will be required).

Front Pump Regulated Pressure: Remove floor mat and inspection cover in floor panel, remove ¼" pipe plug on lower left side of transmission bell housing, install ¼" to ⅛" pipe reducer, connect gauge line, support gauge in front compartment so that it can be read while driving car. Start engine and increase speed to 800 RPM. Gauge reading should be 80 lbs. If pressure correct, disconnect gauge, remove reducer, install pipe plug.

High Range Clutch Pressure: Remove ⅛" pipe plug at center of lower rear end of transmission bell housing (just to right of front pump outlet passage plug), connect gauge at this point. Test car on road with gearshift lever in "H" High Range. Pressure should be approximately 30 lbs. with throttle closed, and approximately 85 lbs. with throttle wide open. Repeat test with gearshift lever in Low Range, then shift to High Range and again repeat test. If pressures correct, disconnect gauge and replace plug.

Direct Drive Clutch Pressure: Remove ⅛" pipe plug just to right of center on lower rear end of transmission bell housing (just to right of high range passage plug above), connect gauge at this point. Test car on road with gearshift lever in High Range. Accelerate car slowly with light throttle opening. At speed of 15 to 18 MPH., with light engine load and steady driving, clutch should engage and gauge reading should be 75 to 90 lbs. If pressure correct, disconnect gauge and replace plug.

Front Oil Pump Relief Valve Boost Pressure: Remove ⅛" pipe plug, at lower right rear end of transmission bell housing, connect gauge at this point. Start engine and run at 600-1000 RPM. Gauge reading should be 70 lbs. If pressure correct, disconnect gauge and replace plug.

Hydraulic Governor Pressure: Remove ⅛" pipe plug at right rear end of transmission case (just to rear of governor housing), connect gauge at this point. Test car on road at speeds above 15 MPH. Gauge reading should be in direct proportion to car speed and range from 29 lbs. at 15 MPH. to 61 lbs. at 56 MPH. If pressures correct in proportion to car speed as noted above, disconnect gauge and replace plug.

►*CAUTION FOR MAKING FOLLOWING TESTS: Gauge must be connected within transmission case as follows:* Drain oil from case, remove oil pan, insert flexible gauge line through oil filler opening on left side of case, connect gauge at correct plug hole for each

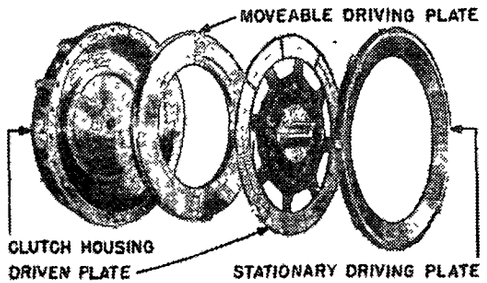

ULTRAMATIC DRIVE DIRECT SPEED CLUTCH

test, re-install oil pan, fill transmission case with fluid so that car can be operated. After tests completed, pan must again be removed to disconnect gauge.

►*NOTE—Following three tests can be made at one time if three gauges used.*

Throttle Valve Pressure: See Caution above. Remove ⅛" pipe plug from throttle valve body (right side of control valve lower body in transmission case), connect gauge at this plug hole. Test car on road at various throttle openings. Gauge reading should be in direct proportion to throttle opening and should range from 24-28 lbs. at closed throttle to 55-63 lbs. at full or wide open throttle. If pressures correct and in proportion to throttle opening, disconnect gauge and replace plug.

Low Range Application Pressure: See Caution above. Remove ⅛" pipe plug from low range cylinder body (right front end of control valve upper body in transmission case), connect gauge at this plug hole. Test car on road under heavy traffic conditions (frequent stops, starts in Low Range, acceleration, and shifts to High Range). Gauge reading should be approximately 30 lbs. when low range band application starts at light throttle, and 80-90 lbs. at full throttle. If pressures correct, disconnect gauge and replace plug.

Reverse Application Pressure: *CAUTION—0 to 200 psi. gauge required for this test.* See gauge connecting Caution above. Remove ⅛" pipe plug from reverse cylinder body (at left rear end of control valve upper body), connect gauge at this plug hole. Test car on road by making frequent stops and engaging Reverse in normal manner. Gauge reading should be 160-180 lbs. with gearshift lever in Reverse and car moving backwards. If pressure correct, disconnect gauge and replace plug.

►*If above tests indicate that transmission not operating satisfactorily, see Disassembly data.*

REMOVAL OF TRANSMISSION FROM CAR: Proceed in following order:

1) Place control lever in "N" neutral position, remove front seat cushion, install covers on front seat back and door trim panels, remove front floor mat and floor transmission inspection cover.
2) Raise both ends of car and support it securely at all four wheels.
3) Remove lower flywheel housing and drain both Torque Converter and Transmission case (see draining data under "Lubrication" above).
4) Disconnect gear selector linkage and transmission throttle linkage, oil cooler lines, speedometer cable, and starter safety switch leads.
5) Disconnect propeller shaft at front and rear universal joints, remove shaft. Disconnect parking brake cable at equalizer lever.
6) Support rear end of engine with a hydraulic jack placed under rear end of oil pan (CAUTION—use block of wood on jack to prevent damage to oil pan). Raise engine and transmission just enough to remove load from engine supports.
7) Remove engine rear support channel and bracket assembly, transmission steady rest and insulator, and both rear engine support insulators from transmission case.
8) Install special lifting bracket on transmission case or use sling around case, install lifting hoist over opening in floor panel, connect hoist cable to bracket or sling, take up transmission weight with hoist by tightening hoist cable until it is just taut.
9) Mark flywheel and converter housing to insure re-installation in same relative positions, remove flywheel-to-direct drive clutch housing bolts, tap clutch housing to loosen it from flywheel and slide converter to the rear.
10) Remove transmission bell housing-to-flywheel housing bolts. Secure converter to transmission bell housing to prevent it falling out during transmission removal. Slide transmission to rear until clutch housing is clear of flywheel.
11) Lower transmission to floor and remove from beneath car.
12) Remove converter assembly from transmission.

►*TRANSMISSION OVERHAUL NOTE*—Converter and transmission are disassembled and serviced separately as follows:

CONVERTER OVERHAUL: After converter removed from transmission, place on bench with pump end up for disassembly.

Disassembly: Take out converter pump-to-clutch housing capscrews (CAUTION—these are special capscrews and must not be interchanged with others of same size). Loosen pump by tapping with a plastic hammer, slip off converter pump and thrust ball bearing and spacer. Bend back turbine capscrew

CONTINUED N NEXT PAGE

PACKARD ULTRAMATIC (C nt.)

lock tabs, remove capscrews mounting second turbine on first turbine, loosen second turbine by tapping it with plastic hammer and lift off. Remove Reactor. Bend back lock tabs and remove capscrews mounting first turbine on direct speed clutch driven plate hub, lift turbine off. Remove clutch driving plate and lock ring, clutch driven plate, and ball thrust bearing. Thread ¼" capscrews into puller holes in clutch movable driving plate, remove plate (CAUTION—piston rings are located on inner diameter of clutch housing and outer diameter of piston).

Cleaning & Inspection: Wash all parts in clear gasoline or kerosene and dry with compressed air. Inspect all contact and mounting surfaces for nicks, burrs, distortion, warping, or low spots. Inspect all bolts and capscrews for worn threads, see that bolt holes not worn or cracked. Inspect machined area around vanes, torus ring, and turbine hub for indications of wear or rubbing condition indicating worn bearings or thrust plates. Check clutch driven plate for worn facings, loose springs, worn splines or worn thrust bearing. Inspect clutch movable plate and piston rings. Check all bearing surfaces for wear, pits and scores. Clean and inspect oil passage in input shaft bearing leading to direct speed clutch piston.

Reassembly: Use all new gaskets, assemble parts by reversing order of disassembly. Check direct speed clutch driven plate by using a dummy input shaft to spin plate before installing turbine (plate should not drag). Tighten first turbine mounting capscrews and second turbine capscrews to 12-15 ft. lbs. (CAUTION—Lock these screws by bending over lock plate tabs). Tighten converter pump attaching capscrews to 12-15 ft. lbs., tightening all screws evenly.

TRANSMISSION OVERHAUL: After converter assembly removed, place transmission on bench with oil pan upward for disassembly.

Disassembly: Remove oil pan and gasket. Install hold-down clips on Low Range and Reverse band levers (will prevent dropping band struts when pistons removed). Remove oil screen, low range cylinder body and piston, reverse cylinder body and piston. Disconnect control valve link, remove control valve lower body, separator and upper body as an assembly (need not be disassembled further unless required). Take out eight capscrews and remove bell housing. Remove hold-down clip from low range band lever, lift out band struts (CAUTION—use care that struts do not drop into case). Remove high range clutch assembly, reaction sun gear thrust bearing, and low range band (NOTE—Do not disturb low range adjusting screw). Remove governor cover and governor adapter mounting screws, mark position of governor adapter on transmission case (to insure correct reinstallation), remove governor assembly. Remove speedometer drive pinion and retainer. Take out rear bearing retainer capscrews, remove retainer. Remove converter check valve. Remove snap ring at rear of parking gear, remove gear, speedometer drive gear, and snap ring. Remove entire planetary unit and output shaft through front end of transmission case. Remove hold-down clip from reverse band lever, remove band struts. Remove reverse drum and planetary ring gear, reverse gear band, and rear oil pump. These various sub-assemblies can be disassembled as follows:

Planetary Unit—Remove capscrews attaching forward and rear halves of planetary cage, remove forward half of cage by tapping it sharply with a plastic hammer. Lift out three short planetary pinions, thrust washers, and roller bearing. Remove driving sun gear, input shaft, and thrust washer, remove snap ring and input shaft from sun gear. Lift out three long planetary pinions, thrust washers and roller bearings.

High Range Clutch—Remove large snap ring from low range drum, remove low range reaction sun gear and flange from drum. Remove clutch hub and thrust washer, and clutch plates. Use special tool to compress clutch piston return spring, remove retaining snap ring, relieve spring tension, remove spring and seat. Dislodge and remove clutch piston by bumping low range drum on a wooden block (piston side down). Remove piston ring from piston and sealing ring from inner hub of low range drum.

Bell Housing—Take out eight capscrews, remove reactor overrunning clutch and housing (CAUTION—do not disassemble overrunning clutch). Remove front pump relief valve and spring, and oil passage plugs.

Front Oil Pump—Remove pump rear cover plate, lift out pump inner and outer rotors, separate front cover from pump body.

Rear Oil Pump—Remove cover plate, lift out inner and outer rotors (CAUTION—Keep these rotors separate from front pump parts, rear pump rotors are smaller and are not interchangeable).

Control Valve—CAUTION—use extreme care to keep working area and all parts CLEAN when working on control valve assembly. Separate lower valve body, separator, and upper valve body (CAUTION—do not clamp valve body or parts in a vise which may mar contact surfaces or crack body). Remove control valve and link (use a slight twisting motion), remove throttle valve plunger, throttle valve piston spring seat, piston and spring. Remove plate at rear end of direct drive clutch shift valve, bump rear end of valve body on wooden block to dislodge valve piston, remove piston and valve. Remove pressure modulating valve (directly in front of direct drive clutch shift valve) by taking out pin at front end of bore.

Hydraulic Governor—Take out two capscrews attaching governor housing to drive shaft flange, separate housing from flange. Check governor driveshaft-to-adapter endplay which should be .010-.018" and side clearance which should be .0005-.002". If clearances not correct, disassemble driveshaft by driving out pin in driving gear, press gear off, remove shaft from adapter. Check governor valves for free operation by pressing valve in to inner limit of travel and noting whether spring pushes it out to outer limit of travel without drag when released, pull vent valve flyweight and valve to outer limit of travel and noting whether spring returns these parts to inner limit of travel without drag when released. If valves stick or excessive looseness noted, disassemble valves as follows: Pull vent valve to outer limit of travel, remove small snap ring, remove flyweight. Remove valve support snap ring, remove valve support, outlet valve and springs, lift governor valve out through vent valve support opening.

Cleaning: Clean all transmission parts (except rear ball bearing) in solvent cleaner such as clear gasoline or naptha. Wash all valve parts in separate container. Dry all parts with clean compressed air. Blow out all oil passages with compressed air (CAUTION—do not use wire or drills to clean out passages

CONTINUED N NEXT PAGE

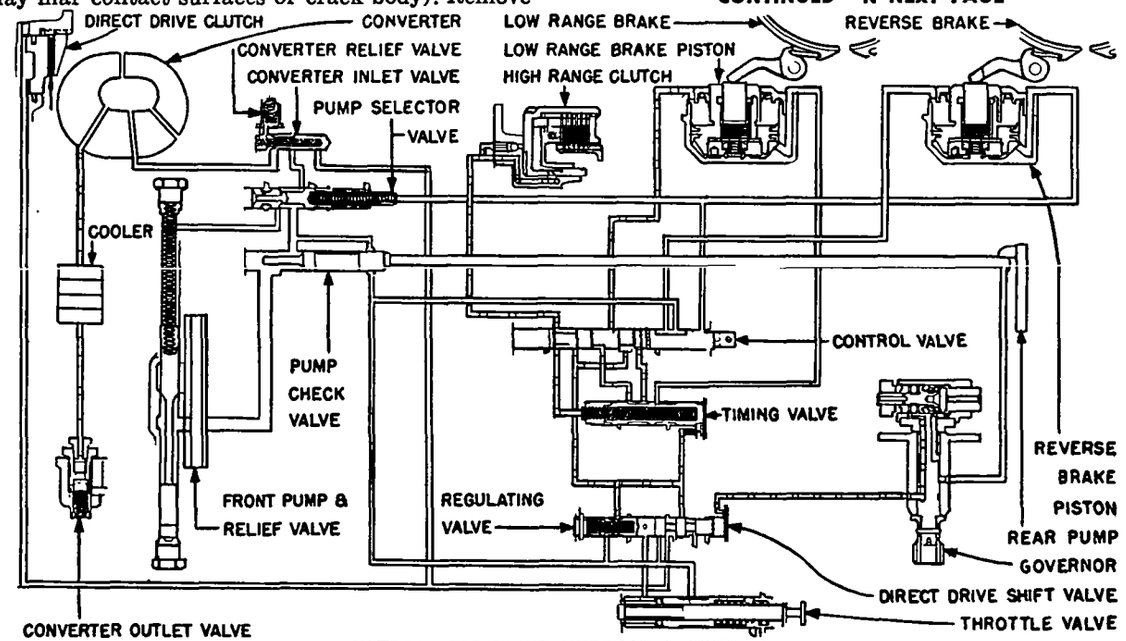

ULTRAMATIC DRIVE HYDRAULIC CIRCUITS

PACKARD ULTRAMATIC (C nt.)

and ports which would damage metering openings and change calibrations).

Reassembly of Parts: Reassemble all sub-assemblies by reversing disassembly directions and note following important details:

►*OIL SEAL & GASKET CAUTION*—Use all new seals and gaskets. **Do not open** gasket envelope until ready to install (gaskets will absorb moisture and expand so they will not fit). If gaskets have absorbed moisture, dry them out in an electric oven at 175-200°F. (do not use gas oven which emits moisture from combustion).

Transmission Case—Install following parts in case before inserting sub-assemblies: Low range band lever and pivot pin, reverse band lever and pivot pin, control valve operating cross-shaft seal, cross-shaft, inner operating lever and parking ratchet spring-load (lock operating lever in place with lockscrew and nut). Install throttle valve operating cross-shaft seal, cross-shaft, and inner operating lever (lock operating lever in place with lockscrew and nut). Install shift selector detent, starter safety switch, converter outlet valve, parking gear lever, pawl, and linkage.

Hydraulic Governor—If new shaft being installed, insert shaft and flange in adapter, press on driving gear until endplay between gear and adapter is .010-.018", drill ⅛" hole in shaft and press in new pin to retain gear. After all parts installed, see that valves operate freely (see disassembly check).

Control Valves—Install all valves with a twisting motion to prevent gouging or scoring valve body and check valves for free operation after installation. Install direct drive clutch shift valve first, install pins at forward end, install modulating valve, piston spring, and retaining spring. Install direct drive clutch shift valve piston, piston retaining plate, tighten retaining screws evenly. Install throttle valve piston, spring, and retainer, tighten retainer screws evenly, install throttle valve plunger. Install control valve. Install new low range and reverse piston seals in large vertical bores in control valve upper body.

►*NOTE*—All valves not spring-loaded should move within control valve body of own weight.

Reactor Overrunning Clutch—If clutch disassembled, install parts in following order: Hold inner race facing front face, install all clutch sprags with curved side at top toward right, and curved side at bottom toward left (use rubber band to hold sprags in place) and see that sprags lean counter-clockwise or toward left at top. Install coil spreader spring at each end of sprags. Install assembly in housing allowing housing to slip off rubber band (CAUTION—make certain that spreader springs remain in place). Check for correct assembly by making certain that inner race will rotate in clockwise direction (viewed from front) but locks when turned in counter-clockwise direction.

Front & Rear Oil Pump—See that correct rotors installed in each pump. Rotors in front pump mesh at the bottom (inner rotor in rear pump automatically aligned by output shaft).

Bell Housing—*CAUTION*—after reactor overrunning clutch installed, do not tip housing down toward front, will allow assembly to fall out. Install front oil pump making certain that oil passages line up, install overrunning clutch, tighten retaining screws to 25-30 ft. lbs. Install front pump relief valve, make certain that valve operates freely, then install valve retaining plug, spring, and plug.

High Range Clutch—Install outer piston ring on piston and inner ring on low range drum hub journal, centralize inner ring on hub, use a ring compressor to guide outer ring when installing piston. See that clutch release spring end seats in piston, use compressing tool to compress spring while installing spring retainer and snap ring. Coat clutch hub thrust washer with cup grease before installing, install snap ring on input shaft ahead of clutch hub, then install clutch hub and rear snap ring. Install clutch driving and driven plates alternately starting with a steel driving plate. Install low range sun gear and flange, and snap ring.

Planetary Unit—Place output shaft upward with planetary cage upward, install pinion rear thrust washers, driving sun gear thrust washer (use cup grease to hold washer in place), driving sun gear. Assemble planetary pinions and roller bearings using cup grease and assembly tool to hold rollers in place (20 rollers at each end with spacer between them). Install long planetary pinions, short pinions, and thrust washers. Install front half of planetary cage and tighten capscrews evenly.

Reassembly of Transmission—Install parts by reversing order of disassembly and note following important instructions:

Planetary Unit Installation—Install rear oil pump making certain that oil passages line up, tighten retaining capscrews evenly. Coat reverse drum thrust washer with cup grease and place it on rear oil pump body journal. Install reverse band and drum (CAUTION—do not score drum bushing), install planetary unit through front end of case and make certain that it is against reverse drum thrust washer. Install speedometer driving gear, snap ring, parking gear spacer and gear, and snap ring. Install output shaft rear bearing, snap ring, bearing retainer (with new oil seal installed in retainer), tighten retainer capscrews evenly to 25-30 ft. lbs. Install hydraulic governor (CAUTION—line up marks on adapter and case made during disassembly), tighten adapter capscrews evenly, install governor cover with new cover gasket, install speedometer drive pinion and retainer.

High Range Clutch Installation (& Endplay Adjustment)—Install low range band, and driving sun gear front thrust ball bearing (use cup grease to hold bearing in place). Install high range clutch unit through front of case and make certain that it is seated against thrust bearing with sun gear in mesh with planetary pinions. Install low range drum front thrust washer temporarily. Use depth gauge and bridge gauge to measure the two following distances:

1) Distance from forward face of low range drum thrust washer to milled front face of transmission case.

2) Distance from milled rear face of bell housing to extreme rear end of journal of overrunning clutch housing. *CAUTION*—Gasket must be removed when making this measurement.

These measurements must be the same and are corrected by selecting a low range drum thrust washer of correct thickness (washer furnished in .010" thickness steps from .085" to .135"). Install correct low range drum thrust washer using cup grease to hold washer in place. Install bell housing using a **new gasket,** tighten capscrews evenly to 55-60 ft. lbs.

►*ENDPLAY CAUTION*—End clearance is controlled by thickness of bell housing gasket and will be .008-.018" if correct thrust washer selected as directed above, and new gasket used when installing bell housing.

Control Valves—Install reverse band anchor strut and lever strut, move lever into position holding struts in place, install lever hold-down clip. Repeat this procedure on low range band. Install control valve upper body using three short capscrews turned in finger-tight for temporary holding. Install control valve separator plate (CAUTION—line up oil passages) using one short capscrew turned in finger-tight for temporary holding. Install control valve lower body with three longer capscrews turning these screws in finger-tight (CAUTION—see that throttle valve collar engages operating lever). Install low range piston and seal cups in cylinder body, install piston automatic take-up, then install the assembly (CAUTION—see that piston does not damage seal in control valve upper body), tighten four cylinder body capscrews finger-tight. Repeat this procedure for reverse piston and cylinder body. Remove two oil pump screen attaching capscrews, tighten all control valve and cylinder body capscrews evenly to 12-15 ft. lbs. Connect control valve link to cross-shaft inner lever, adjust link (see data below), install oil pump screen and tighten attaching screws to 12-15 in. lbs. Remove low range and reverse band lever hold-down clips, adjust bands (see Band Adjustment), backing off both adjusting screws 2 full turns from snug position. Use new gasket when installing transmission oil pan, tighten pan screws evenly to 12-15 ft. lbs.

Control Valve Link Adjustment—Place selector control valve inner lever in Reverse "R" position and make certain that detent fully engaged in detent well. Adjust valve link so that #5 land on selector control valve is flush with-to-1/32" out of control valve lower body and that distance from center of link pin to control valve lower body is exactly .128", then tighten link clamp bolt.

PACKARD SYNCHRO-MESH

Eight, "2200" & "2300" Series (1949)
Super 8, "2200" & "2300" Series (1949)
Custom 8, "2200" Series (Early 1949)

►**ULTRAMATIC DRIVE TRANSMISSION:** Optl. on above models and Std. on Custom Eight. ***See "Packard Ultramatic Drive" for data.***

DESCRIPTION: Three-speed, constant-mesh, synchro-mesh type of same design used on previous models.

OVERDRIVE NOTE—Optl. Overdrive used on these models is new Warner R11 type. See Warner Overdrive data.

TRANSMISSION DISASSEMBLY: ***See complete "Packard 1940-48" Transmission in previous release.***

SPICER TRANSFER CASE

Willys Jeep, Universal CJ-3A (1949)
Willys Jeep Truck, Model 4WD (1949)
Willys Station Wagon, Model 4x4-63 (1949)

DESCRIPTION: Two-speed auxiliary transmission of same design used on corresponding previous models.

REMOVAL, DISASSEMBLY, & REASSEMBLY: ***See complete "Spicer Transfer Case" data in previous release.***

EQUIPMENT INDEX

BRAKES: Page
Anti-Creep 239
Buick (Bendix) 241
Cadillac (Bendix) 241
Chevrolet 1950 Pass. (Own) 245
Chevrolet 1951 Pass. (Bendix) 243
Chevrolet Truck (Own) 245
Chevrolet Truck (Bendix) 243
Chevrolet Truck (Twinplex) 244
Chrysler (Lockheed Safeguard) 245
Chrysler (Disc) 246
Chrysler Vacu-Ease (Power Unit) 240
Crosley (Goodyear Hawley) ..See 1949 Data
Crosley (Lockheed) 249
De Soto (Lockheed Safeguard) 245
De Soto Vacu-Ease (Power Unit) 240
Dodge (Lockheed Safeguard) 245
Ford Pass. Cars (Bendix) 248
Ford Truck (Bendix Duo-servo) 248
Ford Truck (Bendix Uni-servo) 249
Ford Truck (Lockheed) 249
Frazer (Bendix Self-Cntr.) 242
Frazer (Lockheed Self-Adj.) 249
Henry J (Bendix Self-Cntr.) 242
Hudson (Bendix) 241
Kaiser (Bendix Self-Cntr.) 242
Kaiser (Lockheed Self-Adj.) 249
Lincoln (Bendix) 248
Mercury (Bendix) 248
Nash Rambler (Bendix Self-Cntr.) 242
Nash Stsmn. (Bendix Self-Cntr.) 242
Nash Amb. (Bendix) 241
Oldsmobile (Bendix) 241
Packard (Bendix) 241
Plymouth (Lockheed Safeguard) 245
Pontiac (Bendix) 241
Studebaker (Lockheed Self-Adj.) 249
Willys Jeep (Lockheed) 249
Willys Others (Bendix Self-Cntr.) 242

CARBURETORS:
See Separate Index 201

CARBURETION EQUIPMENT:
King-Seeley "CV" Gasoline Gauge 235

CLUTCHES:
Buick 250
Cadillac (Long) 252
Chevrolet 251
Chrysler 6 & 8 (Borg & Beck) 250
Chrysler 8 (Borg & Beck "E") 251
Crosley (Rockford) 251
De Soto (Borg & Beck) 250
Dodge (Borg & Beck and Auburn) 250
Ford (Long) 252
Frazer (Auburn and Borg & Beck) 250
Henry J (Auburn) 250
Henry J (Rockford) 251
Hudson 251
Kaiser (Auburn and Borg & Beck) 250
Lincoln (Long) 252
Mercury (Borg & Beck) 250
Nash (Borg & Beck) 250
Oldsmobile 6 (Borg & Beck) 250
Oldsmobile 8 (Long) 252
Packard (Long) 252
Plymouth (Auburn and Borg & Beck) 250
Pontiac ..... See 1949 Data
Studebaker (Borg & Beck) 250
Willys (Auburn) 250

ELECTRICAL EQUIPMENT: Page
Auto-Lite "IAP" & "IAR" Distr. 237
Auto-Lite "IAT" Distributors 236
Chrysler, De Soto, Dodge
Kick-down Switch 238
Cam Angles 237
Delco-Remy Automatic Starter Drive 238

FRONT SUSPENSION:
Buick 253
Cadillac 253
Chevrolet Pass. Cars 254
Chrysler, De Soto, & Dodge 255
Ford Pass. Cars 255
Frazer 257
Henry J 258
Hudson 258
Kaiser 257
Lincoln & Mercury 255
Nash Rambler 259
Nash Stsmn. & Amb. 258
Oldsmobile 259
Packard 260
Plymouth 255
Pontiac 260
Studebaker 262
Willys 263

FRONT WHEEL DRIVE AXLES:
Willys (Spicer—See Rear Axle) 275

REAR AXLES:
Buick 264
Cadillac 266
Chevrolet Pass. Cars 267
Chevrolet Truck Semi-floating 267
Chevrolet Truck Full-floating 266
Chevrolet Truck Two-Speed 266
Chrysler 267
Crosley (Spicer) 275
De Soto & Dodge 267
Ford Pass. Cars 269
Ford Sta. Wagon & Half-Ton 271
Ford Truck Full-floating 268
Ford Truck Two-Speed 269
Frazer (Spicer) 275
Henry J. (Spicer) 275
Hudson 271
Kaiser (Spicer) 275
Lincoln & Mercury 271
Nash Rambler 273
Nash. Stsmn. & Amb. 272
Oldsmobile 273
Packard 271
Plymouth 267
Pontiac 274
Studebaker (Spicer) 275
Willys except Trucks (Spicer) 275
Willys Truck (Spicer & Timken) 275

REAR SUSPENSION:
Buick 265
Nash 272
Oldsmobile 274

STEERING GEARS:
Chrysler (Gemmer) Hydraguide 276

TRANSMISSIONS:
See Separate Index 278

MISCELLANE US:
King-Seeley "CV" Gauges
Oil Pressure & Temperature 235

CAR MODEL INDEX

Page
BUICK Special Data 3
1950-51 5
CADILLAC Special Data 11
1950-51 13
CHEVROLET Special Data 19
1950-51 Pass. Cars 22
1950-51 Trucks 28
CHRYSLER Special Data 33
1950-51 Six 34
1950 Eight 39
1951 V8 43
CROSLEY Special Data 48
1950-51 49
DE SOTO Special Data 33
1950-51 53
DODGE Special Data 33
1950-51 58
FORD Special Data 63
1950-51 6 Cyl. Cars 65
1950-51 V8 Cars 70
1950-51 Trucks 75
FRAZER Special Data 79
1950 ..... See 1949 Data
1951 80
HENRY J Special Data 84
1951 4 Cyl. 85
1951 6 Cyl. 89
HUDSON Special Data 93
1950-51 Pacemaker 94
1950-51 Six 99
1950-51 Eight 104
KAISER Special Data 109
1950 ..... See 1949 Data
1951 110
LINCOLN Special Data 114
1950-51 115
MERCURY Special Data 119
1950-51 120
NASH Special Data 124
1950-51 Rambler 126
1950-51 Statesman 130
1950-51 Ambassador 134
OLDSMOBILE Special Data 138
1950 Six 140
1950-51 Eight 144
PACKARD Special Data 149
1950 ..... See 1949 Data
1951 150
PLYMOUTH Special Data 33
1950-51 155
PONTIAC Special Data 160
1950-51 Six 162
1950-51 Eight 167
STUDEBAKER Special Data 172
1950-51 Champion 176
1950 Commander 181
1951 Commander V8 185
WILLYS Special Data 190
1950 Early 4 & 6 Cyl. ..... See 1949 Data
1950-51 Jeep ..... See 1949 Data
1950-51 4 Cyl. "F" Hd. 192
1950-51 6 Cyl. Lightning 197

1951 NATIONAL AUTOMOTIVE SERVICE
PRINTED IN U. S. A.

►IMPORTANT FACTORY PRODUCTI N & RECOMMENDED CHANGES (Se Next Page)

IMPORTANT FACTORY PRODUCTION & RECOMMENDED CHANGES FOR PREVIOUS MODELS & 1950-51 MODELS

►Make notation in Previous Years Data of changes for earlier models.

BUICK

►**1950 CARBURETOR PRODUCTION CHANGE (To correct gasoline odors in car)**—*See "Carter WCD" carburetor in 1950-51 Carburetor Section.*

►**1948-51 DYNAFLOW CRANKSHAFT AND FLYWHEEL REPLACEMENT**—*See 1950-51 Buick Special Data.*

►**1948-51 NEW PROCEDURE TO CHECK VALVE TIMING (With Hydraulic Lifters)**—*See 1950-51 Buick car pages.*

CADILLAC

►**1949-51 DETONATION CORRECTION**—*See 1950-51 Cadillac Special Data.*

►**1949-50 VALVE STICKING CORRECTION**—*See 1950-51 Cadillac Special Data.*

►**ALL HYDRAMATIC DRIVE MODELS—CHANGE IN DRAINING AND REFILLING INTERVAL** from 15,000 to 25,000 miles.

►**1946 & LATER HYDRAMATIC TROUBLE SHOOTING AND OVERHAUL**—*See Hydramatic Drive in 1950-51 Transmission Section.*

►**1949 "FLANGED TYPE" REAR AXLE REMOVAL & INSTALLATION**—*See 1950-51 Rear Axle Section.*

CHEVROLET

►**1950-51 PASS. CAR "235" ENGINE WITH HYDRAULIC VALVE LIFTERS (Powerglide Models)**—*See 1950-51 Chevrolet car pages.*

►**1951 PASS. CARS & TRUCKS. NEW "CHEVROLET-BENDIX DUO-SERVO" & "TWIN-PLEX" BRAKES**—*See "Chevrolet-Bendix" & "Twin-Plex" in 1950-51 Brake Section.*

►**1941-49 VALVE ROTATOR INSTALLATION ON TRUCK ENGINES**—*See 1950-51 Chevrolet Special Data.*

►**1940-50 NEW REPLACEMENT FRONT AND REAR TORQUE TUBE BUSHING**—*See 1950-51 Chevrolet Special Data.*

►**1940-50 REPLACEMENT CARBURETOR**—*See Carter "YF" and Rochester Model "B" in 1950-51 Carburetor Section.*

►**1941-49 PASSENGER & TRUCK REPLACEMENT CLUTCH DRIVEN MEMBER**—*See Chevrolet Clutch in 1950-51 Clutch Section.*

CHRYSLER—DE SOTO—DODGE

►**1950 CHRYSLER HYDRAULIC VALVE LIFTER USED ON SOME C49 & C50 CARS (Identified by "X" after engine number)**—*See 1950 Chrysler car pages.*

►**1951 CHRYSLER POWER STEERING**—*See "Hydraguide" in 1950-51 Steering Section.*

►**1950 AUTOMATIC TRANSMISSION SYNCHRYONIZER PRODUCTION CHANGE**—*See "Chrysler, De Soto, Dodge" in 1950-51 Transmission Section.*

CHRYSLER—DE SOTO—DODGE (Cont.)

►**1946-50 CARBURETOR CHANGE (Synchro-mesh Cars)**—*See Carter EX3R Carburetor in 1950-51 Carburetor Section.*

►**1941-50 KICK-DOWN SWITCH PARTS CHANGE (To improve performance)**—*See "Chrysler, De Soto, Dodge" Kick-down Switch in 1950-51 Electrical Equipment Section.*

FORD

►**1951 FORDOMATIC TRANSMISSION LINKAGE PRODUCTION CHANGE**—*See "Fordomatic" in 1950-51 Transmission Section.*

►**1950 & EARLIER INSTALLATION OF ROTATABLE VALVES**—*See 1950-51 Ford Special Data.*

►**1950 CYLINDER HEAD PRODUCTION CHANGE**—*See 1950-51 Ford car pages.*

►**1950 PISTON & PISTON RING PRODUCTION CHANGE**—*See 1950-51 Ford car pages.*

►**1950 F-1 ½-TON TRUCK & 1951 STATION WAGON REAR AXLE ASSEMBLY PRODUCTION CHANGE**—*See 1950-51 "Lincoln-Mercury, Ford" Rear Axle in Rear Axle Section.*

►**1949 SIX CYL. & V8 OIL PAN REMOVAL**—*See 1950-51 Ford Special Data.*

FRAZER & KAISER

►**1951 CARTER WGD 813S & 781S CARBURETOR CHANGE (To correct Stalling and Hard Starting due to flooding)**—*See Carter WGD Carburetors in 1950-51 Carburetor Section.*

►**1949-50 SELF-ADJUSTING BRAKES (LOCKHEED) USED ON SOME CARS**—*See 1950-51 Brake Section.*

HUDSON

►**1948 SIX CYL. CONNECTING ROD CHANGE**—*See 1950-51 Hudson Special Data.*

►**1948-49 SIX CYL. OIL PUMP GEAR CHANGE (When Installing new Camshaft)**—*See 1950-51 Hudson Special Data.*

LINCOLN

►**ALL CARBURETORS—FLOAT NEEDLE & SEAT ASSEMBLY REPLACEMENT**—*See Lincoln Dual Concentric Carburetor in 1950-51 Carburetor Section.*

MERCURY

►**1950 REAR AXLE PRODUCTION CHANGE**—*See "Lincoln-Mercury Ford" Rear Axle in Rear Axle Section.*

►**ALL CARBURETORS—FLOAT NEEDLE & SEAT ASSEMBLY REPLACEMENT**—*See Mercury Dual Concentric Carburetor in 1950-51 Carburetor Section.*

NASH

►**1950-51 AMBASSADOR TAPPET CLEARANCE CHANGE**—*See 1950-51 Nash car pages.*

►**1950-51 STATESMAN & RAMBLER CARTER "WA-1" 780S CARBURETOR CHOKE SETTING CHANGE**—*See Carter "WA-1" in 1950-51 Carburetor Section.*

OLDSMOBILE

►**ALL HYDRAMATIC DRIVE MODELS—CHANGE IN DRAINING AND REFILLING INTERVAL** from 15,000 to 25,000 miles.

►**1949 REPLACEMENT CARBURETORS**—*See Carter WGD in 1950-51 Carburetor Section.*

►**1949 OLDSMOBILE 8 METERING ROD CHANGE**—*See Carter WGD in 1950-51 Carburetor Section.*

►**1946 & LATER HYDRAMATIC TROUBLE SHOOTING AND OVERHAUL**—*See Hydramatic Drive in 1950-51 Transmission Section.*

PACKARD

►**1949-50 Eight Cyl. Carter 728S & 728SA CHOKE SETTING CHANGED AS FOLLOWS:** *728S changed to 2½ pts. lean. 728SA changed to 2 pts. lean. Both were formerly 1 pt. lean.*

►**2100 & 2200 SERIES "R9" OVERDRIVE REPLACEMENT**—*See Warner "R11" OVERDRIVE in 1950-51 Transmission Section.*

►**1949-50 ULTRAMATIC DRAIN AND REFILL SCHEDULE CHANGED TO 25,000 MILES**—*See 1950-51 Packard car pages.*

PLYMOUTH

►**1947-50 THICKER WALL MAIN & CONNECTING ROD BEARINGS**—*See "Chrysler, De Soto, Dodge, Plymouth" Special Data.*

PONTIAC

►**1946 & LATER HYDRAMATIC TROUBLE SHOOTING AND OVERHAUL**—*See Hydramatic Drive in 1950-51 Transmission Section.*

►**1946-51 NEW REAR MAIN BEARING OIL SEAL INSTALLATION PROCEDURE**—*See 1950-51 Pontiac Special Data.*

►**ALL HYDRAMATIC DRIVE MODELS—CHANGE IN DRAINING AND REFILLING INTERVAL** from 15,000 to 25,000 miles.

STUDEBAKER

►**1951 V8 FIRST TYPE STROMBERG CARBURETOR RECOMMENDED CHANGES**—*See Stromberg AAUVB in 1950-51 Carburetor Section.*

►**1951 STUDEBAKER AUTOMATIC TRANSMISSION LINKAGE CHANGE**—*See "Studebaker Automatic" in 1950-51 Transmission Section.*

WILLYS

►**1950-51 WILLYS ½ TON TRUCK (473-HT) REAR AXLE CHANGE FROM TIMKEN TO SPICER**—*See Spicer Axle in 1950-51 Rear Axle Section.*

►**EARLY 1950 FOUR CYL. ALSO USED CARTER YF 738S**—*See Carter YF in 1950-51 Carburetor Section.*

►See Data Sheets for additional Changes & Corrections.

HOOD ASSEMBLY

HOOD ADJUSTMENT: Hood Lock. Hood fastener tension is non-adjustable, as the latches are spring loaded, causing them to seek a firmly locked position. The hood release rod is attached to the front fastener trunnion by means of checknuts on both sides of the trunnion. When fasteners are in full open position the shoulder on rear end of releasing rod should just contact the trunnion of rear fasteners. When the fasteners are at open position and release cable knob is pulled into its seat by the cable return spring, a distance of 3" should exist between rear end of cable pulley housing and the shoulder on releasing rod. This distance is obtained by adjusting the cable where it is anchored to the rear hood hinge.

TIGHTENING SPECIFICATIONS

	Ft. Lbs.	In. Lbs.
Spark Plugs (14 mm. type)	22-28	264-336
Cylinder Head Capscrews	65-70	780-840
Main Bearing Bolts	90-100	1080-1200
Connecting Rod Bolts (40,50)	45-50	540-600
Connecting Rod Bolts (70)	60-65	720-780
Piston Pin Clamp Bolt	25-30	300-360
Rocker Arm Bracket Capscrew	30-35	360-420
Flywheel to Crankshaft (40,50)	35-40	420-480
Flywheel to Crankshaft (70)	45-50	540-600
Manifold Studs	25-30	300-360
Timing Chain Cover	15-20	180-240
Balancer Bolt	100-110	1200-1320

CYLINDER HEAD

CYLINDER HEAD INSTALLATION: Use Torque Indicating Wrench to tighten cylinder head capscrews, tighten in correct sequence as shown in the diagram. Cast Iron heads should be tightened cold and rechecked after engine has been run sufficently to bring all parts to normal operating temperature.
NOTE—On models using "crimped" cylinder head gaskets cylinder head should be tightened initially and then the entire tightening procedure repeated to compensate for gradual flattening of crimping.
Tightening Torque—See Tightening (Torque Wrench) Specifications above.

BUICK

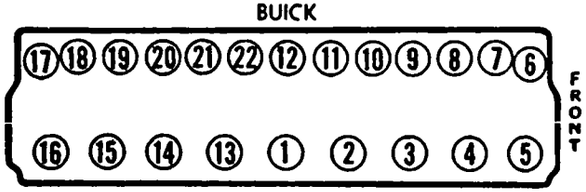

ENGINE MOUNTINGS

"CONTROLLED FREQUENCY" ENGINE MOUNTINGS: Engine and transmission supported at 3 points on "Controlled Frequency" mountings (special synthetic rubber pads).
Front Mountings. At approximate center of crankcase at each side of engine. Mouting pads secured between brackets on frame and engine. Designed to support engine weight and provide torsional control.
Rear Mounting. At rear of transmission. Consists of: 1) Transmission Support (between legs of frame X-member), 2) Rubber Mounting Pad (on support under transmission rear bearing retainer), 3) Rubber Thrust Pad (between rear of support and thrust plate extending down from rear bearing retainer). Steel shims fitted between thrust pad and support. Mounting pad supports part of weight and thrust pad takes drive thrust from rear wheels.

Engine Mounting (and Centering) Adjustment: With torque tube disconnected from torque ball make adjustments as follows:
1) **At front engine mountings.** Tighten brackets at frame and crankcase, loosen front mounting pad top stud nuts at engine bracket on each side.
2) **At rear mounting.** Tighten at following points: a) transmission support ends at frame X-member, b) mounting pad at support and at transmission rear bearing retainer, c) thrust pad to thrust plate stud nuts **at rear.** Then loosen thrust pad to transmission support stud nuts **at front.** Remove steel shims ahead of thrust pad.
3) **Then center engine as follows:** Distance between front edge of crankshaft balancer (at horizontal center line) and **center** of nearest shock absorber bolt head at each side must be equal. If required, shift engine sidewise (oversize holes in engine bracket at rubber mounting permit engine movement) until distance equal at each side (engine centered in frame). Tighten front mounting pad top stud nuts at each engine bracket.
4) **Shimming rear mounting.** Insert steel shims from above (shim tabs UP on left side on Dynaflow UP on right side on Synchro-mesh Trans, cars) to snugly fill space between front face of rubber thrust pad and rear face of transmission support (CAUTION—Engine and transmission must be seated normally on mounting pads). Tighten thrust pad to transmission support stud nuts at front. Then retighten front engine mounting pad stud nuts at each side of engine. Connect torque tube to ball.

TORQUE BALL ADJUSTMENT

TORQUE BALL: Operates between an inner and outer retainer bolted to transmission rear bearing retainer. Universal joint seal provided at rear of torque ball. Shims provided between front flanged ends of inner and outer retainers for adjustment. Synthetic rubber boot fitted from rear of outer retainer to flange of torque ball (replaces packing and spring washer formerly used on inner rear edge of outer retainer).

Disassembly—Disconnect rear axle, move to rear. Take off torque ball boot, thrust plate, and torque ball assembly from transmission rear bearing retainer (on 40, 50, be sure to mark top of outer retainer and use mark for reassembly). Clean all parts Replace worn or damaged parts.

Reassembly and Adjustment—As follows:
1)—Install guide pins in upper bolt holes in transmission rear bearing retainer.
2)—Install one shim (with 3 notches in outer edge) and inner ball retainer (with oil drain hole and notch in edge down) on guide pins.
3)—Oil bearing surfaces of retainer and torque ball, and universal oil seal in torque ball with transmission lubricant.
NOTE—If universal joint oil seal replaced, install seal with feather edge in towards ball, use bar or flat piece of metal and press seal flat with boss on flange of ball. Leather must be soft and pliable (soaked in neatsfoot oil prior to installation).
4)—Assemble torque ball in outer retainer with "TOP" mark on ball and top of retainer (mark on 40, 50; flat portion on 70) together.
5)—Use installing Tool J-2597 and push tool (sleeve and plug) through rear side of torque ball until leather edge of seal on plug (seal will drop off plug). Assemble torque ball and outer retainer (with "TOP" mark up) on guide pins, fill space between flanges of inner and outer retainers with shims (see Torque Ball Shims below). See that oil seal has seated on universal joint, remove tool plug.
Torque Ball Shims—Four thicknesses (marked by notches on outer edge) as follows:
3 Notches .....004-.006" 2 Notches .....009-.011"
1 Notch .....011-.013" Unmarked .....013-.015"
6)—Install thrust plate and bolts in retainer (remove guide pins and install short bolts at these holes). DO NOT TIGHTEN BOLTS.
7)—Tighten retainer bolts evenly while continually moving torque ball by means of hardwood club inserted in end of universal joint. Use soft mallet and tap outer retainer if ball binds while tightening bolts.
►***CAUTION—For proper centering of ball and retainer, torque ball must be moved while tightening retainer bolts.***
8)—Torque ball should require 5 to 10 lbs. drag with 5⅝" leverage (insert hardwood club in universal, attach spring scale in groove on club 5⅝" behind the rear edge of the universal). If torque ball not within this tension, repeat centering operation and recheck tension. If further adjustment required, add torque ball shims if too tight, or remove shims if too loose (see Torque Ball Shims above) until correct adjustment is secured.
9)—Install torque ball boot by turning large end over small end, engage small end in groove on flange of torque ball, then turn large end to front to engage rear end of outer retainer.
►***CAUTION—Always use Tool J-2597 when installing torque ball to avoid damaging universal joint oil seal.***
10)—Re-install shims between thrust plate and thrust pad and tighten thrust plate stud nuts.
11)—Re-install rear axle assembly.

PISTONS

PISTONS (REPLACEMENT SERVICE): Pistons are lighter weight aluminum alloy type and are fitted with pins (pistons not furnished without pins). Pistons have full skirts and are cam ground. Four ring grooves are located above pin. The Series 40 (1950) and Series 70 (1951) pistons have two transverse slots in skirt below bottom ring groove parallel to piston pin; the Series 40 (1951) and Series 50 (1950-51) pistons have these slots in bottom ring groove and piston is approximately 9/16" shorter than previous pistons. Series 40 (1951) and Series 50 (1950-51) piston pins are offset 1/16" toward camshaft side.

Series 40 (1950)

Part No.	Nominal Size	Piston Diameter
1393028	Standard	3.0910-3.0922"
1393029	.005" Oversize	3.0966-3.0972"
1393030	.010" Oversize	3.1016-3.1022"
1393032	.020" Oversize	3.1116-3.1122"
1393033	.030" Oversize	3.1216-3.1222"

Series 40 (1951), 50 (1950-51)

Part No.	Nominal Size	Piston Diameter
1393937	Standard	3.1860-3.1872"
1393938	.005" Oversize	3.1916-3.1922"
1393939	.010" Oversize	3.1966-3.1972"
1393940	.020" Oversize	3.2066-3.2072"
1393941	.030" Oversize	3.2166-3.2172"

CONTINUED ON NEXT PAGE

PISTONS

CONTINUED FR M PRECEDING PA E

Series 70 (1950-51)

Part No.	Nominal Size	Piston Diameter
1393034	Standard①	3.4358-3.4370"
1393035	.005" Oversize	3.4414-3.4420"
1393036	.010" Oversize	3.4464-3.4470"
1393038	.020" Oversize	3.4565-3.4570"
1393039	.030" Oversize	3.4664-3.4670"

①—Standard Pistons are "High Limit" type.

PISTON RINGS

REPLACEMENT PISTON RINGS: Car manufacturer supplies oversize rings in sizes listed below.

Ring Oversize	For Piston Oversizes
.010"	.005" to .010"
.020"	.011" to .020"
.030"	.021" to .030"

Piston Ring Tools—Use Service tool KMO-297-E (Series 40, 50), KMO-297-D (on Series 70), for removing and installing piston rings.

Excessive Oil Consumption Note—When installing rings to correct this condition use a fine hone very lightly on all bores (just enough to dull glaze surface and not change bore size). This will allow quicker break-in of new rings.

CRANKSHAFT & MAIN BEARINGS

CRANKSHAFT REPLACEMENT (Dynaflow Cars): It will be necessary to ream dowel pin holes and install oversize dowel pins when a new crankshaft is installed with either the old flywheel or a new one. Proceed as follows:

1) Install crankshaft, clean crankshaft flange and flywheel and remove any burrs. Install flywheel with dowel pin holes aligned and install the six bolts securely. Check flywheel for runout.

2) Remove rear main bearing cap and turn crankshaft so that a dowel hole can be reamed. Ream both dowel holes through crankshaft flange and flywheel, using Reamer J-808-4.

3) Make two dowel pins from 17/32" drill rod cut to 9/16" long. Round off ends of dowel and tap into place through flywheel and flange until ends are flush with rear face of flywheel.

4) Install main bearing cap and complete assembly of engine and transmission.

REAR MAIN BEARING OIL SEAL: Consists of oil slinger on crankshaft operating in groove to rear of rear main bearing. Slinger groove in bearing cap has oil return hole to crankcase. Braided fabric seal fitted in groove behind slinger groove in crankcase and bearing cap. Vertical joint between cap and crankcase fitted with cork seals at each side.

Installation—With crankshaft removed, place new braided fabric seal in groove in crankcase with both ends extending out from bearing parting line, force seal in groove with hammer handle or smooth piece of wood so that seal seats within 1/16" of crankcase. Cut ends of seal off flush with crankcase (use razor blade or sharp knife). Repeat operation for bearing cap. Coat vertical grooves in cap with gasket cement (allow to set until tacky), use new cork gasket and fit into groove with putty knife (ends will project beyond cap). Place cap in vise to lightly compress seals in grooves, cut ends of cork seals flush with cap surface. Coat cork gaskets with vaseline, install cap in crankcase.

FLYWHEEL

FLYWHEEL (ONLY) REPLACEMENT (Dynaflow Cars): When replacing flywheel only, it is necessary to ream the two dowel holes to avoid deforming the flywheel when it is bolted to the crankshaft. Use a tapered reamer and remove only enough metal to obtain a snug fit over pilot and dowel pin holes.

CAUTION—Flywheel must not be forced over the crankshaft pilot and dowel pins.

NOTE—It may be necessary to re-balance flywheel and crankshaft after installation of new parts. *See "Buick Dynaflow" in Transmission Section for data.*

VALVE SYSTEM

INITIAL ADJUSTMENT OF HYDRAULIC VALVE LIFTERS: Required only when cylinder head has been removed, valves refaced, valve lifters removed, or when setting of adjusting ball stud disturbed.

►*CAUTION—Lifters must be at the lowest position (on heel of cam) when making initial adjustment.*

Adjustment—Set engine in firing position for cylinder to be worked on, this locates lifters *(if all valves being adjusted use table below to avoid setting firing position for each cylinder).* Turn adjusting ball stud to point where all play just removed at each end of push rod and all lash clearance removed from valve train, then turn adjusting ball stud down **exactly two (2) turns.** Oil groove on ball stud must be at least halfway down in rocker arm (ball stud can be turned down one additional turn—if this does not bring oil groove down, replace push rod or lifter).

Adjusting All Valves—By using the flywheel mark "UDC 1-8" and setting engine in firing position for #1 cylinder, valves in left half of table below can be adjusted, then set #8 cylinder firing position and valves in right half of table can be adjusted.

Hydraulic Valve Adjusting Table

No. 1 Cyl. Firing		No. 8 Cyl. Firing	
Valve No.	Valve	Valve No.	Valve
1	#1 Exh.	3	#2 Int.
2	#1 Int.	5	#3 Exh.
4	#2 Exh.	6	#3 Int.
7	#4 Int.	9	#5 Exh.
8	#4 Exh.	10	#5 Int.
11	#6 Int.	13	#7 Exh.
12	#6 Exh.	15	#8 Int.
14	#7 Int.	16	#8 Exh.

ROCKER ARMS: Mounted on tubular shaft and held against sides of shaft brackets by spring installed on shaft between adjacent rocker arms. Arm at each end of shaft held by spring washer assembled between two flat washers, and a cotter pin. Shaft retained by pilot setscrew in top of #2 bracket.

►*CAUTION—Different types of NON-INTERCHANGEABLE rocker arms used on each engine:*

40, 50, 70 Rocker Arms

Part Number	Identification Marks① Upper	Lower	Intake 40-50-70	Exhaust 40-50
1324123	2 Dots	0	1-3-5-7	2-4-6-8
1324122	1 Dot	1	2-4-6-8	1-3-5-7
1337336	42	X	All "70"	

①—Stamped on adjusting screw end of rocker arm.

Series 40 & 50—Two different types of offset rocker arms. All rocker arms have oil lead to adjusting ball stud and studs have drilled oil passage to pushrod socket (on cars with hydraulic lifters, oil is fed through hollow pushrod for lifter operation). *See Identification Table and Installation data.*

Series 70—Three different types of rocker arms: Intake—two offset types (same as used on 40 & 50 above), Exhaust—one type straight arm used for all exhaust valves. *See Identification Table & Installation data.*

►*CAUTION—Rocker arms for engines WITHOUT Hydraulic Lifters have oil feed hole for ball stud on UNDERSIDE of arm.*

Rocker Arm Installation—Install rocker arms in the following order (numbered from front to rear):

Series	Rocker Arm Position	Identification
40 & 50	1-3-5-7-9-11-13-15	marked 1 & 1 Dot
40 & 50	2-4-6-8-10-12-14-16	marked 0 & 2 Dots
70	1-4-5-8-9-12-13-16	marked X & 42
70	2-6-10-14	marked 0 & 2 Dots
70	3-7-11-15	marked 1 & 1 Dot

►*CAUTION—Rocker arms must not be interchanged between engines with or without hydraulic lifters.*

Rocker Arm Lubrication: Outlet side of oil filter connected to drilled passage in cylinder head with pipe connected to top of #1 bracket. Upper pipe fitting in cylinder head restricted to provide proper oil flow.

OIL PUMP

OIL PUMP OVERHAUL: Pump removed from engine.

Disassembly—Remove screen and float assembly from pump cover by removing cotter pin. Remove oil pressure valve and spring and take out idler gear. Remove pump shaft and gear assembly. Wash all parts thoroughly with solvent and blow out screen assembly with light air pressure.

Reassembly—Before reassembling pump, inspect pressure valve for free movement in pump body. Check hole in pump body for roundness (if worn, replace pump body). Replace spring if collapsed or worn. Check position of gear on drive shaft, measurement should be (Series 40 & 50) 7⅝" minus .010", (Series 70) 8" minus .010", from gear to end of shaft. Install gear and shaft assembly in pump body and then install idler gear with rounded end of teeth inward. Lay a straightedge across pump body and check clearance of gears. Clearance should not exceed .004". Install pump cover and tighten cover screws evenly. Shaft and gears must turn freely with a slight amount of endplay. Attach screen assembly, making sure it swings freely and stops permit full range of movement.

Installation—Attach pump assembly to engine using the correct gasket. Tighten attaching screws evenly. Test pump alignment by twisting shaft with fingers; shaft should turn freely within limits of gear backlash. Make this test every 180° through two full revolutions. If pump is not free, loosen attaching screws and shift pump to relieve binding. If binding continues to exist, remove pump and distributor and grind a slight amount from ends of pump and distributor shafts. Distributor gear must be removed.

CLUTCH NOTES

CLUTCH PEDAL OVERCENTER RETURN SPRING: Used on all models. Consists of spring connected to angular link attached to lower end of pedal or equalizer shaft and anchored to frame. This design allows spring to exert pressure to hold pedal down with clutch disengaged and out with clutch engaged.

Adjustment—Angular link is self-positioning on pedal shaft or equalizer shaft. Tighten frame mounting bolt nut as much as possible by turning nut up to limit of threads so that maximum spring tension is secured.

IMPORTANT—Spring tension must always be relieved by backing off eye-bolt nut before disconnecting clutch linkage.

MODEL IDENTIFICATION

SERIAL NUMBER: Stamped on plate on left front door hinge pillar post and stamped on left front frame side rail.

1950 Numbers—First numbers:

1-5360001	Flint	5-5388001	Wilmington
2-5370001	Southgate	6-5393001	Atlanta
3-5374001	Linden	7-5397001	Framingham
4-5380001	Kansas City		

1951 Numbers—First numbers:

1-6031301	Flint	5-6070001	Wilmington
2-6050001	Southgate	6-6075001	Atlanta
3-6055001	Linden	7-6080001	Framingham
4-6061001	Kansas City		

Identification—First digit of serial number indicates assembly plant as listed above.

ENGINE NUMBER: Stamped on boss on right side of crankcase below pushrod cover.

Series	1950 Starting Number	1951
40	55680004	62401004
50	56247345	62401005
70	56350217	62401007

Identification—Last digit of engine no. indicates Series: 4—Series 40, 5—Series 50, 7—Series 70.

TUNE-UP

COMPRESSION PRESSURE:

	Std.	Dynaflow Cars
Series 40	114 lbs.	120 lbs.
Series 50	118 lbs.	120 lbs.
Series 70		120 lbs.

VACUUM READING: Steady 18-20" idling at 8 MPH. or 450 RPM.

FIRING ORDER: 1-6-2-5-8-3-7-4. See Diagram.

SPARK PLUG GAPS: .025". Limits .023-.028".
Plug Type—AC No. 46X. 14 mm. Metric.

DISTRIBUTOR: Breaker Gap—.015" (.0125-.0175").
Cam Angle—Test limits with .016" gap—21-30°.
See "Delco-Remy Cam Angle" in Electrical Equipment Section.

►*CAUTION—Use of cam angle to set point gap not recommended by car manufacturer. If dwell meter used, make final check that gap within .0125-.0175".*
Breaker Arm Spring Tension—19-23 ounces.
Automatic & Vacuum Advance—*See Ignition.*
Condenser Capacity—.18-.23 microfarad.

IGNITION TIMING: 4° BTDC. (40, 50), 6° BTDC. (70).
►*CAUTION—Ignition timing should be set within yellow band of flywheel mark for proper engine performance.*
Timing Procedure—*See Ignition Timing.*
Flywheel Mark—"ADV. 4°" (for 40, 50), "ADV. 6°" (for 70) followed by yellow knurled section on flywheel ⅛" wide which gives timing range of 1° (4-5° for 40, 50; 6-7° for 70). Index mark located on edge of timing hole under cover on housing above starter.
Final Ignition Setting—Very light "ping" may occur with part throttle on a hard pull, or during acceleration between 10-20 MPH. with wide open throttle.

CARBURETION: Carter—
►*725S & 726S CARBURETOR PRODUCTION CHANGE—Superseded Late 1950 by 725SA & 726SA. (To correct gasoline odors noticeable in car). See Carburetor Section for complete data.*
Idle Setting—Both screws 1 turn open. Adjust both screws alike. Turn screws out for richer mixture.
Idle Speed—450 RPM. (or 8 MPH. on level road in 3rd gear).
Float Level—5/32" from top of each float to gasket seat on cover with valve seated (invert to check).
Fuel Level—Even with bottom of inspection hole on side of float bowl with engine idling.
Accelerating Pump—Two holes in arm. Inner hole minimum charge. Outer hole maximum charge.
Automatic Choke Setting—1 notch rich.
Fuel Pump Pressure: 4½-5½ lbs. at pump outlet, 4-5 lbs. at carburetor.

CARBURETION: Stromberg—
Idle Setting—1¾ turns open. Adjust both screws alike. Turn screws out for richer mixture.
Float Level—(On gauge No. T-24971), 5/64" above top of gauge guides.
Fuel Level—(Checked thru inspection hole). **Early type** with plain inspection hole boss, fuel should be 1/32"-1/16" below bottom of threads on inspection hole. **Later type** with ¼" long horizontal rib on each side of hole boss, fuel should be even with bottom of threads in inspection hole.
Accelerating Pump—3 holes. Center hole (med. stroke) normal setting.

CONTINUED ON NEXT PAGE

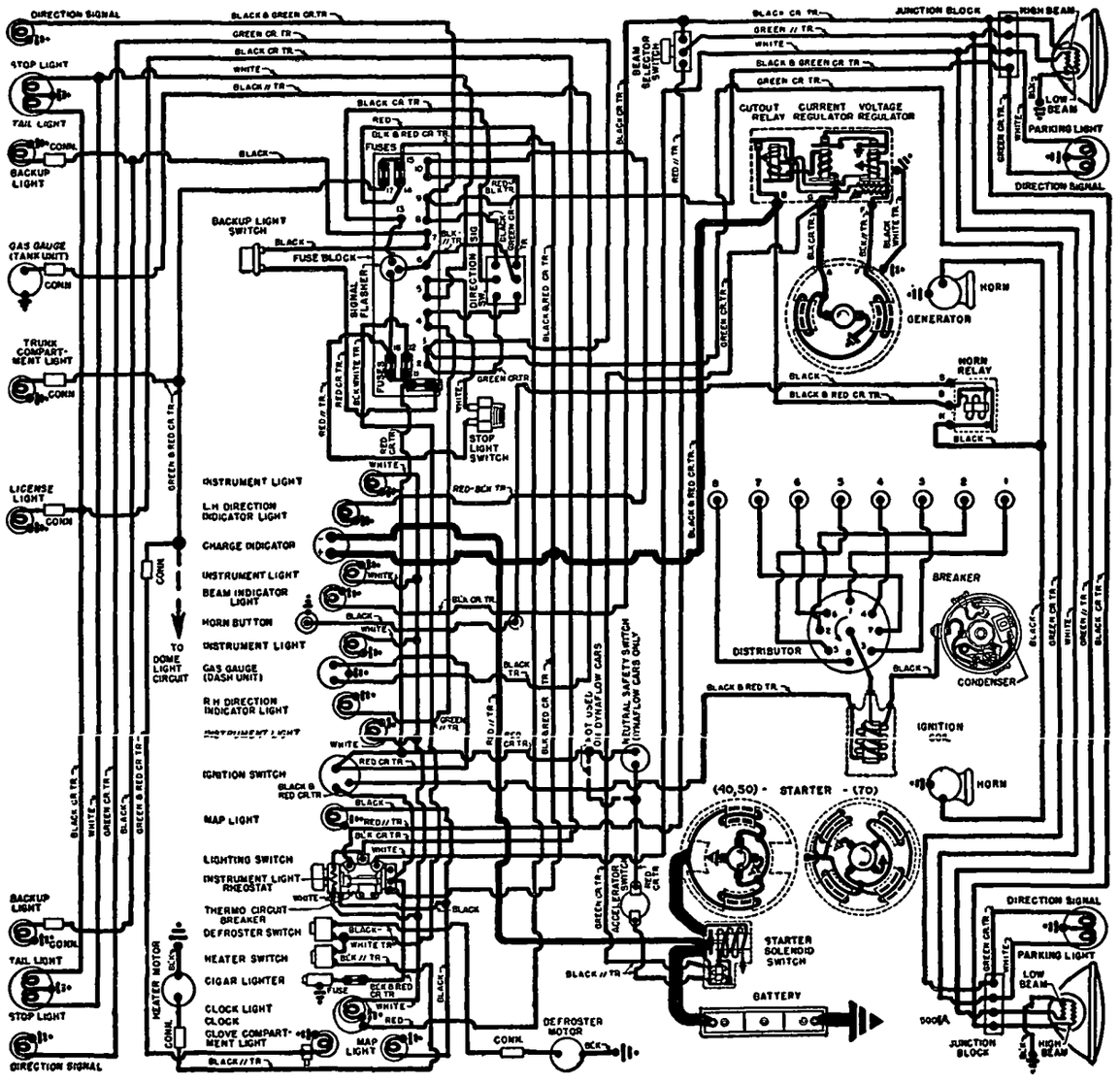

1950 M DELS

C NTINUED FROM PRECEDING PAGE

►*PUMP LEVER SPRING PRODUCTION CHANGE—See Carburetor Section for complete data.*

Automatic Choke Setting—Centered.

Fuel Pump Pressure—4½-5½ lbs. at pump outlet, 4-5 lbs. at carburetor.

MANIFOLD HEAT CONTROL: Setting—Thermostatic coil wind-up ¼ turn at 70°F. (valve closed). To prevent rattles, counterweight should have 1/16-1/8" movement at extreme end positions, adjust by bending anti-rattle spring lower clip.

VALVE TAPPET CLEARANCE: *CAUTION*—Two types of valve lifters used, Hydraulic & Conventional (conventional type on Series 40 with synchro-mesh trans. only, Hydraulic type on all other cars).

Identification: Hydraulic Type, Red lettering **"BUICK FIREBALL"** on valve cover. **Conventional Type, Blue** lettering on valve cover.

►**HYDRAULIC TYPE SETTING:** *NO CLEARANCE ADJUSTMENT REQUIRED* although rocker arms have regular adjusting ball studs. **Initial Adjustment** required when installing cylinder head or if ball studs disturbed.

►**Initial Adjustment**—*See "Valve System" in Buick Special Data.*

►**CONVENTIONAL TYPE SETTING:** To secure .015" road operating clearance, stabilize temperatures by running engine at fast idle (700 RPM. min.) for 20 minutes with radiator cap removed, then adjust clearance **using .017" feeler gauge as "GO", .018" as "NO GO."**

Anti-Freeze Caution—Replace with water for warming up (will boil out if left in radiator).

Valve Timing Check—*See Valve Timing.*

STARTING: *See Battery, Starter, Generator, Regulator.*

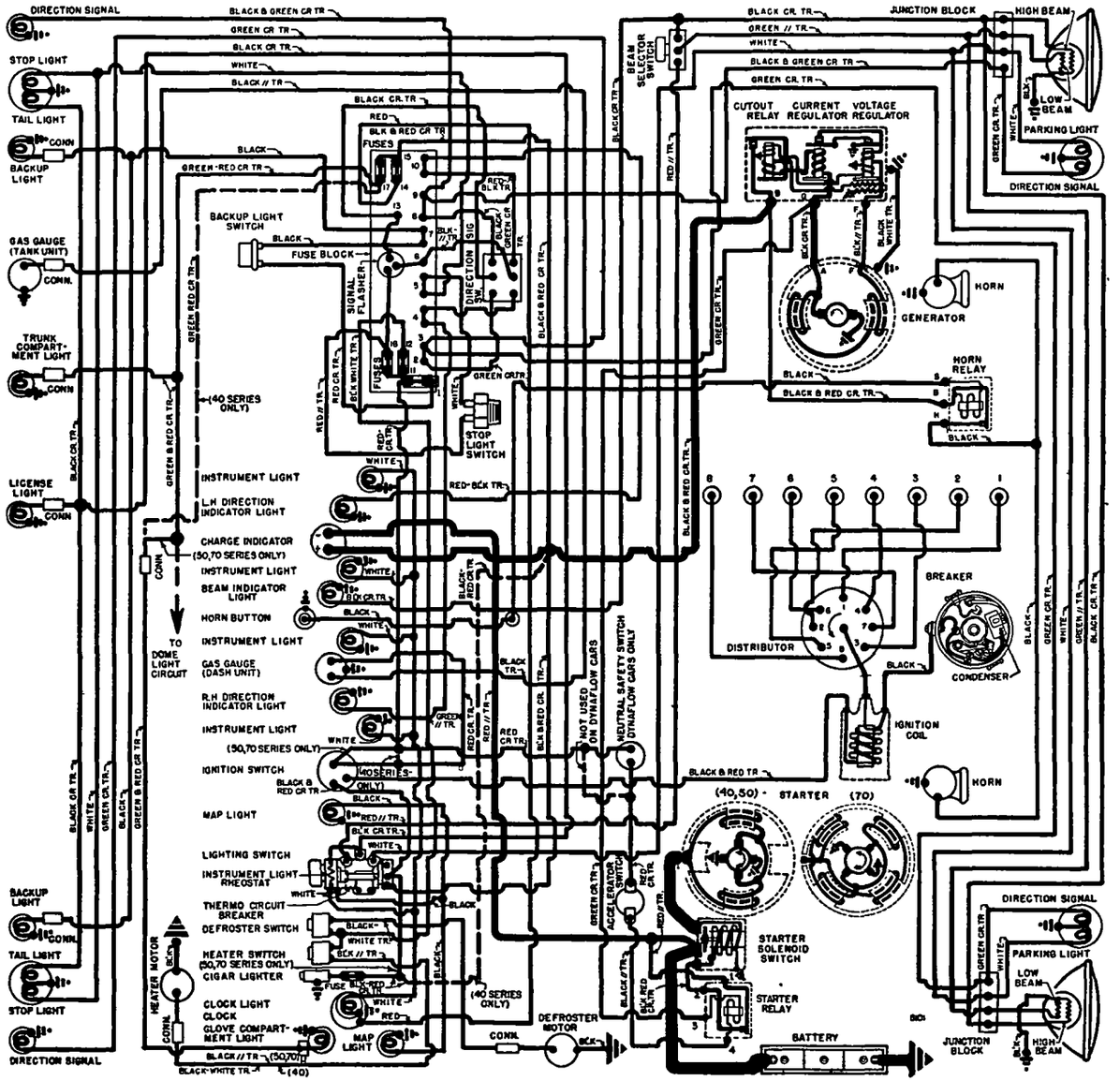

1951 M DELS

IGNITION

IGNITION SWITCH: Delco-Remy No. 1116452.

Ignition Lock—(Series 40 1950, Series 50, 70 1950-51) **Buick No. 1393108,** (Series 40 1950) **Buick No. 1390644.**

COIL: Delco-Remy 1115328. On pushrod cover.

Ignition Current—2½ amperes idling, 4½ stopped.

CONDENSER: Delco-Remy Part No. 1869704.

Capacity—.18-.23 microfarad.

DISTRIBUTOR: Delco-Remy 1110815. Automatic and vacuum advance type with new "center-bearing" breaker plate.

►**Breaker Plate Bearing Assembly**—Plate rotates n 3 bakelite buttons on support plate with spring tension adjustment (shim washers) on underside of support plate. Pull required to move plate should be 8 oz. min., 16 oz. max. with breaker plate assembly out of housing.

See "Delco-Remy Center-Bearing Breaker Plate Distributor" in Electrical Equipment Section.

Breaker Gap—.015". Limits .0125-.0175".

Cam Angle—Test limits with .016" gap—21-30°.

See "Delco-Remy Cam Angle" in Electrical Equipment Section.

►*CAUTION—Use of cam angle to set point gap not recommended by car manufacturer. If dwell meter used, make final check that gap within .0125-.0175".*

Breaker Arm Spring Tension—19-23 ounces.

Rotation—Counter-clockwise viewed from above.

Distributor		Automatic Advance	Engine
Degrees	R.P.M.	Degrees	R.P.M.
Start	250	2	500
7	400	14	800
13	1500	26	3000

Vacuum Spark Control: Delco-Remy No. 1116046.

Plunger Travel—⅛".

Vacuum Advance		
Distr. Degrees	Eng. Degrees	Vacuum (" of HG)
Start	0°	5-7"
5½°	11°	10½-12½"

IGNITION TIMING

Std. Setting	Flywheel Degrees	Piston Pos.
Series 40①, 50②	4° BTDC	.0063" BTDC.
Series 70③	6° BTDC	.0149" BTDC.

①—Regular Fuel. ②—Ethyl Fuel.

►*CAUTION—Ignition timing should be set within yellow band of flywheel mark for proper engine performance.*

Flywheel Mark—"ADV 4°" (for 40, 50), "ADV. 6°" (for 70) followed by yellow knurled section on flywheel ⅛" wide which gives timing range of 1° (4-5°

for 40, 50; 6-7° for 70). Index mark located on edge of timing hole under cover on housing above starter.
Timing (With Synchroscope)—Connect synchroscope to #1 spark plug lead, direct light on flywheel through inspection hole in right front face of housing. Idle engine at **speed not greater than 350 RPM.**, loosen two distributor hold-down screws, rotate distributor until "ADV" mark on flywheel (see Flywheel Mark Note above) lines up with indicator, tighten hold-down screws. Refer to Final Ignition Setting.
Final Ignition Setting—***Must be within yellow band of flywheel mark (leading edge desired).*** If timing advanced, engine roughness may result even with high octane fuel. If timing retarded to overcome heavy "ping", engine performance and economy will be lessened (higher octane fuel should be used). A very light "ping" may occur with part throttle on a hard pull, or during acceleration with wide open throttle between 10-20 MPH. Do not retard timing to eliminate this light "ping."

CARBURETOR

CARTER

Carter WCD-725S, SA (Series 40, 50) 1⅛" Dual down-draft with automatic choke.
Carter WCD-726S, SA (Series 70)—1¼ Dual down-draft with automatic choke.
Carter Casting No. (725) No. 624, (726) No. 626.

►***725S & 726S CARBURETOR PRODUCTION CHANGE —Superseded Late 1950 by 725 SA & 726 SA.(To correct gasoline odors noticeable in car). See Carburetor Section for complete data.***

Settings (Idle Setting, Float Level, and Accelerating Pump Setting): ***See Tune-Up.***
Metering Jets & Rods—***See Carburetor Section for Carter Jet Specifications.***

Fast Idle: Carter Dual (WCD) Carburetor Type.
See Carburetor Equipment Section for complete data.
Setting—Adjust fast idle screw on throttle shaft lever for .015" throttle opening with choke valve tightly closed and screw on high step of fast idle cam.
Automatic Choke: Carter Climatic Control (Dual Carb.)
See Carburetor Equipment Section for complete data.
Setting—1 notch rich.

STROMBERG

Stromberg Model AAUVB-267 (Code 7-88, A, B) (Series 40, 50)—1⅛" Double barrel down-draft with fast idle and Automatic Choke.
Stromberg Model AAVB-267 (Code 7-89, A, B) (Series 70)—1¼" Double barrel down-draft with fast idle and Automatic Choke.

►***PUMP LEVER TORSION SPRING PRODUCTION CHANGE—See Carburetor Section for complete data.***

Settings (Idle Setting, Float Level, and Accelerating Pump Setting): ***See Tune-Up.***
Metering Jets & Rods—***See Carburetor Section for Carter Jet Specifications.***

Fast Idle: Stromberg type.
Setting—Close choke valve on #53 (.0595") drill rod, adjust by bending fast idle cam rod so that locking lever on throttle valve shaft just clears loose lever on fast idle cam stud as throttle is opened and closed.

Automatic Choke: Stromberg type.
Setting—Centered.
See Carburetion Equipment Section for complete data.

Throttle Linkage Adjustment (Synchro-Mesh Transmission): Check linkage for smooth operation of throttle valve from closed to wide open position (pedal correctly secured to floor, pedal rod free in hole in floor mat, return spring proper tension for closed position). Wide open throttle stop should be accelerator pedal striking floor mat (not throttle lever stop striking boss on carburetor). Adjust as follows: With linkage disconnected at throttle operating ball joint, open throttle valve to wide open position against stop, have man press accelerator against floor mat, adjust ball joint so screw will just enter upper hole in throttle lever, turn ball joint 1 or 2 turns clockwise, connect ball joint to throttle lever. Check choke unloader operation.

►**Throttle Linkage Adjustment (Dynaflow Drive Cars):** With engine idling at 450 RPM., clearance between **edge of bracket** (attached to dash at lower end of vertical equalizer shaft) and **ear on lever** (just above shaft operating lever) should be 1/32-1/16" (adjust at ball joint end of throttle operating rod). Check wide open position of throttle valve with engine stopped and adjust at ball joint (as above) to secure wide open throttle position with pedal striking floor mat (not throttle lever stop striking boss on carburetor). Check choke unloader operation. Check Dash-Pot Setting (following).

Dash Pot Setting: (Dynaflow cars). Hold choke valve in fully closed position. Insert .030" feeler gauge between the fast idle cam (at the widest part) and the idle adjusting screw. Turn the adjusting screw on the lever (ahead of the dash pot plunger) until it just contacts the dash pot plunger.

CARB. EQUIPMENT

Air Cleaner: (Series 40,50) AC No. 1544638. **(70)** 1544639. Oil Bath Type.
Filter Element—AC No. 19.
Servicing—Clean and refill with 1 pint of SAE 50 engine oil at 5000 mile intervals.

Fuel Pump: AC No. (Series 40, 50) 1523539, (Series 70) 1523530. Diaphram type fuel and vacuum.

Replacement Pump (Series 40, 50) AC No. 529. **(70)** 530.
Pressure—4½-5½ lbs. at fuel pump outlet, or 4-5 lbs. at carburetor.
See Carburetion Equipment Section for complete data.

Gasoline Gauge: AC Electric type.
Dash Unit—AC No. 1517040.
Tank Unit—AC No. 1517200.
See Carburetion Equipment Section for complete data.

BATTERY

Series 40, 50 Delco Type 15E4W. 6 volt, 15 plate, 100 ampere hour capacity, (20 hour rate).
(70) 17E6W. 6 volt, 17 plate, 120 ampere hour capacity. (20 hour rate).
Grounded Terminal—Negative (—) to engine block.
Location—Under hood, right side.

STARTER

1950—Delco-Remy No. (Series 40, 50) 1107078, (Series 70) 1107953.

1951—Delco-Remy No. (Series 40, 50) 1107097, (Series 70) 1107981.

Armature—Delco-Remy No. 1917855 (Use with 1107078, 97), **1912697** (Use with 1107981), **1867897** (Use with 1107953).

Drive—Overrunning clutch (solenoid pinion shift).
Rotation—Counter-clockwise at commutator end.
Brush Spring Tension—24-28 ounces.

Performance Data—1107078

Torque		R.P.M.	Volts	Amperes
0	ft. lbs.	5000	5.67	65
12	"	Lock	3.37	525

Performance Data—1107953, 81

Torque		R.P.M.	Volts	Amperes
0	ft. lbs.	5500	5.0	65
16	"	Lock	3.0	600

Performance Data—1107097

Torque		R.P.M.	Volts	Amperes
0	ft. lbs.	6000	5.0	60
15	"	Lock	3.0	600

Starting Switch: Delco-Remy Solenoid Switch No. (1950) 1118019, (1951) 1118148, controlled by Stromberg Starter Switch No. 385000 (Cars with Stromberg Carb.), Carter Car Starter Model 192-11U (Cars with Carter Carb.).
Starter Switch Setting—***See Stromberg or Carter Carburetors in Carburetor Section.***

►**Dynaflow Neutral Safety Switch**—Delco-Remy No. 1997838. At lower end of steering column. Connected in starter control circuit so that starter operative only with lever in "N" Neutral or "P" Parking.

►**Neutral Safety Switch Adjustment**—***See "Buick Dynaflow Drive" in Transmission Section.***

GENERATOR

Delco-Remy No. (1950) 1102709, (1951) 1102754. Armature 1912599. Two brush type with voltage & current regulation.
Charging Rate Adjustment. **None. See Regulator.**
Maximum Charging Rate—40 Amperes, 8.0 Volts, 2400 RPM. (Hot).

Performance Data—Cold

	Amperes	Volts	R.P.M.
Cold	40①	8.0	1950

①—Not maximum output. **See Current Regulator.**
Brush Spring Tension—25 ounces each.
Field Current—1.90—2.05 amperes at 6 volts.
Rotation—Counter-clockwise at commutator end.

Belt Adjustment: ½" belt deflection with light pressure at point midway between generator and fan.

REGULATOR

Delco-Remy 1118364. Voltage & Current Regulator.

►New "1118300 SERIES" Regulators have screw adjustment for settings, and single regulator springs. ***See Electrical Equipment Section for complete data.***

CAUTION—Check generator for grounded field coils and leads before changing regulator settings to correct High Charging Rate or High Voltage.

Cutout Relay

Cuts In—5.9-6.8 volts hot (set to 6.4 volts hot).
Contact Gap—.020" (same for both contacts).
Air Gap—.020" (with contacts just closed).

Voltage Regulator

Setting—7.0-7.7 volts hot (set to 7.4 volts hot).
Regulator is over-compensated for temperature. Should be checked with cover in place and hot.

CONTINUED N NEXT PA E

CONTINUED FROM PRECEDING PA E

Air Gap—.075" with armature pressed down to point where contacts are just touching.

Checking & Adjustm't—*See Electrical Equip. Section.*

Current Regulator

Setting—40-46 amperes hot (set to 42 hot).

Air Gap—.075" with armature pressed down to point where contacts are just touching.

Checking & Adjustm't—*See Electrical Equip. Section.*

LIGHTING

Headlamps: Guide "Sealed Beam" type. *See Electrical Equipment Section for complete data.*

Beam Indicator—In upper edge of speedometer dial. Lighted when Upper (Country) Beam in use.

Direction Signal: Buick. *See Electrical Equip. Section.*

Direction Signal Indicators—Left and right arrows in left and right instrument clusters.

Direction Signal: Separate rear bulbs and new switch circuit used.

Instrument & Map Light Control (except early 1950 Series 40): Controlled by rotating lighting switch knob. **Extreme Left**—Map and instrument lights off.

1st step to right—Map lights on. **2nd step right**—Instrument lights on. (Further rotation dims lights)

Switches

Lighting—Delco-Remy No. 1995045, (Except early 1950 Series 40; Delco-Remy No. 1995044).

Beam Selector—Delco-Remy No. 1997008. (RHD 1995015).

Glove Box—Delco-Remy No. 1997858.

Directional Signal—Delco-Remy No. (1950 Dynaflow) 1995546, (1950 Synchro-mesh) 1995547). (1951 Series 40 optional & Series 50) 1995561, (1951 Series 70) 1995562.

Back-Up Light—(Synchro-mesh) Delco-Remy No. 1197825 **(Dynaflow)** 1997847.

MISC. ELECTRICAL

►**DASH PANEL INSPECTION HOLE FOR ACCESS TO WIRING ON BACK SIDE OF INSTRUMENT PANEL:** Located on left side of dash under hood with removeable plate screwed to dash.

THERMOSTATIC RELAY: Delco-Remy. On lighting switch (protects lighting circuits). Contacts remain closed with 30 amperes, open in 3 minutes with current of 42 amperes at 70°F. Not adjustable.

FUSE BLOCK: On lower flange of instrument panel at left of steering column. Five fuses:

1)—Dome, Glove Box, & Trunk Lights. 30 ampere.
2)—Clock. 3 ampere.
3)—Defroster and Heater. 30 ampere.
4)—Direction Signal and Stop Lamp. 14 ampere.
5)—Back-Up Lights. 14 ampere.

HORNS: Delco-Remy No. 1999649 (Low Note—RH), 1999650 (High Note—LH). Vibrator type, twin horns operated by relay.

	Current (at 6 volts)	Air Gap
Low Note	19-21 amperes	.044-.049"
High Note	18-20 amperes	.034-.039"

Horn Relay: Delco-Remy N . 1116775.
Contacts Close—2.75-4.0 volts (set to 3.5 volts).
Contact Gap—.027". **Air Gap**—.014" (contacts closed)

ENGINE

ENGINE SPECIFICATIONS: Eight cylinder, in line, with overhead valves.

Series	Bore	Stroke	Displacement
40 (1950)	3 3/32"	4 1/8"	248.1 cu.in.
40 (1951)	3 3/16"	4 1/8"	263.3 cu. in.
50 (1950-51)	3 3/16"	4 1/8"	263.3 cu. in.
70 (1950-51)	3 7/16"	4 3/16"	320.2 cu. in.

►*NOTE*—.010" oversize bore production engines are marked by stamped dash (—) approx. ¼" long following engine number.

Series	Rated HP	Comp. Ratio	Dev. HP①
40 (1950)	30.63	6.6-1	115
40 (1950)	30.63	7.2-1②	122
40 (1951)	32.51	6.6-1	120
40 (1951)	32.51	7.2-1②	128
50 (1950-51)	32.51	6.9-1	124
50 (1950-51)	32.51	7.2-1②	128
70 (1950-51)	37.81	7.2-1	152

①—At 3600 R.P.M. ②—With Dynaflow.

►**SERIES 40 ENGINE (Synchro-mesh).** These engines are equipped with conventional type valve lifters, and use different camshaft, push rods, rocker arms, ball studs, and valve springs.
Identification: Conventional type lifters, Blue lettering "BUICK FIREBALL" on valve cover. **Hydraulic lifters, Red** lettering.

►**CYLINDER HEAD:** *CAUTION*—**Different head and gasket combinations used for each particular compression ratio:**

Series	Head No.	Gasket Thickness	Comp. Ratio
40 (1950)①	1340248	.050"	6.6-1
40 (1950)②	1340830	.015"	7.2-1
40 (1951)①	1340248	.075"	6.6-1
40 (1951)②	1340248	.015"	7.2-1
50 (1950-51)①	1340248	.050"	6.9-1
50 (1950-51)②	1340248	.015"	7.2-1
70 (1950-51)②	1340868	.050"	7.2-1

①—Synchro-mesh. ②—Dynaflow.

MANIFOLD GASKET INSTALLATION: *See "MANIFOLDS" in Buick Special Data.*

CYLINDER HEAD & TIGHTENING TORQUES: *See Buick Special Data.*

"CONTROLLED FREQUENCY" ENGINE MOUNTINGS: *See Buick Special Data.*

COMPRESSION & VACUUM READINGS: *See Tune-Up.*

PISTONS: Light weight, aluminum alloy, four ring, Turbulator top, cam ground, transverse slot type, with Anodized finish.

Series	Weight (Stripped)	Length
40 (1950)	13.776 oz.	4 21/64"
40 (1951)	12.912 oz.	3 49/64"
50 (1950-51)	12.912 oz.	3 49/64"
70 (1950-51)	17.94 oz.	4 5/8"

Removal—Pistons and rods removed from above.

Clearance—See Fitting New Pistons below.

	Top Land	Top—Skirt—Bottom
Series 40, 50	.023-.030"	.0021" .0015"
Series 70	.026-.033"	.0023" .0017"

NOTE—Car manufacturer recommends reboring if taper exceeds .005", or out-of-round over .003".

Replacement Pistons: *See Buick Special Data.*

Fitting New Pistons: Use feeler stock ¼" wide (for "GO" gauge), ½" wide ("NO GO" gauge) and 12" long suspended in cylinder at right angles to engine center-line, invert piston in cylinder. With piston and cylinder clean and dry and at 70°F., piston should pass through cylinder of own weight with "GO" gauge and should hold its own weight with "NO GO" gauge as follows:

	Clearance Limits Top of Skirt	Feeler Gauges "GO"	"NO GO"
Series 40, 50	.0018-.0024"	.0015"	.002"
Series 70	.0020-.0026"	.0015"	.002"

Installing Pistons: Hollow side of head to camshaft.

PISTON RINGS: Two compression (upper inner edge stepped or beveled), one slotted oil ring in #3 groove, "Flex-fit" oil ring in #4 groove. All rings above pin. #1, #2, and #4 rings are coated.

Ring	Width	End Gap	Side Clearance
Comp.	3/32"	.015"	.0015-.0035"
Oil	3/16	.015"	.0015-.003"

"Flex-Fit" Oil Rings—End gap on these rings is .0015" (no fitting required).

Replacement Rings: *See Buick Special Data.*

PISTON PIN: Clamped in rod.
Diameter—Series 40, 50 .8127", Series 70 .8747".
Length—Series 40, 50 2.6875", Series 70 3.0625".
Pin Fit in Piston—.0003-.0004" clearance or easy finger push fit at 70°F.

Replacement Pins: Std. and .003", .005" oversize. Pins fitted and furnished with new pistons (pistons not furnished without pins).

CONNECTING ROD:	Length	Weight
Series 40 (1950)	7 5/8"	29.20 ozs.
Series 40 (1951)	7 3/8"	28.096 ozs.
Series 50 (1950-51)	7 3/8"	28.096 ozs.
Series 70 (1950-51)	8 1/4"	36.272 ozs.

Crankpin Journal Diameter: (Series 40 1950) 1.998-1.999", (Series 40 1951 & Series 50 1950-51) 2.125-2.126", (Series 70 1950-51) 2.248-2.249".
Bearings—Durex 100-A "full-precision" insert type without shims.
Clearance—.0005-.0018". **Sideplay**—.005-.010".

Bearing Adjustment: None. Replace bearings.

Replacement Bearings: Furnished in Std. and .001", .002", .020", .021" undersize. Undersize bearings marked with number on outer surface near tang indicating size.

Installing Rods: Ridge on edge of cap and boss in web of rod must be toward rear of engine. Oil hole in rod toward camshaft.

CRANKSHAFT: Five bearing, counterweighted.
NOTE—Stepped journals used on Series 40 1950 & Series 70 (1950-51), uniform journals on Series 40 (1951) and Series 50 (1950-51.)

►*CRANKSHAFT REPLACEMENT CAUTION—See Crankshaft Replacement in Buick Special Data.*

Main Bearing Journal Diameters

Series—	"40" 1950 "40" 1951	"50" 1950-51	"70" 1950
#1	2.3105-2.3115"	2.5625-2.5635"	2.5605-2.5615"
#2	2.3735-2.3745"	2.5625-2.5635"	2.6235-2.6245"
#3	2.4355-2.4365"	2.5625-2.5635"	2.6855-2.6865"
#4	2.4985-2.4995"	2.5625-2.5635"	2.7485-2.7495"
#5	2.5605-2.5615"	2.5625-2.5635"	2.8105-2.8115"

NOTE—Car manufacturer recommends crankshaft be replaced or reground if journal out-of-round over .0015".

ENGINE

C NTINUED FR M PRECEDING PA E

Bearings—Steel-backed, Durex 100-A, slip-in type. *NOTE*—Bearings "full-precision" (no shim) type. **Clearance**—.0008-.0015" (new), .002" max. (used).

Bearing Adjustment: None (no shims). Replace bearings. Do not file bearing caps.

►*CAUTION*—Arrow on main bearing caps must point toward front of engine when installed.

Replacement Bearings: Standard and .0012", .002", .020", .022" Undersize.

Rear Bearing Oil Seal Installation: *See Buick Special Data.*

End Thrust: #3 (center bearing). **Endplay** .004-.008".

CAMSHAFT: 5 bearing. Non-adjustable chain drive.

►*CAUTION—Two types of camshafts used,* one for engines with plain sleeve valve lifters, one for engines with hydraulic valve lifters (identified by ½" wide machined cut 60% around shaft between #6 & #7 cams). *Engine operation will be rough and noisy if shafts are interchanged on either engine.*

Bearing Diameters (for All Series)—#1, 2 5/32"; #2, 2 1/8"; #3 2 3/32"; #4, 2 1/16"; #5, 1 3/4". **Bearings**—Steel-backed, babbitt-lined. **Clearance**—.0005-.0035". NOTE—Replacement bearings must be line reamed after installation.

End Thrust: Spacing ring between front bearing journal and thrust plate (on front of crankcase behind camshaft sprocket). **Endplay**—.004-.008".

Timing Chain: Link Belt. **Width** 13/16". **Pitch** .500". **Length (40, 50)** 24 1/2", 49 links. **(70)** 25" 50 links.

Camshaft Setting: Two teeth on timing chain (10 links apart) are marked with copper plated washers. Facing the front of engine, center the crankshaft sprocket timing mark on right side. Set camshaft sprocket, (mark to right side) and install chain with marked teeth matching sprocket marks.

►**VALVES:** *CAUTION*—**Engines with hydraulic valve lifters** use different camshaft, push rods, rocker arms, ball studs, and valve springs.

VALVE SPECIFICATIONS—SERIES 40 & 50

	Head Diameter	Stem Diameter	Length
Intake	1 17/32"	.3715-.3725"	5 7/64"
Exhaust	1 11/32"	.3711-.3719"	5 7/64"

	Seat Angle	Lift	Stem Clearance
Intake	45°	.348"	.0025" (.0015-.0035")
Exhaust	45°	.342"	.003" (.0021-.0039")

Valve Seat Width—Nominal width .062" (1/16"). Seats wider than 5/64" should be narrowed down using proper 20° and 70° cutters.

VALVE SPECIFICATIONS—SERIES 70

	Head Diameter	Stem Diameter	Length
Intake	1 25/32"	.3715-.3725"	5 1/4"
Exhaust	1 7/16"	.3711-.3719"	5 1/4"

	Seat Angle	Lift	Stem Clearance
Intake	45°	.347"	.0025" (.0015-.0035")
Exhaust	45°	.348"	.003" (.0021-.0039")

Valve Seat Width—Nominal width .062" (1/16"). Seats wider than 5/64" should be narrowed down using proper 20° and 70° cutters.

Valve Guides: Upper end of guide 1 5/32" above head. Finish ream replacement guides after installation to .374-.375" (use Valve Guide Reamer J129-3).

►**Valve Springs** *CAUTION*—Engines with hydraulic valve lifters use different valve springs. **Free Length**—1 29/32" (inner), 2 11/32" (outer).

Valve Spring Specifications

►**Engines with Adjustable Valve Lash**

	Inner Spring Lbs. Press.	Lgth.	Outer Spring Lbs. Press.	Lgth.
Closed	17½-22½	—1 21/32"	29½-34½	—1 15/16"
Open	48-54	—1 5/16"	74-80	—1 19/32"

►**Engines with Hydraulic Valve Lifters**

Closed	22-26	—1 21/32"	49-55	—1 15/16"
Open	49-55	—1 5/16"	116-124	—1 19/32"

Valve Lifters (Engines with Adjustable Valve Lash): Plain sleeve, barrel type. Diameter .9975-.9985". **Clearance in Crankcase**—.0005-.0025".

Hydraulic Valve Lifters: Used on all cars with Dynaflow Drive and Series 50 with synchro-mesh trans. *See Miscellaneous Section for complete data.* **Identification**—By RED "Buick Fireball" lettering on valve rocker arm cover and label reading "This Engine Equipped with Hydraulic Lifters."

►*CAUTION*—If lifter operating properly, DO NOT disassemble when removed from engine for other work (wrap in clean paper to keep dirt out).

►**Initial Adjustment (required only when installing cylinder head or when adjusting ball stud setting has been disturbed):** *See "Valve Tappet Clearance" in Buick Special Data.*

Rocker Arms: *CAUTION*—**Engines with hydraulic valve lifters** use different rocker arms and ball studs. Rocker arms used with hydraulic valve lifters do not have small oil hole on underside of arm. Ball studs used with hydraulic lifters have drilled oil hole through center for lifter oil feed (through push rod). Pushrods on first Series 40 with adjustable valve lash have same oil hole in upper end of push-rod.

►**Series 40 Pushrod Change (Engines with Adjustable Valve Lash)**—*See "Valve System" in Buick Special Data.*

Rocker Arm Installation—*See Buick Special Data.*

VALVE TIMING

VALVE TAPPET CLEARANCE: *CAUTION*—**Two types of valve lifters used,** Hydraulic & Conventional (conventional type on Series 40 with synchro-mesh trans. only, Hydraulic type on all other cars). **Identification: Hydraulic type,** Red lettering "BUICK FIREBALL" on valve cover. **Conventional type,** Blue lettering on valve cover.

►**HYDRAULIC TYPE SETTING:** *NO CLEARANCE ADJUSTMENT REQUIRED* although rocker arms have regular adjusting ball studs. **Initial Adjustment** required when installing cylinder head or if ball studs disturbed.

►**Initial Adjustment**—*See "Valve System" in Buick Special Data.*

►**CONVENTIONAL TYPE SETTING:** To secure .015" road operating clearance, stabilize temperatures by running engine at fast idle (700 RPM. min.) for 20 minutes with radiator cap removed, then adjust clearance using .017" feeler gauge as "GO", .018" as "NO GO."

Anti-Freeze Caution—Replace with water for warming up (will boil out if left in radiator).

Timing Chain Setting: *See Camshaft Setting.*

VALVE TIMING—SERIES 40 & 50

Intake Valves—Open 13° BTDC. Close 68° ALDC.
Exhaust Valves—Open 55° BLDC. Close 22° ATDC.

VALVE TIMING—SERIES 70

Intake Valves—Open 14° BTDC. Close 71° ALDC.
Exhaust Valves—Open 56° BLDC. Close 25° ATDC.

VALVE TIMING CHECK

Series 40 (with Adjustable Valve Lash)—Set tappet clearance for .015" road operating lash (see above), use dial indicator to check actual valve opening. #2 or #7 exhaust valve should be .145" open with #1 and #8 pistons at top dead center with flywheel mark "UDC/1&8" visible through inspection hole in right front face of housing.

All Series (With Hydraulic Lifters)—Use dial indicator set up over #2 or #7 exhaust valve to check actual valve movement. With valve fully closed, set indicator to zero, tighten adjusting ball stud until indicator reads .015", wait until leak-down allows indicator to return to zero, repeat process until indicator fails to return to zero (indicating that lifter plunger bottoming in body so that lifter is "solid"). Back off ball stud just enough so that indicator reads zero. Turn crankshaft slowly until indicator reads .145" (Series 40, 50), .155" (70). Flywheel mark "UDC/1&8" should be visible through inspection hole in right front face of housing at this point.

LUBRICATION

Engine Oiling System: Pressure to main bearings, connecting rod lower bearings, camshaft bearings, and restricted flow to rocker arm bearings, push rods and hydraulic valve lifters (if used).
NOTE—Valve system oil feed taken from outlet side of filter with restricted fitting in head at point where rocker shaft oil lead connected (all oil for valve system passes through filter).

Oil Filter: AC Low-restriction type. Filter has by-pass valve which opens at 7-9 lbs. (all oil for valve system passes through filter).
Replacement Element—AC No. P-127.
Crankcase Capacity—Refill—5½ qts. (40, 50), 7 (70). **Dry Capacity**—6½ qts. (40, 50), 8 qts. (70).
NOTE—If oil filter is dry add 1½ qts. to capacities.
Normal Oil Pressure—35 lbs. at 35 MPH.
Oil Pressure Regulator—Non-adjustable spring and valve type on oil pump. Opens at 35 lbs.

Oil Pump: Helical gear type in crankcase.
Oil Pump Clearances—*See Buick Special Data.*

Crankcase Ventilation: Filter in oil filler breather cap and in crankcase ventilator inlet on left side of engine. Outlet pipe mounted on right side of engine.

Oil Pressure Gauge: AC No. (1950 All Series) 1507210, (Series 40 1951) 1507603, (Series 50 & 701951) 1517413.

COOLING

Cooling System: Pressure type with pressure valve and vacuum valve (relief valves) in filler cap. Re-circulation of water through engine (with thermostat closed) permitted by fixed by-pass passage between water outlet and pump inlet.
Water Pump Outlet Pipe for Dynaflow Drive—Separate pipe on right side below pump inlet. Used only on cars with Dynaflow Drive.
Capacity—No Heater (Series 40, 50) 13 qts. (40, 50 Dynaflow) 14 qts. (70) 17¾ qts.
With Heater—Add 1¼ qts. to above capacities.
Pressure Valve—AC No. 850563.

Water Pump: Packless, sealed ball-bearing type. *See Water Pump Section for complete data.*

CONTINUED ON NEXT PAGE

C NTINUED FR M PRECEDIN PA E

Belt Adjustment—*See Generator Belt Adjustment.*

Thermostat: Harrison. In cylinder head water outlet. Buick No. 3122282 Std. 151°, No. 3122285 Hi. T. 182°.

Setting—(151°) starts to open 148-155°F. Fully open not over 175°F.

Temperature Gauge: AC No. (1950 All Series) 1512013, (Series 40 1951) 1512317, (Series 50 & 70 1951) 1512315.

See Miscellaneous Section for complete data.

CLUTCH

Own "Crown Spring" with Borg & Beck or Long Driven Member. Single plate, dry disc type.

See Clutch Section for complete data.

Facings—Woven type, 2 used. Inside diameter 6". Outside Diameter 10". Thickness .125" (⅛").

Pedal Adjustment: Free travel ¾-1". Adjust by loosening locknut and turning adjusting nut on release rod linking cross-shaft lever to clutch fork. Pedal positioned by rubber bumper under toeboard.

►**Correction of Low & Reverse Gear Clash due to Spinning Clutch Plate**—Car manufacturer permits reducing pedal lash to ½" in exceptional cases where gear clash continues (with regular ¾-1" pedal lash) beyond normal waiting period for plate to stop.

Clutch Over-Center Spring: *See Buick Special Data.*

Removal: Remove Rear Axle and Transmission (see below), take off clutch underpan, disconnect linkage at yoke, remove clutch release bearing support by taking out spring washer in housing, pull out yoke (with release bearing) from fulcrum, mark clutch and flywheel, remove cover mounting screws.

TRANSMISSION

Own Make. All Helical Gear, constant-mesh, synchro-mesh (Second & High), sliding gear (Low & Reverse) with steering column mounted shift control. *See Transmission Section for complete data.*

Transmission Control: Buick type remote control. *See Transmission Section for complete data.*

Removal: Disconnect Rear Axle (see data following), drain transmission, fill with clean gasoline or kerosene and run approx. 15 seconds in Neutral, drain cleaner. Disconnect speedometer cable, lower shift rod, and selector rod. Take out toggle spring and extension, remove shift lever and lock washer from selector shaft—hold shift lever in neutral when removing attaching bolt—remove outer selector lever. Reinstall support bar (see Note below) under rear end of oil pan positioning left hook over frame between brake master cylinder and clutch release equalizer, tighten nuts on two hooks evenly. Remove transmission mounting as follows: Disconnect rubber thrust pad from rear of transmission support by taking off 3 nuts and bolt plate, remove shims from behind support, disconnect mounting pad on top of support by taking out 2 attaching bolts and bolt plate, raise engine by turning up on nuts on two support hooks evenly to take load off transmission support, take out transmission support (disconnect at frame ends), and remove thrust pad from thrust plate. Install guide pins J-851 in place of two top mounting bolts, remove remaining mounting bolts, pull transmission straight back and lower from car.

For instructions on shimming Rear Mounting when installing transmission, see "Engine Mounting" in Buick Special Data.

Engine Support Bar Note—Consists of length of 2 x 4 (approx. width of frame) with hole through each end to take hooked rods (hook rests on top of frame, raise and lower support by nuts on rods.

Lubrication Note—When transmission reinstalled in car, inject ½ pint of transmission lubricant through universal joint yoke before attaching torque tube to transmission.

DYNAFLOW DRIVE

OPTIONAL EQUIPMENT

Own Make. Torque Converter and hydraulically operated planetary unit with manual control.

See Transmission Section for complete data.

►*CRANKSHAFT REPLACEMENT CAUTION—See Crankshaft Replacement in Buick Special Data.*

►**Throttle Linkage Adjustment and Dash Pot Setting on Dynaflow Drive Cars**—*See Carburetor Data.*

Lubrication—Check fluid level in transmission every 1000 miles, drain and refill every 25,000 miles.

►*Use only Special Buick Oil for Dynaflow Drive or Automatic Transmission Fluid Type "A" with AQ-ATF embossed on can.*

Capacity—(Ser. 40, 50) 8½ qts. (Ser. 70) 10 qts.

Draining & Refilling—*See "Buick Dynaflow Drive" in Transmission Section.*

Checking Fluid Level—Engine must be idling with selector lever at "P" (parking) and transmission oil warm. Raise right side of hood, lift out oil gauge rod between battery and engine. Add fluid to "FULL" mark level with engine idling.

►*CAUTION—Engine must be idling with transmission in Parking and transmission oil warm when checking Dynaflow Drive Fluid Level.*

UNIVERSALS

Saginaw or Spicer. One used (in Torque Ball at rear of transmission).

See Universals Section for complete data.

NOTE—New rubber seal used on torque ball.

Torque Ball Adjustment—*See Buick Special Data.*

REAR AXLE

Own Make. Hypoid gear, semi-floating type with Torque Tube Drive.

See Rear Axle Section for complete data.

Ratios—Standard Ratios as follows:

Models	Synchro-mesh	Dynaflow
41, 43, 46S, 41D, 43D, 46D	41-10 (4.1)①	②43-11 (3.93)
46	43-11 (3.9)	43-11 (3.9)
51, 56S	43-11 (3.9)	47-13 (3.6)
52, 56C, 56R, 59	41-10 (4.1)	43-11 (3.9)
71, 76S		47-13 (3.6)
72, 76R, 76C, 79		43-11 (3.9)

①—Optl. Ratio (3.9). ②—Optl. Ratio (3.6).

►**Ring Gear and Pinion Interchangeability:** All rear axle gear sets are completely interchangeable for service. That is, any 1950-51 gear set can be used in any 1950-51 Model regardless of ratio.

Ratio Identification: Axle ratio is indicated by numbers stamped on the underside of axle housing.

Backlash—.008-.010" (desired), .008-.012" (limits). Screw adjustment.

Removal: Raise rear end of car and set on car stands. Disconnect parking brake cable at rear brake sheave and at bracket of front end of torque tube, hydraulic brake line from pipe at frame X member and remove retainer. Disconnect lower end of shock absorber links, rear radius rod at axle end, lower end of chassis springs, and torque tube from torque ball. Hoist rear end of car and roll axle assembly out.

►*CAUTION—Torque tube should not be disconnected from carrier (except for gasket replacement).*

Axle Shaft Removal: *See Rear Axle Section.*

Wheel Bearing Adjustment—None.

Rear Suspension: Coil springs & conventional axle. *See Rear Axle Section for complete data.*

SHOCK ABSORBERS

Delco Model 1948-A (front), Model 2105-C, D (rear). Double acting, Hydraulic (parallel cylinder rear).

FRONT SUSPENSION

Front Suspension: Independent, linked parallelogram type with coil springs.

See Front Suspension Section for complete data.

Kingpin Inclination—4¼° crosswise for ⅜° Camber.

Camber—⅜° Positive (⅞° Pos. to ⅝° Neg.) and equal for both wheels within ¾° at curb weight.

Caster—¾° Pos. (¼° Pos. to 1½° Pos.) equal for both wheels within ½° at curb weight. Adjustable.

Toe In—1/16-1/8". Adjust both tie rods equally.

►*CAUTION*—Tie rod clamps must be within ⅛" of end of tube and ear of clamp must overlap slot in tube not less than 1/16".

Steering Geometry (Toe Out on Turns)—With outer wheel turned 20°, inner wheel turns 21½° ± ¾°.

STEERING GEAR

Saginaw. Ball bearing Worm-and-Nut.

See Steering Gear Section for complete data.

BRAKES

Service: Bendix Hydraulic, Duo-Servo, Single Anchor type without Eccentric Adjustment. Parking brake "Step-on" lever applies rear wheel service brakes.

See Brake Section for complete data.

Drums—Cast-iron with steel flange. Drum diameter 11.997-12.003". Max. rebore .060" O.S. (.030" cut).

Lining—Moulded. Width (40, 50) 1¾", (70) 2¼". Thickness 3/16". Length per shoe: Primary (40, 50) 9 15/16", (70) 10"; Secondary: (40, 50) 12 3/4", (70) 12 15/16".

Clearance—.015" at both ends of secondary (rear) shoe with primary shoe forced out against drum.

Step On (Parking Brake): See Service Brakes (above).

MISC. MECHANICAL

Power Operated Convertible Tops, Windows, & Front Seat: Hydro-Lectric type (hydraulic actuation with motor-driven pump supplying oil under pressure).

See Miscellaneous Section for complete data.

Windshield Wiper: Cable Operated—Vacuum type.

See Miscellaneous Section for complete data.

ENGINE REMOVAL

ENGINE REMOVAL: Engine and transmission assembly can be removed as follows: Drain crankcase and cooling system. Remove hood by taking out nut on center moulding-to-strainer assembly and two panel-to-hinge bolts at each side (if shims used, replace same number when re-assembling to maintain alignment). Raise front of car and place on wheel stands at each front wheel. Disconnect battery cables. Remove starter (with solenoid). Take off Backup Light switch bracket from rear of transmission. Free clutch pedal to release yoke rod (cars with synchro-mesh trans.). Take out support bolts at transmission extension housing. Disconnect shift linkage at transmission, and propeller shaft at front universal. Disconnect exhaust pipe from rear end of right exhaust manifold. Remove generator, and fan blade and pulley. Remove radiator (see Radiator Removal). Remove carburetor and air cleaner. Disconnect ignition switch wire at coil, oil pressure gauge line at rear of block, and flexible fuel pump hose at pipe. Take off windshield washer bottle and bracket, disconnect heater hoses. Loop rope (or chain) around intake manifold. Attach rope to hoist and tighten hoist to take slack out of rope, then disconnect front engine supports (one each side). Engine and transmission can then be raised out of car.

CYLINDER HEAD

CYLINDER HEAD INSTALLATION: Use a Torque Wrench and tighten cylinder head capscrews starting from the center row of bolts and working outward and toward each end.

Cylinder Head Gasket. Install with side stamped "Top" UP.

Cylinder Head Capscrews. 8 short screws in outside row, 5 medium length screws in center row, 4 long screws at rocker arm shaft.

Tightening Torque—See Tightening (Torque Wrench) Specifications.

►***CYLINDER HEAD TIGHTENING CAUTION: Loosen intake manifold before checking the cylinder head cap screw torque. This will prevent the upper row of screws from being under-torqued due to the bridging effect of the manifold.***

TIGHTENING SPECIFICATIONS

	Ft. Lbs.	In. Lbs.
Cylinder Head Bolts	65-70	780-840
Main Bearing Caps	90-100	1080-1200
Connecting Rod Nuts	35-40	420-480
Flywheel to Crankshaft (H-M)	70-75	840-900
Flywheel to Crankshaft (S-M)	65-70	780-840
Manifolds to Head	25-30	300-360
Engine Rear Support	50-60	600-720
Eng. Front Support Stud Nut	80-90	960-1080
Diff. Carrier to Axle Housing	30-35	360-420
Spring U-bolts	45-52	540-624
Backing Plate to Axle (60S,61,62)	35-40	420-480
Backing Plate to Axle (75,86)	55-60	660-720
Wheel Mounting Nuts	110-120	1320-1440
Steering Gear to Frame	40-45	480-540
Steering Wheel Nut	45-50	540-600
Front Shock Absorber Bolts	85-95	1020-1140
Susp. Arm Shafts to Frame	60-70	720-840

DETONATION CORRECTION

To correct detonation complaint, perform the following modifications as necessary. NOTE—The complete procedure outlined should not be performed on every engine, but should be used as required.

Ignition Timing—Retard the ignition timing toward the "C" mark to provide a tolerance for fuel variables and premature detonation from a slight build-up of carbon in the combustion chambers.

Exhaust Valve Spring Seats—Prior to engine No. 24380, the new exhaust valve spring seats should be installed and the carbon removed. On later engines a suitable solvent should be used to remove carbon.

Thermostat—If the engine is equipped with a Fulton bellows type unit, remove and install a Dole thermostat, Part No. 1454979.

Manifold Heat Control—Check heat control valve located on right bank exhaust manifold for free operation and free-up if necessary.

Distributor Advance Spring—If the detonation occurs immediately after the 2-3 upshift on cars before Engine No. 50053, installing Part No. 1873551 vacuum advance spring, in place of the regular spring will reduce it. However, if detonation occurs constantly at open throttle, do not change the spring, as part throttle performance is decreased slightly by the change.

Spark Plugs—Clean and reset to .038".

Air Cleaner—Refill to proper level with SAE 40 oil

Carburetor Metering Rods—Install modified rods and 1949 carburetor vacuum piston spring in carburetor, (furnished in kit as Cadillac No. 1458068 or Carter Unitized Package No. 75-772U).

Fuel—Use fuel with highest possible octane rating.

ORIGINAL BORE & PISTONS

ORIGINAL PRODUCTION ENGINE BORE & PISTON SIZES: Cylinder bores and pistons graded in sizes listed below. Can be identified as follows:

Cylinder Bore Marking—Letter stamped on top of block at outer edge of cylinder bore and **position of letter indicates size variation** as follows:

1950-51 Models—2 sizes for each letter. "—" (minus) if letter to left of bore center. "+" (plus) if to right of bore center.

Piston Marking—Letter is marked on piston head.

1950-51 Piston Sizes

Letter①	Piston Size	Cylinder Size
A	3.8104-3.8106"	3.8125-3.8127"
B	3.8106-3.8108"	3.8127-3.8129"
C	3.8108-3.8110"	3.8129-3.8131"
D	3.8110-3.8112"	3.8131-3.8133"
E	3.8112-3.8114"	3.8133-3.8135"
H	3.8114-3.8116"	3.8135-3.8137"
J	3.8116-3.8118"	3.8137-3.8139"
K	3.8118-3.8120"	3.8139-3.8141"
L	3.8120-3.8122"	3.8141-3.8143"
M	3.8122-3.8124"	3.8143-3.8145"

①—Cylinder bore letter to left of center of bore indicates —, to right of center +.

CAUTION—Cylinder bores should always be measured with micrometer to make certain that bore has not been enlarged in field without being marked 'oversize'.

PISTONS

FITTING NEW PISTONS: *Pistons should be fitted by* Micrometer Gauge Method or Feeler Gauge Method as described below.

Skirt Clearance—.0020"-.0022" measured ⅛" below upper cross slot, or .0013"-.0017" measured at top of skirt (with proper allowance for temperature variation). ***See Temperature Variation Note below.***

Micrometer Gauge Method:—Measure cylinder bore with micrometer gauge at point 1¼" below top edge and at right angles to crankshaft. Set inside micrometer at cylinder bore size, **then measure this gauge length with same outside micrometer used to measure piston.** This method will eliminate any error introduced by using different gauges to measure cylinder and piston. Use outside micrometer to measure piston diameter at upper corner of 'T' slot (adjacent to 'T' slot and ⅛" below horizontal slot).

TEMPERATURE VARIATION NOTE—Skirt clearance shown above is for block and piston at 70°F. Subtract .0001" (or add 2/5 lb. pull on feeler gauge) for each 6° increase in piston temperature above 70°F., add .0001" clearance (or subtract 2/5 lb. pull) for each 6° decrease in piston temperature below 70°F.

Feeler Gauge Method:—Use ½" feeler stock .002", .0025", or .003" thick (see Feeler Gauge Note and table below) on side of piston directly over 'T' slot (center feeler on slot) with lower rounded end of feeler extending ½" down on piston skirt past horizontal slot (feeler must not extend further down on piston skirt because skirt is tapered with greater diameter at bottom). Install piston and feeler in cylinder with piston right side up and feeler toward side, measure pull required to withdraw feeler. Pull will vary in accordance with thickness of feeler gauge used and with piston temperature. See table below for correct pull for each feeler gauge thickness to obtain proper skirt clearance listed above.

Feeler Pull (In lbs.)	Piston Clearance (70°F.) .002" Feeler	.0025" Feeler	.003" Feeler
1	.00225"	.00275"	.00326"
2	.002"	.00252"	.00304"
3	.00175"	.00228"	.0028"
4	.0015"	.00205"	.00258"
5	.00125"	.00182"	.00235"
6	.001"	.00157"	.00213"
7	.00075"	.00133"	.0019"

Feeler Gauge Note—Feeler gauges used for piston clearance measurement should be clean and smooth with lower end rounded. Rusted or wrinkled feelers should be discarded and rough edges should be honed to prevent scratching cylinder wall.

REPLACEMENT PISTONS (WITH FITTED PIN): Slipper skirt type pistons furnished as follows:

Nominal Size	Piston Skirt Diameter
Standard	3.8104-3.8124"
.010" Oversize	3.8204-3.8224"
.020" Oversize	3.8304-3.8324"
.030" Oversize	3.8404-3.8424"

PISTON PIN FITTING: Piston pin holes in piston have bearingized finish and, if oversize pins are installed, holes should be honed to proper size as follows: Use Piston Pin Hone, Part No. KMO-754. Mount hone in vise and revolve piston on hone slowly by hand—**do not use electric drill to drive hone.** Use very fine abrasive (Grit No. 240A), wash-

CONTINUED ON NEXT PAGE

PISTONS

C NTINUED FR M PRECEDIN PAGE

ing abrasive out frequently with gasoline or kerosene. CAUTION—Always wash piston thoroughly before inserting pin to gauge for size. Pins should be a free hand press fit in each piston boss with no perceptible play at 70°F. (clearance .00005-.0001").

CRANKSHAFT & MAIN BEARINGS

CRANKSHAFT REMOVAL (Engine in Car): Jack up all four wheels and install a stand at each wheel. Drain crankcase and cooling system. Remove oil pan (see Oil Pan Removal), oil pump (see Oil Pump Removal), timing chain (see Timing Chain Removal), and flywheel (see Flywheel Removal). Take off steering idler at right frame side bar and lower linkage to floor. Remove spark plugs. Take off rod caps and push rod and piston assembly up into bores to clear shaft. Remove front and rear main bearing caps, support shaft at front and rear and remove three remaining caps, lower shaft out of engine.

MAIN BEARING REMOVAL: Upper bearing halves can be rotated out with flattened cotter pin inserted in oil hole in crankshaft and turning shaft clockwise. Crankshaft does not have to be taken out.

Installation—Reverse removal instructions given above. *CAUTION*—Do not interchange caps. Install caps with marking numbers (not casting nos.) on left side and in order from front-to-rear of engine.

REAR MAIN BEARING OIL SEAL: Wiper seal installed in rear groove in bearing cap and block (oil slinger operates in front groove).

Oil Seal Installation—With crankshaft out of engine (See Crankshaft Removal), and bearing cap off, install length of new packing in groove in block. Use Tool J-3048 and drive seal in place. With tool in place, cut ends of packing flush at each end. Repeat operation for bearing cap.

FLYWHEEL

FLYWHEEL REMOVAL: Jack up car 8" off floor, install stand at each wheel. Remove Hydra-Matic Transmission (see Cadillac Hydra-Matic Drive in Transmission Section), or transmission, clutch, and flywheel housing lower cover on cars so equipped (see Transmission and Clutch Removal on car page). Remove flywheel-to-crankshaft bolts, flywheel, and gasket.

Crankshaft Pilot Bearing and Retainer—If replacement required, Tool No. J-164 can be used for removal, and Tool J-2985 for installation. Flywheel should be attached to crankshaft for this operation.

Flywheel Installation: Reverse removal instructions given above. Use new gasket on crankshaft and dip flywheel mounting bolts in sealer before installing.

TIMING CHAIN

TIMING CHAIN REMOVAL: Set engine in firing position for #6 cylinder (this places chain sprocket marks adjacent to one another). Remove water pump (see Cooling on car page), oil pan (see Oil Pan Removal), crankshaft pulley, engine front cover (9 screws), and camshaft thrust plug and spring from front end of camshaft. Take out two camshaft sprocket screws and lock washers. Pull camshaft sprocket and chain off together using Tool No. J-3080. Remove crankshaft sprocket.

Timing Chain Installation: Reverse removal instructions given above. Timing marks on sprockets must be together and aligned with straightedge across shaft centers.

CAMSHAFT & BEARINGS

CAMSHAFT REMOVAL: Remove radiator (see Radiator Removal), radiator shroud support, timing chain (see Timing Chain Removal), valve lifters (see Valve Lifter Removal), distributor (see Ignition on car page), distributor drive gear, use Tool No. J-3080 and pull camshaft half way out, remove tool and withdraw camshaft all the way out.

CAUTION—Slide camshaft out carefully and avoid scratching camshaft bushings with cam lobes.

Camshaft Alignment Check: Place camshaft on surface plate and support at front and rear bearing journals on "V" blocks, or on centers. Mount dial indicator on surface plate over centerline of camshaft with pointer touching shaft. Check heel of each cam through 180° rotation with dial set at zero. Replace camshaft if dial reading greater than .0015".

Camshaft Installation: Reverse removal instructions given above.

VALVE SYSTEM

STICKING VALVES 1949-1950 ENGINES: In engines where a build-up of carbon on the exhaust valve stems causes a sticking condition, remove the counterbored section of the valve guide. The removal of the counterbored section can be done with the guides in the head by using a 19/32" drill, ground almost flat, and carefully drilling out the guide to the TOP of the chamfer. *(CAUTION*—Extreme care must be exercised so that the chamfer is not removed, as any sharp edges or a reduced valve bearing surface in the guide will cause more damage than the carbon deposits).

►*NOTE*—If a modified valve guide is removed for any reason, it is important that a ferrule of equal length to the discarded guide counterbored section be added to the small diameter of special tool J-3066 so that correct guide to valve seat relationship will be maintained.

VALVE REMOVAL: With cylinder heads removed, take out spark plugs. Install head upside down on Cylinder Head Holding Stand Tool No. J-3064. Install Holding Strap No. J-3064-6 over heads of valves. Turn head right side up, compress valve spring with compressor bar and stirrup of Head Holding Tool, remove valve keepers. Release bar and remove valve spring retainer, also rubber seal from lower groove on valve stem. Turn head over, remove Holding Strap, take out valves. *CAUTION*—Note location of each valve, must be re-installed in same position.

Valve Installation: Reverse removal instructions given above and note the following.

Valve Spring Retainers. Install retainers with long skirts on intake valves.

Valve Stem Oil Seals. Installed in lower groove (nearest valve head) ahead of valve keepers. Check for proper sealing after keepers installed by striking ends of valve stem to seat keepers, then using suction cup (similar to type used for grinding valves), compress cup on spring retainer. If seal properly seated, cup will stick to retainer, or if cup does not stick, seal is broken and a new seal will have to be installed.

VALVE LIFTER REMOVAL: Remove rocker arm covers (hang on cowl), intake manifold, three valve compartment cover screws. Loosen crankcase ventilator pipe screw at flywheel housing, move pipe to permit removal of valve cover. Remove rocker arm assemblies and push rods. Take out lifters (use Tool No. J-3049), turn lifters while removing to remove any carbon or varnish deposit from lifter base.

CAUTION—Keep lifters in order—must be re-assembled in same holes.

Partial Removal Note—If one or two lifters only to be removed, rocker arm assembly need not be removed, proceed as follows: Compress valve spring, slide rocker arm over, withdraw pushrod.

ROCKER ARM INSTALLATION: When assembling rocker arm assemblies note the following points:

Rocker Arm Shafts. Locating notch on front end of shaft must point inward and down.

Rocker Shaft Brackets. Front and rear brackets must be assembled with rocker arm cover screw hole on top on valve end of rocker arm. Intermediate (second and third) brackets must be installed right side up (can cause shaft misalignment if upside down).

OIL PAN REMOVAL

OIL PAN REMOVAL: Remove oil level indicator, exhaust cross-under pipe nuts, pipe, gaskets, and manifold heat control valve. Take off starter and lay on frame side rail. Remove two oil pan nuts and eighteen screws, take off oil pan.

Oil Pan Installation: Cement new pan gaskets to pan, install new cork seals in rear main bearing cap and engine front cover with ends of seals seated in grooves. Coat each end of pan gaskets with chassis grease so that ends will slip over front and rear seals. Position pan over two studs on left side of crankcase, then raise right side and insert two pan screws opposite the two studs, put on washers and nuts on two studs. Tighten remaining screws, tightening two screws and nuts originally installed last.

OIL PUMP

OIL PUMP REMOVAL: Take off oil pan (see Oil Pan Removal). Remove oil pan baffle, and two nuts securing pump to rear main bearing cap. Remove pump and float and screen assembly.

Oil Pump Specifications: Backlash between gears .008-.012". Driveshaft to Body Clearance .0010-.0025" (new), .005" max. (worn). Endplay between cover and gears .001-.004" (new), .006" max. (worn).

Pressure Regulator—Valve Plunger to Body Clearance .0020-.0035" (new), .005" (worn). Spring Free Length 2 25/64". Spring Pressure at 1 13/32"—5 3/4 to 6 1/4 lbs.

Oil Pump Installation: Reverse removal instructions given above and use new gasket between pump and bearing cap.

RADIATOR

RADIATOR CORE REMOVAL: Drain radiator, remove radiator hoses, six radiator-to-air deflector screws, and radiator anchor nut and spacers at frame bracket (check number of spacers and reinstall same number when radiator replaced). Lift out radiator.

Radiator Core Installation: Reverse removal instructions given above. NOTE—Core must be properly positioned for spacing between core and fan—this space must be ½" to 1".

MODEL IDENTIFICATION

ENGINE & SERIAL NUMBER: Stamped on the upper right corner on the front face of the right hand block and on the right frame side bar just behind the engine support bracket.

Identification—First two figures indicate year, third and fourth figures indicate model (last five figures are numbered consecutively regardless of series).

Series	First 1950 Nos.	First 1951 Nos.
61	506100000	516100000
62	506200000	516200000
60 Special	506000000	516000000
75	507500000	517500000
86 Commercial	508600000	518600000

ENGINE UNIT NUMBER: Stamped on top of crankcase, behind left hand block (behind distributor).

	Engine Unit Numbers	
1950 Numbers	Std. Trans.	Hydramatic
61	8-M-1 Up	9-M-1 Up
60S, 62		9-M-1 Up
75	2-M-1 Up	9-M-1 Up
86	2-M-1 Up	7-M-1 Up
1951 Numbers		
60S, 61, 62, 75		9-N-1 Up
86	2-N-1 Up	7-N-1 Up

TUNE-UP

►*DETONATION "PING" CORRECTION: See "Detonation Correction" in Cadillac Special Data.*

COMPRESSION PRESSURE: 120-140 lbs. at cranking speed (7.25-1 Std. Cast-iron head).

VACUUM READING: Steady 20-21" idling at 375 RPM. (for Hydra-Matic), 400 RPM. (with Synchro-Mesh).

FIRING ORDER: 1-8-4-3-6-5-7-2. (Cyl. Nos. 1-3-5-7 Left Bank, 2-4-6-8 Right Bank, front-to-rear). See diagram.

SPARK PLUG GAPS: .033-.038".

Plugs—AC No. 48X. 14 mm. *(NOTE—Supercedes previous type).* Use Type 46-5 for high speed operation.

►*CAUTION—Tighten plugs to 20-25 ft. lbs. torque.*

DISTRIBUTOR: Breaker Gap—.013-.018" (new), .010-.015" (used points).

Cam Angle—31°±1½° (new), 28°±1½° (used). Test limits with .016" gap—21-30°.

►*CAUTION—Manufacturer recommends final check with feeler gauge or dial indicator if dwell-meter used to set contact gap.*

Breaker Arm Spring Tension—19-23 ozs.

Automatic & Vacuum Advance—*See Ignition.*

Condenser Capacity—.18-.25 microfarad.

IGNITION TIMING: 5° BTDC (80 Octane Fuel).

Timing Procedure—*See Ignition Timing.*

Timing Mark—"A/" on harmonic balancer at front of engine lined up with pointer on front cover (for fuel of 80 Octane Rating).

►*CAUTION*—If fuel of less than 80 Octane Rating used, and detonation ping noted, timing may be retarded to "/C" mark on balancer (top dead center).

CARBURETION (CARTER):

Idle Setting—Carter (1950 742S, 1951 845S). Both screws ¾ to 1¼ turns open (turn screws out for richer mixture) and set for smooth idle with engine warm.

Idle Speed—375 RPM (Hydra-Matic Trans.), 400 RPM (Synchro-mesh Trans.) with engine warm and Hydra-Matic selector lever in "Dr" position.

►*CAUTION—Use tachometer to set idling speed.*

Float Level—11/64" from top of each float to gasket seat on cover with valve seated (invert to check). Fuel level even with bottom of inspection plug hole on side of bowl with engine idling.

Accelerating Pump—Outer hole (long stroke) normal setting.

Choke Setting: *CAUTION—Different setting used on each carburetor. Choke Modifier on 845S must be adjusted when choke adjustment made.*

Carter (742S)—1 Point Lean.

Carter (845S)—1 Point Rich. See Choke Modifier.

Choke Modifier Setting (845S): Disconnect throttle-to-choke rod, set choke 1 Point Rich (loosen retainer screws, rotate cover, tighten screws). Loosen modifier arm clampscrew, rotate metal pointer until it is in line with fixed pointer on cover, hold pointer in this position, rotate modifier arm until scribed line on face of arm is vertical, tighten clampscrew.

CARBURETION (ROCHESTER):

Idle Setting—Screw idle adjustment needles and springs into throttle body until they are finger tight. Back out screw 1½ turns as a temporary idle adjustment and make final adjustment.

Idle Speed—375 RPM (Hydra-Matic Trans.), 400 RPM (Synchro-mesh Trans.), with engine warm and Hydra-Matic lever in "Dr" position.

►*CAUTION—Use tachometer to set idling speed.*

Float Level—Use Float Gauge, Tool No. J-4715.

Accelerating Pump—No seasonal adjustment.

Choke Setting: *CAUTION—Choke Modifier must be adjusted as part of choke setting.*

CONTINUED N NEXT PAGE

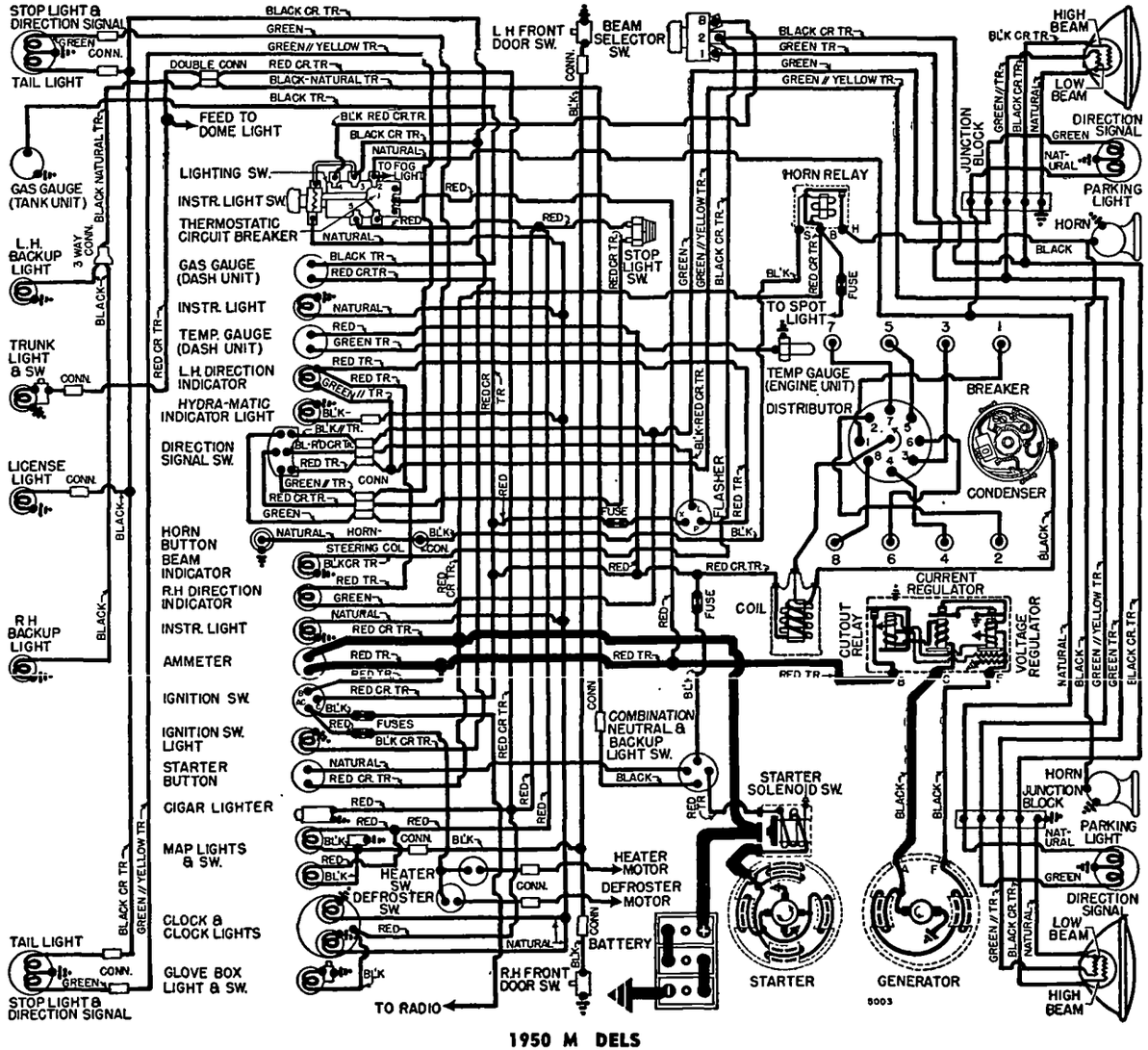

1950 M DELS

C NTINUED FR M PRECEDING PAGE

Choke Setting—2 Points Lean.

Choke Modifier Adjustment—Back off idle stop screw and fast idle screw so throttle valves are fully closed, and loosen modifier lever retaining screw. Rotate index pointer counter-clockwise until choke valve closes. Index pointer should be close to scribed line on the thermostat cover at 75°. Set and hold index pointer two marks on the lean side of scribed mark. With modifier lever pointing away from fuel inlet, and throttle valves fully closed, tighten retainer screws.

Fuel Pump Pressure: 4-5¼ lbs. at carburetor.

MANIFOLD HEAT CONTROL: Automatic thermostatic type. Blocker type valve located between left bank exhaust manifold and cross-under pipe (diverts exhaust through bypass under intake manifold when valve closed).

►*CAUTION*—Valve assembly must be installed with coil toward left side and dampener weight toward rear of engine.

VALVE TAPPET CLEARANCE: None in service (automatic hydraulic type tappet take-up).

Valve Timing Check—*See Valve Timing.*

STARTING: *See Battery, Starter, Generator, Regulator.*

IGNITION

►*DETONATION "PING" CORRECTION: See "Detonation Correction" in Cadillac Special Data.*

IGNITION SWITCH: (1950) Delco-Remy No. 1116462. (1951) Delco-Remy No. 1116470 (Ign. & Starting). **Ignition Lock**—Briggs & Stratton or Delco.

COIL: Delco-Remy 1115380. Mounted on manifold directly in front of distributor.

Ignition Current—2.2 amperes (engine running).

CONDENSER: Delco-Remy Part No. 1869704.

Capacity—.18-.25 microfarad.

DISTRIBUTOR: Delco-Remy 1110819 (1950), 1110820 (1951). Automatic and vacuum advance type with new "center-bearing" breaker plate.

►**Breaker Plate Bearing Assembly**—Plate rotates on 3 bakelite buttons on support plate with spring tension adjustment (shim washers) on underside of support plate. Pull required to move plate should be 8 ozs. min., 16 ozs. max. with breaker plate assembly out of housing.

See "Delco-Remy Center-Bearing Breaker Plate Distributor" in Electrical Equipment Section.

Breaker Gap—.013-.018" (new), .010-.015" (used points).

Cam Angle—31°±1½° (new), 28°±1½° (used). Test limits with .016" gap—21-30°.

►*CAUTION—Car manufacturer recommends final check with feeler gauge or dial indicator if dwell-meter used to set contact gap.*

Breaker Arm Spring Tension—19-23 ozs.

Rotation—Counter-clockwise viewed from above.

Automatic Advance—1110819, 1110820

Distributor Degrees	Distributor R.P.M.	Engine Degrees	Engine R.P.M.
Start	300	1.5	600
16.0	1800	32.0	3600

Vacuum Spark Control: Delco-Remy 1116047. Integral type linked directly to breaker plate. Provides additional advance at speeds above idling except when engine accelerated or operated with wide open throttle when spark retarded by return spring.

Plunger Travel—7/32" (.190-.212").

Vacuum Advance

Distr. Degrees	Eng. Degrees	Vacuum (" of HG)
Start	0°	6-8"
6°	12°	9-11"
10°	20°	13-15"

Removal: Turn crankshaft to top dead center position for #1 piston (mark "/C" on vibration balancer in line with pointer on front cover), remove distributor cap, disconnect breaker lead and vacuum line, remove nut on hold-down clamp stud, hold rotor clockwise (against direction of rotation), lift distributor straight up to disengage drive tongue using care not to lose gasket or nick tongue.

►**Installation Caution**—If distributor drive gear disturbed (by oil pump removal), see Oil Pump Installation data.

IGNITION TIMING

►*DETONATION "PING" CORRECTION: See "Detonation Correction" in Cadillac Special Data.*

Standard Setting.....**5° BTDC**

Timing Mark—"A/" on vibration balancer (located 5° ahead of dead center mark "/C") in line with pointer on right side of engine front cover.

Timing (Using Timing Light)—Loosen distributor hold-down clamp nut just enough to permit distributor adjustment, disconnect vacuum line (to prevent vacuum advance operating), connect timing light to #1 cylinder spark plug lead, direct light on vibration balancer from right side of engine. Warm

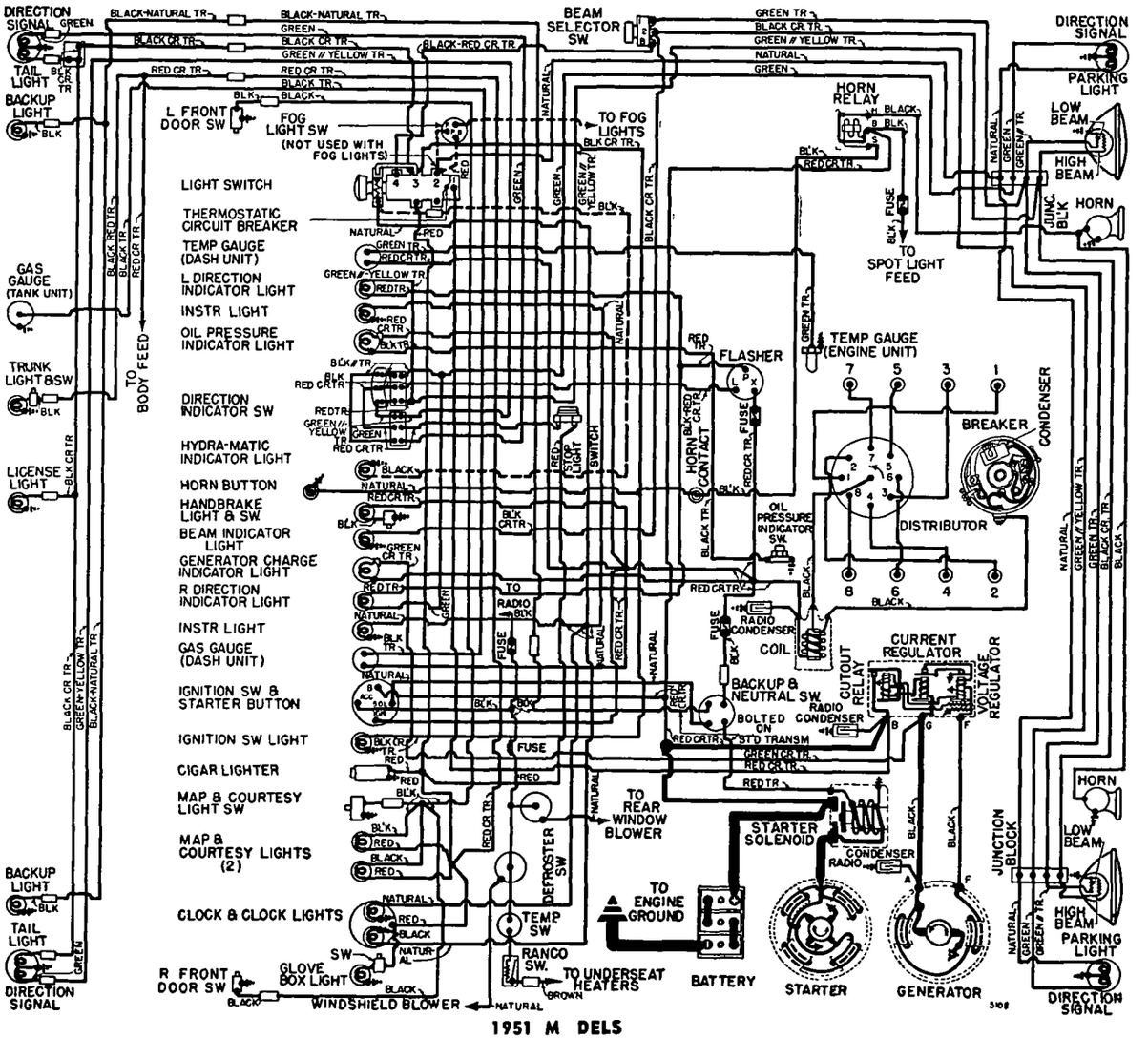

1951 M DELS

up engine. With engine idling, rotate distributor until balancer mark *"A/" lines up with pointer on* front cover, tighten hold-down clamp nut to 15-18 ft. lbs. Recheck timing, connect vacuum line.
Manual Adjustment—If detonation "Ping" noted with std. setting (above), timing can be retarded to "/C" mark on balancer (top dead center), by loosening hold-down clamp nut and rotating distributor counter-clockwise (in direction of rotation).

CARBURETOR

CARTER

Carter WCD, (1950) 742S, (1951) 845S. 1¼" Dual (double barrel), downdraft types with Climatic Control. NOTE—845S has Choke Modifier.
Casting No. (on flange)—(745S) 672, (845S) 821
See Carburetor Section for complete data.

Settings (Idle Setting, Float Level & Accelerating Pump): ***See Tune-Up data.***

Hydra-Matic Throttle Linkage Adjustment: ***See "Cadillac Hydra-Matic Drive" in Transmission Section.***

Metering Jets & Rods: ***See "Carter Downdraft Carburetor Jet Specifications" in Carburetor Section.***

Fast Idle: Carter Dual (WCD) Carburetor type.
Setting—.020" throttle opening (Gauge T109-29) with choke valve tightly closed. Adjust by turning fast idle adjusting screw.
See Carburetion Equipment Section for complete data.

Automatic Choke: Carter Climatic Control (Dual Carburetor). ***(Caution—Different setting used on each carburetor. Choke Modifier on 845S must be adjusted when choke adjustment made.***
Setting—(742S) 1 Point lean. (845S) 1 Point rich.

Choke Modifier Setting (845S): Disconnect throttle-to-choke rod, set choke 1 Point Rich (loosen retainer screws, rotate cover, tighten screws). Loosen modifier arm clampscrew, rotate metal pointer until it is in line with fixed pointer on cover, hold pointer in this position, rotate modifier arm until scribed line on face of arm is vertical, tighten clampscrew.
See Carburetion Equipment Section for complete data.

ROCHESTER

Rochester Model BB, No. 7003200. Dual downdraft type. (Used in partial production on all series 1951).
See Carburetor Section for complete data.

Settings (Idle Setting, Float Level & Accelerating Pump): ***See Tune-Up Data.***

Hydra-Matic Throttle Linkage Adjustment: ***See "Cadillac Hydra-Matic Drive" in Transmission Section.***

Metering Jets: ***See "Rochester Carburetor Jet Specifications" in Carburetor Section.***

Automatic Choke: Rochester Dual "BB" type.
Setting—2 Points Lean. Choke Modifier must be adjusted as part of choke adjustment.
Choke & Modifier Setting—Back off idle stopscrew and fast idle screw so throttle valves are fully closed, and loosen modifier lever retaining screw. Rotate index pointer counter-clockwise until choke valve closes. Index pointer should be close to scribed line on thermostat cover at 75°F. Set and hold index pointer two marks on the lean side of scribed line. With modifier lever pointing away from fuel inlet, and throttle valves closed, tighten retainer screws.
See Carburetion Equipment Section for complete data.

Fast Idle: Rochester Dual "BB" type.
Setting—After choke modifier adjustment made (above), move fast idle cam until choke valve fully closed, hold throttle lever in closed position so that *fast idle screw rests on high step of fast idle cam.* Adjust fast idle screw to obtain clearance of .0195" between throttle valve and throttle bore on side opposite idle screws (measure with wire gauge on Tool J-4716).
See Carburetion Equipment Section for complete data.

CARB. EQUIPMENT

Air Cleaner: AC No. 1544741 Oil-bath type.
Filter Element—AC No. 20.

Fuel Pump: AC No. 1539535. Combination fuel and vacuum pump.
Replacement Pump—AC No. 9535.
Pressure—4-5¼ lbs (at carburetor).
See Carburetion Equipment Section for complete data.

Gasoline Gauge: AC Electric type.
Dash Unit—AC (1950) No. 1517131. (1951) No. 1517447.
Tank Unit—AC No. 1517215 (all models).
See Carburetion Equipment Section for complete data.

BATTERY

STANDARD

Delco Type 17K-4—6 volt, 17 plate, 115 Ampere Hour Capacity (20 hour rate).
Starting Capacity—137 amperes for 20 minutes.
Zero Capacity—300 amperes for 4.3 minutes.
Five Second Voltage—4.4 volts.
Grounded Terminal—Negative (—) terminal connected to engine at starter mounting flange.
Location—In engine compartment on right hand side (mounted outside frame side rail).

COMMERCIAL MODELS

Delco Type 19Q-4. 6 volt, 19 plate, 125 Ampere Hour Capacity (20 hour rate).
Starting Capacity—145 amperes for 20 minutes.
Zero Capacity—300 amperes for 5 0 minutes.
Five Second Voltage—4.5 volts.
Grounded Terminal & Location—Same as Std. models above.

STARTER

Delco-Remy Model 1107969. Armature No. 1917855.
Drive—Overrunning clutch (solenoid pinion shift).
Rotation—Counter-clockwise at commutator end.
Brush Spring Tension—24-28 ozs.

Performance Data

Torque	R.P.M.	Volts	Amperes
0 ft. lbs.	5500	5.7	80①
15 "	Lock	3.0	600

①—Includes current draw of starter switch

Removal: Starter flange mounted on right front face of flywheel housing. To remove, disconnect battery cable and control leads, take out two flange mounting screws, pull starter out.

Starting Switch: Delco-Remy Solenoid Switch No. 1118148 mounted on starter and controlled as follows:
1950—Push button Switch No. 1996009 on instrument panel.
1951—Ignition & Starter Switch No. 1116470. Turn key full RIGHT against spring tension to start.

►**Hydra-Matic Drive Car Starter**—Starter operative only with selector lever in Neutral "N", (Neutral Safety Switch connected in starter solenoid circuit).
Neutral Safety Switch (Hydra-Matic Drive Cars only)—(1950) Delco-Remy No. 1997844, (1951) Delco-Remy No. 1997879.
See Electrical Equipment Section for complete data.

GENERATOR

Delco-Remy Model 1102700. Armature No. 1880550. Two brush type with voltage and current regulation.
Charging Rate Adjustment—None. See Regulator.
Maximum Charging Rate—40-46 amperes reached at 28 MPH. Actual charging rate controlled by regulator and dependent on battery condition.

Performance Data

	Amperes	Volts	R.P.M
Cold	40①	8.0	1900

①—Not maximum output. See Current Regulator.
Rotation—Counter-clockwise at commutator end.
Brush Spring Tension—25 ozs. each.
Field Current—1.9-2.05 amperes at 6.0 volts.

Removal: Generator pivot mounted at right of engine. To remove, disconnect leads, take out two pivot bolts and clampscrew in adjusting link.

Belt Adjustment: Tighten belt to 24 in. lbs. torque measured as follows: Loosen both pivot bolts and adjusting strap screw, install Fan Belt Adjusting Tool J-3046 on head of lower front mounting bolt, rotate tool until arm contacts edge of generator end plate. Use ⅞" socket and torque wrench on tool to pull generator out away from engine until 24 in. lb. reading secured on wrench, tighten adjusting strap screw before releasing wrench.

Generator Charge Indicator—(1951) Red light to right of mileage indicator on instrument panel. Lights when ignition turned on, goes out when generator begins to charge.

REGULATOR

Delco-Remy Model 1118357. Voltage & Current Regulator.

►***NEW "1118300 SERIES"*** regulators have screw adjustment for settings and single regulator springs.
See Electrical Equipment Section for complete data.
CAUTION—Check generator for grounded field coils and leads before changing regulator settings to correct High Charging Rate or High Voltage.

Cutout Relay

Cuts In—5.9-6.8 volts hot (set to 6.4 volts hot).
Contact Gap—.020" (same for both sets).
Air Gap—.020" (with contacts just closed).

Voltage Regulator

Setting—7.0-7.7 volts hot (set to 7.4 volts hot). Regulator is over-compensated for temperature. Check with cover in place and regulator hot.
Air Gap—.075" with armature pressed down to point where contacts are just touching.
Checking & Adjustment—***See Electrical Equipment Section.***

Current Regulator

Setting—40-46 amperes hot (set to 42 hot).
Air Gap—.075" with armature pressed down to point where contacts are just touching.
Checking & Adjustment—***See Electrical Equipment Section.***

LIGHTING

Headlamps: Guide "Sealed Beam" type.
See Electrical Equipment Section for complete data.
Adjustment—Aim upper beam straight ahead (hot spot center 3" below lamp center height at 25 ft.).
Beam Indicator—At center of panel above speedometer. Lighted when country (upper) beam in use.

Direction Signal: ***See Electrical Equipment Section.***
Direction Signal Indicators—Left & Right Turn In-

CONTINUED ON NEXT PA E

CONTINUED FR M PRECEDING PA E

dicator located at either end of speedometer dial. Lights when direction signal on same side of car operating (Stop Light flashes at rear).

Switches

Lighting—Delco-Remy No. (1950) 1995031, (1951) 1995047.
Instrument—Part of lighting switch (rheostat operated by rotating light switch knob).
Beam Selector—Delco-Remy No. 1997008.
Map Light—Delco-Remy No. 1997848.
Directional Signal—Delco-Remy No. (1950 Std.) 1995541, (1950 Hydra-Matic) 1997844, (1951) 1995558.
Back-Up Light—Delco-Remy No. (1950-51 Synchromesh) 1997774, (1950 Hydra-Matic) 1997844, (1951 Hydra-Matic) 1997879.
Stop-Lite Switch—Delco-Remy No. 1997901. Mechanical type, located under toe-board and operated by contact with foot brake lever.

MISC. ELECTRICAL

FUSES: Direction Signal—9 ampere. On Flasher under back of instrument panel on left side.
Defroster & Heater Motor—30 ampere. In lead from "Acc" terminal on ignition switch.
Back Up Light—20 ampere. In lead from switch terminal of ignition coil.

THERMOSTATIC CIRCUIT BREAKER: Delco-Remy. On back of light switch (part of switch assy.). Contacts remain closed with 30 amperes but open in 3 minutes with 42 amperes at 70°F. Not adjustable.

HORNS: Delco-Remy No. (1950) 1999621, 1999641 (Low Note) 1999622, 1999642 (High Note). (1951) 1999639 (Low Note), 1999640 (High Note).

Horn Relay: Delco-Remy No. 1116775.
Contact Gap—.027". **Air Gap**—.014" (closed).
Contacts Close—2.75-4.0 volts (set to 3.5 volts).

ENGINE

ENGINE SPECIFICATIONS: 90° V8 with Overhead Valves. Both cylinder blocks and crankcase cast Enbloc.
Bore—3 13/16" (3.8125-3.8145").
Stroke—3⅝". **Displacement**—331 cu. ins.
Rated Horsepower—46.5.
Developed Horsepower—160 at 3800 RPM.
Compression Ratio—7.5-1.
Compression & Vacuum Reading—*See Tune-Up.*

TIGHTENING TORQUES: *See Cadillac Special Data.*

CYLINDER HEAD INSTALLATION: *See Cadillac Special Data.*

ENGINE REMOVAL: *See Cadillac Special Data.*

OIL PAN REMOVAL: *See Cadillac Special Data.*

PISTONS: Aluminum alloy, 3 ring, T-T slot tin plated "Slipper-Skirt" type (skirt cutaway at pin bosses).
Original Piston & Bore Sizes—*See Cadillac Special Data.*
Diameter (Std. Size)—3.8104-3.8124".
Weight—19.296 ozs. (without rings or pin).
Length—3 15/16".
Removal—Pistons and rods removed from above.
Clearance—.0013-.0017" at 70° measured ⅛" below upper cross slot and at right angles to piston pin.
Replacement Pistons: *See Cadillac Special Data.*
Fitting New Pistons: Use micrometer or feeler gauges. *See Cadillac Special Data.*
Installing Pistons: Mark "REAR" on piston pin boss toward right (#1, 3, 5, 7), toward left (#2, 4, 6, 8) of number on boss on connecting rod when facing this numbered boss end of rod. Install pistons with mark "REAR" toward rear of engine on all pistons.

PISTON RINGS: Two compression, one oil control ring per piston, all above pin. Oil ring slotted type with oil drain holes in groove.

Ring	Width	End Gap	Side Clearance
Compr. (#1, 2)	5/64"	.010-.020"	.0017-.0035"
Oil Contr. (#3)	3/16"	.010-.020"	.0013-.0026"

Installing Rings—Beveled inner edge of compression rings must be upward.

PISTON PIN: Diameter 1". **Length** 3 3/32". Floating type with locking ring at each end.
►*CAUTION*—Install lock rings with tang pointing away from pin and toward piston head at 45° angle.
Pin Fit in Piston—.00005-.0001" at 70°F (new), .0007" (worn limit). Pin should be light push fit at 70° with no perceptible play.
Pin Fit in Rod Bushing—.00005-.000035" (new), .0007" (worn limit). Pin should be free hand-press fit at 70°F. with no perceptible play.
►*CAUTION*—Do not attempt to replace pin bushing (fit oversize pin with KMO-754 Piston Pin Hone or replace rod).

CONNECTING ROD: Length 6⅝".
Weight—(1950) 1.649 lbs., (1951) 1.500 lbs.
Crankpin Journal Diameter—2.2488-2.2493" (out-of-round limit .00025" maximum). Connecting rod diameter (without bearing) 2.3740-2.3745".
Lower Bearing—Removable steel-backed, Moraine-Durex lined type. No shims.
Clearance—.0005-.0020" (new), .0045" (worn limit).
Sideplay—.008-.014" (total both rods).
Bearing Adjustment: None. Replace bearings.
►*CAUTION*—Tang on bearings must register with grooves in rod and cap and oil spit hole register with oil groove in bearing cap (for cylinder wall lubrication).
Installing Rods: Cylinder No. mark on rod and cap (on small boss on end) must be together and installed in same numbered cylinder with piston mark "REAR" toward rear of engine (lubrication groove in rod cap will be on upper side).

CRANKSHAFT: 5-bearing, integral counterweights.
Removal & Installation—*See Cadillac Special Data.*
Journal Diameters—2.4985-2.4990" all bearings (out-of-round limit .00025" maximum).
Bearings—Removable, steel-backed, Moraine-Durex lined type. No shims.
Clearance—.0008-.0025" (new), .005" (worn limit).
Bearing Adjustment: None. Replace bearings.
Bearing Removal & Installation—*See "Crankshaft & Main Bearings" in Cadillac Special Data.*
►*CAUTION*—Bearing caps must not be interchanged. Install caps with marking numbers (not casting nos.) on left side and in order from front-to-rear.
End Thrust: Taken by flanged rear (#5) bearing.
Endplay—.001-.005" (new), .010" (worn limit).
Rear Main Bearing Oil Seal Installation: *See "Crankshaft & Main Bearings" in Cadillac Special Data.*

FLYWHEEL Removal & Installation—*See Cadillac Special Data.*

CAMSHAFT: 5-bearing, Cast-iron type with non-adjustable chain drive.
►*CAUTION*—Handle shaft with care to avoid damage or misalignment. Check whenever removed.
Removal, Alignment & Installation—*See Cadillac Special Data.*
Bearing Type—Steel-backed, babbitt bushings.
Clearance—.001-.0022" (new), .004" (worn limit).
End Thrust: Spring-loaded plug in forward end of shaft bearing against thrust plate in cover.
►*CAUTION*—See that plug and spring in place when installing chain case cover.

Timing Chain: Link-Belt side-guide type. Width 11/16". Pitch .500". Length 23" or 46 links.
Timing Chain Removal—*See Cadillac Special Data.*
►*CAUTION*—Install chain "endless" and as a unit with camshaft sprocket (sprocket press fit on shaft with locating dowel and two retaining capscrews).
Camshaft Setting: Both sprockets marked "0". Mesh chain with sprockets turned so that marks adjacent and in line with straightedge across shaft centers.

VALVES:	Head Diam.	Stem Diam.	Length
Intake	1.745-1.744"	.3415-.3425"	4.539-4.559"
Exhaust	1.4325-1.4425"	.3405-.3415"	4.539-4.559"

	Seat Angle	Lift	Stem Clearance
Intake	44°②	.327"	.0005-.0025"①
Exhaust	44°②	.327"	.0015-.0035"①

①—New valves & guides. Worn limit .005" max.
②—New valves (valves in service can be refaced to 45° if seat width recommendations not exceeded).

►*STICKING VALVE CORRECTION*—*See Valve System in Cadillac Special Data.*
►*CAUTION*—Do not lap new valves in so that seat width is more than 1/64" (1° difference between valve and block angle designed to provide "hairline" contact).
►**Valve Seat Width Recommendations**—3/64-1/16" (moderate speeds or city driving), 1/16-3/32" (high speed driving). Cut seat so that distance from outer edge to edge of flange on valve head is not more than 1/32".
►**Valve Stem Oil Seal**—New rubber oil seal installed in lower groove on valve stem (below valve keeper).
Oil Seal Installation—*See "Valve Removal & Installation" in Cadillac Special Data.*
Valve Removal & Installation: *See "Valves" in Cadillac Special Data.*
Valve Guides: Pressed in cylinder head with counterbored end down toward valve head. Use Remover tool J-3062 to drive old guides out toward top of head, Installer tool J-3066 to drive new guides in (tool plate serves as stop for driver).
Valve Springs: Free length 1.968".

	Pressure	Length
Valve Closed	57.5-62.5 lbs	1.696"
Valve Open	130-140 lbs	1.366"

►*CAUTION*—Lower end of spring must seat in recess in cylinder head.
Valve Lifters: New hydraulic type which maintains zero tappet clearance in service. Lifters operate in guide holes integral with block.
See Miscellaneous Section for complete data.
Valve Lifter Removal—*See Cadillac Special Data.*
Rocker Arms: Rocker arm and shaft assemblies are mounted on each cylinder head. NOTE—No adjusting screws provided on rocker arms.
Rocker Arm Installation—*See Cadillac Special Data.*

VALVE TIMING

Tappet Clearance: None in service (hydraulic type lifters which maintain zero clearance).
Valve Timing: *See Camshaft Setting above.*
Intake Valves—Opens 14° BTDC. Close 58° ALDC.
Exhaust Valves—Opens 48° BLDC. Close 24° ATDC.
Valve Timing Check—Not practical to check in field. Manufacturer recommends removing timing chain cover and check timing marks.

LUBRICATION

Engine Oiling System: Pressure to main bearings, connecting rod lower bearings, camshaft bearings, and hydraulic valve lifters (from right and left oil channels in block); and to rocker arms (through hollow rocker arm shafts). Timing chain lubricated by oil return from forward end of right hand cylinder head (return line from rear of right block and front and rear of left block lead directly to crankcase).

Oil Pan Removal: *See Cadillac Special Data.*

Crankcase Capacity—5 quarts.

Normal Oil Pressure—25 lbs. min. at 30 MPH. 15 lbs. with engine idling.

Oil Pressure Regulator—Located on oil pump. Opens at 25 lbs. minimum. Non-adjustable.

Pressure Regulator Spring—Free length 2 25/64". Pressure should be 5¾-6¼ lbs. compressed to 1 13/32".

Oil Pump: Gear type. In crankcase at rear of engine.

Pump Removal & Overhaul—*See Cadillac Special Data.*

►**Pump Installation Caution**—Flat on upper end of pump driveshaft must engage flat in distributor drive gear in valve compartment. If drive shaft and gear disturbed when pump removed, install pump and driveshaft with distributor gear out, turn crankshaft until #1 piston at TDC entering power stroke, with vibration dampener mark "C" at indicator, install distributor drive gear on end of pump drive shaft engaging shaft flat in gear, turn gear and shaft until flat is on right side and parallel with engine centerline, then mesh gear with camshaft gear. Distributor drive slot in upper end of gear should be approx. 15° to right of engine centerline.

Oil Pressure Gauge: (1950) AC No. 1506374. Pressure type, not electrical.

Oil Pressure Switch: (1951) AC No. 1997884. Sending unit mounted on engine, operates light on instrument panel.

Crankcase Ventilation: Air intake in oil filler cap (oil-wetted type cleaner) with outlet connection at rear of valve compartment cover and outlet pipe extending down below engine at right rear corner.

Servicing—Wash filter element in gasoline and re-oil by dipping in engine oil whenever crankcase oil changed (every 2000 miles).

COOLING

Cooling System: Pressure type with pressure valve (relief valve) in filler cap. Re-circulation with thermostat closed provided by by-pass in pump body.

Capacity—18 qts. (1 qt. addt'l with heater).

Pressure Cap—AC No. 850559. Radiator Filler Cap. Opens at 12-15 lbs.

Radiator Removal: *See Cadillac Special Data.*

Water Pump: Packless type with ball bearing shaft. *See Water Pump Section for complete data.*

Removal—Drain cooling system. Loosen and remove generator drive belt. Remove upper and lower radiator hoses (and heater hose). Take out eight capscrews mounting pump and water manifold assembly on front of engine, lift out pump and fan. NOTE—Water manifold and thermostat are part of pump body casting.

Belt Adjustment—*See Generator Belt Adjustment.*

Thermostat: (1950) Fulton. (1951) Dole. In water outlet connection on top of pump body.

Setting (Std. Type)—Begins to open at 162-168°F. Fully open at 190-195°F.

Setting (High Temp. Type)—Begins to open at 177-183°F. Fully open at 205-210°F.

Temperature Gauge: AC Electric type.

Dash Unit—AC No. (1950) 1512143, (1951) 1512323.

Engine Unit—AC No. (1950) 1512015, (1951) 1512115.

See Miscellaneous Section for complete data.

CLUTCH

Long 11CF-10½TI (60S, 61, 62) 11CF-TI (75, 86). Semi-centrifugal, single plate, dry disc type.

See Clutch Section for complete data.

Facings—Woven type. I.D. 7" (all), O.D. 10½" (60S, 61, 62), 11" (75, 86). Thickness .137" (all).

Pedal Adjustment: Pedal free travel ⅞-1⅛". Adjust by turning nut on connector rod at clutch fork.

Removal: Remove transmission (see Transmission Removal), remove starter, remove lower flywheel housing, remove clutch release yoke-to-lever rod. Remove flywheel housing with clutch release yoke, release bearing, and bearing retainer as an assembly. Punch mark flywheel and clutch cover to insure correct re-installation. Take out six clutch cover mounting screws (CAUTION—turn all screws out evenly to relieve spring pressure), lift clutch and driven member out.

►**Driven Member Installation Caution**—Oil guard must be toward rear.

►**Replacement Clutch Caution**—Clutches furnished with locking pin or block at each release lever. *These locking pins must be removed when clutch installed.*

TRANSMISSION

SYNCHRO-MESH

Own Make. Constant-mesh, synchro-mesh (Second & High), sliding gear (Low & Reverse), all helical gear type with remote shift control.

See Transmission Section for complete data.

Transmission Control: Remote control type mounted on steering column.

See Transmission Section for complete data.

Removal: Support engine on stand, Tool No. J-3068, or use jack under rear end of oil pan (use block of wood on jack to prevent damage to pan). Disconnect rear universal joint, remove propeller shaft. Disconnect speedometer cable and shift rods at levers on transmission case. Disconnect rear engine support at transmission extension housing and remove cross-member on which support mounted. Loosen transmission mounting capscrews (CAUTION—support transmission so that it does not hang on driveshaft in clutch), remove screws, move transmission straight back to free shaft from clutch (CAUTION—plug clutch connection shaft oil drain hole as soon as accessible to prevent loss of lubricant), lower front end of transmission and remove from car.

HYDRA-MATIC TRANSMISSION

Own Make. Consists of Fluid Coupling and automatic self-shifting Four-Speed Transmission. Optional on all models.

See Transmission Section for complete data.

►*ALL MODELS HAVE "MODULATED THROTTLE PRESSURE" CONTROL. 1951 MODELS HAVE HYDRAULICALLY CONTROLLED "CONE TYPE CLUTCH" REVERSE MECHANISM.*

Lubrication—Check fluid level in transmission every 2000 miles along with car lubrication. Drain and refill after 6000 miles and every 25000 miles thereafter. Use only "Cadillac Hydra-Matic Fluid."

Draining & Refilling—*See "Hydra-Matic Drive" in Transmission Section.*

Capacity—Approximately 11 qts. (refill).

Checking Fluid Level—Clean all sand, lint, and dirt away from sheet metal cover in floor under right front corner of front compt. rug. Run engine for approx. 1½ minutes at speed equivalent to 20 MPH, with selector lever in "Neutral". Remove sheet metal cover from floor for access to dip stick, reduce engine speed to slow idle and move selector lever to "Drive" position, measure level with dip stick, add fluid until level is at "FULL" mark with engine idling.

►*CAUTION—Engine must be running at slow idle speed with selector lever in "Drive" position when checking Hydra-Matic Drive Fluid Level.*

Linkage Adjustment—*See "Hydra-Matic Drive" in Transmission Section.*

Removal: *See "Hydra-Matic Drive" in Transmission Section.*

UNIVERSALS

Mechanics Model 3-RCR. Needle bearing type. Two used (three on Comm'l cars with center bearing).

See Universals Section for complete data.

►*CAUTION*—Do not disturb nut on end of pinion shaft retaining rear universal yoke unless yoke or oil seal being replaced. *Pinion bearing pre-load must be adjusted whenever this nut disturbed.*

Propeller Shaft (Pass. Cars): One shaft used (no slip joint—front universal yoke slides on transmission mainshaft in extension housing).

(Commercial Cars)—Two shafts used with center bearing at rear of front shaft. Slip joint provided at rear end of rear shaft.

REAR AXLE

Own Make. Hypoid gear, semi-floating type with Hotchkiss Drive.

See Rear Axle Section for complete data.

►*CAUTION*—Manufacturer recommends that Carrier Assembly be serviced by replacement. Do not disassemble this unit or attempt service work other than oil seal and universal yoke replacement.

►**Axle Identification**—Axles marked by number stamped on bottom of differential case below center of pinion shaft as indicated in ratio table below.

Ratio—	Synchro-Mesh		Hydra-Matic	
Series	Ratio	Mark	Ratio	Mark
60S, 61, 62	3.77-1①		3.36-1	6
75	4.27-1	4	3.77-1	7
86	4.27-1	4	4.27-1	7

①—Series 61 only.

►**Pinion Bearing Pre-Load Caution**—Must be readjusted each time pinion shaft nut loosened. *See "Cadillac Hypoid" in Rear Axle Section.*

Backlash—.003-.010" Screw Adjustment.

Removal: Disconnect propeller shaft at rear universal joint, lower shaft out of the way. Drain rear axle. Remove axle shafts (see below). Remove nuts and washers on carrier mounting bolts, lift out carrier.

Axle Shaft Removal: Remove wheel. Take out two screws holding brake drum on axle shaft flange, remove drum. Remove nuts and lockwashers from four bolts holding bearing retainer and backing plate on axle housing, use Puller J-942-1 and Slide Hammer Tool J-2619 to remove axle shaft.

►*CAUTION*—Use care not to damage axle shaft oil

CONTINUED ON NEXT PA E

CONTINUED FROM PRECEDING PAGE

seal when sliding shaft out and do not disturb position of backing plate on housing.
(Commercial Cars)—Remove wheel, remove nut and washer on end of shaft. Use puller (Snap-On No. S-4567 or similar 5-jaw type) to remove wheel hub and brake drum. Disconnect brake line. Take out retaining screws and remove dust shield (bearing retainer) and backing plate. Use Puller J-838 to pull axle shaft and bearing assembly out using care not to damage oil seal in housing.

Wheel Bearings: Sealed ball-bearing type.

►*CAUTION*—Check bearings for loss of lubricant when shaft removed. If bearing spins freely indicating loss of lubricant, install new bearing.

Pinion Bearing Pre-load Adjustment: Should be adjusted whenever nut on end of pinion shaft disturbed (for universal yoke or oil seal replacement).
See Rear Axle Section for complete data.

SHOCK ABSORBERS

Delco—Direct acting permanently sealed, airplane type located within coil springs (front), "Sea-Leg" type installation (rear) as follows:

Series—	1950 Front	1951	1950 Rear	1951
61	1075F	852F	1071Y	851Y
60S, 62	1075F	872F	1071Y	871Y
75, 86	968G	968G	961BB	961BB

FRONT SUSPENSION

Front Suspension: Independent type with new airplane direct acting shock absorbers located inside coil springs.
See Front Suspension Section for complete data.

NOTE—Specifications below correct with car at curb weight (car unloaded with full gas tank).

Kingpin Inclination—5°51′ crosswise (0° Camber).
Caster—Neg. ½° to Pos. ½°. Equal within ½°.
Camber—Neg. ⅜° to Pos. ⅜°. Equal within ½°.
Toe In—1/32-3/32″ (at rest). Loosen clamp bolts, turn adjusters at outer end of each rod equally.
Steering Geometry (Toe-out on turns)—Outer wheel turned 20°. Inner wheel as follows:

	Left Turn	Right Turn
60S, 61, 62	25°25′	24°42′
75, 86 Comm'l	24°7′	23°6′

STEERING GEAR

Saginaw. Ball bearing Worm-and-Nut type (re-circulating ball type).
See Steering Gear Section for complete data.

BRAKES

Service: Bendix Hydraulic Duo-Servo, Single Anchor type without eccentric adjustment. Hand lever applies rear wheel service brakes.
►***1951 "SELF-CENTERING" BRAKE ANCHOR PINS***—No anchor pin adjustment required.
See Brake Section for complete data.
Drums—Centrifuse. Diameter (60S, 61, 62) 11″. (75) 12″.

NOTE—Drum out-of-round limits is .007″ and re-machining limit (to true up drums) is .030″ max.
Lining—Molded type (all models).

Series	Width Front	Width Rear	Shoe Length Fwd.	Shoe Length Rev.
60S, 61, 62	2½″	2½″	10.55″	11.90″
75	2½″	2½″	12.92″	12.92″
86	2½″	2½″	12 21/32″	12 21/32″

Thickness—3/16″. All series.
Fwd.—Forward or Primary (front) shoe.
Rev.—Reverse or Secondary (rear) shoe.
Clearance—.007-.010″ at each end of each shoe or .015″ at both ends of secondary shoe with primary shoe forced out against drum.
Braking Power—55.8% Front, 44.2% Rear (60S, 61, 62, 75); 50% Front, 50% Rear (86 Comm'l).

Hand (Parking) Brake: See Service Brakes above.

MISC. MECHANICAL

Power Operated Convertible Tops, Windows, & Front Seat: Hydro-Lectric type (hydraulic actuation with motor-driven pump supplying oil under pressure for power cylinders).
See Miscellaneous Section for complete data.

Windshield Wiper: Cable Operated—Vacuum type.
See Miscellaneous Section for complete data.

FRONT END SHEET METAL

PASSENGER CARS

FRONT END SHEET METAL REMOVAL: Front Fenders, Radiator, and Grille can be removed as a unit as follows: ***CAUTION—Where adjusting shims found, make certain same number replaced to maintain sheet metal alignment.*** Drain radiator. Cover fenders and cowl, prop hood in open position, remove hood springs (use Tool J-3181), take out two hinge support arm-to-hood bolts at each side (hold hood to prevent dropping down when bolts removed), remove hood. Remove sill mouldings (bolted to fender, clipped to body). Remove battery, and positive cable from fender skirt. Remove wiring harness from junction blocks, pull harness out of radiator support tie bar and front skirt hole. Take off horn relay and voltage regulator. Remove wiring harness and hood lock cable from left fender skirt. Remove clamp from front end of hood lock cable, loosen nut and bolt attachment of cable bracket to lower hood lock plate. Pull cable out. Turn back rubber connectors over air ducts. Remove radiator hoses and steering gear housing shield. At each side of car remove the following: fender skirt-to-dash leg nuts and bolts, rear baffle-to-cowl bolt, rear baffle extension, fender-to-frame brace, fender-to-lower baffle screws. Then disconnect radiator support to cross-member by removing nuts, lockplate, spacer and rubber cushion (bolts do not come out). Remove fender-to-cowl brace and fender-to-cowl side bolts at each side. Raise assembly at rear end (check so that assembly clears doors) until radiator support bolts free of cross-member and filler panel slips out from under top edge of bumper face bar, pull assembly toward front and remove from car.

NOTE—When re-installing assembly, tape rubber cushion and shims in place on radiator support over support bolts.

TIGHTENING SPECIFICATIONS

	Ft. Lbs.	In. Lbs.
Cylinder Head Capscrews	75-80	900-960
Main Bearing Bolts	100-110	1200-1320
Con. Rod Nuts	40-50	480-600
Rocker Arm Support Bolts	25-30	300-360
Crankcase Frt. End Plate	15-20	180-240
Timing Gear Cover Screws	6-7½	72-90
Manifold Clamp Bolts	15-20	180-240
Manifold Stud Nuts	25-30	300-360
Clutch Mounting Bolts	25-30	300-360
Clutch Housing Bolts	45-55	540-660
Flywheel Bolts	50-65	600-780
Oil Pan Flange Bolts	6-7½	72-90
Oil Pan Corner Bolts	12½-15	150-180
Oil Distr. Cover Screws	6-7½	72-90
Water Pump Mtg. Bolts	25-30	300-360
Fuel Pump Mtg. Bolts	15-20	180-240
Spark Plugs (14 mm.)	20-25	240-300
Spark Plugs (10 mm.)	10-12	120-144
Pitman Arm Bushing Nuts	30-40	360-480
Prop. Shaft Flange Nut	160-280	1920-3360
Axle Flange Bolts (Trucks)	85-95	1020-1140

CYLINDER HEAD

CYLINDER HEAD INSTALLATION: Use Torque Indicating Wrench to tighten cylinder head capscrews, tighten in correct sequence as shown in diagram. Cast Iron heads should be tightened cold and rechecked after engine has been run sufficiently to bring all parts to normal operating temperature.

CHEVROLET

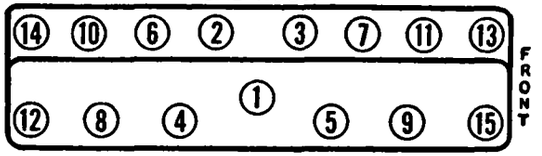

Tightening Torque—See Tightening (Torque Wrench) Specifications.

ENGINE REMOVAL

ENGINE REMOVAL: Engine, clutch, and transmission can be removed as an assembly as follows: Drain radiator, block, oil pan, and transmission. Take off hood by disconnecting hood springs (use Tool J-3181) and removing two hinge support arm-to-hood bolts at each side (hold hood to prevent dropping down when bolts removed). Remove radiator (see Radiator Removal), battery with ground strap attached, and air cleaner. Disconnect wire harness at right junction block and pull harness through header bar. Remove header bar. Disconnect starter and generator wires, coil lead, windshield wiper vacuum line, gas line at pump, choke and throttle cables at carburetor, line at temperature gauge and oil pressure gauge, exhaust pipe flange at manifold, accelerator pedal from rod, transmission control rods from levers on side of case (work through opening in floor), speedometer cable at transmission, and clutch link to pedal arm. (On Powerglide models, disconnect transmission oil cooler lines and vacuum line). Split the universal joint retainer, sliding the ball back, taking out bearing capscrews and removing trunnion bearings. Remove transmission-to-support bolts, engine side mounting-to-frame bracket bolts, and front engine mounting bolts. Take off rocker arm cover. Remove 4th cylinder head bolt from the rear on left side, 3rd from rear on right side and install engine lifting tool No. J-2967. Use a hoist and lift engine, clutch, and transmission assembly from car.

NOTE—On all models (except Powerglide with Automatic Transmission) after engine has been installed and torque tube connected, fill universal housing through speedometer connection (remove driven gear) with ½ pint of SAE 90 transmission lubricant.

ENGINE MOUNTINGS

PASSENGER CARS

ENGINE MOUNTING REPLACEMENT: Front Mounting. Remove engine front mount bolts from engine mounting plate and frame cross-member. Raise front end of engine until front mounts can be moved out from between plate and frame. With front support mounting surfaces clean (no oil, etc.), bolt new supports to frame, lower engine, install mounting plate, bolt support to engine.

Side Mountings. Unbolt mounting from clutch housing and frame brackets and remove mounting. Install new mounting with serrated face toward frame bracket. Bolt mounting to clutch housing bracket first, then tighten mounting to frame bracket bolts (bolt hole in frame bracket slotted and serrated face of frame bracket and mounting permit proper positioning without use of shims).

Transmission Mounting (except Powerglide Cars). Remove mounting attaching bolts (tangs of lock plate must be bent back from bolt heads). Raise rear of engine until mounting can be moved out from between transmission and frame cross-member. Use new bolt lock plate and bolt new mounting to frame, lower engine, use new bolt lock plate and bolt mounting to transmission (transmission attaching bolt holes slotted permitting alignment between transmission and support).

TRUCKS

ENGINE MOUNTINGS (Trucks): Consist of insulated type front and rear mountings as follows:

Front Mounting—Engine mounting bushings are imbedded in rubber insulator assembled between lower retainer and upper plate with a shield on top of the assembly. This mounting should be checked for clearance when installed and periodically in service.

Rear Mounting—Two insulated units. Bolted to bracket on clutch housing and bracket on frame. No adjustment required (keep mounting bolts tight).

Adjustment of Truck Engine Mountings: Check new front engine mounting, and remove and check mounting in service, as follows: With mounting removed from engine, fit insulator into lower retainer and place upper plate on top. Hold parts firmly together and make certain that rubber insulator fits tightly between retainer and plate and that engine mounting bushings project above upper plate (necessary to prevent oil shield contacting upper plate). Replace insulators which do not pass this test. Check clearance between upper edge of lower retainer and lower face of upper plate. If clearance more than 5/64", replace lower retainer. If clearance less than 3/64", grind off top edge of lower retainer. (CAUTION—do not attempt to shim the support). When installing mounting, tighten engine-to-mounting bolts tightly, mounting-to-frame bolts securely but not excessively tight (self-locking type nuts). Rear engine mountings do not require adjustment and mounting bolts should be kept tight.

CRANKSHAFT & MAIN BEARINGS

REPLACEMENT MAIN BEARINGS: New "precision" type bearings now furnished for all models as listed below. These bearings supersede previous type which require line-boring after installation.

MAIN BEARING INSTALLATION (Without Removing Engine or Crankshaft from Chassis): Upper bearing halves can be replaced by following procedure (bearings doweled in place and cannot be "rotated" out):

Main Bearing Replacement (Pass. Cars): Remove radiator (see Radiator removal), remove fan belt and vibration damepener (see Vibration Dampener removal). Loosen all rocker arm screws to relieve tension on camshaft. Remove spark plugs. Raise car and support securely on stands so car is level and approximately 8" off floor. Remove transmission floor pan cover. Remove clutch housing underpan. Remove transmission rear support-to-crossmember

C NTINUED N NEXT PAGE

CONTINUED FROM PRECEDING PA E

bolts. Disconnect shift rods from transmission levers. Raise rear of engine, place 1" square bar behind flywheel and under clutch housing with ends resting on second cross-member brace (this will support engine weight). Release clutch fork from ball. Remove transmission mounting bolts, slide transmission back approximately ¾". Remove oil pan and timing gear cover. Remove oil pump and screen cover assembly. Rotate crankshaft to position allowing removal of all bearing caps. **Mark timing gears to insure re-meshing gears in same relative position.** Then install new bearings as follows:

Bearing Installation—Loosen but do not remove all main bearing cap bolts sufficently to allow crankshaft to drop down approximately ⅜". Remove **front intermediate** and **rear** main bearing caps (other bearing caps will support crankshaft), remove old bearings from bearing cap and crankcase (if old bearings do not drop down with crankshaft, tap bearings lightly to free dowell). Install new bearings, locating dowel on back of bearing shell in hole in crankcase, and pressing bearing up in place (bearing should snap into place and hold if it has correct spread). Re-install bearing cap, using .006" shim thickness (three .002" shims) on each side of cap, tighten bearing caps just enough to support crankshaft. Repeat above procedure at **front** and **rear intermediate** bearings (NOTE—Rear intermediate bearing is close fit in crankcase and may not go up into place until crankshaft lifted up). After all bearings replaced, place a jack under rear intermediate bearing cap and carefully raise crankshaft into position. Keep crankshaft horizontal during this operation (CAUTION—Make certain that timing gears meshed in accordance with marks made before crankshaft dropped). Tighten all bearing caps snugly, then adjust main bearings as directed on car model page.

Main Bearing Replacement (Trucks): Remove radiator (see Radiator removal), remove fan belt and vibration dampener (see Vibration Dampener removal). Loosen all rocker arm screws to relieve tension on camshaft. Remove spark plugs. Take off transmission floor pan cover and clutch housing underpan and extension. Disconnect transmission control rods on side of transmission case (½ & ¾ Ton), remove hand brake lever from transmission mounting stud (Other Trucks). Remove transmission (see Transmission removal instructions for each model on car model page). Remove oil pan and timing gear cover. Remove oil pump and screen cover assembly. Rotate crankshaft to position allowing removal of all bearing caps. **Mark timing gears to insure re-meshing of gears in same relative position.** Then install new bearings as directed for Pass. Cars.

CRANKSHAFT OIL SEALS: Rear Seal. Special rear main bearing cap (mounted on four bolts with two locating dowels) with wick type oil seal installed in groove in cap and crankcase used. Seal bears on outer rim of crankshaft flange (oil slinger and check valve in oil return hole in bearing cap have been discontinued). To install new seal in bearing cap, insert packing in groove and roll firmly in place with rounded tool (roll from both ends toward center). Use round block of wood (same diameter as crankshaft flange) to hold packing in place, cut both ends off evenly and flush with bearing cap face. Install upper half of seal in crankcase in same manner with engine out of car.

Front (Timing Gear Cover) Oil Seal—Spring-loaded leather type installed in pocket in timing gear cover. To install new seal, place seal on special Oil Seal Replacer J-995 with free end of leather toward end of tool, seat seal in cover with few light hammer blows on tool. NOTE—Timing gear cover must be centered on crankshaft when installed on engine to prevent balancer damaging oil seal. To install cover, coat seal with grease, install centering guide J-966 on crankshaft, install cover and tighten cover screws.

VIBRATION DAMPENER

HARMONIC BALANCER: Furnished as a complete assembly. Part No. (216" Engine) 605203, (235" Engine) 3694284.

Removal (Passenger Cars)—Remove radiator (see Radiator Removal), and Radiator Grille and Filler Panel Baffle as an assembly. Take off fan belt. Remove engine front mounting bolts, raise front end of engine approx. ½" (to permit balancer puller head to clear radiator support cross-member). Use puller J-1287, attach puller body to balancer by means of two capscrews screwed in tapped holes in balancer, pull balancer by turning puller screw.

Removal (Trucks)—Remove Front End Sheet Metal Assembly (see Front End Sheet Metal Assembly removal preceding). Then remove balancer with puller tool as described for Passenger Cars (above). **Installation**—Place drive adapter of puller tool J-1287 in starting crank jaws of balancer, install puller body (as above), line up keyway in balancer and key in crankshaft, turn puller screw down to contact driver, then use puller screw as driver and drive balancer in place until it bottoms against crankshaft gear.

TIMING GEARS

TIMING GEAR INSTALLATION: Gears are press fit on crankshaft and camshaft and must be removed and installed as follows:

Crankshaft Gear—To remove gear, attach Puller T126-R by threading puller screws in tapped holes in gear, pull gear off. When installing gear, make certain that two woodruff keys installed in crankshaft keyways, drive gear on shaft until it seats against shoulder on shaft.

Camshaft Gear—To remove gear, install Gear Remover J-971 on shaft in back of gear (remover consists of support sleeve), place camshaft assembly in arbor press (CAUTION—Thrust plate must be positioned so that it will not be damaged by woodruff key in shaft as shaft pressed out), press shaft out of gear. To install gear, place shaft in arbor press (support shaft securely directly back of front bearing journal), install thrust plate, place woodruff key in shaft keyway, press gear on shaft until thrust plate just turns freely (clearance between back of thrust plate and front bearing journal must not exceed .003"). This clearance will give correct camshaft endplay of Free to .003" maximum. When installing camshaft in engine, make certain that correct gasket thickness installed in back of thrust plate (see Gear Alignment data above), thighten thrust plate capscrews through hole in camshaft gear. ***CAUTION—Press on steel hub only when installing camshaft gear (pressure on composition or aluminum gears will cause damage).***

TAPPET CLEARANCE ADJUSTMENT

ENGINE NORMALIZING PROCEDURE (For Valve Tappet Clearance Adjustment): Clearance changes while engine is warming up. Adjust only after engine has been 'normalized' as follows: Run engine at 600 RPM and check oil temperature with thermometer at overflow pipe on valve rocker shaft connector until no change noted in oil temperature for a period of five minutes (oil temperature will become stabilized at some point between 150 225° F.). This normalizing period will be from 5 to 30 minutes depending on engine temperature when started.

POWERGLIDE MODELS

INITIAL ADJUSTMENT OF HYDRAULIC VALVE LIFTERS: ***Required when cylinder head has been removed or rocker arm assemblies or valve lifters have been replaced.***

Lifters must be at their lowest point of travel when adjusted, which is, when cylinder is in firing position. Remove distributor cap and turn engine until rotor is in firing position (points just breaking) for cylinder being set. Starting with #1 cylinder, turn valve adjusting screw down until rocker arm just contacts the valve. This can be determined by checking push rod side play at adjusting screw end while turning the adjusting screw. At the point where no side play can be felt, continue turning the adjusting screw down 1½ turns and tighten locknut securely. Adjust each cylinder following the same sequence as the firing order (1, 5, 3, 6, 2, 4).

VALVE SYSTEM

VALVE STEM OIL SEAL INSTALLATION: Seal consists of a flat synthetic rubber ring installed in lower groove on valve stem (upper groove is for split type valve locks) and is retained by the valve cap (special longer type valve cap used—can be identified by 1/16" deep annular groove on top face). Install seals during valve assembly as follows: With valve in place in cylinder head, install lower spring seat, valve spring, valve cap. Compress spring and valve cap so that lower groove is exposed within cap, install seal ring in lower groove (CAUTION—seal must seat in groove and be flat), install split type locks, relieve spring tension and check to see that cap retains seal and locks properly.
NOTE—Valve cap covers or "umbrellas" not used with these new type oil seals.

VALVE ROTATORS—5000 & 6000 Trucks: Rotators are furnished in sets of six under Part No. 3695373, and may be used on either 216" or 235" engine. The valve rotators consist of a spring collar over a retaining cap, encompassing Bellville washer, a set of balls on inclined races, and ball return springs.

Installation of Valve Rotators—Cylinder head must be removed to install rotators, which take the place of present valve spring retainers.

Earlier Models—(1941-49). On earlier models it will be necessary to use 1950 exhaust valves, Part No. 3845606, with 45° seats, reworking the head to take these valves. Where valve seats have been ground to such an extent that the valve spring height (head to top of spring), with rotators installed is greater than 1 55/64" it will be necessary to install a .060" to .065" washer under spring seat otherwise they will not operate properly.

VALVE GUIDE INSTALLATION: Use special valve guide drivers J-1089 (intake), J-1090 (exhaust) to install guides. Drivers have stop collars which correctly position valve guides so that distance from cylinder head to top of guide is 1" (intake), 55/64" (exhaust). After guides installed, finish ream to inside diameter of .343". Guides furnished for service replacement require only finish reaming after replacement. **Intake** Guide No. 3688760. **Exhaust** Guide No. 3688761.

OILING SYSTEM

OIL DISTRIBUTOR: Distributor is located in recess in left side of engine block (under cover plate).

CAUTION—Inner and outer gaskets used with valve assembly plate must not be interchanged.

Removal—To dismantle oil distributor, take out three screws in cover plate, remove cover plate, outer gaskets, valve assembly plate, inner gasket.

CAUTION—Do not alter oil distributor valve spring tension (will upset proper oiling of engine). If trouble suspected in oil distributor, replace oil distributor valve assembly.

Assembly—Install cork gasket with **two center holes** between valve assembly plate and block, and use cork gasket with **center cut out** between valve assembly plate and cover, tighten cover screws.

OIL LEAD TO VALVE ROCKER ARMS: Installation. New assembly must be used whenever lead is removed from engine. To install proceed as follows: insert pipe in block, coat threads of nipple with white lead and screw in block (on right side), install nipple and sleeve nut on lower end of pipe (left side of block) and secure in place, then bend pipe in upward loop and connect to oil distributor, bend pipe on right side of engine to clear push rod cover and bend upper end so that it passes through hole in cylinder head, connect pipe to valve rocker shaft coupling. Run engine and check for leaks.

Powerglide Models (with 235" Engine)—The rocker arm oil supply is fed from the rear camshaft bearing oil channel instead of from oil distributor valve as used on other models.

CHECKING OIL SYSTEM: Oil nozzle height, oil trough height, aiming of oil nozzles, and connecting rod dipper height should be checked whenever oil pan removed. This check requires use of special gauges CAUTION—Different gauge used for each engine (see below).

Oil Pan Trough Height—Use combination Oil Trough Depth & Connecting Rod Dipper Height Gauge No. J-969-2A (216" Engine), J-1541 (235" Engine). With oil pan gasket removed, place gauge on pan flanges with center pin extending down toward troughs. Slide gauge along pan so that pin passes over edges of trough at center. Pin should clear edge of trough and clearance at this point should not exceed .015". If pin strikes trough, grind edge of trough down for clearance, if clearance greater than .015", reweld any loose trough welds or replace oil pan. Check each trough in this manner.

Connecting Rod Dipper Height—Use same gauge as for Oil Pan Trough Height check (above). Turn crankshaft until connecting rod is at bottom of stroke, place gauge over connecting rod with the two gauge side pins resting on the oil pan mounting face of the crankcase, slide gauge over dipper. Low "Go" step of gauge should pass over dipper and high "No Go" step should not. If low step does not pass over dipper, tap dipper down with light hammer, if high step of gauge clears dipper, install new higher dipper. Check all dippers in this manner.

RADIATOR

RADIATOR CORE REMOVAL: Raise engine hood and block in open position. Drain cooling system by removing drain plug. Disconnect and remove inlet and outlet hoses. Remove radiator mounting bolts from radiator support, lift radiator up and out.

NOTE—On models with radiator shroud, push shroud back and down over fan blades for clearance.

TORQUE TUBE & BALL

PASS. CARS & ½ TON TRUCK

TORQUE TUBE FRONT & REAR BUSHINGS: Bushings are press fit and require special tools for removal and installation.

Removal—Insert flanged shaft of Tool J-4258 into pinion end of housing positioning flange against oil seal. Assemble puller flange on front or torque tube, install thrust bearings and seals from torque tube by turning nut down on shaft.

Installation—Place new seal on driver Tool J-968 so that leather is toward driver head. Insert in rear end of tube and drive the seal against seat. Install new rear bushing using bushing driver Tool J-4259 with spacer washer. Drive bushing in until stop on driver is against end of tube. Using Tool J-4290, drive front bushing into torque tube until stop on driver is against tube.

POWERGLIDE MODELS

UNIVERSAL JOINT BALL ADJUSTMENT (POWERGLIDE MODELS): ***Due to the fact the universal joint is lubricated under pressure (fed by automatic transmission line pressure through channel in output shaft) leakage will develop if the ball joint is not properly adjusted.***

To adjust, remove universal joint ball from torque tube. Clean thoroughly, and inspect for roughness, and clean up with fine emery paper if necessary before making adjustment. Use 4 new universal ball collar shims as a starting point, install joint ball and collar to transmission case and tighten bolts to 8-12 ft. lbs. torque. **NOTE**—Do not install the ball joint collar oil seal (cork) at this time. With bolts tight grasp the ball at the sliding seal (to tube) end with both hands, and test for tightness of ball, up and down. If ball assembly can be moved and is a snug fit, the ball is properly adjusted. If it cannot be moved by hand or is too loose add or remove shims until proper adjustment is secured. After correct adjustment is made disassemble joint and install cork seal after first lubricating it with a graphite grease, and reassemble to transmission tightening bolts to 8-12 ft. lbs. torque.

REAR AXLE NOTES

AXLE SHAFT (PASSENGER CARS): Installation. Assemble new oil deflector, gasket (with shellac or paint on both sides), line up extra hole (center of three closest together) with notch in hub flange in axle shaft (also oil pocket in oil deflector with this notch), insert six new bolts and peen into place in countersink around bolt holes in flange using special Peening Tool and Anvil so that these parts are riveted together. NOTE—Axle shafts are of unequal length, longer shaft used on right side.

	Part No.	Length	Marking
Left Axle Shaft	3687767	28 31/32"	————
Right Axle Shaft	3687768	29 31/32"	————

Endplay Adjustment—When installing shaft, select correct spacer block (see below) so that when installed on pinion shaft between inner ends of axle shafts, shaft endplay will be from a Free Fit to .014" maximum clearance.

Passenger Car Spacer Blocks

Part No.	Type & Size
597251	Narrow (1.012")
597254	Medium (1.0195" & 1.0295")
473603①	Wide (1.0345")

①—Marked by blue paint on rough side.

Above dimensions are measured across the ground surfaces and spacers should be installed with ground surface toward the axle shaft end. Medium spacer ground on all four sides and may be installed either way to secure the two different sizes.

BRAKE NOTES

Parking Brake (All Models except 1951 ½, 1½ & 2 Ton): Adjust Service Brakes before adjusting Parking Brake, then fully release brake lever. Remove clevis pin from brake cable at frame cross-shaft. Pull cable from conduit until positive stop is felt then adjust clevis until pin hole lines up with hole in cross-shaft lever. Replace pin.

NOTE (Pedal Lever Release Adjustment)—(1950) ½" Clearance of handle rod support bracket. Adjust at release rod lower end. (1951) Rod is not adjustable, but handle may be adjusted.

Parking Brake (1951 ½ Ton): After Service Brakes have been adjusted, set pedal lever in fully release position then remove clevis from brake pull rod and adjust to give ⅛" clearance between brake cross-shaft and frame cross-member and replace clevis. Remove brake cable clevis and pull cable from conduit as far as possible. Depress foot pedal 1½" and adjust clevis until pin hole lines up with hole in cross-shaft outer lever. Install pin.Check wheels for equal drag. Re-adjust if necessary.

Parking Brake (1951 1½ & 2 Ton): Fully release brake lever. Loosen locknut on outer shoe adjusting screw then tighten to secure a clearance of .010" to .015" measured at point directly above screw. Tighten locknut. Loosen locknut on link between hand brake lever and shoe actuating lever. Tighten adjusting nut on link to secure a clearance of .010" to .015" between inner shoe and drum. Tighten locknut.

FRONT END SHEET METAL ASSEMBLY REMOVAL: *See Chevrolet Special data.*

MODEL IDENTIFICATION

1950 Cars

Series	Serial Prefix	Model Designation
1500	HJ	Spec. Styleline & Fleetline
2100①	HK	Deluxe Styleline & Fleetline
1508	HJ	Sedan Delivery

1951 Cars

1500	JJ	Spec. Styleline & Fleetline
2100①	JK	Deluxe Styleline & Fleetline
1508	JJ	Sedan Delivery

①—Deluxe models with Powerglide Automatic transmission and "235" engine.

SERIAL NUMBER: Stamped on plate on left front body hinge pillar post.
1950 Serial Numbers—First number 1001 with model prefix as indicated in model identification above.
1951 Serial Numbers—First number 1001 with model prefix as indicated in model identification above.

ENGINE NUMBER: Stamped on right side of crankcase to rear of distributor.
Engine Number Prefix "216" Engine—Indicates manufacturing plant as follows: **HAA**—Flint, **HAM**—Tonawanda.
1950 Engine Numbers—First number 1001 with engine plant prefix as indicated above.
1951 Engine Numbers—First number with engine plant prefix as indicated above.

TUNE-UP

COMPRESSION PRESSURE: 110 lbs. minimum (with cylinders equal within 5-10 lbs.) at cranking speed.

VACUUM READING: Steady 17-21" at idling speed.

FIRING ORDER: 1-5-3-6-2-4. See diagram.

SPARK PLUG GAPS: .035".
Plugs—AC No. 46-5. 14 mm.

►*CAUTION—Tighten plugs to 20-25 ft. lbs. torque or finger tight plus one-half turn.*

DISTRIBUTOR: Breaker Gap—.018" (limits .018-.022") standard setting, or .022-.024" for new points (to allow for seating).
Cam Angle—34°. Test limits with .022" gap 31-37°. *See "Delco-Remy Cam Angle" in Electrical Equipment Section.*
Automatic & Vacuum Advance—*See Ignition.*
Breaker Arm Spring Tension—17-21 ozs.
Condenser Capacity—.18-.23 microfarad.

IGNITION TIMING: 5° BTDC.
Timing Procedure—*See Ignition Timing.*
Timing Mark—Steel ball insert in flywheel lined up with pointer in inspection hole in right front face of housing with Octane Selector set at "O". Then adjust Octane Selector as follows:
Octane Selector Setting—Set for slight ping when accelerating engine with wide open throttle.

CARBURETION:

►*IMPORTANT CARBURETOR CORRECTIONS: See Carburetor Section for complete data.*
Idle Settings—1-2 turns open.
Idle Speed (conventional trans.)—450-500 RPM.
Idle Speed (Powerglide trans.)—430-450 RPM.
Float Level (Rochester)—1 5/16" from bottom of each float to cover gasket (**do not remove gasket**) with cover inverted so that needle valve closed. Use No. 3696192 gauge to set float level and align floats (twisted floats may hang up or rub on bowl). Check float drop or travel by turning cover right side up so that floats drop down. Distance from gasket on cover to bottom of each float must be 1¾". Adjust by bending tang at rear of float assembly. *Above specifications supersede earlier data.*

►*CAUTION—Both floats must be set alike and must not be twisted out of alignment.*

Accelerating Pump—No seasonal adjustment.

Fuel Pump Pressure: 4 lbs. maximum.

MANIFOLD HEAT CONTROL: Thermostatic type. Check for free operation when tuning engine. Should require ½ turn from unhooked to hooked position. *Distorted springs should be replaced.*

VALVE TAPPET CLEARANCE: *CAUTION*—Two types of valve lifters used. CONVENTIONAL TYPE in 216" Engines with Synchro-mesh Transmission. HYDRAULIC TYPE in 235" Engines with Powerglide.

►**CONVENTIONAL TYPE SETTING (216" Eng.):** .006-.008" Intake, .013-.015" Exhaust *after engine "normalized" by running at fast idle for approximately 30 minutes or until oil temperature stabilized.*

►**HYDRAULIC TYPE SETTING (235" Eng.):** *NO CLEARANCE ADJUSTMENT REQUIRED* although rocker arms have regular adjusting screws. **Initial Adjustment** required when installing cylinder head or when adjusting screws disturbed.

►**Initial Adjustment**—*See "Tappet Clearance Adjustment" in Chevrolet Special Data.*

►**Hydraulic Valve Lifter Noise.** Lifters may be noisy when first starting cars that have been idle for a considerable length of time. This noise will disappear as soon as the oil pressure refills the lifters. This is due to the "leakdown" on lifters holding valves open when the engine was stopped.

Valve Timing Check—*See Valve Timing.*

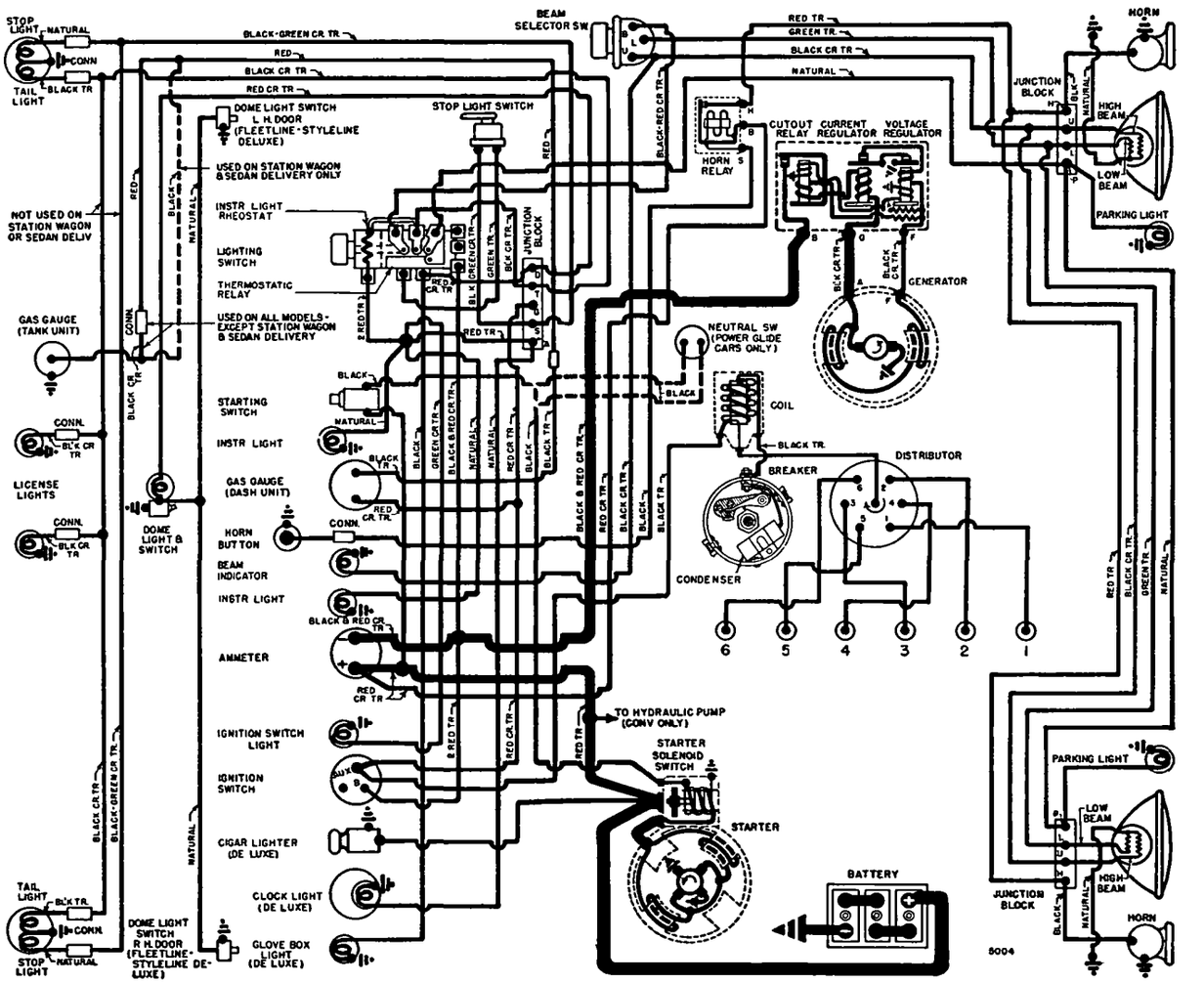

1950 M DELS

IGNITION

IGNITION SWITCH: Delco-Remy No. (1950) 1116452, (1951) 1116469.

Ignition Lock—Chevrolet No. (1950) 3692503, (1951) 3696338 (less keys uncoded).

Key Series—No. 8000 to 9499. **Groove**—No. 15.

COIL: Delco-Remy No. 1115380. Above distributor.

Ignition Current—2.5 amperes idling. 4.5 stopped.

CONDENSER: Delco-Remy No. 1869704.
Capacity—.18-.23 microfarad.

DISTRIBUTOR: Automatic & Vacuum Advance with Octane selector.

216" Engine—Delco-Remy No. (1950) 1112353, (1951) 1112362.

235" Engine—Delco-Remy No. (1950) 1112358, (1951) 1112363.

Breaker Gap—.018" standard setting or .022-.024" for new points (to allow for seating).
Cam Angle—34°. Test limits with .022" gap 31-37°. *See "Delco-Remy Cam Angle" in Electrical Equipment Section.*
Breaker Arm Spring Tension—17-21 ozs.
Rotation—Clockwise viewed from above.

Automatic Advance—1112353, 1112362

Distributor Degrees	R.P.M.	Engine Degrees	R.P.M.
1.5	350	3	700
6.5	600	13	1200
12	1200	24	2400
19	1700	38	3400

Automatic Advance—1112358, 1112363

1	300	2	600
6	700	12	1400
16.5	1850	33	3700

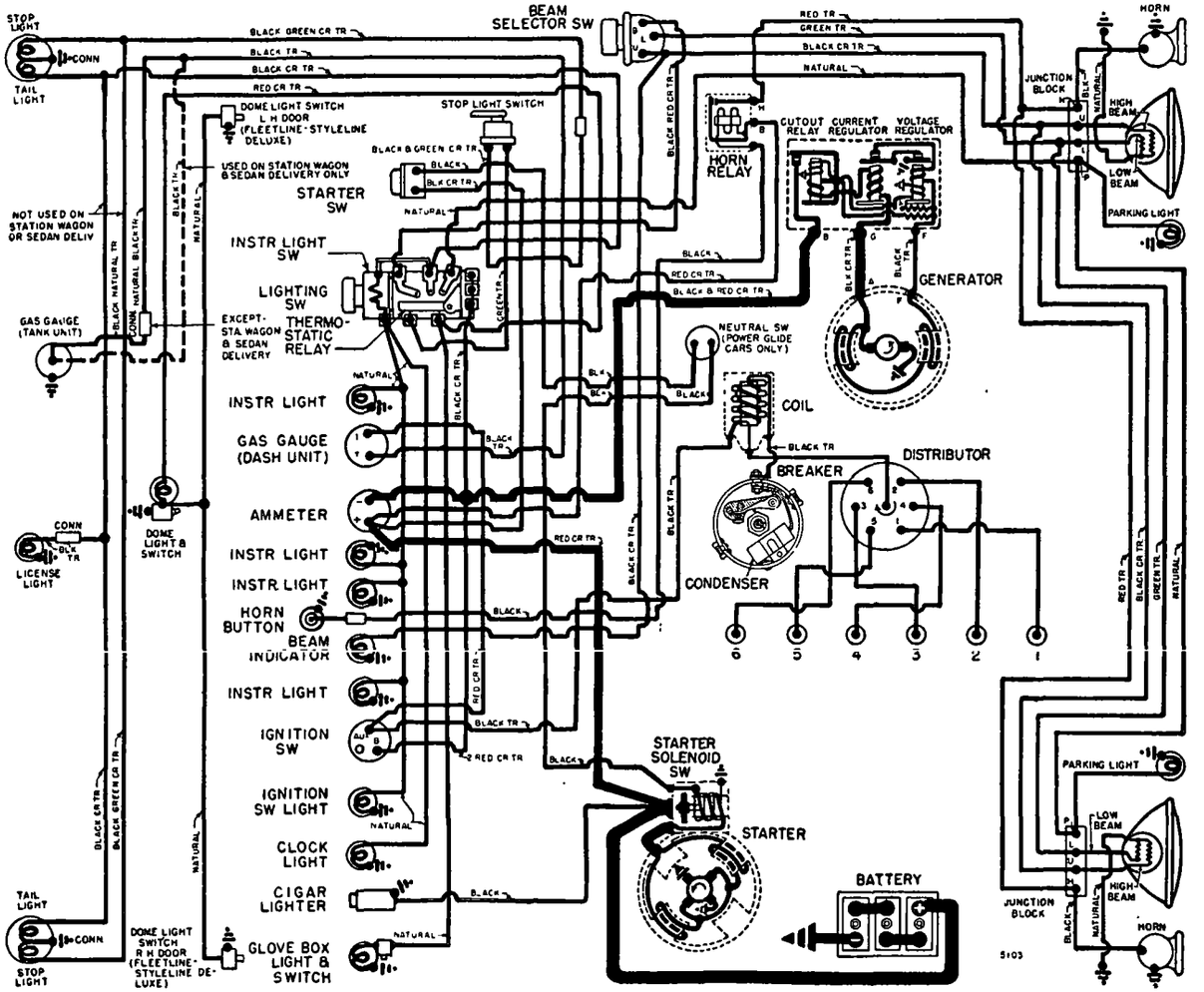

1951 MODELS

Octane Selector—Adjustment on distributor provides 10° advance or retard from center "0" position. See Ignition Timing for adjustment instructions.

Vacuum Spark Control: Delco-Remy No. 1116043. On Octane Selector, linked to advance arm. Provides additional advance at speeds above idling except when engine accelerated or operated with wide open throttle when spark retarded by return spring.

Plunger Travel—17/64".

Vacuum Advance

Distr. Degrees	Eng. Degrees	Vacuum (" of HG)
Start	0°	7-8.5"
10°	20°	16.5-18.5"

Removal: Distributor mounted on right side of crankcase. To remove, loosen advance arm clamp bolt (does not disturb vacuum connections).

IGNITION TIMING

	Flywheel Degrees	Piston Position
Std. Setting①	5° BTDC	.0091" BTDC.

①—Adjust Octane Selector for grade of fuel being used. See Octane Selector Setting below.

Timing (Neon Light)—Recommended method. Connect neon light to #1 spark plug, direct light in flywheel through inspection hole in right front face of housing. Set Octane Selector pointer at "0". Idle engine, loosen advance arm clamp bolt, rotate distributor until ignition mark (steel ball insert in flywheel) lines up with pointer. Tighten clamp bolt and check Octane Selector Setting (see below).

Octane Selector Setting—Set for the grade of fuel being used to produce slight "ping" on acceleration.

CARBURETOR

►*IMPORTANT CARBURETOR CORRECTIONS: See Carburetor Section for complete data.*

Rochester Model B—Single barrel, downdraft type, with concentric bowl and twin floats. Manual choke with throttle kicker and fast idle.

1950-51 216" Engine—Chevrolet No. 7002050. 1½" Bore.

1950 (Early) 235" Engine—Chevrolet No. 7002051. 1 9/16" Bore.

1950 (Late) & 1951 235" Engine—Chevrolet No. 7003060. 1 9/16" Bore.

See Carburetor Section for complete data.

Settings (Idle Settings, Float Level, and Accelerating Pump): *See Tune-Up.*

Throttle Kicker: Operates by cam on choke lever. Opens throttle when choke closed, no adjustment.

Throttle Return Check (Rochester Carb. No. 7003060): *See Carburetor Section for complete data.*

CARB. EQUIPMENT

Air Cleaner: Std. AC No. 1544734 Oil wetted type. Optional Heavy Duty Oil Bath type. AC No. 1544754. (1544771 with governor).

Filter Element—Std. AC No. 6. Heavy Duty No. 23.

Servicing—Clean and re-oil Standard type cleaner (use SAE 50 engine oil) every 2000 miles. On Heavy Duty type, clean and refill oil reservoir (1 pint SAE 50) every 2000 miles.

CONTINUED N NEXT PA E

CONTINUED FR M PRECEDIN PA E

Fuel Pump: AC Type AF. No. 1523089. Diaphragm type.
Replacement Pump—AC No. 429.
Optl. Fuel & Vacuum type AC No. 1539126 or 1539448. (Replacement No. AC -9126)
Pressure—4 lbs. maximum.
See Carburetion Equipment Section for complete data.

Gasoline Gauge: AC Electric type.
Dash Unit—AC No. (1950) 1517341, (1951) 1517255.
Tank Unit—Pass. Car AC No. 1560280. Sed. Del. & Sta. Wgn. AC N . 1517100.
See Carburetion Equipment Section for complete data.

BATTERY

Delco Type 15AA-4. 6 Volt, 15 Plate, 100 Ampere Hour Capacity (20 hour rate).
Starting Capacity—120 amperes for 20 minutes.
Grounded Terminal—Negative (—) terminal.
Dimensions—Length 9". Width 7". Height 8 11/16".
Location—In engine compartment on right side.

STARTER

Delco-Remy Model 1107075. Armature No. 1867897.
Drive—Overrunning clutch (solenoid pinion shift).
Rotation—Counter-clockwise at commutator end.
Brush Spring Tension—24-28 ozs. each.

Performance Data

Torque	R.P.M.	Volts	Amperes
0 ft. lbs	5000	5.7	80①
12 "	Lock	3.4	525

①—Includes current draw of starter switch.

Starting Switch: Delco-Remy Solenoid Switch No. 1118135 (no relay used) mounted on starter and controlled by Push-Button Switch No. 1996045.
►*CAUTION*—Overruning clutch pinion clearance must be adjusted whenever solenoid removed from starter. *See Electrical Equipment Section for data.*
►**Neutral Safety Switch (Powerglide transmission cars)**—Delco-Remy No. 1997845. Connected in starter control circuit. Prevents starter operation unless selector lever is in "N" or "P" position. Located at lower end of steering column.
►**Neutral Safety Switch Adjustment**—*See "Powerglide Automatic Transmission" in Transmission Section.*

GENERATOR

Model	Generator (D-R No.)	Armature
Pass. Cars (1950)	1102710	1879002
Pass. Cars (1951)	1102749	1879002
Taxi (1950-51)	1102629	1880550
City Police & Taxi (1950-51)	1106758	1909996
State Police (1950 & 1951)	1106757	1910073

2 brush types with current and voltage regulation.
Charging Rate Adjustment—None. See Regulator.
Maximum Charging Rate (Pass. Cars)—32-40 amperes reached at car speed of 25 MPH. Actual charging rate controlled by regulator and dependent on battery condition.

Performance Data—Cold

	Amperes①	Volts	R.P.M.
1102710	30	8.0	1750
1102729	40	8.0	1900
1106751 & 757	50	7.5	1410
1106752 & 758	40	7.5	1165

①—Not maximum output. See current Regulator.

Rotation—Counter-clockwise at commutator end.
Brush Spring Tension—25 ozs. (1102710 and 729, 1106751 and 757), 20 ozs. (1106752 and 758).
Field Current—1.75-1.9 amps. at 6 volts (1102710), 1.9-2.05 amps. at 6 volts (1102729), 1.70-1.95 amperes at 6.0 volts (1106751, 52, 57, 58).

Belt Adjustment: Loosen clamp bolt, swing generator out for ¾" belt deflection (light pressure) midway between generator and fan pulleys.

REGULATOR

Model	Delco-Remy No.	For Generator No.
Pass. Cars (1950)	1118301	1102710
Pass. Cars (1951)	1118301	1102749
Taxi	1118300	1102629
Taxi & City Police	1118343	1106758
State Police	1118334	1106757

►*"1118300 SERIES"* have screw adjustment for settings and single regulator springs.
See Electrical Equipment Section for complete data.
CAUTION—Check generator for grounded field coils and leads before changing regulator settings to correct High Charging Rate or High Voltage.

Cutout Relay
Cuts In—5.9-6.8 volts hot (set to 6.4 volts hot).
Contact Gap—.020" (same for both sets).
Air Gap—.020" (with contacts just closed).

Voltage Regulator
Setting—7.0-7.7 volts hot (set to 7.4 volts hot). Regulator is over-compensated for temperature. Check with cover in place and regulator hot.
Air Gap—.075" with armature pressed down to point where contacts are just touching.
Checking & Adjust'mt—*See Electrical Equip. Section.*

Current Regulator

Settings (hot): Set to	Range
1118301 — 36 amps	32-40 amps.
1118300 — 42 amps	40-46 amps.
1118334 — 50 amps	48-52 amps.
1118343 — 40 amps	37-41 amps.

Air Gap—.075" with armature pressed down to point where contacts are just touching.
Checking & Adjust'mt—*See Electrical Equip. Section.*

LIGHTING

Headlamps: Guide "Sealed Beam" type.
See Electrical Equipment Section for complete data.
Headlamp Adjustment—Aim upper beam straight ahead (hot spot 3" below lamp center height).
Beam Indicator—Red dot below 50 figure on speedometer. Lighted when upper beams in use.

Direction Signal: Optl. *See Electrical Equipment Section.*
Direction Signal Indicator—Pilot light on switch case. Lighted when Right or Left Dir. Signal "on".

Switches
Lighting—Delco-Remy No. (1950) 1995031, (1951) 1995048.
Instrument—Part of Lighting Switch (Rheostat operated by turning light switch knob).
Beam Selector—Delco-Remy No. 1997008.
Glove Box—Delco-Remy No. 3693641.
Back-Up Light—Delco-Remy No. 1997911.
Stop Light—Delco-Remy No. (1950) 1997901, (1951) 1997913 (mechanical type).

MISC. ELECTRICAL

►**DASH PANEL INSPECTION HOLE FOR ACCESS TO WIRING ON BACK SIDE OF INSTRUMENTS:** Located on left side under hood with removable door screwed to dash.

THERMOSTATIC CIRCUIT BREAKER: Delco-Remy. On back of light switch (part of switch assy.). Contacts remain closed with 30 amperes but open in 3 minutes with 42 amperes at 70°F. Not adjustable.

HORNS: Delco-Remy No. 1999643 (Low Note, Right), No. 1999644 (High Note, Left). Vibrator types operated by relay.
NOTE—1999643 and 644 are welded.

Type	Current (at 6.0 volts)	Air Gap
1999643 (Low Note)	19-21 amperes	.044-.049"
1999644 (High Note)	17-19 amperes	.034-.039"

Horn Relay: Delco-Remy No. 1116775.
Contact Gap—.027". **Air Gap**—.014" (closed).
Contacts Close—2.75-4.0 volts (set to 3.5 volts).

ENGINE

ENGINE SPECIFICATIONS: Own make. Two used.
"216" Engine—Used with Synchro-mesh transmission cars.
New "235" Engine—Used with Powerglide Automatic transmission cars. Has larger bore, longer stroke, larger valves, hydraulic valve lifters, and improved manifolding.

Eng.	Bore	Stroke	Displacement
216	3 1/2"	3 3/4"	216.5 cu. in.
235	3 9/16"	3 15/16"	235.5 cu. in.

	Comp. Ratio	Rated H.P.	Developed H.P.
216	6.6-1	29.4	92 at 3400 RPM
235	6.7-1	30.4	105 at 3600 RPM

Compression & Vacuum Readings—*See Tune-Up.*

ENGINE REMOVAL: *See Chevrolet Special Data.*
ENGINE MOUNTINGS (Installation & Adjustment): *See Chevrolet Special Data.*
CYLINDER HEAD & TIGHTENING TORQUES: *See Chevrolet Special Data.*

PISTONS: Passenger Cars. Cast alloy iron, flat head, cam ground, tin plated type with slipper skirt.
Truck Pistons. Same as Pass. Cars except heavier. Truck pistons marked with small boss on underside of each pin boss. *CAUTION*—Do not interchange pistons (must be same type in one engine).
Weight—1.56 lbs. (Pass. Cars). **Length**—3.75" (min.).
Removal—Pistons and rods removed from above.
Clearance—Top: .0155-.0235". Skirt: Selective Fit. See Fitting New Pistons below.

Replacement Pistons: *See Chevrolet Special Data.*
NOTE—To install new pistons, hone cylinder for .005" oversize, rebore and hone for other sizes (rebore .002" less than piston oversize ,finish by honing for piston clearance—see fit below). Cylinder bore taper and out-of-round must not exceed .001".

Fitting New Pistons: Use feeler gauge between piston and cylinder wall at right angles to pin bosses. Piston should pass through bore with light pressure on .002" feeler, and lock on .003" feeler.

PISTON RINGS: Three used per piston.

216 Engine

Ring	Width	End Gap①	Side Clearance
#1 Comp.②	1/8"	.005-.015"	.0015-.003"
#2 Comp.②	1/8"	.005-.015"	.0015-.003"
#3 Oil	3/16"	.005-.015"	.002-.0035"

ENGINE

C NTINUED FR M PRECEDIN PAGE

235 Engine

#1 Comp.③ .....3/32"....005-.015".....0015-.003"
#2 Comp.② .....1/8" .....007-.020".....0015-.003"
#3 Oil .....3/16".....005-.015".....002-.0035"
①—End Gap Worn Limit 1/32" maximum.
②—Taper Face type. ③—Deep section twist type.

Installing Compr. Rings—Side marked "TOP" up.

Replacement Rings: Furnished Standard size and .005", .020", .030", .040" Oversize.

Expander Type Rings—Furnished for use in cylinder bores of indicated oversizes as follows: Standard (Bore Std. to .009" Oversize), .020" Oversize (Bore .010" to .029" Oversize—(ring gaps must be filed for bores less than .020" Oversize), .030" Oversize (Bore .030" to .039" OS), .040" OS. (Bore .040" to .049" OS.).

PISTON PIN: Diameter—.8645-.8650". **Length** 3.135-3.165". Pin locked in rod (piston bronze bushed).

Pin Fit in Piston—Thumb push fit (at room temp.).

Replacement Pins: Std. & .003", .005", .010" oversize. NOTE—New pistons fitted with bushings and pins. If bushings reamed, use piston pin bushing fixture to insure reaming at right angles to piston skirt.

CONNECTING ROD: Length—6 13/16". **Weight** 31.2 ounces.

Crankpin Journal Diameter—2.311-2.312".

Lower Bearing—Spun high-lead, thin-wall babbitt.

Clearance—.0003-.0013" selective fit (see Bearing Adjustment following).

Sideplay—.004-.012" at lower end (rod to crankpin), .015" minimum at upper end (rod to piston pin boss).

Bearing Adjustment: Laminated shims. Remove shims equally at both sides to secure 'snap fit' (rod tight to hand but should snap from one side to the other with light tap of 8 oz. hammer), **then replace one .002" shim on one side for clearance** (if unequal number, place extra shim on camshaft side). Bearing clearance correct when rod can be snapped back and forth on crankpin with one hand (grasp bearing cap between thumb and index finger to test).

Installing Rods: Numbers on rods and caps must be together and installed in same numbered cylinder with numbers and pin clamp bolt toward camshaft side. Install oil dippers on rods with mouth toward camshaft side of engine. Check dipper height.

Dipper Height Adjustment—*See "Oiling System" in Chevrolet Special Data.*

CRANKSHAFT: Four-bearing type with integral counterweights and vibration dampener.

Vibration Dampener—*See Chevrolet Special Data.*

Journal Diameters—#1, 2.6835-2.6845"; #2, 2.7145-2.7155"; #3, 2.7455-2.7465"; #4, 2.7765-2.7775".

NOTE—Journal taper or out-of-round limits .001". Run-out limits for #2 and #3 journals .002".

Bearing Type—Steel-backed "Precision" type thin-wall babbitt. *Do not require line-boring or reaming.*

►*CAUTION—#1 (front) and #2 (front intermediate) bearings similar in appearance but must not be interchanged. #2 bearing marked by letter "I" in oil groove.*

Clearance—.0007-.0024" selective fit. See Bearing Adjustment (below).

►*NOTE—Precision type bearings can be replaced singly.*

Bearing Adjustment: Solid shims. Remove shims until slight drag secured when shaft turned by hand, **then replace one .002" shim on one side for clearance** (if unequal number of shims used, place extra shim on same side for all bearings).

Replacement Bearings: New "Precision" type bearings furnished for all engines Std. size and .002", .010", .020", .030" Undersize.

►**Bearing Installation**—*Not necessary to remove crankshaft or engine from car. See "Crankshaft & Main Bearings" in Chevrolet Special Data.*

Bearing Cap Installation—Intermediate (#2 & 3) bearing caps marked for identification. Install #2 cap with mark "FRONT" toward front of engine, #3 cap with mark "REAR" toward rear of engine.

►*CAUTION—Rear intermediate (#3) bearing is special flanged type (takes end thrust).*

Crankshaft Oil Seal Servicing: *See Chevrolet Special Data for Front (Timing Gear Cover) and Rear Oil Seals.*

End Thrust: Taken by #3 (rear intermediate) bearing. To check endplay, force crankshaft to rear, check clearance at rear of #3 bearing. Adjust by replacing bearing. **Endplay**—.003-.009".

CAMSHAFT: Four bearing type. Helical gear drive.

►*CAUTION*—Camshafts used in the "216" and "235" engines are not interchangeable.

Identification—(216) Part No. 838733 stamped between #11 and #12 cams. (235) Part No. 3835502 stamped between #10 and #11 cams. (235 camshaft used with hydraulic lifters).

Journal Diameters—#1, 2.0282-2.0292"; #2, 1.9657-1.9667"; #3, 1.9032-1.9042"; #4, 1.8407-1.8417".

NOTE—Journal out-of-round limits .001". Run-out limits .002" (straighten if run-out excessive).

Bearing Type—Steel-backed, babbitt-lined bushings (staked in place). NOTE—New bearings must be line-reamed. **Clearance**—.002-.004".

End Thrust: Taken by thrust plate behind camshaft gear (gear position on shaft controls endplay).

Endplay Adjustment—*See "Timing Gear Installation" in Chevrolet Special Data.*

Endplay—Free fit to .003" maximum.

Timing Gears: Crankshaft gear steel. Camshaft gear Bakelite and Fabric composition.

Max. Gear Runout—.003" crankshaft, .004" camshaft.

Replacement Timing Gears, and Gear Installation & Alignment—*See Chevrolet Special Data.*

Timing Gear Backlash—.003-.004".

Camshaft Setting: Gears punch marked. Punch marks on both gears must be lined up and directly opposite each other.

216 Engine

	Head Diam.	Stem Diam.	Length
Intake	1 41/64"	.3410-.3417"	.6.26-6 29"
Exhaust	1 1/2"	.3400-.3407"	.4.917-4.947"

	Seat Angle	Lift	Stem Clearance
Intake	30°	.2941"	.001-.0027"
Exhaust	45°	.3118"	.002-.0037"

235 Engine

	Head Diam.	Stem Diam.	Length
Intake	1 15/16"	.3410-.3417"	.6.364-6.394"
Exhaust	1 1/2"	.3400-.3407"	.4.904-4.934"

	Seat Angle	Lift	Stem Clearance
Intake	30°	.3275"	.001-.0027"
Exhaust	45°	.3275"	.002-.0037"

Valve Stem Oil Seal Installation—*See "Valve System" in Chevrolet Special Data.*

Valve Guides: Precision type. Pressed in head.

Valve Guide Installation—*See "Valve System" in Chevrolet Special Data.*

Valve Springs: Install springs with closed coil end down. Check with spring tester and replace if outside limits shown below.

216 Engine—Valve spring free length 2 1/8".

	Spring Pressure	Length
Valve closed	53-63 lbs.	1.821"
Valve open	124-140 lbs.	1.505"

235 Engine—Valve spring free length 2 5/32".

►*CAUTION—Aluminum colored valve springs used on 235 (Powerglide) engine must not be used on other models.*

	Spring Pressure	Length
Valve closed	62-68 lbs.	1.821"
Valve open	155-165 lbs.	1.505"

Valve Lifters (216" Engine): Plain barrel type with pushrod seat brazed on upper end.

Diameter—.989-.990".

Clearance—.001" (selective free fit).

Hydraulic Valve Lifters (235" Engine): Used with Powerglide Transmission.

See Miscellaneous Section for complete data.

►**Initial Adjustment (required only when installing cylinder head or when adjusting screw setting has been disturbed):** *See "Tappet Clearance Adjustment" in Chevrolet Special Data.*

►*REMOVING HYDRAULIC VALVE LIFTERS: When removing lifters and push rods use a rack to keep them in proper sequence. They should be installed in their original location when re-assembling.*

VALVE TIMING

VALVE TAPPET CLEARANCE: *CAUTION*—**Two types of valve lifters used.** CONVENTIONAL TYPE in 216" Engines with Synchro-mesh Transmission. HYDRAULIC TYPE in 235" Engines with Powerglide Transmission.

►**CONVENTIONAL TYPE SETTING (216" Eng.):** .006-.008" Intake, .013-.015" Exhaust *after engine "normalized" by running at fast idle for approximately 30 minutes or until oil temperature stabilized.*

►**HYDRAULIC TYPE SETTING (235" Eng.):** *NO CLEARANCE ADJUSTMENT REQUIRED* although rocker arms have regular adjusting screws. **Initial Adjustment** required when installing cylinder head or when adjusting screws disturbed.

►**Initial Adjustment**—*See "Tappet Clearance Adjustment" in Chevrolet Special Data.*

Timing Gear Settings—*See Camshaft Setting.*

Valve Timing: (Valves) **"216" Engine**—
Intake Valves—Open 1° ATDC. Close 39° ALDC.
Exhaust Valves—Open 42° BLDC. Close 9° ATDC.

"235" Engine

"Theoretical" Valve Timing with Hydraulic Lifters.
Intake Valves—Open 16° BTDC. Close 48° ALDC.
Exhaust Valves—Open 46°30' BLDC. Close 17°30' ATDC.

Valve Timing Check—**"216" Engine.** Remove all tappet clearance from #1 exhaust valve. Turn engine over until this valve just starts to close and until triangular flywheel mark lines up with pointer in right face of flywheel housing, mount dial indicator on rocker shaft with stem contacting #1 exhaust valve adjusting screw, set indicator dial at .044". Turn crankshaft until indicator hand just stops

C NTINUED ON NEXT PAGE

C NTINUED FR M PRECEDIN PA E

moving. Timing is correct if indicator reading is ZERO plus or minus .004". Reset tappet to correct running clearance.

"235" Engine—Use same procedure as for the "216" engine except that it is necessary to replace the hydraulic lifter operating #1 exhaust valve with a conventional type lifter while making the check.

LUBRICATION

Engine Oiling System: "216" Engine. Pressure and positive splash system. Pressure to main bearings, camshaft bearings, timing gears, and to overhead valve system (low pressure). Connecting rod bearings lubricated by oil dippers which scoop oil from troughs (low speed) and directly from nozzles (high speed). Oil is divided between high and low pressure systems by the Oil Distributor Valve on left side of engine.

"235" Engine—Lubrication system similar to "216" engine except that the rocker arms are fed from an extension of the passage to the rear camshaft bearing. This same extension also feeds the oil channel supplying the hydraulic lifters.

CAUTION—Engine lubrication dependent upon adjustment of connecting rod dippers, oil troughs, and nozzles which must be **checked each time the oil pan is removed** (requires special gauges).

Crankcase Capacity—5½ qts. (dry), 5 qts. (refill).

Normal Oil Pressure—14 lbs. at 2000 RPM.

Oil Pressure Regulator—Located in oil pump cover Opens at 60 lbs. Non-adjustable type. Pressure normally controlled by Oil Distributor Valve on left side of engine which opens at 15 lbs.

Rocker Arm Oil Lead & Overflow Pipe Servicing: *See "Oiling System" in Chevrolet Special Data.*

Oil Pump: Located in crankcase. Driven independently through short shaft by gear on camshaft.

Oil Pump Installation—Assemble ground side of idler gear toward cover (use Chevrolet cover gasket only—controls pump clearance). Oil pump assembly mounted in crankcase by tapered setscrew. See that screw seated firmly in tapered hole in pump housing before tightening locknut.

Oil Distributor: *See "Oiling System" in Chevrolet Special Data.*

Crankcase Ventilation: Air intake through valve rocker cover (air cleaner on some models), outlet through pipe on right side of engine.

Servicing—On all models with air cleaner mounted on valve rocker cover, wash filter element with solvent and re-oil at 2000 mile intervals or more often if required by operating conditions.

COOLING

Cooling System: Positive circulation with water pump on front of engine.

Capacity—15 quarts.

Radiator Core Removal: *See Chevrolet Special Data.*

Water Pump: Double-outlet, packless type with sealed ball bearing shaft.

See Water Pump Section for complete data.

Belt Adjustment—*See Generator Belt Adjustment.*

Thermostat: Harrison. In cylinder head outlet.

Std.—No. 3123992 stamped "143". Starts to open at 140-147°F. Fully open at 170°F.

Temperature Gauge: AC No. (1950) 1511842, (1951) 1512241.

CLUTCH

Own Make—Diaphragm spring, single plate, dry disc type. NOTE—9" clutch used on all cars.

See Clutch Section for complete data.

Facings—Moulded Asbestos, 2 required as follows: 6⅛" I.D., 9⅛" O.D. .132-.138" thick.

Adjustment: Pedal free travel ¾-1". To adjust ,loosen checknut and turn adjusting nut on connecting link at clutch throwout fork. NOTE—Use finger pressure only when checking pedal free travel.

Removal: Remove transmission (see Transmission Removal below). Remove throw-out bearing, remove fork by prying fork off ball, remove fork mounting (use ¾" wrench). Install Clutch Pilot Tool K-411 (to support clutch), loosen all six cover bolts evenly, remove assembly from below. CAUTION—Do not allow pressure plate to hang on retracting springs (support by hand). When installing clutch align 'X' mark on cover with 'X' mark on flywheel.

TRANSMISSION

Own Make. Two types used, new Powerglide Automatic transmission (optional on De Luxe model cars) and Synchro-mesh on Standard model cars.

Synchro-mesh Transmission—Three-speed, synchro-mesh (Second & High), sliding gear (Low & Reverse).

See Transmission Section for complete data.

Transmission Control & Linkage: *See Transmission Section for complete data.*

Removal: Remove floor mat and floor cover over transmission. Disconnect speedometer cable, and shifter rods from levers on transmission. Drain lubricant. Disconnect hand brake pull back spring, and hand brake cable clevis from idler lever, remove idler lever. Remove universal joint collar-to-support capscrews and slide ball back on propeller shaft housing. Place jack under propeller shaft, remove 4 capscrews securing front trunnion bearings to front yoke, split joint and lower front end of propeller shaft. Remove rear transmission support-to-frame cross member bolts, install support under rear of engine. Remove two upper transmission-to-clutch housing capscrews and insert guide pins. Remove clutch underpan and two lower transmission-to-clutch housing capscrews. Slide transmission back and lift out through opening in floor.

POWERGLIDE TRANSMISSION

Powerglide Automatic Transmission (used with "235" Engine only). Torque Converter type, hydraulically operated planetary unit with manual control.

See "Chevrolet Powerglide Automatic Transmission" in Transmission Section for complete data.

Lubrication—Check fluid level in transmission every 1000 miles. Oil should be added only when the oil gets down to the "Add One Quart" mark on the dipstick. Change oil, remove and clean oil suction screen every 25000 miles. Use only AUTOMATIC TRANSMISSION FLUID "Type A" bearing a "AQ-ATF" marking on container.

Capacity—9 qts. (10 qts. dry).

Checking Fluid Level—Engine must be idling with the parking brake set, transmission warm, and the control lever in the "D" range when taking dipstick readings. Dipstick is located under hood right side just opposite starter.

Draining and Refilling—*See "Chevrolet Powerglide Automatic Transmission" in Transmission Section.*

Removal—*See "Transmission Removal" under Chevrolet Powerglide Automatic Transmission in Transmission Section.*

Transmission Control & Linkage—*See Transmission Section for complete data.*

►**Neutral Safety Switch, Powerglide Automatic transmission cars:** Connected in starter control circuit to prevent starter operating unless shift lever is in "N" Neutral or "P" position. Located at lower end of steering column.

►**Neutral Safety Switch Adjustment**—*See "Powerglide Automatic Transmission" in Transmission Section.*

UNIVERSALS

Own Make. Cross type with surface treated trunnions and bearings. One used in torque ball behind transmission rear support).

See Universals Section for complete data.

TORQUE TUBE BUSHING INSTALLATION: *See "Torque Tube & Ball" in Chevrolet Special Data.*

►**UNIVERSAL JOINT BALL ADJUSTMENT (POWERGLIDE MODELS):** Improper adjustment will cause leakage. *See "Torque Tube & Ball" in Chevrolet Special Data.*

REAR AXLE

Own Make. Semi-floating, hypoid gear type with Torque Tube drive. "Revacycle" differential side gears and pinions used.

See Rear Axle Section for complete data.

Ratio—(with Synchro-mesh transmission) 4.11-1 Std. Optl. 3.73-1 (with Powerglide transmission) 3.55-1.

Axle Identification—Prefix of axle serial number (stamped on front face of carrier flange on right side) indicates ratios as follows:

Backlash—.005-.007". Screw adjustment.

Removal: Raise rear of car, remove rear wheels and brake drums, install clamps on wheel brake cylinders, disconnect hand brake cables from idler lever and remove cables from cable clamps on frame, disconnect brake line at axle housing and shock absorber from rear spring 'U' bolt and anchor plate. Remove spring 'U' bolts and plate, disconnect spring shackles and drop springs. Pull axle assembly back to free front end of torque tube, withdraw assembly.

Axle Shaft Removal: Wheel bolted directly on flange on outer end of axle shaft. Shaft retained by 'C' washer on inner end of differential case. To remove axle shaft, remove wheel, take out two 'zipon' nuts retaining brake drum, remove drum, install clamp on wheel brake cylinder. Remove axle housing cover, differential pinion shaft lock screw, pinion shaft and axle shaft spacer. Push axle shaft in, remove 'C' washer on inner end, pull shaft out.

Axle Shaft Endplay—Free fit to .014" maximum.

Axle Shaft Installation & Endplay Adjustment: *See "Rear Axle Notes" in Chevrolet Special Data.*

SHOCK ABSORBERS

Delco. Chevrolet No. 5394583 (front), 5394584 (rear). Direct acting, non-adjustable, sealed (non-refillable) type. Serviced by replacement.

FRONT SUSPENSION

Front Suspension: New linked parallelogram type with direct acting shock within each coil spring.
See Front Suspension Section for complete data.

Kingpin Inclination—4° ± ½° crosswise.
Caster—Pos. ½° ± ½°. Adjustable.
Camber—Pos. ½° ± ½°. Adjustable.
Toe In—0-⅛". Loosen clamp bolts at each end of left hand tie-rod and turn rod, tighten clamp bolts.
CAUTION—Align tie rod ends before tightening clamp bolts (ball studs will bind if not aligned).

Steering Geometry (toe-out on turns)—Outer wheel turned 20°. Inner wheel turned 24° ± 2°.

STEERING GEAR

Saginaw. Worm and roller type with push-pull lash adjustment.
See Steering Gear Section for complete data.

►**STEERING GEAR PRODUCTION CHANGE:** Steering Gear assembly, Part No. 5662075 supersedes previous assemblies Part No. 5661893 & 5662113, on 1950 & 1951 cars. This later assembly provides easier steering (ratio 19.4-1). *Can be identified by embossed "X" ½" wide on top of steering gear housing. Parts not interchangeable with earlier assemblies.*

►**STEERING GEAR CHANGE FOR EASIER STEERING ON EARLY 1950 CARS:** Late 1950 steering gear (above) can be installed on first cars with No. 5661893 gear (with 17.4-1 ratio) for easier steering.

BRAKES

1950 CARS

Service Brakes: Own Make, hydraulic type. Hand lever applies rear wheel service brakes.
NOTE—Bonded brake lining used.
See Brake Section for complete data.

Wheel Cylinder Bore—Front wheels 1 5/16", Rear 1 1/8". Sizes stamped under adjusting cup lock spring on wheel cylinder housing.
Drums—Cast iron rim, steel web. Diameter: 11".
Lining—Moulded type (bonded). Width 1¾". Thickness .187-.194". Length per wheel 20⅝".
Clearance—Adjusting cover (on wheel cylinder) backed off 4 Notches from slight drag position.
Braking Power—57.7% front wheels, 42.3% rear.

Hand Brake: See Service Brakes above.

1951 CARS

Service Brakes: Chevrolet-Bendix Duo-Servo single anchor hydraulic type. Hand lever applies rear wheel secondary shoe.
NOTE—Bonded brake lining used.
See Brake Section for complete data.

Wheel Cylinder Bore—Front wheels 1⅛", Rear 1". Sizes stamped under adjusting cup lock spring on wheel cylinder housing.
Drums—Cast iron, steel web. Diameter: 11".
Lining—Molded type, (bonded). Width 2" (Front) 1¾" (Rear). Thickness .202-.222". Length per wheel 21".
Clearance—Single adjusting screw located at bottom of backing plate. A snap plate covers hole in backing plate. Back off adjusting screw 14 notches from slight drag position.
Braking Power—55.9% front wheels, 44.1% Rear.

Hand Brake: See Service Brakes above.

MISC. MECHANICAL

Convertible Top Control: Hydro-Lectric type (hydraulic actuation with motor-driven pump supplying oil under pressure for power cylinders).
See Miscellaneous Section for complete data.

Windshield Wiper: Vacuum Link-&-Crank Arm type.
See Miscellaneous Section for complete data.

MODEL IDENTIFICATION

Series	Special Prefix 1950	1951	Wheelbase	Type
3100	HP	JP	116"	Half-Ton
3600	HR	JR	125¼"	¾-Ton
3742	HT	JT	125¼"	¾ T. Fwd.-Contr
3800	HS	JS	137"	1-Ton
3802			137"	School Bus
3942	HU	JU	137"	1 T. Fwd-Contr
4100	TJ	UJ	137"	1½-Ton
4400	TK	UK	161"	1½-Ton
4502	TL	UL	161"	School Bus
5100	TP	UP	110"	COE 2-Ton
5400	TR	UR	134"	COE 2-Ton
5700	TS	US	158"	COE 2-Ton
5100S	TPS	UPS	110"	COE 1½ T. Spec
5400S	TRS	URS	134"	COE 1½ T. Spec
5700S	TSS	USS	158"	COE 1½ T. Spec
6100	TV	UV	137"	2-Ton
6400	TW	UW	161"	2-Ton
6702	TX	UX	199"	School Bus
6100S	TVS	UVS	137"	1½-Ton Spec
6400S	TWS	UWS	161"	1½-Ton Spec

SERIAL NUMBER: Stamped on plate on cab left front hinge pillar (Flat Face Cowl models have plate on left hand cowl inner panel).
Serial Numbers—First number 1001 with Serial Prefix for each Series as indicated in table above.

ENGINE NUMBER: Stamped on right side of crankcase to rear of distributor.
Engine Numbers—First number 1001 with prefix indicating year, engine type & plant as follows:

1950 Truck Engine Number Prefixes

Engine Type	Flint	Tonawanda
Half-Ton Truck	HBA	HBM
¾ & 1 Ton Truck	AHCA	AHCM
1½ Ton (216" Eng.)	HCA	HCM
1½ & 2 Ton (235" Eng.)	HEA	HEM
Cab-over-Engine Mdls.	HDA	HDM

1951 Truck Engine Number Prefixes

Engine Type	Flint	Tonawanda
Half-Ton Truck	JBA	JBM
¾ & 1 Ton Truck	AJCA	AJCM
1½ Ton (216" Eng.)	JCA	JCM
1½ & 2 Ton (235" Eng.)	JEA	JEM
Cab-over-Engine Mdls.	JDA	JDM

TUNE-UP

COMPRESSION PRESSURE: 110 lbs. minimum (with cylinders equal within 5-10 lbs.) at cranking speed.
VACUUM READING: Steady 17-21" at idling speed.
FIRING ORDER: 1-5-3-6-2-4. See diagram.
SPARK PLUG GAPS: .035".
Plugs—AC No. 46-5. 14 mm.
►*CAUTION—Tighten plugs to 20-25 ft. lbs. torque or finger tight plus one-half turn.*
DISTRIBUTOR: Breaker Gap—.018" (limits .018-.022") standard setting, or .022-.024" for new points (to allow for seating).
Cam Angle—34°. Test limits with .022" gap 31-37°. *See "Delco-Remy Cam Angle" in Electrical Equipment Section.*
Breaker Arm Spring Tension—17-21 ozs.
Automatic & Vacuum Advance—*See Ignition.*
Condenser Capacity—.18-.23 microfarad.
IGNITION TIMING: 5° BTDC.
Timing Procedure—*See Ignition Timing.*
Timing Mark—Steel ball insert in flywheel lined up with pointer in inspection hole in right front face of housing with Octane Selector set at "O". Then adjust Octane Selector as follows:
Octane Selector Setting—Set for slight ping when accelerating engine with wide open throttle.

CARBURETION: Rochester—Downdraft type. (Conventional Trucks).
►*IMPORTANT CARBURETOR CORRECTIONS: See Carburetor Section for complete data.*
Idle Setting—1½ turns open (turn out for richer mixture).
Idle Speed—450-500 RPM. with warm engine.
Float Level (Rochester)—1 5/16" from bottom of each float to cover gasket (**do not remove gasket**) with cover inverted so that needle valve closed. Use No. 3696192 gauge to set float level and align floats (twisted floats may hang up or rub on bowl). Check float drop or travel by turning cover right side up so that floats drop down. Distance from gasket on cover to bottom of each float must be 1¾". Adjust by bending tang at rear of float assembly. *Above specifications supersede earlier data.*
►*CAUTION—Both floats must be set alike and must not be twisted out of alignment.*
Accelerating Pump—No seasonal adjustment.
Fuel Pump Pressure: 4 lbs. maximum.

CARBURETION: Carter—Updraft type. (Cab-Over-Engine & Forward Control Trucks).
Idle Setting—½-1½ turns open. Turn out for richer mixture.
Idle Speed—450-500 RPM. with engine warm.
Float Level—Top of float 0-1/32" below edge of bowl with needle valve seated.

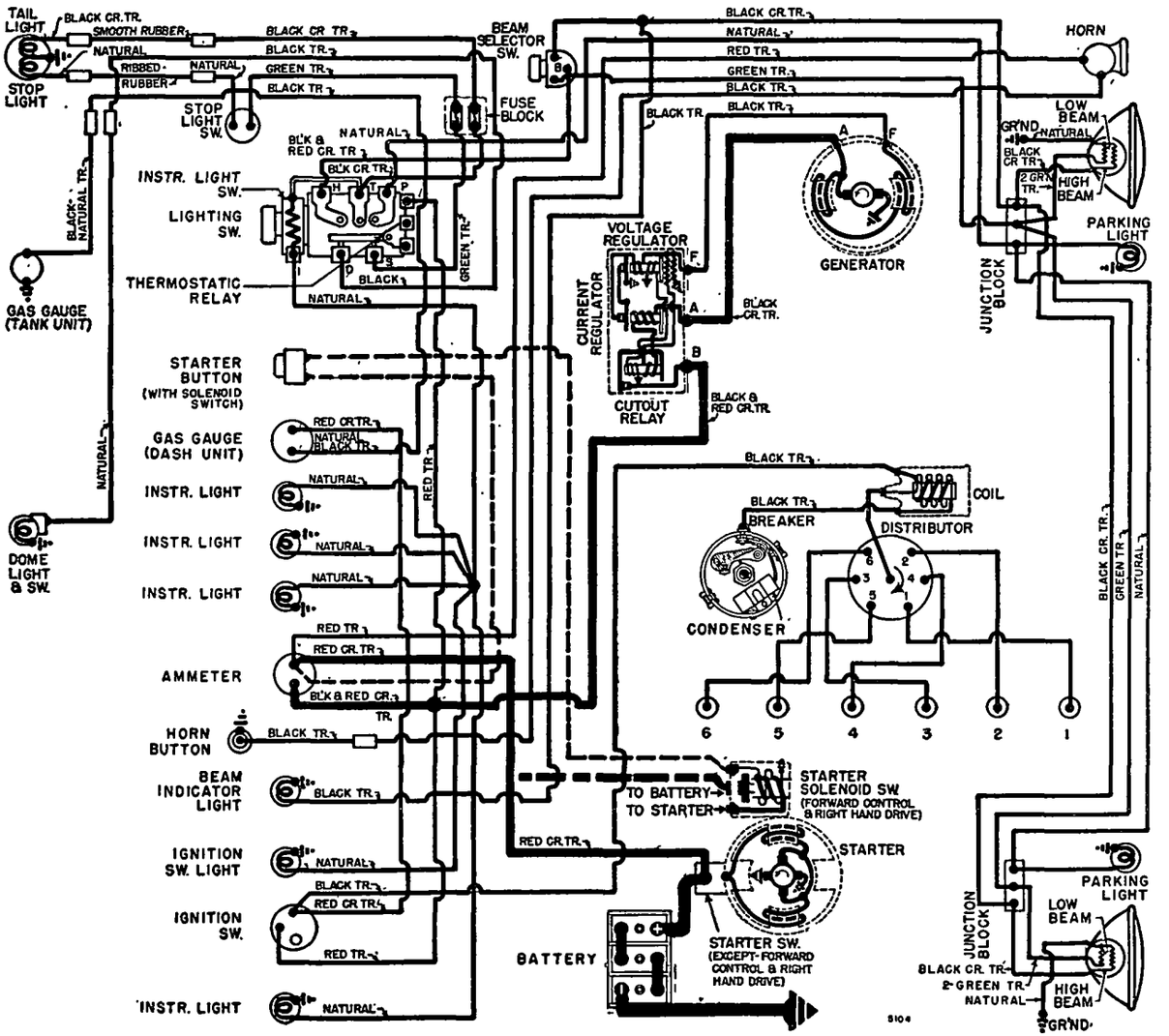

Accelerating Pump—Inner hole Summer, Outer hole Winter.

Fuel Pump Pressure: 4 lbs. maximum.

MANIFOLD HEAT CONTROL: Thermostatic type. Check for free operation when tuning engine. Spring should be wound up just enough to slip end over manifold pin (approximately ½ turn).

►*CAUTION*—Excessive spring tension may cause valve to stick (causes detonation and poor performance).

►**VALVE TAPPET CLEARANCE:** ***CAUTION—Engine must be "normalized" by running at fast idle of approximately 600 RPM. for 30 minutes or until oil temperature stabilized before adjusting.***

Normal Operation—.006-.008" Intake. .013-.015" Exhaust, with engine "normalized."

Heavy Duty (Full Throttle) Operation—.010" Intake. .020" Exhaust, with engine "normalized."

IGNITION

IGNITION SWITCH: Delco-Remy No. 1116464.
Key Series—No. 8000 to 9499. **Groove**—No. 15.

COIL: Delco-Remy No. 1115380. Mounted directly above distributor.
Ignition Current—2.5 amperes idling, 4.5 stopped.

CONDENSER: Delco-Remy Part No. 1869704.
Capacity—.18-.23 microfarad.

DISTRIBUTOR: Delco-Remy No. (1950 216" Eng.) 1112353, (1950 235" Eng.) 1112358, (1951 216" Eng.) 1112362, (1951 235" Eng.) 1112363.

►***CAUTION—These distributors have different advance.***

Breaker Gap—.018" standard setting, or .022-.024" for new points (to allow for seating).
Cam Angle—34°. Test limits with .022" gap 31-37°.
See "Delco-Remy Cam Angle" in Electrical Equipment Section.

Breaker Arm Spring Tension—17-21 ozs.

Rotation—Clockwise viewed from above.

Automatic Advance
No. 1112353 & 1112362

Degrees	Distr. R.P.M.	Degrees	Eng. R.P.M.
Start	350	3	700
6.5	600	13	1200
12.0	1200	24	2400
19.0	1700	38	3400

Automatic Advance
No. 1112358 & 1112363

Start	300	2	600
6	700	12	1400
16.5	1850	33	3700

Octane Selector—Adjustment on distributor provides 10° advance or retard from center "0" Position. See Ignition Timing for adjustment instructions.

Vacuum Spark Control: Delco-Remy No. 1116043.
Plunger Travel—17/64".

Vacuum Advance

Distr. Degrees	Eng. Degrees	Vacuum (" of HG)
Start	0°	7-8.5"
10°	20°	16.5-18.5"

IGNITION TIMING

	Flywheel Degrees	Piston Position
Std. Setting①	5° BTDC	.0091" BTDC.

①—Adjust Octane Selector for grade of fuel being used. See Octane Selector Setting below.

Timing (Neon Light)—Recommended method. Connect neon light to #1 spark plug, direct light in flywheel through inspection hole in right front face of housing. Set Octane Selector pointer at "O". Idle engine, loosen advance arm clamp bolt, rotate distributor until ignition mark (steel ball insert in flywheel) lines up with pointer. Tighten clamp bolt and check Octane Selector Setting (see below).

CARBURETOR

ROCHESTER DOWNDRAFT

Rochester G.M. Model B. ***CAUTION—Different carburetor used on each engine:***

►***IMPORTANT CARBURETOR CORRECTIONS:*** ***See Carburetor Section for complete data.***

216" Engine—Chevrolet No. 7002050. 1½" Bore.
235" Engine—Chevrolet No. 7002051. 1 9/16" Bore.
Single Barrel, downdraft type with concentric bowl and twin floats. Choke is manual type with throttle kicker and fast idle.

See Carburetor Section for complete data.

Settings (Idle Setting, Float Level, and Accelerating Pump): ***See Tune-Up.***

Throttle Kicker: Operates by cam on choke lever—opens throttle when choke closed—no adjustment.

CARTER UPDRAFT

Carter (BB) Model 745S. 1¼" single barrel, updraft type with manual choke control.
See Carburetor Section for complete data.

Settings (Idle Setting, Float Level, and Accelerating Pump): ***See Tune-Up.***
Metering Jets—***See Carter (BB) Updraft Jet Table in Carburetor Section for data.***

CARB. EQUIPMENT

Air Cleaner: AC types as follows:
864133—Forward Control Models.
1529264 oil-wetted—Std. All (exc. 2 Ton & C-O-E).
1529192 oil-bath—Optl. All (exc. 2 Ton & C-O-E).
1542078 oil-bath—Std. on 2 Ton Conventional Truck.
1543889 oil-bath—Std. on Cab-Over-Engine.
Filter Element—AC #2 (1529264), #9 (1529192), #7-S (for 1542078), None (for 1543889).

Fuel Pump: AC Type AF, No. 1523089. Diaphragm type.
Optl. AC No. 1539126 or 1539448 combination fuel-and-vacuum pumps.
Replacement Pump—AC No. 429 (for 1523089), 9126 (for Optl 1539126 or 1539448 combination pumps).
Pressure—4 lbs. maximum.
See Carburetion Equipment Section for complete data.

Gasoline Gauge: AC Electric type. AC Nos.:
Dash Unit—No. 1517169 (all models).
Tank Unit—AC types as follows:

Model	AC Tank Unit No.
Forward Control	1515466
School Bus Chassis	1516334
1 Ton (with Cab)	1515566
All Others (with Cab)	①1517500
½ Ton Chassis	1515466
¾ Ton Chassis	1516999
1 Ton Chassis	②1516983
1½ & 2 Ton Chassis (exc. Sch. Bus)	③1515467

①—1950 No. 1517140.
②—Inside Tank. ③—Outside Tank.
See Carburetion Equipment Section for complete data.

BATTERY

Delco Type 15AA-4. 6 Volt, 15 Plate, 100 Ampere Hour Capacity (20 hour rate).
Starting Capacity—120 amperes for 20 minutes.
Zero Capacity—300 amperes for 3.6 minutes.
Five Second Voltage—4.2 volts.
Grounded Terminal—Negative (—) terminal.
Dimensions—Length 9". Width 7". Height 8 11/16".
Location—Under front floor on right side (Forward Control Trucks on frame on right side of engine).

School Bus—Delco Type 19Q-4. 6 Volt, 19 Plate, 125 Ampere Hour Capacity (20 hour rate).
Starting Capacity—145 amperes for 20 minutes.
Zero Capacity—300 amperes for 5.0 minutes.
Five Second Voltage—4.5 volts.
Grounded Terminal—Negative (—) terminal.
Dimensions—Length 10⅜". W. 7". Height 8 11/16".
Location—Under hood.

STARTER

Delco-Remy 1107055 (1107075 on Forward Control Trucks). Armature No. 1867897.
Drive—Overrunning clutch with manual pinion shift (1107055), solenoid pinion shift (1107075).
Rotation—Counter-clockwise at commutator end.
Brush Spring Tension—24-28 ozs. each.

Performance Data

Torque	R.P.M.	Volts	Amperes
0 ft. lbs.	5000	5.7	65①
12 "	Lock	3.4	525

①—80 amperes on 1107075 (includes current draw of solenoid starter switch).

Starting Switch (1107055): Delco-Remy No. 820052. On starter. Operated by pedal.
(1107075 Starter). Delco-Remy Solenoid Switch No. 1118135 (no relay used) mounted on starter and controlled by pushbutton switch No. 1996045.
See Electrical Equipment Section for complete data.

GENERATOR

Delco-Remy:	Generator No.	Armature No.
Std. Equip. (1950)	1102710	1879002
Std. Equip. (1951)	1102749	1879002
Door-to-Door	1102726	1879002
Spec. Equip. (55 amp.)	1106757	1910073
Spec. Equip. (50 amp.)	1106758	1909996

2 Brush types with voltage and current regulation.

Charging Rate Adjustment—None. See Regulator.
Maximum Charging Rate (Reg. Gen.)—36 amperes, 7.4 volts, 2400 RPM.

Performance Data—Cold

	Amperes①	Volts	R.P.M.
1102710 & 11102749	30	8.0	1750
1102726	26	8.0	1450
1106757	50	7.5	1410
1106758	40	7.5	1165

①—Not maximum output. See Current Regulator.

Rotation—Counter-clockwise at commutator end.
Brush Spring Tension—25 ozs. each.
Field Current—1.75-1.9 amps., (1.70-1.95 amps. on 1106757 & 1106758) at 6.0 volts.

Belt Adjustment: Loosen clamp bolt, swing generator out for ¾" belt deflection (light pressure) midway between generator and fan pulleys.

CONTINUED ON NEXT PA E

CONTINUED FROM PRECEDING PAGE

REGULATOR

Delco-Remy Regulator No.	Used With Generator No.
1118301	1102710
1118301	1102749
1118361	1102726
1118334	1116757
1118343	1116758

►*"118300 SERIES"* regulators have screw adjustment for settings and single regulator springs.
See Electrical Equipment Section for complete data.

CAUTION—Check generator for grounded field coils and leads before changing regulator settings to correct High Charging Rate or High Voltage.

Cutout Relay

Cuts In—5.9-6.8 volts hot (set to 6.4 volts hot).
Contact Gap—.020" (same for both sets).
Air Gap—.020" (with contacts just closed).

Voltage Regulator

Setting—7.0-7.7 volts hot (set to 7.4 volts hot). Regulator is over-compensated for temperature. Check with cover in place and regulator hot.
Air Gap—.075" with armature pressed down to point where contacts are just touching.
Checking & Adjustment—*See Electrical Equipment Section.*

Current Regulator

Settings (hot)	Set to	Range
1118301	36	32-40
1118361	25	23-27
1118334	50	48-52
1118343	40	37-41

Air Gap—.075" with armature pressed down to point where contacts are just touching.
Checking & Adjustment—*See Electrical Equipment Section.*

LIGHTING

Headlamps: Guide "Sealed Beam" type.
See Electrical Equipment Section for complete data.
Headlamp Adjustment—Aim upper beam straight ahead (hot spot center 4½" below lamp center height).
Beam Indicator—Red dot on lower edge of speedometer. Lighted when upper beams in use.

Switches

Lighting—Delco-Remy No. (1950) 1995031, (1951) 1995048.
Instrument—Part of Lighting Switch (Rheostat operated by turning light switch knob).
Beam Selector—Delco-Remy No. 1997008.
Stop Light—D-R No. 1997901 (mechanical type).
NOTE—Hydraulic switch used on some models.

MISC. ELECTRICAL

FUSES: Lighting. Five 20-ampere fuses in fuse box on engine side of dash. Protects individual light circuits as follows:

Top Fuse Upper Beams
2nd Fuse Lower Beams
3rd Fuse Parking Lights
4th Fuse Tail Lights
5th Fuse Stop Lights

NOTE—These fuses used together with circuit breaker.

THERMOSTATIC CIRCUIT BREAKER: Delco-Remy. On back of light switch (part of switch assy.). Contacts remain closed with 30 amperes but open in 3 minutes with 42 amperes at 70°F. Not adjustable. Protects lighting circuits together with fuses listed above.

HORNS: Delco-Remy No. 1999801. Vibrator type.
Horn Current—7-9 amperes at 6.0 volts.
Air Gap—.027-.033".

ENGINE

►**ENGINE SPECIFICATIONS:** *TWO DIFFERENT ENGINES:*

216" **Thrift-Master**—Std. on ½, ¾, 1, 1½ Ton, and 137" & 161" WB. School Bus.
235" **Load-Master**—Std. on 2 Ton, C-O-E Trucks, and 199" School Bus. Optl. on 1½ Ton and 161" WB. School Bus.

Engine	Bore	Stroke	Displacement
216"	3½"①	3¾"	216.5 Cu. In.
235"	3 9/16"②	3 15/16"	235.5 Cu. In.

①—3.4995-3.5015". ②—3.520-3.5640".

Engine	Comp. Ratio	Rated HP.	Developed HP.
216"	6.6-1	29.4	92 at 3400 RPM
235"	6.7-1	30.4	105 at 3600 RPM
235" (1950 COE)	6.7-1	30.4	102 at 3600 RPM
235" (1951 COE)	6.7-1	30.4	100 at 3500 RPM

Compression & Vacuum Reading—*See Tune-Up.*

►**Non-Interchangeable Parts:** Parts interchangeable between the 216" and 235" engines except as follows: Cylinder Block and Crankcase, Cylinder Block Assembly (Short Motor), Push Rods (approx. ¾" longer on 235" Engine and identified by shoulder just below cup at top end), Valve Lifters, Camshaft, Piston and Pin Assembly, Piston Rings, Crankshaft, Oil Pan Pipe Assembly, Oil Distributor to Valve Rocker Shaft Pipe Assembly, Oil Pump Screen Cover Support Assembly.

►**VALVE ROTATORS AVAILABLE FOR TRUCK ENGINES:** To promote longer valve life. *See "Valve System" in Chevrolet Special Data.*

OTHER ENGINE DATA: *See 1950-51 Passenger car pages for all engine data (Pistons, Connecting Rods, Crankshaft, Bearings, Valves, etc).*

VALVE TIMING

►**VALVE TAPPET CLEARANCE:** *CAUTION—Engine temperature must be "normalized" before adjusting. See "Tappet Clearance Adjustment" in Chevrolet Special Data.*

Normal Operation—.006-.008" Intake, .013-.015" Exhaust, with engine "normalized."
Heavy Duty (Full Throttle) Operation—.010" Intake, .020" Exhaust, with engine "normalized."

►*CAUTION—If Valve Rotators are used set Exhaust Valve Clearance at .018-.020".*

VALVE TIMING: Camshaft Setting. Timing gears punchmarked. Punchmarked tooth of camshaft gear must be meshed with punchmarked space on crankshaft gear.

Valve Timing

Intake Valves—Open 1° ATDC. Close 39° ALDC.
Exhaust Valves—Open 42° BLDC. Close 9° ATDC.
Valve Timing Check—Remove all tappet clearance from #1 exhaust valve, turn engine over until this valve just starts to close and until triangular flywheel mark lines up with pointer in right front face of flywheel housing, mount dial indicator on rocker shaft support with stem contacting #1 exhaust valve adjusting screw, set indicator dial at .044". Turn crankshaft until indicator hand just stops moving. Timing is correct if indicator reading is ZERO plus or minus .004".

LUBRICATION

Engine Oiling System: Pressure and positive splash system. Pressure to main bearings, camshaft bearings, timing gears, and to overhead valve system (low pressure). Connecting rod bearings lubricated by oil dippers which scoop oil from troughs (low speed) and directly from nozzles (high speed). Oil is divided between high and low pressure systems by Oil Distributor Valve on left side of engine.

CAUTION—Engine lubrication dependent upon adjustment of connecting rod dippers, oil troughs and nozzles which must be **checked each time the oil pan is removed** (requires special gauges).
Checking Oiling System—*See "Oiling System" in Chevrolet Special Data.*

Crankcase Capacity—5½ qts. (dry), 5 qts. (refill).
Normal Oil Pressure—14 lbs. at 2000 RPM.
Oil Pressure Regulator—Located in oil pump cover. Opens at 60 lbs. Non-adjustable type. Pressure normally controlled by Oil Distributor Valve on left side of engine which opens at 15 lbs.

Rocker Arm Oil Lead & Overflow Pipe Servicing: *See "Oiling System" in Chevrolet Special Data.*

Oil Pump: Located in crankcase. Driven independently through short shaft by gear on camshaft.

Oil Pump Installation—Assemble ground side of idler gear toward cover (use Chevrolet cover gasket only—controls pump clearance). Oil pump assembly mounted in crankcase by tapered setscrew. See that screw seated firmly in tapered hole in pump housing before tightening locknut.

Oil Distributor: *See "Oiling System" in Chevrolet Special Data.*

Checking Oiling System: Check entire system (Dipper Height, Oil Pan Trough Height, Oil Nozzle Height & Aim) each time oil pan removed.
See "Oiling System" in Chevrolet Special Data.

CAUTION—Special checking gauges required for each type (216" & 235") engine.

Crankcase Ventilation (All Trucks except Forward Control Models): Regular velocity type with air intake through valve rocker cover (air cleaner on some models) and outlet pipe on right side of engine.

Servicing—On all models with air cleaner mounted on valve rocker cover, wash filter element with solvent and re-oil at 2000 mile intervals or more often if required by operating conditions.

►**Positive Crankcase Ventilation (Forward Control Truck Models only):** Vacuum operated ventilator consisting of vacuum pipe from oil filler pipe to a ventilator valve in fitting on intake manifold. Valve is spring-loaded, variable opening type giving constant crankcase ventilation at all speeds. **Valve must close at idling speed to maintain proper air fuel mixture.**

Servicing. Every 5000 miles (or oftener if required), clean vacuum pipe, valve, and filler pipe thoroughly. Oil filler cap gasket must seal tightly. Test vacuum valve as follows:

Vacuum Valve. With valve disassembled, check spring tension—must be 7.5 ozs. with spring compressed to .418-.432". If defective replace with new valve assembly, Part No. 1543979.

►*CAUTION*—When assembling valve, make certain end coil of spring engages groove under head of valve.

COOLING

Cooling System: Positive circulation with water pump on front of engine. Pressure type (relief valve) radiator cap used on Cab-Over-Engine Trucks.

Pressure Valve (C-O-E Trucks)—AC No. 850501 Radiator Filler Cap). Open at 4 lbs.

Capacity—15 qts. (with 216" Engine), 17½ qts. (with 235" engine). NOTE—Heavy Duty 17½ qt. radiator Optl. on ¾, 1, 1½ Ton and 137" & 161" WB. School Bus.

Radiator Core Removal: *See Chevrolet Special Data.*

Water Pump: Double-outlet, packless type with sealed ball-bearing shaft.

See Water Pump Section for complete data.

Belt Adjustment—*See Generator Belt Adjustment.*

Thermostat. Harrison. In cylinder head water outlet.

Setting—No. 3113995 stamped "143." Starts to open 140-147°F. Fully open 170°F.

Temperature Gauge: AC No. 1512148 (1512150 for C-O-E Trucks). Not electric.

CLUTCH

Own Make. Diaphragm spring, single plate, dry disc type. NOTE—Half-Ton Trucks use 9" clutch, all other models 10¾" type.

See Clutch Section for complete data.

Facings—Moulded Asbestos, 2 required as follows:

	I. D.	O. D.	Thickness
9" type	6⅛"	9⅛"	.132-.138"
10¾" type	7"	10¾"	.137-.143"

Adjustment: Pedal-free travel ¾-1". To adjust, loosen checknut and turn adjusting nut on connecting link at clutch throwout fork. NOTE—Use finger pressure only when checking pedal free travel.

Removal: Remove transmission (see Transmission Removal below). Remove throw-out bearing, remove fork by prying fork off ball, remove fork mounting (use ¾" wrench). Install Clutch Pilot Tool K-411 (to support clutch), loosen all six cover bolts evenly, remove assembly from below. CAUTION—Do not allow pressure plate to hang on retracting springs (support by hand). When installing clutch align 'X' mark on cover with 'X' mark on flywheel.

TRANSMISSION

3-SPEED

Own Make. Three-speed, all helical gear type, Constant-mesh, synchro-mesh (Second & High), sliding gear (Low & Reverse).

See Transmission Section for complete data.

Transmission Control: Mechanical type with shift lever mounted on steering column.
See Transmission Section for complete data.

Removal (Half-Ton): Remove accelerator pedal, floor mat, and transmission cover on floor. Disconnect speedometer cable from rear bearing retainer, remove hand brake lever from transmission case. Drain transmission. Remove battery. Remove four capscrews holding universal joint collar on rear bearing retainer, remove bolts holding transmission support on frame cross-member. Support propeller shaft with jack, slide universal joint ball and collar back on shaft, split front universal by removing capscrews retaining front trunnion bearings on front yoke. Raise propeller shaft as far as possible with jack to provide clearance. Remove two top transmission mounting screws, install special J-1116 guide pins in these holes. Take off clutch housing underpan. Remove two lower transmission mounting screws, slide transmission straight back on guide pins until main drive gear shaft is free from clutch driven member, lift transmission up and remove through floor opening.

Removal (¾ Ton): Remove accelerator pedal, floor mat, and transmission cover on floor. Disconnect speedometer cable from rear bearing retainer, remove hand brake lever from transmission case. Drain transmission. Split intermediate universal by removing trunnion bearing "U" bolts, lower rear propeller shaft to floor. Remove four capscrews holding universal joint collar on rear bearing retainer, slide ball collar and retainer back on housing. Remove two bolts and nuts mounting intermediate universal support bracket on frame cross-member, pull front propeller shaft assembly to rear and free of front universal joint. Remove transmission in same manner as on Half-Ton (above).

4-SPEED

Own Make. Four-speed, constant-mesh, synchro-mesh, helical gear (2nd, 3rd, and 4th), sliding spur gear (Low & Reverse). Floor mounted gearshift.
See Transmission Section for complete data.

►**Locking in 3rd & 4th Gear Correction**—New design 3rd & 4th speed clutch hub and clutch keys used.
See Chevrolet 4-speed Helical Gear Transmission in Transmission Section.

►**Gear Disengagement & High Gear Noise Correction:** *See "Chevrolet 4-Speed Helical Gear Transmission" in Transmission Section.*

Transmission Control (Cab-Over-Engine): *See Chevrolet Special Data for Removal & Installation data.*
NOTE—Floor-mtd. gear shift used on Other Trucks.

Removal (½ & ¾ Ton): See 3-speed Transmission data above. NOTE—On Forward Control Models shift lever and rear floor pan must be removed.

Removal (Other Trucks): Free steering gear grommet from floor, remove accelerator pedal, floor mat, and transmission cover on floor. Disconnect speedometer cable from rear bearing retainer, remove hand brake lever from transmission case. Drain transmission. Split front universal joint by removing trunnion bearing "U" bolts (tape or wire trunnions together to prevent losing bearings), slide shaft down to one side to clear transmission. Remove two top transmission mounting capscrews, install special J-1116 guide pins in these holes. Take off clutch housing underpan. Remove 2 lower transmission mounting capscrews, slide transmission straight back on guide pins until main drive gear shaft is free from clutch driven-member, remove transmission.

UNIVERSALS

Half-Ton: Own Make. No. 591642 (3-Spd. Trans.), 605118 (4-Spd. Trans.). Same type as Pass. Car. One used (in torque ball back of transmission).
See Universal Section for complete data.

►*TORQUE TUBE BUSHING INSTALLATION (½ Ton Truck)—See "Torque Tube & Ball" in Chevrolet Special Data.*

¾ Ton Truck: Front Universal—Own Make. Chevrolet No. 591646 (3-Spd. Trans.), 3689288 (4-Spd. Trans.). Same type as used on Half-Ton (above).

Intermediate & Rear Universal—Spicer Model No. 1351-5107X (Intermediate—slip joint), 1358-5104X (rear—permanent joint). Needle bearing type.
See Universals Section for complt data.

1, 1½, 2 Ton Trucks (Regular & C-O-E): Spicer Needle bearing type. Slip-joint used at intermediate position, permanent type at transmission and rear axle.

Spicer Model Nos.	Front	Intermediate	Rear
C-O-E 110" WB	1351-5107X	①	1358-5105X
Bus 199" WB	1358-5104X	②	1358-5104X
All Others	1358-5104X	1351-5107X	1358-5104X

①—No intermediate joint used (1 propeller shaft).
②—Two intermediate universals as follows: First—1358-5104X, second 1351-5107X (3 section shaft).
See Universal Section for complete data.

REAR AXLE

SEMI-FLOATING (HALF-T N)

Own Make. Semi-floating, hypoid gear type with Torque Tube drive.
NOTE—This axle same design as passenger car type.
See Rear Axle Section for complete data.
Ratio—4.11-1 Standard.
Backlash—.005-.007". Screw adjustment.

Removal: Raise rear of car, remove rear wheels and brake drums, install clamps on wheel brake cylinders, disconnect hand brake cables from idler lever and remove cables from cable clamps on frame, disconnect brake line at axle housing and shock absorber from rear spring 'U' bolt and anchor plate. Remove spring 'U' bolts and plate, disconnect spring shackles and drop springs. Pull axle assembly back to free front end of torque tube, withdraw assembly from beneath car.

Axle Shaft Removal: Wheel bolted directly on flange on outer end of axle shaft. Shaft retained by 'C' washer on inner end of differential case. To remove axle shaft, remove wheel, take out two 'zipon' nuts retaining brake drum, remove drum, install clamp on wheel brake cylinder. Remove axle housing cover, differential pinion shaft lock screw, pinion shaft and axle shaft spacer. Push axle shaft in, remove "C" washer on inner end, pull shaft out.
Axle Shaft Endplay—Free fit to .014" maximum.

FULL-FLOATING (EXC. HALF-TON)

Own Make. Full-floating, hypoid gear (straddle mounted pinion) with Hotchkiss Drive.

►**¾ & 1 Ton Note**—"Revacycle" differential side gears and pinions used.

►**1½ & 2 Ton Note**—Axle shaft splined to wheel hubs.
See Rear Axle Section for complete data.

Ratios: The following rear axle ratios are standard equipment as indicated.

Truck Model	Ratio
¾ Ton (exc. Fwd. Contr.)	4.57-1
①1 Ton (Single Tires)	5.14-1
①1 Ton (Dual Tires)	5.14-1
1½ Ton	6.17-1
1½ Ton	5.43-1
②2 Ton & C-O-E	6.17-1

①¾ Ton Forward Control Models also.
②1½ Ton Special Model also.

CONTINUED ON NEXT PAGE

C NTINUED FR M PRECEDING PAGE

Backlash—.005-.008". Screw adjustment.

Removal:—Remove differential cover and axle shafts (see below). Disconnect rear universal by removing two U-bolts from rear yoke (wire trunnions to retain bearings). Slide shaft forward and lower to floor. Remove differential carrier mounting bolts.

Axle Shaft Removal (¾ & 1 Ton): Remove 8 capscrews and lockwashers in axle shaft flange, install two ½" x 13 screws in special threaded holes in flange (between regular mounting screw holes), turn these screws up evenly to loosen the shaft, withdraw shaft from housing, remove and discard gasket. NOTE—Use new gasket when re-installing shaft.

CAUTION—Thoroughly clean all lubricant from axle shaft flange and end of wheel hub before installing axle shaft. Grease at this point **will cause loosening of axle shaft flange capscrews.**

Axle Shaft Removal (1½ & 2 Ton): Shaft flange is splined in wheel hub (tight fit) and requires special puller for removal. Remove five capscrews and lockwashers in hub cap, remove hub cap and gasket. Assemble special adapter J-1436-8 on Rear Axle Shaft Bearing & Oil Seal Remover J-1436 (remove jaws), thread adapter into hole in axle shaft flange, pull axle shaft. NOTE—When re-installing shaft, tap flange splines into engagement with wheel hub splines (if necessary, rotate wheel slightly to align splines on shaft with both wheel hub and differential side gear splines), use new hub gasket.

Axle Shaft Note—Shafts unequal length (right shaft longer) and may be identified by part number stamped on shaft or lengths as follows:

¾ & 1 Ton Truck

	Part No.	Length
Left Shaft	3680977	31 3/16"
Right Shaft	3680978	37 1/16"

1½ Ton Truck (Splined Shaft)

Left Shaft	3685191	34 3/32"
Right Shaft	3685192	40 15/32"

2 Ton & C-O-E (Splined Shaft)

Left Shaft	3685193	36 7/16"
Right Shaft	3685194	40 5/8"

Wheel Bearing Adjustment: Remove wheels and axle shaft (see above). Bend back lip of lock in locknut notch, remove locknut and adjusting nut lock. Tighten adjusting nut tight, using special wrench J-2222 (¾ & 1 Ton), J-870 (1½ & 2 Ton) while turning hub by hand, then back nut off 45°, check for free turning, install adjusting nut lock (with lock tangs aligned with slots in adjusting nut), bend tang down into notch in adjusting nut, install locknut and tighten securely, bend tang of lock down into notch of locknut.

REAR AXLE

TWO-SPEED

Own Make (2 Ton Optl.). Full-floating, Two-speed Double reduction type with Hypoid Gears (First reduction), Helical Gears (Second reduction) and vacuum shift control.

See Rear Axle Section for complete data.

Ratio—6.13-1 (High), 8.10-1 (Low).

Two-Speed Shift Control: Vacuum power type with selector valve on instrument panel.

Removal: Carrier Assembly can be removed (without disturbing axle housing) as follows: Remove axle shaft flange mounting bolts, pull both axle shafts out of housing approximately 8" (to clear differential). Drain axle lubricant and remove inspection plate. Loosen hose clamps and slip hoses off vacuum cylinder hose connections. Disconnect rear universal joint by removing trunnion bearing "U" bolts from rear flange, slide propeller shaft assembly forward, tape universal bearing trunnions in place to prevent loss of needle bearing, swing propeller shaft out of the way (tie up to frame side rail). Remove capscrews mounting carrier on axle housing (support carrier by means of long punch inserted through one upper mounting screw hole in housing before removing last mounting screw). Place support jack under carrier assembly, roll assembly straight forward until differential clears housing, remove carrier assembly from beneath tuck.

Axle Shaft Removal & Wheel Bearing Adjustment: Same as for regular rear axle (see above).

SHOCK ABSORBERS

Delco Hydraulic type. Single or double acting piston types or Direct acting type.

Direct Acting Types

Front—1052-M (½, ¾, 1 Ton).
Rear—1066-Z (½ Ton), 1066-T (¾ Ton).

Single Acting Types

Rear—1431-Y, Z (¾ Ton 1950).

Double Acting Types

Front—1730-B (exc. C-O-E), 1730-C, D (C-O-E.)
Rear—1722-F, E (1 Ton Dubl. Duty), 2000-W, V (1½ Ton, School Bus, & C-O-E).

FRONT SUSPENSION

Front Suspension: Conventional "I" beam section front axle with Reverse Elliott ends and semi-elliptic springs.

Kingpin Inclination—7° 10' ±1° crosswise (All).

Camber—1° ± ½° (All). Bend axle for corrections (when kingpin inclination is likewise off).

Caster—See table below. All specifications ± ½°. Use wedge shims for minor corrections (up to 2°), bending tools for greater corrections.

	Caster	Toe-In
½ Ton	1¾°	1/16-3/16"
¾ Ton (exc. Fwd. Contr)	2½°	1/16-3/16"
¾ Ton Fwd. Contr.	3¼°	1/16-¼"
1 Ton Fwd. Contr.	2¼°	1/16-¼"
1, 1½, 2 Ton (exc. (C-O-E)	2¾°	1/16-¼"
C-O-E Trucks	3°	1/16-¼"

Toe-In—See table above. Adjust by turning tie rod.

CAUTION—Tie rod ends must be aligned with studs.

Steering Geometry—Outer wheel turned 20°, inner wheel 23° ± 2° (All Models).

STEERING GEAR

Saginaw Model. Ball bearing (re-circulating ball) Worm-and-Nut. Chevrolet Part Nos. as follows:

270927 (½ Ton & ¾ Ton with 3-Spd. Transmission), 270221 (¾, 1, 1½ Ton with 4-Spd. Transmission), 270224 (2 Ton & School Bus), 270635 (C-O-E).

See Steering Gear Section for complete data.

BRAKES

Service Brakes: Three different hydraulic types used as follows:

Chevrolet Hydraulic—(1950) All Models, (1951) ¾ & 1 Ton (Front & Rear), 1½ & 2 Ton (Rear only).
Chevrolet Bendix—(1951) ½ Ton.
Chevrolet Twinplex—(1951) 1½&2 Ton (Rear only).

See Brake Section for complete data.

Wheel Cylinders—Size stamped on housing under adjusting cup lock spring.

Drums—Cast iron rim with steel web.

	Diameter Front	Rear
½ Ton	11"	11"
¾ Ton	11"	12"
1 Ton	12"	14"
1½ & 2 Ton (1950)	14"	16"
1½ & 2 Ton (1951)	14"	15"

Lining—Molded type. (Riveted on 1½ & 2 Ton), Bonded on others.

Thickness—.187-.194" (11" Drum except 1951 ½ Ton), .202-.222" (11" Drum 1951 ½ Ton), .265-.272" (12", 14" & 16" Drum), .392-.412" (15" Drum, 1951 Twinplex).

Clearance—Adjust for clearance as follows:

½ Ton 1950 (Front & Rear), ¾ Ton 1950-51 (Front & Rear), 1, 1½ & 2 Ton (Front Only)—Turn adjusting wheel until shoe drags slightly, then turn wheel back 5 notches.

1 Ton 1950-51 (Rear Only), 1½ & 2 Ton 1950 (Rear Only)—Turn adjusting pinion stud in clockwise direction (facing flange plate from center of truck) until shoe drags slightly, then back off stud 2/3 of a turn or 4 sides of the hex stud.

½ Ton 1951 (Front & Rear)—Remove adjusting hole cover and turn brake adjusting screw until light drag is felt (Tap backing plate until drag remains constant), then back off adjusting screw 14 notches.

1½ & 2 Ton 1951 (Rear Only)—Remove adjusting covers from flange plate and turn rear adjusting screw until slight drag is felt, then back off 3 notches. Repeat on front adjusting screw. (2 adjustments on each wheel).

Parking Brake (Except 1951 1½ & 2 Ton): Hand lever or Foot pedal operated. Applies rear wheel service brakes.

1951 1½ & 2 Ton—Hand lever operated. Brake consists of brake drum attached to output shaft of transmission ahead of universal joint, and an internal and external shoe which grips the drum between them, contacting about ¼ of drum circumference.

Parking Brake Adjustment—***See "Brake Notes" in Chevrolet Special Data.***

Hydrovac Brake System: Std. on 2 Ton, Cab-Over-Engine, and 1½ Ton Special Models. Consists of special power unit (vacuum power used to augment regular hydraulic brake actuation) in hydraulic line between master cylinder and wheel cylinders.

See Brake Section for complete data.

CYLINDER HEAD

CYLINDER HEAD INSTALLATION: Use Torque Indicating Wrench to tighten cylinder head bolt nuts and capscrews, tighten in correct sequence as shown in diagram for each car.

Tightening Torque—See Tightening (Torque Wrench) Specifications below.

CHRYSLER 6-DE SOTO-DODGE-PLYMOUTH

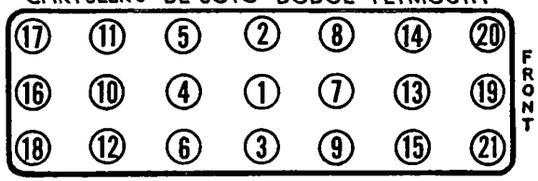

CHRYSLER 8

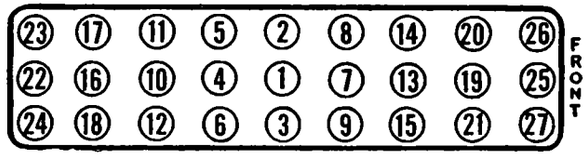

CHRYSLER V8

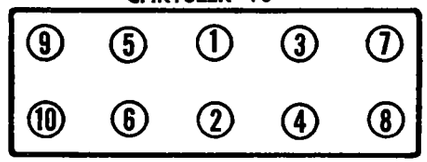

TIGHTENING SPECIFICATIONS

EXCEPT V8 ENGINE

	Ft.Lbs.	In.Lbs.
Spark Plugs (14 MM. Type)	30-32	360-384
Cyl. Head Nuts 7/16"	52-57	624-684
Cyl. Head Nuts 1/2"	85-90	1020-1080
Cyl. Head Capscrews (Plain hd.)	65-70	780-840
Cyl. Head " (Cupped hd.)	67-72	804-864
Main Bearing Cap Nuts	75-80	900-960
Main Bearing Capscrews	80-85	960-1020
Connecting Rods Nuts 3/8"	45-50	540-600
Connecting Rods Nuts 7/16"	50-75	600-900
Flywheel Nuts	55-60	660-720
Manifold Stud Nuts	15-20	180-240
Starting Crank Jaw	108 min.	1296

V8 ENGINE

	Ft.Lbs.
Chain Case Cover Screw	30-35
Cylinder Head Cover Stud	12-17
Cylinder Head Cap Screw	80-85
Cylinder Head Water Outlet Elbow Screw	30-35
Crankshaft Bearing Cap Screw	80-85
Crankshaft Balancer Screw	130-140
Connecting Rod Bearing Cap Nut	45-50
Camshaft Sprocket Hub Nut	120-130
Oil Filter Attaching Screw	25-30
Fan Attaching Screw	12-17
Fan Belt Idler Pulley Nut	40-45
Water Pump Inlet Elbow Screw	25-30
Water Pump Body Screw	25-30
Intake Manifold Screw	25-30
Exhaust Manifold Stud	30-35
Spark Plug Assembly	30-32

CAMSHAFT & BEARINGS

V8 ENGINE

CAMSHAFT REMOVAL: Remove valve tappet cover, cylinder head cover and rocker arm assemblies and push rods. Remove valve tappet assemblies, remove distributor. Remove timing chain cover case *(CAUTION*—One cover attaching bolt located in case back of water pump), timing chain and camshaft sprocket. Camshaft sprocket and timing chain can be removed by taking off the camshaft hub nut, fuel pump eccentric and dowel assembly. Chain and sprocket can then be removed. Remove four camshaft thrust plate screws, distributor and oil pump drive gear. Pull out the camshaft being careful not to damage camshaft bearings.

VALVE SYSTEM

V8 ENGINE

VALVE LIFTER REMOVAL: To remove the complete valve lifter assembly, remove cylinder head cover, rocker arm assembly, push rods and valve chamber cover. On early production engines the above procedure must also be followed to remove valve lifter plunger assembly from valve lifter body. On later engines the valve push rod hole has been enlarged, making it only necessary to remove the cylinder head cover, and then proceed as follows: Install valve spring compressing tool C-3034 over the rocker arm so heel of tool is resting on valve side. Make certain valve is seated on low part of cam lobe. (See following for camshaft position). Using handle of tool for leverage, compress valve springs sufficiently to raise rocker arm above push rod. While holding in this position, slide rocker arm to one side. Remove push rod, and insert tool C-3039 (standard spring jaw type holding tool) into push rod hole, positioning it over valve lifter plunger assembly. Pull the assembly from valve lifter body being careful not to pull body from lifter bore.

Low Point of Camshaft Lobe—With distributor rotor at No. 1 firing position, the following lifters will be on the low side of camshaft lobe, Nos. 1, 2, 7, 8 **intake.** Nos. 1, 2, 4, 8 **exhaust.** With distributor rotor at No. 6 firing position the following lifters will be on the low side of camshaft lobe, Nos. 3, 4, 5, 6 **intake.** Nos. 3, 5, 6, 7 **exhaust.**

ORIGINAL BORE & PISTONS

ALL MODELS

ORIGINAL PISTON & CYLINDER BORE SIZES: Original production (new engine) piston and bore sizes indicated by letter located as follows:

Piston Size—Letter stamped on piston head (number following letter on Dodge pistons is weight).

Bore Size—Letter stamped on pad on distributor side of engine at top of block. Do not confuse this letter with "Special Standard" size letter indicating oversize bore.

"Special Standard" Size Bore—Letter "A" or "AB" following engine number indicates engine has .020" larger standard cylinder bore.

'Special Standard' Pistons and Bores (.020" oversize)—Original production (new engine) piston and bore sizes which are .020" oversize (see Engine Bore Size data above) are graded in same steps as for standard sizes but these pistons and bores are marked "P", "Q", "R", "S", "T".

NOTE—When measuring piston diameter take readings at right angles to the pin hole and ¾" from bottom of the skirt.

ORIGINAL BEARING SIZES

ALL MODELS

ENGINE NUMBER LETTERS ('SPECIAL STANDARD BORE & BEARING SIZES):—Letters used with engine number (**not in circular pads**) denote following 'special standard' sizes: **'A'**—.020" larger standard cylinder bore **'B'**—.010" smaller standard main and connecting rod bearings. **'AB'**—Cylinder bore, main and connecting bearings 'special standard'.

PLYMOUTH ONLY

►**.001" THICKER WALL MAIN & CONNECTING ROD BEARINGS:** When these bearings installed on production engines, machined surface of crankshaft center counterbalance marked as follows:

Connecting Rods—Shaft marked R1, R2, R3, R4, R5, or R6 depending on which connecting rod is fitted with a .001" thicker wall bearing.

Main Bearings—Shaft marked M1, M2, M3, or M4 depending on which journal fitted with a .001" thicker wall bearing.

►***CAUTION: These bearings used only in positions indicated by marks (not necessarily in complete sets).***

BRAKE NOTES

HAND BRAKE ADJUSTMENT (Internal Type): Place transmission shifting lever in neutral and be sure the hand brake is released. Disconnect front end of propeller shaft and remove adjusting screw cover plate. Loosen brake cable guide clamping screw and back off cable adjusting nut. Turn brake shoe adjusting nut to decrease shoe-to-drum clearance until a slight drag is felt on drum. Back off adjusting nut one full notch (using spanner wrench C-3014) to give approx. .010" clearance. (NOTE—be sure the two raised shoulders on the adjusting nut are seated in the grooves on adjusting sleeve). The cable length adjusting nut should be positioned against cable housing so there is at least .005" (but not more than .010") clearance between operating lever and brake shoe table. To lock the adjustment, tighten cable housing clamp securely and then tighten cable adjusting nut against housing. Test hand brake lever for travel. When properly adjusted, 4 to 6 clicks of ratchet should be obtained to hold car. Install adjusting screw cover plate and connect propeller shaft.

HAND BRAKE ADJUSTMENT (External Type): The hand brake adjustments can be made from beneath car as follows: Fully release hand lever (cable length adjusted by means of clevis at lower end). Adjust anchor screw for .015-.020" band to drum clearance by bending back tab of anchor screw lock and turning screw (on lower right side of brake), then lock screw by bending tab against flat of screw. Loosen guide bolt locknut and adjust guide bolt adjusting nut for .015-.020" band to drum clearance (these two nuts located in front of release springs at left side), then tighten locknut. Turn large adjusting bolt nut (on lower end of bolt below springs) for .015-.020" band to drum clearance for upper half of band. Groove in upper end of this nut must contact ridge on band operating lever spacer above nut.

NOTE—Clearance between side of anchor bracket at center of band and anchor must not exceed .005" (if clearance excessive band may be distorted when brake applied). To correct, compress saddle in vise or place on block and tap lightly with a hammer.

MODEL IDENTIFICATION

SERIAL NUMBER: On left front door hinge post.

1950 Numbers—	Detroit	Los Angeles
C-48S Royal	70,058,001	65,004,001
C-49W Windsor	70,794,001	67,011,001
1951 Numbers—		
C-51 Windsor	70,081,001	65,007,001
C-51 Windsor Deluxe	70,891,001	67,026,001

ENGINE NUMBER: Stamped on boss on left side of cylinder block between Nos. 1 and 2 cylinders.

TUNE-UP

COMPRESSION PRESSURE: 120-150 lbs. at cranking speed of 150 RPM.

VACUUM READING: Steady 18-21" idling at 6 MPH.

FIRING ORDER: 1-5-3-6-2-4. See diagram.

SPARK PLUG GAPS: .035". Limits plus or minus .001". Plugs—Auto-Lite Resistor Type AR5 ('50), AR8 ('51).

DISTRIBUTOR: Breaker Gap—.020".
Cam Angle—34½° to 38°. **Do NOT** exceed Breaker Gap limits (.018 to .022") to obtain cam dwell.
Breaker Arm Spring Tension—17-20 ozs.
Automatic & Vacuum Advance—*See Ignition.*
Condenser Capacity—.25-.28 microfarad.

IGNITION TIMING: At Top Dead Center (TDC).
Timing Procedure—*See Ignition Timing.*
Timing Mark—Vibration Dampener marked "DC" at top dead center position with 15-1° graduations before and after this point. Set timing with DC mark at pointer on chain case cover, then set manual. (octane selector) adjustment.
Manual (Octane Selector) Adjustment—Set for slight ping with 10-30 MPH. range when accelerating with wide open throttle. Do not vary initial timing more than 4° advance or retard.

CARBURETION:
Idle Setting—Set idle adjusting screw for smooth idling with warm engine (idle screw ½-1½ turns open), turn screw out for richer mixture.
Idle Speed—(Std. Trans.). Adjust to 6 MPH. (Automatic Trans.). (1950) 450-475 RPM., (1951) 475-500 RPM.
Float Level—Top of float (not soldered seam) 5/64", plus or minus 1/64", below top edge of bowl.
Accelerating Pump—Center Hole (med. stroke) Normal. Inner Hole—Summer, Outer Hole—Winter,
Choke Setting—(1950) Adjust by inserting a gauge pin through the hole in automatic choke lever shaft and slot in base mounting flange (to position shaft) and adjust carburetor choke valve lever so that choke valve is tightly closed.
Choke Setting—(1951) Cover "mark" centered on index.

Fuel Pump Pressure: 3½-5½ lbs.

MANIFOLD HEAT CONTROL: Automatic thermostatic type. See that valve operates freely. When installing coil, wind free end up **approx. ¾ turn,** not over one turn or under ½ turn, hook end on stop stud.

VALVE TAPPET CLEARANCE: .008" Intake, .010" Exhaust, Hot.

IGNITION

IGNITION SWITCH: Mitchellock. Combination ignition-starter switch. Starter operates when key held fully to the right. Key automatically returns to "on" position. Coil lead protected by armored cable through fir wall.

COIL: Auto-Lite No. CR-4001. On bracket above distributor.

Ignition Current—2.25 amperes idling, 5 stopped.

CONDENSER: Auto-Lite No. IG-3927G.
Capacity—.25-.28 microfarad.

DISTRIBUTOR: Year	U. S. Prod. Auto-Lite No.	Canada Auto-Lite No.
1950 Early	IAP-4102C	IAP-4012B-1
1950 Late	IAT-4004	IAT-4004C
1951	IAT-4012	IAT-4012C

Automatic advance type with vacuum spark control.

►*DISTRIBUTOR CAP POPPING OFF CORRECTION Early "IAP" Distributors): See "Auto-Lite IAP Distributors" in Electrical Equipment Section.*

►**"IAT" Distributor Note**—New "Pivoted Breaker Plate" type. *See Electrical Equipment Section for data.*
Breaker Gap—.020".
Cam Angle—34½° to 38° Closed.
Breaker Arm Spring Tension—17-20 ozs.
Rotation—Clockwise viewed from above.

Automatic Advance—IAP-4102B-1, IAT-4004C, IAT-4012C

Degrees	Distr. R.P.M.	Degrees	Eng. R.P.M.
Start	350	0	700
3	400	6	800
6	780	12	1560
9	1160	18	2320
12	1530	24	3060

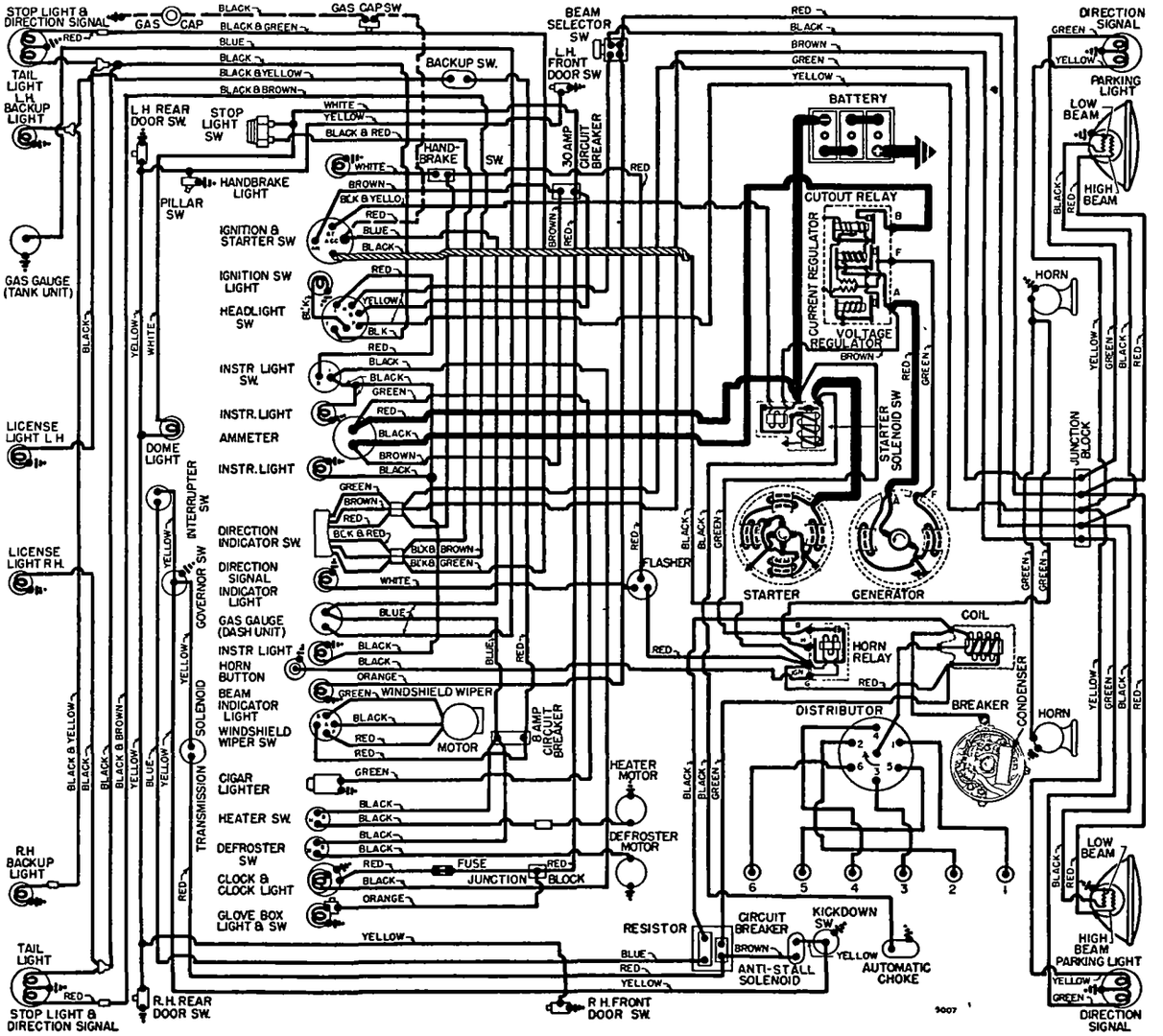

1950 MODELS

Automatic Advance—IAP-4102C-1, IAT-4004, IAT-4012

Start	350	0	700
1	450	2	900
5	800	10	1600
9	1300	18	2600
10	1425	20	2850

Vacuum Spark Control: Auto-Lite Unit. Integral type

Vacuum Advance—IAP-4102C, IAP-4012B-1, IAT-4004, IAT-4004C, IAT-4012, IAT-4012C

Distr. Degrees	Eng. Degrees	Vacuum (" of HG)
Start	0°	5"
2°	4°	7¼"
4°	8°	9⅜"
6°	12°	11⅝"
9°	18°	15"

Manual Adjustment—Provides for minor changes in ignition timing at distributor. See Ignition Timing.

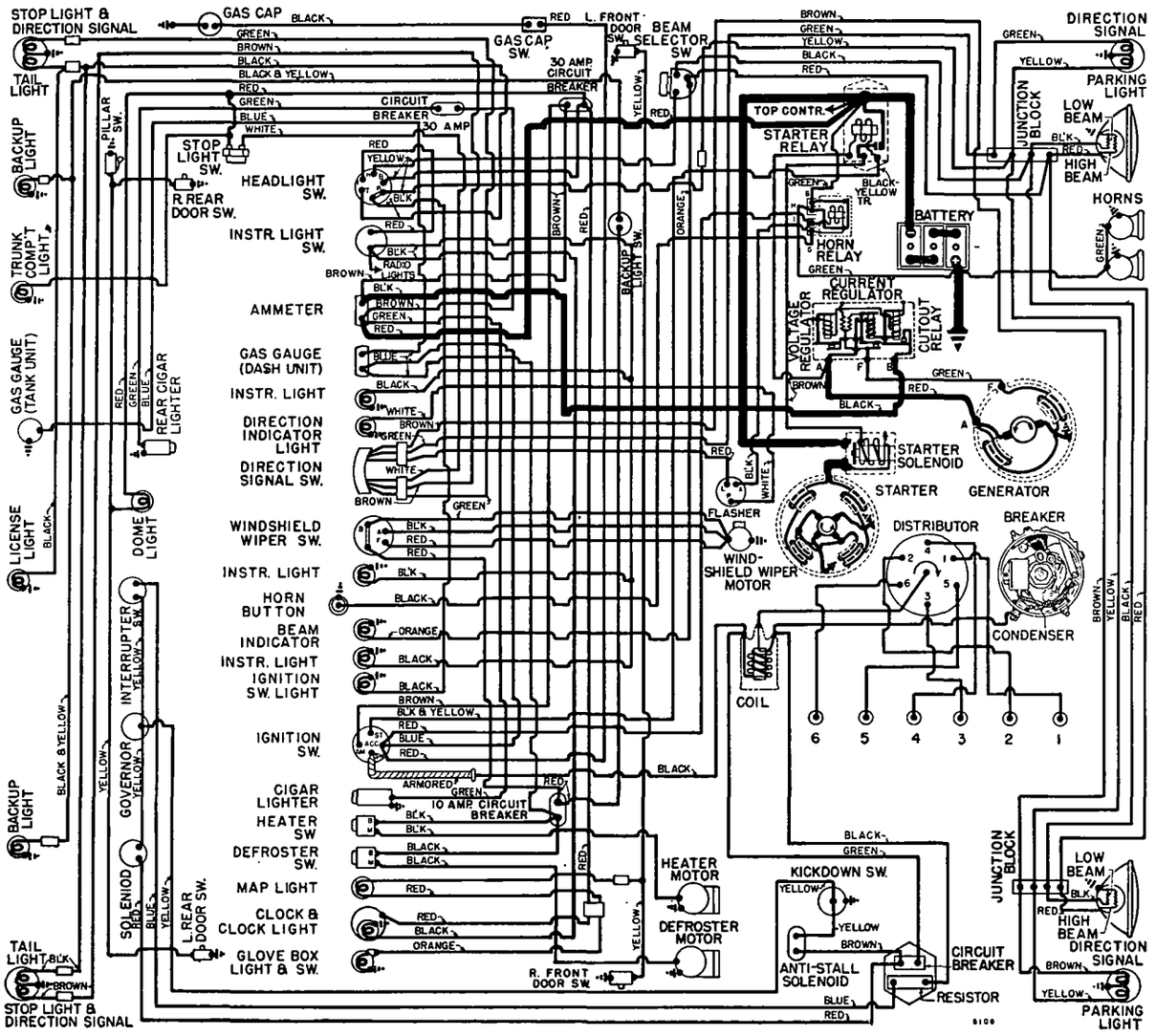

1951 MODELS

IGNITION TIMING

Std. Setting—Initial setting (for regular non-premium fuel) as shown below. See Manual Adjustment (following) for Final Setting.

NOTE—Impulse neutralizer marked 'DC' at TDC. with 15 (1°) graduations on either side.

Timing (Using Timing Light)—Connect timing light between distributor primary terminal and battery terminal on generator regulator. Set #1 or #6 piston in firing position (see setting above) with correct mark on impulse neutralizer aligned with pointer on chain case cover. Loosen lock-plate hold-down screw, center pointer on scale, tighten screw. Loosen lock-plate clamp bolt, rotate distributor until timing light just goes out, tighten clamp bolt. Check Manual Adjustment (following).

Timing (Using Synchroscope)—Tool C-374. Clip lead to #1 spark plug, direct light on impulse neutralizer (mark correct graduation with paint), idle engine and adjust distributor as directed above.

Manual Adjustment—Set to give slight ping from 10-30 MPH acelerating with wide open throttle from 10 MPH. To adjust, loosen lock-plate hold-down screw, move the plate (not more than 4° before or after initial setting) counter-clockwise (if no ping noted), clockwise to retard spark (if ping too severe), tighten screw.

CARBURETOR

Carter (Ball & Ball)—Used on all models. 1½" single barrel, downdraft type. Slow closing throttle and Kick-down switch used for hydraulic operated transmission.

Year	Application	Carb. No.
1950	Synchro-mesh Trans.	EX3①
1950	Automatic Trans.	E7L4
1951	Synchro-mesh Trans.	E9C1
1951	Automatic Trans.	E9A1

①—Superseded by Carb. No. EX3R.

See Carburetor Section for complete data.

Settings (Idle Setting, Float Level, and Accelerating Pump): *See Tune-Up data.*

Metering Jet—*See Carter (B&B) Jet Table in Carburetor Section for complete data.*

Slow-closing Throttle: Solenoid type. Non-adjustable. *See Carburetion Equipment Section for complete data.*

Automatic Choke: Sisson type. *See Carburetion Equipment Section for complete data.*

Fast Idle: Setting—(EX3, E7L4) Throttle stop dog linked to choke valve so that stop dog rotated and throttle opened to fast idle position when choke closed for starting. No adjustment required.

Fast Idle: Setting—(E9C1, E9A1) .018" throttle opening with choke valve held closed and throttle stop screw backed off.

Automatic Choke: Sisson Type (1950). Carter Climatic Control (1951).

Setting—Sisson Type. With throttle 1/3 open, insert gauge pin through hole in automatic choke lever shaft and slot in base mounting flange (to position shaft), adjust carburetor choke valve lever so that choke valve is closed tightly.

Setting—Carter Climatic Control. Centered (coil housing at index mark). *Do not change setting for hot or cold climate.*

See Carburetion Equipment Section for complete data.

CONTINUED ON NEXT PAGE

C NTINUED FR M PRECEDING PA E

CARB. EQUIPMENT

Air Cleaner: AC No. 1544349 Heavy Duty Oil-bath type. Filter Element AC No. 21.

Servicing—Clean filter element in kerosene, clean out oil reservoir and fill to indicated level with SAE No. 50 oil (20W oil below 32°F., approx. 1 pint required). Service cleaner whenever sump is half filled with oil and dust sludge. NOTE—Crankcase ventilator air cleaner in oil filler cap should be cleaned in kerosene and re-oiled by dipping in SAE No. 50 engine oil at 1000 mile intervals.

Fuel Pump: Carter No. M639SL, SZ. Vacuum diaphragm type.
Pressure—3½ to 5 lbs.
See Carburetion Equipment Section for complete data.

Fuel Tank Filter: Oillite metal filter in tank.

Servicing—If more than 2 pints water in tank, fuel will not pass filter. Remove filler cap and drain plug, draining tank. Disconnect fuel line at some point between pump and tank, blow out line and filter with air, increasing pressure as filter is cleaned. Flush tank with clean gasoline.

Gasoline Gauge: Auto-Lite Electric type.

Dash Unit (1950)—Auto-Lite No. 12129A.

Dash Unit (1951)—Auto-Lite No. 12462A. (Estate Wagon) 12463A.

Tank Unit—Auto-Lite No. 11538A.

See Carburetion Equipment Section for complete data.

BATTERY

Willard or Auto-Lite—17 Plate, 6 Volt, 120 Ampere Hour Capacity (20 hour rate).
Starting Capacity—152 amperes for 20 minutes.
Grounded Terminal—Positive (+) to engine.
Location—Under hood in left fender shield.

STARTER

Auto-Lite No. (1950) MCL-6101, MCL-6109, MCL-6108. (1951) MCL-6109. (Canada 1950) MAX-4090.
Armature—Auto-Lite No. MCH-2039 (MCL-6101), MAW-2213 (MAX-4090), MCH-2070 (MCL-6108,6109).
Drive—Solenoid pinion shift & overrunning clutch.
Rotation—Counter-clockwise at commutator end.
Brush Spring Tension—42-53 ozs. (new brushes).

Performance Data (MAX-4090)

Torque	R.P.M.	Volts	Amperes
0 ft. lbs	5300	5.5	65
8.0 "	Lock	2.0	410

Performance Data (MCL-6101, MCL-6108, MCL-6109).

Torque	R.P.M.	Volts	Amperes
0 ft. lbs	4900	5.5	65
8.0 "	Lock	2.0	410

Starting Switch: Auto-Lite Solenoid type controlled by turning ignition switch past "ON" position.

Switch No.	Use with Auto-Lite Starter
SS-4707	MAX-4090, MCL-6101
SSX-4001	MCL-6109
SSX-4101	MCL-6108

See Electrical Equipment Section for complete data.

GENERATOR

1950 (Early) Synchro-mesh Trans.	GGW-6001A
1950 (Late) Synchro-mesh Trans.	GGW-6001J①
1950 (Early) Automatic Trans.	GGU-6001A
1950 (Late) Automatic Trans.	GGU-6001G①
1950 (Canada)	GDZ-4801R
1951	GGW-6001J①
1950 (Early) City Police & Taxi	GGU-6001A
1950 (Early) State Police	GGU-6001E
1950 (Early) City Police & Taxi	GGJ-6001A
1950 (Early) State Police	GGJ-6001B
1950-51 City Police & Taxi	GGU-6001G①
1950-51 State Police	GGU-6001H①
1950-51 City Police & Taxi	GGJ-6001F①
1950-51 State Police	GGJ-6001G①

①—Narrow groove pulley.

Two brush type current-voltage regulators.
Maximum Charging Rate—See table below.
Charging Rate Adjustment—None. See Regulator.

Performance Data (GGW-6001A, J)

Amperes	Volts	Cold—R.P.M.—Hot
0	6.4	870-970 — 950-1050
40	8.0	1800-2000 — 2150-2350

Performance Data (GDZ-4801R)

0	6.4	870-970 — 950-1050
35	8.0	1800-2000 — 2150-2350

Performance Data (GGJ-6001A, F, B, G)

0	6.4	600-700 — 650-750
50	8.0	1400-1600 — 1550-1750

Performance Data (GGU-6001A, G, E, H)

0	6.4	750-850 — 800-900
45	8.0	1450-1650 — 1650-1850

Rotation—Counter-clockwise at commutator end.
Brush Spring Tension—(GGW, GDZ, GGU) 35-53 ozs. (new brushes); (GGJ) 30-37 ozs. (new brushes).
Field Current—(GGW, GDZ) 1.6-1.8 amperes, (GGJ) 1.7-1.9 amperes, (GGU) 1.7-1.8 amperes, all at 6.0 volts.
Motoring Current—(GGW) 4.6-5.2 amps., (GDZ) 4.2-4.6 amps., (GGJ) 4.3-4.8 amps., (GGU) 5.5-6.5 amps., all at 6.0 volts.

Belt Adjustment: Loosen pivot and clamp bolts, pull out on generator until belt is snug (40-50 lbs. tension secured on scale attached to field frame) or ¼" belt deflection between generator and pump.

REGULATOR

Auto-Lite Regulator No.	for Auto-Lite Gen. No.
VBA-4202A or ①VBA-4204A	GGJ-6001A, B, F, G
VAV-6001A or ①VAV-6002A	GGU-6001A, E, G, H
VAV-6001B	GGU-6001G, T, R
VRP-6004A	GGW-6001A, J
VBE-6001A	GGW-6001A

①—For negative ground.
See Electrical Equipment Section for complete data.
NOTE—Regulator case cover is sealed. Serviced on exchange basis if seals not broken (to remove cover)

Cutout Relay

Cuts In (VAV, VRP)—6.4-7.0 volts (set to 6.4-6.6 volts).
Cuts In (VBA, VBE)—6.3-6.8 volts (set to 6.4-6.6 volts).
Cuts Out (All)—4.1-4.8 volts (approx. 4-6 amps. dis.)
Air Gap (All)—.031-.034" with contacts pen (check at hinge end of core).

Voltage Regulator

Setting (VAV, VBA, VBE)—7.1-7.4 volts at 70°. (VRP)—7.2-7.5 volts at 70°. See Electrical Equipment Section for settings at other temperatures.
Checking (without breaking seals) & Adjustment—*See Electrical Equipment Section.*
Air Gap (All)—.048-.052" with contacts just opening.

Current Regulator
►(Temperature Compensated Regulators)

	Nominal Setting
VRP-6004A	40
VAV-6001A, VAV-6002A, VBE-6001A	45
VBA-4202A, VBA-4204A, VAV-6001B	50

►*CAUTION*—Nominal setting is approx. setting at 70°F. room temperature after regulator has been run (will be higher started cold). See Electrical Equipment Section for settings at various temperatures.
Checking (without breaking seals) & Adjustment—*See Electrical Equipment Section.*
Air Gap (All)—.048-.052" with contacts just opening.

LIGHTING

Headlamps: Corcoran-Brown "Sealed Beam" type with new "Bull's-eye lens". Beam selector switch on toeboard controls upper and lower beams.
See Electrical Equipment Section for complete data.
Headlamp Adjustment—Aim upper beam straight ahead (hot spot center 3" below lamp center height).
Beam Indicator—Lighted when Country (upper) beams in use. Located on lower right corner of speedometer face.

Direction Signal: *See Electrical Equipment Section.*
Direction Signal Indicator—In lower left corner of speedometer dial.
Direction Signal Flasher—Chrysler No. 1257223.

Switches

Lighting—Chry. No. (1950) 1339720, (1951) 1339691.
Beam Selector—Chry. No. (1950) 1253460, (1951) 1253003.
Directional Signal—Chry. No. (1950) 1235606, (1951) 1370454.

MISC. ELECTRICAL

CIRCUIT BREAKERS: Lighting—On back of lighting switch. Vibrating type, protects lighting circuits.
Direction Signal—On flasher behind instrument panel. Vibrating type. Protects direction signal
Auxiliary Circuit Breaker—8 ampere. Protects the Windshield Wipers and Back-Up Light.
Transmission Solenoid—Vibrating type mounted as an assembly with resistor unit.

FUSES: Clock—2 ampere. In clock lead.
Clock—2 ampere. In clock lead wire.
Radio—14 ampere. In fuse connector at radio.

HORNS: Auto-Lite No. (1950) HW-4101 (Low Pitch), HW-4102 (High Pitch). (1951) HW-4107 (Low Pitch), HW-4108 (High Pitch).

Horn Relay: Auto-Lite No. 4104. Connected through ignition switch, operates only when ignition "ON".
Contacts Close—1.5-3.0 volts (seal to core with 4.0 volts maximum).
Contacts Open—.5 volt min. (open from seal).
Contact Gap—.026". Air Gap—.016-.020" (armature air gap with contacts closed but not sealed), .015-.018" (gap between armature leg and yoke with armature sealed to cor).

ENGINE

ENGINE SPECIFICATIONS: Six cylinder, "L" head.
Bore—3 7/16". **Stroke**—4½".
Displacement—250.6 cu. ins. **Rated H.P.**—28.36.
Developed Horsepower—116 at 3600 RPM.
Compression Ratio—7.0-1 Std. cast-iron head.
Compression & Vacuum Reading—*See Tune-up data.*

ORIGINAL BORE & PISTONS: *See Chrysler Special Data.*

ORIGINAL BEARING SIZES: *See Chrysler Special Data.*

TIGHTENING TORQUES: *See Chrysler Special Data.*

CYLINDER HEAD: Tightening Torque & Cylinder Head Diagram—*See Chrysler Special Data.*

PISTONS: Aluminum alloy, U-slot, cam ground type. NOTE—Skirt cam ground (.010-.014" smaller diameter across pin bosses) and tapered (.0002-.0012" smaller diameter at top of skirt than at bottom).
Length—3⅞". **Weight**—18.5 ozs. (stripped).
Clearance—.0005" to .0015" on thrust face at center of skirt.
Removal—Pistons and rods removed from above.

Fitting New Pistons: Check piston size with micrometer across large diameter at bottom of skirt. Insert .002" x ½" feeler between cylinder wall and piston (inverted, pin removed) on side opposite slot. Feeler pull 5-7 lbs. (with piston and block at 70°F).

Replacement Pistons: .005", .020", .030", .040", .060" OS. NOTE—Cylinder recondition limits .0005" taper and .0005" out-of-round. Badly scored bores or with taper over .030" or out-of-round over .004" require reboring and honing to limits listed above.

Installing Pistons: Slot away from camshaft.

PISTON RINGS: Two compression, two slotted oil control, coated rings per piston, all above pin. Oil ring grooves drilled for oil drainage (lower groove slotted).

Ring	Width	End Gap	Side Clearance
Compr. (#1)	3/32"	.007-.015"	.0025-.004"
Compr. (#2)	3/32"	.007-.015"	.002-.0035"
Oil Contr. (#3,4)	.5/32"	.007-.015"	.001-.0025"

Installing Rings—#1 Compr. with step on inner edge up. #2 Compr. with step on inner edge up or if step on outer edge install with step down.

Replacement Rings: .005" .020" .030" .040" .050" .060" OS.

PISTON PIN: Diameter—55/64". **Length**—2⅞". Floating type with locking ring at each end.
Pin Fit in Piston—.0000" to .0005". Thumb push fit with piston heated to 160°F.
Pin Fit in Rod Bushing—.0001-.0004". Tight thumb push fit at normal room temperature.

Replacement Pins: Standard size and .0006", .003", .008" Oversize.

CONNECTING ROD: Length—7⅞". **Weight**—32.4 ozs. with bolts less bearings. NOTE—Piston pin hole (upper bearing) bronze bushed.
"Original Bearing Sizes" in Chrysler Special Data.
Lower Bearing—Removable, precision type, thin babbitt on steel. No shims.
Clearance—.0005-.0015". **Sideplay**—.006-.011".

Bearing Adjustment: None (no shims). Replace bearings. Do not file rods or caps.
Replacement Bearings: .001", .002", .010", .012" U.S.
Installing Rods: Oil metering hole toward camshaft.

CRANKSHAFT: 4 bearings, 9 integral counterweights with vibration dampener on front end.
Bearing Type—Removable, precision type, thin babbitt on steel. No shims.
Clearance—.0005-.0015".

Bearing Adjustment: None (no shims). Replace bearings. Do not file rods or caps.

Replacement Bearings: .001", .002", .010", .012" U.S.

End Thrust: Taken by flange faces on rear (#4) main bearing. **Endplay**—.003-.007".

CAMSHAFT: 4 bearing. Non-adjustable chain drive.
Bearing Diameters—#1, 2"; #2, 1 31/32"; #3, 1 15/16"; #4, 1 1/4".
Bearing Type—Removable steel-backed, babbitt-lined bushings (except #4 machined in block).
Clearance—.001-.003" (#1), .0015-.0035" (all others).

End Thrust: Taken by thrust plate behind camshaft sprocket hub. **Endplay**—.002-.006".

Timing Chain: Width 1". Pitch .500" (½"). Length 24" or 48 links.

Camshaft Setting: Sprockets marked. Mesh chain with sprockets turned so that '0' marks are adjacent and in line with a straightedge across shaft centers.

VALVES:	Head Diameter	Stem Diameter	Length
Intake	1 23/32"	.3405-.3415"	4 25/32"
Exhaust	1 17/32"	.3395-.3405"	4 25/32"

	Seat Angle	Lift	Stem Clearance
Intake	45°	3/8"	.001-.003"
Exhaust	45°	3/8"	.002-.004"

Valve Seat Width (Max.) 7/64".

Valve Guides: Remove from above. Press new guides in (stepped end down) with upper end 7/8" below top of block (Tool CM-83), finish ream to .3425-.3435".

Valve Springs: Install with closely coiled end to top. Free Length 2".

	Spring Pressure	Length
Valve Closed	40-45 lbs.	1¾"
Valve Open	110-120 lbs.	1⅜"

Valve Lifters: Mushroom type (remove from below). Stem Diam. 5/16". Ream holes from above (pilot in valve guide). Oversizes .001", .008", .030" & .060".
Lifter Clearance in Block—.000-.001".

VALVE TIMING

Tappet Clearance: .008" Intake, .010" Exh. (hot and idling). NOTE—Tappet screws self-locking (no locknuts). Remove right front wheel and lower wheel housing panel for access to valves.

Valve Timing: See Camshaft Setting above.
Intake Valves—Open 12° BTDC. Close 44° ALDC.
Exhaust Valves—Open 50° BLDC. Close 6° ATDC.
Valve Timing Check—With .014" (cold) tappet clearance #6 intake valve should open with #6 piston within range of 5° to 17° or .011" to .122" BTDC with 5th to 17th graduation before DC mark on impulse neutralizer aligned with pointer on chain case cover. Reset tappet clearance to running clearance .008" Hot.

LUBRICATION

Engine Oiling System: Pressure through new Full-flow oil filter to main and connecting rod bearings, camshaft bearings, and timing chain. "Rotor" type oil pump used.
Crankcase Capacity—5 quarts (refill).
Normal Oil Pressure—40-50 lbs. at 20 MPH. with warm oil.
Oil Pressure Relief Valve—Opens at 40-45 lbs. Under plug on left side of crankcase ahead of the oil line to provide additional oil at idling speeds. Adjustable by replacing spring. 3 types: 1) Plain—unpainted. 2) Light—painted Red. 3) Heavy—painted Green. CAUTION—Install replacement spring of same color as original spring.

Oil Pump: "Rotor" type on right side of crankcase.

Oil Filter: "Full-flow" type. All oil under full pressure passes through filter before entering oil passage. Safety valve in filter opens if element is clogged allowing oil to pass directly to engine.
Servicing—Install new filter element and cover gasket at 5000 mile intervals (or earlier if required). Change oil at same time. **Checking:** If oil pressure drops to 35-45 lbs. with warm oil, filter element may be clogged and should be replaced. to bring oil pressure to normal 40-50 lbs. at 20 MPH.

Oil Pressure Gauge: Auto-Lite No. (1950) 12126A, (1951) 12461A. Not electric.

COOLING

Cooling System: Positive circulation with pump on front of engine, by-pass thermostat, and water distribution tube in cylinder block behind pump.
Capacity—(1950) 17 qts., (1951) 15 qts.

Water Pump: Packless type with grease fitting.
See Water Pump Section for complete data.
Removal—Drain cooling system, remove fan belt, disconnect hoses at pump, remove pump mounting studs, lift fan and pump off.
Belt Adjustment—*See Generator Belt Adjustment.*

Thermostat: By-pass type in cyl. head water outlet.
Setting—Starts to open 157-162°F. Fully open 183°F.

Temperature Gauge: Auto-Lite No. (1950) 12127A, (1951) 12459A. Not electric.

CLUTCH

Borg & Beck, Model 10A7 (Synchro-mesh Trans.), **9A7** (Fluid Drive & Automatic Trans.), **11A6** (Taxi-cab). Single plate, dry disc type.
Identification Note—Cover stamped 953 (9A7), 930 (10A7), 931 (11A6).
See Clutch Section for complete data.
Facings—Woven type, 2 required.

	Inside Diam.	Outside Diam.	Thickness
9A7	6"	9¼"	.125" (⅛")
10A7	7"	10"	.125" (⅛")
11A6	6½"	11"	.125" (⅛")

Pedal Adjustment: Should just clear toeboard (adjust stopscrew on lower end of pedal) and have 1" free travel (adjusting nut on connector link at fork).

Removal: Remove release fork pull-back spring, Transmission (see Transmission) and housing underpan. Pull out clutch release bearing and sleeve. Mark cover and flywheel (or driving plate on Fluid Drive). Take out cover screws, remove assembly.

FLUID DRIVE

Chrysler—Fluid coupling at rear of engine. Optl.
See Transmission Section for complete data.

Oil Level: Keep to level of filler hole. Check at first

CONTINUED N NEXT PA E

CONTINUED FROM PRECEDIN PAGE

1000 miles and every 10,000 miles. Manufacturer recommends MOPAR Fluid Drive Fluid.

Removal: Remove transmission and clutch (see TRANSMISSION and CLUTCH), take off driver flange stud nuts (Tool C-589), lower fluid drive assembly out.

TRANSMISSION

STD. ROYAL MODELS

Own Make—All helical gear, constant-mesh, synchro-mesh (Second & High), sliding gear (Low & Reverse). *See Transmission Section for complete data.*

Transmission Control: Manual steering column shift. *See Transmission Section for complete data.*

Removal: Jack up front end of car, disconnect front universal (loosen companion flange nut if disassembling transmission—see Chrysler Special Data for Propeller Shaft Center Bearing Removal on 7 pass.). Disconnect speedometer cable, hand brake cable, gear-shift rods. Remove trans.-to-clutch housing capscrews and nuts. Pull unit to rear, down and out of car. NOTE—Use pilot studs when installing assembly.

TRANSMISSION

STD. WINDS R, OPTL. ROYAL

Hydraulically Operated Type (with Fluid Drive). Semi-automatic, four-speed transmission with hydraulic actuation and electrical control.
See Transmission Section for complete data.
Transmission Oil—3 pints, 10-W engine oil.

Transmission Control: See Transmission article for adjustment instructions.
See Transmission Section for complete data.
Kickdown Solenoid—Auto-Lite No. SSS-4003.
Governor—Auto-Lite No. (1950) TG-4205R, (1951) TGG-4001.
Kick-down Switch—Part of carburetor assembly. *See "Chrysler, DeSoto, Dodge Kick-down Switch" in Electrical Equipment Section.*
Ignition Interrupter Switch—On right side of transmission above Governor.

Removal: Remove access cover on right rear side of floorboard under front floor mat, disconnect speedometer cable, and governor, solenoid, and interrupter switch wires at transmission. Remove governor and solenoid. Disconnect hand brake cable at brake band, remove cable and cable anchor bracket. Remove brake support band, adjusting bolt bracket and lever as an assembly. Disconnect front universal (push yoke back), and gearshift rods at transmission. Drain transmission, replace drain plug. Disconnect transmission mounting bolts and lower assembly out of car.

►*INSTALLATION CAUTION*—Rear face of clutch housing and lower pan must be in correct alignment. Misalignment can cause hard shifting when transmission installed.

UNIVERSALS

Detroit Universal. Cross type with roller bearings. **(Royal)** Series 7200, **(Windsor)** Series 7300.
See Universals Section for complete data.

Propeller Shaft Center Bearing: Used on 7 Passenger.

REAR AXLE

Own Make—Semi-floating, hypoid gear type with Hotchkiss Drive.
See Rear Axle Section for complete data.

Car Model	Std. Trans.	Auto. Trans.
C-48 Royal	3.9-1 (39-10)	3.73-1 (41-11)
C-48 Royal (Limo.)	4.1-1 (41-10)	3.91-1 (43-11)
C-48 Windsor (5 Pass.)	3.73-1 (41-11)	——
C-48 Windsor (Limo.)	3.91-1 (43-11)	——
C-48 Sta. Wgn	4.1-1 (41-10)	3.91-1 (43-11)
C-51 5 Pass	3.9-1 (39-10)	3.9-1 (39-10)
C-51 Sta. Wgn.	4.1-1 (41-10)	3.9-1 (39-10)
C-51 8 Pass.	4.1-1 (41-10)	4.1-1 (41-10)

Removal: Disconnect rear universal, remove axle shafts (see below) and carrier assembly capscrews. **Axle Shaft Removal**—Remove wheel, hub, and drum assembly (use screw type hub puller—Tool C-675), block brake pedal, disconnect brake line at wheel cylinder, remove axle shaft key, install sleeve (Tool C-745) in oil seal, remove brake support (oil seal mounted in support), pull shaft and bearing (use C-499 puller). NOTE—Use puller C-293-C to remove bearing from shaft, puller C-748 or C-358 to remove inner oil seal, drift C-201 to install seal.

Axle Shaft Outer Oil Seal: New leather type mounted on brake support (backing plate).

Wheel Bearing Adjustment: Shims between backing plate and axle housing. With wheel and hub removed, check endplay with dial indicator. To adjust, remove backing plate (see above), add or remove shims (furnished .010", .0125", .015", .030" thick) equally at both wheels. **Endplay**—.003-.008".

SHOCK ABSORBERS

New "Oriflow" direct acting hydraulic type. Non-adjustable, non-refillable.
See Shock Absorber Section for complete data.

FRONT SUSPENSION

Front Suspension: Independent, linked parallelogram type with coil springs and direct acting shock absorbers.
See Front Suspension Section for complete data.
Kingpin Inclination—5° to 6½° crosswise.
Camber—Neg. ⅜° to Pos. ⅜° (¼-½° higher on left).
Caster—Neg. 1° to Neg. 3°. Neg. 2° preferred.
Toe In—0" preferred. Limits 0" to 1/16". Adjust both tie rods equally.
Steering Geometry—Inner wheel 21½° plus or minus 1°. Outer 20°.

STEERING GEAR

Own Make—3 tooth Worm-and-Roller. Similar to Gemmer model 335.
NOTE—See Gemmer 305, 335 & 375 article for data.
See Steering Gear Section for complete data.

BRAKES

Service: Chrysler "Safe-guard" Lockheed Hydraulic.
►*BRAKE SQUEAK OR SQUEAL CORRECTION—See "Lockheed-Chrysler Safe-guard Hydraulic" Brake in Brake Section.*
Front Wheels—Two-cylinder type (front shoe anchored at bottom and actuated by upper cylinder, rear shoe anchored at top and actuated by lower cylinder).
Rear Wheels—Double anchor type with single double-acting wheel cylinder.
See Brake Section for complete data.
Wheel Cylinders—1⅛" bore. Single acting (front), double acting (rear wheels).
Drums—Centrifuse. Diameter 12".
Lining—Molded Asbestos. 2" wide. 13/64" thick.
Length per Wheel—25⅛".
Clearance—.006" at each end of all shoes.
Braking Power—60% (front wheels), 40% (rear).

Hand Brake: On shaft at rear of transmission. 6" External contracting band used with Synchro-mesh Transmission. 7" Internal expanding used with Automatic Transmission.
Adjustment—*See "Hand Brake Notes" in Chrysler Special Data.*
Drum—Cast Iron.

Lining—	Width	Thickness	Length
6" Ext. Type	2"	5/32"	15 3/8"
7" Int. Type	2"	5/32"	13 1/8"

Clearance—(External Type) .015-.020" around band, **(Internal Type)**—Adjusting nut on shoe link backed off one notch from point where shoes firm against drum.

MISC. MECHANICAL

WINDSHIELD WIPER: Auto-Lite electric type.
EWJ-4001—1950 (exc. Convt.) & 1951 8 Pass.
EWJ-4003—1950 Convt. & 1951 (exc. 8 Pass.).
See Miscellaneous Section for complete data.

CONVERTIBLE TOP CONTROL: Auto-Lite Model EWM-4001. Electric type.
See Miscellaneous Section for complete data.

MODEL IDENTIFICATION

SERIAL NUMBER: On left front door hinge post.

C-49K—Saratoga 6,774,501
C-49N—New Yorker 7,119,001
C-49N—New Yorker (Town & Country).....7,411,501
C-50 —Imperial 7,813,501

ENGINE NUMBER: Stamped on boss on left side of cylinder block between Nos. 2 and 3 cylinders.

NOTE—Letter "X" after the engine number on some C49 and C50 models indicate engine is equipped with hydraulic valve lifters.

TUNE-UP

COMPRESSION PRESSURE: 120-150 lbs. at cranking speed of 150 RPM.

VACUUM READING: Steady 18-21" idling at 6 MPH.

FIRING ORDER: 1-6-2-5-8-3-7-4. See diagram.

SPARK PLUG GAPS: .035". Limits plus or minus .001". **Plugs**—Auto-Lite Resistor Type AR5. 14 mm.

DISTRIBUTOR: Breaker Gap—.018".
Cam Angle—27° to 30½° (closed).
Breaker Arm Spring Tension—17-20 ozs.
Automatic & Vacuum Advance—*See Ignition.*
Condenser Capacity—.25-.28 microfarad.

IGNITION TIMING: At Top Dead Center (TDC).

Timing Procedure—*See Ignition Timing.*

Timing Mark—Vibration Dampener marked "DC" at top dead center position with 15-1° graduations before and after this point. Set timing with DC mark at pointer on chain case cover, then set manual. (octane selector) adjustment.

Manual (Octane Selector) Adjustment—Set for slight ping in 10-30 MPH. range when accelerating with wide open throttle. Do not vary initial timing more than 4° advance or retard.

CARBURETION:

Idle Setting—Set idle adjusting screw for smooth idling with warm engine (idle screw ½-1½ turns open), turn screw out for richer mixture.

Idle Speed—450-475 RPM with warm engine.

Float Level—Top of float 5/64", ±1/64" below top surface of carburetor body casting.

Accelerating Pump—Center hole (med. stroke) Normal. Inner hole—Summer, Outer hole—Winter, for extreme temperatures.

Choke Setting: Adjust by inserting gauge pin (Tool C-723 or straight round pin fitting hole in choke unit shaft snugly) through hole in choke lever shaft and slot in base mounting flange to line up choke unit, loosen choke arm clampscrew, position carburetor choke valve so that it is fully closed, tighten clampscrew, remove gauge pin.

Fuel Pump Pressure: 3½-5½ lbs.

MANIFOLD HEAT CONTROL: Automatic thermostatic type. See that valve operates freely. When installing coil, wind free end up **approx. 1¼ turns**, not over 1½ turns or under 1 turn, hook end over stop stud.

VALVE TAPPET CLEARANCE: .008" Intake, .010" Exhaust, Hot. NOTE—Self-locking tappet screws used.

►**HYDRAULIC VALVE LIFTERS USED ON SOME C49 & C50 MODELS:** Identified by "X" after engine number. No adjustment required except when valves are reconditioned.

IGNITION

IGNITION SWITCH: Mitchellock. Combination ignition-starter switch. Starter operates when key held fully to the right. Key automatically returns to "on" position. Coil lead protected by armored cable through fire wall.

COIL: Auto-Lite No. CR-4001. Mounted directly above distributor on ignition bracket.
Ignition Current—2.25 amperes idling, 5 stopped.

CONDENSER: Auto-Lite No. IG-3927F.
Capacity—.25-.28 microfarad.

DISTRIBUTOR: Auto-Lite No. IAR-4101-1. Automatic advance type with Vacuum Spark Control.

►*DISTRIBUTOR CAP POPPING OFF CORRECTION (Early "IAR" Distributors): See "Auto-Lite IAR Distributors" in Electrical Equipment Section.*

Breaker Plate Identification—Maximum vacuum advance limited by slot in plate. Plate marked #10.
Breaker Gap—.018".
Cam Angle—27° to 30½° (closed).
Breaker Arm Spring Tension—17-20 ounces.
Rotation—Clockwise viewed from the top.

Automatic Advance

Degrees	Distr. R.P.M.	Degrees Eng. R.P.M.
Start	350	0 — 700
1	450	2 — 900
5	800	10 — 1600
9	1400	18 — 2800
10	1550	20 — 3100

Vacuum Spark Control: Auto-Lite Unit. On distributor, linked directly to breaker plate.

CONTINUED ON NEXT PAGE

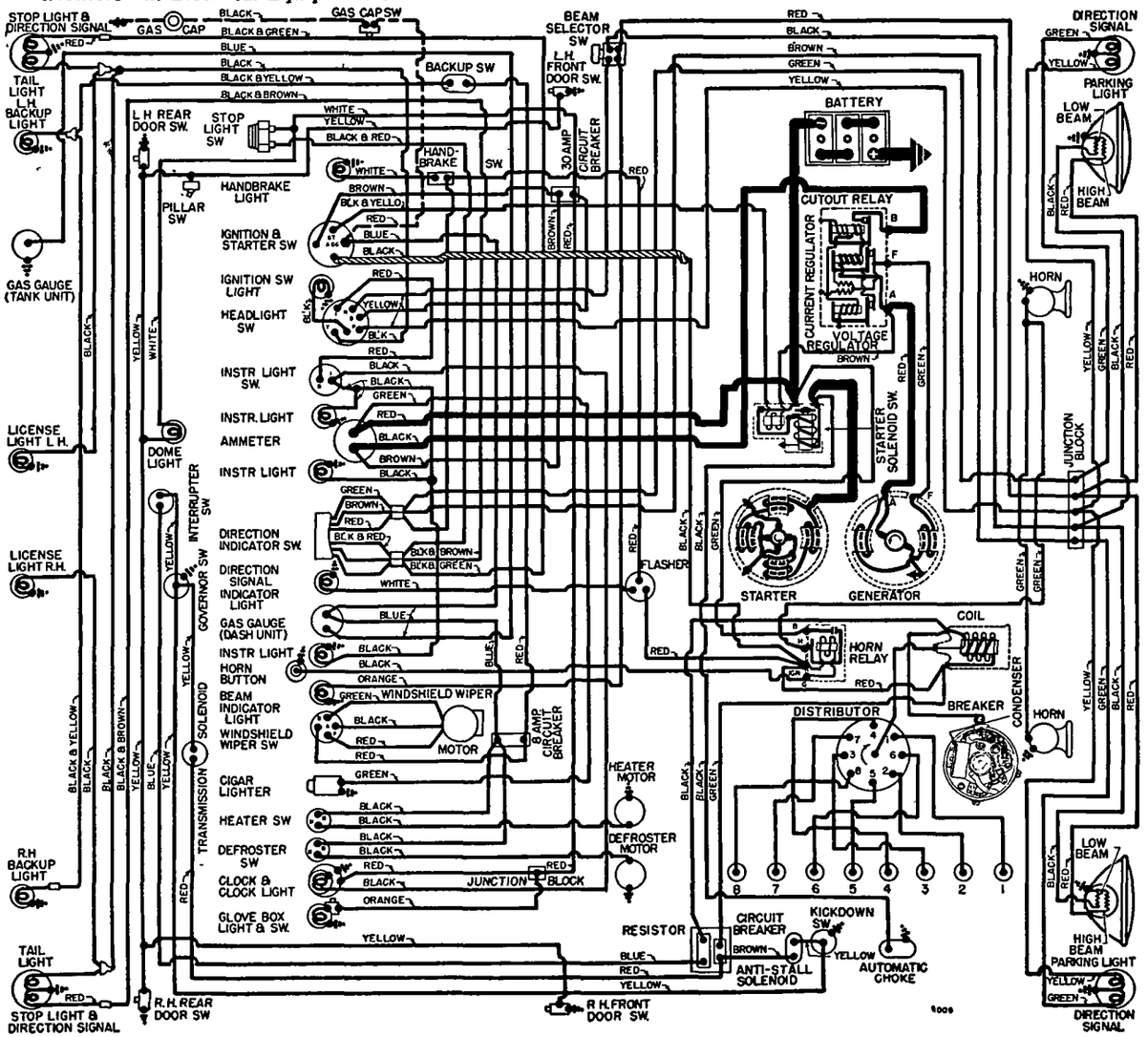

C NTINUED FROM PRECEDING PAGE

Vacuum Advance

Distr. Degrees	Eng. Degrees	Vacuum (" of HG)
Start	0°	5"
2°	4°	8"
4°	8°	11"
6°	12°	14"
8°	16°	17"

Manual Adjustment: Provides for minor changes in ignition timing at distributor. See Ignition Timing.

IGNITION TIMING

Std. Setting—Initial setting (for regular non-premium fuel) as shown below. See Manual adjustment (following) for Final Setting.
NOTE—Impulse neutralizer marked at TDC with 12 (1°) graduations on either side.
Timing (Using Synchroscope)—Tool C-374. Clip lead to #1 spark plug, direct light on impulse neutralizer (mark correct graduation with paint), idle engine and adjust distributor (as above).
Manual Adjustment—Set to give slight ping from 10-30 MPH accelerating with wide open throttle from 10 MPH. To adjust, loosen lock-plate hold-down screw, move the plate (not more than 4° before or after initial setting) counter-clockwise (if no ping), clockwise to retard spark (if too severe).

CARBURETOR

Carter (B & B) E7J4. 1½" Single barrel downdraft type with Sisson Automatic Choke control, Slow-closing Throttle and Kick-down switch for hydraulically operated transmission.
See Carburetor Section for complete data.
Settings (Idle Setting, Float Level, and Accelerating Pump): *See Tune-Up data.*
Metering Jet—*See Carburetor Section for Carter (B&B) Downdraft Carburetor Jet Specification Table.*
Slow-Closing Throttle: Solenoid type. Non-adjustable.
See Carburetion Equipment Section for complete data.
Fast Idle: Throttle stopscrew stop dog linked to choke valve so that stop dog rotated and throttle opened to fast idle position when choke valve closed for starting. No adjustment required.
Automatic Choke: Sisson type.
Setting—With throttle 1/3 open place pin gauge (Tool No. C-723 or a straight round pin that fits the hole in choke unit shaft snugly) so that pin lines up slot in choke base with hole in shaft. With choke lined up in this position the carburetor choke valve should be fully closed. If not, loosen the choke arm clamp screw (on choke) and set as above, and tighten screw to lock in this position.
See Carburetion Equipment Section for complete data.

CARB. EQUIPMENT

Air Cleaner: AC No. 1544405 Heavy Duty oil-bath type. Filter Element AC No. 20.
Fuel Pump: AC No. 1539215. Diaphragm type.
Replacement Pump—AC No. 514 or 590.
Pressure—3½-5½ lbs.
See Carburetion Equipment Section for complete data.
Fuel Tank Filter: Oillite metal filter in tank.
Servicing—If more than 2 pints water in tank, fuel will not pass filter. Remove filler cap and drain plug, draining tank. Disconnect fuel line at some point between pump and tank, blow out line and filter with air, increasing pressure as filter is cleaned. Flush tank with clean gasoline.
Gasoline Gauge: Auto-Lite electric type.
Dash Unit—Auto-Lite No. (C-49) 12136A, (C-50) 12137A.
Tank Unit—Auto-Lite No. (C-49) 11539A, (C-50) 11783A.
See Carburetion Equipment Section for complete data.

BATTERY

Auto-Lite Type 2H-135RD. 6 volt, 19 plate, 135 Ampere Hour Capacity (20 hour rate).
Grounded Terminal—Positive (+) to engine.
Location—Under hood in left fender shield.

STARTER

Auto-Lite Model MCL-6101. Armature MCH-2039.
Drive—Overrunning clutch (solenoid pinion shift).
Rotation—Counter-clockwise at commutator end.
Brush Spring Tension—42-53 ozs. (new brushes).
Cranking Engine—150 RPM., 175 amperes, 5.4 volts.

Performance Data

Torque	R.P.M.	Volts	Amperes
0 ft. lbs.	5300	5.5	65
8.0 "	Lock	2.0	410

Starting Switch: Auto-Lite Solenoid Type SS-4707 controlled by turning ignition switch past "on"
See Electrical Equipment Section for complete data.

GENERATOR

1950 (Early) C-49 Synchro-mesh Tr.	GGW-6001A
1950 (Late) C-49 Synchro-mesh Tr.	GGW-6001J①
1950 (Early) C-49 Automatic Trans.	GGU-6001A
1950 (Late) C-49 Automatic Trans.	GGU-6001G①
1950 (Early) C-50	GGJ-6001A
1950 (Late) C-50	GGJ-6001F①

①—Narrow Groove Pulley.
For State Police, City Police & Taxi, see 1950-51 Chrysler 6.
Maximum Charging Rate—See table below.
Charging Rate Adjustment—None. See Regulator.

Performance Data (GGU-6001A, G)

Amperes	Volts	Cold—R.P.M.—Hot
0	6.4	750-850 — 800-900
45	8.0	1450-1650 — 1650-1850

Performance Data (GGJ-6001A, J)

0	6.4	600-700 — 650-750
50	8.0	1400-1600 — 1550-1750

Performance Data (GGW-6001A, J)

0	6.4	870-970 — 950-1050
40	8.0	1800-2000 — 2150-2350

Rotation—Counter-clockwise at commutator end.
Brush Spring Tension—(GGU, GGW) 35-53 ozs. (new brushes), (GGJ) 30-37 ozs. (new brushes).
Field Current—(GGU) 1.7-1.8 amperes, (GGW) 1.6-1.8 amperes, (GGJ) 1.7-1.9 amperes, all at 6.0 volts.
Motoring Current—(GGU) 5.5-6.5 amps., (GGJ) 4.3-4.8 amps., (GGW) 4.6-5.2 amps., all at 6.0 volts.
Belt Adjustment: Loosen pivot and clamp bolts, pull out on generator until belt is snug or 40-50 lbs. tension secured on scale attached to field frame.

REGULATOR

Auto-Lite Regulator No.	for Auto-Lite Generator
VBA-4202A or ①VBA-4204A	GGJ-6001A, F
VAV-6001A or ①VAV-6002A	GGU-6001A, G
VRP-6004A	GGW-6001A, J

①—For Negative ground.
See Electrical Equipment Section for complete data.
NOTE—Regulator case cover is sealed. Serviced on exchange basis if seals not broken (to remove cover).

Cutout Relay
Cuts In (VAV, VRP)—6.4-7.0 volts (set to 6.4-6.6 volts).
Cuts In (VBA)—6.35-6.75 volts (set to 6.4-6.6 volts).
Cuts Out (All)—4.1-4.8 volts (approx. 4-6 amps. disch.).
Air Gap (All)—.031-.034" with contacts open (check at hinge end of core).

Voltage Regulator
Setting (VAV, VRP)—7.2-7.5 volts at 70°F., **(VBA)** 7.0-7.2 volts at 70°F. See Electrical Equipment Section for settings at other temperatures.
Checking (without breaking seals) & Adjustment—*See Electrical Equipment Section.*
Air Gap (All)—.048-.052" with contacts just opening.

Current Regulator
►**(Temperature Compensated Regulators)**

	Nominal Setting
VRP-6004A	40
VAV-6001A, VAV-6002A	45
VBA-4202A, VBA-4204A	50

►*CAUTION*—Nominal setting is approx. setting at 70°F. room temperature after regulator has been run (will be higher started cold). See Electrical Equip. Section for settings at various temperatures.
Checking (without breaking seals) & Adjustment—*See Electrical Equipment Section.*
Air Gap (All)—.048-.052" with contacts just opening.

LIGHTING

Headlamps: Corcoran-Brown "Sealed Beam" type with new "Bull's-eye lens". Beam selector switch on toeboard controls upper and lower beams.
See Electrical Equipment Section for complete data.
Beam Indicator—Lighted when Country (upper) beams in use. Located on lower right corner of speedometer face.
Direction Signal: *See Electrical Equipment Section.*
Direction Signal Indicator—In lower left corner of speedometer face.
Direction Signal Flasher—Chrysler No. 1257223.

Switches
Beam Selector—Chrysler No. 1253460.
Map Light—Chrysler No. 1244605.
Direction Signal—Chrysler No. 1235606.

MISC. ELECTRICAL

CIRCUIT BREAKERS: Lighting—30 ampere. Vibrating type, protects lighting circuits.
Aux. Circuit Breaker—8 ampere. Protects Windshield Wipers and Back-Up Light.
Direction Signal—On flasher behind instrument panel. Vibrating type. Protects dir. signal circuit.
Transmission Solenoid—Vibrating type mounted as an assembly with resistor unit.
Convertible Top—Mounted near control switch. Thermostatic type. Opens at 80 amperes in 1 minute or less.
FUSES: Clock—3 ampere. In clock lead.
Radio—14 ampere. In fuse connector at radio.
HORNS: Auto-Lite Model HW-4101 (Low Pitch), HW-4102 (High Pitch). Dual horns operated by relay.
Horn Relay: Auto-Lite No. HRL-4104. Connected through ignition switch, operated only with ignition "ON".
Contacts Close—1.5-3.0 volts (seal to core with 4.0 volts maximum).
Contacts Open—.5 volt min. (open from seal).

Contact Gap—.026". Air Gap—.016-.020" (armature air gap with contacts closed but not sealed), .015-.018" (gap between armature leg and yok with armature sealed to core).

ENGINE

ENGINE SPECIFICATIONS: 8 cyl., "L" head type.
Bore—3¼". Stroke—4⅞".
Displacement—323.5 cu. ins. Rated H.P.—33.80.
Developed Horsepower—135 at 3200 RPM.
Compression Ratio—7.25-1 Std. cast-iron head.
Compression & Vacuum Reading—*See Tune-Up data.*

CYLINDER HEAD & TIGHTENING TORQUE: *See Chrysler Special Data.*

PISTONS: Aluminum alloy, U-slot, cam ground type.
Original Bore & Pistons—*See Chrysler Special Data.*
NOTE—Skirt cam ground (.010-.014" smaller diameter across pin bosses) and tapered (.0005-.0015" smaller diameter at top of skirt than at bottom).
Length—3⅞". Weight—16.5 ozs. (stripped).
Removal—Pistons and rods removed from above.
Clearance—.0005" to .0015" on thrust face at center of skirt.

Fitting New Pistons: Measure piston size with micrometer across thrust faces (right angles to pin bosses) ¾" from bottom of skirt. Fit piston in bore using .002" x ½" feeler, insert piston upside down in bore with feeler 90° from pin bosses on side opposite slot. Clearance correct when 5-7 lbs. pull required to withdraw feeler, bore and piston at 70°F. *NOTE*—Cylinder recondition limits .0005" taper and .0005" out-of-round. Badly scored bores or with taper over .030" or out-of-round over .004" require reboring and honing to limits listed above.

Replacement Pistons: .005", .020", .030", .040", .060" OS.

Installing Pistons: "U" slot away from valves.

PISTON RINGS: Two compression, two slotted oil control, coated rings per piston, all above pin. Oil ring grooves drilled for oil drainage (lower groove slotted).

Ring	Width	End Gap	Side Clearance
Compr. (#1)	3/32"	.007-.015"	.0025-.004"
Compr. (#2)	3/32"	.007-.015"	.002-.0035"
Oil Contr. (#3,4)	5/32"	.007-.015"	.001-.0025"

Installing Rings—#1 Compr. with step on inner edge up. #2 Compr. with step on inner edge up or if step on outer edge install with step down.
Replacement Rings: .005" .020" .030" .040" .050" .060" OS.

PISTON PIN: Diameter—55/64". Length—2¾". Floating type with locking ring at each end.
Pin Fit in Piston—.0000" to .0005". Thumb push fit with piston heated to 160°F.
Pin Fit in Rod Bushing—.0001-.0004". Tight thumb push fit at normal room temperature.

Replacement Pins: Standard size and .0006", .003", .008" oversize.

CONNECTING ROD: Length—9". Weight—34 ozs. with bolts less bearings.
NOTE—Pin hole in rod bronze-bushed.
Crankpin Journal Diameter—2.1865-2.1875".
"Original Bearing Sizes" in Chrysler Special Data.
Lower Bearing—Removable, precision type.
Clearance—.0005-.0015". **Endplay**—.006-.011".

Bearing Adjustment: None (no shims). Replace bearings. Do not file rods or bearing caps.

Replacement Bearings: .001", .002", .010", .012" U.S.

Installing Rods: Offset type. Wide side of bearing to rear for #1, 3, 5, 7; to front for #2, 4, 6, 8. Oil spray hole in rod toward camshaft on all rods.

CRANKSHAFT: 5 bearing, 8 integral counterweights with vibration dampener on front end.
Journal Diameters—2.7025-2.7035". ***See "Original Bearing Sizes" in Chrysler Special Data.***
Bearings—Removable, precision type.
Clearance—.0005-.0015".

Bearing Adjustment: None (no shims). Replace bearings. Do not file rods or bearing caps.

Replacement Bearings: .001", .002", .010", .012" U.S.

End Thrust: Taken by flange faces on rear (#5) main bearing. **Endplay**—.003-.007".

CAMSHAFT: 6 bearing. Non-adjustable chain drive.
Bearing Diameters—#1, 2 1/16"; #2, 2 1/32"; #3, 2"; #4, 1 31/32"; #5, 1 15/16"; #6, 1 3/8".
Bearings—Removable, steel-backed, babbitt-lined bushings (except #6—machined in crankcase).
Clearance—.001-.003" (#1), .0015-.0035" (all others). NOTE—Replacement bearings are finished (reaming, scraping, or burnishing not required).

End Thrust: Taken by thrust plate behind camshaft sprocket hub. **Endplay**—.002-.006".

Timing Chain: Width 1¼". Pitch .500" (½"). Length 23½" or 47 links.

Camshaft Setting: Sprockets marked. Mesh chain with sprockets turned so that "0" marks are adjacent and in line with a straightedge across shaft centers.

VALVES:

	Head Diameter	Stem Diameter	Length
Intake	1 17/32"	.340-.341"	5 7/8"
Exhaust	1 11/32"	.3395-.3405	5 7/8"

	Seat Angle	Lift	Stem Clearance
Intake	45°	⅜"	.0015-.0035"
Exhaust	45°	⅜"	.002-.004"

Exhaust Valve Seat Inserts—*See Chrysler Special Data.*
Valve Seat Width (Max.) 7/64".

Valve Guides: Remove from above. Press new guides in with stepped end down and upper end 1" (Intake), 1 3/32" (Exhaust), below top of block. Ream guides to inside diameter of .3425-.3435" (Tool DD-849). Exhaust guides counterbored on upper end.

Valve Springs: Install springs with close-coil end to top. Spring Free Length 2".

	Spring Pressure	Spring Length
Valve Closed	40-45 lbs.	1¾"
Valve Open	107-115 lbs.	1⅜"

Valve Lifters: Mushroom type (remove from below with camshaft out of engine). Stem diameter ⅝". Service by reaming lifter holes (work from above piloting reamer Tool C-265 in valve guide) and installing oversize lifters. **Clearance**—.000-.001".
Replacement Lifters—.001", .008", .030", .060" oversize.

HYDRAULIC VALVE LIFTERS: Used on some C-50 engines. Identified by "X" stamped after engine number. ***See Miscellaneous Section for complete data.***

VALVE TIMING

Tappet Clearance: .008" Intake, .010" Exhaust, Hot. Self-locking tappet screws used. NOTE—Remove right front wheel and lower wheel housing panel for access to valves.
TAPPET ADJUSTMENT NOT REQUIRED ON HYDRAULIC VALVE LIFTERS: Except when valves are reconditioned. For initial adjustment, proceed as follows: Insert shank of ⅜" drill between valve face and valve seat. With the valve held tightly down on the drill shank, a .016" feeler must pass freely between the top of the plunger and the valve stem tip. If there is less than .016" clearance, grind valve stem tip in a suitable fixture until a .026" feeler will pass through freely.

Valve Timing: See Camshaft Setting above.
Intake Valves—Open 12° BTDC. Close 44° ALDC.
Exhaust Valves—Open 50° BLDC. Close 6° ATDC.
Valve Timing Check—With .014" tappet clearance (Cold), #8 intake valve should open with #8 piston 5° to 17° or .011" to .122" BTDC. with 5th to 17th graduation before DC mark on impulse neutralizer aligned with pointer on chain case cover. Reset tappet clearance to .008" Hot running clearance.

LUBRICATION

Engine Oiling System: Pressure through Full-flow oil filter to main and connecting rod bearings, camshaft bearings, and timing chain. "Rotor" type oil pump on right side of engine.
Crankcase Capacity—6 quarts (refill).
Normal Oil Pressure—45-60 lbs. above 45 MPH. with warm oil. CAUTION—Pressure of 40-45 lbs. at driving speeds indicates oil filter may be clogged and should be replaced.
Oil Pressure Relief Valve—Under cap on lower left side of crankcase. Has bleed duct which connects with new idle oil passage to provide additional oil at idling speeds. Valve has screw adjustment but factory setting seldom requires changing. Opens at 40-45 lbs.
Oil Filter: "Full-flow" type. All oil under full pressure passes through filter before entering oil passage. Safety valve in filter opens if element is clogged allowing oil to pass directly to engine.
Servicing—Install new filter element and cover gasket at 5000 mile intervals (or earlier if required). Change oil at same time. **Checking:** If oil pressure drops to 40-45 lbs. with warm oil, filter element may be clogged and should be replaced, to bring oil pressure to normal 45-60 lbs. above 45 MPH.
Oil Pressure Gauge: Auto-Lite No. 12138A. Not electric.

COOLING

Cooling System: Pressure type with pressure valve (relief valve) in filler cap, and positive circulation with pump on front of engine, by-pass type thermostat, and water distribution tube in block.
Capacity—21 quarts.
Pressure Valve—In filler cap. Opens at 3 lbs.

Water Pump: Packless type with shaft mounted on 2 ball bearings with lubricant fitting for bearing lubrication and grease nipple for seal lubrication. ***See Water Pump Section for complete data.***
Removal—Drain cooling system. Remove fan blade assembly, fan belt, by-pass hose and elbow, inlet hose, pump mounting capscrews. Take pump off. Spacer behind pump need not be taken off engine.
Belt Adjustment—*See Generator Belt Adjustment.*

Thermostat: In cylinder head water outlet.
Setting—Starts to open 157-162°F. Fully open 183°F.
INSTALLATION NOTE—Install thermostat with 2 ports facing front, 2 ports to rear. Some thermostats equipped with heavy shield welded on bottom (for

CONTINUED N NEXT PA E

CONTINUED FROM PRECEDING PAGE

bellows protection at high speeds), this type thermostat cannot be installed on earlier cars.

Temperature Gauge: Auto-Lite No. 12139A. Not electric.

CLUTCH

Borg & Beck Model 10A6 with "Borglite" driven member. Single plate, dry disc type. NOTE—Cover Assembly No. 961 stamped on cover

See Clutch Section for complete data.

Facings—Woven type, 2 used. Inside Diameter 6". Outside Diameter 10". Thickness .125" (⅛").

Pedal Adjustment: Set pedal to just clear toeboard by loosening locknut and turning stopscrew at lower end of pedal arm above shaft. Set pedal for 1" free travel by turning clutch release fork adjusting nut on connector link at clutch release fork.

CAUTION—Do not disturb turnbuckle on pedal link (controls pedal over-center spring tension).

Removal: Remove Transmission (see TRANSMISSION). Remove clutch housing underpan and clutch release bearing and sleeve. Mark clutch and fluid drive clutch driving plate for re-assembly. Remove all clutch cover mounting screws evenly, lower cover and driven member out through opening in housing.

FLUID DRIVE

Chrysler—Fluid coupling at rear of engine.

See Transmission Section for complete data.

Oil Level: Keep to level of filler hole. Check at first 1000 miles and every 10,000 miles. Manufacturer recommends MOPAR Fluid Drive Fluid.

Removal: Remove transmission and clutch (see TRANSMISSION and CLUTCH), take off driver flange stud nuts (Tool C-589), lower fluid drive assembly out.

TRANSMISSION

SYNCHRO-MESH

Own Make—All helical gear, constant-mesh, synchro-mesh (Second & High), sliding gear (Low & Reverse). *See Transmission Section for complete data.*

Transmission Control: Manual steering column shift.

See Transmission Section for complete data.

Removal: Jack up front end of car. Disconnect front universal (loosen companion flange nut if transmission to be dismantled). Disconnect speedometer cable, hand brake cable at brake band, gearshift control rod and selector rod at transmission. Remove transmission mounting screws and nuts at clutch housing, pull transmission straight back to free clutch shaft, lower transmission and remove from under car.

NOTE—When installing transmission, use pilot studs installed in upper mounting screw holes to maintain alignment and prevent springing clutch driven member.

PRESTO-MATIC

Hydraulically Operated Type (with Fluid Drive). New design semi-automatic, four-speed transmission with hydraulic actuation and electrical control.

See Transmission Section for complete data.

►**Kick-down Switch Change to improve Transmission Operation**—*See "Chrysler, DeSoto, Dodge Kick-down Switch" in Electrical Equipment Section.*

Transmission Control: *See Transmission article for adjustment directions.*

Kickdown Solenoid—Auto-Lite No. SSS-4003.

Governor—Auto-Lite No. TG-4205R.

Kick-down Switch—Part of carburetor assembly.

See "Chrysler, DeSoto, Dodge Kick-down Switch" in Electrical Equipment Section.

Ignition Interrupter Switch—On right side of transmission above Governor.

Transmission Oil—3 pints, 10-W engine oil.

Removal: Remove access cover on right rear side of floorboard under front floor mat, disconnect speedometer cable, and governor, solenoid, and interrupter switch wires at transmission. Remove governor and solenoid. Disconnect hand brake cable at brake band, remove cable and cable anchor bracket. Remove brake support, band, adjusting bolt bracket and lever as an assembly. Disconnect front universal (push yoke back), and gearshift rods at transmission. Drain transmission, **replace drain plug.** Disconnect transmission mounting bolts and lower assembly out of car.

INSTALLATION CAUTION—Rear face of clutch housing and lower pan must be in correct alignment. Misalignment can cause hard shifting when transmission installed.

UNIVERSALS

Detroit Universal Series 7300—Cross type with roller bearings. Two used (3 on Crown Imperial and other long-wheelbase cars with center bearing).

See Universals Section for complete data.

REAR AXLE

MODELS C49

Own Make—Semi-floating, hypoid gear type with Hotchkiss Drive.

See Rear Axle Section for complete data.

Ratio—3.54-1 Std. (39-11). C49 Town & Country 3.91-1 (43-11).

Backlash—.006-.010". Screw adjustment.

Removal: Disconnect rear universal, remove axle shafts (see below), take out carrier capscrews, lift off carrier assembly.

Axle Shaft Removal—Remove wheel, hub, and drum assembly (use screw type hub puller—Tool C-675), block brake pedal, disconnect brake line at wheel cylinder, remove axle shaft key, install sleeve (Tool C-757) in oil seal, remove brake support (oil seal mounted in support), pull shaft and bearing (use C-499 puller). NOTE—Use puller C-293-C to remove bearing from shaft, puller C-748 or C-358 to remove inner oil seal, drift C-241 to install seal.

Axle Shaft Outer Oil Seal: New leather type mounted on brake support (backing plate).

Wheel Bearing Adjustment: Shims between backing plate and axle housing. With wheel and hub removed, check endplay with dial indicator. To adjust, remove backing plate (see above), add or remove shims (furnished .010", .0125", .015", .030" thick) equally at both wheels. **Endplay**—.003-.008".

MODELS C50

Own Make—Semi-floating, hypoid gear type with Hotchkiss drive. Barrel type differential with adjustable ring gear thrust pad used.

See Rear Axle Section for complete data.

Ratio—3.58-1 (43:12).

Ring Gear Thrust Pad Setting—Loosen locknut on left side of carrier housing, tighten thrust pad screw finger tight, back screw off 1/8 turn.

Removal, Oil Seal, & Wheel Bearing Adjustment: See C-49 Rear Axle above.

SHOCK ABSORBERS

New "Hydra-Lizer" hydraulic, direct acting type.

FRONT SUSPENSION

Front Suspension: Independent, linked parallelogram, coil springs and direct acting shock absorbers.

See Front Suspension Section for complete data.

Kingpin Inclination—6¼-7½° crosswise.

Camber—0° to Pos. ¾°. (¼-½° higher on left).

Caster—Neg. 2° preferred. Limits Neg. 1° to Neg. 3°.

Toe In—0" preferred. Limits 0" to 1/16". Adjust both tie rods equally.

Steering Geometry—Inner wheel 21½°, plus or minus 1°. Outer 20°.

STEERING GEAR

Own Make—3 tooth Worm-and-Roller. Similar to Gemmer model 335.

NOTE—See Gemmer 305, 335 & 375 article for data.

See Steering Gear Section for complete data.

BRAKES

MODELS C49-1 & C49-2

Service: Chrysler "Safe-guard" Lockheed Hydraulic.

See Brake Section for complete data.

►*BRAKE SQUEAK OR SQUEAL CORRECTION—See "Lockheed-Chrysler Safe-guard Hydraulic" Brake in Brake Section.*

Drums—Centrifuse. Diameter 12".

Lining—Molded asbestos. Width 2". Thickness 13/64". Length per wheel 25 1/8".

Clearance—.006" at each end of all shoes.

Braking Power—60% front wheels, 40% rear.

Power Brake: (C-49)—Vacdraulic vacuum power unit.

See Brake Section for complete data.

Hand Brake: On shaft at rear of transmission. External type (Early 1950), Internal type (Late 1950).

Adjustment—*See "Hand Brake Notes" in Chrysler Special Data.*

Drum—Cast-iron. Diameter 7".

Lining—	Width	Thickness	Length
External Type	2 1/2"	5/32"	20"
Internal Type	2"	5/32"	13 1/8"

Clearance (External Type)—.015-.020" around band.

Clearance (Internal Type)—Adjusting nut on shoe link backed off one notch from point where shoes firm against drum.

MODELS C49-3 & C50

Service: Hydraulic self-energizing, two-shoe, DISC type. NOTE—No power booster used.

See Brake Section for complete data.

Disc Face Diameter—I.D. 9", O.D. 12".

Lining—Molded Asbestos segments (12 used). Thickness .170".

Clearance—Brakes are self-adjusting.

►**Bleeding Disc Type Brakes**—Manufacturer recommends bleeding all four lower wheel cyls. first, then all four upper ones last. *See "Brakes" in Chrysler Special Data.*

MISC. MECHANICAL

WINDSHIELD WIPER: Auto-Lite Model EWJ-4001, EWJ-4003 (Conv. Coupe). Electric type with circuit breaker mounted on control switch.

See Miscellaneous Section for complete data.

CONVERTIBLE TOP CONTROL: Auto-Lite Model EWM-4001. Electric type.

See Miscellaneous Section for complete data.

WINDOW REGULATORS: Hydro-electric type.

See Miscellaneous Section for complete data.

MODEL IDENTIFICATION

SERIAL NUMBER: On left front door hinge post.
1951 Numbers—C-52 (New Yorker) 7,165,001 Up. **C-53** (Imperial 8 Pass.) 7,814,501 Up. **C-54** (Imperial) 7,736,501 Up.

ENGINE NUMBER: Stamped on a boss on the top front side of the cylinder block just back of water pump.

TUNE-UP

COMPRESSION PRESSURE: 135 to 165 lbs. at 150 RPM. cranking speed. Minimum allowable pressure of 90 lbs. with a 15 lb. maximum allowable variation between cylinders.

VACUUM READING: Steady 18-21" idling.

FIRING ORDER: 1-8-4-3-6-5-7-2. See wiring diagram.

SPARK PLUG GAPS: .035".
Plugs—Auto-Lite Resistor Type 4S165. 14 MM.

DISTRIBUTOR: Breaker Gap—.015" to .018".
Cam Angle—27½° to 30° (one set of points) 34° to 36° (Total dwell).

►*NOTE—Set both contacts alike. No other adjustment required.*
Breaker Arm Spring Tension—17 to 20 ozs.
Automatic and Vacuum Advance—*See Ignition.*
Condenser Capacity—.25-.28 microfarad.

IGNITION TIMING: At Top Dead Center (TDC).
Timing Procedure—*See Ignition Timing.*
Timing Mark—Vibration dampener marked "DC" at top dead center position. Depending upon fuel, adjust the distributor until a slight ping is audible when accelerating from 15 miles per hour in fourth speed with wide open throttle. Move distributor clockwise to retard and counter-clockwise to advance.

CARBURETION:
Idle Setting—Set idle adjustment screw for smooth idling with engine warm (idle screw ¾ to 1¼ turns open), turn screw out for richer mixture. Same adjustment both screws.
Idle Speed—475 to 500 RPM.
Float Level—11/64" between top of float and machined surface of cover casting. Use Gauge T109-205 for correct vertical and lateral adjustment.
Accelerating Pump—Outer hole (long stroke), Normal setting.

Choke Setting: Indicator mark on Climatic Control must line up with Center index mark on air horn.

►*CAUTION*—Do not change setting for hot or cold climates.

Fuel Pump Pressure: 3½ to 5 lbs.

MANIFOLD HEAT CONTROL: Automatic thermostatic type. See that valve operates freely. When installing coil, wind free end up approx. 1¼ turns, not over 1½ turns or under 1 turn, hook end over stop stud.

VALVE TAPPET CLEARANCE: Hydraulic valve lifters used. No adjustment required except when valves reconditioned.

STARTING: *See Battery, Starter, Generator, Regulator.*

IGNITION

IGNITION SWITCH: Mitchellock. Combination ignition-starter switch. Starter operates when key held fully to the right. Key automatically returns to "on" position. Coil lead protected by armored cable through fire-wall.

COIL: Auto-Lite Model CR-4001. Mounted forward of distributor between cylinder banks.
Ignition Current—2.25 amperes idling, 5 stopped.

CONDENSER: Auto-Lite.
Capacity—.25-.28 microfarad.

DISTRIBUTOR: Auto-Lite No. IAZ-4001 or IAZ-4001-A. Double breaker type with Automatic Advance and Vacuum Spark Control.
Breaker Gap—.015" to .018".
Cam Angle—27½° to 30° (one set points) 34° to 36° (Total dwell). Both points to be set alike. No other adjustment required.
Breaker Arm Spring Tension—17 to 20 ozs.
Rotation—Clockwise viewed from above.

Automatic Advance (IAZ-4001)

Degrees	Distr. R.P.M.	Degrees Eng.	R.P.M.
Start	350	0°	700
3°	400	6°	800
7°	820	14°	1640
11°	1240	22°	2480
13°	1450	26°	2900

Automatic Advance (IAZ-4001-A)

Degrees	Distr. R.P.M.	Degrees Eng.	R.P.M.
Start	350	0°	700
1°	370	2°	740
2.5°	400	5°	800
12°	1525	24°	3050
13.5°	1700	27°	3400

CONTINUED ON NEXT PAGE

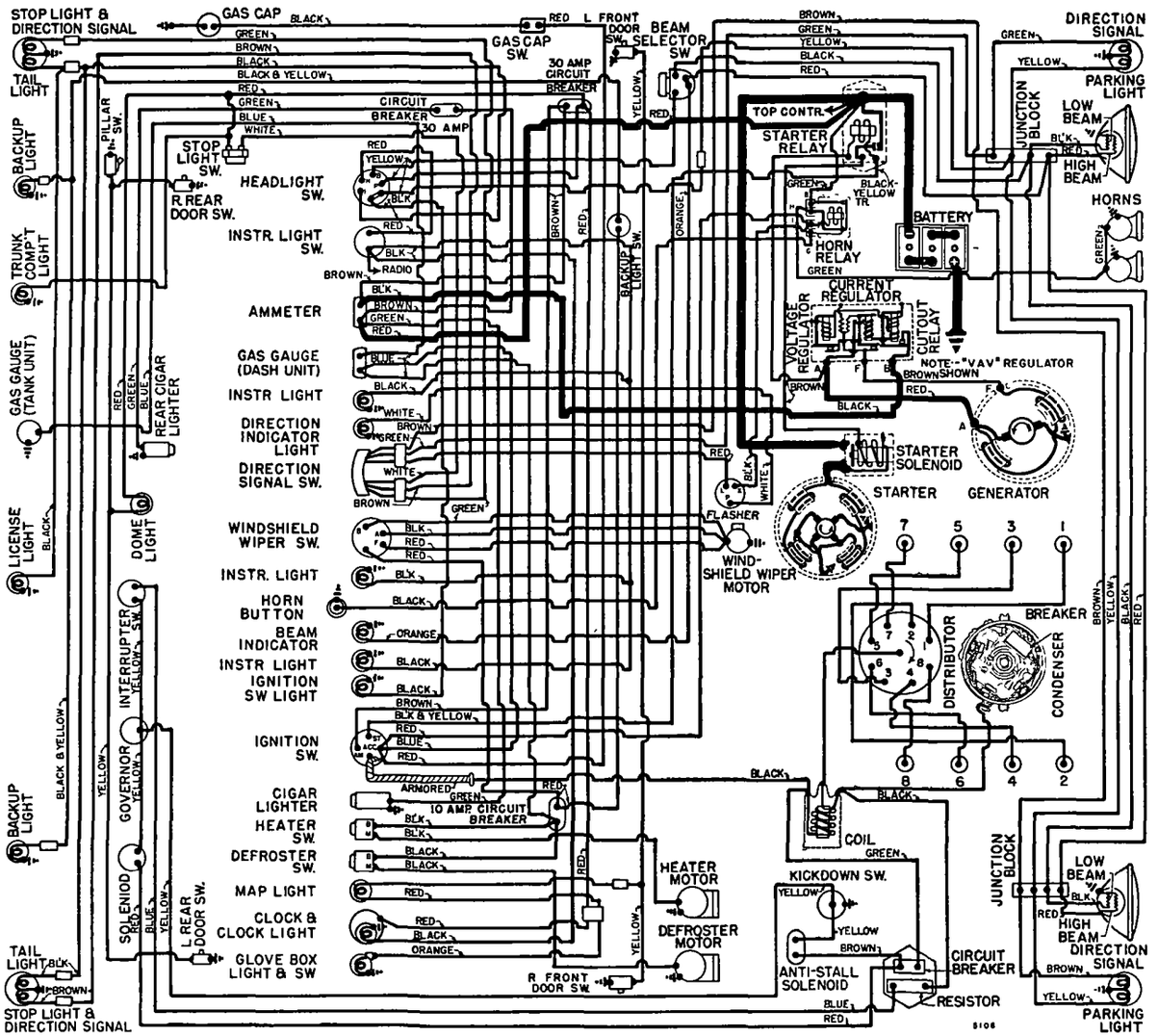

C NTINUED FR M PRECEDIN PA E

Vacuum Spark Control: Auto-Lite Unit. On distributor, linked directly to breaker plate.

Vacuum Advance (IAZ-4001)

Distr. Degrees	Eng. Degrees	Vacuum (" of HG)
Start	0°	4¾"
1°	2°	6"
4°	8°	9½"
7°	14°	13¼"
8.5°	17°	15"

Vacuum Advance (IAZ-4001-A)

Distr. Degrees	Eng. Degrees	Vacuum (" of HG)
Start	0°	5"
1°	2°	6"
5°	10°	10¼"
10¼°	20½°	15½"
11.5°	23°	17"

Distributor Removal: Mounted between cylinder banks at rear of engine. To remove, disconnect vacuum line, take out hold-down screw in lock plate.
Installation Note—Install distributor with #1 piston in firing position and rotor opposite #1 segment in cap.

IGNITION TIMING

Initial Setting—TDC. Vibration dampener marked "DC" with 1° graduations to either side.
Timing (Using Synchroscope)—Mark correct graduation on vibration dampener with white chalk. Connect one lead of Synchroscope to #1 spark plug wire at the distributor (Using Tool C-3066 Adapter). Connect other lead to negative terminal of battery and direct the light on vibration dampener. Idle engine and loosen distributor lock plate. Rotate distributor (clockwise to retard, counter-clockwise to advance) until pointer is aligned with chalk mark on vibration dampener. Tighten distributor lock plate clamp.
Manual Adjustment—Adjust distributor to give slight ping when accelerating from 15 MPH. with wide open throttle in fourth speed. NOTE—Do not set timing more than 4° early or 4° later than initial setting.

CARBURETOR

Carter WCD, 830S & 830SA. Dual downdraft type with Carter Climatic Control, slow closing throttle, and Kick-down Switch for hydraulically operated transmission.
►***SLOW WARM-UP CORRECTION (830S Carburetors):*** ***See Carburetor Section for recommended climatic control changes.***
See Carburetor Section for complete data.
Settings (Idle Setting, Float Level, and Accelerating Pump): ***See Tune-Up data.***
Metering Jet—***See Carburetor Section for "Carter (WCD) Downdraft" Carburetor Jet Specification Table.***
Slow Closing Throttle: Solenoid type. Adjustable.
See Carburetion Equipment Section for complete data.
Fast Idle: Carter Dual (WCD) Carburetor type.
Setting—.018" throttle opening (Gauge T109-44 with choke valve tightly closed). Adjust by turning fast idle adjusting screw.
See Carburetion Equipment Section for complete data.
Automatic Choke: Carter Climatic Control (Dual Carburetor).
Setting—Centered with index mark on air horn.
See Carburetion Equipment Section for complete data.

CARB. EQUIPMENT

Fuel Pump: Carter No. M-840-S. Diaphragm type.
Pressure—3½-5½ lbs.
See Carburetor Equipment Section for complete data.
Fuel Tank Filter: Oilite metal filter in tank.
Servicing—If more than 2 pints of water in tank, fuel will not pass filter. Remove filler cap and drain plug, drain tank. Disconnect fuel line at some point between pump and tank, blow out line and filter with air, increasing pressure as filter is cleaned. Flush tank with clean gasoline.
Gasoline Gauge: Auto-Lite electric type.
Dash Unit—Auto-Lite No. (C-52) 12575A, (C-53) 12468A, (C-54) 12467A.
Tank Unit—Auto-Lite No. (C-52, C-54) 11539A, (C53) 11783A.
See Carburetion Equipment Section for complete data.

BATTERY

Auto-Lite Type 2H-135RD or Willard MW-2-135R, 6 volt, 19 plate, 135 Ampere Hour capacity (20 hour rate).
Starting Capacity—170 Amperes for 20 minutes.
Grounded Terminal—Positive (+) grounded.
Location—Under hood in left fender shield.

STARTER

Auto-Lite Model MCL-6109. Armature MCH-2070.
Drive—Overrunning Clutch. (Solenoid Pinion Shift)
Rotation—Counter-clockwise at commutator end.
Brush Spring Tension—42-53 ozs. (New brushes).

Performance Data

Torque	R.P.M.	Volts	Amperes
0 ft. lbs.	4900	5.0	65
8.0 "	Lock	2.0	410

Removal: Disconnect wires (tape battery lead), remove mounting bolts, withdraw starter.
Starting Switch: Auto-Lite Solenoid Type, (pinion shift). Controlled by turning ignition switch past "ON" position.
1951 Auto-Lite No. SSX-4001 (Use with AutoLite Starter No. MCL-6109).
See Electrical Equipment Section for complete data.

GENERATOR

	Gen. No.	Armature No.
1951—C52	GGU-6001T	GGU-2006F
1951—C52, C54	GGU-6001R	GGU-2006F
1951—C53, C54	GGJ-6003A	GGJ-2103F

Two brush type current-voltage regulators.
Maximum Charging Rate—See table below.
Charging Rate Adjustment—None. See Regulator.

Performance Data (GGU-6001A, T, R)

Amperes	Volts	Cold—R.P.M.—Hot	
0	6.4	750-850	800-900
45	8.0	1450-1650	1650-1850

Rotation—Counter-clockwise at commutator end.
Brush Spring Tension—(GGU) 35-53 ozs. (New brushes), (GGJ) 30-37 ozs. (New brushes).
Field Current—(GGU) 1.7-1.8 amperes, (GGJ) 1.7-1.9 amperes, all at 6 volts.
Motoring Current—(GGU) 5.5-6.5 amperes, (GGJ) 4.3-4.8 amperes, all at 6 volts.
Removal—Mounted on pivot bracket above left cylinder bank. Remove fan belt and wiring. Remove clamp bolt and pivot bolts, and remove generator.
Belt Adjustment: Loosen pivot and clamp bolts, adjust generator so that ¾" slack will be obtained when pressure is applied between pulleys.
Fan Belt Adjustment—***See "Cooling" for belt adjustment.***

REGULATOR

Auto-Lite Regulator No.	for Auto-Lite Gen. No.
VAV-6001B	GGU-6001T, R
VBA-4202A	GGJ-6003A

See Electrical Equipment Section for complete data.
NOTE—Regulator case cover is sealed. Serviced on exchange basis if seal not broken (to remove cover).

Cutout Relay

Cuts In (VAV)—6.4-7.0 volts (set to 6.4-6.6 volts).
Cuts In (VBA)—6.35-6.75 volts (set to 6.4-6.6 volts).
Cuts Out (All)—4.1-4.8 volts (approx. 4-6 amps. disch).
Contact Gap (All)—.015" minimum.
Air Gap (All)—.031-.034" with contacts open (check at hinge end of core).

Voltage Regulator

Setting (VAV)—7.2-7.5 volts at 70°F., (VBA) 7.0-7.2 volts at 70°F. See Electrical Equipment Section for setting at other temperatures.
Checking (without breaking seals) & Adjustment—***See Electrical Equipment Section.***
Air Gap (All)—.048-.052" with contacts just opening.

Current Regulators
►**(Temperature Compensated Regulators)**

	Nominal Setting
VBA-4202A	50
VAV-6001B	50

►***CAUTION***—Nominal setting is approximate setting at 70°F. room temperature after regulator has been run (will be higher started cold). See Electrical Equipment Section for settings at various temperatures.
Checking (without breaking seals) & Adjustment—***See Electrical Equipment Section.***
Air Gap (All)—.048-.052" with contacts just opening.

LIGHTING

Headlamps: Corcoran-Brown "Sealed Beam" type with new "Bull's Eye" lens. Beam selector switch on toeboard. Controls upper and lower beam.
See Electrical Equipment Section for complete data.
Headlamp Adjustment—Aim upper beam straight ahead (hot spot center 3" below lamp center height at 25 ft.).
Beam Indicator—Lighted when Country (upper) beams in use. Located on lower right corner of speedometer face.
Directional Signal: ***See Electrical Equipment Section.***
Directional Signal Indicator—In lower left corner of speedometer face.
Directional Signal Flasher—Chrysler No. 1257223.

Switches

Beam Selector—Chrysler No. 1253460.
Map Light—Chrysler No. 1244605.
Directional Signal—Chrysler No. 1235606.

MISC. ELECTRICAL

CIRCUIT BREAKERS Lighting—30 ampere. Vibrating type, protects lighting circuits.
Aux. Circuit Breaker—8 ampere. Protects Windshield Wipers and Back-Up Light.
Directional Signal—On flasher behind instrument

panel. Vibrating type. Protects directional signal circuit.
Transmission Solenoid—Vibrating type mounted as an assembly with resistor unit.
Convertible Top—Mounted near control switch. Thermostatic type. Opens at 80 amperes in 1 minute or less.

FUSES: Clock—3 amperes. In clock lead.
Radio—14 amperes. In fuse connector at radio.

HORNS: Auto-Lite Model HW-4107 (Low Pitch), HW-4108 (High Pitch). Dual horns operated by relay.

Horn Relay: Auto-Lite Model HRL-4104. Connected through ignition switch. Operated only with ignition "on".
Contacts Close—1.5-3.0 volts (seal to core with 4.0 volts maximum).
Contacts Open—.5 volts min. (open from seal).
Contact Gap—.026". **Air Gap**—.016-.020" (armature air gap with contacts closed but not sealed), .015-.018" (gap between armature leg and yoke with armature sealed to core).

ENGINE

ENGINE SPECIFICATION: 8 cyl. "V" type, valve-in-head.
Bore—3 13/16". **Stroke**—3 5/8".
Displacement—331.1 cu. in. **Rated HP.**—46.5.
Developed Horsepower—180 at 4000 RPM.
Compression Ratio—7.5-1 Std. cast iron head.
Compression & Vacuum Reading—*See Tune-Up data.*

ENGINE REMOVAL: Work engine out toward left front fender. Not necessary to remove heater assembly.

TIGHTENING TORQUES: *See Chrysler Special Data.*

CYLINDER HEAD: Tightening Torque & Cylinder Head Diagram—*See Chrysler Special Data.*

PISTONS: Aluminum alloy, Steel-strut, Slipper type, cam ground and tin plated.
Length—3 7/8". **Weight**—20.8 ozs.
Removal—Pistons and rods removed from above.
Clearance—.0005 to .0015" between the thrust face of the piston and the cylinder wall.

Fitting New Pistons: Fit piston in bore using .002"x½" feeler. Insert piston upside down in bore with feeler 90° from pin bosses on thrust side. Clearance correct when 9-12 lbs. pull required to withdraw feeler.

►*CAUTION—Letter "F" embossed in side of piston near piston pin hole must face front of engine when installed.*

►*NOTE*—Cylinder recondition limits .0005" taper and .0005" out-of-round. Badly scored bores or with taper over .030" or out-of-round over .004" require reboring and honing to limits listed above.

Replacement Pistons: Standard, .010", .020", .030", .040", .050", .060", oversize.

Installing Pistons: Letter "F" embossed in side of piston near piston pin hole must face front of engine.

PISTON RINGS: Two compression, one slotted oil control, all above pin. Oil ring groove drilled for oil drainage.

Ring	Width	End Gap	Side Clearance
Compression	5/64"	.010-.020"	.002-.0035"
Oil Control	3/16"	.010-.020"	.001-.0025"

PISTON PIN: Diameter—63/64". **Length**—3 9/64".
Floating type with locking ring at each end.
Pin Fit in Piston—Thumb push fit in piston at normal room temperature (70°F.).
Pin Fit in Rod Bushing—.0000" to .0004" at normal room temperature (70°F.).

Replacement Pins: Standard and .003", .008" Oversize.

CONNECTING ROD: Length—6⅝". **Weight**—25.2 ozs. with bolts less bearings.
Crankpin Journal Diameter—2.49" to 2.50".
Lower Bearing—Removable, precision type, thin babbitt on steel. No shims.
Clearance—.0005" to .0015".
End Play—.006" to .014" (two rods).

Bearing Adjustment: None (no shims). Replace bearings. Do not file rods or bearing caps.

Replacement Bearings: Standard size and .001", .002", .010" Undersize.

Installing Rods: Rods are chamfered on one side at bearing insert and must be installed with chamfer toward end of crankpin journal.

►*CAUTION*—Rods are **interchangeable**, however, when rods are assembled to piston the assemblies of one engine bank are **not interchangeable** with the other bank.

►*CONNECTING ROD BEARING CAP CAUTION*—The "V" slot across one bolt hole of each bearing cap is an oil passage for lubricating the opposite cylinder wall and piston pin. When installing the bearing cap make certain the "V" slot oil passage is toward the top of engine.

CRANKSHAFT: 5 bearing with vibration dampener on front end.
Journal Diameter—2.4995" to 2.5005".
Bearings—Removable, precision type, thin babbitt on steel. No shims.
Clearance—.0005" to .0015".

Bearing Adjustment: None (no shims). Replace bearings. Do not file bearing caps.

Replacement Bearings: Standard and .001", .002", .010", .012" undersize.
End Thrust—Taken on flange faces of center (#3) main bearing. **Endplay**—.002" to .007".

CAMSHAFT: 5 bearing. Non adjustable chain drive.
Journal Diameters—Nos. 1-2-3-4, 1.998-1.999". No. 5, 1.4355-1.4365".
Bearings—Removable, steel backed, babbitt lined bushings.
Clearance—.001-.003".

End Thrust: Taken by thrust plate behind camshaft sprocket hub. **Endplay**—.002-.006".

Camshaft Removal: *See "Camshaft & Bearings" in Chrysler Special Data.*

Timing Chain: Width 1⅛". Pitch .375". Length 68 links.

Camshaft Setting: Place crankshaft sprocket "Zero" mark exactly in line with center of camshaft. Temporarily install camshaft sprocket (less chain) and line up dowel pin hole in hub with sprocket dowel pin hole, while at the same time positioning the camshaft sprocket "Zero" mark exactly in line with center of crankshaft. (Use a straight edge to check accuracy of alignment). Remove camshaft sprocket and position it in timing chain and reinstall assembly, positioning timing chain on crankshaft sprocket. When properly installed, "Zero" marks should be in line with shaft centers. Install fuel pump eccentric and camshaft nut. Tighten to 120-130 ft. lbs.

►*TIMING CASE COVER REMOVAL CAUTION—One cover attaching bolt located in case back of water pump. Remove water pump before attempting to remove timing case cover.*

VALVES:

	Head Diameter	Stem Diameter	Length
Intake	1 13/16"	.3725"	5"
Exhaust	1 1/2"	.3715"	4 29/32"

	Seat Angle	Lift	Stem Clearance
Intake	45°	.378"	.001-.003"
Exhaust	45°	.362"	.002-.004"

Exhaust Valve Seat Inserts—*See Chrysler Special Data.*

Valve Guides: Remove old guides by driving them out through top of head using tool DD-883. Install new guides by driving them up through valve port opening. To install the intake valve, place a steel scale across combustion chamber dome and drive valve guide in until punch mark on tool DD-883 is flush with the face of cylinder head. To install exhaust valve guide, drive it in until it is flush with the machined face of the hole.

►*CAUTION*—When installing exhaust valve guide, make certain the oil holes in the top of the guide are facing up.

Valve Springs: Two springs used each valve. Install with closed coil toward cylinder head.
Free Length—Outer 2 1/32". Inner 1 29/32".

Outer—	Spring Pressure	Spring Length
Valve Closed	52-57 lbs.	1 11/16"
Valve Open	130-138 lbs.	1 9/32"
Inner—	**Spring Pressure**	**Spring Length**
Valve Closed	14-16 lbs.	1 9/16"
Valve Open	37-42 lbs.	1 5/32"

►*NOTE*—If valves or seats are reground, check installed height of spring. If height is 1 3/4" or greater, install 1/16" spacer (Part No. 1400482) in the head counterbore to bring spring height back to the nominal 1 11/16".

►*CAUTION*—Hydraulic valve lifter "pump-up" will restrict engine speed and cause valve burning if valve spring loads are not maintained.

Valve Lifters: Hydraulic type.
See Miscellaneous Section for complete data.
Removal—*See "Valve System" in Chrysler Special Data.*

►*VALVE GRINDING CAUTION*—If the position of the valve in the head has been changed (due to valve or seat grinding) so as to shorten the operating length by 1/32" or more from its factory installed position, the dimension from the valve spring seat in the head to the tip of the valve should be checked with gauge C-3061. If the tip exceeds the maximum, grind tip to approach (but do not go below) the minimum allowable on the gauge. Improper valve clearance at high speed will result if this condition is not corrected.

VALVE TIMING

Tappet Clearance: No adjustment required, except when valves are reconditioned.

Valve Timing: See Camshaft Setting above.
Intake Valves—Open 15° BTDC. Close 57° ALDC.
Exhaust Valves—Open 49° BLDC. Close 15° ATDC.

►*TIMING CASE COVER REMOVAL CAUTION—One cover attaching bolt located in case back of water pump. Remove water pump before attempting to remove timing case cover.*

C NTINUED ON NEXT PAGE

CONTINUED FROM PRECEDING PAGE

LUBRICATION

Engine Oiling System: Pressure through "Full-Flow" oil filter to main and connecting rod bearings, camshaft bearings, timing chain and hydraulic valve lifters. "Rotor" type oil pump mounted below rear main bearing cap. Floating type oil strainer is used.
Crankcase Capacity—5 quarts, (add one quart when "Full-Flow" oil filter element is replaced).
Normal Oil Pressure—55 to 65 lbs. at 40 to 60 miles per hour.
Oil Pressure Relief Valve—Mounted in oil pump.
Oil Pump—"Rotor" type mounted on rear main bearing cap.
Oil Filter—"Full-Flow" type. All oil enters lubricating system of engine through filter at full pump pressure. Safety valve in filter opens if element is clogged allowing oil to pass into lubricating system under a reduced pressure.
Servicing—Install new filter element and cover gasket at 5000 mile intervals (or earlier if required). Change oil at same time filter element is replaced.

Oil Pressure Gauge: Auto-Lite No. (C52) 12479A, (C53 & C54) 12466A.

COOLING

Cooling System: Non-Pressure type (under ordinary operating conditions). A pressure vent type radiator cap is used. Under normal operating conditions, pressure is not built up in the system. However, if an abnormal condition develops, such as overheating, or car is driven at excessively high speeds, the valve at the bottom closes, seating against gasket. This action pressurizes the system up to approximately 4 lbs., at which time the valve and seat raise and allow the built-up pressure to escape through the overflow tube.
Capacity—25 qts.

Water Pump: Packless type with shaft mounted on two ball bearings with lubricant fitting for bearing lubrication.
See Water Pump Section for complete data.
Removal—Drain cooling system, remove fan belts and belt pulley. Remove four bolts attaching pump to water manifold and remove pump.

►*NOTE*—Three drain cocks. One on radiator, one on each engine bank.
Fan Belt Adjustment—Loosen idler pulley pivot bolts and adjust fan to have ½" slack when applying pressure midway between pulleys.
Generator Belt Adjustment—*See "Generator" for adjustment.*

Thermostat: In cylinder head water outlet.

Temperature Gauge: Auto-Lite No. (C52) 12475A, (C53) 12468A, (C54) 12467A.

CLUTCH

Borg & Beck Model No. (C52 & C54) 9.5E, (C53) 10E, with "Borglite" driven member. Single plate, dry disc type. NOTE—Assembly No. (C52 & C54) 1213, (C53) 1211, stamped on cover.
See Clutch Section for complete data.
Facings—Woven type. 2 used. Inside diameter (9.5E) 6", (10E) 6½". Outside diameter (9.5E) 9½", (10E) 10¼". Thickness .125".

Pedal Adjustment: Set pedal to just clear toeboard by loosening locknut and turning stopscrew at lower end of pedal arm above shaft. Set pedal for 1" free travel by turning clutch release fork adjusting nut on connector link at clutch release fork.

►*CAUTION*—Do not disturb turnbuckle on pedal link (controls pedal over-center spring tension).

Removal (with Fluid-Matic Drive): Remove transmission (see TRANSMISSION) and unhook clutch release fork pull-back spring. Disconnect one end of clutch fork rod assembly from fork by removing cotter key, pin and two washers. Disconnect other end from clutch release bearing torque shaft by removing cotter key, pin and three washers. (*CAUTION*—As soon as rod assembly is removed, push clutch pedal until over-center spring brings it to floor board. This will avoid danger of injury should pedal be pushed in while linkage is disconnected.) To remove release bearing from clutch fork, do not force bearing and pull-back springs straight off from fork prongs. Pivot the release bearing away from the fork. Assembly and springs will slide off easily. Remove two screws holding shaft pivot bracket assembly to clutch housing. Remove opposite end of pivot bracket assembly from torque shaft. Place jack under engine oil pan to support engine (block of wood between jack and pan). Remove clutch housing-to-cross member bolts, then cross member-to-frame bolts and drop cross member from frame. Jack engine down about three inches so clutch housing is far enough below floorboard to permit removal of housing cap screws. Remove cap screws and housing, and remove clutch assembly from clutch drive plate.

Removal (with Fluid-Torque Drive): Remove oil reservoir from bottom of clutch housing and oil lines from converter support plate before proceding as outlined above.
See Chrysler Fluid-Torque Drive in Transmission Section.

FLUID DRIVE

Chrysler—Fluid coupling at rear of engine.
See Transmission Section for complete data.

Oil Level: Keep to level of filler hole. Check at first 1000 miles and every 10,000 miles. Manufacturer recommends MOPAR Fluid Drive Fluid.

Slippage Test—*See "Fluid Drive" in Chrysler Special Data.*

Removal: Remove transmission and clutch (see TRANSMISSION and CLUTCH), take off driver flange stud nuts (Tool C-589), lower fluid drive assembly out.

AUTOMATIC TRANSMISSION

Hydraulically Operated Type (with Fluid Drive & Fluid Torque). New design semi-automatic, four speed transmission with hydraulic actuation and electrical control.
See Transmission Section for complete data.

►**Kick-down Switch Change to improve Transmission Operation**—*See "Chrysler, DeSoto, Dodge Kick-down Switch" in Electrical Equipment Section.*

Transmission Control: *See Transmission article for adjustment directions.*
Kickdown Solenoid—Auto-Lite No. SSS-4003.
Governor—Auto-Lite No. TGG-4001.
Kick-down Switch—Part of carburetor assembly. *See "Chrysler, DeSoto, Dodge Kick-down Switch" in Electrical Equipment Section.*
Ignition Interrupter Switch—On right side of transmission above Governor.
Transmission Oil—3 pints, 10-W engine oil.

Removal: Remove access cover on right rear side of floorboard under front floor mat, disconnect speedometer cable, and governor, solenoid, and interrupter switch wires at transmission. Remove governor and solenoid. Disconnect hand brake cable at brake band, remove cable and cable anchor bracket. Remove brake support, band, adjusting bolt bracket and lever as an assembly. Disconnect front universal (push yoke back), and gearshift rods at transmission. Drain transmission, **replace drain plug.** Disconnect transmission mounting bolts and lower assembly out of car.
INSTALLATION CAUTION—Rear face of clutch housing and lower pan must be in correct alignment. Misalignment can cause hard shifting when transmission installed.

FLUID-TORQUE DRIVE

Own Make—Four element single stage type. Unit cannot be disassembled. Replace unit if repairs are necessary.

Oil Level: Bottom of filler plug hole. Replenish to this point if fluid is low.

Draining & Refilling: Check every 1000 miles and change oil every 10,000 miles using MOPAR Fluid Drive Fluid.
See Transmission Section for complete data.

UNIVERSALS

Detroit Universal Series 7300—Cross type with roller bearings. Two used (3 on C53, 8 pass., and Limo.).

Propeller Shaft Center Bearing: Used on C53.
See Universals Section for complete data.

REAR AXLE

Own Make—Semi-floating, hypoid gear type with Hotchkiss drive. Barrel type differential with adjustable ring gear thrust pad used.
See Rear Axle Section for complete data.
Ratio—(C52, C54) 3.73-1 (41-11). (C53) 3.54-1 (39-11).
Backlash—.006-.010". Screw adjustment.
Ring Gear Thrust Pad Setting—Loosen locknut on left side of carrier housing, tighten thrust pad screw finger tight, back screw off ⅛ turn, tighten locknut.

Removal: Disconnect rear universal, remove axle shafts (see below), take out carrier capscrews, lift off carrier assembly.
Axle Shaft Removal—Remove wheel, hub, and drum assembly (use screw type hub puller—Tool C-675), block brake pedal, disconnect brake line at wheel cylinder, remove axle shaft key, install sleeve (Tool C-757) in oil seal, remove brake support (oil seal mounted in support), pull shaft and bearing (use C-499 puller). NOTE—Use puller C-293-C to remove bearing from shaft, puller C-748 or C-358 to remove inner oil seal, drift C-241 to install seal.

Axle Shaft Outer Oil Seal: New leather type mounted on brake support (backing plate).

Wheel Bearing Adjustment: Shims between backing plate and axle housing. With wheel and hub removed, check endplay with dial indicator. To adjust, remove backing plate (see above), add or remove shims (furnished .010", .0125", .015", .030", thick) equally at both wheels. **Endplay**—.003-.008".

SHOCK ABSORBERS

New "Oriflow" hydraulic, direct acting, non-adjustable type.

FRONT SUSPENSION

Front Suspension: Independent linked parallelogram type with coil springs and direct acting shock absorbers.
See Front Suspension Section for complete data.

King-Pin Inclination—(C52, C54) 5° to 6½°, (C53) 6½° to 8°.

Camber—Neg. ⅜° to Pos. ⅜°. (¼-½° higher on left).

Caster—Neg. 1° to Neg. 3°, (Neg. 2° preferred).
Toe-In—0" to 1/16", (0" preferred).

STEERING GEAR

Own Make—Std. (C52, C54) 3 tooth Worm-and Roller. Similar to Gemmer model 335.
Hydra-Guide—Std. (C53). Optional (C52, C54). Gemmer hydraulic steering unit. Oil pump on generator operates piston connected to pitman arm through a valve operating block controlled by the steering wheel.
See Steering Gear Section for complete data.

BRAKES

SAFE GUARD TYPE

Service: Chrysler "Safe-guard" Lockheed Hydraulic.
See Brake Section for complete data.

►*BRAKE SQUEAK OR SQUEAL CORRECTION—See "Lockheed-Chrysler Safe-guard Hydraulic" Brake in Brake Section.*

Wheel Cylinders—1¼" bore (front wheel front shoe—top cylinder), 1⅛" bore (all others). Single acting (front), double acting (rear wheels).
Drums—Centrifuse. Diameter 12".
Lining—Molded asbestos. Width 2". Thickness 3/16". Length per wheel 25⅛".
Clearance—.006" at each end of shoes.
Braking Power—60% front wheels, 40% rear.

Power Brake: Vacu-Ease vacuum power unit.
See Brake Section for complete data.

Hand Brake: On shaft at rear of transmission. Internal type.
Adjustment—*See "Hand Brake Notes" in Chrysler Special Data.*
Drum—Cast iron. Diameter 7".
Lining—Width 2". Thickness 5/32". Two shoes, total length 13⅛".
Clearance—Adjusting nut on shoe link backed off one notch from point where shoes firm against drum.

DISC TYPE

Service: Hydraulic self-energizing, two-shoe, DISC type. NOTE—No power booster used.
See Brake Section for complete data.

Disc Face Diameter—I.D. 9", O.D. 12".

Lining—Molded asbestos segments (12 used). Thickness 3/16".
Clearance—Brakes are self-adjusting.

►**Bleeding Disc Type Brakes**—Manufacturer recommends bleeding all four lower wheel cyls. first, then all four upper ones last.

MISC. MECHANICAL

WINDSHIELD WIPER: Auto-Lite Model EWJ-4003, (except 8 pass., & Limosine). EWJ-4001 (8 pass., & Limosine). Electric type with circuit breaker mounted on control switch.
See Miscellaneous Section for complete data.

WINDOW REGULATORS: Hydro-electric type.
See Miscellaneous Section for complete data.

TIGHTENING (TORQUE WRENCH) SPECIFICATIONS

	In. Lbs.
Spark Plugs	225-250
Cyl. Block Hold-down Stud Nuts	125-165
Main Bearing Cap Stud Nuts	150-180
Connecting Rod Cap Stud Nuts	200-280
Camshaft Bearing Capscrew	75-100
Flywheel Mounting Capscrew	225-285
Flywheel Housing Capscrews	225-285
Clutch Mouting Capscrews	150-180
Oil Pump Housing Capscrews	50-80
Oil Pump Mounting Capscrews	125-165
Intake & Exhaust Manifold Capscrews	225-285

ENGINE REMOVAL

ENGINE REMOVAL (FOR SERVICING): Engine should be removed from chassis as follows: Remove hood, drain radiator. Disconnect battery cable at battery, disconnect and remove starting switch-to-starter cable. Disconnect all ignition leads at distributor, fuel line at fuel pump, throttle and choke cables at carburetor, oil pressure gauge line at right rear corner of engine, windshield wiper hose at manifold, generator wire at Cutout Relay, hose connections at engine block outlet and water pump, exhaust pipe at manifold connection, engine ground strap at flywheel housing, clutch release cable at release lever under flywheel housing, temperature indicator cable and bulb at engine outlet connection. Remove radiator brace rod connected to top of radiator, take out two base bolts under radiator and carefully lift radiator out of engine compartment. Remove hood latch cable. Slack off fan drive belt, remove fan assembly and belt. Place support jack under engine, split front & rear flywheel housing by taking out 5 bolts, remove nut and lock washer on right front engine mounting stud (goes through frame), remove left front engine mounting bolt. Attach lifting sling to engine (loop sling under oil pan), support engine weight with sling and hoist, move engine straight forward approximately 4" (to clear clutch shaft), lift engine out tilting the front end up slightly for clearance.

CYLINDER BLOCK REMOVAL (FOR VALVE SERVICING): With the engine out of the car (see Engine Removal), remove water pump, fuel pump, carburetor, manifolds, and spark plugs. Remove camshaft cover, take out mounting bolts in all camshaft bearings and lift off camshaft and bearings (oil metering tube in upper end of towershaft at front of camshaft will come out with camshaft). Unscrew and remove towershaft adjuster, lift out towershaft upper bevel gear. Remove oil pan, connecting rod caps, and oil pump. Turn crankshaft to top center. Remove 11 elastic stopnuts holding cylinder block on crankcase, lift off cylinder block and piston assembly.

Cylinder Block Installation—Disconnect piston and connecting rod assemblies from crankshaft and insert these in cylinder block before installing block on crankcase. See that face of cylinder block and crankcase are clean, use new gasket and elastic stopnuts. Install cylinder block on crankcase (use locating dowel) making certain that connecting rods turned so that rod markings are on distributor (left) side of engine. Use plain washer under cylinder block mounting stud nuts, tighten all nuts evenly (see tightening Torque Data). Install connecting rod bearing caps, install oil pan.

CRANKSHAFT & MAIN BEARINGS

CRANKSHAFT SERVICING: Crankshaft Removal—With engine out of car (see Engine Removal), remove oil pan, remove oil pump (see Oil Pump Servicing), remove gear on lower end of distributor shaft, remove all crankshaft bearing caps, lift crankshaft out (not necessary to remove clutch).

CRANKSHAFT OIL SEALS: Front Seal. Metal enclosed neoprene seal. To remove, take off oil pan and crankshaft pulley, slide seal off. Coat outside of new seal with Permatex No. 2, slide into position against shoulder at rear of its groove. Install crankshaft pulley, adjust lower gear backlash.

Rear Seal. With crankshaft out of engine, remove old seal. Turn new one-piece seal on shaft with edge of internal lip to front. Use Permatex No. 3 in seal groove. Install crankshaft so that seal gap will be in the center of the rear bearing cap.

CAMSHAFT & BEARINGS

TOWER SHAFT ASSEMBLY SERVICING:

Disassembly—Towershaft and lower bevel gear (integral with shaft) can be withdrawn from below after towershaft adjuster has been unscrewed from upper end of shaft and upper bevel gear lifted out.

Assembly—Insert bushing in crankcase from below, insert towershaft, install crankshaft and mesh gears (see Camshaft Drive Gear Meshing below) check and adjust lower bevel gear backlash. After cylinder block installed on crankcase, see that upper bushing in place in upper end of towershaft housing, install towershaft upper bevel gear, install towershaft adjuster, tighten adjuster until clearance between shoulder on upper gear and face of upper bushing is .004" (measure with feeler gauge while prying upward on adjuster). Towershaft clearance in bushings should be .0005-.002" (lower bushing), .0005-.0015" (upper gear hub in upper bushing). Backlash in gears should be .003-.005" (lower bevel gears—see Towershaft Gear Backlash Adjustment below), .003-.005" (upper bevel gears—see Camshaft Endplay Adjustment).

Lower Gear Backlash Adjustment—To check backlash adjustment, push crankshaft forward until thrust flange is against rear main bearing. Mount dial indicator so as to measure movement of towershaft lower bevel gear, rock towershaft back and forth. Backlash .003-.005" and adjust as follows:

Backlash Adjustment—When installing towershaft assembly, screw the crankshaft adjuster (slotted stud in forward end of crankshaft) in until lower bevel gears are snug. Start the engine. If gears are noisy, stop engine, unscrew crankshaft adjuster slightly, repeat test. When gears run quietly, tighten nut on adjuster securely (hold adjuster with screwdriver to prevent change in adjustment).

CAMSHAFT ENDPLAY ADJUSTMENT: To check endplay with camshaft installed on engine, push camshaft forward as far as possible, measure clearance between rear face of camshaft gear hub and front bearing with a feeler gauge. Endplay should be .003-.005". Adjust camshaft endplay as follows: Loosen front camshaft bearing capscrews, slip bearing strap up on capscrews for access to thrust washer, & replace with washer of correct thickness.

CAMSHAFT DRIVE GEAR MESHING MARKS: With engine completely disassembled, install and mesh all gears of the valve system as follows:

Crankshaft Gear—Install gear on crankshaft splines with marked spline on shaft in line with punchmark on gear hub. NOTE—On first cars where gear hub not marked, marked spline on shaft should be on same side and in line with marked tooth on gear.

Tower Shaft Lower Gear—Gear is integral with shaft. The two punch-marked teeth on tower gear should straddle punch-marked tooth on crankshaft gear.

Tower Shaft Upper Gear—Install gear on shaft with punch marks in line. Mesh punch-marked tooth on gear between two punch-marked teeth of camshaft gear.

Camshaft Gear—Gear is keyed on shaft.

CAMSHAFT OIL METERING HOUSING ASSEMBLY: Install oil metering housing (90° fitting between upper end of towershaft and camshaft) in forward end of camshaft with camshaft off engine, then engage lower end of housing in upper end of towershaft as camshaft is placed in position on cylinder block. Housing clearance should be .0002-.0023" in camshaft and .0005-.0025" in towershaft gear adjuster. Backlash between camshaft and towershaft gears should be .003-.005".

VALVE CLEARANCE ADJUSTMENT

TAPPET CLEARANCE ADJUSTMENT: To check clearance, turn camshaft until heel of cam is directly over cam follower, press valve in so that it rests firmly on seat, check clearance with feeler gauge. If clearance insufficient, select adjusting shim pack of correct thickness for correct tappet clearance, insert shims through slot in head of cam follower (above spacer washer), lock shims in place by bending up ends. Shims furnished in following sizes.

Cam Follower Shims

Thickness	Part No.	Thickness	Part No.
.008"	209855-8	.022"	209855-22
.010"	209855-10	.024"	209855-24
.012"	209855-12	.026"	209855-26
.014"	209855-14	.028"	209855-28
.016"	209855-16	.030"	209855-30
.018"	209855-18	.032"	209855-32
.020"	209855-20		

Tappet Clearance—Closed

Intake—.004-.005". **Exhaust**—.005-.007"

VALVE SYSTEM

VALVE SERVICING: With engine removed from chassis, remove cylinder block (see Cylinder Block Removal above), lift out valve lifters (cam followers) and number these to insure re-installation in same positions (CAUTION—Do not lose tappet clearance adjusting shims and spacer washers on later cars). Use special bar type valve lifter to compress valve springs, remove split locks, spring retainer, and spring from each valve, remove valve from inside cylinder. Reface valves in usual manner (see data below for refacing valve seats), reinstall assemblies, check tappet clearance.

Valve Seat Resurfacing—Special tools must be used to avoid marring cylinder walls (valve seats must be serviced from within cylinder). Use special Blue Point Stone Carrier, VG-10-2B, turned down to **1" diameter,** and 5/16" pilot with following stones: SE-400-R Valve Seat Stone (Roughing), SE-400-F (finishing). Stones must be turned to **1 3/16" diameter for Intake Valves, 1 1/16" for Exhaust.**

MODEL IDENTIFICATION

MODEL DESIGNATIONS:
"CD" Deluxe—Sedan "A", Pick-Up Truck "B", Convertible "C", Station Wagon "D", Panel Delivery "E", Cab "F".
"CD" Super Deluxe—Sedan "A", Convertible "C", Station Wagon "D".
"VC" Models—Hotshot "A", Super Sports "B".

SERIAL NUMBER: Stamped on plate on front face of dash panel in engine compartment.
1950 Numbers—Deluxe & Super Deluxe "CD" CD-200,000 Up.
Hotshot & Super Sports "VC" VC-20,000 Up.
1951 Numbers—Deluxe & Super Deluxe "CD" CD-300,000 Up.
Hotshot & Super Sports "VC" VC-30,000 Up.

ENGINE NUMBER: Stamped on pad on left side of crankcase.

TUNE-UP

COMPRESSION PRESSURE: 125-135 lbs. max. (110 lbs. min. hot) at cranking speed of 260 RPM. All cylinders must be equal within 10 lbs.

VACUUM READING: 18-20" Idling at 700 RPM.

FIRING ORDER: 1-3-4-2. See diagram.

SPARK PLUG GAPS: .025".
Plugs—Auto-Lite Type AN-7E. 14 mm. Metric.

DISTRIBUTOR: Breaker Gap—.020". Limits .018-.022"
Cam Angle—44° (closed).
Breaker Arm Spring Tension—17-20 ozs.
Automatic & Vacuum Advance—*See Ignition.*
Condenser Capacity—.20-.25 microfarad.

IGNITION TIMING: 12° BTDC.
Timing Procedure—*See Ignition Timing.*
Timing Mark—First flywheel mark (second mark is TDC) in inspection hole in right front face of flywheel housing.

CARBURETION:
Initial Setting (to warm up Engine)—Idle adjustment screw 1¼ turns open, Main (high speed) adjustment screw 2¾ turns open.
Main (High Speed) Adjustment—With engine warm and running at ½ throttle opening, turn screw in until engine begins to lose speed, then out until maximum speed and power secured (2-2⅛ turns open).
Idle Adjustment—After making Main Adjustment (above), close throttle and set stopscrew for slightly faster than normal idle speed, turn idle adjusting screw in until engine misses, then turn screw out until engine fires smoothly. Final setting 1 turn open.
Idle Speed—700 RPM or 7-8 MPH.
Float Level—Fuel level 23/32" below top edge of bowl or even with bottom of inspection plug hole on side of bowl.
►*CAUTION*—Remove idle adjusting screw, spring, and idle tube before removing air horn and float bowl cover assembly.
Accelerating Pump—None.

Choke Setting: Manual choke.

Fuel Pump Pressure: 1½-3¼ lbs.

VALVE TAPPET CLEARANCE: .004-.005" Intake, .006-.007" Exhaust, Cold.

Tappet Clearance Adjustment Procedure—*See "Valve System" in Crosley Special Data.*
Valve Timing Check—*See Valve Timing.*

STARTING: *See Battery, Starter, Generator, Regulator.*

IGNITION

IGNITION SWITCH: Crosley No. 302199.

COIL: Auto-Lite Model IG-6001. On dash.
Service Coil—IG-4070 with IG-1944 Service Bracket.
Ignition Current—2 amperes idling, 5 stopped.

CONDENSER: Auto-Lite No. IGB-1025.
Capacity—.20-.25 microfarad.

DISTRIBUTOR: Auto-Lite Model IGW-4181B or 4181C. Single breaker, four lobe cam, full automatic advance type (no vacuum control).
Breaker Gap—.020". Limits .018-.022".
Cam Angle—44° (closed).
Breaker Arm Spring Tension—17-20 ozs.
Rotation—Counter-clockwise viewed from above.

Automatic Advance—IGW-4181B

Distributor Degrees	R.P.M.	Engine Degrees	R.P.M.
Start	400	0	800
1	490	2	980
6	890	12	1780
14	1550	28	3100
15	1625	30	3250

Automatic Advance—IGW-4181C

Distributor Degrees	R.P.M.	Engine Degrees	R.P.M.
Start	400	0	800
1	465	2	930
7	835	14	1670
16	1390	32	2780
17	1450	34	2900

Removal: Distributor mounted on crankcase at left front of engine. To remove distributor, drain engine oil, remove oil pan, remove distributor drive gear by removing palnut and regular nut on lower end f

CONTINUED ON NEXT PAGE

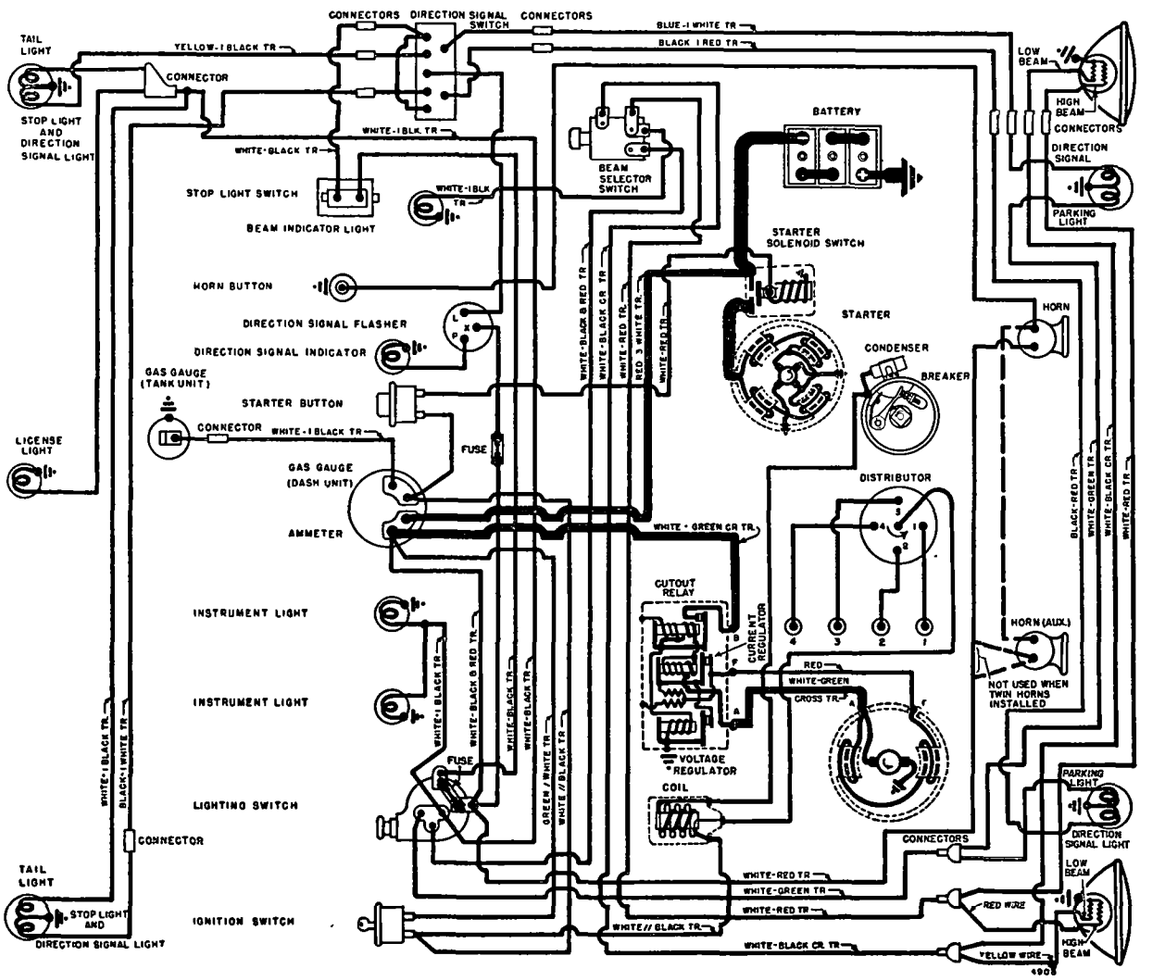

C NTINUED FR M PRECEDING PAGE

distributor shaft. (CAUTION—Do not lose Woodruff key in shaft). Then remove hold-down screw in advance arm, lift distributor out.
Distributor Installation Note—When installing distributor, first turn crankshaft to #1 cylinder firing position (#1 piston on compression, ignition timing mark on flywheel in center of inspection hole in right front face of housing), turn distributor shaft until rotor is at #1 segment in distributor cap (see diagram) with contacts just opening, install distributor on engine and tighten hold-down screw in advance arm. With oil pan removed, install drive gear on lower end of distributor shaft. (CAUTION—make certain that Woodruff key in place), being careful not to disturb relative position of distributor shaft and crankshaft when meshing gears, install regular nut and palnut on distributor shaft. Check Ignition Timing.

IGNITION TIMING

Std. Setting.....12° BTDC.
To Set Timing—With #1 piston on compression, turn engine over until piston reaches firing position when first timing mark on flywheel is in center of inspection hole in right front face of housing. Loosen advance arm clamp bolt, rotate distributor housing until contacts begin to open, tighten clamp bolt. Check rotor and make certain it is at #1 segment in distributor cap, check spark plug connections.
To Check Timing (with Neon Timing Light)—Attach neon timing light to #1 spark plug, direct light on flywheel through inspection hole in right front face of housing. Start engine and allow it to idle (speed must not exceed 700 RPM. to avoid automatic advance action). Loosen distributor clamp bolt in advance arm, rotate distributor until timing mark (located 12° before TDC mark) appears to be in center of inspection hole, tighten clamp bolt,

CARBURETOR

Tillotson Model DY-9C—⅞", single barrel, plain tube, downdraft type with manual choke control.
See Carburetor Section for complete data.
NOTE—This carburetor has Main (High Speed) adjustment as well as conventional Idling (Low Speed) adjustment.
Adjustment & Float Level—*See Tune-up for data.*
Metering Jets—*See Tillotson DY-9C Carburetor article in Carburetor Section for complete data.*

CARB. EQUIPMENT

Air Cleaner: Oil-bath type. Crosley No. 206984 (DC), 301631 (VC).
Servicing—Remove and disassemble cleaner, wash out with gasoline (including filter), refill reservoir with light engine oil to indicated level (approx. ¼ pint) every 5000 miles or more often if required (inspect every 1000 miles).
Fuel Pump: AC No. 1538923 (Crosley No. 300042).
See Carburetion Equipment Section for data.
Pressure—1½-3¼ lbs.
Gasoline Gauge: Stewart (Stewart-Warner) Electric
See Carburetion Equipment Section for data.

BATTERY

Auto-Lite Type 1MS-70—6 volt, 11 plate, 70 Ampere Hour Capacity (20 hour rate).
Starting Capacity—80 amperes for 20 minutes.
Zero Capacity—300 amperes for 1.6 minutes. Five second voltage 3.6 volts.
Grounded Terminal—Positive (+) terminal.
Location—On left hand side in engine compartment.
NOTE—Battery on **Hotshot** located under right front fender.
Dimensions—Length 8 15/16". Width 7 1/6". Height 8 5/8".

STARTER

Auto-Lite Model MZ-4147. Armature No. MZ-2053.
Drive—Bendix Drive No. A2920.
Rotation—Counter-clockwise at commutator end.
Brush Spring Tension—42-53 ozs. with new brushes.

Performance Data

Torque	R.P.M.	Volts	Amperes
0 ft. lbs	4000	5.0	68
4.4 "	Lock	2.0	280

Removal: Starter flange mounted on left front face of flywheel housing. To remove, disconnect cable, take out capscrews.
Starting Switch: Auto-Lite Model SS-4007 Magnetic Switch and Pushbutton Model XA-456 or XA-456E. Switch is mounted on dash and controlled by push-button on instrument panel.
See Electrical Equipment Section for complete data.

GENERATOR

Auto-Lite Model GDZ-4806B. Armature GDZ-2079F. Two brush type with current and voltage regulation.
Maximum Charging Rate—35 amperes at 8.0 volts.
Charging Rate Adjustment—None. See Regulator.

Cold		Performance Data	Hot		
Amperes	Volts	R.P.M.	Amperes	Volts	R.P.M.
0	6.4	870-970	0	6.4	950-1050
35	8.0	1800-2000	35	8.0	2150-2350

Rotation—Counter-clockwise at commutator end.
Brush Spring Tension—35-53 ozs. (new brushes).
Field Current—1.60-1.78 amperes at 6.0 volts.
Motoring Current—4.2-4.6 amperes at 6.0 volts.
Removal: Generator cradle mounted on right side of engine with fan belt drive (water pump driven by armature shaft extension). To remove generator, disconnect leads, slack off belt adjustment and remove fan belt, remove front bolt in water pump coupling. Remove two 5/16" elastic stop nuts on generator mounting band, lift generator out.
Belt Adjustment: Loosen nuts on two bolts mounting fan shaft bracket on front of engine, move fan upward (right hand bolt hole slotted) until belt deflection is ½" (thumb pressure) midway between generator and fan pulleys, tighten nuts and recheck.
NOTE—Two holes provided in bracket for left hand fan mounting bolt. Additional range of adjustment can be secured by shifting bolt to upper hole.

REGULATOR

Auto-Lite Model VRP-4004F-2. Voltage-current type.
See Electrical Equipment Section for complete data.
NOTE—Regulator cover sealed. Warranty void if seals broken.

Cutout Relay

Cuts In—6.4-7.0 volts (set to 6.4-6.6 volts).
Cuts Out—4.1-4.8 volts (approx. 4-6 amps. disch.).
Contact Gap—.015" minimum.
Air Gap—.031-.034" with contacts open (check at hinge end of core).

Voltage Regulator

Setting—7.2-7.5 volts at 70°F. See Electrical Equipment Section for settings at other temperatures.
Checking (without breaking seals) & Adjustment—*See Electrical Equipment Section for complete data.*
Contact Gap—.012" min. (armature against stop pin).
Air Gap—.048-.052" with contacts just opening.

Current Regulator

Setting—34-36 amperes (marked '35' on cover).
Checking (without breaking seals) & Adjustment—*See Electrical Equipment Section for complete data.*
Contact Gap—.012" min. (armature against stop pin).
Air Gap—.048-.052" with contacts just opening.

LIGHTING

Headlamps: "Sealed Beam" type. Upper and lower beams controlled by Beam Selector Switch on toboard. Crosley No. 207371 (CD), 301351 (VC).
Adjustment—Aim upper beams straight ahead with top of "hot spot" 3" below lamp center height at 25 feet.
Direction Signal: Crosley No. 209355 used on "CD"—A, B, C, D, E, models. Crosley No. 301730 used on all "VC" models.
Direction Indicator—Single flasher light on lower edge of instrument panel to left of steering column.
See Electrical Equipment Section for complete data.

Switches

Lighting—Crosley No. 205936.
Beam Selector—Crosley No. 209446.
Directional—Crosley No. 209354.
Stop Light—Crosley No. 207800.

MISC. ELECTRICAL

FUSE: Lighting—20 ampere. On lighting switch.
Direction Signal—14 amperes. Located on lead wire on back of instrument cluster to left of steering column.
HORN: Sparton or Auto-Lite No. HA-4037. Vibrator type. Single horn standard, dual horns optional.
Horn Current—7 amperes each.

ENGINE

ENGINE SPECIFICATIONS: New "CIBA" cast-iron block engine. Four cylinder, Overhead Valve type with Overhead Camshaft. Cylinder block (with integral Head) is bolted on separate crankcase.
Bore—2.5". **Stroke**—2.25".
Displacement—44 cu. ins. **Rated H.P.**—10.
Developed Horsepower—26.5 at 5400 RPM.
Compression Ratio—7.8-1.
Compression & Vacuum Reading—*See Tune-up data.*
►**ENGINE SERVICE NOTE:** Cylinder Heads are integral with cylinder barrels and cylinder block must be removed from crankcase for work on Valves, Pistons, Rings, etc.
ENGINE REMOVAL and Cylinder Block Removal: *See Crosley Special Data.*
TIGHTENING (TORQUE WRENCH) SPECIFICATIONS: *See Crosley Special Data.*
PISTONS: Aluminum alloy, four ring type, heat treated, cam ground, with aluminum oxide finish.
Weight—6.5 ozs. stripped. **Length**—1 29/32".
Clearance—.002-.0035" (skirt). See Fitting New Pistons.
Removal—Pistons and rods removed through lower

ENGINE

CONTINUED FROM PRECEDING PAGE

end of cylinder when cylinder block removed from crankcase (cylinder head integral with block).
See Crosley Special Data for Cylinder Block Removal.

Fitting New Pistons: Use .002" feeler gauge, ½" wide, to check clearance. Place feeler gauge 90° from pin holes in piston on maximum thrust side. Pull required to withdraw feeler should be 4-6 lbs.

Replacement Pistons: Furnished Std. Size and .0025", .005", .010", .020", .030" Oversize.
NOTE—Std. piston furnished with pin and plugs.

PISTON RINGS: Two compression, one oil control ring above pin, additional oil control ring below pin. Drain holes provided in both oil ring grooves.

Ring	Width	End Gap	Side Clearance
Compr. (#1,2)	.0620-.0625"	.007-.017"	.0025-.005"
Oil (#3,4)	.1545-.1550"	.007-.015"	.0015-.003"

Installing Rings—Inside bevel on compression rings must be upward. Top compression ring chrome plated.

Replacement Rings: Furnished Std. Size and .010", .020", .030" Oversize.

PISTON PIN: Floating type with aluminum plug insert in each end of pin. Pin hole in rod has lead-bronze bushing.
Pin Fit in Piston—.0004" Loose to .0003" Tight at room temperature or 70°F.
Diameter—.6252". **Length**—2.260".
CAUTION—Heat piston to 160°F. when inserting pin to avoid distorting piston skirt.
Pin Fit in Rod Bushing—.000-.0005" clearance or tight thumb push fit at room temperature (70°F.).
►*NOTE*—Bushing is split leaded-bronze type and of size for press fit in connecting rod hole. Hone bushing for correct pin fit after installation (pressing bushing into place will close up gap and leave pin hole undersize).
Piston Pin Plugs—Must be snug fit in ends of pin.
Replacement Piston Pins: .001", .002", .003" Oversize.

CONNECTING ROD: Length—4.125-4.130". **Weight**—9.62 ozs. NOTE—Bearing cap bolts are forged integrally with the connecting rod.
Crankpin Journal Diameter—1.374-1.375".
Lower Bearing Type—Replaceable, precision type steel-backed, babbitt-lined. No shims.
►*NOTE*—Connecting rod bearings are interchangeable with the three intermediate lower main bearing halves (not interchangeable with crankshaft upper bearings).
Clearance—.0015-.003". **Sideplay**—.010-.025".

Bearing Adjustment: None (no shims). Replace bearings (precision type, no fitting required). Do not file bearing caps. NOTE—Palnuts used on connecting rod bolts. Always use new Palnuts.

Replacement Bearings: Furnished Std. Size and .001", .005", .010", .020" Undersize.

Installing Rods: Numerical marking on rod and bearing cap together on left side of engine (distributor side).

CRANKSHAFT: Five main bearing type with individually counterweighted crankpins.
Journal Diameters—1.374-1.375" (except rear bearing), 1.499-1.500" (rear bearing only).
Bearing Type—Replaceable, precision type, steel-backed, babbitt-lined. Rear bearing is flanged (for end thrust).
►*NOTE*—The three intermediate main bearings are interchangeable and these lower bearing halves are interchangeable with connecting rod bearings. **Upper and lower bearing halves are not interchangeable** (upper halves may be identified by oil holes which must register with oil channels in crankcase).
Clearance—.0015-.003".

Bearing Adjustment: None (no shims). Replace bearings. Do not file bearing caps. Engine should be removed from chassis and crankshaft removed for main bearing work.
See Crosley Special Data for Engine Removal and Crankshaft Removal Instructions.
CAUTION—When installing bearings, make certain that oil holes in bearing upper halves register with oil channels in crankcase (see Bearing Note above). Bearing caps are numbered (1 to 5) on left side of engine and cannot be interchanged.
Crankshaft Oil Seals—Replace rear main bearing oil seal whenever rear main bearing is disturbed.
Oil Seal Replacement—*See "Crankshaft & Main Bearings" in Crosley Special Data.*

Replacement Bearings: Furnished Std. Size and .001", .005", .010", .020" Undersize.

End Thrust: Taken by flanges on #5 (rear bearing). Replace rear main bearing when endplay exceeds .008". **Endplay**—.003-.008".

CAMSHAFT: Five bearing type mounted on top of engine and driven through bevel gears by vertical tower shaft at front of engine.
Bearing Type—Consist of five split aluminum bearings bolted individually on pads on top of engine. Top of all bearing upper halves are machined flat and a separate bearing strap is assembled on top of bearing under bearing capscrews. These bearing straps have stud for camshaft cover retaining nuts (except rear #5 bearing strap which is plain type).
Bearing Interchangeability—All upper and lower bearing halves except front (#1) interchangeable on all engines. Bearing straps are interchangeable on intermediate bearings (#2, 3, 4). Rear bearing strap is plain type.
Clearance—.0015-.0027".
Endplay—Taken by thrust washer between camshaft gear and front camshaft bearing. With correct endplay, backlash between camshaft gear and upper towershaft gear will be .003-.005".
Endplay Adjustment—*See "Camshaft & Bearings" in Crosley Special Data.*

Camshaft Drive (Towershaft) Assembly: *See "Camshaft & Bearings" in Crosley Special Data.*

Camshaft Setting: For correct valve timing, with **camshaft out of engine**, proceed as follows:
1) Turn engine over slowly until the following three conditions occur simultaneously: a) Top dead center mark on flywheel is in center of inspection hole in right front face of housing, b) Distributor rotor points toward #1 cylinder segment in distributor cap, c) Punch-marked tooth of upper tower gear (see below) points toward rear of engine and is in line with center-line of camshaft bearings.
2) With engine positioned as above, assemble the camshaft, pushing the oil metering housing into upper tower shaft gear and **meshing punch-marked tooth of upper tower shaft gear between two punch-marked teeth of camshaft gear.** Complete camshaft assembly by installing bearing caps.
3) Check camshaft endplay (see data above).
4) Turn engine over slowly by hand for at least two revolutions.

VALVES: Engine must be dismantled (removed from chassis, cylinder block taken off) for valve work.
Valve Servicing—*See "Valve System" in Crosley Special Data.*

	Head Diameter	Stem Diameter	Length
Intake	1 11/64"	.3135-.3140"	3.934"
Exhaust	1 3/64"	.3125-.3130"	3.934"

	Seat Angle	Lift	Stem Clearance
Intake	45°	.235"	.0015- .003"
Exhaust	45°	.235"	.0025-.0040"

►*VALVE INSTALLATION CAUTION*—Valve spring washer (intake valves), Thompson Roto Cap (exhaust valves) must be installed below valve springs with cupped side of washer and extruded lip on Roto Cap up toward camshaft.

Valve Springs: Free length 2". Install with tightly wound coil down, using special spring compressor.

Outer "Booster" Springs
►(Engines No. 101374 to 101991)

	Spring Pressure	Length
Valve Closed	7.5 lbs. max.	1 23/32"
Valve Open	9 lbs. max.	1 7/16"

Inner Springs (All Engines)

	Spring Pressure	Length
Valve Closed	30 lbs.	1 1/2"
Valve Open (Intake)	46-51 lbs.	1 7/32"
Valve Open (Exhaust)	46-51 lbs.	①1 5/64"

①—With Thompson Roto-Cap.

Valve Guides: Press old guide out from top to bottom. Press new guide in until top of guide protrudes ¾" above bottom of cam follower guide. Ream for .0015-.003" clearance (intake), .002-.004" (exhaust). Reface valve seats.

Valve Lifter (Cam Follower): Consists of an inverted cup operating in guide hole in cylinder block direcly above each valve assembly (cam follower spacer and tappet clearance adjusting shims located within cam follower above valve stem).
Cam Follower Clearance—.0005-.0015".

VALVE TIMING

Tappet Clearance: .004-.005" **Intake**; .006-.007" **Exhaust**, Cold.
Adjustment—Tappet clearance adjusted with shims at cam followers.
►**Tappet Clearance Adjustment Procedure**—*See "Valve System" in Crosley Special Data.*

Valve Timing: See Camshaft Setting (above).
Engines before No. 105,010
Intake Valves—Open 5° BTDC. Close 50° ALDC.
Exhaust Valves—Open 32½° BLDC. Close 5° ATDC.
Engines after No. 105,010
Intake Valves—Open 5° BTDC. Close 50° ALDC.
Exhaust Valves—Open 50° BLDC. Close 5° ATDC.
Valve Timing Check—See Camshaft setting for assembly of valve gear.

LUBRICATION

Engine Oiling System: Pressure to main bearings, connecting rod bearings, camshaft bearings, and timing gear bearings (oil flow to camshaft bearings is through hollow towershaft and hollow camshaft). Oil pump in crankcase at forward end of engine.
Crankcase Capacity—2 qts. (refill), 2.8 qts. (when filter drained or filter element replaced).
Normal Oil Pressure—35-50 lbs. at 30 MPH. (hot oil). 7 lbs. minimum with engine idling.
Oil Pressure Regulator—Located under plug on

CONTINUED ON NEXT PAGE

CONTINUED FR M PRECEDIN PAGE

right front corner of engine. Not adjustable.

Oil Pump: Disassembly—Take out center capscrew on lower cover, remove cover, gasket, and screen. Take out four capscrews in pump cover, remove cover and gasket, lift out idler gear and shaft. To remove pump shaft and gear, file off end of pin in pump drive gear, drive pin out and remove gear.

Reassembly—Use new gaskets. Make certain that plain washer and lockwasher used on each cover screw and that lower cover (with oil inlet pipe) is tight. See Tightening Torque Wrench data for housing and mounting screw torques.

Oil Filter: Replace filter element at 8000-10000 mile intervals. NOTE—Add .8 qt. of oil in crankcase when oil filter drained or element replaced.

Crankcase Ventilation: Oil-wetted type filter element in oil filler cap (air intake). Outlet pipe located at rear of valve chamber.

Servicing—Wash filter element in kerosene and re-oil at 2000 mile intervals or more often if required by operating conditions.

COOLING

Cooling System: Not pressurized (Pressure type Radiator Filler Cap available as accessory equipment). **Capacity**—4 quarts (5 quarts with Heater).

Water Pump (No. C-207187): Adjustable Packing type. Mounted on right side of engine.

See Water Pump Section for complete data.

Removal—Disconnect drive coupling at water pump, drain cooling system by taking out drain plug at bottom of radiator, disconnect two water hoses, take out two mounting bolts in flange in front of pump, lift pump out.

Belt Adjustment—*See Generator Belt Adjustment.*

Thermostat: In engine outlet connection (blocker type). Opens at 175°F.

Temperature Gauge: Vapor pressure type (not electric).

CLUTCH

Rockford Model No. 4608, Type 6TS (Before Serial No. CD-205500 & VC-20783). **Model No. 165299, Type 6½TS** (After Serial No. CD-205500 & VC-20783). Single plate dry disc type.

See Clutch Section for Complete data.

Facings—(R4608) I.D. 4". O.D. 6". (165299) I.D. 4½" O D. 6½". **Thickness (both)** ⅛".

Pedal Adjustment: Pedal free travel should be 1". To adjust, turn clevis end in or out on cable.

Removal: Remove transmission (see Transmission Removal below). Working from below through the housing opening, remove two bolts in each of three release lever brackets, remove pressure plate and driven member through opening.

TRANSMISSION

Warner Model AS1-T92. Three-speed, sliding spur gear type with conventional shift lever mounted on transmission case cover.

See Transmission Section for complete data.

Removal: Raise rear of car until weight removed from rear springs, disconnect rear springs and shock absorbers from axle. Disconnect brake cable and conduit at each rear wheel backing plate (mechanical brakes) or disconnect brake line and parking brake cable (hydraulic brakes). Disconnect speedometer cable and clutch release cable clamp from bottom of transmission case. Support rear end of engine on blocks, remove rear engine mount (under transmission case at rear end). Remove floor transmission cover. Take out capscrews mounting torque tube on rear face of transmission adapter, pull rear wheels, rear axle, and propeller shaft assembly to rear and clear of the transmission case (CAUTION—Do not lose spring and washer located between propeller shaft and speedometer gear). Remove four capscrews mounting transmission on flywheel housing, pull transmission straight back to clear clutch shaft and remove from car.

UNIVERSALS

New England Products. Crosley No. 207483. One used. Plain bushing type. In ball housing at rear of transmission adapter.

See Universals Section for complete data.

REAR AXLE

Spicer Salisbury Model 11. Semi-floating, spiral bevel gear type with Torque Tube drive.

See Rear Axle Section for complete data.

Ratio—5.17-1 Std.

Backlash—.003-.008". Shim adjustment.

Removal: "CD" Models—Disconnect hand brake cable at brake cam lever at each rear wheel. Disconnect hydraulic brake lines. Raise rear of car until all weight removed from rear springs, disconnect rear springs and shock absorbers from axle. Take out capscrews mounting torque tube on rear face of transmission adapter, pull rear wheels, rear axle and torque tube assembly to rear until free from transmission. CAUTION—Do not lose spring and washer located between universal joint and speedometer gear in transmission.

"VC" Models—Disconnect rear shocks and two radius springs at axle. Disconnect main hand brake rod at front and rear and rear brake hoses at frame. Disconnect torque tube at rear axle and remove rear coil springs. Remove rear axle from car. Disconnect torque tube at universal joint and pull back until ball housing is as close as possible to front cross member. Turn torque tube to left to a point almost at right angle to the body. The ball housings will then come out of the tunnel over cross member.

Installation: Reverse removal procedure.

Axle Shaft Removal—Remove rear wheel hub cap, rear wheel, and wheel hub (use Puller M.T. 262). Disconnect brake cable from brake cam lever and free cable conduit from clamp on backing plate. Take out four capscrews mounting backing plate on axle housing, remove backing plate being careful not to lose bearing adjusting shims on housing flange. Pull axle shaft out of housing.

►*CAUTION*—On cars with hydraulic brakes, wheel brake unit must be disassembled before hub and brake disc can be removed.

See "Goodyear Hawley Hydraulic Brakes" in Brake Section.

Wheel Bearing Adjustment: Check endplay at each wheel with dial indicator. Adjust by adding or removing shims located between backing plate and flange on axle housing (see Axle Shaft Removal for dismantling instructions). Adjustment made at one side only for right and left bearings.

Endplay—.002-.007" total for both wheels (between inner ends of shafts and thrust block in differential).

TORQUE TUBE & PROPELLER SHAFT ASSEMBLY: Spicer No. 98-1182X. Torque tube assembly has flanged end at rear (bolted to rear axle housing flange) and thrust ball at forward end (cap assembly bolted on adapter on rear end of transmission). Propeller shaft is splined on pinion shaft (rear end) and in universal joint (forward end) and is positioned by spring located between universal joint and speedometer gear in transmission case.

NOTE—A propeller shaft center bearing is located within the torque tube and is provided with a grease fitting on the tube at this point.

Propeller Shaft Removal: Remove Rear Axle and Torque Tube Assembly (see Rear Axle Removal above), withdraw propeller shaft through forward end of tube.

CAUTION—When installing assembly in car, make certain that spring and washer installed on transmission shaft ahead of universal joint. This spring takes up endplay in propeller shaft.

SHOCK ABSORBERS

Delco Model—Direct acting, hydraulic type.

Crosley Numbers

Front	Rear
CD①—301755	301754
VC —301166	301306

①—Used after Serial No. CD-201995.

FRONT SUSPENSION

Front Suspension: Conventional axle with semi-elliptic springs.

Kingpin Inclination—6½° crosswise.

Camber—2°. No adjustment (axle may be bent for minor adjustments).

Caster—7½°. Adjust by inserting wedge shims between spring and spring pad on axle.

Toe-In—(CD) 1/16". (VC) ⅛".

Toe-Out On Turns—Inner wheel turned 20°, outer wheel turned 18°.

STEERING GEAR

Ross Model S-12. Cam-and-Lever type.

See Steering Gear Section for complete data.

BRAKES

GOODYEAR-HAWLEY HYDRAULIC

Service: Goodyear-Hawley hydraulic four-wheel disc type. Hand lever applies rear wheel service brakes.

See Brake Section for complete data.

Disc Diameter—7½".

►*CAUTION*—Disc integral with wheel hub. Wheel brake unit must be disassembled before wheel hub can be removed.

Clearance—Compensating screw backed off ¼ turn from point where wheel locked.

Lining—Molded circular discs (2 used).

Hand Brake: See Service Brakes (above).

LOCKHEED HYDRAULIC

Service Brakes: Lockheed Hydraulic, 4-wheel, double anchor type. Hand lever applies rear wheel service brakes.

See Brake Section for complete data.

Drums—Composite (cast-iron & steel). Diameter 9".

Lining—Molded type. Width 1" Thickness 7/32".

Length—(Forward shoe) 9 15/32". (Rear shoe) 6 53/64".

Clearance—Heel .005". Toe .008".

Hand Brake: See Service Brake data (above).

MODEL IDENTIFICATION

SERIAL NUMBER: On left front door hinge post.

1950 Numbers	Detroit	Los Angeles
Custom	50,062,001 Up	62,011,501 Up
Deluxe	6,233,501 Up	60,005,001 Up
1951 Numbers		
Custom	50,155,001 Up	62,024,001 Up
Deluxe	6,269,001 Up	60,011,001 Up

ENGINE NUMBER: Stamped on boss on left side of cylinder block between Nos. 1 and 2 cylinders.

TUNE-UP

COMPRESSION PRESSURE: 120-150 lbs. at cranking speed of 150 RPM.

VACUUM READING: Steady 18-21" idling at 6 MPH.

FIRING ORDER: 1-5-3-6-2-4. See diagram.

SPARK PLUG GAPS: .035". Limits plus or minus .001". **Plugs**—Auto-Lite Resistor Type AR5 ('50), AR8 ('51)

DISTRIBUTOR: Breaker Gap—.020".
Cam Angle—34½° to 38°. **Do Not** exceed Breaker Gap limits (.018" to .022") to obtain cam dwell.
Breaker Arm Spring Tension—17-20 ozs.
Automatic & Vacuum Advance—*See Ignition.*
Condenser Capacity—.25-.28 microfarad.

IGNITION TIMING: At Top Dead Center (TDC).
Timing Procedure—*See Ignition Timing.*
Timing Mark—Vibration Dampener marked "DC" at top dead center position with 15-1° graduations before and after this point.
Manual (Octane Selector) Adjustment—Set for slight ping with 10-30 MPH. range when accelerating with wide open throttle. Do not vary initial timing more than 4° advance or retard.

CARBURETION:
Idle Setting—Set idle adjusting screw for smooth idling with warm engine (idle screw ½-1½ turns open), turn screw out for richer mixture.
Idle Speed—(Std. Trans.) Adjust to 6 MPH. (Tip-toe Shift Trans.). (1950) 450-475 RPM., (1951) 475-500 RPM.
Float Level—Top of float (not soldered seam) 5/64", plus or minus 1/64", below top edge of bowl.
Accelerating Pump—Center Hole (med. stroke) Normal. Inner Hole—Summer, Outer Hole—Winter, for extreme temperatures.

Choke Setting: (1950) Adjust by inserting a gauge pin through hole in automatic choke lever shaft and slot in base mounting flange (to position shaft) and adjust carburetor choke valve lever so that choke valve is tightly closed.

Choke Setting: (1951) Cover "mark" centered at index.

Fuel Pump Pressure: 3½-5½ lbs.

MANIFOLD HEAT CONTROL: Automatic thermostatic type. See that valve operates freely. When installing coil, wind free end up **approx. ¾ turn,** not over one turn or under ½ turn, hook end on stop stud.

VALVE TAPPET CLEARANCE: .008" Intake, .010" Exhaust, Hot.

IGNITION

IGNITION SWITCH: Mitchellock. Combination ignition-starter switch. Starter operates when key held fully to the right. Key automatically returns to "on" position. Coil lead protected by armored cable through fire wall.

COIL: Auto-Lite No. CR-4001. Mounted directly above distributor on ignition cable bracket.
Ignition Current—2.25 amperes idling, 5 stopped.

CONDENSER: Auto-Lite No. IG-3927G.
Capacity—.25-.28 microfarad.

DISTRIBUTOR:

Year	U. S. Prod. Auto-Lite No.	Canada Auto-Lite No.
1950 Early	IAP-4102C-1	IAP-4102A-1
1950 Late	IAT-4004	IAT-4004B
1951	IAT-4012	IAT-4012B

►*DISTRIBUTOR CAP POPPING OFF CORRECTION Early "IAP" Distributors): See "Auto-Lite IAP Distributors" in Electrical Equipment Section.*

►**"IAT" Distributor Note**—New "Pivoted Breaker Plate" type. *See Electrical Equipment Section for data.*
Breaker Gap—.020".
Cam Angle—34½° to 38° Closed.
Breaker Arm Spring Tension—17-20 ozs.
Rotation—Clockwise viewed from above.

Automatic Advance—IAP-4102A-1, IAT-4004B

Distributor Degrees	R.P.M.	Engine Degrees	R.P.M.
Start	350	0	700
3	400	6	800
6	770	12	1540
9	1150	18	2300
11	1400	22	2800

CONTINUED ON NEXT PAGE

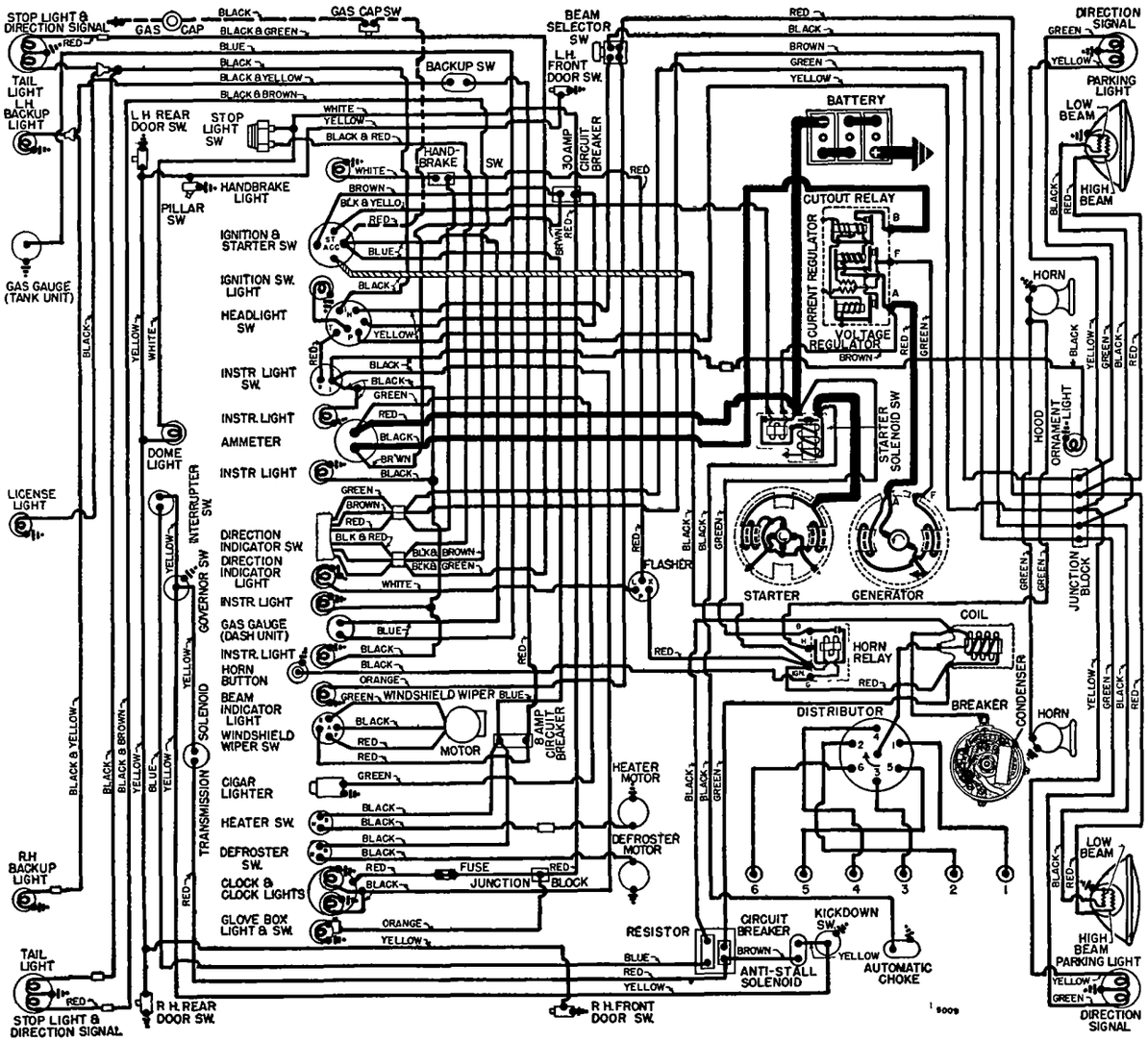

1950 MODELS

C NTINUED FR M PRECEDING PAGE

Automatic Advance—IAP-4102C-1, IAT-4004, IAT-4012, IAT-4012B

Start	350	0	700
1	450	2	900
5	800	10	1600
9	1300	18	2600
10	1425	20	2850

Vacuum Spark Control: Auto-Lite Unit. Integral type

Vacuum Advance—IAP-4102A-1, IAT-4004B

Distr. Degrees	Eng. Degrees	Vacuum (" of HG)
Start	0°	5⅛"
1°	2°	6⅝"
3°	6°	9⅝"
5°	10°	12½"
6°	12°	14"

Vacuum Advance—IAP-4102C-1, IAT-4004, IAT-4012, IAT-4012B

Distr. Degrees	Eng. Degrees	Vacuum (" of HG)
Start	0°	5"
2°	4°	7¼"
4°	8°	9⅜"
6°	12°	11⅝"
9°	18°	15"

Manual Adjustment—Provides for minor changes in ignition timing at distributor. See Ignition Timing.

IGNITION TIMING

Std. Setting—Initial setting (for regular non-premium fuel) as shown below. See Manual Adjustment (following) for Final Setting.

NOTE—Impulse neutralizer marked 'DC' at TDC.

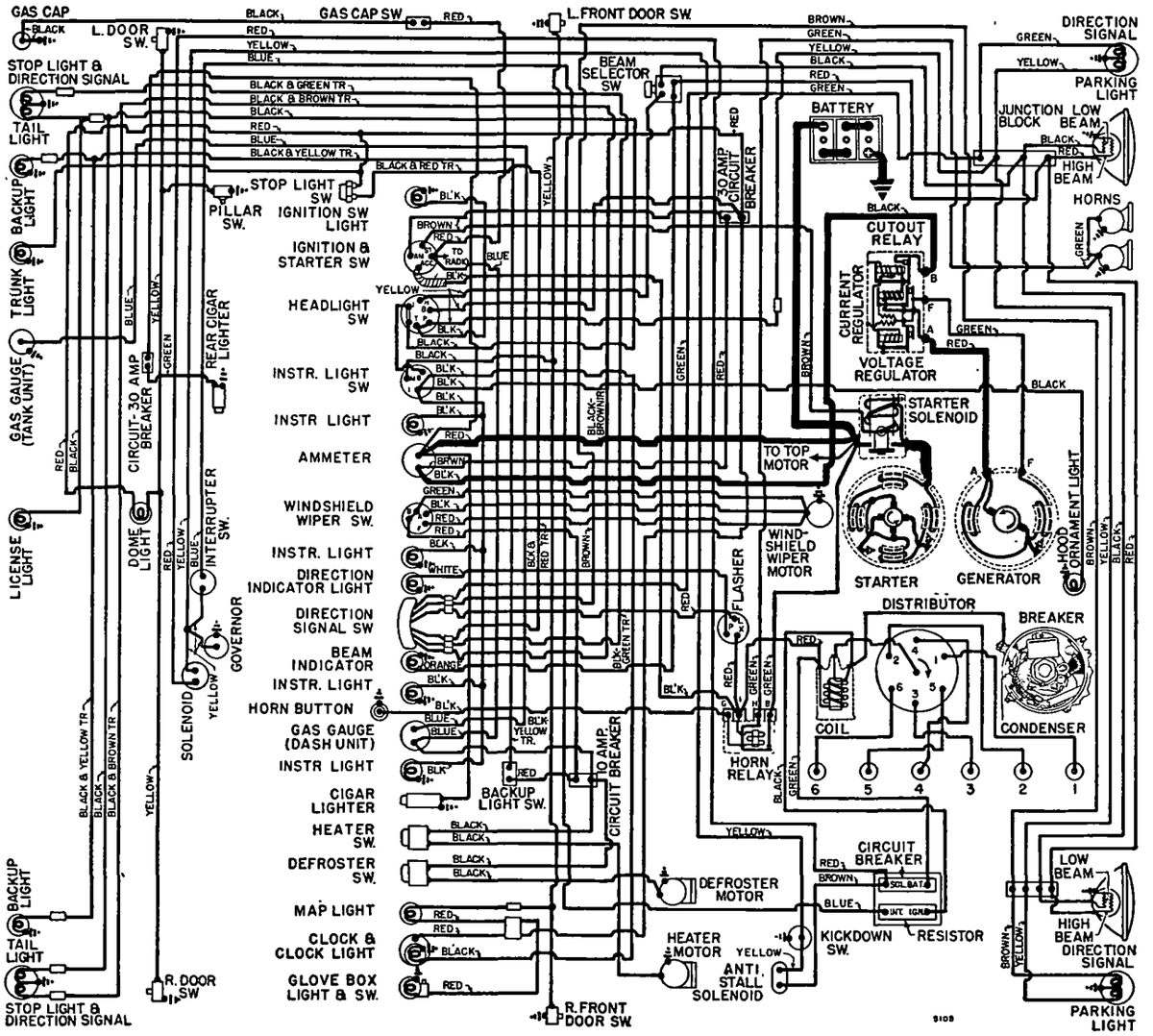

1951 M DELS

Timing (Using Timing Light)—Connect timing light between distributor primary terminal and battery terminal on generator regulator. Set #1 or #6 piston in firing position (see setting above) with correct mark on impulse neutralizer aligned with pointer on chain case cover. Loosen lock-plate hold-down screw, center pointer on scale, tighten screw. Loosen lock-plate clamp bolt, rotate distributor until timing light just goes out, tighten clamp bolt. Check Manual Adjustment (following).

Timing (Using Synchroscope)—Tool C-374. Clip lead to #1 spark plug, direct light on impulse neutralizer (mark correct graduation with paint), idle engine and adjust distributor as directed above.

Manual Adjustment—Set to give slight ping from 10-30 MPH accelerating with wide open throttle from 10 MPH. To adjust, loosen lock-plate hold-down screw, move plate (not more than 4° or .007" before or after initial setting) counter-clockwise (if no ping noted), clockwise to retard spark (if ping too severe), tighten screw.

CARBURETOR

Carter (Ball & Ball)—Used on all models. 1½" single barrel, downdraft type. Slow closing throttle and Kick-down switch used for hydraulic operated transmission.

Year Application	Carb. No.
1950 Synchro-mesh Trans.	EX3①
1950 Automatic Trans.	E7L4
1950-51 City Traffic	E7W1②
1951 Synchro-mesh Trans.	E9C1
1951 Automatic Trans.	E9A1

①—Superseded by Carb. No. EX3R.
②—With Throttle Restrictor.
See Carburetor Section for complete data.

Settings (Idle Setting, Float Level, and Accelerating Pump): *See Tune-Up data.*

Metering Jet—*See Carter (B&B) Jet Table in Carburetor Section for complete data.*

NOTE—If lean metering jet (High Altitude calibration) used at lower altitudes for increased economy, speed and power are reduced (not recommended).

Slow-closing Throttle: Solenoid type. Non-adjustable. *See Carburetion Equipment Section for complete data.*

Fast Idle: Setting—(EX3, E7L4, E7W1) Throttle stop dog linked to choke valve so that stop dog rotated and throttle opened to fast idle position when choke valve closed for starting. No adjustment required.

Fast Idle: Setting—(E9C1, E9A1) .018" throttle opening with choke valve held closed and throtttle lever stop screw backed off.

Automatic Choke: Sisson Type (1950). Carter Climatic Control (1951).

Setting—Sisson Type. With throttle 1/3 open, insert gauge pin through hole in automatic choke lever shaft and slot in base mounting flange (to position shaft), adjust carburetor choke valve lever so that choke valve is closed tightly.

Setting—Carter Climatic Control. Centered (coil housing at index mark). *Do not change for hot or cold climate.*

See Carburetion Equipment Section for complete data.

CARB. EQUIPMENT

Air Cleaner: AC No. 1544349 Heavy Duty Oil-bath type. Filter Element AC No. 21.

Fuel Pump: AC No. 1539208 or Carter No. M639SL, SZ. Diaphragm type fuel pump.

Replacement Pump—AC No. 588.
Pressure—3½ to 5 lbs.
See Carburetion Equipment Section for complete data.

Fuel Tank Filter: Oilite metal filter in tank.
Servicing—If more than 2 pints water in tank, fuel will not pass filter. Remove filler cap and drain plug, draining tank. Disconnect fuel line at some point between pump and tank, blow out line and filter with air, increasing pressure as filter is cleaner. Flush tank with clean gasoline.

Gasoline Gauge: Auto-Lite Electric type.
Dash Unit—Auto-Lite No. (1950) 12112A, (1951) 12341A, (1950 Sta. Wgn.) 12191A.
Tank Unit—Auto-Lite No. (1950-51) 11538A. (1950 Sta. Wgn.) 12157A (Early), 12195A (Late).
See Carburetion Equipment Section for complete data.

BATTERY

Willard or Auto-Lite. 6 volt, 17 plate, 120 ampere hour capacity (20 hour rate).
Grounded Terminal—Positive (+) to engine.
Location—Under hood in left fender shield.

STARTER

Year	Auto-Lite Models U. S.	Canada
1950 (Early)	MCH-6102	MAW-4055
1950 (Late)	MCH-6105	MCH-6105
1951	MCL-6109	MCL-6109

Armature—Auto-Lite No. MCH-2039 (MCH-6102), **MAW-2213** (MAW-4055), **MCH-2070** (MCL-6109, MCH-6105).
Drive—Solenoid pinion shift & overrunning clutch.
Rotation—Counter-clockwise at commutator end.
Brush Spring Tension—42-53 ozs. (new brushes).

Performance Data—MCH-6102, MCH-6105, MAW-4055

Torque	R.P.M.	Volts	Amperes
0 ft. lbs.	4300	5.0	65
6.0 "	Lock	2.0	335

Performance Data—MCL-6109

Torque	R.P.M.	Volts	Amperes
0 ft. lbs.	4900	5.0	65
8.0 "	Lock	2.0	410

Starting Switch: Auto-Lite No. (Early 1950) SS-4707, (Late 1950 & 1951) SSX-4001. Solenoid type controlled by turning ignition switch past "on" position.
See Electrical Equipment Section for complete data.

GENERATOR

Year	Auto-Lite No.
1950 (Early) Automatic Trans.	GGW-6001A
1950 (Late) Automatic Trans.	GGW-6001J①
1950 (Early) Synchro-mesh Trans.	GGW-6001B
1950 (Late) Synchro-mesh Trans.	GGW-6001K①
1950 (Early) Automatic Trans.②	GDZ-4801R
1951	GGW-6001J①
1951 Limosine & 8 Passenger	GGW-6001K①
1950 (Early) City Police & Taxi	GGJ-6001A
1950 (Early) City Police & Taxi	GGU-6001A
1950 (Early) State Police	GGJ-6001B
1950 (Early) State Police	GGU-6001E
1950-51 City Police & Taxi	GGU-6001G①
1950-51 City Police & Taxi	GGJ-6001F①
1950-51 State Police	GGU-6001H①
1950-51 State Police	GGJ-6001G①

①—Narrow Groove Pulley. ②—Canada.

Armature—GGW-2006F (GGW type generators), GDZ-2006F (GDZ type generators), GGJ-2101F (GGJ type generators), GGU-2006F (GGU type generators).
Two brush type current-voltage regulators.
Maximum Charging Rate—See table below.
Charging Rate Adjustment—None. See Regulator.

Performance Data (GGW-6001A, B, J, K)

Amperes	Volts	Cold—R.P.M.—Hot	
0	6.4	870-970	950-1050
45.	8.0	1925-2125	2350-2550

Performance Data (GDZ-4801R)

0	6.4	870-970	950-1050
35	8.0	1800-2000	2150-2350

Performance Data (GGJ-6001A, B, F, G)

0	6.4	600-700	650-750
50	8.0	1400-1600	1550-1750

Performance Data (GGU-6001A, E, G, H)

0	6.4	750-850	800-900
45	8.0	1450-1650	1650-1850

Rotation—Counter-clockwise at commutator end.
Brush Spring Tension—(GGW, GDZ, GGU) 35-53 ozs. (new brushes); (GGJ) 30-37 ozs. (new brushes).
Field Current—(GGW, GDZ) 1.6-1.8 amperes, (GGJ) 1.7-1.9 amperes, (GGU) 1.7-1.8 amperes, all at 6.0 volts.
Motoring Current—(GGW) 4.6-5.2 amps., (GDZ) 4.2-4.6 amps., (GGJ) 4.3-4.8 amps., (GGU) 5.5-6.5 amps., all at 6.0 volts.

Belt Adjustment: Loosen pivot and clamp bolts, pull out on generator until belt is snug (40-50 lbs. tension accrued on scale attached to field frame) or ¼" belt deflection between generator and pump.

REGULATOR

Auto-Lite Regulator No.	for Auto-Lite Generator
VBA-4202A or ①VBA-4204A	GGJ-6001A, B, F, G
VBE-6001A	GGW-6001J, K
VAV-6001A or ①VAV-6002A	GGU-6001A, E, G, H
VRP-6004A	GGW-6001A, B, J, K
VRP-4503A	GDZ-4801R

①—For negative ground.
See Electrical Equipment Section for complete data.
NOTE—Regulator case cover is sealed. Serviced on exchange basis if seals not broken (to remove cover).

Cutout Relay
Cuts In (VAV, VRP)—6.4-6.9 volts (set to 6.4-6.6 volts).
Cuts In (VBA, VBE)—6.3-6.8 volts (set to 6.4-6.6 volts).
Cuts Out (All)—4.1-4.8 volts (Approx. 4-6 amps. disch.).
Air Gap (All)—.031-.034" with contacts open (check at hinge end of core).

Voltage Regulator
Setting (VAV, VBA, VBE)—7.1-7.4 volts at 70°F. **(VRP)**—7.2-7.5 volts at 70°F. See Electrical Equipment Section for settings at other temperatures.
Checking (without breaking seals) & Adjustment—***See Electrical Equipment Section.***
Contact Gap (VRP)—.012" min. (armature against stop pin).
Air Gap (All)—.048-.052" with contacts just opening.

Current Regulator
►(Temperature Compensated Regulators)

	Nominal Setting
VRP-4503A	35
VRP-6004A	40
VBE-6001A, VAV-6001A, 6002A	45
VBA-4202A, 4204A	50

►***CAUTION***—Nominal setting is approx. setting at 70°F. room temperature after regulator has been run (will be higher started cold). See Electrical Equipment Section for settings at various temperatures.
Checking (without breaking seals) & Adjustment—***See Electrical Equipment Section.***
Contact Gap (VRP)—.012" min. (armature against stop pin).
Air Gap (All)—.048-.052" with contacts just opening.

LIGHTING

Headlamps: Corcoran-Brown "Sealed Beam" type with "Bull's-eye lens". Beam selector switch on toeboard controls upper and lower beams.
See Electrical Equipment Section for complete data.
Headlamp Adjustment—Aim upper beam straight ahead (hot spot center 3" below lamp center height).
Beam Indicator—Lighted when Country (upper) beams in use. Located on lower right corner of speedometer face.

Direction Signal: ***See Electrical Equipment Section.***
Direction Signal Indicator—In lower left corner of speedometer face.
Direction Signal Flasher—DeSoto No. 1257223.

Switches
Beam Selector—DeSoto No. (1950) 1253460, (1951) 1253003.
Directional Signal—DeSoto No. (1950) 1257223, (1951) 1370454.
Map Light—DeSoto No. (1950) 1244605. (1951) 1253034.

MISC. ELECTRICAL

CIRCUIT BREAKERS: Lighting—30 ampere. Vibrating type, protects lighting circuit.
Aux. Circuit Breaker—8 ampere. Protects Windshield Wipers and Back-Up Light.
Direction Signal—On flasher behind instrument panel. Vibrating type. Protects direction signal circuit.
Transmission Solenoid—Vibrating type mounted as an assembly with resistor unit.

FUSES: Clock—3 ampere. In clock lead.
Radio—14 ampere. In fuse connector at radio.

HORNS: Auto-Lite No. (1950) **HW-4201 (Low Pitch), HW-4202 (High Pitch).** (1951) **HW-4107 (Low Pitch), HW-4108 (High Pitch).** Dual horns operated by relay. **Amp. Draw**—15 amps. each.

Horn Relay: Auto-Lite No. HRL-4104. Connected through ignition switch, operates only when ignition "ON".
Contacts Close—1.5-3.0 volts (seal to core with 4.0 volts maximum).
Contacts Open—.5 volt min. (open from seal).
Contact Gap—.026". **Air Gap**—.016-.020" (armature air gap with contacts closed but not sealed), .015-.018" (gap between armature leg and yoke with armature sealed to core).

CONTINUED N NEXT PA E

C NTINUED FR M PRECEDIN PA E

ENGINE

►*NEW LARGE ENGINE USED IN 1951 CARS.*

ENGINE SPECIFICATIONS: Six cylinder, "L" head.

Bore—3 7/16".
Stroke—(1950) 4¼", (1951) 4½".
Displacement—(1950) 236.6 cu. in. **Rated HP**—28.36. (1951) 250.6 cu. in. **Rated HP**—28.36.
Developed Horsepower—At 3600 RPM. (1950) 112 HP. (1951) 116 HP.

Compression Ratio—7.0-1 Std. cast-iron head.

Compression & Vacuum Reading—*See Tune-up data.*

ORIGINAL BORE & PISTONS: *See Chrysler Special Data.*

ORIGINAL BEARING SIZES: *See Chrysler Special Data.*

TIGHTENING TORQUES: *See Chrysler Special Data.*

CYLINDER HEAD: Tightening Torque & Cylinder Head Diagram—*See Chrysler Special Data.*

PISTONS: Aluminum alloy, U-slot, cam ground type.

NOTE—Skirt cam ground (.010-.014" smaller diameter across pin bosses) and tapered (.0002-.0012" smaller diameter at top of skirt than at bottom).

Length—3⅞". **Weight**—18.5 ozs. (stripped).

Clearance—.0005" to .0015" on thrust face at center of skirt.

Removal—Pistons and rods removed from above.

Fitting New Pistons: Check piston size with micrometer across large diameter at bottom of skirt. Insert .002" x ½" feeler between cylinder wall and piston (inverted, pin removed) on side opposite slot. Feeler pull 5-7 lbs. (with piston and block at 70°F.).

Replacement Pistons: .005", .020", .030", .040", .060" OS.

NOTE—Cylinder recondition limits .0005" taper and .0005" out-of-round. Badly scored bores or with taper over .030" or out-of-round over .004" require reboring and honing to limits listed above.

Installing Pistons: Slot away from camshaft.

PISTON RINGS: Two compression, two slotted oil control, coated rings per piston, all above pin. Oil ring grooves drilled for oil drainage (lower groove slotted).

Ring	Width	End Gap	Side Clearance
Compr. (#1)	3/32"	.007-.015"	.0025-.004"
Compr. (#2)	3/32"	.007-.015"	.002-.0035"
Oil Contr. (#3,4)	.5/32"	.007-.015"	.001-.0025"

Installing Rings—#1 Compr. with step on inner edge up. #2 Compr. with step on inner edge up or if step on outer edge install with step down.

Replacement Rings: .005" .020" .030" .040" .050" .060" OS.

PISTON PIN: Diameter—55/64". Length 2 7/8". Floating type. Pin hole in rod bronze bushed.

Pin Fit in Piston—.0000" to .0005". Thumb push fit with piston heated to 160°F.

Pin Fit in Rod Bushing—.0001-.0004". Tight thumb push fit at normal room temperature.

Replacement Pins: Standard size and .0006", .003", .008" oversize.

CONNECTING ROD: (1950) Length—8". **Weight**—34.1 ozs. **(1951) Length**—7 7/8". **Weight**—32.4 ozs., with bolts less bearing.

Crankpin Journal Diameter—2.124-2.125". *See "Original Bearing Sizes" in Chrysler Special Data.*

Lower Bearing—Removable, precision type, thin babbitt on steel.

Clearance—.0005-.0015". **Sideplay**—.006-.011".

Bearing Adjustment: None (no shims). Replace bearings. Do not file rods or caps.

Replacement Bearings: .001", .002", .010", .012" U.S.

Installing Rods: Oil metering hole toward camshaft.

CRANKSHAFT: 4 bearing with vibration dampener on front end.

Journal Diameters—2.4995-2.5005". *See "Original Bearing Sizes" in Chrysler Special Data.*

Bearing Type—Removable, precision type, thin babbitt on steel. No shims.

Clearance—.0005-.0015".

Bearing Adjustment: None (no shims). Replace bearings. Do not file rods or caps.

Replacement Bearings: .001", .002", .010", .012" U.S.

End Thrust: Taken by flange faces on rear (#4) main bearing. **Endplay**—.003-.007".

CAMSHAFT: 4 bearing. Non-adjustable chain drive. **Bearing Diameters**—#1, 2"; #2, 1 31/32"; #3, 1 15/16"; #4, 1 1/4".

Bearing Type—Removable steel-backed, babbitt-lined bushings (except #4 machined in block).

Clearance—.001-.003" (#1), .0015-.0035" (all others).

End Thrust: Taken by thrust plate behind camshaft sprocket hub. **Endplay**—.002-.006".

Timing Chain: Width 1". Pitch .500" (½"). Length 24" or 48 links.

Camshaft Setting: Sprockets marked. Mesh chain with sprockets turned so that '0' marks are adjacent and in line with a straightedge across shaft centers.

VALVES:	Head Diameter	Stem Diameter	Length
Intake	1 23/32"	.3405-.3415"	4 25/32"
Exhaust	1 17/32"	.3395-.3405"	4 25/32"

	Seat Angle	Lift	Stem Clearance
Intake	45°	⅜"	.001-.003"
Exhaust	45°	⅜"	.002-.004"

Valve Seat Width (Max.) 7/64".

Valve Guides: Remove from above. Press new guides in (stepped end down) with upper end ⅞" below top of block (Tool CM-83), finish ream to .3425-.3435".

Valve Springs: Install with closely coiled end to top. Free Length 2".

	Spring Pressure 1950	1951	Length
Valve Closed	40-45 lbs.	40-45 lbs.	1¾"
Valve Open	107-115 lbs.	110-120 lbs.	1⅜"

Valve Lifters: Mushroom type (remove from below). Stem diam. ⅝". Ream holes from above (pilot in valve guide). Oversizes .001", .008", .030" & .060".

Lifter Clearance in Block—.000-.001".

VALVE TIMING

Tappet Clearance: .008" Intake, .010" Exh. (hot and idling). *NOTE*—Tappet screws self-locking (no locknuts). Remove right front wheel and lower wheel housing panel for access to valves.

Valve Timing: See Camshaft Setting above.

Intake Valves—Open 12° BTDC. Close 44° ALDC.

Exhaust Valves—Open 50° BLDC. Close 6° ATDC.

Valve Timing Check—With .014" (cold) tappet clearance #6 intake valve should open with #6 piston within range of 5° to 17° or .011" to .122" BTDC with 5th to 17th graduation before DC mark on impulse neutralizer aligned with pointer on chain case cover. Reset tappet clearance to running clearance .008" Hot.

LUBRICATION

Engine Oiling System: Pressure to main and connecting rod bearings, camshaft bearings, and timing chain. "Rotor" type oil pump mounted externally on right side of crankcase.

Crankcase Capacity—5 quarts (refill).

Normal Oil Pressure—(1950) 45 to 55 lbs. at 30 MPH. (1951) 40 to 50 lbs. at 20 MPH.

Oil Pressure Relief Valve—Under plug below starter. Opens at (1950) 40-50 lbs. (1951) 45-55 lbs. Spring painted red, green or unmarked. If spring replaced, use spring of same color.

Oil Pump: "Rotor" type on right side of crankcase.

Oil Filter: On left side of engine above starter.

Servicing—Replace element at 8000 mile intervals.

Oil Pressure Gauge—Auto-Lite No. 12340A (not electric).

COOLING

Cooling System: Positive circulation with pump on front of engine, by-pass thermostat, pressure vent cap, and water distribution tube in cylinder block behind pump.

Capacity—(1950) 17 qts. (1951) 15 qts.

Water Pump: Packless type with grease fitting.

Removal—Drain cooling system, remove fan belt, disconnect hoses at pump, remove pump mounting studs, lift fan and pump off.

Belt Adjustment—*See Generator Belt Adjustment.*

Thermostat: In cylinder head water outlet.

INSTALLATION NOTE—Install thermostat with 2 ports facing front, and 2 ports facing rear.

Setting—Starts to open 157-162°F. Fully open 183°F.

Temperature Gauge: Auto-Lite No. 12343A (not elec.).

CLUTCH

Borg & Beck Model 10A7 (with Synchro-mesh Trans.), 9A7 (with Tip-Toe Shift Trans.), 11A6 (Taxicab). Single plate, dry disc type.

Identification Note—Cover stamped (1950) 952 (9A7), 957 (10A7), 994 (11A6). (1951) 953 (9A7), 930 (10A7), 994 (11A7).

See Clutch Section for complete data.

Facings—Woven type, 2 required.

	Inside Diam.	Outside Diam.	Thickness
9A7	6"	9¼"	.125" (⅛")
10A7	7"	10"	.125" (⅛")
11A6	6½"	11"	.125" (⅛")

Pedal Adjustment: Should just clear toeboard (adjust stopscrew on lower end of pedal) & have 1" free travel (adjusting nut on connector link at fork).

Removal: Remove release fork pull-back spring, Transmission (see Transmission) and housing underpan. Pull out clutch release bearing and sleeve. Mark cover and flywheel (or driving plate on Fluid Drive). Take out cover screws, remove assembly.

FLUID DRIVE

DeSoto—Fluid coupling at rear of engine. Optl.

See Transmission Section for complete data.

Oil Level: Keep to level of filler hole. Check at first 1000 miles and every 10,000 miles. Manufacturer recommends MOPAR Fluid Drive Fluid.

Removal: Remove transmission and clutch (see TRANSMISSION and CLUTCH), take off driver flange stud nuts (Tool C-589), lower fluid drive assembly out.

TRANSMISSION

STD. DELUXE MODELS

Own Make—All helical gear, constant-mesh, synchro-mesh (Second & High), sliding gear (Low & Reverse). ***See Transmission Section for complete data.***

Transmission Control: Manual steering column shift.
See Transmission Section for complete data.

Removal: Jack up front end of car, disconnect front universal (loosen companion flange nut if disassembling transmission—see Chrysler Special Data for Propeller Shaft Center Bearing Removal on 7 pass.). Disconnect speedometer cable, hand brake cable, gear-shift rods. Remove trans.-to-clutch housing capscrews and nuts. Pull unit to rear, down and out of car. *NOTE*—Use pilot studs when installing assembly.

TRANSMISSION

STD. CUSTOM, OPTL. DELUXE

Tip-Toe Shift Type (with Fluid Drive)—Semi-automatic design, four-speed transmission with hydraulic actuation and electrical control.

See Transmission Section for complete data.

Transmission Oil—3 pints, 10-W engine oil.

►**Kick-down Switch Change to improve Transmission Operation**—***See "Chrysler, DeSoto, Dodge Kick-down Switch" in Electrical Equipment Section.***

Transmission Control: See Transmission article for adjustment instructions.

See Transmission Section for complete data.

Kickdown Solenoid—Auto-Lite No. SSS-4003.

Governor—Auto-Lite No. TGG-4001.

Kick-down Switch—Part of carburetor assembly

See "Chrysler, DeSoto, Dodge Kick-down Switch" in Electrical Equipment Section.

Ignition Interrupter Switch—On right side of transmission above Governor.

Removal: Remove access cover on right rear side of floorboard under front floor mat, disconnect speedometer cable, and governor, solenoid, and interrupter switch wires at transmission. Remove governor and solenoid. Disconnect hand brake cable at brake band, remove cable and cable anchor bracket. Remove brake support band, adjusting bolt bracket and lever as an assembly. Disconnect front universal (push yoke back), and gearshift rods at transmission. Drain transmission, **replace drain plug.** Disconnect transmission mounting bolts and lower assembly out of car.

►***INSTALLATION CAUTION***—Rear face of clutch housing and lower pan must be in correct alignment. Misalignment can cause hard shifting when transmission installed.

UNIVERSALS

Detroit Universal Series 7200—Cross type with roller bearings. Two used (3 on Long Wheelbase Cars).

See Universals Section for complete data.

Propeller Shaft Center Bearing: Used on 7 Passenger.
See "Propeller Shaft" in Chrysler Special Data.

REAR AXLE

Own Make—Semi-floating, hypoid gear type with Hotchkiss Drive.

See Rear Axle Section for complete data.

Axle Ratios—1950

Car Model	S-M Trans.①②	Auto Trans.②
5-Pass.	3 9-1 (39-10)③	3.73-1 (41-11)④
8-Pass.	4.1-1 (41-10)	3.91-1 (43-11)
Sta. Wgn.	4 1-1 (41-10)	3.91-1 (43-11)

Axle Ratios—1951

Car Model	S-M Trans.①②	Auto Trans.②
5-Pass.	3 9-1 (39-10)③	3.9-1 (39-10)
8-Pass.	4 3-1 (43-10)	4.1-1 (41-10)
Sta. Wgn.	4.1-1 (41-10)⑤	3.9-1 (39-10)

①—Synchro-mesh Transmission.
②—Standard Ratios.
③—4.1-1 (41-10) Optional.
④—3-9-1 (39-10), 4.1-1 (41-10) Optional.
⑤—3.9-1 (39-10) Optional.

Backlash—.006-.010". Screw adjustment.

Removal: Disconnect rear universal, remove axle shafts (see below) and carrier assembly cap screws. **Axle Shaft Removal**—Remove wheel ,hub, and drum assembly (use screw type hub puller—Tool C-675), block brake pedal, disconnect brake line at wheel cylinder, remove axle shaft key, install sleeve (Tool C-745) in oil seal, remove brake support (oil seal mounted in support), pull shaft and bearing (use C-499 puller). *NOTE*—Use puller C-293-E to remove bearing from shaft, puller C-748 or C-358 to remove inner oil seal, drift C-201 to install seal.

Axle Shaft Outer Oil Seal: New leather type mounted on brake support (backing plate).

Oil Seal Servicing—***See "Rear Axle" in Chrysler Special Data.***

Wheel Bearing Adjustment: Shims between backing plate and axle housing. With wheel and hub removed, check endplay with dial indicator. To adjust, remove backing plate (see above), add or remove shims (furnished .010", .0125", .015", .030" thick) equally at both wheels. **Endplay—.003-.008".**

SHOCK ABSORBERS

Own Make—New "Oriflow" type. Direct acting non-adjustable, non-refillable.

FRONT SUSPENSION

Front Suspension: Independent, linked parallelogram type with coil springs and direct acting shock absorbers.

See Front Suspension Section for complete data.

Kingpin Inclination—4¾° to 6° crosswise.

Camber—Neg. ⅜° to Pos. ⅜° (¼-½° higher on left).

Caster—Neg. 2° preferred. Limits Neg. 1° to Neg. 3°.

Toe In—0" preferred. Limits 0" to 1/16". Adjust both tie rods equally.

Steering Geometry—Inner wheel 21½° plus or minus 1°. Outer 20°.

STEERING GEAR

Own Make—3 tooth Worm-and-Roller. Similar to Gemmer Model 335.

NOTE—See Gemmer 305, 335 & 375 article for data.

See Steering Gear Section for complete data.

BRAKES

Service: DeSoto "Safe-guard" Lockheed Hydraulic.

Front Wheels—Two-cylinder type (front shoe anchored at bottom and actuated by upper cylinder, rear shoe anchored at top and actuated by lower cylinder).

Rear Wheels—Double anchor type with single double-acting wheel cylinder.

See Brake Section for complete data.

►***BRAKE SQUEAK OR SQUEAL CORRECTION—See "Lockheed-Chrysler Safe-guard Hydraulic" Brake in Brake Section.***

Wheel Cylinders—1⅛" bore. Single acting (front), double acting (rear wheels).

Drums—Centrifuse, 12" diameter.

Lining—Molded asbestos, 2" wide, 13/64" thick, Length per wheel—25 1/8". Bonded to shoe.

Clearance—.006" at each end of all shoes.

Braking Power—60% (front wheels), 40% (rear).

Hand Brake: On shaft at rear of transmission. 6" External contracting band used with Synchro-mesh Transmission 7" Internal expanding used with Automatic Transmission.

Adjustment—***See "Hand Brake Notes" in Chrysler Special Data.***

Drum—Cast Iron.

Lining—	Width	Thickness	Length
6" External	2"	5/32"	15 3/8"
7" Internal	2"	5/32"	13 1/8"

Clearance (External Type)—.015-.020" around band.

(Internal Type)—Adjusting nut on shoe link backed off one notch from point where shoes firm against drum.

MISC. MECHANICAL

WINDSHIELD WIPER: Auto-Lite Model EWJ-4001, EWJ-4003 (Conv. Coupe). Electric type with circuit breaker mounted on control switch.

See Miscellaneous Section for complete data.

CONVERTIBLE TOP CONTROL: Auto-Lite Model EWM-4001. Electric type.

See Miscellaneous Section for complete data.

MODEL IDENTIFICATION

SERIAL NUMBER: Located on left front door hinge post.

1950 Numbers

Plant	D33	D34
Detroit	37,060,001	31,420,001
Los Angeles	48,502,001	45,505,001
San Leandro	48,004,001	45,064,001

1951 Numbers

Plant	D41	D42
Detroit	37,135,001	31,663,001
Los Angeles	48,506,001	45,518,001
San Leandro	48,008,001	45,079,001

ENGINE NUMBER: Located on left side of cylinder block between #1 & #2 cylinders.
1950 Numbers—D34-1001 Up.
1951 Numbers—D42-1001 Up.

TUNE-UP

COMPRESSION PRESSURE: 120-150 lbs. at cranking speed of 150 RPM.

VACUUM READING: Steady 18-21" idling at 6 MPH.

SPARK PLUG GAPS: .035". Limits plus or minus .001"
Plugs—Auto-Lite Resistor Type (1950) AR5, (1951) AR8. 14 mm.

FIRING ORDER: 1-5-3-6-2-4. See diagram.

DISTRIBUTOR: Breaker Gap—.020"
Cam Angle—34½° to 48° (closed).
Breaker Arm Spring Tension—17-20 ozs.
Automatic & Vacuum Advance—*See Ignition.*
Condenser Capacity—.25-.28 microfarad.

IGNITION TIMING: At Top Dead Center (TDC).
This setting supersedes previous data.
Timing Procedure—*See Ignition Timing.*
Timing Mark—Fan Pulley (Wayfarer), vibration dampener (Others) marked "DC" at top dead center position with 15-1° graduations before and after this point. Set timing with DC mark at pointer on chain case cover, then set manual (octane selector) adjustment.
Octane Selector—Set for slight ping when accelerating with wide open throttle between 10-30 MPH.

CARBURETION:
Idle Setting—With engine warm, set throttle stop-screw. Adjust idle adjusting screw for smooth idle (½-1½ turns open for Carter).
Idle Speed (Std. Trans.)—6 MPH.
Idle Speed (Gyro-Matic Drive)—450-475 RPM.
Float Level (Stromberg)—Fuel level ⅝" below top surface of float chamber.
Float Level (Carter)—Top of float (not soldered seam) 5/64"±1/64" below top edge of bowl.
Accelerating Pump—Center hole (medium) Normal. Inner Hole—Summer, Outer Hole—Winter.

Choke Setting: The choke can be adjusted by inserting a gauge pin through hole in automatic choke lever shaft and slot in base mounting flange (to position shaft) and adjusting carburetor choke valve lever so that choke valve is tightly closed.

Fuel Pump Pressure: 3-5 lbs.

MANIFOLD HEAT CONTROL: Thermostatic coil type. See that valve operates freely. When installing coil, wind free end up **approx. one turn.**

VALVE TAPPET CLEARANCE: .008" Intake, .010" Exh. Hot.
Valve Timing Check—*See Valve Timing.*

STARTING: ***See Battery, Starter, Generator, Regulator.***

IGNITION

IGNITION SWITCH: Mitchellock. Combination ignition-starter switch. Starter operates when key held fully to the right. Key automatically returns to "on" position.

COIL: Auto-Lite CR-4001 (IG-4809 Early Cars). On ignition cable bracket above distributor.
Ignition Current—2¼ amperes idling, 5 stopped.

CONDENSER: Auto-Lite No. IG-3927G.
Capacity—.25-.28 mfd.

DISTRIBUTOR: Auto-Lite—Automatic advance type with Vacuum Spark Control as follows:

	Early	Late
D33 ('50) Std.	IGS-4207B-1	IAT-4003
D33 ('50) Spec.		IAP-4103A-1
D34 ('50) Std.	IAP-4103A-1	IAT-4003
D34 ('50) Canada	IAP-4102-1	IAT-4004A
D42 ('51) Canada	IAT-4012A	
D41, D42 ('51)	IAT-4011	

►***DISTRIBUTOR CAP POPPING OFF CORRECTION Early "IAP" Distributors): See "Auto-Lite IAP Distributors" in Electrical Equipment Section.***

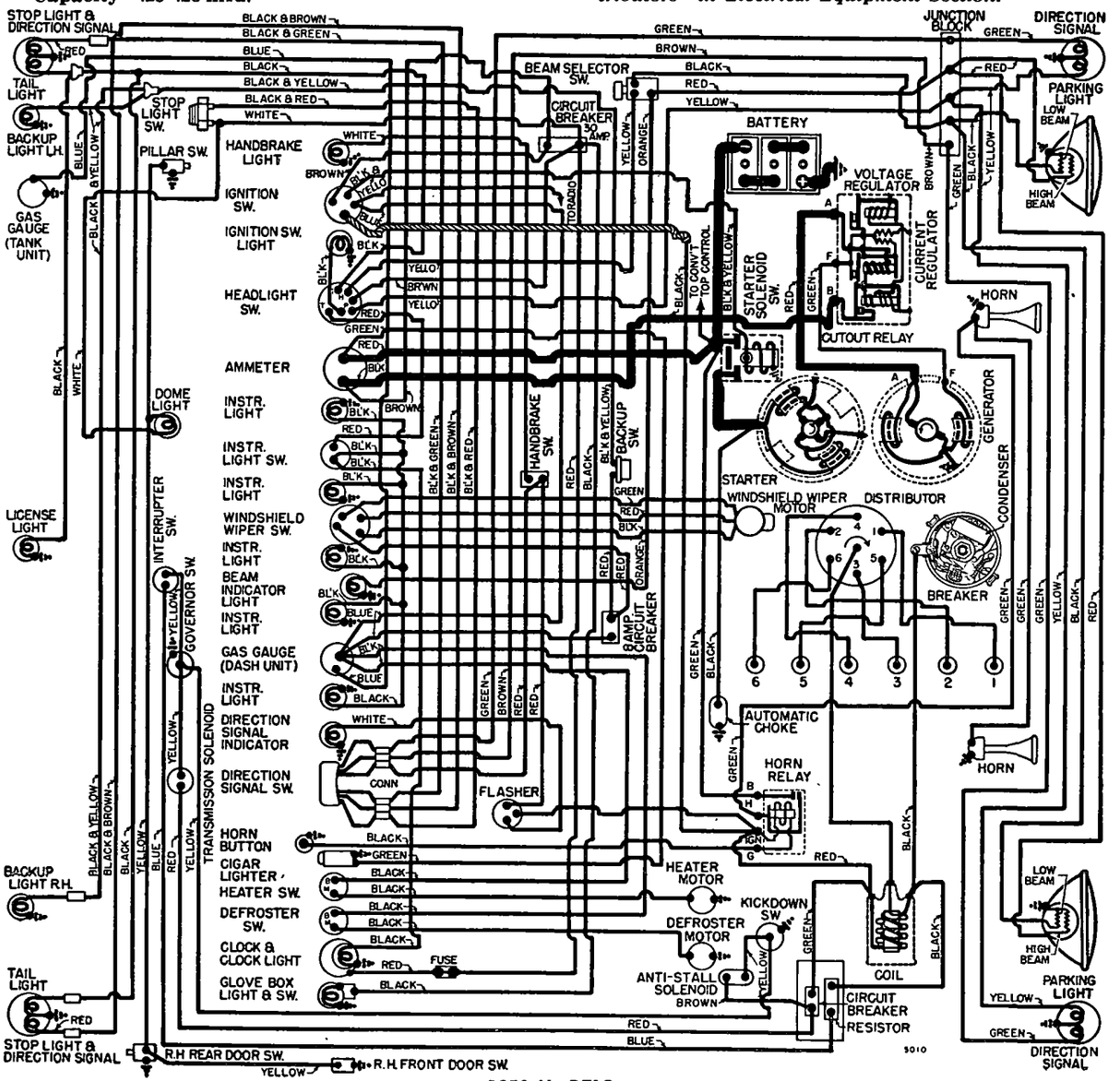

1950 MODELS

Breaker Gap—.020".
Cam Angle—34½° to 38° (closed).
Breaker Arm Spring Tension—17-20 ounces.
Rotation—Clockwise viewed from above.

Automatic Advance—IGS-4207B-1, IAP-4103A-1 IAT-4011, IAT-4003

Degrees	Distr.	R.P.M.	Degrees	Eng.	R.P.M.
Start		350	0		700
1		450	2		900
5		800	10		1600
9		1300	18		2600
10		1425	20		2850

Automatic Advance—IAP-4102-1, IAT-4004A, IAT-4012A

Degrees	Distr.	R.P.M.	Degrees	Eng.	R.P.M.
Start		350	0		700
3		400	6		800
6		850	12		1700
9		1300	18		2600
12		1750	24		3500

Vacuum Spark Control. Auto-Lite Units. Integral type (on distributor, linked directly to breaker plate). Provides additional advance at speeds above idling except when engine accelerated or operated with wide open throttle (spark retarded by return spring).

Vacuum Advance—IGS-4207B-1, IAP-4103A-1, IAT-4011, IAT-4003

Distr. Degrees	Eng. Degrees	Vacuum (" of HG)
Start	0°	4½"
1°	2°	5½"
4°	8°	9⅛"
7°	14°	12¾"
8°	16°	14"

Vacuum Advance—IAP-4102-1, IAT-4004A, IAT-4012A

Distr. Degrees	Eng. Degrees	Vacuum (" of HG)
Start	0°	5"
1°	2°	6¾"
3°	6°	9¼"
5°	10°	12⅛"
7°	14°	15"

Manual Adjustment—Provides for minor changes in ignition timing at distributor. See Ignition Timing.

Distributor Removal: Mounted on left side of crankcase. To remove, disconnect vacuum line, take out hold-down screw in lock plate. **Installation Note**—Install distributor with #1 piston in firing position.

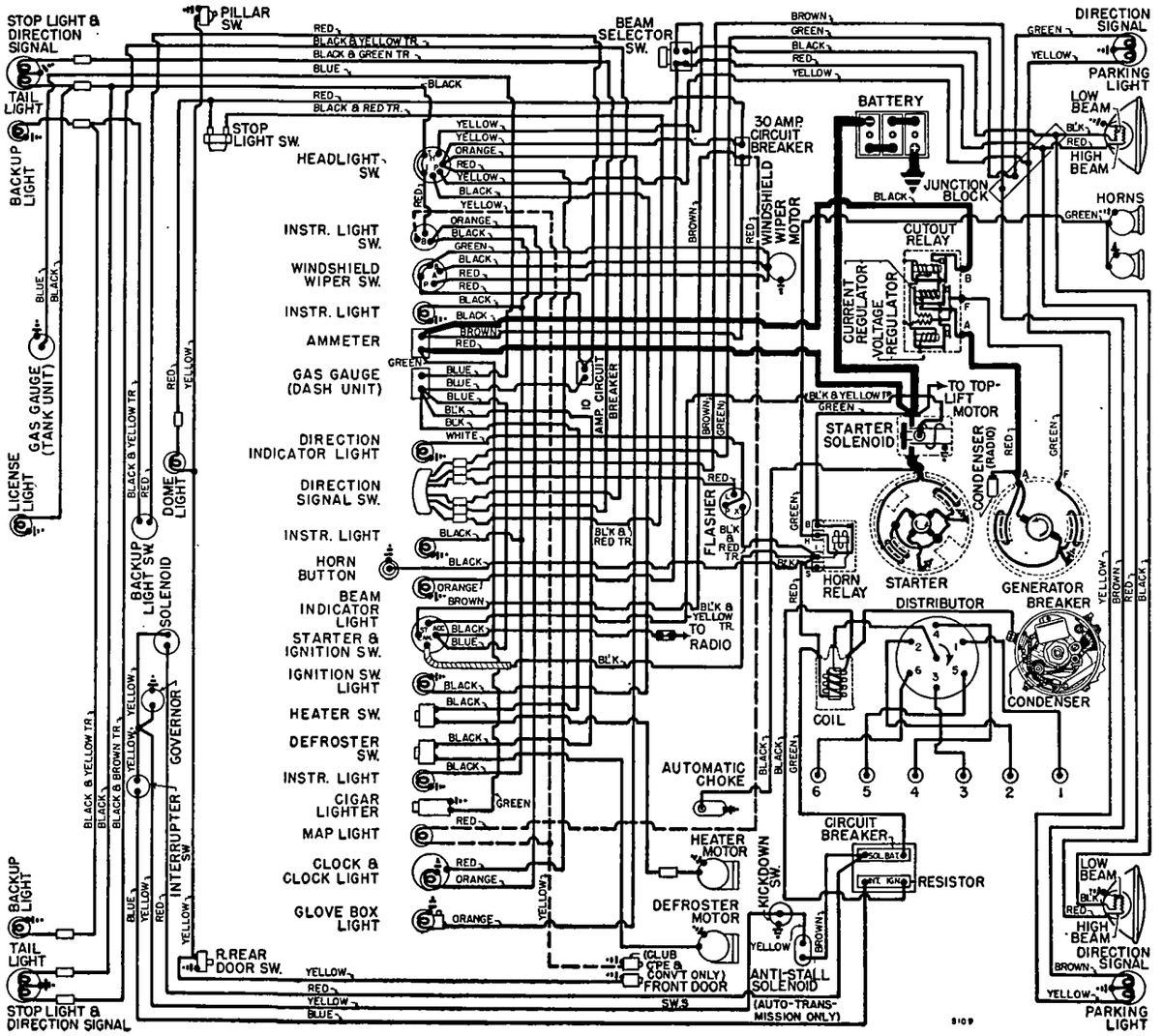

1951 M DELS

IGNITION TIMING

Std. Setting—Initial setting (for regular non-premium fuel) as shown below. See Manual Adjustment (following) for Final Setting.

	Flywheel Degrees	Piston Position
All Engines	At TDC	.000" TDC.

This setting supersedes previous data.

NOTE—Impulse neutralizer marked 'DC' at TDC. with 15 (1°) graduations on either side.

Timing (Using Timing Light)—Connect timing light between distributor primary terminal and battery terminal on generator regulator. Set #1 or #6 piston in firing position (see Setting above) with correct mark on impulse neutralizer aligned with pointer on chain case cover. Loosen lock-plate hold-down screw, center pointer on scale, tighten screw. Loosen lock-plate clamp bolt, rotate distributor until timing light just goes out, tighten clamp bolt. Check Manual Adjustment (following)

Timing (Using Synchroscope)—Tool C-374. Clip lead to #1 spark plug, direct light on impulse neutralizer (mark correct graduation with paint), idle engine, adjust distributor as directed above until mark aligned with pointer on chain case cover.

Manual Adjustment—Set to give slight ping from 10-30 MPH. accelerating with wide open throttle from 10 MPH. To adjust, loosen lock-plate hold-down screw, move plate (not more than 4° or .007" before or after initial setting) counter-clockwise (if no ping), clockwise (if ping too severe), tighten screw.

CARBURETOR

Stromberg Models BXVD-3 (with Fluid Drive). BXVES-3 (with Gyro-Matic Drive Transmission). 1½" Single barrel downdraft type with Sisson Automatic Choke.

►*NOTE*—BXVES-3 type has Kick-down Switch for automatic transmission.

See Carburetor Section for complete data.

►**Carburetor Production Changes**—***Changes made in specifications indicated by carburetor Code No. (see Code Note). See "Stromberg BXVD-3 & BXVES-3" in Carburetor Section.***

CONTINUED N NEXT PAGE

C NTINUED FR M PRECEDING PAGE

►**Carburetor Code Note**—Stamped on carburetor:

Carburetor No.	Code No.①
BXVD-3 380249	3-93, A, etc.
BXVD-3 380253 (Can.)	3-97, A, etc.
BXVES-3 380251	3-95, A, etc.
BXVES-3 380268 (Can.)	3-103, A, etc.

①—See Carburetor Production Change note above.

Settings (Idle Setting, Float Level, and Accelerating Pump): *See Tune-Up data.*
Metering Jet—*See Carburetor Section for Stromberg Downdraft Carburetor Jet Specification Table.*

Slow-Closing Throttle: Adjustable Dashpot type.
Setting—With all slack removed from linkage, set adjusting screw on dash pot lever under float bowl so that piston travel is 5/16-11/32" (measured on dash pot rod on bowl cover). Turn screw out to lengthen stroke, in to shorten.
See Carburetion Equipment Section for complete data.

Fast Idle: Throttle opened to fast idle position when choke valve closed. No adjustment required.
See Carburetion Equipment Section for complete data.

Carter (B&B) Models D6P1 (with Fluid Drive), D6M1 (with Gyro-Matic Drive). 1½" Single barrel, downdraft type with Sisson Automatic Choke.
NOTE—D6M1 type has Kick-down Switch for automatic transmission.
See Carburetor Section for complete data.

Settings (Idle Setting, Float Level, and Accelerating Pump): *See Tune-Up data.*
Metering Jet—*See Carburetor Section for Carter (B&B) Downdraft Carburetor Jet Specification Table.*

Slow-Closing Throttle: (D6P1) Adjustable type, **(D6M1)** Non-adjustable Solenoid type.
Setting (D6P1)—Adjusting screw on top of bowl cover, open five (5) full turns from closed position.
See Carburetion Equipment Section for complete data.

Fast Idle: Throttle opened to fast idle position when choke valve closed. No adjustment required.
See Carburetion Equipment Section for complete data.

Automatic Choke: Sisson Type.
Setting—The choke can be adjusted by inserting a gauge pin through hole in automatic choke lever shaft and slot in base mounting flange (to position shaft) and adjusting carburetor choke valve lever so that choke valve is tightly closed.
See Carburetion Equipment Section for complete data.

CARB. EQUIPMENT

Air Cleaner: AC No. 1544714 Heavy duty oil-bath type. Filter element AC No. 21.
Servicing—Wash filter element in kerosene, drain and clean oil reservoir and refill to indicated level mark with 1 pint SAE No. 50 engine oil (SAE No. 20W for temperatures below freezing) at 1000 mile or 30 day intervals, or more often if required.

Fuel Pump: AC No. 1539208 or Auto-Lite No. FA-4001 (1950). Auto-Lite No. FA-4001A (1951). Diaphragm type fuel pump.
Replacement Pump—AC No. 588 (for 1539208).
Pressure—3-5 lbs.
See Carburetion Equipment Section for complete data.

Fuel Tank Filter: Oilite metal filter in tank.
Servicing—If more than 2 pints water in tank, fuel will not pass filter. Remove filler cap and drain plug, draining tank. Disconnect fuel line at some point between pump and tank, blow out line and filter with air, increasing pressure as filter is cleaned. Flush tank with clean gasoline.

Gasoline Gauge: Auto-Lite electric type.
Dash Unit—Auto-Lite No. 12103A ('50), No. 12335A ('51).
Tank Unit—Auto-Lite No. 11538A (1950-51).
See Carburetion Equipment Section for complete data.

BATTERY

Willard HW-1-105C or Auto-Lite IH-105-D. 6 volt, 15 plate, 105 Ampere Hour Capacity (20 Hour rate).
Dimensions—Length 9". Width 7 1/16". Hgt. 9 5/16".
Grounded Terminal—Positive (+) to engine.
Location—Under hood in left fender shield.

STARTER

U.S......**Auto-Lite MCH-6101.** Arm. MCH-2028
Canada.....**Auto-Lite MAW-4041.** Arm. MAW-2128
Drive—Outboard Barrel Type Bendix No. A-2991.
Rotation—Counter-clockwise at commutator end.
Brush Spring Tension—42-53 ozs. (new brushes).

Performance Data

Torque	R.P.M.	Volts	Amperes
0 ft. lbs.	4300	5.0	65
6.0 "	Lock	2.0	335

Removal: Disconnect wires (tape battery lead), remove mounting bolts, withdraw starter (not necessary to disturb oil filter or oil lines).

Starting Switch: Auto-Lite Model SST-4001 ('50), SST-4006 ('51). Magnetic type mounted on left front fender shield and controlled by turning ignition switch past "On" position.
See Electrical Equipment Section for complete data.

GENERATOR

	Auto-Lite No.	Armature No.
D33, D34 (Std.)	GGW-6001A (Early)	GGW-2006F
	①GGW-6001J (Late)	GGW-2006F
D33, D34 (Spec.)	GGW-6001B (Early)	GGW-2006F
	①GGW-6001K (Late)	GGW-2006F
D41 (Std.)	①GGW-6001L	GGW-2006F
D42 (Std.)	①GGW-6001K	GGW-2006F
City Police	GGU-6001A (Early)	GGU-2006F
	①GGU-6001G (Late)	GGU-2006F
	GGJ-6001A (Early)	GGJ-2101F
	①GGJ-6001F (Late)	GGJ-2101F
State Police	GGU-6001E (Early)	GGU-2006F
	①GGU-6001H (Late)	GGU-2006F
	GGJ-6001B (Early)	GGJ-2101F
	①GGJ-6001G (Late)	GGJ-2101F
Sta. Wg. & 7 Pass.	GGW-6001D (Early)	GGW-2006F
	①GGW-6001L (Late)	GGW-2006F

①—New Type Narrow Belt.
Two brush type current-voltage regulators.
Maximum Charging Rate—See table below.
Charging Rate Adjustment—None. See Regulator.

Performance Data (GGW-6001A, B, D, J, K, L)

Amperes	Volts	Cold—R.P.M.	Hot
0	6.4	870-970	950-1050
40	8.0	1800-2000	2150-2350

Performance Data (GGJ-6001A, B, F, G)

0	6.4	600-700	650-750
50	8.0	1400-1600	1550-1750

Performance Data (GGU-6001A, E, G, H)

0	6.4	750-850	800-900
45	8.0	1450-1650	1650-1850

Rotation—Counter-clockwise at commutator end.
Brush Spring Tension—(GGW, GGU) 35-53 ozs. (new brushes); (GGJ) 30-37 ozs. (new brushes).
Field Current—(GGW) 1.6-1.8 amperes, (GGJ) 1.7-1.9 amperes; (GGU) 1.7-1.8 amperes. All at 6.0 volts.
Motoring Current—(GGW) 4.6-5.2 amps., (GGU) 5.5-6.5 amps., (GGJ) 4.3-4.8 amps., all at 6.0 volts.
Removal: Pivot mounted at left front of engine. To remove, take out pivot and clamp bolts.
Belt Adjustment: Loosen pivot and clamp bolts, pull out on generator until belt is snug (40-50 lbs. tension secured on scale attached to field frame) or ¼" belt deflection between generator and pump.

REGULATOR

Auto-Lite Regulator No.	for Auto-Lite Generator
VRP-6004A	GGW-6001A, B, D, J, K, L
VBA-4202A, VBA-4204A①	GGJ-6001A, B, F, G
VAV-6001A, VAV-6002A①	GGU-6001A, E, G, H
VBE-6001A	GGW-6001L, K

①—VBA-4204A & VAV-6002A for negative ground.
See Electrical Equipment Section for complete data.

►*NOTE*—Regulator case cover is sealed. Serviced on exchange basis if seals not broken (to remove cover).

Cutout Relay

Cuts In (VAV, VRP)—6.4-7.0 volts (set to 6.4-6.6 volts).
Cuts In (VBA)—6.35-6.75 volts (set to 6.4-6.6 volts).
Cuts Out (All)—4.1-4.8 volts (approx. 4-6 amps. disch.).
Contact Gap (All)—.015" minimum.
Air Gap (All)—.031-.034" with contacts open (check at hinge end of core).

Voltage Regulator

Setting (VAV, VRP)—7.2-7.5 volts at 70°F. **(VBA)**—7.0-7.2 volts at 70°F. See Electrical Equipment Section for settings at other temperatures.
Checking (without breaking seals) & Adjustment—*See Electrical Equipment Section.*
Contact Gap (VRP)—.012" min. (armature against stop pin).
Air Gap (All)—.048-.052" with contacts just opening.

Current Regulator

►**(Temperature Compensated Regulators)**

	Nominal Setting
VRP-6004A	40
VAV-6001A, VAV-6002A	45
VBA-4202A, VBA-4204A, VBE-6001A	50

►*CAUTION*—Nominal setting is at 70°F. room temp., AFTER regulator has been run (will be higher started cold). See Electrical Equipment Section for settings at various temperatures.
Checking (without breaking seals) & Adjustment—*See Electrical Equipment Section.*
Contact Gap (VRP)—.012" min. (armature against stop pin).
Air Gap (All)—.048-.052" with contacts just opening.

LIGHTING

Headlamps: Corcoran-Brown "Sealed Beam" type with new "Bull's-eye lens."
See Electrical Equipment Section for complete data.
Adjustment—Aim upper beam straight ahead (hot spot center 3" below lamp center height at 25 ft.).
Beam Indicator—Lighted when Country (upper) beams in use. Located on lower face of speedometer.

Direction Signal: *See Electrical Equipment Section.*
Direction Signal Indicator—Located on lower face of speedometer.

Switches

Lighting—Dodge No. (1950) 1300600, (1951) 1370138.
Beam Selector—Dodge No. (1950) 1253460, (1951) 1253003.
Instrument—Dodge No. (1950) 1244997, (1951) 1370011.
Map Light—Dodge No. 1244600.

MISC. ELECTRICAL

CIRCUIT BREAKERS: Lighting—30 ampere Vibrating type, protects lighting circuits
Aux. Circuit Breaker—8 ampere Protects Windshield Wipers and Back-Up Light.
Direction Signal—On flasher behind instrument panel. Vibrating type Protects dir. signal circuit.
Transmission Solenoid—Vibrating type mounted as an assembly with resistor unit
Convertible Top—Mounted near control switch. Thermostatic type Opens at 80 amperes in 1 minute or less.

FUSES: Clock—3 ampere. In clock lead.
Radio—14 ampere. In fuse connector at radio

HORNS: Auto-Lite.
1950—HW-4201 (Low Pitch) & HW-4202 (High Pitch).
1951—HW-4108 (Low Pitch) & HW-4108 (High Pitch). Dual horns operated by relay.
Horn Current—15 amperes

Horn Relay: Auto-Lite HRL-4104. Connected through ignition switch, operates only with ignition on.
Contacts Close—1.5-3 0 volts (seal to core with 4 V).
Contacts Open—.5 volt min. (open from seal).
Contact Gap—.026". **Air Gap**— 016-.020" (armature air gap with contacts closed but not sealed), 015-.018" (gap between armature leg and yoke with armature sealed to core).

ENGINE

ENGINE SPECIFICATIONS: 6 cylinder, "L" hd. type.
Bore—3¼". **Stroke**—4⅝".
Displacement—230.2 cu. ins. **Rated HP.**—25.35.
Developed Horsepower—103 at 3600 RPM.
Compression Ratio—7 0-1 Std. Cast-iron Head
Compression & Vacuum Reading—*See Tune-up data.*

ORIGINAL BORE & PISTONS: *See Chrysler Special Data.*

ORIGINAL BEARING SIZES: *See Chrysler Special Data.*

OIL PAN REMOVAL: *See Chrysler Special Data.*

ENGINE REMOVAL: *See Chrysler Special Data.*

TIGHTENING TORQUES: *See Chrysler Special Data.*

CYLINDER HEAD: Tightening Torque & Cylinder Head Diagram—*See Chrysler Special Data.*

PISTONS: Aluminum alloy, "U" slot, cam ground type.
NOTE—Piston skirt is elliptical (.010-.012" smaller diameter across pin bosses than across thrust faces), and tapered (.0005-.0015" smaller diameter at top of skirt than at bottom).
Length—3 11/16". **Weight**—16.0 ozs. (stripped).
Removal—Pistons and rods removed from above.
Clearance—.0008" on thrust face ¾" from bottom of skirt. Ring land diameter .0305" larger than skirt.

Fitting New Pistons: Measure piston size with micrometer across thrust faces (right angles to pin bosses) ¾" from bottom of skirt. Fit piston in bore using .002" x ½" feeler, insert piston upside down in bore with feeler 90° from pin bosses on side opposite slot. Clearance correct when 5-7 lbs. pull required to withdraw feeler (bore & piston at 70°F.).
NOTE—Cylinder recondition limits .0005" taper and .0005" out-of-round. Badly scored bores or with taper over .030" or out-of-round over .004" require reboring and honing to limits listed above.

Replacement Pistons: .005", .020", .030", .040", .060" OS. *See "Pistons" in Chrysler Special Data.*

Installing Pistons: "U" slot away from valves.

PISTON RINGS: Two compression (top ring chrome-plated), two slotted oil control, coated rings per piston, all above pin. Oil ring grooves drilled for oil drainage

Ring	Width	End Gap	Side Clearance
Compr. (#1)	3/32"	007-015"	.0025-004"
Compr. (#2)	3/32"	007-015"	.002-.0035"
Oil Contr. (#3,4)	5/32"	007-015"	.001-.0025"

Installing Rings—#1 Compr. with step on inner edge up. #2 Compr. with step on inner edge up or if step on outer edge, install with step down NOTE—Ring expanders used with top oil ring

Replacement Rings: .005" .020" .030" .040" .050" .060" OS *See "Piston Rings" in Chrysler Special Data.*

Piston Pin: Diameter—55/64". **Length**—2 3/4". Pin floats in piston and rod, held by lock rings.
Pin Fit in Piston—.0000" to +.0005". Thumb push fit with piston at 70°F.
Pin Fit in Rod Bushing—+ 0001" to + 0002". Thumb push fit at 70°F.

Replacement Pins: Std , .0006", .003", .008" Oversize.

CONNECTING ROD: Length—7 13/16". **Weight**—27 90 ozs. (with bolts less bearings).
NOTE—Pin hole in rod bronze bushed
Crankpin Journal Diameter—2.0615-2.0625". *See "Original Bearing Sizes" in Chrysler Special Data.*
Lower Bearing—Removable, precision type, steel-backed, thin babbitt-lined. No shims
Clearance—.0005-.0015". **Sideplay**—.006-.011".

Bearing Adjustment: None (no shims). Replace bearings. Do not file rods or bearing caps *See "Connecting Rod & Bearings" in Chrysler Special Data.*

Replacement Bearings: .001", .002", .010", .012" U.S. *See "Connecting Rod & Bearings" in Chrysler Special Data.*

Installing Rods: Wide portion of bearing to rear (#1, 3, 5), to front (#2, 4, 6). Oil hole to camshaft

CRANKSHAFT: 4 bearings, 7 integral counterweights, with vibration dampener on front end.
Journal Diameters—2.4995-2.5005". *See "Original Bearing Sizes" in Chrysler Special Data.*
Bearings—Removable, precision type, steel-backed, thin babbitt-lined. No shims.
Clearance— 0005-.0015".

Bearing Adjustment: None (no shims) Replace bearings. Do not file bearing caps. *See "Crankshaft and Main Bearings" in Chrysler Special Data.*

Replacement Bearings: .001", .002", .010", .012" U.S *See "Crankshaft & Main Bearings" in Chrysler Special Data.*

End Thrust: Taken by flanged faces of #4 (rear) main bearing **Endplay**—.003-007".

Crankshaft Front & Rear Oil Seals: *See "Crankshaft and Main Bearings" in Chrysler Special Data.*

CAMSHAFT: 4 bearing. Non-adjustable chain drive.
Bearing Diameters—#1, 2"; #2, 1 31/32"; #3, 1 15/16"; #4, 1 1/4".
Bearings—Removable, steel-backed, babbitt-lined bushings (except #4—machined in crankcase).
Clearance—.001-.003".

Camshaft Removal: *See "Camshaft & Bearings" in Chrysler Special Data.*

End Thrust: Taken by thrust plate behind camshaft sprocket hub. **Endplay**—.002-.006".

Timing Chain: Width 1". Pitch .500" (½"). Length 24" or 48 links.

Camshaft Setting: Sprockets marked. Mesh chain with sprockets turned so that '0' marks are adjacent and in line with a straightedge across shaft centers.

VALVES:

	Head Diameter	Stem Diameter	Length
Intake	1 17/32"	340-341"	4 25/32"
Exhaust	1 13/32"	340-341"	4 25/32"

	Seat Angle	Lift	Stem Clearance
Intake	45°	23/64"	001-003"
Exhaust	45°	23/64"	002-.004"

Exhaust Valve Seat Inserts—*See Chrysler Special Data.*

Valve Guides: Remove from above. Install new guides with the counterbore end UP for EXHAUST valves and with the counterbore end DOWN for INTAKE valves. Press new guides in with upper end 7/8" below top of block, ream guides to inside diameter of .342-343" (Intake), .343-344" (Exhaust).

Valve Springs: Install with close-coil end to top. Free Length 2".

	Spring Pressure	Length
Valve Closed	40-45 lbs	1¾"
Valve Open	110-120 lbs	1⅜"

Valve Lifters: Mushroom type (remove from below with camshaft out of engine) Stem diameter ⅝". Service by reaming lifter holes (work from above piloting reamer in valve guide) and installing oversize lifters furnished .001", 008", 030" Oversize.
Lifter Clearance in Block—.000-.001".

VALVE TIMING

Tappet Clearance: .008" Intake, .010" Exhaust, Hot. NOTE—Tappet screws self-locking type.

Valve Timing: See Camshaft Setting above
Intake Valves—Open 8° BTDC. Close 36° ALDC.
Exhaust Valves—Open 37° BLDC. Close 7° ATDC.
Valve Timing Check—With .014" tappet clearance (Cold), #6 intake valve should open with #6 piston 8° before top dead center (8th graduation before "DC" mark on vibration dampener or crankshaft fan pulley aligned with pointer on chain case cover). Reset tappet clearance to .008" HOT running clearance.

LUBRICATION

Engine Oiling System: Pressure to main and connecting rod bearings, camshaft bearings, and timing chain. "Rotor" type oil pump.
Crankcase Capacity—5 qts. (refill).
Normal Oil Pressure—40-50 lbs. at 20 MPH
Oil Pressure Relief Valve—Under plug below starter. Opens at 40-45 lbs. Spring painted red, green, or unmarked. If spring replaced, use same color spring.

Oil Pump: "Rotor" type on right side of engine.
Servicing—*See "Oil Pump" in Chrysler Special Data.*

Oil Filter: On left side of engine above starter.
Servicing—Replace filter at 8000 mile intervals.

Oil Pressure Gauge: Auto-Lite No. (1950) 12105A, (1951) 12332A. (Not electric).

COOLING

Cooling System: Positive circulation with pump on front of engine, by-pass thermostat, and water distribution tube in cylinder block behind pump.
Capacity—15 quarts.

Radiator Core Removal: *See "Radiator" in Chrysler Special Data.*

Water Distribution Tube Servicing: *See "Cooling System" in Chrysler Special Data.*

Water Pump: Packless type with grease fitting.
See Water Pump Section for complete data.
Removal—Drain cooling system, remove fan belt,

C NTINUED N NEXT PAGE

C NTINUED FR M PRECEDING PAGE

disconnect hoses at pump, remove pump mounting studs, lift fan and pump off.
Belt Adjustment—*See Generator Belt Adjustment.*
Thermostat: In cylinder head water outlet.
INSTALLATION NOTE—Install thermostat with 2 ports facing front, and 2 ports facing rear.
Setting—Starts to open 157-162°F. Fully open 183-187°F.
Temperature Gauge: Auto-Lite No. (1950) 12104A, (1951) 12333A. (Not electric).

CLUTCH

Borg & Beck Model No. 9A7, Auburn Model No. 9251-12 (Std.). Borg & Beck Model No. 10A7 (Heavy Duty), 11A6 (Taxicab). Single plate dry disc clutch.
BORG & BECK NOTE—Cover Assembly marked 952 (9A7), 931 (11A6).
See Clutch Section for complete data.
Facings (Borg & Beck)—Molded woven asbestos.

	Inside Diam.	Outside Diam.	Thickness
9A7	6"	9¼"	.125" (⅛")
11A7	6½"	11"	.125" (⅛")

Facings (Auburn)—Molded woven asbestos. I.D. 6⅛", O.D. 9⅛", Thickness .125".
Pedal Adjustment: Set pedal to just clear toeboard (stopscrew on lower end of pedal) and set for 1" free travel (adjust nut on connector link at fork). NOTE—Do not disturb turnbuckle on pedal link.
Clutch Over-Center Spring—*See "Clutch Notes" in Chrysler Special Data for setting procedure.*
Removal: Remove release fork pull-back spring, Transmission (see Transmission) and housing underpan. Pull out clutch release bearing and sleeve. Mark cover and flywheel (or driving plate on Fluid Drive). Take out cover screws, remove assembly.

FLUID DRIVE

Fluid Coupling. Std. on all engines (with or without Gyromatic automatic transmission).
See Transmission Section for complete data.
Oil Level: Keep to level of filler hole. Check at first 1000 miles and every 10,000 miles. Manufacturer recommends MOPAR Fluid Drive Fluid.
Slippage Test—*See "Fluid Drive" in Chrysler Special Data.*
Removal: Remove transmission and clutch (see TRANSMISSION and CLUTCH), take off driver flange stud nuts (Tool C-589), lower fluid drive assembly out.

TRANSMISSION

STANDARD

Own Make—All helical gear, constant-mesh, synchro-mesh (Second & High), sliding gear (Low & Reverse). *See Transmission Section for complete data.*
Transmission Control: Manual steering col. shift Std. *See Transmission Section for complete data.*
Removal: Jack up front end of car, disconnect front universal (loosen companion flange nut if disassembling transmission—see Chrysler Special Data for Propeller Shaft Center Bearing Removal on 7 Pass.). Disconnect speedometer cable, hand brake cable, gear-shift rods, vacuum and air hose (if Power Shift used). Remove trans.-to-clutch housing capscrews and nuts. Pull unit to rear, down and out of car.
NOTE—Use pilot studs when installing assembly.

AUTOMATIC TRANSMISSION

Gyromatic—4-speed hydraulically operated type. New design semi-automatic, four-speed transmission with hydraulic actuation and electrical control.
See Transmission Section for complete data.
►*SYNCHRONIZER PRODUCTION CHANGE NOTE*—New "Pin Type" synchronizer unit replaced former type during 1950 production.
►**Kick-down Switch Change to improve Transmission Operation**—*See "Chrysler, DeSoto, Dodge Kick-down Switch" in Electrical Equipment Section.*
Transmission Control: See Transmission article for adjustment directions.
See Transmission Section for complete data.
Kick-down Solenoid—Auto-Lite No. SSS-4003.
Governor—Auto-Lite No. TG-4205R ('50), No. TGG-4001 ('51).
Kick-down Switch—Part of carburetor assembly.
See "Chrysler, DeSoto, Dodge Kick-down Switch" in Electrical Equipment Section.
Ignition Interrupter Switch—On right side of transmission above Governor.
Transmission Oil—3 pints, 10-W engine oil.
Removal: Remove access cover on right rear side of floorboard under front floor mat, disconnect speedometer cable, and governor, solenoid, and interrupter switch wires at transmission. Remove governor and solenoid. Disconnect hand brake cable at brake band, remove cable and cable anchor bracket. Remove brake support, band, adjusting bolt bracket and lever as an assembly. Disconnect front universal (push yoke back), and gearshift rods at transmission. Drain transmission, **replace drain plug.** Disconnect transmission mounting bolts and lower assembly out of car.
INSTALLATION CAUTION—Rear face of clutch housing and lower pan must be in correct alignment. Misalignment can cause hard shifting when transmission installed.

UNIVERSALS

All exc. 8 Pass.—Detroit Universal Series 4200.
8 Pass. Models—Detroit Universal Series 7200.
Ball-and-Trunnion Type (4200), cross type (7200).
See Universals Section for complete data.
Propeller Shaft Center Bearing: Used on 8 pass. sedan.
See "Propeller Shaft" in Chrysler Special Data.

REAR AXLE

Own Make—Semi-floating, hypoid gear type with Hotchkiss drive. *See Rear Axle Section for data.*

Axle Ratio—	Std.	Gyro-Matic
D33, D41 Coupe & Rdstr.	3.73-1	
All Others	3.9-1	3.9-1

Removal: Disconnect rear universal, remove axle shafts (see below) and carrier assembly cap screws.
Axle Shaft Removal—Remove wheel, hub, and drum assembly (use screw type hub puller—Tool C-675), block brake pedal, disconnect brake line at wheel cylinder, remove axle shaft key, install sleeve (Tool C-745) in oil seal, remove brake support (oil seal mounted in support), pull shaft and bearing (use C-499 puller). NOTE—Use Puller C-293-E to remove bearing from shaft, puller C-748 or C-358 to remove inner oil seal, drift C-201 to install seal.
Axle Shaft Oil Seal: New leather type mounted on brake support (backing plate).
Oil Seal Servicing—*See "Rear Axle" in Chrysler Special Data.*
Wheel Bearing Adjustment: Shims between backing plate and axle housing. With wheel and hub removed, check endplay with dial indicator. To adjust, remove backing plate (see above), add or remove shims (furnished .010", .0125", .015", .030" thick) equally at both wheels. **Endplay**—.003-.008".

SHOCK ABSORBERS

Hydraulic, direct acting, non-adjustable.
1951, New "Oriflow" type used.

FRONT SUSPENSION

Front Suspension: Independent, linked parallelogram. Coil Springs and direct acting shock absorbers.
See Front Suspension Section for complete data.
Kingpin Inclination—(1950) 4¾° to 6° crosswise, (1951) 5° to 6½° crosswise.
Camber—(1950) Pos. ¼°. Limits 0° to Pos. ¾° (¼-½° higher on left). (1951) Pos. ⅜° to Neg. ⅜° (0° preferred).
Caster—0° preferred. Limits Neg. 1° to Pos. 1°.
Toe-In—0" (0-1/16"). Adjust by turning both tie rods equally.
Toe-out on Turns—Inner wheel 22½°. Outer 20°.

STEERING GEAR

Own Make—(Gemmer design) Model 305 (exc. 8 pass.), 335 "3-tooth" type (8 passenger).
See Steering Gear Section for complete data.

BRAKES

Service: Dodge "Safe-guard" Lockheed Hydraulic.
See Brake Section for complete data.
►*BRAKE SQUEAK OR SQUEAL CORRECTION*—*See "Lockheed-Chrysler Safe-guard Hydraulic" Brake in Brake Section.*
Wheel Cylinders—Single acting type (front), double acting type with straight (1⅛") bore (rear).
Drum—Cast Iron. Diameter 10" (D33, D41), 11" (D34, D42), 12" (Station Wgns. & Long W.B. Cars).
Lining—Molded asbestos.

	Width	Thickness	Length
D33, D41	2"	13/64"	21" Frt., 18 1/2" Rear
D34, D42	2"	13/64"	23" Frt., 20 3/8" Rear
Sta. Wgn. & Long W.B.	2"	13/64"	25 1/8" Frt. & Rear

Clearance—.006" at each end of all shoes.
Braking Power—60% front wheels, 40% rear.
Hand Brake: On shaft at rear of transmission. External contracting type (Synchro-mesh Trans.). Internal expanding type (Gyro-Matic Trans.).
Adjustment—*See "Hand Brake Notes" in Chrysler Special Data.*
Drum—Cast Iron. Diam. 7" (8 Pass.), 6" (others).
Lining—Molded asbestos. **Width** 2", **Thick.** 5/32".
Clearance—.015-.020" around drum.

MISC. MECHANICAL

WINDSHIELD WIPER:
Auto-Lite Model—Electric type with circuit breaker mounted on control switch.
EWJ-4001—D34 exc. Convt. ('50), D42 L.W.B. ('51).
EWJ-4003—Convt. ('50-51), D42 Coronet ('51).
EWR-5001C—D41 Sedan & Coupe (1951).
EWR-5001D—D42 Meadowbrook (1951).
EWR-5001E—D41 Roadster (1951).
Trico Vacuum Type: Model SSM-118, D33 (1950).
See Miscellaneous Section for complete data.
CONVERTIBLE TOP CONTROL: Auto-Lite Model EWM-4001. Electric Type.
See Miscellaneous Section for complete data.

TIGHTENING SPECIFICATIONS

	Ft. Lbs.	In. Lbs.
Cyl. Hd. bolts	65-70	780-840
Cyl. Hd. nuts	45-50	540-600
Con. Rod nuts (castellated)	35-40	420-480
Con. Rod nuts (self-locking)	40-45	480-540
Main B'g. nuts (self-locking)	80-90	960-1080
Main B'g. bolts (self-locking)	80-90	960-1080
Main B'g. nuts (castellated) V8	80-90	960-1080
Main B'g. nuts (castellated) Six	75-80	900-960
Flywheel Screws (self-locking)	80	960
Flywheel Screws (lock wire)	65-70	780-840
Diff. Carrier Stud Nuts	30-35	360-420
Axle Shaft Retainer Nuts	30-35	360-420
Spark Plugs	**Ft. Lbs.**	**In. Lbs.**
18 MM. Cast Iron Head	28-32	336-384
18 MM. Aluminum Head	24-28	288-336
14 MM. Cast Iron Head	24-28	288-336
14 MM. Aluminum Head	20-24	240-288

CYLINDER HEAD

CYLINDER HEAD INSTALLATION: Use Torque Indicating Wrench and tighten in following order:

FORD SIX

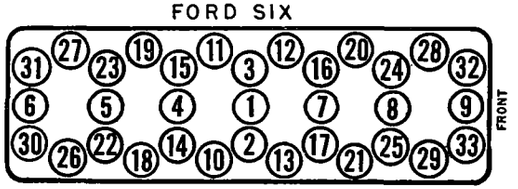

FORD V8

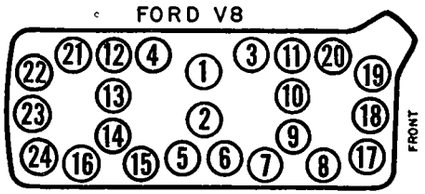

6 CYL. "H" ENGINE

6 CYLINDER HEAD BOLTS & STUDS: Studs used on engines up to 7HA-61171, bolts used after this number. Both studs and bolts furnished for service but should not be mixed. **Use all studs or bolts.**

6 CYLINDER HEAD GASKET: Gasket must be installed with **large full flow passages at rear.** Late type gaskets have left front corner cut off for identification. If this type gasket with cut off corner installed backwards, water leaks at the rear corner between head and block will occur.

ENGINE REMOVAL

ENGINE REMOVAL: Remove hood and battery. Drain crankcase and radiator. Disconnect upper radiator hose at engine and lower hose at radiator. Disconnect heater hoses and remove from engine. Disconnect all wires from engine, spread cable clips and fold cable out of the way. Disconnect fuel lines, throttle linkage, and accelerator pedal rod. Push cross shaft back against dash panel. Disconnect windshield wiper hose at engine. Disconnect muffler inlet pipe and clutch retracting spring. Remove the two top transmission to flywheel housing bolts. Remove engine front support nuts. Install engine lift brackets and take up the load with chain hoist. Support transmission and remove two lower transmission to flywheel housing bolts. Rock the engine and pull it away from transmission until the pilot and shaft separate from the clutch, then raise engine carefully. Be sure it clears all parts of engine compartment. Do not let engine strike grille.

Installation: Reverse the above procedure. NOTE—It may be necessary to adjust height of transmission with relation to engine until after pilot enters the clutch. If engine "hangs up" after pilot enters, turn crankshaft slowly until splines seat.

PISTON RINGS

REPLACEMENT PISTON RINGS: Sets furnished for all engines as listed below. Rings are available in sets as follows: **1. Standard** (snap type) designed for use in new engine or whenever the block is rebored and new pistons are installed and a light hone is recommended. **2. Expander Type,** is designed for use after a light honing job and the taper of the cylinder does not exceed .006". **3. Steel Section Type,** designed for use in cylinders where the taper of the bore is between .006" & .015", or whenever excessive oil consumpetion is encountered, or when the cylinder bore is not to be honed. **NOTE**—Expander Type Rings only are furnished for "M" Engine.

PISTON RING SETS

6 Cylinder "H" Engine—4 Ring Sets

Snap Type	**Size**
7HA-6149-A	Standard
7HA-6149-B	.020" Oversize
7HA-6149-C	.030" Oversize
7HA-6149-D	.040" Oversize
7HA-6149-E	.060" Oversize
Expander Type	**Size**
7HA-6149-F	Standard
7HA-6149-G	.020" Oversize
7HA-6149-H	.030" Oversize
7HA-6149-J	.040" Oversize
7HA-6149-K	.060" Oversize
Steel Section Type①	**Size**
7HAS-6149-A	Standard
7HAS-6149-B	.020" Oversize
7HAS-6149-C	.030" Oversize
7HAS-6149-D	.040" Oversize
7HAS-6149-E	060" Oversize

6 Cylinder "M" Engine—3 Ring Sets

Expander Type	**Size**
8MTH-6149-F	Standard
8MTH-6149-G	.020" Oversize
8MTH-6149-H	.030" Oversize
8MTH-6149-J	.040" Oversize
8MTH-6149-K	.060" Oversize

V8 "B" & "R" Engines—4 Ring Sets

Snap Type②	**Size**
8BA-6149-A	Standard
8BA-6149-B	.020" Oversize
8BA-6149C	.030" Oversize
8BA-6149-D	.040" Oversize
Expander Type②	**Size**
8BA-6149-E	Standard
8BA-6149-F	.020" Oversize
8BA-6149-G	.030" Oversize
8BA-6149-H	.040" Oversize
8BA-6149-J	.060" Oversize
Steel Section Type②	**Size**
8BAS-6149-A	Standard
8BAS-6149-B	.020" Oversize
8BAS-6149-C	.030" Oversize
8BAS-6149-D	.040" Oversize
8BAS-6149-E	.060" Oversize

①—Use with Split Skirt Piston.
②—Use with Solid Skirt Piston.

OIL PAN REMOVAL

6 Cylinder: Remove engine from chassis. Remove screws holding oil pan to engine rear plate, and screws holding pan to engine block and front cover plate. Remove pan from engine.

Installation—Soak new packing 2 hours in SAE 20 engine oil before installation. Install packing in retainer groove and roll it in place with a round bar, making sure the packing meets the pan gasket evenly. Mount pan on engine and install screws holding pan to engine block and front plate. Torque to 15-18 ft. lbs. (*NOTE*—Alignment of pan can be simplified by using two studs in opposite corners of block). Install screws holding oil pan to rear plate. Torque to 10-15 ft. lbs.

8 Cylinder: Drain crankcase, remove starter motor clutch spring and the flywheel housing front cover. Remove the road air breather duct and the bolts retaining steering gear idler arm to frame. Remove steering gear arm and drop idler and connecting rod until it hangs from spindle. Remove oil pan retaining screws and drop the oil pan. The two front screws on the pan can be reached through holes in frame front cross member. *NOTE*—On some engines it will be necessary to disconnect the front engine supports and raise front of engine.

Installation—Clean gasket surface of block and file off any burrs around bolt holes. Tie each half of pan gasket to pan through two of the holes to hold gasket while installing. Hold pan in place on block and install two screws finger tight in each side. Remove strings and install remaining screws, tightening them to 15-18 ft. lbs. Install road breather duct and flywheel housing front cover. *NOTE*—Align flywheel housing front cover by installing the two shoulder bolts in the top holes. Install starter motor, clutch return spring, steering idler arm support bracket and the steering idler arm. Fill crankcase with oil and run engine to check for oil leaks.

OIL PUMP

6 CYLINDER ROTOR TYPE OIL PUMP: Removal from Passenger Car. Remove the distributor cap turn engine over until #1 cylinder at firing position (rotor will point to oil hole in distributor), allow crankshaft to remain in this position while pump off engine. Remove front engine mounts-to-frame bolts. Loosen rear engine mounting. **Raise front of engine 2" and move ½" to left.** Remove distributor. Take out 3 pump mounting capscrews in pump cover, pull pump out.

Pump Disassembly—Remove cover and outer rotor (rotate drive gear to free rotor from pump body). Drive out pin in drive gear and press gear off shaft. Remove shaft and inner rotor. Clean all parts and check to specifications listed below.

Pump Specifications and Clearances—As follows:

C NTINUED N NEXT PAGE

C NTINUED FR M PRECEDIN PA E

Outer Rotor. Outside Diameter 2.249" (wear limit 2.245"). Clearance in Body .005-.010" (wear limit .012").

Pump Body. Inside Diameter 2.258" (wear limit 2.260").

Inner Rotor. Clearance in Outer Rotor .006" (wear limit .010").

Shaft. Outside Diameter .5175" (wear limit .5170"). Shaft Endplay .004-.008" (wear limit .010").

Pump Assembly—If new shaft installed, assemble shaft with inner rotor in pump. Press drive gear on end of shaft to obtain .004" clearance between gear and upper end of pump body. Drill pin hole in shaft. Install pin and peen both ends. Place outer rotor in body, install cover being sure to use new cover gasket.

Pump Installation—Reverse removal instructions listed above making certain distributor correctly positioned for proper ignition timing.

6 CYL. "H" ENGINE

OIL PUMP DRIVEN GEAR: (After Pass. Car 8HA-107555, Truck 7H-219349), cast-iron gear (7HA-6652) used together with flame-hardened camshaft (7HA-6250-C). Camshaft No. cast between second and fourth cam lobes from rear end of camshaft. **Replacement of Oil Pump Driven Gear on Engines before Pass. Car No. 8HA-107555 and Truck No. 7H-219349.** Bronze gear used on these engines. If pump replaced or if gear failure encountered, manufacturer recommends installation of cast-iron gear No. 7HA-6652. If this cast-iron gear fails prematurely, new flame-hardened camshaft No. 7HA-6250-C and new cast-iron gear should be installed. *CAUTION*—If oil pump being replaced, 8HA-6600 pump will require re-working by installation of cast-iron driven gear 7HA-6652.

Gear Installation Note. Must be .004-.008" shaft endplay. See Oil Pump Installation above.

VALVE SYSTEM

V8 ENGINE

VALVE ASSEMBLY SERVICING: The complete valve assembly (valve, spring, and guide) should be removed and installed as a unit. Service these assemblies as follows:

Valve Assembly Removal: Compress valve spring down against valve locks and remove valve guide retainer. Pry up on tappet end of valve spring to remove assembly.

Disassembly—Install valve assembly in tool No. 6513-P and compress spring and remove valve spring retainer locks. Remove valve spring retainer, valve spring, and valve guide.

Reassembly (1950 Non-rotatable Valves)—Install valve guide on valve, install spring and spring retainer and place assembly in compression tool No. 6513-P. Compress spring and install retainer locks with lock replacer.

Reassembly (1951 Rotatable Valves)—Place valve, spring, guide, and spring retainer in compressing tool. Place valve locks in valve spring retainer sleeve. Hold locks in the sleeve and start sleeve over the end of valve, compress the valve spring and work sleeve and locks into place with finger.

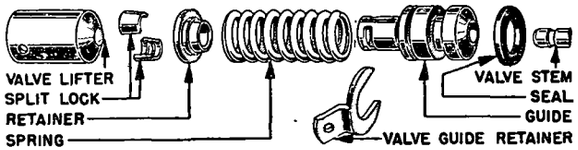

CONVENTIONAL TYPE-1950 8 CYL. PASS. CAR ENGINE & "R" SERIES TRUCK ENGINE

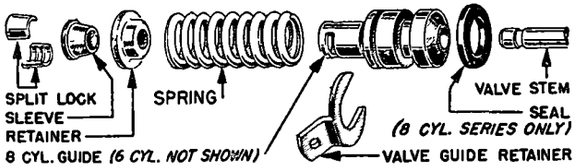

ROTATABLE TYPE-1951 8 CYL. PASS. CARS, "R" SERIES TRUCK ENGINE & ALL 6 CYL. "H" ENGINES

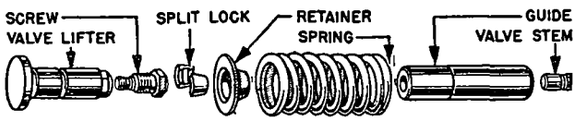

CONVENTIONAL TYPE-EARLY 1950 "M" SERIES TRUCK ENGINE & 1950 "H" SERIES TRUCK & PASS. CAR ENGINE

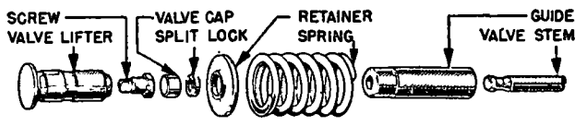

FREE TYPE-LATE 1950 & 1951 6 CYL. "M" SERIES TRUCK ENGINE

Valve Assembly Installation: Slide valve and spring assembly into valve chamber. Compress the valve spring and insert guide retainer in the groove provided in valve guide. Be sure retainer seats properly when spring is released.

►*INTAKE VALVE GUIDE RUBBER SEAL CAUTION*—***Be sure rubber seal around guide starts evenly in valve guide opening.***

6 CYL. "H" ENGINE

VALVE TAPPET NOISE: Valve Tappet Clearance Springs, Ford Part No. 8HA-6550 can be used when valve tappets are noisy after they have been adjusted correctly. To install springs turn engine over to close valve and insert small end (bottom) of spring between tappet and tappet adjusting screw. Compress the large end (top) and seat against the valve spring retainer.

ALL ENGINES

ROTATABLE VALVES: Used in 1951 engines. New two piece retainer and shorter valve spring used. Valve locks are same as previous types. Rotatable valves and parts can be installed in engines not so equipped by changing the spring retainer, valve spring, exhaust and intake valves. NOTE—When removing valve assembly from engine be sure to identify each valve assembly so it can be replaced in the same valve port from which it was removed.

BRAKE NOTES

HAND BRAKE ADJUSTMENT: For independent shaft brake at transmission. Set hand lever in fully released position and make certain that flat portion of cam is resting on rear of brake band upper end (if cam not flat, remove clevis pin in upper end of cam, adjust clevis rod until cam is flat when rod re-connected). Remove locking wire from brake band anchor adjusting screw (left side), turn screw clockwise until clearance between band and drum is .010" at the anchor screw, install lock wire. Loosen locknut on adjusting screw for lower position of brake band (round screw on brake mounting bracket), turn screw until clearance between lower portion of brake band and drum is .010", tighten locknut. Tighten adjusting nut at lower end of main adjusting bolt (on which band positioning springs are located) until clearance between upper portion of band and drum is .010". This completes the brake adjustment.

MODEL IDENTIFICATION

VEHICLE NUMBER: Stamped on plate attached to engine side of dash and on top of right frame side rail just to rear of front suspension upper control arm.

SERIAL NUMBERS: As follows:

Year	Engine Type	Model	Assembly Plant	Serial Number
1950	H	0	See below	100001 Up
1951	H	1	See below	100001 Up

Assembly Plant Designations

AT—Atlanta	**DA**—Dearborn	**MP**—Memphis
BF—Buffalo	**LU**—Louisville	**NR**—Norfolk
CS—Chester	**EG**—Edgewater	**RH**—Richmond
CH—Chicago	**KC**—Kansas City	**SR**—Somerville
DL—Dallas	**LB**—Long Beach	**SP**—Twin City
HM—Highland Park		(St. Paul)

TUNE-UP

COMPRESSION PRESSURE: (1950) 110 lbs. at cranking speed. (1951) 120 lbs. at cranking speed.

VACUUM READING: Steady 18-21" idling at 500 RPM.

FIRING ORDER: 1-5-3-6-2-4. See diagram.

SPARK PLUG GAPS: .030". Limits .029-.032".
Plug Type—Champion H-10. 14 mm.

DISTRIBUTOR: Breaker Gap—.024-.026".
Cam Angle—36° closed, 24° open.
Breaker Arm Spring Tension—17-20 ounces.
Advance Performance—*See Ignition.*
Condenser Capacity—.21-.25 microfarad.
Distributor Line (Carburetor Connection) Vacuum—1.2-1.4" at 800 RPM., 2.1-2.9" at 1000 RPM., 4.7-6.3" at 2000 RPM.

IGNITION TIMING: TDC.
Timing Procedure—*See Ignition Timing.*
Dampener Mark—Circular boss or groove (depending on type of dampener used). 2 pointers on front engine cover. ***Use pointer nearest to outer circumference of dampener for proper timing.***

CARBURETION:
Idle Setting—Approx. 1 turn open. One screw—turning screw out gives richer mixture.
Idle Speed—(Std. Trans.) Approx. 500 RPM.
Idle Speed—(Fordomatic Trans.) 425 RPM.
Float Level—1.322-1.353" bottom of float to underside of bowl cover with needle valve seated (use Gauge No. 9550-A).
Accelerating Pump—Center hole average setting. Inner hole for hot weather, Outer for cold weather.

Fuel Pump Pressure: 4-5 lbs.

MANIFOLD HEAT CONTROL: Automatic thermostatic type. Valve should be closed (counterweight arm against stop pin) with engine cold and should operate freely).

►*NOTE*—Late 1950 & 1951 engine marked "OH" on right hand side of block directly above #3 intake port.

►**High Speed Setting**—.002" additional exhaust valve clearance recommended by car manufacturer.

►**VALVE TAPPET NOISE**—Silencing springs available. *See "Valve System" in Ford Special Data.*

VALVE TAPPET CLEARANCE: ***CAUTION—Different settings required for each type camshaft.***

►**First type Camshaft No. 7HA-6250-C**
(no markings on engine or camshaft)
Tappet Clearance (all valves) .013"-.015" Cold.
High Speed Setting—.002" additional exhaust valve clearance recommended by car manufacturer.

►**Later type Camshaft No. OHA-6250**
(Eng. Marked "OH" above #3 Intake port)
(Camshaft marked "O" on front end)
Tappet Clearance—Intake .014". Exhaust .018", Cold.

►***CAUTION***—Loss of power will result if correct tappet clearance not used on engines with "O" camshaft.

►***ADJUSTABLE SELF-LOCKING TAPPET SCREWS***

IGNITION

IGNITION SWITCH: Ford No. ('50) 6A-11572-B, ('51) No. 1A-11572-B.
Ignition Lock—Ford No. ('50) 8A-11582-A, ('51) 8A-11582-B.

COIL: Ford No. 8BA-12029.
Location—On left side of engine above distributor.
Ignition Current—Idling 2.75-3.0 amperes at 6 volts, 5.0-5.5 stopped. Coil primary resistance 1.05-1.15 ohms, (75°F). Secondary resistance 4100 ohms, (75°F).

CONDENSER: Ford No. 7RA-12300-B.
Capacity—.21-.25 microfarad.

DISTRIBUTOR: Ford No. 7HA-12127 (Less Cap and Rotor). "Pressure" distributor with spark advance controlled by vacuum diaphragm moving breaker plate to advance spark against two breaker plate springs.
See "Ford, Lincoln, Mercury Distributor" in Electrical Equipment Section.

►**Excessive Pinging Correction**—*See "Ford, Lincoln, Mercury Distributor" in Electrical Equipment Section.*
Breaker Gap—.024-.026".
Cam Angle—36° closed, 24° open.
Breaker Arm Spring Tension—17-20 ounces.
Rotation—Clockwise viewed from above.

CONTINUED ON NEXT PAGE

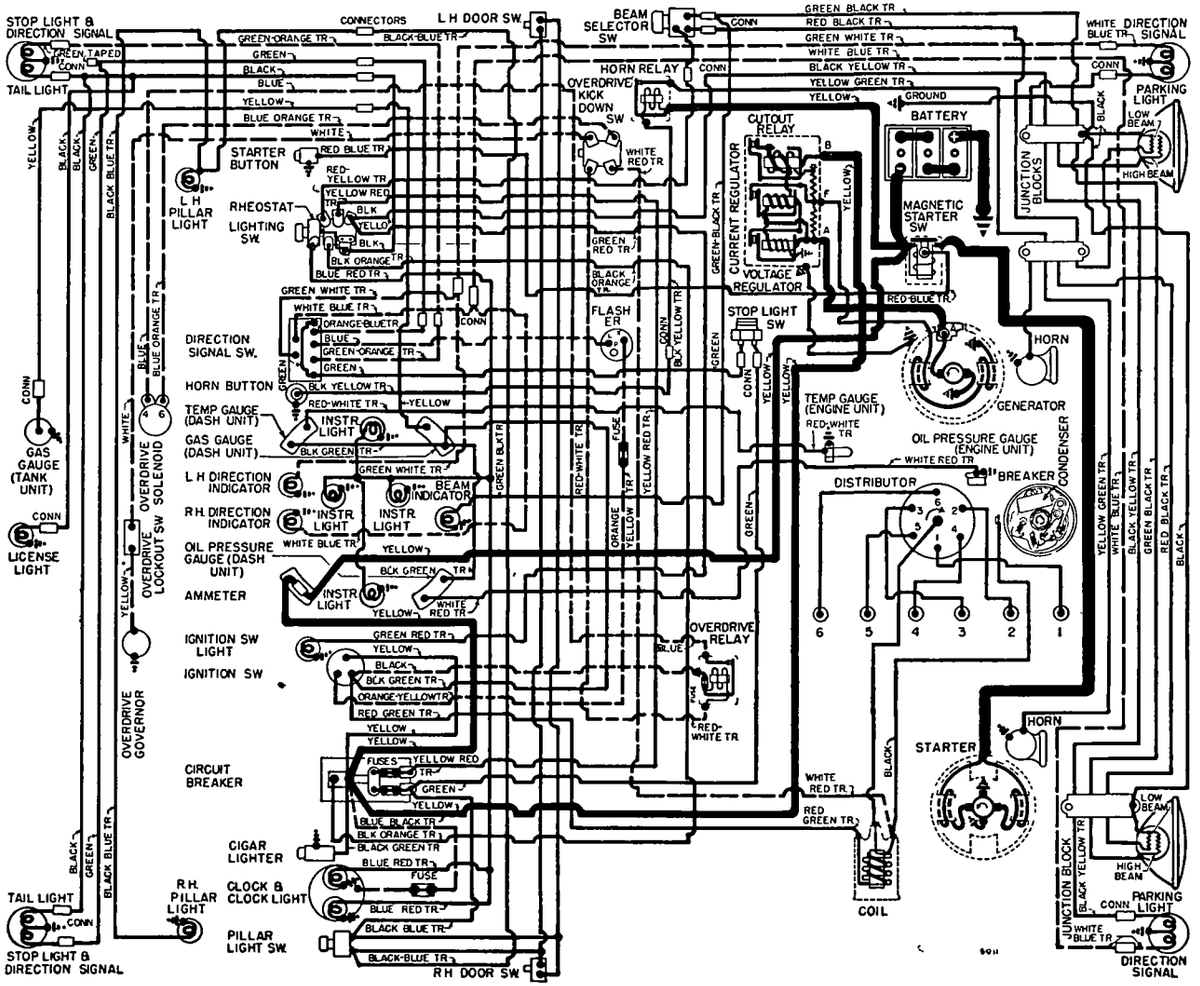

CONTINUED FR M PRECEDING PAGE

Advance Performance

►With Distributor on Test Unit

Distr. Degrees	Vacuum	R.P.M.
0°	0"	200
1¾-3°	0.4"	500
5½-6¾°	1.4"	1000
11½-13°	5.5"	1000
8½-9¾°	2.9"	1500
10½-11½°	4.1"	2000

Distributor Line Vacuum Test—*See Tune-Up.*

Distributor Removal: Mounted on left side of engine at center. To remove, disconnect vacuum line, take out hold-down screw in timing arm, lift off.

►*NOTE—Distributor angle-mounted on left side of engine and shaft splined to oil pump drive gear.*

IGNITION TIMING

Std. Setting.....**at TDC.**

Dampener Mark—Circular boss or groove (depending on type of dampener used). 2 pointers on front engine cover. *Use pointer nearest to outer circumference of dampener for proper timing.*

Timing—With #1 piston at firing position and timing mark aligned with pointer on front of engine, loosen clamp screw on timing arm, rotate distributor until contacts begin to open, tighten clamp screw. Check spark plug connections (see diagram), see that rotor opposite #1 terminal in cap).

►**Timing (with Neon Timing Light)**—*CAUTION—Vacuum line must be disconnected to avoid vacuum advance operating.* Mark proper timing pointer (see Dampener Mark above) and dampener mark with white chalk. Connect timing light to #1 spark plug. Idle engine and adjust distributor (as directed above) until mark and pointer aligned when light flashes.

CARBURETOR

1950-51 (Std. Trans.) Holley-Ford No. 8HA-9510-A. 1951 (with Fordomatic Trans.) Holley-Ford No. 1HA-9510-A.

Single barrel downdraft type with vacuum passages for distributor operation.

See Carburetor Section for complete data.

Setting (Idle Setting, Float Level, and Accelerating Pump): *See Tune-Up data.*

Metering Jets—*See Holley-Ford Jet Specification Table in Carburetor Section.*

►*CARBURETOR JET CHANGE—See Carburetor Section for complete data.*

Fast Idle: Integral type. Operated by choke valve lever. No adjustment required.

CARB. EQUIPMENT

Fuel Pump (std.): Ford No. 7HA-9350-B.
Optl. (Fuel-&-Vacuum)—Ford No. 8HA-9350.
Pressure—4-5 lbs.
See Carburetion Equipment Section for complete data.

Gasoline Gauge: King-Seeley Electric.
Dash Unit—Ford No. (Red Pntr. 1950) 8A-9280-B, (White Pntr. 1951) No. 1A-9280-B.
Tank Unit—Ford No. 8A-9275.
See Carburetion Equipment Section for complete data.

Air Cleaner (Std.—oil wetted): Ford No. OHA-9600-A.
Optl. (oil bath)—Ford No. OHA-9600-B1 (1 pint cap.), OHA-9600-B4 (1 quart cap.).

BATTERY

Ford No. 81A-10655-A. 6 Volt, 17 Plate, 100 Amp. Hr.
Zero Capacity—300 amperes for 3.3 minutes. Five Second Voltage—4.2 volts.
Grounded Terminal—Positive (+).
Location—On left side in engine compartment.
Dimensions—L. 10½". W. 7⅛". H. 7¼".

STARTER

1950 (All Models) Ford No. 7HA-11002.
1951 (Except Fordomatic) Ford No. 1A-11002-A.
1951 (With Fordomatic) Ford No. 1CM-11002-A.
Armature—(Except Fordomatic) No. 18-11005. (With Fordomatic) No. 1CM-11005-A.

►**Starter, Motor Rusting Correction**—*See "Electrical System Notes" in Ford Special Data.*
Drive—Ford No. 7HA-11350. New 9 tooth pinion type for use with 114 tooth flywheel ring gear.
Rotation—Counter-clockwise at commutator end.
Brush Spring Tension—20-22 ounces.
Cranking Engine—100 RPM., 190-215 amperes.

Performance Data

Torque	R.P.M.	Volts	Amperes
No Load	4000-6000	5.8	45-60
15 ft. lbs.	Lock	3.5	600

Starting Switch: (1950 All Models & 1951 Sta. Wgn.) Ford No. 21A-11450. (1951 Except Sta. Wgn.) Ford No. 1A-11450-A. Mounted on left front fender apron and controlled as follows:

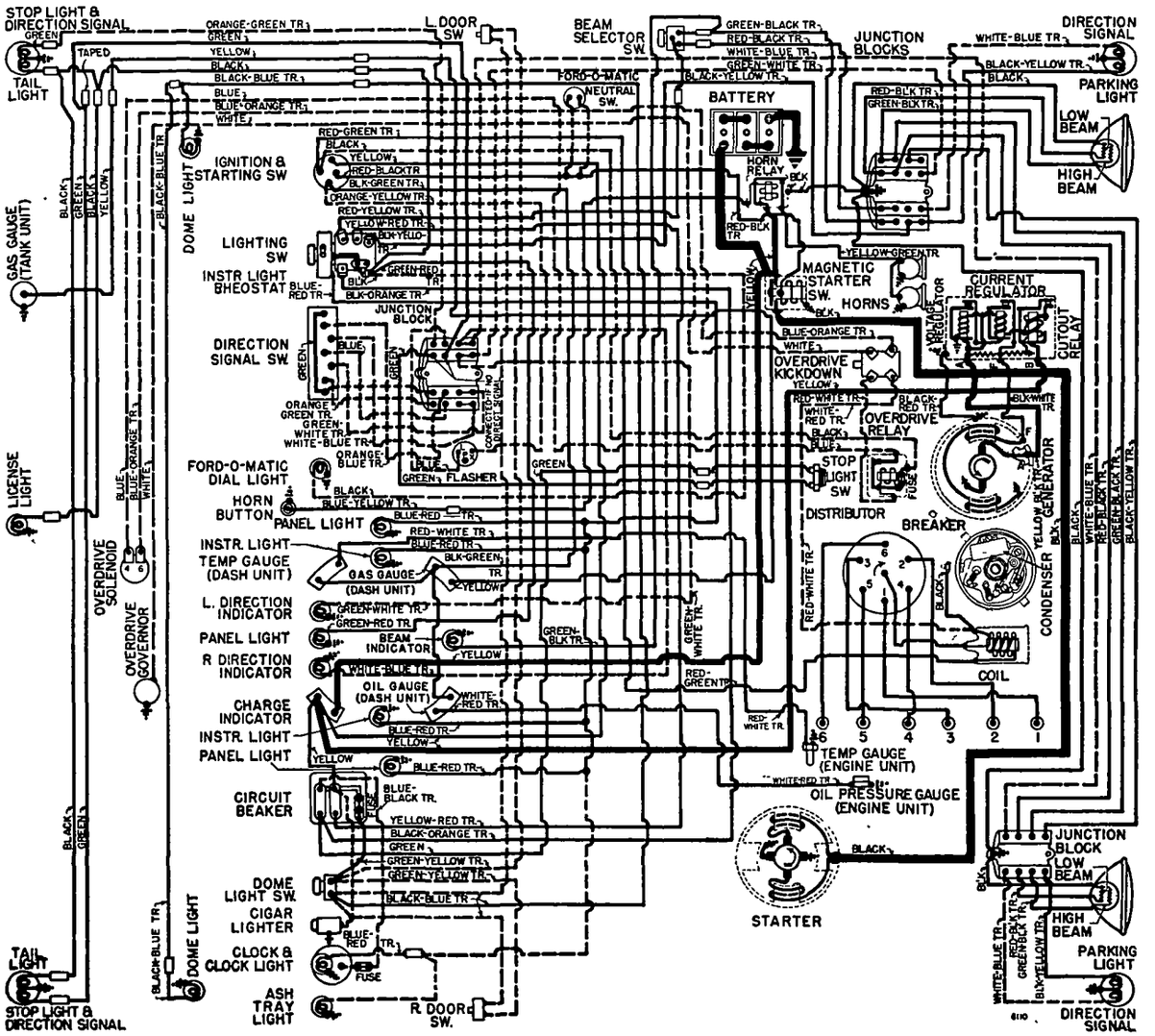

1951 MODELS

►*1951 STARTER SWITCH CAUTION*—(Except Station Wagon). Starter switch grounded at switch bracket. Make sure mounting surfaces clean.
1950—Pushbutton Switch No. 6H-11500 mounted on instrument panel.
1951—Key operated ignition & starter switch, Ford No. 1A-11572-B. Turn switch full right to start.

►*FORDOMATIC DRIVE NOTE*—Neutral Safety Switch, Ford No. 1M-15812-B in circuit between ignition switch and starter relay. Selector lever must be in neutral to operate starter.

GENERATOR

1950—Ford No. (Std.) 8BA-10002-A, (Heavy Duty) 8BA-10002-B. Use with bracket No. 7HA-6129.
1951—Ford No. (Std.) OHA-10000-A, (Spec. Equip.) OHA-10000-B. Use with bracket OHA-6129-A.
Two brush type with current and voltage regulation.
Charging Rate Adjustment—None. See Regulator.
Maximum Charging Rate—36 amperes, 7 volts, at approximately 20 MPH. Controlled by regulator and dependent on load and battery condition.

Performance Data

Generator	Amperes	RPM.
OHM-10000-A	35	1500
OHM-10000-B	40	1500
8BA-10002-A	35	1500
8BA-10002-B	40	1500

Rotation—Counter-clockwise at commutator end.
Brush Spring Tension—20-24 ozs.
Belt Adjustment: ¼" deflection midway between generator and pump pulleys. To adjust, loosen 2 mounting bracket bolts under generator and capscrew in bracket slot behind generator.

REGULATOR

Ford Numbers

Regulator	Generator
51A-10505-A	8BA-10002-A
51A-10505-H	8BA-10002-A
5EH-10505-C	8BA-10002-B
8M-10505-A	OHA-10000-A
8L-10505	OHA-10000-B
8L-10505	8BA-10002-B

Voltage-current 3-Unit types.
See Electrical Equipment Section for complete data.
NOTE—Spearate ground wire extending to cowl must be in place when gereator operated.

Cutout Relay

Regulator	Cuts In	Cuts Out (Disch.)
51A-10505-A	6.6-7.0 Volts	0-8 Amperes
51A-10505-H	6.6-7.0 Volts	0-8 Amperes
5EH-10505-C	6.6-7.0 Volts	0-8 Amperes
8M-10505A	6.0-6.6 Volts	0-8 Amperes
8L-10505	6.0-6.6 Volts	0-8 Amperes

Contact Gap—.010" (armature against upper stop).
Air Gap—.014" between armature and core with contacts open.

Voltage Regulator

Regulator	Voltage Setting COLD①
51A-10505-A	7.2-7.6 Volts
51A-10505-H	6.6-7.0 Volts
5EH-10505-C	6.6-7.0 Volts
8M-10505-A	7.2-7.6 Volts
8L-10505	7.2-7.6 Volts

①—Voltage settings will increase approx. .2 volt after 20 minutes running.
Checking & Adjustment—*See Elec. Equip. Section.*
Air Gap—.032-.035" between armature and core with contacts just closed.

►*CAUTION—Make certain gauge contacts armature and not brass rivet on underside of armature.*
Contact Spring Tension—5 ounces minimum with contacts just opening.

Current Regulator

Regulator	Current Setting COLD	Amperes
51A-10505-A		30-34
51A-10505-B		34-38
5EH-10505-C		38-42
8M-10505-A		38-42
8L-10505		38-42

Checking & Adjustment—*See Elec. Equip. Section.*
Air Gap—.032-.035" between armature and core with contacts just closed.
Contact Spring Tension—5 ounces minimum with contacts just opening.

LIGHTING

Headlamps: Ford "Sealed Beam" type.
See Electrical Equipment Section for complete data.
Beam Indicator—Bulb between 50 and 60 on speedometer. Lighted with Upper Beam "on".
Direction Signal: Optl. *See Electrical Equipment Section.*
Direction Indicators—Right and Left indicators on lower edge of speedometer.
Directional Signal Flasher—Ford No. ('50).. 8L-13350-B, ('51) 8L-13350-C.

Switches

Lighting—Ford No. ('50) 0A-11654, ('51) 0L-11654.
Instrument—Part of Lighting Switch (operated by turning knob).
Beam Selector—Ford No. 8A-13532.
Dome Light—Ford No. ('50) 0A-13752, ('51) 1A-13752.
Dome Light (Sta. Wgn.) Ford No. 0M-13752.
Door Switch—Ford No. 0A-13713.
Stop Light—Ford No. ('50) 1 1A-13480, ('51) 0A-13480.

MISC. ELECTRICAL

CIRCUIT BREAKER: Ford No. ('50) 0A-12258, ('51) 1A-12258-A. Behind instrument panel.
Convertible Top—Ford No. 51A-12250-A. 30 ampere. On hydraulic pump motor or on front of dash near convertible top control switch.
FUSES: Auxiliary Lights (Parking, Tail & Instrument) (1950 only)—14 ampere. On circuit breaker bracket behind instrument panel (see wiring diagram).
Dome & Stop (1950 only)—14 ampere. Next to fuse listed above.
Dome (1951)—14 ampere. On circuit breaker bracket behind instrument panel.
Clock—2 ampere. In clock feed wire.
Overdrive—30 ampere. On relay on dash under hood.
Direction Signal—15 ampere. In feed from ignition switch to flasher.
HORNS: Ford No. 51A-13832-A or B (High Pitch, Right Horn), No. 51A-13833-A or B (Low Pitch, Left Horn). Dual horns operated by relay. NOTE—"A" horns are 4.28" high, "B" horns are 4.14". Horns marked "HI" or "LO" on air columns.
Air Gap—.027-.029" for high pitch (right horn), .032-.034" for low pitch (left) for Sparks-Withington.
Horn Current—13 amperes (high pitch), 14 (low).
Horn Relay: Ford No. ('50) 7RA-13853-B, ('51) 7RA-13853-A.
►*CAUTION—Use only Ford type relay No. 7RA-13852-B with TAN plastic cover on 1950 cars. If 1951 relay No. 7RA-13853-A with BLACK plastic cover is used, shock at button may result when blowing horn.*

Contact Gap—.015-.025".
Contact Closing Voltage—4 volts max.

ENGINE

ENGINE SPECIFICATIONS. Own 8HA. Six cylinder, "L" head type.
Bore—3.30". **Stroke**—4.40".
Displacement—226 cu. ins. **Rated HP**—26.13.
Developed Horsepower—95 at 3300 RPM.
Compression Ratio—6.8-1 cast iron head.
Compression & Vacuum Reading—*See Tune-Up.*
CYLINDER HEAD AND TIGHTENING TORQUE: *See Ford Special Data.*
►*CYLINDER HEAD PRODUCTION CHANGE NOTE—New type cylinder head used in production beginning early 1950. Interchangeable with previous head.*
CYLINDER SLEEVE: Cast iron dry type cylinder sleeves furnished for replacement service.
OIL PAN REMOVAL: *See Ford Special Data.*
NOTE—Engine must be removed to remove oil pan.
PISTONS: *CAUTION—Two types used.*
1950 (Early Production)—7HA piston, 4 ring (all above pin), flat head, aluminum alloy, steel strut, U-slot cam ground type.
1950-51 (Except early 1950 production) *New OHA AUTOTHERMIC TYPE used.* Solid skirt, 4 ring (all above pin), aluminum alloy.
►*CAUTION—When installing the OHA piston, make sure the small indentation at the top outer edge is towards the front of the engine. This is necessary since pin is offset 1/16".*
►*PISTON INTERCHANGE CAUTION*—The OHA piston should not be replaced with the earlier 7HA piston. However, the OHA piston can be used to replace the 7HA piston individually or in sets.
Replacement Pistons: Standard size and .0025", .005", .020", .030", .040", and .060" Oversize.
Fitting Pistons: Use ½" wide feeler inserted between piston and cylinder wall at right angles to pin on thrust side. Feeler thickness as follows:
OHA Piston—New piston in new bore .002". New piston in used bore .002". Used piston in used bore .003". Pounds pull to withdraw gauge: 3 to 12.
7HA Piston—New piston in new bore .003". New piston in used bore .003". Used piston in used bore .003". Pounds pull to withdraw gauge: 6 to 12.
Skirt Clearance—(OHA Piston) .0006" to .0012".
►*PISTON RING PRODUCTION CHANGE 1950—New OHA piston rings of the steel segment type used beginning early 1950.*
►*CAUTION—When using the earlier type piston ring (7HA) on the OHA piston, install the oil ring expander in the 3rd groove rather than the 4th groove. OHA piston rings may be used on the 7HA piston.*
PISTON RINGS: 2 compression, 2 slotted oil rings, all above pin. Upper oil ring groove drilled with oil drain holes, lower ring groove slotted.

Ring	Width	End Gap	Side Clearance
Compr. #1	3/32"	.007-.017"①	.0015-.0035"②
Compr. #2	3/32"	.007-.017"①	.001-.004"③
Oil (#3, 4)	3/16"	.007-.017"①	.001-.004"③

Worn Limits—① .035", ② .0045", ③ .005".
Replacement Rings. Snap type ring sets furnished std. size and .020", .030", .040", .060" Oversize.
See Ford Special Data.
PISTON PIN: Diameter .8504" (maximum).
Floating type (lock ring in piston at each end). Pin hole in connecting rod bronze-bushed.
Pin Fit in Piston—.0003" (new), .0015" (worn limit).

'C NTINUED N NEXT PA E

ENGINE

C NTINUED FR M PRECEDING PAGE

Pin Fit in Rod Bushing—.0002-.0005" (new), .0015" (worn limit).

Replacement Pins: Sizes and paint marks: Std. (green), .001" Oversize (blue), .002" Oversize (yellow).

CONNECTING ROD: Length 8¼". Weight 29.0 ozs.

Crankpin Journal Diameter—2.2988". Maximum wear limits—Out-of-round .0015", Taper .001".

Lower Bearing—Removable, steel-backed, copper-lead alloy lined, locked in type.

Clearance—.000-.0025" (new), .005" (worn limit).

►*NOTE—Replace bearing shells less than .0593" thick.*

Sideplay—.006-.014" (new), .017" (worn limit).

Bearing Adjustment: None (except early 1950 "M" engine). Do not file caps. Replace bearings. Tang on bearing must engage groove in rod and cap.

►*BEARING ADJUSTMENT FIRST "M" ENGINES*—Engines built prior to January 25, 1950 were equipped with connecting rods having shims. Engines built after this date did not have shims.

CAUTION—Connecting rods having shims must be serviced WITH THE SHIMS IN PLACE. When assembling new rods and new crankshafts if the bearing clearance is in exces of .0007" to .0013", the removal of one shim will reduce the clearance .00075". If both shims are removed the bearing clearance will be reduced .0015".

Replacement Bearings: Standard size and .002", .010", .020", .030", .040" Undersize.

CRANKSHAFT: 4 bearing, integral counterweights.

Vibration Dampener—Viscous or rubber type.

Journal Diameters—2.8740" (all bearings). Max. wear limits—Out-of-round .0015". Taper .001".

Bearings—Steel-backed, copper-lead alloy lined, replaceable shells. Upper and lower halves alike.

Clearance—.0009-.0032" (new), .0052" (worn limit).

►*NOTE—Replace main bearing shells less than .0938" thick.*

Bearing Adjustment: None. Replace bearings. Tang on bearing must engage groove in block and cap.

Replacement Bearings: Std., .002", .020", .030" U. S.

End Thrust: Taken by rear main bearing. Adjust by replacing bearing if endplay excessive.

Endplay—.003-.006" (new), .008" (worn limit).

CAMSHAFT: *CAUTION—Two different types used, each type requires different tappet clearance.*

7HA-6250-C—All engines built before June 20, 1950.

OHA-6250—Beginning production June 20, 1950 and used for service replacement of first type camshaft. Has changed cam contours for quieter operation.

7HT-6256-A—Replaces earlier camshaft gear in truck engines.

►*CAMSHAFT IDENTIFICATION*—New OHA-6250 camshaft stamped "O" on the forward end. (First type not marked), and engine marked "OH" on right hand side of block directly above #3 intake port.

►*ENGINE MARKING CAUTION*—Engine marking (see above) must be added when "OH" camshaft installed in unmarked block, or removed if first type camshaft installed in marked block.

Bearing Diameter—1.9285" (replace bearing if diameter greater than worn limit 1.9315").

Bearings—Steel-backed, babbitt lined bushings.

Clearance—.001-.002".

Replacement Bearings: Three sizes as follows:

1—Std. size on both inside and outside diameter.

2—Std. on I.D., .080" Oversize on O.D.

3—.015" Undersize on I.D., std. size on O.D.

End Thrust: Thrust plate bolted to front of block behind camshaft hub.

Timing Gears: *CAUTION—Two types used.* **8HA-6256-D (Early type)** used with 7HA Camshaft. **OHA-6256-A (Late type)** used with new OHA-6250 Camshaft.

►*NOTE*—The early type camshaft gear can be used with the "OHA" camshaft by increasing the chamfer from 15° to 45°. The new type gear can be used with early type camshaft without interference.

Crankshaft Gear—Cast Alloy Iron.

VALVE TIMING

VALVE TAPPET CLEARANCE: *CAUTION—Different settings required for each type camshaft.*

►First type Camshaft No. 7HA-6250-C (no markings on engine or camshaft)

Tappet Clearance (all valves) .013"-.015" Cold.

High Speed Setting—.002" additional exhaust valve clearance recommended by car manufacturer.

►**VALVE TAPPET NOISE**—Silencing springs available. *See "Valve System" in Ford Special Data.*

►Later type Camshaft No. OHA-6250 (Eng. Marked "OH" above #3 Intake port) (Camshaft marked "O" on front end)

Tappet Clearance—Intake .014", Exhaust .018", Cold.

►*CAUTION*—Loss of power will result if correct tappet clearance not used on engines with "O" camshaft.

Valve Timing: See Camshaft Setting above.

Intake Valves—Open 11° BTDC. Close 41° ALDC.

Exhaust Valves—Open 48° BLDC. Close 10° ATDC.

Valve Timing Check—Intake valve opens 11° BTDC. Valve timing mark location on vibration dampener.

Replacement Camshaft Gears—Std., .006", .012" OS.

Camshaft Setting: Mesh marked tooth of crankshaft gear with marked space on camshaft gear.

VALVES:	Head Diam.	Stem Diam.	Stem Clearance
Intake	1.65"	3410"①	.0014-.0034"②
Exhaust	1.51"	3405"③	.0019-.0039"④

	Seat Angle	Lift
All Valves	45°	.350"

Worn Limits (Stem Diam.)—① .3385", ③ .3375".

Worn Limits (Clearance)—② .0046", ④ .006".

►*NOTE—Valves are straight-stemmed type operating in one-piece valve guides.*

Sticking Valve Correction—If necessary to ream guides, use .001" oversize reamer for exhaust valve guides, .0005" oversize reamer for intake valve guides.

Valve Seat Inserts—Used for exhaust valves.

Valve Guides: One-piece type pressed in block.

Removal: Use special tool 6510-O to remove guides.

Installation—Upper end of guide 1.18" Intake, 1.08" Exhaust below top face of block. Install with stepped end down. Use tool 6510-N to drive guides in place.

Valve Lifters: Mushroom type with self-locking adjusting screws. Removable from below with camshaft out.

Diameter—.6240" (replace if worn to less than wear limit of .6225").

Clearance—.0005-.0015" (new), .003" (worn limit).

Valve Springs: Coated springs used. Install springs with closely spaced coils toward top (against block).

Spring Test—47-53 lbs. at 2.109". Free length 2.50".

LUBRICATION

Engine Oiling System: Pressure to main, connecting rod, and camshaft bearings. Timing gears lubricated by spray past camshaft thrust plate. Rotor type oil pump mounted externally on right side of engine.

Crankcase Capacity—4 quarts (5 quarts when changing filter).

Normal Oil Pressure—45 lbs. at 30 MPH.

Oil Pressure Relief Valve: Not adjustable.

Spring Tension—12.64-12.88 lbs. at 1.14".

Oil Pump: Rotor type. Mounted externally on right side of engine with drive gear at center of camshaft.

Removal and Installation—*See Ford Special Data.*

Oil Filter: Mounted directly on block.

Oil Filter Cartridge—Ford No. 7HA-6731A.

Oil Pressure Gauge: King-Seeley Electric.

Dash Unit—Ford No. (1950 Red Pntr.) 8A-9273-B, (1951 White Pntr.) 1A-9273-B.

Engine Unit—Ford No. 41A-9278.

See Miscellaneous Section for complete data.

Crankcase Ventilation: Filter in oil filler cap (inlet) with outlet pipe in rear valve chamber.

COOLING

Cooling System: Pressure type with relief valve in filler cap, one belt-driven pump, and by-pass.

Capacity—16 quarts.

Pressure Valve—In radiator filler cap. Ford No. (Except with Fordomatic) 26H-8100-B. Opens at 3½-4½ lbs. (With Fordomatic) 1M-8100-B. Opens at 6½-7½ lbs.

Water Pump: Centrifugal, belt driven, packless type. *See Water Pump Section for complete data.*

Thermostat: In head water outlet. Ford No. 7HA-8575-A or B. Two makes used.

1950 Thermostats

Part No.	Starts to Open
8BA-8575-B	157°-162°
8BA-8575-C	167°-172°
8BA-8575-D	152°-157°
8BA-8575-A	148°-153°

1951 Thermostats

1BA-8575-A	157°-162°
1BA-8575-B①	177°-182°

①—For use with permanent anti-freeze.

Temperature Gauge: King-Seeley Electric type.

Dash Unit—Ford No. (1950 Red Pntr.) 8A-10883-B, (1951 White Pntr.) 1A-10883-B.

Engine Unit—Ford No. 8A-10884.

See Miscellaneous Section for complete data.

CLUTCH

Long Models—(Pass. Cars) 9½ CF-TS, Ford No. 8A-7563-A. (Police & Taxi) 10 CF-TI, Ford No. 19A-7563-A.

►DISC NOTE—Softer damper springs used on cars with Overdrive (black colored springs). Cars without Overdrive have aluminum colored springs.

See Clutch Section for complete data.

Facings—Thickness .125". Outside diameter 9½".

Pedal Adjustment: 1" free travel. Lock nut and adjusting nut at release lever end of release rod.

Removal: Remove transmission (see TRANSMISSION Removal below). Take off flywheel housing. Install wooden wedges between each release lever and cover to hold clutch in released position, take out 6 cover capscrews, lift assembly out.

TRANSMISSION

SYNCHRO-MESH

Own Make. 3-speed, all helical gear type. Constant-mesh, synchro-mesh (Second & High), sliding gear (Low & Reverse).

See Transmission Section for complete data.

►**Transmission Locking in Reverse Correction**—*See "Ford, Lincoln, Mercury Transmission" in Transmission Section.*

►**Transmission Inoperative in Reverse (Overdrive Transmissions)**—*See "Ford, Lincoln, Mercury Transmission" in Transmission Section.*

Transmission Control: Steering column mounted shift *See Transmission Section for complete data.*

Removal: Disconnect rear universal, slide propeller shaft out of transmission. Disconnect clutch, transmission and speedometer linkage. Support rear of engine and disconnect rear engine mounting from frame, Take out 4 transmission-to-flywheel housing capscrews and remove transmission.

OVERDRIVE

Warner Models—Optional Equipment. Overdrive is solenoid operated type (no centrifugal pawls) with Governor Control and throttle operated kickdown.
AS1-R10E—1950 (Except Convertible & Sta. Wgn.).
AS4-R10E—1951 (Except Convertible & Sta. Wgn.). Same as AS1-R10E except does not have lockout switch.

AS3-R10E—1950-51 Convertible & Sta. Wgn. Same as AS1-R10E except solenoid is mounted under overdrive housing and connected to "pawl" by linkage. Frame construction does not allow standard mounting.
Solenoid—Ford No. 8M-6916-A (8A-6916-C is rubber coated for Convertible & Sta. Wgn.).
Control Relay—Ford No. 8M-6915.
Overdrive Fuse—30 amperes. On relay.
Lockout Switch—Ford No. 6917-A, (1950).
Throttle Kickdown Switch—Ford No. 8A-6818-B.
Removal: Same as for Std. Transmission (above) after disconnecting control cable and wiring.

FORDOMATIC TRANSMISSION

Torque converter and 3-speed automatic transmission with hydraulic control and mechanical parking lock.

►*LINKAGE PRODUCTION CHANGE*—Throttle Linkage changed on later cars for quieter and more efficient operation, Can be installed on earlier cars. *See Fordomatic Transmission in Transmission Section. See Transmission Section for complete data.*
Lubrication—Check transmission oil level every 1000 miles and maintain oil level at "Full" mark on dipstick. Drain and refill every 15000 miles. **Use only Automatic Transmission Fluid, Type A.**
Capacity—Approx. 9 qts.
Checking Oil Level—With transmission selector lever in "Neutral," run engine approx. four minutes at idle speed. Clean floor mat and lift right side to expose plate in floor boards, remove plate. When engine and transmission are at normal operating temperature, move the selector lever through all ranges to assure distribution of oil throughuot the transmission. Clean all dirt away from fluid level indicator cap and remove indicator. Wipe indicator and insert in transmission making sure that it is seated and locked. Remove indicator and check level. Add fluid to bring level to the "full" mark on the indicator. Replace indicator and tighten it properly. Replace plate and floor mat.

►*CAUTION—Do not fill above FULL mark.*
Draining & Refilling—*See "Ford Fordomatic" in Transmission Section.*
Linkage Adjustment—*See "Ford Fordomatic" in Transmission Section.*
Removal: *See "Ford Fordomatic" in Transmission Section.*

UNIVERSALS

Mechanics Type 2CR. Needle bearing type. 2 used. *See Universals Section for complete data.*
►*CAUTION (ALL CARS EXCEPT STATION WAGON)—Rear universal joint companion flange nut controls pinion bearing "pre-load" (must be adjusted whenever nut is loosened). See "Ford Passenger Cars (except Station Wagon)" in Rear Axle Section.*

REAR AXLE

PASSENGER CARS

Own Make. Semi-floating hypoid gear type with Hotchkiss drive **with separate carrier.** Axle ends flanged (no separate hub). Wheel bearings are sealed-ball pre-lubricated (no lubrication required). *See Rear Axle Section for complete data.*
►**Excessive Axle Shaft Endplay (causing noise in service) Correction**—*See "Ford Passenger Cars (except Station Wagon)" in Rear Axle Section.*
►**Ring & Pinion Gear Production Change**—*See "Ford Passenger Cars (except Station Wagon)" in Rear Axle Section.*

Ratios
Standard Transmission—3.73-1 (41-11).
Overdrive Transmission—4.10-1 (41-10).
Fordomatic Transmission—3.31-1 (43-13). (Optional) 3.54-1 (39-11).
Backlash—.005-.008". *Screw adjustment.*
Removal: Disconnect rear universal. Remove axle shafts (see instructions below). Remove carrier from housing.
►**Carrier Mounting Bolt Tightening Caution**—*See "Ford Passenger Cars (except Station Wagon)" in Rear Axle Section.*
►*CAUTION—Pinion bearing pre-loading must be re-established whenever universal joint flange nut on pinion shaft is removed or disturbed. See "Ford Passenger Cars (except Station Wagon)" in Rear Axle Section.*
Axle Shaft Removal: Remove wheel. Take off drum. Remove 4 axle retainer locking type nuts (work through opening in axle shaft flange). Use Puller No. 4235-P and pull shaft (do not disturb brake backing plate or damage wheel bearing oil seal). Replace one nut to secure backing plate.
Wheel Bearing Adjustment: None.

STATION WAGONS

Own Make. Semi-floating, hypoid gear type with Hotchkiss drive **(separate carrier not used).** Axle ends flanged—(no separate hub). Wheel bearings are sealed-ball pre-lubricated (no lubrication required).
►*NOTE—AXLE NOT SAME AS FORD PASSENCER CAR, similar to Mercury.*
See Rear Axle Section for complete data.
Ratio (Standard)—3.91-1 (43-11).
Ratio (with Overdrive)—4.27-1 (47-11).
Ratio (with Fordomatic)—3.54-1 (39-11).
Backlash—.003-.008". *Shim adjustment.*
Removal: Raise rear of car. Disconnect rear universal. Remove axle shafts (see instructions above). Disconnect brake line at "T" on left side of axle housing, and hand brake cable. Disconnect shock absorbers, spring U-bolts and shackles. Remove axle housing assembly from car.
Axle Shaft Removal: Same as Ford Pass. Cars.

SHOCK ABSORBERS

Front—Ford No. ('50 Pass. Cars) 8A-18045-A. ('51 Pass Cars) 1A-18045-A2. Ford No. ('50 Sta. Wagon) 8A-18045-B. ('51 Sta. Wagon) 1A-18045-D.
Rear—Ford No. ('50 Pass. Cars) 8A-18080-A. ('51 Pass. Cars) 1A-18080-A. Ford No. ('50 Sta. Wagon) 8A-18080-B. ('51 Sta. Wagon) 1A-18080-B.
Direct acting, hydraulic types. Two makes are used and are interchangeable.

FRONT SUSPENSION

Front Suspension: Independent, linked parallelogram type with coil springs, direct acting shocks, and front stabilizer.
See Front Suspension Section for complete data.
►**Riding Height & Car Leveling Correction**—*See "Ford Passenger Cars, Lincoln, Mercury" in Front Suspension Section).*
►**Front Suspension Noise (popping or chucking noise) Correction**—*See "Ford Passenger Cars, Lincoln, Mercury" in Front Suspension Section.*
►**Front Spring Production Change & Installation Caution**—*See "Ford Passenger Cars, Lincoln, Mercury" in Front Suspension Section.*
Kingpin Inclination—5¼° crosswise.
Caster (Pass Cars)—Pos. ½° to Neg. 1°.
(Station Wagon)—Neg. ¼° preferred, Limits Neg. ¼° to Neg. 1¾°.
NOTE—½° max. variation between wheels.
Camber (All)—Pos. ¼° to Pos. ¾° preferred. Limits 0° to Pos. 1°.
NOTE—¼° max. variation between wheels.
Toe In—1/16" to 1/8".

STEERING GEAR

Gemmer design (Model 305), Ford Make—Worm-&-Roller type.
See Steering Gear Section for complete data.
►**Steering Idler Arm Looseness Complaints**—*See "Ford (6 & V8 Pass. Car)" in Steering Gear Section.*

BRAKES

Service: Ford-Bendix Hydraulic, Duo-Servo, Single Anchor type without eccentric adjustment. Hand lever applies rear wheel service brakes.
See Brake Section for complete data.
Wheel Cylinders—Diameter: Front wheel 1.128" (hone limit 1.132"). Rear Wheel: .878" (hone limit .880").
Drums—Diameter 10" (11" Sta. Wagon rear drums).
Lining—Molded or Woven. Width 2¼" (front wheel), 1¾" (rear wheel). Thickness 3/16". Length per shoe:
Front—11". (Stn. Wgn. 11 15/16").
Rear—11". Pri., 11 3/4" Sec. (Stn. Wgn. 11 15/16" Pri. & Sec.).
Clearance—.010" at each end of secondary shoe with primary shoe forced out against drum (adjusting screw in each wheel backed off 14 notches or "clicks" from point where shoes drag on drum).
Hand Brake: See Service Brakes (above).
►**Hand Brake Linkage Change (for easier application) and Cable Interference Correction**—*See "Ford-Bendix Hydraulic" in Brake Section.*

MISC. MECHANICAL

Power Operated Convertible Top: Hydro-Lectric type (hydraulic actuation with motor-driven pump supplying oil under pressure for power cylinders).
See Miscellaneous Section for complete data.
Windshield Wipers: Vacuum Link & Crank Arm Type.
See Miscellaneous Section for complete data.

MODEL IDENTIFICATION

VEHICLE NUMBER: Stamped on plate attached to engine side of dash and on top of right frame side rail just to rear of front suspension upper arm.

Year	Engine Type	Assembly Model	Assembly Plant	Serial Number
1950	B	0	See below	100001 Up
1951	B	1	See below	100001 Up

Assembly Plant Designations

AT—Atlanta	**DA**—Dearborn	**MP**—Memphis
BF—Buffalo	**LU**—Louisville	**NR**—Norfolk
CS—Chester	**EG**—Edgewater	**RH**—Richmond
CH—Chicago	**KC**—Kansas City	**SR**—Somerville
DL—Dallas	**LB**—Long Beach	**SP**—Twin City
HM—Highland Park		(St. Paul)

TUNE-UP

COMPRESSION PRESSURE: (1950) 110 lbs. at cranking speed. (1951) 120 lbs. at cranking speed.

VACUUM READING: Steady 18-21" idling at 500 RPM.

FIRING ORDER: 1-5-4-8-6-3-7-2. See diagram.

SPARK PLUG GAPS: .030". Limits .029-.032".
Plug Type—Champion H-10. 14 mm.

DISTRIBUTOR: Breaker Gap—.014-.016".
Cam Angle—27° closed, 18° open.
Breaker Arm Spring Tension—17-20 ounces.
Advance Performance—*See Ignition.*
Condenser Capacity—.21-.25 microfarad.
Distributor Line (Carburetor Connection) Vacuum—Readings in inches Hg.
Distributor Line (Carburetor Connection) Vacuum—2.0-2.9" at 800 RPM., 3.5-4.8" at 1000 RPM., 4.7-6.4" at 2200 RPM., 4.6-6.2" at 2400 RPM.

IGNITION TIMING: 2° BTDC.
Timing Procedure—*See Ignition Timing.*
Crankshaft Pulley Mark—Circular boss aligned with timing pointer on right side of engine front cover.

CARBURETION:
Idle Setting—Approx. 1 turn open. Two screws—turning screws out gives richer mixture.
Idle Speed—(Std. Trans.) 475-500 RPM, (Automatic Trans.) 425 RPM.
Float Level—1.322-1.353" bottom of float to underside of bowl cover with needle valve seated (use Gauge No. 9550-A).
Accelerating Pump—Center hole average setting. Inner hole for hot weather, Outer for cold weather.

Fuel Pump Pressure: 3½-4½ lbs.

MANIFOLD HEAT CONTROL: Automatic. No adjustment. Valve located between right end of exhaust pipe cross over and right exhaust manifold.

VALVE TAPPET CLEARANCE: *CAUTION—Different settings required for each type camshaft.*
►**First type Camshaft No. 8BA-6250①**
(no markings on Engine or Camshaft)
Intake—.010-.012", **Exhaust**—.014-.016", Cold.
①—Before Eng. No. 8BA-622468—Partial production after this number.
►**Later type Camshaft No. 8BA-6250-B②**
(Eng. marked—"GAP, in- .014", ex- .018")③
(Camshaft marked "B" on front end)
Intake—.014" (.013-.015") **Exhaust**—.018" (.017-.019"), Cold.
②—Partial production after Eng. No. 8BA-622468, and service replacement on all engines.
③—On top of block at center under valve cover.
►*CAUTION—Loss of power will result if correct tappet clearance not used on engines with "B" CAMSHAFT.*
Adjustment—*See "Valve System" in Ford Special Data.*

IGNITION

IGNITION SWITCH: Ford No. 6A-11572-B ('50), No. 1A-11572-B ('51).
Ignition Lock—Ford No. 8A-11582-A ('50), No. 8A-11582-B ('51).

COIL: Ford No. 8BA-12029.
Location—On front lower corner of right cylinder head.
Ignition Current—Idling 2.75-3.0 Amperes at 6 volts. 5 0-5.5 amperes stopped. Coil primary resistance 1.05-1.15 ohms (75°F). Secondary resistance 4100 ohms (75°F).

CONDENSER: Ford No. 7RA-12300-B.
Capacity—.21-.25 microfarad.

DISTRIBUTOR: (Early 1950) Ford No. 7RA-12127-C. Use with 8BA-6250-A Camshaft. (Late 1950-51) Ford No. 8BA-12127 (used with cast iron front cover), 0BA-12127 (used with aluminum front cover). Pressure type distributor with spark advance controlled by vacuum diaphragm moving breaker plate to advance spark against two breaker plate springs.
►**Excessive Pinging Correction**—*See "Ford, Lincoln, Mercury Distributor" in Electrical Equipment Section.*
Breaker Gap—.014-.016".
Cam Angle—27° closed, 18° open.
Breaker Arm Spring Tension—17-20 ounces.
Rotation—Clockwise viewed from above.

8BA, OBA-12127 Advance Performance
►With Distributor on Test Unit

Distr. Degrees	Vacuum	R.P.M.
0°	0"	200
0-1°	0 30"	500
5 2-6 2°	1.32"	1000
8¾-10°	2.85"	1500
10-11¼°	3 7"	2000

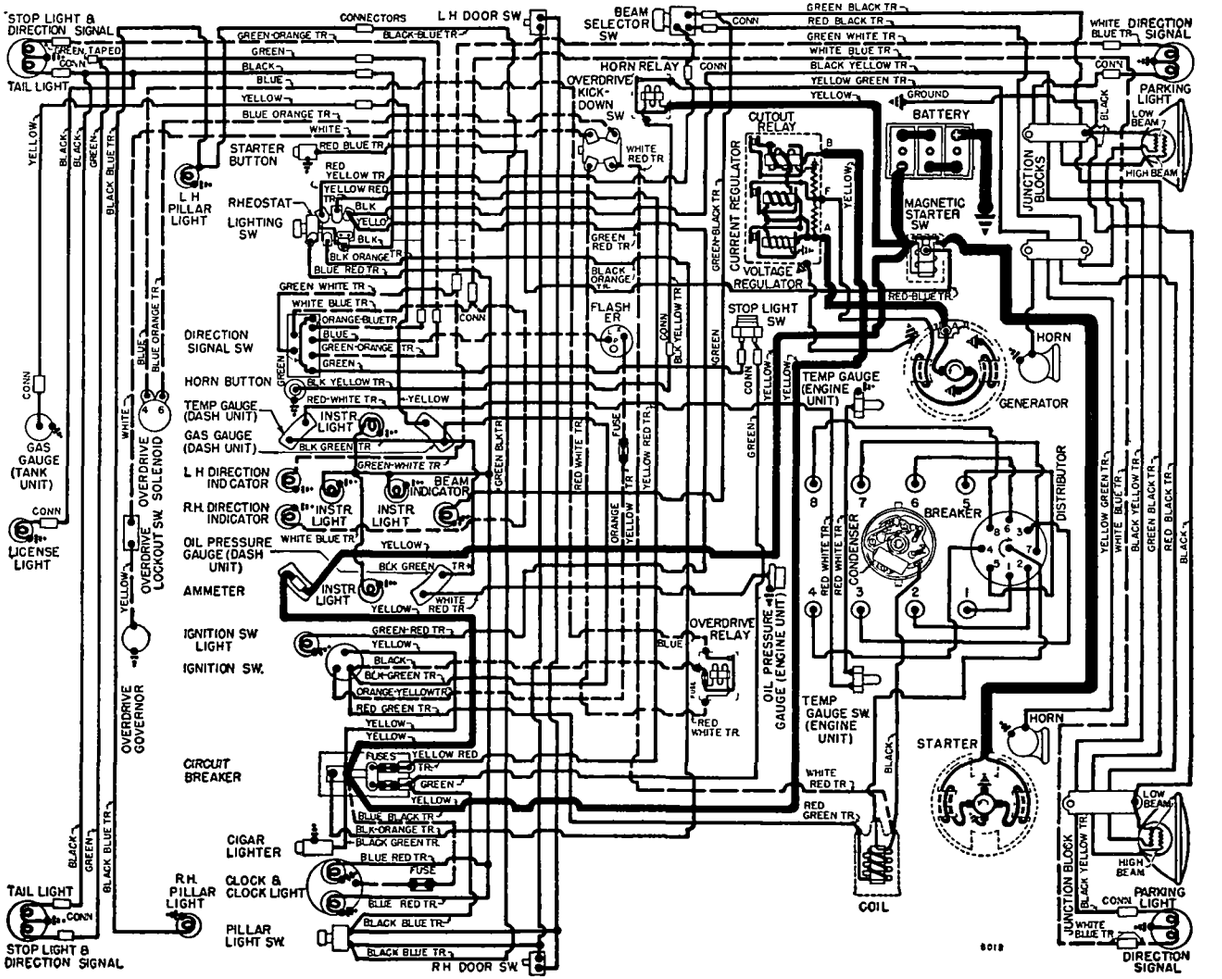

1950 MODELS

7RA-12127-C Advance Performance
►With Distributor on Test Unit

Distr. Degrees	Vacuum	R.P.M.
0°	0"	200
1¼-2¼°	0.4"	500
4¼-5¼°	1.7"	1000
6¼-7¼°	2.8"	1500
7½-8½°	3.7"	2000

Distributor Line Vacuum Test—*See Tune-Up.*

Distributor Removal: Mounted at front of engine at right side. To remove, disconnect vacuum line, take out hold down screws, lift off.

IGNITION TIMING

Std. Setting ..... 2° BTDC.

Crankshaft Pulley Mark—Circular boss on rear edge of pulley (timing pin on right front side of engine).

Timing—With #1 piston at firing position and timing mark on pulley aligned with timing pin on front of engine, loosen hold-down screw on distributor, rotate distributor until contacts begin to open, tighten hold-down screw. Check spark plug connections (see diagram), see that rotor opposite #1 terminal in cap.

►**Timing (with Neon Timing Light)**—*CAUTION—Vacuum line must be disconnected to avoid vacuum advance operating.* Mark timing pin and pulley mark with white chalk. Connect timing light to #1 spark plug. Idle engine and adjust distributor (as directed above) until mark and timing pin aligned.

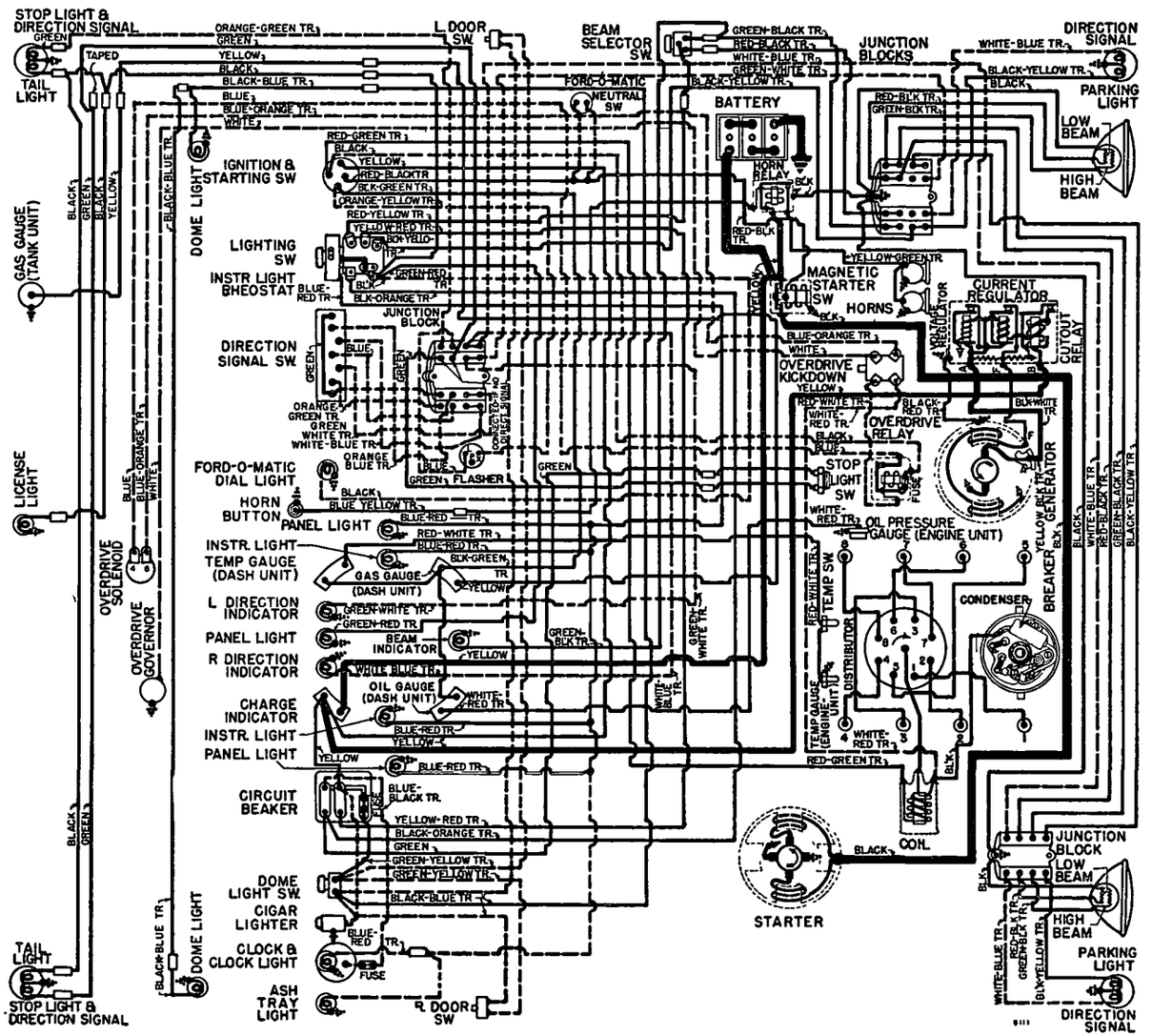

1951 M DELS

CARBURETOR

1950-51 (Std. Trans.) Holley-Ford No. 8BA-9510-A.
1951 (With Fordomatic) Holley-Ford No. 1BA-9510-A. Dual (double-barrel) downdraft type with new vacuum passages for distributor operation.
See Carburetor Section for complete data.

Setting (Idle Setting, Float Level, and Accelerating Pump): *See Tune-Up.*
Metering Jets—*See Holley-Ford Jet Specification Table in Carburetor Section.*

Fast Idle: Integral type. Operated by choke valve lever. No adjustment required.

CARB. EQUIPMENT

Fuel Pump (std.): Ford No. (1950) 7RA-9350-C, (1951) 1BA-9350.
Optl. (Fuel & Vacuum)—(1950-51) Ford No. 7RA-9350-E.
Pressure—3½-4½ lbs. (both types).

Gasoline Gauge: King-Seeley Electric.
Dash Unit—Ford No. (Red Pntr.) 8A-9280-B (All '50 & Sta. Wgn. '51). (White Pntr.) No. 1A-9280-B ('51 except Sta. Wgn.).
Tank Unit—No. 8A-9275 (Sta. Wgn. 01A-9275-A). *See Carburetion Equipment Section for complete data.*

Air Cleaner: (Std.—Oil Wetted): Ford No. 0BA-9600-A
Optl. (oil bath)—0BA-9600-B. Use 0BA-9600-D with governor.

BATTERY

Ford No. 81A-10655-A. 6 Volt, 17 Plate, 100 Amp. Hr.
Grounded Terminal—Positive (+).
Location—On left side in engine compartment.

STARTER

1950 (All Models) Ford No. 7RA-11002.
1951 (Except Fordomatic) Ford No. 1A-11002-A.
1951 (With Fordomatic) Ford No. 1CM-11002-A.
Armature—(Exc. Fordomatic) No. 18-11005. (With Fordomatic) No. 1CM-11005-A.
Drive—Bendix No. A1472 (Ford No. B-11350).
Rotation—Counter-clockwise at commutator end.
Brush Spring Tension—20-22 ounces.
Cranking Engine—100 RPM., 190-215 amperes.

Performance Data

Torque	R.P.M.	Volts	Amperes
No Load	4000-6000	5.8	45-60
15 ft. lbs.	Lock	3.5	600

Starting Switch: (1950 All Models & 1951 Sta. Wgn.) Ford No. 21A-11450. (1951 Except Sta. Wgn.) Ford No. 1A-11450-A. Mounted on left front fender apron and controlled as follows:

►*1951 STARTER SWITCH CAUTION*—(Except Station Wagon). Starter switch grounded at switch bracket. Make sure mounting surfaces clean.
1950—Pushbutton Switch No. 6H-11500 mounted on instrument panel.
1951—Key operated ignition & starter switch, Ford No. 1A-11572-B. Turn switch full right to start.

►*FORDOMATIC DRIVE NOTE*—Neutral Safety Switch, Ford No. 1M-15812-B in circuit between ignition switch and starter relay. Selector lever must be in neutral to operate starter.

CONTINUED N NEXT PAGE

CONTINUED FR M PRECEDIN PAGE

GENERATOR

Ford No. 8BA-10002-A or D (Std.), 8BA-10002-B (Heavy Duty).
Armature No.—Ford No 8BA-10005-A (Std), 8EH-10005 (Heavy Duty).
2 brush type with current and voltage regulation
Charging Rate Adjustment—None. See Regulator.
Maximum Charging Rate—36 amperes, 7 volts, reached at approximately 20 MPH. Controlled by regulator (dependent on load & battery condition)

Performance Data

Generator	Amperes	RPM
8BA-10002-A	35	1500
8BA-10002-D	30 ..	1500
8BA-10002-B	40	1500

Rotation—Counter-clockwise at commutator end.
Brush Spring Tension—20-24 ozs.
Generator Belt Adjustment: Loosen 2 bolts on fan mounting bracket, loosen generator support mounting stud nut, raise generator up until side movement on belt midway between generator and water pump pulleys is ½" (thumb and finger pressure)
Fan Belt Adjustment—*See COOLING.*

REGULATOR

Ford Numbers

Regulator	Generator
51A-10505-A	8BA-10002-A or D
51A-10505-H	8BA-10002-A or D
5EH-10505-C	8BA-10002-B
8L-10505	8BA-10002-B
8M-10505-A①	8BA-10002-A or D

①Service replacement regulator.
See Electrical Equipment Section for complete data.
NOTE—Separate ground wire extending to cowl must be in place when generator operated.

Cutout Relay

Regulator	Cuts In	Cuts Out (Discharge)
51A-10505-A	6.6-7.0 Volts	0-8 Amperes
51A-10505-H	6 6-7 0 Volts	0-8 Amperes
5EH-10505-C	6 6-7.0 Volts	0-8 Amperes
8M-10505A	6 0-6.6 Volts	0-8 Amperes
8L-10505	6 0-6 6 Volts	0-8 Amperes

Contact Gap—.010" (armature against upper stop).
Air Gap—.014" between armature and core with contacts open.

Voltage & Current Regulator Cold Settings①

Regulator	Voltage Reg.	Current Reg.
51A-10505-A	7.2-7.6 Volts	30-34 Amperes
51A-10505-H	6 6-7 0 Volts	34-38 Amperes
5EH-10505-C	6.6-7.0 Volts	38-42 Amperes
8L-10505	7.2-7.6 Volts	38-42 Amperes
8M-10505-A	. 7.2-7.6 Volts	38-42 Amperes

①—Voltage settings will increase approx. .2 volts after 20 minutes running.
Checking & Adjustment—*See Elec. Equip. Section.*
Air Gap—.032-.035" between armature and core with contacts just closed.
►*CAUTION—Make certain gauge contacts armature and not brass rivet on underside of armature.*
Contact Spring Tension—5 ounces minimum with contacts just opening.

LIGHTING

Headlamps: Ford "Sealed Beam" type.
See Electrical Equipment Section for complete data.
Beam Indicator—Bulb between 50 and 60 on speedometer. Lighted with Upper Beam "on".
Direction Signal: Optl. *See Electrical Equipment Section.*
Direction Indicators—Right and Left indicators on lower edge of speedometer.
Directional Signal Flasher—Ford No ('50) 8L-13350-B, ('51) 8L-13350-C

Switches

Lighting—Ford No. ('50) 0A-11654, ('51) 0L-11654.
Instrument—Part of Lighting Switch (operated by turning knob)
Beam Selector—Ford No 8A-13532
Dome Light—Ford No ('50) 0A-13752, ('51) 1A-13752.
Dome Light (Sta. Wgn.) Ford No. 0M-13752
Door Switch—Ford No. 0A-13713
Stop Light—Ford No. ('50) 11A-13480, ('51) 0A-13480.

MISC. ELECTRICAL

CIRCUIT BREAKER: Ford No. ('50) 0A-12358, ('51) 1A-12258-A. Behind instrument panel.
Convertible Top—Ford No. 51A-12250-A 30 ampere
FUSES: Auxiliary Lights (Parking, Tail & Instrument) (1950 only)—14 ampere. On circuit breaker
Dome & Stop (1950 only)—14 ampere Next to fuse listed above.
Dome (1951)—14 ampere. On circuit breaker bracket.
Clock—2 ampere. In clock feed wire.
Overdrive—30 ampere. On relay on dash under hood.
Direction Signal—15 ampere. In feed from ignition switch to flasher.
HORNS: Ford No. 51A-13832-A or B (High Pitch, Right Horn), No. 51A-13833-A or B (Low Pitch, Left Horn). Dual horns operated by relay
Horn Current—13 amperes (high pitch), 14 (low).
Horn Relay: Ford No. ('50) 7RA-13853-B, ('51) 7RA-13853-A.
►*CAUTION—Use only Ford type relay No. 7RA-13852-B with TAN plastic cover on 1950 cars. If 1951 relay No. 7RA-13853-A with BLACK plastic cover is used, shock at button may result when blowing horn.*
Contact Gap—.015-.025".

ENGINE

ENGINE SPECIFICATIONS: Own 8BA. Eight cylinder "L" head, 90° Vee type with both cylinder banks and crankcase cast Enbloc.
Bore—3.187". **Stroke**—3.75".
Displacement—239 cu ins. **Rated HP**—32 5.
Developed Horsepower—100 at 3600 RPM.
Compression Ratio—6 8-1 cast-iron heads.
Compression & Vacuum Reading—*See Tune-Up.*
CYLINDER HEAD & TIGHTENING TORQUE: *See Ford Special Data.*
CYLINDER SLEEVE: Cast iron dry type cylinder sleeves furnished for replacement service.
OIL PAN REMOVAL: *See Ford Special Data.*
►*NOTE—1951 Oil Pan cannot be interchanged with earlier models.*
PISTON: *CAUTION*—**Two types used:**
"49T" U-Slot Pistons (Before Pass. Car Eng. No. 8BA-641087, Truck 8R Eng. No. 195401)—4 ring (lower ring below pin) aluminum alloy, steel strut, cam ground, dome head type.
CAUTION—49T pistons must be used in ALL steel sleeve engines. Use "29A-" piston rings with this piston. Do not use 49T pistons to replace Autothermic pistons.
"8BA" Solid Skirt Pistons, AUTOTHERMIC type (After Pass. Car Eng. No. 8BA-641087, Truck 8R Eng. No. 195401)—4 ring (lower ring below pin) aluminum alloy, "Autothermic" type, 1/16" offset pin
CAUTION—8BA Autothermic pistons must not be used on steel sleeve engines. Can be used to replace 49T pistons in sets on other engines. Use "8BA-" piston rings with this piston (29T rings must not be used).
►*CAUTION—Ford and Mercury Pistons and Rings are not interchangeable.*
Weight—13 12 ozs.
Removal—Pistons and rods removed from above
Clearance—See Fitting Pistons
Replacement Pistons ("49T-"): Std, 005, 020", 030", 040", 060" Oversize.
Replacement Pistons ("8BA-" Autothermic): Std (4 grades with limits 3 1879-3 1891 in 0003" steps for selective fitting), 0025", 020", .030", 040", 060" OS
Fitting Pistons ("49T-"): Use 50" wide feeler stock of correct thickness (as listed below) inserted between piston and cylinder wall at right angles to pin to check clearance. Pull to withdraw feeler 6-10 lbs
Feeler Thickness—.002" New Piston in New Plain Bore, .003" New Piston in New Sleeve, .004" New Piston in Worn Bore, .005" Worn Piston in Worn Bore
Fitting Pistons ("8BA-" Autothermic): Use feeler gauge .0015" x ½" on thrust side of piston with 6-12 lb pull.
Installing Pistons ("8BA-" Autothermic): Locating mark (small indention) on head of piston above one piston pin hole, to front on all pistons
►*CAUTION*—Necessary since pin offset 1/16" and must be located on thrust side of bore.
PISTON RINGS: 2 compression, 2 slotted oil rings (lower oil ring below pin). Upper oil ring groove drilled with oil drain holes, lower groove slotted

Ring	Width	End Gap	Side Clearance
Compr. (#1)	0915-.0920"	.007-.017"①	.0015- 0035"②
Compr. (#2)	.0915- 0920"	.007-.017"①	.001- 003"③
Oil (#3, 4)	.1545-.1550"	007- 017"①	001- 003"③

Worn Limits—① .035" ② .0045" ③ .005".
Replacement Rings: Snap type, Expander type, or Steel Section type ring sets furnished in the following sizes: Std., .020", .030", .040", 060" Oversize.
See Ford Special Data.
►*CAUTION—Use "29A-" rings on first type 49T Pistons, "8BA-" rings on 8BA Autothermic Pistons.*
PISTON PIN: Diameter .7504" (maximum)
Floating type (lock ring in piston at each end).
Pin hole in connecting rod bronze-bushed.
Pin Fit in Piston— 0005" (new), .0015" (worn limit)
Pin Fit in Rod Bushing— 0002-.0005" (new), .0015" (worn limit).
Replacement Pins: Sizes and paint marks: Std (green), .001" Oversize (blue), .002" OS (yellow).
CONNECTING ROD: Length 7". **Weight** 18.7 ozs.
►*CONNECTING ROD PRODUCTION CHANGE*—Beginning Engine No. 8BA-628866 through 8BA-629940 and all Engines after 8BA-641087, new type connecting rod used with 5/64" squirt hole drilled on an angle into the side of the bearing flange web meeting a 3/16" hole in connecting rod bearing flange.
►*CAUTION—These new connecting rods should be used only on engines with neoprene seals on intake valve guides and increased capacity oil pump.*
Crankpin Journal Diameter—2 1390". Maximum wear limits—out-of-round .0015", Taper 001".
Lower Bearing—Steel-backed, copper-lead alloy lined, replaceable shells Upper and lower halves interchangeable.

ENGINE

C NTINUED FR M PRECEDING PAGE

Clearance—.0005-.003" (new), .005" (worn limit).

►*NOTE—Replace bearing shells less than .0745" thick.*

Side Play—(Early type rod) .006-.014". Late type rod .006-.020".

Bearing Adjustment: None (no shims). Do not file caps. Replace bearings. Tang on bearing must engage groove in rod and cap.

►*NOTE—Self-locking connecting rod nuts used. Tighten to 40-45 ft. lbs. Palnuts not required.*

Replacement Bearings: Standard size and .002", .010", .020", .030", .040" Undersize.

Installing Rods—Rods with squirt hole installed with squirt hole toward valve push rod assembly.

CRANKSHAFT: 3 bearing. Integral counterweights.

►*SLUDGE TRAPS—Crankpin throws equipped with sludge traps having removable plugs for cleaning. Always use new plugs if old plugs disturbed and peen or stake crankshaft to hold plugs in place securely.*

Journal Diameters—2.4990" (all bearings). Max. wear limits—Out-of-round .0015", Taper .001".

Bearings—Steel-backed, copper-lead alloy lined, replaceable shells. Upper and lower halves alike.

Clearance—.000-.003" (selective fit, crankshaft to turn free). Worn limit .005" maximum.

►*NOTE—Replace main bearing shells less than .0835" thick.*

Bearing Adjustment: None (no shims). Do not file caps. Replace bearings. Tang on bearing must engage groove in block and cap.

Replacement Bearings: Standard size and .002", .010", .020", .030" Undersize. Rear mains also furnished .015" Oversize in Overall Length for taking up endplay wear.

End Thrust: Taken by rear main bearing. Adjust by replacing bearing if endplay excessive.

Endplay—.002-.006" (new), .008" (worn limit).

CAMSHAFT: *CAUTION—Two different types used, each type requires different tappet clearance.*

8BA-6250—All engines before No. 8BA-622468 and partial production after this number.

8BA-6250-B—Partial production beginning Eng. No. 8BA-622468 and service replacement of first type. Has new cam contours for quieter valve operation.

►*CAMSHAFT IDENTIFICATION*—New 8BA-6250-B Camshaft stamped "B" on forward end (first type not marked), and engine marked "**GAP, in- .014", ex- .018**" on top of block under valve cover at center.

►*ENGINE MARKING CAUTION*—Gap mark (see above) must be added when "B" shaft installed on unmarked block, or removed if first type shaft installed on marked block.

Bearing Diameter—1.7985" (replace bearing if diameter greater than worn limit 1.8015").

Bearings—Steel-backed, babbitt lined bushings.

Clearance—.001-.002".

Replacement Bearings: Standard size and .010", .015" Undersize (US. bearings require finish reaming).

End Thrust: Taken by front end of camshaft. Adjust by replacing cover. **Endplay**—.007-.016".

Timing Gears: *CAUTION—Two types camshaft gears used:* Aluminum (first), Fibre (later).

Crankshaft Gear—Cast Alloy Iron.

►*CAUTION—Camshaft gear teeth REVERSE (L.H.) providing one-way thrust to camshaft for silencing backlash.*

►*INTEGRAL HUB CAMSHAFT GEAR—See "Camshaft" in Ford Special Data.*

Replacement Camshaft Gears—Std. .006", .012" OS.

Camshaft Setting: Mesh marked tooth of crankshaft gear with marked space on camshaft gear.

VALVES:	Head Diam.	Stem Diam.	Length
All Valves	1.51"	.3410"①	4.750"
	Seat Angle	**Lift**	**Stem Clearance**
All Valves	45°	.292"	.0015-.0035"②

Wear Limit—①—.3375". ②—.005" Int., .006" Exh.

►*1951 VALVE ASSEMBLY CHANGE NOTE: New rotatable valve assembly used on all 1951 engines. See "Valve System" in Ford Special Data.*

►*NOTE—Valves are straight-stemmed type operating in one-piece valve guides.*

►*NOTE*—Late type valve assemblies can be used in earlier 100 H.P. engines.

►**Sticking Valve Correction**—If necessary to ream guides, use .001" oversize reamer for exhaust valve guides, .0005" oversize reamer for intake guides.

►*INTAKE VALVE SEAT CHANGE NOTE*—(Except early 1950 engines). Intake valve seats discontinued in all 8BA engines.

Valve Guides: One-piece type positioned and retained by "C" washer. Inside diameter .344", Outside diameter 1.031". Length 2.20". NOTE—Rubber seal used on intake guide.

Valve Lifters: Barrel type in guide holes in block.

Diameter—.9992" (replace if worn to less than .9977"). Length limit after resurfacing 1.700".

Clearance—.0007-.0016" (new), .003" (worn limit).

Valve Springs: Coated springs used.

Spring Pressure—37-40 lbs. (closed), 78-80 (open).

Spring Test—40-43 lbs. at 2.13". Free length 2.41".

VALVE TIMING

VALVE TAPPET CLEARANCE: *CAUTION—Different settings required for each type camshaft.*

►**First type Camshaft No. 8BA-6250①**
(no markings on Engine or Camshaft)

Intake—.010-.012", **Exhaust**—.014-.016", Cold.

①—Before Eng. No. 8BA-622468—Partial production after this number.

►**Later type Camshaft No. 8BA-6250-B②**
(Eng. marked—"GAP, in- .014", ex- .018")③
(Camshaft marked "B" on front end)

Intake—.014" (.013-.015") **Exhaust**—.018" (.017-.019"), Cold.

②—Partial production after Eng. No. 8BA-622468, and service replacement on all engines.

③—On top of block at center under valve cover.

►*CAUTION—Loss of power will result if correct tappet clearance not used on engines with "B" CAMSHAFT.*

Adjustment—*See "Valve System" in Ford Special Data*

Valve Timing: See Camshaft Setting above.

Early Camshaft No. 8BA-6250

Intake Valves—Open at TDC. Close 44° ALDC.

Exhaust Valves—Open 48° BLDC. Close 6° ATDC.

Late Camshaft No. 8BA-6250-B

Intake Valves—Open 5° BTDC. Close 44° ALDC.

Exhaust Valves—Open 48° BLDC. Close 3° ATDC.

Valve Timing Check—**(8BA-6250 Camshaft)** Intake valve opens TDC.

(8BA-6250-B Camshaft) Intake valve opens 5° BTDC. No timing marks provided other than Ignition mark (2° BTDC) on vibration dampener.

LUBRICATION

Engine Oiling System: Pressure to main bearings, connecting rod lower bearings, camshaft bearings, timing gears and distributor drive gear. Piston pins and valve lifters lubricated by splash. Oil pump mounted in crankcase at rear of engine.

Crankcase Capacity—4 quarts (5 quarts when changing oil filter).

Normal Oil Pressure—45 lbs. at 30 MPH.

Oil Pressure Relief Valve: In pump body. Not adj.

Spring Tension—12 lbs. compressed to 1.14".

Oil Pump: Gear type (two types: one equipped with spur gears, second with helical gears).

Oil Filter: On left cylinder head.

Oil Filter Cartridge—Ford No. 7HA-6731A.

Oil Pan Removal: *See Ford Special Data.*

Oil Pressure Gauge: King-Seeley Electric.

Dash Unit—Ford No. (1950 Red Pntr.) 8A-9273-B, (1951 White Pntr.) 1A-9273-B.

Engine Unit—Ford No. 41A-9278.

See Miscellaneous Section for complete data.

Crankcase Ventilation: Filter in oil filler cap (inlet).

COOLING

Cooling System: Pressure type with relief valve in filler cap and two belt-driven pumps (one for each bank) with re-circulating by-pass.

Capacity—21 quarts.

Pressure Valve—In radiator filler cap. Ford No. (Except with Fordomatic) 26H-8100-B. Opens at 3½-4½ lbs. (With Fordomatic) 1M-8100-B. Opens at 6½-7½ lbs.

Water Pumps: Two used. Packless type.

Fan Belt Adjustment—Loosen 2 fan mounting bracket bolts, raise fan up until side movement of belt midway between fan and crankshaft pulleys is ½".

Generator (& Water Pump) Belt Adjustment—*See GENERATOR.*

Thermostats: Two Used (one in each head water outlet). Two makes used.

1950 Thermostats

Part No.	Starts to open
8BA-8575-B	157°-162°
8BA-8575-C①	167°-172°
8BA-8575-D	152°-157°
8RT-8575-A	148°-153°

1951 Thermostats

1BA-8575-A	157°-162°
1BA-8575-B①	177°-182°

①For use with permanent anti-freeze.

Temperature Gauge: King-Seeley Electric type.

Dash Unit—Ford No. (1950 Red Pntr.) 8A-10883-B, (1951 White Pntr.) 1A-10883-B.

Engine Unit—Consists of "Sender" (stamped 224), and "Switch" (stamped 217).

Sender—Ford No. 8A-10884, installed (1950) in left bank, (1951) right bank.

Switch—Ford No. 8A-10990, installed (1950) in right bank, (1951) left bank.

See Miscellaneous Section for complete data.

CLUTCH

Long Model 9½ CF-TS, Ford No. 8A-7563A. Single plate,semi-centrifugal, dry disc type.

See Clutch Section for complete data.

Facings—Thickness .125". Outside diameter 9½".

Pedal Adjustment: 1" free travel. Lock nut and adjusting nut at release lever end of release rod.

Removal: Remove transmission (see TRANSMISSION Removal below). Take off flywheel housing. Install wooden wedges between each release lever and cover to hold clutch in released position, take out 6 cover capscrews, lift assembly out.

CONTINUED ON NEXT PA E

CONTINUED FROM PRECEDING PAGE

TRANSMISSION

SYNCHRO-MESH

Own Make. 3-speed, all helical gear type. Constant-mesh, synchro-mesh (Second & High), sliding gear (Low & Reverse).
See Transmission Section for complete data.
►**Transmission Locking in Reverse Correction**—*See "Ford, Lincoln, Mercury Transmission" in Transmission Section.*
►**Transmission Inoperative in Reverse (Overdrive Transmissions)**—*See "Ford, Lincoln, Mercury Transmission" in Transmission Section.*
Transmission Control: Steering column mounted shift
See Transmission Section for complete data.
Removal: Disconnect rear universal, slide propeller shaft out of transmission. Disconnect clutch, transmission and speedometer linkage. Support rear of engine and disconnect rear engine mounting from frame, Take out 4 transmission-to-flywheel housing capscrews and remove transmission.

OVERDRIVE

Warner Models—Optional Equipment. Overdrive is solenoid operated type (no centrifugal pawls) with Governor Control and throttle operated kickdown.
AS1-R10E—1950 (Except Convertible & Sta. Wgn.).
AS4-R10E—1951 (Except Convertible & Sta. Wgn.). Same as AS1-R10E except no lockout switch.
AS3-R10E—1950-51 Convertible & Sta. Wgn. Same as AS1-R10E except solenoid is mounted under overdrive housing and connected to pawl by linkage.
Solenoid—Ford No. 8M-6916-A (8A-6916-C is rubber coated for Convertible & Sta. Wgn.).
Control Relay—Ford No. 8M-6915.
Overdrive Fuse—30 amperes. On relay.
Lockout Switch—Ford No. 6917-A, (1950).
Throttle Kickdown Switch—Ford No. 8A-6818-B.
Removal: Same as for Std. Transmission (above).
►**Overdrive not engaging, and Prolonged shorting out of Ignition on Kick-down Corrections**—*See "Ford, Lincoln, Mercury Overdrive in Transmission Section.*

FORDOMATIC TRANSMISSION

Torque converter and 3-speed automatic transmission, hydraulic control, mechanical parking lock.
►*LINKAGE PRODUCTION CHANGE*—Throttle Linkage changed on later cars for quieter and more efficient operation. Can be installed on earlier cars.
See Fordomatic Transmission in Transmission Section.
Lubrication—Check transmission oil level every 1000 miles and maintain oil level at "Full" mark on dipstick. Drain and refill every 15000 miles. **Use only Automatic Transmission Fluid, Type A.**
Capacity—Approx. 9 qts.
Checking Oil Level—With transmission selector lever in "Neutral," run engine approx. four minutes at idle speed. Clean floor mat and lift right side to expose plate in floor boards, remove plate. When engine and transmission are at normal operating temperature, move the selector lever through all ranges to assure distribution of oil throughuot the transmission. Clean all dirt away from fluid level indicator cap and remove indicator. Wipe indicator and insert in transmission making sure that it is seated and locked. Remove indicator and check level. Add fluid to bring level to the "full" mark on the indicator. Replace indicator and tighten it properly. Replace plate and floor mat.
►*CAUTION—Do not fill above FULL mark.*
Draining & Refilling—*See "Ford Fordomatic" in Transmission Section.*
Linkage Adjustment—*See "Ford Fordomatic" in Transmission Section.*
Removal: *See "Ford Fordomatic" in Transmission Section.*

UNIVERSALS

Mechanics Type 2CR. Needle bearing type. 2 used.
See Universals Section for complete data.
►*CAUTION (ALL CARS EXCEPT STATION WAGON)—Rear universal joint companion flange nut controls pinion bearing "pre-load" (must be adjusted whenever nut is loosened). See "Ford Passenger Cars (except Station Wagon)" in Rear Axle Section.*

REAR AXLE

PASSENGER CARS

Own Make. Semi-floating hypoid gear type with Hotchkiss drive with separate carrier. Axle ends flanged (no separate hub). Wheel bearings are sealed-ball pre-lubricated (no lubrication required).
See Rear Axle Section for complete data.
►**Excessive Axle Shaft Endplay (causing noise in service) Correction**—*See "Ford Passenger Cars (except Station Wagon)" in Rear Axle Section.*
►**Ring & Pinion Gear Production Change**—*See "Ford Passenger Cars (except Station Wagon)" in Rear Axle Section.*
Ratios
Standard Transmission—3.73-1 (41-11).
Overdrive Transmission—4.10-1 (41-10).
Fordomatic Transmission—3.31-1 (43-13). (Optional) 3.54-1 (39-11).
Backlash—.005-.008". *Screw adjustment.*
Removal: Disconnect rear universal. Remove axle shafts (see instructions below). Remove carrier from housing.
►**Carrier Mounting Bolt Tightening Caution**—*See "Ford Passenger Cars (except Station Wagon)" in Rear Axle Section.*
►*CAUTION—Pinion bearing pre-loading must be re-established whenever universal joint flange nut on pinion shaft is removed or disturbed. See "Ford Passenger Cars (except Station Wagon)" in Rear Axle Section.*
Axle Shaft Removal: Remove wheel. Take off drum. Remove 4 axle retainer locking type nuts (work through opening in axle shaft flange). Use Puller No. 4235-P and pull shaft (do not disturb brake backing plate or damage wheel bearing oil seal).
Wheel Bearing Adjustment: None.

STATION WAGONS

Own Make. Semi-floating, hypoid gear type with Hotchkiss drive (**separate carrier not used**). Axle ends flanged—(no separate hub). Wheel bearings are sealed-ball pre-lubricated type.
►*NOTE—AXLE NOT SAME AS FORD PASSENCER CAR, similar to Mercury.*
See Rear Axle Section for complete data.
Ratio (Standard)—3.91-1 (43-11).
Ratio (with Overdrive)—4.27-1 (47-11).
Ratio (with Fordomatic)—3.54-1 (39-11).
Backlash—.003-.008". *Shim adjustment.*
Removal: Raise rear of car. Disconnect rear universal. Remove axle shafts (see instructions above). Disconnect brake line at "T" on left side of axle housing, and hand brake cable. Disconnect shock absorbers, spring U-bolts and shackles. Remove axle housing assembly from car.
Axle Shaft Removal: Same as Ford Pass. Car.

SHOCK ABSORBERS

Front—Ford No. ('50 Pass. Cars) 8A-18045-A. ('51 Pass Cars) 1A-18045-A2. Ford No. ('50 Sta. Wagon) 8A-18045-B. ('51 Sta. Wagon) 1A-18045-D.
Rear—Ford No. ('50 Pass. Cars) 8A-18080-A. ('51 Pass. Cars) 1A-18080-A. Ford No. ('50 Sta. Wagon) 8A-18080-B. ('51 Sta. Wagon) 1A-18080-B.
Direct acting, hydraulic types. Two makes are used and are interchangeable.

FRONT SUSPENSION

Front Suspension: Independent, linked parallelogram type with coil springs, direct acting shocks, and front stabilizer.
See Front Suspension Section for complete data.
►**Riding Height & Car Leveling Correction**—*See "Ford Passenger Cars, Lincoln, Mercury" in Front Suspension Section.*
►**Front Suspension Noise (popping or chucking noise) Correction**—*See "Ford Passenger Cars, Lincoln, Mercury" in Front Suspension Section.*
►**Front Spring Production Change & Installation Caution**—*See "Ford Passenger Cars, Lincoln, Mercury" in Front Suspension Section.*
Kingpin Inclination—5¼° crosswise.
Caster (Pass Cars)—Pos. ½° to Neg. 1°.
(Station Wagon)—Neg. ¼° preferred, Limits Neg. ¼° to Neg. 1¾°.
NOTE—½° max. variation between wheels.
Camber (All)—Pos. ¼° to Pos. ¾° preferred. Limits 0° to Pos. 1°. NOTE—¼° max. variation between wheels.
Toe In—1/16" to 1/8".

STEERING GEAR

Gemmer Design (305), Ford Make—Worm & Roller.
See Steering Gear Section for complete data.
►**Steering Idler Arm Looseness Complaints**—*See "Ford (6 & V8 Pass. Car)" in Steering Gear Section.*

BRAKES

Service: Ford-Bendix Hydraulic, Duo-Servo, Single Anchor type without eccentric adjustment. Hand lever applies rear wheel service brakes.
See Brake Section for complete data.
Wheel Cylinders—Diameter: Front wheel 1.128" (hone limit 1.132"). Rear Wheel: .878" (hone limit .880").
Drums—Diameter 10" (11" Sta. Wagon rear drums).
Lining—Molded or Woven. Width 2¼" (front wheel), 1¾" (rear wheel). Thickness 3/16". Length per shoe:
Front—11". (Stn. Wgn. 11 15/16").
Rear—11". Pri., 11 3/4" Sec. (Stn. Wgn. 11 15/16" Pri. & Sec.).
Clearance—.010" at each end of secondary shoe with primary shoe forced out against drum (adjusting screw in each wheel backed off 14 notches or "clicks" from point where shoes drag on drum).
Hand Brake: See Service Brakes (above).
►**Hand Brake Linkage Change (for easier application) and Cable Interference Correction**—*See "Ford-Bendix Hydraulic" in Brake Section.*

MISC. MECHANICAL

Power Operated Convertible Top: Hydro-Lectric type
See Miscellaneous Section for complete data.
Windshield Wipers: Vacuum Link & Crank Arm Type.
See Miscellaneous Section for complete data.

MODEL IDENTIFICATION

Series	MODEL "V8"①	"6 Cyl"②	WHB
F-1 ½ Ton	9RC	9HC	114"
F-2 ¾ Ton	9RD	9HD	122"
F-3 ¾ Heavy Duty	9RY	9HY	122"
F-3 Parcel Delivery	——	9HJ	104"
F-3 Parcel Delivery	——	9H2J	122"
F-4 1 Ton	9RTL	9HTL	134"
F-5 1½ Ton	9RT	9HT	134"
F-5 1½ Ton	9R8T	9H8T	158"
F-5 1½ Ton	9R6T	9H6T	176"
F-5 School Bus	9R8T	9H8T	158"
F-5 School Bus	9R4T	9H4T	194"
F-5 1½ C-O-E	9ROW	9HOW	110"
F-5 1½ C-O-E	9RW	9HW	134"
F-5 1½ C-O-E	9R8W	9H8W	158"
F-6 2 Ton	9RTH	9HTH	134"
F-6 2 Ton	9R8TH	9MTH③	158"
F-6 2 Ton	9R6TH	9H8TH	176"
F-6 2 C-O-E	9ROWH	9HOWH	110"
F-6 2 C-O-E	9RWH	9MOWH③	134"
F-6 2 C-O-E	9R8WH	9HWH	158"

①—Rouge 239 Truck V8 100 H.P. "R" Engine.
②—Rouge 226 Truck 6 Cyl. 95 H.P. "H" Engine.
③—*Rouge 254 Truck 6 Cyl. 110 H.P. "M" Engine.*

ENGINE NUMBER: On Rating Plate on dispatch compartment (glove box) door and on left side of frame near steering gear mounting bracket. NOTE—Engine Number is also Serial Number.

TUNE-UP

COMPRESSION PRESSURE: 110 lbs. at cranking spd.

VACUUM READING: Steady 18-21" idling at 500 RPM.

FIRING ORDER (V8): 1-5-4-8-6-3-7-2. See diagram.

FIRING ORDER (6 CYL.): 1-5-3-6-2-4. See diagram.

SPARK PLUG GAPS: .025-.028".
Plug Type—Champion H-9 Comm. 14 mm.

DISTRIBUTOR:
Breaker Gap—(6 Cyl.) .024-.026" (V8) .014-.016"
Cam Angle—(6 Cyl.) 36° closed, (V8) 27° closed.
Breaker Arm Spring Tension—17-20 ounces.
Advance Performance—*See Ignition.*
Condenser Capacity—.21-.25 microfarad.

Distributor Line (Carburetor Connection) Vacuum Engine RPM—	800	1000	2200	2400
6 "H" & "M"	0.5-0.7"	1.2-1.6"	4.8-6.6"	4.9-6.7"
V8 "R"	2.0-2.9"	3.5-4.8"	4.7-6.4"	4.6-6.2"

IGNITION TIMING: 2° BTDC (V8), TDC (6 Cyl.).
Timing Procedure—*See Ignition Timing.*
V8—Crankshaft Pulley Mark—Circular boss aligned with pointer on right side of engine front cover.
6 Cyl.—Dampener Mark—Circular boss or groove (depending on type of dampener used). 2 pointers on front engine cover. ***Use pointer nearest to outer circumference of dampener for proper 6 Cyl. Timing.***

CARBURETION:
Idle Setting—Approx. 1 turn open. 2 screws used on V8—turning screws out gives richer mixture.
Idle Speed—Approximately 500 RPM.
Float Level (V8 & 6 cyl. "H" engine)—1.322-1.353" bottom of float to bowl cover with needle valve seated (use gauge No. 9550-A).
Float Level (8 cyl. "M" engine)—1.283" to 1.315" from bottom of float to machined surface of air horn with assembly held in inverted position.
Float Level (C-O-E 6 cyl. "M" & "H" engine)—1.180"1.200" from top of float to surface of bowl casting.
Accelerating Pump—Center hole average setting. Inner hole for hot weather, Outer for cold weather.

Fuel Pump Pressure: (V8) 3½-4½ lbs., (6) 4-5 lbs.

MANIFOLD HEAT CONTROL: Automatic.
V8 Engine—Valve located between right end of exhaust pipe cross over and right exhaust manifold.
6 Cylinder—At center of exhaust manifold just under intake manifold.

VALVE TAPPET CLEARANCE:

	Intake	Exhaust
"H" Engine①	.013-.015"	.013-.015"
"M" Engine①	.009-.011"	.013-.015"
"R" Engine	.013-.015"	.017-.019"

①—Set .002" additional for high speed operation.

►*V8 TAPPET CLEARANCE CAUTION—Tappet Clearance above applies to engines marked "CAP, in- .014", ex- .018"" on top of block at center under Valve Covcr.*

Refer to 1949 Data for clearance on unmarked engines.
NOTE (6 cyl.)—Adjustable self-locking tappet screws used.

IGNITION

IGNITION SWITCH: Ford No. (1950) 6A-11572-A, (1951) OL-11572-A.
Ignition Lock—Ford No. (1950) 8A-11582-A, (1951) 1A-11582-A.

COIL: Ford No. 7RA-12029-A. Metal can type.
Location—Next to distributor.
Ignition Current—Idling 2.75-3 amperes at 6 volts.
5-5.5 amperes stopped. Coil primary resistance 1.05-1.15 ohms (75°F). Secondary resistance 4100 ohms (75°F).

CONDENSER: Ford No. 7RA-12300-B.
Capacity—.21-.25 microfarad.

DISTRIBUTOR: Less Distributor Cap and Rotor.

CONTINUED ON NEXT PA E

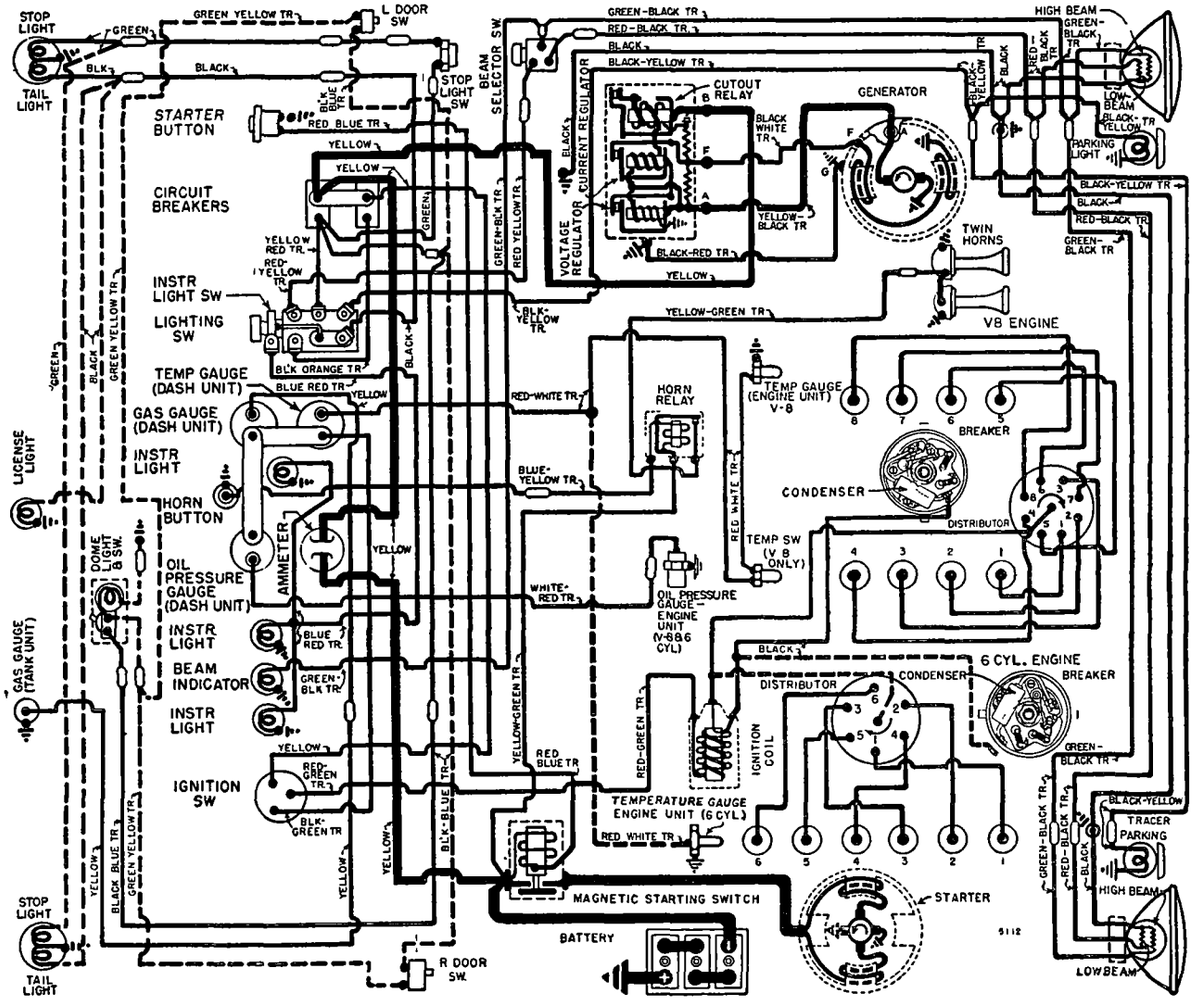

C NTINUED FR M PRECEDIN PA E

Engine	Distributor No.
"H" 6 cyl.	7HA-12127
"M" 6 cyl.	8MTH-12127
"R" 8 cyl.	①8BA-12127
"R" 8 cyl.	②OBA-12127

①—With Cast Iron front cover.
②—With Aluminum front cover.

Pressure type with the distributor spark advance controlled by vacuum diaphragm moving breaker plate to advance spark against two breaker plate springs.

See "Ford, Lincoln, Mercury Distributor" in Electrical Equipment Section.

Breaker Gap—(6 Cyl.) .024-.026" (V8) .014-.016".
Cam Angle—(6 Cyl.) 36° closed, (V8) 27° closed.
Breaker Arm Spring Tension—17-20 ounces.
Rotation—Clockwise viewed from above.

Advance Performance
►With Distributor on Test Unit

8BA-12127			OBA-12127		
Degrees	Vacuum	RPM	Degrees	Vacuum	RPM
0-0°	0"	200	0-0°	0"	200
0-1°	0.30"	500	0-1°	0.30"	500
5.2-6.2°	1.32"	1000	5.2-6.2°	1.32"	1000
8¾-10°	2.85"	1500	8¾-10°	2.85"	1500
10-11¼°	3.7"	2000	10-11¼°	3.7"	2000
7HA-12127			**8MTH-12127**		
Degrees	Vacuum	RPM	Degrees	Vacuum	RPM
0-0°	0"	200	0-0°	0"	200
1¾-3°	0.4"	500	1½-3°	0.4"	500
5½-6¾°	1.4"	1000	7¼-8¼°	1.3"	1000
11½-13°	5.5"	1000	10½-12°	3.6"	1400
8½-9¾°	2.9"	1500	9¼-10¼°	2.6"	1600
10½-11½°	4.1"	2000			

Distributor Line (Carburetor Connection) Vacuum —*See Tune-Up.*

IGNITION TIMING

V8 Engine ..... **2° BTDC.**
6 Cylinder ..... **TDC.**
Timing Marks—*See Tune-Up data.*
Timing (with Neon Timing Light)—*CAUTION—Vacuum line must be disconnected to avoid vacuum advance operating.* Mark timing mark and pointer with white chalk (6 cylinder equipped with two pointers use pointer nearest to outer circumference of dampener). Connect timing light to #1 spark plug, idle engine, adjust distributor by loosening clamp screw and rotating distributor until mark and pointer are aligned, tighten clamp screw, connect vacuum line.

CARBURETOR

Holley-Ford Downdraft Types	Ford Model Nos.
V8 "R" Engine	7RT-9510-A
6 Cyl. "H" Engine	7HT-9510-A
6 Cyl. "M" Engine	8MTH-9510
Updraft Types	
6 Cyl. "H" Engine COE & Parcel Del.	7HW-9510
6 Cyl. "M" Engine COE	8MWH-9510

Dual or double barrel (V8), single barrel (6 Cyl.) downdraft type with new vacuum passages for distributor operation.

See Carburetor Section for complete data.

Settings (Idle Setting, Float Level, and Accelerating Pump): *See Tune-Up data.*
Metering Jets—*See Holley-Ford Jet Specification Table in Carburetor Section.*
Fast Idle: Integral type. Operated by ch ke valve lever. No adjustment required.

CARB. EQUIPMENT

Fuel Pump (V8 Engines):
1950—(Std.) Ford No. 7RA-9350-C.
1950—(Optional) Ford No. 7RA-9350-A.
1950—(California only) Ford No. 8CM-9350-E.
1951—(Std.) Ford No. 1BA-9350-A.
1951—(Std. California, optional otherwise) Ford No. 8CM-9350-E.

Fuel Pump (6 Cyl. Engines):
1950—(Std.) Ford No. 7HA-9350-B.
1951—(Std.) Ford No. 1HA-9350-A.
Pressure—3½-4½ lbs. (V8), 4-5 lbs. (6 Cyl.).
See Carburetion Equipment Section for complete data.

Gasoline Gauge: King-Seeley Electric.
Dash Unit—Ford No. (1950) 7RC-9280, (1951) 1C-9280-A. All models.
Tank Unit (All Closed Cabs)—Ford No. 7RC-9275.
Tank Unit (F-1, 2, 3 Panels)—Ford No. 21C-9275B.
Tank Unit (F-4, 5, 6 Panels & Bus)—No. 7RT-9275.
See Carburetion Equipment Section for complete data.

Air Cleaner V8, & 6Cyl. C-O-E (oil bath): Ford No. 7RT-9600-C (1 quart capacity).
6 Cyl. "H" Engine (Exc. C-O-E) Oil bath. Ford No. 7HT-9600-B.
6 Cyl. "M" Engine (Exc. C-O-E) Oil bath. Ford No. 8MTH-9600.

BATTERY

8 Cyl. (F-1, F-2, F-3, F-4)—Ford No. 81A-10655-B. 15 plate, 90 amp. hour. (Green Oval on case).
8 Cyl. (F5, F-6, & C-O-E)—Ford No. 81A-10655-A. 17 plate, 100 amp. hour. (Gold Oval on case).
6 Cyl. (All Models)—Ford No. 81A-10655-A. 17 Plate, 100 amp. hour capacity. (Gold Oval on case).
School Bus—Ford No. 01A-10655-A. 17 Plate, 120 amp. hour capacity. (Gold Oval on case).
Special Equipment—Ford No. 01A-10655-C. 15 Plate, 100 amp. hour capacity. (Green Oval on case).

STARTER

Model	Ford Part No.
V8 Engine (1950)	①7RA-11002
V8 Engine (1951)	①1A-11002-A
6 Cyl. "H" Engine (1950)	②7HA-11002
6 Cyl. "H" & "M" Engine (1950)	③7HA-11002
6 Cyl. "H" & "M" Engine (1951)	④1A-11002-A

①—Use with B-11350 Drive Assy.
②—Use with B-11350 Drive Assy. & 2GA-6384-A Ring Gear.
③—Use with 8HA-11350 Drive Assy. & 8HA-6384 Ring Gear.
④—Use with 8HA-11350 Drive Assy.

Armature No.—Ford No. 18-11005.

Drive—10 Tooth Pinion Type (All V8, Early 6 Cyl.) Ford No. B-11350 (Bendix No. A1472) for use with 112 tooth flywheel ring gear.
Drive—9 Tooth Pinion Type (Late 6 Cyl.) Ford Part No. 8HA-11350 (with 114 tooth flywheel ring gear).
►6 CYL. STARTER DRIVE CAUTION—Use proper type drive. Both 9 and 10 tooth pinions used as listed above.
Rotation—Counter-clockwise at commutator end.
Brush Spring Tension—20-22 ounces.
Cranking Engine—100 RPM., 190-215 amperes.

Performance Data

Torque	R.P.M.	Volts	Amperes
No Load	4000-6000	5.8	45-60
15 ft. lbs.	Lock	3.5	600

Starting Switch: Ford No. 21A-11450 Magnetic Switch mounted on front of dash next to battery (left side on 6 Cyl. Conventional Truck, right side all others) controlled by pushbutton, Ford No. 11C-11500.

GENERATOR

Ford 2 brush type with voltage & current regulation.

Generator No.	Capacity
8BA-10002-A or D (Std. Equip.)	35 amps.
8BA-10002-B①	40 amps.
8HJ-10002-A (Parcel Delivery)①	30 amps.
OHA-10002-A (Std. Equip. 1951 "H" Eng.)	35 amps.
OHA-10002-B (Sch. Bus "H" Eng.)①	45 amps.

①—Special Equipment.

Armature No.	Generator No.
8BA-10005-A	8BA-10002-A or D
8EH-10005	8BA, OHA-10002-B
8HJ-10005-A	8HJ-10002-A
OHA-10005-A	OHA-10002-A, 8BA-10002-A or D

Charging Rate Adjustment—None. See Regulator.
Maximum Charging Rate—Controlled by regulator dependent on load and battery condition.

Performance Data

	Maximum Rate Amperes	Eng. RPM
8BA-10002-A	35	935
8BA-10002-B	40	1060
8BA-10002-D	35	900
8HJ-10002-A	30	——
OHA-10002-A	35	890
OHA-10002-B	40	1060

Rotation—Counter-clockwise at commutator end.
Brush Spring Tension—20-24 ozs.
Belt Adjustment (V8): Loosen 2 bolts on fan mounting bracket, loosen generator support mounting stud nut, raise generator up until side movement on belt midway between generator and water pump pulleys is ½" (thumb and finger pressure), tighten stud nut. Adjust fan belt in similar manner, tighten 2 fan bracket bolts.
Belt Adjustment (6 Cyl.): ½" deflection midway between generator and pump pulleys. To adjust, loosen 2 mounting bracket bolts under generator and capscrew in bracket slot behind generator.

REGULATOR

Ford Numbers

Regulator	Ampere Rating	Generator
51A-10505-A	30-34	8BA-10002-A
51A-10505-H	34-38	8BA-10002-A
8M-10505-A	34-38	8BA, 8HJ, OHA-10002-A
5EH-10505-C	38-42	8BA-10002-B
8L-10505	38-42	OHA, 8BA-10002-B

Voltage-current 3-Unit types.
See Electrical Equipment Section for complete data.
NOTE—Ground wire between generator and regulator must be in place.

Cutout Relay

Regulator	Cuts In
51A-10505-A,H, 5EH-10505-C	6.6-7.0 Volts
8M-10505-A, 8L-10505	6.0-6.6 Volts

Cuts Out (Discharge—0-8 Amperes.
Contact Gap—.010" (armature against upper stop).
Air Gap—.014" between armature and core with contacts open.

Voltag Regulator

Regulator	Voltage Setting COLD①
All	7.2-7.6 Volts

①—Voltage settings will increas approx. .2 volts after 20 minutes running.

Checking & Adjustment—*See Elec. Equip. Section.*
Air Gap—.032-.035" between armature and core with contacts just closed.
►***CAUTION—Make certain gauge contacts armature and not brass rivet on underside of voltage armature.***
Contact Spring Tension—5 ounces minimum with contacts just opening.

Current Regulator

Regulator	Current Setting COLD Amperes
51A-10505-A	30-34
51A-10505-H, 8M-10505-A	34-38
5EH-10505-C, 8L-10505	38-42

Checking & Adjustment—*See Elec. Equip. Section.*
Air Gap—.032-.035" between armature and core with contacts just closed.
Contact Spring Tension—5 ounces minimum with contacts just opening.

LIGHTING

Headlamps: Ford "Sealed Beam" type.
See Electrical Equipment Section for complete data.
Beam Indicator—Bulb between Fuel and Oil Gauges on panel. Lighted when Upper Beam in use.

Switches

Lighting—Ford No. (1950) 7RA-11654, (1951) OL-11654.
Beam Selector—Ford No. 7RA-13532.
Instrument—Ford No. (1950) 21C-13740, (1951) OL-13740.
Stop Light—Ford No. 11A-13480.

MISC. ELECTRICAL

CIRCUIT BREAKERS: Ford No. 51A-12258-A, 8C-12258-B. Consists of one 15 amp., and one 30 amp., circuit breakers. Located behind instrument panel.

HORNS: (1950) Single Horn (Std.), Dual Horns with relay (Optl.). (1951) Dual Horns, with relay (Std.).

ENGINE

ENGINE SPECIFICATIONS: Own Make "L" Head
6 Cylinder Rouge 226 "H" Engine.
6 Cylinder Rouge 254 "M" Engine.
8 Cylinder Rouge 239 "R" Engine, Vee type.

	Bore	Stroke	Displacement
"H" Engine	3.30"	4.40"	226 cu. in.
"M" Engine	3.5"	4.40"	254 cu. in.
"R" Engine	3.187"	3.75"	239 cu. in.

	Comp. Ratio	Rated HP	Developed HP
"H" Engine	6.8-1	26.1	95 at 3300 RPM
"M" Engine	6.8-1	29.4	110 at 3400 RPM
"R" Engine	6.8-1	32.5	100 at 3800 RPM

Compression & Vacuum Reading—*See Tune-Up.*

CYLINDER HEAD & TIGHTENING TORQUES: *See Ford Special Data.*

►**OTHER ENGINE DATA:** *See 1950-51 Ford Six & V8 Passenger Car pages.* 6 Cyl. "H" engines and V8 "R" engines are similar to those used in 1950-51 passenger cars, and the data on pistons, rings, bearings, valves, etc. shown on passenger car pages applies to truck engines.

►**6 CYL. "M" ENGINE DATA:** *Same as for 6 Cyl. "H" engines except as follows:*
Fitting Pistons—Use ½" wide feeler inserted between piston and cylinder wall at right angles to pin on thrust side. Feeler thickness as follows:
New piston in new bore .0015". New piston in used bore .002". Used piston in used bore .003". Pounds pull to withdraw: 5-10 lbs.

►*PISTON PRODUCTION CHANGE—Split skirt pistons used in early production 1950. Solid skirt pistons used late 1950 & 1951.*
Piston Rings—3 used per piston, 2 Comp. and 1 Oil ring.
End Gap (Compr. Rings) .008-.016", (Oil) .007-.015".
Side Clearance—Oil ring .003".
Connecting Rod Side Clearance—.003-.007".
Crankshaft Main Bearing Clearance—.0005-.0032".

VALVE TIMING

VALVE TAPPET CLEARANCE: With engine COLD.

	Intake	Exhaust
"H" Engine①	.013-.015"	.013-.015"
"M" Engine①	.009-.011"	.013-.015"
"R" Engine	.013-.015"	.017-.019"

①—Set .002" additional for high speed operation.

►*"R" V8 TAPPET CLEARANCE CAUTION—Tappet clearance above applies to engines marked "GAP, in-.014", ex-.018"" on top of block at center under Valve Cover. Refer to 1949 Data for clearance on unmarked engines.*

VALVE TIMING: *See Camshaft setting 1950-51 Ford 6 cyl. & V8 Pass. Cars.*

"H" & "M" 6 Cyl. Engine
Intake Valves—Open 11° BTDC. Close 41° ALDC.
Exhaust Valves—Open 48° BLDC. Close 10° ATDC.

V8 "R" Engine
Intake Valves—Open 5° BTDC. Close 44° ALDC.
Exhaust Valves—Open 48° BLDC. Close 3° ATDC.
Valve Timing Check—Intake valve opens at TDC (V8), 11° BTDC (6 Cyl.).

LUBRICATION

Engine Oiling System: Pressure to main bearings, connecting rod lower bearings, camshaft bearings. Timing gears and distributor drive gear lubricated through drilled hole in front end of camshaft on V8. Timing gears lubricated by spray past camshaft thrust plate on 6 cylinder engine.

►*OIL PAN CLEAN-OUT PLATE—On underside of oil pan, attached by 7 nuts. Remove to clean oil pump intake and screen, and oil pan.*
Crankcase Capacity—"H" & "R" engines 5 qts. "M" engine 6 qts.
Normal Oil Pressure—50 lbs. at 2000 RPM.

Oil Pressure Gauge: King-Seeley Electric.
Dash Unit—Ford No. (1950) 7RC-9273, (1951) 1C-9273-A.
Engine Unit—Ford No. 41A-9278.
See Miscellaneous Section for complete data.

►*OTHER LUBRICATION DATA: See 1950-51 Ford Six & V8 Passenger Car pages.*

COOLING

Cooling System: Pressure type with relief valve in filler cap, by-pass in block, and belt-driven water pump (2 used on V8).
Capacity—18 quarts (6 Cyl.), 23 quarts (V8).
Pressure Valve—In radiator filler cap. Ford Nos. 41A-8100-B (with knurled edge) or 41A-8100-A (flange type grip—use with 51A-8138 radiator cap gasket). Opens at 3½-4½ lbs.

Temperature Gauge: King-Seeley Electric.
Dash Unit—Ford No. (1950) 7RC-10883, (1951) 1C-10883-A.
Engine Unit—Ford No. 8A-10884.
Temp. Switch (V8 Only)—Ford No. 8A-10990, in left cylinder head.
See Miscellaneous Section for complete data.

►*OTHER COOLING DATA: See 1950-51 Ford Six & V8 Passenger Car pages.*

CLUTCH

Long Model 10CF-TI (F-1 with 3 spd. Transmission).
Long Model 11CF-CI (All Other Models).
Semi-centrifugal, single plate, dry disc types.
See Clutch Section for complete data.
Facings (10CF)—Moulded. 10" O.D. .125" thick.
Facings (11CF)—Woven (School Bus), Moulded (Others). Outside Diameter 11". Thickness .137".

Pedal Adjustment: 1⅛-1⅜" (10" & 11" Clutch), pedal free travel. Adjusting clevis provided at forward end of connector rod between pedal shaft and equalizer shaft.

Removal: Remove transmission (see TRANSMISSION Removal below). Install wooden wedges between each release lever and cover to hold clutch in released position, take out 6 cover capscrews, lift assembly out. NOTE—Flywheel housing may have to be removed on some models.

TRANSMISSION

3-SPEED TYPE

►*F-1 TRANSMISSION: See Passenger Car pages.*
►*TRANSMISSION CONTROL PRODUCTION CHANGE*—Steering column shifting control used beginning early 1950, as standard equipment on F-1 trucks.
Own Make. Heavy duty, 3-speed. Helical gear, constant-mesh, synchro-mesh (Second & High). Sliding spur gear (Low & Reverse).
►*PARCEL DELIVERY F-3 & F-5*—Steering column shift control standard equipment with 3-Speed Heavy-Duty Transmission.
See Transmission Section for complete data.
NOTE—This transmission standard on F-2, F-3 Series, optional on F-1, F-4, F-5.
Removal: Same as for 4-Speed type following.

4-SPEED SYNCHRO-MESH

Own Make. 4-speed constant-mesh type. Synchromesh (Second, Third & High). Helical gears used for second, third and fourth speed. Spur gears used low and reverse.
See Transmission Section for complete data.
NOTE—This transmission standard equipment on F-6 with 6 cylinder "M" engine and as optional equipment on F-4, F-5, F-6 with either 8 cyl. ("R" Series) or 6 cyl. ("H" Series) engines.

Removal: Same as 4-Speed Transmission (see below).

4-SPEED

Own Make. 4-speed, sliding spur gear type.
See Transmission Section for complete data.
NOTE—This tranmission standard on F-4, F-5, F-6 Series, optional on F-1, F-2, F-3.

Removal: Remove seat cushion, floor mat, and transmission cover on floor. Support engine with jack under flywheel housing (use wood block on jack), raise jack until engine weight is off rear mounting. Free coupling shaft support bearing from crossmember by removing nuts on two bolts, disconnect

CONTINUED N NEXT PAGE

C NTINUED FR M PRECEDIN PA E

front universal joint by taking out four bolts mounting universal joint flange at hand brake drum and disconnect intermediate universal joint at support bearing by removing nuts on "U" bolts (tape bearing caps in place to prevent losing needle bearings), remove front shaft. Remove clutch equalizer shaft by taking out pin in clutch shaft and clevis pin at lever and pulling equalizer shaft off the bracket (CAUTION—Do not lose spring and bushing halves). Remove two bolts in engine rear support. Disconnect speedometer shaft at transmission. Remove transmission capscrews from flywheel housing, pull transmission straight back until clutch (main drive gear) shaft clears, then lift transmission out through floor opening.

NOTE—To remove brake assembly, take out 2 capscrews in hand brake lever sector on transmission case and two capscrews in brake adjusting screw bracket, disconnect hand brake link from transmission and anchor adjusting screw from brake band, remove brake band assembly and hand brake lever.

UNIVERSALS

Spicer. Needle bearing type, two used (Series F-1, and F-5, F-6 C-O-E 110"), three used with slip joint at forward end of rear shaft behind coupling shaft support bearing (All Others).

SERIES F-1 NOTE—Propeller shaft is one-piece type with slip joint provided by front universal yoke sliding on splined drive shaft in transmission.

See Universals Section for complete data.

Spicer Model Nos.

Series	Front	Center	Rear
F-1①	1278-102X	None	1278-102X
F-1②	1311-102X	None	1318-105X
F-2, F-3	1318-103X	1311-102X	1318-103X
F-4, F-5, F-6	1358-54X	1351-5107X	1358-5104X
F-5, F-6 110"	1351-517X	None	1358-5104X
F-5 194"	1358-514X	1351-5107X	1358-5107X

①—3-Speed Transmission. ②—4-Speed Trans.

Coupling Shaft Center Bearing: Consists of cushion mounted ball bearing bolted to underside of frame intermediate cross-member. Bearing is mounted on end of coupling shaft in a sleeve with felt retainer sleeve on each end and bearing baffle on front end.

REAR AXLE

FULL-FL ATING TYPE

►*F-1 REAR AXLE: See "Station Wagon Rear Axle" in Ford Six & V8 Passenger Car pages.*

Own Make. Full-floating, Spiral Bevel Gear type with Hotchkiss drive.

See Rear Axle Section for complete data.

Ratios:	Standard	Optional
F2, F3	4.86-1 (34-7)	4.11-1 (37-9)
F4	5.14-1 (36-7)	5.83-1 (35-6)
F5	6.66-1 (33-5) 5.83-1 (35-6)	5.14-1 (36-7)

Backlash—.004-.018".

Removal: Raise rear end of frame, remove axle shafts (see below), wheel and drum assemblies. Disconnect hydraulic brake line at each wheel and hose at bracket (bleed brake lines when re-connected). Remove backing plate assemblies. Disconnect rear universal. Remove nuts on rear spring "U" bolts, drive bolts up free of housing, lower axle assembly and remove from underneath truck.

Axle Shaft Removal: Remove hub cap, remove nuts on 8 hub studs holding axle shaft flange in place, turn 2 special screws (in tapped holes in flange) up evenly to break flange loose from hub, back these screws out, strike axle shaft flange at center to loosen centering cones on studs, remove cones, pull axle shaft out (wheel not disturbed).

Wheel Bearing Adjustment: Remove axle shaft (see above), use special bearing adjustment wrench and remove bearing locknut (outer nut), and lockwasher. Adjust bearings by turning bearing adjusting nut (inner nut) up until tight and then backing nut off ⅛ turn. Install bearing lockwasher making certain that it fits over dowel pin on adjusting nut, install bearing locknut and turn this nut up tight. NOTE—When installing axle shaft make certain that gasket in place under shaft flange, cones in place on studs and that two loosening screws backed off sufficiently so that stud nuts can be tightened securely. Turn two loosening screws in just enough to prevent loosening in service.

TWO-SPEED TYPE

STD. F-6 SERIES, OPTL. F-5 SERIES

Own Make. Vacuum Operated Shift, Two-speed, Full-floating, Spiral Bevel Gear (final drive), spur gear planetary unit (reduction gearing) with Hotchkiss drive.

See Rear Axle Section for complete data.

Ratio (Standard)—5 83-1 (Direct Speed), 8 11-1 (Second Speed).

Ratio (Optional)—6 33-1 (Direct Speed), 8 81-1 (Second Speed).

Backlash—.004-.018".

Removal: Same as for standard axle (above) after disconnecting vacuum line at hose connection.

SHOCK ABSORBERS

Houde (Houdaille). Direct acting, hydraulic type.

►*Shocks are sealed (cannot be refilled or repaired).*

F-1, F-2, F-3—Ford No. 7RC-18045-B, Houde No. H-160 (Front). 7RC-18080-B, Houde H-170 (Rear). F-4, F-5, F-6 NOTE—Houde rotary type shocks optional equipment for front end only (Ford No. 8T-18045 Right, No. 8T-18046 Left). These shocks are adjustable and can be refilled.

FRONT SUSPENSION

Kingpin Inclination—8° ± ¼° (Sch. Bus., Parcel Del., F-1, F-2 & F-3), 8¼° ± ¼° (F- 4,F-5, & F-6). **Caster**—2½° to 4½° (F-1, F-2 & F-3)①, 1° to 3½° (F-4, F-5 & F-6), 1° to 3° (Parcel Del. & Sch Bus). Maximum variation between wheels ½°.

①F-2, F-3 without caster wedges, caster angle should be Neg. ½° to Pos. 1½°.

NOTE—Caster angle controlled by wedge shims inserted between axle pads and springs. To increase caster, insert taper shims equally at both sides.

Camber—¼° to 1° (All Models). Maximum variation between wheels ¼°. Right wheel must not exceed left wheel.

Toe-In—0-1/16" (All Models) with truck empty.

STEERING GEAR

F-1, F-2, F-3—Ford No. 7RC-3504.
F-4, F-5, F-6—Ford No. 7RT-3504.
Cab-Over-Eng. & Parcel Del.—Ford #7RW-3504-B.

Worm-and-Roller types with "push-pull" adjustment. Gemmer 305 & 335 design. See Gemmer.

See Steering Gear Section for complete data.

BRAKES

F-2, 3, 4, 5, 6 SERIES

►*F-1 BRAKES: See Passenger Car pages.*

Service—F-2 (All Wheels), F-3 (Front): Ford-Lockheed Hydraulic, self-centering, double anchor type. Hand lever applies rear wheel service brakes.

F-3 (Rear Wheels), F-4, 5, 6 (All Wheels)—Ford-Lockheed Hydraulic, double anchor type. Hand lever applies rear wheel service brakes (F-3), independent shaft brake at transmission (F-4, F-5, F-6).

►**Parcel Delivery Note**—Ford-Lockheed Hydraulic, double anchor, with 13⅛" I.D. drums and independent shaft brake at transmission.

See Brake Section for complete data.

Wheel Cylinders—Diameters: **F-2 All Wheels, F-3 Front** 1.378" (hone limit 1.382") forward shoe, 1.003" (hone limit 1.005") reverse shoe. **F-3 Rear Wheels; F-4, F-5, F-6 Front Wheels** 1.378" (hone limit 1.382"). **F-4, F-5, F-6 Rear Wheels** 1.503" (hone limit 1.507").

Drum Diameter—

Model	Front	Rear
F-2	12"	12"
F-3 (1950-1951)	12"	14"
F-3 (Late 1951)	12"	12"
F-3 P. Del (1950-1951)	13⅛"	13⅛"
F-3 P. Del (Late 1951)	13⅛"	12"
F-4, F-5, F-6	14"	15"

Brake Drum Re-surfacing Limits—.020" (Except following models having a limit of .060") F-1 (Front & Rear), F-2, F-3 (Rear, Late 1951), F-4, F-5, F-6 (Rear).

Lining—Molded type (all shoes).

Lining Width & Thickness—

Model	Front	Rear
F-2 (1950-1951)	1¾"①	1¾"①
F-2 (Late 1951)	2"①	2"①
F-3 (1950-1951)	1¾"①	2"②
F-3 (Late 1951)	2"①	2"①
Par. Del. (1950-1951)	2"②	2"②
Par. Del. (Late 1951)	2"②	2"①
F-4, F-5, F-6	2"②	3½"③

Lining Thickness—①3/16"—②¼" ③5/16".

Lining Length—

Model	Front Pri.	Front Sec.	Rear Pri.	Rear Sec.
F-2 (1950-1951)	13½"	10⅜"	13½"	10⅜"
F-2 (Late 1951)	11½"	12 31/64"	11½"	12 31/64"
F-3 (1950-1951)	13½"	10⅜"	15 61/64"	10¾"
F-3 (Late 1951)	11½"	12 31/64"	11½"	12 33/64"
F-3① (1950-1951)	14 9/16"	12 41/64"	14 9/16"	12¼"
F-3① (Late 1951)	14 9/16"	12 41/64"	11 7/8"	12 33/64"
F-4, F-5, F-6	15 31/64"	10¾"	16⅝"	11 33/64"

①—Parcel Delivery.

Hand Brake (F-3): Hand lever applies rear wheel service brakes. See Service Brakes above.

Hand Brake (F-4, F-5, F-6): Independent external contracting band on drum at rear of transmission.

Adjustment—*See Ford Shop Notes.*

Drum Diameter—7 81".

Lining Woven. Lgth. 24.6". Width 2½". Thick. ¼".

TIGHTENING SPECIFICATIONS

	Ft. Lbs.	In. Lbs.
Cylinder Head Bolts	30-35	360-420
Spark Plugs	30	360
Con. Rod Bearing Bolts	40-45	480-540
Main Bearing Cap Bolts	85-95	1020-1140
Flywheel Mounting Bolts	35-40	420-480
Camshaft Sprocket Nut	35-40	420-480
Camshaft Thrust Plate	12-15	144-180
Timing Gear Cover	12-15	144-180
Eng. Front End Plate 5/16"	12-15	144-180
Eng. Front End Plate 7/16"	40-50	480-600
Int. & Exh. Manifolds	30-35	360-420
Oil Pan Screws	12-15	144-180
Water Pump Mtg. Bolts	12-15	144-180
Vibration Dampener Bolt	100-130	1200-1560
Steering Wheel Nut	10-15	120-180
Steering Gear Mtg. Bolts	25-30	300-360
Pitman Arm Nut	110 min.	1320
Rear Spring "U" Bolt Nuts	45-55	540-660
Wheel Mtg. Nuts or Bolts	85-90	1020-1080
Differential Bearing Caps	38-42	456-504
Rear Axle Shaft Nut	160 min.	1920

CAUTION—Torque figures given are for clean and dry threads. If threads oiled, reduce torque approx. 10%.

CYLINDER HEAD

CYLINDER HEAD INSTALLATION: Use a Torque Indicating Wrench to tighten cylinder head bolts, tighten in correct sequence as shown in diagram. Heads should be tightened cold and rechecked after engine temperature reaches 150°F.

Tightening Torque: See Tightening Specifications.

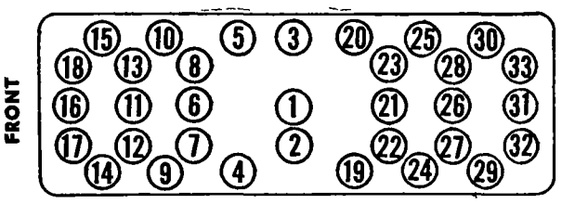

ORIGINAL BORE & PISTONS

BORE & PISTON SIZES: Engines originally equipped at factory with special oversize pistons may be identified by code letter following engine number:

"N"—Pistons are .020" Oversize.

"AN"—Pistons .020" Oversize. Main and connecting rod bearings Undersize (See Original Bearing Sizes).

"NX"—Pistons .020" Oversize. Main bearings are Undersize (see Original Bearing Sizes following).

PISTONS

PISTON IDENTIFICATION: Two types of aluminum alloy pistons used which can be identified as follows:

►*CAUTION—Piston weight different on each type.*

Strut Type Piston—Has wide strut embedded within skirt at each piston pin boss and drilled oil drain holes in both #3 and #4 ring grooves.

T-Slot Type Piston—Has horizontal slot in lower (#4) ring groove and short vertical slot on one side of piston skirt. #3 oil ring groove has drilled oil drain holes.

PISTON RINGS

REPLACEMENT PISTONS: See "Piston Identification" for types used. Each type piston furnished in following sizes:

	Kaiser-Frazer Part No.	
Piston Size	Strut Type	T-Slot Type
Standard	200108	201947
.005" Oversize	200357	201949
.010" Oversize	200358	201950
.020" Oversize	200359	201951
.025" Oversize	202484	202487
.030" Oversize	200360	201952
.040" Oversize		203751
.050" Oversize		203752
.060" Oversize		203753

►*CAUTION—Piston weight different on each type.*

REPLACEMENT RINGS: Rings furnished as single rings (12 Compression, 12 Oil Rings required), or in complete sets (1 Set per car) as follows:

Single Rings

Ring Size	Compression—Part No.	Oil
Standard	200111	200112
.010" Oversize	200361	200364
.020" Oversize	200362	200365
.030" Oversize	200363	200366

Ring Sets

Ring Size	Cyl. Size①	Part No.
Standard	St. to .009" OS	203145
.020" Oversize	.010" to .029" OS	203146
.040" Oversize	.030" to .049" OS	203147
.060" Oversize	.050" to .069" OS	203148

①—Use ring indicated for oversize cylinders within this range (check End Gap).

ORIGINAL BEARING SIZES

MAIN & CONNECTING ROD BEARING SIZES: Engines originally equipped with special undersize main and connecting rod bearings may be identified by code letter following engine number:

"A"—Main & Connecting Rod Bearings .010" Undersize.

"X"—Main Bearings .002" Undersize.

"AN"—Main & Connecting Rod Bearings .010" Undersize and Pistons Oversize (see Original Bore and Pistons).

"NX"—Main Bearings .002" Undersize and Pistons Oversize (see Original Bore and Pistons).

TAPPET CLEARANCE ADJUSTMENT

TAPPET CLEARANCE ADJUSTMENT PROCEDURE: Car manufacturer recommends valves be adjusted in order listed (see table below). Remove right front wheel and access cover in fender splash shield for access to valve compartment. Remove spark plugs so that engine can be turned over by moving fan or fan belt. By setting valves in fully raised position (left hand column), **valves in right hand column** will be on "low" side of cam **in position for tappet adjustment.**

Valve Tappet Adjustment Order
(numbered from FRONT of engine)

Fully Raise Valve	Then ADJUST Valve:
Nos. 1 and 3	Nos. 10 and 12
Nos. 8 and 9	Nos. 4 and 5
Nos. 2 and 6	Nos. 7 and 11
Nos. 10 and 12	Nos. 1 and 3
Nos. 4 and 5	Nos. 8 and 9
Nos. 7 and 11	Nos. 2 and 6

Tappet Clearance—Prior to Engine No. 10769, tappet clearance should be .010" Intake, .014" Exhaust. Beginning Engine No. 10769 tappet clearance is .014" for both Intake and Exhaust valves.

OIL PAN REMOVAL

OIL PAN REMOVAL: Raise front end of car and support it securely on stands. Disconnect steering drag link at idler arm on frame, turn wheels to right and work drag link clear of oil pan. Drain oil, remove oil pan capscrews and lockwashers, slide pan to rear.

►**INSTALLATION NOTE**—Lower Filler Blocks (front and rear) must be removed to install new oil pan side gaskets. See "Front & Rear Filler Blocks" under Crankshaft & Main Bearings (above) for data.

OIL PUMP

OIL PUMP SERVICING: Pump can be removed from engine (with oil pan off) by taking off retaining nut on stud on #3 main bearing cap and pulling pump straight down to disengage drive gear and distributor drive coupling. Service pump as follows:

Disassembly—Take out cotter pin and remove screen float assembly. Remove cover and gasket. Drive out pin holding upper drive gear on shaft (pin peened in place), drive out shaft from gear. remove idler gear (remove idler shaft if required). Take off lower drive gear (press fit and keyed to shaft).

Oil Pump Clearances—Check as follows:

1)—Pump Body Bushing: if over .005" clearance between pump body and ends of lower drive gear teeth, replace bushing and ream to .500-.501".

2)—Pump Shaft: shaft diameter .4990-.4985".

3)—Lower Drive Gear: end of gear should be .001-.006" beyond gasket seat on pump body.

4)—Upper Drive Gear: .002-.004" clearance between underside of gear and upper end of pump body. Controlled by pressing lower drive gear on shaft until this clearance obtained.

NOTE—Cover plate should be replaced if worn from contact with gears, or if cracked.

Oil Pump Bushing (in Cylinder Block)—Replace if worn or loose (can restrict oil gallery if loose). Replace by using drift inserted in distributor drive shaft bore from top of block. Install new bushing from below (must be flush with bottom of block).

Reassembly—Press upper drive gear on shaft with pin hole at right angles to tongue on shaft. Insert new pin and peen ends flush with gear. Install shaft and gear in pump body. Press lower drive gear on shaft (with key in place) until .002-.004" clearance obtained between upper drive gear and upper end of pump body. Press idler gear shaft in body, install idler gear. Install cover using new gasket and pin oil screen float assembly on cover. Check shaft and gears—must rotate freely when turned by hand.

Oil Pump Installation—Set #1 piston at top dead center. Insert distributor main drive shaft from top of block. Install pump with pump drive shaft tongue engaging slot in lower end of distributor main drive shaft and in such a position that when installed, slot in upper end of distributor main drive shaft will be approx. parallel to side of block (slot pointing fore-and-aft), install lock washer, tighten mounting nut. Remove distributor shaft for cyl. head installation.

►*CAUTION—Check Ign. Timing after pump installed.*

MODEL IDENTIFICATION

SERIAL NUMBER: On plate located on left front pillar post.

ENGINE NUMBER: Stamped on pad on left front upper corner of engine block and on Engine Name Plate on left side of crankcase.
NOTE—Numeral following Engine Model Designation (first part of Engine Number on Engine Name Plate) indicates Engine Plant: 4—Detroit, 8—Muskegon.

►**Engine Number Symbol (Special Bore & Bearing Sizes)** *See "Original Bore & Pistons" & "Original Bearing Sizes" in Frazer Special Data.* NOTE—Symbol consists of 1 or 2 letters following engine number.

TUNE-UP

COMPRESSION PRESSURE: 120-130 lbs. (7.3-1 Heads) at cranking speed of 70 RPM. (engine hot, all plugs out, throttle wide open). All cylinders must be equal within 10 lbs.
NOTE—7.3-1 Heads marked by "73" stamped on head directly above engine number pad on block.

VACUUM READING: 17½" steady idling at 550 RPM.

FIRING ORDER: 1-5-3-6-2-4. See diagram.

SPARK PLUG GAPS: .032" (A-5 plug), .040" (AR-5 plug).
Plug Type—Auto-Lite A-5 or Resistor type AR-5. 14 mm.

DISTRIBUTOR: Breaker Gap—.020" (.018-.022").
Cam Angle—38° closed, 22° open.
Breaker Arm Spring Tension—17-20 ozs.
Automatic & Vacuum Advance—*See Ignition.*
Condenser Capacity—.20-.25 microfarad.

IGNITION TIMING: 4° BTDC.
Timing Procedure—*See Ignition Timing.*
Timing Mark—4th. graduation before top dead center "0" mark on vibration dampener.

►*CAUTION—Engine must be idling below 450 RPM when setting timing.*
Octane Selector Setting—Set for slight ping when accelerating with wide open throttle.

CARBURETION:
Idle Setting—½ to 1 turn open—2 screws. Turn screws out for richer mixture.
Idle Speed—550-600 RPM (Std.), 425-450 RPM (Hydra-Matic).
Float Level—(Early Production, Spring Loaded Needle & Seat assembly)—7/64". (Later Production, Solid Needle & Seat assembly)—¼", measured from machined surface of bowl cover to top of float with bowl cover inverted.

►*CAUTION—When measuring float level do not depress float lip against spring in needle, but let float rest of its own weight. Adjust by bending lip of float, not float arm.*
Accelerating Pump—No seasonal adjustment. *See Carburetor Section for complete data.*

Choke Setting: Centered (coil housing at index mark).

Fuel Pump Pressure: 3-4½ lbs.

►*CAUTION—Pump pressure must not exceed 4½ lbs.*

MANIFOLD HEAT CONTROL: Automatic thermostatic type. See that valve operates freely.

VALVE TAPPET CLEARANCE: .014" All Valves, Cold.

►**Adjustment Procedure**—*See Frazer Special Data.*

NOTE—Remove splash shield under right front fender for convenience in adjusting valves.

Valve Timing Check—*See Valve Timing.*

STARTING: *See Battery, Starter, Generator, Regulator.*

IGNITION

IGNITION SWITCH: Kaiser & Frazer No. 204485.
Lock Cylinder—Kaiser-Frazer No. 203885 (with key).

COIL: Auto-Lite IG-6009A (Early), CR-6009 (Late).
On left side of engine opposite distributor.
Ignition Current—4.8 amperes at 6.3 volts (stopped).

CONDENSER: Auto-Lite Part No. IG-2671K.
Capacity—.20-.25 microfarad.

DISTRIBUTOR: Auto-Lite Model IGS-4214. Full automatic advance type with auxiliary vacuum spark control and octane selector adjustment.

Breaker Plate Identification—Maximum vacuum advance limited by slot in plate. Plate marked #5.
Breaker Gap—.022" (.018-.022").
Cam Angle—38° closed, 22° open.
Breaker Arm Spring Tension—17-20 ozs.
Rotation—Counter-clockwise viewed from above.

Distr. Degrees	Automatic Advance R.P.M.	Eng. Degrees	R.P.M.
Start	325	0	650
1	450	2	900
6.5	1200	13	2400
8	1475	16	2950
9	1675	18	3350

Octane Selector—Manual adjustment at distributor providing advance and retard. See Ignition Timing.

Vacuum Spark Control: Auto-Lite (integral type).

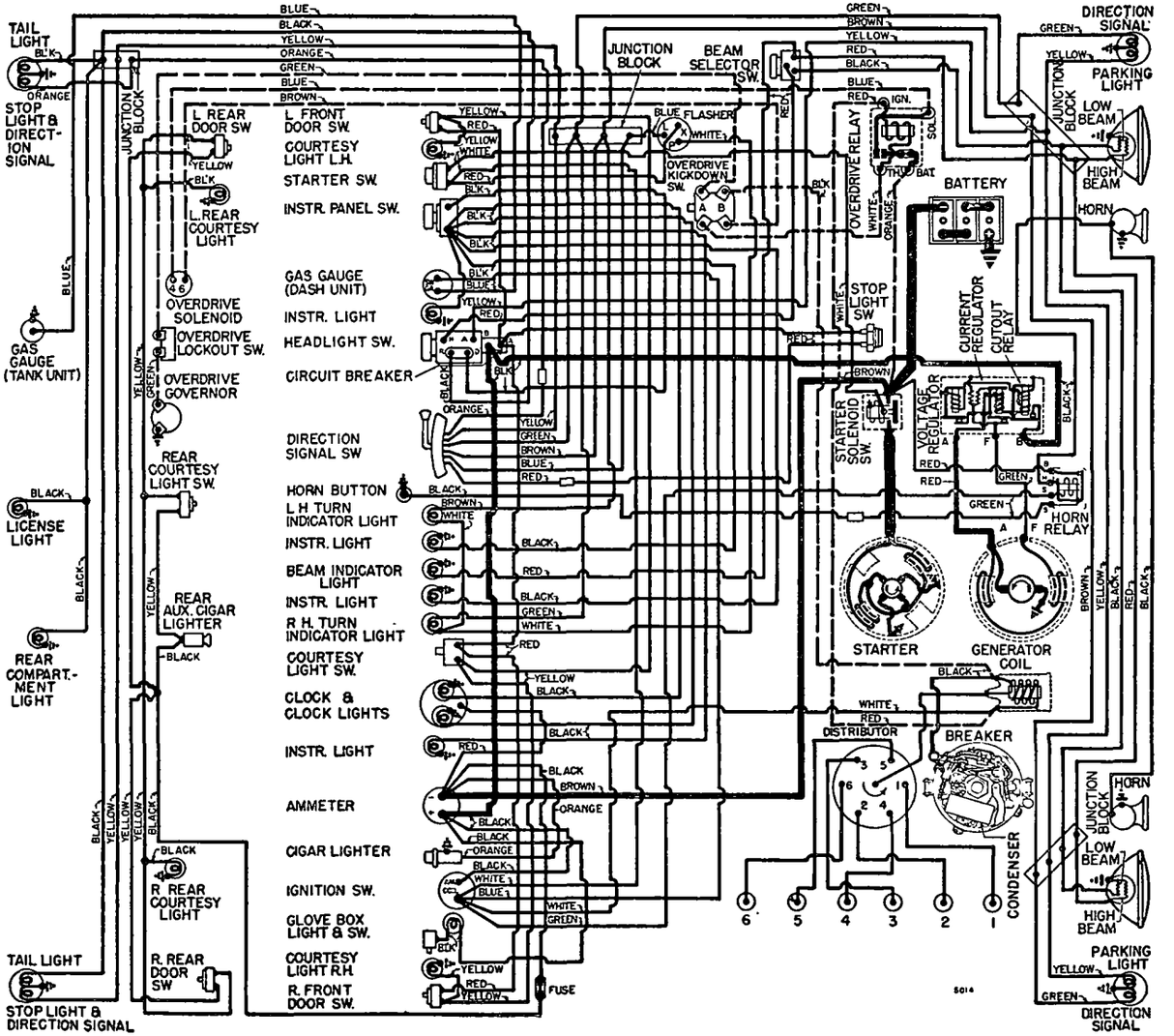

Linked directly to breaker plate. Provides additional advance at speeds above idling except when engine accelerated or operated with wide open throttle when spark retarded by return spring in unit.

Vacuum Advance

Distr. Degrees	Eng. Degrees	Vacuum (" of HG)
Start	0°	10"
3	6°	13"
5	10°	15"

Distributor Removal: On cylinder head between #4 and #5 cylinders. To remove, disconnect vacuum line, take out hold-down screw in advance arm.

IGNITION TIMING

Std. Setting ..... **4° BTDC.**
Timing Mark—Timing mark located on vibration dampener. Consists of "0" mark at top dead center with 1° graduations before and after this point.
Timing (with Timing Light C-693)—Mark fourth degree mark before "0" top dead center mark on vibration dampener with chalk or white paint. Connect timing light to #1 spark plug terminal and direct light at timing mark. Idle engine **below 450 RPM,** (back off throttle stopscrew to decrease normal idle speed of 550 RPM). Loosen hold-down screw in advance arm, center screw in slot, tighten hold-down screw. Loosen cap screw in end of arm under distributor, rotate distributor until timing mark appears in line with pointer, tighten capscrew. Check octane selector setting.
►*CAUTION*—Reset engine idling speed to 550 RPM on cars with synchro-mesh transmission.
Octane Selector Setting—Set for slight ping when accelerating with wide-open throttle. To adjust, loosen hold-down screw in advance arm, rotate distributor clockwise (if no ping noted), counter-clockwise (if ping too severe).

CARBURETOR

Carter WGD Type 813S. 1¼" Dual (double barrel), Downdraft type with Fast Idle and Climatic Control.
Casting No. on Flange—774.
See Carburetor Section for complete data.
Settings (Idle Setting, Float Level, and Accelerating Pump): *See Tune-Up data.*
Metering Rods & Jets—*See Carter Jet Table in Carburetor Section.*
Fast Idle: Carter Dual (WGD) type.
Setting—With thermostatic coil housing gasket and baffle plate removed, crack throttle valve and hold choke valve closed. There should now be .018" to .023" clearance (gauge T109-29) between throttle valve and bore of carburetor (side opposite idle port). Adjust by bending the choke connector rod at lower angle bend.
See Carburetion Equipment Section for complete data.
Automatic Choke: Carter Climatic Control (Dual Carburetor Type).
Setting—Centered (coil housing at index mark).
See Carburetion Equipment Section for data.

CARB. EQUIPMENT

Air Cleaner: AC No. 1544539 Oil-bath type.
Element—AC No. 22.
Servicing—Empty and clean reservoir, wash cleaner in kerosene, refill to indicator line with SAE No. 50 engine oil (No. 20 for below freezing temp.) at 2000 mile intervals or when engine tuned.
Fuel Pump: AC No. 1539074 combination Fuel-and-Vacuum Pump.
Replacement Pump—AC No. 582.
►*CAUTION—Install pump with rocker arm UNDER camshaft eccentric.*
Pressure—3-4¼ lbs.
See Carburetion Equipment Section for data.
Gasoline Gauge: Auto-Lite electric type.
Dash Unit—A-L No. 11586A.
Tank Unit—A-L No. 11571A.
See Carburetion Equipment Section for data.

BATTERY

Auto-Lite Type 1M-100D. 6 Volt, 15 Plate, 105 Ampere Hour capacity (20 hour rate).
Grounded Terminal—Positive (+) terminal grounded at left front engine support. Engine ground cable connected at same point.
Location—In engine compt. on left side.

STARTER

Auto-Lite Model MAW-4054 (Std.), MAW-4057 (Hydra-Matic). Armature MAW-2138.
Drive—Barrel type Bendix Drive No. A1792.
Rotation—Counter-clockwise at commutator end.
Brush Spring Tension—42-53 ozs. (new brushes).

Performance Data

Torque	R.P.M.	Volts	Amperes
0 ft. lbs.	4900	5.5	65
2.75 "	1480	5.0	200
12.0 "	Lock	3.0	505
6.0 "	Lock	2.0	335

Starting Switch: Magnetic switch K-F Part No. 204752 on splash shield near starter and controlled by push-button on instrument panel.
See Electrical Equipment Section for complete data.

GENERATOR

35 Amp.....Auto-Lite GDZ-4818A. Arm. GDZ-2006F.
45 Amp.....Auto-Lite GGU-6001B. Arm. GGU-2006F.
Two brush type with voltage and current regulation.
Charging Rate Adjustment—None (see Regulator).
Maximum Charging Rate—As given below.

Performance Data (GDZ-4818A)

Amperes	Volts	Cold—R.P.M.—Hot
0	6.4	870-970 950-1050
35	8.0	1800-2000 2150-2350

Performance Data (GGU-6001B)

Amperes	Volts	Cold—R.P.M.—Hot
45	8.0	1550 Max. ———

Rotation—Counter-clockwise at commutator end.
Brush Spring Tension—35-53 ozs. (new brushes).
Field Current—(GDZ) 1.60-1.78 amperes at 6.0 volts, (GGU) 1.7-1.8 amperes at 6.0 volts.
Motoring Current—(GDZ) 4.16-4.60 amperes at 6.0 volts, (GGU) 5.5-6.2 amperes at 6.0 volts.
Belt Adjustment: Adjust by pulling generator out with 15 lb. force in line with adjuster link with all mounting bolts loose. A 6 lb. adjustment for new belt is recommended.

REGULATOR

Auto-Lite Regulator No.	For Generator No.
VRP-4004F-2 (Early)	GDZ-4818A
VRP-6001A (Late)	GDZ-4818A
VAV-4002C (Taxi)	GGU-6001B

Vibrating type voltage and current regulators.
See Electrical Equipment Section for complete data.
NOTE—Regulator cover sealed. Warranty void if seals broken.

Cutout Relay
Cuts In—6.4-7.0 volts (set to 6.4-6.6 volts).
Cuts Out—4.1-4.8 volts (approx. 4-6 amps. disch.).
Contact Gap—.015" minimum.
Air Gap—.031-.034" with contacts open (check at hinge end of core).

Voltage Regulator
Setting—7.2-7.5 volts at 70°F. See Electrical Equipment Section for settings at other temperatures.
Checking (without breaking seal) & Adjustment—*See Electrical Equipment Section.*
Contact Gap—.012" min. (armature against stop pin).
Air Gap—.048-.052" with contacts just opening.

Current Regulator
Setting—As follows:
VAV-4002C 44-46 amperes (marked '45' on cover).
VRP-4004F-2 34-36 amperes (marked '35' on cover).
Checking (without breaking seal) & Adjustment—*See Electrical Equipment Section.*
Contact Gap & Air Gap—Same as Voltage Regulator.

LIGHTING

Headlamps: Hall "Sealed Beam" type. Upper and lower beams controlled by beam selector switch.
See Electrical Equipment Section for complete data.
Adjustment—Aim upper beam straight ahead (hot spot center 3" below lamp center height at 25 ft.).
Beam Indicator—Red jewel at bottom of speedometer dial. Lighted when upper (country beams) in use.
Direction Signal: Mitchell (United Specialties) type.
See Electrical Equipment Section for complete data.
Direction Indicators—Right and Left indicator lights on face of speedometer. Lighted when direction signal on same side of car in operation.

Switches
Lighting—Kaiser-Frazer No. 203830.
Beam Selector—Kaiser-Frazer No. 204545.
Instrument Panel—Kaiser-Frazer No. 203833.
Courtesy (on Instrument Panel)—K-F No. 200821.
Door—Kaiser-Frazer No. 204229.
Dome Lamp—Kaiser-Frazer No. 204779.
Stop Lamp—Kaiser-Frazer No. 201466.
Direction Signal—Kaiser-Frazer No. 204552.

MISC. ELECTRICAL

LIGHTING CIRCUIT BREAKER: Thermostatic type, 30 amperes. On back of lighting switch.
FUSES: Clock—2 ampere. In clock lead.
Overdrive—20 amperes. On control relay.
Rear Seat Cigar Lighter & Body Lights—30 ampere in lead back of instrument panel.
HORNS: Auto-Lite or Sparton. A-L HW-4017 (Low Note), HW-4018 (High Note). Twin horns.
Horn Current—Approximately 15 amperes each at 6.2 volts.
Horn Relay: Auto-Lite Model HRL-4101. Relay connected through ignition switch (horns operative only with ignition switch "on").
Contacts Close—1.5-3.0 volts (seal to core with 4.0 volts maximum).
Contacts Open—.5 volt min. (open from seal).
Contact Gap—.026". **Air Gap**—.016-.020" (armature air gap with contacts closed but not sealed), .015-.018" (between armature leg and yoke with armature sealed to core.

CONTINUED N NEXT PAGE

C NTINUED FROM PRECEDIN PAGE

ENGINE

ENGINE SPECIFICATIONS: Own (Continental). Six Cylinder, "L" head type.
Bore—3 5/16" (3.3125-3.3145"). *See "Original Bore & Pistons" in Frazer Special Data.*
Stroke—4⅜".
Displacement—226.2 cu. ins. **Rated HP.**—26.3
Developed Horsepower—115 at 3650 RPM.
Compression Ratio—7.3-1.
NOTE—7.3-1 Heads marked by "73" stamped on left front directly above engine number on block.
Compression & Vacuum Reading—*See Tune-Up data.*

CYLINDER HEAD AND TIGHTENING TORQUES: *See Frazer Special Data.*

PISTONS: Aluminum alloy, Cam-ground. Tin-plated, T-slot type. Length 3 17/32".
Clearance—See Fitting new pistons.
Removal—Pistons and rods removed from above.
►*CAUTION—Mark piston and rod assemblies before removal to insure re-installation in same cylinder.*

Fitting New Pistons: Use .0015" feeler stock ½" wide inserted on side opposite slot. Pull to withdraw feeler must be 5-10 lbs.

Replacement Pistons: *See Frazer Special Data.*

Installing Pistons: Slot in skirt toward left or away from camshaft.

PISTON RINGS: Two compression, two slotted oil rings, all above pin. Third ring groove drilled, fourth groove slotted for oil drainage.

Ring	Width	End Gap	Side Clearance
Comp. (#1)	.0925-.0935"	.008-.016"	.0025-.004"
Comp. (#2)	.0925-.0935"	.008-.016"	.0015-.0035"
Oil (#3,4)	.1550-.1545"	.008-.016"	.001-.0025"

Installing Rings: Side marked "TOP" (compression rings) upward.

Replacement Rings: *See Frazer Special Data.*

PISTON PIN: Diameter—.8591-.8593". **Lgth.**—2 13/16". Floating type with lock ring at each end.
Pin Fit in Piston—Push fit with piston heated to 212°F. (heat piston in water at 212°F. to install new pins).
Pin Fit in Rod Bushing—Light press fit. When installing new bushings, ream bushings with DD-82-2 Reamer to inside diameter of .8593-8595" for new std. pins.
►*CAUTION*—Pin bushing must protrude 1/64" on each side of rod.

Replacement Pins: Std. size and .003", .005" Oversize.

CONNECTING ROD: Length—7". **Weight**—29.6 ozs.
Crankpin Journal Diameter—2.0619-2.0627".
►*CAUTION—Special bearing size used in some engines. See "Original Bearing Sizes" in Frazer Special Data.*
Lower Bearing—Removable steel-backed, babbitt-lined type. No shims.
Clearance—.0005-.0018". **Side Play**—.006-.010".

Bearing Adjustment: None. Replace bearings. Do not file rods or bearing caps.

Replacement Bearings: Furnished Std. Size and .001", .002", .010", .012" Undersize.
CAUTION—Install bearings with tang engaging notch in rod and cap and oil hole aligned with oil spurt hole in rod.

Installing Rods: Mark rods and bearing caps. Install with marks together and toward camshaft in same order as when removed. Oil spray hole in lower end of rod toward camshaft. NOTE—Lower bearings offset with narrow side of rod toward nearest main bearing (#1, 3, 5 toward front; #2, 4, 6 toward rear of engine).

CRANKSHAFT: Four bearing, counterweighted type with vibration dampener on forward end.
Journal Diameters—2.3744-2.3752". NOTE—Allowable taper or out-of-round .001".
►*CAUTION—Special bearing size used in some engines. See "Original Bearing Sizes" in Frazer Special Data.*
Bearings—Removable, steel-backed babbitt-lined.
Clearance—.0007-.002".

Bearing Adjustment: None (no shims). Replace bearings. Do not file bearing caps. Upper main bearing shells can be "rotated" out by installing tool KF-8 in crankshaft journal hole (lug on tool engages edge of bearing when crankshaft rotated).
Filler Block (Front & Rear) Removal & Installation—*See "Crankshaft & Main Bearings" in Frazer Special Data.*

Replacement Bearings: Furnished Std. size and .001", .002", .010", .012" Undersize.

End Thrust: Taken by front (#1) bearing (special thrustwasher used with unflanged bearings). Controlled by shims installed between front crankshaft thrust washer (ahead of #1 bearing) and crankshaft thrust plate (behind crankshaft sprocket).
End Play—.002-.006".

CAMSHAFT: Four bearing. Two-sprocket chain drive.
Journal Diameters—#1, 1.8725-1.8735"; #2, 1.8095-1.8105"; #3, 1.7472-1.7485"; #4, 1.2475-1.2485".
Bearing Diameters (I.D.)—#1, 1.8745-1.8755"; #2, 1.8115-1.8125"; #3, 1.7495-1.7502"; #4, 1.2495-1.2505".
Bearings—Steel-backed, babbited bushings.
Clearance—.002-.004".

Bearing Adjustment: None. Replace bushings with camshaft removed.

Replacement Bushings: Replace as set (furnished finished line-bored and do not require reaming after installation). Use KF-4 Camshaft Bearing Remover & Replacer.
►*CAUTION—Align oil hole in bushings and block.*

End Thrust: Taken by thrust plate on front of engine (between front bearing journal and camshaft sprocket. **Endplay**—.003-.007".

Timing Chain: Non-adjustable type. Width 1". Pitch .500", Length 23" or 46 links.
►*Timing Chain Caution—Morse and Link Belt chains used. Interchangeable only as complete sets with both sprockets.*

Camshaft Setting: Mesh chain with 9 links (or 10 link pins inclusive of pins opposite marks) between marks on sprockets with #6 piston at top dead center on compression stroke.

VALVES:	Head Diameter	Stem Diameter	Length
Intake	1 33/64"	.3414-.3406"	5 3/16"
Exhaust	1 21/64"	.3382-.3390"	5 3/16"

	Seat Angle	Lift	Stem Clearance
Intake	30°	.3520"	.0008-.0026"
Exhaust	45°	.3315"	.0032-.0050"

Valve Seat Width: 5/64" (max.).

Valve Guides: Pressed in block. Replace when stem clearance exceeds maximum (above). Ream new guides for correct clearance using Reamer C-249.
Valve Guide Installation—Place guide (tapered end of guide toward top) in position in bore. Use Tool KF-27 when installing guides to correct position of 1 7/32" below top face of cylinder block.

Valve Springs: Check spring with tester C-647. Pressure should be 45 ± 2½ lbs. at 1 21/32". Free length 1 31/32".

	Spring Pressure	Length
Valve Closed	51 lbs.	1 43/64"
Valve Open	113 lbs.	1 5/16"

Valve Lifters: Barrel type. Two types used and are interchangeable. One type using tappet adjusting screw with locknut, other type is self-locking.
Clearance—Selective fit. Lifter should rotate in bore with slight drag. Service by installing oversize lifter.
Replacement Lifters—Furnished Std. size and oversize. Oversize identified as follows: "A", .0005", "B", .001", "C", .0015", "D", .002", "K", .005", "S", .008".

VALVE TIMING

Tappet Clearance: .014" All Valves, Cold.
►**Adjustment Procedure**—*See Frazer Special Data.*

Valve Timing: See Camshaft Setting above.
Intake Valves—Open 10° BTDC. Close 60° ALDC.
Exhaust Valves—Open 55° BLDC. Close 10° ATDC.
Valve Timing Check—With .020" tappet clearance, #1 exhaust valve should close with piston 10° or .045" after top dead center with ten-degree mark after dead center "0" mark on dampener aligned with pointer at front of engine.

LUBRICATION

Lubrication System: Pressure to crankshaft, connecting rod, camshaft bearings, exhaust valve lifters, timing chain. Oil pump located in oil pan.
Crankcase Capacity—5 qts. (refill), 5½ (dry).
Normal Oil Pressure—35-40 lbs., 2000 RPM., 30 MPH.
Oil Pressure Regulator—Located in right side of cylinder block below the valve chamber and toward the rear of engine. Adjustable by replacing spring or install washers No. 200272 between end of spring and plug.

Oil Pressure Gauge: Auto-Lite No. 11585A (Not elec.).

Oil Pan Removal: *See Frazer Special Data.*

Crankcase Ventilation: Filter element in oil filler cap (air intake). Outlet pipe located on front valve cover plate on right side of engine.

Oil Pump: Gear Type. In crankcase.
Oil Pump Servicing—*See Frazer Special Data.*

Oil Filter: Replace cartridge at 10,000 mile intervals or more often if required by operating conditions.

COOLING

Cooling System: Sealed system (relief valve in filler cap) with positive circulation and thermostatic control.
Capacity—13½ qts. (13 qts. at driving level).
Pressure Valve—AC No. 850501 (Radiator Filler Cap). 3¼-4¼ lbs.

Water Pump: Centrifugal type with ball bearing shaft. *See Water Pump Section for complete data.*
Belt Adjustment—*See Generator Belt Adjustment.*

Thermostat: Kaiser-Frazer No. 200160 (Std.), No. 202349 (for Permanent Anti-freeze only). In water outlet elbow on cylinder head.
Setting (Std. type)—Begins to open at 149-156°F. Fully open at 176°F.
Temperature Gauge: Auto-Lite No. 11775A (Not elec.).

CLUTCH

Auburn Model 9251-18 or Borg & Beck 9A7 No. 951. Single plate, dry disc type.
►**Clutch Identification**—Types can be identified by number of pressure plate springs—3 (for Auburn), 9 (for Borg & Beck). Borg & Beck cover marked 951.
See Clutch Section for complete data.
Facings (Borg & Beck)—Woven asbestos, 2 required. Inside Diam. 6". Outside Diam. 9¼". Thickness ⅛".
Facings (Auburn)—Molded metallic or Raybestos. 2 required. I. D. 6". O. D. 9¼". Thickness .135".
Pedal Adjustment: Pedal free travel ⅝-¾". To adjust remove return spring, clevis pin and release clevis end of adjusting link from clutch pedal shaft bellcrank. Turn clevis end in or out to obtain correct pedal free movement. Install adjusting link clevis on bellcrank, insert clevis pin, cotter pin, and return spring.
Removal: Remove transmission (see Transmission Removal below), remove housing pan. Position of clutch on the flywheel must be marked before removal. Rotate flywheel, using Flywheel Turning Tool C-771 and loosen six bolts equally before removing. Remove clutch pressure plate and cover assembly and clutch disc.

TRANSMISSION

Warner Model AS49-T86E (Std.), Model AS50-T86E with new Type R10B Overdrive (Optl.)—Constant-mesh, synchro-mesh (Second & High), sliding gear (Low and Reverse).
See Transmission Section for complete data.
Transmission Control: Remote control type with gear-shift lever mounted on steering column.
See Transmission Section for complete data.
Removal: Remove clutch pedal return spring, clevis pins at cross shaft coupling and slide coupling onto cross shaft. Disconnect gear shift rods at transmission levers. (If overdrive is installed disconnect overdrive shift rod at overdrive unit.) Disconnect speedometer cable at transmission (plug hole in transmission to prevent loss of lubricant). Disconnect wiring to overdrive. Support rear of engine using Tool KF-47 or suitable jack under clutch housing, disconnect propeller shaft at front companion flange. Free engine rear support from cross-member by taking out two insulator bolts at transmission. Disconnect and remove master cylinder operating rod. Disconnect hand brake cable at equalizer and engine rear crossmember. Remove eight bolts at frame side rails and remove crossmember. Remove four bolts holding transmission to clutch housing and pull out the transmission. (If overdrive is installed it will be removed with transmission).

OVERDRIVE

Warner Type R10B (with special AS50-T86E Transmission). Optl. Equipment. New Governor controlled type (no centrifugal pawls) with electrical solenoid operation and throttle controlled "kick-down."
See Transmission Section for complete data.
Overdrive Solenoid—D-R 1118132, K-F No. 200911.
Governor—Kaiser-Frazer No. 200908.
Control Relay—Auto-Lite HRT-4001A, K-F Part No. 201636. Has 20-ampere fuse on BAT terminal.
Kick-down Switch—Kaiser-Frazer No. 203451.
Lock-out Switch—Kaiser-Frazer No. 200915.
Removal: Remove drain plug in overdrive housing and drain lubricant. Disconnect wiring at shift fork rail switch terminals. Disconnect speedometer cable at overdrive housing, control wire at control shaft lever on overdrive housing and the tie-down clips. Disconnect front propeller shaft at front companion flange and move shaft away from housing. Remove Overdrive and Transmission as a unit (see Transmission Removal above).

HYDRA-MATIC DRIVE TRANSMISSION

Four-speed planetary type automatic transmission and fluid coupling.
See Transmission Section for complete data.
Lubrication—Check fluid level every 1000 miles. Add fluid as required, to maintain level at "F" mark on dip stick. Drain and refill every 15,000 miles. Use Hydra-Matic Fluid (Automatic Transmission Fluid Type "A").
Capacity—Approx. 11 qts. (refilling after draining). 12 qts. (when transmission disassembled).
Checking Fluid Level—Check only with transmission warm (set hand brake, run engine with selector in "N"). With transmission oil hot, idle engine for at least two minutes, then check with engine running and selector in "N". Dip stick located under inspection hole cover in floor pan under front floor mat. Add fluid as required to bring level up to "F" mark on stick.
CAUTION—Do not fill above "F" mark on dip stick.
Draining & Refilling—*See "Kaiser-Frazer Hydra-Matic Drive" in Transmission Section.*
Removal: *See "Kaiser-Frazer Hydra-Matic Drive" in Transmission Section.*
Neutral Safety Switch Adjustment—(Hydra-Matic) No adjustment required.

UNIVERSALS

Detroit Series 4200. Ball-and-Trunnion. 3 used with intermediate universal at propeller shaft support.
See Universals Section for complete data.
Propeller Shaft & Support Bearing: Two shafts used with support bearing on frame crossmember at intermediate universal.
Propeller Shaft & Support Bearing Servicing—*See "Propeller Shaft" in Frazer Special Data.*

REAR AXLE

Spicer (Salisbury) Model 41-2. Semi-floating, Hypoid Gear type with Hotchkiss Drive.
See Rear Axle Section for complete data.
Ratio (Without Overdrive)—3.91-1 Std., 3.73-1 or 4.09-1 Optl.
Ratio (With Overdrive)—4.27-1 or 4.55-1.
Backlash—.003-.006". Shim adjustment.
Removal: Hoist rear end of car and place supports under frame. Remove rear wheels and drums (use Puller C-319). Disconnect propeller shaft at rear universal flange, disconnect hydraulic brake line at connector on axle housing, disconnect rear shock absorbers and sway eliminator links (when used) at spring seat, disconnect parking brake cables. Disconnect both springs at front hanger and rear shackle, remove axle and spring assembly from beneath car. NOTE—Axle can be removed without disturbing springs by taking out spring "U" bolts.
Axle Shaft Removal—Remove rear wheel and drum using puller C-319. Disconnect hydraulic brake line at backing plate and brake cable. Remove outer oil seal and backing plate (CAUTION—do not lose adjusting shims between backing plate and housing flange). Pull axle shaft and bearing assembly out.
Wheel Bearing Adjustment: Adjust endplay by adding or removing shims located between backing plate and axle housing flange (shims .003", .005", .010", .030" thick). Make certain that shim thickness at right wheel is .060" (to center thrust block on differential shaft), adjust endplay at left wheel.
Endplay—.001-.006".

SHOCK ABSORBERS

Monroe—Direct acting, hydraulic type. Serviced by replacement (mountings serviced separately).

FRONT SUSPENSION

Front Suspension: Independent, linked parallelogram type with coil springs.
See Front Suspension Section for complete data.
Kingpin Inclination—5½° preferred (4¾-5¾° crosswise).
Caster—0° preferred (—1° to +1°).
Camber—½° preferred (0° to ¾°).
Toe-In—1/8" preferred (1/16-1/8"). Adjust by turning both tie rods.
Steering Geometry (Toe-out)—Inner wheel 23°. Outer wheel 20°. No adjustment.

STEERING GEAR

Gemmer Model 305—Worm-and-Roller type with "push-pull" adjustments.
See Steering Gear Section for complete data.

BRAKES

Service Brakes: Bendix (Lockheed) Hydraulic type with floating self-centering shoes (no anchor pin adjustment). Hand lever applies rear service brakes.
See Brake Section for complete data.
Drums—Composite (cast-iron & steel). Diameter 11"
Lining—Molded type. Width 2". Thickness 13/64". Length 12¼" (forward shoe—all wheels), 10 1/32" (rear shoe—all wheels).
Clearance—.010" at heel and toe of each shoe.
Braking Power—55.5% Front wheels, 44.5% Rear.
Hand Brake: See Service Brake data (above).

MISC. MECHANICAL

Windshield Wiper: Vacuum type, cable operated.
See Miscellaneous Section for complete data.

HOOD ASSEMBLY

HOOD ALIGNMENT: Hinge screw holes in hood are slotted to permit fore-and-aft movement of the hood for adjustment (no adjustment at hood hinge-to-cowl mounting). To align hood, loosen three attaching screws at each hood hinge just enough to permit hood to be shifted on the hinges, shift hood as necessary to obtain 5/32" clearance between rear edge of hood and cowl, and uniform clearance between edge of hood and fender at each side, tighten hinge screws being careful not to change position of hood.

FRONT END SHEET METAL

FRONT END SHEET METAL ASSEMBLY REMOVAL: Entire front assembly with exception of hood (front fenders, splash shields, radiator shroud, grille, radiator, and radiator support) can be removed as an assembly for work on front of engine. To remove assembly, take out six bolts at body front cowl and one bolt and insulator at radiator support, disconnect fender-to-cowl brace on each side.

CYLINDER HEAD

CYLINDER HEAD INSTALLATION: Use a Torque Indicating Wrench to tighten cylinder head nuts. Heads should be tightened cold and rechecked after engine reaches temperature of 150°F.

Tightening Torque—See Tightening Specifications.

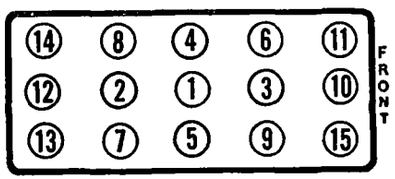

4 CYLINDER

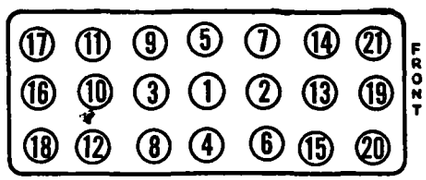

6 CYLINDER

TIGHTENING SPECIFICATIONS

	Ft.Lbs.	In.Lbs.
Cylinder Head Stud Nuts	60-65	780-792
Main Bearing Capscrews	65-70	780-840
Con. Rod Bolts (4 Cyl.)	50-55	600-660
Con. Rod Bolts (6 Cyl.)	25-30	300-360
Spark Plugs	30	360
Manifold Nuts	20-25	240-300

CRANKSHAFT & MAIN BEARINGS

CRANKSHAFT SERVICING: Bearing Replacement— ►*CAUTION*—4 Cyl. engine must be removed from car for bearing replacement (bearings "doweled" in case and crankshaft must be taken out to remove and install bearings). 6 Cyl. bearings not doweled in this manner.

Make certain that oil holes in bearings line up with oil holes in crankcase. On 4 cylinder, see that bearings fit snugly on dowel pins in crankcase and bearing caps.

Rear Bearing Oil Seal—Consists of a wick type packing installed in grooves in bearing cap and crankcase. To install new packing, insert packing in groove, use round piece of wood or steel to "roll" packing into groove, working from both ends toward center. With packing firmly seated in groove, cut off ends flush with surface. NOTE—Crankshaft must be removed to install packing in upper (crankcase) half of bearing.

Rear Bearing Cap Seal—Bearing cap sealed by cylindrical rubber packing strips inserted in holes between cap and case. When installing bearing cap, coat upper face lightly with sealing compound, insert new packing strips after cap is in place. Packing strips should protrude ¼" to provide proper compression when oil pan installed. CAUTION—Do not cut off this protruding portion of the packing.

Front (Timing Cover) Oil Seal—On all models, timing case cover (with double baffle and spring loaded leather seal) and crankshaft pulley (with polished surface for seal contact) used.

CAMSHAFT & BEARINGS

CAMSHAFT REMOVAL: Drain radiator and cylinder block, remove entire Front End Sheet Metal Assembly or remove grille and radiator. Remove cylinder head, manifold, valves, and valve springs. Remove oil pump, fuel pump, fan blade assembly, and oil pan. Remove drive belt. Use puller W-175 to remove crankshaft pulley. Remove timing gear cover. Remove camshaft gear using puller W-172. Tie up all valve lifters out of the way (can be held up by string to manifold studs). Take out attaching screws in camshaft thrust plate, remove thrust plate and spacer. Withdraw camshaft at front of engine.

Camshaft Front Bearing—Consists of a steel-backed, babbitt-lined bushing which takes thrust. When installing this bushing, make certain oil hole lines up with drilled oil hole in crankcase, stake bearing in place to prevent turning in service.

Camshaft Thrust Plate—Thrust plate is assembled on shaft behind camshaft gear with spacer between plate and camshaft front bearing journal. If required, thin shim can be installed behind spacer to increase clearance, or spacer can be dressed off to reduce clearance.

CAUTION—Install spacer with beveled inner edge toward rear.

OIL PUMP

ROTOR TYPE OIL PUMP: Pump mounted externally on left hand side of crankcase.

Pump Removal—Remove mounting screws in pump body flange, slide pump assembly out. To disassemble pump, remove cover screws and lockwashers, lift off cover, remove pump outer rotor. To remove shaft and rotor assembly, file off end of pin in drive gear hub, drive pin through shaft using a small drift, remove gear, withdraw shaft and rotor from housing. To remove oil regulator, remove hexagonal-headed plug on side of housing, withdraw regulator spring and plunger.

CAUTION—Do not lose adjusting shims located in plug above spring.

Pump Servicing & Assembly—Replace rotors if clearance between inner and outer rotor excessive, or if rotor clearance in housing excessive. Replace cover if rotor bearing surface is worn or scratched. Use new body and cover gaskets. Make certain that driving gear pin is securely installed.

OIL PUMP INSTALLATION: Turn flywheel to #1 piston firing position with flywheel mark "IGN" centered in inspection hole in right front face of flywheel housing below starter. Turn distributor shaft to #1 firing position with distributor rotor finger opposite #1 terminal in distributor cap. Hold oil pump in same relative position as when installed on engine, turn pump shaft until tongue offset is upward (widest part of shaft down) and line up gear retaining pin with right hand side of slot in pump body. Slide pump into place on mounting studs, recheck rotor position. NOTE—If distributor rotor not at #1 terminal with pump installed, remove pump, turn shaft as required, and re-install.

RADIATOR

RADIATOR REPLACEMENT: Radiator mounted in U-shaped cradle by three bolts on each side with shroud on each side at front of radiator to direct air flow through core. On 4 Cyl. model, additional shroud or fan ring installed between radiator core and fan to increase air flow through radiator core.

Radiator Removal—Drain cooling system and disconnect hoses. Take out three bolts on each side attaching radiator to cradle. On 4 Cyl. model, move fan shroud back out of the way or remove this shroud. Lift radiator out.

MODEL IDENTIFICATION

SERIAL NUMBER: On left front door hinge post. **1951 Nos.** 1001 Up.
Body Number Note—Stamped on plate on right front upper firewall in engine compartment.

ENGINE NUMBER: Stamped on top of water pump boss at front of engine and on Engine Name Plate on right side of crankcase.
1951 Nos. 3,500,000 Up.

TUNE-UP

COMPRESSION PRESSURE: 120-130 lbs. at cranking speed (Std. 7.0-1 Hd.). 10 lbs. max. variation between cylinders.

VACUUM READING: Steady 17-21" idling at 550 RPM.

FIRING ORDER: 1-3-4-2. See diagram.

SPARK PLUG GAP: .030".
Plug Type—Auto-Lite AN-7 (Std.). 14 mm. Tighten to 30 ft. lbs. torque.

DISTRIBUTOR: Breaker Gap—.020". Limits .018-.022".
Cam Angle—41°±1° closed.
Breaker Arm Spring Tension—17-20 ounces.
Automatic & Vacuum Advance—*See Ignition.*
Condenser Capacity—.20-.25 microfarad.

IGNITION TIMING: 5° BTDC.
Timing Procedure—*See Ignition Timing.*
Timing Mark—5° mark before top dead center "TC" mark on flywheel.
CAUTION—Engine must be idling below 550 RPM. when setting timing.

CARBURETION:
Idle Setting—½-1½ turns open. Turn screw out for richer mixture.
Idle Speed—550 RPM.
Float Level—9/32" from top of float at free end to bowl cover when needle is seated (assembly inverted).
Accelerating Pump—No seasonal adjustment.

Fuel Pump Pressure: 3½-4½ lbs. fast idle.

CRANKCASE VENTILATOR: Remove and clean Vacuum Control Valve on manifold. *See Crankcase Ventilator (following CARB. EQUIPMENT) for data.*

MANIFOLD HEAT CONTROL: Automatic thermostatic type.
See that valve operates freely.

VALVE TAPPET CLEARANCE: .016" All Valves, Cold.
NOTE—Tappet adjusting screws self-locking. Remove left front wheel and access hole cover in splash shield for access when adjusting valves.
Valve Timing Check—*See Valve Timing.*

STARTING: *See Battery, Starter, Generator, Regulator.*

IGNITION

IGNITION SWITCH: K-F No. 212063

COIL: Auto-Lite Model CR-4009. On right side of engine to rear of distributor.
Ignition Current—2.5 amperes (idling). 4.8 amps. (stopped) at 6.3 volts.

CONDENSER: Auto-Lite Part No. IAT-3076L.
Capacity—.20-.25 microfarad.

DISTRIBUTOR: Auto-Lite No. IAT-4008 & 4008-A. New "Pivoted Breaker Plate" type. Full automatic advance with auxiliary vacuum spark control.
See Electrical Equipment Section for complete data.
Breaker Gap—.020". Limits .018-.022".
Cam Angle—41°±1° closed.
Breaker Arm Spring Tension—17-20 ounces.
Rotation—Counter-clockwise viewed from above.

Automatic Advance—IAT-4008

Degrees	Distr. R.P.M.	Degrees	Eng. R.P.M.
Start	300	0°	600
1°	400	2°	800
5°	650	10°	1300
10°	1800	20°	3600
11°	2000	22°	4000

Automatic Advance—IAT-4008-A

Degrees	Distr. R.P.M.	Degrees	Eng. R.P.M.
Start	350	0°	700
2°	560	4°	1120
5°	875	10°	1750
8°	1190	16°	2380
11°	1500	22°	3000

Vacuum Spark Control: Auto-Lite (integral type). Linked directly to breaker plate. Provides additional advance at speeds above idling except when engine accelerated or operated with wide open throttle when spark retarded by return spring in unit.

Vacuum Advance—IAT-4008

Distr. Degrees	Eng. Degrees	Vacuum (" of HG)
Start	0°	4¾"
1°	2°	5⅜"
3°	6°	6¾"
4°	8°	7⅜"
5°	10°	8"

Vacuum Advance—IAT-4008-A

Distr. Degrees	Eng. Degrees	Vacuum (" of HG)
Start	0°	3½"
2°	4°	5¾"
5°	10°	9¼"
8°	16°	12¾"
10°	20°	15"

CONTINUED ON NEXT PAGE

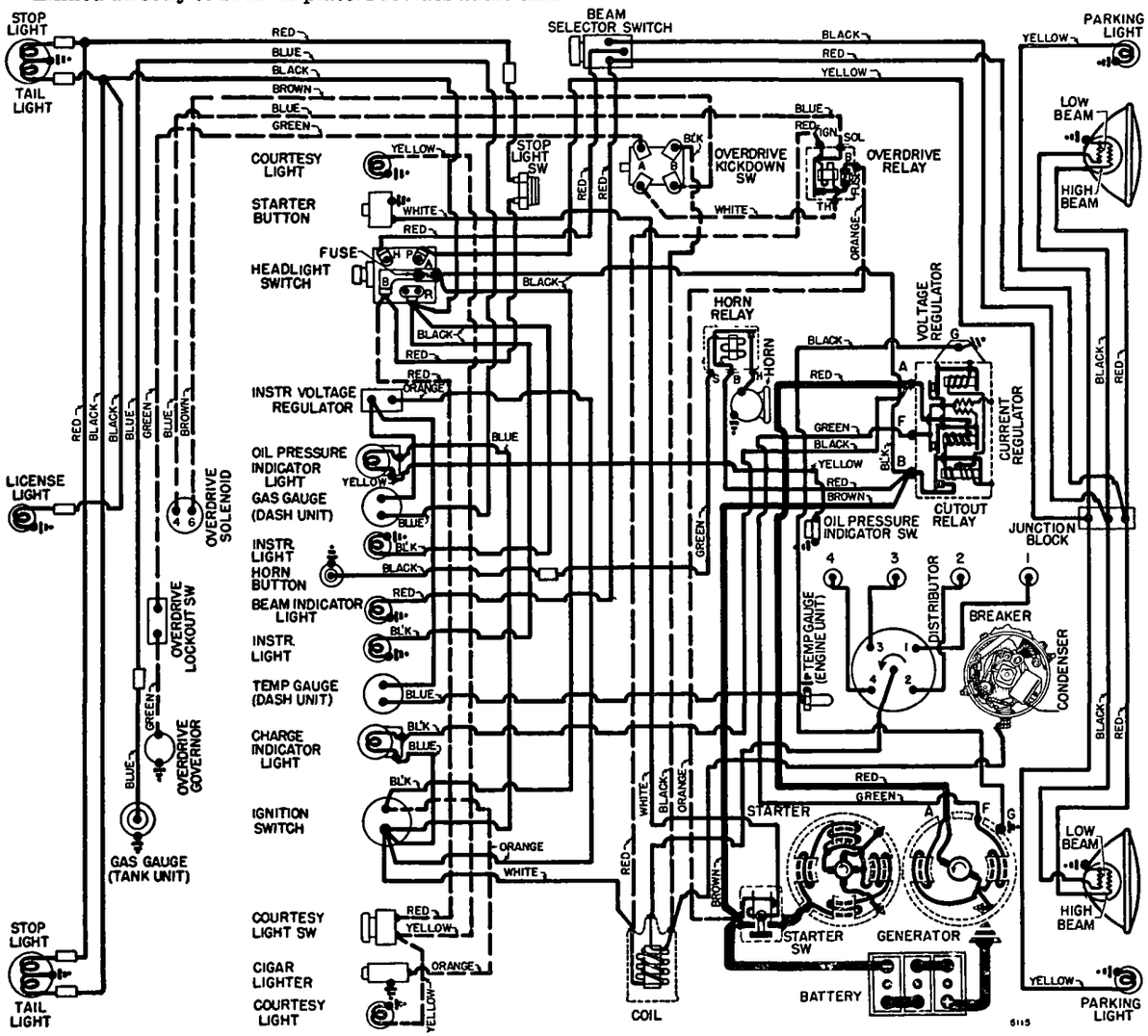

CONTINUED FROM PRECEDING PAGE

Distributor Removal Distributor located on right side of engine. To remove, disconnect vacuum line, take out hold-down screw in advance arm

►*CAUTION—If Oil Pump removed, refer to Oil Pump Installation directions in Henry J Special Data.*

IGNITION TIMING

Std. Setting . . . . . 5° BTDC.

Timing Mark—Timing mark located on flywheel. Consists of "TC" mark at top dead center with a 5° mark before this point

Timing (with Timing Light C-693)—Mark 5° mark before "TC" top dead center mark on flywheel with chalk or white paint. Connect timing light to #1 spark plug terminal and direct light at timing mark. Idle engine at lowest possible smooth idle speed (back off throttle stopscrew to decrease normal idle speed of 550 RPM.). Loosen hold-down screw in advance arm, center screw in slot, tighten hold-down screw. Loosen cap screw extending upward through 45° slot in arm under distributor. Advance or retard distributor until timing mark appears in line with index mark on edge of flash hole, tighten cap screw.

►*CAUTION—Reset engine idling speed at 550 RPM.*

CARBURETOR

Carter YF-820S, SA, SB—1¼" Single Barrel, Downdraft types. Identical in appearance with YF-814 & 833S (6 cyl.) but not interchangeable.

See Carburetor Section for complete data.

Settings (Idle Setting, Float Level, and Accelerating Pump): *See Tune-Up data.*

Metering Rods & Jets—*See Carter Jet Table in Carburetor Section.*

Fast Idle: Carter Single Barrel.

See Carburetion Equipment Section for complete data.

Setting—With choke held in wide open position, lip on fast idle arm should contact boss on body casting. Adjust by bending at offset of fast idle link.

CARB. EQUIPMENT

Air Cleaner: United Specialties. K-F No. 212749 Oil-wetted type Std., Oil-bath type Optl.

Fuel Pump (Std.): Carter M807S. Diaphragm type.

Optl.—Carter No. M809S combination Fuel-and-Vacuum Pump.

See Carburetion Equipment Section for complete data.

Pressure—3½-4½ lbs. fast idle. At 1000 RPM should be 3-4¼ lbs. If more than 4½ lbs., adjust by adding gaskets between pump and cylinder block.

Gasoline Gauge: King-Seeley "CV" (Constant Voltage) electric type with voltage regulator.

Dash Unit—K-S No. 45574.

Tank Unit—K-S No. 45567.

See Carburetion Equipment Section for complete data.

CRANKCASE VENTILATOR

Sealed Positive Ventilation Type. Air Intake Pipe (from air cleaner to **oil filler pipe**) furnishes clean air to crankcase and Air Outlet Pipe (from valve chamber cover to intake manifold) allows fumes from crankcase to be sucked into intake manifold. There is a vacuum control valve at the manifold connection and this valve **must close at idling speed** for satisfactory engine idling performance.

Servicing—Make certain that connecting pipes are tight and that oil filler cap gasket seals cap tightly. When vacuum control valve is clogged, pressure will build up in crankcase. When not seating, idle will be unsatisfactory. Remove and clean vacuum control valve and air outlet pipe when tuning engine or if system operating incorrectly.

Vacuum Control Valve—Remove control valve by disconnecting pipe at valve chamber cover and unscrewing valve from manifold. Disassemble valve by clamping in vise and removing top, withdraw valve and spring. Clean valve and valve seat thoroughly. Reassemble and re-install unit.

BATTERY

Auto-Lite Type IM-100D or Willard HW-1-100—6 volt, 15 plate, 100 ampere hour capacity (20 Hour Rate).

Grounded Terminal—Positive (+) terminal grounded at right front engine support. Engine ground cable connected at same point.

Location—In engine compt. on right side.

STARTER

Auto-Lite Model MZ-4163. Armature No. MZ-2237. Four field, 4 brush type with magnetic switch on starter.

Drive—Barrel type Bendix Drive No. A2089.

Rotation—Counter-clockwise at commutator end.

Brush Spring Tension—42-53 ozs. (new brushes).

Performance Data

Torque	R.P.M.	Volts	Amperes
0 ft. lbs.	... 4000	5.0	68
44 " ...	Lock	2.0 .	280

Starting Switch: Auto-Lite No. SS-4014 solenoid operated, mounted on motor near starter and controlled by push-button on instrument panel.

Removal: Flange mounted on right front face of flywheel housing. To remove, disconnect cable, take out flange mounting screws and bracket screw.

GENERATOR

Auto-Lite No. GDZ-6001-E. Armature No. GGY-2006F. Two-brush type with voltage and current regulation.

Charging Rate Adjustment—None. See Regulator.

Maximum Charging Rate—35 amperes, cold, at 8.0 volts, 1800-2000 RPM.

Performance Data

Amperes	Volts	Cold—R.P.M.—Hot	
0	6.4	870-970	950-1050
35...	8 0 ..	1800-2000	2150-2350

Rotation—Counter-clockwise at commutator end.

Brush Spring Tension—35-53 ozs. (new brushes).

Field Current—1 3-1.5 amperes at 5.0 volts.

Motoring Current—3.9-4.4 amperes at 5.0 volts.

Removal: Pivot mounting at right front of engine. To remove, disconnect leads, take out clamp bolt and pivot bolts.

Belt Adjustment: Loosen clamp and pivot bolts, swing generator out away from engine to 15 lbs. pull on scale in line with adjusting bracket.

Generator Indicator: Warning light (under RED plastic) burns red when ignition switch turned on and goes out when cutout relay closes.

REGULATOR

Auto-Lite Model VRP-6001-A. Vibrating type voltage and current regulator.

See Electrical Equipment Section for complete data.

NOTE—Regulator cover sealed. Warranty void if seals broken.

Cutout Relay

Cuts In—6.4-6.9 volts (set to 6.4-6.6 volts).

Cuts Out—4.1-4.8 volts (approx. 4-6 amps. disch.).

Contact Gap—.015" minimum.

Air Gap—.031-.034" with arm against stop.

Voltage Regulator

Setting—7.2-7 5 volts at 70°F. See Electrical Equipment Section for settings at other temperatures.

Checking (without breaking seal) & Adjustment—*See Electrical Equipment Section.*

Air Gap—.048-.052" with contacts just opening.

Current Regulator

Setting—34-36 amperes (marked '35' on cover).

Checking (without breaking seal) & Adjustment—*See Electrical Equipment Section.*

Air Gap—.048-.052" with contacts just opening.

LIGHTING

Headlamps: Hall "Sealed Beam" type. Upper and lower beams controlled by beam selector switch.

See Electrical Equipment Section for complete data.

Beam Indicator—Red jewel at top of speedometer dial. Lighted when upper (country beams) in use.

Direction Signal: (Optl.)—Guide Light Division make.

See Electrical Equipment Section for complete data.

Direction Indicators—Right and left indicator lights on lower face of speedometer. Lighted when direction signal on same side of car in operation.

Switches

Lighting—K-F No. 212091

Beam Selector—K-F No. 204545

Courtesy Light (Optl.)—K-F No. 200821

MISC. ELECTRICAL

FUSES: Lighting—30 ampere. On back of switch.
Overdrive—20 amperes. On control relay.
Heater—14 amperes.
Radio—14 amperes.

HORNS: Delco-Remy No. 1999639 (Low Note), 1999640 (High Note). Matched tone twin horns with relay.
Horn Relay—K-F No. 212080.

GAUGE VOLTAGE REGULATOR: King-Seeley No. 45557. Thermo-bimetal interrupter unit designed to maintain constant voltage of 5 volts (regardless of generator charging voltage fluctuation) on gauge feed circuit. Unit is connected in gauge feed circuit.

ENGINE

ENGINE SPECIFICATIONS: K-F Model 4L-134. Four cylinder Supersonic "L" head type.
Bore—3⅛" or 3.125".
Stroke—4⅜".
Displacement—134.2 cu. ins. **Rated HP**—15.63.
Developed Horsepower—68 at 4000 RPM.
Compression Ratio—7.0-1.
Compression & Vacuum Reading—*See Tune-Up.*

TIGHTENING TORQUES: *See Henry J Special Data.*

CYLINDER HEAD INSTALLATION: *See Henry J Special Data.*

PISTONS: Aluminum alloy, "T" slot, Cam ground, tin- or brass-plated type with heat insulation groove above top ring groove.
Length—3¾".
Weight—12.7 ozs. without rings or pin.
Removal—Pistons and rods removed from above.
Clearance—Top land .017-.019". Skirt .003".
CAUTION—Pistons must not be "lapped" in (will destroy tin-plated surface).

Replacement Pistons: Std. & .010", .020", .030", .040" oversize.

Fitting New Pistons: Use .003" feeler stock, ¾" wide,

ENGINE

C NTINUED FR M PRECEDING PAGE

inserted between piston and cylinder wall on opposite side from "T" slot. Pull required to withdraw feeler must be within 5-10 lbs. at 70°F.

Installing Pistons: "T" slot toward valve (left) side of engine (opposite side from oil spray hole in connecting rod lower end).

PISTON RINGS: Two compression, one oil control ring per piston, all above pin (piston has narrow heat insulation groove above top ring groove). Oil ring groove drilled with oil drainage holes.

Ring	Width	End Gap	Side Clearance
Compression	3/32"	.008-.013"	.0005-.001"
Oil Contr.	3/16"	.008-.013"	.001-.0015"

Installing Rings: Install compression rings with mark "TOP" (on side) toward top. Rings have taper face and must be installed correctly. Top ring inner bevel edge must be up.

Replacement Rings: .010", .020", .030", .040" oversize.

PISTON PIN: Diameter—.8117-.8119". **Lgth**—2 25/32". Pin is locked in connecting rod by clampscrew.
Pin Fit in Piston—.0001-.0005" clearance or light thumb push fit with piston and pin at 70°F.

Replacement Pins: No oversizes are available.

CONNECTING ROD: Length—9.1845-9.1905". **Weight**—39.41 ozs. NOTE—Rods are offset and are **not** interchangeable.
Crankpin Journal Diameter—1.938-1.9375".
Lower Bearing—Steel-backed, babbitt-lined, replaceable precision type. CAUTION—Oil spray hole in upper half of bearing must line up with oil spray hole in rod.
Clearance—.0005-.0025". **Sideplay**—.004-.010".

Bearing Adjustment: None. (No shims.) Replace bearings. Do not file connecting rods or bearing caps. NOTE—Replace bearings when clearance exceeds .005" or sideplay exceeds .013".

Replacement Bearings: .001", .002", .010", .012" Undersize.

Installing Rods: Lower bearing offset. Install rods with short side of bearing toward nearest main bearing or toward front of engine (#1, 3), toward rear (#2, 4). Oil spray hole in lower end of rod toward right of engine (away from camshaft) on all rods.

CRANKSHAFT: Three bearing type with removable counterweights.
Journal Diameters—2.3341" (all bearings).
Bearings—Steel-backed, babbitt-lined, replaceable precision type. Bearing shells are dowelled in bearing caps and crankcase.
Clearance—.0014-.0029".
NOTE—Replace bearings when clearance exceeds .006" or when endplay exceeds .018".

Bearing Adjustment: None (no shims). Replace bearings. Do not file bearing caps. *See Crankshaft Servicing instructions in Henry J Special Data.*
NOTE—Engine must be removed from chassis for bearing replacement and crankshaft servicing.

Replacement Bearings: .001", .002", .010" Undersize.

Oil Seals: Rear main bearing oil seal is wick type packing in groove in crankcase and rear main bearing cap.
Oil Seal Installation—*See Henry J Special Data.*

End Thrust: Taken by flanged faces of #1 (front) bearing. Adjustable by adding or removing shims between crankshaft gear thrustwasher and shoulder on crankshaft at front of flanged front bearing. NOTE—Crankshaft gear must be removed with a gear puller in order to make endplay adjustments.
Endplay—.002-.008".

CAMSHAFT: Four bearing, helical gear drive Pressed-on type fibre gear.
Journal Diameters—#1, 2 188"; #2, 2 1/4"; #3, 2 3/16"; #4, 1 3/4".
Bearings—Removable steel-backed, babbitt-lined bushing (front), machined in crankcase (all others).
Clearance—.002-.0035". Service limit .006" (front), .008" (all others).
Camshaft Removal—*See Henry J Special Data.*

End Thrust: Taken by thrust plate assembled behind gear with a spacer assembled between plate and camshaft journal
Endplay—.003-.0055".

Timing Gears: Crankshaft gear cast iron. Camshaft gear fibre with steel hub.
Timing Gear Backlash—.000-.002".

Camshaft Setting: Mesh gears with marked tooth of camshaft gear opposite marked space between gear teeth on crankshaft gear.

VALVES:	Head Diam.	Stem. Diam.	Length
Intake	1 17/32"	373"	5 57/64"
Exhaust	1 15/32"	.3725"	5 13/16"

	Seat Angle	Lift	Stem Clearance
Intake	45°	23/64"	.0015-.00325"
Exhaust	45°	23/64"	.0025-.0045"

Valve Guides: Removable type. Remove guides from above with puller, install new guides with driver or press guides down in place to following dimensions:
Intake Guide—Top of guide 1 5/16" below top face of block. The shorter smaller-diameter section end of the guide should be up.
Exhaust Guide—Top of guide 1" below top face of block. Taper end (counter-bored end) of guide should be up.

Valve Springs: Two close-wound coils toward top of block. Install springs with closed-coil end up toward cylinder block. Spring free length 2½".

	Spring Pressure	Length
Valve Closed	53 lbs.	2 7/64"
Valve Open	120 lbs.	1 3/4"

Valve Lifters: Mushroom type with self-locking screws, operating in reamed holes in block. Access hole in cover in left front splash shield. Serviced by installing oversize lifters.
Lifter Diameter—.6240-.6245".
Lifter Clearance—.0005-.002".
NOTE—Camshaft must be removed for lifter removal. *See Camshaft Removal instructions in Henry J Special Data.*

VALVE TIMING

Tappet Clearance: .016" All Valves, Cold.
Adjustment Procedure—*See Henry J Special Data.*

Valve Timing: See Camshaft Setting above.
Intake Valves—Open 9° BTDC. Close 50° ALDC.
Exhaust Valves—Open 47° BLDC. Close 12° ATDC.
Valve Timing Check—With .020" tappet clearance on #1 intake valve. This valve should open with #1 piston at 9° or .039" BTDC, with flywheel mark "I.O." centered in inspection hole in right front face of flywheel housing. Reset tappet clearance at .016"

LUBRICATION

Engine Oiling System: Pressure to crankshaft, connecting rod, and camshaft bearings, and to timing gears.
Crankcase Capacity—4 qts. refill.
Normal Oil Pressure—35 lbs. at 30 MPH.
Oil Pressure Regulator—Opens at 28-40 lbs. Located on oil pump cover. Adjustable by removing or adding shims between valve retainer and spring.

Oil Pump: External Rotor type with floating oil intake. Mounted externally on left side of crankcase
Oil Pump Servicing—*See Henry J Special Data.*

Oil Pressure Gauge: Indicator light on instrument panel. Controlled by King-Seeley Engine Unit. Light glows RED until oil pressure rises above 13 lbs.
Engine Unit—King-Seeley No. 47100. Pressure Switch. Contacts open at 13 lbs. (remain closed with lower oil pressure).

COOLING

Cooling System: Pressure type Relief valve in cap optl. equipment.
Capacity—10¾ qts. (11¾ qts. with heater).
Pressure Cap (Optl.)—For high altitudes or extremely hot temperatures.

Water Pump: Centrifugal, belt-driven, packless type with sealed ball bearing shaft.
See Water Pump Section for complete data.
Removal—Loosen drive belt adjustment, remove belt, disconnect hose. Remove pump mounting screws and lift out pump and fan assembly.

Thermostat: Harrison. In outlet elbow on cylinder head. No by-pass.
Std.—Stamped '151'. Starts to open at 149-156°F Fully open at 176°F.

Temperature Gauge: King-Seeley "CV" (Constant Voltage) Electric type with voltage regulator.
Dash Unit—King-Seeley No. 45577.
Engine Unit—King-Seeley No. 44200.
See Miscellaneous Section for complete data.

CLUTCH

Auburn Model 8501-37 or Rockford Model 8½ RM with Borg & Beck Driven Member. Single plate dry disc type.
Clutch Identification—Types can be identified by number of pressure plate springs—3 (for Auburn), 6 (Rockford).
See Clutch Section for complete data.
Facings (Auburn)—Molded metallic or Raybestos. 2 required" I D. 5⅜". O.D. 8½". Thickness .305".
Facings (B&B on Rockford Clutch)—Woven Asbestos. 2 required. I.D. 5⅜". O D. 8½". Thickness .132-138".

Pedal Adjustment: Free travel 1" measured at pedal rod. Adjust as follows: (1) Clearance between rounded forward end of release fork adjusting rod and clutch housing when release bearing just contacting clutch levers should be ⅝". If less than ½", adjust to ⅝" by changing release fork adjusting rod length (more accessible by removing bellcrank from pivot with rod attached—grease bellcrank pivot before re-installing). (2) Connect and adjust length of pedal rod at trunnion end on bellcrank for required 1" free pedal travel.

Removal: Remove transmission (see Transmission Removal). Free clutch pedal adjusting rod at trunnion end of bellcrank. Remove flywheel bell housing. Mark pressure plate and flywheel to insure correct re-installation, take out mounting screws to clutch cover flange (turn all screws out evenly), remove clutch assembly and driven member.

CONTINUED ON NEXT PA E

C NTINUED FROM PRECEDING PAGE

TRANSMISSION

Warner Model AS40-T96. Model AS41-T96 with new Type R10B Overdrive (Optl.). Constant-mesh (Second & High), sliding gear (Low & Reverse).
See Transmission Section for complete data.
Transmission Control: Remote control type with gear-shift lever mounted on steering column.
Removal: Support car on stands, drain transmission case (and overdrive case). Disconnect both shift rods at levers on transmission case (on overdrive cars, disconnect control cable from lever on overdrive case and electrical wiring at solenoid and lockout switch). Remove two capscrews and washers attaching clutch cross-shaft support bracket to transmission and remove bracket. Disconnect speedometer cable. Disconnect propeller shaft by taking off four nuts attaching front universal joint to yoke (CAUTION—tape needle bearing retainers in place to prevent entry of dirt or loss of bearings), tie propeller shaft up out of the way. Remove two capscrews attaching rear mounting insulator to cross-member, support rear end of engine (Support Tool KF-104) and raise engine just enough to remove weight from cross-member. Disconnect clutch realease bearing return spring from transmission (accessible through opening in right side of clutch housing). Remove four nuts attaching transmission to clutch housing, pull transmission straight back and remove from beneath car.

OVERDRIVE

Warner Type R10B (with special AS41-T96 Transmission)—Optl. equipment. New solenoid operated, governor controlled with throttle "kick-down."
NOTE—Overdrive is new "centered ring gear" type with one rear bearing only.
Control Relay—K-F No. 207923
Overdrive Governor—K-F No. 212385
Kick-down Switch—K-F No. 207924
Overdrive Solenoid—Warner 4AR10B-62.
See Transmission Section for complete data.
Removal: Overdrive and transmission are removed as a unit. See Transmission Removal above.

UNIVERSALS

Spicer Model with needle bearing.
Spicer No. 10275-1SF. Needle bearing type.
See Universals Section for complete data.

REAR AXLE

Spicer (Salisbury) Model 23-6, Part No. 2125-1; or Model 23-6, Part No. 2125-2 with O.D.—Semi-floating, Hypoid Gear type with Hotchkiss Drive.
See Rear Axle Section for complete data.
Ratio—4.10-1 (Std.), 4.55-1 (with O.D.).
Backlash—.001-.005".
Removal: Hoist rear end of car and place supports under frame. Remove rear wheels and drums (use Puller C-319). Disconnect propeller shaft at rear universal flange, disconnect hydraulic brake line at connector on axle housing, disconnect rear shock absorbers at spring seat, disconnect parking brake cables. Take out "U" spring bolts, disconnect both springs at rear shackle, remove axle from beneath car.
Axle Shaft Removal: Remove rear wheel and drum using puller C-319. Disconnect hydraulic brake line at backing plate and brake cable. Remove outer oil seal and backing plate (CAUTION—do not lose adjusting shims between backing plate and housing flange). Pull axle shaft and bearing assembly out, using Axle Shaft Puller KF-15 (with Adapter SP-341 required).

SHOCK ABSORBERS

Monroe—Direct Acting, hydraulic two-way type. Serviced by replacement (mountings serviced separately).

FRONT SUSPENSION

Front Suspension: Independent, linked parallelogram type with coil springs.
See Front Suspension Section for complete data.
Kingpin Inclination—4½° preferred. Limits 4-4¾°.
Caster—0° preferred (±1°). Adjust by adding half shim under upper control arm at frame mounting bolt (rear bolt for Pos., front bolt for Neg. caster).
Camber—½° preferred (¼°-1° Pos. limits). Adjust by adding or removing whole shim under upper control arm at frame mounting bolts.
Toe-In—¼" (3/16-1/4" limits). Adjust by turning sleeve at outer end of each tie rod equally.
Steering Geometry (Toe-out)—Inner wheel 20°. Outer wheel 17°31'. No adjustment.

STEERING GEAR

Own Make (Gemmer 305 Type)—Worm-and-Roller type with "push-pull" adjustments.
See Steering Gear Section for complete data.

BRAKES

Service Brakes: Bendix (Lockheed) Hydraulic type with floating self-centering shoes (no anchor pin adjustment). Hand lever applies rear service brakes.
See Brake Section for complete data.
Drums—Composite (cast-iron & steel). Diameter 9".
Lining—Molded type. Width 2". Thickness 3/16".
Length per shoe—9.75" (Forward Shoe—all wheels), 7.18" (Rear Shoe—all wheels).
Clearance—Shoe eccentric backed off to point where wheel turns freely.
Hand Brake: See Service Brake data (above).

MISC. MECHANICAL

Windshield Wiper: Vacuum type.
See Miscellaneous Section for complete data.

MODEL IDENTIFICATION

SERIAL NUMBER: On left front door hinge post.
1951 Nos. 1001 Up.
Body Number Note—Stamped on plate on right front firewall in engine compartment.

ENGINE NUMBER: Stamped on pad on right front upper corner of cylinder block and on Engine Name Plate on right side of crankcase.
1951 Nos. 3,000,000 Up.

TUNE-UP

COMPRESSION PRESSURE: 130-140 lbs. at cranking speed (Std. 7.0-1 Hd.). 10 lbs. max. variation between cylinders.

VACUUM READING: Steady 18-21" idling at 550 RPM.

FIRING ORDER: 1-5-3-6-2-4. See diagram.

SPARK PLUG GAP: .030".
Plug Type—Auto-Lite AN-7 (Std.). 14 mm. Tighten to 30 ft. lbs. torque.

DISTRIBUTOR: Breaker Gap—.020". Limits .018-.022".
Cam Angle—38° ± 1° closed.
Breaker Arm Spring Tension—17-20 ounces.
Automatic & Vacuum Advance—*See Ignition.*
Condenser Capacity—.20-.25 microfarad.

IGNITION TIMING: TDC.
Timing Procedure—*See Ignition Timing.*
Timing Mark—Top dead center "0" mark on flywheel dampener.
CAUTION—Engine must be idling below 550 RPM. when setting timing.

CARBURETION:
Idle Setting—1-2 turns open. Turn screw out for richer mixture.
Idle Speed—550 RPM.
Float Level—9/32" from top of float at free end to bowl cover when needle is seated (assembly inverted).
Accelerating Pump—No seasonal adjustment.

Fuel Pump Pressure: 3½-4½ lbs. fast idle.

CRANKCASE VENTILATOR: Remove and clean Vacuum Control valve on manifold. *See Crankcase Ventilator (following CARB. EQUIPMENT) for data.*

MANIFOLD HEAT CONTROL: Automatic thermostatic type. See that valve operates freely.

VALVE TAPPET CLEARANCE: .016" All Valves, Cold.
NOTE—Tappet adjusting screws self-locking. Remove left front wheel and access hole cover in splash shield for access when adjusting valves.
Valve Timing Check—*See Valve Timing.*

STARTING: *See Battery, Starter, Generator, Regulator.*

IGNITION

IGNITION SWITCH: K-F No. 212063

COIL: Auto-Lite Model CR-4009. On right side of engine to rear of distributor.
Ignition Current—2.5 amperes (idling). 4.8 amps. (stopped) at 6.3 volts.

CONDENSER: Auto-Lite Part No. IAT-3076L.
Capacity—.20-.25 microfarad.

DISTRIBUTOR: Auto-Lite No. IAT-4007. New "Pivoted Breaker Plate" type. Full automatic advance with auxiliary vacuum spark control.
See Electrical Equipment Section for data.
Breaker Gap—.020". Limits .018-.022".
Cam Angle—38° ± 1° closed (at 300 RPM).
Breaker Arm Spring Tension—17-20 ounces.
Rotation—Counter-clockwise viewed from above.

Automatic Advance

Degrees Distr.	R.P.M.	Degrees Eng.	R.P.M.
Start	350	0°	700
1°	380	2°	760
7°	550	14°	1100
11°	1300	22°	2600
12°	1500	24°	3000

Vacuum Spark Control: Auto-Lite (integral type). Linked directly to breaker plate. Provides additional advance at speeds above idling except when engine accelerated or operated with wide open throttle when spark retarded by return spring in unit.

Vacuum Advance

Distr. Degrees	Eng. Degrees	Vacuum (" of HG)
Start	0°	3½"
1°	2°	5½"
3°	6°	9¼"
5°	10°	13"
6°	12°	15"

Distributor Removal: Distributor located on right side of engine. To remove, disconnect vacuum line, take out hold-down screw in advance arm.

►*CAUTION—If Oil Pump removed, refer to Oil Pump Installation directions in Henry J Special Data.*

CONTINUED ON NEXT PAGE

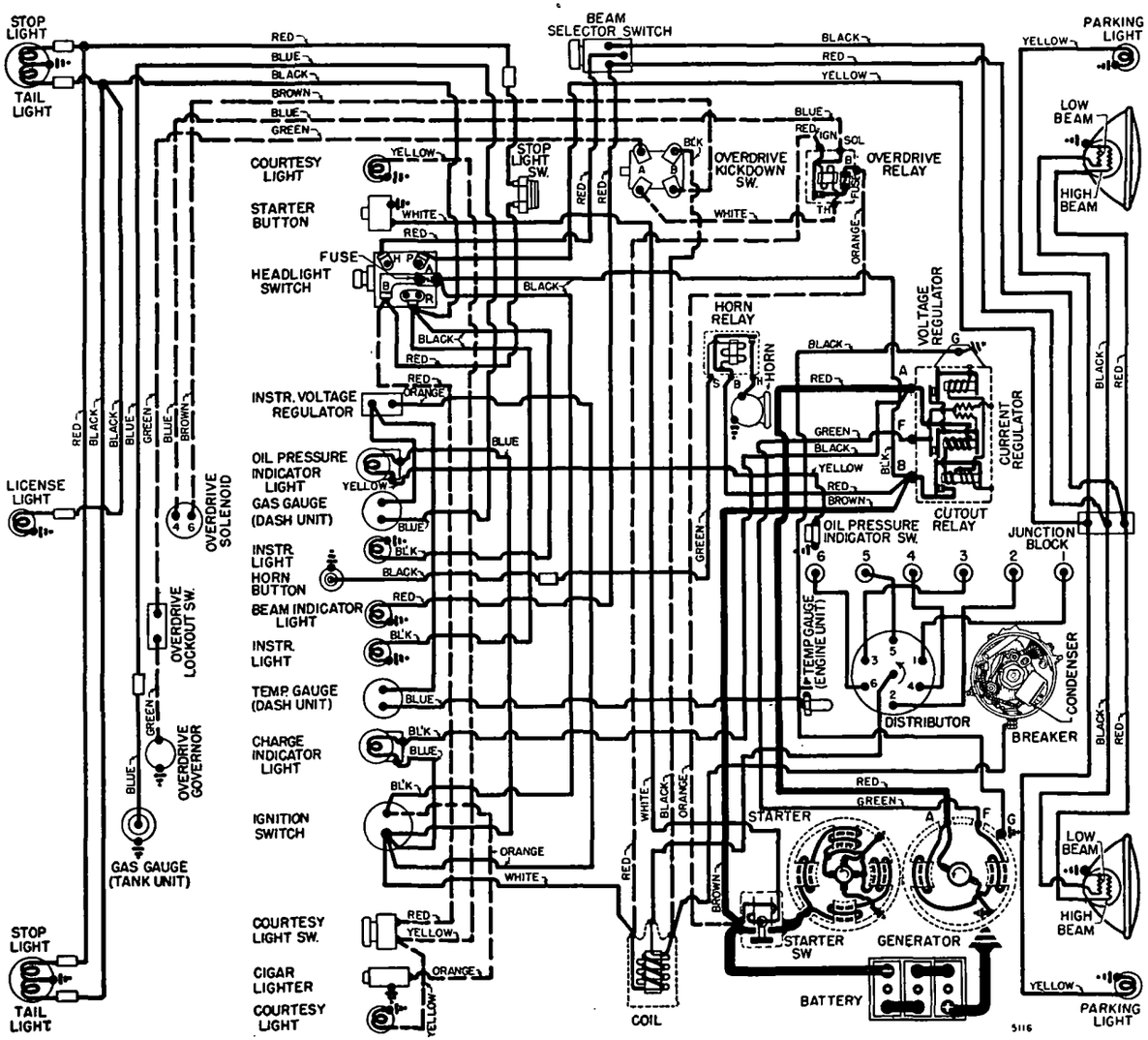

C NTINUED FR M PRECEDING PAGE

IGNITION TIMING

Std. Setting ..... **TDC.**
Timing Mark—Timing mark located on flywheel dampener. Consists of "0" mark at top dead center with 1° graduations before and after this point.
Timing (with Timing Light C-693)—Mark "0" mark of top dead center on dampener with chalk or white paint. Connect timing light to #1 spark plug terminal and direct light at timing mark. Idle engine at lowest possible smooth idle speed (back off throttle stopscrew to decrease normal idle speed of 550 RPM). Loosen hold-down screw in advance arm, center screw in slot, tighten hold-down screw. Loosen cap screw extending upward through 45° slot in arm under distributor. Advance or retard distributor until timing mark appears in line with pointer at front of engine. Tighten cap screw and recheck timing.
►*CAUTION—Reset engine idling speed at 550 RPM.*

CARBURETOR

Carter YF No. 814S (First Cars), No. 833S, SA, SB (Late Cars). 1¼" Single barrel. Downdraft types. Identical in appearance with YF-820S, SA, SB (4 Cyl.) but not interchangeable.
See Carburetor Section for complete data.
Settings (Idle Setting, Float Level, and Accelerating Pump): *See Tune-Up data.*
Metering Rods & Jets—*See Carter Jet Table in Carburetor Section.*
Fast Idle: Carter Single Barrel.
See Carburetion Equipment Section for complete data.
Setting—With choke held in wide open position, lip on fast idle arm should contact boss on body casting. Adjust by bending at offset of fast idle link.

CARB. EQUIPMENT

Air Cleaner: United Specialties. K-F No. 212749 Oil-wetted type Std., Oil-bath type Optl.
Fuel Pump (Std.): Carter No. M807S Diaphragm type.
Optl.—Carter No. M809S combination Fuel-and-Vacuum Pump.
See Carburetion Equipment Section for complete data.
Pressure—3½-4½ lbs. fast idle. At 1000 RPM should be 3-4½ lbs. If more than 4½ lbs., adjust by adding gaskets between pump and cylinder block.
Vacuum—Not less than 6" at fuel pump inlet while cranking engine. 8" at 120 fuel pump RPM or 10½" at 1800 RPM.
Gasoline Gauge: King-Seeley "CV" (Constant Voltage) electric type with voltage regulator.
Dash Unit—K-S No. 45574.
Tank Unit—K-S No. 45567.
See Carburetion Equipment Section for complete data.

CRANKCASE VENTILATOR

Sealed Positive Ventilation Type. Air Intake Pipe (from air cleaner to oil filler pipe) furnishes clean air to crankcase and Air Outlet Pipe (from valve chamber cover to intake manifold) allows fumes from crankcase to be sucked into intake manifold. There is a vacuum control valve at the manifold connection and this valve **must close at idling speed** for satisfactory engine idling performance.
Servicing—Make certain that connecting pipes are tight and that oil filler cap gasket seals cap tightly. When vacuum control valve is clogged, pressure will build up in crankcase. When not seating, idle will be unsatisfactory. Remove and clean vacuum control valve and air outlet pipe when tuning engine or if system operating incorrectly.
Vacuum Control Valve—Remove control valve by disconnecting pipe at valve chamber cover and unscrewing valve from manifold. Disassemble valve by clamping in vise and removing top, withdraw valve and spring. Clean valve and valve seat thoroughly. Reassemble and re-install unit.

BATTERY

Auto-Lite Type IM-100D & Willard HW-1-100—6 volt, 15 plate, 100 Ampere Hour Capacity (20 hour rate).
Grounded Terminal—Positive (+) terminal grounded at right front engine support. Engine ground cable connected at same point.
Location—In engine compt. on right side.

STARTER

Auto-Lite Model MZ-4163. Armature No. MZ-2237. Four-field, 4-brush type with magnetic switch in starter.
Drive—Barrel type Bendix Drive No. A2089.
Rotation—Counter-clockwise at commutator end.
Brush Spring Tension—42-53 ozs. (new brushes).

Performance Data

Torque	R.P.M.	Volts	Amperes
0 ft. lbs.	4000	5.0	68
4.4 "	Lock	2.0	280

Starting Switch: Auto-Lite No. SS-4014 solenoid operated, mounted on motor near starter and controlled by push-button on instrument panel.
Removal: Flange mounted on right front face of flywheel housing. To remove, disconnect cable, take out flange mounting screws and bracket screw.

GENERATOR

Auto-Lite No. GDZ-6001-E. Armature No. GGY-2006F. Two-brush type with voltage and current regulation.
Charging Rate Adjustment—None. See Regulator.
Maximum Charging Rate—35 amperes, cold, at 8.0 volts, 1800-2000 RPM.

Performance Data

Amperes	Volts	Cold—R.P.M.—Hot	
0	6.4	870-970	950-1050
35	8.0	1800-2000	2150-2350

Rotation—Counter-clockwise at commutator end.
Brush Spring Tension—35-53 ozs. (new brushes).
Field Current—1.3-1.5 amperes at 5.0 volts.
Motoring Current—3.9-4.4 amperes at 5.0 volts.
Removal: Pivot mounting at right front of engine. To remove, disconnect leads, take out clamp bolt and pivot bolts.
Belt Adjustment: Loosen clamp and pivot bolts, swing generator out away from engine to 15 lbs. pull on scale in line with adjusting bracket.
Generator Indicator: Warning light (under RED plastic) burns red when ignition switch turned on and goes out when cutout relay closes.

REGULATOR

Auto-Lite Model VRP-6001-A. Vibrating type voltage and current regulator.
See Electrical Equipment Section for complete data.
NOTE—Regulator cover sealed. Warranty void if seals broken.

Cutout Relay

Cut In—6.4-6.9 volts (set to 6.4-6.6 volts).
Cuts Out—4.1-4.8 volts (approx. 4-6 amps. disch.).
Contact Gap—.015"minimum.
Air Gap—.031-.034" with arm against stop.

Voltage Regulator

Setting—7.2-7.5 volts at 70°F. See Electrical Equipment Section for settings at other temperatures.
Checking (without breaking seal) & Adjustment—*See Electrical Equipment Section.*
Air Gap—.048-.052" with contacts just opening.

Current Regulator

Setting—34-36 amperes (marked '35' on cover).
Checking (without breaking seal) & Adjustment—*See Electrical Equipment Section.*
Air Gap—.048-.052" with contacts just opening.

LIGHTING

Headlamps: Hall "Sealed Beam" type. Upper and lower beams controlled by beam selector switch.
Adjustment—Aim upper beam straigh ahead (hot spot center 3" below lamp center height at 25 ft.).
Beam Indicator—Red jewel at top of speedometer dial. Lighted when upper (country beams) in use.
Direction Signal: (Optl.)—Guide Light Division make.
See Electrical Equipment Section for complete data.
Direction Indicators—Right and left indicator lights on lower face of speedometer. Lighted when direction signal on same side of car in operation.

Switches

Lighting—K-F No. 212091
Beam Selector—K-F No. 204545
Courtesy Light (Optl.)—K-F No. 200821

MISC. ELECTRICAL

FUSES: Lighting—30 ampere on back of switch.
Overdrive—20 amperes. On control relay.
Heater—14 amperes.
Radio—14 amperes.
HORNS: Delco-Remy No. 1999639 (Low Note), 1999640 (High Note). Matched tone twin horns with relay.
Horn Relay—K-F No. 212080.
GAUGE VOLTAGE REGULATOR: King-Seeley No. 45557. Thermo-bimetal interrupter unit designed to maintain constant voltage of 5 volts (regardless of generator charging voltage fluctuation) on gauge feed circuit. Unit is connected in gauge feed circuit. See wiring diagram.

ENGINE

ENGINE SPECIFICATIONS: K-F Model 6L-161. Six cylinder Supersonic "L" head type.
Bore—3⅛" or 3.125".
Stroke—3½".
Displacement—161.0 cu. ins. **Rated HP.**—23.44.
Developed Horsepower—80 at 3800 RPM.
Compression Ratio—7.0-1.
Compression & Vacuum Reading—*See Tune-Up.*
TIGHTENING TORQUES: *See Henry J Special Data.*
CYLINDER HEAD INSTALLATION: *See Henry J Special Data.*
PISTONS: Aluminum alloy, "T" slot, cam ground, tin-plated type with heat insulation groove above top ring groove.
Length—3".
Weight—10.8 ozs. without rings or pin.
Removal—Pistons and rods removed from above.
Clearance—Top land .018-.021". Skirt .0021".
CAUTION—Pistons must not be "lapped" in (will destroy tin-plated surface).

ENGINE

C NTINUED FROM PRECEDING PA E

Replacement Pistons: Std. & .010", .020", .030", .040" oversize.

Fitting New Pistons: Use .0015" feeler stock, ½" wide, inserted between piston and cylinder wall on opposite side from "T" slot. Pull required to withdraw feeler must be within 5-10 lbs. at 70°F.

Installing Pistons: "T" slot toward valve (left) side of engine (opposite side from oil spray hole in connecting rod lower end).

PISTON RINGS: Two compression, one oil control ring per piston, all above pin (piston has narrow heat insulation groove above top ring groove). Oil ring groove drilled with oil drainage holes.

Ring	Width	End Gap	Side Clearance
Compression	3/32"	.007-.017"	.0005-.001"
Oil Contr.	3/16"	.008-.013"	.001-.0015"

Installing Rings: Install compression rings with mark "TOP" (on side) toward top. Rings have taper face and must be installed correctly. Top ring inner bevel edge must be up.

Replacement Rings: .010", .020", .030", .040" oversize.

PISTON PIN: Diameter—.7496-.7495". **Length**—2 1/32".
Pin Fit in Piston—.0001-.0005" clearance or light thumb push fit with piston and pin at 70°F.

Replacement Pins: No Oversizes are available.

CONNECTING ROD Length—6.345". **Weight** 22.5 ozs.
NOTE—Rods are **not** offset and are interchangeable.
Crankpin Journal Diameter—1.875" (1 7/8").
Lower Bearing—Steel-backed, babbit-lined, replaceable precision type. CAUTION—Oil spray hole in upper half of bearing must line up with oil spray hole in rod.
Clearance—.0005-.0025". **Sideplay**—.002-.008".

Bearing Adjustment: None (no shims). Replace bearings. Do not file connecting rods or bearing caps. NOTE—Replace Bearings when clearance exceeds .005" or sideplay exceeds .013".

Replacement Bearings: .001", .002", .010", .012" Undersize.

Installing Rods: Rods **not** offset. Install with oil spray hole in lower end toward right (away from camshaft) on all rods.

CRANKSHAFT: Four-bearing type with integral counter-weights. Vibration dampener on forward end.
Journal Diameters—2.250" (all bearings).
Bearings—Steel-backed, babbit-lined, replaceable precision type.
NOTE—Bearing shells are NOT dowelled on 6 cylinder engine. They can be removed and replaced without removing crankshaft.
Clearance—.0009-.003".

Bearing Adjustment: None (no shims). Replace bearings. Do not file bearing caps. *See Crankshaft Servicing instruction in Henry J Special Data.*

Replacement Bearings: .001", .002", .010" Undersize.

Oil Seals: Rear main bearing oil seal is wick type packing in groove in crankcase and rear main bearing cap.
Oil Seal Installation—*See Henry J Special Data.*

End Thrust: Taken by thrust plate assembled behind gear with a spacer assembled between plate and camshaft journal.
End Play—.002-.008".

CAMSHAFT: Four-bearing, helical gear drive. Pressed-on type fibre gear.
Journal Diameters—#1, 1.8755-1.8760"; #2, 1.8425-1.8435", #3, 1.8110-1.8120"; #4, 1.6245-1.6250".
Bearings—Removable steel-backed, babbit-lined bushing (front), machined in crankcase (all others).
Clearance—.002-.0035". Service limit .006" (front), .008" (all others).
Camshaft Removal—*See Henry J Special Data.*

End Thrust: Taken by thrust plate assembled behind gear with a spacer assembled between plate and camshaft journal.
Endplay—.003-.0055".

Timing Gears: Crankshaft gear cast iron. Camshaft gear fibre with steel hub.
Timing Gear Backlash—.000-.002".

Camshaft Setting: Mesh gears with marked tooth of camshaft gear opposite marked space between gear teeth on crankshaft gear.

VALVES:	Head Diam.	Stem. Diam.	Length
Intake	1 3/8"	.3410"	4 9/16"
Exhaust	1 9/32"	.3400"	4 9/16"
	Seat Angle	**Lift**	**Stem Clearance**
Intake	45°	.284"	.0015-.00325"
Exhaust	45°	.300"	.0025-.0045"

Valve Guides: Removable type. Remove guides from above with puller, install new guides with driver or press guides down in place. Upper end 7/8" below upper edge of valve seat (taper end up).

Valve Springs: Springs can be installed with either end up. Free length 1 57/64".

	Spring Pressure	Length
Valve Closed	50 lbs.	1 5/8"
Valve Open	105 lbs.	1 21/64"

Valve Lifters: Mushroom type with self-locking screws, operating in reamed holes in block. Serviced by installing oversize lifters.
NOTE—Camshaft must be removed for lifter removal. *See Camshaft Removal instructions in Henry J Special Data.*
Lifter Diameter—.597-.605". **Length**—2".
Clearance in Block—.0005-.002".

VALVE TIMING

Tappet Clearance: .016" All Valves, Cold.
Adjustment Procedure—*See Henry J Special Data.*

Valve Timing: See Camshaft Setting above.
Intake Valves—Open 5° BTDC. Close 44° ATDC.
Exhaust Valves—Open 47° BLDC. Close 12° ATDC.
Valve Timing Check—With .020" tappet clearance on #1 intake valve, this valve should open with piston 5° before top dead center with five-degree mark **before** dead center "0" mark on dampener aligned with pointer at front of engine. Reset tappet clearance at .016".

LUBRICATION

Engine Oiling System: Pressure to crankshaft, connecting rod, and camshaft bearings, and to timing gears.
Crankcase Capacity—5 qts. refill.
Normal Oil Pressure—30-40 lbs. at 30 MPH.
Oil Pressure Regulator—Opens at 40 lbs. Located on oil pump cover. Adjustable by removing or adding shims between valve retainer and spring.

Oil Pump: External Rotor type with floating oil intake. Mounted externally on left side of crankcase.
Oil Pump Servicing—*See Henry J Special Data.*

Oil Pressure Gauge: Indicator light on instrument panel. Controlled by King-Seeley Engine Unit. Light glows RED until oil pressure rises above 13 lbs.
Engine Unit—King-Seeley No. 47100. Pressure Switch. Contacts open at 13 lbs. (remain closed with lower oil pressure).

COOLING

Cooling System: Pressure type. Relief valve in cap optl. equipment.
Capacity—9 qts. (10 qts. with heater).
Pressure Cap (Optl.)—For high altitudes or extremely hot temperatures.

Water Pump: Centrifugal, belt-drive, packless type with sealed ball bearing shaft. NOTE—Seal not same as that on 4 cylinder.
Removal—Loosen drive belt adjustment, remove belt, disconnect hose. Remove pump mounting screws and lift out pump and fan assembly.
See Water Pump Section for complete data.

Thermostat: Harrison. In outlet elbow on cylinder head. No by-pass.
Std.—Stamped '151'. Starts to open at 149-156°F. Fully open at 176°F.

Temperature Gauge: King-Seeley "CV" (Constant Voltage) Electric type with voltage regulator.
Dash Unit—King-Seeley No. 45577.
Engine Unit—King-Seeley No. 44200.
See Miscellaneous Section for complete data.

CLUTCH

Auburn Model 8501-37 or Rockford Model 8½ RM with Borg & Beck Driven Member. Single plate dry disc type.
Clutch Identification—Types can be identified by number of pressure plate springs—3 (for Auburn), 6 (Rockford).
See Clutch Section for complete data.
Facings (Auburn)—Molded metallic or Raybestos. 2 required. I.D. 5⅜". O.D. 8½". Thickness .305".
Facings (B&B on Rockford Clutch)—Woven Asbestos, 2 required. I.D. 5⅜". O.D. 8½". Thickness .132-.138".

Pedal Adjustment: Free travel 1" measured at pedal rod. Adjust as follows: (1) Clearance between the rounded forward end of release fork adjusting rod and clutch housing when release bearing just contacting clutch levers should be ⅝". If less than ½", adjust to ⅝" by changing release fork adjusting rod length (more accessible by removing bellcrank from pivot with rod attached—grease bellcrank pivot before re-installing). (2) Connect and adjust length of pedal rod at trunnion end on bellcrank for required 1" free pedal travel.

Removal: Remove transmission (see Transmission Removal). Free clutch pedal adjusting rod at trunnion end of bellcrank. Remove flywheel bell housing. Mark pressure plate and flywheel to insure correct re-installation, take out mounting screws to clutch cover flange (turn all screws out evenly), remove clutch assembly and driven member.

TRANSMISSION

Warner Model AS40-T96. Model AS41-T96 with Type R10B Overdrive (Optl.). Constant-mesh (Second & High), sliding gear (Low & Reverse).
See Transmission Section for complete data.

Transmission Control: Remote control type with gearshift lever mounted on steering column.

Removal: Support car on stands, drain transmission case (and overdrive case). Disconnect both shift rods at levers on transmission case (on overdrive cars, disconnect control cable from lever on overdrive case and electrical wiring at solenoid and lockout switch). Remove two capscrews and washers

CONTINUED ON NEXT PAGE

C NTINUED FR M PRECEDIN PA E

attaching clutch cross-shaft support bracket to transmission and remove bracket. Disconnect speedometer cable. Disconnect propeller shaft by taking off four nuts attaching front universal joint to yoke (CAUTION—tape needle bearing retainers in place to prevent entry of dirt or loss of bearings), tie propeller shaft up out of the way. Remove two capscrews attaching rear mounting insulator to cross-member, support rear end of engine (Support Tool KF-104) and raise engine just enough to remove weight from cross-member. Disconnect clutch realease bearing return spring from transmission (accessible through opening in right side of clutch housing). Remove four nuts attaching transmission to clutch housing, pull transmission straight back and remove from beneath car.

OVERDRIVE

Warner R10B (with special AS41-T96 Transmission)—Optl. equipment. New solenoid operated, governor controlled with throttle "kick-down."
NOTE—Overdrive is new "centered ring gear" type with one rear bearing only.
Control Relay—K-F No. 207923
Overdrive Governor—K-F No. 212385
Kick-down Switch—K-F No. 207924
Overdrive Solenoid—Warner 4AR10B-62.
See Transmission Section for complete data.
Removal: Overdrive and transmission are removed as a unit. See Transmission Removal above.

UNIVERSALS

Spicer No. 10275-1SF. Needle bearing type.
See Universals Section for complete data.

REAR AXLE

Spicer (Salisbury) Model 23-6, Part No. 2125-1; or Model 23-6, Part No. 2125-2 with O.D.—Semi-floating, Hypoid Gear type with Hotchkiss Drive.
See Rear Axle Section for complete data.
Ratio—4.10-1 (Std.), 4.55-1 (with O.D.).
Backlash—.001-.005".
Removal: Hoist rear end of car and place supports under frame. Remove rear wheels and drums (use Puller C-319). Disconnect propeller shaft at rear universal flange, disconnect hydraulic brake line at connector on axle housing, disconnect rear shock absorbers at spring seat, disconnect parking brake cables. Take out "U" spring bolts, disconnect both springs at rear shackle, remove axle from beneath car.
Axle Shaft Removal—Remove rear wheel and drum using Puller C-319. Disconnect hydraulic brake line at backing plate and brake cable. Remove outer oil seal and backing plate (CAUTION—do not lose adjusting shims between backing plate and housing flange). Pull axle shaft and bearing assembly out, using Axle Shaft Puller KF-15 (with Adapter SP-341 required).

SHOCK ABSORBERS

Monroe—Direct Acting, hydraulic two-way type. Serviced by replacement (mountings serviced separately).

FRONT SUSPENSION

Front Suspension: Independent, linked parallelogram type with coil springs.
See Front Suspension Section for complete data.
Kingpin Inclination—4½° preferred. Limits 4-4¾°
Caster—0° preferred (±1°). Adjust by adding half shim under upper control arm at frame mounting bolt (rear bolt for Pos., front bolt for Neg. caster).
Camber—½° preferred (¼-1° Pos. limits). Adjust by adding or removing whole shim under upper control arm at frame mounting bolts.
Toe-In—¼" (3/16-1/4" limits). Adjust by turning sleeve at outer end of each tie rod equally.
Steering Geometry (Toe-out)—Inner wheel 20°. Outer wheel 17°31'. No adjustment.

STEERING GEAR

Own Make (Gemmer 305 Type). Worm-and-Roller type with "push-pull" adjustments.
See Steering Gear Section for complete data.

BRAKES

Service Brakes: Bendix (lockheed) Hydraulic type with floating self-centering shoes (no anchor pin adjustment). Hand lever applies rear wheel service brakes.
See Brake Section for complete data.
Drums—Composite (cast iron & steel). Diameter 9".
Lining—Molded type. Width 2". Thickness 3/16". Length per shoe—9.75" (Forward Shoe—all wheels), 7.18" (Rear Shoe—all wheels).
Clearance—Shoe eccentric backed off to point where wheel just turns freely.
Hand Brake: See Service Brakes (above).

MISC. MECHANICAL

Windshield Wiper: Vacuum type.
See Miscellaneous Section for complete data.

CYLINDER HEAD

CYLINDER HEAD INSTALLATION: Use Torque Indicating Wrench to tighten cylinder head stud nuts, tighten in the sequence shown in the diagram.

Cast Iron Heads—With engine cold, tighten all nuts evenly to correct tension. Then run engine until it is thoroughly warmed up and recheck all nuts.

Aluminum Heads—With the engine cold, tighten all nuts to correct tension. Run engine until thoroughly warm, allow engine to cool off, and then recheck all nuts. Do not tighten aluminum heads when warm.

Tightening Torque—See Tightening (Torque Wrench) Specifications below.

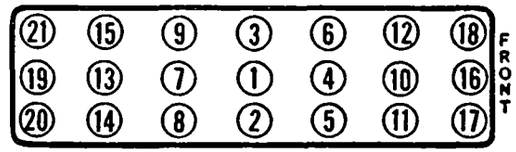

HUDSON 6

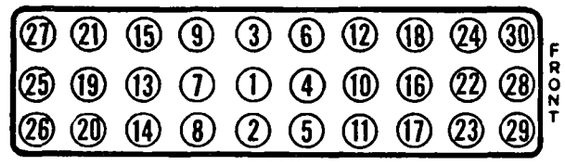

HUDSON 8

TIGHTENING SPECIFICATIONS

	Ft. Lbs.	In. Lbs.
Cylinder Head Capscrews (6)	70-75	840-900
Cylinder Head Stud Nuts (8)	45-50	540-600
Main Bearing Capscrews (6)	60-65	720-780
Main Bearing Capscrews (8)	70-80	840-960
Connecting Rod Bolts	40-45	480-540
Intake Manifold Stud Nuts	12-15	144-180
Exhaust Manifold Stud Nuts	20-30	240-360
Vibration Dampener Screw	100-120	1200-1440
Clutch Cover Bolts	20-25	240-360
Differential Carrier Bolts	35-40	420-480
Rear Axle Shaft Nut	125-200	1500-2400

PISTONS

REPLACEMENT PISTON SIZES: Code markings are same as for Original Pistons.

►***1950 SIX CYLINDER PISTON PRODUCTION CHANGE CAUTION:*** The "T" slot type piston replaced by a "solid skirt" type which is relieved at the Piston Pin bosses. This change became effective on Model 501-502 at car serial No. 501-63216 and on the Model 500 intermittently prior to car serial No. 50A-85995 and in complete production after that serial number. (NOTE—Model 500 engines before serial No. 50A-85995 in which new type pistons were installed can be identified by the letter "P" stamped on the upper right corner of front engine face).

►**PACEMAKER & OTHER SIX CYLINDER REPLACEMENT PISTON CAUTION**—***Pacemaker pistons are higher and must not be interchanged with pistons used on other engines.***

	Six Cyl. Identification Pin Center to Top—Height—Overall
Pacemaker	2.310-2.314" — 3¾"
Other 6 Cyl.	2.060-2.064" — 3¾"

ORIGINAL BORE & PISTONS

ORIGINAL PRODUCTION: Engine block and pistons marked as follows:

Cylinder Code Marks—Stamped on lower edge of valve chamber opposite cylinders.

Piston Code Marks—Stamped on head of piston indicate the following: **Letter** indicates piston size and cylinder size for which piston to be fitted (see Cylinder Bore and Piston Table). **Number** indicates piston weight in ounces (if 2 numbers used, one over the other, top number indicates weight in ounces, lower number ¼ ounces). All pistons in one engine should be of same weight. NOTE—Original factory installed pistons also have number of cylinder in which piston installed.

6 CYL. PISTON & BORE SIZES

Code	1950 500, 1, 2 / 1951 4A, 5A, 6A Cyl.	Piston	1951 7A Hornet Cyl.	Piston
A			3.812"	3.8095"
B	3.5625"	3.560"	3.8125"	3.810"
C	3.563"	3.5605"	3.813"	3.8105"
D	3.5635"	3.561"	3.8135"	3.811"
E	3.564"	3.5615"	3.814"	3.8115"
F	3.5645"	3.562"	①	3.812"
J	①	3.564"	①	3.814"
L	①	3.565"	①	3.815"
P	①	3.567"	①	3.817"
AO	3.572"	3.5695"	3.822"	3.8195"
BO	3.5725"	3.570"	3.8225"	3.820"
CO	3.573"	3.5705"	3.823"	3.8205"
DO	3.5735"	3.571"	3.8235"	3.821"
EO	3.574"	3.5715"	3.824"	3.8215"
FO	3.5745"	3.572"	①	3.822"
LO	①	3.575"	①	3.825"
BB	3.5825"	3.580"	3.8325"	3.830"
DD	3.5835"	3.581"	3.8335"	3.831"
FF	3.5845"	3.582"	3.8345"	3.832"

①—Cylinders not originally bored these sizes.

8 CYL. PISTON & BORE SIZES
1950-51

Code	Cyl.	Piston
A①	3.000"	2.998"
B①②	3.0005"	2.9985"
C①	3.001"	2.999"
D①②	3.0015"	2.9995"
E①	3.002"	3.000"
F	3.0025"	3.0005"
J	3.0045"	3.0025"
L	3.0055"	3.0035"
P	3.0075"	3.0055"
AO①	3.010"	3.008"
BO①②	3.0105"	3.0085"
CO①	3.011"	3.009"
DO①②	3.0115"	3.0095"
EO①	3.012"	3.010"
FO	3.0125"	3.0105"
JO	3.0145"	3.0125"
LO	3.0155"	3.0135"
PO	3.0175"	3.0155"
BB	3.0205"	3.0185"
DD	3.0215"	3.0195"
FF	3.0225"	3.0205"
BOOO	3.0305"	3.0285"
EOOO	3.032"	3.030"

①—1950 engines bored these sizes only in production.

②—1951 engines bored these sizes only in production.

PISTON RINGS

REPLACEMENT RINGS: Use Standard or Oversize rings for replacement pistons listed above. Ring size and pistons for each size as follows:

Six Cylinder Ring Size	Piston Mark	Eight Cylinder Ring Size	Piston Mark
Standard	B,C,D	Standard	A,B,C,D,E,F
.003" OS	F	.003" OS	J
.005" OS	J,L	.005" OS	L,P
.010" OS	P,AO,BO	.010" OS	AO,BO,CO
.010" OS	CO,DO	.010" OS	DO,EO,FO
.015" OS	EO,FO,LO	.015" OS	JO,PO,LO
.020" OS	BB,DD,FF	.020" OS	BB,DD,FF
		.030" OS	BOOO,EOOO

Piston Ring Sets—Cast-iron or steel segment types furnished standard size, .010" and .020" oversize.

Note—If rings filed, keep clearance at pin uniform with end gap (.006-.014" desired on 6 cyl., .004-.009" on 8 cyl.).

CRANKSHAFT SIZE CODE

CRANKSHAFT SIZE CODE: Engine built with undersize parts are identified by following marks stamped on left front corner of cylinder block on bottom face beside oil pan gasket. Crankshaft dimensions marked on front face of #1 counterweight.

PU—.010" undersize connecting rod crank pins.

MU—.010" undersize main bearing journals.

PMU—.010" undersize main and connecting rod pins.

Bearing Marks—Undersize Main Bearings marked by green paint and part number stamped on back for Eight Cylinder engines, stamped on back of bearing shells only on Six Cylinder engines.

OIL PAN REMOVAL

6 CYL. ENGINE

OIL PAN REMOVAL: Raise front end of car and place jack stands under #2 cross-member. Take out three bolts attaching center steering arm support bracket to #2 cross-member and drop center steering arm and tie rods. Take out two bolts attaching flywheel dust cover, remove cover. Drain oil pan. Take out oil pan attaching screws and lockwashers, lower pan and slide it out to rear.

►***CAUTION—Do not lose round rubber gasket at oil outlet tube.***

8 CYL. ENGINE

OIL PAN REMOVAL: Raise front of car and place jacks under each side of #3 crossmember. Drain oil and re-install plug. Place jack under center of #2 crossmember and raise jack until pressure is exerted against #2 crossmember enough to hold member in place against coil spring expansion pressure when attaching studs are removed. Remove one bolt (and loosen the second bolt) in each shock absorber anchor plate, which will allow the shock absorbers to slide out of the anchor plates. Remove the outer bolt (each side) of #2 crossmember at front of coil springs and insert ½"-20x6" studs. Remove two bolts (each side) from #2 crossmember at rear of coil springs and insert ½"-20x6" studs. Remove four bolts holding crossmember at front of coil springs. Release pressure of jack slowly and allow crossmember to settle on the heads of the six special studs. Remove two bolts from flywheel dust cover and remove cover. Remove bolts from oil pan and remove pan.

MODEL IDENTIFICATION

SERIAL & ENGINE NUMBER: Stamped on plate on right front door hinge pillar post and stamped vertically on upper right front end of block. 1951 model designation (4A) appears only in the separate space above the serial number.

1950 Numbers—500101 Up.

Identification—First three figures of number indicate Series and Model: 500101 Pacemaker Six.

1951 Numbers—1001 Start. Cars will be consecutively numbered regardless of model or body type.

TUNE-UP

COMPRESSION PRESSURE: 100 lbs. min. Compression between cylinders should not vary more than 10 lbs.

VACUUM READING: 17-18" idling at 540-560 RPM. (Std.), 580-600 RPM. (Vacumotive, Drive-Master or Super-Matic).

FIRING ORDER: 1-5-3-6-2-4. See diagram.

SPARK PLUG GAPS: .032".
Plugs (Early 1950)—Champion J-7 (Cast-iron Head). H-10 (Aluminum Head). 14 mm.

DISTRIBUTOR: Breaker Gap—.020".
Cam Angle—38° Closed. 22° Open.
Breaker Arm Spring Tension—17-20 ounces.
Automatic & Vacuum Advance—*See Ignition.*
Condenser Capacity—.20-.25 microfarad.

IGNITION TIMING: TDC (top dead center).
Timing Procedure—*See Ignition Timing.*
Flywheel Mark—"UDC.1/" aligned with lower edge of rear engine support plate opening behind starter.
Fuel Compensator Setting—Slight ping at 15 MPH. when accelerating from 10 MPH. in high gear.

CARBURETION:
Idle Setting—½-1½ turns open. Turn screw out for richer mixture.
Idle Speed (Std.)—540-560 RPM., or 7½-8 MPH.
Idle Speed (with Vacumotive, Drive-Master or Super-Matic Drive)—580-600 RPM.
Float Level—½" from top of projection on underside of bowl cover to top of seam on free end of float (invert bowl cover and float to check level).
Accelerating Pump—Outer hole (Normal). Inner hole if less charge required.

Choke Setting: Centered at index.

Fuel Pump Pressure: (Carter)—3½-4½ lbs. at carburetor, (AC)—3-4 lbs.

MANIFOLD HEAT CONTROL: Automatic thermostatic type.

VALVE TAPPET CLEARANCE: .008" Int., .010" Exh., Hot.
NOTE—Self-locking tappet adjusting screws used. Remove apron in right front fender for access.
Valve Timing Check—*See Valve Timing.*

STARTING: *See Battery, Starter, Generator, Regulator.*

IGNITION

IGNITION SWITCH: Mitchellock.

COIL: Auto-Lite No. CR-6012-A. Located on left side of engine above distributor.

Ignition Current—1.5-2.0 amperes idling, 5 stopped.

CONDENSER: Auto-Lite.
Capacity—.20-.25 microfarad.

DISTRIBUTOR: (1950) Auto-Lite Model IAT-4002. (1951) Auto-Lite Model IAT-4009. New "Pivoted Breaker Plate" type with automatic advance, Vacuum Spark Control and Fuel Compensator adjustment.
See Electrical Equipment Section for data.

►**Breaker Plate Binding Correction on First Cars**—*See Electrical Equipment Section for data.*

Breaker Gap—.020".

Cam Angle—38° Closed, 22° Open.

Breaker Arm Spring Tension—17-20 ounces.

Rotation—Clockwise viewed from above.

Automatic Advance

Degrees	Distr. R.P.M.	Degrees Eng.	R.P.M.
Start	300	0	600
1	365	2	730
3	400	6	800
9	1090	18	2180
10	1200	20	2400

Fuel Compensator: 10° advance or retard adjustment at distributor. See Ignition Timing.

Vacuum Spark Control: Auto-Lite. Integral type. Linked directly to breaker plate. Provides additional advance at speeds above idling except when engine accelerated or operated with wide open throttle when spark retarded by return spring in unit.

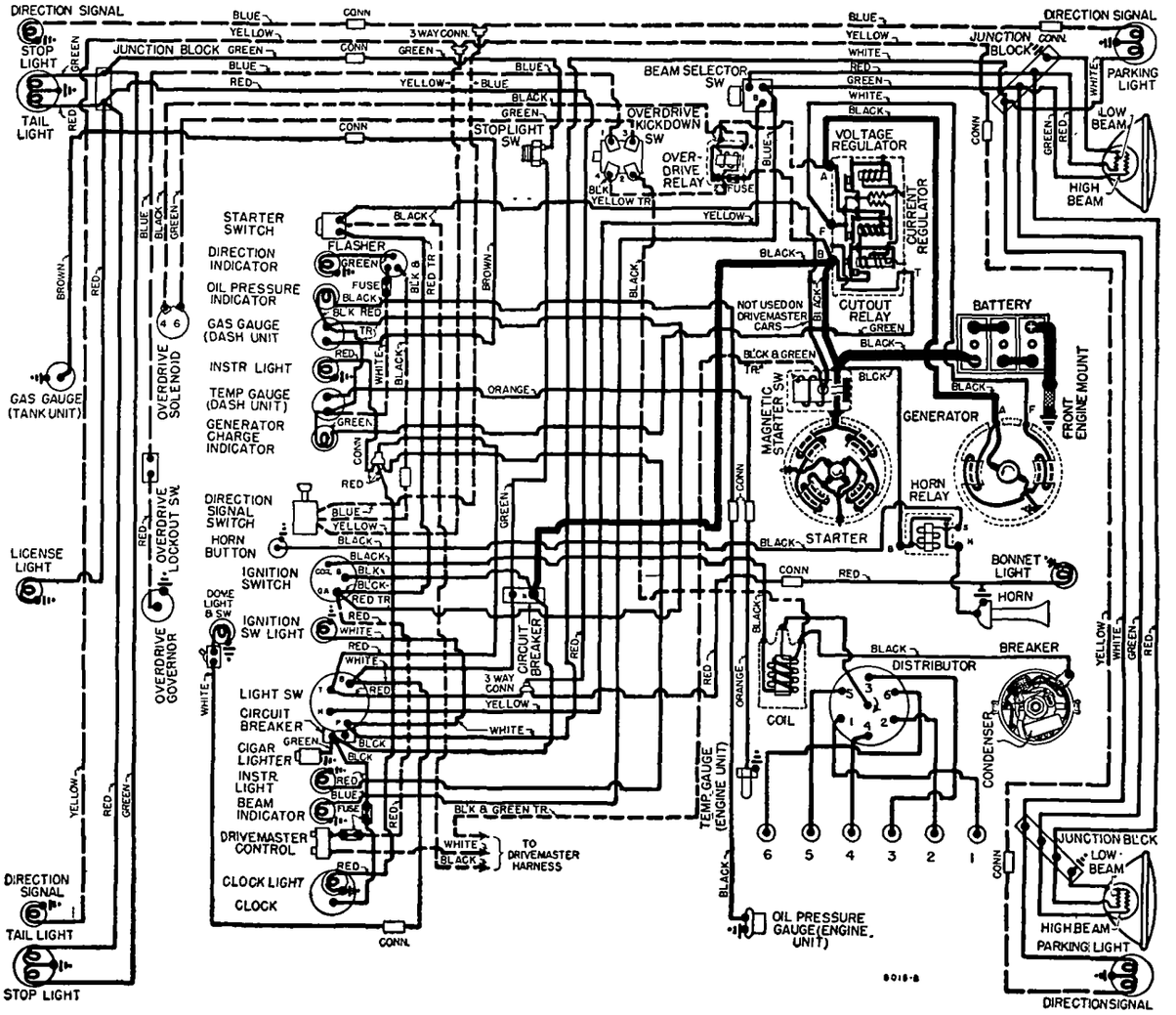

1950 MODELS

Vacuum Advance

Distr. Degrees	Eng. Degrees	Vacuum (" of HG)
Start	0°	9½"
1°	2°	10"
3°	6°	11"
4°	8°	11½"
5°	10°	12"

Distributor Removal: On left side of engine. Disconnect vacuum line, take out hold-down screw in advance arm. Lift off.

►***INSTALLATION CAUTION—If oil pump removed, refer to Oil Pump Installation directions in Hudson Special Data.***

IGNITION TIMING

Std. Setting.....At Top Dead Center

NOTE—Modify this setting for special fuel and altitude conditions. See Fuel Compensator Setting.

Flywheel Mark—"UDC.1/" (#1 and #6 piston top dead center position) with 4 short marks (¼" apart) ahead of this mark. Visible in opening behind starter.

Timing—With #1 piston on compression stroke, crank engine until long line of flywheel mark "UDC-1/" lines up with pointer in rear engine support plate behind starter. Loosen hold-down screw in quadrant, rotate distributor clockwise to limit of quadrant slot, then rotate distributor counterclockwise until contacts open, tighten quadrant screw. Check Fuel Compensator setting.

Timing (with Neon Timing Light)—Mark long line on flywheel with white chalk and loosen hold-down screw in distributor quadrant. Operate the engine at idle speed with timing light aimed at flywheel opening and rotate distributor until chalk mark lines up with pointer. Tighten quadrant screw.

Fuel Compensator Setting—Set for slight ping at 15 MPH. when accelerating from 10 MPH. with wide open throttle. To adjust, loosen hold-down screw, rotate distributor counter-clockwise (if ping too severe), clockwise (if no ping). **Final setting must not be more than 1" (1st short line) ahead of "UDC-1/" flywheel mark.**

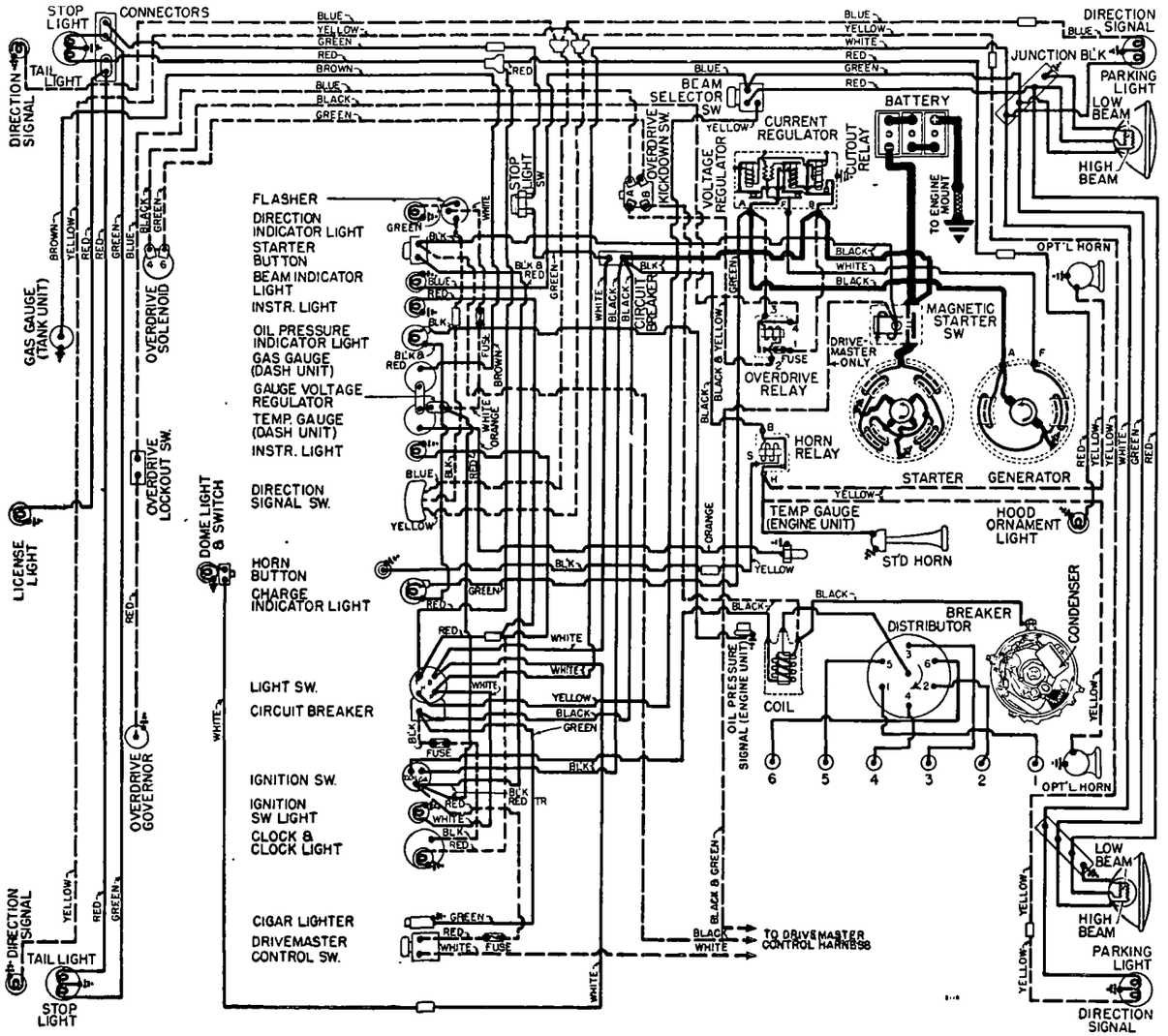

1951 MODELS

CARBURETOR

Carter WA1-749S. 1¼" single barrel downdraft type with Carter Climatic Control.
Casting No. on Flange—682.
See Carburetor Section for complete data.

Settings (Idle Setting, Float Level, and Accelerating Pump): *See Tune-Up data.*
Metering Rods & Jets—*See Carter Jet Table in Carburetor Section.*

Fast Idle: Carter Single Barrel Carburetor type.
Setting—⅝" clearance between choke valve and air horn (Gauge T109-85) with throttle valve closed and stopscrew against (not on) first step of fast idle cam. Adjust by bending connector link at lower offset (Tool T109-41).
See Carburetion Equipment Section for complete data.

Automatic Choke: Carter Climatic Control (Single Barrel Carburetor).
Setting—Center at index.
See Carburetion Equipment Section for complete data.

CARB. EQUIPMENT

Air Cleaner: AC. Oil-wetted Std., Oil-bath Optl.
Servicing (oil-wetted type)—Clean and re-oil filter element (use same grade engine oil used in crankcase) at 2000 mile intervals or more often if required by operating conditions.
Servicing (oil-bath type)—Service same as oil-wetted type except that filter element not oiled and refill to level with engine oil.

Fuel Pump (Std.): Carter Model M729SZ.
Optl. (Fuel & Vacuum)—AC type "AJ".
Pressure—(Carter) 3½-4½ lbs. at carb. **(AC)** 3-4 lbs.
See Carburetion Equipment Section for complete data.

Gasoline Gauge (1950): King-Seeley Electric type.
Dash Unit—K-S No. 42916.
Tank Unit—K-S No. 42696.

Gasoline Gauge (1951): King-Seeley "CV" (Constant Voltage) type with voltage regulator.
Dash Unit—K-S No. 45675.
Tank Unit—K-S No. 44513.
See Carburetion Equipment Section for complete data.

BATTERY

National Type OE-2L-100. 6 volt, 17 Plate, 100 Ampere Hour Capacity (20 hour rate).
Grounded Terminal—Positive (+) to frame and engine by a single strap.
Location—On left side under engine hood.

C NTINUED N NEXT PAGE

C NTINUED FR M PRECEDIN PAGE

STARTER

Auto-Lite Model MZ-4159 (1950).

Auto-Lite Model MZ-4164 (1951).

Drive—Bendix No. A-1806. Inboard Barrel type.
Rotation—Counter-clockwise at commutator end.
Brush Spring Tension—42-53 ozs. (new brushes).
Cranking Engine—Approx. 160 amperes at 150 RPM.

Performance Data

Torque	R.P.M.	Volts	Amperes
0 ft. lbs.	4300	5.5	70
4.4 "	Lock	2.0	280

Removal: On left front face of rear motor support. To remove, take off Drivemaster mounting bracket bolts (on cars equipped with Drivemaster), disconnect linkage, and pull bracket out and forward, disconnect cables from solenoid switch, remove two starter mounting stud nuts and remove starter motor assembly.

Starting Switch: Auto-Lite No. SS-4001 ('50). SS-4030 ('51). On starter with pushbutton on instrument panel. Operative only with ignition "on" (and clutch disengaged on cars with Vacumotive Drive, Drive-Master or Super-Matic).

See Electrical Equipment Section for complete data.

GENERATOR

Auto-Lite Model GDZ-6001B. Armature GGY-2006F.

Two brush (shunt) type with voltage and current regulation. Ventilated.

Maximum Charging Rate—35 amperes at 8 volts.

Charging Rate Adjustment—None (see Regulator).

Performance Data

Amperes	Volts	Cold—R.P.M.—Hot	
0	6.4	870-970	950-1050
35	8.0	1800-2000	2150-2350

Rotation—Counter-clockwise at commutator end.
Brush Spring Tension—53 ozs. max. (new brushes).
Field Current—1.6-1.8 amperes at 6.0 volts.
Motoring Current—4.2-4.6 amps. at 6.0 volts.

Removal: Pivot mounted at left front of engine. To remove, take out pivot and clamp screws and nuts.

Belt Adjustment: ¾" belt deflection between generator and pump pulleys. Loosen bolts, swing generator out.

REGULATOR

Auto-Lite Model (1950) VRP-6002A, (1951) VRP-6101A. Voltage and Current regulators.

NOTE—VRP-6002A Cutout Relay has extra set of contacts for Generator "Teleflash" Indicator control. VRP-6101A Cutout Relay does not have extra set of points. "Teleflash" Indicator light is operated from the "A" terminal on the regulator.

NOTE—Regulator cover sealed. Warranty void if seal broken.

Cutout Relay

Cuts In—6.4-7.0 volts (set to 6.4-6.6 volts).
Cuts Out—4.1-4.8 volts (approx. 4-6 amps. disch.).
Contact Gap—.015" min., ground contacts closed (ground contacts open when main contacts close).
Air Gap—.031-.034" at hinge end of core with contacts open (ground contacts closed).

Voltage Regulator

Voltage Setting—7.2-7.5 volts at 70°F. See Electrical Equipment Section for settings at other temperatures.
Contact Gap—.012" Min. (armature against stop pin).
Air Gap—.048-.052" with contacts just opening.
Checking (without breaking seals) & Adjustment—*See Electrical Equipment Section for complete data.*

Current Regulator

Setting—34-36 amperes (marked '35' on the cover).
Contact Gap—.012" min. (armature against stop).
Air Gap—.048-.052" with contacts just opening.
Checking (without breaking seals) & Adjustment—*See Electrical Equipment Section for complete data.*

LIGHTING

Headlamps: Hall "Sealed Beam" type.
See Electrical Equipment Section for complete data.
Adjustment—Aim upper beams straight ahead (hot spot centers 3" below lamp center height at 25 ft.).
Beam Indicator—Red pilot bulb at lower center of speedometer dial. Lights when Upper Beam "on."

Direction Signal: *Optl. See Electrical Equipment Section.*
Direction Signal Indicator—At left end of instrument panel. Flashes when Signal in use.

MISC. ELECTRICAL

See 1950-51 Hudson Six Pages for Circuit Breakers, Generator Charge & Oil Presure Signals, and Horns.

ENGINE

ENGINE SPECIFICATIONS: Own Make. Six cylinder, "L" head type.
Bore—3 9/16". *See "Original Bore & Pistons" in Hudson Special Data.*
Stroke—3 7/8".
Displacement—232 cu. ins. **Rated HP**—30.4.
Developed Horsepower—112 at 4200 RPM.
Compression Ratio (Std.)—6.70-1 cast-iron head.
Compression Ratio (OptL)—7.20-1 aluminum head.
Compression & Vacuum Reading—*See Tune-Up.*

ORIGINAL BORE & PISTONS: *See Hudson Special Data.*

ORIGINAL BEARING SIZES: *See Hudson Special Data.*

TIGHTENING TORQUES: *See Hudson Special Data.*

CYLINDER HEAD: *CAUTION—NOT INTERCHANGEABLE with other engines.*

►**Head Diagram & Tightening Torques**—*See Hudson Special Data.*

OIL PAN REMOVAL: *See Hudson Special Data.*

PISTONS: Aluminum alloy, Cam ground, T-slot type.

►*CAUTION—Pistons NOT INTERCHANGEABLE with other engines* (greater height from pin hole to top—2.310-2.314" on Pacemaker, 2.060-2.064" other Sixes).
Weight—18⅛ ozs. (stripped). **Length**—3¾".
Removal—Pistons and rods removed from above.
Clearance—.0025" to .002" (skirt).
See "Original Bore & Pistons" in Hudson Special Data.
Piston Fitting—Insert piston in cylinder with .002" feeler gauge. Using Piston Feeler Scale (Tool J-888), pull to withdraw feeler, 3 to 4 lbs.

Replacement Pistons: *See Hudson Special Data.*

Installing Pistons: Slot away from camshaft.

PISTON RINGS: Two compression, two oil rings (one above pin, one below pin) per piston. Rings are square end type. Rings pinned to prevent rotation. Rings cut and notched to fit pin (clearance on pin equal to ring end gap.

Ring	Width	End Gap	Side Clearance
Compression	5/64"	.006-.014"	.001"
Oil (upper)	3/16"	.006-.014"	.001"
Oil (lower)	5/32"	.006-.014"	.001"

Installing Rings—Three top rings have offset pin notch (in relation to gap). Install rings so that alternate gaps offset.

Replacement Rings: *See Hudson Special Data.*

PISTON PIN: Diameter—.9684-.9687". **Lgth.**—2.9375". Floating type with diamond-drilled pin holes in piston and rolled steel babbitt faced bearing in connecting rod. Pin retained by lock ring at each end.
Pin Fit in Piston—.0000-.0003" at 70°F. or hand push fit with piston at 200°F.
Pin Fit in Rod Bushing—Hand push fit at 70°F.

Replacement Pins: Std., .002", .005", .010" oversize. Select pin to fit piston. **Do not ream pin hole in piston.**

CONNECTING ROD: Length—8⅛".
NOTE—Connecting Rods are interchangeable with other Six Cylinder engines.
Weight—34.24 ozs. (without bearings).
Crankpin Journal Diameter—2.1244-2.1254".
See "Original Bearing Size" in Hudson Special Data.
Lower Bearing—steel-backed, babbitt-lined type with upper and lower halves interchangeable. No shims.
Clearance—.0005-.0015". **Sideplay**—.007-.013".

Bearing Adjustment: None (no shims). Replace bearings. Do not file rods or bearing caps.
NOTE—Identifying notches on side of cap and rod must be together when cap installed on rod.
Palnuts—Tighten finger tight, plus 1/3 turn.

Replacement Bearings: Large std., small std., .010" US.

Installing Rods: Not offset. Oil spit hole in lower end of rod must be toward valve side of engine.

CRANKSHAFT: Four bearing type with integral counterweights. Vibration dampener on front end.
NOTE—Crankshaft not interchangeable with other Six Cylinder engines.
Journal Diameter—2.4988-2.4998".
Bearing Diameter—2.4993-2.5013".
See "Original Bearing Size" in Hudson Special Data.
Bearings—Removable steel-backed, babbitt-lined type. Upper and lower halves of each bearing are interchangeable.
Clearance—.0005-.0015".
Front & Rear Oil Seals—*See "Crankshaft & Main Bearings" in Hudson Special Data.*

Bearing Adjustment: None (no shims). Replace bearings. Do not file bearing caps.
NOTE—Bearing shells positioned in cap and crankcase by tang on edge of shell. Can be rotated out without removing crankshaft by using Tool KMO-734.
Palnuts—Tighten finger tight, plus 1/3 turn.

Replacement Bearings: Std., optl. std., .010" US.

End Thrust: Taken by #3 bearing. Replace bearing if endplay excessive.
Endplay: .003-.009".

CAMSHAFT: 4 bearing type. Non-adjustable chain.

ENGINE

CONTINUED FROM PRECEDING PAGE

Bearing Diameter—#1, 2.375-2.3755"; #2, 1.997-1.9975"; #3, 1.965-1.9655"; #4, 1.497-1.4975".
Bearings—Steel-backed, babbitt-lined bushings.
Clearance—.0015-.002".
Camshaft Removal—*See Hudson Special Data.*

Replacement Bearings: Finished-reamed or unfinished.
Finished Reamed—Will be proper dimension when pressed in place (.0026-.0055" press fit) and no reaming required.
Unfinished—Press in place (.0026-.0055" press fit) and line ream to .001" larger than individual camshaft journals.
►*CAUTION*—Install all bearings with notch at top.

End Thrust: Steel thrust plate fitted between front end of camshaft and sprocket. Plate attached to crankcase by two capscrews and locks.

Timing Chain: Morse. 60 links. ⅜" pitch. Width 1¼".
Chain Tension Shoe—Fibre shoe backed by synthetic rubber plunger mounted inside timing chain cover at top. Holds chain in close mesh with sprockets and prevents whip.

Camshaft Setting: Sprockets marked. Two chain guide links marked with center holes. Mesh chain with center hole in each link opposite "O" mark on each sprocket with #1 piston at top dead center (crankshaft sprocket keyway at top with #1 piston at TDC.) NOTE—With this setting, there should be 6 full links plus two half-links between marks on sprockets (half-links opposite sprocket marks).

VALVES:	Head Diameter	Stem Diameter	Length
Intake	1 53/64"	.3412-.3422"	5.730"
Exhaust	1 9/16"	.3402-.3412"	5.730"

	Seat Angle	Lift	Stem Clearance
Intake	45°	11/32"	.0015-.003"
Exhaust	45°	.346"	.002-.004"

NOTE—Stem clearance worn limit .005" max.

Valve Guides: Removable, one-piece, cast-iron Exhaust guides counterbored at upper end. Install guides as follows:
Intake Guide—Upper end 1 7/16" below top of valve seat. Finish ream to .3432-.3442".
Exhaust Guides—Upper end 1 3/32" below top of valve seat. Finish ream to .3432-.3442". Counterbored 9/16" deep to diameter of 25/64".

Valve Springs: Cadmium plated springs are used. Install springs with closely coiled end up.

	Spring Pressure	Length
Valve Closed	77 lbs.	2 3/16"

NOTE—Reject springs if pressure less than 60 lbs. Free length 2.500".

Valve Lifters: Mushroom type fitted directly in crankcase. Removed from below with camshaft out.
NOTE—Inner sides of guide clamps should be in full contact at all points with matching flat surfaces of front face of each pair of tappet guides within .0015".
Clearance—.00075-.0015".
Replacement Lifters—.002", .004", .010" Oversize.

VALVE TIMING

Tappet Clearance: .008" Intake, .010" Exhaust, Hot. Self-locking tappet screws are used. Remove right front fender apron for access to valve compartment.

Valve Timing: See Camshaft Setting above.
Intake Valves—Open 7°18' BTDC. Close 53°42' ALDC.
Exhaust Valves—Open 53°18' BLDC. Close 7°42' ATDC. These figures correct with .010" tappet clearance, Hot or .012" Cold.
Valve Timing Check—Remove front tappet cover and adjust tappet clearance of No. 1 intake valve to .010" Hot, or .012" Cold. Insert .002" feeler gauge in No. 1 intake tappet and rotate engine in direction of rotation until exhaust valve begins to close and light drag is felt on feeler gauge. Engine is correctly timed when first of four long timing marks is approximately ⅝" above index of timing hole in rear engine support plate. Reset tappet clearance to .008" Hot, or .010" Cold.

LUBRICATION

Engine Oiling System: Pressure to crankshaft, connecting rod, and camshaft bearings, piston pins, valve lifters, and timing chain.
Crankcase Capacity—7 qts. (refill), 7½ qts. (dry).
Normal Oil Pressure—40 lbs. at 30 MPH. No gauge used. See Oil Pressure Indicator below.
Oil Pressure Relief Valve—Non-adjustable release valve and spring under plug on left side of engine ahead of starter.

Oil Pan Removal: *See Hudson Special Data.*

Oil Pump: Rotor type consisting of inner and outer rotor, shaft, body, and cover. Angle mounted on right side of crankcase and driven from camshaft.

Removal & Overhaul—*See "Oil Pump" in Hudson Special Data.*

Oil Pressure Indicator: Hudson Signal Light with Oil Pressure Warning Switch. Consists of light on instrument panel operated by switch as follows:
Oil Pressure Warning Switch—Carter No. A815S or King-Seeley No. 47100 (Hudson No. 300828). On right side of engine above oil pump. Contacts open at 11-15 lbs. Switch sealed (no adjustment).
See Electrical Equipment Section for complete data.

Crankcase Ventilation: Oil-wetted type filter element in oil filler cap (air intake). Outlet pipe in rear valve compartment cover on right side of engine.
Servicing—Wash filter element in gasoline and re-oil when changing oil.

COOLING

Cooling System: Positive circulation with pump on front of engine, by-pass type thermostat, and brass water distribution tube in cylinder block.
Capacity (1950)—18 qts. 19 qts. with heater.
Capacity (1951)—18½ qts. 19½ qts. with heater.
Pressure Cap—Optl. AC #850005 or Stant #AAX-0417.

Water Pump: Centrifugal, belt-driven, packless type. Shaft mounted on sealed duplex ball bearing.
See Water Pump Section for complete data.
Belt Adjustment—*See Generator Belt Adjustment.*

Thermostat: By-pass type in water outlet on cylinder head.
Setting—Starts to open 150-155°F. Fully open 185°.

Temperature Gauge (1950): King-Seeley Electric type.
Dash Unit—K-S No. 42918.
Engine Unit—K-S No. 41085.

Temperature Gauge (1951): King-Seeley "CV" (Constant Voltage) type with voltage regulator.
Dash Unit—K-S No. 45675.
Engine Unit—K-S No. 44200.
See Miscellaneous Section for complete data.

CLUTCH

Own Make—Single plate, fluid cushioned type (cork insert type driven member operating in Hudsonite oil. 9" type used on standard models, 10" type used with Drive-Master.
See Clutch Section for complete data.
Facings—Cork insert type. Inside Diameter 6⅜". Outside Diam. 9" (Std.), 10" (With Drive-Master), 90 corks (9"), 108 corks (10"), .203" thick.

Pedal Adjustment: Clearance between underside of toeboard and top face of pedal shank must be 1½". To adjust, loosen locknut above clevis, remove clevis pin, turn clevis in or out of link, tighten locknut after re-connecting clevis.

Clutch Oil Servicing: *See Hudson Special Data.*

Removal: Remove transmission (see Transmission Removal following). Drain clutch oil by turning engine over until plug on flywheel is accessible through timing inspection hole in rear engine support plate behind starter, remove plug, turn engine over 1/3 revolution until star on flywheel visible through timing hole (drain hole then at bottom), allow lubricant to be drained. Loosen mounting bolts in clutch cover rim to release spring tension, remove bolts and lift clutch assembly off car.

VACUMOTIVE DRIVE

Vacumotive Drive: Automatic clutch control. Optl.
See Clutch Section for complete data.

TRANSMISSION

STANDARD

Own Make—All helical gear type. Constant-mesh, synchro-mesh (Second & High), sliding gear (Low & Reverse) with remote (steering column) shift.
Second Speed Ratio—1.82:1.
See Transmission Section for complete data.

Transmission Control: Handy-shift remote control type with shift lever mounted on steering column.
See Transmission Section for complete data.

Transmission Removal: Remove front seat cushion, disconnect front seat from track, disconnect seat adjusting lever and remove seat back from car. Disconnect accelerator pedal at accelerator rod, brake pedal rod at lever. Remove floor mat, remove Weather Control blower unit (2 screws each side), disconnect bowden wire at control valve at cylinder head. Remove floor opening cover over transmission. Disconnect front universal joint at transmission (wire bearings on universal joint spider). Remove bolts attaching center bearing support bracket, move propeller shaft to rear to clear companion flange at transmission. Disconnect clutch pedal lever return spring, remove clutch cross-shaft and bracket, disconnect clutch control link clevis. Disconnect Handy Shift by removing shifter shaft outer lever, nut, and washer. Remove flywheel guard from bottom of clutch housing. Remove two engine rear mounting bolts and nuts, jack up rear end of engine about ½" off frame cross-member (CAUTION—use block of wood on jack to prevent damage to oil pan). Disconnect speedometer cable at transmission case, plug hole with wood plug. Remove two top screws attaching clutch housing to engine, install guide studs (headless screws) in these holes to support transmission, remove remaining screws. Re-

CONTINUED N NEXT PAGE

CONTINUED FROM PRECEDING PAGE

move breather pipe bracket from clutch housing and bolt attaching breather pipe and rear valve cover. Pull transmission straight back on guide studs, lift transmission out through floor opening (NOTE—Hoist J-1502 can be used to lift transmission out).

DRIVE-MASTER TRANSMISSION

Drive-Master Transmission: Optl. Conventional 3-speed transmission with automatic gear shifting between Second & High Gears. Used in conjunction with Vacumotive Drive (automatic clutch control).
Identification—Metal tag attached by a cover bolt screw carries second speed ratio 1.82:1.
See Transmission Section for complete data.
Drive-Master Fuse—15 ampere, Part No. 71406. Located in wiring circuit 6" from control switch.

GAUGE VOLTAGE REGULATOR: King-Seeley—Consists of a thermo-bi-metal interrupter unit designed to maintain a constant voltage of 5 volts (regardless of generator charging voltage fluctuation) on gauge feed circuit. Unit is mounted on the instrument cluster and is connected between the ignition switch, and the gauge circuits. See Wiring Diagram.
Power Cylinder Lubrication—Must be lubricated at 10,000 mile intervals. *See "Hudson Drive-Master" in Transmission Section.*

OVERDRIVE

Warner Type AS2-R10D (Early '50), AS3-R10D (Late '50), AS4-R10D (Late '50 & '51). (Models AS3,4 have centered ring gear). Optl. with Hudson Transmission. Part of Super-Matic Drive. Has simplified control (2-terminal solenoid, Relay & Throttle Kick-down Switch).

Removal: Same as standard transmission removal (above) except that overdrive control cable and wiring must also be disconnected.

SUPER-MATIC DRIVE TRANSMISSION

Own Make—Four-speed automatic transmission (3-speed automatic shift plus ultra-low). Optl.
See Transmission Section for complete data.

UNIVERSALS

Spicer No. 1268-111X.....Front & Rear
Spicer No. 1268-102X.....Intermediate
Needle bearing type. Three used with intermediate universal to rear of propeller shaft center bearing.
See Universals Section for complete data.

Propeller Shaft & Center Bearing: Two shafts used:
1) Front shaft supported by sealed ball-bearing just ahead of rear coupling flange (no slip joint).
2) Rear shaft with slip joint at forward end.
Center Bearing—Prelubricated sealed annular ball bearing fitted in cast steel housing bolted to support mounting which is secured to underside of frame cross-members. Housing cradle mounted on two rubber supports and forward end of support mounting fitted with rubber cushion.
Center Bearing Removal & Installation—*See Hudson Special Data.*

REAR AXLE

Own Make—Semi-floating, hypoid gear type with Hotchkiss drive.
See Rear Axle Section for complete data.

Ratios	Std.	Optl.
Std. Transmission	4.1-1	4.55 or 3.82-1
With Drive-Master	4.1-1	4.55 or 3.82-1
With Overdrive	4.55-1	4.1-1
With Super-Matic	4.1-1	4.55-1

Backlash—.004-.006". Screw adjustment.

Removal: Support car on stands under body frame just forward of rear springs, remove fender shields and rear wheels. Disconnect brake line at tee on axle housing, remove tee. Disconnect brake cables at equalizer bar clevis and unscrew end fittings, loosen nuts on cable conduit brackets, on crossmember and free conduits from brackets, disconnect cable conduit clips on rear springs, pull cables and conduits out through guides and clamps. Disconnect rear universal joint and lower propeller shaft. Disconnect lower end of shock absorbers, disconnect and remove rear stabilizer. Disconnect each rear spring at axle housing, and at rear shackle, lower rear end of springs, slide axle out toward rear.

Axle Shaft Removal: Hoist rear of car. Remove rear wheels. Remove axle shaft nut and washer. Remove hub and drum assembly using screw type wheel puller (Tool J-736—CAUTION—Car manufacturer recommends that screw type puller be used, if knock-out type puller is used serious damage to differential parts may result). Remove 4 nuts on bearing cap bolts, remove bearing cap and shims (without disturbing brake backing plate). Pull rear wheel bearing and axle shaft, using puller Tool J-352. Do not drag axle shaft on oil seal assembly.

Wheel Bearing Adjustment: Controlled by shims (.003", .005", or .015" thick) under bearing cap. To adjust, remove bearing cap (see directions above under Axle Shaft Removal), add or remove shims equally at both wheels (necessary to keep thrust spacer centered on differential pinion shaft).
Endplay—.001-.004".

SHOCK ABSORBERS

Delco or Monroe. Direct acting, hydraulic types.

Light Scale

Make	Front	Rear
Monroe	303060	300351
Delco	303062	301241

Heavy Scale

Monroe	303061	301768
Delco	303063	301770

Extra Heavy Scale

Monroe	302431	302431
Delco	303063	301770

APPLICATION NOTE—**Light Scale** front and rear shocks used with light scale springs and with front only heavy scale springs. **Heavy Scale** front and rear shocks used with heavy scale springs and with rear only heavy scale springs. **Extra Heavy Scale** front and rear shocks optional on all models. **Part Number** stamped on outside of shock absorber body.

FRONT SUSPENSION

Front Suspension: Independent, linked parallelogram type with coil springs and lateral stabilizer.
See Front Suspension Section for complete data.
Kingpin Inclination—3°36' crosswise.
Caster—½-1½°. Eccentric adjustment. Both wheels alike within ½°.
Camber—½-1½°. Eccentric adjustment. Both wheels alike within ½°.
Toe In—1/32" ± 1/32". Center steering arm on frame must be at center of car. To adjust, loosen clamps at ends of each tie rod and adjust tubes equally (to increase toe-in turn rods in direction of wheel travel, to decrease, turn in opposite direction).
Steering Geometry—Inner wheel 30° .Outer 25°.

STEERING GEAR

Gemmer Model 335—**"3-tooth"** Worm-and-Roller type with "push-pull" adjustments.
See Steering Gear Section for complete data.

BRAKES

Service: Bendix Hydraulic, Duo-Servo, Single Anchor type without eccentric adjustment. Mechanical follow-up (pedal linked to hand brake cables) provided. Hand lever applies rear wheel service brakes.
See Brake Section for complete data.
Wheel Cylinders—Diameters: Front wheel 1 1/16", Rear wheel 15/16".
Drums—11" centrifuse type.
Lining—Molded. Width 1¾" (front & rear). Length per shoe 11" (except rear secondary 11 1/16").
Clearance—.010" at both ends of secondary (rear) shoe with primary shoe forced out against drum.

Mechanical Follow-Up (Reserve): Over-running linkage between brake pedal and parking (hand brake) linkage which causes rear wheel brakes to be applied mechanically by pedal if hydraulic system not operating.
Setting—1¼" clearance between clevis pin and rear end of slot in pedal rod rear clevis.
See Brake Section for complete data.

Hand Brake: See Service Brakes above.

MISC. MECHANICAL

Power Operated Convertible Top & Windows: Hydro-Lectric (hydraulic actuation with motor-driven pump supplying oil under pressure for power cylinders. *See Miscellaneous Section for complete data.*

Windshield Wipers: Cable operated—Vacuum type.
See Miscellaneous Section for complete data.

MODEL IDENTIFICATION

SERIAL & ENGINE NUMBER: Stamped on plate on right front door pillar post and stamped vertically on upper right front corner of block. Model designation (5A, 6A, etc.) on 1951 models appears only in the separate space above the serial number.

1950 Serial Number—Super 6, 501101 Up. Commodore 6, 502101 Up. First three figures of number indicate model.

1951 Serial Number—All Models, 1001 Up. Cars will be consecutively numbered regardless of model or body type.

TUNE-UP

COMPRESSION PRESSURE: 119 lbs. min. at 125 RPM. but not less than 100 lbs. min. and not over 10 lbs. max. variation between cylinders.

VACUUM READING: 17-18" idling at 540-560 RPM. (Std.), 580-600 RPM. (Vacumotive or Drive-Mstr.).

FIRING ORDER: 1-5-3-6-2-4. See diagram.

SPARK PLUG GAPS: .032".

Plugs (Early 1950)—Champion J-7 (Cast-iron Head), H-10 (Aluminum Head). 14 mm.

Plugs (1950-51)—Champion H-8 14 mm. (all Heads).

DISTRIBUTOR: Breaker Gap—.020". Limits .018-.022".

Cam Angle—38° ('50), 39° ('51) Closed.

Breaker Arm Spring Tension—17-20 ounces.

Automatic & Vacuum Advance—*See Ignition.*

Condenser Capacity—.25-.28 microfarads ('50). .20-.25 microfarads ('51).

IGNITION TIMING: TDC (top dead center).

Timing Procedure—See Ignition Timing.

Flywheel Mark—"UDC-1/" aligned with pointer in rear engine support plate opening behind starter.

Octane Selector Setting—Slight ping at 15 MPH. when accelerating from 10 MPH. in high gear.

CARBURETION:

Idle Setting: (WDO-647SA—Early 1950)—1¼-1¾ turns open, **(WGD-776S—1950-51)**—1-1½ turns open. Turn screws out for richer mixture.

Idle Speed: (Std.)—540-560 RPM. or 7½-8 MPH.

Vacumotive or Drive-Master—580-600 RPM.

Hydra-Matic Drive—490-510 RPM.

Float Level—3/16". Measured from top of float to gasket seat (machined surface) on bowl cover with needle valve seated. **776S NOTE**—Measured from center highest point of float.

Accelerating Pump—Outer hole, max. (Normal). **776S Note**—No seasonal pump adjustment.

Choke Setting: Coil housing 1 point lean (WDO), 2 points lean (WGD).

►*CAUTION*—2 point setting on WGD Carb. supersedes original setting of 1 point lean.

Fuel Pump Pressure: (Carter)—3½-4½ lbs. at carburetor. **(AC)**—3-4 lbs.

MANIFOLD HEAT CONTROL: Automatic. No adjustment. Valve must operate freely.

VALVE TAPPET CLEARANCE: .008" Int., .010" Exh. Hot. NOTE—Self-locking tappet adjusting screws used. Remove apron in right front fender for access.

Valve Timing Check—See Valve Timing.

STARTING: *See Battery, Starter, Generator, Regulator.*

IGNITION

IGNITION SWITCH: Mitchellock.

COIL: Auto-Lite No. CE-6006A (Early), CR-6012A (Late '50 & '51).

Location—Left side of engine above distributor.

Ignition Current—2.5 amperes idling, 4.5 stopped.

CONDENSER: Auto-Lite IG-3927G ('50).

Capacity—.25-.28 microfarads ('50). .20-.25 microfarads ('51).

DISTRIBUTOR: (1950) Auto-Lite Model No. IGS-4213A-1. (1951) Auto-Lite Model No. IAT-4009A. Automatic advance type with Vacuum Spark Control and Fuel Compensator Adjustment.

NOTE—IAT-4009A new "Pivoted Breaker Plate" type.

See Electrical Equipment Section for complete data.

Breaker Plate Identification—Number stamped on plate (at pivot arm pin) indicates maximum vacuum advance.

Breaker Gap—.020". Limits .019-.022".

Cam Angle—38° ('50), 39° ('51) Closed. 22° Open.

Breaker Arm Spring Tension—17-20 ounces.

Rotation—Clockwise viewed from above.

Automatic Advance IGS-4213A-1, IAT-4009A

Degrees	Distr. R.P.M.	Degrees	Eng. R.P.M.
Start	500	0	1000
1	670	2	1340
4	1150	8	2300
8	1825	16	3650
9	2000	18	4000

Fuel Compensator: 10° advance or retard adjustment at distributor. *See Ignition Timing.*

Vacuum Spark Control: Auto-Lite. Integral type.

Vacuum Advance—IGS-4213A-1, IAT-4009A

Distr. Degrees	Eng. Degrees	Vacuum (" of HG)
Start	0°	13⅜"
1°	2°	14"
2°	4°	14¾"
3°	6°	15⅜"
3.75°	7.50°	16"

CONTINUED ON NEXT PAGE

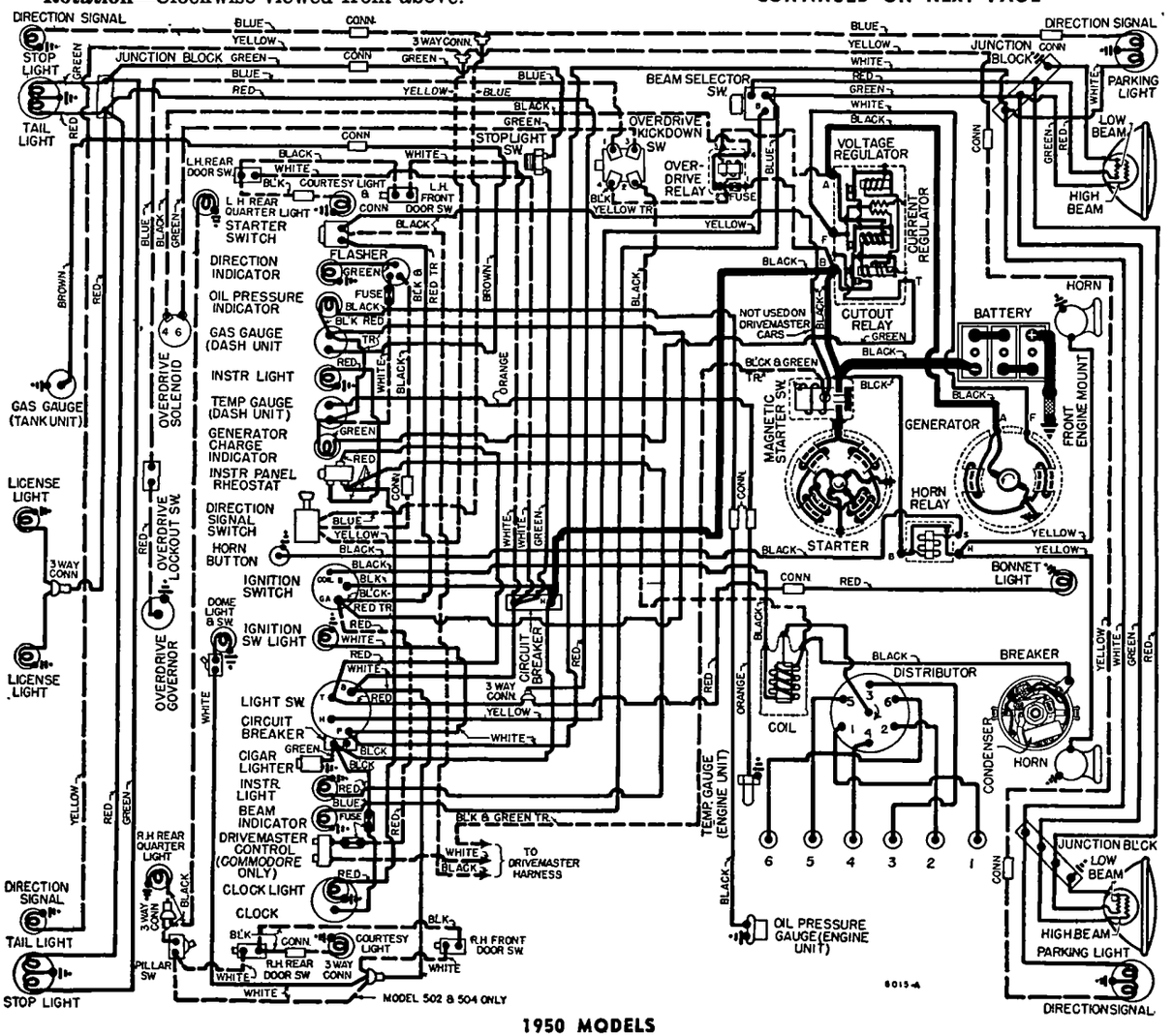

1950 MODELS

CONTINUED FROM PRECEDING PAGE

Distributor Removal: On left side of engine. Disconnect vacuum line, take out hold-down screw in advance arm. Lift off.

►*INSTALLATION CAUTION—If oil pump removed, refer to Oil Pump Installation in Hudson Special Data.*

IGNITION TIMING

Std. Setting*.....*At Top Dead Center

NOTE—Modify this setting for special fuel and altitude conditions. See Fuel Compensator Setting.

Flywheel Mark—"UDC-1/" (#1 and #6 piston top dead center position) with 4 short marks (1¼" apart) ahead of this mark (opening behind starter).

NOTE—Early flywheels marked "UDC-1-6/", later flywheels marked "UDC-1/".

Timing—With #1 piston on compression stroke, crank engine until long line of flywheel mark "UDC-1/" lines up with pointer in rear engine support plate behind starter. Loosen hold-down screw in quadrant, rotate distributor clockwise to limit of quadrant slot, then rotate distributor counter-clockwise until contacts open, tighten quadrant screw. Check Fuel Compensator setting.

Timing (with Neon Timing Light)—Mark long line of "UDC-1/" flywheel mark with white paint, connect timing light to #1 spark plug. Idle engine below 800 RPM., adjust distributor (as directed above) until mark lines up with lower edge of opening.

Fuel Compensator Setting—Set for slight ping at 15 MPH. when accelerating from 10 MPH. with wide open throttle. To adjust, loosen hold-down screw, rotate distributor counter-clockwise (if ping too severe), clockwise (if no ping). **Final setting must not be more than 1" (4th short line) ahead of "UDC-1/" flywheel mark.**

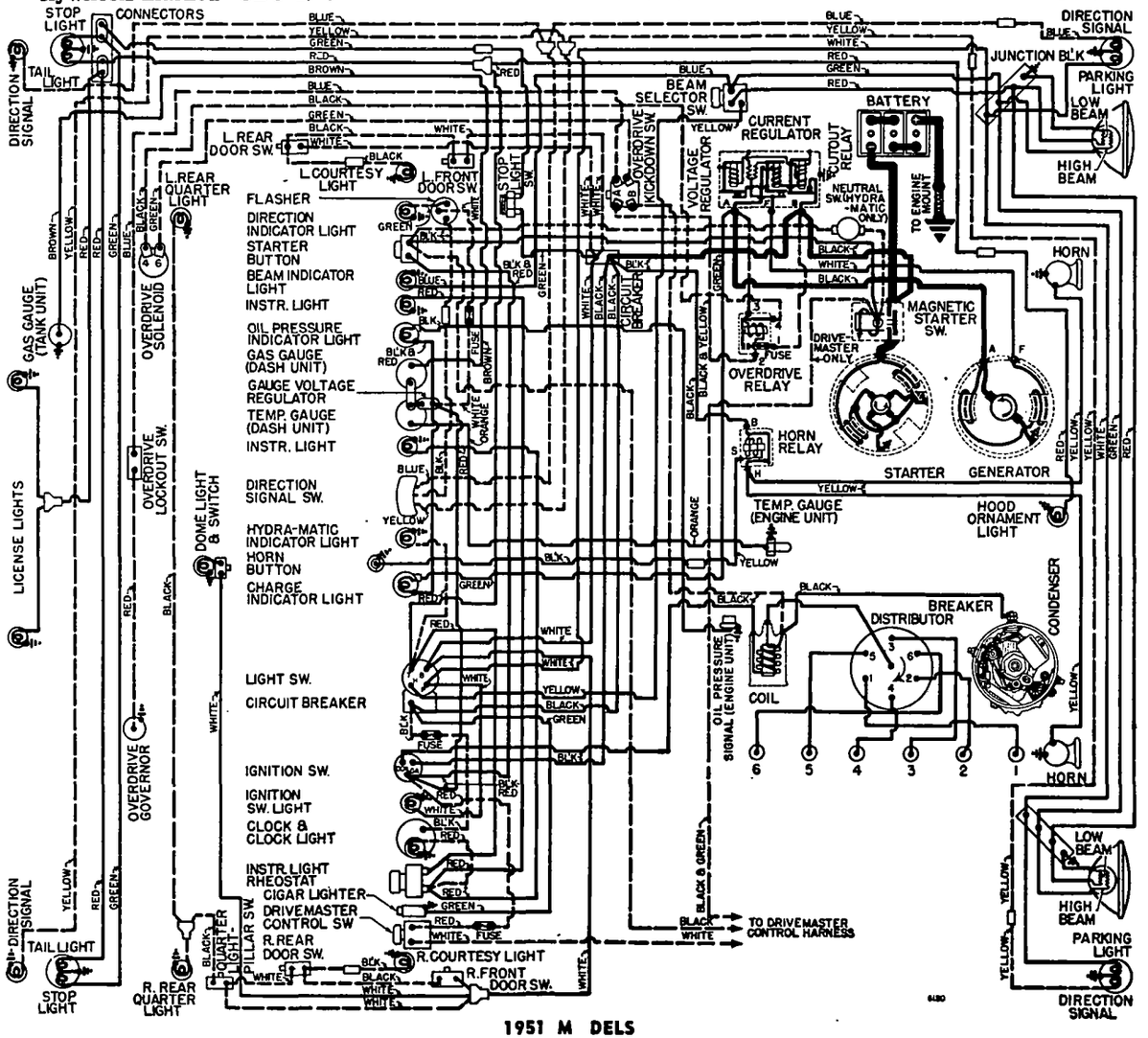

1951 M DELS

CARBURETOR

(1950 Early) Carter WDO-647SA.
(1950 Late and 1951) Carter WGD-776-S. 1¼" dual downdraft with Carter Climatic Control.
Casting No. on Flange (647SA)—542.
See Carburetor Section for complete data.

Settings (Idle Setting, Float Level, and Accelerating Pump): ***See Tune-Up data.***
Metering Rods & Jets—***See Carter Jet Table in Carburetor Section.***

►*776S METERING ROD & FLOAT VALVE PRODUCTION CHANGE—See Carburetor Section for complete data.*

Fast Idle: Carter Dual (WDO) or (WGD) Carburetor type.
Setting (WDO Carb.)—.054" throttle opening with choke valve closed. Adjust by turning fast idle screw on high step of cam.
Setting (WGD Carb.)—.026" throttle opening with choke valve closed. Check with thermostatic coil housing, gasket, and baffle plate removed. Crack throttle valve, hold choke valve closed, move throttle valve toward closed position as far as possible. If throttle opening not .026" adjust by bending connector rod at lower angle.
See Carburetion Equipment Section for complete data.

Automatic Choke: Carter Climatic Control.
Setting—Set coil housing 1 point lean (WDO), 2 points lean (WGD).

►*WGD CAUTION*—2 point lean setting supersedes original setting of 1 point lean.
See Carburetion Equipment Section for complete data.

CARB. EQUIPMENT

Air Cleaner (std.): AC 1544265 (1544297 for Dr.-Mstr.).
(Optl. oil bath)—1544266 (1544298 Drive-Master).
Filter Element—(std.) #5, (oil bath) #7-S.

Fuel Pump (Std.): Carter Model M729SL or SZ.
Optional (Fuel & Vacuum)—AC Type AJ-1539108.
Replacement Pumps—No. 583 (AJ).
Pressure—(Carter) 3½-4½ lbs., (AC) 3-4 lbs.
See Carburetion Equipment Section for complete data.

Gasoline Gauge (1950): King-Seeley Electric.
Dash Unit—K-S No. 42916, **Tank Unit** No. 42696.

Gasoline Gauge (1951): King-Seeley "CV" (Constant Voltage).
Dash Unit—K-S No. 45675, **Tank Unit** No. 44513.
See Carburetion Equipment Section for complete data.

BATTERY

National OE-2L-100. 6 volt, 17 plate, 100 ampere hour capacity (20 hour rate).
Grounded Terminal—Positive (+) to frame and engine by a single strap.
Location—On left side under engine hood.

STARTER

1950—Auto-Lite MZ-4159. Armature MZ-2312.
1951—(Except Hydra-Matic) Auto-Lite No. MCH-6109. Armature No. MCH-2023.
1951—(Hydra-Matic) Auto-Lite No. MCH-6107. Armature No. MCH-2028.
Drive—Bendix No. A-1806 (on MZ-4159, MCH-6109 Starters). Bendix No. A-1792 (on MCH-6107 Starter). A-1806 is Inboard Barrel type. A-1792 Outboard Barrel type.
Rotation—Counter-clockwise at commutator end.

Brush Spring Tension—42-53 ozs. (new brushes).
Cranking Engine—Approx. 140-160 amperes at 120 RPM. (warm engine).

Performance Data—MZ-4159

Torque	R.P.M.	Volts	Amperes
0 ft. lbs.	4000	5.0	68
4.4 "	Lock	2.0	280

Performance Data—MCH-6107, 9

0 ft. lbs.	4300	5.0	65
4.0 "	Lock	2.0	335

Starting Switch—Auto-Lite No. SS-4001. On left front fender splash apron, with pushbutton on instrument panel. Operative only with ignition "on" (and clutch disengaged on cars with Vacumotive Drive, Drive-Master or Super-Matic). Hydra-Matic selector lever must be in neutral to operate starter. *See Electrical Equipment Section for complete data.*
Removal: On left front face of rear motor support. To remove, take off Drivemaster mounting bracket bolts (on cars equipped with Drivemaster), disconnect linkage, and pull bracket out and forward, disconnect cables from solenoid switch, remove two starter mounting stud nuts and remove starter.

GENERATOR

Auto-Lite GDZ-6001B, Armature GGY-2006F.
Two brush (shunt) type with voltage and current regulation. Ventilated.
Maximum Charging Rate—35 amperes at 8 volts.
Charging Rate Adjustment—None (see Regulator).

Performance Data

Amperes	Volts	Cold—R.P.M.—Hot	
0	6.4	870-970	950-1050
35	8.0	1800-2000	2150-2350

Rotation—Counter-clockwise at commutator end.
Brush Spring Tension—53 ozs. max. (new brushes).
Field Current—1.6-1.8 amperes at 6.0 volts.
Motoring Current—4.2-4.6 amps. at 6.0 volts.
Belt Adjustment: ¾" deflection between generator and pump. Loosen clamp, swing generator out.

REGULATOR

Auto-Lite Model VRP-6002A ('50), VRP-6101A ('51). Vibrating Voltage and current regulators.
►*NOTE*—VRP-6002A Cutout Relay has extra set of contacts for Generator "Teleflash" Indicator control. VRP-6101A Cutout Relay does **not** have extra set of points. "Teleflash" indicator light is operated from the "A" terminal on the regulator.
►*NOTE*—Regulator cover sealed. Warranty void if seal broken.

Cutout Relay

Cuts In—6.4-7.0 volts (set to 6.4-6.6 volts).
Cuts Out—4.1-4.8 volts (approx. 4-6 amps. disch.).
Contact Gap—.015" min., ground contacts closed (ground contacts open when main contacts close).
Air Gap—.031-.034" at hinge end of core with contacts open (ground contacts closed).

Voltage Regulator

Voltage Setting—7.2-7.5 volts at 70°F. See Electrical Equipment Section for other temperatures.
Contact Gap—.012" Min. (armature against stop pin).
Air Gap—.048-.052" with contacts just opening.
Checking (without breaking seals) & Adjustment—*See Electrical Equipment Section for complete data.*

Current Regulator

Setting—34-36 amperes (marked '35' on the cover).
Contact Gap—.048-.052" contacts just opening.
Checking (without breaking seals) & Adjustment—*See Electrical Equipment Section for complete data.*

LIGHTING

Headlamps: Hall "Sealed Beam" type.
See Electrical Equipment Section for complete data.
Beam Indicator—Red pilot bulb at lower center of speedometer dial. Lights when Upper Beam "on".
Direction Signal: Optl. *See Electrical Equipment Section.*
Direction Signal Indicator—At left end of instrument panel. Flashes when Signal in use.
Direction Signal Flasher—Hudson No. 300877.

Switches

Lighting—Hudson No. 300641 (with Circuit Breaker), No. 300642 (switch only).
Beam Selector—Hudson No. 300799.
Instrument (Commodore)—Hudson No. 160092.
Direction Signal—Hudson No. 305081 (with wires).

MISC. ELECTRICAL

CIRCUIT BREAKERS: Vibrating thermostatic types.
Lighting—Hudson 300643. 30 amp. On light switch.
Misc. Lighting—Hudson No. 301853. 20 ampere. On steering support bracket behind instrument panel.
Convertible Top & Hydraulic Window Regulators—Hudson No. 300626. 30 ampere. On steering support bracket behind instrument panel.
FUSES: Electric Clock—3 ampere. Behind clock.
Direction Signal—10 ampere. On Direction Signal Harness behind instrument panel.
Drive-Master—15 ampere. In Drive-Master control switch on instrument panel.
Overdrive—30 ampere. In insulated fuse holder in overdrive relay feed wire on left front side of dash.
GENERATOR CHARGE SIGNAL: Red indicator on instrument panel (to right of temperature gauge). *See Electrical Equipment Section for complete data.*
OIL PRESSURE SIGNAL: Red indicator on instrument panel (to left of gas gauge). If pressure drops below approximately 13 lbs., red dash signal lights.
Oil Pressure Warning Switch—Carter No. A815S or King-Seeley No. 47100, Hudson No. 300828. On right side of engine above oil pump. Contacts open at 11-15 lbs. Switch sealed. Not adjustable.
HORNS: Sparton or Auto-Lite Model HW-4021 (Low Pitch), HW-4022 (High Pitch). Dual horns.
Air Gap—.027-.029" (high pitch), .032-.034" (low pitch).

ENGINE

ENGINE SPECIFICATIONS: Own make. 6 cylinder, "L" head type.

Model	Bore	Stroke	Displacement
5A, Super	3 9/16"	4⅜"	262 Cu. In.
6A, Commodore	3 9/16"	4⅜"	262 Cu. In.
7A, Hornet	3 13/16"	4½"	308 Cu. In.

Rated Horsepower—(5A Super & 6A Commodore) 30.4. (7A Hornet) 34.9.
Developed Horsepower—(5A Super & 6A Commodore) 123 at 4000 RPM., (7A) 145 at 3800 RPM.

Compression Ratio	Standard	Optional
5A, 6A	6.7-1	7.2-1
7A	7.2-1	6.7-1

NOTE—6.7-1 ratio is for cast-iron head. 7.2-1 ratio is for aluminum head.
Compression and Vacuum Reading—*See Tune-Up.*
ENGINE REAR MOUNTING ADJUSTMENT: *See Hudson Special Data.*
CYLINDER HEAD & TIGHTENING TORQUE: *See Hudson Special Data.*
►*1951 CYLINDER HEAD & GASKET CHANGE*—New cylinder head and/or gasket not interchangeable with earlier 6 cyl. engines. Impaired cooling will result if incorrect head or gasket used.
OIL PAN REMOVAL: *See Hudson Special Data.*
PISTONS: Aluminum Alloy, Cam Ground, "T" Slot.
Original Bore & Pistons—*See Hudson Special Data.*
CAUTION: DIFFERENT PISTONS used early 1950 cars. New type used in production beginning Car Serial 50163216, Super & Commodore.
CAUTION—New type pistons must not be used for replacement of previous type except in sets.
Weight—(5A, 6A) 18½ ozs., (7A) 18⅝ ozs. (stripped.)
Length—3¾".
Removal—Pistons and rods removed from above.
Clearance—.0025 "to .002" (skirt).
Piston Fitting—Insert piston in cylinder with .002" feeler gauge. Pull to withdraw feeler 3 to 4 lbs. using Tool J-888 Piston Feeler Scale to measure pull.
Replacement Pistons: *CAUTION*—Two different types required. *See Hudson Special Data.*
Installing Pistons: Slot away from camshaft.
PISTON RINGS: Two compression, two oil rings (one above pin, one below pin) per piston. Rings are square end type. Rings pinned to prevent rotation. Rings cut and notched to fit pin (clearance on pin equal to ring end gap).

Ring	Width	End Gap	Side Clearance
Compression	5/64"	.007-.012"	.001"
Oil (upper)	3/16"	.007-.012"	.001"
Oil (lower)	5/32"	.007-.012"	.001"

Installing Rings—Three top rings have offset pin notch (in relation to gap). Install rings so that alternate gaps offset.
NOTE—7A top compression ring chrome-plated.
Replacement Rings: *See Hudson Special Data.*
PISTON PIN: Dia.—.9684-.9687". **Length**—2.9375".
Floating type with diamond-drilled pin holes in piston and rolled steel babbitt faced bearing in connecting rod. Pin retained by lock ring at each end.
Pin Fit in Piston—.0000-.0003" at 70°F. or hand push fit with piston at 200°F.
Pin Fit in Rod Bushing—.0003" clearance. Hand push fit at 70°F.
Replacement Pins: Std., .002", .005", .010" oversize. Select pin to fit piston. **Do not ream pin hole in piston.**
CONNECTING ROD: Length—8⅛".
Weight—34.24 ozs. (without bearings).
Crankpin Journal Diameter—2.1244-2.1254".
►*See "Crankshaft Size Code" in Hudson Special Data.*
Lower Bearing—Steel-backed, babbitt-lined type with upper and lower halves alike. No shims.
Clearance—.0005-.0015". **Sideplay**—.007-.013".
Bearing Adjustment: None (no shims). Replace bearings. Do not file rods or bearing caps.
NOTE—Identifying notches on side of cap and rod must be together when cap installed on rod.
Palnuts—Tighten finger tight, plus ¼-⅓ turn.
Replacement Bearings: Furnished Std. ("Large" & "Small"), & .0005", .002", .010", .012" Undersize.
Installing Rods: Not offset. Oil spit hole in lower end of rod must be toward valve side of engine.
CRANKSHAFT: Four bearing type with integral counterweights. Vibration dampener on front end.
Journal Diameter—2.4988-2.4998".
Bearing Diameter—2.4993-2.5013".
►*See "Crankshaft Size Code" in Hudson Special Data.*
Bearings—Removable steel-backed, babbitt-lined upper and lower halves of each bearing alike.
Clearance—.0005-.0015".

CONTINUED N NEXT PA E

ENGINE

CONTINUED FROM PRECEDING PAGE

Bearing Adjustment: None (no shims). Replace bearings. Do not file bearing caps.
NOTE—Bearing shells positioned in cap and crankcase by tang on edge of shell. Can be rotated out without removing crankshaft with Tool KMO-734.
Palnuts—Tighten finger tight, plus ⅓ turn.
Replacement Bearings: Furnished Std. & .001", .002", .010", .012" Undersize.
End Thrust: Taken by #3 bearing. Replace bearing if endplay excessive. **Endplay**—.003-.009".
CAMSHAFT: 4 bearing type. Non-adjustable chain.
Bearing Diameter—#1, 2.375-2.3755"; #2, 1.997-1.9975"; #3, 1.965-1.9655"; #4, 1.497-1.4975".
Bearings—Steel-backed, babbitt-lined bushings.
Clearance—.0015-.002".
Replacement Bearings: Furnished as follows:
Finished Reamed—Will be proper dimension when pressed in place (.0026-.0055" press fit).
Unfinished—Press in place (.0026-.0055" press fit) and line ream to .001" larger than journals.
►*CAUTION*—Install all bearings with notch at top.
End Thrust: Steel thrust plate fitted between front end of camshaft and sprocket. Plate attached to crankcase by two capscrews and locks.
Timing Chain: Morse. 60 links, ⅜" pitch. Width—1¼".
Chain Tension Shoe—Fibre shoe backed by synthetic rubber plunger mounted inside timing chain cover at top. Holds chain in close mesh with sprockets and prevents whip.
Camshaft Setting: Sprockets marked. Two chain guide links marked with center holes. Mesh chain with center hole in each link opposite "O" mark on each sprocket with #1 piston at top dead center (crankshaft sprocket keyway at top with #1 piston at TDC). NOTE—With this setting, there should be 6 full links plus two half-links between marks on sprockets (half-links opposite sprocket marks).

VALVES:	Head Diameter	Stem Diameter	Length
Intake	1 53/64"	.3412-.3422"	5.730"
Exhaust	1 9/16"	.3402-.3412"	5.730"

	Seat Angle	Lift	Stem Clearance
Intake	45°	11/32"	.0015-.003"
Exhaust	45°	.346"	.002-.004"

NOTE—No valve inserts used. Stem clearance worn limit .005" max.

Valve Guides: Removable, one-piece, cast-iron Exhaust guides counterbored at upper end. Install guides as follows:
Intake Guide—Upper end 1 7/16" below top of valve seat. Finish ream to .3432-.3442" (.3437" preferred).
Exhaust Guides—Upper end 1 3/32" below top of valve seat. Finish ream to .3432-.3442" (.3437" preferred). Counterbored 9/16" deep to 25/64".

Valve Springs: Cadmium plated springs are used. Install springs with closely coiled end up.

	Spring Pressure	Length
Valve Closed	77 lbs	2 3/16".

NOTE—Reject springs if pressure less than 60 lbs. Free length 2.500".
Valve Lifters: Mushroom type fitted directly in crankcase. Removed from below with camshaft out. Service by installing oversize lifter.
NOTE—Inner sides of guide clamps should be in full contact at all points with matching flat surfaces of front face of each pair of guides within .0015".
Clearance—.00075-.0015".
Replacement Lifters—.002", .004", .010" Oversize.

VALVE TIMING

Tappet Clearance: Intake—.008" (Hot), .010" (Cold). **Exhaust**—.010" (Hot), .012" (Cold).
Self-locking tappet screws are used. Remove right front fender apron for access to valve compartment.
Valve Timing: See Camshaft Setting above.
Intake Valves—Open 7°18' BTDC. Close 53°42' ALDC.
Exhaust Valves—Open 53°18' BLDC. Close 7°42' ATDC. These figures correct with .010" tappet clearance Hot or .012" Cold.
Valve Timing Check—Remove front tappet cover and adjust tappet clearance of No. 1 intake valve to .010" Hot, or .012" Cold. Insert .002" feeler gauge in No. 1 intake tappet and rotate engine in direction of rotation until exhaust valve begins to close and light drag is felt on feeler gauge. Engine is correctly timed when first of four long timing marks is approximately ⅝" above index of timing hole in rear engine support plate. Reset tappet clearance to .008" Hot, or .010" Cold.

LUBRICATION

Engine Oiling System: Pressure to crankshaft, connecting rod, and camshaft bearings, valve lifters and timing chain.
►**Oil Pump & Camshaft Gear Change**—Camshaft driving gear & mating oil pump gear have "Granoseal" finish to reduce wear (may be identified by black velvety appearance).
Crankcase Capacity—7 qts. (refill), 7½ qts. (dry).
Normal Oil Pressure—40 lbs. at 30 MPH. No gauge used. See Oil Pressure Indicator below.
Oil Pressure Relief Valve—Non-adjustable release valve and spring under plug on left side of engine ahead of starter.
Oil Pump: Rotor type consisting of inner and outer rotor, shaft, body, and cover. Angle mounted on right side of crankcase and driven from camshaft.
►*CAUTION*—New granoseal type oil pump gear must be installed when installing new camshaft.
Oil Pressure Indicator: Hudson "Teleflash" with Oil Pressure Warning Switch. Consists of light on instrument panel operated by switch as follows:
Oil Pressure Warning Switch—Carter No. A815S or King-Seeley No. 47100. Hudson No. 300828. On right side of engine above oil pump. Contacts open at 11-15 lbs. Switch sealed. No adjustment. ***See Electrical Equipment Section for data.***
Crankcase Ventilation: Oil-wetted type filter element in oil filler cap (air intake). Outlet pipe in rear valve compartment cover on right side of engine.
Servicing—Wash filter element in gasoline and re-oil when changing oil.

COOLING

►*1951 CYLINDER HEAD AND GASKET CAUTION*—Impaired cooling will result if incorrect head or gasket used. 1951 cylinder head and gasket not interchangeable with earlier 6 cyl. engines.
Cooling System: Positive circulation with pump on front of engine, by-pass type thermostat, and brass water distribution tube in cylinder block.
Pressure Cap (1950)—AC No. 85005 or Stant No. AAX-0417.
Capacity—(1950) 19 qts. without heater, 20 qts. with heater. (1951) 18½ qts. without heater, 19½ qts. with heater.
Water Pump: Centrifugal, belt-driven, packless type. Shaft mounted on sealed duplex ball bearing.
See Water Pump Section for complete data.
Belt Adjustment—***See Generator Belt Adjustment.***
Thermostat: Hudson No. 166272. By-pass type in water outlet on cylinder head.
Setting—Starts to open 150-155°F. Fully open 185°.
Temperature Gauge (1950): King-Seeley electric type.
Dash Unit—K-S No. 42918, **Engine Unit** No. 41085.
Temperature Gauge (1951)—King-Seeley "CV" (Constant Voltage).
Dash Unit—K-S No. 45675, **Engine Unit** No. 44200.
See Miscellaneous Section for complete data.

CLUTCH

Own Make. Single plate, fluid cushioned type (cork insert type driven member) operating in Hudsonite oil. 10" type used on all models.
See Clutch Section for complete data.
Facings—Cork insert type. Inside diameter 6⅜". Outside Diam. 10". 108 corks, .203" thick.
Pedal Adjustment: Clearance between underside of toeboard and top face of pedal shank must be 1½". To adjust, loosen locknut above clevis, remove clevis pin, turn clevis in or out of link, tighten locknut after re-connecting clevis.
Removal: Remove transmission (see Transmission Removal following). Drain clutch oil by turning engine over until plug on flywheel is accessible through timing inspection hole in rear engine support plate behind starter, remove plug, turn engine over ⅓ revolution until star on flywheel visible through timing hole (drain hole then at bottom), allow lubricant to be drained. Loosen mounting bolts in clutch cover rim to release spring tension, remove bolts and lift clutch assembly off car.

VACUMOTIVE DRIVE

Vacumotive Drive: Automatic clutch control. Optl.
See Clutch Section for complete data.

TRANSMISSION

STANDARD

Own Make. All helical gear type. Constant-mesh, synchro-mesh (Second & High), sliding gear (Low & Reverse) with remote (steering column) shift.
►***SLIPPING OUT OF HIGH & SECOND GEAR CORRECTION—See Transmission Section for complete data.***
See Transmission Section for complete data.
Transmission Control: Handy-shift remote control type with shift lever mounted on steering column.
See Transmission Section for complete data.
Transmission Removal: Remove front seat cushion, disconnect front seat from track, disconnect seat adjusting lever and remove seat back from car. Disconnect accelerator pedal at accelerator rod, brake pedal rod at lever. Remove floor mat, remove Weather Control blower unit (2 screws each side), disconnect bowden wire at control valve at cylinder head. Remove floor opening cover over transmission. Disconnect front universal joint at transmission (wire bearings on universal joint spider). Remove bolts attaching center bearing support bracket, move propeller shaft to rear to clear companion flange at transmission. Disconnect clutch pedal lever return spring, remove clutch cross-shaft and bracket, disconnect clutch control link clevis. Disconnect Handy Shift by removing shifter shaft outer lever, nut, and washer. Remove flywheel guard from bottom of clutch housing. Remove two engine rear mounting bolts and nuts, jack up rear end of engine about ½" off frame cross-member (CAUTION—use block of wood on jack to prevent damage

to oil pan). Disconnect speedometer cable at transmission case, plug hole with wood plug. Remove two top screws attaching clutch housing to engine, install guide studs (headless screws) in these holes to support transmission, remove remaining screws. Remove breather pipe bracket from clutch housing and bolt attaching breather pipe and rear valve cover. Pull transmission straight back on guide studs, lift transmission out through floor opening. (NOTE—Hoist J-1502 can be used to lift transmission out).

DRIVE-MASTER TRANSMISSION

Drive-Master Transmission: Optl. Conventional 3-speed transmission with automatic gear shifting between Second & High Gears. Used in conjunction with Vacumotive Drive (automatic clutch control). *See Transmission Section for complete data.*

Identification—Metal tag attached by a cover bolt screw carries second speed ratio 1.82:1.

►**Drive-Master Fuse**—15 ampere, Part No. 71406. Located in wiring circuit 6" from control switch.

Power Cylinder Lubrication—Must be lubricated at 10,000 mile intervals. *See "Hudson Drive-Master" in Transmission Section.*

SUPER-MATIC DRIVE TRANSMISSION

Own Make—Four-speed automatic transmission (3-speed automatic shift plus ultra-low). Optl. *See Transmission Section for complete data.*

OVERDRIVE

Warner Type AS2-R10D (Early '50), AS3-R10D (Late '50), AS4-R10D (Late '50 & '51). (Models AS3, 4 have centered ring gear). Optl. With Hudson Transmission. Part of Super-Matic Drive. Has simplified control (2-terminal Solenoid, Relay & Throttle Kick-down Switch).

See Transmission Section for complete data.

Overdrive Relay—Hudson No. BT303107.

Throttle Switch—Hudson No. BT303254.

Overdrive Fuse—30 ampere. On fuse block on side of overdrive relay.

Removal: Same as standard transmission removal, except that overdrive control cable and wiring must be disconnected.

HYDRA-MATIC TRANSMISSION

Four speed planetary type automatic transmission and fluid coupling. *1951 MODELS*—Modulated pressure and hydraulically operated reverse mechanism. *See Transmission Section for complete data.*

Lubrication—Check fluid level every 1000 miles. Add fluid as required to maintain level at "F" mark on dip stick. Drain and refill every 25,000 miles. Use Automatic Transmission Fluid Type "A".

Capacity—11 qts. (approx.). 12 qts. (after reassembly).

Checking Fluid Level—Operate engine at normal operating temperature. Manual control lever in "N" position. Hand brake on. Dipstick located under inspection cover placed on right side under floor mat. Oil level must be just to the full mark on the dip stick. *DO NOT OVERFILL.*

CAUTION—Do not check oil level when transmission temperature is excessively high and do not fill above "F" on dip stick (will cause foaming when hot).

Draining and Refilling—*See "Hydra-Matic Drive" in Transmission Section.*

Hydra-Matic Linkage Adjustment—*See "Hydra-Matic Drive" in Transmission Section.*

Removal—*See "Hydra-Matic Drive" in Transmission Section.*

UNIVERSALS

Spicer No. 1268-111X.....**Front & Rear**
Spicer No. 1268-102X.....**Intermediate**
Needle bearing types.
See Universals Section for complete data.

Propeller Shaft & Center Bearing: Two shafts used: 1) Front shaft supported by sealed ball-bearing just ahead of rear coupling flange (no slip joint).
2) Rear shaft with slip joint at forward end.

Center Bearing—Prelubricated sealed annular ball bearing fitted in cast steel housing bolted to support mounting which is secured to underside of frame cross members. Housing cradle mounted on two rubber supports and forward end of support mounting fitted with rubber cushion.

REAR AXLE

Own Make. Semi-floating, hypoid gear type with Hotchkiss drive.
See Rear Axle Section for complete data.

1950 Ratios:	**Std.**	**Optl.**
Std. & Drive-Master	4.1-1	4.55-1
With Overdrive	4.55-1	4.1-1
With Super-Matic	4.1-1	4.55-1
1951 Ratios:	**Std.**	**Optl.**
Std. Trans.	4.1-1	①4.55-1
With Overdrive	4.55-1	4.1-1
With Super-Matic Drive	4.55-1	4.1-1
With Hydra-Matic Drive	3.58-1	———

①—3.58-1 also on 7A Hornet model.

Backlash—.004-.006". Screw adjustment.

Removal: Support car on stands under body frame just forward of rear springs, remove fender shields and rear wheels. Disconnect brake line at tee on axle housing, remove tee. Disconnect brake cables at equalizer bar clevis and unscrew end fittings, loosen nuts on cable conduit brackets, on cross-member and free conduits from brackets, disconnect cable conduit clips on rear springs, pull cables and conduits out through guides and clamps. Disconnect rear universal joint and lower propeller shaft. Disconnect lower end of shock absorbers, disconnect and remove rear stabilizer. Disconnect each rear spring at axle housing, and at rear shackle, lower rear end of springs, slide axle out toward rear.

Axle Shaft Removal: Hoist rear of car. Remove rear wheels. Remove axle shaft nut and washer. Remove hub and drum assembly using screw type wheel puller (Tool J-736—CAUTION—Car manufacturer recommends that screw type puller be used, if knock-out type puller is used serious damage to differential parts may result). Remove 4 nuts on bearing cap bolts, remove bearing cap and shims (without disturbing brake backing plate). Pull rear wheel bearing and axle shaft, using puller Tool J-352. Do not drag axle shaft on oil seal assembly.

Wheel Bearing Adjustment: Controlled by shims (.003", .005", or .015" thick) under bearing cap. To adjust, remove bearing cap (see directions above under Axle Shaft Removal), add or remove shims equally at both wheels (necessary to keep thrust spacer centered on differential pinion shaft).

Endplay—.001-.004".

SHOCK ABSORBERS

Delco or Monroe. Direct acting, hydraulic types.

Make	**Front**	**Rear**
Light Scale		
Monroe	303060	300351
Delco	303062	301241
Heavy Scale		
Monroe	303061	301768
Delco	303063	301770
Extra Heavy Scale		
Monroe	302431	302431
Delco	301637	301638

APPLICATION NOTE—Light Scale front and rear shocks used with light scale springs and with front only heavy scale springs. **Heavy Scale** front and rear shocks used with heavy scale springs and with rear only heavy scale springs. **Extra Heavy Scale** front and rear shocks optional on all models. **Part Number** stamped on outside of shock absorber body.

FRONT SUSPENSION

Front Suspension: Independent, linked parallelogram type with coil springs and lateral stabilizer.
See Front Suspension Section for complete data.

Kingpin Inclination—3°36' crosswise.

Caster—½-1½°. Eccentric adjustment. Both wheels alike within ½°.

Camber—½-1½°. Eccentric adjustment. Both wheels alike within ½°.

Toe In—1/32" ± 1/32" measured at wheel rim. Center steering arm on frame must be at center of car. To adjust loosen clamps at ends of each tie rod and adjust tubes equally.

Steering Geometry—Inner wheel 30°. Outer 25°.

STEERING GEAR

Gemmer Model 335. "3-tooth" Worm-and-Roller type with "push-pull" adjustments.
See Steering Gear Section for complete data.

BRAKES

Service: Bendix Hydraulic, Duo-Servo, Single Anchor type without eccentric adjustment. Mechanical follow-up (pedal linked to hand brake cables) provided. Hand lever applies rear wheel service brakes.
See Brake Section for complete data.

Wheel Cylinders—Diameters: Front wheel 1⅛", Rear wheel 15/16".

Drums—11" centrifuse type.

Lining Molded. Width 2¼" (front whl.), 1¾" (rear). Length per shoe 11" (exc. 11 1/16" rear secondary).

Clearance—.010" at both ends of secondary shoe with primary shoe forced out against drum.

Mechanical Follow-Up (Reserve): Over-running linkage between brake pedal and parking (hand-brake) linkage which applies rear wheel brakes by pedal mechanically if hydraulic system not operating.
See Brake Section for complete data.

Setting—1¼" clearance between clevis pin and rear end of slot in pedal rod rear clevis.

Hand Brake: See Service Brakes above.

MISC. MECHANICAL

Power Operated Convertible Top & Windows: Hydro-Lectric (hydraulic actuation with motor-driven pump. *See Miscellaneous Section for complete data.*

Windshield Wiper: Cable Operated—Vacuum type.
See Miscellaneous Section for complete data.

MODEL IDENTIFICATION

SERIAL & ENGINE NUMBER: (1950-51) Serial Number stamped on plate on right front door hinge pillar post. (1950) Engine Number stamped on top of cylinder block between No. 1 and No. 2 exhaust manifold flanges, and (1951) vertically on upper right front of block. Model designation (8A) appears in separate space above the serial number.
1950 Serial Number—Super 8, 503101 Up. Commodore 8, 504101 Up. First three figures of number indicate model.
1951 Serial Number—Start 1001 Up.

TUNE-UP

COMPRESSION PRESSURE: 119 lbs. min. at 125 RPM. Minimum 100 lbs. with not more than 10 lbs. variation between cylinders.

VACUUM READING: 18-21" idling at 540-560 RPM (Std.), 580-600 RPM. (Vacumotive or Drive-Mstr)

FIRING ORDER: 1-6-2-5-8-3-7-4. See diagram.

SPARK PLUG GAPS: .032".
Plugs (Early 1950)—Champion J-7 (Cast-iron Head), H-10 (Aluminum Head), 14 mm.
Plugs (1950-51)—Champion H-8 14 mm. (all heads)

DISTRIBUTOR: Breaker Gap—.017". Limits .015-.019".
Cam Angle—27° closed with .017" gap.
Breaker Arm Spring Tension—17-20 ounces.
Automatic & Vacuum Advance—*See Ignition.*
Condenser Capacity—.20-.25 microfarad.

IGNITION TIMING: TDC (top dead center).
Timing Procedure—*See Ignition Timing.*
Flywheel Mark—"UDC-1/" aligned with pointer in rear engine support plate opening behind starter
Fuel Compensator Setting—Slight ping at 15 MPH when accelerating from 10 MPH. in high gear.

CARBURETION:
Idle Setting—(648S) 1-1½ turns open. (773S) ½-1 turn open. Turn screw out for richer mixture.
Idle Speed (Std.)—540-560 RPM.
Vacumotive or Drive-Master—580-600 RPM.
Hydra-Matic Drive—490-510 RPM.
Float Level—(648S) 13/64", (773S) 3/16" measured from top of float to gasket seat (machined surface) on bowl cover with needle valve seated (invert to check). **773S Note**—measured from center highest point of float.
Accelerating Pump—(648S) Outer hole—Normal, Inner hole if less charge required. (773S) No seasonal adjustment.
Choke Setting: Centered (at index).
Fuel Pump Pressure: (Carter)—4-5 lbs., **(AC)**—3-4 lbs

MANIFOLD HEAT CONTROL: Automatic. No adjustment. Valve must operate freely.

VALVE TAPPET CLEARANCE: .008" Intake, .010" Exhaust at normal operating temperature.
NOTE—Remove apron in right front fender for access to valve compartment.
Valve Timing Check—*See Valve Timing.*

STARTING: *See Battery, Starter, Generator, Regulator.*

IGNITION

IGNITION SWITCH: Mitchellock.

COIL: Auto-Lite CE-6006A (Early), CR-6012A (late).
Location—Right side of engine above distributor.
Ignition Current—2½ amperes idling, 4½ stopped.

CONDENSER: Auto-Lite No. IG-2671G.
Capacity—.20-.25 microfarad.

DISTRIBUTOR: Auto-Lite Model IGT-4204B-1. Automatic advance type with Vacuum Spark Control and Fuel Compensator Adjustment.
Breaker Plate Identification—Number stamped on plate (opposite vacuum control unit), indicates maximum vacuum advance.
Breaker Gap—.017". Limits .015-.019".
Cam Angle—27° closed with .017" gap.
Breaker Arm Spring Tension—17-20 ounces.
Rotation—Clockwise viewed from above.

Automatic Advance IGT-4204B-1

Degrees Distr.	R.P.M.	Degrees Eng.	R.P.M.
Start	300	0	600
3	400	6	800
8	850	16	1700
13	1300	26	2600
17.5	1700	35	3400

Fuel Compensator: 10° adjustment at distributor. See Ignition Timing for adjustment and setting.

Vacuum Spark Control: Auto-Lite. Integral type. Linked directly to breaker plate. Provides additional advance at speeds above idling except when engine accelerated or operated with wide open throttle when spark retarded by return spring in unit.

Vacuum Advance—IGT-4204B-1

Distr. Degrees	Eng. Degrees	Vacuum (" of HG)
Start	0°	13⅜"
1°	2°	14"
2°	4°	14¾"
3°	6°	15⅜"
3.75°	7.5°	16"

Distributor Removal: On right side of engine. Disconnect vacuum line, take out hold-down screw in advance arm. Lift off.

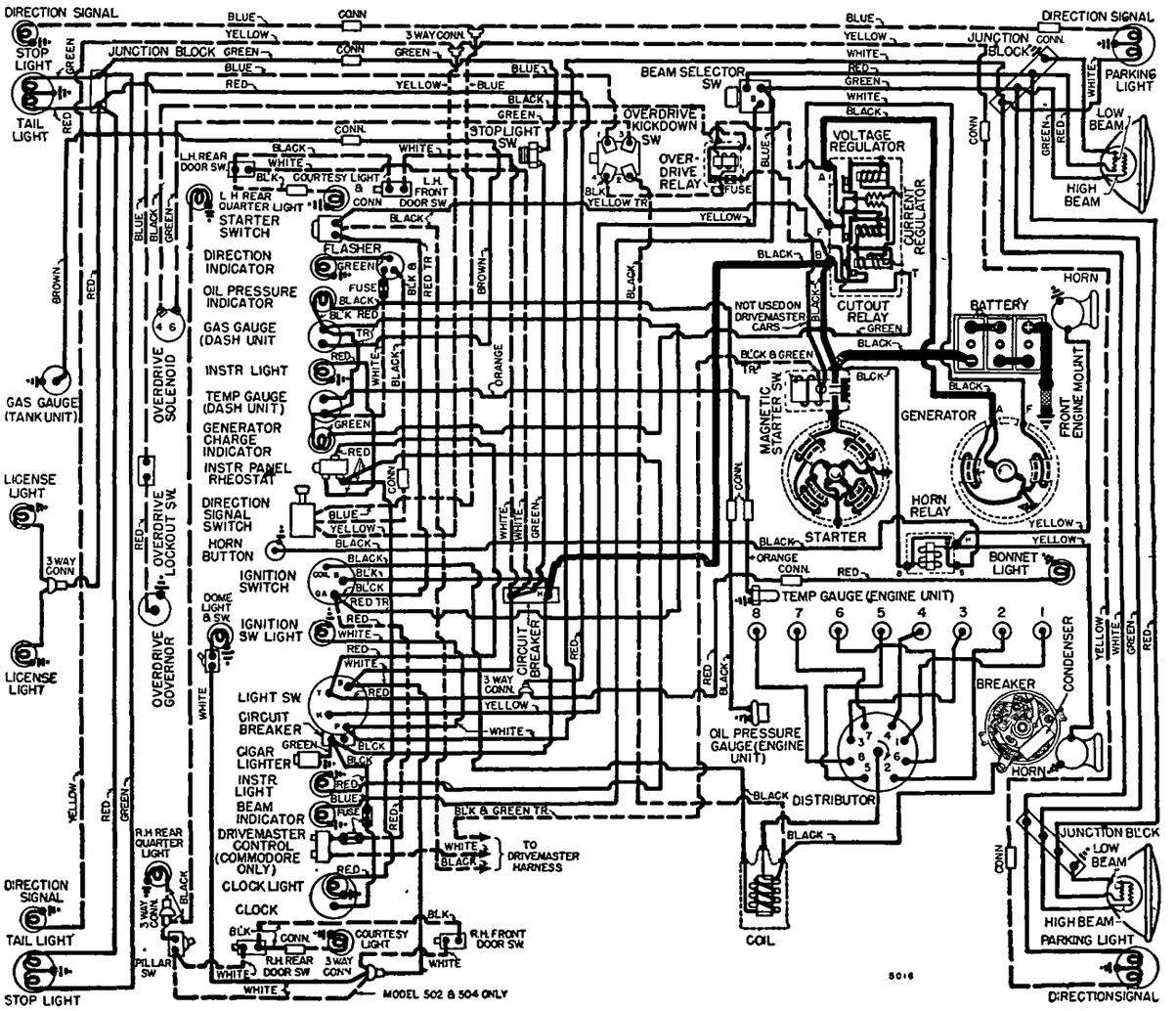

1950 MODELS

IGNITION TIMING

Std. Setting.....At Top Dead Center
NOTE—Modify this setting for special fuel and altitude conditions. See Fuel Compensator Setting.
Flywheel Mark—"UDC-1/" (#1 and #8 piston top dead center position) with 4 short marks (¼" apart) ahead of this mark (opening behind starter).
Timing—With #1 piston on compression stroke, crank engine until long line of flywheel mark "UDC-1/" lines up with pointer in rear engine support plate behind starter. Loosen hold-down screw in quadrant, rotate distributor clockwise to limit of quadrant slot, then rotate distributor counter-clockwise until contacts open, tighten quadrant screw. Check Fuel Compensator setting.
Timing (with Neon Timing Light)—Mark long line of "UDC-1/" flywheel mark with white paint, connect timing light to #1 spark plug. Idle engine below 600 RPM., adjust distributor (as directed above) until mark lines up with lower edge of opening.
Fuel Compensator Setting—Set for slight ping at 15 MPH. when accelerating from 10 MPH. with wide open throttle. To adjust, loosen hold-down screw, rotate distributor counter-clockwise (if ping too severe), clockwise (if no ping). **Final setting must not be more than 1" (4th short line) ahead of "UDC-1/" flywheel mark.**

CARBURETOR

(Early 1950) Carter WDO, No. 648S. (Casting No. 542.)
(1950-51) Carter WGD, No. 773S. 1¼" dual barrel downdraft types with Carter Climatic Control.
See Carburetor Section for complete data.
Settings (Idle Setting, Float Level, and Accelerating Pump: *See Tune-Up data.*
Metering Rods & Jets—*See Carter Jet Table in Carburetor Section.*
►*773S FLOAT VALVE PRODUCTION CHANGE—See Carburetor Section for complete data.*
Fast Idle: Carter Dual (WDO) or (WGD) Carburetor type.
See Carburetion Equipment Section for complete data.
Setting (WDO Carb.)—.054" throttle opening with choke valve closed. Adjust by turning fast idle screw on high step of cam.
Setting (WGD Carb.)—.026" throttle opening with choke valve closed. Check with thermostatic coil housing, gasket, and baffle plate removed. Crack throttle valve, hold choke valve closed, move throttle valve toward closed position as far as possible. If throttle opening not .026" adjust by bending connector rod at lower angle.
Automatic Choke: Carter Climatic Control (Dual).
See Carburetion Equipment Section for complete data.
Setting—Coil housing centered (at index).

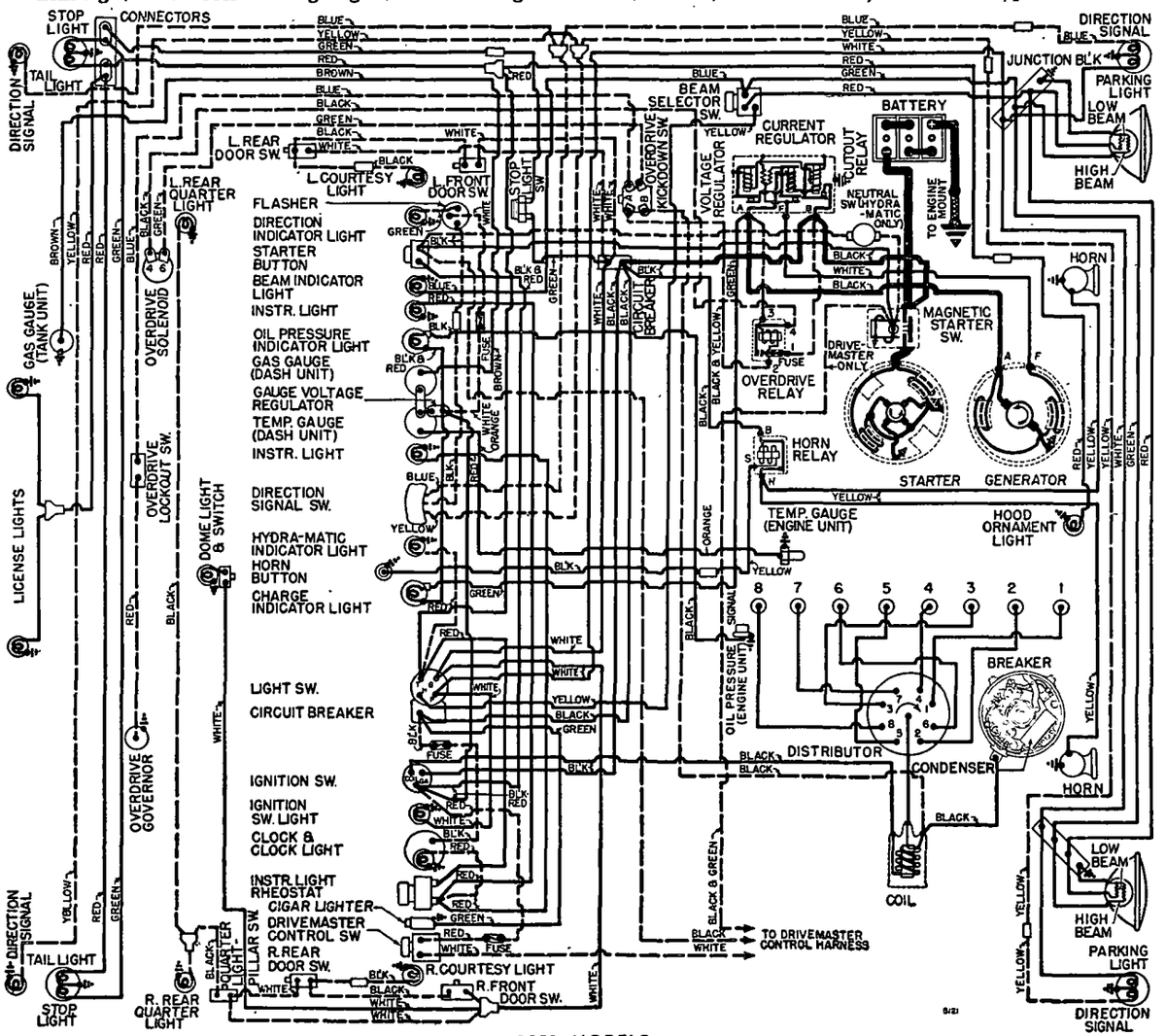

1951 MODELS

CARB. EQUIPMENT

Air Cleaner (std.): AC 1544265 (1544297 for Dr.-Mstr.).
(Optl. oil-bath)—1544266 (1544298 Drive-Master).
Filter Element—(std.) #5, (oil bath) #7-S.
Servicing (oil-wetted type)—Clean and re-oil filter element (use same grade engine oil used in crankcase) at 2000 mile intervals or more often if required by operating conditions.
Servicing (oil-bath type)—Service same as oil-wetted type except that filter element not oiled. Refill to level with engine oil.
Fuel Pump (Std.): Early 1950—AC Type AH No. 1539109.
Optl. (Fuel-and-Vacuum)—AC Type AJ No. 1539108.
Replacement Pump—No. 584 (for AH), 583 (AJ).
Fuel Pump (Std.): Late 1950-51—Carter Models M729-SL or SZ.
Optional (Fuel-and-Vacuum)—AC Type AJ No. 1539108.
Replacement Pump—No. 583 (AJ).
Pressure—(Carter) 3½-4½ lbs., (AC) 3-4 lbs.
See Carburetion Equipment Section for complete data.
Gasoline Gauge (1950): King-Seeley Electric type.
Dash Unit—K-S No. 42916.
Tank Unit—K-S No. 42696.
Gasoline Gauge (1951): King-Seeley "CV" (Constant Voltage).
Dash Unit—K-S No. 45675.
Tank Unit—K-S No. 44513.
See Carburetion Equipment Section for complete data.

BATTERY

National OE-2L-100, 6 volt, 17 plate, 100 ampere hour capacity (20 hour rate).
Grounded Terminal—Positive (+) to engine and frame with a single strap.
Location—On left side under hood.

STARTER

1950—Auto-Lite No. MCL-6006. Armature No. MCH-2023.
1951—(Except Hydra-Matic) Auto-Lite No. MCH-6109. Armature No. MCH-2084.

CONTINUED N NEXT PAGE

CONTINUED FROM PRECEDING PAGE

1951—(Hydra-Matic) **Auto-Lite No. MCH-6007. Armature No. MCH-2028.**
Rotation—Counter-clockwise at commutator end.
Brush Spring Tension—42-53 ozs. (new brushes).
Cranking Engine—Approx. 160 amperes at 150 RPM.

Performance Data—MCL-6006 (1950)

Torque	R.P.M.	Volts	Amperes
0 ft. lbs.	4900	5.0	65
8.0 "	Lock	2.0	410

Performance Data—MCH-6107, 9 (1951)

Torque	R.P.M.	Volts	Amperes
0 ft. lbs.	4300	5.0	65
4.4 "	Lock	2.0	335

Starting Switch: Auto-Lite Magnetic type SS-4001 ('50), SS-4030 ('51) on left front fender splash apron, with pushbutton on instrument panel. On Drive-Master and Super-Matic, operative only with ignition "on", and on Hydra-Matic, with ignition switch "on" and gear shift lever in "N" position.
See Electrical Equipment Section for complete data.
Removal: On left front face of rear motor support. To remove, take out flange mounting bolts.

GENERATOR

Auto-Lite No. GDZ-6001B. Armature No. GGY-2006F.
Two brush (shunt) type with voltage and current regulation. Ventilated.
Maximum Charging Rate—35 amperes at 8 volts.
Charging Rate Adjustment—None (see Regulator).

Performance Data

Amperes	Volts	Cold—R.P.M.—Hot	
0	6.4	870-970	950-1050
35	8.0	1800-2000	2150-2350

Rotation—Counter-clockwise at commutator end.
Brush Spring Tension—53 ozs. max. (new brushes).
Field Current—1.6-1.8 amperes at 6.0 volts.
Motoring Current—4.2-4.6 amps. at 6.0 volts.

REGULATOR

Auto-Lite Model VRP-6002A ('50), VRP-6101A ('51). Vibrating type Voltage and Current regulators (with Cutout Relay).
►*NOTE*—VRP-6002A Cutout Relay has extra set of contacts for Generator "Teleflash" Indicator control. VRP-6101A Cutout Relay does **not** have extra set of points. "Teleflash" Indicator light is operated from the "A" terminal on the regulator.
►*NOTE*—Regulator cover sealed. Warranty void if seal broken.

Cutout Relay

Cuts In—6.4-7.0 volts (set to 6.4-6.6 volts).
Cuts Out—4.1-4.8 volts (approx. 4-6 amps. disch.).
Contact Gap—.015" min., ground contacts closed (ground contacts open when main contacts close).
Air Gap—.031-.034" at hinge end of core with contacts open (ground contacts closed).

Voltage Regulator

Voltage Setting—7.2-7.5 volts at 70°F. See Electrical Equipment Section for settings at other temperatures.
Contact Gap—.012" Min. (armature against stop pin).
Air Gap—.048-.052" with contacts just opening.
Checking (without breaking seals) & Adjustment—*See Electrical Equipment Section for complete data.*

Current Regulator

Setting—34-36 amperes (marked '35' on the cover).
Contact Gap—.012" min. (armature against stop).
Air Gap—.048-.052" with contacts just opening.
Checking (without breaking seals) & Adjustment—*See Electrical Equipment Section for complete data.*

LIGHTING

Headlamps: Hall "Sealed Beam" type.
Adjustment—Aim upper beams straight ahead (hot spot centers 3" below lamp center height at 25 ft.).
Beam Indicator—Red pilot bulb at lower center of speedometer dial. Lights when Upper Beam "on".
Direction Signal: Optl. *See Electrical Equipment Section.*
Direction Signal Indicator—At left end of instrument panel. Flashes when Signal in use.
Direction Signal Flasher—Hudson No. 300877.

Switches

Lighting—Hudson No. 300641 (with Circuit Breaker), No. 300642 (switch only).
Beam Selector—Hudson No. 300799.
Instrument (Commodore)—Hudson No. 160092.
Door Switch—Hudson No. 300796.
Front Dome Light—Hudson No. 211312.
Rear Quarter Pillar—Hudson No. 160091.
Stop Light—Auto-Lite 100810K.
Direction Signal—Hudson No. 305081 (with wires).

MISC. ELECTRICAL

CIRCUIT BREAKERS: Vibrating thermostatic types.
Lighting—Hudson 300643. 30 amp. On light switch.
Misc. Lighting—Hudson No. 301853. 20 ampere. On steering support bracket behind instrument panel.
Convertible Top & Hydraulic Window Regulators—Hudson No. 300626. 30 ampere. On steering support bracket behind instrument panel.
FUSES: Electric Clock—3 ampere. Behind clock.
Direction Signal—10 ampere. On Direction Signal Harness behind instrument panel.
Weather Control—14 ampere. On heater.
Drive-Master—15 ampere fuse. In Drive-Master control switch on instrument panel.
GAUGE VOLTAGE REGULATOR: King-Seeley—Consists of a thermo-bi-metal interrupter unit designed to maintain a constant voltage of 5 volts (regardless of generator charging voltage fluctuation) on gauge feed circuit. Unit is mounted on the instrument cluster and is connected between the ignition switch, and the gauge circuits. See Wiring Diagram.
Overdrive—30 ampere. In insulated fuse holder in overdrive relay feed wire on left front side of dash.
GENERATOR CHARGE SIGNAL: Red indicator on instrument panel (to right of temperature gauge). Should light when ignition turned on and should go out when generator begins to charge.
See Electrical Equipment Section for complete data.
OIL PRESSURE SIGNAL: Red indicator in instrument panel (to left of gas gauge). If pressure drops below approximately 13 lbs. red dash signal lights.
See Electrical Equipment Section for complete data.
HORNS: Sparton or Auto-Lite Model HW-4021 (Low), HW-4022 (High). Dual horns operated by relay.
Air Gap—.027-.029" for high pitch (short horn), .032-.034" low pitch (long horn).
Horn Relay: Hudson No. 164401. On engine dash.
Contacts Close—3 volts min., 4 volts max.
Open—2 volts min. (relay upright, terminals down).

ENGINE

ENGINE SPECIFICATIONS: Own Make. 8 cylinder, "L" head type.
Bore—3". *See "Original Bore & Pistons" in Hudson Special Data.*
Stroke—4½".
Displacement—254 cubic inches. **Rated HP**—28.8.
Developed Horsepower—128 at 4200 RPM.
Compression Ratio: (Std.)—Cast-iron head 6.7-1.
Compression Ratio: (Optl.)—Aluminum head 7.2-1.
Compression & Vacuum Reading—*See Tune-Up.*
ORIGINAL BEARING SIZES: *See Hudson Special Data.*
TIGHTENING TORQUES: *See Hudson Special Data.*
CYLINDER HEAD: *See Hudson Special Data.*
OIL PAN REMOVAL—*See Hudson Special Data.*
PISTONS: Aluminum alloy, Cam ground, T-slot type.
Weight—10¾ ozs. (stripped). **Length**—3 3/16".
Removal—Pistons and rods removed from above or below.
Clearance—.002-.0025" (skirt).
See "Original Bore & Pistons" in Hudson Special Data.
Replacement Pistons: *See Hudson Special Data.*
Fitting New Pistons: Use .002" feeler ½" wide inserted between piston and cylinder wall on side opposite slot at right angles to pin. Pull to withdraw feeler must be within 3-4 lbs. Use Tool J-888 Piston Feeler Scale to measure pull.
Installing Pistons: Slot away from camshaft.
PISTON RINGS: Two compression, two oil rings (one above pin, one below pin) per piston. Rings are square end type. Rings pinned to prevent rotation. Rings cut and notched to fit pin (clearance on pin equal to ring end gap.

Ring	Width	End Gap	Side Clearance
Compression	3/32"	.004-.009"	.001"
Oil (upper	3/16"	.004-.009"	.001"
Oil (lower)	5/32"	.004-.009"	.001"

Installing Rings—Three top rings have offset pin notch (in relation to gap). Install rings so that alternate gaps offset.
Replacement Rings: *See Hudson Special Data.*
PISTON PIN: Dia.—.7497-.750". **Lgth.**—2.4375". Floating type with diamond-drilled pin holes in piston and bronze bushing (with oil grooves at sides) in connecting rod. Lock ring used at each end of pin.
Pin Fit in Piston—.0000-.0003" at 70°F., or hand push fit with piston at 200°F.
Pin Fit in Rod Bushing—.0003" clearance. Hand push fit at 70°F.
Replacement Pins: Std., .002", .005", .010" oversize. Select pin to fit piston. **Do not ream pin hole in piston.**
CONNECTING ROD: Length—8 3/16".
Weight—31.36 ozs. (with bearings).
Crankpin Journal Diameter—1.935-1.936".
►*See "Crankshaft Size Code" in Hudson Special Data.*
Lower Bearing—Babbitt-lined, spun type.
Clearance—.0003-.0006". **Sideplay**—.007-.013".
Bearing Adjustment: None (no shims). Install replacement rods furnished on exchange basis. Do not file rods or caps. Palnuts used on bolt nuts.
NOTE—Identifying notches on side of cap and rod must be together when cap installed on rod.
Palnuts—Tighten finger tight, plus 1/3 turn.
Replacement Rods: Std. size and .010" undersize.
Installing Rods: Offset. Install rods with widest half of bearing toward rear (#1, 3, 5, 7), toward front (#2, 4, 6, 8). Oil scoop on all rods toward camshaft.
CRANKSHAFT: Five bearing type with integral counter weights and vibration dampener on forward end.
►*VIBRATION DAMPENER PRODUCTION CHANGE*—New softer material, Part No. 304781. Identified by white dot on side of facing.

Journal Diameter—#1, 2.279-2.280"; #2, 2.311-2.312"; #3, 2.341-2.342"; #4, 2.373-2.374"; #5, 2.404-2.405".
Bearing Diameter—#1, 2.2805-2.2815"; #2, 2.3125-2.3135"; #3, 2.3425-2.3435"; #4, 2.3745-2.3755"; #5, 2.4055-2.4065".
►*See "Crankshaft Size Code" in Hudson Special Data.*
Bearings—Bronze backed, babbitt lined type. Bearings secured in cap and crankcase by brass screws.
Clearance—.001".

Bearing Adjustment: None (no shims). Replace bearings. Do not file bearing caps.
►***CAUTION—Replacement of main bearings requires removal of crankshaft. Bearing shells retained by brass screws.***

Palnuts—Tighten finger tight, plus 1/3 turn.

Replacement Bearings: Reamed bearings furnished standard size and .010" Undersize. Unfinished bearings also supplied.

End Thrust: Taken by center (#3) bearing. Replace bearing if endplay excessive.
Endplay—.006-.012".

CAMSHAFT: Five bearing type. Helical gear drive.
Bearing Diameter—#1, 2.028-2.030"; #2, 1.997-1.999"; #3, 1.965-1.967"; #4, 1.9345-1.9365"; #5, 1.497-1.499".
Bearings—Steel-backed, babbitt-lined bushings.
Clearance—.0015-.002".

Replacement Bearings: Furnished as follows:
Finished Reamed—Will be proper dimension when pressed in place (.0026-.0055" press fit) and no reaming required.
Unfinished—Press in place (.0026-.0055" press fit and line ream to .001" larger than individual camshaft journals.
►*CAUTION*—Install all bearings with notch at top.

End Thrust: Bakelite thrust washer between gear and crankcase. Spring loaded button in front end of camshaft bears against hardened plate on gear cover.

Timing Gears: Crankshaft gear Cast-iron, camshaft gear Aluminum. Teeth have 20° pressure angle and are slightly crowned for quiet operation.
Identification of Gears—Figure "20" on front face of gears (crankshaft gear also marked "FRONT").
Replacement Gear Caution—Camshaft gear not furnished singly (set only). Crankshaft gear furnished singly or in matched set.
Backlash—.002-.004".

Camshaft Setting: Mesh marked crankshaft gear tooth between two marked teeth on camshaft gear.

VALVES:	Head Diameter	Stem Diameter	Length
Intake	1 1/2"	.3407-.3417"	5.094"
Exhaust	1.380"	.3392-3402"	5.094"
	Seat Angle	**Lift**	**Stem Clearance**
Intake	45°	11/32"	.0015-.003"
Exhaust	45°	.346"	.003-.005"

NOTE—Stem clearance worn limit .005" max.

Valve Guides: Removable type pressed in block.
Guide Removal & Installation—Use Tool J-1188 to drive guides out. Install guides with Tool J-883-A with top of guide 15/16" below top of cylinder block. With guides installed, ream guides with Tool J-129-3 to .3437" (11/32") which will provide proper valve stem-to-guide clearance. NOTE—Car manufacturer recommends that guides be cleaned with Tool KMO-122 to remove carbon and scale out of guides (pay particular attention to carbon in counterbore at top of exhaust guide).

Valve Springs: Cadmium plated springs are used. Install springs with closely coiled end up.

	Spring Pressure	Length
Valve Closed	46 lbs.	2"
Valve Open	80 lbs.	1.656"

NOTE—Reject springs if pressure less than 34 pounds. Free length 2.343".

Valve Lifters: Roller shoe type, fitted in removable guides in cylinder block.
NOTE—Inner sides of guide clamps should be in full contact at all points with matching flat surfaces of front face of each pair of tappet guides within .0015".

VALVE TIMING

Tappet Clearance: .008" Int., .010" Exh. at normal operating temperature.
NOTE—Removable apron in right front fender.

Valve Timing: See Camshaft Setting above.
Intake Valves—Open 10°40' BTDC. Close 60° ALDC.
Exhaust Valves—Open 50° BLDC. Close 18°44' ATDC.
Above figures correct with .010" tappet clearance, Hot or .012" Cold.
Valve Timing Check—Remove front tappet cover and adjust tappet clearance of No. 1 intake valve to .010" Hot, or .012" Cold. Insert .002" feeler gauge in No. 1 intake tappet and rotate engine in direction of rotation until exhaust valve begins to close and light drag is felt on feeler gauge. Engine is correctly timed when first of four long timing marks is approximately 5/8" above index of timing hole in rear engine support plate. Reset tappet clearance to .008" Hot, or .010" Cold.

LUBRICATION

Engine Oiling System: Duo-flow (pressure and positive splash) system. Pump delivers oil to front and rear ends of upper tray in oil reservoir. Connecting rod bearings are lubricated by dippers on caps which dip into troughs in this upper tray and also splash oil inside crankcase. Part of this oil is caught in channels inside crankcase and fed into reservoirs directly over each camshaft and crankshaft bearing from which it flows into the bearings.
Crankcase Capacity—(Dry) 8 qts. (Refill) 7 qts.
►*NOTE*—Whenever pan removed, install 1 qt. in upper tray before pan installed, then 7 qts. through oil filler after pan in place on engine.
Normal Oil Pressure—Approximately 13 lbs. at normal operating temperature. No gauge used (see Oil Pressure indicator below).

Oil Check Valve: Located on right side of crankcase at rear. Opens at 11-15 lbs. Operates dash signal to indicate oil flow.

Oil Pump:—Oscillating plunger type, gear driven by camshaft. Mounted on right side of crankcase.

Oil Pressure Indicator:—Hudson Teleflash Oil Pressure Indicator. *See Electrical Equipment Section for complete data.*

Crankcase Ventilation: Outlet pipe in rear valve compartment cover on right side of engine.

COOLING

Cooling System: Positive circulation with pump on front of engine and by-pass type thermostat.
Capacity—18½ quarts. 19½ quarts with heater.

Water Pump: Centrifugal, belt-driven, packless type. Shaft mounted on sealed duplex ball bearing.
See Water Pump Section for complete data.
Belt Adjustment—*See Generator Belt Adjustment.*

Thermostat: Hudson No. 166272. By-pass type in water outlet on cylinder head.
Setting—Starts to open 150-155°F. Fully open 185°.

Temperature Gauge (1950): King-Seeley Electric type.
Dash Unit—K-S No. 42918.
Engine Unit—K-S No. 41085.

Temperature Gauge (1951): King-Seeley "CV" (Constant Voltage).
Dash Unit—K-S No. 45675.
Engine Unit—K-S No. 44200. New type sender unit.
See Miscellaneous Section for complete data.

CLUTCH

Own Make. Single plate, fluid cushioned type (cork insert type driven member operating in Hudsonite oil). 10" type used on all models.
See Clutch Section for complete data.
Facings—Cork insert type. Inside Diameter 6⅜". Outside Diam. 10". 108 corks, .203" thick.

Pedal Adjustment: Clearance between underside of toeboard and top face of pedal shank must be 1½". To adjust, loosen locknut above clevis, remove clevis pin, turn clevis in or out of link, tighten locknut after re-connecting clevis.

Removal: Remove transmission (see Transmission Removal following). Drain clutch oil by turning engine over until plug on flywheel is accessible through timing inspection hole in rear engine support plate behind starter, remove plug, turn engine over ⅓ revolution until star on flywheel visible through timing hole (drain hole then at bottom), allow lubricant to be drained. Loosen mounting bolts in clutch cover rim to release spring tension, remove bolts and lift clutch assembly off car.

VACUMOTIVE DRIVE

Vacumotive Drive: Automatic clutch control. Optl.
See Clutch Section for complete data.

TRANSMISSION

STANDARD

Own Make. All helical gear type. Constant-mesh, synchro-mesh (Second & High), sliding gear (Low & Reverse) with remote (steering column) shift.
►*SLIPPING OUT OF HIGH & SECOND GEAR CORRECTION—See Transmission Section for complete data.*

Transmission Control: Handy-shift remote control type with shift lever mounted on steering column.
See Transmission Section for complete data.

Transmission Removal: Remove front seat cushion, disconnect front seat from track, disconnect seat adjusting lever and remove seat back from car. Disconnect accelerator pedal at accelerator rod, brake pedal rod at lever. Remove floor mat, remove Weather Control blower unit (2 screws each side), disconnect bowden wire at control valve at cylinder head. Remove floor opening cover over transmission. Disconnect front universal joint at transmission (wire bearings on universal joint spider). Remove bolts attaching center bearing support bracket, move propeller shaft to rear to clear companion flange at transmission. Disconnect clutch pedal lever return spring, remove clutch cross-shaft and bracket, disconnect clutch control link clevis. Disconnect Handy Shift by removing shifter shaft outer lever, nut, and washer. Remove flywheel guard from bottom of clutch housing. Remove two engine rear mounting bolts and nuts, jack up rear end of

C NTINUED N NEXT PAGE

CONTINUED FROM PRECEDING PAGE

engine about ½" off frame cross member (CAUTION—use block of wood on jack to prevent damage to oil pan). Disconnect speedometer cable at transmission case, plug hole with wood plug. Remove two top screws attaching clutch housing to engine, install guide studs (headless screws) in these holes to support transmission, remove remaining screws. Remove breather pipe bracket from clutch housing and bolt attaching breather pipe and rear valve cover. Pull transmission straight back on guide studs, lift transmission out through floor opening.

DRIVE-MASTER TRANSMISSION

Drive-Master Transmission: Optl. Conventional 3-speed transmission with automatic gear shifting between Second & High Gears. Used in conjunction with Vacumotive Drive (automatic clutch control).
Identification—Metal tag attached by a cover bolt screw carries second speed ratio 1.82:1.
See Transmission Section for complete data.
►**Drive-Master Fuse**—15 ampere, Part No. 71406. Located in wiring circuit 6" from control switch.
Power Cylinder Lubrication—Must be lubricated at 10,000 mile intervals. *See "Hudson Drive-Master" in Transmission Section.*

SUPER-MATIC DRIVE TRANSMISSION

Own Make—Four-speed automatic transmission 3-speed automatic shift plus ultra-low). Optl.
See Transmission Section for complete data.

HYDRA-MATIC TRANSMISSION

Four speed planetary type automatic transmission and fluid coupling. *1951 MODELS*—Modulated pressure and hydraulically operated reverse mechanism.
See Transmission Section for complete data.
Lubrication—Check fluid level every 1000 miles. Add fluid as required to maintain level at "F" mark on dip stick. Drain and refill every 25,000 miles. Use automatic Transmission Fluid "A".
Capacity—11 qts. (approx).
Checking Fluid Level—Operate engine at normal operating temperature. Manual control lever in "N" position. Hand brake on. Dipstick located under inspection cover placed on right side under floor mat. Oil level must be just to the full mark on the dipstick. *DO NOT OVERFILL.*
►*CAUTION—Do not check oil level when transmission temperature is excessively high and do not fill above "F" on dip stick (will cause foaming when hot).*
Draining and Refilling—*See "Hudson Hydra-Matic Drive" in Transmission Section.*
Hydra-Matic Linkage Adjustment—*See "Hudson Hydra-Matic Drive" in Transmission Section.*
Removal—*See "Hudson Hydra-Matic Drive" in Transmission Section.*

OVERDRIVE

Warner Type AS2-R10D (Early '50), AS3-R10D (Late '50), AS4-R10D (Late '50 & '51). (Models AS3, 4 have centered ring gear). Optl. with Hudson Transmission. Part of Super-Matic Drive. Has simplified control (new 2-terminal Solenoid, Relay & Throttle Kick-down Switch).
See Transmission Section for complete data.
Overdrive Relay—Hudson No. BT303107.
Throttle Switch—Hudson No. BT303254.
Overdrive Fuse—30 ampere. On fuse block on side of overdrive relay.
Removal—Same as for standard transmission removal, except that overdrive control cable and wiring must be disconnected.

UNIVERSALS

Spicer No. 1268-111X.....**Front & Rear**
Spicer No. 1268-102X.....**Intermediate**
Needle bearing types.
See Univerals Section for complete data.
Propeller Shaft & Center Bearing: Two shafts used: 1) Front shaft supported by sealed ball-bearing just ahead of rear coupling flange (no slip joint).
2) Rear shaft with slip joint at forward end.
Center Bearing—Prelubricated sealed annular ball bearing fitted in cast steel housing bolted to support mounting which is secured to underside of frame cross members. Housing cradle mounted on two rubber supports and forward end of support mounting fitted with rubber cushion.
Center Bearing Removal & Installation—*See Hudson Special Data.*

REAR AXLE

Own Make. Semi-floating, hypoid gear type with Hotchkiss drive.
See Rear Axle Section for complete data.

1950 Axle Ratios

Make	Std.	Optl.
Std. & Drive-Master	4.1-1	4.55-1
With Overdrive	4.55-1	4.1-1
With Super-Matic	4.1-1	4.55-1

1951 Axle Ratios

Make	Std.	Optl.
Std. Trans.	4-1-1	4.55-1
With Overdrive	4.55-1	4.1-1
With Hydra-Matic	3.58-1	———

Backlash—.004-.006". Screw adjustment.
Removal: Support car on stands under body frame just forward of rear springs, remove fender shields and rear wheels. Disconnect brake line at tee on axle housing, remove tee. Disconnect brake cables at equalizer bar clevis and unscrew end fittings, loosen nuts on cable conduit brackets on cross member and free conduits from brackets, disconnect cable conduit clips on rear springs, pull cables and conduits out through guides and clamps. Disconnect rear universal joint and lower propeller shaft. Disconnect lower end of shock absorbers, disconnect and remove rear stabilizer. Disconnect each rear end of springs, slide axle assembly out toward rear of car.
Axle Shaft Removal: Hoist rear of car. Remove rear wheels. Remove axle shaft nut and washer. Remove hub and drum assembly using screw type wheel puller (Tool J-736—CAUTION—Car manufacturer recommends that screw type puller be used, if knock-out type puller is used serious damage to differential parts may result). Remove 4 nuts on bearing cap bolts, remove bearing cap and shims (without disturbing brake backing plate). Pull rear wheel bearing and axle shaft, using puller Tool J-352. Do not drag axle shaft on oil seal assembly.
Wheel Bearing Adjustment: Controlled by shims (.003", .005", or .015" thick) under bearing cap. To adjust, remove bearing cap (see directions above under Axle Shaft Removal), add or remove shims equally at both wheels (necessary to keep thrust spacer centered on differential pinion shaft).
Endplay—.001-.004".

SHOCK ABSORBERS

Delco or Monroe. Direct acting, hydraulic types.

Light Scale

Make	Front	Rear
Monroe	303060	300351
Delco	303062	301241

Heavy Scale

Monroe	303061	301768
Delco	303063	301770

Extra Heavy Scale

Monroe	302431	302431
Delco	301637	301638

►**APPLICATION NOTE—Light Scale** front and rear shocks used with light scale springs and with front only heavy scale springs. **Heavy Scale** front and rear shocks used with heavy scale springs and with rear only heavy scale springs. **Extra Heavy Scale** front and rear shocks optional on all models. **Part Number** stamped on outside of shock absorber body.

FRONT SUSPENSION

Front Suspension: Independent, linked parallelogram type with coil springs and lateral stabilizer.
See Front Suspension Section for complete data.
Kingpin Inclination—3°36' crosswise.
Caster—½-1½°. Eccentric adjustment. Both wheels alike within ½°.
Camber—½-1½°. Eccentric adjustment. Both wheels alike within ½°.
Toe In—1/32" ± 1/32" measured at wheel rim. Center steering arm on frame must be at center of car. To adjust, loosen clamps at ends of each tie rod and adjust tubes equally (to increase toe-in turn rods in direction of wheel travel, to decrease, turn in opposite direction).
Steering Geometry—Inner wheel 30°. Outer 25°.

STEERING GEAR

Gemmer Model 335. "3-tooth" Worm-and-Roller type with "push-pull" adjustments.
See Steering Gear Section for complete data.

BRAKES

Service: Bendix Hydraulic, Duo-Servo, Single Anchor type without eccentric adjustment. Mechanical follow-up (pedal linked to hand brake cables) provided. Hand lever applies rear wheel service brakes.
See Brake Section for complete data.
Wheel Cylinders Diam. front wh'l. 1⅛", rear 15/16".
Drums—11" centrifuse type.
Lining Molded. Width 2¼" (front whl.), 1¾" (rear). Length per shoe 11" (exc. 11 1/16" rear secondary).
Clearance—.010" at both ends of secondary shoe with primary shoe forced out against drum.
Mechanical Follow-Up (Reserve): Over-running linkage between brake pedal and parking (hand-brake) linkage which applies rear wheel brakes by pedal mechanically if hydraulic system not operating.
See Brake Section for complete data.
Setting—1¼" clearance between clevis pin and rear end of slot in pedal rod rear clevis.
Hand Brake: See Service Brakes above.

MISC. MECHANICAL

Power Operated Convertible Top & Windows: Hydro-Lectric (hydraulic actuation with motor-driven pump supplying oil under pressure for power cylinders. *See Miscellaneous Section for complete data.*
Windshield Wiper: Cable Operated—Vacuum type.
See Miscellaneous Section for complete data.

TIGHTENING SPECIFICATIONS

	Ft. Lbs.	In. Lbs.
Cylinder Head Bolts	30-35	360-420
Spark Plugs	30	360
Con. Rod Bearing Bolts	40-45	480-540
Main Bearing Cap Bolts	85-95	1020-1140
Flywheel Mounting Bolts	35-40	420-480
Camshaft Sprocket Nut	35-40	420-480
Camshaft Thrust Plate	12-15	144-180
Timing Gear Cover	12-15	144-180
Eng. Front End Plate 5/16"	12-15	144-180
Eng. Front End Plate 7/16"	40-50	480-600
Int. & Exh. Manifolds	30-35	360-420
Oil Pan Screws	12-15	144-180
Water Pump Mtg. Bolts	12-15	144-180
Vibration Dampener Bolt	100-130	1200-1560
Steering Wheel Nut	10-15	120-180
Steering Gear Mtg. Bolts	25-30	300-360
Pitman Arm Nut	110 min.	1320
Rear Spring "U" Bolt Nuts	45-55	540-660
Wheel Mtg. Nuts or Bolts	85-90	1020-1080
Differential Bearing Caps	38-42	456-504
Rear Axle Shaft Nut	160 min.	1920

CAUTION—Torque figures given are for clean and dry threads. If threads oiled, reduce torque approx. 10%.

CYLINDER HEAD

CYLINDER HEAD INSTALLATION: Use a Torque Indicating Wrench to tighten cylinder head bolts, tighten in correct sequence as shown in diagram. Heads should be tightened cold and rechecked after engine temperature reaches 150°F.

Tightening Torque: See Tightening Specifications.

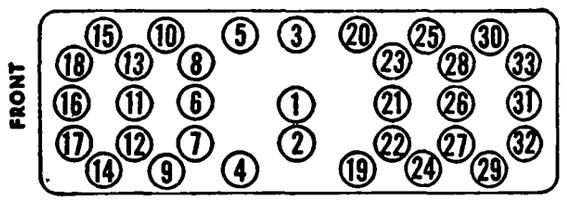

ORIGINAL BORE & PISTONS

BORE & PISTON SIZES: Engines originally equipped at factory with special oversize pistons may be identified by code letter following engine number:

"N"—Pistons are .020" Oversize.

"AN"—Pistons .020" Oversize. Main and connecting rod bearings Undersize (See Original Bearing Sizes).

"NX"—Pistons .020" Oversize. Main bearings are Undersize (see Original Bearing Sizes following).

PISTONS

PISTON IDENTIFICATION: Two types of aluminum alloy pistons used which can be identified as follows:

►*CAUTION—Piston weight different on each type.*

Strut Type Piston—Has wide strut embedded within skirt at each piston pin boss and drilled oil drain holes in both #3 and #4 ring grooves.

T-Slot Type Piston—Has horizontal slot in lower (#4) ring groove and short vertical slot on one side of piston skirt. #3 oil ring groove has drilled oil drain holes.

REPLACEMENT PISTONS: See "Piston Identification" for types used. Each type piston furnished in following sizes:

Piston Size	Kaiser-Frazer Part No. Strut Type	T-Slot Type
Standard	200108	201947
.005" Oversize	200357	201949
.010" Oversize	200358	201950
.020" Oversize	200359	201951
.025" Oversize	202484	202487
.030" Oversize	200360	201952
.040" Oversize		203751
.050" Oversize		203752
.060" Oversize		203753

►*CAUTION—Piston weight different on each type.*

PISTON RINGS

REPLACEMENT RINGS: Rings furnished as single rings (12 Compression, 12 Oil Rings required), or in complete sets (1 Set per car) as follows:

Single Rings

Ring Size	Compression—Part No.	—Oil
Standard	200111	200112
.010" Oversize	200361	200364
.020" Oversize	200362	200365
.030" Oversize	200363	200366

Ring Sets

Ring Size	Cyl. Size①	Part No.
Standard	St. to .009" OS	203145
.020" Oversize	.010" to .029" OS	203146
.040" Oversize	.030" to .049" OS	203147
.060" Oversize	.050" to .069" OS	203148

①—Use ring indicated for oversize cylinders within this range (check End Gap).

ORIGINAL BEARING SIZES

MAIN & CONNECTING ROD BEARING SIZES: Engines originally equipped with special undersize main and connecting rod bearings may be identified by code letter following engine number:

"A"—Main & Connecting Rod Bearings .010" Undersize.

"X"—Main Bearings .002" Undersize.

"AN"—Main & Connecting Rod Bearings .010" Undersize and Pistons Oversize (see Original Bore and Pistons).

"NX"—Main Bearings .002" Undersize and Pistons Oversize (see Original Bore and Pistons).

TAPPET CLEARANCE ADJUSTMENT

TAPPET CLEARANCE ADJUSTMENT PROCEDURE: Car manufacturer recommends valves be adjusted in order listed (see table below). Remove right front wheel and access cover in fender splash shield for access to valve compartment. Remove spark plugs so that engine can be turned over by moving fan or fan belt. By setting valves in fully raised position (left hand column), **valves in right hand column** will be on "low" side of cam **in position for tappet adjustment.**

Valve Tappet Adjustment Order (numbered from FRONT of engine)

Fully Raise Valve	Then ADJUST Valve:
Nos. 1 and 3	Nos. 10 and 12
Nos. 8 and 9	Nos. 4 and 5
Nos. 2 and 6	Nos. 7 and 11
Nos. 10 and 12	Nos. 1 and 3
Nos. 4 and 5	Nos. 8 and 9
Nos. 7 and 11	Nos. 2 and 6

Tappet Clearance—Prior to Engine No. 10769, tappet clearance should be .010" Intake, .014" Exhaust. Beginning Engine No. 10769 tappet clearance is .014" for both Intake and Exhaust valves.

OIL PAN REMOVAL

OIL PAN REMOVAL: Raise front end of car and support it securely on stands. Disconnect steering drag link at idler arm on frame, turn wheels to right and work drag link clear of oil pan. Drain oil, remove oil pan capscrews and lockwashers, slide pan to rear.

►INSTALLATION NOTE—Lower Filler Blocks (front and rear) must be removed to install new oil pan side gaskets. See "Front & Rear Filler Blocks" under Crankshaft & Main Bearings (above) for data.

OIL PUMP

OIL PUMP SERVICING: Pump can be removed from engine (with oil pan off) by taking off retaining nut on stud on #3 main bearing cap and pulling pump straight down to disengage drive gear and distributor drive coupling. Service pump as follows:

Disassembly—Take out cotter pin and remove screen float assembly. Remove cover and gasket. Drive out pin holding upper drive gear on shaft (pin peened in place), drive out shaft from gear. remove idler gear (remove idler shaft if required). Take off lower drive gear (press fit and keyed to shaft).

Oil Pump Clearances—Check as follows:

1)—Pump Body Bushing: if over .005" clearance between pump body and ends of lower drive gear teeth, replace bushing and ream to .500-.501".

2)—Pump Shaft: shaft diameter .4990-.4985".

3)—Lower Drive Gear: end of gear should be .001-.006" beyond gasket seat on pump body.

4)—Upper Drive Gear: .002-.004" clearance between underside of gear and upper end of pump body. Controlled by pressing lower drive gear on shaft until this clearance obtained.

NOTE—Cover plate should be replaced if worn from contact with gears, or if cracked.

Oil Pump Bushing (in Cylinder Block)—Replace if worn or loose (can restrict oil gallery if loose). Replace by using drift inserted in distributor drive shaft bore from top of block. Install new bushing from below (must be flush with bottom of block).

Reassembly—Press upper drive gear on shaft with pin hole at right angles to tongue on shaft. Insert new pin and peen ends flush with gear. Install shaft and gear in pump body. Press lower drive gear on shaft (with key in place) until .002-.004" clearance obtained between upper drive gear and upper end of pump body. Press idler gear shaft in body, install idler gear. Install cover using new gasket and pin oil screen float assembly on cover. Check shaft and gears—must rotate freely when turned by hand.

Oil Pump Installation—Set #1 piston at top dead center. Insert distributor main drive shaft from top of block. Install pump with pump drive shaft tongue engaging slot in lower end of distributor main drive shaft and in such a position that when installed, slot in upper end of distributor main drive shaft will be approx. parallel to side of block (slot pointing fore-and-aft), install lock washer, tighten mounting nut. Remove distributor shaft for cyl. head installation.

►*CAUTION—Check Ign. Timing after pump installed.*

MODEL IDENTIFICATION

SERIAL NUMBER: On plate located on left front pillar post.

Body Number Note—Stamped on plate on right front face of dash in engine compartment.

ENGINE NUMBER: Stamped on pad on left front upper corner of engine block and on Engine Name Plate on left side of crankcase.

NOTE—Numeral following Engine Model Designation (first part of Engine Number on Engine Name Plate) indicates Engine Plant: 4—Detroit, 8—Muskegon.

►**Engine Number Symbol (Special Bore & Bearing Sizes).** *See "Original Bore & Pistons" Kaiser Special Data.*

NOTE—Symbol consists of 1 or 2 letters following engine number.

TUNE-UP

COMPRESSION PRESSURE: 120-130 lbs. at cranking speed.

VACUUM READING: 17½" steady idling at 550 RPM.

FIRING ORDER: 1-5-3-6-2-4. See Diagram.

SPARK PLUG GAPS: .032" (A-5 plug), .040" (AR-5 plug).

Plug Type—Auto-Lite A-5 or Resistor type AR-5. 14 mm.

DISTRIBUTOR: Breaker Gap—.022".

Cam Angle—31°-37°.

Breaker Arm Spring Tension—17-21 ozs.

Automatic & Vacuum Advance—*See Ignition.*

Condenser Capacity—.18-.23 microfarad.

IGNITION TIMING: 4° BTDC.

Timing Procedure—*See Ignition Timing.*

Timing Mark—4th. graduation before top dead center "0" mark on vibration dampener.

►***CAUTION—Engine must be idling below 450 RPM. when setting timing.***

Octane Selector Setting—Set for slight ping when accelerating with wide open throttle.

CARBURETION:

Idle Setting—½ to 1 turn open—2 screws. Turn screws out for richer mixture.

Idle Speed—550-600 RPM (Std.), 425-450 RPM (Hydra-Matic).

Float Level—(Early Production, Spring Loaded Needle & Seat assembly)—7/64". (Later Production, Solid Needle & Seat assembly) ¼", measured from machined surface of bowl cover to top of float with bowl cover inverted.

►***CAUTION—When measuring float level do not depress float lip against spring in needle, but let float rest of its own weight. Adjust by bending lip of float, not float arm.***

Accelerating Pump—No seasonal adjustment. *See Carburetor Section for complete data.*

Choke Setting: Centered (coil housing at index mark).

Fuel Pump Pressure: 3-4½ lbs. (pump mounted at front of engine).

►***CAUTION—Pump pressure must not exceed 4½ lbs.***

MANIFOLD HEAT CONTROL: Automatic thermostatic type. See that valve operates freely.

VALVE TAPPET CLEARANCE: .014" All Valves, Cold.

Adjustment Procedure—*See Kaiser Special Data.*

Valve Timing Check—*See Valve Timing.*

STARTING: *See Battery, Starter, Generator, Regulator.*

IGNITION

IGNITION SWITCH: Kaiser & Frazer No. 207760.

COIL: Delco-Remy No. 1115328.

Ignition Current—5 amperes at 6 volts (stopped).

CONDENSER: Delco-Remy No. 1869704.

Capacity—.18-.23 microfarad.

DISTRIBUTOR: Delco-Remy No. 1110224. Full automatic advance type with auxiliary vacuum spark control and octane selector adjustment.

Breaker Gap—.022".

Cam Angle—31°-37°.

Breaker Arm Spring Tension—17-21 ozs.

Rotation—Counter-clockwise viewed from above.

Distr. Degrees	Automatic Advance R.P.M.	Engine Degrees	R.P.M.
Start	300	0	600
2	600	4	1200
6	1180	12	2360
8	1460	16	2920
10	1600	20	3200

Octane Selector—Manual adjustment at distributor providing advance and retard. See Ignition Timing.

Vacuum Spark Control: Delco-Remy (integral type). Linked directly to breaker plate. Provides additional advance at speeds above idling except when engine accelerated or operated with wide open throttle when spark retarded by return spring in unit.

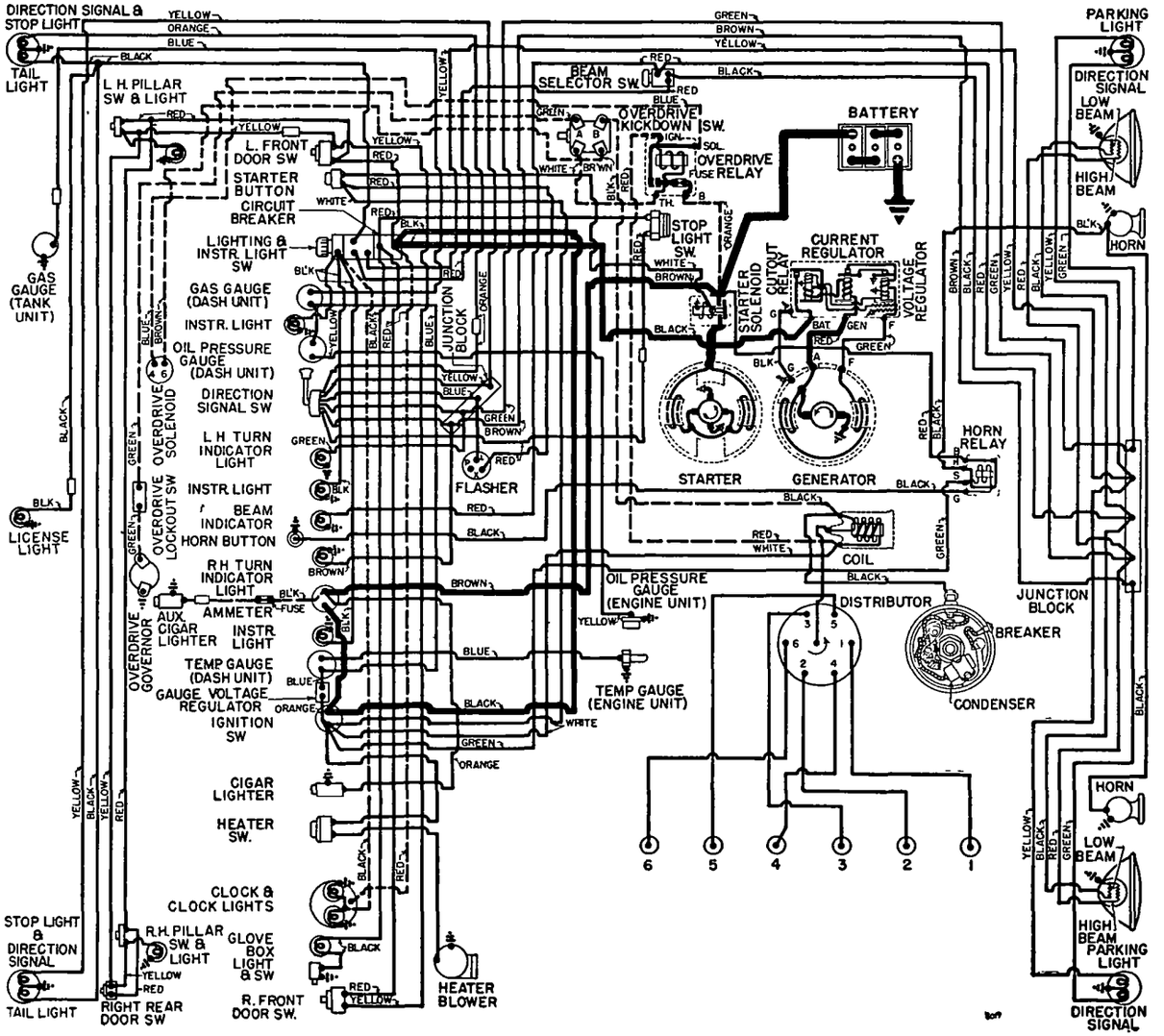

Vacuum Advance

Distr. Degrees	Eng. Degrees	Vacuum (" of HG)
Start	0°	10"
3	6°	13"
5	10°	15"

IGNITION TIMING

Std. Setting.....**4° BTDC.**

Timing Mark—Timing mark located on vibration dampener. Consists of "0" mark at top dead center with 1° graduations before and after this point.

Timing (with Timing Light C-693)—Mark fourth degree mark before "0" top dead center mark on vibration dampener with chalk or white paint. Connect timing light to #1 spark plug terminal and direct light at timing mark. Idle engine **below 450 RPM.** (back off throttle stopscrew to decrease normal idle speed of 550 RPM.). Loosen hold-down screw in advance arm, center screw in slot, tighten hold-down screw. Loosen cap screw in end of arm under distributor, rotate distributor until timing mark appears in line with pointer, tighten cap screw. Check octane selector setting.

►*CAUTION*—Reset engine idling speed to 550 RPM on cars with Synchro-mesh transmission.

Octane Selector Setting—Set for slight ping when accelerating with wide-open throttle. To adjust, loosen hold-down screw in advance arm, rotate distributor clockwise (if no ping noted), counter-clockwise (if ping too severe).

CARBURETOR

Carter WGD Type 781S. 1¼" Dual (double barrel), Downdraft type with Fast Idle and Climatic Control.
Casting No. on Flange—774.
See Carburetor Section for complete data.

Settings (Idle Setting, Float Level, and Accelerating Pump): *See Tune-Up data.*
Metering Rods & Jets—*See Carter Jet Table in Carburetor Section.*

Fast Idle: Carter Dual (WGD) type.
Setting—With thermostatic coil housing gasket and baffle plate removed, crack throttle valve and hold choke valve closed. There should now be .018" to .023" clearance (gauge T109-29) between throttle valve and bore of carburetor (side opposite idle port). Adjust by bending the choke connector rod at lower angle bend.
See Carburetion Equipment Section for complete data.

Automatic Choke: Carter Climatic Control (Dual Carburetor Type).
Setting—Centered (coil housing at index mark).
See Carburetion Equipment Section for complete data.

CARB. EQUIPMENT

Air Cleaner: (Special). AC #1544029 Oil-bath type.
Element—AC No. 7-S.

Fuel Pump: AC No. 1539074 combination Fuel-and-Vacuum Pump.
Replacement Pump—AC No. 582.
►*CAUTION—Install pump with rocker arm UNDER camshaft eccentric.*
Pressure—3-4½ lbs.
See Carburetion Equipment Section for data.

Gasoline Gauge: King-Seeley "CV" (Constant Voltage) type, with voltage regulator.
Dash Unit—K-S No. 45507.
Tank Unit—K-S No. 44504.
See Carburetion Equipment Section for complete data.

BATTERY

Auto-Lite Type 1M-100D—6 Volt, 15 Plate, 105 Ampere Hour Capacity (20 hour rate).

Grounded Terminal—Positive (+) terminal grounded at left front engine support. Engine ground cable connected at same point.

Location—In engine compt. on left side.

STARTER

Delco-Remy No. 1107087 (Standard), Delco-Remy No. 1107088 (Hydra-Matic). Armature No. 1878077.

Drive—Barrel type Bendix Drive. D-R No. 1878079.

Rotation—Counter-clockwise at commutator end.

Brush Spring Tension—24-28 ozs. (new brushes).

Performance Data

Torque	R.P.M.	Volts	Amperes
No Load	5000	5.0	65
12 ft. lbs.	Lock	3.4	525

Starting Switch: Magnetic switch on splash shield near starter and controlled by push-button on instrument panel.
See Electrical Equipment Section for complete data.

GENERATOR

Delco-Remy No. 1102733. Armature No. 1879002.
Two brush type with voltage and current regulation.
Charging Rate Adjustment—None. *See Regulator.*
Maximum Charging Rate—35 amperes, cold, at 8 volts, 1800-2000 RPM.

Performance Data

	Amperes	Volts	R.P.M.
Cold	30①	8.0	1750

①—Not maximum output. See Current Regulator
Rotation—Counter-clockwise at commutator end.
Brush Spring Tension—24-28 ozs.
Field Current—1.75-1.90 amps. at 6 volts.
Motoring Current—4.2-4.6 amps. at 6 volts.

Belt Adjustment: Adjust by pulling generator out with 15 lb. force in line with adjuster link with all mounting bolts loose. A 6 lb. adjustment for new belt is recommended.

REGULATOR

Delco-Remy 1118302. Voltage Current type.
►*NEW "1118300 SERIES"* regulators have screw adjustment for settings and single regulator springs.
See Electrical Equipment Section for complete data.
CAUTION—Check generator for grounded field coils and leads before changing regulator settings to correct High Charging Rate or High Voltage.

Cutout Relay
Cuts In—5.9-6.8 volts hot (set to 6.4 volts hot).
Contact Gap—.020" (same for both contacts).
Air Gap—.020" (with contacts just closed).

Voltage Regulator
Setting—7.0-7.7 volts hot (set to 7.4 volts hot). Regulator is over-compensated for temperature. Should be checked with cover in place and hot.
Air Gap—.075" with armature pressed down to point where contacts are just touching.
Checking & Adjustment—*See Elec. Equip. Section.*

Current Regulator
Setting—32-40 amperes hot, (set at 36 hot).
Air Gap—.075" with armature pressed down to point where contacts are just touching.
Checking & Adjustment—*See Elec. Equip. Section.*

LIGHTING

Headlamps: Hall "Sealed Beam" type. Upper and lower beams controlled by beam selector switch.
See Electrical Equipment Section for complete data.
Adjustment—Aim upper beam straight ahead (hot spot center 3" below lamp center height at 25 ft.).
Beam Indicator—Red jewel at top of speedometer dial. Lighted when upper (country beams) in use.

Direction Signal: (Deluxe) Mitchell (United Specialties) type.
See Electrical Equipment Section for complete data.
Direction Indicators—Right and Left indicator lights on lower face of speedometer. Lighted when direction signal on same side of car in operation.

Switches
Headlight & Instrument—Kaiser-Frazer No. 207782.
Beam Selector—Kaiser-Frazer No. 204545.
Courtesy—Kaiser-Frazer No. 203662.
Door—Kaiser-Frazer No. 204229.
Dome Lamp—Kaiser-Frazer No. 204779.
Stop Lamp—Kaiser-Frazer No. 201466.
Direction Signal—Kaiser-Frazer No. 204551.

MISC. ELECTRICAL

LIGHTING CIRCUIT BREAKER: Thermostatic type, 30 amperes. On back of lighting switch.

FUSES: Clock—2 ampere. In clock lead.
Overdrive—20 amperes. On control relay.
Rear Seat Cigar Lighter—30 ampere. In lead back of instrument panel.

HORNS: Auto-Lite, Sparton or Delco-Remy—A-L HW-4017 (Low Note), HW-4018 (High Note). D-R No. 1999649 (Low Note), D-R No. 1999650 (High Note). Twin horns.
Horn Current—Approximately 15 amperes each at 6.2 volts.

Horn Relay: Relay connected through ignition switch (horns operative only with ignition switch "on").

GAUGE VOLTAGE REGULATOR: King-Seeley—No. 45550. Thermo-bi-metal interrupter unit designed to maintain a constant voltage of 5 volts (regardless of generator charging voltage fluctuation) on gauge feed circuit. Unit is mounted on the instrument cluster and is connected between the ignition switch, and the gauge circuits. See Wiring Diagram.

ENGINE

ENGINE SPECIFICATIONS: Own (Continental). Six Cylinder, "L" head type.
Bore—3 5/16" (3.3125-3.3145"). *See "Original Bore & Pistons" in Frazer-Kaiser Special Data.*
Stroke—4⅜".
Displacement—226.2 cu. ins. **Rated HP.**—26.3
Developed Horsepower—115 at 3650 RPM.
Compression Ratio—7.3-1.
NOTE—7.3-1 Heads marked by "73" stamped on left front directly above engine number on block.
Compression & Vacuum Reading—*See Tune-Up data.*

CYLINDER HEAD & TIGHTENING TORQUES: *See Kaiser Special Data.*

PISTONS: Aluminum alloy, Cam-ground. Tin-plated, T-slot type. Length 3 17/32".
Clearance—See Fitting new pistons.
►*CAUTION—Mark piston and rod assemblies before removal to insure re-installation in same cylinder.*

CONTINUED N NEXT PAGE

ENGINE

CONTINUED FR M PRECEDING PAGE

Fitting New Pistons: Use .0015" feeler stock ½" wide inserted on side opposite slot. Pull to withdraw feeler must be 5-10 lbs.

Replacement Pistons: *See Kaiser Special Data.*

Installing Pistons: Slot in skirt toward left or away from camshaft.

PISTON RINGS: Two compression, two slotted oil rings, all above pin. Third ring groove drilled, fourth groove slotted for oil drainage.

Ring	Width	End Gap	Side Clearance
Comp. (#1)	.0925-.0935"	.008-.016"	.0025-.004"
Comp. (#2)	.0925-.0935"	.008-.016"	.0015-.0035"
Oil (#3,4)	.1550-.1545"	.008-.016"	.001-.0025"

Installing Rings: Side marked "TOP" (compression rings) upward.

Replacement Rings: *See Kaiser Special Data.*

PISTON PIN: Diameter—.8591-.8593". **Lgth.**—2 13/16". Floating type with lock ring at each end.

Pin Fit in Piston—Push fit with piston heated to 212°F. (heat piston in water at 212°F. to install new pins).

Pin Fit in Rod Bushing—Light press fit. When installing new bushings, ream bushings with DD-82-2 Reamer to inside diameter of .8593-.8595" for new std. Pins.

►*CAUTION*—Pin bushing must protrude 1/64" on each side of rod.

Replacement Pins: Std. size and .003", .005" Oversize.

CONNECTING ROD: Length—7". **Weight**—29.6 ozs.

Crankpin Journal Diameter—2.0619-2.0627".

►*CAUTION—Special bearing sizes used in some engines. See "Original Bearing Sizes" in Kaiser Special Data.*

Lower Bearing—Removable steel-backed, babbitt-lined type. No shims.

Clearance—.0005-.0018". Side Play—.006-.010".

Bearing Adjustment: None. Replace bearings. Do not file rods or bearing caps.

Replacement Bearings: Furnished Std. Size and .001", .002", .010", .012" Undersize.

CAUTION—Install bearings with tang engaging notch in rod and cap and oil hole aligned with oil spurt hole in rod.

Installing Rods: Mark rods and bearing caps. Install with marks together and toward camshaft in same order as when removed. Oil spray hole in lower end of rod toward camshaft. NOTE—Lower bearings offset with narrow side of rod toward nearest main bearing (#1, 3, 5 toward front; #2, 4, 6 toward rear of engine).

CRANKSHAFT: Four bearing, counterweighted type with vibration dampener on forward end.

Journal Diameters—2.3744-2.3752". NOTE—Allowable taper or out-of-round .001".

►*CAUTION—Special bearing sizes used in some engines. See "Original Bearing Sizes" in Kaiser Special Data.*

Bearings—Removable, steel-backed babbitt-lined.

Clearance—.0007-.002".

Bearing Adjustment: None (no shims). Replace bearings. Do not file bearing caps. Upper main bearing shells can be "rotated" out by installing tool KF-8 in crankshaft journal hole (lug on tool engages edge of bearing when crankshaft rotated).

Replacement Bearings: Furnished Std. size and .001", .002", .010", .012" Undersize.

End Thrust: Taken by front (#1) bearing (special thrustwasher used with unflanged bearings). Controlled by shims installed between front crankshaft thrust washer (ahead of #1 bearing) and crankshaft thrust plate (behind crankshaft sprocket).

End Play—.002-.006".

CAMSHAFT: Four bearing. Two-sprocket chain drive.

Journal Diameters—#1, 1.8725-1.8735"; #2, 1.8095-1.8105"; #3, 1.7472-1.7485"; #4, 1.2475-1.2485".

Bearing Diameters (I.D.)—#1, 1.8745-1.8755"; #2, 1.8115-1.8125"; #3, 1.7495-1.7502"; #4, 1.2495-1.2505".

Bearings—Steel-backed, babbitted bushings.

Clearance—.002-.004".

Bearing Adjustment: None. Replace bushings with camshaft removed.

Replacement Bushings: Replace as set (furnished finished line-bored and do not require reaming after installation). Use KF-4 Camshaft Bearing Remover & Replacer.

►*CAUTION—Align oil hole in bushings and block.*

End Thrust: Taken by thrust plate on front of engine (between front bearing journal and camshaft sprocket. **Endplay**—.003-.007".

Timing Chain: Non-adjustable type. Width 1". Pitch .500", Length 23" or 46 links.

►*Timing Chain Caution—Morse and Link Belt chains used. Interchangeable only as complete sets with both sprockets.*

Camshaft Setting: Mesh chain with 9 links (or 10 link pins inclusive of pins opposite marks) between marks on sprockets with #6 piston at top dead center on compression stroke.

VALVES:	Head Diameter	Stem Diameter	Length
Intake	1 33/64"	.3414-.3406"	5 3/16"
Exhaust	1 21/64"	.3382-.3390"	5 3/16"

	Seat Angle	Lift	Stem Clearance
Intake	30°	.3520"	.0008-.0026"
Exhaust	45°	.3315"	.0032-.0050"

Valve Seat Width: 5/64" (max.).

Valve Guides: Pressed in block. Replace when stem clearance exceeds maximum (above). Ream new guides for correct clearance using Reamer C-249.

Valve Guide Installation—Place guide (tapered end of guide toward top) in position in bore. Use Tool KF-27 when installing guides to correct position of 1 7/32" below top face of cylinder block.

Valve Springs: Check spring with tester C-647. Pressure should be 45 ± 2½ lbs. at 1 21/32". Free length 1 31/32".

	Spring Pressure	Length
Valve Closed	51 lbs.	1 43/64"
Valve Open	113 lbs.	1 5/16"

Valve Lifters: Barrel type. Two types used and are interchangeable. One type using tappet adjusting screw with locknut, other type is self-locking.

Clearance—Selective fit. Lifter should rotate in bore with slight drag. Service by installing oversize lifter.

Replacement Lifters—Furnished Std. size and oversize. Oversize identified as follows: "A", .0005", "B", .001", "C", .0015", "D", .002", "K", .005", "S", .008".

VALVE TIMING

Tappet Clearance: .014" All Valves, Cold.

Adjustment Procedure—*See Kaiser Special Data.*

Valve Timing: See Camshaft Setting above.

Intake Valves—Open 10° BTDC. Close 60° ALDC.

Exhaust Valves—Open 55° BLDC. Close 10° ATDC.

Valve Timing Check—With .020" tappet clearance, #1 exhaust valve should close with piston 10° or .045" after top dead center with ten-degree mark after dead center "0" mark on dampener aligned with pointer at front of engine.

LUBRICATION

Lubrication System: Pressure to crankshaft, connecting rod, camshaft bearings, exhaust valve lifters, timing chain. Oil pump located in oil pan.

Crankcase Capacity—5 qts. (refill), 5½ (dry).

Normal Oil Pressure—35-40 lbs., 2000 RPM., 30 MPH.

Oil Pressure Regulator—Located in right side of cylinder block below the valve chamber and toward the rear of engine. Adjustable by replacing spring or install washers No. 200272 between end of spring and plug.

Oil Pan Removal: *See Kaiser Special Data.*

Crankcase Ventilation: Filter element in oil filler cap (air intake). Outlet pipe located on front valve cover plate on right side of engine.

Oil Pump: Gear Type. In crankcase.

Oil Pump Servicing—*See Kaiser Special Data.*

Oil Filter: Replace cartridge at 10,000 mile intervals or more often if required by operating conditions.

Oil Pressure Gauge—King-Seeley "CV" (Constant Voltage) type, with voltage regulator.

Gauge Voltage Regulator used. *See Misc. Electrical.*

Dash Unit—K-S No. 45511.

Engine Unit—K-S No. 44030.

See Miscellaneous Section for complete data.

COOLING

Cooling System: Sealed system (relief valve in filler cap) with positive circulation and thermostatic control.

Capacity—13½ qts. (13 qts. at driving level).

Pressure Valve—AC No. 850501 (Radiator Filler Cap). 3¼-4¼ lbs.

Water Pump: Centrifugal type with ball bearing shaft.

See Water Pump Section for complete data.

Belt Adjustment—*See Generator Belt Adjustment.*

Thermostat: Kaiser-Frazer No. 200160 (Std.), No. 202349 (for Permanent Anti-freeze only). In water outlet elbow on cylinder head.

Setting (Std. type)—Begins to open at 149-156°F. Fully open at 176°F.

Temperature Gauge: King-Seeley "CV" (Constant Voltage) type, with voltage regulator.

Dash Unit—K-S No. 45514.

Engine Unit—K-S No. 44200.

See Miscellaneous Section for complete data.

CLUTCH

Auburn Model 9251-18 or Borg & Beck 9A7 No. 951. Single plate dry disc type.

Clutch Identification—Types can be identified by number of pressure plate springs—3 (for Auburn), 9 (Borg & Beck). Borg & Beck cover marked 951.

See Clutch Section for complete data.

Facings (Borg & Beck)—Woven Asbestos, 2 required. Inside Diam. 6". Outside Diam. 9¼". Thickness ⅛".

Facings (Auburn)—Molded metallic or Raybestos. 2 required. I.D. 6". O.D. 9¼". Thickness .135".

Pedal Adjustment—Pedal free travel ⅝-¾". To adjust remove return spring, clevis pin and release clevis end of adjusting link from clutch pedal shaft bellcrank. Turn clevis end in or out to obtain correct pedal free movement. Install adjusting link clevis on bellcrank, insert clevis pin, cotter pin, and return spring.

Removal: Remove transmission (see Transmission

Removal below), remove housing pan. Position of clutch on the flywheel must be marked before removal. Rotate flywheel, using Flywheel Turning Tool C-771 and loosen six bolts equally before removing. Remove clutch pressure plate and cover assembly and clutch disc.

TRANSMISSION

Warner Model AS49-T86E (Std.), Model AS50-T86E with new Type R10B Overdrive (Optl.)—Constant-mesh, synchro-mesh (Second & High), sliding gear (Low & Reverse).

See Transmission Section for complete data.

Transmission Control: Remote control type with gear-shift lever mounted on steering column.
See Transmission Section for complete data.

Removal: Remove clutch pedal return spring, clevis pins at cross shaft coupling and slide coupling onto cross shaft. Disconnect gear shift rods at transmission levers. (If overdrive is installed disconnect overdrive shift rod at overdrive unit). Disconnect speedometer cable at transmission (plug hole in transmission to prevent loss of lubricant). Disconnect wiring to overdrive. Support rear of engine using Tool KF-47 or suitable jack under clutch housing, and disconnect propeller shaft. Free engine rear support from crossmember by removing insulator bolts at transmission. Disconnect master cylinder. Disconnect hand brake cable to clear crossmember. Remove bolts from side rails holding crossmember and remove crossmember. Remove transmission to clutch housing mounting bolts and pull out transmission.

OVERDRIVE

Warner Type R10B (with special AS50-T86E Transmission)—Optl. Equipment. New Governor controlled type (no centrifugal pawls) with electrical solenoid operation and throttle controlled "kick-down."

See Transmission Section for complete data.

Overdrive Solenoid—D-R 1118132, K-F No. 200911.
Governor—Kaiser-Frazer No. 200908.
Control Relay—Auto-Lite HRT-4001A, K-F Part No. 201636. Has 20-ampere fuse on BAT terminal.
Kick-down Switch—Kaiser-Frazer No. 203451.
Lock-out Switch—Kaiser-Frazer No. 200915.

Removal: Remove drain plug in overdrive housing and drain lubricant. Disconnect wiring at shift fork rail switch terminals. Disconnect speedometer cable at overdrive housing, control wire at control shaft lever on overdrive housing and the tie-down clips. Remove Overdrive and Transmission as a unit (see Transmission Removal above).

HYDRA-MATIC DRIVE TRANSMISSION

Four-speed planetary type automatic transmission and fluid coupling. *See Transmission Section for complete data.*

Lubrication—Check fluid level every 1000 miles. Add fluid as required to maintain level at "F" mark on dip stick. Drain and refill every 15000 miles. Use Hydra-Matic Fluid (Automatic Transmission Fluid Type "A").

Capacity—Approx. 11 qts. (refilling and draining). 12 qts. (when transmission disassembled).

Checking Fluid Level—Check only with transmission warm (set hand brake, run engine with selector in "N"). With transmission oil hot, idle engine for at least two minutes, then check with engine running and selector in "N". Dip stick located under inspection hole cover in floor pan under front floor mat. Add fluid as required to bring level up to "F" mark on stick.

►*CAUTION—Do not fill above "F" mark on dip stick.*
Draining & Refilling—*See "Kaiser-Frazer Hydra-Matic Drive" in Transmission Section.*

Removal: *See "Hydra-Matic" in Transmission Section.*

►**Hydra-Matic Neutral Switch—Delco-Remy No. 1997846.** At lower end of steering column. Connected in starter control circuit so that starter operative only with lever in "N" position.

►**Neutral Switch Adjustment**—*See "Hydra-Matic Drive" in Transmission Section.*

UNIVERSALS

Spicer—Two used. Needle bearing cross type. Front yoke slides on transmission mainshaft splined extension.
See Universals Section for complete data.

REAR AXLE

Spicer (Salisbury) Model 41-2—Semi-floating, Hypoid Gear type with Hotchkiss Drive.
See Rear Axle Section for complete data.
Ratio—3.9-1 (Std.), 4.55-1 (with O.D.), 3.54-1 (with Hydra-Matic).
Backlash—.003-.006". Shim adjustment.

Removal: Hoist rear end of car and place supports under frame Remove rear wheels and drums (use Puller C-319). Disconnect propeller shaft, hydraulic brake line at axle housing, rear shock absorbers, and parking brake cables. Disconnect both springs at front hanger and rear shackle, remove axle and spring assembly from beneath car. NOTE—Axle can be removed without disturbing springs by taking out spring "U" bolts.

Axle Shaft Removal—Remove rear wheel and drum using puller C-319. Disconnect hydraulic brake line at backing plate and brake cable. Remove outer oil seal and backing plate (CAUTION—do not lose adjusting shims between backing plate and housing flange). Pull axle shaft and bearing assembly out.

Wheel Bearing Adjustment: Adjust endplay by adding or removing shims located between backing plate and axle housing flange (shims .003", .005", .010", .030" thick). Make certain that shim thickness at right wheel is .060" (to center thrust block on differential shaft), adjust endplay at left wheel.

Endplay—.001-.006".

SHOCK ABSORBERS

Monroe—Direct acting, hydraulic type. Serviced by replacement (mountings serviced separately).

FRONT SUSPENSION

Front Suspension: Independent, linked parallelogram type with coil springs.
See Front Suspension Section for complete data.
Kingpin Inclination—5½° preferred (4¾-5¾° crosswise).
Caster—0° preferred (—1° to +1°).
Camber—½° preferred (0° to ¾°).
Toe-In—1/8" preferred (1/16-1/8"). Adjust by turning both tie rods.

STEERING GEAR

Gemmer Model 305—Worm-and-Roller type with "push-pull" adjustments.
See Steering Gear Section for complete data.

BRAKES

Service Brakes: Bendix (Lockheed) Hydraulic type with floating self-centering shoes (no anchor pin adjustment). Hand lever applies rear service brakes.
See Brake Section for complete data.
Drums—Composite (cast-iron & steel). Diameter 11"
Lining—Molded type. Width 2". Thickness 13/64". Length 12¼" (forward shoe—all wheels), 10 1/32" (rear shoe—all wheels).
Clearance—.010" at heel and toe of each shoe.
Braking Power—55.5% Front wheels, 44.5% Rear.

Hand Brake: See Service Brake data (above).

MISC. MECHANICAL

WINDSHIELD WIPER: (Deluxe Models)—Auto-Lite No. EWJ-4004. Electric type. **(Standard Models)**—Vacuum type, cable operated.
See Miscellaneous Section for complete data.

CYLINDER HEAD

CYLINDER HEAD INSTALLATION: Use Torque Indicating Wrench to tighten cylinder head capscrews in correct sequence as shown in diagram. Tighten all screws to correct tension and recheck after engine has been run and thoroughly warmed up.

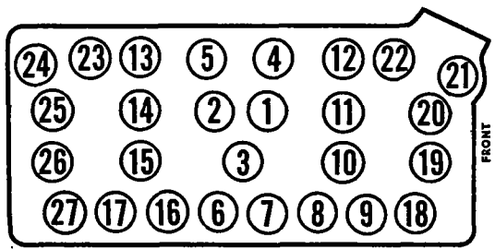

TIGHTENING SPECIFICATIONS

	Ft. Lbs.	In. Lbs.
Cylinder Head Stud Nuts	50-55	600-660
Cylinder Head Capscrews	65-70	780-840
Main Bearing "Place Bolts"	120-130	1440-1560
Connecting Rod Nuts	52-60	624-720
Flywheel to Crankshaft	75-85	900-1020
Vib. Damper to Crankshaft	120-130	1440-1560

ENGINE REMOVAL

ENGINE REMOVAL: To remove engine from chassis, proceed as follows:

1. Drain oil and water.
2. Remove hood, battery, generator, air cleaner.
3. Remove air deflector top panel, radiator and hoses.
4. Remove carburetor fuel line, throttle rods, vacuum lines, engine to dash bonding strap.
5. Disconnect coil wire to distributor, temp. gauge wiring and starter cable.
6. Disconnect universal joint (rear) and remove drive line, (slip yoke at front end slides out of transmission).
7. Disconnect transmission shift rods, exhaust pipe at manifold, and remove front and rear engine mounting bolts.
8. Lift engine out, guiding the rear at the same time.

►**Hydra-Matic Cars**—Follow steps 1 to 6 above and proceed as follows:

1. Remove transmission levers, bell crank rods, accelerator bell crank and accelerator cross shaft.
2. Support rear of engine on jack.
3. Remove cross member and rear mount supporting transmission.
4. Lift engine out with man beneath guiding the transmission.

OIL PAN REMOVAL

►**OIL PAN REMOVAL (LINCOLN):** ***CAUTION—For access to oil pump and screen or for clean out, oil sump only can be removed. Oil sump secured by 4 lower capscrews on bell housing and 18 nuts to oil pan.***

Oil Pan Removal—Car manufacturer recommends following method be used:

1)—Drain oil, set #2 piston at top dead center (2nd cylinder right hand bank), turn wheels to extreme right, take off exhaust cross-over pipe (secure manifold heat valve with one nut).

2)—Remove steering idler arm bracket from right frame rail and pull down. Take off starter and oil dip stick tube.

3)—Remove oil sump (4 lower capscrews on bell housing and 18 nuts to oil pan). Take off oil pan baffle (clipped to oil pan). Disconnect filter return line on left side of pan.

4)—Remove 20 oil pan-to-block capscrews using ⅜" drive tools. Move outlet pipe to left after freeing bracket for access to front oil pan screws. Lower rear end of pan and slide out to rear.

OIL PAN REMOVAL (LINCOLN COSMOPOLITAN): Same as given for LINCOLN above except that front end of engine must be raised as follows:

1)—Drain radiator and remove lower radiator hoses.

2)—Turn fan so that wide angle between blades up.

3)—Remove fuel & vacuum pump from adapter.

4)—Take off 2 nuts from front engine mounts, raise front of engine 2¼-2⅜", block engine up by inserting blocks between brackets and engine mounts.

5)—When removing oil pan, pan should be turned so front oil seal will pass over left capscrew of front main bearing cap.

CONNECTING ROD & BEARINGS

REPLACEMENT CONNECTING ROD BEARINGS: Bearing halves (upper and lower halves have same part number) furnished in Standard Size and following Undersizes:

1950-51 CONNECTING ROD BEARINGS

Part Number	Size
8EL-6211-A	Standard
8EL-6211-B	.002" Undersize
8EL-6211-C	.010" Undersize
8EL-6211-D	.020" Undersize
8EL-6211-E	.030" Undersize
8EL-6211-F	.040" Undersize

CAMSHAFT & BEARINGS

Oversize Camshaft Bearings: Some engines in production have .080" oversize outside diameter camshaft bearings installed. Can be identified by the fact they are not the split type. Engines with these bearings are stamped on the valve cover gasket surface near the left water pump with an "F," "G," or "H" indicating front, center, or rear bearing is oversize. Part Nos. are #1 & #2, 8EL-6262-D, #3, 8EL-6263-D.

VALVE SYSTEM

Initial Valve Lifter Clearance: .030" to .070" between lifter and valve with lifter dry and compressed. *See "Wilcox-Rich Zero Lash" Hydraulic Lifters in Miscellaneous Section.*

CRANKSHAFT & MAIN BEARINGS

Valve Seat Width: Valve seat width should be held to 1/16-5/64". If wider than this they should be narrowed down by grinding the seat at bottom 30° and top 60°. Center valve head face contact is desired. Seat contact on valve can be raised by grinding block seat with 30° grinder and lowered with a 60° grinder. If the original seat has been ground to a point where the contact with the valve face is too near the outer edge a **.070" oversize intake valve** (Part No. 8EL-6507-B) should be installed. To install the oversize valve, grind the seat down with a 45° grinder **until the valve does not protrude more than .030" above the block,** (for head clearance).

Valve Timing Check—Remove valve cover (intake manifold) and right cylinder head. With intake valve (#1 cyl.) just opening, line up timing mark on dampener with pointer. Raise #1 exhaust valve and insert a piece of ⅛" stock between lifter plunger and valve stem, release the valve and allow the lifter to collapse completely. Crank engine backwards about 45° and place contact point of dial indicator on head of #1 exhaust valve and set indicator to ZERO. Crank engine forward until timing mark and pointer again line up. If the valve timing is correct the indicator will read .020" to .040". If the reading falls back it indicates the lifter is not completely collapsed and it will be necessary to repeat the procedure. If the camshaft is one or more teeth out of time the dial reading will be considerably outside the limits given.

Crankshaft Replacement: Use 8EL-6303-A or B for replacement in engines with standard clutch and transmission, and 8EL-6303-B, or C, crankshaft in engines with Hydra-Matic transmission. "C" shaft is the same as "B" shaft except the pilot bushing and retainer for the Hydra-Matic have been installed.

Flywheel Replacement: If a new crankshaft is installed with an old flywheel or a new flywheel used with an old crankshaft on Hydra-Matic cars, new oversize dowels must be installed. A special Lincoln reaming tool is made for this purpose. Oversize dowels (.005" O/S Part No. 8EL-6387-D, .015" O/S No. 8EL-6387-E) are furnished for service.

COOLING SYSTEM

►**PRODUCTION CHANGE FOR IMPROVED COOLING: New Cylinder Head Gasket No. 8EL-6051-D.** This gasket required for new water holes added during production, 4 holes in block (1 in upper corners of each bank) with matching holes in each cylinder head. This gasket furnished for service on all engines (can be used on early engines without the additional holes).

Drilling of Additional Water Passage Holes on Early Cylinder Blocks and Heads for Improved Circulation—Allowed by car manufacturer where overheating conditions cannot be corrected by regular methods. Use new gasket No. 8EL-6051-D as template, drill 5/16" additional holes as follows: 4 in cylinder block (1 in upper corner front and rear of each bank), 2 in each cylinder head (1 in upper corner front and rear).

►***CAUTION—Holes in cylinder block should not be drilled deeper than ⅝".***

MODEL IDENTIFICATION

VEHICLE NUMBER: Stamped on plate attached to engine side of dash and on top of right frame side rail to rear of front suspension upper control arm.

TUNE-UP

COMPRESSION PRESSURE: 110 lbs. at cranking speed.

VACUUM READING: Steady 18-21" idling at 500 RPM.

FIRING ORDER: 1-5-4-8-6-3-7-2. See diagram.

SPARK PLUG GAPS: .030". Limits .029-.032".
Plug Type—Champion H-10. 14 mm.

DISTRIBUTOR: **Breaker Gap**—.014-.016".
Cam Angle—26-28½°.
Breaker Arm Spring Tension 17-20 ounces.
Vacuum Advance—*See Ignition.*
Condenser Capacity—.20-.25 microfarad

IGNITION TIMING: 4° BTDC.
Timing Procedure—*See Ignition Timing.*
Dampener Mark—"/" mark aligned with timing pin on front engine cover above top of dampener.

CARBURETION:
Idle Setting—Set for highest steady vacuum reading. 2 screws (turning out gives richer mixture).
Idle Speed (standard)—Approx. 500 RPM.
Idle Speed (Hydra-Matic)—375-400 RPM.
Float Level—Fuel level ½" ± 1/32" below top edge of bowl. Use Fuel Level Gauge No. 9550-B.
►*NEW "CLIP TYPE" FLOAT NEEDLE & SEAT ASSEMBLY*—Furnished for replacement.
Accelerating Pump—Center hole average setting. Inner hole for Hot weather, outer for cold weather.

Fuel Pump Pressure: 3½-4½ lbs.

Choke Setting: Index mark on coil cover aligned with center mark on housing (maximum variation one division either side).

MANIFOLD HEAT CONTROL: Automatic. No adjustment. Valve located between right end of exhaust pipe cross over and right exhaust manifold.

VALVE TAPPET CLEARANCE: None in service (Hydraulic type lifters).
Valve Timing Check—*See Valve Timing.*

STARTING: *See Battery, Starter, Generator, Regulator.*

IGNITION

IGNITION SWITCH: **Lincoln No. OL-11572-A.**
Ignition Lock—Lincoln No. 8H-11582-A or B.

COIL: **Lincoln No. 7RA-12029-A.** Can type.
Ignition Current—5 amperes stopped, 3 amperes idling.

CONDENSER: **Lincoln No. 7RA-12300-B** (used with breaker plate No. OBA-12150-A), **7RA-12300-C** (used with breaker plate No. OBA-12150-B).
Capacity—.20-.25 microfarad.

DISTRIBUTOR: **Lincoln No. OEL-12127.** New "Pressure Type" Distributor, fully vacuum controlled (no centrifugal advance). Diaphragm unit connected to breaker plate governs entire advance range in relation to engine vacuum.
See "Ford, Lincoln, Mercury Distributor" in Electrical Equipment Section.
Breaker Gap—.014-.016".
Cam Angle—26-28½°.
Breaker Arm Spring Tension—17-20 ounces.
Rotation—Clockwise, viewed from above.

Advance Performance
►**With Distributor on Test Unit**

Distributor Degrees	Vacuum	R.P.M.
0°	0"	200
1½-2½°	0.8"	600
5-6°	2.0"	1000
9½-10½°	5.8"	2000

IGNITION TIMING

Std. Setting ..... **4° BTDC.**
Dampener Mark—"/" groove mark on edge of dampener with timing pin on front of engine.

Timing—With #1 piston at firing position and "/" groove mark on dampener aligned with timing pin on front of engine, loosen clamp screw in timing arm, rotate distributor until contacts begin to open, tighten clamp screw. Check spark plug connections (see diagram), see that rotor at #1 cap terminal. **Timing (with Neon Timing Light)**—Mark timing pin and "/" groove mark on dampener with white chalk. Connect timing light to #1 spark plug. Idle engine below 550 RPM., adjust distributor (as directed above) until mark and timing pin aligned when light flashes.

CARBURETOR

Holley-Ford OEL-9510-A—Dual downdraft with separate automatic choke. Automatic choke unit located on intake manifold.
See Carburetor Section for complete data.
►*NEW "CLIP TYPE" FLOAT NEEDLE & SEAT ASSEMBLY*—Furnished for replacement.
Settings (Idle Setting, Float Level, and Accelerating Pump): *See Tune-Up data.*
Metering Jets—*See Holley-Ford Jet Specification Table in Carburetor Section.*
Hydra-Matic Throttle Adjustment: *See "Lincoln Hydra-Matic Drive" in Transmission Section.*

CONTINUED ON NEXT PAGE

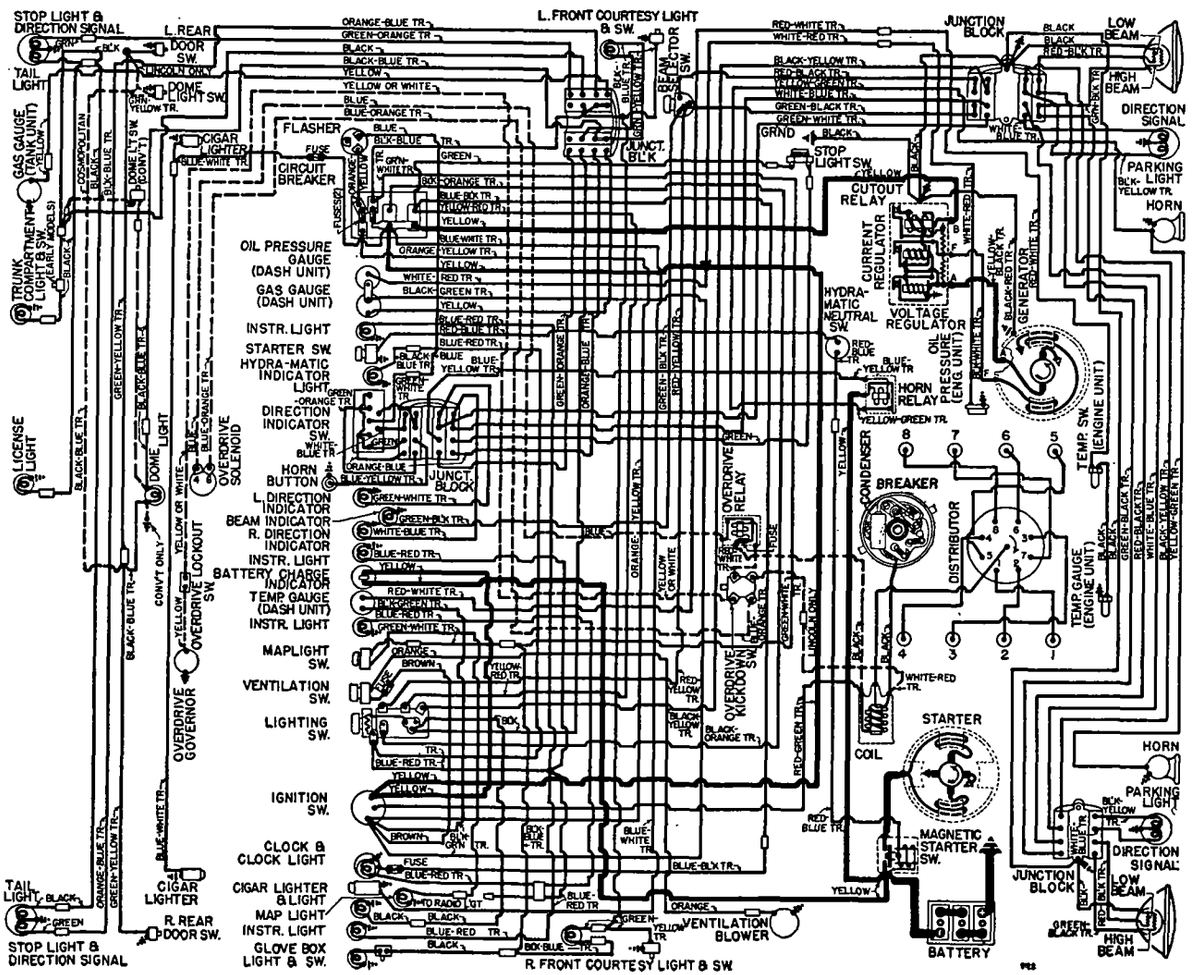

C NTINUED FROM PRECEDIN PA E

Fast Idle: Holley-Ford Carburetor type.
See Carburetion Equipment Section for complete data.

Automatic Choke: Holley-Ford Carburetor type.
Setting—Index mark on coil cover aligned with center mark on housing (maximum variation one division either side).
See Carburetion Equipment Section for complete data.

CARB. EQUIPMENT

Air Cleaner (Oil Bath): Lincoln No. 8EL-9600.
Fuel Pump (Fuel-&-Vacuum): Lincoln 8EL-9350-A.
Pressure—3½-4½ lbs.
►**Fuel Pump Filter Change**—Copper screen type changed to "Edge" type. Use "Edge" type when servicing pumps, Part No. 8EL-99360 Kit.
See Carburetion Equipment Section for complete data.

Gasoline Gauge: King-Seeley Electric.
Dash Unit—Lincoln No. OL-9280.
Tank Unit (Lincoln)—No. 99A-9275-B.
Tank Unit (Cosmopolitan)—Lincoln No. 21C-9275A,
See Carburetion Equipment Section for complete data.

BATTERY

Lincoln No. 06H-10655-A. 6 Volt, 17 Plate, 120 Ampere Hour Capacity (20 hour rate).
Starting Capacity—150 amperes for 20 minutes.
Grounded Terminal—Positive (+) terminal.
Location—On right side in engine compartment.

STARTER

Standard.....**Lincoln 7EH-11002-B.** Arm. 18-11005
Hydra-Matic.....**Lincoln 8EL-11002.** Arm. 52-11005
Drive—(7EH) B-11350, (8EL) 29B-11350.
Rotation—Counter-clockwise at commutator end.
Brush Spring Tension—20-22 ounces.
Cranking Engine—100-180 RPM., 190-215 Amperes.

Performance Data

Torque	R.P.M.	Volts	Amperes
No Load①	4000-6000	5.8	45-60
15 ft. lbs.	Lock	3.5	600

①—Manufacturer recommends taking "No Load" readings by inserting 0-600 range ammeter in battery circuit at battery and operating starter while engine is idling.

Starting Switch: Lincoln No. 21A-11450 Magnetic Switch mounted on right front fender apron and controlled by panel pushbutton switch Lincoln No. 6H-11500 (and 8L-15812 Neutral Safety Switch on Hydra-Matic Drive cars).
Hydra-Matic Neutral Safety Switch Adjustment—*See "Hydra-Matic Drive" in Transmission Section.*
Removal: On right front face of engine rear plate. To remove, take off right engine splash pan (if used), free starter-to-oil pan bracket, take out 2 starter through bolts.

GENERATOR

Lincoln No. 8EL-10002 (less pulley & bracket).
Armature No.—Lincoln No. 8EH-10005. Two brush type with current and voltage regulation.
Maximum Charging Rate—42 amperes, 7 volts, reached at approximately 19.5 MPH. Controlled by regulator and dependent on load and battery condition.

To Check Generator Output—Connect ammeter in series with charging line at regulator "ARM" terminal, connect short insulated jumper between generator "A" and "F" terminals (to short out regulator). Run engine at approximately 1500 RPM. and note ammeter reading. If generator output equals or exceeds rate output (below) generator performance is satisfactory. Remove jumper.

►*CAUTION—Do not operate generator at higher speeds or in service with jumper connected between generator armature and field terminals. This jumper eliminates all regulator action.*

Performance Data

Amperes	Engine R.P.M.
40	1500

Rotation—Counter-clockwise at commutator end.
Brush Spring Tension—20-24 ozs.
Generator Belt Adjustment: Loosen nut on support mounting stud, raise generator up until side movement on belt midway between generator and water pump pulley is ¾" (thumb and finger pressure).
Fan Belt Adjustment: *See COOLING.*

REGULATOR

Lincoln No. 8L-10505. Voltage-current, 3 unit type.
See Electrical Equipment Section for complete data.
NOTE—Separate ground wire extending to cowl must be in place when generator operated.

Cutout Relay

Cuts In——6.0-6.4 volts COLD (will be slightly higher when warm).
Cuts Out—8 ampere discharge current (maximum).
Contact Gap—.010" (armature against upper stop).
Air Gap—.014" between armature and core with contacts open.

Voltage Regulator

Voltage Setting (8L-10505)—7.2-7.6 volts COLD. (7.4-7.8 volts after 20 minutes run).
Air Gap—.032-.035" between armature and core with contacts just closed.
►*CAUTION—Make certain gauge contacts armature and not brass rivet on underside of armature.*
Contact Spring Tension—5 ounces minimum with contacts just opening.
Checking & Adjustment—*See Electrical Equip. Section.*

Current Regulator

Current Setting—38-42 amperes COLD.
Air Gap—.032-.035" between armature and core with contacts just closed.
Contact Spring Tension—5 ounces minimum with contacts just opening.
Checking & Adjustment—*See Electrical Equip. Section.*

LIGHTING

Headlamps: Ford "Sealed Beam" type.
See Electrical Equipment Section for complete data.
Adjustment—Aim upper beams straight ahead (hot spot centers 3" below lamp center height at 25 ft.).
Direction Signal: Std. *See Electrical Equipment Section.*
Direction Signal Flasher—Lincoln No. 8L-13350-B.

Switches

Lighting—Lincoln No. OL-11654.
Beam Selector—Lincoln No. 8A-13532.
Instrument—Lincoln No. OL-13740.
Map Light—OL-13764.
Dome Light (exc. Conv.)—Lincoln No. OM-13752.
Dome (Convertible)—OH-13752.
Door Switches—Lincoln No. 8M-13713.
Stop Light—Lincoln No. 91A-13480.
Directional Signal—Lincoln No. (1950) OL-14486, (1951) 1M-14486-A.
Back-Up Light—Lincoln No. (1950) 51A-15520-A, (1951) 1H-15520-A.

MISC. ELECTRICAL

CIRCUIT BREAKERS: Lincoln No. 8L-12258-A (Lincoln), No. 8H-12258-A (Lincoln Cosmopolitan, Lincoln Convertible). Three used on one mounting, located on dash behind instrument panel together with two fuses (see wiring diagram for positions on bracket).
30 Ampere CB. Protects main lighting system.
15 Ampere CB. Protects speedometer light, control panel light, instrument cluster light, electric clock and clock light.
15 Ampere CB. Protects hydraulic equipment.

FUSES: Courtesy, Dome, Glove Box and Map Lights—14 ampere. Located on circuit breaker behind instrument panel (see wiring diagram).
Direction Signal—14 Ampere. Located on circuit breaker behind instrument panel (see wiring diagram).
Overdrive—30 ampere. On "IGN" terminal of overdrive relay (on dash under hood).
Clock—3 ampere. In clock feed wire.

HORNS: Lincoln No. OL-13801-A (High Pitch, Right Horn), OL-13802-A (Low Pitch, Left Horn). Replaces previous types. Dual horns operated by relay.
Horn Current—13 amperes (High Pitch), 14 (Low).
Horn Relay: Lincoln No. 7RA-13853-A. On dash.

ENGINE

ENGINE SPECIFICATIONS: Own Make. Eight cylinder, "L" head, 90° Vee type with both cylinder banks and crankcase cast Enbloc.
Bore—3½". **Stroke**—4⅜".
Displacement—336.7 cu. ins. **Rated HP**—39.2.
Developed Horsepower—152 at 3600 RPM.
Compression Ratio—7.0-1 cast-iron head.
Compression & Vacuum Reading—*See Tune-Up.*

CYLINDER HEAD & TIGHTENING TORQUES: *See Lincoln Special Data.*

PISTONS: Aluminum alloy, steel strut, flat head, split skirt, cam ground type.
Weight—548 grams. **Length**—3.84".
Removal—Pistons and rods removed from above.
Clearance—.0005-.001". See Fitting Pistons.
Replacement Pistons: Std. .0025", .020", .030", .040" OS.
Fitting Pistons: Use ½" wide feeler inserted between piston (on side opposite slot) and cylinder wall at right angles to pin. Feeler thickness .0015" (for new piston in new bore), .002" (for new piston in old bore), .003" for old piston in old bore). Pull to
Cyl. Bore Wear Limit—Out-of-round .003", Taper .006".

PISTON RINGS: 2 compression, 1 oil ring used. Oil ring slotted, compression ring coated.

Ring	Width	End Gap	Side Clearance
Compr. #1	3/32"	.008-.016"	.002-.0035"①
Compr. #2	3/32"	.008-.016"	.0015-.003"②
Oil #3	3/16"	.008-.016"	.001-.003"③

Worn Limit—① .0035", ② .0045", ③ .004".
Replacement Rings—Std. and .020", .030", .040", .050", .060" Oversize.

PISTON PIN: Diameter .8501-.8504". **Length** 3.118". Floating type. Bronze bushing in rod.
Pin Fit in Piston—.0001-.00005" clearance (new), .001" (worn limit).
Pin Fit in Rod Bushing—.0001-.0003" clearance. Light thumb push fit. Worn limit .0012".
Replacement Pins: Std. size & .001", .002" Oversize.

ENGINE

CONTINUED FR M PRECEDING PAGE

CONNECTING ROD: Length—8.062".
Weight—773 grams (less bearings).
Crankpin Journal Diameter—(1950) 2.3995-2.400", (1951) 2.3991-2.400". **Maximum Wear Limits**—Out-of-round .0015". Taper .001".
Lower Bearing—Steel-backed, copper-lead alloy lined, replaceable shells. Upper and lower halves are interchangeable.
Clearance—.0004-.0024" Worn limit .005".
Sideplay—.007-.013" (new), .022" (worn limit).
►*NOTE—Replace rod bearings less than .0745" thick.*
Bearing Adjustment: None (no shims). Do not file caps. Replace bearings. Tang on bearing must engage groove in rod and cap.
Replacement Bearings: Standard size and .002", .010" .020", .030", .040" Undersize.
Connecting Rod Installation: The numbered side of the connecting rods must be towards the outside of the engine. Left bank rod numbers must be towards the left side of engine and right bank rod numbers to the right side.
CRANKSHAFT: 3 bearing with 6 integral counterweights and vibration dampener on front end.
►**Crankshaft Interchangeability:** *See "Crankshaft & Main Bearings" in Lincoln Special Data.*
►**Flywheel Replacement, Special Dowels Necessary**—*See "Crankshaft & Main Bearings" in Lincoln Special Data.*
►*SLUDGE TRAPS—Crankpin throws equipped with sludge traps having removable plugs for cleaning.*
Main Journal Diameter—(1950) All bearings, 2.8735-2.8740", (1951) #1 & #2 2.8729-2.9740", #3 2.8724-2.8735". **Maximum Wear Limits**—Out-of-round .0015". Taper .001".
Bearings—Steel-backed, copper-lead alloy lined, replaceable shells. Upper and lower halves alike.
Clearance—#1 & #2 (1950) .0004-.0029", (1951) .0004-.0019". #3 (1950) .0009-.0034", (1951) .0009-.0024".
►*NOTE—Replace main bearings less than .0938" thick.*
Bearing Adjustment: None (no shims). Do not file caps. Replace bearings. Tang on bearing must engage groove in block and cap.
►*NOTE—Self-locking bearing cap bolts used.*
Replacement Bearings: Standard size and .002", .010", .020", .030", .040" Undersize.
End Thrust: Taken by rear main bearings. Adjust by replacing bearings if clearance excessive.
End Play—.004-.008". Worn limit .010".
CAMSHAFT: 3 bearing. Helical gear drive.
Camshaft Journal Diameter—(1950) 1.9265-1.9270", (1951) 1.9262-1.9267". Out-of-round limit .001". Undersize camshaft bearings are available for reground camshafts.
►**Oversize Diameter Camshaft Bearings in some production engines**—*See "Camshaft" in Lincoln Special Data.*
Bearing Diameter—1.9285" (replace bearing if diameter greater than worn limit of 1.9315").
Replacement Bearings: Three sizes as follows:
1—Std. size on both inside and outside diameter.
2—Std. on I. D., .080" Oversize on O. D.
3—.015" Undersize on I. D., Std. on O. D. (must be finished reamed in assembly).
End Thrust: Thrust plate bolted on front of block.
Camshaft End Play—.004-.0065".
Timing Gears: Helical cast aluminum camshaft gear bolted on camshaft, cast alloy iron crankshaft gear.
Back Lash—.002-.003".
Oversize Timing Gears—Furnished in the following sizes: .006" & .012" oversize.
Camshaft Setting: Mesh marked tooth of crankshaft gear with space marked by line on camshaft gear.

VALVES:	Head Diameter	Stem Diameter	Length
Intake	1.800"	.3412-.3422"	5.7145"
Exhaust	1.484"	.340-.341"	5.7145"

	Seat Angle	Lift	Stem Clearance
Intake	45°	.350"	.0015-.003"①
Exhaust	45°	.350"	.002-.003"②

Wear Limit—①—.005", ②—.006".
Valve Seat Width—1/16-5/64". NOTE—If valve seat bearing line is at extreme outer edge of valve head or if seat width is under above specifications install oversize valve. *See "Valve System" in Lincoln Special Data.*
►*CAUTION—Top of valve must not be more than .030" above top face of block for head clearance.*
Valve Guides: One piece type pressed in block. Inside diameter .3431-.3436". Length 2.66".
Guide Installation—Press in block from above with small diameter end down. Distance from top of valve seat to upper end of valve guide 1.30".
Valve Lifters: Mushroom type, hydraulic tappet take-up (Wilcox-Rich Zero-Lash type).
Body Diameter—.7177" (new), .7167" (wear limit).
Clearance in Block—.0003-.0018" (new), .003" (worn). *See Miscellaneous Section for complete data.*
Initial Valve Clearance—*See "Valve System" in Lincoln Special Data.*
Valve Springs: Coated springs used.
Spring Pressure—62-68 lbs. (closed), 140-152 (open).
Spring Test—63-69 lbs. at 1.680". Free length 2.08".

VALVE TIMING

Tappet Clearance: None in service (hydraulic lifter).
Intake Valves—Open 5° BTDC. Close 52° ALDC.
Exhaust Valves—Open 49° BLDC. Close 8° ATDC.
Valve Timing Check—*See "Valve System" in Lincoln Special Data.*

LUBRICATION

Engine Oiling System: Pressure to main bearings, connecting rod lower bearings, camshaft bearings, valve lifters (hydraulic type) and timing gears. Oil pump mounted in crankcase at rear of engine.
Crankcase Capacity—6 quarts.
Normal Oil Pressure—45-55 lbs. at 2000 RPM.
Oil Pressure Relief Valves: Two used as follows:
1—**Oil Pump Relief Valve**—In oil pump body and regulates pressure to 50 lbs. for engine lubrication. Spring Tension 12.4 lbs. at 2.175".
2—**Cylinder Block Oil Relief Valve**—At front end of valve chamber and regulates pressure to 15 lbs. for hydraulic valve lifters.
Oil Pump: Gear type. In crankcase at rear of engine.
►*NOTE—Removable sump attached to oil pan for access to oil pump and screen.*
Oil Filter: On left cylinder head. Replace cartridge every 5000 miles or more often if required.
Oil Filter Cartridge—Lincoln No. 8CM-6731A Kit.
Oil Pressure Gauge: King-Seeley Electric.
Dash Unit—Lincoln No. OL-9273.
Engine Unit—Lincoln No. 41A-9278.
See Miscellaneous Section for complete data.
Crankcase Ventilation: Filter element in oil filler breather cap (inlet), and in upper end of utlet pipe at elbow connection just below generator on left side.
Servicing—Wash screen in cleaning fluid and wet with engine oil when dry at oil change period (2500 miles).
Outlet Pipe Air Filter Cartridge—Lincoln No. 8EL-6841.

COOLING

►**New Cylinder Head Gasket for improved cooling:** *See "Cooling System" in Lincoln Special Data.*
Cooling System: Pressure type with relief valve in filler cap and two belt-driven pumps (one for each bank) with re-circulating by-pass.
Capacity—34½ quarts.
Pressure Valve—In radiator filler cap. Lincoln No. 26H-8100-B (AC #846740). Opens at 3½-4 lbs.
Water Pumps: Two used. Centrifugal, belt-driven, packless type. Shaft mounted on sealed duplex ball bearing.
NOTE—Bottom bolt must be installed prior to installing water pump pulley.
See Water Pump Section for complete data.
Fan Belt Adjustment—Loosen fan mounting bracket bolts, raise fan up until side movement on belt midway between fan and crankshaft pulleys is ½".
Generator (& Water Pump) Belt Adjustment—*See GENERATOR.*
Thermostats: Two used (one in each cylinder head water outlet). Lincoln No. 8EL-8575-A (std.), B & C (optl.).
Setting (std.)—148-170° maximum.
Settings (Optl.)—158-180° (B), 178-200° (C), max.
Temperature Gauge: King-Seeley Electric.
Dash Unit—Lincoln No. OL-10883.
Engine Unit—Lincoln No. 8A-10884 in left head.
Engine Switch—No. 8A-10990 in right hand head.
See Miscellaneous Section for complete data.

CLUTCH

Long Model 11CF-10½TI, Lincoln No. 8EL-7563. Semi-centrifugal, single plate, dry disc type.
See Clutch Section for complete data.
Facings—Moulded or Woven. Inside Diameter 7". Outside Diameter 10½". Thickness .125".
Pedal Adjustment: 1-1¼" free travel. Adjust by loosening locknut and turning adjusting screw on adjusting rod.
Removal: Remove transmission (see TRANSMISSION Removal below). Remove flywheel housing inspection cover. Remove transmission from flywheel housing, detach clutch release spring first, remove flywheel housing from engine plate and cylinder block. Take off clutch release bearing and hub. Prick punch flywheel and pressure plate so that these parts may be placed in original positions when reassembling. Use Tool 7563 to compress pressure plate. Take off 6 capscrews holding pressure plate assembly to flywheel.

TRANSMISSION

STANDARD

Warner Model AS1-T85B (Std.), AS2-T85B (with Overdrive). All helical gear type, constant-mesh, synchro-mesh (Second & High), sliding gear (Low & Reverse).
See Transmission Section for complete data.

CONTINUED ON NEXT PA E

C NTINUED FR M PRECEDIN PAGE

Transmission Control: Steering column mounted shift. *See Transmission Section for complete data.*

Removal: Disconnect rear universal, slide propeller shaft out of transmission. Disconnect clutch, transmission and speedometer linkage. Support rear of engine and disconnect rear engine mounting from frame. Take out four transmission-to-flywheel housing capscrews and remove transmission.

OVERDRIVE

Warner Model AS2-T85B (Transmission & Overdrive). Optl. equipment. Overdrive is solenoid operated type (no centrifugal pawls) with Governor Control and throttle operated "kick-down".
See Transmission Section for complete data.

►**Prolonged shorting-out of Ignition on Kick-down Correction**—*See "Ford, Lincoln, Mercury (Warner) Overdrive" in Transmission Section.*

Solenoid—Lincoln No. 8M-6916.
Control Relay—Lincoln No. 8M-6915. On engine side of dash. 30 ampere fuse at IGN terminal of relay.
Lock-Out Switch—Lincoln No. 8M-6917-A.
Throttle Kick-down Switch—Lincoln No. 8A-6918.
Governor Switch—Lincoln No. 8M-6919.

Removal: Same as for Std. transmission (above) after disconnecting overdrive control cable and wiring.

HYDRA-MATIC DRIVE

PTI NAL EQUIPMENT

Description—Four-speed planetary type automatic transmission and fluid coupling. Similar to other Hydra-Matic Drive installations, with Modulated Line Pressure.
See Transmission Section for complete data.
Lubrication—Check fluid level every 1000 miles. Add fluid, as required, to maintain level at "F" mark on dip stick. Drain and refill every 25,000 miles. Use Automatic Transmission Fluid Type "A", furnished under Lincoln Part No. 8L-19582.
Capacity—11 qts. (approx.).
Checking Fluid Level—To check fluid level engine must be idling, transmission warm, parking brake set, and selector lever in "DR" position. Dipstick located under inspection cover placed on right side under floor mat. Add oil if below "L" mark on dipstick to bring level to "F" mark.

►*CAUTION—Do not check oil level when transmission temperature excessively high and do not fill above "F" on dip stick (will cause foaming when warm).*

Draining & Refilling—*See "Hydra-Matic Drive" in Transmission Section.*
Hydra-Matic Linkage Adjustment—*See "Lincoln Hydra-Matic Drive" in Transmission Section.*

Removal: *See "Lincoln Hydra-Matic Drive" in Transmission Section.*

UNIVERSALS

Spicer 1310. Needle bearing type. Two used.
See Universals Section for complete data.

REAR AXLE

Own Make. Semi-floating, hypoid gear type with Hotchkiss drive (separate carrier not used). Axle ends flanged (no separate hub). **Wheel bearings are sealed ball, pre-lubricated (no lubrication required).**
See Rear Axle Section for complete data.
Ratio—3.9-1 (43:11—Std.), 4.27-1 (47:11—with O.D.).
Ratio (Hydra-Matic)—3.31-1.
Backlash—.005-.008". Shim adjustment.

Removal: Raise rear of car. Remove axle shafts, and drive shaft. Take off hydraulic line clips from axle housing and free line from differential housing clip. Disconnect shock absorbers, spring U-bolts. Remove axle housing assembly from car.

Carrier Assy. Removal—To remove the differential assembly from the axle housing it is necessary to spread the housing. A special spreading tool No. 4000-A (Lincoln special tool) is used for this purpose. This spreading is necessary as the differential side bearings have an initial pre-load of .005-.009" when installed. **Do not spread the housing more than .015".** After spreading, the assembly can be pried loose with a large screwdriver and removed.

Axle Shaft Removal: Remove rear wheels. Take out 3 capscrews holding brake drum to axle shaft flange. Remove hydraulic lines from brake backing plate. Take out 4 axle retainer nuts (work through opening in axle shaft flange). Use Tool 4235-A to remove axle shaft and bearing assembly from housing. Take off gasket and backing plate. Do not damage oil seal when removing axle shaft.

SHOCK ABSORBERS

Front—Lincoln No. 8L-18045-C (Monroe).
Rear—Lincoln No. 8L-18080 (Monroe).
Direct acting, hydraulic types. Two makes are used and are interchangeable.

►*NOTE—Shock absorbers are permanently sealed and cannot be refilled or repaired.*

►**Rear Shock Absorber Installation**—Lower tube has welded stone shield on lower end which must be installed toward front of car.

FRONT SUSPENSION

Front Suspension: Independent, linked parallelogram type with coil springs, direct acting shocks, and front stabilizer.
See Front Suspension Section for complete data.
Kingpin Inclination—5° crosswise with ¾° Camber.
Caster—0° to Neg. 1½°. Threaded bushing adjustment at lower pivot pin.
Camber—0° to Pos. ¾°. Eccentric adjustment at upper pivot pin.
Toe In—3/32-5/32". Adjusting sleeve on outer end of each tie rod. Adjust equally.
Steering Geometry (toe out on turns)—Inner wheel turned 23½° ± ½°, outer wheel 20°.

STEERING GEAR

Gemmer Model 335. "3-tooth" Worm-and-Roller type with "push-pull" adjustment.
See Steering Gear Section for complete data.

BRAKES

Service: Lincoln-Bendix Hydraulic, Duo-Servo, Single Anchor type **without eccentric adjustment.** Hand lever applies rear wheel service brakes.
See Brake Section for complete data.
Wheel Cylinders—Diameter: Front wheel 1.128" (hone limit 1.132"). Rear wheel .940" (hone limit .942").
Drums—Diameter 12".
Lining—Molded. Width 2¼" (front wheel), 2" (rear wheel). Thickness 7/32". Length per wheel 23 7/64".
Clearance—.010" at each end of each shoe.
Braking Power—59% front wheels, 41% rear.

Hand Brake: See Service Brakes above.

MISC. MECHANICAL

Power Operated Convertible Tops, Windows & Front Seat: Hydro-Lectric type (hydraulic actuation with motor-driven pump supplying oil under pressure for power cylinders).
See Miscellaneous Section for complete data.

Windshield Wipers: Two types used:
Lincoln 9EL—Vacuum Link and Crank Arm type.
Cosmopolitan 9EH—Vacuum Cable Operated type.
See Miscellaneous Section for complete data.

TIGHTENING SPECIFICATIONS

	Ft Lbs.	In. Lbs.
Cylinder Head Capscrews	65-70	780-840
Main Bearing Capscrews	80-90	960-1080
Connecting Rod Nuts	45-50	540-600
Flywheel to Crankshaft	75-85	900-1020
Engine Front Support	65-70	780-840
Eng. Rear Support to Trans.	55-60	660-720
Clutch Cover Mounting Screws	22-26	264-312
Flywheel Housing:		
To Cylinder Block	40-45	480-540
To lower Front Cover	15-18	180-216
Trans. to Flywheel Housing	30-35	360-420
Exten. (or OvDr.) to Trans.	40-45	480-540
Pitman Arm to Shaft	120-130	1440-1560
Steering Gear to Frame	30-35	360-420
Steering Idler Arm to Bracket	90-110	1080-1320
Idler Arm Bracket to Frame	40-45	480-540
Front Suspension:		
Upper Arm to Frame	75-80	900-960
Lower Arm to Frame	48-53	576-636
Upper Arm to Spindle	90-110	1080-1320
Lower Arm to Spindle	110-130	1320-1560
Front Brake Drum to Hub	13-15	156-180
Rear Brake Drum to Flange	12-17	144-204
Rear Shock Absorber	60-65	720-780
Rear Spring U-bolts	65-70	780-840
Rear Spring Shackles	35-40	420-480

CYLINDER HEAD

CYLINDER HEAD INSTALLATION: Use Torque Indicating Wrench to tighten cylinder head capscrews in correct sequence as shown in diagram. Tighten all screws to correct tension and recheck after engine has been run and thoroughly warmed up.

Tightening Torques—See Tightening (Torque Wrench) specifications.

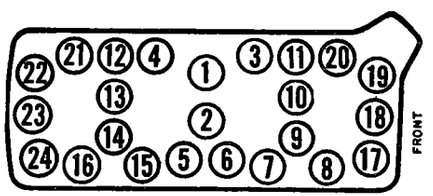

MERCURY

ENGINE REMOVAL

ENGINE REMOVAL: Drain radiator and oil pan and mask the edge of hood, fender and cowl to protect the paint. Remove capscrews that retain hinge assembly to hood. Remove battery, air cleaner, and heater hoses. Detach flexible fuel line at fuel pipe and windshield wiper tubing from vacuum booster pump. Release throttle rod from throttle lever. Remove ignition wire from coil (overdrive wire if used), wire from right head water temperature gauge sender unit, and the wires from generator. Remove wiring cable clip at left water outlet housing. Remove wire from oil pressure gauge sender unit. Remove overdrive cable from clip at left at rear left cylinder head and remove upper radiator hoses. Remove generator and fan assemblies. Loosen lower radiator hose clamps. Slide hose towards water pumps as far as possible. Remove three bolts on each side of radiator that retain radiator to radiator support, and remove radiator. Remove battery cable at starter. Remove bolts that retain engine to front mounts and overdrive or extension housing to rear mount. Remove drive shaft by detaching rear universal joint from companion flange. If equipped with overdrive, remove solenoid, governor and control wire. Remove speedometer cable housing from transmission. Detach shift rods from transmission and clutch equalizer shaft from release shaft. Remove oil filter, exhaust crossover pipe and exhaust pipe. Attach engine lifting hooks and lift engine from car.

Installation: Reverse the above removal procedure.

OIL PAN REMOVAL

OIL PAN REMOVAL (MERCURY): Car manufacturer recommends following method be used (pan can be removed without draining oil):

1)—Take off exhaust pipe cross-over (secure manifold heat valve with one nut).

2)—Remove steering idler arm bracket from right frame rail and pull down.

3)—Remove starter.

4)—Take off flywheel housing lower front cover (cover drops straight down after removing nuts and bolts). Remove oil dip stick tube from pan.

5)—Remove 16 oil pan-to-block capscrews using 3/8" drive tools. Lower rear end of pan and slide out to rear.

NOTE—Front end of engine does not have to be raised to remove pan.

PISTONS

REPLACEMENT PISTONS: Pistons furnished for service are steel strut type, cam ground and tin plated. 4 rings are used.

PISTONS

Part No.	Piston Size
8CM-6110-A	Standard
8CM-6110-B	.0025"
8CM-6110-C	.020"
8CM-6110-D	.030"
8CM-6110-E	.040"

PISTON RINGS

REPLACEMENT PISTON RINGS: Furnished in oversize sets as listed below. Each set contains two oil rings and two compression rings.

PISTON RING SETS

Part No.	Ring Size
8CM-6149-E	Standard
8CM-6149-F	.020"
8CM-6149-G	.030"
8CM-6149-H	.040"

CONNECTING ROD & BEARINGS

CONNECTING ROD INSTALLATION: Install left bank rods with oil squirt holes on front side and right bank rods with squirt holes on rear side. Left bank rod numbers must be towards left side of engine and right bank rod numbers to right side of engine.

VALVE SYSTEM

VALVE TIMING CHECK: Remove valve cover (intake manifold) and right cylinder head. Crank engine over until intake valve #1 cylinder is opening. Line up pointer with timing mark on front dampener. Insert a piece of .020" stock between the exhaust valve (#1) stem and lifter. Crank the engine forward about 45°. Place contact point of dial indicator on head of #1 exhaust valve, and set dial to ZERO. Crank engine backward until timing marks are again lined up. If the valve timing is correct indicator will read .033" to .050". If the camshaft is one or more teeth out of time the dial readings will be considerably outside the limits given.

MODEL IDENTIFICATION

VEHICLE NUMBER: Stamped on plate attached to engine side of dash and on top of right frame side rail to rear of front suspension upper control arm.

TUNE-UP

COMPRESSION PRESSURE: 115 lbs. at cranking speed.

VACUUM READING: Steady 18-21" idling at 500 RPM.

FIRING ORDER: 1-5-4-8-6-3-7-2. See diagram.

SPARK PLUG GAPS: .030" Limits .029-.032".
Plug Type—Champion H-10. 14 mm.

DISTRIBUTOR: Breaker Gap—.014-.016".
Cam Angle—28-30° (closed).
Breaker Arm Spring Tension—17-20 ounces.
Advance Performance—*See Ignition.*
Condenser Capacity—.21-.25 microfarad.
Distributor Line (Carburetor Connection) Vacuum—.25" at 800 RPM., .8" at 1000 RPM., 1.7" at 1200 RPM., 2.4" at 1400 RPM., 2.8" at 1600 RPM.

►**NOTE**—Cars with "1CM" carburetors will have a higher distributor line vacuum at high speed or full open throttle than care with "OCM" carburetor. *See "Lincoln & Mercury Dual Concentric Carburetor" in Carburetor Section.*

IGNITION TIMING: 2° BTDC.
Timing Procedure—*See Ignition Timing.*
Crankshaft Pulley Mark—Small circular button on rim of pulley.

CARBURETION:
Idle Setting—Approx. 1 turn open. Two screws—turning screws out gives richer mixture.
Idle Speed—Approximately 500 RPM.
Float Level—Fuel level ½" ± 1/32" below top edge of bowl. Use Fuel Level Gauge No. 9550-B.
►*NEW "CLIP TYPE" FLOAT NEEDLE & SEAT ASSEMBLY*—furnished for replacement.
Accelerating Pump—Center Hole average setting. Inner Hole for hot weather, Outer for cold weather.
Choke Setting: Index mark on coil cover aligned with center mark on housing (maximum variation one division either side).

Fuel Pump Pressure: 3½-4½ lbs.

MANIFOLD HEAT CONTROL: Automatic. No adjustment. Valve located between right end of exhaust pipe cross over and right exhaust manifold.

VALVE TAPPET CLEARANCE: *CAUTION—Different camshafts used in 1950 & 1951. Valve tappet clearances are different.*
1950—Intake .010"-.012". Exhaust .014"-.016".
1951—Intake .013"-.015". Exhaust .017"-.019".
Valve Timing Check—*See Valve Timing.*

STARTING: *See Battery, Starter, Generator, Regulator.*

IGNITION

IGNITION SWITCH: Mercury No. OL-11572-A.
Ignition Lock—Mercury No. (Early 1950) OL-11572-A, (Late 1950 & 1951) OL-11572-B.

COIL: Mercury No. 8BA-12029. Primary resistance 1.05 ohms (75°F.) Secondary resistance 4100 ohms (75°F.).
Location—On front lower corner f right cyl. hd.
Ignition Current—2.75-3.0 amperes idling. 5.0-5.5 amperes stopped.

CONDENSER: Mercury No. 7RA-12300-B.
Capacity—.21-.25 microfarad.

DISTRIBUTOR: Mercury No. OCM-12127 (Less Cap and Rotor). "Pressure Type" Distributor with spark advance controlled by diaphragm.

See "Ford, Lincoln, Mercury Distributor" in Electrical Equipment Section.

►**Excessive Pinging Correction & Retarded Spark Complaints on first cars**—*See "Ford, Lincoln, Mercury Distributor" in Electrical Equipment Section.*
Breaker Gap—.014-.016".
Cam Angle—28-30° (closed).
Breaker Arm Spring Tension—17-20 ounces.
Rotation—Clockwise viewed from above.

Advance Performance
►**With Distributor on Test Unit**

Distr. Degrees	Vacuum	R.P.M.
0°	0"	200
1¼-2¼°	0.4"	500
4¼-5¼°	1.7"	1000
6¼-7¼°	2.8"	1500
7½-8½°	3.7"	2000

Distributor Removal: Mounted at front of engine on right side. To remove, disconnect vacuum line, take out hold down screw, lift off.

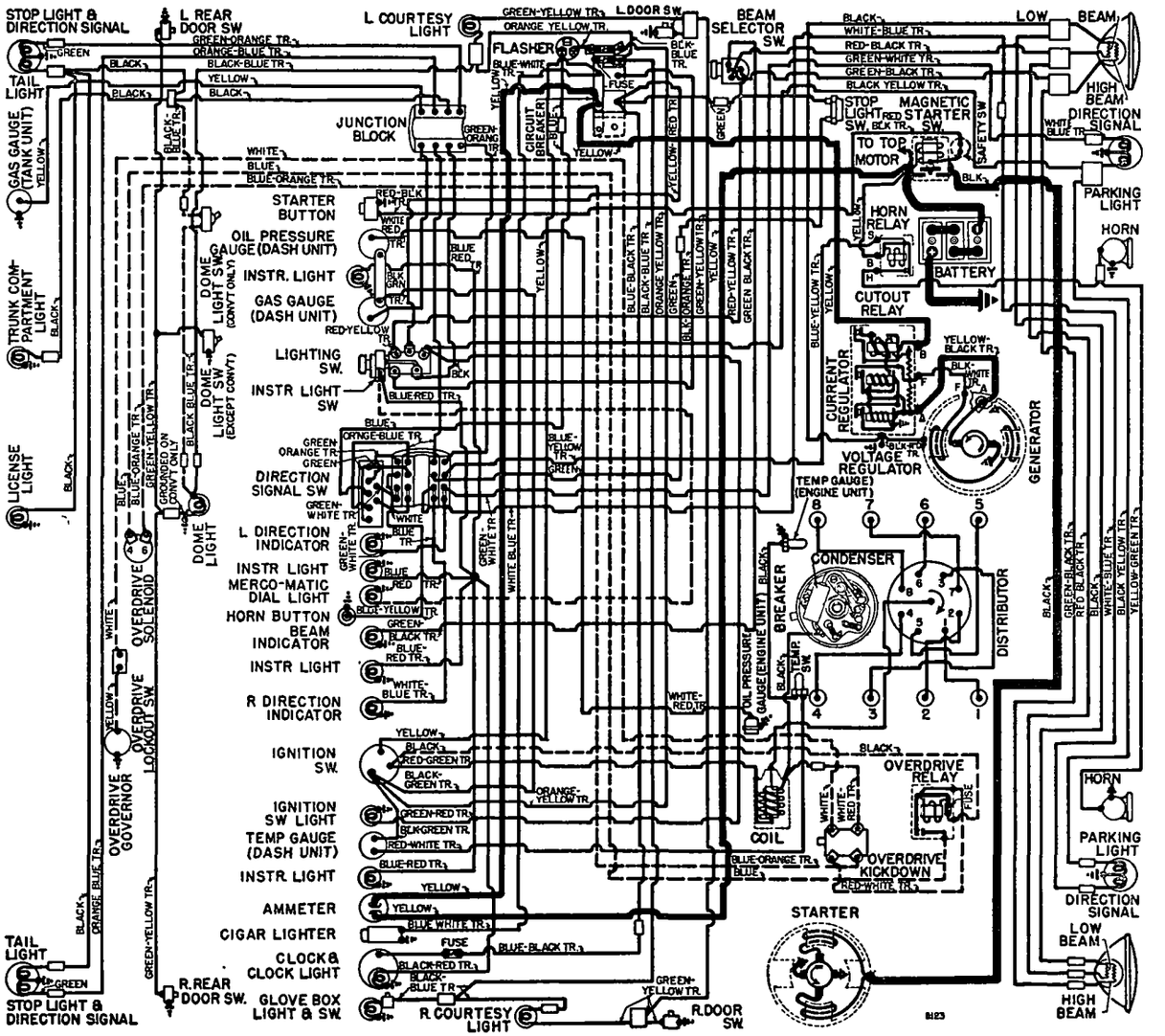

IGNITION TIMING

Std. Setting .....2° BTDC.
Crankshaft Pulley Mark—Small circular button on rim of pulley. Timing pin above pulley on right side.
Timing—With #1 piston at firing position and timing mark on pulley aligned with timing pin on front of engine, loosen hold down screw on distributor, rotate distributor until contacts begin to open, tighten hold down screw. Check spark plug connections (see diagram), see that rotor at #1 in cap.
►**Timing (with Neon Timing Light)**—*CAUTION—Vacuum line must be disconnected to avoid vacuum advance operating.* Connect timing light to #1 spark plug. Idle engine and adjust distributor (as directed above) until mark aligned with timing pin.

CARBURETOR

Holley-Ford dual concentric (double barrel) downdraft with automatic choke.
1950 (Early) Std. Trans 8CM-9510-G,H,J
1950-1951 Std. Trans. 1CM-9510-G,H,J
1950 (Early) Merc-O-Matic. 1CM-9510-K,L,M
1950-1951 Merc-O-Matic ①1CM-9510-N,P,R
①Automatic choke mounted on intake manifold.
See Carburetor Section for complete data.
►*NEW "CLIP TYPE" FLOAT NEEDLE & SEAT ASSEMBLY*—furnished for replacement.
Settings (Idle Setting, Float Level, and Accelerating Pump): *See Tune-Up data.*
Metering Jets—*See Holley-Ford Jet Specification Table in Carburetor Section.*
Fast Idle: Holley-Ford Carburetor type.
See Carburetion Equipment Section for complete data.
Automatic Choke: Holley-Ford Carburetor type.
►*AUTOMATIC CHOKE PRODUCTION CHANGE*—Automatic choke moved to position on intake manifold on late 1950 & 1951 Merc-O-Matic cars.
See Carburetion Equipment Section for complete data.
Setting—Index mark on coil cover aligned with center mark on housing (maximum variation one division either side).

CARB. EQUIPMENT

Air Cleaner (oil bath): Mercury No. 8CM-9600-A1.
►*CAUTION: Oil Bath Air Cleaners stamped "HH" on underside should be serviced with ½ pint of engine oil only. Disregard level mark or 1 pint specifications.*
Fuel Pump (std.): Mercury No. 7RA-9350-C.
►**Fuel Filter Change to "Edge" type**—*See Lincoln Mercury Dual Concentric Carburetor in Carburetor Section.*
Optl. (Fuel-&-Vacuum)—Mercury 8CM-9350-A, C. **Pressure**—3½-4½ lbs. (both types).
See Carburetion Equipment Section for complete data.
Gasoline Gauge: King-Seeley Electric.
Dash Unit—Mercury No. OM-9280.
Tank Unit (exc. Sta. Wgn.)—Mercury 99A-9275-B.
Tank Unit (Sta. Wagon)—Mercury No. 01A-9275-A.
See Carburetion Equipment Section for complete data.

BATTERY

Mercury No. 8M-10655-A. 6 volt, 17 plate, 100 A. H. Zero Capacity—300 amperes for 3.3 minutes. **Five Second Voltage**—4.2 volts.
Grounded Terminal—Positive (+) terminal.
Location—On left side in engine compartment.
Dimensions—L. 10 9/16". W. 7¼". H. 8 1/16".

STARTER

Mercury No. (Std. Trans.) 7RA-11002. Armature No. 18-11005. **(Merc-O-Matic Trans.) 1CM-11002.** Armature No. 1CM-11005-A.
Drive—Mercury No. (Std. Trans.) B-11350. (Merc-O-Matic) 1CM-11350-B.
Rotation—Counter-clockwise at commutator end.
Brush Spring Tension—20-22 ounces.
Cranking Engine—100-180 RPM., 190-215 amperes.

Performance Data

Torque	R.P.M.	Volts	Amperes
No Load①	4000-6000	5.8	45-60
15 ft. lbs.	Lock	3.5	600

①—Manufacturer recommends taking "No Load" reading by inserting 0-600 range ammeter in battery circuit at battery and operating starter while engine is idling.
Starting Switch: Mercury No. 21A-11450 Magnetic Switch mounted on left front fender apron and controlled by panel pushbutton switch 6H-11500.
Removal: On right front face of flywheel housing cover. To remove, take off right engine splash pan (if used), free starter-to-oil pan bracket, take out 2 starter through bolts.

GENERATOR

Mercury No.	Armature Mercury No.
8BA-10002-D	OA-10005-A
OM-10002	8HJ-10005
8EL-10002-B	8EH-10005
8EL-10002 ('50 Std.)	8EH-10005

2 Brush type with current and voltage regulation.
Charging Rate Adjustment—None. See Regulator.
Maximum Charging Rate—Controlled by regulator (dependent on battery condition).
To Check Generator Output—Connect ammeter in series with charging line at regulator "ARM" terminal, connect short insulated jumper between generator "A" and "F" terminals (to short out regulator). Run engine at approximately 1500 RPM. and note ammeter reading. If generator output equals or exceeds rate output (below) generator performance is satisfactory. Remove jumper.
►*CAUTION—Do not operate generator at higher speeds or in service with jumper connected between generator armature and field terminals. This jumper eliminates all regulator action.*

Performance Data

Generator	Amperes	Engine R.P.M.
8BA-10002-D	30.	1500
OM-10002	32.	1500
8EL-10002-B	40.	1500

Rotation—Counter-clockwise at commutator end.
Brush Spring Tension—20-24 ozs.
Generator Belt Adjustment: Loosen 2 bolts on fan mounting bracket, loosen generator support mounting stud nut, raise generator up until side movement on belt midway between generator and water pump pulley is ¾" (thumb and finger pressure), tighten stud nut.
Fan Belt Adjustment: *See COOLING.*

REGULATOR

Mercury Numbers

Regulator	Generator
51A-10505-A	8BA-10002-D
8M-10505-A	8EL-10002-B
8L-10505①	8EL-10002-B
8A-10505-A	OM-10002

①—One piece base type.
Voltage-current 3-Unit types.
See Electrical Equipment Section for complete data.
NOTE—Separate ground wire extending to cowl must be in place when generator operated.

Regulator Settings (Cold)

	①Cut-in Volts	Voltage Regulator Volts	Current Regulator Amperes
51A-10505-A	6.6-7.0	7.2-7.6	30-34
8M-10505-A	6.0-6.4	7.2-7.6	34-38
8L-10505	6.0-6.4	7.2-7.6	38-42
8A-10505-A	6.0-6.4	7.2-7.6	30-34

①—Cuts Out at 0-8 amperes discharge (all).
Checking & Adjustment—*See Electrical Equip. Section.*
Cut Out Relay Contact Gap—.010" (armature against upper stop).
Air Gap—.014" between armature and core with contacts open.
Voltage Regulator Air Gap—.032-.035"①.
Current Regulator Air Gap—.032"-.035"①.
①—Between armature and core with contacts just closed.
►*CAUTION—Make certain gauge contacts armature and not brass rivet on underside of armature.*
Contact Spring Tension (voltage & current regulators) 5 ounces minimum with contacts just opening.

LIGHTING

Headlamps: Ford "Sealed Beam" type.
See Electrical Equipment Section for complete data.
Adjustment—Aim upper beams straight ahead (hot spot centers 3" below lamp center height at 25 ft.)
Beam Indicator—Bulb between 50 and 60 on speedometer. Lighted with Upper Beam "on".
Direction Signal: Std. *See Electrical Equipment Section*
Direction Indicators—Right and Left indicators on lower edge of speedometer.
Direction Signal Flasher—Mercury No. 8L-13350-B

Switches

Lighting—Mercury No. OL-11654.
Beam Selector—Mercury No. 8A-13532.
Instrument—Mercury No. OL-13740.
Glove Box—Mercury No. OM-14413-A.
Dome Light—Mercury No. OM-13752.
Dome Light (Conv.)—Mercury No. OH-13752.
Door Switches—Mercury No. 8M-13713.
Stop Light—Mercury No. 11A-13480.
Trunk Light—Mercury No. OM-13546.
Directional Signal—Mercury No. (1950) OL-14486. (1951) 1M-14486.

MISC. ELECTRICAL

CIRCUIT BREAKERS: Mercury No. 8L-12258-A, No. 8H-12258-A (Convertible). Three used on one mounting, located on dash behind instrument panel together with two fuses (see wiring diagram for positions on bracket).
30 Ampere CB—Protects main lighting system.
15 Ampere CB—Protects speedometer light, control panel light, instrument cluster light, electric clock and clock light.
15 Ampere CB—Protects hydraulic equipment.
FUSES: Courtesy, Dome, Glove Box and Map Lights—14 ampere. Located on circuit breaker behind instrument panel (see wiring diagram).

CONTINUED ON NEXT PAGE

C NTINUED FROM PRECEDING PA E

Direction Signal—14 ampere. Located on circuit breaker behind instrument panel (see wiring diagram).
Clock—3 ampere. In clock feed wire.
Overdrive—30 ampere. On IGN terminal of overdrive relay (on dash under hood).
Heater—20 ampere. In lead to heater switch.

HORNS: Mercury No. 51A-13832-A, B (High Pitch, Right Horn). 51A-13833-A, B (Low Pitch, Left Horn). Dual horns operated by relay.
Air Gap—.027-.029" for high pitch (right horn), .032-.034" for low pitch (left horn).
Horn Current—13 amperes (high pitch), 14 (low).

Horn Relay: Mercury No. 7RA-13853-A. On dash.
Contact Gap—.015-.025".
Contact Closing Voltage—4 volts max.

ENGINE

ENGINE SPECIFICATIONS: Own Make. Eight cylinder "L" head, 90° Vee type with both cylinder banks and crankcase cast Enbloc.
Bore—3 3/16". **Stroke**—4".
Displacement—255.4 cu. ins. **Rated HP**—32.5.
Developed Horsepower—110 at 3600 RPM.
Compression Ratio—6.8-1 cast-iron head.
Compression & Vacuum Reading—*See Tune-Up.*

CYLINDER HEAD & TIGHTENING TORQUES: *See Mercury Special Data.*

OIL PAN REMOVAL: *See Mercury Shop Notes.*

PISTONS: Aluminum alloy, steel strut, dome head, U-slot, cam ground type.
►*CAUTION—Mercury and Ford Pistons or Rings are not interchangeable.*
Weight—370 grams. **Length**—2.89" (exclud. dome).
Removal—Pistons and rods removed from above.
Clearance—.0005-.001". See Fitting Pistons.
Cyl. Bore Wear Limits—Out-of-round .003", Taper .006".

Replacement Pistons: See Mercury Special Data.

Fitting Pistons: Use ½" wide feeler inserted between piston and cylinder wall at right angles to pin. Feeler thickness .0015" for New Piston in New Bore, Pull to withdraw feeler 6 to 12 lbs.

PISTON RINGS: Two compression, two slotted oil rings per piston (lower oil ring below pin). Rings are taper faced. Upper oil ring groove slotted, lower ring groove drilled for oil drainage.
NOTE—Top compression ring Chrome plated.
►*CAUTION—Mercury and Ford Piston Rings are not interchangeable (heavier rings used on Mercury).*

Ring	Width	End Gap①	Side Clearance
Compr. #1	3/32"	.010-.017"	.0015-.003"②
Compr. #2	3/32"	.010-.017"	.001-.0025"③
Oil #3 & #4	3/16"	.010-.017"	.0015-.003"②

Worn Limit—① .035", ② .004", ③ .0035".
Ring Thickness—Compr. .154", Oil .142".

Installing Rings: Top compression ring assembled with counterbore to top. Lower compression ring assembled with side marked "TOP" to face top of piston.

Replacement Rings: Ring sets furnished standard size and .020", .030", .040" Oversize. *See Mercury Special Data.*
NOTE—Service Rings have expander behind top oil ring, not the bottom.

PISTON PIN: Diameter—.7501-.7504". **Length**—2.847". Floating type. Pin hole in connecting rod bronze bushed.
Pin Fit in Rod—.0002-.0004" clearance. Light thumb push fit. Worn Limit .0015".

Replacement Pins: Std. size & .001", .002" Oversize.

CONNECTING ROD: Length—7".
Weight—524 grams (less bearings).
Crankpin Journal Diameter—2.138-2.139". Maximum wear limit out of round .0015", Taper .001".
►**Lower Bearing**—*Locked in (not floating type as used on earlier engines)*, steel-backed, copper-lead alloy lined, replaceable shells. Upper and lower halves interchangeable.
Clearance—.0005-.003" (new), .005" (worn limit).
Side Play—(2 rods) .006-.020". Worn Limit .022".
►*NOTE—Replace bearing shells less than .0745" thick.*
Bearing Adjustment—None. Replace bearings.
►**CONNECTING ROD INSTALLATION**—*See "Connecting Rod & Bearings" in Mercury Special Data.*

Replacement Bearings: Standard size and .002", .010", .020", .030", .040" Undersize.

CRANKSHAFT: 3 bearing, 6 integral counterweights.
►*SLUDGE TRAPS—Crankpin throws equipped with sludge traps having removable plugs for cleaning.*
Journal Diameters—2.498-2.499" (all main journals).
Wear Limits: .0015" Out-of-round, .001" Taper.
Bearings—Steel-backed, copper-lead alloy lined, replaceable shells. Upper and lower halves alike.
Clearance—.001-.0026".
►*NOTE—Replace main bearing shells when less than .0835" thick.*
Bearing Adjustment—None. Replace bearings.

Replacement Bearings: Standard size and .002", .010", .020", .030" Undersize. Rear mains also furnished .015" Oversize length for taking up excessive end play.

End Thrust: Taken by rear main bearing. Adjust by replacing bearing if endplay excessive.
Endplay—.002-.006" (new), .008" (worn).

CAMSHAFT: *CAUTION—Different Camshafts used in 1950 & 1951.* Three bearing. Helical gear drive. Distributor drive gear pressed on front end of shaft, oil pump drive gear on rear end.
Camshaft Journal Diameter—1.7965-1.797".
Bearing Diameter—1.7985" (replace bearing if diameter greater than worn limit of 1.8015").

Replacement Bearings: Standard size and .010", .015" Undersize. Undersize bearings require finish reaming.

End Thrust: Taken by front end of camshaft and thrust surface on inner face of front cover. Adjust by replacing front cover. **End Play**—.007-.016".

Timing Gears: L.H. helical. Fiber camshaft gear.
Replacement Camshaft Gears—Standard, .006" & .012" Oversize.

Camshaft Setting: Mesh marked tooth of crankshaft gear with marked space on camshaft gear.

VALVES:	Head Diam.	Stem Diam.	Length
Intake	1.515"	.342"	4.8175"
Exhaust	1.515"	.3405-.3415"	4.8175"

Seat Angle—45°
Lift—(1950) .338". (1951) .333".
Stem Clearance—Intake .0006-.0026".
Exhaust—.0011-.0031".
►*REPLACEMENT VALVES—Exhaust valves furnished for replacement to be used for ALL VALVES.*
Valve Seat Inserts—Used on all valves.
Valve Seat Width—1/16-5/64".

Valve Guides: One piece type positioned and retained by "C" washer. Inside diameter .344". Outside diameter 1.031". Distance from top of valve seat to upper end of guide 1.116".
Valve Guide Bushing—Rubber seal used around outer diameter of intake valve guide bushings.

Valve Lifters: Barrel type operating in guide holes in cylinder block.
Diameter—.9992" (replace if worn to less than .9977"). Length limit after resurfacing end 1.728".
Clearance—.0007-.0016" (new), .003" (worn limit).

Valve Springs: Coated springs used.
Spring Test—37-40 lbs. at 2.125". Free length 2.41".

VALVE TIMING

VALVE TAPPET CLEARANCE: *CAUTION—Different camshafts used in 1950 & 1951. Valve tappet clearances are different.*
1950—Intake .010"-.012". Exhaust .014"-.016".
1951—Intake .013"-.015". Exhaust .017"-.019".

Valve Timing: See Camshaft Setting above.

1950
Intake Valves—Open 10° BTDC. Close 50° ALDC.
Exhaust Valves—Open 50° BLDC. Close 10° ATDC.

1951
Intake Valves—Open 5° BTDC. Close 51° ALDC.
Exhaust Valves—Open 47° BLDC. Close 9° ATDC.
Valve Timing Check—*See "Valve System" in Mercury Special Data.*

LUBRICATION

Engine Oiling System: Pressure to main bearings, connecting rod lower bearings, camshaft bearings, timing gears and distributor drive gear. Piston pins and valve lifters lubricated by splash. Oil pump mounted in crankcase at rear of engine.
Crankcase Capacity—5 quarts (refill).
Normal Oil Pressure—55 lbs. at 2000 RPM.

Oil Pressure Relief Valve: In oil pump body. Not adjustable.
Spring Tension—12 lbs. at 1.14".
NOTE—Cylinder block oil relief valve not used.

Oil Pump: Gear type. In rear of crankcase.

Oil Filter: On left cylinder head. Replace cartridge each 5000 miles or more often if required.
Oil Filter Cartridge—Mercury No. 8CM-18662.

Oil Pressure Gauge: King-Seeley Electric.
Dash Unit—Mercury No. OM-9273.
Engine Unit—Mercury No. 41A-9278.
See Miscellaneous Section for complete data.

Crankcase Ventilation: Filter element in oil filler breather cap (inlet), and in outlet pipe below fan.
Servicing—Wash screen in cleaning fluid and wet with engine oil when dry at oil change period (2500 miles).
Outlet Pipe Air Filter Cartridge—Mercury No. 8CM-6841.

COOLING

Cooling System: Pressure type with relief valve in filler cap and two belt-driven pumps (one for each bank) with re-circulating by-pass.
Capacity—22.25 quarts.
Pressure Valve—In radiator filler cap. Mercury No. 26H-8100-B (AC #846740). Opens at 3½-4 lbs.

Water Pumps: Two used. Centrifugal, belt driven packless type. Shaft mounted on pre-packed ball bearings. Require no lubrication service.
NOTE—Bottom bolt must be installed prior to installing water pump pulley.
See Water Pump Section for complete data.
Fan Belt Adjustment—Loosen 2 fan mounting bracket bolt nuts, raise fan up until side movement of belt midway between fan and crankshaft pulleys is ½".
Generator (& Water Pump) Belt Adjustment—*See GENERATOR.*
Thermostats: Two used (one in each cylinder head water outlet). Mercury No. 8RT-8575-A.
Setting—Starts to open 148-153°F. Fully open 168-173°F.
Temperature Gauge: King-Seeley Electric.
Dash Unit—Mercury No. OM-10883.
Engine Unit—Mercury No. 8A-10990 (switch in right bank), No. 8A-10884 (reg. unit left bank).
See Miscellaneous Section for complete data.

CLUTCH

Borg & Beck Model 10A7 Mercury No. 8CM-7563-B or C. Single plate. Dry disc type with Borglite driven member.
Cover Number—988 stamped on cover.
See Clutch Section for complete data.
Facings—Moulded. Inside diameter 6¾". Outside diameter 10". Thickness .125".
Pedal Adjustment: 1-1¼" free travel. Adjust by loosening locknut and turning adjusting screw on adjusting rod.
Removal: Remove transmission (see TRANSMISSION Removal below). Remove flywheel housing. Prick punch flywheel and pressure plate so that these parts may be placed in original positions when reassembling. Compress pressure plate assembly with Tool 7563 and remove capscrews. Take off clutch assembly.

Torque converter and three speed automatic transmission with hydraulic control and mechanical parking lock.
See Transmission Section for complete data.
Lubrication—Check transmission oil level every 1000 miles and maintain oil level at "Full" mark on dip stick. Drain and refill every 15000 miles. Use only Automatic Transmission Fluid, Type A.
Capacity—Approx. 9 qts.
Checking Oil Level—With transmission selector lever in "Neutral," run engine approximately four minutes at idle speed. Clean floor mat and lift right side to expose plate in floor boards, remove plate. When engine and transmission are at normal operating temperature, move selector lever through all ranges to assure distribution of oil throughout the transmission. Clean all dirt away from fluid indicator cap and remove indicator. Wipe indicator and insert in transmission making sure that it is seated and locked. Remove indicator and check level. Add fluid to bring level to "Full" mark on the indicator. Replace indicator and tighten properly. Replace plate and floor mat.
CAUTION—Do not fill above "FULL" mark.
Draining & Refilling—*See "Mercury Merc-O-Matic" in Transmission Section.*
Linkage Adjustment—*See "Mercury Merc-O-Matic" in Transmission Section.*
Removal: *See "Mercury Merc-O-Matic" in Transmission Section.*

TRANSMISSION

Own Make. 3-speed, all helical gear type. Constant-mesh, synchro-mesh (Second & High), sliding gear (Low & Reverse).
See Transmission Section for complete data.
Transmission Control: Steering column mounted shift.
See Transmission Section for complete data.
Removal: Disconnect rear universal, slide propeller shaft out of transmission. Disconnect clutch, transmission and speedometer linkage. Support rear of engine and disconnect rear engine mounting from frame. Take out eight transmission-to-flywheel housing capscrews and remove transmission.

OVERDRIVE

Warner Model (1950) AS1-R10C, (Early 1951) AS1-R10E, (Late 1951) AS4-R10E. (NOTE—AS4-R10E is not equipped with "Lock-out" switch). Overdrive is solenoid operated type (no centrifugal pawls) with Governor Control and throttle operated kick-down switch.
See Transmission Section for complete data.
►**Prolonged shorting-out of Ignition on Kick-down Correction**—*See "Ford, Lincoln, Mercury (Warner) Overdrive" in Transmission Section.*
Solenoid—Mercury No. 8M-6916-A.
Control Relay—Mercury No. 8M-6915. On engine of dash. 30 ampere fuse at IGN terminal of relay.
Lock-out Switch—Mercury No. 8M-6917-A (Not used on AS4-R10E Overdrive).
Throttle Kick-down Switch—Mercury No. 8A-6918.
Governor Switch—Mercury No. 8M-6919.
Removal: Same as for Std. transmission (above) after disconnecting overdrive control cable and wiring.

UNIVERSALS

Mechanics Type 2CR. Needle bearing type. 2 used.
See Universals Section for complete data.
►*NOTE—Slip joint formed by splined yoke of front universal engaging transmission mainshaft (or overdrive shaft). One-piece propeller shaft used.*

REAR AXLE

Own Make. Semi-floating, hypoid gear type with Hotchkiss drive (separate carrier not used). Axle ends flanged (no separate hub). Wheel bearings are sealed-ball pre-lubricated (no lubrication required).
See Rear Axle Section for complete data.
Ratio—Standard: 3.9-1 (43-11). With Overdrive: 4.27-1 (47-11). Station Wagon: 4.55-1 (50-11).
Backlash—.003-.008". Shim adjustment.
Removal: Raise rear of car. Remove axle shafts, and drive shaft. Take off hydraulic line clips from axle housing and free line from differential housing clip. Disconnect shock absorbers, spring U-bolts. Remove axle housing assembly from car.
Axle Shaft Removal: Remove rear wheels. Take out 3 capscrews holding brake drum to axle shaft flange. Remove hydraulic lines from brake backing plate. Take out 4 axle retainer nuts (work through opening in axle shaft flange). Use Tool 4235-A to remove axle shaft and bearing assembly from housing. Take off gasket and backing plate. Do not damage oil seal when removing axle shaft.

SHOCK ABSORBERS

Std.—Mercury 8M-18045-A1, A2 (front), 8M-18080-A1, A2 (rear).
Heavy Duty (special equip.)—Mercury 8M-18045-C1, C2, D (front), 8M-18080-C1, C2, D (rear).
Direct acting, hydraulic types. Two makes are used and are interchangeable except station wagon.
See Shock Absorber Section for complete data.
►*NOTE—Shock absorbers are permanently sealed and cannot be refilled or repaired.*
Rear Shock Absorber Installation—Lower tube has welded stone shield on lower end which must be installed toward front of car.

FRONT SUSPENSION

Front Suspension: Independent, linked parallelogram type with coil springs, direct acting shocks, and front stabilizer.
See Front Suspension Section for complete data.
►**FRONT SPRING PRODUCTION CHANGE:** *See "Ford Pass. Cars, Lincoln, Mercury" in Front Suspension Section.*
Kingpin Inclination—5° crosswise with ¾° Camber.
Caster—Pos. ½° to Neg. 1°. Threaded bushing adjustment at lower pivot pin.
Camber—0° to +¾°. Eccentric adjustment at upper pivot pin.
Toe In—3/32-5/32". Adjusting sleeve on outer end of each tie rod. Adjust equally.
Steering Geometry (toe out on turns)—Inner wheel turned 23½° ± ½°, outer wheel 20°.

STEERING GEAR

Gemmer Model 305—"3-tooth" Worm-and-roller type with "push-pull" adjustment.
See Steering Gear Section for complete data.

BRAKES

Service: Mercury-Bendix Hydraulic, Duo-Servo, Single Anchor type without ecentric adjustment. Hand lever applies rear wheel service brakes.
See Brake Section for complete data.
Wheel Cylinders—Diameter: Front wheel 1.128" (hone limit 1.132"). Rear wheel 1.003" (hone limit 1.005").
Drums—Diameter 11".
Lining—Molded or woven. Width 2" (front wheel), 1¾" (rear wheel). Thickness 3/16". Length per shoe 11 15/16".
Clearance—.010" at each end of each shoe.
Braking Power—56% front wheels, 44% rear.
Hand Brake: See Service Brakes above.
►**HAND BRAKE LINKAGE CHANGE: For easier application**—*See "Ford-Bendix Hydraulic" in Brake Section.*

MISC. MECHANICAL

Power Operated Convertible Tops, Windows, & Front Seat: Hydro-Lectric type (hydraulic actuation with motor-driven pump supplying oil under pressure for power cylinders).
See Miscellaneous Section for complete data.
Windshield Wipers: Vacuum Link & Crank Arm Type.
See Miscellaneous Section for complete data.

CYLINDER HEAD

INSTALLING CYLINDER HEAD: Use a Torque Indicating Wrench to tighten cylinder head stud nuts, tighten in correct sequence as shown in the diagrams. Cast Iron heads should be tightened cold and rechecked after the engine has been run and thoroughly warmed up.

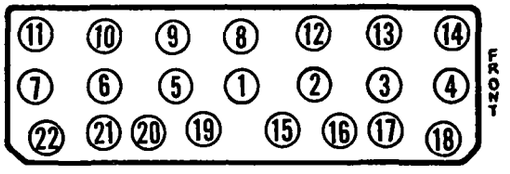

STATESMAN & RAMBLER

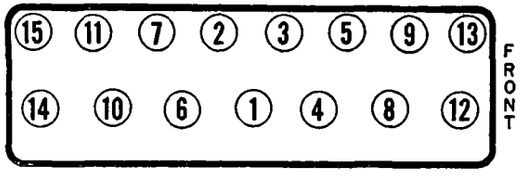

AMBASSADOR

TIGHTENING SPECIFICATIONS

Cylinder Head Stud Nuts:	Ft. Lbs.	In. Lbs.
Statesman & Rambler—Dry	61-64	732-768
Statesman & Rambler—Oiled	60-65	720-785
Ambassador—Dry	65-70	780-840
Ambassador—Oiled	60-65	720-785
Main Bearing Cap Screws—All	66-70	792-840
Connecting Rod Bolt Nuts:		
Statesman & Rambler	27-30	324-360
Ambassador	50-55	600-660
Spark Plugs (14 mm.)	30	360

ENGINE REMOVAL

RAMBLER

ENGINE REMOVAL: Engine is removed from below car. Place car on lift or place two high jacks under body sills just behind the rear engine support cross-member. Remove hood top and radiator core. Disconnect fuel line at fuel pump, and remove fuel line to carburetor. Disconnect wires at generator and oil and heat indicator engine units. Disconnect throttle linkage. Remove exhaust manifold and fasten out of the way against the side panel. Disconnect steering cross tie rod, shift rods at transmission, clutch linkage to clutch beam, speedometer cable (and Overdrive wiring if used). Place lifting fixture to head studs and lift engine just enough to support it. Remove four bolts holding front cross-member to side sills. Remove rear engine diagonal mounting braces and the four bolts holding the rear engine support cross-member to body sills. Engine will now be supported by the lifting device. Lower the engine slightly and move forward enough to slide the front universal off the transmission. Engine can now be lowered and removed from beneath the car.

ORIGINAL BORE & PISTONS

ORIGINAL BORE SIZE (ENGINE CODE) Engines factory equipped with .010" oversize bore (or undersize bearings) are marked with a three-letter code for identification. **Standard size engines do not have this code mark.**

Code Mark Location—Code mark consists of three letters stamped on engine number pad.

Letter Position—Bore (and piston) size is indicated by **first** letter of the three-letter code.

Size Identification—Letters indicate following:
"A"—Standard size Bore and Pistons.
"C"—.010" Oversize Bore and Pistons.

NOTE—The other two letters of the three-letter code designate main and connecting rod journal and bearing sizes (see Original Bearing Sizes).

ORIGINAL BEARING SIZES

ORIGINAL BEARING SIZES (ENGINE CODE NOTE):
—Engines factory-equipped with oversize bores or undersize main or connecting rod bearings carry a three letter code for identification. **Standard engines carry no code mark.**

Code Mark Location—Three letter code stamped on engine number pad.

Letter Position—Three letter code used. Position of letter indicates the following:
1st Letter—Original Bore Size.
2nd Letter—Main Bearing Journal Size.
3rd Letter—Crankpin Journal Size.

Size Identification—Letters indicate following:
'A'—Standard size (bore or bearing sizes).
'B'—.010" Undersize (main or con rod bearings).
'C'—.010" Oversize (bore size with .010" OS Pistons).
NOTE—.010" Undersize bearings fitted to .010" Undersize main bearing and crankpin journals. .010" Oversize pistons fitted to .010" oversize bores.

CRANKSHAFT & MAIN BEARINGS

CRANKSHAFT REAR MAIN OIL SEAL: Install new seals with rear main bearing cap off (and crankshaft out of engine when replacing upper half) as follows:

Rear Main Bearing Oil Seal (Statesman & Rambler)—Packing in groove in block and cap behind oil slinger on crankshaft. Cap sealed with rubber plugs in groove on each side where cap fitted in recess in block. Use Tool J-1610 to install packing in groove in block and cap. Place packing in groove (with bearing shell removed) place small diameter of tool over packing, hit end of tool with lead hammer to seat packing, cut ends of packing flush with bearing cap seat, remove tool. Repeat operation for groove in block. Install rubber seal plugs on each side of bearing cap (where angle seal used, make certain that seal also seated in horizontal groove in block).

Rear Main Bearing Oil Seal (Ambassador)—Steel-backed, synthetic rubber seal. Install upper half in block, lower half in bearing cap, making certain that seal fits snugly over edge of rear bearing oil return groove. See that surface on crankshaft to rear of oil slinger (on which seal bears) is clean and smooth. Install rubber seal key strips on either side of bearing cap three strips overlap bearing cap and seal sides and mating surfaces of bearing cap in crankcase).

STATESMAN & RAMBLER

CRANKSHAFT END THRUST PLATE: Crankshaft end thrust taken by flanged edges of front bearing. A steel thrust plate is assembled between rear face of timing chain sprocket and flanged face of front bearing. Plate keyed to shaft by Woodruff key which also secures sprocket on shaft. When plate installed, chamfered edge on inner diameter should face toward the rear for tight fit against bearing journal.
Adjustment—If endplay not correct with all parts correctly assembled, replace front main bearings or thrust plate.

CAMSHAFT & BEARINGS

STATESMAN & RAMBLER

CAMSHAFT REMOVAL: NOTE—Special valve tappet retaining clips (supplied in sets of 16—Tool No. J-1612) available for camshaft removal without necessity of removing valves or cylinder head. Clips should be installed on upper ends of valve lifters and will hold lifters up out of the way while the camshaft is being withdrawn.

CAMSHAFT REMOVAL: Amb. Six. Remove pushrods. Remove valve cover on side of engine, lift up each valve lifter and use rubber band to hold lifters up out of the way while the camshaft is being withdrawn.

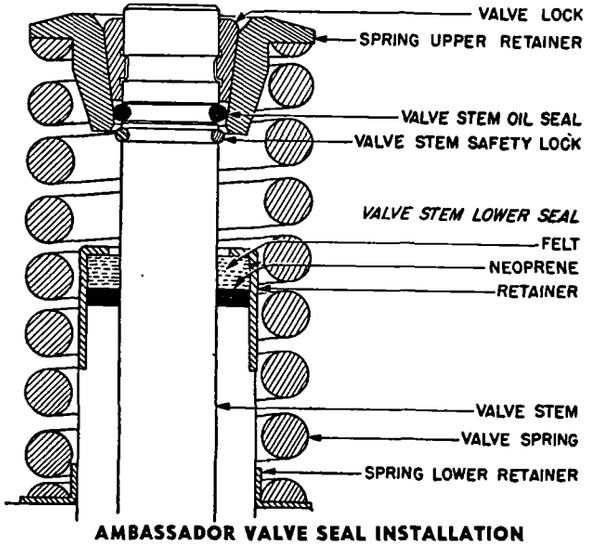

AMBASSADOR VALVE SEAL INSTALLATION

VALVE SYSTEM

AMBASSADOR

VALVE STEM OIL SEAL: Consists of a neoprene valve stem seal and a felt seal under a metal retainer which is mounted over the top of the valve guide. The neoprene seal prevents excessive oil passage past valve stem while the felt seal provides initial starting lubrication. An upper seal is also provided in the form of a neoprene ring installed below valve locks.

NOTE—A safety lock is mounted below upper seal on valve stem to prevent valve dropping below top of valve guide during disassembly.

STATESMAN & RAMBLER

SELF-LOCKING TAPPET SCREWS: No locknuts are used on tappet adjusting screw. Threaded bushing welded to top of tappet with threads out of index with threads in tappet which locks tappet screw in position. Screw tension should be 50 inch lbs. minimum to retain tappet adjustment. Check with tension wrench. Tappet screws supplied separately, however car manufacturer recommends replacement of complete tappet assembly.

OIL PAN REMOVAL

OIL PAN REMOVAL: Oil pan is removed in a conventional manner except as indicated below:

Rambler—Remove steering linkage tie rod before attempting to remove the oil pan.

Statesman—Lift front of engine sufficiently so pan bolts under generator can be removed without difficulty.

Ambassador—Engine must be lifted approximately 4" so oil pan will clear #1 & #2 crank throws.

OIL PUMP

OIL PUMP (AMBASSADOR): Mounted on center main bearing cap and must be dismantled for removal as follows:

Disassembly & Removal—Remove distributor, remove oil pan and take out two screws holding pump body to main bearing cap. Withdraw pump body and idler gear assembly (pump shaft will remain in engine). Withdraw shaft from below, removing drive gear from splines on end of shaft. Pump shaft rotates in thin walled bushing mounted in block at upper end of shaft, and in bore in pump housing at lower end. Thrust on shaft is taken by a steel ball in pump housing. Remove and install shaft bushing from below with pump out of engine. Ream bushing to .500" after installation.

CAUTION—Excessive clearance of shaft in bushing will result in low oil pressure (pump oil delivery is up along shaft to oil channel in block).

Oil Pump Assembly & Installation: Make certain that loose thrust ball is installed in pump body at lower end of pump shaft. Install pump in reverse order of disassembly and removal instructions (above).

CAUTION—Maintain a tight connection between inlet flange and pump body.

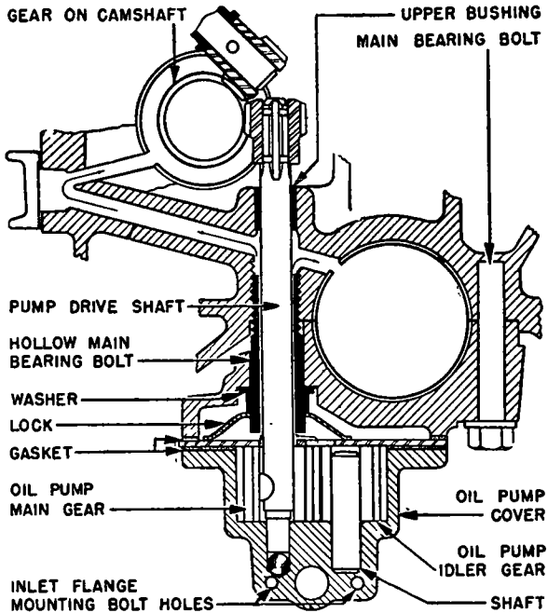

AMBASSADOR OIL PUMP

CLUTCH NOTES

CLUTCH LINKAGE: Linkage consists of a beam lever, with a support mounted at one end in a hook plate on engine (later models use a flexible link) and the other end held in position by a fulcrum plate and guide fastened to a steering gear housing boss bolt which also bolts steering gear to frame. The outer end of the beam lever connects to the clutch pedal with a rod, and the inner end connected by rod to the release bearing fork arm. Both rods are adjustable. Only the latter rod must be used when making clutch pedal free play adjustments. The fulcrum plate guide centers the beam support. If the beam support is not centered it will climb out of the hook and cause chattering. The beam is held in position by the beam anchor spring, and the pedal return spring.

►***CAUTION—Do not disturb the length of the pedal to beam rod (All Models).***

Clutch Linkage Adjustment—Pedal free play adjustment is made by lengthening or shortening the beam to release bearing fork arm rod. Do not disturb the pedal to beam rod setting. In the event it is necessary to adjust the pedal to beam rod, the adjustment is made so that the outer end of the beam lever projects ½" on Statesman and 5/16" on Ambassador from the beam, toward the rear, with clutch pedal against floor boards. No provision is made for adjustment of this rod on "Rambler."

"RAPPING" CORRECTION

1951 RAMBLER

(EARLY 1951 PRODUCTION CARS)—In some cases, insufficient clearance may exist between the transmission at the drain plug boss and the rear engine support crossmember. This may result in a metallic rapping noise when driving over rough roads and may be diagnosed as a front suspension noise. Correct by lowering front crossmember, thereby raising rear end of transmission and providing sufficient clearance.

NOTE—Slotted holes in front crossmember will permit lowering the member.

MODEL IDENTIFICATION

FRONT FENDER & GRILLE ASSEMBLY REMOVAL: *See Nash Special Data.*

SERIAL NUMBER: On plate located on front wheelhouse panel at right side under hood.
1950 Numbers—D-1001 Up.
1951 Numbers—D-12501 Up.

ENGINE NUMBER: Stamped on right side of engine block above exhaust pipe.
1950 Numbers—F-1001 Up.
1951 Numbers—F-13001 Up.

TUNE-UP

COMPRESSION PRESSURE: 120 lbs. at cranking speed.

VACUUM READING: Steady 18-21", 450-500 RPM idle.

FIRING ORDER: 1-5-3-6-2-4. See diagram.

SPARK PLUG GAPS: .030".
Plugs—Auto-Lite Type A5. 14 mm. Metric.

DISTRIBUTOR: Breaker Gap—.018-.024".
Cam Angle—35°. Test limit with .022" gap 31-37°. *See "Delco-Remy Cam Angle" in Elec. Equip. Sect.*
Breaker Arm Spring Tension—17-21 ozs.
Automatic & Vacuum Advance—*See Ignition.*
Condenser Capacity—.18-.23 microfarad.

IGNITION TIMING: TDC. (At top dead center).
Timing Procedure—*See Ignition Timing.*
Timing Mark—"/" mark on dampener aligned with pointer on chain cover above dampener.

CARBURETION: (Early 1950) Carter 694S.
Idle Setting—Idle screw ¾-1¾ turns open. One screw—turning screw out gives richer mixture.
Idle Speed—450-500 RPM.
Float Level—½" from top of projection on underside of bowl cover to top of seam on free end of float (invert bowl cover and float to check level).
Accelerating Pump—Medium stroke (lower, outer hole) Normal, Inner (min.), Upper (max. stroke).

Choke Setting: 2 points rich.
Fuel Pump Pressure: 3-4½ lbs. (5 lbs. maximum).

CARBURETION: (Late 1950 & Early 1951) Carter 757S, SA, SB. (Late 1951) Carter 876S.
►*CARBURETOR PRODUCTION CHANGES (EARLY MODELS)—See Carburetor Section for complete data.*
Idle Setting—(757S, SA, SB) 1 to 2 turns open. (876S) ½ to 1½ turns open. For richer mixture, turn screw out.
Idle Speed—450-500 RPM.
Float Level—(757S, SA, SB) 1/2", (876S) 5/16". Measure from underside of bowl cover to top of float with bowl cover inverted and weight of float on needle valve.
Accelerating Pump—No seasonal adjustment provided and no pump stroke setting required.
Choke Setting—(757S, SA, SB) Center on index. (876S) Set 1 point lean.
Fuel Pump Pressure—3-4½ lbs. (5 lbs. maximum).

VALVE TAPPET CLEARANCE: .015" Hot, all valves.
Cold Setting—Intake .016". Exhaust .018".
NOTE—Tappet adjusting screws self-locking type.

IGNITION

IGNITION SWITCH: Nash Number 3123588. On instrument panel.

COIL: Delco-Remy No. (1950) 1115328, (1951) 1115380. Mounted on engine.

CONDENSER: Delco-Remy Part No. 1869704.
Capacity—.18-.23 microfarad.

DISTRIBUTOR: Delco-Remy No. 1112351. Full automatic advance type with separate vacuum spark control and octane selector adjustment.
Breaker Gap—.018-.024".
Cam Angle—35°. Test limits with .022" gap 31-37°. *See "Delco-Remy Cam Angle" in Elec. Equip. Sect.*
Breaker Arm Spring Tension—17-21 ozs.
Rotation—Counter-clockwise viewed from above.

Automatic Advance

Degrees Distr.	R.P.M.	Degrees Eng.	R.P.M.
Start	300	2	600
5½	400	11	800
11	1400	22	2800

Vacuum Spark Control: Delco-Remy No. 1116045. Separate unit mounted on hold-down plate and linked to advance arm. Provides additional advance at speeds above idling except when engine accelerated or operated with wide open throttle.
Plunger Travel—23/64".

Vacuum Advance

Distr. Degrees	Eng. Degrees	Vacuum (" of HG)
Start	0°	3.5"
7½°	15°	14-16"

Distributor Removal: (Early 1950 Cars). Disconnect vacuum line, take out hold-down screw. Remove distributor cap and rotate shaft until flat side of shaft is toward bottom. Tilt engine toward right by prying with a bar sufficiently to withdraw distributor.

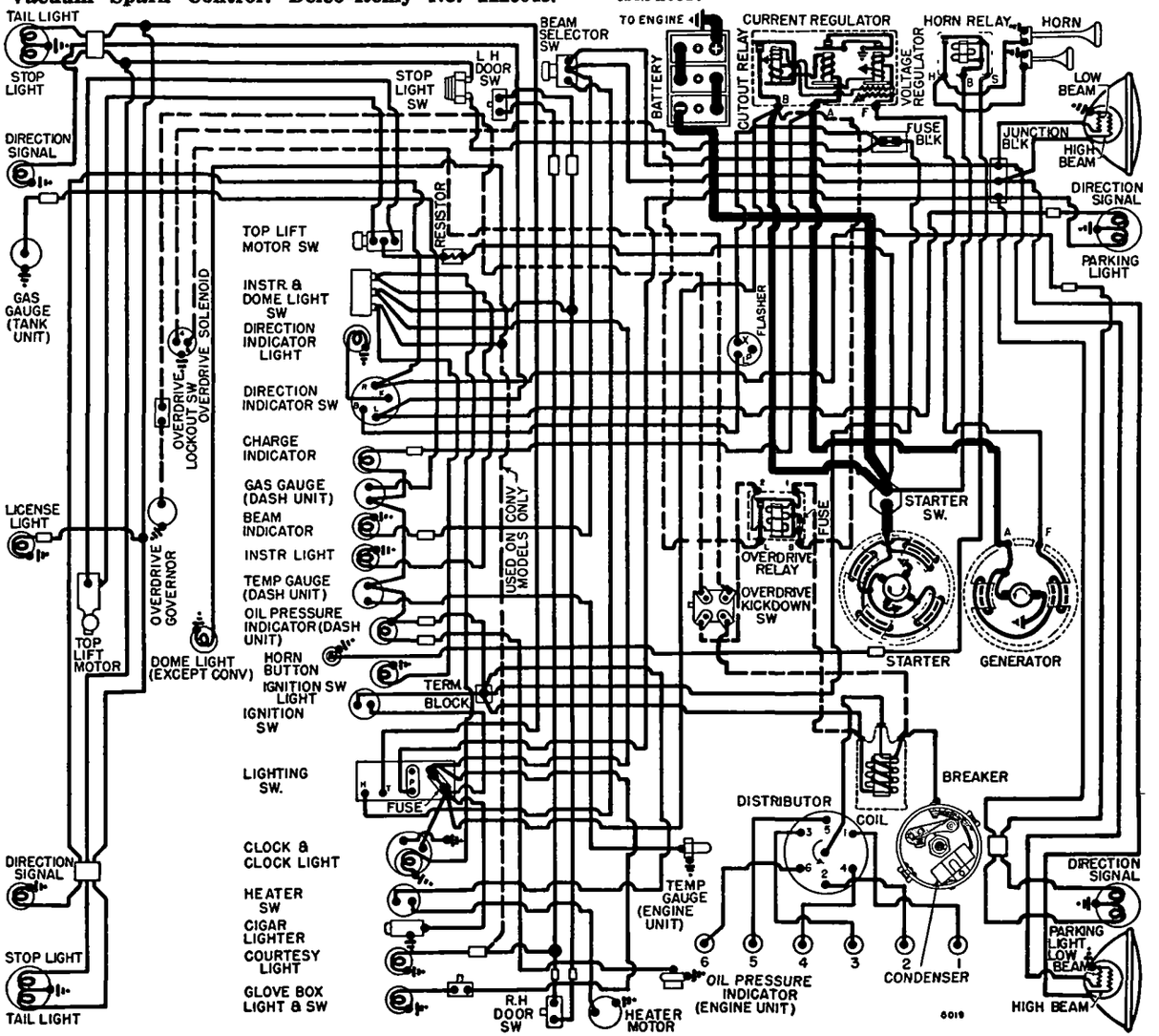

1950 M DELS

►*DISTRIBUTOR PRODUCTION CHANGE NOTE*—Late 1950 & 1951 engines have been changed to give the distributor more clearance, and it is not necessary to tilt the engine.

IGNITION TIMING

Std. Setting.....At TDC.

NOTE—Car manufacturer recommends using Neon Timing Light to set Ignition Timing.

Timing (Using Neon Timing Light)—Align ⅛" holes in clamp arm and distributor support and insert pin. Loosen distributor hold-down screw and center octane selector scale, tighten screw. Clip Neon Timing Light to #1 spark plug, direct light at vibration dampener at timing chain cover pointer. Idle engine at 450-500 RPM., loosen clamp arm bolt, rotate distributor until "/" mark on dampener aligned with pointer, tighten clamp bolt, remove ⅛" pin in support. Check Octane Selector Setting.

Octane Selector Setting—Loosen hold-down screw in distributor, adjust at scale for slight ping accelerating 10-15 MPH. with wide open throttle.

CARBURETOR

EARLY 1950 CARTER WA-1

Carter 694S. (Early 1950) 1¼" Single Barrel downdraft with Climatic Control.

See Carburetor Section for complete data.

Settings (Idle Setting, Float Level, and Accelerating Pump Setting): ***See Tune-Up data.***

Metering Rods & Jets—***See Carter Jet Table in the Carburetor Section.***

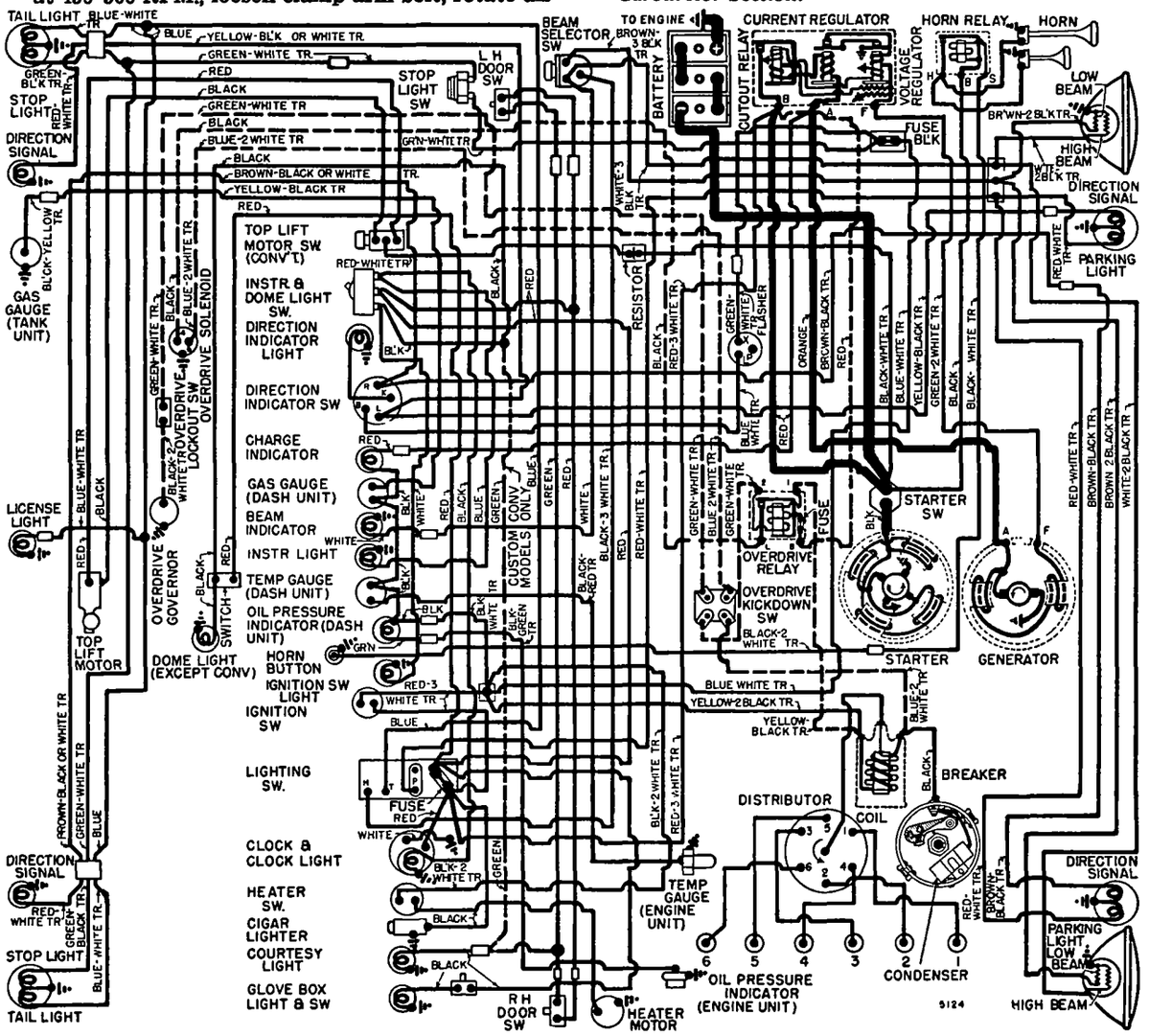

Fast Idle: Carter Single Barrel Carburetor type.
See Carburetion Equipment Section for complete data.
Setting—⅝" clearance between choke valve and air horn (Gauge T109-85) with throttle valve closed and stopscrew against (not on) first step of fast idle cam (bend connector link at lower offset).
Automatic Choke: Carter Climatic Control (Single Barrel Carburetor).
See Carburetion Equipment Section for complete data.
Setting—2 points rich.

1950-51 CARTER YF

Carter 757S, SA, SB (Late 1950 & Early 1951). Carter 876S (Late 1951). 1¼" Single Barrel downdraft with Climatic Control.

See Carburetor Section for complete data.

Settings (Idle Setting, Float Level, and Accelerating Pump): ***See Tune-Up data.***

►***CARBURETOR PRODUCTION CHANGES (EARLY MODELS)—See Carburetor Section for complete data.***

Metering Rods & Jets—***See Carter Jet Table in the Carburetor Section for complete data.***

Fast Idle: .054" between throttle valve and bore of carburetor (side opposite port). Remove thermostatic coil housing and baffle plate. Crack throttle valve and hold choke valve fully closed, then close throttle. Fast idle cam will revolve to fast idle position. With choke valve held tightly closed, and slight tension on throttle lever, check throttle opening. Adjust by bending connector link at lower bend.
See Carburetion Equipment Section for complete data.
Automatic Choke: Carter Climatic Control (Single Barrel Carburetor).
Setting—(757S, SA, SB) Centered on index. **(876S)** Set 1 point lean.
See Carburetion Equipment Section for complete data.

CARB. EQUIPMENT

Air Cleaner: Oil-wetted (Std.), oil-bath (Optl.).
Servicing (Oil-wetted type)—Wash filter element and re-oil with heavy engine oil every 2000 miles.
Servicing (Oil-bath type)—Wash filter element, clean out and refill oil reservoir with 1 pint SAE 50 oil (summer), 20 (winter) every 5000 miles.
Fuel Pump: Carter No. M-774-S. Diaphragm type, Std.
Opt'l (with Overdrive) No. M-797-S.
Pressure—4-5¼ lbs. at 1800 RPM.
See Carburetion Equipment Section for complete data.
Gasoline Gauge: King-Seeley Electric type.
Dash Unit—KS No. 42751 (Std., Red Dial).
No. 42951 (Custom, Alum. Dial).
Tank Unit—KS No. 42760.
See Carburetion Equipment Section for complete data.

BATTERY

Auto-Lite Type IH-90D—6 volt, 13 plate, 90 Ampere Hour capacity (20 hour rate).
Starting Capacity—114 amperes for 20 minutes.
Grounded Terminal—Positive (+) grounded to wheelhouse (engine grounded at same point).
Location—Left side in engine compt. under hood.

STARTER

Delco-Remy No. (1950) 1109459, (1951) 1109463.
Armature—Delco-Remy No. 1915056 (for 1109459), **1917887** (for 1109463).
Drive—Delco-Remy No. 1915041 (for 1109459), **1917888** (for 1109463).

CONTINUED ON NEXT PA E

CONTINUED FROM PRECEDIN PA E

Rotation—Counter-clockwise at commutator end.
Brush Spring Tension—24-28 ounces.

Performance Data

Torque	R.P.M.	Volts	Amperes
0 ft. lbs	6000	5.7	60
11.5 "	Lock	3.3	.540

Starting Switch: Delco-Remy No. 1996476. Mounted on toeboard, actuated by fully depressing clutch pedal.
Removal: Flange mounted on left front face of flywheel housing. To remove, work from above under hood, disconnect shift rods at shift levers, disconnect starter cable, take out mounting screws.

GENERATOR

Delco-Remy No. (Std.) 1102730, (Optional) 1102748. Two brush with voltage and current regulation.
Armature—Delco-Remy No. 1913597 (for 1102730), 1917175 (for 1102748).
Car Speed for maximum charging rate—19 MPH up.
Charging Rate Adjustment—See Regulator.

Performance Data—1102730

	Amperes	Volts	R.P.M.
Cold	30①	8.0	1750

Performance Data—1102748

	Amperes	Volts	R.P.M.
Cold	40	8.0	1950

①—Not maximum output. See Current Regulator.
Rotation—Counter-clockwise at commutator end.
Brush Spring Tension—28 ozs.
Field Current—1.75-1.9 amperes (for 1102730), 1.90-2.05 amperes (for 1102748). All at 6.0 volts.
Belt Adjustment: Adjust whenever belt deflection exceeds ½" either way between the fan and generator shaft pulleys. To adjust, loosen fan mounting bracket screws (pivots on one screw, other screw hole slotted), raise fan, tighten screws. Belt misalignment corrected by shims behind fan bracket.

REGULATOR

Delco-Remy No. 1118302 (for 1102730), **No. 1118382** (for 1102748). Voltage and current regulator.
►"*1118300 SERIES*" regulators have screw adjustment for settings and single regulator springs.
See Electrical Equipment Section for complete data.
CAUTION—Check generator for grounded field coils and leads before changing regulator settings to correct High Charging Rate or High Voltage.

Cutout Relay

Cuts In—5.9-6.8 volts hot (set to 6.4 volts hot).
Contact Gap—.020" (same for both sets).
Air Gap—.020" (with contacts just closed).

Voltage Regulator

Setting—7.0-7.7 volts hot (set to 7.4 volts hot). Regulator is over-compensated for temperature. Should be checked with cover in place and hot.
Air Gap—.075" with armature pressed down to point where contacts are just touching.
Checking & Adjustment—***See Electrical Equipment Section.***

Current Regulator

Setting—(1118302) 32-40 amperes hot (set to 36 hot).
Setting—(1118382) 40-46 amperes hot (set to 42 hot).
Air Gap—.075" with armature pressed down to point where contacts are just touching.
Checking & Adjustment—***See Electrical Equipment Section.***

LIGHTING

Headlamps: Hall "Sealed Beam." Upper and lower beams controlled by selector switch on toeboard.
See Electrical Equipment Section for complete data.
Beam Indicator—Red jewel located in speedometer

Switches

Lighting—Nash No. 3130348.
Beam Selector—Nash No. 3130120.
Instrument Light—Part of Lighting Switch.

MISC. ELECTRICAL

GENERATOR CHARGE INDICATOR: Indicator light in instrument cluster. Lights when ignition turned on, should go out when generator begins to charge.
LOW OIL PRESSURE INDICATOR: See "Oil Pressure Gauge" under LUBRICATION.
FUSES: Lighting—30 ampere on lighting switch.
Stop & Directional Signal—30 ampere located on left front wheelhouse panel.
Overdrive: 30 ampere on overdrive relay.
HORNS: E. A. Laboratories. Vibrator type twin horns.
Horn Current—12 amperes per horn.
Contact Gap—.031" ± .010".
Horn Relay: E.A. Laboratories. On horn bracket.

ENGINE

ENGINE SPECIFICATIONS: 6 cylinder, "L" head type. Cylinder cast Enbloc with intake manifold cast in block (Iso-thermal fuel intake system).
Bore—3⅛". ***See "Original Bore & Pistons" in Nash Special Data.***
Stroke—3¾". **Displacement**—172.6 cubic ins.
Rated Horsepower—23.44.
Developed Horsepower—82 at 3800 RPM.
Compression Ratio—7.25-1 std. cast-iron head.
Compression & Vacuum Reading—***See Tune-Up.***
CYLINDER HEAD & TIGHTENING TORQUES: ***See Nash Special Data.***
ENGINE REMOVAL: ***See Nash Special Data.***
OIL PAN REMOVAL: ***See Nash Special Data.***
PISTONS: Aluminum alloy, Cam Ground, Tin plated, strut type with solid skirt. **Length**—3⅜".
Removal—Pistons and rods removed from above.
Clearance—.001-.002". See Fitting New Pistons.
NOTE—Cylinder out-of-round & taper limits .004".
Original Piston & Bore Sizes: ***See Nash Special Data.***
Fitting New Pistons: With all parts clean and dry, fit pistons so that piston will support its own weight in any portion of cylinder. If feeler gauge used, insert .002" x ½" feeler at right angles to pin bosses, pull to withdraw feeler must be 12-18 lbs.
Replacement Pistons: Furnished Std., and .002", .005", .010", .020" and Semi-finished.
Piston Installation: Pin hole in piston offset 1/16" from center-line. Install piston with heavy side away from camshaft (pin offset toward camshaft).
PISTON RINGS: 2 compression, 1 slotted oil and 1 Thompson U-Flex oil ring, (U-Flex ring in #4 groove), per piston. All rings above pin. Oil groove drilled with oil drain holes.

Ring	Width	End Gap	Side Clearance
Compression	3/32"①	.010-.015"	.002-.004"
Oil Control	5/32"②	.010-.015"③	.002-.004"

①—.0930" ± .0005". ②—.15475" ± .00025".
③—No end gap on Thompson U-Flex ring.
Installing Rings—Stepped inner edge of both compression rings must be UP.
Replacement Rings: ***See "Piston Rings" in Nash Special Data.***
PISTON PIN: Diameter—.8593-.8595". **Length**—2¾". Floating type with lock ring at each end.
Pin Fit in Piston—Thumb press fit or .0003" max. loose fit at room temperature (70°F.).
Pin Fit in Rod Bushing—Light thumb push fit at room temperature.
CONNECTING ROD: Length 6⅝". **Weight**—25 ozs.
Crankpin Journal Diameter—2 3/32" (2.094-2.095"). ***See "Original Bearing Sizes" in Nash Special Data.***
Lower Bearing—Removable steel-backed, babbitt lined type. No shims.
Clearance—.001-.002". **Sideplay**—.006-.014".
Bearing Adjustment: None. Replace bearings. ***See "Connecting Rods & Bearings" in Nash Special Data.***
Installing Rods: Oil squirt hole in lower end of rod toward right (camshaft side) of engine.
NOTE—Rods and bearing caps should be marked before removal and replaced in same cylinder and in same relative positions.
CRANKSHAFT: Four bearing, counter-weighted type with vibration dampener mounted on front end.
Vibration Dampener—***See Nash Special Data.***
Journal Diameters—2 31/64" (2.479"). ***See "Original Bearing Sizes" in Nash Special Data.***
Bearings—Removable, steel-backed, micro-babbitt.
Clearance—.0007-.002".
Bearing Adjustment: None (no shims). Replace bearings. ***See "Crankshaft & Main Bearings" in Nash Special Data.***
Crankshaft Oil Seal: ***See "Crankshaft & Main Bearings" in Nash Special Data.***
End Thrust: Taken by front (#1) bearing (thrust plate on shaft ahead of flanged bearing).
Endplay Adjustment—***See "Crankshaft & Main Bearings" in Nash Special Data.***
Endplay—.006-.008".
CAMSHAFT: 4 bearing. Non-adjustable chain drive.
Camshaft Removal—***See Nash Special Data.***
Bearings—Steel-backed, babbitted bushings.
Clearance—.002".
End Thrust: Thrust plate assembled on front face of engine between #1 bearing and camshaft sprocket. Endplay controlled by position of timing chain sprocket (press fit on shaft). **Endplay** .004-.006".
CAUTION—Thrust plate has long oil groove on rear face which provides valve tappet lubrication from #1 camshaft bearing. Short groove on front face of plate lubricates timing chain and sprockets.
Timing Chain: Morse. Non-adjustable type. Width 1". Pitch ⅜". Length 22½" or 60 links.
Camshaft Setting: Install chain with punch mark on camshaft sprocket and inverted "V" mark on crankshaft sprocket adjacent and in line with straight-edge across shaft centers. To check, turn engine until camshaft sprocket mark at "1 o'clock" and crankshaft sprocket mark just meshing with chain, there should be 9½ links or 19 pins between marks.

VALVES	Head Diam.	Stem Diam.	Length
Intake	1 15/32"	.3407-.3412"	4 25/32"
Exhaust	1 9/32"	.3407-.3412"	4 25/32"

	Seat Angle	Lift	Stem Clearance
All Valves	①	.300"	.002-.003"

①—Valve face angle 44°. Valve angle in block 45°.
Valve Guides: Pressed in block. Remove guides using Tool J-2814. Install guides using Tool J-1429-A with adapter J-1429-4.
Valve Springs: Install springs with closed-coil end up

ENGINE

C NTINUED FR M PRECEDIN PAGE

against cylinder block and seated in counterbore in block. Spring free length 2 3/32".

►*CAUTION—Excessive wear of valve stem and guides will result if springs not properly seated in counterbore.*

	Spring Pressure	Length
Valve Closed	37-41 lbs.	1 3/4"
Valve Open	80-86 lbs.	1 7/16"

Valve Lifters: Mushroom type operating in reamed holes in block. Lifters removed from below with camshaft out of engine.

VALVE TIMING

Tappet Clearance: .015" Hot, running clearance.
Cold Setting—Intake .016". Exhaust .018".
Valve Timing: See Camshaft Setting above.
Intake Valves—Open 6° BTDC. Close 50° ALDC.
Exhaust Valves—Open 46° BLDC. Close 10° ATDC.
Valve Timing Check—With tappet clearance set at .019", #1 exhaust valve should close with piston 10° after top dead center and "DC" mark on vibration dampener 5/8" past pointer on timing chain cover. Reset tappet clearance at .015" Hot.

LUBRICATION

Engine Oiling System: Pressure to main, connecting rod, and camshaft bearings, valve tappets, and timing chain.
Crankcase Capacity—5 quarts.
Normal Oil Pressure—50 lbs. at 35 MPH.
Oil Pressure Regulator—Spring-loaded release valve under plug to rear of oil pump on lower edge of crankcase. Non-adjustable. Opens at 50-58 lbs.
Oil Pump: Gear type. Mounted externally on right side of crankcase.
Oil Filter: Optional. Replace cartridge every 8000 miles, or oftener if necessary.
Oil Pressure Gauge: King-Seeley Electric type.
Dash Unit—Warning indicator light used. Light goes on when ignition switch is turned on, and goes out when oil pressure exceeds 13 pounds.
Engine Unit—King-Seeley No. 47100.
See Miscellaneous Section for complete data.

COOLING

Cooling System: Pressure type with pressure valve and vacuum valve (relief valves) in filler cap, and positive circulation with water pump.
Capacity—12 quarts (13 quarts with heater).
Pressure Valve—AC #850501 Cap. Opens 4½ lbs.
Water Pump: New sealed-in, non-adjustable seal assembly. Grease fitting for bushing lubrication. Centrifugal pump driven from generator shaft.
See Water Pump Section for complete data.
Belt Adjustment—*See Generator Belt Adjustment.*
Removal—Drain cooling system, disconnect pump drive coupling (remove rear bolt), disconnect inlet hose, remove two pump mounting capscrews.
Thermostat: Dole. In cylinder head water outlet.
Setting—Starts to open 162-168°F. and should be fully open 20° above opening point.
Temperature Gauge: King-Seeley Electric type.
Dash Unit—KS No. 42735 (Std. Red dial).
No. 42953 (Custom Alum. dial).
Engine Unit—KS No. 42550.
See Miscellaneous Section for complete data.

CLUTCH

Borg & Beck Model 8A7—Single plate, dry disc type.
See Clutch Section for complete data.
Facings—Woven (flywheel side). Molded (pressure plate side). I.D. 5⅜". O.D. 8". Thickness ⅛".
Adjustment: Pedal free travel ½-¾". Adjust by loosening locknut and turning adjusting nut on connector link at clutch fork.

►*CAUTION—Do not disturb adjustment of clutch beam lever-to-pedal rod.*

Removal: Remove transmission (see below), disconnect clutch pedal linkage, remove clutch housing and pan, punchmark flywheel, clutch cover and pressure plate (reassemble to same marks), take out clutch fork and mounting screws in cover flange.

TRANSMISSION

Warner AS35-T96 (Std.), AS36-T96 (Optl.—with Overdrive). Constant-mesh, synchro-mesh, all helical gear type.
See Transmission Section for complete data.
Transmission Control: Mech. steering column shift.
See Transmission Section for complete data.
Removal: Move rear axle back (see Universals for procedure) to slip front universal joint off transmission. Disconnect shift levers and speedometer cable, remove two upper transmission to bell housing bolts, and install special guide bolts in their place. Remove lower bolts, slide transmission out.

OVERDRIVE

Warner R10 Type (part of AS36-T96 Transmission). New centered ring gear type. Governor controlled with electrical solenoid operation and throttle operated kick-down switch.
See Transmission Section for complete data.
Overdrive Fuse—30 ampere on overdrive relay.
Removal: Remove as a unit with transmission after disconnecting control cable and all wiring on overdrive case. See Transmission Removal (above).

UNIVERSALS

Mechanics or Saginaw. Needle bearing, cross type. Front joint slips on transmission mainshaft.
See Universal Section for complete data.
Lubrication—Pre-packed. Service every 15000 miles.
Propeller Shaft: Open drive line with front and rear universal joints.
Removal—Support rear of car at body side sills and rear axle at the housing. Loosen propeller shaft coupling nut by turning nut clockwise (facing rear of car) with Tool J-4486 (Shaft holding and Coupling wrenches). Disconnect rear shocks at axle tube, parking brake cable at adjusting yoke, and disconnect rear brake hose clip from body floor pan. Remove rear spring front bracket mounting nuts and lower the rear axle (continue to support body). Push rear axle assembly to rear; sliding propeller shaft yoke off transmission main shaft splines. Remove propeller shaft from pinion shaft by tapping with a soft hammer.
Installation—Install propeller shaft (coupling) onto pinion shaft until center of "U" joint is 4 3/16" from front face of rear axle housing. Push axle assembly to rear and slide front "U" joint onto transmission main shaft. Loosen rear spring front eye bolt and tilt front bracket so rear holes are aligned with bolts in floor pan. Raise axle assembly, aligning rear spring front bracket with mounting bolts and secure the mounting nuts. TIGHTEN THE COUPLING NUT TO 300 FOOT POUNDS TORQUE with the use of Tool J-4486 and 3' extensions applied to wrench handles. Reinstall brake clip. Connect rear shock absorbers.

REAR AXLE

Own Make. Semi-floating, hypoid gear type with Hotchkiss Drive.
See Rear Axle Section for complete data.
Ratio—(Std.) 3.8-1 (9-34), **(Overdrive)** 4.4-1 (8-35), **(Optional ratio with overdrive)** 4.1-1 (9-37). (Sta. Wgn.) 4.4-1 (8-35).
Backlash—.004-.006". Shim adjustment.
Removal: Raise and support rear end of body. Remove rear wheels, axle shaft nuts, and rear hub and drums. Disconnect parking brake cables at rear wheels, brake hose and shock absorbers. Remove rear spring clips and rear spring front eye brackets. Move axle to rear which will pull the front universal off the transmission mainshaft spline. Rear axle and propeller shaft now removed as an assy.
Axle Shaft Removal & Wheel Bearing Adjustment: See "1950-51 Nash Statesman" data.
Endplay—.002-.004".

SHOCK ABSORBERS

Delco. Direct acting, hydraulic type.

FRONT SUSPENSION

Front Suspension: New design, parallelogram type with coil springs and direct acting shock absorbers.
See Front Suspension Section for complete data.
Kingpin Inclination—8½° crosswise.
Caster—Pos. ¾° to 1¼° (1° preferred).
Camber—Pos. ¼° to ¾° (½° preferred).
Toe-In—1/8" to 3/16".

STEERING GEAR

Gemmer Model 305. Worm-and-roller type with "push-pull" adjustments.
See Steering Gear Section for complete data.

BRAKES

Service Brakes: Bendix (Lockheed) Hydraulic, self-centering (floating shoe) type. Hand lever applies rear wheel service brakes.
NOTE—No anchor pin adjustment on these brakes.
See Brake Section for complete data.
Wheel Cylinders—Front wheels 1", Rear 13/16".
Drums—Cast iron. Diameter 8".
Lining—Molded. **Lining Thickness** 3/16" (all).

►*Lining—CAUTION—Different width and length used on each shoe in each wheel as follows:*

Lining Width	Frt. Wheel	Rear Wheel
Primary Shoe	1¾"	1¼"
Secondary Shoe	1½"	1"

Clearance—All shoes just free of drag with brakes centralized (by hard brake application and releasing pedal). Eccentric adjustment for each shoe.
Braking Power—60.2% front wheels, 39.8% rear.
Hand Brake: See Service Brakes (above).

MISC. MECHANICAL

CONVERTIBLE TOP CONTROL: Electric. Cable operated with electric motor operating winding drum behind rear seat.
See Miscellaneous Section for complete data.
WINDSHIELD WIPER: Vacuum type, cable operated.
See Miscellaneous Section for complete data.

MODEL IDENTIFICATION

SERIAL NUMBER: On plate on right side of dash under engine hood.

1950 Numbers—(Kenosha) K-340001 Up. (El Segundo) KC-9501 Up.

1951 Numbers—(Kenosha) K-438001 Up. (El Segundo) KC-23501 Up.

ENGINE NUMBER: Stamped on right side of engine block above exhaust pipe.
1950 Numbers—S-92001 Up (All Plants).
1951 Numbers—S-207001 Up (All Plants).

TUNE-UP

COMPRESSION PRESSURE: 120 lbs. at cranking spd.

VACUUM READING: Steady 18-21", 450-500 RPM idle.

FIRING ORDER: 1-5-3-6-2-4. See diagram.

SPARK PLUG GAPS: .030" ± .002".
Plugs—Auto-Lite Type A5. 14 mm. Metric.

DISTRIBUTOR: Breaker Gap—.018-.024".
Cam Angle—35°. Test limits with .022" gap 31-37°. *See "Delco-Remy Cam Angle" in Electrical Equipment Section.*
Breaker Arm Spring Tension—17-21 ozs.
Automatic & Vacuum Advance—*See Ignition.*
Condenser Capacity—.18-.23 microfarad.

IGNITION TIMING: TDC. (At Top Dead Center).
Timing Procedure—*See Ignition Timing.*
Timing Mark—"/" mark on dampener aligned with pointer on chain cover above dampener.
Octane Selector—Set to give slight ping when accelerating with wide open throttle at 10-15 MPH.

CARBURETION: (1950) Carter 780S.
Idle Setting—Idle screw ¾-1¾ turns open. One screw—turning screw out gives richer mixture.
Idle Speed—450-500 RPM.
Float Level—½" from top of projection on underside of bowl cover to top of seam on free end of float (invert bowl cover and float to check level).
Accelerating Pump—Medium stroke (lower, outer hole) Normal. Inner hole (min.). Upper (max.).

Choke Setting: 2 points rich.
Fuel Pump Pressure: 3-4½ lbs. (5 lbs. maximum).

CARBURETION: (Early 1951) Carter 824S, SA, SB. (Late 1951) Carter 877S.

►*CARBURETOR PRODUCTION CHANGES (EARLY MODELS)—See Carburetor Section for complete data.*
Idle Setting—(824S, SA, SB) 1 to 2 turns open. (877S) ½ to 1½ turns open. For richer mixture, turn screw out.
Idle Speed—(Std. Trans.) 500 RPM. (Hydra-Matic) 375 RPM. with Selector Lever in "N" position.
Float Level—(824S, SA, SB) 1/2", (877S) 5/16". Measure from underside of bowl cover to top of float with bowl cover inverted and weight of float on needle valve.
Accelerating Pump—No seasonal adjustment provided and no pump stroke setting required.
Choke Setting—(824S, SA, SB) Center on index. (877S) Set 1 point lean.
Fuel Pump Pressure—3-4½ lbs. (5 lbs. maximum).

VALVE TAPPET CLEARANCE: .015" All Valves, Hot.
NOTE—Tappet adjusting screws self-locking type.
Valve Timing Check—*See Valve Timing.*

STARTING: *See Battery, Starter, Generator, Regulator.*

IGNITION

IGNITION SWITCH: Nash No. (1950) 3128822, (1951) 3131343. Located on instrument panel.

COIL: Delco-Remy No. (1950) 1115328, (1951) 1115380. Mounted on engine.
Ignition Current—2 amperes idling, 5 stopped.

CONDENSER: Delco-Remy Part No. 1869704.
Capacity—.18-.23 microfarad.

DISTRIBUTOR: Delco-Remy No. 1112351. Full automatic advance type with separate vacuum spark control and octane selector adjustment.
Breaker Gap—.018-.024".
Cam Angle—35°. Test limits with .022" gap 31-37°. *See "Delco-Remy Cam Angle" in Electrical Equipment Section.*
Breaker Arm Spring Tension—17-21 ozs.
Rotation—Counter-clockwise viewed from above.

Automatic Advance

Degrees	Distr.	R.P.M.	Degrees	Eng.	R.P.M.
Start		300	2		600
5½		400	11		800
12		1400	24		2800

Vacuum Spark Control: Delc -Remy No. 1116045. Plunger Travel 23/64".

Vacuum Advance

Distr. Degrees	Eng. Degrees	Vacuum (" of HG)
Start	0°	3.5"
8½°	17°	13-17"

IGNITION TIMING

Std. Setting ..... **At TDC.**

Timing (Using Neon Timing Light)—Align ⅛" holes in clamp arm and distributor support and insert pin. Loosen distributor hold-down screw and center octane selector scale, tighten screw. Clip Neon Timing Light to #1 spark plug, direct light at vibration dampener at timing chain cover pointer. Idle engine at 450-500 RPM., loosen clamp arm bolt, rotate distributor until "/" mark on dampener aligned with pointer, tighten clamp bolt, remove ⅛" pin in support. Check Octane Selector Setting.

Octane Selector Setting—Loosen hold-down screw in distributor, adjust scale so that slight ping secured at 10-15 MPH. with wide open throttle.

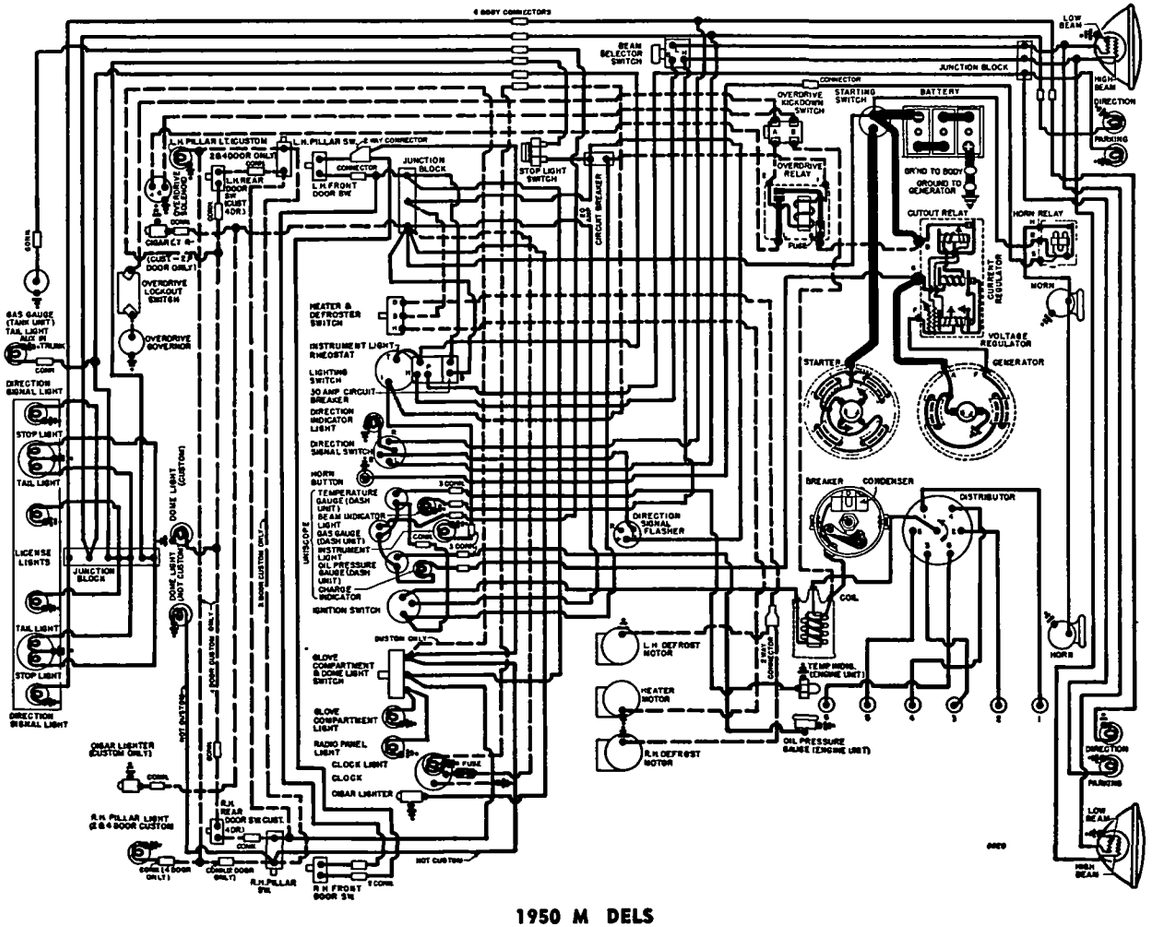

1950 M DELS

CARBURETOR

EARLY 1950 CARTER WA-1

Carter No. (1950 Early Cars) 694S, (1950 Late Cars) 780S. 1¼" Downdraft type with Climatic Control.
Casting No. on Flange (694S)—298, (780S)—779.
See Carburetor Section for complete data.
Settings (Idle Setting, Float Level, and Accelerating Pump): ***See Tune-Up data.***
►**694S Accelerating Pump Setting Change**—To improve acceleration performance. ***See "Carter WA-1" in Carburetor Section.***
Metering Rods & Jets—***See Carter Jet Table in the Carburetor Section.***
Fast Idle: Carter Single Barrel Carburetor type.
Setting—⅝" clearance between choke valve and air horn (Gauge T109-85) with throttle valve closed and stopscrew against (not on) first step of fast idle cam. Adjust by bending connector link.
See Carburetion Equipment Section for complete data.
Automatic Choke: Carter Climatic Control (Single Barrel Carburetor).
See Carburetion Equipment Section for complete data.
Setting—2 points rich.

1950-51 CARTER YF

Carter No. (Early 1951) 824S, SA, SB. (Late 1951) 877S. 1¼" Single Barrel downdraft type with Climatic Control.
See Carburetor Section for complete data.
Settings (Idle Setting, Float Level, and Accelerating Pump): ***See Tune-Up Data.***

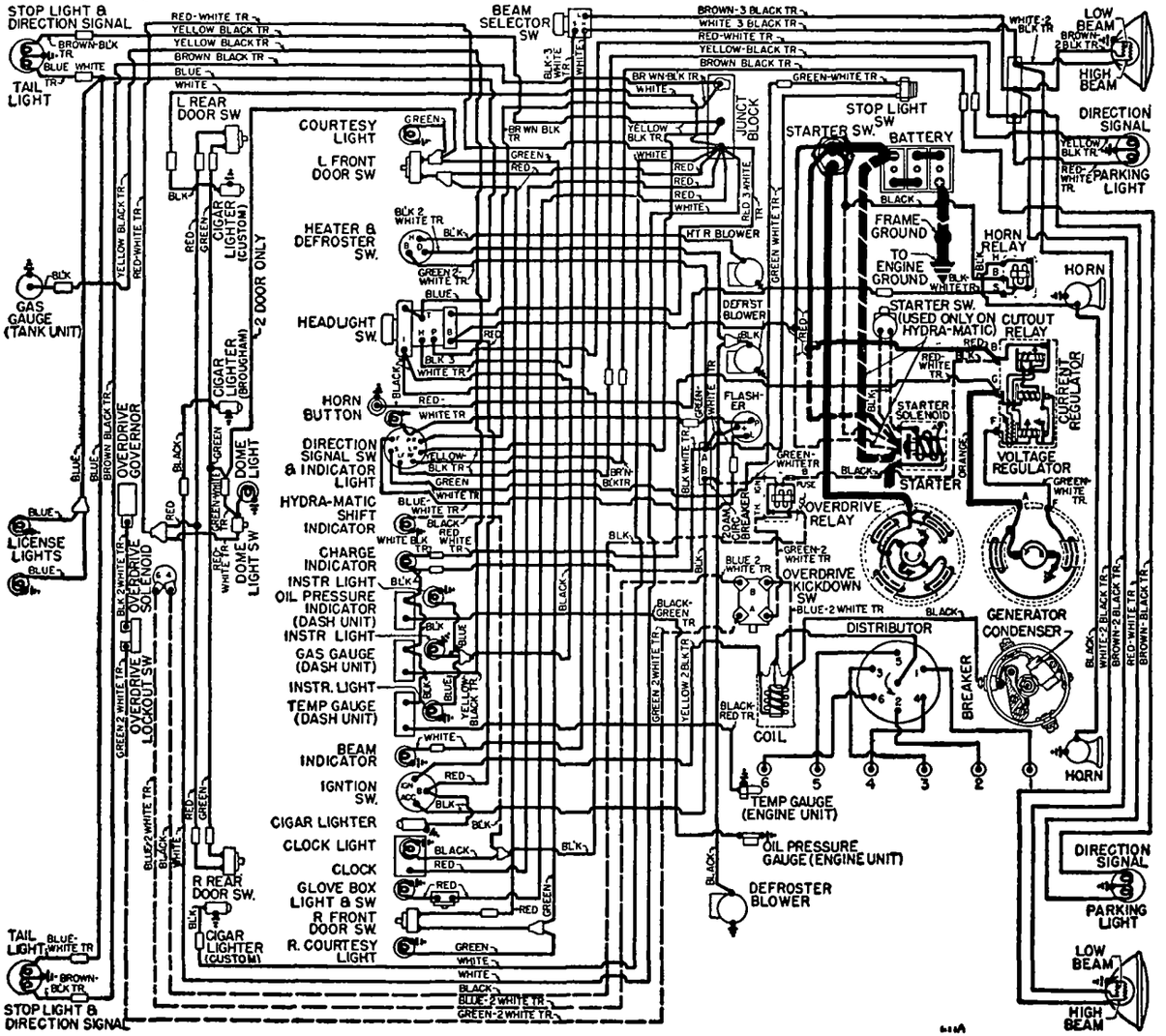

1951 M DELS

►***CARBURETOR PRODUCTION CHANGES (EARLY MODELS)—See Carburetor Section for complete data.***
Metering Rods & Jets—***See Carter Jet Table in the Carburetor Section.***
Fast Idle: .054" between throttle valve and bore of carburetor (side opposite port). Remove thermostatic coil housing and baffle plate, adjust by bending connector link at lower bend.
See Carburetion Equipment Section for complete data.
Automatic Choke: Carter Climatic Control (Single Barrel Carburetor).
Setting—(824S, SA, SB) Centered on index. (877S) Set 1 point lean.
See Carburetion Equipment Section for complete data.

CARB. EQUIPMENT

Air Cleaner: Oil Wetted type (std.), Oil Bath type (optional).
Fuel Pump: (1950) Carter No. M797S or AC type W, No. 1537398 or 1539413.
(Optl. & Overdrive Cars)—AC Type AJ, No. 1537406 combination fuel-and-vacuum pump.
Replacement Pumps—AC 532 (for W), 7406 (for AJ).
Fuel Pump: (1951) Carter No. M797S, (Hydra-Matic & Overdrive cars). AC No. 1539413 (Std. Trans. cars).
►***CAUTION—Install pumps with rocker arm ABOVE (W), or UNDER (AJ) eccentric on camshaft.***
Pressure—3-4½ lbs. (5 lbs. maximum).
See Carburetion Equipment Section for complete data.
Gasoline Gauge: Auto-Lite electric type.
Dash Unit—Auto-Lite (1950) 11982A, (1951) 12268A.
Tank Unit—Auto-Lite (1950) 11529A, (1951) 12203A.
See Carburetion Equipment Section for complete data.

BATTERY

Auto-Lite Type CT-1-13—6 volt, 13 plate, 90 Ampere Hour capacity (20 hour rate).
Grounded Terminal—Positive (+) grounded to wheelhouse (engine grounded at same point).
Location—Under hood at left side of engine.

STARTER

Delco-Remy No. (1950) 1109451 or 1109459, (1951) 1109463 (Std. Trans.), 1109465 (Hydra-Matic).
Armature—Delco-Remy No. 1882547 (for 1109451), **1915056** (for 1109459), **1917887** (for 1109463), **1917946** (for 1109465).
Drive—(1950) Barrel type Bendix Drive No. A 2033
Drive—(1951) Delco-Remy Automatic type. No. 1917888 (Std. Trans.), No. 1917948 (Hydra-Matic).
Rotation—Counter-clockwise at commutator end.
Brush Spring Tension—24-28 ounces.

Performance Data

Torque	R.P.M.	Volts	Amperes
0 ft. lbs.	6000	5.7	60
11.5 "	Lock	3.3	540

Starting Switch: (Std. Trans.) Delco-Remy No. 1996478. Mounted on toeboard, actuated by fully depressing clutch pedal.
Starting Switch: (Hydra-Matic Trans.) Delco-Remy No. 1465. Magnetic type. Control switch (Delco-Remy No. 1996044) mounted on steering column and controlled by Hydra-Matic selector lever. Operative by lifting the lever in "N" position.

GENERATOR

1950—Delco-Remy No. 1102712 or 1102730. Armature No. 1913597.
1951—Delco-Remy No. (Std.) 1102730, (Optional) 1102748. Armature No. 1913597 (for 1102730), **1917175** (for 1102748).

CONTINUED N NEXT PAGE

CONTINUED FROM PRECEDING PAGE

Maximum Charging Rate—30 amperes, 8.0 volts.
Charging Rate Adjustment—None (see Regulator).

Performance Data
(Gen. Nos. 1102712 & 1112730)

	Amperes	Volts	R.P.M.
Cold	30①	8.0	1750

Performance Data
(Gen. No. 1102748)

Cold	40	8.0	1950

①—Not maximum output. See Current Regulator.
Rotation—Counter-clockwise at commutator end.
Brush Spring Tension—28 ozs.
Field Current—1.75-1.9 amperes (for 1102712 & 1102730). 1.90-2.05 amperes (1102748) at 6.0 volts.

Belt Adjustment: Adjust whenever belt deflection exceeds ½" either way between the fan and generator shaft pulleys. To adjust, loosen fan mounting bracket screws (pivots on one screw, other screw hole slotted), raise fan, tighten screws. Belt misalignment can be corrected by installing shims behind fan bracket.

REGULATOR

Delco-Remy No. 1118302 (for 1102712 & 1102730), **No. 1118382** (for 1102748) Voltage and Current type.
"*1118300 SERIES*" regulators have screw adjustment for settings and single regulator springs.
See Electrical Equipment Section for complete data.
CAUTION—Check generator for grounded field coils and leads before changing regulator settings to correct High Charging Rate or High Voltage.

Cutout Relay
Cuts In—5.9-6.8 volts hot (set to 6.4 volts hot).
Contact Gap—.020" (same for both sets).
Air Gap—.020" (with contacts just closed).

Voltage Regulator
Setting—7.0-7.7 volts hot (set to 7.4 volts hot). Regulator is over-compensated for temperature. Should be checked with cover in place and hot.
Air Gap—.075" with armature pressed down to point where contacts are just touching.
Checking & Adjustment—*See Elec. Equip. Section.*

Current Regulator
Setting—(1118302) 32-40 amperes hot (set to 36).
Setting—(1118382) 40-46 amperes hot (set to 42).
Air Gap—.075" with armature pressed down to point where contacts are just touching.
Checking & Adjustment—*See Elec. Equip. Section.*

LIGHTING

Headlamps: Hall "Sealed Beam". Upper and lower beams controlled by selector switch on toeboard.
See Electrical Equipment Section for complete data.
Beam Indicator—Red jewel located on right side of instrument cluster face.

Switches
Lighting—Nash No. 3128824. Push-pull type on instrument panel.
Beam Selector—Nash No. 3104105.
Instrument lights controlled by turning light switch knob.

MISC. ELECTRICAL

GENERATOR CHARGE INDICATOR: Indicator light in instrument cluster. Lights when ignition turned on, should go out when generator begins to charge.
CIRCUIT BREAKERS: Two used, one mounted on Lighting Switch (30 amp.), and one mounted on left body sill brace under hood (20 amp.).
20 ampere Circuit Breaker protects Stop Light Switch, Heater and Defroster Switch, and Directional Signal Flasher.
30 ampere Circuit Breaker protects Dome Light, Pillar Light, Courtesy Light, and Main Lighting Switches.
FUSES: Electric Clock. 3 ampere in clock feed.
Overdrive—30 ampere. On Overdrive Relay.
HORNS (1950): Auto-Lite No. HW-4025 (Low Pitch), HW-4026 (High Pitch).
HORNS (1951): Delco-Remy No. 1999657 (Low Pitch), No. 1999658 (High Pitch).
Horn Current—15 amps. at 6.2 volts.
Horn Relay: Nash No. 3125879.

ENGINE

ENGINE SPECIFICATIONS: 6 cylinder, "L" head type. Cylinder cast Enbloc with intake manifold cast in block (Iso-thermal fuel intake system).
Bore—3⅛". **Stroke**—4".
Displacement—184 cu. in. **Rated Horsepower**—23.44.
Developed Horsepower—85 at 3800 RPM. (7.0-1 Hd.)
Compression Ratio—(Std.) 7.0-1, (Optional) 7.35-1.
Compression & Vacuum Reading—*See Tune-Up.*
CYLINDER HEAD & TIGHTENING TORQUES: *See Nash Special Data.*
OIL PAN REMOVAL—*See Nash Special Data.*
PISTONS: Aluminum alloy, Cam Ground, Tin plated, strut type with solid skirt. **Length**—3⅜".
Original Bore and Pistons—*See Nash Special Data.*
Weight—13½ ozs. stripped.
Removal—Pistons and rods removed from above.
Clearance—.001-.002". See Fitting New Pistons.
NOTE—Cylinder out-of-round and taper limits .004"
Fitting New Pistons: With all parts clean and dry, fit pistons so that piston will support its own weight in any portion of cylinder. If feeler gauge used, insert .002" x ½" feeler at right angles to pin bosses, pull to withdraw feeler must be 12-18 lbs.
Replacement Pistons: Furnished Std., and .002", .005", .010", .020" and Semi-finished.
Piston Installation: Pin hole in piston offset 1/16" from center-line. Install piston with heavy side away from camshaft (pin offset toward camshaft).
PISTON RINGS: 2 compression, 1 slotted oil and 1 Thompson U-Flex oil ring, (U-Flex ring in #4 groove), per piston. All rings above pin. Oil grooves drilled with oil drain holes.

Ring	Width	End Gap	Side Clearance
Compression	3/32"①	.015±.005"	.002-.004"
Oil Control	5/32"②	.015±.005"③	.002-.004"

①—.0930" ± .0005". ②—.15475" ± .00025".
③—No end gap on Thompson U-Flex ring.
Installing Rings—Stepped inner edge of both compression rings must be UP.
PISTON PIN: Diameter—.8593-.8595". **Length**—2¾".
Locked in rod.
Pin Fit in Piston—Thumb press fit or .0003" max. loose fit at room temperature (70°F.).
Replacement Pins: Standard & .001", .003" oversize.
CONNECTING ROD: Length—6⅝" (6.623-6.627").
Weight—25 ozs.
Original Bearing Sizes—*See Nash Special Data.*
Crankpin Journal Diameter—2 3/32" (2.094-2.095").
Lower Bearing—Removable steel-backed, babbitt lined type. No shims.
Clearance—.001-.0025". **Sideplay**—.006-.014".
Bearing Adjustment: None. Replace bearings.
NOTE—Tangs on bearing shells must engage slots in rod and cap. Palnuts used on rod bolt nuts.
Replacement Bearings: Std. & .002", .010" Undersize.
Installing Rods: Oil squirt hole in lower end of rod toward right (camshaft side) of engine.
NOTE—Rods and bearing caps should be marked before removal and replaced in same cylinder and in same relative positions.
CRANKSHAFT: Four bearing, counterweighted type with vibration dampener mounted on front end.
Original Bearing Sizes—*See Nash Special Data.*
Journal Diameters—2 31/64" (2.479").
Bearings—Removable, steel-backed, micro-babbitt.
Clearance—.002".
Bearing Adjustment: None. Replace bearings.
NOTE—Upper bearing halves can be rotated in and out without removing crankshaft.
Replacement Bearings: Std. & .002", .010" Undersize.
Crankshaft Oil Seal: *See "Crankshaft & Main Bearings" in Nash Special Data.*
End Thrust: Taken by front (#1) bearing (thrust plate on shaft ahead of flanged bearing).
Endplay Adjustment—*See "Crankshaft & Main Bearings" in Nash Special Data.*
Endplay—.006-.008".
CAMSHAFT: 4 bearing. Non-adjustable chain drive.
Camshaft Removal—*See Nash Special Data.*
Bearings—Steel-backed, babbitted bushings.
Clearance—.002".
End Thrust: Thrust plate assembled on front face of engine between #1 bearing and camshaft sprocket.
Endplay—.004-.006".
CAUTION—Thrust plate has long oil groove on rear face which provides valve tappet lubrication from #1 camshaft bearing. Short groove on front face of plate lubricates timing chain and sprockets.
Timing Chain: Morse. Non-adjustable type. Width 1". Pitch ⅜". Length 22½" or 60 links.
Camshaft Setting: Install chain with punch mark on camshaft sprocket and inverted "V" mark on crankshaft sprocket adjacent and in line with straightedge across shaft centers. Check setting as follows: turn engine over until punch mark on camshaft sprocket at one o'clock position with crankshaft sprocket mark just beginning to mesh with chain—there should be 9½ links or 19 pins (2 pins to each link) between marks.

VALVES:	Head Diam.	Stem Diam.	Length
Intake	1 15/32"	.3407-.3412"	4 25/32"
Exhaust	1 9/32"	.3407-.3412"	4 25/32"

	Seat Angle	Lift	Stem Clearance
All Valves	①	5/16"	.002-.003"

①—Valve face angle 44°. Valve angle in block 45°.
Valve Guides: Pressed in block. Remove guides using Tool J-2814. Install guides using Tool J-1429-A with adapter J-1429-4.
Valve Springs: Install springs with closed-coil end up against cylinder block and seated in counterbore in block. Spring free length 2 3/32".
►*CAUTION*—**Excessive wear of valve stems and guides will result if springs not properly seated in counterbore.**

	Spring Pressure	Length
Valve Closed	37-41 lbs.	1 3/4"
Valve Open	①	1 7/16"

①—(1950) 80-86 lbs., (1951) 75-82 lbs.
Valve Lifters: Mushroom type operating in reamed holes in block. Lifters removed from below with camshaft out of engine. *See "Camshaft & Bearing" in Nash Special Data for Camshaft Removal.*

VALVE TIMING

Tappet Clearance: .015" Hot, running clearance.
NOTE—Tappet adjusting screws are self-locking.

Valve Timing: See Camshaft Setting above.
Intake Valves—Open 6° BTDC. Close 50° ALDC.
Exhaust Valves—Open 46° BLDC. Close 10° ATDC.
Valve Timing Check—With tappet clearance set at .019", #1 exhaust valve should close with piston 10° after top dead center and "DC" mark on vibration dampener ⅝" past pointer on timing chain cover. Reset tappet clearance at .015" Hot.

LUBRICATION

Engine Oiling System: Pressure to main, connecting rod, and camshaft bearings, valve tappets, and timing chain.
Crankcase Capacity—5 quarts.
Normal Oil Pressure—50 lbs. at 30 MPH.
Oil Pressure Regulator—Spring-loaded release valve under plug to rear of oil pump on lower edge of crankcase. Non-adjustable. Opens at 50-58 lbs.

OIL PAN REMOVAL—*See Nash Special Data.*

Oil Pump: Gear type pump mounted on right side of engine, driven by inclined shaft.

Oil Filter: Optional. Replace cartridge at 8000 mile intervals or more often if necessary.

Oil Pressure Gauge: Auto-Lite Electric.
Dash Unit—Auto-Lite No. (1950) 11981A, (1951) 12267A. Auto-Lite Magnetic type.
Engine Unit—Auto-Lite No. 11527-A.
See Miscellaneous Section for complete data.

COOLING

Cooling System: Pressure type with pressure valve and vacuum valve (relief valves) in filler cap, and positive circulation with water pump.
Capacity—14 quarts (15 quarts with heater).
Pressure Valve—AC #850501 Filler Cap. Opens 4 lbs.

Water Pump: New sealed-in, non-adjustable seal assembly. Grease fitting for bushing lubrication. Centrifugal pump driven by flexible coupling from generator.
See Water Pump Section for complete data.
Belt Adjustment—***See Generator Belt Adjustment.***
Removal—Drain cooling system, disconnect pump drive coupling (remove rear bolt), disconnect inlet hose, remove two pump mounting capscrews.

Thermostat: Dole. In cylinder head water outlet.
Setting—Starts to open 162-168°F. and should be fully open 20° above opening point.

Temperature Gauge: Auto-Lite Electric.
Dash Unit—Auto-Lite No. (1950) 11983A, (1951) 12269A. Auto-Lite Magnetic type.
Engine Unit—Auto-Lite No. 11528-A.
See Miscellaneous Section for complete data.

CLUTCH

Borg & Beck Model 8A7—**(Std. & O.D. Trans. Cars).** Single plate dry disc type.
Identification Note—Cover stamped "987".
See Clutch Section for complete data.
Facings—Woven. 2 used. I.D. 5⅜". O.D. 8". Thickness ⅛".

Adjustment: Pedal free travel ½-¾". Adjust by loosening locknut and turning adjusting nut on connector link at clutch fork.

►***CAUTION—Do not disturb adjustment of clutch beam lever-to-pedal rod.***

Removal: Remove transmission (see below), disconnect clutch pedal linkage, remove clutch housing and pan, punchmark flywheel, clutch cover and pressure plate (reassemble to same marks), take out clutch fork and mounting screws in cover flange. Remove clutch assembly.

TRANSMISSION

Own Make. Constant-mesh, synchro-mesh (second & high), sliding gear (low & reverse), all helical gear.
See Transmission Section for complete data.

Transmission Control: Mech. steering column shift.
See Transmission Section for complete data.

Removal: Remove Rear Axle (see REAR AXLE below), disconnect transmission shift rods at levers on left side of case and speedometer cable. Support engine at rear, free rear engine mounting, take out transmission upper mounting bolts, install special guide bolts in these holes, remove lower mounting bolts, slide transmission back on guide bolts, remove from below.

OVERDRIVE

Warner Type AS8-R10B—With centered ring gear. Optional (with Nash Transmission). Governor controlled type with electric solenoid operation and throttle operated kick-down switch.
See Transmission Section for complete data.
Overdrive Solenoid—Delco-Remy No. 1118132.
Governor—Warner No. AR10B-72E.
Control Relay—Auto-Lite No. HRT-4101.
Overdrive Fuse—30 ampere. On BAT terminal of overdrive relay (on left body sill under hood).

Removal: Remove as a unit with transmission after disconnecting control cable and all wiring on overdrive case. See Transmission Removal (above).

HYDRA-MATIC TRANSMISSION

See Nash Ambassador for Nash Hydra-Matic Data.

UNIVERSALS

Mechanics 1½CR or Saginaw. One used (in torque tube adapter at rear of transmission). Tapered coil spring is installed ahead of joint to properly locate joint on driveshaft. NOTE—Universal is slip fit on transmission end, slight press fit on driveshaft.
See Universals Section for complete data.

Propeller Shaft (Std. & Overdrive Cars): Steel shaft with pre-lubricated, rubber mounted center bearing installed in torque tube. Shaft splined at both ends, universal light press fit on forward end, coupling at rear end is a tight press fit.

Propeller Shaft (Hydra-Matic Drive): One piece tubular steel shaft with one universal at forward end and companion flange at rear. No center bearing.

►***CAUTION***—When connecting propeller shaft coupling to pinion shaft, coupling nut must be tightened to 300 ft. lbs. to prevent loosening in service.
See Nash Rear Axle in the Rear Axle Section for Propellor Shaft Data.

REAR AXLE

Own Make. Semi-floating, hypoid gear type with Torque Tube Drive.
See Rear Axle Section for complete data.
Ratio—**(Std.)** 4.4-1 (8-35). **(Overdrive)** 4.9-1 (8-39). **(Hydra-Matic)** 3.8-1 (9-34).
Backlash—.004-.006". Shim adjustment.

Removal: Jack up and support rear end of body. Disconnect rear brake cable at equalizer, torque tube at rear of transmission, brake hose and shock absorbers at axle end (allow shocks and brake hose to hang from body). Roll axle assembly out from under car. ***For Torque Tube Trunnion Bracket Adjustment, see Nash Rear Axle in Rear Axle Section.***
Axle Shaft Removal—Remove wheel, pull drum (use hub puller J-1644). Disconnect brake line and cable. Remove backing plate mounting bolts nuts, take off oil seal retainer, backing plate, and wheel bearing adjusting shims. Withdraw axle shaft using Puller J-2498, do not drag shaft on inner oil seal.

Wheel Bearing Adjustment—Shims located between backing plate and flanged end of housing. To adjust, remove wheel and backing plate (above), add or remove shims for endplay. **Endplay**—.002-.004".

Rear Suspension: Coil spring type with conventional rear axle. ***See Rear Axle Section for complete data.***

SHOCK ABSORBERS

Delco or Monroe. Direct acting, Hydraulic.

FRONT SUSPENSION

Front Suspension: Independent, parallelogram type. with coil springs and direct acting shock absorbers.
NOTE—Entire assembly mounted on box-section pressed steel cross-member attached to frame and body through 4 rubber-bushed bolts.
See Front Suspension Section for complete data.
Kingpin Inclination—8½° crosswise.
Caster—0° desired. Limits 0° to Pos. ½°. Shim adjustment ("C" washers) between upper control arm inner pivot and frame bracket.
Camber—0° desired. Limits Neg. ¼° to Pos. ¼°. Shim adjustment as for Caster (above).
Toe-In—1/16" to 3/16". Loosen clamp at both ends of adjustable tubes in each tie rod. Turn tubes
Steering Geometry—Inner wheel 23½° + ½° — 0°. Outer wheel 20°.

STEERING GEAR

Gemmer Model 305. Worm-and-roller type with "push-pull" adjustments.
See Steering Gear Section for complete data.

BRAKES

Service Brakes: Bendix (Lockheed) Hydraulic, self-centering (floating shoe) type. Hand lever applies rear wheel service brakes.
NOTE—No anchor pin adjustment on these brakes.
See Brake Section for complete data.
Wheel Cylinders—Diam.: Front wheels 1", Rear ⅞".
Drums—Cast-iron. Diameter 9".
►***Lining—CAUTION—Different width and length used on each shoe in each wheel as follows:***

Brake Shoe	Width	Length	Thickness
Forward (Primary)	2"	10"	3/16"
Rear (Secondary)	1 3/4"	7½"	3/16"

Lining is moulded type.
Clearance—.015" heel and toe. Eccentric adjustment for each shoe.
Braking Power—57.6% front wheels, 43.4% rear.

Hand Brake: See Service Brakes (above).

MISC. MECHANICAL

Windshield Wiper: Cable Operated—vacuum type.
See Miscellaneous Section for complete data.

MODEL IDENTIFICATI N

SERIAL NUMBER: On plate on right side of dash under engine hood.
1950 Numbers—(Kenosha) R-556001 Up. (El Segundo) RC-3501 Up.
1951 Numbers—(Kenosha) R-600501 Up. (El Segundo) RC-8701 Up.

ENGINE NUMBER: Stamped on pad on right side of engine block at upper front corner.
1950 Numbers—A-46001 Up (All Plants).
1951 Numbers—A-97001 Up (All Plants).

TUNE-UP

COMPRESSION PRESSURE: 130 lbs. at cranking speed.

VACUUM READING: Steady 18-21", 450-500 RPM. Idle. (375 RPM. on Hydra-Matic Drive cars).

FIRING ORDER: 1-5-3-6-2-4. See diagram.

SPARK PLUG GAP: .030" ± .002".
Plugs—Auto-Lite A5, or AC 44, 14 mm.

DISTRIBUTOR: Breaker Gap—.018-.024".
Cam Angle—35°. Test limits with .022" gap 31-37°.
See "Delco-Remy Cam Angle" in Electrical Equipment Section.
Breaker Arm Spring Tension—17-21 ozs.
Automatic & Vacuum Advance—*See Ignition.*
Condenser Capacity—.18-.23 microfarad.

IGNITION TIMING: TDC. (At Top Dead Center).
Timing Procedure—*See Ignition Timing.*
Timing Mark—"/" mark on dampener aligned with pointer on chain cover above dampener.

CARBURETION:
Idle Setting—Set idle adjusting screw ½-1½ turns open. Turn out for richer mixture.
Idle Speed (standard)—450-500 RPM.
Idle Speed—(Hydra-Matic) 375 RPM. with Selector Lever in "N" position.
Float Level—½" from top of projection on underside of bowl cover to top of seam on free end of float (invert bowl cover and float to check level).
Accelerating Pump—Inner Hole (med. stroke) Normal, Lower Hole (max.) winter, Upper (min.) Summer.

Choke Setting: Centered (coil housing at index).

Fuel Pump Pressure: 3-4½ lbs. 5 lbs. Maximum.

VALVE TAPPET CLEARANCE: .012" Intake valves. .016" Exhaust valves. Engine hot.

►*NOTE—This clearance supersedes previous setting on 1950-51 cars only.*

IGNITION

IGNITION SWITCH: Nash No. (1950) 3128822, (1951) 3131343. Located on instrument panel.

COIL: Delco-Remy No. 1115380. Mounted on engine.
Ignition Current—2 amperes idling, 5 stopped.

CONDENSER: Delco-Remy Part No. 1869704.
Capacity—.18-.23 microfarad.

DISTRIBUTOR: Delco-Remy No. (1950) 1110216 or 1110223, (1951) 1110223. Full automatic advance type with auxiliary vacuum spark control.
Breaker Gap—.018-.024".
Cam Angle—35°. Test limits with .022" gap 31-37°.
See "Delco-Remy Cam Angle" in Electrical Equipment Section.
Breaker Arm Spring Tension—17-21 ozs.
Rotation—Clockwise viewed from above.

Automatic Advance

Degrees Distr.	R.P.M.	Degrees Eng.	R.P.M.
Start	300	2	600
8	650	16	1300
15	1350	30	2700

Vacuum Spark Control: Delco-Remy No. 1116044.

Vacuum Advance

Distr. Degrees	Eng. Degrees	Vacuum (" of HG)
Start	0°	4-6"
6°	12°	14-16"

IGNITION TIMING

Std. Setting ..... **At TDC.**
NOTE—Car manufacturer recommends using Neon Timing Light to set Ignition Timing.
Timing—Clip Neon Timing Light to #1 spark plug, direct light at vibration dampener at timing chain cover pointer. Idle engine at 450-500 RPM., loosen clamp arm bolt, rotate distributor until "/" mark on dampener aligned with pointer, tighten clamp bolt.

CARBURETOR

Carter No. (Early 1950 Cars) 683S, (Late 1950 & 1951) 746S. 1¼" single barrel downdraft with Climatic Control.

Casting No. on Flange—(683S) 290, (764S) 679.
See Carburetor Section for complete data.

Settings (Idle Setting, Float Level, and Accelerating Pump): *See Tune-Up data.*

Metering Rods & Jets—*See Carter Jet Table in the Carburetor Section.*

►**683S Metering Rod Production Change**—*See "Carter WA-1" in Carburetor Section.*

Hydra-Matic Throttle Linkage Adjustment: *See Nash Hydra-Matic Drive in Transmission Section.*

Fast Idle: Carter Single Barrel Carburetor type.
Setting—⅝" clearance between choke valve and air horn (Gauge T109-85) with throttle valve closed and stopscrew against (not on) first step of fast idle cam. Adjust by bending connector link at lower offset (Tool T109-41).
See Carburetion Equipment Section for complete data.

Automatic Choke: Carter Climatic Control (Single Barrel Carburetor).
Setting—Centered (coil housing at index).
See Carburetion Equipment Section for complete data.

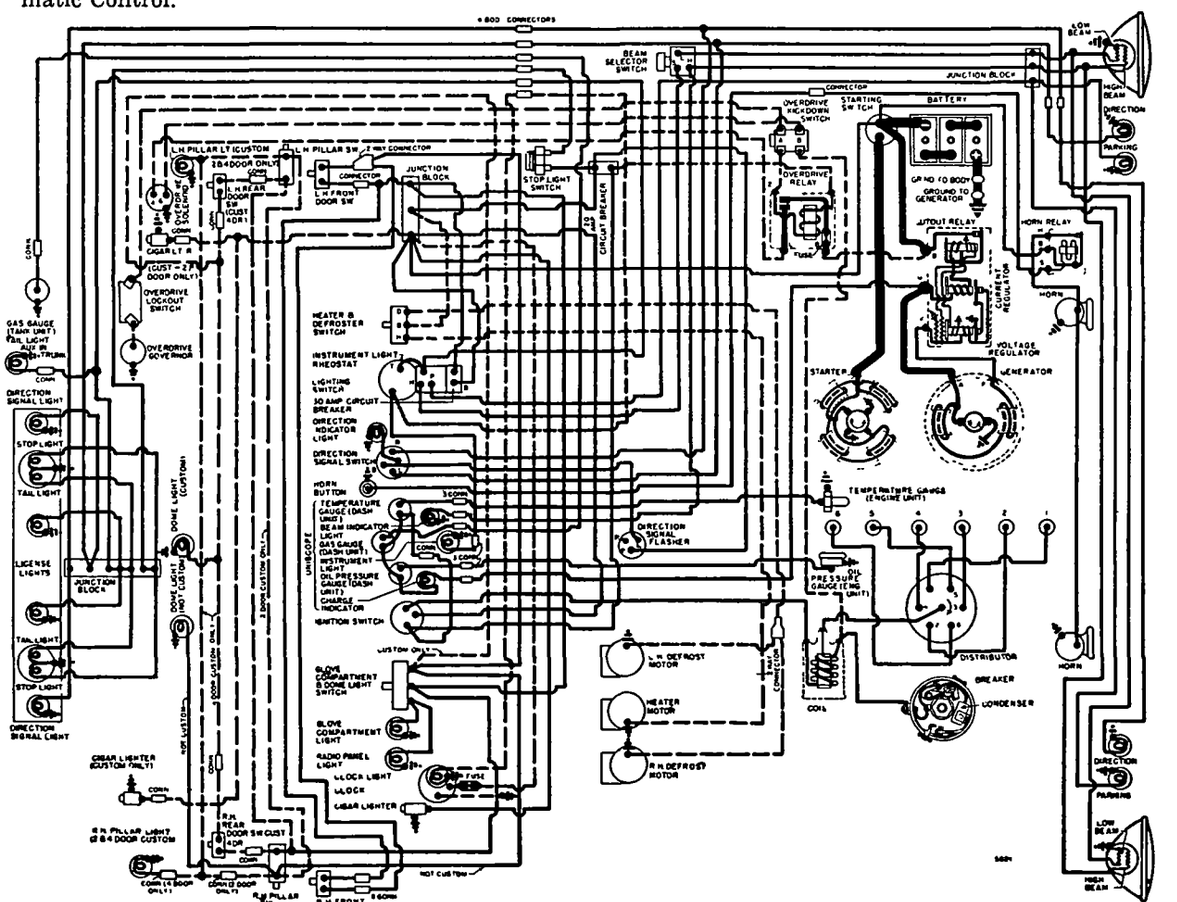

1950 MODELS

CARB. EQUIPMENT

Air Cleaner: AC No. 1544443 Oil-wetted type (Std.), Filter Element #3. Oil-bath Cleaner AC No. 1544393, Element #7-S.

Fuel Pump: (Std.) AC Type W, No. 1537389 or 1539412, Carter No. M-816-S.
(Optional, Overdrive & Hydra-Matic Cars) AC Type AJ, No. 1539216 or Carter No. M-798-S.

►***CAUTION—Install pumps with rocker arm ABOVE (W), or UNDER (AJ) eccentric on camshaft.***
See Carburetion Equipment Section for complete data.

Pressure—3-4½ lbs. (5 lbs. maximum).

Gasoline Gauge: Auto-Lite electric type.
Dash Unit—Auto-Lite No. (1950) 11982A, (1951) 12268A.
Tank Unit—Auto-Lite No. (1950) 11529A, (1951) 12203A.
See Carburetion Equipment Section for complete data.

BATTERY

Auto-Lite Type CT-1-15—6 volt, 15 plate, 105 Ampere Hour Capacity (20 hour rate).

Starting Capacity—133 amperes for 20 minutes.

Zero Capacity—300 amperes for 3.5 minutes. Five second voltage—4.2 volts.

Grounded Terminal—Positive (+) grounded to wheelhouse (engine grounded at same point).

Location—Left side of engine compartment under hood.

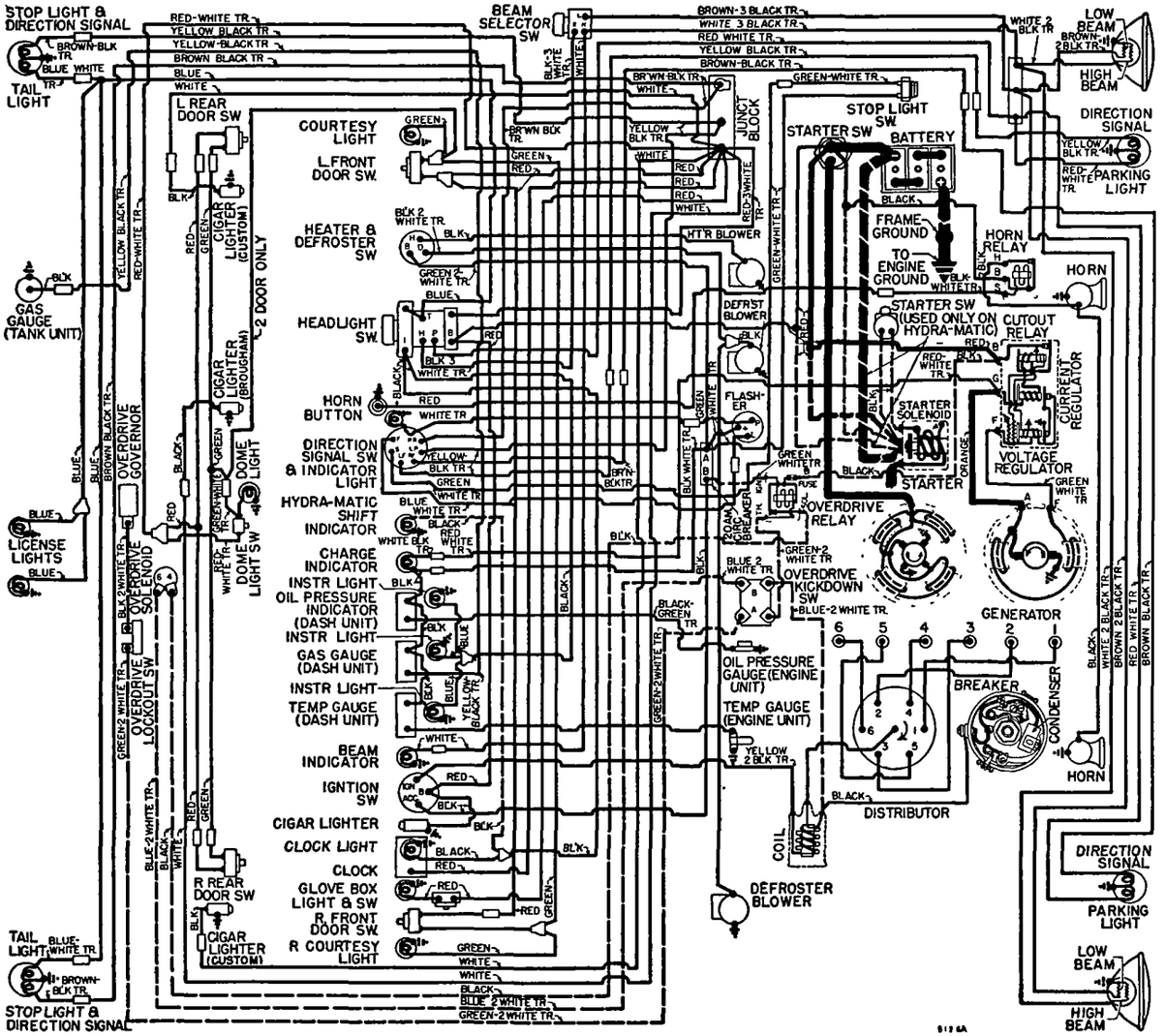

1951 MODELS

STARTER

Standard.....Delco-Remy 1107950. Arm. 1911832
Hydra-Matic.....Delco-Remy 1107965. Arm. 1867897
Drive (1107950 & 959)—Bendix No. A-2033.
Drive (1107965)—Delco-Remy No. 1873789. Overrunning clutch with solenoid pinion shift.
Rotation—Counter-clockwise at commutator end.
Brush Spring Tension—24-28 ozs.

Performance Data—1107950 & 959

Torque		R.P.M.	Volts	Amperes
0	ft. lbs.	5500	5.7	65
16	"	Lock	3.0	600

Performance Data—1107965

0	ft. lbs.	5500	5.7	80①
14	"	Lock	3.0	600

①—Includes current draw of starter switch.

Starting Switch (Std.): Delco-Remy No. 1996478. On toeboard, actuated by fully depressing clutch pedal.

Starting Switch (Hydra-Matic): Delco-Remy Solenoid No. 1118136 (no relay) used mounted on starter. Control Switch (Delco-Remy No. 1996044) mounted on steering column and controlled by Hydra-Matic selector lever. Operative only with lever in "N."

►***CAUTION***—Overrunning clutch pinion clearance must be adjusted whenever solenoid removed from starter.
See Electrical Equipment Section for complete data.
Starter Switch Adjustment—***See Nash Hydra-Matic Drive in Transmission Section.***

GENERATOR

1950—Delco-Remy No. 1102712 or 1102730. Armature No. 1913597.
1951—Delco-Remy No. (Std.) 1102730, (Optional) 1102748. Armature No. 1913597 (for 1102730), **1917175** (for 1102748).
Two-brush with voltage and current regulation.
Maximum Charging Rate—30 amperes, 8.0 volts.
Charging Rate Adjustment—None (see Regulator).

Performance Data
(Gen. Nos. 1102712 & 1102730)

	Amperes	Volts	R.P.M.
Cold	30①	8.0	1750

Performance Data
(Gen. No. 1102748)

	Amperes	Volts	R.P.M.
Cold	40	8.0	1950

①—Not maximum output. See Current Regulator.
Rotation—Counter-clockwise at commutator end.
Brush Spring Tension—28 ozs.
Field Current—1.75-1.9 amperes (for 1102712 & 1102730). **1.90-2.05 amperes** (for 1102748). All at 6.0 volts.

Belt Adjustment: Adjust whenever belt deflection exceeds ½" either way between the fan and generator shaft pulleys. To adjust, loosen fan mounting bracket screws (pivots on one screw, other screw hole slotted), raise fan, tighten screws. Belt misalignment can be corrected by installing shims behind fan bracket.

REGULATOR

Delco-Remy No. 1118302 (for 1102712 & 1102730), **No. 1118382** (for 1102748. Voltage and Current Regulator.

►***"1118300 SERIES"*** regulators have screw adjustment for settings and single regulator springs.
See Electrical Equipment Section for complete data.

CONTINUED ON NEXT PAGE

C NTINUED FR M PRECEDING PAGE

CAUTION—Check generator for grounded field coils and leads before changing regulator settings to correct High Charging Rate or High Voltage.

Cutout Relay

Cuts In—5.9-6.8 volts hot (set to 6.4 volts hot).
Contact Gap—.020" (same for both sets).
Air Gap—.020" (with contacts just closed).

Voltage Regulator

Setting—7.0-7.7 volts hot (set to 7.4 volts hot). Regulator is over-compensated for temperature. Should be checked with cover in place and hot.
Air Gap—.075" with armature pressed down to point where contacts are just touching.
Checking & Adjustment—*See Electrical Equipment Section.*

Current Regulator

Setting—(1118302 & 1118330) 32-40 amperes hot (set to 36 hot).
Setting—(11183820) 40-46 amperes hot (set to 42 hot).
Air Gap—.075" with armature pressed down to point where contacts are just touching.
Checking & Adjustment—*See Electrical Equipment Section.*

LIGHTING

Headlamps: Hall "Sealed Beam" type. Upper and lower beams controlled by selector switch on floor. *See Electrical Equipment Section for complete data.*
Beam Indicator—Red jewel located on right side of instrument cluster face.

Switches

Lighting—Nash No. 3128824. Push-pull type on instrument panel.
Beam Selector—Nash No. 3104105.
Instrument lights controlled by turning light switch

MISC. ELECTRICAL

GENERATOR CHARGE INDICATOR: Indicator light in instrument cluster. Lights when ignition turned on should go out when generator begins to charge.
CIRCUIT BREAKERS: Two used, one mounted on Lighting Switch (30 amp.), and one mounted on left body sill brace under hood (20 amp.).
20 ampere Circuit Breaker protects Stop Light Switch, Heater and Defroster Switch, and Directional Signal Flasher.
30 ampere Circuit Breaker protects Dome Light, Pillar Light, Courtesy Light, and Main Lighting Switches.
FUSES: Electric Clock. 3 ampere in clock feed.
Overdrive—30 ampere. On overdrive Relay on left body sill brace under hood.
HORNS (1950): Auto-Lite No. HW-4025 (Low Pitch), HW-4026 (High Pitch).
HORNS (1951): Delco-Remy No. 1999657 (Low Pitch), No. 1999658 (High Pitch).
Horn Relay: Nash No. 3125879.
Contact Gap—.026".
Air Gap—.016-.020" with contacts closed.
Contacts Close—1.5-3.0 volts.
Contacts Open—.5 volts minimum (open from seal).

ENGINE

ENGINE SPECIFICATIONS: 6 cylinder, valve-in-head type. Cylinders cast Enbloc with intake manifold cast in block. (Iso-thermal fuel intake system).
Bore—3⅜". *See "Original Bore & Pistons" in Nash Special Data.*
Stroke—4⅜". **Displacement**—234.8 cu. ins.
Rated Horsepower—27.34.
Developed Horsepower—115 at 3400 RPM.
Compression Ratio—7.3-1 (Std.), 7.5-1 (Optional).
CYLINDER HEAD & TIGHTENING TORQUES: *See Nash Special Data.*
OIL PAN REMOVAL—*See Nash Special Data.*
PISTONS: Aluminum alloy, Cam Ground, Tin plated, strut type with split skirt. **Length**—3⅞".
Weight—12½ ozs. (stripped).
Clearance—.001-.002". See Fitting New Pistons.
NOTE—Cylinder out-of-round and taper limits .004".
Removal—Pistons and rods removed from above.
Original Piston & Bore Sizes: *See Nash Special Data.*
Fitting New Pistons: With all parts clean and dry, fit pistons so that piston will support its own weight in any portion of cylinder. If feeler gauge used, insert .002" x ½" feeler at right angles to pin bosses on side opposite slot, 12-18 lbs. pull to withdraw.
Replacement Pistons: Furnished Std., and .002", .005", .010", .020" and Semi-finished.
Installing Pistons: Piston slot toward left side (opposite side from oil squirt hole in rod).
PISTON RINGS: 2 compression, 1 slotted oil and 1 Thompson U-Flex oil ring, (U-Flex ring in #4 groove), per piston. All rings above pin. Oil ring grooves drilled with oil drain holes.

Ring	Width	End Gap	Side Clearance
Comp.	.0930±.0005"	.015±.005"	.002-.004"
Oil Control	.15475"	.015±.005"①	.002-.004"

①—No end gap on Thompson U-Flex oil rings.
Installing Rings—Top compression ring inner groove up, lower compr. ring outer groove down.
PISTON PIN: Diameter—.8746". **Length**—2.824".
Floating type, with lock ring at each end.
NOTE—Pin hole in piston offset toward camshaft.
Pin Fit in Piston—Palm push fit with piston heated (heat piston in boiling water).
Pin Fit in Rod Bushing—Light thumb push fit at room temperature.
Replacement Pins: Standard & .001", .003" oversize.
CONNECTING ROD: Length—8¾". **Weight**—36¼ ozs.
Crankpin Journal Diameter—2.000-2.001". *See "Original Bearing Sizes" in Nash Special Data.*
Lower Bearing—Removable steel-backed, babbitt lined type. No shims.
Clearance—.001-.002". **Sideplay**—.008-.014".
►*CENTER MAIN BEARING REMOVAL NOTE*—Oil pump must be removed before removing center main bearing cap. *See "Oil Pump" in Nash Special Data.*
Bearing Adjustment: None. Replace bearings.
NOTE—Tangs on bearing shells must engage slots in rod and cap. Palnuts used on rod bolt nuts.
Replacement Bearings: Std. & .002", .010" Undersize.
Installing Rods: Oil spray hole in lower end of rod must be toward camshaft (right) side of engine.
NOTE—Rods and bearing caps should be marked before removal and replaced in same cylinder and in same relative position.
CRANKSHAFT: Seven bearing, counterweighted type with vibration dampener mounted on front end.
Journal Diameters—2 31/64" (2.479"). *See "Original Bearing Sizes" in Nash Special Data.*
Bearings—Removable, steel-backed, micro-babbitt.
Clearance—.0018".
Bearing Adjustment: None. Replace bearings.
Replacement Bearings: Std. & .002", .010" Undersize.
Crankshaft Rear Oil Seal: *See Nash Special Data.*
End Thrust: Taken by Center (#4) bearing.
Endplay—.0055±.002".
CAMSHAFT: Non-adjustable 2 sprocket chain drive.
Camshaft Removal—*See Nash Special Data.*
Bearings—Steel-backed, babbitted bushings.
Clearance—.002".
End Thrust: Taken by front bearing, controlled by position of chain sprocket (press fit on shaft).
Endplay—.004-.006".
Timing Chain: Morse. Non-adjustable type. Width 1". Pitch ⅜". Length 22½" or 60 links.
Camshaft Setting: Install chain with punch mark on camshaft sprocket and inverted "V" mark on camshaft sprocket adjacent and in line with straightedge across shaft centers. Check setting as follows: turn engine over until punch mark on camshaft sprocket at one o'clock position with crankshaft sprocket mark just beginning to mesh with chain—there should be 9½ links or 19 pins (2 pins to each link) between marks.

VALVES:	Head Diam.	Stem Diam.	Length
Intake	1 25/32"①	.3725-.3740"	5 31/64"
Exhaust	1 15/32"	.3725-.3740"	5 31/64"

①1¾"—1950 Cars.

1950—	Seat Angle	Lift	Stem Clearance
Intake	①	11/32"	.002-.004"
Exhaust	①	3/8"	.002-.004"
1951—	**Seat Angle**	**Lift**	**Stem Clearance**
Intake	②	.365"	.002-.004"
Exhaust	①	.3635"	.002-.004"

①—Valve face angle 44°. Valve angle in block 45°.
②—Valve face angle 29°. Valve angle in block 30°.
ROCKER ARM & VALVE LUBRICATION: *CAUTION*—Hollow bolt must be used in front mounting bolt hole of rocker arm assembly for proper lubrication.
►*1951 VALVE STEM OIL SEAL ASSEMBLY CAUTION*—*See "Valve Stem Oil Seal Assembly" in Nash Special Data.*
Valve Guides: *1950 PRODUCTION CHANGE—Two different settings used.* Early 1950 cars, install valve guides to a height of 11/16" above boss. Late 1950 & 1951, install guides to a height of 25/32". *CAUTION—Check height of original guide and install new guide to same height.*
Valve Springs: Single springs used.
Free Length—2 1/16".

Valve Spring Specifications

	Spring Pressure	Spring Length
Valve Closed	53-58 lbs.	1 13/16"
Valve Open	①	1 7/16"

①—(1950) 141-151 lbs. (1951) 144-154 lbs.
Installing Springs—Closely coiled end of springs should be installed toward the valve seat.
Valve Lifters: Mushroom type. Lifter guide holes in block. Remove from below with camshaft out.

VALVE TIMING

Tappet Clearance: .015" Intake, .018" Exhaust, HOT.
Valve Timing: *See Camshaft Setting above.*
Intake Valves—Open 8°30' BTDC. Close 55°30' ALDC.
Exhaust Valves—Open 53°30' BLDC. Close 10°30' ATDC.
Valve Timing Check—Set No. 6 piston on TDC in firing position, then set valves on No. 1 cylinder to .003" clearance. Slowly rock crankshaft back and forth. If timing is set correctly, the exhaust valve should open before the D.C. mark on vibration dampener lines up with pointer. **Note the amount of opening.** Now the intake valve should open an equal distance after the D.C. mark passes the pointer.

LUBRICATION

Engine Oiling System: Pressure to main, connecting rod, and camshaft bearings, piston pins, and timing chain.
Crankcase Capacity—6 quarts.
Normal Oil Pressure—50 lbs. at 30 MPH.
Oil Pressure Regulator—Located in body of pump. Not adjustable. Opens at 50-58 lbs.

Oil Pump: Gear type in crankcase mounted on center main bearing cap.
See "Oil Pump" in Nash Special Data.

Cylinder Cover Vent: Vent located on front of cover just behind water outlet elbow to allow escape of vapors inside cover. Turn to open position at all times, especially winter, except for hot dusty driving.

Oil Filter: Replace cartridge at 8000 mile intervals or more often if necessary.

Oil Pressure Gauge: Auto-Lite Electric.
Dash Unit—Auto-Lite No. (1950) 11981A, (1951) 12267A.
Engine Unit—Auto-Lite No. 11527-A.
See Miscellaneous Section for complete data.

COOLING

Cooling System: Pressure type with pressure valve and vacuum valve (relief valves) in filler cap, and positive circulation with water pump.
Capacity—17 quarts (18 quarts heater).
Pressure Valve—AC 850501 (Filler Cap). Opens at 4 lbs.

Water Pump: New sealed-in, non-adjustable type.
See Water Pump Section for complete data.
Removal—Drain cooling system, disconnect pump drive coupling (remove rear bolt), disconnect inlet hose, remove pump mounting capscrews.

Belt Adjustment: *See Generator Belt Adjustment.*

Thermostat: Dole. In water outlet on cylinder head.
Setting—Starts to open at 162-168°F. and should be fully open 20° above starting point.

Temperature Gauge: Auto-Lite Electric.
Dash Unit—Auto-Lite No. (1950) 11983A. (1951) 12269A.
Engine Unit—Auto-Lite No. 11528-A.
See Miscellaneous Section for complete data.

CLUTCH

Borg & Beck Model 10A7—Assembly No. 950 stamped on cover. Single plate, dry disc type.
See Clutch Section for complete data.
Facings—Woven type, 2 used. Inside Diameter 7". Outside Diameter 10". Thickness ⅛".

Adjustment: Pedal free travel ½-¾". Adjust by loosening locknut and turning adjusting nut on connector link at clutch fork.

►*CAUTION—Do not disturb adjustment of clutch beam lever-to-pedal rod.*

Removal: Remove transmission (see below), disconnect clutch pedal linkage, remove clutch housing and pan, punchmark flywheel, clutch cover and pressure plate (reassemble to same marks), take out clutch fork and mounting screws in cover flange.

TRANSMISSION

Warner Model (Std. Without Overdrive) AS25-T86E. (Optional With Overdrive Early 1950) AS26-T86E, (Optional With Overdrive Late 1950 & 1951) AS46-T86E. Constant mesh, synchro-mesh (Second & High), sliding gear (Low & Reverse).
See Transmission Section for complete data.

Transmission Control: Mechanical steering col. shift.
See Transmission Section for complete data.

Removal: Remove Rear Axle (see REAR AXLE below), disconnect transmission shift rods at levers on left side of case and speedometer cable. Support engine at rear, free rear engine mounting, take out transmission upper mounting bolts, install special guide bolts in these holes, remove lower mounting bolts, slide transmission back, remove from below.

OVERDRIVE

Warner Type R10 (part of AS26-T86E & AS46-T86E Transmission). Optl. Governor controlled type with electrical solenoid operation and throttle operated kick-down switch. Overdrive in AS46-T86E assembly is new "centered ring gear" type.
See Transmission Section for complete data.
Overdrive Solenoid—Delco-Remy No. 1118132.
Governor—Auto-Lite No. TGE-4005.
Control Relay—Auto-Lite No. HRT-4101.
Overdrive Fuse—20 ampere. On BAT terminal of overdrive relay (on left body sill under hood).

Removal: Remove as a unit with transmission after disconnecting control cable and all wiring on overdrive case. See Transmission Removal (above).

HYDRA-MATIC DRIVE

OPTIONAL EQUIPMENT

Description—Four-speed planetary type automatic transmission and fluid coupling.

►*1951 MODELS HAVE HYDRAULICALLY OPERATED "CONE TYPE CLUTCH" REVERSE MECHANISM.*
See Transmission Section for complete data.

Lubrication—Check fluid level every 1000 miles. Add fluid, as required, to maintain level at "F" mark on dip stick. Drain and refill every 15,000 miles. Use Hydra-Matic Fluid (Automatic Transmission Fluid Type "A") as furnished in containers marked with approval symbol "AQ-ATF".
Capacity—Approx. 11 qts. (refilling after draining). **12 qts.** (when transmission disassembled).
Checking Fluid Level—Set hand brake, place selector lever in "N" position, start engine and idle for a minimum of two minutes after transmission has reached operating temperature. Roll back front floor mat on right side, remove inspection cover in floor pan, clean all dirt and lint from floor and around oil level indicator on left side of transmission case. Place selector lever in "D" position and idle engine with lever in this position while checking fluid level. Fluid level should be at "F" mark on dip stick, add fluid to bring level up to "F" mark.

►*CAUTION—Do not fill above "F" mark on dip stick.*
Draining & Refilling—*See "Hydra-Matic Drive" in Transmission Section.*
Hydra-Matic Linkage Adjustment—*See "Nash Hydra-Matic Drive" in Transmission Section.*

Removal: *See "Nash Hydra-Matic Drive" in Transmission Section.*

UNIVERSALS

Mechanics or Saginaw—Roller bearing type, 1 used.
See Univerals Section for complete data.

Propeller Shaft: (Synchro-mesh Trans.) One piece steel shaft with pre-lubricated, rubber mounted center bearing installed in torque tube.
(1950 Hydra-Matic Drive) Two shafts used. Front shaft is tubular and is splined to rear solid steel shaft which is supported in the center with a pre-lubricated, rubber mounted bearing installed in the torque tube.
(1951 Hydra-Matic Drive) One piece shaft.
See Nash Rear Axle in the Rear Axle Section for Propeller Shaft Data.

REAR AXLE

Own Make. Semi-floating, hypoid gear type with torque tube drive.
See Rear Axle Section for complete data.
Ratio—(Std.) 4.4-1 (9-40), (Overdrive) 4.1-1 (10-41), (Hydra-Matic) 3.5-1 (11-39).
Backlash—.004-.006". Shim adjustment.

Removal: Raise and support rear end of car. Disconnect rear brake cable at center equalizer. Disconnect torque tube at rear of transmission. Disconnect brake hose and shock absorbers at the axle end, (will hang from the body). Roll axle free from car.
Axle Shaft Removal—Remove wheel, pull drum (use hub puller J-1644). Disconnect brake line and cable. Remove backing plate mounting bolts nuts, take off oil seal retainer, backing plate, and wheel bearing adjusting shims (check thickness of shims, replace same amount when re-assembling). Withdraw axle shaft using Puller J-2498, do not drag on inner seal.
Wheel Bearing Adjustment—Shims located between backing plate and flanged end of housing. To adjust, remove wheel and backing plate (above), add or remove shims for endplay. **Endplay**—.002-.004".

SHOCK ABSORBERS

Delco or Monroe—Direct acting, hydraulic type.

FRONT SUSPENSION

Front Suspension: Independent, linked parallelogram type with coil springs and direct acting shocks.
See Front Suspension for complete data.
Kingpin Inclination—8½° crosswise.
Caster—0° desired. Limits 0° to Pos. ½°. Shim adjustment ("C" washers) at upper control arms.
Camber—0° desired. Limits Neg. ¼° to Pos. ¼°. Shim adjustment as for Caster (above).
Toe-In—1/16" to 3/16". Loosen clamp at both ends of adjustable tubes in each tie rod. Turn tubes equally.
Steering Geometry—Inner wheel 23° plus ½°, minus 0°. Outer wheel 20°.

STEERING GEAR

Gemmer Model 305—Worm-and-roller type with "push-pull" adjustments.
See Steering Gear Section for complete data.

BRAKES

Service Brakes: Bendix hydraulic, duo-servo, single anchor type without Eccentric Adjustment. Hand lever applies rear wheel service brakes.
See Brake Section for complete data.
Drums—Cast-iron. Diameter 10".
Lining—Moulded type. Width 2". Thickness 3/16". Length 22" per wheel.
Clearance—.015" heel and toe. Eccentric adjustment for each shoe.
Braking Power—53% front wheels, 47% rear.

Hand Brakes: See Service Brake data (above).

MISC. MECHANICAL

Windshield Wiper: Cable Operated—vacuum type.
See Miscellaneous Section for complete data.

HOOD ASSEMBLY

ALL MODELS

HOOD REMOVAL: Disconnect under-hood lamp wire and 2 hood hinge bracket-to-hood support springs (mark hood hinge support bracket location to facilitate re-installation). Remove 2 hood hinge-to-body bracket bolts at each side. Lower hood and take out one hood hinge-to-body bracket bolt from inside body at each side. See Hood Alignment below when re-installing hood.

HOOD REMOVAL: Disconnect under-hood lamp wire and 2 body-to-hinge springs. Remove 2 hood prop pins. Take out hood hinge brace-to-hood hinge bracket bolt at each side. Remove 2 hood hinge-to-body bracket bolts from inside body at each side. See Hood Alignment below when re-installing hood.

►***HOOD REMOVAL 'SUPER 88' CAUTION***—Do not remove hood independent of hinges and supports, without first removing hood springs.

FRONT END SHEET METAL

ALL MODELS

FRONT END SHEET METAL ASSEMBLY REMOVAL: Front fenders, radiator grille, and radiator can be removed as an assembly as follows: Drain cooling system, disconnect radiator hoses. Remove battery. Disconnect wiring harness from junction blocks and from clips on radiator tie bar. Disconnect hood latch operating cable from latch plate and from clips on baffle and left pillar plate. Detach flexible air tubes at front of dash on each side. Disconnect fresh air inlet pulls (left side "76" & "88", right side "98"). Disconnect heater hose from right fender, heater motor wire, windshield washer hose from bottle and fender, antenna wire at radio and pull wire out through left side of body (antenna is not removed). Remove front bumper. Disconnect radiator dust shield and lower fender-to-frame dust shields at each side. Remove fender-to-body bolts (2 center, 1 upper, and 1 lower on "76" & "88", 2 lower on "98") at each side. Take out nut from center bolt in front frame cross-member. Remove front radiator support bolt. Remove front end assembly as a unit.

CYLINDER HEAD

SIX CYL. ENGINE

CYLINDER HEAD INSTALLATION: Use a Torque Wrench and tighten cylinder head capscrews in order shown in diagram. Cast iron heads should be tightened cold and rechecked after engine has been run sufficiently to bring all parts up to normal operating temperature.

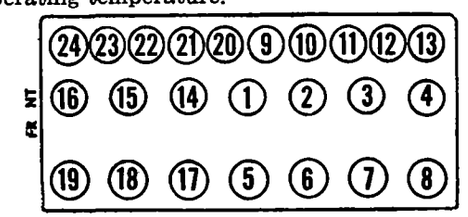

LDSM BILE SIX

R CKET V8 ENGINE

CYLINDER HEAD REMOVAL: Drain cooling system, disconnect upper radiator hose from water outlet. Remove air cleaner, generator, and spark plug wire retainers (name plates on valve covers). Disconnect wires at spark plugs, throttle linkage, and spark plug wire and air cleaner supports from cyl. heads. Take off distributor cap, lift off cap, high tension wire assembly and supports off engine as an assembly. Remove carburetor fuel and vacuum lines, external water by-pass (tube around lower end of oil filler pipe), valve covers, intake manifold with coil and carburetor attached. Disconnect exhaust pipe from exhaust manifold. Remove rocker arm shaft assembly, push rods. Remove cylinder head with exhaust manifold by taking out 14 cylinder head bolts.

CYLINDER HEAD INSTALLATION: Reverse removal instructions given above and note following:

Gaskets. Use all new gaskets. Use POB No. 3 sealer and coat both sides of head and intake gaskets. Cement cover gaskets to valve covers. ***Install head gaskets with crimped side UP.***

Cylinder Head Bolts. 7/16" bolts used as follows: Four 6" bolts at rocker arm supports. Ten 4½" bolts through center of head. Four 2½" bolts at bottom. Use a Torque Wrench (see Tightening Specifications) and tighten in order shown in head diagram.

Intake Manifold. ***CAUTION—Manifold must be centered between cylinder heads.*** Dip threads of six manifold bolts (two ⅜" x 1⅞" at front, and four ⅜" x 1½" at sides) in POB No. 3 sealer. Use large flat washers under manifold nuts, small flat washers on bolts. Use a Torque Wrench (see Tightening Specifications) and tighten in order shown below.

Tightening Torque—See Tightening (Torque Wrench) Specifications below.

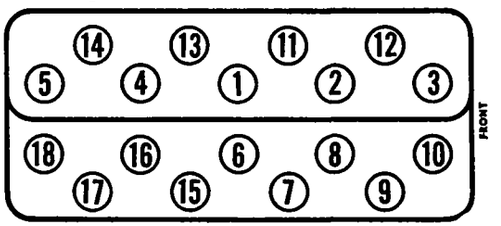

OLDSMOBILE ROCKET V8

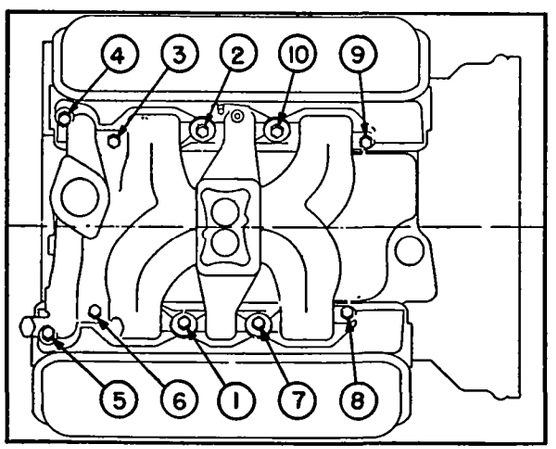

R CKET V8 INTAKE MANIFOLD

TIGHTENING SPECIFICATIONS

ENGINE

	Ft. Lbs.	In. Lbs.
Con. Rod Nuts (self-locking)	45-50	540-600
Crankshaft Front End Bolt	130-140	1560-1680
Cylinder Head Capscrews	60-70	720-840
Exh. & Int. Manifold Nuts (V8)	22-26	264-312
Exh. to Int. Manifold Bolts (6)	22-26	264-312
Flywheel to Crankshaft (6)	55-60	660-720
Flywheel to Crankshaft (V8)	65-70	780-840
Flywheel Housing to Block	50-55	600-660
Front Cover to Block (V8)	30-35	360-420
Front Plate to Block (6)	22-26	264-312
Main Bearing Capscrews (Rear)	140	1680
" " " (All Others)	100	1200
Oil Filter or Pad to Block (V8)	30-35	360-420
Oil Pan Capscrews	9-11	108-132
Oil Pump to Block (6)	30-35	360-420
Oil Pump to Bearing Cap (V8)	11-14	132-168
Rocker Shaft Sup. to Block (V8)	18-22	216-264
Spark Plugs (14 MM.)	28-35	336-420
Torus Cover (H-M) to Flywheel	30-35	360-420
Transmission to Housing	60-70	720-840

CHASSIS

	Ft. Lbs.	In. Lbs.
Body Bolts (7/16")	25-30	300-360
Body Bolts (½")	45-50	540-600
Differential to Axle Housing	40-45	480-540
Front & Rear Eng. Mtg. to Frame	25-30	300-360
Front Shock to Frame	55-60	660-720
Pitman Arm Nut	100-110	1200-1320
Rear Axle Insulator Bolt	110-120	1320-1440
Rear Shock to Backing Plate	120-130	1440-1560
Starter to Housing	45-50	540-600
Steering Gear to Frame	25-30	300-360
Tie Rod Clamp Bolt	11-14	132-168
Track Bar Nuts (both ends)	135-140	1620-1680
Wheels Nuts	65-70	780-840

ENGINE FRONT COVER

ROCKET V8 ENGINE

ENGINE FRONT COVER REMOVAL: Drain cooling system. Disconnect lower raidiator hose and heater hose from front cover, external water-by-pass (tube at base of oil filler pipe), and generator link at generator. Remove oil pan (see Oil Pan Removal). Take out two front motor mount-to-frame bolts. Use Tool Set BT-29 and support engine with motor mount clear of frame front cross-member. Remove radiator core and shroud, fan blades and pulleys, lower pulley and harmonic balancer, and fuel-&-vacuum pump. Take out front cover attaching screws (five 1¾" screws on outside of cover, two 4" screws through water pump housing—one each side at center, use 9/16" wrench).

ENGINE FRONT COVER INSTALLATION: Reverse removal data given above and seal as follows: Use new front cover gasket and cement to cover with V.G. 1000 cement. Apply Fiske lubriplate to fuel pump mounting pad and to front oil seal. Coat threads of cover screws and water by-pass fittings with POB No. 3 sealer.

C NTINUED ON NEXT PAGE

CRANKSHAFT & MAIN BEARINGS

CRANKSHAFT FRONT OIL SEAL INSTALLATION: Remove Engine Front Cover (see removal instructions above). Drive seal out towards front of cover. Coat outer diameter of new seal with POB No. 3 sealer. Install new seal using Timing Chain Cover Seal Driver BT-20. Install Engine Front Cover.

VALVE SYSTEM

ROCKET V8 ENGINE

VALVE LIFTER REMOVAL: Remove intake manifold, cylinder block cover, valve covers, rocker arm shaft assemblies, push rods, and valve lifters.

►*CAUTION*—Valve lifters must be re-installed in same bores from which removed.

ROCKER ARM SHAFT ASSEMBLIES: Identical hollow steel tube shafts (ends plugged) are used. Four removable supports for each shaft, one support doweled to shaft for oil feed (at oil line from #2 camshaft bearing on left side, from #4 camshaft bearing on right side). Three springs used to position center rocker arms against supports. End rocker arms retained by wave washer, flat washer, and cotter key.

Rocker Arm Shaft Disassembly: With assembly off engine, remove cotter key and washers from end of shaft. Remove rocker arms, supports (except doweled support which should not be removed from shaft), and springs.

►***CAUTION—Rocker arms should be stored so that they can be reassembled in their original position.***

Rocker Arm Shaft Reassembly: Assemble supports in proper position as to doweled support (oil supply). Push rod end of rocker arms must be on same side as large cylinder head bolt hole in each support.

OIL PUMP

SIX CYL. ENGINE

OIL PUMP: Disassembly. With pump off engine, use an arbor press and Tool J-959 and press drive gear off shaft and take out woodruff key. Disassemble pump, take off cover, oil pump gears and shaft.

Assembling Pump. With pump gear on flat surface and woodruff key in place on shaft, press shaft through gear until flush with outer end of gear. Put idler gear on stub shaft in pump body, slide pump shaft and gear assembly into place in pump housing. Place woodruff key on upper end of shaft and press pump drive gear on shaft with Tool J-954-1 between inner face of gear hub and pump body (gives proper end clearance of pump shaft assembly). Install piston, relief spring and nut in pump cover, bolt cover to body. Use new gaskets between pump cover and body, and between pump body and cylinder block.

Installation. Set engine in firing position for #1 cylinder with rotor opposite #1 segment in distributor cap. Note position of distributor shaft tongue for proper oil pump drive gear mesh, then raise distributor and mesh pump drive gear with camshaft gear. Replace distributor in position and reset ignition timing.

OIL PAN REMOVAL

SIX CYL. ENGINE

OIL PAN REMOVAL: Disconnect steering idler arm from frame and drop steering relay assembly. Drain radiator, disconnect radiator hoses. Remove two front engine mounting-to-frame bolts, raise engine approx. ¾". For access to pan bolts at front end, unhook fasteners on splash guard between cross-member and radiator baffle and work through opening in cross-member. Front bolts on each side of pan must be removed with an end wrench. With pan bolts removed, rotate crankshaft to place counterweights up for clearance, remove oil pan.

Installation—Use new gasket coated with cement. Allow cement to dry for easier installation.

ROCKET V8 ENGINE

OIL PAN REMOVAL: Remove starter and exhaust cross-over pipe. Disconnect idler arm from frame and drop steering relay rod. Remove oil pan cap-screws and withdraw pan.

FRONT END SHEET METAL ASSEMBLY REMOVAL, HOOD REMOVAL: See Oldsmobile Special Data.

MODEL IDENTIFICATION

SERIAL NUMBER: On left front door hinge post. First number 1001 with prefix 506M, A etc., as follows: **Serial Number Prefix Identification.** First two numbers 50 indicate year, third number 6 indicates 76 series, letter indicates assembly plant: **M**—Lansing, **A**—Atlanta, **B**—Framington, **K**—Kansas City, **C**—South Gate, **W**—Wilmington.

ENGINE NUMBER: On left front top corner of block. **1950 Numbers**—1001 Up. **Hydra-Matic Cars**—Engine number followed by letter "H".

TUNE-UP

COMPRESSION PRESSURE: 125 lbs. at cranking speed.

VACUUM READING: Steady 17" min. at idling speed.

FIRING ORDER: 1-5-3-6-2-4. See diagram.

SPARK PLUG GAPS: .040".
Plugs—AC No. 45. 14 mm.

DISTRIBUTOR: Breaker Gap—.021-.026" (new). .018-.024" or .020" preferred (used points).

►*CAUTION—Set new points at .021-.026" to allow for wearing in of rubbing block.*

Cam Angle—35°. Test limits with .022" gap 31-37°. *See "Delco-Remy Cam Angle" in Electrical Equipment Section.*
Breaker Arm Spring Tension—17-21 ozs.
Automatic & Vacuum Advance—*See Ignition.*
Condenser Capacity—.18-.23 microfarad.

IGNITION TIMING: Synchro-Mesh Trans......**TDC.**
Hydra-Matic Drive...0005" BTDC.
Timing Procedure—*See Ignition Timing.*
Flywheel Mark—Steel ball insert aligned with pointer in inspection hole in housing beside starter.
Octane Selector—Set to give slight ping accelerating with wide open throttle below 15 MPH.

CARBURETION:
Idle Setting (1950)—½-1½ turns open. Turning screw out gives richer mixture.
Idle Speed (Standard)—425 RPM. or 6 MPH.
Idle Speed—350 RPM. with gear selector in "Dr" position.
Float Level—½" from machined projection on cover to top of soldered seam at free end (invert to check).
Accelerating Pump—No seasonal adjustment.

Choke Setting: Centered (housing centered on scale).

Fuel Pump Pressure: 4-5 lbs.

MANIFOLD HEAT CONTROL: Thermostatic coil type. **Setting**—Coil wind-up should be 125° (approx. 1/3 turn) at room temperature. NOTE—To check valve for correct position on shaft, use feeler gauge in slot on rear end of shaft. With valve closed, gauge should contact stop pin (slot 6° to left or toward engine from up-and-down position) with 1/8" clearance between valve tip and manifold. Valve welded to shaft in this position.

VALVE TAPPET CLEARANCE: Intake Valves .008", Exhaust Valves .011", HOT.
Valve Timing Check—*See Valve Timing.*

STARTING: *See Battery, Starter, Generator, Regulator.*

IGNITION

IGNITION SWITCH: Delco-Remy No. 1116453.
Ignition Lock—Briggs & Stratton or Delco.

COIL: Delco-Remy 1115380. On side of engine.
Ignition Current—2.0 amperes idling, 4.5 stopped.

CONDENSER: Delco-Remy Part No. 1869704.
Capacity—.18-.23 microfarad.

DISTRIBUTOR: Delco-Remy No. 1110221. Automatic and vacuum advance with Octane Selector. "Center-Bearing" breaker plate used.

►**Breaker Plate Bearing Assembly**—Plate rotates on 3 bakelite buttons on support plate with spring tension adjustment (shim washers) on underside of support plate. Pull required to move plate should be 8 oz. min., 16 oz. max. with breaker plate assembly out of housing.
See "Delco-Remy Center-Bearing Breaker Plate Distributor" in Electrical Equipment Section.
Breaker Gap—.021-.026" (new points), .018-.024" or .020" preferred (used points).

►*CAUTION—Set new points at .021-.026" to allow for wearing in of rubbing block.*

Cam Angle—35°. Test limits with .022" gap 31-37°. *See "Delco-Remy Cam Angle" in Electrical Equipment Section.*
Breaker Arm Spring Tension—17-21 ozs.
Rotation—Counter-clockwise viewed from above.

Distributor		Automatic Advance	Engine
Degrees	R.P.M.	Degrees	R.P.M.
Start	250	2.0	500
12.0	1600	24.0	3200

Vacuum Spark Control: Delco-Remy No. 1116039 (for 1110214 distributor), **1116053** (for 1110221). Integral type linked directly to breaker plate. Provides additional advance at speeds above idling except when engine accelerated or operated with wide open throttle when spark retarded by return spring.

Plunger Travel—5/32".

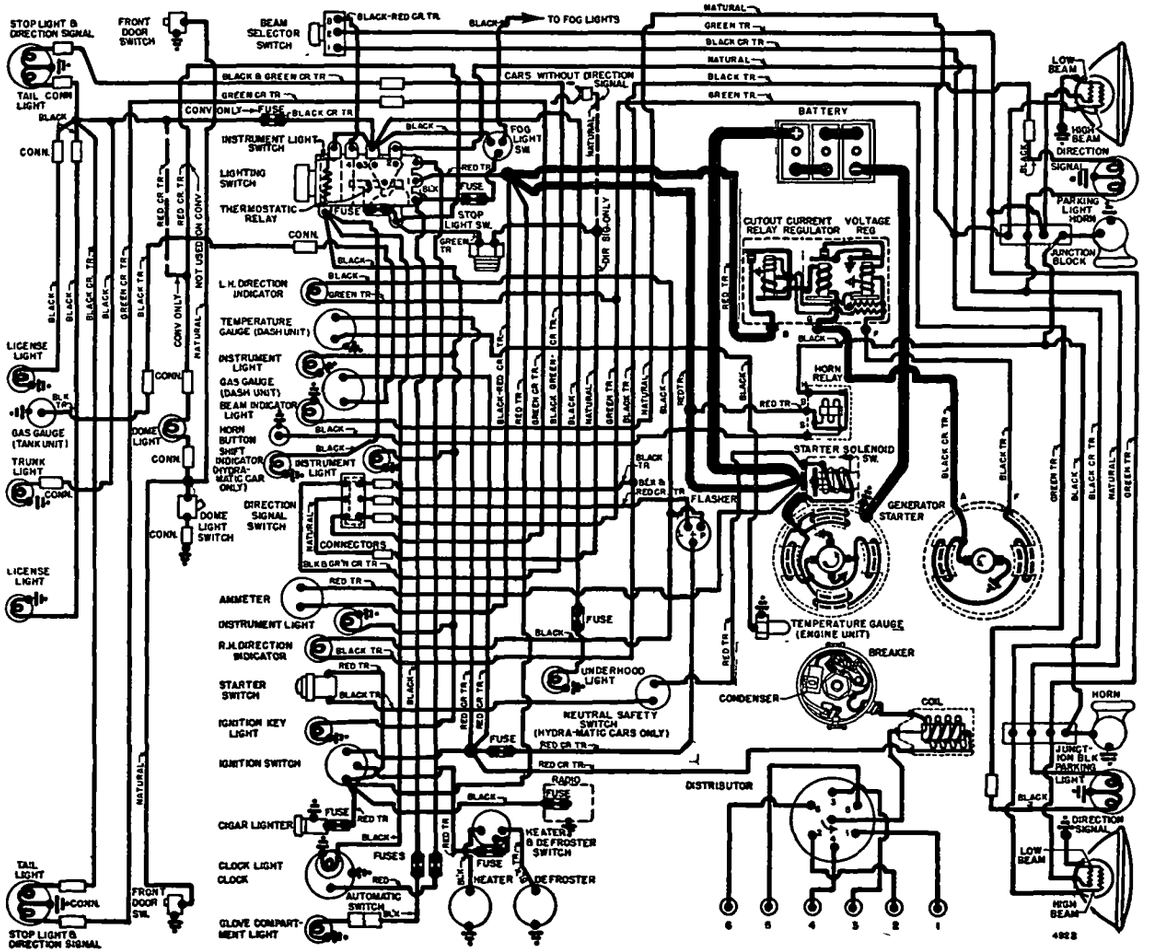

Vacuum Advance

Distr. Degrees	Eng. Degrees	Vacuum (" of HG)
Start	0°	5-7"
8°	16°	(1116039) 16½-18½"
8°	16°	(1116053) 16-20"

Octane Selector—Hold-down plate permits 10° advance or retard. See Ignition Timing.

IGNITION TIMING

Std. Setting	Piston Position
Synchro-Mesh Transmission	TDC.
Hydra-Matic Drive	.0005" BTDC.

NOTE—Modify this setting for special fuel and altitude conditions. See Octane Selector Setting.

Flywheel Mark—Steel ball on flywheel (#1 and #6 piston top dead center position). Inspection hole in left front face of flywheel housing above starter.

Timing (with Synchroscope)—Use Tool HMO-161. Loosen distributor hold-down plate bolt, center hold-down plate scale ("0" at indicator line), tighten hold-down bolt. Clip synchroscope lead to #1 spark plug, direct light on flywheel through inspection hole in housing above starter. With engine idling, loosen hold-down plate clamp screw, rotate distributor until ignition mark (steel ball insert) lines up with pointer, tighten clamp screw, check Octane selector setting (below).

►**Hydra-Matic Drive Note**—Set distributor so contacts open with piston .0005" before top dead center.

Timing (without Synchroscope)—Turn engine over to firing position for #1 cylinder (steel ball on flywheel aligned with pointer in inspection hole in housing above starter). Loosen distributor hold-down plate bolt, center hold-down plate scale ("0" at indicator line), tighten hold-down bolt. Loosen hold-down plate clamp screw, rotate distributor until contacts begin to open, tighten clamp screw, check Octane Selector Setting below.

Octane Selector Setting: Set for slight ping when accelerating with wide open throttle in high gear below 15 MPH. To adjust, loosen hold-down plate bolt, move plate toward RET end of scale if no ping noted, toward ADV end if ping too severe, tighten bolt.

CARBURETOR

Carter WA-1—No. 764S (Synchro-mesh Trans.), 763S, 763SA (Hydra-Matic Trans.).
1½" single barrel downdraft, Carter Climatic Contr.
Casting No. on Flange—538.
See Carburetor Section for complete data.

►**763S, SA Production Changes—*See "Carter WA-1" in Carburetor Section.***

Settings (Idle Setting, Float Level, and Accelerating Pump): ***See Tune-Up data.***
Metering Rods & Jets—*See Carter Downdraft Jet Specification Table in Carburetor Section.*

Hydra-Matic Throttle Linkage Adjustment: ***See Oldsmobile Hydra-Matic Drive in Transmission Section.***

Throttle Cracker Adjustment: .0625 to .0851" (1/16") clearance between throttle stopscrew and highest step of fast idle cam with starter button fully depressed. Adjust by loosening locknut and turning adjusting screw on accelerator bellcrank.

Fast Idle: Carter Single Barrel Carburetor type.
Setting—⅝" clearance between choke valve and air horn (Gauge T109-85) with throttle valve closed and stopscrew against (not on) first step of fast idle cam. Adjust by bending connector link at lower offset (use Tool T109-41).
See Carburetion Equipment Section for complete data.

Automatic Choke: Carter Climatic Control (single barrel carbs).
Setting—Centered (coil housing at index mark).
See Carburetion Equipment Section for complete data.

CARB. EQUIPMENT

Air Cleaner: AC No. 1544458 oil wetted type (std.), No. 1544459 heavy duty oil-bath type (optl.).
Filter Element—AC #6 (std.), #21 (hvy. duty).
Servicing—Clean and re-oil std. cleaner every 2000 miles. On heavy duty types clean and refill reservoir with 1 pint SAE 50 (40 in winter) oil every 2500-5000 miles.

Fuel Pump: AC No. 1539516 fuel & vacuum pump.
Replacement Pump—AC No. 9297.
Pressure—4-5 lbs.
See Carburetion Equipment Section for complete data.

Gasoline Gauge: AC Electric type.
Dash Unit—AC No. 1517011.
Tank Unit—AC No. 1517299.
See Carburetion Equipment Section for complete data.

BATTERY

Delco Type 15AA-4. 6 Volt, 15 Plate, 100 Ampere Hour Capacity (20 hour rate).
Starting Capacity—120 amperes for 20 minutes.
Zero Capacity—300 amperes for 3.6 minutes. Five second voltage—4.2 volts.
Grounded Terminal—Negative (—) to Starter.
Location—In engine compartment on left side.

STARTER

Delco-Remy Model 1107955. Armature No. 1867897.

►***CAUTION—Starter operates whenever pushbutton depressed (and shift lever in neutral on Hydra-Matic) regardless of ignition switch position.***
Drive—Overrunning clutch (solenoid pinion shift).
Rotation—Counter-clockwise at commutator end.
Brush Spring Tension—24-28 ozs. each.

Performance Data

Torque	R.P.M.	Volts	Amperes
0 ft. lbs.	5500	5.7	80①
14 "	Lock	3.0	600

①—Includes current draw of starter switch.

Starting Switch: Delco-Remy Solenoid Switch No. 1118136 (no relay used) mounted on starter and controlled by Pushbutton Switch No. 1996046 (and Neutral Safety Switch No. 1997849 on Hydra-Matic).

►***CAUTION***—Overrunning clutch pinion clearance must be adjusted whenever solenoid removed.
See Electrical Equipment Section for complete data.
Neutral Safety Switch Adjustment—*See Oldsmobile Hydra-Matic Drive in Transmission Section.*

GENERATOR

Delco-Remy 1102706 (Std.), 1102707 (Hydra-Matic). Armature No. 1880550. Two brush (shunt) types with voltage and current regulation. Ventilated by fan.
Charging Rate Adjustment—None. See Regulator.
Maximum Charging Rate—40 amperes min. reached at car speed of 22 MPH. Actual charging rate controlled by regulator.

Performance Data

	Amperes	Volts	R.P.M.
Cold	40①	8.0	1900

①—Not maximum output. See Current Regulator.
Rotation—Counter-clockwise at commutator end.
Brush Spring Tension—25 ozs. each.
Field Current—1.9-2.05 amperes at 6.0 volts.

Belt Adjustment: Check with straightedge across pulleys. Belt deflection should be ¾".

REGULATOR

Delco-Remy 1118300. Voltage & Current Regulator.
►***NEW "1118300 SERIES"*** regulators have screw adjustment for settings and single regulator springs.
See Electrical Equipment Section for complete data.
CAUTION—Check generator for grounded field coils and leads before changing regulator settings to correct High Charging Rate or High Voltage.

Cutout Relay

Cuts In—5.9-6.8 volts hot (set to 6.4 volts hot).
Contact Gap—.020" (same for both sets).
Air Gap—.020" (with contacts just closed).

Voltage Regulator

Setting—7.0-7.7 volts hot (set to 7.4 volts hot). Regulator is over-compensated for temperature. Check with cover in place and regulator hot.
Air Gap—.075" with armature pressed down to point where contacts are just touching.
Checking & Adjustment—*See Elec. Equip. Section.*

Current Regulator

Setting—40-46 amperes hot (set to 42 amps. hot).
Air Gap—.075" with armature pressed down to point where contacts are just touching.
Checking & Adjustment—*See Elec. Equip. Section.*

LIGHTING

Headlamps: Guide "Sealed Beam" type.
See Electrical Equipment Section for complete data.
Headlamp Adjustment—Aim upper beam straight ahead (hot spot center 3" below lamp center height).
Beam Indicator—Small red indicator in upper edge of speedometer. Lighted when Upper Beams in use.

Direction Signal: ***See Electrical Equipment Section.***
Direction Signal Indicators—Left & Right Turn Indicator located at either end of instrument cluster. Lights when direction signal on same side of car operating (Stop Light flashes at rear).

Switches

Lighting—Delco-Remy No. 1995030.
Instrument—Part of Lighting Switch (Rheostat operated by turning light switch knob).
Beam Selector—Delco-Remy No. 1997008.
Directional Signal—Delco-Remy No. 1995554.

Stop Light—Delco-Remy No. 1997725.

MISC. ELECTRICAL

THERMOSTATIC CIRCUIT BREAKER: Delco-Remy. On back of light switch (part of switch assy.). Contacts remain closed with 30 amperes but open in 3 minutes with 42 amperes at 70°F. Not adjustable.

FUSES: Dome & Stop—SFE 14 amp. On light switch.
Dome & Tail (Convertible only)—AGC 20 ampere. In body feed wire to dome and tail lights.
Glove Box & Under-hood Light—AGA 5 amp. each.
Direction Signal—SFE 9 ampere. In Flasher to Ignition Switch wire behind instrument panel.

CONTINUED ON NEXT PAGE

C NTINUED FROM PRECEDIN PA E

Electric Clock—AGA 2 ampere. In feed wire.
Cigar Lighter—AGC 30 ampere.

HORNS: Delco-Remy No. 1999647 (Low Note), 1999648 (High Note). Vibrator type operated by relay.

Horn Relay: Delco-Remy No. 1116775.
Contact Gap—.027". Air Gap—.014" (closed).
Contacts Close—2.75-4.0 volts (set to 3.5 volts).

ENGINE

ENGINE SPECIFICATIONS: Big Six. 6 cylinder, "L" head.

Bore—3 17/32". Stroke—4 3/8".

Displacement—257 cubic ins. Rated HP.—29.9.

Developed Horsepower—105 at 3400 RPM.

Compression Ratio—6.5-1 cast-iron head.

Compression & Vacuum Reading—*See Tune-Up.*

TIGHTENING TORQUES: *See Oldsmobile Special Data.*

CYLINDER HEAD INSTALLATION: *See Oldsmobile Special Data.*

OIL PAN REMOVAL: *See Oldsmobile Special Data.*

PISTONS: Aluminum alloy, T-slot, cam ground, oxalic sulphuric acid coated type.

Weight—18.05 ozs. stripped.
Length—4 1/32".
Removal—Pistons and rods removed from above.

Clearance—Top Land .023-.028". Skirt clearance Top .0025", Bottom .00075". Fitted for .0125-.00175" clearance on thrust surface. See Fitting New Pistons following.

Replacement Pistons: Finished pistons (pins fitted) .003", .005", .010", .015", .030" oversize.

Fitting New Pistons: Check piston for size with micrometer (pin removed) 90° from pin bosses 3/8" below lower ring groove and also 3/8" from bottom of skirt. Taper should be .0004" max. (larger diameter at the bottom). Then check clearance by inserting .0015 x ½" feeler between piston (pin removed) and cylinder wall on valve side with piston inverted and T-slot on opposite side from feeler. Pull to withdraw feeler should be 7 to 20 lbs.

Installing Pistons: Mark "V-S" on piston head toward valves.

PISTON RINGS: 2 coated compression (install with mark TOP up), 2 oil control rings, all above pin.

Ring	Width	End Gap	Side Clearance
Comp. (#1,2)	.0925-.0935"	.007-.017"	.001-.003"
Oil (#3,4)	.1860-.1865"	.007-.016"	.001-.0025"

Replacement Rings: .010", .020", .030" oversize.

PISTON PIN: Diameter .8554-.8557". Length 3 5/32". Pin locked in one piston boss by lockscrew (opposite end slotted). Piston bosses may be reamed for installation of oversize pins.

Pin Fit in Piston—.0001" tight to .0002" loose (plain boss end), .0003-.0006" tight (lock boss end), or a tight wring fit (with solid end of pin in boss, pin should just be able to be turned with 6" drift in pin lock screw hole—test each boss).

Pin Fit in Rod Bushing—.0003-.0006" clearance, or suck fit (pin holds on own weight but can be pushed through with slight thumb pressure).

Replacement Pins: Std., .001", .003" oversize.
Piston Pin Removal and Installation—*See "Piston Pins" in Oldsmobile Special Data.*

CONNECTING ROD: Length 7 13/16". Wgt. 30.72 oz.
Crankpin Journal Diameter—2.353-2.354".
Lower Bearing Diameter—2.3570-2.3575".
Lower Bearing—Removable steel-backed, Durex-babbitt overlay. No shims.
Clearance—.0005-.0025". Sideplay—.0055-.0105".

Bearing Adjustment: None (no shims). Replace bearings. Do not file rods or caps.

Installing Rods: Oil spit hole at lower end toward valves and grooves on rod and cap bolt boss (part number side) matched. Special ground cap bolts with self-locking nuts used. Tighten to 45-50 ft. lbs.

CRANKSHAFT: 4 bearing, 7 integral counterweights.
Journal Diameters—#1, 2.478-2.479"; #2, 2.5405-2.5415"; #3, 2.6655-2.6665"; #4, 2.6855-2.6865".
Bearings—Removable, steel-backed, Durex-babbitt overlay bearing shells. Front bearing has oil groove (to front) for thrust plate lubrication.
Clearance—.0005-.002" (rear), .0005-.003" (others).

Bearing Adjustment: None (no shims). Replace bearings. Do not file caps. *NOTE*—9/16" cap bolts used on rear bearing, ½" on others (heads are alike).
Bearing Removal—*See "Crankshaft & Main Bearings" in Oldsmobile Special Data.*

End Thrust: At No. 1 bearing. Endplay—.004-.008". *See "Crankshaft & Main Bearings" in Oldsmobile Special Data for thrust collar and plate data.*

Rear Main Bearing Oil Seal Installation: *See "Crankshaft & Main Bearings" in Oldsmobile Special Data.*

FLYWHEEL: Removal & Installation—*See Oldsmobile Special Data.*

CAMSHAFT: 4 bearing. Non-adjustable chain drive.
Journal Diameters—#1, 1.9974-1.9981"; #2, 1.9349-1.9351"; #3, 1.8724-1.8731"; #4, 1.8099-1.8106".
Reamed Bushing Diameters—#1, 1.9995-2.001"; #2, 1.937-1.9385"; #3, 1.8745-1.876"; #4, 1.812-1.8135".
Bearings—Steel backed copper lead bronze bushings.
Clearance—.0014-.0036".

End Thrust: Forward thrust taken by flange on front engine support plate, rear thrust by flange on shaft bearing against front of engine block.

Timing Chain: Link-Belt. Width 15/16". Pitch .500". Length 47 links or 23½".

Camshaft Setting: Mesh chain with sprocket marks adjacent and in line with a straightedge across the shaft centers (or use Tool HM-408-0).

VALVES	Head Diam.	Stem Diam.	Length
Intake	1.745-1.755"	.3415-.3425"	5.789"
Exhaust	1 27/64"	.3410-.3418"	5.816"

1950 Models

	Seat Angle	Lift	Stem Clearance
Intake	30°	.340"	.0022-.0042"
Exhaust	45°	.308"	.0029-.0047"

Valve Guides: Intake and exhaust guides same. Press guides in until top end 7/8" below top of block, Tool J-952 positions guide correctly in block. Ream to .34425-.34525" inside diameter (not tapered).
Length—3 7/32".

Valve Springs: Intake and exhaust springs the same. Damper installed on top of each spring. Free length 2 5/8".

	Spring Pressure	Spring Length
Valve Closed	55 lbs.	2¼"
Valve Open	100 lbs.	1 15/16"

Valve Lifters: Mushroom type with self-locking screws. Body Diameter .6235-.6240". Head Diam. 1.125-1.140".
Clearance—.0005-.0008".
Replacement Lifters—.001", .002", .005", .010" O. S.
NOTE—Lifter holes in block have "Bearingized" finish. If holes worn, fit oversize lifter without reaming hole when possible to preserve finish.

VALVE TIMING

Tappet Clearance: .008" INT., .011" EXH. Hot & idling.
NOTE—Self-locking tappet screws used.
Valve Timing: See camshaft setting above.

1950 Models

Intake Valves—Open 4° BTDC. Close 46° ALDC.
Exhaust Valves—Open 44° BLDC. Close 6° ATDC.
Valve Timing Check—With .0125" tappet clearance #1 intake valve should open with piston 5° (.010") BTDC. with flywheel steel ball insert (TDC mark) approx. 2 teeth before indicator (hole on left front face of housing). Reset tappet clearance at .008" hot.

LUBRICATION

Engine Oiling System: Pressure to main, connecting rod, and camshaft bearings, piston pins and chain.
Crankcase Capacity—5 quarts.
Normal Oil Pressure—40 lbs. at 30 MPH.
Oil Pressure Regulator—On oil pump. Opens at 40 lbs. Not adjustable.

Oil Pump: Gear type on right side of crankcase.
Oil Pump Assembly & Installation—*See "Oil Pump" in Oldsmobile Special Data.*

Oil Pressure Gauge: AC No. 1507124. Not electric.

Crankcase Ventilation: Filter element in oil filler cap (inlet breather). Outlet pipe on right side of engine.

COOLING

Cooling System: Pressure type with pressure valve and vacuum valve (relief valve) in filler cap. Water distribution tube installed in block. Re-circulation of water through engine (with thermostat closed) permitted by fixed by-pass from cylinder head through block to pump inlet.
Capacity—18½ quarts.
Pressure Valve—AC No. 850501 Filler Cap. Opens at 4 lbs. (3¼-4¼ lbs.).

Radiator Core Removal: *See Oldsmobile Special Data.*

Water Pump: Packless, sealed ball-bearing shaft.
See Water Pump Section for complete data.

Thermostat: Harrison. In cylinder head water outlet.
Setting—Starts to open 152°F. Fully open 173°F.

Temperature Gauge: AC Electric.
Dash Unit—AC No. 1512168.
Engine Unit—AC No. 1512015.
See Miscellaneous Section for complete data.

CLUTCH

Borg & Beck Model 10A7 (Borglite driven member). Single plate, dry disc type with pressure plate oil baffle and release bearing lubrication fitting.
Clutch Cover No.—927 stamped on cover.
See Clutch Section for complete data.
Clutch Release Bearing Lubrication—*See Oldsmobile Special Data.*
Facings—Spiral wound (spirally grooved) molded woven, 2 used. Inside Diam. 7". O. D. 10". ⅛" thick.

Pedal Adjustment: Free travel 7/8-1¼". Turn link at fork in or out of clevis on auxiliary shaft.

Removal: Remove transmission (see data below), clutch underpan and take out 6 mounting screws in clutch cover (when installing, use 2 long shank mounting screws in 2nd hole on each side of locating dowel), lower clutch assembly out.

TRANSMISSION

STANDARD

Own Make. All helical gear, constant-mesh, synchro-mesh (2nd & high), sliding gear (low & reverse).
See Transmission Section for complete data.

Transmission Control: Oldsmobile "Handi-shift".
See Transmission Section for complete data.

Removal: Disconnect shift and selector rods from levers at transmission, speedometer cable, rear universal and slide slip yoke and propeller shaft to rear. Remove 4 transmission mounting capscrews, pull transmission straight back and remove.

HYDRA-MATIC DRIVE

OPTIONAL EQUIPMENT

Own Make. Consists of Fluid Coupling and automatic self-shifting four-speed transmission.

►*HYDRA-MATIC PRODUCTION CHANGE*—Late production cars have modulated throttle pressure.
See Transmission Section for complete data.

►*NOTE—Different Hydra-Matic Transmissions used and can be distinguished by Serial No. Plate Color and Prefix as follows:*

Car Model	Prefix (& Plate Color)
1950 Six (First Cars)	S- (Aluminum)
1950 Six (Later "Whirlaway")①	B- (Orange)

①—Beginning No. 6A108158H.

►*CAUTION*—"Whirlaway" transmissions not interchangeable with earlier transmissions.

Lubrication—Check fluid level in transmission every 2000 miles. Drain and refill after first 15000 miles and every 15000 miles thereafter. Use only "Oldsmobile Hydra-Matic Drive Fluid."

Draining & Refilling—*See "Hydra-Matic Drive" in Transmission Section.*

Capacity—Approx. 10½ qts.

Checking Fluid Level—Raise front floor mat at right side, remove sheet metal cover in floor, clean opening of lint, sand, etc. Set hand brake, start engine and let engine idle, move control lever to "DR" position. Take out dip stick, wipe dry and replace stick, remove stick quickly and check level. Level should be at "FULL" mark, add fluid to bring up to "FULL" if required with engine idling.

►*CAUTION—Engine must be idling and selector lever in "Drive" position when checking fluid level.*

Linkage Adjustment—*See "Hydra-Matic Drive" in Transmission Section.*

Removal: *See "Hydra-Matic Drive" in Transmission Section.*

UNIVERSALS

Mechanics 2C or 2CR. Roller bearing types.
See Universals Section for complete data.
NOTE—Slip joint formed at rear of transmission ahead of front U-joint (one-piece driveshaft used).

►*CAUTION*—Rear universal companion nut controls rear axle pinion bearing "pre-load" (must be adjusted whenever nut is loosened). *See Oldsmobile Rear Axle in Rear Axle Section for complete data.*

REAR AXLE

Own Make. Hypoid gear, semi-floating type with pinion mounted on two taper roller bearings.

►*CAUTION*—Do not use "76" series carrier and axle housing on "88" and "98" series cars. New support used on "88" and "98" series rear axles.

►*NOTE*—Rear universal companion nut controls pinion bearing "pre-load."
See Rear Axle Section for complete data.

Standard Ratios

41:10 (4.1)—Std. exc. Convertible & Sta. Wagon.
43:10 (4.3)—Std. on Convertible & Station Wagon. Optional Hilly Ratio Domestic Cars, & Export Cars.
39:10 (3.9)—Optional on Export Cars.

Hydra-Matic Ratios

40:11 (3.64)—Std. exc. Convertible & Station Wagon. Optional on Export Cars.
39:10 (3.9)—Std. on Convertible and Station Wagon. Optional on Export Cars.
41:12 (3.42)—Optional on Export Cars.

Rear Axle Ratio Marking—Ring and pinion gear ratio (39:10, etc.) and date stamped on underside of carrier right horizontal rib.

Backlash—.004-.008". Screw adjustment.

Removal: Disconnect driveshaft at rear universal (wire trunnions to avoid losing rollers), mark joint (reassemble to mark when reassembling). Remove axle shafts (see data below) and carrier capscrews.

►*CAUTION*—Rear universal joint companion flange nut controls pinion bearing "pre-load" (must be adjusted whenever nut is loosened).

Axle Shaft Removal: Remove wheel. Take off brake drum by removing two Tinnerman nuts from wheel studs (if nuts removed by turning off threads they can be re-used, if nuts damaged new nuts must be used). Remove backing plate mounting nuts, and static collector. Loosen bearing retainer (do not move backing plate or brake line may be damaged). Pull shaft and bearing with Puller J-942 (do not allow shaft to drag on oil seal), replace one backing plate nut.

Wheel Bearing Adjustment—None.

Rear Suspension: Coil spring type with support arms.
See Rear Axle Section for complete data.

SHOCK ABSORBERS

Delco. Double acting (parallel cyl. rear), hydraulic.
FRONT—Model 1947-J (right), 1947-K (left).
REAR—Model 2105-N (right), 2105-P (left).

FRONT SUSPENSION

Front Suspension: Independent, linked parallegram type with coil springs.
See Front Suspension Section for complete data.

Kingpin Inclinaion—4°29'47".

Caster—0° to Neg. ¾°. Adjustable.

Camber—Neg. ¾° to Pos. ¾° (Service Limits), Neg. ¼° to Pos. ¾° (New Car Specification).

Toe-In—1/16-1/8". Adjust each tie rod equally.

Steering Geometry Inner wheel 23° ± ½°. Outer 20°.

STEERING GEAR

Steering Gear—Saginaw Model 420. Worm-and-Roller type.
See Steering Gear Section for complete data.

BRAKES

Service Brakes: Bendix Hydraulic, duo-servo, single anchor type **without eccentric adjustment.** Hand lever applies rear wheel service brakes.
See Brake Section for complete data.

Wheel Cylinder Bore—Front wheels 1⅛", Rear 1".

Drums—Cast-iron. Diameter 11". Max. rebore .060". (or .030" cut).

Lining—Moulded. Width 2" (front wheels), 1¾" (rear). Thickness 3/16". Length per shoe: 9 11/32" (primary), 11 31/32" (secondary).

Clearance—.015" at both ends of secondary (rear) shoe with primary shoe forced out against drum.

Braking Power—56% front wheels, 44% rear.

Hand Brake: See Service Brakes above.

MISC. MECHANICAL

Convertible Top Control: Hydro-lectric type (hydraulic actuation with motor-driven pump supplying oil under pressure for power cylinders).
See Miscellaneous Section for complete data.

Windshield Wiper: Vacuum Link-&-Crank Arm type.
See Miscellaneous Section for complete data.

FRONT END SHEET METAL ASSEMBLY REMOVAL, HOOD REMOVAL: See Oldsmobile Special Data.

MODEL IDENTIFICATION

SERIAL NUMBERS: On left front door hinge post.

1950 Numbers—First number 1001 with prefix (**88 Series**) **508M** or (**98 Series**) **509M**, A, etc., as shown below.

1951 Numbers—First number 1001 with prefix (**88 Series**) **517M**, (**Super 88 Series**) **518M** or (**98 Series**) **519M**, A, etc., as shown below.

Serial Number Prefix Identification. First numbers 50 (1950), 51 (1951) indicate year, third number, **7** indicates 88 Series, **8** indicates Super 88 Series, or **9** for 98 Series, letter indicates assembly plant: **M**—Lansing, **A**—Atlanta,Ga., **B**—Framington, **K**—Kansas City, **C**—South Gate, **W**—Wilmington.

ENGINE NUMBER: Stamped on machined pad on left side of block between #5 & #7 exhaust ports, and is prefixed by the digit "8," indicating number of cylinders, and a letter, indicating compression ratio. ("A" for 7.25-1 & "C" for 7.5-1).

1950 Numbers—194001 Up. Suffix letter "H" indicates Hydra-Matic Transmission.

1951 Numbers—1001 Up. Suffix letter "B" indicates Synchro-mesh Transmission.

TUNE-UP

COMPRESSION PRESSURE: 136 lbs. at cranking spd.

VACUUM READING: Steady 17" min. at idling speed.

FIRING ORDER: 1-8-7-3-6-5-4-2 (Cyl. Nos. 1-3-5-7 Left Bank, 2-4-6-8 Right Bank, front-to-rear). See wiring diagram.

SPARK PLUG GAPS: .030".

Plugs—AC No. 46-5. 14 mm.

DISTRIBUTOR: Breaker Gap—.016-.021" (new points), .012-.0175" or .015" preferred (used points).

►***CAUTION—Set new points at .016-.021" to allow for wearing in of rubbing block.***

Cam Angle—22°. Test limits with .016" gap 21-30°.

See "Delco-Remy Cam Angle" in Electrical Equipment Section.

Breaker Arm Spring Tension—19-23 ozs.

Automatic & Vacuum Advance—*See Ignition.*

Condenser Capacity—.18-.23 microfarad.

IGNITION TIMING: 2½° BTDC.

Timing Procedure—*See Ignition Timing.*

Dampener Mark—Pointer on left front side of engine midway between edges of machined slot on dampener.

CAUTION—Ignition timing very sensitive and must be set exactly midway between edges of slot. If spark must be retarded to eliminate spark knock, do not retard more than is required.

CARBURETION: 1950 Rochester Model AA.

Idle Setting—Approximately 1 turn open. Turning screws out gives richer mixture.

Idle Speed—(**Synchro-mesh**) 425 RPM. or 6 MPH.

Idle Speed—(**Hydra-Matic**) 350 RPM. with selector lever in "Dr" position.

Float Level—23/32" from top of seam on free end to gasket seat on cover with cover assembly inverted and needle seated.

Float Tension—Bend float tang against spring to decrease amount of drop; bend away from spring to increase drop. Tension is correct when the bottom edge of float is suspended freely from cover and is 1/8" above the power stem.

Accelerating Pump Adjustment—3 holes in pump shaft lever. Outer hole (minimum stroke), Center hole (medium stroke), Inner hole (maximum stroke).

Choke Setting—Centered on index.

CARBURETION: 1951 Rochester Model BB.

Idle Setting—Approximately 1½ turns open. Turning screw out gives richer mixture.

Idle Speed—(**Synchro-mesh**) 425 RPM. or 6 MPH.

Idle Speed—(**Hydra-Matic**) 350 RPM. with selector lever in "Dr" position.

Float Level—Set float position with Float Gauge BT-51.

Float Tension—Bend float tang against balance spring to decrease drop; bend away from spring to increase drop. Tension is correct when the distance from bottom of air horn gasket to bottom of float is 1⅝", which is equivalent to the distance from scribed line on Gauge BT-51 to end of gauge.

Accelerating Pump—No seasonal adjustment.

Choke Setting—(Hydra-Matic Cars) Centered on index. (Synchro-mesh Cars) 2 notches rich.

CARBURETION: Carter Model WGD-851S.

Idle Setting—Both screws ¾-1½ turns open. Turning screws out gives richer mixture.

Idle Speed—(**Standard**) 425 RPM. or 6 MPH.

Idle Speed—(**Hydra-Matic**) 350 RPM. with selector lever in "Dr" position.

Float Level—15/64" between top of float and bowl cover with bowl inverted.

Accelerating Pump—No seasonal adjustment.

Choke Setting—Centered on index.

Fuel Pump Pressure: 4-5 lbs.

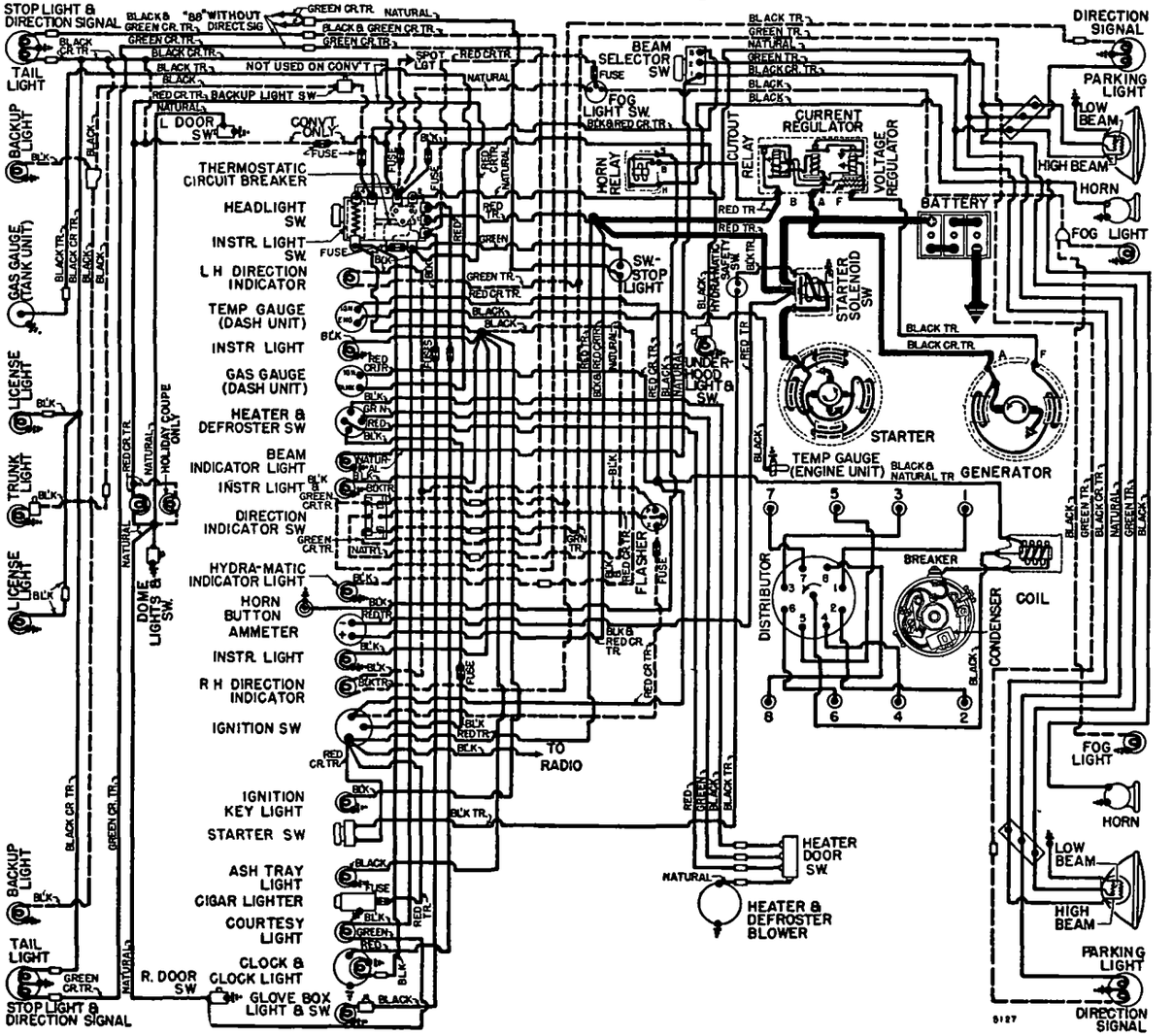

MANIFOLD HEAT CONTROL: Thermostatic coil type. Valve located on left side between exhaust manifold and exhaust pipe. Stop spring should strike stop before counter-weight touches pin to prevent valve rattles when closed.

VALVE TAPPET CLEARANCE: None in service (automatic hydraulic type tappet take-up).

Valve Timing Check—*See Valve Timing.*

STARTING: *See Battery, Starter, Generator, Regulator.*

IGNITION

IGNITION SWITCH: Delco-Remy No. 1116453.
Ignition Lock—Briggs & Stratton or Delco.

COIL: Delco-Remy 1115380. Mounted on manifold just ahead of distributor.
Ignition Current—2.0 amperes idling, 4.5 stopped.

CONDENSER: Delco-Remy No. 1869704.
Capacity—.18-.23 microfarad.

DISTRIBUTOR: Delco-Remy No. (1950) 1110817, (1951) 1110824. Automatic and vacuum advance with Octane Selector and "Center-Bearing" type breaker plate.

►**Breaker Plate Bearing Assembly**—Plate rotates on 3 bakelite buttons on support plate with spring tension adjustment (shim washers) on underside of support plate. Pull required to move plate should be 8 oz. min., 16 oz. max. with breaker plate assembly out of housing.
See "Delco-Remy Center-Bearing Breaker Plate Distributor" in Electrical Equipment Section.
Breaker Gap—.016-.021" (new points), .012-.0175" or .015" preferred (used points).
►*CAUTION—Set new points at .016-.021" to allow for wearing in of rubbing block.*
Cam Angle—(1950) 22°. Test limits with .016" gap 21-30°. (1951) 26-33°.
See "Delco-Remy Cam Angle" in Electrical Equipment Section.
Breaker Arm Spring Tension—19-23 ozs.
Rotation—Counter-clockwise viewed from above.

Distr. Degrees	Automatic Advance R.P.M.	Eng. Degrees	R.P.M.
Start	300	2.0	600
16.0	2000	32.0	4000

Vacuum Spark Control: Delco-Remy No. (1950) 1116048, (1951) 1116059. Integral type linked directly to breaker plate.
Plunger Travel—7/32".

Vacuum Advance Distr. Degrees	Eng. Degrees	Vacuum (" of HG)
Start	0°	6.5-8.5"
10°	20°	19-21"

Octane Selector—Hold-down plate permits 15° advance or retard. See Ignition Timing.

Removal: Remove distributor cap, disconnect breaker lead and vacuum line, take out 2 distributor clamp-to-block capscrews, lift distributor straight up.
Installation—Turn engine over to place #1 cylinder in firing position (#1 piston on compression and two balls on dampener midway between pin on front of engine—left side). Install distributor with flat in distributor drive gear aligned with flat on oil pump shaft, push distributor down just enough to engage oil pump shaft—drive gear must not engage camshaft gear. Align distributor clamp with holes in engine. Turn rotor and align it with breaker terminal (low tension connection). Push distributor down to engage camshaft gear (rotor will turn to No 1 terminal). Install hold-down plate by raising distributor slightly, install 2 capscrews in plate. Connect low tension lead and vacuum line, install cap.

IGNITION TIMING

	Flywheel Degrees	Piston Position
Std. Setting①	2½° BTDC.	.002" BTDC.

①—For premium gasolines.
Dampener Mark—Machined slot on rear rim of crankshaft pulley Left hand edge of slot (facing rear of car) indicates TDC Right hand edge of slot indicates 5° BTDC Pointer on lower left front side of engine should point exactly in center midway between edges of slot
Timing (with Synchroscope)—Use Tool HMO-161. Loosen hold-down plate and center scale "0" mark on center line, tighten hold-down plate Clip synchroscope lead to #1 spark plug, direct light on dampener at timing pointer on left side of engine. With engine idling, loosen clamp bolt, rotate distributor until point on dampener midway between edges of slot line up with pointer, tighten bolts
Timing (without Synchroscope)—Turn engine over to firing position for #1 cylinder (midpoint between edges of slot on dampener aligned with timing pointer on left front of engine) Loosen hold-down plate and center scale "0" mark on center line, tighten hold-down plate Loosen clamp bolt, rotate distributor until contacts open, tighten bolt
Octane Selector Setting: Normal setting, "0" mark on scale at center line. Timing should not be retarded more than to eliminate spark ping if required

CARBURETOR
CARTER WGD

Carter WGD No. 851S. 1¼" downdraft, vertical air intake type Used partial production 1951.
Casting No.—836 on face of flange
See Carburetor Section for complete data.
Settings (Idle Setting, Float Level, and Accelerating Pump): *See Tune-Up data.*
Metering Rods & Jets—*See "Carter Downdraft Carburetor Jet Specifications" in Carburetor Section.*
Hydra-Matic Throttle Linkage Adjustment: *See "Oldsmobile Hydra-Matic Drive" in Transmission Section.*
Fast Idle: Carter Dual (WGD) Carburetor type.
See Carburetion Equipment Section for complete data.
Setting—Remove thermostatic coil housing, gasket and baffle plate. Crack throttle valve and hold choke valve fully closed, then close throttle This will allow fast idle cam to revolve to fast idle position With choke valve held tightly closed and slight tension on throttle lever, loosen lock nut on choke connector rod assembly and turn sleeve until there is 017" clearance between throttle valve and bore of carburetor, side opposite port. Hold sleeve in position, lock nut
►*THROTTLE STICKING CORRECTION—Fast idle link change. See Carburetor Section for complete data.*
Automatic Choke: Carter Climatic Control (Dual Carburetor).
See Carburetion Equipment Section for complete data.
Setting—Centered (housing centered on scale)

ROCHESTER

1950—Rochester Model AA—Oldsmobile No. 7001570. Dual downdraft concentric bowl, horizontal air intake type with diaphragm accelerating pump.
1951—Rochester Model BB—Oldsmobile No. 7002900. Dual downdraft, vertical air intake type with lever operated accelerating pump and automatic choke. Used partial production 1951
Settings (Idle Setting, Float Level, and Accelerating Pump): *See Tune-Up Data.*
Hydra-Matic Throttle Linkage Adjustment: *See "Oldsmobile Hydra-Matic Drive" in Transmission Section .*
Fast Idle: Rochester GM Dual Carburetor type.
See Carburetion Equipment Section for complete data.
Setting—500 RPM, engine idling speed with engine and transmission warm. Adjusted by opening throttle slightly, rotating fast idle cam by hand until fast idle screw rests on first (low) step of fast idle cam and turning fast idle screw for 500 RPM idle speed with transmission selector lever in "N" position.
Automatic Choke: Rochester GM Automatic Choke.
See Carburetion Equipment Section for complete data.
Setting—Centered (index marks aligned).

CARB. EQUIPMENT

1950—(Standard) AC No. 1544505, (optional Oil Bath type) AC No. 1544506.
1951—(Standard) AC No. 1551023, (optional Oil Bath type) AC No. 1551024.
Fuel Pump: AC No. 1539294 fuel-&-vacuum pump.
Replacement Pump—AC No. 9294.
Pressure—4-5 lbs.
►*CAUTION*—When installing fuel pump, tip pump up to place arm under fuel pump eccentric.
See Carburetion Equipment Section for complete data.
Gasoline Gauge: AC Electric type.
Dash Unit—AC No. (1950) 1517011, (1951) 1517358.
Tank Unit—AC No. (1950 Exc. Sta. Wgn.) 1517299, (Sta. Wgn.) 1516342. (1951) 1517420.
See Carburetion Equipment Section for complete data.

BATTERY

Delco Type 17K4. 6 Volt, 17 Plate, 115 Ampere Hour
Grounded Terminal—Negative (—) to cyl. block.
Location—In engine compartment on left side.

STARTER

Delco-Remy No. (1950) 1107956, (1951) 1107982.
Armature No. 1867897.
Drive—Overrunning clutch (solenoid pinion shift).
►*CAUTION*—Overrunning clutch pinion clearance must be adjusted whenever solenoid removed from starter.
Rotation—Counter-clockwise at commutator end.
Brush Spring Tension—24-28 ozs. each.

Performance Data

Torque	R.P.M.	Volts	Amperes
0 ft. lbs.	5500	5.7	80①
14 "	Lock	3.0	600

①—Includes current draw of starter switch.
Starting Switch: Delco-Remy Solenoid Switch No. 1118136 (no relay used) mounted on starter and controlled by Pushbutton Switch No. 1996038 and Hydra-Matic Neutral Safety Switch—Delco-Remy No. (1950) 1997849. (1951) 1997887. *See "Hydra-Matic Drive" in Transmission Section.*
Hydra-Matic Drive" in Transmission Section.
►*CAUTION—Starter operates whenever pushbutton depressed with shift lever in Neutral regardless of ignition switch position.*

GENERATOR

Delco-Remy Model 1102704. Armature No. 1880550.
Two brush type with voltage and current regulation.
Charging Rate Adjustment—None. See Regulator.
Maximum Charging Rate—40 amperes min. reached

CONTINUED ON NEXT PA E

C NTINUED FR M PRECEDIN PAGE

at car speed of 22 MPH. (88), 21 MPH. (98). Actual charging rate controlled by regulator and dependent on battery condition.

Performance Data

	Amperes	Volts	R.P.M.
Cold	40①	8.0	1900

①—Not maximum output. See Current Regulator.

Rotation—Counter-clockwise at commutator end.
Brush Spring Tension—25 ozs. each.
Field Current—1.9-2.05 amperes at 6.0 volts.
Generator Belt Adjustment: Loosen generator attaching bolts and place tool J-4170 against generator between bracket and generator. Attach torque wrench to tool and pull generator against belt to a tension of: (1950) 12-13 ft. lbs., (1951) 4 ft. lbs. Tighten generator attaching bolts.
Fan Belt Adjustment: *See COOLING.*

REGULATOR

Delco-Remy 1118300. Voltage & Current Regulator.
►*NEW "1118300 SERIES"* regulators have screw adjustment for settings and single regulator springs. *See Electrical Equipment Section for complete data.*
CAUTION—Check generator for grounded field coils and leads before changing regulator settings to correct High Charging Rate or High Voltage.

Cutout Relay

Cuts In—5.9-6.8 volts hot (set to 6.4 volts hot).
Contact Gap—.020" (same for both sets).
Air Gap—.020" (with contacts just closed).

Voltage Regulator

Setting—7.0-7.7 volts hot (set to 7.4 volts hot). Regulator is over-compensated for temperature. Check with cover in place and regulator hot.
Air Gap—.075" with armature pressed down to point where contacts are just touching.
Checking & Adjustment—*See Elec. Equip. Section.*

Current Regulator

Setting—40-46 amperes hot (set to 42 amps. hot).
Air Gap—.075" with armature pressed down to point where contacts are just touching.
Checking & Adjustment—*See Elec. Equip. Section.*

LIGHTING

Headlamps: Sealed Beam. *See Electrical Equip. Section.*
Directional Signal: *See Electrical Equipment Section.*
Directional Signal Indicators—Left & Right Turn Indicator located at either end of instrument cluster. Lights when directional signal on same side of car operating (Stop Lights flash at rear).

Switches

Lighting—Delco-Remy No. 1005030.
Instrument—Part of Lighting Switch (Rheostat operated by turning light switch knob).
Beam Selector—Delco-Remy No. 1997008.
Directional Signal—Delco-Remy No. (1950) 1995554, (1951) 1995559.
Starting—Delco-Remy No. 1996046.
Stop Light—Delco-Remy No. (1950) 1997725, (1951) 1997901.
Back-Up Light—(1951 Synchro-mesh cars) Delco-Remy No. 1997893.
Back-Up Light—(1951 Hydra-Matic cars) Delco-Remy No. 1997875. Combined with Neutral Safety Switch.

MISC. ELECTRICAL

THERMOSTATIC CIRCUIT BREAKER: Delco-Remy. On back of light switch (part of switch assembly). Contacts remain closed with 30 amperes but open in 3 minutes with 42 amperes at 70°F. Not adjustable.
FUSES: Dome & Stop—SFE 14 amp. On light switch.
Dome & Tail (Convertible only)—AGC 20 ampere. In body feed wire to dome and tail lights.
Glove Box & Under-hood Light—AGA 5 amp. each.
Directional Signal—SFE 9 ampere. In Flasher to Ignition Switch wire behind instrument panel.
Electric Clock—AGA 2 ampere. In feed wire.
Cigar Lighter—AGC 30 ampere.
HORNS: (Low Note) Delco-Remy No. (1950) 1999647, (1951) 1999665. (High Note) Delco-Remy No. (1950) 1999648, (1951) 1999666. Vibrator type operated by relay.
Horn Relay: Delco-Remy No. 1116775.
Contact Gap—.027" **Air Gap**—.014" (closed).
Contacts Close—2.75-4.0 volts (set to 3.5 volts).

ENGINE

ENGINE SPECIFICATIONS: Rocket Engine. New 90° V8 with Overhead Valves. Both cylinder blocks and crankcase cast Enbloc.
Bore—3 3/4". **Stroke**—3 7/16".
Displacement—303 cubic inches. **Rated HP.**—45.
Developed Horsepower—135 at 3600 RPM.
Compression Ratio—(1950) 7.25-1, (1951) 7.5-1. 1951 cylinder head identified by a figure "2" stamped on center exhaust port.
Compression & Vacuum Reading—*See Tune-Up.*
CYLINDER HEAD & TIGHTENING TORQUES: *See Oldsmobile Special Data.*
OIL PAN REMOVAL: *See Oldsmobile Special Data.*
PISTONS: Aluminum alloy, three-ring, auto-thermic steel-strut, slipper skirt, cam ground, tin plated.
Length—4". **Weight**—19.88 ozs. (stripped).
Removal—Pistons and rods removed from above.
►*CAUTION*—When removing more than one piston assembly, stamp cylinder number on piston, connecting rod, and cap, before loosening assembly.
Clearance—Top land .032-.036". Skirt clearance .0005-.001" measured ⅛" from bottom of skirt with piston pin removed.
Fitting New Pistons: Insert .0015" x ½" x 12" feeler between piston (pin removed) and cylinder wall at right angles to pin hole. Pull to withdraw feeler should be 10 to 18 lbs.
►*CAUTION*—Allow rebored cylinders to cool to normal room temperature before fitting pistons.
Installing Pistons: Mark "F" cast on each side of pin hole on front side of piston. Install pistons 1, 3, 5, 7 in left bank, 2, 4, 6, 8 in right bank with letter "F" toward front on all pistons.
PISTON RINGS: Two coated compression rings, one slotted oil ring, all above pin. Oil ring groove drilled

Ring	Width	End Gap	Side Clearance
Comp. (#1,2)	.077-.078"	.008-.020"	.001-.003"
Oil (#3)	.1860-.1865"	.008-.020"	.0018-.0033"

Installing Rings—Compression rings installed with step on inner edge UP. Oil rings marked TOP installed with mark UP.
PISTON PIN: Diameter—.9803-.9807". **Length**—3.016". Floating type with lock ring at each end. Rods rifle drilled for pin lubrication.
►*CAUTION*—Discard old lock rings and install new service type lock rings when installing pins.
Pin Fit in Piston—.0000-.0002" loose. Pin should NOT fall through piston of own weight. Pin can be tapped in place using brass drift. Pin hole out-of-round .0005" max. Hone pin hole and install oversize pin.
Pin Fit in Rod Bushing—.0003-.0005" loose.
►*CAUTION*—If rod bushing replaced, align oil hole in bushing and rod for pin lubrication, finish to size with Piston Pin Bushing Honing Tool No. KMO-754. Standard bushing diameter .9807-.9811".
Replacement Pins: Std. size, and .001", .003", oversize.
CONNECTING ROD: Length 6.625". **Weight** 29.54 ozs. Not rifle drilled for piston pin lubrication.
►*CAUTION*—Use Guide Tool No. BT-22 over rod bolts to prevent damaging crankpin journals when removing and installing piston and rod assemblies.
Crankpin Journal Diameter—2.2488-2.2499".
Lower Bearing—Removable, steel-backed, Durex-babbitt overlay. No shims.
Clearance—.0009-.0029". **Sideplay**—.002-.011".
Bearing Adjustment: None (no shims). Replace bearings. Do not file rods or caps.
NOTE—Tang on bearing insert must seat in notches in cap and rod.
►**Installing Rods:** *CAUTION*—Rods have plain side and boss side (two machined bosses at lower end). Install rods #1, 3, 5, 7, with plain side to front, and #2, 4, 6, 8, with boss side to front (NOTE—Pistons marked "F" on front side). Caps offset and cannot be installed incorrectly. Groove on rod and cap and pads for numbering caps and rods are on same side.
►*CAUTION*—Misaligned rods must be replaced, straightening rods in field not recommended.
NOTE—Oil spit hole for lubrication of opposite cylinder wall provided in rod above cap joint.
CRANKSHAFT: 5 bearing, 6 integral counterweights.
Journal Diamters #1, 2, 3, 4, 2.498-2.499"; #5, 2.623-2.624".
Bearings—Removable, steel-backed, Durex-babbitt overlay bearing shells. Rear bearing flanged.
Clearance—.002-.0035" (rear), .0005-.003" (others).
►*REAR BEARING SHELLS*—Marked with letter on backside of bearing tang. Use same size bearing (indicated by letter on tang) when replacing bearing. Rear bearings are selective fit during manufacture, 3 sizes used: "M" Medium, "T" Thin, "H" Heavy.
Bearing Adjustment: None (no shims). Replace bearings. Do not file caps.
NOTE—#1, 2, 3, 4, bearing caps numbered. Install with numbers toward right hand cylinder bank.
Bearing Removal—Bearing shells can be removed and installed without removing crankshaft.
End Thrust: Taken by flanges on rear main bearing.
Endplay—.004-.008".
Crankshaft Front Oil Seal and Rear Main Bearing Oil Seal Installation: *See "Crankshaft & Main Bearings" in Oldsmobile Special Data.*
CAMSHAFT: 5 bearing, coated (Parco-Lubrited) shaft
Camshaft Removal & Installation—*See Oldsmobile Special Data.*
Journal Diameters—1.8724-1.8731" (all).
Reamed Bushing Diameters—1.8745-1.8760" (all).
Bearings—Steel-backed, babbitt bushings.
Clearance—.0014-.0036".
End Thrust: Forward thrust taken by thrust plate on front of engine, rear thrust at front of cyl. block.
►*CAUTION*—Thrust plate seals off two oil galleys and must be installed flat to prevent low oil pressure at idling speeds. 1/16" hole in plate at right galley provides lubrication for chain, sprockets, fuel pump

Timing Chain:	Link-Belt (Std.)	Morse (Optl.)
Width	27/32"	7/8"
Pitch	.500"	.375"
Length (Links)	48	64

Camshaft Setting: Mesh chain with sprocket marks

ENGINE

C NTINUED FROM PRECEDIN PAGE

adjacent and in line with a straightedge across the shaft centers (or use Tool BT-11).
NOTE—Fuel pump eccentric bolted to front end of camshaft ahead of sprocket. Assemble with "0" mark to front, machined step against sprocket.

VALVES:	Head Diam.	Stem Diam.	Length
Intake	1 3/4"	.3417-.3425"	4.907-4.927"
Exhaust	1.432-1.442"	.3930-.3938"	4.931-4.951"
1950 Models			
Intake	45°	.333"	.0022-.0040"
Exhaust	45°	.333"	.0027-.0045"

►**Intake Valve Rubber Seals**—Installed in second groove from end of valve stem between lock retainer and valve stem. Always use new rubber seals.

Valve Guides: Intake guides tapered on lower end. Press guides in head until top end 53/64-27/32" above face of valve spring seat (Tool BT-13 positions guide correctly in head). Inside ream diameter .34425-.34525" Intake, .39605-.39705" Exhaust.

Valve Springs: Intake and exhaust springs are alike. Dampers used on lower end of all springs.
Free Length—2 3/32".

	Spring Pressure	Spring Length
Valve Closed	62-68 lbs.	1.777"
Valve Open	136-146 lbs.	1.447"

►*CAUTION*—Lower end of damper and spring must seat in recess in head.

Valve Lifters: New hydraulic type maintaining zero tappet clearance in service. Production lifters fitted in four sizes: standard, .001", .002", or .003" oversize with identification number (except standard which is unmarked) etched on lifter body and cylinder block carries size mark on rail under push rod cover. **Use proper size lifter when replacing valve lifters.** *See Miscellaneous Section for complete data.*
Valve Lifter Removal—*See Oldsmobile Special Data.*

Rocker Arms: New rocker arm and shaft assemblies mounted on each cylinder head. Intake rocker arms identified by brass pin in oil lead.
Rocker Arm Shaft Disassembly and Reassembly—*See Oldsmobile Special Data.*
►*CAUTION*—Steel plain finish push rods (alike for all valves) used on domestic engines. Longer copper finish push rods (for thicker head gaskets) used on export engines only.

VALVE TIMING

Tappet Clearance: None in service (hydraulic type lifters which maintain zero clearance).

Valve Timing: *See Camshaft Setting above.*
Intake Valves—Open 13½° BTDC. Close 50½° ALDC.
Exhaust Valves—Open 49½° BLDC. Close 14½° ATDC.
Valve Timing Check—#1 intake valve opens 14° before top dead center (#1 piston .060" before top dead center) with zero tappet clearance.

LUBRICATION

Engine Oiling System: Pressure to main bearings, camshaft bearings, connecting rod lower bearings, hydraulic valve lifters (right cylinder bank from main oil galley on right side, left bank from left oil galley from front main bearing); and to rocker arms (hollow shafts, left shaft fed from #2 camshaft bearing, right shaft from #4 camshaft bearing. Timing chain, sprockets, fuel pump lever and eccentric lubricated by metered hole in camshaft thrust plate over front end of right main oil galley. Distributor drive gear lubricated by metered hole in plug in rear end of left oil galley.
►*CAUTION*—See "Oil Filter" below.
Crankcase Capacity—5 quarts.
Normal Oil Pressure—40 lbs. at 30 MPH.
Oil Pressure Regulator—Located on oil pump. Opens at 40 lbs. Non-adjustable.

Oil Pump: Gear type. Located in crankcase and attached to rear main bearing cap by three bolts.
NOTE—Pump can be removed and installed without disturbing distributor drive (flat on upper end of oil pump shaft engages flat on distributor drive gear).

Oil Filter: AC PF-122 full-flow type optional. On lower right side of crankcase at rear.
►*CAUTION*—If oil filter (or pad cover if filter not used) replaced, use a new gasket (coat both sides with POB No. 5 Sealer) and tighten bolts to 35-40 ft. lbs. Oil filter (or pad) mounted externally on lower right side of crankcase at rear. Oil filter is full flow type (all oil from pump delivered to oil filter) requires pad when filter not used to return oil to main oil galley.

Oil Pressure Gauge: AC No. 1507124. Not electrical.

Crankcase Ventilation: Air intake in oil filler cap *(oil-wetted type cleaner) with outlet connection to* a ventilating baffle at rear of block above right bank. Outlet pipe push fit at ventilator and extends down below right rear corner of engine.
Servicing—Wash and re-oil filter element in cap every 2000 miles (oftener in dusty areas).

COOLING

Cooling System: Pressure type with pressure valve and vacuum valve (relief valves) in filler cap. Two by-passes for water re-circulation with thermostat closed: 1) internal passage from cylinder head through block to pump inlet; 2) (1950) external tube from water outlet (cast as part of intake manifold) to pump inlet. (1951) internal bypass, eliminating external bypass previously used.
Capacity—21½ qts.
Pressure Valve—AC No. 850549 Radiator Cap. Opens at 7 lbs.

Water Pump: Packless, sealed ball-bearing shaft. Pump mounted in front engine cover casting.
See Water Pump Section for complete data.
Removal—Take off fan and two fan pulleys. Remove six pump mounting bolts (4 to engine cover, 2 to block). Remove pump. NOTE—When installing pump, coat one side of pump housing gasket with gasket cement, dip four bolts in CP No. 9 Sealer.
Fan Belt Adjustment—Loosen idler pulley attaching screws and place tool J-4139 over idler pulley attaching bolt and under bracket. Attach torque wrench to tool J-4139 and tighten belt to 25 ft. lbs.
Generator Belt Adjustment—*See GENERATOR.*

Thermostat: Harrison. In water outlet (integral with intake manifold casting).
Setting—Starts to open 152°F. Fully open 173°F.

Temperature Gauge: AC Electric.
Dash Unit—AC No. (1950) 1512168, (1951) 1512275.
Engine Unit—AC No. 1512015.
See Miscellaneous Section for complete data.

CLUTCH

Long 11CF-10½ TI—Semi-centrifugal, single plate, dry disc type.
See Clutch Section for complete data.

Facings—Woven type. I.D. 7", O.D. 10½", Thick. .137".
Pedal Adjustment: Pedal free travel ⅞-1⅛". Adjust by turning nut on connector rod at clutch fork.
Removal: Remove transmission (see Transmission), remove right and left splash pans, engine breather pipe, and right and left lower flywheel housing bolts. Install Engine Rear Support Tool BT-28, entering pilot supports into lower housing bolt holes. Remove engine rear mount bolts at clutch housing, and remove frame cross-member by removing three bolts at each end. Remove clutch housing by removing eight bolts holding housing to flywheel housing. Remove clutch assembly from flywheel.

TRANSMISSION

SYNCHRO-MESH

Own Make. Constant-mesh, synchro-mesh (Second & High), sliding gear (Low & Reverse), all helical gear type with remote shift control.
►*1951 NOTE*—Different shifting arrangement used on this transmission. Not interchangeable with previous models.
See Transmission Section for complete data.

Transmission Control: Oldsmobile "Handi-shift."
See Transmission Section for complete data.

Removal: *Drain transmission and disconnect manual* control rods and speedometer cable at transmission. Remove clutch return spring and disconnect clutch linkage at yoke connecting link. Detach drive shaft at rear universal joint, and slide shaft from transmission. Remove transmission.

HYDRA-MATIC TRANSMISSION

Oldsmobile "Whirlaway" consists of Fluid Coupling and an Automatic self-shifting transmission with Modulated Throttle Pressure.
►*1951 HYDRAMATIC REVERSE NOTE—Has Hydraulically operated "Cone Type Clutch" Reverse mechanism. See Transmission Section for complete data.*
►*CAUTION—1950 Eight cylinder transmissions NOT interchangeable with 6 Cyl. types (have greater torque capacity).*
Lubrication—Check fluid level in transmission every 2000 miles. Drain and refill after first 15000 miles and every 15000 miles thereafter. Use only "Oldsmobile Hydra-Matic Drive Fluid."
Draining & Refilling—*See "Hydra-Matic Drive" in Transmission Section.*
Capacity—10½ qts.
Checking Fluid Level—Raise front floor mat at right side, remove sheet metal cover in floor, clean opening of lint, sand, etc. Set hand brake, start engine and let engine idle, move control lever to "DR" position. Take out dip stick, wipe dry and replace stick, remove stick quickly and check level. Level should be at "FULL" mark, add fluid to bring up to "FULL" if required with engine idling.
►*CAUTION—Engine must be idling and selector lever in "Drive" position when checking fluid level.*
Linkage Adjustment—*See "Hydra-Matic Drive" in Transmission Section.*
Removal: *See "Hydra-Matic Drive" in Transmission Section.*

UNIVERSALS

Mechanics 2C or 2CR. Roller bearing types.
See Universals Section for complete data.
►*CAUTION*—Rear universal companion nut controls

CONTINUED ON NEXT PAGE

CONTINUED FROM PRECEDING PA E

rear axle pinion bearing "pre-load" (must be adjusted whenever nut is loosened). *See Oldsmobile Rear Axle in Rear Axle Section for complete data.*

REAR AXLE

Own Make. Hypoid gear, semi-floating type with pinion mounted on two tapered roller bearings.

►*CAUTION*—New carriers (with machined surfaces on differential side bearing caps) and axle housings (with 2 welded support plates—supports bearing caps to take care of increased torque of new Rocket engine) are used. *Not interchangeable with "76" Series carrier and axle housing.* **Use only carriers and axle housings described above on "88" and "98" Cars.**

►*NOTE*—Rear universal companion nut controls pinion bearing "pre-load."

See Rear Axle Section for complete data.

"88" Series Ratios

1950-51 Synchro-mesh—Std. 3.64-1 (40-11), Optl. 3.90-1 (39-10).

1950-51 Hydra-Matic—3.42-1 (41-12).

Super "88" Series Ratios

1951 Hydra-Matic—3.64-1 (40-11), Optl. 3.90-1 (39-10).

"98" Series Ratios

1950 Synchro-mesh—Std. 3.90-1 (39-10), Optl. 3.64-1 (40-11). **Convertible** 3.90-1 (39-10).

1951 Synchro-mesh—Std. 3.90-1 (39-10).

1950-51 Hydra-Matic—Std. 3.64-1 (40-11), Optl. 3.90-1 (39-10). **Convertible** 3.90-1 (39-10).

Rear Axle Ratio Markings—Coded ring and pinion gear marking stamped on lower side of carrier housing as follows: 4 = 39:10, 6 = 40:11, 8 = 41:12. NOTE—Early 1950 housings were stamped with three figures, last two of which indicated date of manufacture.

Backlash—.004-.008". Screw adjustment.

Removal: Disconnect driveshaft at rear universal (wire trunnions to avoid losing rollers), mark joint (reassemble to mark when reassembling). Remove axle shafts (see data below) and carrier capscrews.

►*CARRIER INSTALLATION CAUTION*—Due to close fit between carrier pedestal caps and support plates in housing, **special carrier installation procedure used.** *See Oldsmobile Rear Axle in Rear Axle Section.*

►*CAUTION*—Rear universal joint companion flange nut controls pinion bearing "pre-load" (must be adjusted whenever nut is loosened).

Axle Shaft Removal: Remove wheel. Take off brake drum by removing two Tinnerman nuts from wheel studs (if nuts removed by turning off threads they can be re-used, if nuts damaged new nuts must be used). Remove backing plate mounting nuts, and static collector. Loosen bearing retainer (do not move backing plate or brake line may be damaged). Pull shaft and bearing with Puller J-942 (do not allow shaft to drag on oil seal), replace one nut.

Wheel Bearing Adjustment—None.

Rear Suspension: Coil spring type with support arms.

See Rear Axle Section for complete data.

SHOCK ABSORBERS

Delco. Double acting front and rear on 1950 cars. Double acting front and direct acting rear on 1951 cars except Series "88" which uses double acting on rear.

	Front		Rear	
	R.H	L.H.	R.H.	L.H.
1950-51 "88"	1947-J	1947-K	2105-T	2105-U
1951 Super "88"	1947-J	1947-K	801-T	801-T
1950 "98"	1947-C	1947-D	2105-R	2105-S
1951 "98"	1947-C	1947-D	801-T	801-T

FRONT SUSPENSION

Front Suspension: Independent, linked parallegram type with coil springs.

See Front Suspension Section for complete data.

Kingpin Inclination—4° 29' 47" crosswise.

Caster—0° to Neg. ¾°. Adjustable.

Camber—Neg. ¾° to Pos. ¾° (Service Limits), Neg. ¼° to Pos. ¾° (New Car Specification).

Toe-In—1/16-1/8". Adjust each tie rod equally.

Steering Geometry Inner wheel 23° ± ½°. Outer 20°.

STEERING GEAR

Steering Gear—Saginaw Worm-and-Roller type.

See Steering Gear Section for complete data.

BRAKES

Service Brakes: Bendix Hydraulic, duo-servo, single anchor type **without eccentric adjustment.** Hand lever applies rear wheel service brakes.

See Brake Section for complete data.

Wheel Cyl. Bore (88) Front whl. 1 3/32", rear 15/16".

Wheel Cylinder Bore (98) Front wheel 1⅛", rear 1".

Drums—Cast-iron. Diameter 11". Max. rebore .060"

Lining—Molded. Width, Front wheel 2½", rear wheel 2". Thickness, 3/16". Length per shoe; 9 3/8" (primary), 12 1/32" (secondary).

Clearance—.015" at both ends of secondary (rear) shoe with primary shoe forced out against drum.

Braking Power (88)—58% front wheels, 42% rear.

Braking Power (98)—56% front wheels, 44% rear.

Hand Brake: See Service Brakes above.

MISC. MECHANICAL

Power Operated Convertible Tops, Windows, & Front Seat: Hydro-Lectric type (motor driven pump).

See Miscellaneous Section for complete data.

Windshield Wiper: (88) Vacuum Link-&-Crank Arm. **(98)** Vacuum Cable Operated type.

See Miscellaneous Section for complete data.

CYLINDER HEAD

CYLINDER HEAD INSTALLATION: Use Torque Indicating Wrench to tighten cylinder head stud nuts, tighten in correct sequence as shown in the diagrams.

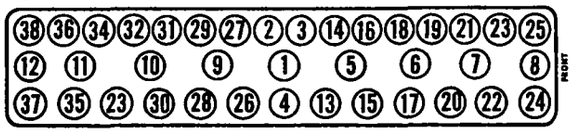

TIGHTENING SPECIFICATIONS

	Ft. Lbs.	In. Lbs.
Cylinder Head Stud Nuts	60-62	720-744
Main Bearing Capscrews	90-95	1080-1680
Connecting Rod Nuts (7/16)	60-65	720-780
Connecting Rod Nuts (3/8)	45-46	540-552
Camshaft Sprocket Nut	140-160	1680-1920
Timing Chain Cover	15-18	180-216
Intake & Exhaust Manifold	25-30	300-360
Vibration Dampener Screw	130-150	1560-1800
Flywheel to Crankshaft		
Screws (1/2)	70-80	840-960
Screws (7/16)	55-60	660-720
Oil Pan	15-18	180-216
Spark Plugs (10 mm.)	10-14	120-168

ORIGINAL BORE & PISTONS

ORIGINAL BORE & PISTON SIZES: Piston size indicated by mark stamped on head of each piston. Cylinder bore size indicated by mark stamped on top left face of the cylinder block.

Mark	Piston Size	Cylinder Size
AA	3.49825-3.49850"	3 49950-3 49975"
A	3 49850-3.49875"	3 49975-3 50000"
BB	3.49875-3.49900"	3 50000-3.50025"
B	3.49900-3.49925"	3 50025-3.50050"
CC	3.49925-3.49950"	3.50050-3 50075"
C	3 49950-3.49975"	3 50075-3 50100"
DD	3.49975-3.50000"	3 50100-3 50125"
D	3.50000-3.50025"	3.50125-3.50150"

PISTONS

REPLACEMENT ALUMINUM ALLOY PISTONS:—Finished aluminum alloy replacement pistons are stamped on head with decimal figure (.005, 010, etc.) indicating nominal oversize and one or two letters (AA, A, BB, B, CC, C, DD, D) which indicates the actual size variation (in .00025" steps) of the piston from indicated nominal oversize See oversizes listed below and size variations for each letter (in table).

NOTE—This system of marking makes it possible to order a finished piston (using number and letter) for any particular bore size within these limits

Piston Oversizes (Figures Stamped on Piston Head) Furnished for all engines as follows:

PISTON MARKING (FOR SIZE VARIATION)

AA—.00025" Under marked size.
A—Same as marked size.
BB—.00025" Over marked size.
B—.0005" Over marked size.
CC—.00075" Over marked size.
C—.001" Over marked size
D—.00125" Over marked size
DD—.0015" Over marked size.

PISTON RINGS

TRIPLE ACTION PISTON RING SETS: Service Sets.—These rings furnished in packaged sets for all models and should be installed on **aluminum pistons only** as directed below. CAUTION—Do not use these rings with Cast Iron pistons.

Oil Ring—Spring expander type oil ring used consisting of top and bottom rails with a spring assembled between two rails Two tabs in each rail engage a loop in spring expander when assembly installed in ring groove. Install ring on piston as follows: Place lower rail with locking tabs up (45° to right of thrust face or left side of piston) on piston slightly below lower ring groove. Insert spring expander in oil ring groove with end gap centered on thrust or left side of piston. Install upper rail in ring groove with locking tabs down so as to engage first loop in spring to left of spring end gap. Move lower rail up into ring groove with tabs in rail engaging first loop in spring expander to right of spring end gap. Press upper and lower rails down firmly on spring so that rails are properly seated on spring and are free in groove

#2 Compression Ring—Assemble ring in #2 ring groove with groove on outer edge down

Top Compression Ring—Assemble ring in top ring groove with groove on inner edge up.

PISTON PINS

PISTON PIN BUSHING INSTALLATION: Two-piece bushing used in rod. Use Piston Pin Bushing Replacement Set J-2555 (consists of: Remover, Replacer, Plate, Burnisher), and Piston Pin Bushing Reamer J-874-18 Press old bushings out with Remover and arbor press. *(CAUTION*—Each half of bushing must be installed and burnished separately so that oil channel formed between inner ends of bushing halves will not close up). Install one half of bushing flush with outer end of rod, then using Plate of tool under end of rod, push Burnisher through from **inner end** of bushing. Install second half of bushing and burnish in place from inner end working through bushing half already in place Ream bushing for size-to-size fit with piston pin using Reamer J-874-18. Check pin fit as follows

Piston Pin Fit in Rod Bushing—With lower bearing inserts and cap installed on rod, insert piston pin in rod, clamp pin in vise with lead jaws placing rod in horizontal position. Rod should hold in this position, but should fall down of own weight when tapped down by hand.

CRANKSHAFT & MAIN BEARINGS

CRANKSHAFT FRONT SEAL: Installed on front end behind timing chain cover To replace seal remove radiator core, vibration dampener (puller J-2636 for fluid type dampener), and timing chain cover Remove old seal and install new seal over end of shaft Place cover aligning arbor over end of shaft, install cover and tighten cover screws. Insert feeler gauge between arbor and hole in cover, run gauge around arbor, if clearance not uniform, loosen cover screws and shift cover until clearance uniform.

VALVE SYSTEM

HYDRAULIC VALVE LIFTER CHECK: When valves ground or new valves installed, mechanical clearance at valve lifters should be checked as follows. With valves out, lift out hydraulic take-up assemblies from tappet bodies (keep assemblies in order so that they can be re-installed in same position) Install valves without springs, set #1 piston at top of compression stroke placing tappets for this cylinder on heel of cam. Check valves for #1 cylinder by inserting Plug Gauge of Hydraulic Tappet Gauge J-2553 in tappet body. Check clearance between gauge plug and valve stem (with valve held down on seat) using feeler gauge supplied with gauge set **Clearance should be .030" to .070".** If under .030" grind off end of valve stem with valve refacer.

See Wilcox-Rich "Zero-Lash" Valve Lifter in Miscellaneous Section.

OIL PAN REMOVAL

OIL PAN REMOVAL: Place car to position hoist over engine. Disconnect steering idler lever support from frame side rail and lower steering linkage. Remove flywheel housing lower cover and take out oil pan screws Lower oil pan and if necessary, rotate crankshaft to place counterweights up for clearance (use pry bar at flywheel housing engaging teeth on flywheel). If pan requires additional clearance, attach hoist to front of engine (do not disturb front engine support bolts), raise engine just enough to relieve load on support, pan should then come out.

OIL PUMP

OIL PUMP: Removal—Set engine in firing position for #1 cylinder (6° BTDC), remove distributor cap and mark rotor position on distributor housing. With pump cover off, mark pump driving gear position on pump body (check to this mark when re-assembling since pump must be rotated 180° on some cars to clear frame when removing pump from engine).

Oil Pump Installation: Correct engaging position of pump drive is with driving blade in pump drive gear parallel to camshaft and punch mark on end of drive gear at top. Re-assemble to marks made when removing pump (see above—engine in firing position for #1 cylinder). If pump does not engage slot in distributor shaft, remove pump and turn pump drive gear one tooth and re-install (making certain distributor rotor at #1 firing position).

CLUTCH NOTES

CLUTCH PEDAL OVER-CENTER SPRING: New adjustable type over-center (booster) spring Adjustment provided at spring eye-bolt nut (front end of spring) and by turnbuckle type pedal-to-relay lever link (controls over-center point). To adjust, proceed as follows·

Clutch Pedal Linkage Adjustment: Check over-center eye bolt (should be 1 5/8" from end of bolt to head of nut—adjust if necessary). Back off locknut and adjusting nut on rod at throwout lever and unhook pedal retracting spring from throwout lever. Adjust pedal-to-relay lever link turnbuckle so that over-center spring will pull pedal down after pedal moved down one inch from toeboard (make certain throwout lever does not contact adjusting nut and locknut backed off above). Hook pedal retracting spring to throwout lever. Adjust pedal for 1¼-1½" free play at pedal pad. Check over-center spring hold-in position by pulling pedal to floor and hooking spring at bend in pedal arm. Adjust eye bolt nut to hold pedal down with seven lbs. pull on scale.

ELECTRICAL EQUIPMENT NOTE: Both Auto-Lite and Delco-Remy equipment are used. Cars are equipped entirely with either one or the other system.

MODEL IDENTIFICATION

SERIAL NUMBERS: Stamped on plate mounted on left front door pillar post.

ENGINE NUMBERS: Stamped left side of engine opposite #8 cylinder.

1951 Starting Numbers—(200) J-200001, (300) J-400001, (400) J-600001.

TUNE-UP

COMPRESSION PRESSURE:
200—124 lbs. at 150 RPM (Std. 7.0 Hd.).
300—134 lbs. (Std. 7.0), 144 lbs. (Optl. 7.8) at 150 RPM.
400—144 lbs. at 150 RPM (Std. 7.8 Hd.).

VACUUM READING: 18.2" idling at 400 RPM.

FIRING ORDER: 1-6-2-5-8-3-7-4 See diagram.

SPARK PLUG GAP: .026"-.030".
Plug Types—Auto-Lite A5, AC No. 46-5, Champion J-8. 14 mm. Metric.

DISTRIBUTOR: Breaker Gap—.017", Limits .013" to .018".
Cam Angle—(Auto Lite)—Closed 27°, Open 18°.
Cam Angle—(Delco Remy)—Tests limits with .016". gap—21°-30°.
Breaker Arm Spring Tension—(Auto-Lite) 17-21 ozs. (Delco-Remy) 19-23 ozs.
Automatic & Vacuum Advance—*See Ignition.*
Condenser Capacity—(Auto-Lite) .20-.25 mfd. (Delco-Remy) .18-.23 mfd.

IGNITION TIMING: 6° BTDC.
Timing Procedure—*See Ignition Timing.*
Vibration Dampener Mark—"#1UP.DC" with fifteen 1° graduations ahead of this point. Set ignition contacts to open at 6th graduation before "DC".
Fuel Compensator Setting—Slight ping accelerating with wide open throttle.

CARBURETION:
Idle Setting—½-1½ turns open. Two screws—turn screws out for richer mixture.
Idle Speed (Standard)—6 miles per hour.
Idle Speed (Ultramatic Drive)—400 RPM.
Float Level—13/64" from top of float to cover with valve seated (Assembly inverted).
Accelerating Pump—Pressure type delayed action plunger. (Non-adjustable).

Choke Setting: 1 Point rich.
CAUTION—This setting supersedes previous setting.

Fuel Pump Pressure: 4-4¾ lbs.

MANIFOLD HEAT CONTROL: Automatic. No adjustment. Valve must operate freely.

VALVE TAPPET CLEARANCE: "200" Engine .007" Intake, .010" Exhaust, Hot.
"300" & "400" Engines—Hydraulic lifters used. No adjustment required.
Valve Timing Check—*See Valve Timing.*

STARTING: *See Battery, Starter, Generator, Regulator.*

IGNITION

AUTO-LITE

COIL: Auto-Lite CR-4001A.
Location—Left side of engine above distributor.
Ignition Current—2.75 amperes idling. 4.5 amperes stopped.

CONDENSER: Auto-Lite.
Capacity—.20-.25 microfarad.

DISTRIBUTOR: Auto-Lite Model No. IGP-4502C. Automatic advance type with Vacuum Spark Control and Fuel Compensator adjustment.
Breaker Gap—.017". Limits .013"-.018".
Cam Angle—Closed 27°, Open 18°.
Breaker Arm Spring Tension—17-21 ozs.
Rotation—Counter-clockwise viewed from above.

Automatic Advance (Auto-Lite)

Degrees	Distr.	R.P.M.	Degrees	Eng.	R.P.M.
Start		300	0		600
1		400	2		800
3		600	6		1200
6		1200	12		2400
8		1600	16		3200

Fuel Compensator: 40° range of adjustment on quadrant at vacuum link connection. *See Ignition Timing.*

Vacuum Spark Control: Auto-Lite. Mounted on hold-down plate and linked to adjusting quadrant on distributor. Provides additional advance at speeds above idling except when engine accelerated or operated with wide open throttle when spark retarded by return spring.

Vacuum Advance (Auto-Lite)

Dist. Degrees	Eng. Degrees	Vacuum (" of HG)
Start	0°	6"
1°	2°	6¾"
5.7°	11.4°	10"
9°	18°	14¾"
10.5°	21°	17"

Distributor Removal: On left side of engine. Discon-

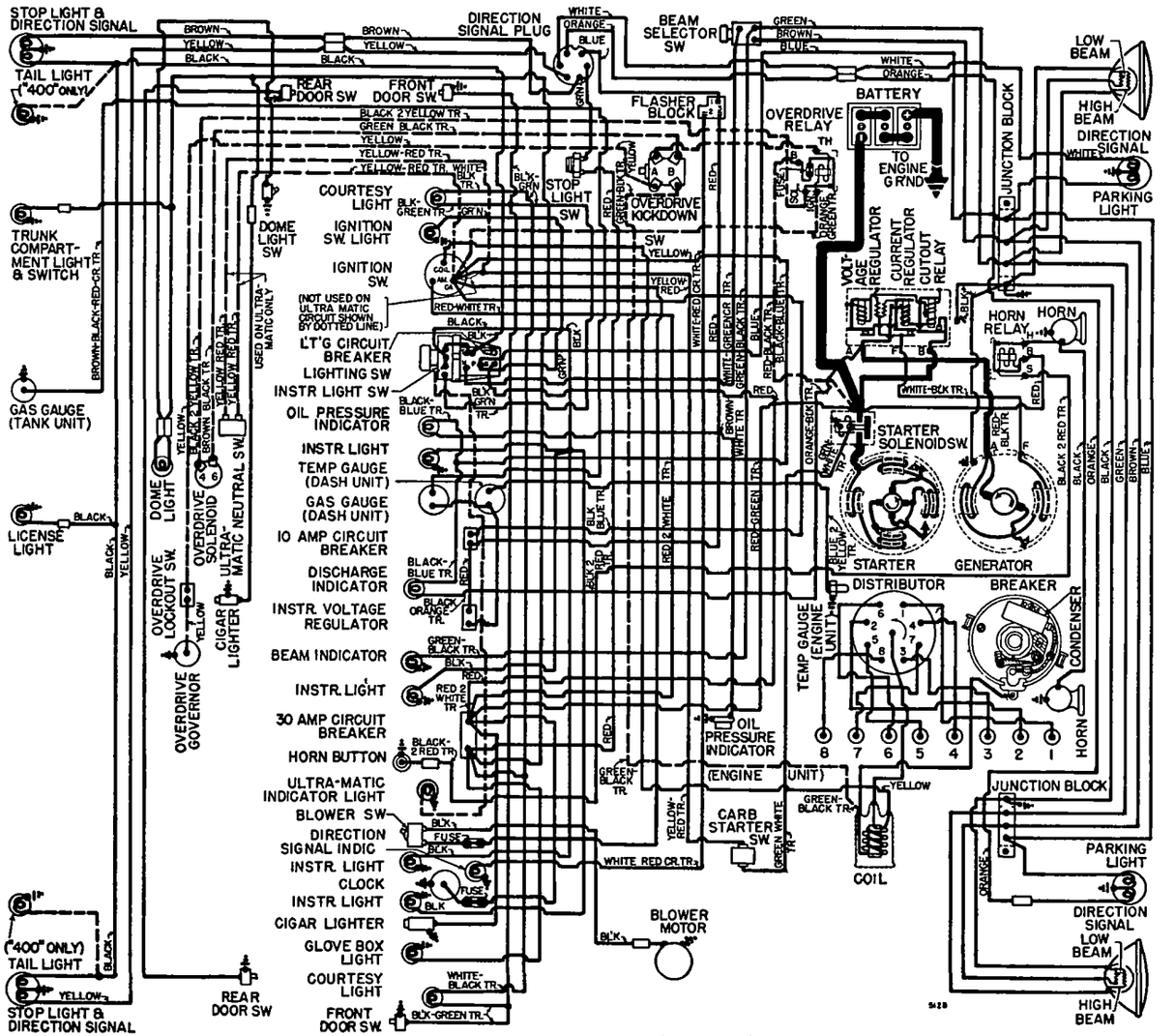

CARS WITH AUT -LITE EQUIPMENT

nect vacuum line, take out screw in hold-down plate, lift off.

DELCO-REMY

COIL: Delco-Remy No. 1115376.
Location—Left side of engine above distributor.
Ignition Current—2.75 amperes idling. 4.5 stopped.

CONDENSER: Delco-Remy Part No. 1869704.
Capacity—.18-.23 microfarad.

DISTRIBUTOR: Delco-Remy 1110825. Automatic and vacuum advance type with "center bearing" breaker plate and fuel compensator adjustment.
See "Delco-Remy Center-Bearing Breaker Plate Distributor" in Electrical Equipment Section.
Breaker Gap—.017". Limits .013"-.018".
Cam Angle—Test limits with .016" gap—21-30° *See "Delco-Remy Cam Angle" in Electrical Equipment Section.*
Breaker Arm Spring Tension—19-23 ozs.
Rotation—Counter-clockwise viewed from above.

Automatic Advance (Delco-Remy)

Degrees Distr.	R.P.M.	Degrees Eng.	R.P.M.
Start	300	2	600
4	600	8	1200
9	1600	18	3200

Fuel Compensator: 10° advance or retard adjustment at distributor. *See Ignition Timing.*
Vacuum Spark Control: Delco-Remy 1116060. Integral type mounted on distributor and linked directly to breaker plate. Provides additional advance at speeds above idling except when engine accelerated or operated with wide open throttle when spark retarded by return spring in unit. Plunger travel 15/64" Max.

Vacuum Advance (Delco-Remy)

Distr. Degrees	Eng. Degrees	Vacuum (" of HG)
Start	0°	5-7"
7°	14°	19"

Distributor Removal: Same as for Auto-Lite above.

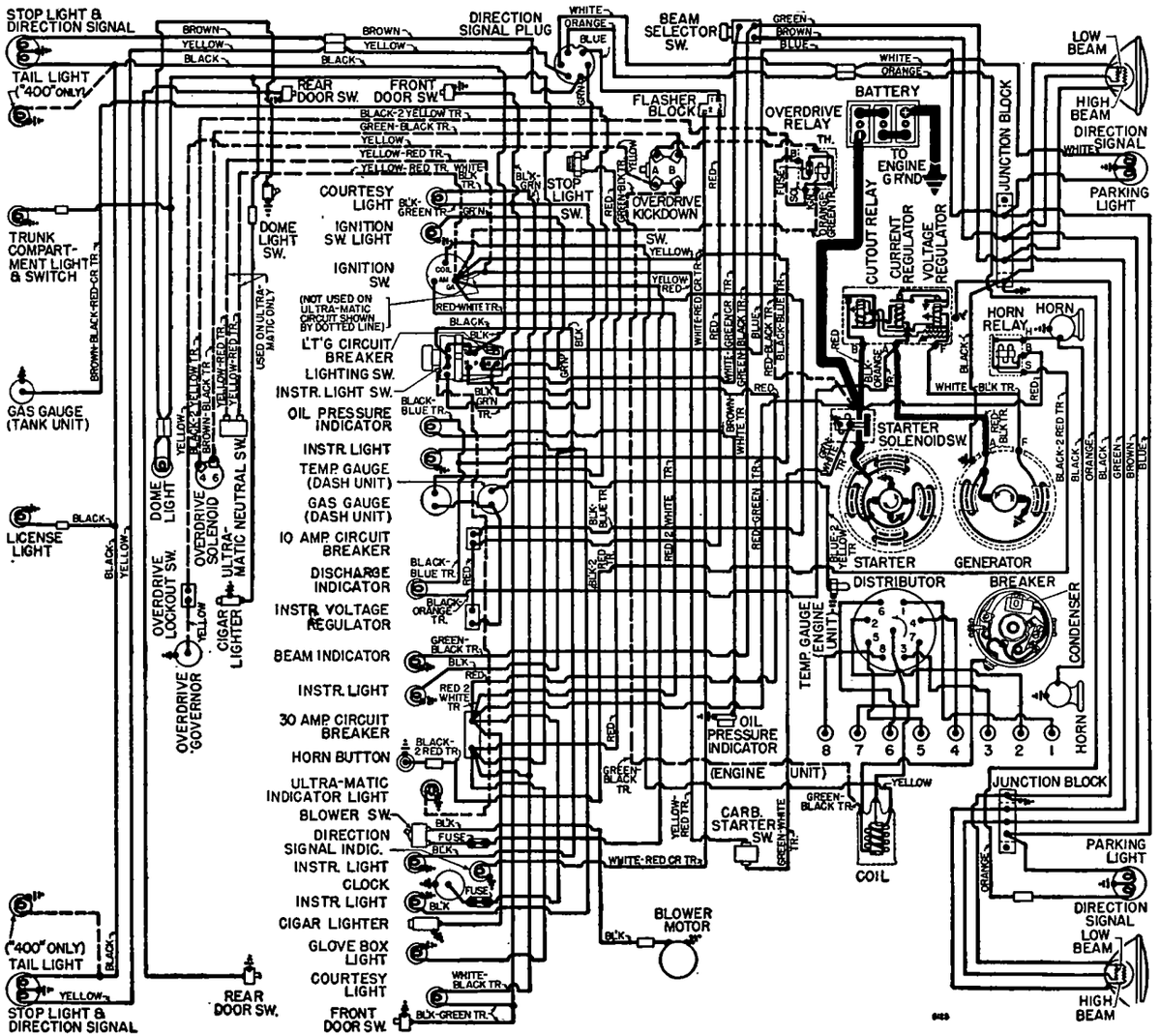

CARS WITH DELCO-REMY EQUIPMENT

IGNITION TIMING

Std. Setting.....6° BTDC.
NOTE—Modify this setting for special fuel and altitude conditions. *See Fuel Compensator Setting.*
Vibration Dampener Mark—"#1UP.DC" with fifteen 1°graduations ahead of mark.
Timing—With #1 piston on compression, turn engine over until piston reaches firing position with correct mark on dampner in line with pointer on chain cover (see table above). Loosen vacuum unit link screw in distributor quadrant. (Auto-Lite distributors), or holdown screw in advance arm (Delco-Remy distributors), rotate distributor until contacts begin to open, tighten screw.
Fuel Compensator Setting—Should be set for slight ping when accelerating engine with wide open throttle. To adjust, loosen vacuum unit link screw in distributor quadrant (Auto-Lite distributors), advance arm hold-down screw (Delco-Remy distributors), rotate distributor one graduation at a time counter-clockwise (if ping too severe), clockwise (if no ping) until correct performance secured.

CARBURETOR

Carter WGD ("200") No. 784S, ("300" & "400") 767S. 1¼" dual barrel, downdraft types with Carter Climatic Control.
Casting No. on Flange—803 (784S & 767S).
See Carburetor Section for complete data.
Settings (Idle Setting, Float Level, and Accelerating Pump): *See Tune-Up.*
Metering Rods & Jets—*See Carter Downdraft Jet Table in Carburetor Section.*
Fast Idle: Carter (WGD) Carburetor type.
Setting—.023" throttle opening with choke valve closed (throttle must be opened first). Adjust by bending choke connector rod at lower end.
See Carburetion Equipment Section for complete data.
Automatic Choke: Carter Climatic Control (Dual Carburetors).
Setting—1 Point rich.
See Carburetion Equipment Section for complete data.

CARB. EQUIPMENT

Air Cleaner: ("200") AC No. 1544276 Oil-wetted type (Std.), No. 1544277 Oil-bath type (Optl.).
("300" & "400") AC No. 1554277 Oil-bath type Std.
Servicing (oil wetted type)—Wash and re-oil filter element every 1000 to 2000 miles whenever crankcase oil is changed.
Servicing (oil bath type)—Clean filter element, clean and refill oil reservior with SAE 50 engine oil (Summer), No. 20 (Winter) to level of indicator line on case (Approx. 1 pint) every 5000 miles or oftener if required.
Fuel Pump: (Fuel & Vacuum)—AC type CV No. 1539606.
Replacement Pump—AC No. 9590.
Pressure—4-4¾ lbs.
See Carburetion Equipment Section for complete data.

CONTINUED N NEXT PAGE

CONTINUED FR M PRECEDING PAGE

GASOLINE GAUGE: King-Seeley "CV" (Constant Voltage) type with voltage regulator.
Dash Unit—("200") K-S No. 45654; ("300" & "400") K-S No. 45607.
Tank Unit—(All Models) K-S No. 44510.
See Carburetion Equipment Section for complete data.

BATTERY

("200" & "300") **Auto-Lite Type 2L-100, Willard SW-2L-100,** 6 volt 17 plate, 100 ampere hr. capacity (20 hr. rate).
("400") **Auto-Lite Type 2FH-120, Willard HW-2F-120,** 6 volt 17 plate, 120 ampere hr. capacity (20 hr. rate).
Grounded Terminal—Positive (+) to engine at water pump.
Location—Left side of engine compartment.

STARTER

AUTO-LITE

(200, 300)—Auto-Lite MCL-6003 (Early), MCL-6113 (Later).
Armature—Auto-Lite MCH-2021 (MCL-6003), MCH-2028 (MCL-6113), MCH-2070 (MCL-6114).
Drive—(MCL-6003) Bendix Drive No. A-1915, (MCL-6113) Bendix Drive No. A-1792 (MCL-6114) Solenoid pinion shift.
Rotation—Counter-clockwise at commutator end.
Cranking Engine—175-225 amperes.
Brush Spring Tension—42-53 ozs. (new brushes).

Performance Data (Auto-Lite)

Torque	R.P.M.	Volts	Amperes
0 ft. lbs.	4900	5.0	65
8.0 "	Lock	2.0	410

Removal: On left front face of flywheel housing. To remove, take out flange mounting screws.
Starting Switch: (200, 300) Auto-Lite SS-4017 Magnetic type switch (400) Auto-Lite SSX-4102 solenoid pinion shift and switch. Controlled by Carter Car Starter No. 192-11U on carburetor (accelerator pedal starting.
See Electrical Equipment Section for complete data.
Ultramatic Drive Starter Safety Switch—Packard No. 421319. On left side of transmission case, connected in starter control circuit so that starter operative only with lever in "N" Neutral or "P" Parking.

DELCO-REMY

Delco-Remy Model 1107943. Armature No. 1910938.
Drive—Outboard barrel Type Bendix No. A-1792.
Rotation—Counter-clockwise at commutator end.
Cranking Engine—175-225 amperes.
Brush Spring Tension—24-28 ozs.

Performance Data (Delco-Remy)

Torque	R.P.M.	Volts	Amperes
0 ft. lbs.	5500	5.7	65
16 "	Lock	3.0	600

Removal: Same as for Auto-Lite (above).
Starting Switch: Delco-Remy Model 1452 Magnetic Switch on starter, controlled by Carter Car Starter No. 192-11U on carburetor (accelerator pedal control).
See Electrical Equipment Section for complete data.
Ultramatic Drive Starter Safety Switch—Packard No. 421319. On left side of transmission case. Connected in starter control circuit so that starter operative only with lever in "N" Neutral or "P" Parking.

GENERATOR

AUTO-LITE

Auto-Lite GGW-6003A. Armature GGW-2006F.
Two brush type with current and voltage regulation.
Maximum Charging Rate—See table below.
Charging Rate Adjustment—None. See Regulator.

Performance Data

Amperes	Volts	Cold—R.P.M.—Hot
0	6.4	870-970 — 950-1050
40	8.0	1800-2000 — 2150-2350

Rotation—Counter-clockwise at commutator end.
Brush Spring Tension—35-53 ozs. (new brushes).
Field Current—1.3-1.5 amperes at 5.0 volts (70°F).
Motoring Current—3.9-4.5 amperes at 5.0 volts (70°F) with field terminal grounded to frame.
Generator Charge Indicator: Red light on right side of instrument cluster. Lights when ignition turned on, goes out when generator begins to charge battery.
Belt Adjustment: Loosen two generator bracket-to-generator screw nuts two or three turns. Loosen the generator strap to generator screw and loosen the generator to water pump screw. Place tool J-4714 over the head of the generator bracket front screw and rotate the tool clockwise until the arm of the tool contacts the edge of the generator drive end plate. Using a torque wrench with a 7/8" socket over the tool, rotate the wrench clockwise and move the generator outward until 15 ft. lb. torque is indicated on the scale. The adjusting strap to generator screw should be tightened to hold the generator in this position while maintaining the 15 ft. lbs. torque. Tighten all screws previously loosened.
Removal: Pivot mounted at left front of engine. To remove, disconnect leads, take out adjusting strap screw and pivot bolts.

DELCO-REMY

Delco-Remy No. 1102745. Armature No. 1912599. Two brush type with current and voltage regulation.
Maximum Charging Rates—See table below.
Charging Rate Adjustment—None. See Regulator.

Performance Data (Delco-Remy)

	Amperes	Volts	R.P.M.
Cold	40	8.0	1950

Rotation—Counter-clockwise at commutator end.
Brush Spring Tension—28 ozs.
Field Current—1.90-2.05 amperes at 6.0 volts.
Generator Charge Indicator: Red light on right side of instrument cluster. Lights when ignition turned on, goes out when generator begins to charge battery.
Removal & Belt Adjustment: Same as Auto-Lite (above).

REGULATOR

AUTO-LITE

Auto-Lite VRP-4402C for GGW-6003A Generator. Current voltage type.
See Electrical Equipment Section for complete data.
NOTE—Regulator cover sealed. Warranty void if seal broken.

Cutout Relay
Cuts In—6.4-7.0 volts, (set to 6.4-6.6 volts).
Cuts Out—4.1-4.8 volts (approx. 4-6 amps. disch.).
Contact Gap—.015" minimum.
Air Gap—.031-.034" with contacts open (check at hinge end of core).

Voltage Regulator
Setting—7.2-7.5 volts at 70°F. See Electrical Equipment Section for settings at other temperatures.
Checking (without breaking seals) & Adjustment—*See Electrical Equipment Section for complete data.*
Contact Gap—.012" min. (armature against stop pin).
Air Gap—.048-.052" with contacts just opening.

Current Regulator
Setting—39-41 amperes (marked '40' on cover).
Checking (without breaking seals) & Adjustment—*See Electrical Equipment Section for complete data.*
Contact Gap—.012" min. (armature against stop pin).
Air Gap—.048-.052" with contacts just opening.

DELCO-REMY

Delco-Remy 1118360 for 1102745 Generator. Voltage & current type.
►*NEW "1118300 SERIES"* regulators have screw adjustment for settings and single regulator springs.
See Electrical Equipment Section for complete data.
►*CAUTION*—Check generator for grounded field coils and leads before changing regulator settings to correct High Charging Rate or High Voltage.

Cutout Relay
Cuts In—5.9-6.8 volts hot (set to 6.4 volts hot).
Contact Gap—.020" (same for both sets).
Air Gap—.020" (with contacts just closed).

Voltage Regulator
Setting—7.0-7.7 volts hot (set to 7.4 hot). Regulator is over-compensated for temperature. Should be checked with cover in place and hot.
Air Gap—.075" with armature pressed down to point where contacts are just touching.
Checking & Adjustment—*See Electrical Equipment Section.*

Current Regulator
Setting—40-46 amperes hot (set to 42 hot).
Air Gap—.075" with armature pressed down to point where contacts are just touching.
Checking & Adjustment—*See Electrical Equipment Section.*

LIGHTING

Headlamps: Hall "Sealed Beam" type.
See Electrical Equipment Section for complete data.
Adjustment—Aim upper beams straight ahead (hot spot center 3" below lamp center height at 25 ft.).
Beam Indicator—Red light between "30" and "40" on speedometer dial. Lighted when Upper beam on.
Directional Signal—Std. *See Electrical Equipment Section.*
Directional Signal Indicator—Amber light between "70" and "80" on speedometer dial. Flashes when signal in use.

Switches
Lighting—Packard No. 416288.
Beam Selector—Packard No. 383490.
Instrument—Part of Lighting Switch.
Courtesy (Pillar Sw.)—Packard No. 416439.
Courtesy (Door Sw.)—Packard No. 416264.

MISC. ELECTRICAL

CIRCUIT BREAKERS: Vibrating thermostatic types.
Lighting—30 ampere. On lighting switch.
Accessory (Stop & Body Lamps)—30 ampere. Behind instrument panel below gauges. Protects Glove

Box Lamp, Courtesy Lamps, Stop Lamps, Dome Lamp and Rear Cigar Lighter.
Hydro-Electric Power (Convertible)—On engine side of dash on pump upper bracket.
Directional Signal—10 ampere circuit breaker on instrument cluster.

FUSES: Clock—SFE 3 ampere in lead below clock.
Overdrive—SFE 30 ampere. On overdrive relay (at BAT terminal) on engine side of dash.
Heater—SFE 30 ampere. In cable near Ign. Switch.

HORNS: Sparton. Dual horns operated by relay.
Horn Current—22-25 amperes.

Horn Relay—Delco-Remy No. 1116775.
Contacts Close—2.75-4.0 volts (set to 3.5 volts).
Contact Gap—.027". **Air Gap**—.014" (contacts closed).

GAUGE VOLTAGE REGULATOR: King-Seeley No. 45550—Consists of a thermo-by-metal interrupter unit designed to maintain a constant voltage of 5 volts (regardless of generator charging voltage fluctuation) on gauge feed circuit. Unit is mounted on the instrument cluster and is conected between the ten amp. circuit breaker and the instrument circuits. See Wiring Diagram.

ENGINE

ENGINE SPECIFICATIONS: 8 cylinder, "L" head type.

	"200"	"300"	"400"
Bore①	3½"	3½"	3½"
Stroke	3¾"	4¼"	4¼"
Displacement (cu. ins.)	288	327	327
Rated HP.	39.2	39.2	39.2
Developed HP.②	135	150	155
Comp. Ratio (Std.)	7.0-1	7.0-1	7.8-1
Comp. Ratio (Optl.)	7.5-1	7.8-1	

①—*For Original Bore Sizes, See Packard Special Data.*
②—Horsepower at 3600 RPM.

►*HYDRAULIC VALVE LIFTERS: Standard on "300" & "400" Engines.*

OIL PAN REMOVAL: *See Packard Special Data.*

TIGHTENING TORQUES: *See Packard Special Data.*

CYLINDER HEAD: Tightening Torque & Cylinder Head Diagram—*See Packard Special Data.*

PISTONS: Aluminum alloy, autothermic strut type.
Piston Sizes & Markings—*See Packard Special Data.*
Length—3 7/8".
Weight—19½ ozs. (stripped), 25½ ozs. (with rings & pins).

►**Cyl. Bore Taper Note**—Car manufacturer recommends cylinders be rebored and new pistons installed if cylinder taper exceeds .007-.010". If necessary, new rings only can be installed (without reboring) for tapers up to .014".
Removal—Pistons and rods removed from above.
Clearance—.0005-.001". See Fitting New Pistons.

►**Piston Skirt Expander Note**—Car manufacturer recommends skirt expanders be installed if cylinder diameter over .006" greater than piston skirt diameter (measured alongside upper end of piston skirt slot).

Replacement Pistons: *See Packard Special Data.*

►*NOTE*—Check ring grooves by installing new piston ring in groove—if .006" feeler can be inserted 1/16", wear excessive and piston should be replaced. Check top groove when testing.

Fitting New Pistons: Insert .0015" feeler ½" wide between piston and cylinder wall on side opposite slot. Pull to withdraw feeler should be 12-18 lbs.

►*NOTE*—Piston should hold in any portion of the bore of its own weight, but should move when one or two finger pressure applied to piston with cylinder bore vertical.

Installing Pistons: Slot toward camshaft.

PISTON RINGS: Two compression rings (No. 200 top groove, No. 200 second groove), one oil control ring (No. 85) per piston, all above pin. Oil ring groove has 12 holes 5/32" dia., for drainage.

Ring	Width	End Gap	Side Clearance
Comp. (#1,2)	.0930-.0935"	.007-.017"	.0025-.003"
Oil (#3)	.186-.1885"	.007-.015"	.0025-.003"

Installing Rings—End gaps must be between pin holes with #2 ring on same side as skirt slot, #1 and #3 ring on side opposite slot.
Replacement Rings: Std., .020", .030", .040" oversize

PISTON PIN: Diameter 7/8". **Length** 3 1/64".
Floating type retained by lock ring at each end. Split type bushing used in upper end of rod.
Pin Fit in Piston—Palm push fit with piston at 160°F. (heat piston in water only).
Piston Pin (Connecting Rod) Bushing Installation—*See "Piston Pins" in Packard Special Data.*

Replacement Pins: Std., .003" and .006" oversize.

CONNECTING ROD: Length (200 Engine) 7 15/16", (300 & 400 Engines) 7 11/16"
Weight—("200") 35.8 ozs. ("300" & "400") 35.4 ozs
Crankpin Journal Diameter—2.250".
Lower Bearing—Shimless precision, steel backed, Moraine Durex or Federal Mogul 24.
Clearance—0005-.0025". **Endplay**—.003-.011".
Bearing Adjustment—None (no shims). Replace bearings. Self-locking nut used on cap bolts (tighten to 60-65 ft. lbs.).

Replacement Bearings: Std., .001", .002", .020" US
Installing Rods: Oil squirt hole toward camshaft.

CRANKSHAFT: 5 bearing ("200" & "300"), 9 bearing ("400"), with integral counter weights.
Vibration Dampener—Hydraulic type, filled with silicone fluid
Dampener Removal—Use puller tool No J-2636
Journal Diameter—2.7465".
Bearings—Interchangeable, shimless, precision, steel-backed, Moraine Durex or Federal Mogul.
Clearance—.001-.003".

Bearing Adjustment—None (no shims). Replace bearings (upper halves can be rotated in and out)
Replacement Bearings—Std., .001", .002", .020" US.
Crankshaft Front Oil Seal—*See "Crankshaft and Main Bearings" in Packard Special Data.*
End Thrust—At #3 bearing. **Endplay**—.0035-.0085".

CAMSHAFT: 5 bearing. Non-adjustable chain drive
Bearings—Steel-backed, babbitt-lined bushings.
Clearance—001-.003".
End Thrust: Taken by thrust plate in back of camshaft sprocket. **Endplay**—004-.006"
Timing Chain: Morse. Width 1". Pitch .375". Length 58 links.
Camshaft Setting: Install chain and sprockets together with "0" marks on sprockets adjacent and in line with straightedge across shaft centers.

VALVES:	**Head Diam.**	**Stem Diam.**	**Length**
Intake	1 43/64"	.3417"	5 7/8"
Exhaust	1 7/16"	.3398"	5 7/8"

	Seat Angle	**Lift**	**Stem Clearance**
Intake	30°	.342"	.002"
Exhaust	45°	①.342"	004"

①—.337" Lift on 300 & 400 Series.

Valve Guides: Lubrite coated. Pressed in block from above with upper end 31/32" below top of block. Use Valve Guide Driver No. J-2577. This tool properly positions guides when gauge seated on block. Ream guides after installation with 11/32" (.3437") reamer. Upper end of exhaust guide counter bored.

►**Valve Guide Removal Note**—If guides to be removed with lifters in engine, use Valve Guide Remover Tool J-2580 to drive guide down to just clear tappet (with tappet on heel of cam). Score guide with chisel through valve ports, then break off lower end, finally driving remainder of guide out. If lifters out, guide can be driven down and out without breaking

Valve Springs: Intake and exhaust springs interchangeable. Anti-rotation serrated cup washers installed on top of spring and seats in recess in block.

	Spring Pressure	**Spring Length**
Valve Closed	60-66 lbs.	1 3/4"
Valve Open	135-145 lbs.	1 13/32"

Valve Lifters ("200" Engine): Conventional mushroom type. Remove from below with camshaft out
Diameter—6236-.6239" **Clearance**—0001-0016"
Replacement Lifters—.001", .002", .005" Oversize
Use Tool ST-5144 (piloted in valve guide) to ream for .005" oversize lifter installation.

Valve Lifters ("300" & "400" Engines): Wilcox-Rich "Zero-Lash" hydraulic type (mushroom type body) Remove from below with camshaft out.
Diameter—.6236-.6239" **Clearance**—0001-0016"
Valve Clearance Check (When Grinding Valves):
See "Valve System" in Packard Special Data.
See Miscellaneous Section for complete data.

VALVE TIMING

VALVE TAPPET CLEARANCE: ("200" Engine)—.007" Intake, .010" Exhaust, Hot.
("300" & "400" Engine)—No adjustment required (hydraulic type lifters).

Valve Timing: See camshaft setting above

"200" Engine Valve Timing

Intake Valves—Open 15° BTDC. Close 45° ALDC
Exhaust Valves—Open 50° BLDC. Close 9° ATDC

"300" & "400" Engine Valve Timing

Intake Valves—Open 15° BTDC. Close 43° ALDC
Exhaust Valves—Open 53° BLDC. Close 4° ATDC.
Above figures for 0125" intake, .015" exhaust tappet clearance, ("200" Engine).

Valve Timing ("200" Engine)—With .0125" tappet clearance #1 intake valve should be open, with #1 piston 10° BTDC. (10th graduation before top dead center mark "1UP.DC" on vibration dampener aligned with pointer). Reset tappet clearance to .007" Hot.

►*CAUTION*—If valve more than 8° before or after this point in closing, camshaft setting incorrect.

Valve Timing Check ("300" & "400" Engines)—Check by turning tappet plunger for No. 8 exhaust valve with fingers Turn engine over until this valve fully open, turn engine further until valve nearly closed (plunger should not turn), continue turning engine while attempting to turn plunger, until plunger "breaks loose" or turns. This should be approx. 9° after top dead center—check at timing mark on vibration dampener.

►*CAUTION*—If valve more than 8° before or after this point in closing, camshaft setting incorrect

C NTINUED ON NEXT PAGE

C NTINUED FROM PRECEDING PAGE

LUBRICATION

Engine Oiling System: Pressure to main and connecting rod bearings, camshaft bearings, piston pins, valve lifters and timing chain.
Crankcase Capacity—7 qts.
Normal Oil Pressure—40 lbs., Normal driving.
Oil Pressure Regulator—On oil pump cover. Not Adjustable.
Oil Filter: Optl. (200), Std. (300 & 400). Replace cartridge every 8000 miles or when oil shows signs of being dirty.
Oil Pressure Indicator: Red light on left side of instrument cluster. Lighted when oil pressure less than 10 lbs. (lights when ignition turned on, goes out when pressure exceeds 10 lbs.).
Engine Unit—King-Seeley No. 47110 Pressure Switch. Contacts open when pressure exceeds 10 lbs. (remain closed at lower pressures).
Crankcase Ventilation: Oil-wetted type filter element in oil filler cap air intake. Outlet pipe in valve compartment at rear.

COOLING

Cooling System: Pressure type with pressure relief valve in filler cap and fan driven pump.
Capacity—20 qts., with 2/3 qts. additional for heater and defroster.
Pressure Valve—AC No. 850005 Cap. Opens at 7 lbs.
Water Pump: Centrifugal belt driven, packless type.
See Water Pump Section for complete data.
Belt Adjustment—*See Generator Belt Adjustment.*
Thermostat: In cylinder head outlet.
Setting (Std.)—Starts to open 140°-156°F.
Setting (Optl. High Reading)—Starts to open 157°-165°F. or 175°-184°F.
Temperature Gauge: King-Seeley "CV" (Constant Voltage) type with Voltage regulator.
Dash Unit—K-S No. 45658.
Engine Unit—K-S No. 44215.
See Miscellaneous Section for complete data.

CLUTCH

Long ("200" Engine) 10CF-TI, ("300" Engine) 11CF-10½-TI. Single plate, semi-centrifugal, dry disc type.
See Clutch Section for complete data.
Facings—Woven (U.S. Asbestos). Thickness .125". Inside diameter ("200") 6¾", ("300") 7". Outside diameter ("200") 10", ("300") 10½".
Pedal Adjustment: 1¼-1½" free travel. Adjustment nut on rod at throw-out lever.
►**Clutch Pedal Over-Center Spring:** New adjustable type. *See "Clutch Notes" in Packard Special Data for Adjustment.*
Removal: Remove transmission (see Transmission Removal following) and flywheel housing lower cover. Disconnect throw-out linkage and remove throw-out bearing. Remove clutch cover screws (release tension evenly), lower assembly out of car.

TRANSMISSION

SYNCHRO-MESH

Own Make. Helical gear, constant-mesh, synchro-mesh (second & high), constant-mesh (low), sliding spur gear (reverse). Low & Second speed gears are ball bearing mounted.
See Transmission Section for complete data.
Transmission Control: Steering column type.
See Transmission Section for complete data.
Removal: Disconnect shifter rod, speedometer cable, hand brake cable at equalizer, engine ground strap, front universal (block driveshaft up against floor pan). Support rear of engine with jack and unbolt cross-member (at frame ends and transmission). Disconnect clutch retractor spring and fore-and-aft restraint rod. Take out Transmission-to-housing mounting screws, remove transmission.

OVERDRIVE

Warner Model AS6-R11. Optional equipment with Packard transmission. Solenoid operated overdrive with Governor Control and throttle operated "kick-down."
See Transmission Section for complete data.
Overdrive Solenoid—Packard No. 403942.
Governor—Packard No. 418447.
Control Relay—Packard No. 403940.
Kick-down Switch—Packard No. 403945.
Lock-out Switch—Packard No. 426453.
Removal: Disconnect control cable and all leads to solenoid and governor. Free mounting at rear of overdrive case. Then remove overdrive and transmission (see Transmission Removal above).

ULTRAMATIC TRANSMISSION

Own Make. Torque Converter (with hydraulically operated Direct Speed clutch) and hydraulically operated planetary unit with manual control.
See Transmission Section for complete data.
Linkage Adjustment on Ultramatic Drive Cars: *See "Ultramatic Drive" in Transmission Section.*
Lubrication—Check fluid every 1000 miles, drain and refill every 25,000 miles.
Recommended Fluid. Packard Ultramatic Drive or any Type "A" Automatic Transmission Fluid which has an AQ-ATF number embossed on container.
Capacity. Approximately 12 qts.
Draining and Refilling. *See Packard "Ultramatic Drive" in Transmision Section.*
Checking Fluid Level. ***CAUTION—Fluid must only be checked at normal operating temperatures and after engine has been idling at 800 RPM. for at least one minute with selector lever in "N" position.*** Stop the engine, check level by removing dipstick from filler hole on left side of transmission (accessible from under car—release cap by turning ½ turn counter-clockwise). Add fluid as required to bring level up to FULL mark on dipstick.
Removal: *See Packard Ultramatic Drive in Transmission Section.*

REAR AXLE

Own Make. Semi-floating, hypoid gear type with Hotchkiss Drive.
See Rear Axle Section for complete data.

Model	Ratios Std.	O.D. Cars	Ultramatic Cars
200	3.9-1	4.1-1	3.9-1
300	3.9-1	4.1-1	3.54-1
400	——	——	3.54-1

Backlash—.003-.005". Screw adjustment.
Removal: Remove axle shafts (see Removal below). Disconnect rear universal (wire trunnions), wire or prop propeller shaft up against floor pan with 2x4 inserted inside frame X-member. Drain differential, replace drain plug. Clean off housing, take off carrier locknuts, lift carrier out.
Axle Shaft Removal: Remove wheel, brake drum (use screw type puller J-4153—do not use knock-out type puller or thrust block may be damaged). Disconnect brake line at wheel cylinder. Remove nuts at oil seal guard and take off seal guard, gasket, retainer, oil seal, brake support plate, and bearing shims. Remove axle shaft and bearing using Puller J-2552 (do not drag shaft on inner seal). Use Tool J-943-B to remove inner seal.
Wheel Bearing Adjustment: Endplay controlled by shims between flanged end of housing and brake backing plate. Add or remove shims (furnished .005", .007", .020" thick) at one wheel if .050" or under. At both wheels if over .050" to secure .004-.007" endplay.
Endplay—.004-.007".

SHOCK ABSORBERS

Direct acting hydraulic type. Front shock absorbers are inside front suspension coil springs.
200 Series—Packard No. (Front) 419680, (Rear) 419904.
300 Series—Packard No. (Front) 419682, (Rear) 433131.
400 Series—Packard No. (Front) 419690, (Rear) 426559.

FRONT SUSPENSION

Front Suspension: Packard Broad-Beam Suspension, independent, linked parallelogram type with coil springs and double acting shock absorbers.
See Front Suspension Section for complete data.
King Pin Inclination—5°50′ crosswise.
Caster—Neg. 1°±½°. Eccentric adjustment.
Camber—0°±½°. Eccentric adjustment.
Toe-In—0" (plus 1/16", minus 0"). Adjust by turning adjuster at outer end of each tie rod equally.

STEERING GEAR

Packard-Gemmer Model 335. Worm & 3-tooth Roller type with "push-pull" adjustments.
See Steering Gear Section for complete data.

BRAKES

Service: Bendix Hydraulic, Duo-Servo, Single Anchor type without eccentric adjustment. Hand lever applies rear wheel service brakes.
See Brake Section for complete data.
Wheel Cylinder—Diam. Front 1⅛", Rear Wheels 1".
Drums—12" Centrifuse type.
Lining—Marshall 4112 (Primary Shoes), Marshall 9051 (Secondary Shoes). Width—see table below. Thickness 3/16". Length per shoe 11½" (Primary), 13" (Secondary).

Lining Width	Front Wheels	Rear Wheels
200	1¾"	1¾"
300 & 400	2¼"	2"

Clearance—.015" at both ends of secondary shoe with primary shoe forced out against drum.
Hand Brake: See Service Brake above.

MISC. MECHANICAL

Windshield Wiper: Vacuum type, cable operated.
See Miscellaneous Section for complete data.

MODEL IDENTIFICATION

SERIAL NUMBER: Stamped on left front door hinge pillar post.

1950 Numbers:	P19 Deluxe	P20 Deluxe	P20 Spec. Deluxe
Detroit	18,041,001	15,359,501	12,384,501
Los Angeles	28,004,001	26,030,501	25,097,501
Evansville	24,012,001	22,097,001	20,367,001
San Leandro	28,503,501	26,405,001	25,511,001

1951 Numbers:	P22 Concord	P23 Cambridge	P23 Cranbrook
Detroit	18,126,001	15,460,001	12,635,001
Los Angeles	28,011,001	26,040,001	25,112,001
Evansville	24,042,001	22,132,001	20,435,001
San Leandro	28,513,001	26,512,001	25,531,001

ENGINE NUMBER: Stamped on boss on left front side of cylinder block.

TUNE-UP

COMPRESSION PRESSURE: 120-150 lbs. at cranking speed of 150 RPM.

VACUUM READING: Steady 18-21" idling at 6 MPH.

FIRING ORDER: 1-5-3-6-2-4. See diagram.

SPARK PLUG GAPS: .035" plus or minus .001" (1950). .038" (1951).
Plugs—Auto-Lite Resistor Type AR5 (1950). AR8 ('51). 14 mm.

DISTRIBUTOR: Breaker Gap—.020". Limits .018-.022".
Cam Angle—34½° to 38° Closed.
Breaker Arm Spring Tension—17-20 ozs.
Automatic & Vacuum Advance—*See Ignition.*
Condenser Capacity—.25-.28 microfarad.

IGNITION TIMING: At Top Dead Center (TDC).
Timing Procedure—*See Ignition Timing.*
Timing Mark—Fan pulley marked "DC" at top dead center position with 15-1° graduations before and after this point. Set timing with DC mark at pointer on chain case cover, then set manual (octane selector) adjustment.
Octane Selector—Set for slight ping when accelerating with wide open throttle between 10-30 MPH.

CARBURETION:
Idle Setting—½-1½ turns open. Turn screw out for richer mixture.
Idle Speed—450-500 RPM.
Float Level—Top of the float (not soldered seam) 5/64" ±1/64" below top edge of bowl.
Accelerating Pump—Center Hole Normal Setting, Outer Hole (max.) Winter, Inner (min.) Summer.

Choke Setting: Adjusted by inserting a gauge pin through hole in automatic choke lever shaft and slot in base mounting flange (to position shaft) and adjusting carburetor choke valve lever so that choke valve is tightly closed.

Fuel Pump Pressure: 3-5 lbs.

MANIFOLD HEAT CONTROL: Thermostatic coil type. Install coil so approx. one full turn (335°) required to hook free end over stop stud for correct operation.

VALVE TAPPET CLEARANCE: (1950) .008" Intake, .010" Exhaust. (1951). 010" Intake, .010" Exhaust, Hot.
Valve Timing Check—*See Valve Timing.*

IGNITION

IGNITION SWITCH: Mitchellock. Combination ignition-starter switch. Starter operates when key held fully to the right. Key automatically returns to "on" position. Coil lead armored through firewall.

COIL: Auto-Lite No. CR-4001 (U.S.), IG-4809 (Canada). Mounted above distributor.
Ignition Current—2¼ amperes idling, 5 stopped.

CONDENSER: Auto-Lite Part No. IG-3927G.
Capacity—.25-.28 microfarad.

DISTRIBUTOR: Auto-Lite. Automatic advance type with Vacuum Spark Control as follows:

P19 (Std.) Early Cars	IGS-4207B-1
P20 (Std.) P19 (Sp. Equip.) Early Cars	IAP-4103A-1
P19 & P20 (All) Late Cars	IAT-4003
P19 & P20 (Canada) Early Cars	IAP-4102-1
P19 & P20 (Canada) Late Cars	IAT-4004A
P22 & P23 (All)	IAT-4011
P22 & P34 (Canada)	IAT-4012A
P19 & P20 Taxi	IAT-4003B
P22 & P23 Taxi	IAT-4011B

►**"IAT" Distributor Note**—New "Pivoted Breaker Plate" type. *See Electrical Equipment Section for data.*

Rotation—Clockwise viewed from above.

Breaker Gap—.020". Limits .018-.022".

CONTINUED ON NEXT PAGE

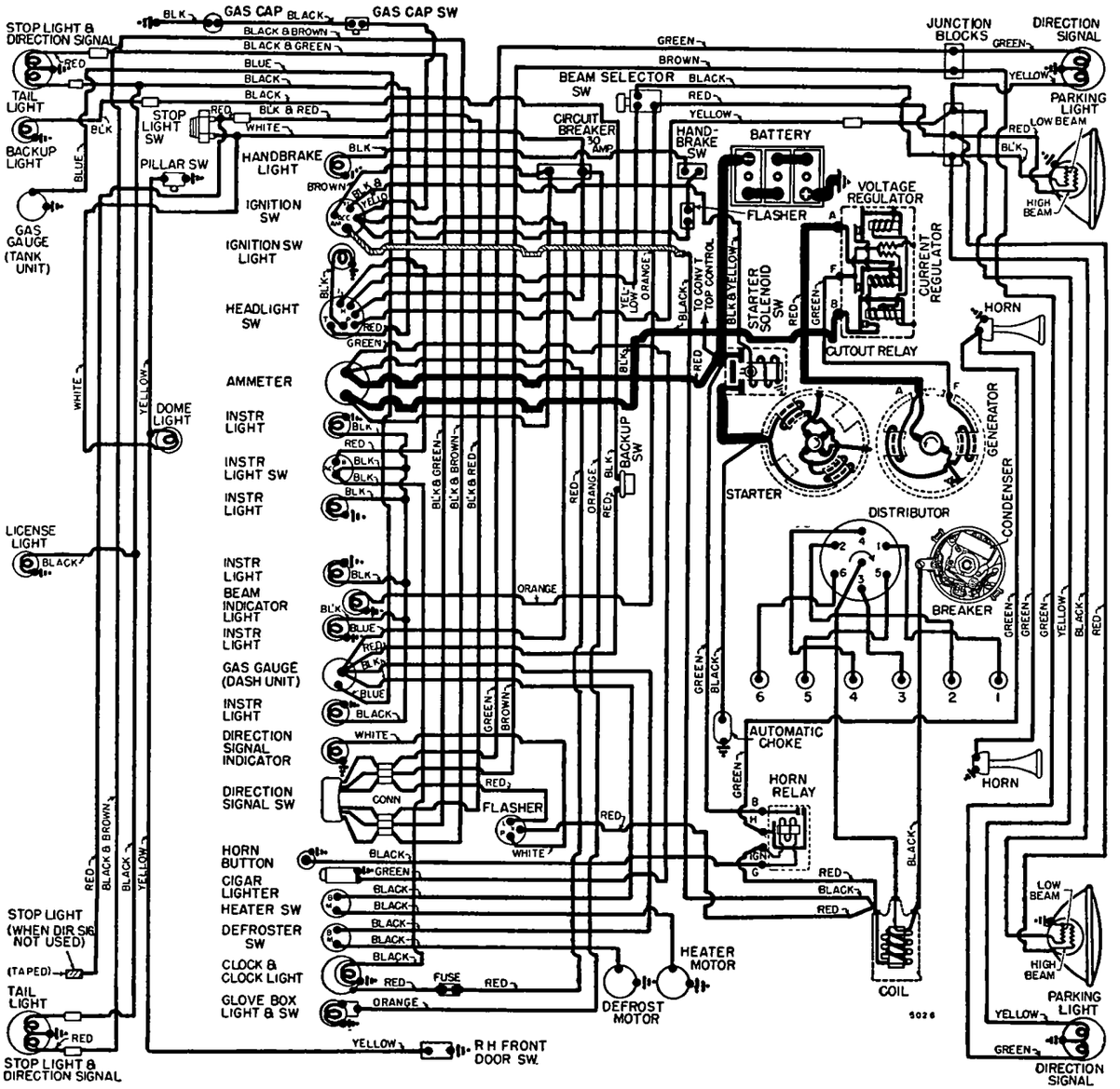

1950 M DELS

CONTINUED FROM PRECEDING PAGE

Cam Angle—34½° to 38° Closed.
Breaker Arm Spring Tension—17-20 ozs.

Automatic Advance—IAT-4003B, IAT-4011B

Degrees Distr.	R.P.M.	Degrees Eng.	R.P.M.
Start	350	0	700
3	400	6	800
5	700	10	1400
7	1000	14	2000
9	1300	18	2600

Automatic Advance—IAP-4102-1, IAT-4004A, IAT-4012A

Degrees Distr.	R.P.M.	Degrees Eng.	R.P.M.
Start	350	0	700
3	400	6	800
6	850	12	1700
9	1300	18	2600
12	1750	24	3500

Automatic Advance—IGS-4207B-1, IAP-4103A-1, IAT-4003, IAT-4011

Degrees Distr.	R.P.M.	Degrees Eng.	R.P.M.
Start	350	0	700
1	450	2	900
5	800	10	1600
9	1300	18	2600
10	1425	20	2850

Vacuum Spark Control: Auto-Lite Units. Integral type

Vacuum Advance—IAP-4102-1, IAT-4004A, IAT-4012A

Distr. Degrees	Eng. Degrees	Vacuum (" of HG)
Start	0°	5"
1°	2°	6¾"
3°	6°	9¼"
5°	10°	12⅛"
7°	14°	15"

Vacuum Advance—4207B-1, IAP-4103A-1, IAT-4003, B; IAT-4011, B

Start	0°	4½"
1°	2°	5½"
4°	8°	9⅛"
7°	14°	12¾"
8°	16°	14"

Manual Adjustment—Provides for minor changes in ignition timing at distributor. See Ignition Timing.

Distributor Removal: Mounted on left side of crankcase. To remove, disconnect vacuum line, take out hold-down screw in lock plate. **Installation Note**—Install distributor with #1 piston in firing position.

IGNITION TIMING

Std. Setting—Initial setting (for regular non-premium fuel) as shown below. See Manual Adjustment (following) for Final Setting.

	Flywheel Degrees	Piston Position
All Engines	At TDC	.000" TDC.

NOTE—Impulse neutralizer marked 'DC' at TDC. with 15 (1°) graduations on either side.

Timing (Using Timing Light)—Connect timing light between distributor primary terminal and battery terminal on generator regulator. Set #1 or #6 piston in firing position (see Setting above) with correct mark on impulse neutralizer aligned with pointer on chain case cover. Loosen lock-plate hold-down screw, center pointer on scale, tighten screw. Loosen lock-plate clamp bolt, rotate distributor until timing light just goes out, tighten clamp bolt. Check Manual Adjustment for final setting.

Timing (Using Synchroscope)—Tool C-374. Clip lead to #1 spark plug, direct light on impulse neutralizer (mark correct graduation with paint), idle engine, adjust distributor as directed above until mark aligned with pointer on chain case cover.

Manual Adjustment—Set to give slight ping from 10-30 MPH. accelerating with wide open throttle. To adjust, loosen lock-plate hold-down screw, move plate (not more than 4° or .007" before or after initial setting) counter-clockwise (if no ping), clockwise (if ping too severe), tighten screw.

CARBURETOR

Carter (B&B)	Model Nos.
Standard	D6H2
City Traffic	D6N2

1½" single barrel downdraft type with Sisson automatic choke.

See Carburetor Section for complete data.

►**Carburetor Production Changes**—*See "Carter (B&B) 1940-50 Downdraft" in Carburetor Section.*

Settings (Idle Setting, Float Level, and Accelerating

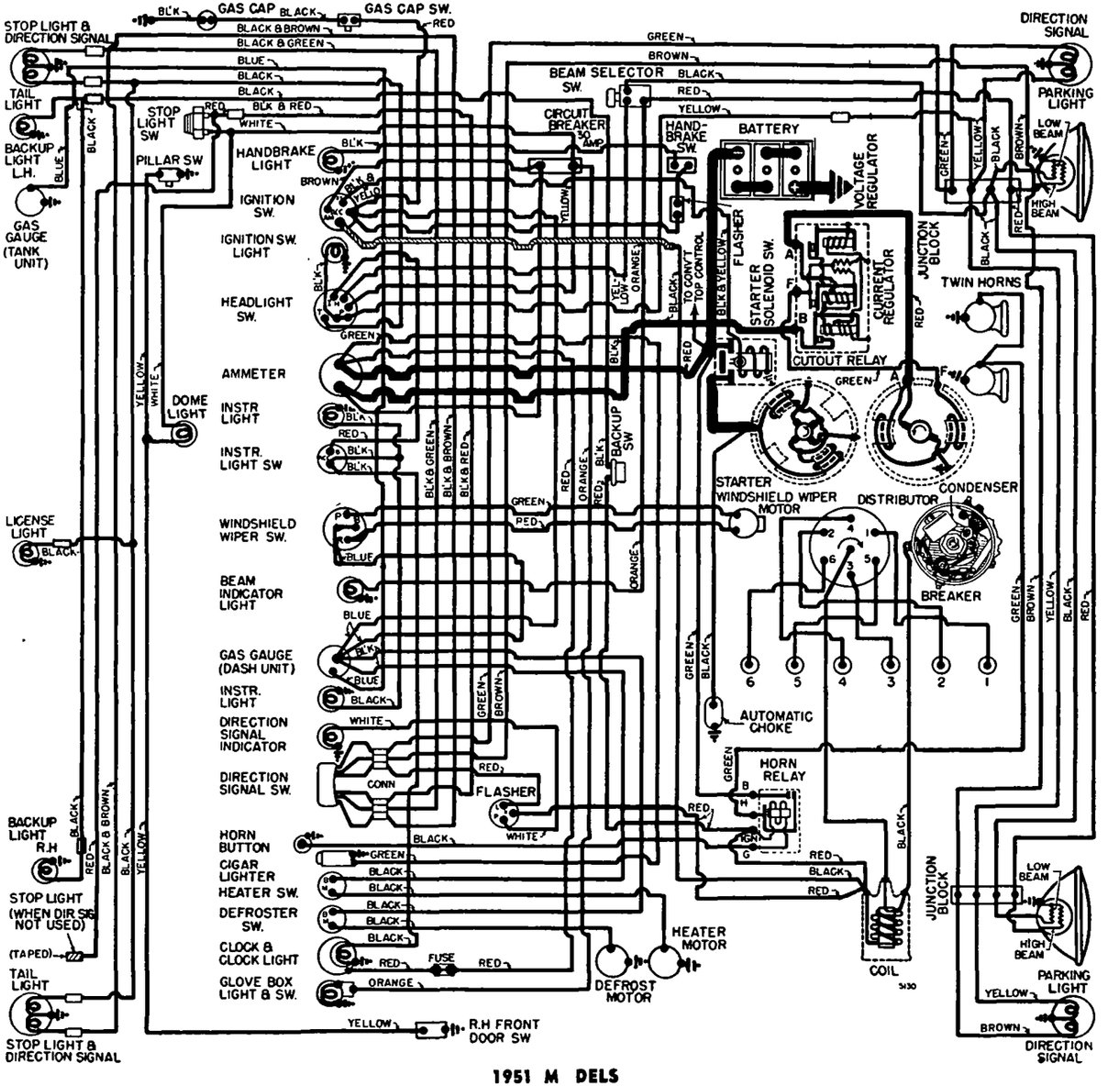

1951 M DELS

Pump): *See Tune-Up data.*

Metering Jet—*See Carter (B&B) Jet Table in Carburetor Section for complete data.*

Fast Idle: Throttle opened to fast idle position when choke valve closed.

Automatic Choke: Sisson type Optl.

Setting—Choke can be adjusted by inserting a gauge pin through hole in automatic choke lever shaft and slot in base mounting flange (to position shaft) and adjusting corburetor choke valve lever so that choke valve is tightly closed.

See Carburetion Equipment Section for data.

CARB. EQUIPMENT

Air Cleaner: AC No. 1544640 Heavy duty oil-bath type. Filter Element AC No. 21.

Fuel Pump: (Std.)—AC No. 1539421 Diaphragm type. (Optl.)—AC No. 19539418 fuel & vacuum type. **Replacement Pump**—AC No. 588 (for 1539421) No. 9418 (for 1539418).

Pressure—3-5 lbs.

See Carburetion Equipment Section for data.

Fuel Tank Filter: Oilite metal filter in tank.

Servicing—If more than 2 pints water in tank, fuel will not pass filter. Remove filler cap and drain plug, draining tank. Disconnect fuel line at some point between pump and tank, blow out line and filter with air, increasing pressure as filter is cleaned. Flush tank with clean gasoline.

Gasoline Gauge: Auto-Lite electric type.

Dash Unit—Auto-Lite No. (1950) 12095A or 12310A. (1951) 12327A.

Tank Unit—Auto-Lite No. 11538A. (Suburban) NG-11816T.

See Carburetion Equipment Section for data.

BATTERY

Willard HW-1-100-C or Auto-Lite Type 1M-100D. 6 volt, 15 plate, 100 ampere hour capacity (20 hour rate).

Starting Capacity—120 amperes for 20 minutes.

Zero Capacity—300 amperes for 3.2 minutes. Five second voltage 4.15 volts.

Grounded Terminal—Positive (+) to engine.

Location—In left fender shield under engine hood.

Dimensions—Length 9 3/32". Width 7 1/8". Height 8 5/8".

STARTER

U.S. Cars.....**Auto-Lite MCH-6101.** Arm. MCH-2028

Canada.....**Auto-Lite MAW-4041.** Arm. MAW-2128

Drive—Outboard Barrel Type Bendix No. A-2991.

Rotation—Counter-clockwise at commutator end.

Brush Spring Tension—42-53 ozs. (new brushes).

Performance Data

Torque	R.P.M.	Volts	Amperes
0 ft. lbs	4300	5.0	65
6.0 "	Lock	2.0	335

Starting Switch: Auto-Lite No. (1950) SST-4001, (1951) SST-4006. Magnetic type mounted on left front fender shield and controlled by turning ignition switch past "ON" position.

See Electrical Equipment Section for complete data.

GENERATOR

Year	Auto Lite No.
1950 (Early)	GGW-6001B
1950 (Late)	GGW-6001K①
1950 (Canada)	GDZ-4801A
1951	GGW-6001K①
1950 (Early) City Police & Taxi	GGU-6001A
1950 (Early) State Police	GGJ-6001B
1950 State Police	GEG-4823B
1950 State Police	GGU-6001E
1950-51 City Police & Taxi	GGU-6001G①
1950-51 City Police & Taxi	GGJ-6001F①
1950-51 State Police	GGU-6001H①
1950-51 State Police	GGJ-6001G①

①—Narrow Groove Pulley.

Armature—GGW-2006F (GGW type generators), GDZ-2006F (GDZ type generators), GGJ-2101F GGJ type generators), GGU-2006F (GGU type generators).

Two brush type current-voltage regulators.

Maximum Charging Rate—See table below.

Charging Rate Adjustment—None. See Regulator.

Performance Data (GGW-6001B, K)

Amperes	Volts	Cold—R.P.M.	Hot
0	6.4	870-970	950-1050
45	8.0	1925-2125	2350-2550

Performance Data (GDZ-4801A)

Amperes	Volts	Cold—R.P.M.	Hot
0	6.4	870-970	950-1050
35	8.0	1800-2000	2150-2350

Performance Data (GEG-4823B)

40	8.0	1550 Max.	———

Performance Data (GGJ-6001B, F, G)

0	6.4	600-700	650-750
50	8.0	1400-1600	1550-1750

Performance Data (GGU-6001A, E, G, H)

0	6.4	750-850	800-900
45	8.0	1450-1650	1650-1850

Performance Data (GGW-6001B)

0	6.4	870-970	950-1050
40	8.0	1800-2000	2150-2350

Rotation—Counter-clockwise at commutator end.

Brush Spring Tension—(GDZ, GGU, GGW) 35-53 ozs. (new brushes); (GGJ) 30-37 ozs. (new brushes); (GEG) 64-68 ozs. (new brushes).

Field Current—(GDZ, GGW) 1.6-1.8 amperes, (GEG) 1.6-1.78 amperes, (GGJ) 1.7-1.9 amperes, (GGU) 1.7-1.8 amperes, all at 6.0 volts.

Motoring Current—(GDZ) 4.2-4.6 amps., (GEG) 4.7-5.2 amps., (GGJ) 4.3-4.8 amps., (GGU) 5.5-6.5 amps., (GGW) 4.6-5.2 amps., all at 6.0 volts.

Belt Adjustment: Loosen pivot and clamp bolts, pull out on generator until belt is snug (40-50 lbs. tension secured on scale attached to field frame) or ¼" belt deflection between generator and pump).

REGULATOR

Auto-Lite Regulator No.	for Auto-Lite Gen. No.
VBA-4202A or ①VBA-4204A	GGJ-6001A, B, F, G
VAV-6001A or ①VAV-6002A	GGU-6001A, E, G, H
VRP-6004A	GGW-6001B, K
VBE-6001A	GGW-6001K
VRP-4501C	GEG-4823B
VRP-4503A	GDZ-4801A

①—For negative ground.

See Electrical Equipment Section for complete data.

NOTE—Regulator case cover is sealed. Serviced on exchange basis if seals not broken (to remove cover).

Cutout Relay

Cuts In (VAV, VRP)—6.4-6.9 volts (set to 6.4-6.6 volts).

Cuts In (VBA, VBE)—6.3-6.8 volts (set to 6.4-6.6 volts).

Cuts Out (All)—4.1-4.8 volts (Approx. 4-6 amps. disch.).

Air Gap (All)—.031-.034" with contacts open (check at hinge end of core).

Voltage Regulator

Setting (VAV, VBA, VBE)—7.1-7.4 volts at 70°F. **(VRP)**—7.2-7.5 volts at 70°F. See Electrical Equipment Section for settings at other temperatures.

Checking (without breaking seals) & Adjustment—*See Electrical Equipment Section.*

Current Regulator

►**(Temperature Compensated Regulators)**

	Nominal Setting
VRP-4503A	35
VRP-6004A, 4501C	40
VAV-6001A, 6002A, VBE-6001F	45
VBA-4202A, 4204A	50

►*CAUTION*—Nominal setting is approx. setting at 70°F. room temperature after regulator has been run (will be higher started cold). See Electrical Equip. Section for settings at various temperatures.

Checking (without breaking seals) & Adjustment—*See Electrical Equipment Section.*

Air Gap (All)—.048-.052" with contacts just opening.

LIGHTING

Headlamps: Corcoran-Brown "Sealed Beam" type with new "Bull's-eye lens."

See Electrical Equipment Section for complete data.

Beam Indicator—On speedometer dial. Lighted when upper beams "on."

Direction Signal: *See Electrical Equipment Section.*

Direction Signal Indicator—On speedometer dial. Flashes when direction signal operating.

Switches

Lighting—Plymouth No. (1950) 1300600, (1951) 1370138.

Beam Selector—Plymouth No. (1950) 1253460, (1951) 1253003.

Instrument—Plymouth No. (1950) 1244997, (1951) 1370011.

MISC. ELECTRICAL

CIRCUIT BREAKER: 30 ampere. On back of instrument panel above headlight switch.

FUSES: Clock—2 ampere. In clock lead connector. **Radio**—14 ampere. In fuse connector at radio.

HORNS: Auto-Lite No. (1950) HW-4201 (Low Pitch), **HW-4202** (High Pitch). **(1951) HW-4107** (Low Pitch), **HW-4108** (High Pitch). Dual horns operated by relay.

Horn Relay: Auto-Lite HRL-4103 or 4104. Connected thru ignition switch, operates only with ignition on. **Contact Close**—1.5-3.0 volts (seal to core with 4 V). **Contacts Open**—.5 volt min. (open from seal). **Contact Gap**—.026". **Air Gap**—.016-.020" (armature air gap with contacts closed but not sealed), .015-.018" (gap between armature leg and yoke with armature sealed to core).

C NTINUED N NEXT PAGE

CONTINUED FROM PRECEDING PAGE

ENGINE

ENGINE SPECIFICATIONS: 6 cylinder, "L" hd. type.
Bore—3¼". **Stroke**—4⅜".
Displacement—217.8 cu. ins. **Rated H.P.**—25.35.
Developed Horsepower—97 at 3600 RPM.
Compression Ratio—7.0-1 Std. Cast Iron Head.
Compression & Vacuum Reading—*See Tune-up data.*

ORIGINAL BORE & PISTONS: *See Chrysler Special Data.*

ORIGINAL BEARING SIZES: *See Chrysler Special Data.*

TIGHTENING TORQUES: *See Chrysler Special Data.*

CYLINDER HEAD: Tightening Torque & Cylinder Head Diagram—*See Chrysler Special Data.*

PISTONS: Aluminum alloy, "U" slot, cam ground type. NOTE—Piston skirt is elliptical (.010-.012" smaller diameter across pin bosses than across thrust faces), and tapered (.0005-.0015" smaller diameter at top of skirt than at bottom).

Length—3 11/16". **Weight**—16.0 ozs. (stripped).

Removal—Pistons and rods removed from above.
Clearance—.028-.032" (Head & Ring Lands), .0002-.0012" (Skirt—across thrust faces and ¾" up from bottom). See Fitting New Pistons.

Fitting New Pistons: Measure piston size with micrometer across thrust faces (right angles to pin bosses) ¾" up from bottom of skirt with piston at 70°F. To fit pistons, with cylinder wall and piston dry and clean and at 70°F., invert piston in cylinder bore. Piston should have slight drag but should pass slowly through bore of own weight.

Replacement Pistons: .005", .020", .030", .040", .060" OS.

Installing Pistons: "U" slot away from valves.

PISTON RINGS: Two compression (top ring chrome-plated), two slotted oil control, coated rings per piston, all above pin. Oil ring grooves drilled for oil drainage.

Ring	Width	End Gap	Side Clearance
Compr. (#1)	3/32"	.007-.015"	.0025-.004"
Compr. (#2)	3/32"	.007-.015"	.002-.0035"
Oil Contr. (#3,4)	5/32"	.007-.015"	.001-.0025"

Installing Rings—#1 Compr. with step on inner edge up. #2 Compr. with step on inner edge up or if step on outer edge, install with step down.

Replacement Rings: .005" .020" .030" .040" .050" .060" OS.

PISTON PIN: Diameter—55/64". **Length**—2¾". Pin floats in piston and rod, held by lock rings.
Pin Fit in Piston—.0000-.0005". Thumb push fit with piston heated to 130°F.
Pin Fit in Rod Bushing—.0001-.0002". Tight thumb push fit at normal room temp. (70°F.).

Replacement Pins: Std., .0006", .003", .008" Oversize.

CONNECTING ROD: Length—7 15/16". **Weight**—31.06 ozs. (with bolts, less bearings).
►*THICK-WALL BEARING CAUTION*—Inspect "hollowed-out" section of crankshaft center counterbalance for stamped mark (M-1, M-2, R-1, R-2, etc.) indicating which main or connecting rod journal uses THICK-WALL BEARING. *See "Original Bearing Sizes" in Chrysler Special Data.*
Crankpin Journal Diameter—2.0615-2.0625". *See "Original Bearing Sizes" in Chrysler Special Data.*
Lower Bearing—Removable, precision type, steel-backed, thin babbitt-lined. No shims.
Clearance—.0005-.0015". **Sideplay**—.006-.011".
Bearing Adjustment: None (no shims). Replace bearings. Do not file rods or caps.
Replacement Bearings: .001", .002", .003", .010", .012" Undersize.
Installing Rods: Wide portion of bearing to rear (#1, 3, 5), to front (#2, 4, 6). Oil hole to camshaft.

CRANKSHAFT: 4 bearings, 7 integral counterweights, with vibration dampener on front end.
Journal Diameters—2.4995-2.5005". *See "Original Bearing Sizes" in Chrysler Special Data.*
Bearings—Removable, precision type, steel-backed, thin babbitt-lined. No shims.
Clearance—.0005-.0015".
►*THICK-WALL BEARING CAUTION*—Inspect "hollowed-out" section of crankshaft center counterbalance for stamped mark (M-1, M-2, R-1, R-2, etc.) indicating which main or connecting rod journal uses THICK-WALL BEARING. *See "Original Bearing Sizes" in Chrysler Special Data.*
Bearing Adjustment: None (no shims). Replace bearings. Do not file bearing caps.
Replacement Bearings: .001", .002", .003", .010", .012" Undersize.
End Thrust: Taken by flanged faces of #4 (rear) main bearing. **Endplay**—.003-.007".

CAMSHAFT: 4 bearing. Non-adjustable chain drive.
Bearing Diameters—#1, 2"; #2, 1 31/32"; #3, 1 15/16"; #4, 1 1/4".
Bearings—Removable, steel-backed, babbitt-lined bushings (except #4—machined in crankcase).
Clearance—.001-.003".
End Thrust: Taken by thrust plate behind camshaft sprocket hub. **Endplay**—.002-.006".

Timing Chain: Width 1". Pitch .500" (½"). Length 24" or 48 links.
Camshaft Setting: Sprockets marked. Mesh chain with sprockets turned so that '0' marks are adjacent and in line with a straightedge across shaft centers.

VALVES:

	Head Diameter	Stem Diameter	Length
Intake	1 17/32"	.340-.341"	4 25/32"
Exhaust	1 13/32"	.340-.341"	4 25/32"

	Seat Angle	Lift	Stem Clearance
Intake	45°	3/8"	.001-.003"
Exhaust	45°	3/8"	.002-.004"

Valve Guides: Remove from above. Press new guides in with stepped end down and upper end 7/8" below top of block, ream guides to inside diameter of .342-.343" (Intake), .344-.345" (Exhaust).
Valve Springs: Install with close-coil end to top.

Free Length 2".	Spring Pressure	Spring Length
Valve Closed	40-45 lbs.	1¾"
Valve Open	107-115 lbs.	1⅜"

Valve Lifters: Mushroom type (remove from below with camshaft out of engine). Stem diameter ⅝". Service by reaming lifter holes (work from above piloting reamer in valve guide) and installing oversize lifters furnished .001", .008", .030" Oversize.

VALVE TIMING

Tappet Clearance: .008" Intake, .010" Exhaust, Hot.
NOTE—Tappet screws self-locking type.
Valve Timing: See Camshaft Setting above.
Intake Valves—Open 12° BTDC. Close 44° ALDC.
Exhaust Valves—Open 50° BLDC. Close 6° ATDC.
Valve Timing Check—With .014" tappet clearance (Cold), #6 intake valve should open with #6 piston 5° to 17° or .011" to .0125" BTDC with 5th to 17th graduation before DC mark on impulse neutralizer aligned with pointer on chain case cover. Reset tappet clearance to running clearance .008" Hot.

LUBRICATION

Engine Oiling System: Pressure to main and connecting rod bearings, camshaft bearings, and timing chain. "Rotor" type oil pump.
Crankcase Capacity—5 qts. (refill).
Normal Oil Pressure—30 to 50 lbs. above 30 MPH.
Oil Pressure Regulator—Under plug on left side of crankcase (below starter). Opens at 45 to 55 lbs. Adjustable by replacing spring (Std. spring Unpainted, Lighter spring—Red, Heavier spring—Green).
CAUTION—Install replacement spring of same color as original spring.

Oil Pump: "Rotor" type on right side of engine.

Oil Filter: On left side of engine above starter.
Servicing—Replace filter at 8000 mile intervals.

Oil Pressure Gauge: Auto-Lite No. (Early '50) 12096A, (Late '50) 12309A, (1951) 12324A. Not electrical.

COOLING

Cooling System: Positive circulation with pump on front of engine, by-pass thermostat, and water distribution tube in cylinder block behind pump.
Capacity—(1950) 15 qts., (1951) 13 qts.

Water Pump: Packless type with grease fitting.
See Water Pump Section for complete data.
Removal—Drain cooling system, remove fan belt, disconnect hoses at pump, remove pump mounting studs, lift fan and pump off.
Belt Adjustment—*See Generator Belt Adjustment.*

Thermostat: In cylinder head water outlet.
INSTALLATION NOTE—Install thermostat with 2 ports facing front, and 2 ports facing rear.
Setting—Starts to open 157-162°F. Fully open 183°F.

Temperature Gauge: Auto-Lite No. (Early '50) 12094A, (Late '50) 12307A, (1951) 12326A. Not electrical.

CLUTCH

Borg & Beck Model 9A7 or Auburn Model 9251-17. Single plate, dry disc types.
BORG & BECK NOTE—Cover Assy. marked 924 (Std.), 964 (Special Equipment).
See Clutch Section for complete data.
Facings—Molded woven type. I.D. 6", O.D. 9¼", Thickness .114" on .125" optional.
Facings (Auburn)—Molded type. I.D. 6⅛", O.D. 9⅛", Thickness .125".

Pedal Adjustment: Set pedal to just clear toeboard (stopscrew on lower end of pedal) and set for 1" free travel (adjust nut on connector link at fork). NOTE—Do not disturb turnbuckle on pedal link.

Removal: Remove Transmission (see Transmission Removal below), remove release fork pull-back spring and clutch housing underpan. Disconnect release fork from pivot, withdraw release bearing and sleeve from housing. Mark clutch and flywheel (to insure correct re-installation), remove all clutch cover mounting screws evenly, remove clutch cover assembly and driven member through pening at bottom of housing.

TRANSMISSION

Own Make. All helical gear, constant-mesh, synchro-mesh (Second & High), sliding gear (Low & Reverse).

See Transmission Section for complete data.

Transmission Control: Remote control type with gearshift lever mounted on steering column.

See Transmission Section for complete data.

Removal: Jack up front end of car. Disconnect front universal by taking out bolts in shaft flange (if transmission to be dismantled, loosen flange retaining nut), and rear universal by removing bearing caps on rear axle yoke (wire bearing cups in place to prevent loss of bearing rollers). Disconnect speedometer cable, hand brake cable at brake band, gearshift control rod and selector rod at transmission case. Remove transmission mounting screws in clutch housing, pull transmission straight back to free clutch shaft, then lower transmission and remove from beneath car.

NOTE—When installing transmission, use pilot studs installed in upper mounting screw holes to maintain alignment and prevent springing clutch driven member.

UNIVERSALS

Detroit Universal Series 4200—Ball-and-Trunnion type (front & rear).

See Universals Section for complete data.

REAR AXLE

Own Make. Semi-floating, hypoid gear type with Hotchkiss Drive.

See Rear Axle Section for complete data.

Ratio—(P19 & P22) Std. 3.73-1, Optional 3.9-1. **(P20 & P23)** Std. 3.9-1, Optional 4.1-1.

(Station Wagon)—4.1-1 Std.

Backlash—.006-.010". Screw adjustment.

Removal: Hoist rear end of car. Remove rear wheels. Disconnect brake hose at frame bracket, disconnect lower end of shock absorbers. Disconnect propeller shaft by removing capscrews from bearing caps on rear axle yoke (wire bearing caps in place to prevent loss of bearing rollers). Support axle housing, remove rear spring "U" bolts, lower axle assembly and remove from beneath car.

NOTE—Carrier assembly can be removed without disturbing axle housing by removing axle shafts and taking out carrier-to-housing mounting screws.

Axle Shaft Removal—Remove wheel, hub, and drum assembly (use screw type hub puller—Tool C-675), block brake pedal, disconnect brake line at wheel cylinder, remove axle shaft key, install sleeve (Tool C-745) in oil seal, remove brake support (oil seal mounted in support), pull shaft and bearing (use C-499 puller). NOTE—Use Puller C-293-E to remove bearing from shaft, puller C-748 or C-358 to remove inner oil seal, drift C-201 to install seal.

Axle Shaft Oil Seal: New leather type mounted on brake support (backing plate).

Wheel Bearing Adjustment: Shims between backing plate and axle housing. With wheel and hub removed, check endplay with dial indicator. To adjust, remove backing plate (see above), add or remove shims (furnished .010", .0125", .015", .030" thick) equally at both wheels. **Endplay**—.003-.008".

SHOCK ABSORBERS

Own Make—"Oriflow" hydraulic, direct acting, non-adjustable, non-refillable.

FRONT SUSPENSION

Front Suspension: Independent, linked parallelogram type with coil springs and direct acting shock absorbers.

See Front Suspension Section for complete data.

Kingpin Inclination—4¾° to 6° crosswise.

Camber—Neg. ⅜° to Pos. ⅜° (¼-½° higher on left).

Caster—0° preferred. Limits Neg. 1° to Pos. 1°. No adjustment.

Toe In—0" (0-1/16"). Adjust by turning both tie rods equally.

Steering Geometry—Inner wheel 22½°. Outer 20°.

STEERING GEAR

Own Make. Worm-and-roller type with "push-pull" adjustments. Same as Gemmer design Model 305.

NOTE—See Gemmer Model 305 article for data.

See Steering Gear Section for complete data.

BRAKES

Service: Chrysler "Safe-guard" Lockheed Hydraulic type as follows:

Front Wheels—Two-cylinder type (front shoe anchored at bottom and actuated by upper cylinder, rear shoe anchored at top and actuated by lower cylinder).

Rear Wheels—Double anchor type with a single double-acting wheel cylinder.

See Brake Section for complete data.

Wheel Cylinders—Single acting type (front), double acting type with straight (1⅛") bore (rear).

Drums—Centrifuse type. Diameter 10".

Lining—Woven asbestos. **Width** 2". **Thickness** 13/64". **Length** per wheel 21" (Front wheels), 18½" (Rear wheels).

Clearance—.006" at each end of all brake shoes.

Hand Brake: Independent type. Hand lever actuates band on drum at rear of transmission.

Drum Diameter—6". Cast-iron.

Lining—**Width** 2". **Thickness** 5/32". **Length** 15⅜".

Clearance—.015-.020" around band.

Adjustment—*See Chrysler Special Data.*

MISC. MECHANICAL

CONVERTIBLE TOP CONTROL: Hydro-Lectric type.

See Miscellaneous Section for complete data.

Windshield Wipers: (Except Conv't. & Sta. Wgn.) (1950)—Vacuum controlled Link-and-Crank Arm type; (1951)—Auto-Lite No. EWR-5001A. **(Conv't. & Sta. Wgn.)** (1950)—Vacuum Link-and-Chain type; (1951) Auto-Lite No. EWR-5001B.

See Miscellaneous Section for complete data.

CYLINDER HEAD

CYLINDER HEAD INSTALLATION: Use Torque Indicating Wrench to tighten cylinder head capscrews, tighten in correct sequence as shown in the diagram. Cast Iron heads hould be tightened cold and rechecked after engine has been run sufficiently to bring all parts to normal operating temperature.

Tightening Torque—See Tightening (Torque Wrench) Specifications below.

PONTIAC 6

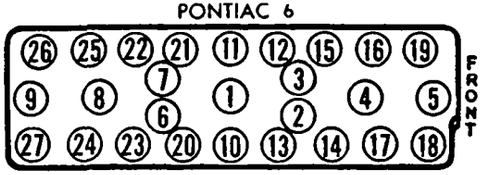

PONTIAC 8

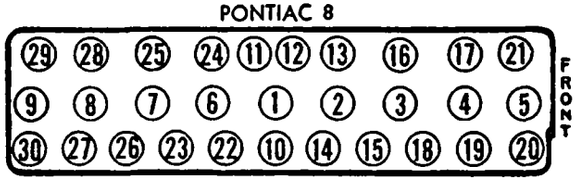

TIGHTENING SPECIFICATIONS

	Ft. Lbs.	In. Lbs.
Cylinder Head Capscrews	60	720
Main Bearing Capscrews①	95	1140
" (6 Cyl. Rear only)	120	1440
Connecting Rod Cap Nuts	45	540
Flywheel-to-Crankshaft②	105	1260
Piston Pin Lock Bolt	10-12	120-144
Frt. Eng. Mount-to-Support	60	720
Rear Eng. Mount-to-frame (SM)	35	420
Rear Eng. Mount-to-frame (HD)	60	720
Harmonic Balancer Bolt	95	1140
Spark Plugs	25-30	300-360

①—Except All 6 Cyl. & 1950 8 Cyl. Rear Main Bearing.

②—With self-locking bolts (no lockwashers), torque should be 100 ft. lbs. or 1200 in. lbs.

SM—Synchro-mesh Trans. cars.

HD—Hydra-Matic Drive Trans. cars.

ORIGINAL BORE & PISTONS

ORIGINAL BORE & PISTON SIZES: Original bore sizes, and size of pistons installed in each cylinder bore, may be determined by letter stamped on piston head and on top face of cylinder block. Piston sizes graduated in .0005" steps as follows:

1950-51 Original Std. Pistons

Piston & Engine Mark	Six—Piston Size—Eight
'A'	3.5605"—3.372"
'B'	3.561"—3.3725"
'C'	3.5615"—3.373"
'D'	3.5625"—3.374"

PISTONS

REPLACEMENT PISTONS: Standard size. Furnished in following sizes for replacement of Standard Production Pistons listed. Sizes and part numbers for each model as follows:

1950-51 Replacement Std. Pistons

Part No.	—Six— Size	Part No.	—Eight— Size
507554	3.561"	513884	3.373"
507555	3.562"	513885	3.374"
507556	3.563"	513886	3.375"

First size covers 'A' and low limit 'B' production pistons. Second size covers high limit 'B', all 'C', and low limit 'D' pistons. Third size covers high limit 'D' and all 'E' pistons.

Oversize Replacement Pistons:—Finished pistons furnished in following oversizes: .005", .010", .020", .030". NOTE—All factory replacement pistons held to uniform weight within 1/16 oz. and all oversize pistons up to .030" oversize are same weight as standard pistons.

CAUTION—Factory replacement pistons electroplated after being finished to size and must not be ground.

PISTON PINS

PISTON PIN FITTING: Pin case-hardened & ground (out-of-round .0002" max.). To install pins, coat inside of piston bosses with graphite grease, insert slotted end of pin in lockscrew boss and press in place. Pressure to install pin in piston should be 200-300 lbs. If necessary, pin holes in piston can be sized with expansion reamer to secure this fit. CAUTION—Pins will be noisy if fit in piston is too loose, and pin bosses may be fractured when installing pin if fit in piston is too tight.

NOTE—Car manufacturer recommends use of the following tools (in conjunction with arbor press): hydraulic cylinder & gauge (J-1325-SA-1), piston rest block (J-1325-1), piston pin remover (J-1325-2), piston skirt plug (J-1325-3).

PISTON PIN BUSHING: New Type Service Bushings. New type aluminum bronze bushings which are more resistant to corrosion furnished for service as follows: Part No. 505320 (6), 505321 (8). May be distinguished from previous bronze type by lighter color and less coppery appearance (bushings darken and may require polishing or buffing to bring out difference in color).

Installation—Press bushings in place, making sure that 3/32" groove between bushings aligned with oil hole in rod. Burnish bushings securely in place with burnishing bar. Then hone bushings for .0004-.0006". The car manufacturer recommends use of following tools for servicing pin bushings. J-540-1—Bushing Remover. J-540-2—Bushing Replacer (tool fitted with shoulder which prevents bushings from being pressed too far in or from collapsing while being installed), J-516 Burnisher Bar, and J-526 Burnisher Block. NOTE—These tools are used in conjunction with an arbor press using the J-526 Burnisher Block as a support for the rod on the press.

CRANKSHAFT & MAIN BEARINGS

MAIN BEARINGS: Removal. Remove the bearings with caps removed and crankshaft in place by inserting suitable tool (see NOTE following) in oil hole in shaft and rotating shaft in usual direction.

NOTE—Bearing Removal Tool can be made from 1/8"x1 1/2" cotter key. Bend each end of key up 5/16" to make 5/8" long base. With this as a base, bend key to form 59° angle. With this tool inserted in place end will just protrude far enough to engage bearing.

Installation—Insert plain edge of bearing in indented side of bearing support, slowly rotate crankshaft until bearing seated.

REAR MAIN BEARING OIL SEAL: Seal consists of oil slinger on crankshaft to rear of main bearing, operating in groove formed in block and cap (drain hole in cap returns oil to crankcase) with asbestos seal fitted in separate groove at rear.

Installation—Remove bearing cap and upper half of bearing insert from first main bearing forward of the rear main bearing. Remove all connecting rod bearing caps. Remove rear main cap and loosen remaining main bearing caps sufficiently to allow crankshaft to be lowered approximately 3/8" at rear. Remove upper half of rear main bearing oil seal and with rear main bearing cap on bench, remove oil seal and insert. Install new seal using tool J-1045, and trim flush. *(CAUTION*—Do not pack seal into locking recess). Carefully remove seal from cap and slide it into groove in block over crankshaft. *(Caution*—Take particular care to install seal so that end of seal which was at locking recess in cap during forming operation, will meet locking recess in cap when cap is installed). Install bearing inserts and cap on main bearing forward of the rear main and torque to 95 ft. lbs. to properly seat crankshaft against new oil seal. (NOTE—Make sure that upper half of seal in rear main is flush with edge of block). *(CAUTION*—If inspection shows seal to be an improper length, remove and discard it, and form a new seal as follows: Install a new seal in bearing cap using tool J-1045 and trim one end flush; carefully remove seal from cap and reinstall in cap, rotating it so that trimmed end is below or above edge of cap the proper distance to correct for the improper length of the first seal. Reseat the seal with tool J-1045 and trim the uncut end flush with edge of cap. Reinstall in block groove). Install new seal in rear main bearing cap using tool J-1045 and pack end of seal into locking recess. Trim the other end flush and replace inserts. Install cap and torque to 120 ft. lbs. Remove rear main bearing cap again and inspect break line between cap and block to be certain that none of the seal material has been compressed between the two. Scrape surfaces to insure seating of cap. Re-install and torque to 120 ft. lbs.

Bearing Cap Seal: After rear bearing cap installed, drive wooden wedge seal into groove on each side of bearing cap next to block. ***CAUTION—Use care not to split these wooden wedges.***

NOTE—Late 1950 & 51 bearing cap seals differ from Early 1950 types and are not interchangeable.

CAMSHAFT & BEARINGS

CAMSHAFT: Removal. Remove Front Fender and Radiator Assembly (see above), remove fan belt, fan, and harmonic balancer (use Puller J-496). Support front end of engine with jack and remove front engine support, timing chain cover, chain, and sprockets. Remove cylinder head and valve covers, take out valves and lifters (lifters are barrel type and can be removed from above with valves out). Remove oil pump, fuel pump, and distributor. Take out screws and remove camshaft thrust plate, withdraw camshaft at front of engine. Re-install camshaft in same manner making certain that timing chain cover is properly centered (see Timing Chain Cover and Oil Seal data below). After camshaft installed, check Valve Timing, Ignition Timing, and Tappet Clearance.

CAMSHAFT BEARINGS: Use tool No. J-550 to remove and install camshaft bearings (rear bearing on

Eight must be pulled out toward front as expansion plug at rear prevents driving on bearing from rear). Use driver to install all bearings making certain that oil hole in bearings is lined up with hole in block (holes are at bottom of bearings). Then line ream all bearings to finished sizes as follows:

Bearing Finished Size:	Six	Eight
#1 (Front)	1.9950-1.9955"	1.9950-1.9955"
#2	1.9637-1.9642"	1.9637-1.9642"
#3	1.9325-1.9330"	1.9325-1.9330"
#4	1.9012-1.9017"	1.9012-1.9017"
#5		1.8700-1.8705"

TIMING CHAIN

TIMING CHAIN REPLACEMENT: Timing chain must be installed "endless" with both sprockets off the engine as directed below. CAUTION—Any attempt to install the chain by removing only one sprocket will result in breaking of the chain.

Timing Chain Removal—Remove Front End Sheet Metal Assembly as a unit, remove fan belt and fan, remove Harmonic Balancer (see Vibration Dampener). Support front end of engine with support jack, remove front engine support (see Front Engine Insulator Removal), remove timing chain cover, timing chain and sprockets.

Timing Chain Installation—Mesh sprockets in chain with timing marks on both sprockets lined up for correct valve timing (see Camshaft Setting on car model pages), install both sprockets together being careful not to place any side strain on chain. Re-install timing cover (see Timing Chain Cover Oil Seal data below), front engine support, harmonic balancer, fan and fan belt, and front end sheet metal assembly. NOTE—See Front End Sheet Metal Assembly data for alignment directions.

TIMING CHAIN COVER & OIL SEAL: Consists of cork seal and spring assembled on the crankshaft in front of the chain sprocket so that the cork bears against the inner face of the timing chain cover.

Installing New Cork Seal—Coat seal with graphite lubricant, rubbing lubricant well into the face of the cork, before installing seal in engine. This lubrication necessary to prevent noise at this point.

Installing Timing Chain Cover—Use J-546 tool to center timing chain cover before screws tightened.

NOTE: A timing chain bumper has been incorporated in the timing chain cover on the six cylinder engine. This bumper dampens timing chain vibration. The bumper consists of a synthetic rubber pad which is vulcanized to a steel bracket welded on the left edge of the timing chain cover on the driving side of the chain. The new cover is servicable as an assembly on past 6 cylinder engines.

OIL PUMP

OIL PUMP SERVICING: Pump is gear type mounted externally on right side of engine.

Removal: Turn crankshaft so that #1 piston on top dead center of compression stroke with distributor rotor at #1 firing position. Remove steering idler arm and right hand engine side pan. Take out pump mounting bolts and remove pump.

Overhaul: Remove cover assembly, lift out oil pump driven gear. Take out wire retainer and remove three distributor drive springs. Support pump on bottom surface, press pump shaft out of distributor gear (use drift of slightly smaller diameter than shaft inserted in end of drive gear to press on end of shaft). Take out relief valve plug, remove relief valve parts. Clean all parts thoroughly, replace worn or damaged parts. When re-installing parts, note specifications listed below. NOTE—Oil pump drive gear and shaft furnished as an assembly; distributor drive gear, pump driven gear, and driven gear shaft furnished as individual parts.

Pump Specifications—Driveshaft clearance in body .0025-.0005". Driven gear clearance on shaft .0020-.0005". Shaft fit in body .0025-.001" tight (press fit). Pump gear backlash .004-.006". Gear end clearance in body—Flush to .004" protrusion beyond cover surface of body (with gasket removed). Pump shaft end clearance .002-.006" (press distributor gear on shaft until clearance between gear and end of body is .002-.006").

Oil Pressure Relief Valve—Assembly consists of spring loaded disc valve located in the pump body below the idler gear. When pressure exceeds 40 lbs., disc is forced off its seat and oil is by-passed back to inlet side. Valve is not adjustable.

OILING SYSTEM

CRANKCASE OIL CLEANER: Pontiac type "Controlled flow" design consisting of settling chamber in oil inlet and filter screen housing in crankcase.

Servicing—No servicing required but Oil Cleaner should be removed and settling chamber cleaned out when oil pan removed for other work, or if car has been upset or turned over.

Cleaner Removal and Installation—To remove oil cleaner with oil pan off engine, disconnect oil suction pipe and remove oil cleaner assembly from engine. Remove screen assembly bottom cover by taking out two screws in bottom plate. Remove 12 screws which mount cleaner head in housing shell, remove settling chamber from housing shell. Wash all parts in gasoline and scrape sediment from settling chamber. When re-assembling cleaner, see that all gaskets in good condition or use new gaskets, turn head and housing upside down and insert 2 screws and place gasket inside shell, then set settling chamber in plate and start screw threads, turn assembly right side up and install remainder of screws, tighten all screws securely, assemble all other parts. Fill cleaner with fresh oil and install. *CAUTION*—Fill cleaner with oil before assembling to crankcase (avoids running engine without oil when engine is first started).

OIL PAN REMOVAL

OIL PAN REMOVAL: Drain crankcase and cooling system, remove radiator hoses at water pump and cylinder head. Take out two bolts mounting steering idler arm support, drop steering linkage down to provide clearance at pan. Remove front cross member-to-radiator cross member apron. Take off two self-locking nuts mounting engine front insulator to engine support. Use jack under oil pan (place wood block on jack to prevent damage to pan) to raise front end of engine approximately 1" (CAUTION—do not raise engine more than necessary to remove front insulator), take out two bolts mounting front insulator and rebound clamp assembly on frame and remove assembly. Install block approximately 2½" high between frame and engine support, lower engine so that it rests securely on this block, remove jack from under pan. Take off flywheel housing lower cover. Remove oil pan (NOTE—Removal of one engine side apron may be necessary to provide clearance for removing the pan).

CLUTCH NOTES

CLUTCH RELEASE BEARING & SUPPORT: Release bearing is new factory lubricated and sealed ball bearing type. Bearing is piloted on tubular support mounted in clutch housing and entirely enclosing transmission main drive gear shaft. This tubular support is installed and removed through rear face of clutch housing (with transmission off car) and a paper gasket is used between the support flange and the face of the housing. An oil slinger is provided on the main drive shaft ahead of the bearing in the transmission and a felt oil seal is installed against shoulder ahead of oil slinger retaining ring.

Release Bearing Support Removal—When removing support, **do not pry on flange in clutch housing,** tap support out of housing from inside (do not strike tubular portion of support, tap bell end of support at rear lightly with soft hammer).

Bearing Servicing—Do not wash bearings (factory lubricated and sealed).

IGNITION NOTES

1950-51 Distributor Cap & Cables—Distributor cap is conventional "Low Tower" type without any built-in suppression resistance. Ignition cables used with this cap are new "NON-METALLIC CONDUCTOR" type (conductors of graphite impregnated linen or rayon) with built-in suppression resistance. This 1950 cable can be identified by marking "RADIO-4000-GM" and individual cable resistances listed below.

►*CAUTION—This "RADIO-4000-GM" 1950 cable must not be used on 1949 cars with "High Tower" distributor cap (combination will have excessive resistance).*

1950-51 Secondary Cable Resistance
►Marked "Radio-4000-GM"

Cable	6 Cyl. (Ohms)	8 Cyl. (Ohms)
Ign. Coil Lead	2000-4400	2000-4400
#1	5200-12200	5200-12200
#2	4400-10300	5000-11500
#3	3600-8500	4200-10000
#4	4400-10300	4200-10000
#5	4400-10300	5500-13000
#6	5200-12200	6000-14000
#7		6300-14500
#8		7500-17500

►*CABLE INSTALLATION CAUTION—Special procedure as given below necessary to secure good contact between cable conductors and terminals.*

Terminal Installation on 1950-51 Secondary Cables—Before installing terminals, insert piece of metal wire to depth of 7/8" in end of cable to provide large area of contact with non-metallic conductor, bend end of wire across end of cable to provide good contact with metal of terminal, install conventional terminal on cable.

►**Loose Spark Plug Cable Terminal Correction on early 1950 Cars (where cable terminal pops off spark plug and cylinder cuts out)**—On early cars with first type cable terminal (with single detent dimple on end), detent may not lock securely on later type spark plug nut (with single groove) allowing cable to pop off in service. If terminal bottoms on spark plug nut before detent snaps tightly in spark plug nut groove, **grind approximately 1/16" off end of cable terminal.**

NOTE—This trouble should not be experienced with "double detent" type cable terminals which have detent on each side.

MODEL IDENTIFICATION

SERIAL NUMBER: On left front door hinge post.

1950 Numbers—P6TS-1001 Up Synchro-mesh Tr.
P6TH-1001 Up With Hydra-Matic Drive
1951 Numbers—P6US-1001 Up Synchro-mesh Tr.
P6UH-1001 Up With Hydra-Matic Drive
Prefix letter indicates Assembly Plant (below).

►**Assembly Plant Prefix Letter. P**—Pontiac, Mich., **C**—South Gate, **L**—Linden, **W**—Wilmington, **K**—Kansas City, **A**—Atlanta, **F**—Framingham.

ENGINE NUMBER: Same as Serial Number. Stamped on boss on left upper front corner of engine block.

TUNE-UP

COMPRESSION PRESSURE: 118 to 135 lbs. at 200 RPM (Std. 6.5-1 Head) 135 to 153 lbs. at 200 RPM (Optl. 7 5-1 Head).

VACUUM READING: 18-20" steady idling at 7-8 MPH or 365-385 RPM. on Hydra-Matic cars.

FIRING ORDER: 1-5-3-6-2-4. See diagram.

SPARK PLUG GAPS: .025". Limits .023-.028".
Plugs—AC No. 45. 14 mm. Metric

DISTRIBUTOR: Breaker Gap— 022" (new points), .020" (used points).

►*CAUTION*—Dial indicator for setting point gap recommended by car manufacturer. ***Do not use feeler gauge for setting used points.***
Cam Angle—35°. Test limits with .022" gap 31-37°. ***See "Delco-Remy Cam Angle" in Electrical Equipment Section.***
NOTE—If dial indicator not available when setting Breaker Gap on Used Points, car manufacturer recommends gap be set by cam angle at 35° closed.
Breaker Arm Spring Tension—17-21 ounces.
Automatic & Vacuum Advance—***See Ignition.***
Condenser Capacity—.18-.23 microfarad.

IGNITION TIMING: 6° BTDC (Initial setting—See Gaselector Setting).
Timing Procedure—***See Ignition Timing.***
Timing Mark—First (6°) line on vibration dampener aligned with pointer on chain case cover (2nd line 2° or 3° BTDC, 3rd line TDC).
Gaselector Setting—Set for barely audible ping when accelerating at 20-30 MPH, full throttle.

CARBURETION: Carter WA-1.
Idle Setting—Set idle adjusting screw 1-1¾ turns open. Turning screw out gives richer mixture.
Idle Speed (standard)—450-475 RPM. or 7-8 MPH.
Idle Speed (Hydra-Matic)—365-385 RPM.
Float Level—7/16" from machined projection on cover (inverted) to top of soldered seam at free end.
Accelerating Pump—Lower hole Normal Setting, Upper hole max. charge, Inner hole min. charge.

Choke Setting: Coil housing 3 Points Rich.

CARBURETION: Rochester Model BC.
Idle Setting—Set idle adjusting screw 1½ turns out for preliminary setting. Adjust further for smooth engine performance. Turning screw out gives richer mixture.
Idle Speed (standard)—450-475 RPM. or 7-8 MPH.
Idle Speed (Hydra-Matic)—365-385 RPM.
Float Level—1½" from gasket to top of float seam with bowl cover inverted and needle valve seated.
CAUTION—Do not damage lower seal on heat suction tube when removing bowl cover.
Accelerating Pump—No adjustment.
Choke Setting—Index mark on choke cover centered on long center scale mark on air horn casting.

Fuel Pump Pressure: 4-4¾ lbs.

MANIFOLD HEAT CONTROL: Thermostatic coil type, non-adjustable (fixed anchor pin). Counterweight should be securely clamped to shaft in vertical position with valve closed (cold position).
NOTE—Valve shaft bushings are Stainless Steel.

VALVE TAPPET CLEARANCE: .011" to .013", Hot. .011" "Go" gauge, .013" "No Go" gauge.
High Speed Setting—.013" EXH. Hot.

►**Cold Setting with Engine Stopped**—.012" to .014" Cold (room temperature). *CAUTION*—Check setting after engine warmed-up for limits of .011" to .013".

►**NOTE**—A removable plate is installed in front fender skirt so tappets are accessible for adjustment. fender skirt so tappets are accessible for adjustment.

Valve Timing Check—***See Valve Timing.***

STARTING: ***See Batery, Starter, Generator, Regulator.***

IGNITION

►***IGNITION HIGH TENSION CABLE CAUTION***—Special non-metallic conductor cables (with built-in suppression resistance). Marked "RADIO-4000-GM." ***See "Ignition Notes" in Pontiac Special Data for cable installation data.***

►*CAUTION*—This high-resistance cable must not be used on 1949 cars with "High Tower" resistor type distributor caps.

IGNITION SWITCH: Delco-Remy No. 1116464.
Ignition Lock—Briggs & Stratton or Delco-Remy.

COIL: Delco-Remy No. ('50) 1115378, ('51) 1115380. Mounted on engine.
Ignition Current—2.5 amperes idling, 4.5 stopped.

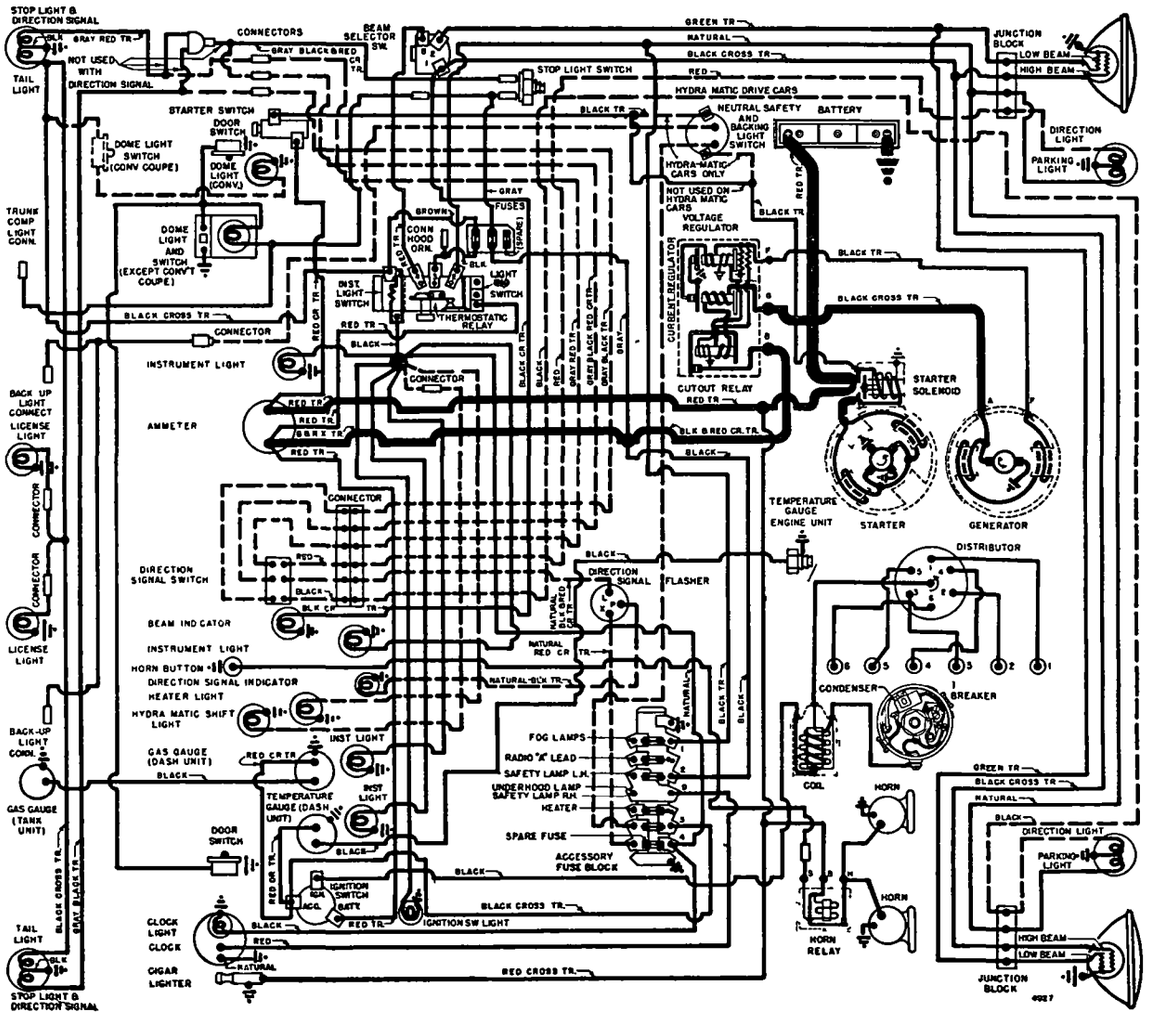

1950 MODELS

CONDENSER: Delco-Remy No. 1869704.
Capacity—.18-.23 microfarad.

DISTRIBUTOR: Delco-Remy Model 1110222. Automatic and vacuum advance type with new "center bearing" breaker plate.

►**Breaker Plate Bearing Assembly**—Plate rotates on 3 bakelite buttons on support plate with spring tension adjustment (shim washers) on underside of support plate. Pull required to move plate should be 8 oz. min., 16 oz. max. with breaker plate assembly out of housing.

See "Delco-Remy Center-Bearing Breaker Plate Distributor" in Electrical Equipment Section.

Breaker Gap—.022" (new points), .020" (used pts.).

►*CAUTION*—Dial indicator for setting point gap recommended by car manufacturer. ***Do not use feeler gauge for setting used points.***

Cam Angle—35°. Test limits with .022" gap 31-37°. ***See "Delco-Remy Cam Angle" in Electrical Equipment Section.***

Breaker Arm Spring Tension—17-21 ounces.

Rotation—Counter-clockwise viewed from above.

Automatic Advance

Degrees Distr.	R.P.M.	Degrees Eng.	R.P.M.
Start	300	2	600
8.25	1100	16.5	2200
8.5	1400	17	2800
14	2050	28	4100

Gaselector—Manual adjustment at distributor. 10° advance or retard. See Ignition Timing.

Vacuum Spark Control: Delco-Remy (part of distr.).

Vacuum Advance—1110222

Distr. Degrees	Eng. Degrees	Vacuum (" of HG)
Start	0°	7-9"
7½°	15°	14.5-16.5"

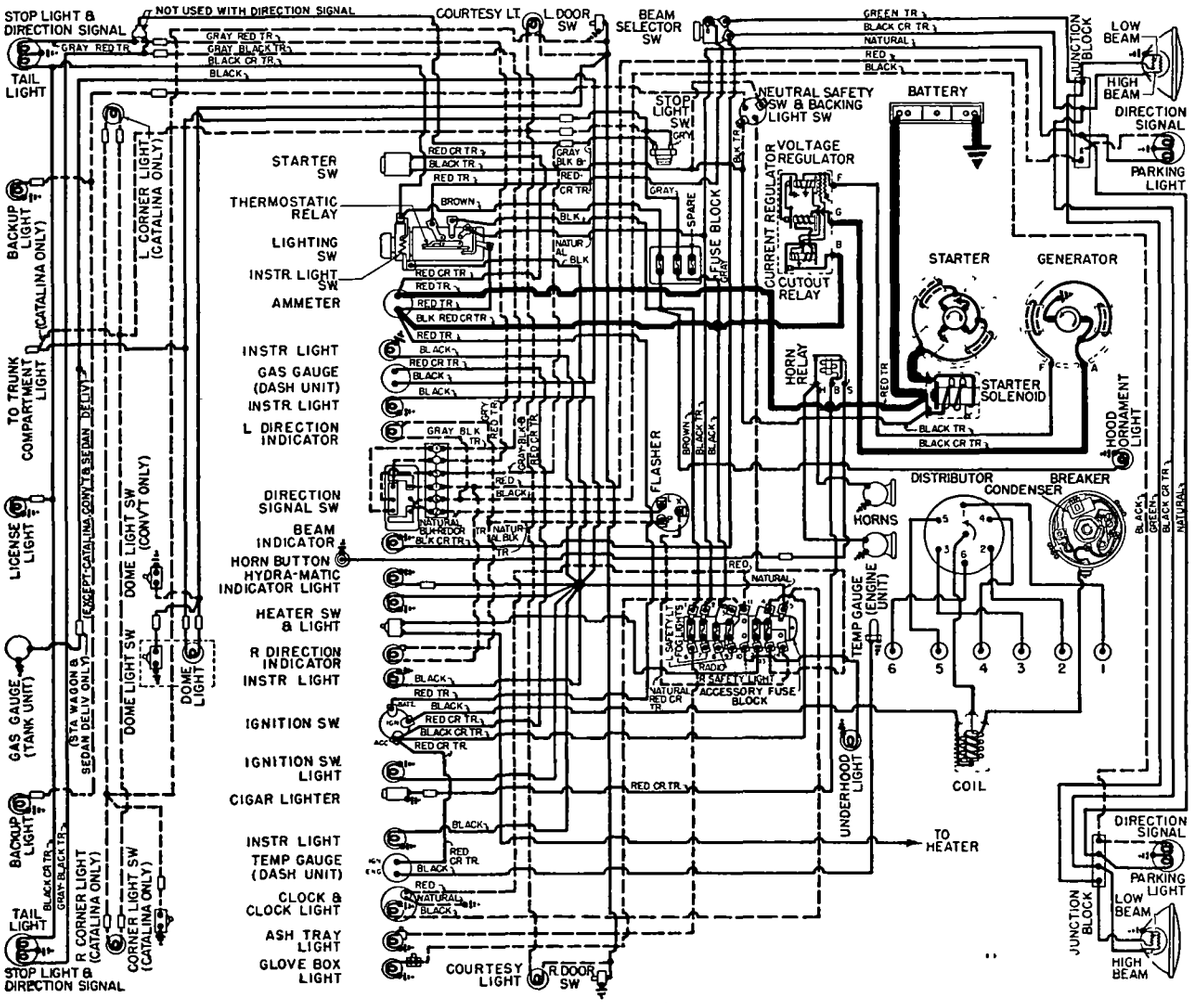

1951 MODELS

IGNITION TIMING

Std. Setting	Flywheel Degrees	Piston Pos.
All Engines①	6° BTDC	.0138" BTDC.

①—Regular Fuel—Std. Hd. Ethyl Fuel—7.5-1 Hd. High Comp. Head Engines set 3° BTDC at factory.

Timing Mark—Three lines on vibration dampener. First (6°) line on vibration dampener aligned with pointer on chain case cover (2nd line 2° or 3° BTDC, 3rd line TDC).

Timing (with Timing Light)—Loosen gaselector indicator arm-to-block clamp bolt, set arm at 0, tighten bolt. Connect Timing Light (KMO318) to No 1 spark plug, idle engine. Loosen advance arm clamp bolt, rotate distributor until timing light shows pointer at timing mark on vibration dampener which indicates 6° BTDC (1st line). Tighten clamp screw. Check Gaselector Setting (see below).

Gaselector Setting—Set to give best performance without spark knock or ping for fuel used. Marked "ADV" and "RET", adjust according to these marks.

CARBURETOR

1950 CARTER

Carter WA-1, No. 717S.....Synchro-Mesh Trans.
Carter WA-1, No. 718S.....Hydra-Matic Drive
1¼" single barrel downdraft types with Carter Climatic Control.

Casting No. on Flange—(717S) 388, (718S) 592.
See Carburetor Section for complete data.

Settings (Idle Setting, Float Level, and Accelerating Pump): ***See Tune-Up.***

Metering Rod & Jet—***See Carter Jet Table in Carburetor Section.***

NOTE—No "throttle cracker" used.

Hydra-Matic Throttle Linkage Adjustment: ***See Pontiac Hydra-Matic Drive in Transmission Section.***

Fast Idle: Carter Single Barrel Carburetor type.
Setting—⅝" clearance between choke valve and air horn (Gauge T109-85) with throttle valve closed and stopscrew against (not on) first step of fast idle cam. Adjust by bending connector link at lower offset (use Tool T109-41).
See Carburetion Equipment Section for complete data.

Automatic Choke: Carter Climatic Control (single barrel carburetors).
Setting—3 Points Rich.
See Carburetion Equipment Section for complete data.

1951 ROCHESTER

Rochester Model BC, No. 7002870. Synchro-mesh and Hydra-Matic Drive cars.
1¼" single barrel downdraft with automatic choke.
See Carburetor Section for complete data.

Settings—(Idle Setting, Float Level, and Accelerating Pump): ***See Tune-Up.***

Hydra-Matic Throttle Linkage Adjustment: ***See Pontiac Hydra-Matic Drive in Transmission Section.***

Fast Idle: Rochester "GM" Carburetor type.
Setting—With choke cover indexed, turn idle screw in to contact second step of fast idle cam. Hold screw against cam and bend choke rod at dog leg to give .059" clearance between choke valve and air horn.
See Carburetion Equipment Section for complete data.

Automatic Choke: Rochester "GM" Carburetor type.
See Carburetion Equipment Section for complete data.

CONTINUED N NEXT PAGE

C NTINUED FR M PRECEDIN PA E

CARB. EQUIPMENT

Air Cleaner: AC No. 1529871 oil-wetted type (std.), No. 1544486 heavy duty oil-bath type (optional).
Filter Element—AC #1 (std.), #21 (heavy duty).
Servicing—Clean and re-oil std. cleaner, or on heavy duty clean and refill reservoir with 1 pint SAE 50 (20W below freezing) oil, at 10,000 mile intervals (twice yearly) or more often if required.

Fuel Pump: (Std.) AC No. 1537317 (Fuel & Vacuum).
Replacement Pump—AC-539.
Pressure—4 to 4¾ lbs.
See Carburetion Equipment Section for complete data.

Gasoline Gauge: AC Electric type.
Dash Unit—(1950) AC 1517117. (1951) AC 1517378.
Tank Unit—(1950) AC 1517249, Station Wagon AC 1517122. (1951) AC 1517411, Station Wagon AC 1517410.
See Carburetion Equipment Section for complete data.

BATTERY

Delco Type 15E4 (1950). Delco Type 15E6 (1951), 6 volt, 15 plate. 100 Ampere Hour Capacity.
Grounded Terminal—Negative (—) to engine.
Location—On left side of engine compartment.

Police Battery Delco Type 19E4 (1950). Delco Type 19E6 (1951), 6 volt, 19 plate, 130 Ampere Hour Capacity.

NOTE—The "E6" battery used on the 1951 cars is the new "Low Gravity Type." Specific gravity range of electrolyte at full charge is 1.260-1.280 ("E4" models 1.275-1.290).

STARTER

LHD.....**Delco-Remy 1107079. Arm. No. 1867897.**
RHD.....**Delco-Remy 1107934. Arm. No. 1867897.**

►*CAUTION—LHD starter operates whenever pushbutton depressed (and shift lever in neutral on Hydra-Matic)*
Drive—Overrunning clutch (solenoid pinion shift).
Rotation—Counter-clockwise at commutator end.
Brush Spring Tension—24-28 ozs. each.

Performance Data—1107079

Torque		R.P.M.	Volts	Amperes
0	ft. lbs	5000	5.7	80①
12	"	Lock	3.4	525

Performance Data—1107934

0	ft. lbs	5500	5.7	80①
14	"	Lock	3.0	600

①—Includes current draw of starter switch.

Removal: Flange mounted at left front of flywheel housing. To remove, take out mounting screws.

Starting Switch (1107079 Starter): (1950-51) Delco-Remy Solenoid 1118140 (no relay used) mounted on starter and controlled by Pushbutton Switch (1950) No. 1996037. (1951) No. 1996045, and Neutral Safety Switch No. 1997846 (1950-51) Hydra-Matic cars.
CAUTION—Overrunning clutch pinion clearance must be adjusted if solenoid removed from starter.
See Electrical Equipment Section for complete data.
(1107934)—Delco-Remy Solenoid 1118102 on starter and controlled by Relay No. 269-G and Pushbutton Switch No. 1996039 (and Neutral Safety Switch 1997846 on Hydra-Matic Drive cars).
See Electrical Equipment Section for complete data.
Neutral Safety Switch Adjustment—*See Pontiac Hydra-Matic Drive in Transmission Section.*

GENERATOR

1950 (Std.).....**D-R No. 1102711. Arm. No. 1879002**
1951 (Std.).....**D-R No. 1102750. Arm. No. 1911962**
1950-51 (Police)....**D-R No. 1106403. Arm. No. 1880252**

Two brush types with voltage and current regulation.
Maximum Charging Rate—No. 1102711, 36 amperes cold, at 2040 Gen. RPM. No. 1102750, 40 amperes cold at 1950 Gen. RPM. Actual charging rate set by regulator (dependent on battery condition).

Performance Data—Cold

	Amperes	Volts	R.P.M.
1102711	30①	8.0	1750
1102750	40	8.0	1950
1106403	35	8.0	1040

①—Not maximum output. See Current Regulator.
Rotation—Counter-clockwise at commutator end.
Brush Spring Tension—28 ozs.
Field Current—(1102711) 1.75-1.9 amperes at 6.0 volts. (1102750) 1.90-2.05 amperes at 6.0 volts. (1106403) 1.77-2.0 amperes at 6.0 volts.
Belt Adjustment: Belt deflection or sideplay midway between generator & pump pulley should be 1½".

REGULATOR

1950 (Std.).....**D-R No. 1118301 (for 1102711 Gen.)**
1951 (Std.).....**D-R No. 1118300 (for 1102750 Gen.)**
1950-51 (Police)..**D-R No. 1118352 (for 1106403 Gen.)**

►*NEW "1118300 SERIES"* regulators have screw adjustment for settings and single regulator springs.
See Electrical Equipment Section for complete data.
CAUTION—Check generator for grounded field coils and leads before changing regulator settings to correct High Charging Rate of High Voltage.

Cutout Relay

Cuts In—5.9-6.8 volts hot (set to 6.4 volts hot).
Contact Gap—.020" (same for both contacts).
Air Gap—.020" (with contacts just closed).

Voltage Regulator

Setting—7.0-7.7 volts hot (set to 7.4 volts hot). Regulator is over-compensated for temperature. Should be checked with cover in place and hot.
Air Gap—.075" with armature pressed down to point where contacts are just touching.
Checking & Adjustment—*See Elec. Equip. Section.*

Current Regulator

Setting (1118301).....32-40 amps. hot (set at 36 hot)
Setting (1118300).....40-46 amps. hot (set at 42 hot)
Setting (1118352).....33-37 amps. hot (set at 35 hot)
Air Gap—.075" with armature pressed down to point where contacts are just touching.
Checking & Adjustment—*See Elec. Equip. Section.*

LIGHTING

Headlamps: Guide "Sealed Beam" type.
See Electrical Equipment Section for complete data.
Adjustment—Aim upper beam straight ahead (hot spot centered 3" below lamp center height at 25 ft.).
Beam Indicator—At speedometer. Lighted when upper beam in use.
Directional Signal: *See Electrical Equipment Section.*
Direction Signal Indicator—Red pilot light on speedometer dial. Flashes when signal in use.

Switches

Lighting—Delco-Remy No. 1995032.
Instrument—Part of lighting switch. Rheostat operated by turning Light Switch Knob.
Beam Selector—Delco-Remy No. 1997008.

MISC. ELECTRICAL

THERMOSTATIC CIRCUIT BREAKER: Delco-Remy. On back of light switch (part of switch assy.). Contacts remain closed with 30 amperes but open in 3 minutes with 42 amperes at 70°F. Not adjustable.

MAIN FUSE BLOCK: On left hand engine side of dash. Two fuses (plus 1 spare) as follows:
Tail Lamp—SFE 14 ampere. In gold colored fuse holder. Protects rear license, instrument, ignition key, and clock lamps (dome on convertible).
Stop Lamp—SFE 14 ampere. In gray colored fuse holder. Protects trunk light and dome light (except on Convertible).

ACCESSORY FUSE BLOCK: Six fuses mounted on fuse block on dash behind instrument panel. All fuses are 20 ampere except Radio fuse which is 14 ampere. (Spare Radio fuse on main fuse block on engine side of dash). Fuse identification printed inside fuse block cover.

HORNS: Delco-Remy No. 1999645 (Low Note). No. 1999646 (High Note). Vibrator types operated by relay.

Type	Current (at 6 volts)	Air Gap
Low Note	19-21 amperes	.047-.052"
High Note	18-20 amperes	.039-.044"

Horn Relay: Delco-Remy No. 1116775.
Contact Gap—.027". **Air Gap**—.014" (closed).
Contacts Close—2.75-4.0 volts (set to 3.5 volts).

ENGINE

ENGINE SPECIFICATIONS: Own. Six Cyl., "L" head.
Bore—3 9/16". *For Original Bore Sizes and Markings, see "Original Bore & Pistons" in Pontiac Special Data.*
Stroke—4". **Displ.**—239.2 cu. ins. **Rated HP**—30.4.
Developed Horsepower—90 at 3400 RPM. (6.5-1 Head). 100 at 3400 (7.5-1 Head).
Compression Ratio—Std. 6.5-1. Optl. 7.5-1, iron hds.
Compression & Vacuum Reading—*See Tune-Up.*

TIGHTENING TORQUES: *See Pontiac Special Data.*

CYLINDER HEAD: Tightening Torque & Cylinder Head Diagram—*See Pontiac Special Data.*

PISTONS: Chrome nickel alloy, electro-plated type. Pistons have 20 oil drain holes in oil ring groove.
Length—3.572-3.582". **Weight**—27.1 ozs.
Removal—Pistons and rods removed from above.
Clearance—Top Land .015-.027". Skirt .002".

Fitting New Pistons: Insert .0005" x ½" feeler between piston and cylinder wall. Pull to withdraw feeler must be (1950) 10-20 lbs., (1951) 20-35 lbs. Taper and out-of-round limits—Piston .0005", Cylinder .0005" max. new.

Replacement Pistons: *See Pontiac Special Data.*

PISTON RINGS: Two tapered-face compression rings above pin, one slotted oil control ring below pin.
NOTE—Rings are cadmium-plated or tin-plated.

Ring	Width	End Gap	Side Clearance
Compr. (#1, 2)	3/32"	.007-.012"	.0015-.003"
Oil (#3)	3/16"	.007-.012"	.001-.0025"

Installing Compression Rings—Mark "TOP" up.
Replacement Rings: .005", .010", .020", .030" Oversize.

PISTON PIN: Diameter—.9369-.9375". **Lgth**—3 1/16". Pin is shot-peened type (shot-peened before final grinding and lapping). Pin is locked in one piston

C NTINUED ON NEXT PAGE

ENGINE

CONTINUED FROM PRECEDING PAGE

boss by self-locking lockscrew and opposite boss is slotted to permit pin movement.
Pin Fit in Rod Bushing—.0004-.0006" clearance.

Replacement Pins:—.001" (red & brown), .003" (red), .005" (blue) oversize. Paint marked on end of pin.

CONNECTING ROD: Weight 37 ozs. Length 7 9/16".
Crankpin Journal Diameter—2.1237-2.1247".
Lower Bearing—Thin type, interchangeable, steel-backed, babbitt-lined type.
Clearance—.0001-.0021". **Sideplay**—.007-.012".

Bearing Adjustment:—None (no shims).

Replacement Bearings: Standard size & .001" Undersize. *NOTE*—Bearings have small tongue which must engage groove in rod and cap.

Installing Rods: Not offset (install either way).
NOTE—Rods and bearing caps marked to insure correct reassembly (marks must be together). These marks do not indicate cylinder in which rod used.
CAUTION—Keep each connecting rod and its bearing cap together.

CRANKSHAFT: Four bearing type with integral counterweights and vibration dampener on forward end.

►**Flywheel to Crankshaft Bolts (Synchro-Mesh Transmission)**—¾" hex head bolts (No. 508463) or 1" hex head bolts (No. 510832) are used. Either type can be used for replacement but head sizes must be alike on all bolts or engine balance will be destroyed.
Journal Diameters—#1, 2.4982-2.4992"; #2, 2.5294-2.5304"; #3, 2.5919-2.5929"; #4, 2.6232-2.6242".
Bearings—Thin type, removable, steel-backed, babbitt-lined. Upper and lower bearing halves alike.
Clearance—.0003-.0023".

Rear Main Bearing Oil Seal Renewal—*See Pontiac Special Data.*

Replacement Bearings: Standard & .001" Undersize.

End Thrust: At #3 (rear intermediate) bearing.
Endplay—.003-.008".

CAMSHAFT: Four bearing, non-adjustable chain.
Clearance—.0015-.0025" (new).

End Thrust:—Steel thrust plate behind camshaft sprocket. Replace if worn. **Endplay**—.003-.007".

Timing Chain: Morse. Width 1". Pitch ⅜". Length 21" or 56 links. *NOTE:* 1951 cars equipped with a timing chain bumper to eliminate vibration.
See "Timing Chain" in Pontiac Special Data Section.

Camshaft Setting:—Sprockets marked. Mesh chain with sprockets turned so that '0' marks are adjacent and in line with a straightedge across shaft centers.

VALVES:	Head Diam.	Stem Diam.	Length
Intake	1 19/32"	.310-.311"	5.718"
Exhaust	1 15/32"	.310-.311"	5.718"

	Seat Angle	Lift	Stem Clearance
Intake	30°	19/64"	Free fit to .0006"①
Exhaust	45°	19/64"	Free fit to .0006"①

①——Tapered (max. clearance at bottom .0006").

Valve Guides: Guides have tapered hole (.001" taper to inch—greatest clearance at top). Exhaust guides counterbored at top to depth of ¾".
Checking Valve Clearance in Guide—Clean guide with tool KMO122, clean counterbore in exhaust guide with Counterbore Cleaner J-2122. Valve should just fall through guide of own weight.
Installing Guides—Use Valve Guide Remover J-2542 to remove and install guides. Drive new guide down in block (counterbored end up on exhaust guides) until upper end 29/32" below top edge of valve seat. Ream guide with PR-131 tapered reamer and finish counterbore with Counterbore Cleaner J-2122 for correct clearance (see above).
►*CAUTION*—Guides furnished with straight hole which must be taper reamed.
NOTE—Eight cylinder intake valve guide may be used on six cylinder cars.

Valve Springs:—Intake and exhaust springs identical. Install with two closed coils at top and dampener on top of each spring. Use new dampeners whenever removed from spring. **Free Length**—2 9/16".

	Spring Pressure	Length
Valve Closed	56-63 lbs	1 29/32"
Valve Open	97-105 lbs	1 19/32"

Valve Lifters:—Barrel type, cast-iron. Guide holes reamed in block. Lifters furnished .005" oversize (use pilot reamer J-706-P when reaming holes to maintain alignment—valve guides must be removed, use Valve Guide Removing Tool J-2542).
Clearance—Free fit. Lifter should just move freely with finger touch.

VALVE TIMING

Tappet Clearance: .011" to .013", All Valves, Hot. .011" "Go" gauge, .013" "No Go" gauge.
High Speed Setting—.013" EXH. Hot.
Cold Setting with Engine Stopped—.012" to .014" Cold (room temperature). *CAUTION*—Check setting after engine warmed-up for limits of .011" to .013".
►**NOTE**—A removable plate is installed in front fender skirt so tappets are accessible for adjustment.

Valve Timing:—*See Camshaft Setting above.*
Intake Valves—Open 5° BTDC. Close 39° ALDC.
Exhaust Valves—Open 45° BLDC. Close 5° ATDC.
Valve Timing Check—With .015" tappet clearance #6 intake valve should open with #6 piston 5° or .0096" before top dead center with first straight line of dampener mark '/IGN.ONE/' slightly past pointer on left front face of chain cover. Reset tappet clearance .011-.013" (warm).

LUBRICATION

Engine Oiling System: Pressure to main bearings connecting rod lower bearings and piston pins (rifle-drilled rods), camshaft bearings, and chain.
Crankcase Capacity—5 qts. (refill), 6 qts. (dry).
Normal Oil Pressure—35-45 lbs. at 40 MPH. with warm oil (10-30 lbs. idling).
Oil Pressure Regulator—On oil pump. Opens at 40 lbs. Replace spring if free length less than 2 5/16".

Oil Pump: Gear type. On right side of crankcase.

Oil Cleaner: Precipitation type (in crankcase).

Oil Pressure Gauge: AC No. 1507535. Not electric.

Crankcase Ventilation: Filter element in oil filler cap (inlet). Outlet pipe at valve compt. cover on right rear side of engine (cars with oil bath air cleaner use 3-piece outlet pipe containing filter element). Wash filter element and re-oil by dipping in engine oil when servicing air cleaner.
CAUTION—Filler cap must be installed with air opening in cap toward front of car and seam in line with groove in tube (may cause excessive il consumption if installed backward).
Crankcase Ventilator Outlet Pipe—On cars with Oil-bath type Air Cleaner, special 3-piece ventilator outlet pipe used with copper gauze air cleaner.

COOLING

Cooling System: Pressure type with pressure valve and vacuum valve (relief valve) in filler cap.
Capacity—18½ qts.
Pressure Valve—AC No. 850549 Filler Cap. Opens at 7 lbs. (6¼-7½ lbs.).

Water Pump: Packless, sealed ball-bearing shaft.
See Water Pump Section for complete data.
Removal—Drain cooling system, remove hose connection at pump, remove belt, take out water pump mounting bolts and lift pump out.
Belt Adjustment—*See Generator Belt Adjustment.*

Thermostat:—Harrison. In cylinder head outlet.
Setting—Starts to open 148-156°F. Fully open 176°F.

Temperature Gauge: AC Electric type.
Dash Unit—AC No. 1512287.
Engine Unit—AC No. 1512015.
See Miscellaneous Section for complete data.

CLUTCH

Inland. Single Plate, "Diaphragm", dry disc type with Long Driven Member Model 9½CF-TS (except Taxicab), Model 10CF-CS (Taxicab).
See Clutch Section for complete data.

►**Heavy Duty Clutch Note**—No separate 1950 Heavy Duty Clutch used. Std. 8 Cyl. clutch cover assembly used with special 6 Cyl. 10" driven member.
See Clutch Section for complete data.
Facings—Woven type, 2 required. I.D. 6" (All O.D. 9½" (exc. Taxi), 10" (Taxi), Thickness ⅛".

Pedal Adjustment:—Free travel ⅞-1⅛" (adjusting nut on link at clutch fork).

Removal: Remove Transmission (see Transmission Removal below), remove clutch bearing support spring washer (in rear face of clutch housing), remove clutch housing bottom cover and control shaft inner bracket. Remove release bearing support and release bearing (see Clutch Release Bearing & Support data), tapping the support from inside the clutch housing to aid in removing (*CAUTION*—avoid striking tubular portion of support) Mark flywheel and clutch cover (to insure reinstallation in same position to maintain balance), remove clutch cover mounting bolts evenly, move clutch assembly away from flywheel at bottom and withdraw driven member, lower cover assy. out.

►**Clutch Sticking Correction (Removal of Excess Release Bearing Lubricant):** If recess in bore on bearing over-lubricated when clutch assembly installed, excess lubricant may be found causing clutch sticking. Clean out excess lubricant found at the following points: transmission drive gear, driven plate hub, clutch facings, pressure plate and cover assembly, release bearing support tube, fulcrum points of release fork, and recess in bore on release bearing (do not wash bearing, bearing is "sealed" type). Lubricate clutch parts exactly as described under Installation Note following:
Clutch Installation Note—Install new felt oil seal against shoulder ahead of oil slinger retaining ring on Transmission Main Drive Gear (will bear against flared end of release bearing support when installed). Lubricate seal with engine oil before transmission installed. Coat entire length of outer diameter of release bearing support tube with grease. Lubricate release fork fulcrum points with a very

C NTINUED ON NEXT PA E

C NTINUED FROM PRECEDING PAGE

light coat of grease. Apply light coat of Lubriplate on main driving gear splines. Use new paper gasket between support flange and clutch housing, make certain that flange is not bent or distorted (will cause misalignment of transmission).

Clutch Release Bearing & Support: *See Pontiac Special Data for description.*

TRANSMISSION

Own Make. All helical gear. Constant-mesh synchro-mesh (Second & High), sliding gear (Low & Reverse). *See Transmission Section for data.*

Transmission Control: Pontiac "Safety-shift" remote control type with gearshift lever on steering column. *See Transmission Section for complete data.*

Removal:—Disconnect speedometer cable, gearshift selector and control rods from transmission. Disconnect rear universal (wire trunnions) and pull out propeller shaft. Remove upper transmission mounting screws, install guide pins (J-851), remove lower screws, pull transmission to rear, down and out. **Installation Note**—Use guide pins installed in two upper transmission mounting holes to assist in sliding transmission straight forward into place (to avoid damage to clutch release bearing support.

►**New Transmission Main Drive Gear Oil Seal**—*See Transmission Section for complete data.*

HYDRA-MATIC DRIVE

OPTIONAL EQUIPMENT

Four speed planetary type automatic transmission and fluid coupling. *1951 MODELS*—Modulated pressure and hydraulically operated reverse mechanism. *See Transmission Section for complete data.*

►**NOTE:** *Different Hydra-Matic Transmission used as follows:*

	Hydra-Matic Model No.
1950 (First 10,000 cars)	185-49-P①
1950 (After 10,000 cars)	185-50-P②
1951	185-51-P③

①—P9 preceding Serial No. on black background.
②—P50 preceding Serial No. on black background.
③—P51 Preceding Serial No. on black background.

►*NOTE:* P9, P50 also used on 8 cyl. cars. Check serial number plate.

►*CAUTION—P9 Transmission should not be used to replace P50 or P51 transmissions.*
See "Pontiac Hydra-Matic Drive" in Transmission Section.

Lubrication—Check fluid level in transmission every 2000 miles (at lubrication period). Drain and refill every 25,000 miles. Use only GM Hydramatic Fluid or "Automatic Transmission Fluid Type A."

Draining & Refilling—*See "Hydra-Matic Drive" in Transmission Section.*

Checking Fluid Level—Roll back right side of front floor mat. Clean all sand, lint, and dirt away from sheet metal cover in floor, remove cover, clean any dirt away from dipstick cover on transmission. **Set Hand Brake.** Run engine for approx. 1½ minutes at speed equivalent to 20 MPH. with selector lever in "Neutral." Reduce engine speed to slow idle and move selector lever to "Drive" position, measure level with dipstick, add fluid until level is at "FULL" mark with engine idling.

►*CAUTION—Engine must be idling slow and selector lever in "Drive" position when checking fluid level.*

Linkage Adjustment—*See "Hydra-Matic Drive" in Transmission Section.*

Removal: *See "Hydra-Matic Drive" in Transmission Section.*

UNIVERSALS

Mechanics Model 2CR lock ring retainer type or **Saginaw** clamp plate retainer type.
See Universals Section for complete data.

►*CAUTION*—Rear universal companion nut controls rear axle pinion bearing "pre-load" (must be adjusted whenever nut is loosened). *See Pontiac Rear Axle in Rear Axle Section.*

REAR AXLE

Own Make. Hypoid gear, semi-floating type with pinion mounted on two taper roller bearings.

►*CAUTION*—Rear Universal companion nut controls pinion bearing "pre-load" and must be adjusted each time nut is loosened.
See Rear Axle Section for complete data.

►**Filler Plug Production Change**—Moved from axle cover at rear to front face of carrier on right side

Model	Ratio	Paint Mark①
Hydra-Matic (All)	3.63-1	Violet or Blue
Synchro-Mesh	4.1-1	Green
Synchro-Mesh	3.9-1	Red
Synchro-Mesh	4.3-1	White
Synchro-Mesh	4.55-1	Yellow
Synchro-Mesh	3.63-1	Violet or Blue

①—On outer end of axle shafts.

Backlash—.003-.012" (new), slightly over .012" (worn).

Removal:—Disconnect rear universal and wire trunnions (do not disengage spline joint at transmission), remove axle shafts and carrier flange capscrews. Withdraw carrier assembly from housing.

►CAUTION—Rear universal joint companion flange nut controls pinion bearing "pre-load" (must be adjusted whenever nut is loosened).

Axle Shaft Removal:—Remove wheel, brake drum, 4 backing plate bolt nuts, static collector, and loosen bearing retainer (do not move backing plate or brake line may be damaged). Pull shaft with puller J-942 —(do not drag axle shaft on oil seal).

Wheel Bearing Adjustment—None.

SHOCK ABSORBERS

Delco. Direct acting, non-adjustable, sealed (non-refillable) type. Serviced by replacement.

1950 Front—Pontiac No. (Std.) 5513190, (HD) 5513562.
1950 Rear—Pontiac No. (Std) 5513200, (HD) 5513201.
1951 Front—Pontiac No. (Std.) 5516126, (HD) 5513562.
1951 Rear—Pontiac No. (Std.) 5516127, (HD) 5513563.

FRONT SUSPENSION

Front Suspension: New linked parallelogram type with direct acting shock absorber mounted within each coil spring.
See Front Suspension Section for complete data.
Rebound Noise Correction—*See "1949-50 Pontiac" in Front Suspension Section.*
Kingpin Inclination—4¾° to 5¼° crosswise.
Caster—Neg. ¾°. Limits Neg. ½° to Neg. 1°. Adjustable.
Camber—0°. Limits Neg. ¼° to Pos. ¼°. Adjustable.
Toe In—0-1/16". Adjust rod sleeves equally.

STEERING GEAR

Saginaw. Worm-and-Roller type.
See Steering Gear Section for complete data.

BRAKES

Service Brakes: Bendix Hydraulic, duo-servo, single anchor type **without eccentric adjustment.** Hand lever applies rear wheel service brakes.
See Brake Section for complete data.
Wheel Cylinder Bore—Front wheels 1 1/16". Rear ⅞"
Drums—Steel & cast-iron. Diameter 11".
Lining—Molded. Width 2¼" (front wheels), 1¾" (rear). Thickness 3/16". Length per shoe: 9 11/32" (primary), 11 31/32" (secondary).
Clearance—.015" at both ends of secondary (rear) shoe with primary shoe forced out against drum.
Braking Power—60% front wheels, 40% rear.

Hand Brake: See Service Brakes above.

MISC. MECHANICAL

Convertible Top Control: Hydro-Lectric type (hydraulic actuation with motor-driven pump supplying oil under pressure for power cylinders).
See Miscellaneous Section for complete data.

Windshield Wiper: Vacuum Link-&-Crank Arm type.
See Miscellaneous Section for complete data.

MODEL IDENTIFICATION

SERIAL NUMBER: On left front door hinge post.

1950 Numbers—P8TS-1001 Up.....Synchro-Mesh Tr.
P8TH-1001 Up.....with Hydra-Matic Drive

1951 Numbers—P8RS-1001 Up.....Synchro-mesh Tr.
P8UH-1001 Up.....With Hydra-Matic Drive
Prefix letter indicates Assembly Plant (below).

►**Assembly Plant Prefix Letter. P**—Pontiac, Mich., **C**—South Gate, **L**—Linden, **W**—Wilmington, **K**—Kansas City, **A**—Atlanta, **F**—Framingham.

ENGINE NUMBER: Same as Serial Number. Stamped on boss on left upper front corner of engine block.

TUNE-UP

COMPRESSION PRESSURE: (Std. 6.5-1 Head) 118-135 lbs. at 200 RPM. (Optl. 7.5-1 Head) 135-153 lbs. at 200 RPM.

VACUUM READING: 18-20" steady idling at 7-8 MPH. or 365-385 RPM. on Hydra-Matic cars.

FIRING ORDER: 1-6-2-5-8-3-7-4. See diagram.

SPARK PLUG GAPS: .025". Limits .023-.028".
Plugs—AC No. 45. 14 mm. Metric.

DISTRIBUTOR: Breaker Gap—.016" (new points), .015" (used points).

►*CAUTION*—Dial indicator for setting point gap recommended by car manufacturer. ***Do not use feeler gauge for setting used points.***

Cam Angle—26°. Test limits with .016" gap 21-30°. ***See "Delco-Remy Cam Angle" in Electrical Equipment Section.***

NOTE—If dial indicator not available when setting Breaker Gap on Used Points, car manufacturer recommends gap be set by cam angle at 28° closed.

Breaker Arm Spring Tension—19-23 ounces.

Automatic & Vacuum Advance—***See Ignition.***

Condenser Capacity—.18-.23 microfarad.

IGNITION TIMING: 6° BTDC (initial setting—See Gaselector Setting).

Timing Procedure—***See Ignition Timing.***

Timing Mark—First (6°) line on vibration dampener aligned with pointer on chain case cover (2nd line 2° or 3° BTDC, 3rd line TDC).

Gaselector Setting—Set for barely audible ping when accelerating at 20-30 MPH., full throttle.

CARBURETION:

Idle Setting—¾-1¼ turns open. Two screws—turning screws out gives richer mixture.

Idle Speed (standard)—450-475 RPM. or 7-8 MPH.

Idle Speed (Hydra-Matic)—365-385 RPM.

Float Level—3/16" from top of floats to gasket seat on bowl cover (Gauge T109-162). Sides of floats should barely touch vertical uprights on gauge (to avoid floats binding on sides of bowl).

Accelerating Pump—Lower Hole (minimum) Normal. Upper Hole (max.)—if more charge required.

Choke Setting: Centered at Index.

Fuel Pump Pressure: 4-4¾ lbs.

MANIFOLD HEAT CONTROL: Thermostatic coil type, non-adjustable (fixed anchor pin). Counterweight should be securely clamped to shaft in vertical position with valve closed (cold position).
NOTE—Valve shaft bushings are Stainless Steel.

VALVE TAPPET CLEARANCE: .011" to .013", Hot. .011" "Go" gauge, .013" "No Go" gauge.

High Speed Setting—.013" EXH. Hot.

►**Cold Setting with Engine Stopped**—.012" to .014" Cold (room temperature). *CAUTION*—Check setting after engine warmed-up for limits of .011" to .013".

►*NOTE*—A removable plate is installed in front fender skirt so tappets are accessible for adjustment.

Valve Timing Check—***See Valve Timing.***

STARTING: ***See Batery, Starter, Generator, Regulator.***

IGNITION

►*IGNITION HIGH TENSION CABLE CAUTION*—Special non-metallic conductor cables (with built-in suppression resistance). Marked "RADIO-4000-GM." ***See "Ignition Notes" in Pontiac Special Data for cable installation data.***

►*CAUTION*—This high-resistance cable must not be used on 1949 cars with "High Tower" resistor type distributor caps.

IGNITION SWITCH: Delco-Remy No. 1116464.
Ignition Lock—Briggs & Stratton Delco-Remy.

COIL: Delco-Remy No. 1115380. Mounted on engine.
Ignition Current—2.5 amperes idling, 4.5 stopped.

CONDENSER: Delco-Remy No. 1869704.
Capacity—.18-.23 microfarad.

DISTRIBUTOR: Delco-Remy Model 1110818. Automatic and vacuum advance type with new "center bearing" breaker plate.

►**Breaker Plate Bearing Assembly**—Plate rotates on 3 bakelite buttons on support plate with spring tension adjustment (shim washers) on underside of support plate. Pull required to move plate should be

CONTINUED ON NEXT PAGE

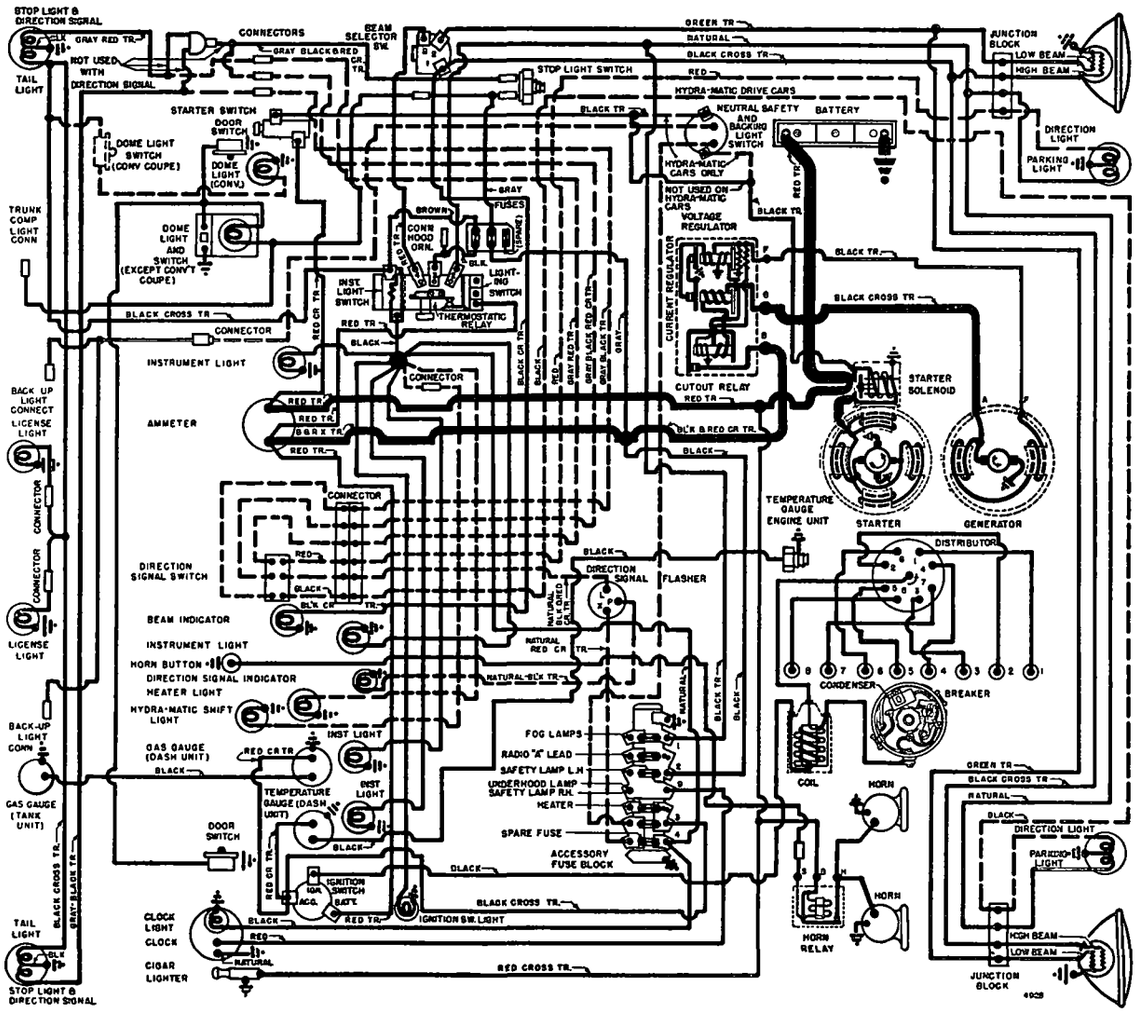

1950 M DELS

C NTINUED FR M PRECEDIN PAGE

8 oz. min., 16 oz. max. with breaker plate assembly out of housing.

See "Delco-Remy Center-Bearing Breaker Plate Distributor" in Electrical Equipment Section.

Breaker Gap—.016" (new points), .015" (used pts.).

►*CAUTION*—Dial indicator for setting point gap recommended by car manufacturer. *Do not use feeler gauge for setting used points.*

Cam Angle—26°. Test limits with .016" gap 21-30°. *See "Delco-Remy Cam Angle" in Electrical Equipment Section.*

Breaker Arm Spring Tension—19-23 ounces.

Rotation—Counter-clockwise viewed from above.

Automatic Advance

Degrees Distr.	R.P.M.	Degrees Eng.	R.P.M.
Start	250	2	500
7.5	1200	15	2400
8.25	1500	16.5	3000
13.5	2100	27	4200

Gaselector—Manual adjustment at distributor. 10° advance or retard. See Ignition Timing.

Vacuum Spark Control: Delco-Remy No. 1116050. Integral type linked directly to breaker plate.

Plunger Travel—7/32".

Vacuum Advance

Distr. Degrees	Eng. Degrees	Vacuum (" of HG)
Start	0°	7-9"
10°	20°	17.5-19.5"

Distributor Removal: On left side of engine. Disconnect vacuum line, take out Gaselector screw, lift out.

IGNITION TIMING

Std. Setting	Flywheel Degrees	Piston Pos.
All Engines①	6° BTDC	.0128" BTDC.

①—Regular Fuel—Std. Hd. Ethyl Fuel—7.5-1 Hd. High Comp. Head Engines set 3° BTDC at factory.

Timing Mark—Three lines on vibration dampener. First (6°) line on vibration dampener aligned with pointer on chain case cover (2nd line 2° or 3° BTDC, 3rd line TDC).

Timing (with Timing Light)—Loosen gaselector indicator arm-to-block clamp bolt, set arm at 0, tighten bolt. Connect Timing Light (KMO318) to No. 1 spark plug, idle engine. Loosen advance arm clamp bolt, rotate distributor until tming light shows pointer at timing mark on vibration dampener which indicates 6° BTDC (1st line). Tighten clamp screw. Check Gaselector Setting (see below).

Gaselector Setting—Set to give best performance without spark knock or ping for fuel used. Marked "ADV" and "RET", adjust according to these marks.

CARBURETOR

Carter WCD, No. 719S, SA.....**Synchro-mesh Trans.**
Carter WCD, No. 720S, SA.....**Hydra-Matic Drive**
1¼" dual downdraft with Carter Climatic Control.
Casting No.—(719S, SA) 550, (720S, SA) 558.

►**Choke Valve anti-rattle correction:** *See "Carter WCD-719SA and WCD 720SA" in Carburetor Section. See Carburetor Section for complete data.*

Settings (Idle Setting, Float Level, and Accelerating Pump): *See Tune-Up.*

Metering Rod & Jet—*See Carter Jet Table in Carburetor Section.*

Hydra-Matic Throttle Linkage Adjustment: *See Pontiac Hydra-Matic Drive in Transmission Section.*

Fast Idle: Carter Dual (WCD) Carburetor type.

Setting—.026" throttle opening (Gauge No. T109-189) with choke valve tightly closed. Adjust by turning fast idle screw.

See Carburetion Equipment Section for complete data.

Automatic Choke: Carter Climatic Control (Dual Carburetor).

Setting—Centered at Index.

See Carburetion Equipment Section for complete data.

CARB. EQUIPMENT

Air Cleaner: AC No. 1544256 oil-wetted type (standard), No. 1544530 heavy duty oil-bath type (optl.).

Filter Element—AC #6 (std.), #7-S (heavy duty).

Servicing—Clean and re-oil std. cleaner, or on heavy duty clean and refill reservoir with 1 pint SAE 50 (20W below freezing) oil every 10000 miles.

Fuel Pump (Fuel-&-Vacuum): AC Type AJ, 1537317.

Replacement Pump—AC No. 539.

Pressure—4-4¾ lbs.

See Carburetion Equipment Section for complete data.

Gasoline Gauge: AC Electric type.

Dash Unit—AC 1517378. **Tank Unit**—AC 1517411. Station Wagon AC 1517410.

See Carburetion Equipment Section for complete data.

BATTERY

Delco Type 15E4 (1950). Delco Type 15E6 (1951), 6 volt, 15 plate. 100 Ampere Hour Capacity.

Grounded Terminal—Negative (—) to engine.

Location—On left side of engine compartment.

Police Battery Delco Type 19E4 (1950). Delco Type

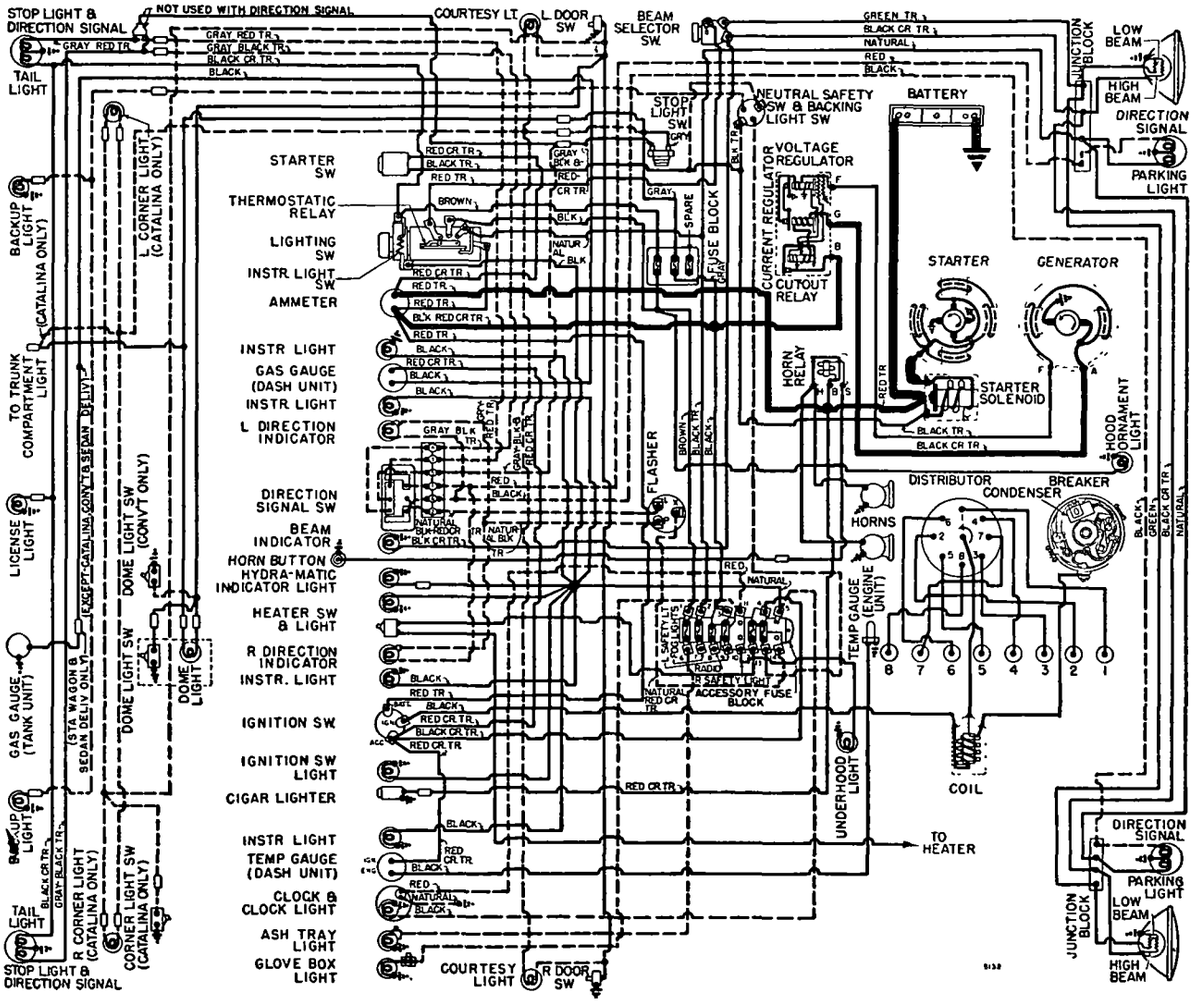

1951 M DELS

19E6 (1951), 6 volt, 19 plate, 130 Ampere Hour Capacity.

NOTE—The "E6" battery used on the 1951 cars is the new "Low Gravity Type." Specific gravity range of electrolyte at full charge is 1.260-1 280 ("E4" models 1.275-1.290).

Grounded Ter. & Location—Same as 15E-4 above.

STARTER

LHD ..... **Delco-Remy 1107957. Arm. No. 1867897.**
RHD ..... **Delco-Remy 1107934. Arm. No. 1867897.**

►***CAUTION—LHD starter operates whenever pushbutton depressed (and shift lever in neutral on Hydra-Matic)***

Drive—Overrunning clutch (solenoid pinion shift).

Rotation—Counter-clockwise at commutator end.

Brush Spring Tension—24-28 ozs. each.

Performance Data—1107934 & 957

Torque	R.P.M.	Volts	Amperes
0 ft. lbs.	5500	5.7	80①
14 "	Lock	3.0	600

①—Includes current draw of starter switch.

Removal: Flange mounted at left front of flywheel housing. To remove, take out mounting screws.

Starting Switch (1107957 Starter): (1950-51) Delco-Remy Solenoid 1118140 (no relay used) mounted on starter and controlled by Pushbutton Switch (1950) No. 1996037. (1951) No. 1996045, and Neutral Switch No. 1997846 (1950-51) Hydra-Matic cars.

CAUTION—Overrunning clutch pinion clearance must be adjusted if solenoid removed from starter. ***See Electrical Equipment Section for complete data.***

(1107934)—Delco-Remy Solenoid 1118102 on starter and controlled by Relay No. 269-G and Pushbutton Switch No. 1996039 (and Neutral Safety Switch 1997846 on Hydra-Matic Drive cars).

See Electrical Equipment Section for complete data.

Neutral Safety Switch Adjustment—***See Pontiac Hydra-Matic Drive in Transmission Section.***

GENERATOR

1950 (Std.) . . **D-R No. 1102711. Arm. No. 1879002**
1951 (Std.) **D-R No. 1102750. Arm. No. 1911962**
1950-51 (Police) . . **D-R No. 1106403. Arm. No. 1880252**

Two brush types with voltage and current regulation.

Maximum Charging Rate—**No. 1102711,** 36 amperes cold, at 2040 Gen. RPM. **No. 1102750,** 40 amperes cold at 1950 Gen. RPM. Actual charging rate set by regulator (dependent on battery condition).

Performance Data (Cold)

	Amperes	Volts	R P M.
1102711	30①	8 0	1750
1102750	40	8.0	1950
1106403	35	8.0	1040

Rotation—Counter-clockwise at commutator end

Brush Spring Tension—28 ozs.

Field Current—(1102711) 1.75-1.9 amperes at 6.0 volts. (1102750) 1.90-2 05 amperes at 6 0 volts. (1106403) 1.77-2.0 amperes at 6.0 volts.

Removal: Generator pivot mounted at left front of engine. To remove, take out pivot and clamp bolts.

Belt Adjustment: Belt deflection or sideplay midway between generator & pump pulley should be 1½".

REGULATOR

1950 (Std.) **D-R No. 1118301 (for 1102711 Gen.)**
1951 (Std.) . **D-R No. 1118300 (for 1102750 Gen.)**
1950-51 (Police) **D-R No. 1118352 (for 1106403 Gen.)**

►***NEW "1118300 SERIES"*** regulators have screw adjustment for settings and single regulator springs. ***See Electrical Equipment Section for complete data.***

CAUTION—Check generator for grounded field coils and leads before changing regulator settings to correct High Charging Rate of High Voltage.

Cutout Relay

Cuts In—5.9-6 8 volts hot (set to 6.4 volts hot).

Contact Gap—.020" (same for both contacts).

Air Gap—.020" (with contacts just closed).

Voltage Regulator

Setting—7.0-7.7 volts hot (set to 7.4 volts hot). Regulator is over-compensated for temperature. Should be checked with cover in place and hot.

Air Gap—.075" with armature pressed down to point where contacts are just touching.

Checking & Adjustment—***See Elec. Equip. Section.***

Current Regulator

Setting (1118301).....32-40 amps. hot (set at 36 hot)
Setting (1118300).....40-46 amps. hot (set at 42 hot)
Setting (1118352).....33-37 amps. hot (set at 35 hot)

Air Gap—.075" with armature pressed down to point where contacts are just touching.

Checking & Adjustment—***See Elec. Equip. Section.***

LIGHTING

Headlamps: Guide "Sealed Beam" type.

See Electrical Equipment Section for complete data.

Adjustment—Aim upper beam straight ahead (hot spot center 3" below lamp center height at 25 ft.).

Beam Indicator—At speedometer. Lighted when upper beams in use.

Directional Signal: ***See Electrical Equipment Section.***

Direction Signal Indicator—Red pilot light on speedometer dial. Flashes when signal in use.

Switches

Lighting—Delco-Remy No. 1995032.

Instrument—Part of Lighting Switch. Rheostat operated by turning Light Switch Knob.

Beam Selector—Delco-Remy No. 1997008.

MISC. ELECTRICAL

THERMOSTATIC CIRCUIT BREAKER: Delco-Remy. On back of light switch (part of switch assy.). Contacts remain closed with 30 amperes but open in 3 minutes with 42 amperes at 70°F. Not adjustable.

MAIN FUSE BLOCK: On left hand engine side of dash. Two fuses (plus 1 spare) as follows:

Tail Lamp—SFE 14 ampere. In gold colored fuse holder. Protects rear license, instrument, ignition key, and clock lamps (dome on convertible).

Stop Lamp—SFE 14 ampere. In gray colored fuse holder. Protects trunk light and dome light.

ACCESSORY FUSE BLOCK: Six fuses mounted on fuse block on dash behind instrument panel. All fuses are 20 ampere except Radio fuse which is 14 ampere. (Spare Radio fuse on main fuse block on engine side of dash). Fuse identification printed inside fuse block cover.

HORNS: Delco-Remy No. 1999645 (Low Note). No. 1999646 (High Note). Vibrator types operated by relay.

Type	Current (at 6 volts)	Air Gap
Low Note	19-21 amperes	.047-.052"
High Note	18-20 amperes	039-.044"

Horn Relay: Delco-Remy No 1116775

Contact Gap—.027". **Air Gap**— 014" (closed).

Contacts Close—2 75-4.0 volts (set to 3 5 volts).

Contact Gap—.027". **Air Gap**—.014" (closed).

Contacts Close—2.75-4.0 volts (set to 3.5 volts).

ENGINE

ENGINE SPECIFICATIONS: 8 cylinder, "L" head type.

Bore	3⅜"
Stroke	3¼"
Displacement	cu. ins 268.4
Rated Horsepower	· 36 4
Developed HP	116 at 3600

Compression Ratio—Std. 6.5-1. Optl. 7.5-1, iron hds.

Compression & Vacuum Reading—***See Tune-Up.***

TIGHTENING TORQUES: ***See Pontiac Special Data.***

CYLINDER HEAD: Tightening Torque & Cylinder Head Diagram—***See Pontiac Special Data.***

►***CAUTION***—New cylinder heads and thinner gasket used on 1950 engine. Interchange of heads on 1949-50 engines will change compression ratio. **Do not use thinner 1950 gasket on 1949 engines.**

PISTONS: Chrome nickel alloy, electro-plated type. Pistons have 20 oil drain holes in oil ring groove

Length—3.593-3.603".

Weight—(1949) 24.64 ozs., (1950) 26.7 ozs.

Removal—Pistons and rods removed from above.

Clearance—Top Land .0165-.0284". Skirt—See Fitting New Pistons.

Fitting New Pistons: Insert .0005" x ½" feeler between piston and cylinder wall. Pull to withdraw feeler must be (1950) 10-20 lbs, (1951) 20-35 lbs. Taper and out-of-round limits—Piston .0005", Cylinder .0005" max. new.

Replacement Pistons: ***See Pontiac Special Data.***

PISTON RINGS: Two tapered-face compression rings above pin, one slotted oil control ring below pin.

NOTE—Rings are cadmium-plated or tin-plated.

Ring	Width	End Gap	Side Clearance
Compr. (#1, 2)	3/32"	.008-.015"	.0015-.003"
Oil (#3)	3/16"	.008-.015"	.001-.0025"

Installing Compression Rings—Mark "TOP" up.

Replacement Rings: .005", .010", .020", .030" Oversize.

PISTON PIN: Dia. .9369-.9375". **Length**—2⅞".
Pin is shot-peened type (shot-peened before final grinding and lapping). Pin is locked in one piston boss by self-locking lockscrew and opposite boss is slotted to permit pin movement.

Pin Fit in Piston—***See Pontiac Special Data.***

Pin Fit in Rod Bushing—.0004-.0006" clearance.

CONTINUED ON NEXT PAGE

ENGINE

C NTINUED FR M PRECEDING PA E

Pin Removal & Installation: *See Pontiac Special Data.*

Replacement Pins:—.001" (red & brown), .003" (red), .005" (blue) oversize. Paint marked on end of pin.

CONNECTING ROD: Wt.—32 ozs. **Lgth.**—7.560-7.565".

Piston Pin Bushing (Upper Bearing)—Split aluminum bronze bushings. *See Pontiac Special Data.*

Crankpin Journal Diameter—1.9987-1.9997".

See "Crankhaft & Main Bearings" in Pontiac Special Data.

Lower Bearing—Thin type, interchangeable, steel-backed, babbitt-lined type.

Clearance—.0001-.0021". **Sideplay**—.007-.012".

Bearing Adjustment:—None (no shims).

Replacement Bearings: Standard size & .001" Undersize. *NOTE*—Bearings have small tongue which must engage groove in rod and cap.

Installing Rods: Not offset (install either way).

NOTE—Rods and bearing caps marked to insure correct reassembly (marks must be together). These marks do not indicate cylinder in which rod used.

CAUTION—Keep each connecting rod and its bearing cap together.

CRANKSHAFT: Five bearing type with integral counterweights and vibration dampener on forward end.

1949 Journal Diameters—#1, 2.3732-2.3742"; #2, 2.4044-2.4054"; #3, 2.4357-2.4367"; #4, 2.4669-2.4679"; #5, 2.4982-2.4992".

1950 Journal Diameters—#1, 2.3732-2.3742"; #2, 2.4044-2.4054"; #3, 2.4357-2.4367"; #4, 2.4669-2.4679"; #5, 2.6232-2.6242".

Bearings—Thin type, removable, steel-backed, babbitt-lined. Upper and lower bearing halves alike.

Clearance—.0003-.0023".

See "Crankhaft & Main Bearings" in Pontiac Special Data.

Bearing Adjustment:—None (no shims). *See Pontiac Special Data for Removal and Fitting of Bearings.*

Rear Main Bearing Oil Seal Renewal—*See Pontiac Special Data.*

Replacement Bearings: Standard & .001" Undersize.

End Thrust: Taken by #4 (rear intermediate) bearing. **Endplay**—.003-.008".

CAMSHAFT: Five bearing, non-adjustable chain.

Timing Chain Cover Oil Seal Installation—*See "Timing Chain" in Pontiac Special Data.*

Bearing Diameters—#1, 2"; #2, 1 31/32"; #3, 1 15/16"; #4, 1 29/32"; #5, 1 7/8". *For Bearing Finished Sizes, see "Camshaft & Bearings" in Pontiac Special Data.*

Bearings—Steel-backed, babbitt-lined bushings.

Clearance—.0015-.0025" (new).

End Thrust: Steel thrust plate behind camshaft sprocket. Replace if worn. **Endplay**—.003-.007".

Timing Chain: Morse. Width 27/32". Pitch 3/8". Length 21" or 56 links.

Chain Installation—*See Pontiac Special Data.*

Camshaft Setting: Sprockets marked. Mesh chain with sprockets turned so that "0" marks are adjacent and in line with straightedge across shaft centers.

VALVES:	Head Diameter	Stem Diameter	Length
Intake	1 15/32"	.310-.311"	5.53"
Exhaust	1 11/32"	.310-.311"	5.53"

	Seat Angle	Lift	Stem Clearance
Intake	30°	19/64"	Free fit to .0006"①
Exhaust	45°	19/64"	Free fit to .0006"①

①——Tapered (max. clearance at bottom .0006").

Valve Guides: Guides have tapered hole (.001" taper to inch—greatest clearance at top). Exhaust guides counterbored at top to depth of 9/16". Guides have valve spring seat at lower end.

Check Valve Clearance in Guide—Clean guide with tool KMO-122, clean counterbore in exhaust guide with Counterbore Cleaner J-2122 *(CAUTION—Set tool for 9/16").* Valve should just fall through guide with own weight.

Installing Guides—Use Valve Guide Remover J-2542 to remove and install guides. Drive new guide down in block (counterbored end up on exhaust guides) until upper end 7/8" below top edge of valve seat. Ream guide with PR-131 tapered reamer and finish counterbore with Counterbore Cleaner J-2122 for correct clearance (see above).

►*CAUTION*—Guides furnished with straight hole which must be taper reamed.

Valve Springs:—Intake and exhaust springs identical. Install with two closed coils at top and dampener on top of each spring. Use new dampeners whenever removed from spring. **Free Length**—2 9/16".

►*CAUTION*—Dampeners located inside spring, with upper seat for spring located on valve guide. Eight cyl. guides not the same as the 6 cyl., but new 8 cyl. intake valve guides may be installed on 6 cyl.

1950-51 Valve Spring Specifications

Valve Closed	62½ lbs	1 23/32"
Valve Open	105 lbs	1 13/32"

Valve Lifters:—Barrel type, cast-iron. Guide holes reamed in block. Lifters furnished .005" oversize (use pilot reamer J-706-P when reaming holes to maintain alignment—valve guides must be removed, use Valve Guide Removing Tool J-2542).

Clearance—Free fit. Lifter should just move freely with finger touch.

VALVE TIMING

Tappet Clearance: .011" to .013", All Valves, Hot. .011" "Go" gauge, .013" "No Go" gauge.

High Speed Setting—.013" EXH. Hot.

Cold Setting with Engine Stopped—.012" to .014" Cold (room temperature). *CAUTION*—Check setting after engine warmed-up for limits of .011" to .013".

►*NOTE*—A removable plate is installed in front fender skirt so tappets are accessible for adjustment.

Valve Timing:—*See Camshaft Setting above.*

Intake Valves—Open 5° BTDC. Close 39° ALDC.

Exhaust Valves—Open 45° BLDC. Close 5° ATDC.

Valve Timing Check—With .015" tappet clearance #6 intake valve should open with #6 piston 5° or .0089" before top dead center with first straight line of dampener mark '/IGN.ONE/' slightly past pointer on left front face of chain cover. Reset tappet clearance .011-.013" (warm).

LUBRICATION

Engine Oiling System: Pressure to main bearings connecting rod lower bearings and piston pins (rifle-drilled rods), camshaft bearings, and chain.

Crankcase Capacity—5 qts. (refill), 6 qts. (dry).

Normal Oil Pressure—35-45 lbs. at 40 MPH. with warm oil (10-30 lbs. idling).

Oil Pressure Regulator—On oil pump. Opens at 40 lbs. Replace spring if free length less than 2 5/16".

Oil Pump: Gear type. On right side of crankcase.
Removal & Installation—*See Pontiac Special Data.*

Oil Cleaner: Precipitation type (in crankcase).
Removal & Installation—*See Pontiac Special Data.*

Oil Pressure Gauge: AC No. 1507535. Not electric.

Crankcase Ventilation: Filter element in oil filler cap (inlet). Outlet pipe at valve compt. cover on right rear side of engine (cars with oil bath air cleaner use 3-piece outlet pipe containing filter element).

Oil Filler (Crankcase Ventilator) Cap Cleaning—Wash filter element and re-oil by dipping in engine oil when servicing air cleaner.

CAUTION—Filler cap must be installed with air opening in cap toward front of car and seam in line with groove in tube (may cause excessive oil consumption if installed backward).

Crankcase Ventilator Outlet Pipe—On cars with Oil-bath type Air Cleaner, special 3-piece ventilator outlet pipe used which has copper gauze type air cleaner in container section. Wash and re-oil filter element when servicing air cleaner.

COOLING

Cooling System: Pressure type with pressure valve and vacuum valve (relief valve) in filler cap.

Capacity—19½ qts.

Capacity—18½ qts.

Pressure Valve—AC No. 850549 Filler Cap. Opens at 7 lbs. (6¼-7½ lbs.).

Water Pump: Packless, sealed ball-bearing shaft.

NOTE—Fan flange reversed over previous models. *See Water Pump Section for complete data.*

Removal—Drain cooling system, remove hose connection at pump, remove belt, take out water pump mounting bolts and lift pump out.

Belt Adjustment—*See Generator Belt Adjustment.*

Thermostat:—Harrison. In cylinder head outlet.
Setting—Starts to open 151°F. Fully open 173°F.

Temperature Gauge: AC Electric type.

Dash Unit—AC No. 1512287.

Engine Unit—AC No. 1512015.
See Miscellaneous Section for complete data.

CLUTCH

Inland. Single Plate, "Diaphragm," dry disc type with Long Driven Member Model 10CF-CS.
See Clutch Section for complete data.

Pedal Adjustment:—Free travel 7/8-1⅛" (adjusting nut on link at clutch fork).

Removal: Remove transmission (see Transmission Removal below), remove clutch bearing support spring washer (in rear face of clutch housing), remove clutch housing bottom cover and control shaft inner bracket. Remove release bearing support and

release bearing (see Clutch Release Bearing & Support data), tapping the support from inside the clutch housing to aid in removing. (*CAUTION*—avoid striking tubular portion of support). Mark flywheel and clutch cover (to insure re-installation in same position to maintain balance), remove clutch cover mounting bolts evenly, move clutch assembly away from flywheel at bottom and withdraw driven member, lower cover assembly out.

►**Clutch Sticking Correction (Removal of Excess Release Bearing Lubricant):** If Recess in bore on bearing over-lubricated when clutch assembly installed, excess lubricant may be found causing clutch sticking. Clean out excess lubricant found at the following points: transmission drive gear, driven plate hub, clutch facings, pressure plate and cover assembly, release bearing support tube, fulcrum points of release fork, and recess in bore on release bearing (do not wash bearing, bearing is "sealed" type). Lubricate clutch parts exactly as described under Installation Note following:

Clutch Installation Note—Install new felt oil seal against shoulder ahead of oil slinger retaining ring on Transmission Main Drive Gear (will bear against flared end of release bearing support when installed). Lubricate seal with engine oil before transmission installed. Coat entire length of outer diameter of release bearing support tube with grease. Lubricate release fork fulcrum points with a very light coat of grease. Apply light coat of Lubriplate on main driving gear splines. Use new paper gasket between support flange and clutch housing, make certain that flange is not bent or distorted (will cause misalignment of transmission).

Clutch Release Bearing & Support: *See Pontiac Special Data for description.*

TRANSMISSION

Own Make. All helical gear. Constant-mesh synchro-mesh (Second & High), sliding gear (Low & Reverse). *See Transmission Section for data.*

Transmission Control: Pontiac "Safety-shift" remote control type with gearshift lever on steering column. *See Transmission Section for complete data.*

Removal:—Disconnect speedometer cable, gearshift selector and control rods from transmission. Disconnect rear universal (wire trunnions) and pull out propeller shaft. Remove upper transmission mounting screws, install guide pins (J-851), remove lower screws, pull transmission to rear, down and out.

Installation Note—Use guide pins installed in two upper transmission mounting holes to assist in sliding transmission straight forward into place (to avoid damage to clutch release bearing tubular support). *NOTE*—These guide pins may be made from ½-13 American National Thread bolts by cutting heads off and reducing over-all length to 4¼".

►**New Transmission Main Drive Gear Oil Seal**—*See Transmission Section for complete data.*

HYDRA-MATIC DRIVE

OPTI NAL EQUIPMENT

Own Make. Consists of Fluid Coupling and automatic self-shifting 4-speed planetary transmission.

►**NOTE:** *Different Hydra-Matic Transmission used as follows:*

	Hydra-Matic Model No.
1950 (First 10,000 Cars)	185-49-P①
1950 (After 10,000 Cars)	185-50-P②
1950 (Late Production)	210-50-D③
1950 (Last 1000 cars)	210-51-D④
1951	210-51-D④

①—P9 preceding Serial No. on black background.
②—P50 preceding Serial No. on black background.
③—D50 preceding Serial No. on green background.
④—D51 preceding Serial No. on green background.

►*D-50 (Late 1950) HYDRAMATIC NOTE—Has Modulated Throttle Pressure.*

►*D-51 (1951) HYDRAMATIC NOTE—Has Modulated Throttle Pressure and "Cone Type Clutch" Reverse mechanism.*

Lubrication—Check fluid level in transmission every 2000 miles (at lubrication period). Drain and refill every 25,000 miles. Use only GM Hydramatic Fluid or "Automatic Transmission Fluid Type A."

Draining & Refilling—*See "Hydra-Matic Drive" in Transmission Section.*

Checking Fluid Level—Roll back right side of front floor mat. Clean all sand, lint, and dirt away from sheet metal cover in floor, remove cover, clean any dirt away from dipstick cover on transmission.

Set Hand Brake. Run engine for approx. 1½ minutes at speed equivalent to 20 MPH. with selector lever in "Neutral." Reduce engine speed to slow idle and move selector lever to "Drive" position, measure level with dipstick, add fluid until level is at "FULL" mark with engine idling.

►*CAUTION—Engine must be idling slow and selector lever in "Drive" position when checking fluid level.*

Linkage Adjustment—*See "Hydra-Matic Drive" in Transmission Section.*

Removal: *See "Hydra-Matic Drive" in Transmission Section.*

UNIVERSALS

Mechanics Model 2CR lock ring retainer type or **Saginaw** clamp plate retainer type.

See Universals Section for complete data.

►*CAUTION*—Rear universal companion nut controls rear axle pinion bearing "pre-load" (must be adjusted whenever nut is loosened). *See Pontiac Rear Axle in Rear Axle Section.*

REAR AXLE

Own Make. Hypoid gear, semi-floating type with pinion mounted on two taper roller bearings.

►*CAUTION*—Rear Universal companion nut controls pinion bearing "pre-load" and must be adjusted each time nut is loosened.

See Rear Axle Section for complete data.

►**Filler Plug Production Change**—Moved from axle cover at rear to front face of carrier on right side on late cars.

Model	Ratio	Paint Mark①
Hydra-Matic (All)	3.63-1	Violet or Blue
Synchro-Mesh	4.1-1	Green
Synchro-Mesh	3.9-1	Red
Synchro-Mesh	4.3-1	White
Synchro-Mesh	4.55-1	Yellow
Synchro-Mesh	3.63-1	Violet or Blue

①—On outer end of axle shafts

Backlash—.003-.012" (new), slightly over .012" (worn).

Removal:—Disconnect rear universal and wire trunnions (do not disengage spline joint at transmission), remove axle shafts and carrier flange capscrews. Withdraw carrier assembly from housing.

►CAUTION—Rear universal joint companion flange nut controls pinion bearing "pre-load" (must be adjusted whenever nut is loosened).

Axle Shaft Removal:—Remove wheel, brake drum, 4 backing plate bolt nuts, static collector, and loosen bearing retainer (do not move backing plate or brake line may be damaged). Pull shaft with puller J-942 —(do not drag axle shaft on oil seal).

Wheel Bearing Adjustment—None.

SHOCK ABSORBERS

Delco. Direct acting, non-adjustable, sealed (non-refilliable) type. Serviced by replacement.

1950 Front—Pontiac No. (Std.) 5513190, (HD) 5513562.
1950 Rear—Pontiac No. (Std) 5513200, (HD) 5513201.
1951 Front—Pontiac No. (Std.) 5516126, (HD) 5513562.
1951 Rear—Pontiac No. (Std.) 5516127, (HD) 5513563

FRONT SUSPENSION

Front Suspension: New linked parallelogram type with direct acting shock absorber mounted within each coil spring.

See Front Suspension Section for complete data.

Rebound Noise Correction—*See "1949-50 Pontiac" in Front Suspension Section.*
Kingpin Inclination—4¾° to 5¼° crosswise.
Caster—Neg. ¾°. Limits Neg. ½° to Neg. 1°. Adjustable.
Camber—0°. Limits Neg. ¼° to Pos. ¼°. Adjustable.
Toe In—0-1/16". Adjust rod sleeves equally.

STEERING GEAR

Saginaw. Worm-and-Roller type.
See Steering Gear Section for complete data.

BRAKES

Service Brakes: Bendix Hydraulic, duo-servo, single anchor type **without eccentric adjustment.** Hand lever applies rear wheel service brakes.
See Brake Section for complete data.
Wheel Cylinder Bore—Front wheels 1 1/16". Rear ⅞"
Drums—Steel & cast-iron. Diameter 11".
Lining—Molded. Width 2¼" (front wheels), 1¾" (rear). Thickness 3/16". Length per shoe: 9 11/32" (primary), 11 31/32" (secondary).
Clearance—.015" at both ends of secondary (rear) shoe with primary shoe forced out against drum.
Braking Power—60% front wheels, 40% rear.

Hand Brake: See Service Brakes above.

MISC. MECHANICAL

Convertible Top Control: Hydro-Lectric type (hydraulic actuation with motor-driven pump supplying oil under pressure for power cylinders).
See Miscellaneous Section for complete data.

Windshield Wiper: Vacuum Link-&-Crank Arm type.
See Miscellaneous Section for complete data.

ENGINE REMOVAL

ALL EXCEPT V8 ENGINE

ENGINE REMOVAL: Drain cooling system and disconnect water outlet from cylinder head. Remove hood and disconnect battery ground strap. Proceed as follows:

1. Disconnect inlet hose from water pump.
2. On Commander, remove radiator brace.
3. Remove fan blades and pulley.
4. Remove radiator and shroud assembly.
5. Remove center cylinder head capscrew and replace with an engine lifting eyebolt. Attach hoist and take up slack in chain.
6. On the Commander, remove stabilizer shaft assembly with frame brackets attached and turn steering wheel all the way to the right.
7. On the Champion, remove both clutch housing-to-engine rear plate dowel bolts and on the Commander, drive or pull out the dowel rings. Then remove bolts holding clutch housing to rear engine plate.
8. Remove clutch housing cover plate from floor pan and remove clutch housing-to-block capscrews.
9. Disconnect exhaust pipe front support clamp and then remove exhaust pipe flange-to-manifold nuts and lower pipe off manifold studs.
10. Disconnect windshield wiper hose and disconnect upper pressure pipe from flexible coupling.
11. Remove distributor assembly and on the Champion, also remove oil level gauge adapter.
12. Remove starter (without disconnecting wires) and tie to left hood hinge.
13. Disconnect accelerator cross shaft from crank rod, and disconnect all other wiring from engine.
14. Disconnect fuel pump flex lines.
15. Remove front engine support insulator-to-crossmember (crossmember bracket on Champion) and also disconnect engine ground strap.
16. Roll car rearward and separate engine rear plate from clutch housing. Slowly pull engine up and forward, keeping engine tilted until clutch pressure plate clears transmission pinion. Move engine toward rear and turn engine to the right, then slowly lift engine out of chassis.

Engine Installation Note: Lubricate pilot bearing and make sure clutch driven plate is aligned with it. Locate chain hoist so lift chain will exert a rearward force on engine as it is lowered into position. On the Commander, place a hydraulic jack under rear of transmission and raise it so pinion is near its normal operating position. Slowly lower engine into chassis, tilting rear of engine downward, engage pinion and clutch release bearing. After end of pinion has entered clutch assembly, engage pinion shaft and driven plate splines. Temporarily align clutch housing with engine rear plate by means of two tapered drifts, then install dowel bolts of the Champion or the dowel rings of the Commander. Draw dowel bolts into place by tightening the nuts. ***CAUTION—Do not drive dowels into place.*** Install bolts which retain clutch housing to rear engine plate. Install clutch housing-to-block cap screws and install clutch housing cover plate. Complete installation by reversing removal procedure.

V8 ENGINE

ENGINE REMOVAL: Remove battery. Remove hood. Drain coolant. Remove lock wire from hood latch. and remove the wiring harness from radiator air deflector clips. Disconnect the horn wires at the relay and push them through the hole in air deflector. Remove air deflector and radiator. Disconnect Climatizer hoses from water pump and swing them back out of the way. Remove Climatizer blower assembly from fire wall and swing back out of way. Remove carburetor air cleaner. Disconnect the throttle cross shaft-to-throttle control rod. Disconnect fuel line to pump coupling. Disconnect the vacuum line from vacuum advance. Disconnect coil to distributor wires and remove wires from spark plugs. Remove the spark plug wire retaining brackets from valve covers and remove distributor. Disconnect starter cable, heat indicator wire from cylinder head. Disconnect oil pressure gauge pipe. Remove the cotter pin from inner end of clutch operating shaft sleeve and move shaft away from the clutch release shaft. Remove transmission. *See Transmission Removal on Studebaker car page.*

►***NOTE—Automatic Transmission Removal, see "Studebaker Automatic Transmission" in Transmission Section for complete data.***

Attach lifting hooks to the exhaust manifolds and take up the slack in the chain. Disconnect engine ground strap from frame front crossmember. Disconnect both front engine supports. Remove the two crossmember to engine rear support bolts. Disconnect exhaust pipe flange and remove exhaust pipe bracket. Raise engine until the exhaust connection and cross-over pipe can be slipped off the manifold studs. Remove manifold heater valve at this time. Lift the engine and at the same time pull the engine forward so that the clutch clears the fire wall. Tilt engine up at front and remove it from the car.

CYLINDER HEAD

V8 ENGINE

CYLINDER HEAD INTERCHANGEABILITY: The V-8 Right and left bank cylinder heads are identical, water pump ports are provided at the front and rear of all heads. It is necessary to block off the rear port not in use with a dummy plate and gasket.
NOTE: Heat indicator engine unit must be mounted in the water outlet opening cover plate at the rear of the left bank cylinder head.

V8 ENGINE

CYLINDER HEAD INSTALLATION: Clean all threads, using a tap and die. Check head for warping. (NOTE —Head may be planed .015" if necessary). Apply gasket compound to gasket and install. ***(CAUTION*** —Be sure main oil gallery-to-rocker arm assembly oil passage at the rear of the right bank and front of the left bank is not blocked by gasket). Install cylinder head on the hollow dowel. Dip capscrews in engine oil and install the nine short screws in the two outer rows of holes and the five medium length screws in the center row of holes and tighten finger tight. Install rocker arm assembly. *See "Rocker Arm Assembly."* Install and tighten long head screws finger tight. Insert rocker arm assembly capscrews through rocker arm brackets. Tighten all cylinder head capscrews in correct sequence. See diagram. **Tightening Torque**—See Tightening (Torque Wrench) Specifications below.

EXCEPT V8 ENGINE

CYLINDER HEAD INSTALLATION: Use Torque Indicating Wrench to tighten cylinder head capscrews, tighten in correct sequence (see diagrams).
Tightening Torque—See Tightening (Torque Wrench) Specifications below.

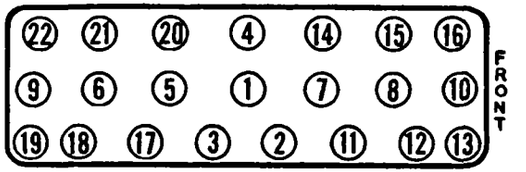

STUDEBAKER CHAMPION

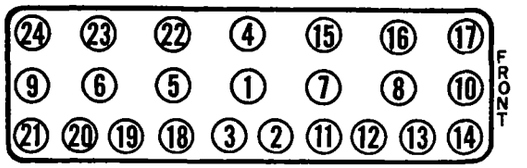

1950 STUDEBAKER COMMANDER

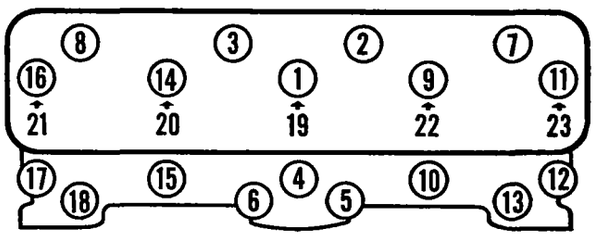

1951 V8 STUDEBAKER COMMANDER

ALL MODELS

CYLINDER HEAD GASKET: Coat lower face of gasket and face of cylinder head with Perfect Seal Gasket cement before installing (use sparingly and see that it does not enter screw holes and water passage openings).

TIGHTENING SPECIFICATIONS

ALL MODELS

	Ft.Lbs.	In.Lbs.
Cyl. Hd. Capscrews (Champ.)	46-50	550-600
Cyl. Hd. Capscrews ('50 Comm.)	80-85	960-1020
Cyl. Hd. Capscrews ('51 Comm.)	46-50	550-600
Con. Rod Nuts (Champ.)	28-32	336-384
Con. Rod Nuts (All Comm.)	52-54	624-648
Vibr. Dmpr. Capscrew (Ch.)	130-140	1560-1680
Vibr. Dmpr. Nut (All Comm.)	160-170	1920-2040
Main Bearing Cap Screws	88-93	1050-1115
Piston Pin Clamp Screw Nut	20-25	240-300
Spark Plugs (14 mm.)	25-30	300-360
Flywheel Bolt Nut	33-35	396-420
Timing Cover Bolts & Screws	13-17	156-204
Clutch Cover Mounting Screw	13-15	156-180
Rear Engine Mounting	25-30	300-360

ORIGINAL BORE & PISTONS
ALL MODELS

ORIGINAL BORE & PISTON SIZES: Bore Sizes marked by figure stamped on top face of cylinder block next to each cylinder bore as follows:

Original Bore Sizes

Champion (1950-51)		Commander (1950)		Commander (1951)	
0	3.000"	25	3.3125"	50	3.375"
05	3.0005"	3	3.313"	55	3.3755"
1	3.001"	35	3.3135"	60	3.376"
15	3.0015"	4	3.314"	65	3.3765"
2	3.002"	45	3.3145"	70	3.377"
25	3.0025"	5	3.315"		

Original Pistons—Stamped with size of cylinder bore in which pistons are installed.

PISTONS
ALL MODELS

REPLACEMENT PISTONS: Finished aluminum alloy pistons (with fitted pins) are furnished for replacement in the sizes listed below.

Replacement Pistons

Size	Champion (1950-51) Part No.	Commander (1950) Part No.	Commander (1951) Part No.
Standard	524316	524315	529428
.010"	524294	524309	530640
.020"	524296	524311	530641
.030"	524297	524312	530642
.040"	522112	522119	530643

PISTON PINS
ALL MODELS

PISTON PIN REMOVAL & INSTALLATION: Use fixture J-1293A (Champion 1950-51), (Commander 1950). Tool J-1293C (Commander 1951).

Removal—Place rod and piston assembly on assembling fixture. Remove lock nut and star washer from clamp screw, and by tightening lock nut on other end of clamp screw, remove clamp screw, remove the screw from connecting rod. Then slide piston and connecting rod off piston pin.

Installation—Champion (1950-51), Commander (1950). Place piston pin on assembling fixture, slide piston and connecting rod into position. (Oil squirt hole and number on connecting rod should be on the solid side of the piston). Insert piston pin clamp screw in connecting rod, install star washer and lock nut, and tighten nut securely. On connecting rod Nos. 1, 3 & 5, the clamp screw nut is installed on the T-slot side of the piston. On Nos. 2, 4 & 6, the nut is installed on the solid side of the piston. When installing the screw regardless of the number of the rod, if the rod is held with the offset of the rod to the left and the screw is inserted from the front, the nut will be located on the correct side in relation to the piston. Be sure to align the flat surface on the piston pin with the flat surface on the clamp screw.

Installation—Commander (1951)—Place piston pin on assembly tool and slide piston and connecting rod into position. Before inserting the piston pin clamp screw in the rod, be sure the piston and connecting rod are assembled in the proper relative positions. The solid side of the piston must be on the squirt hole side of the rod. If the connecting rod is new and hasn't been marked, it should be checked to determine if it is for left or right bank. Hold rod facing oil squirt hole. The left bank rod, when facing squirt hole will have the offset or widest part of the rod end to the right. The right rod when facing the squirt hole will have the offset to the left. The number should be stamped on the rod cap on the squirt hole side on right rods, opposite side on left rods. Insert the piston pin clamp screw so that the nut will be installed on the T-slot side of the piston. This is the correct position of the piston pin clamp screw for all pistons. Be sure the flat surface of the clamp screw mates properly with the flat surface of the piston pin. Install the star washer and lock nut and tighten the nut securely.

VIBRATION DAMPENER
ALL MODELS

VIBRATION DAMPENER: Dampener consists of a flywheel mounted on two rubber discs (discs have insulating buttons at pilot rivet holes) mounted on the crankshaft pulley hub at the forward end of the crankshaft and retained by a large nut on the end of the crankshaft. Compression of rubber discs is limited by length of crankshaft pulley hub (when retaining nut drawn up securely) and no adjustment required. If dampener does not operate correctly, replace rubber discs.

DISTRIBUTOR DRIVESHAFT ASSY.
V8 ENGINE

Removal: Turn the crankshaft until the distributor rotor is in the No. 1 firing position and the timing marks show the "IGN" mark directly below the pointer on the timing gear cover. Remove the distributor. Remove the two capscrews and lock washers that hold distributor driveshaft housing to the cylinder block. Lift the assembly out of the block. To avoid difficulty in meshing the tongue of the shaft with the groove of the oil pump shaft when installing the distributor driveshaft assembly, the relation between the positions of the crankshaft and the oil pump shaft must be maintained. Therefore, do not turn the crankshaft after it is once positioned with the timing mark under the pointer.

Disassembly: The drive gear is held in position on the distributor drive shaft by a pin. Using a flat file, carefully file one end of the pin flush with the shaft. With a small punch drive the pin out, being careful not to damage or bend the shaft. Use an arbor press to push the shaft out of the drive gear and the housing. The distributor drive shaft and coupling are serviced as an assembly.

Reassembly: The hole for the drive gear pin must be drilled after positioning the gear on the shaft for correct end play. Insert the distributor drive shaft in the housing. In pressing the gear on the shaft be sure the flat bearing face of the gear is toward the housing. In order not to shear the coupling pin, do not press against the coupling. A 7/16" diameter bolt or cap screws, 2½" long may be used, placing the end of the bolt in the coupling bore so that it pushes against the end of the shaft and takes the load instead of the coupling pin. Place a .003" feeler gauge between the face of the drive gear and the housing and then press the shaft through the gear until the gear and housing both contact the feeler gauge. Then using the hole in the gear as a pilot, drill a hole in the shaft with a No. 13 drill bit, ream it to 3/16", insert new pin, peen pin securely in place.

Installation: Make sure the crankshaft is in the same position that it was when the assembly was removed. Position the distributor shaft so that when the assembly is placed in the block, the slot in the coupling is offset to the rear. This will position the coupling slot so that it is 30° from the rear flange of the block. Slide the assembly down into the block so that the distributor drive gear meshes with the camshaft gear. The slot will then be turned counterclockwise so that it will be approximately 30° from center line of engine. Install two capscrews and lockwashers. Turn crankshaft until pointer on timing gear cover is at "IGN" mark and distributor rotor is in No. 6 firing position. Timing gear marks will now be aligned between the marks on the crankshaft gear. Remove the rocker arm assemblies, push rods and valve lifters. Remove the distributor drive shaft assembly. If the oil pump is not to be removed do not move the crankshaft as difficulty may be encountered entering the tongue of the distributor shaft into the groove of the oil pump. Remove the timing gear cover and take out the two capscrews which attach the camshaft thrust plate to the cylinder block. This will permit removal of the camshaft. Camshaft gear can now be taken off the camshaft with Puller No. HM-925.

CAMSHAFT & BEARINGS
EXCEPT V8 ENGINE

CAMSHAFT REMOVAL (With Engine out of Car): Remove vibration dampener (Puller HM-925), remove timing gear cover, pull crankshaft gear (Puller HM-925). Remove cylinder head, valves, valve springs, and oil pump. Invert engine so that valve lifters will not interfere with camshaft removal. Remove two capscrews and lockwashers in timing gear thrust plate, pull camshaft straight out through front of engine.

CAMSHAFT BUSHING INSTALLATION: Use Tool J-2036-A to remove old bushings and to install new bushings.

CAMSHAFT ENDPLAY: Endplay regulated by thickness of spacer installed on camshaft directly behind timing gear and is equal to amount by which thickness of spacer exceeds thickness of thrust plate bolted on cylinder block. When installing new parts, measure both thrust plate and spacer with a micrometer, select parts so that endplay is .004-.006" (1947-48), .003-.006" (1949-50). Spacer must be .004-.006" thicker than thrust plate.

TIMING GEARS
ALL MODELS

TIMING GEARS: Camshaft gears (All Models)—Holes provided in gears for gear puller to remove gears. Use tool HM-925. See replacement Camshaft Gear Sizes (below) for size selection when replacing gears. Use gear pusher tool HM-861Y to install gears. CAUTION—Do not drive gears on with a hammer which will loosen gear at hub.

Replacement Camshaft Gear Sizes: Furnished in two sizes: "S"—Standard, "H"—High Limit. When replacing gear on engine with considerable service, install next largest camshaft gear size. For reconditioned engine with new camshaft and main bearings use same size gear. Crankshaft gear furnished in standard size only.

CONTINUED N NEXT PAGE

CONTINUED FROM PRECEDING PAGE

VALVE SYSTEM

ALL MODELS

SELF-LOCKING TAPPETS: Tappet screws slotted on lower end and require no locknuts. When tappet screws replaced, car manufacturer recommends that screws must check as follows: Pull required to move tappet screw must be 25 in. lbs. minimum (4 lbs. pull on 6" wrench).

VALVE CHAMBER BAFFLES: Oil baffle plates are provided to prevent excessive oil splash in valve spring chambers. Baffles straddle lifters and are the same for both sides of the chamber.

Installation—Insert baffle so curved portion is upward with notch aligned with cover plate screw hole. Install cover plate making sure notches straddle cover plate screws. With cover installed, baffle is held tightly in place against cover and cover plate screws.

EXCEPT V8 ENGINE

VALVE SPRING INSTALLATION: Springs should be installed with closed-coil end of spring upward.

Valve Lifter Tension Spring: Consists of "U" shaped flat spring installed so as to engage lower end of valve stem and upper end of lifter (spring tension keeps lifter on cam lobe). Make certain that tension springs in place when valves and springs installed.

V8 ENGINE

VALVE SPRING ASSEMBLY INSTALLATION: Install dampers on "closed coil" end of spring so that damper fingers contact sides of spring. Place springs on valve stem so damper is next to the cylinder head. Install the valve spring retainers on the springs making sure the retainers with the skirts are on the intake valves. Compress the spring until the retainer is past the inner groove of the valve stem far enough to permit installing the rubber seal. Place the keepers in position and slowly release the spring.

►*CAUTION*—Always install new rubber seals whenever valve springs have been removed.

V8 ENGINE

ROCKER ARM ASSEMBLY: Two identical hollow steel shafts (ends plugged) are used. Four removable supports doweled to each shaft with cylinder head capscrews. Three springs used to position rocker arms against supports. Lubrication is supplied by oil from the main oil galleys to a passage in the cylinder head which leads the oil up around the relieved capscrew shank in the rocker arm front support on the left bank and the rocker arm rear support on the right bank. The bracket is drilled to connect the capscrew hole with the rocker arm shaft hole. The oil flows under pressure to the rocker arms and through holes drilled in the rocker arms to the adjusting screws and through the center of the adjusting screws to the push rods.

►*DISASSEMBLY CAUTION*: Mark rocker arms, brackets, and the rocker arm shaft so that they can be reassembled in their original position.

Reassembly—Make certain the oil holes and grooves in the rocker arm shaft and the oil holes in the brackets, rocker arms and adjusting screws are clean. Check rocker arms and shaft clearance which should be .0005" to .0025". Test springs. It should require 9½ to 10½ lbs. to compress springs to 2 1/32". If not within these limits, replace spring. Place a spring washer between two flat washers and install on one end of the rocker arm shaft and install a new cotter pin in the shaft. Place a rocker arm on the shaft next to the inner flat washer. *(CAUTION* —The oil groove side of the shaft must be at the bottom of the rocker arm and the adjusting screw end of the rocker arm be on the same side of the shaft as the cylinder head capscrew groove in the shaft). Place a shaft bracket on the shaft so that the bottom of the bracket is on the oil groove side of the shaft and align the cylinder head capscrew hole in the bracket with the capscrew groove in the shaft. Insert a capscrew through the bracket. Clamp the bracket in a vice and install the second rocker arm on the shaft, positioning it in the same way as the first rocker arm. Slide a spacer spring on the shaft and, holding the spring compressed, slide the third rocker arm and the second bracket on the shaft and position it in the same way as the first bracket. Align the screw hole in the bracket with the groove in the shaft, insert a capscrew and release the spring. Install the rest of the rocker arms, springs and brackets in the same manner. Slip the two flat washers with the spring washer between them, on the end of the shaft and install a new cotter pin in the shaft. If correctly assembled, when installed on the engine, the flat side on the end of the rocker arm shaft will be at the rear on the right bank and at the front on the left bank.

See "Tightening (Torque Wrench) Specifications".

V8 ENGINE

VALVE GUIDE REMOVAL AND INSTALLATION: Valve guide tool J-4673 is used to remove and install the valve guides. Drive guide out of cylinder head from the combustion chamber side.

Installation—Coat valve guide lightly with white lead and start chamfered end into cylinder head from the combustion chamber side. Place the installing plate on the face of the head so that the long side of the plate is parallel to the end of the head and the bore of the plate centered over the guide bore. The plate is marked "Intake" on one side and "Exhaust" on the other side. Be sure that the exposed mark of the plate corresponds to the valve guide being installed so that the depth of the counterbore of the plate will control the depth to which the guide is driven into the head. Insert the driver through the plate and into the guide. Drive the guide into the head until the shoulder of the driver contacts the bottom of the counterbore in the plate.

OIL PUMP

1950-51 CHAMPION

OIL PUMP REMOVAL: Oil pump must be disassembled as follows for removal from engine: Remove 4 cover screws and washers, take off cover, gasket, idler gear, and drive gear. Remove woodruff key and "C" washer from driveshaft which allows pump body to be taken off engine (driveshaft stays in engine). Oil pan must be removed in order to take out oil pump driveshaft.

Oil Pump Re-Assembly and Installation: Turn engine over until #1 piston at TDC entering power stroke, and "UDC.1-6" mark aligned with pointer. Engage pump shaft with key-way in end of shaft pointing down (key way will rotate to rear when gears meshed). Install new body gasket and pump body over shaft, insert "C" washer and woodruff key on shaft, install pump drive gear and idler gear. Install cover using a new cover gasket and tighten screws securely. Prime pump with engine oil by disconnecting oil pressure gauge line fitting at pump.

1950 COMMANDER

OIL PUMP REMOVAL: Disconnect battery, turn crankshaft to #1 piston firing position with mark "UDC.1-6" at timing pointer. Proceed as follows:

1)—Take out starter mounting capscrews, tie starter up out of the way (not necessary to disconnect cables and wires).

2)—Use jack to raise rear end of engine just enough to remove weight from rear engine mountings, remove support mountings from cross-member, remove clutch operating shaft bracket-to-crossmember bolts.

3)—Place hydraulic jack between right frame side rail and base of engine block with ram of jack just to rear of breather tube, move rear of engine about 2" to left.

4)—Disconnect oil pressure gauge line at oil pump

5)—Take out four capscrews in pump cover which mount pump body on engine, remove cover and pump body assembly.

V8 ENGINE

OIL PUMP REMOVAL: Remove oil pan. Take out the two pump retaining nuts and lockwashers and slip off the mounting pad studs. Removing the pump does not effect the ignition timing.

Disassembly: Remove cotter pin retaining floating oil strainer pipe in pump cover inlet and remove the strainer. The floating oil strainer is serviced only as an assembly and should not be disassembled. Remove cover screws and lockwashers and take off the pump cover. No gasket is used between the pump body and cover. Remove the idler gear, drive gear and shaft. The drive gear and shaft is serviced as an assembly and should not be disassembled. Clean the strainer with solvent and dry it thoroughly before reassembly.

OIL PAN REMOVAL

1950 COMMANDER

►**OIL PAN REMOVAL & INSTALLATION**—*Not necessary to remove engine from car.*

Removal: Drain oil, remove oil level gauge stick. Disconnect and remove front stabilizer shaft by disassembling link assembly at each side and taking off shaft bushing retainer at each frame side rail. Disconnect both tie rods at steering knuckle arms, remove steering bell crank shaft and bracket assembly by loosening clamp bolt holding bellcrank on shaft and taking out bracket mounting bolts. Swing bellcrank and tie rods toward left side of car and tie up out of the way. Remove lower right clutch housing bolt for clearance in removing pan. Remove engine front support-to-crossmember bolts. Place hydraulic jack under oil pan mounting flanges at each side of engine and as far forward as possible (CAUTION—do not place jack under center of pan), raise engine so that front support is 1½" from top of front crossmember and insert a block of wood to hold engine in this position. Remove jacks. Take out oil pan screws and remove pan.

Installation: After installing oil pan, raise engine just enough to remove wood block, then lower engine and reassemble all disconnected parts.

1950-51 CHAMPION

►**OIL PAN REMOVAL & INSTALLATION**—*Not necessary to remove engine from car.*

Removal: Drain oil, remove oil level gauge stick. Disconnect center auxiliary tie rod from steering gear pitman arm and idler arm, remove tie rod. Remove lower exhaust pipe bracket-to-clutch housing bolt to provide clearance. Remove engine front splash pans. Remove engine front support-to-crossmember bolts. Place hydraulic jack under oil pan mounting flanges at **each side** of engine and as far forward as possible (CAUTION—do not place jack under center of pan), raise engine so that front support cushion is 1½" from top of front crossmember and insert a block of wood to hold engine in this position. Remove both jacks. Take out four lower timing gear cover screws to permit removal of oil pan filler block. Take out oil pan screws and remove pan.

Installation: Install side gaskets on block flanges, and new gasket in rear main bearing cap channel. Position filler block at front engine plate and align holes in block and timing gear cover, install timing gear cover screws loosely. Place filler block gasket on oil pan, place pan in position and install all screws. **After pan screws tightened,** tighten timing gear cover screws securely. Raise engine just enough to remove wood support block, then lower engine and reassemble disconnected parts.

V8 ENGINE

OIL PAN REMOVAL: Support car on jacks and drain the oil. Disconnect one of the battery cables and remove the starter. Disconnect one end of the right tie rod and the reach rod from the steering bellcrank. Remove the steering bellcrank shaft and bracket and swing the bellcrank out of the way to the left side of the car. Remove the exhaust crossover pipe. Remove oil pan screws and drop the pan.

Installation Oil Pan Gaskets: The front filler block must be removed to install the side pan gaskets. Remove the four screws holding the filler block to the timing gear cover, and using a thin spatula carefully separate the filler block from the timing gear cover gasket. If this gasket is damaged, cut away the exposed portion of the gasket and then from a new gasket, cut the required amount and fit it to the timing gear cover using Perfect Seal or its equivalent. Clean oil pan and oil pan mounting flanges of the block. Apply sealer to the flanges and place new gaskets on the side flanges. Place filler block against timing gear cover and install a screw in one of the upper holes. Using a hardwood stick, pry upward against the filler block and install the opposite upper screw. Install the remaining two screws and tighten until the heads just touch the lock washers. With all the gaskets in position install the oil pan and tighten the pan screws evenly. Then tighten the four timing gear cover-to-filler block screws.

CRANKSHAFT & MAIN BEARINGS

ALL MODELS

Installation: "Brummer type" Oil Seal. Loosen the bearing capscrews of the three intermediate bearings two turns until the "Brummer" seal has been installed. If these screws are loosened too much while the front bearing screws are tight, the front bearing will be damaged. Place the neoprene seal in the cross grooves of the main bearing cap so that the inner end of each seal is flush with or inset not more than 1/16" from the inner end of the grooves. Thoroughly clean the channel just forward of the rear flange using a swab saturated with alcohol and pulling it through the channel several times. Dry the channel thoroughly. Dip the ends of the seal in liquid soap and spread the liquid soap throughout the inside of the center groove. Carefully insert the end of one half of the seal between the crankshaft and the cylinder block at the crankshaft rear flange. Work the seal around the crankshaft until the end emerges on the opposite side. Place the ends of the other half of the seal against the ends of the half that is in the engine. Then work both halves of the seal around the crankshaft until the exposed joint is approximately 45° from the lower surface of the block. During the installation procedure, great care must be taken to avoid scuffing the soft center sealing cushion at the bottom of the groove of the seal. Apply oil between the compression flange of the seal and the crankshaft journal. Install the bearing cap and the two neoprene seals. Be sure that the exposed part of the "Brummer" oil seal smoothly straddles the rear flange of the bearing cap. Install the bearing capscrews and tighten all capscrews to the specified torque of 88-93 ft. lbs. Lockwire all screw heads. Trim the end of the neoprene seal that protrudes past the cap flush with the side of the cap. Install new cork seals being sure seals are not damaged during the installation. Run the engine for 45 minutes then check for oil leaks.

PROPELLER SHAFT

ALL MODELS

PROPELLER SHAFT & SUPPORT BEARING ASSEMBLY: New type two-unit propeller shaft (separate Front and Rear Propeller Shafts) with intermediate Universal Joint in Support Bearing Assembly on cross-member.

Front Propeller Shaft—One piece type (no slip joint) with intermediate universal joint yoke

Rear Propeller Shaft—Conventional type with slip joint at forward end.

Universal Joints—Spicer needle bearing type.

Propeller Shaft & Support Bearing Removal: Disconnect rear propeller shaft by taking out "U" bolts mounting intermediate universal joint on rear flange of front shaft (behind support bearing assembly) and sliding universal joint and stub shaft back on slip-joint. Remove capscrew and washers retaining universal joint flange on rear of front shaft, punchmark flange and shaft to insure correct re-installation, remove flange using Puller J-2046. Remove nuts and washers on forward end of studs mounting support assembly on frame crossmember, pull assembly off splines of front propeller shaft. To dismantle support cushions, remove nuts and washers on rear end of frame mounting studs. Studs have shoulder at each end to position rubber cushion and prevent excessive compression of the cushion when stud nuts are tightened.

Installation—Re-install support bearing assembly and propeller shafts by reversing removal instruction.

Support Bearing Servicing: Bearing is sealed type (pre-packed with lubricant) and **must never be washed in gasoline or other solvents.**

Bearing Removal & Installation—To remove bearing from support bracket, press bearing out using a piece of tubing of sufficient size to engage outer bearing race. Install new bearing in same manner and press bearing in until outer bearing race is just **flush with front edge of support bracket.** With front propeller shaft in place in car, install spacer (some Commander cars—see Note below) and dust shield on shaft, then install support bearing assembly, secure support to cross-member with lockwashers and nuts on forward ends of studs, make certain that plain washer and lockwasher installed on rear end of studs. Tighten nuts securely.

CLUTCH NOTES

CLUTCH CHATTER (Champion Early 1950)—When clutch chatter in the 1950 Champion (prior to Serial No. G-573846) is the result of engine movement when car is being accelerated from low speed, newly designed clutch linkage should be installed. Remove old Clutch Operating Shaft and Lever assembly, Support Bracket and Clutch Pedal Shaft-to-Operating Shaft Rod. Mount new Support Bracket, Part No. 537911, on new Operating Shaft, Part No. 527893, using a new Bearing and Retainer Kit, Part No. 527424. Insert end of operating shaft in shaft sleeve and secure support bracket on frame cross-member with the upper bolts. Align hole in operating shaft with hole in sleeve and install retaining pin. Position Brake Cable Bracket, Part No. 527909, (with cable loop upward) on the forward side of frame cross-member, securing it with support bracket side mounting bolt. Attach front end of pedal shaft-to-clutch operating shaft rod, and then bend back half of rod to align it with clutch pedal lever. Adjust pedal free travel.

CLUTCH OPERATING SHAFT RATTLE CORRECTION (Commander & Champion Early 1950)—Remove clutch operating shaft bracket and bearing and install neoprene washer Part No. 527281 between bushing and felt washer on each side of bushing. Thoroughly lubricate with SAE 30 motor oil and reassemble bracket and shaft.

FRONT SUSPENSION NOTES

CHAMPION FRONT END TROUBLE CORRECTION (1950 Cars): To correct conditions such as Excessive Right Front Tire Wear, Front End Vibration or Shimmy, Unstable Steering etc., check and correct following points:

1) Auxiliary Arm Bracket Distortion—Install special brace which will prevent bending or distortion of the bracket: No. 530284 Auxiliary Arm Bracket Brace, 520259 Spacer, 2-0734 Bolt, 2-0626 Bolt, and 361-07 Plain Washer. To install brace, remove right rear outer lower control arm innershaft mounting bolt and both auxiliary steering arm-to-bracket mounting bolts. Install the brace with the single hole to lower control arm and place spacer between the brace and frame cross-member flange. Install the 2-0734 bolt, flat washer, lockwasher and nut. Tighten nut loosely. Install both auxiliary steering arm-to-bracket bolts (use 2-0626 bolt in lower hole with bracket on outside of auxiliary steering arm), tighten bolts securely, then tighten control arm mounting bolt securely. Check front end alignment.

2) Worn or Loose Parts—Check and adjust or replace (end fittings, bushings, insulators, etc.).

3) Steering Gear Adjustment—Adjust if necessary.

4) Caster, Camber, Toe-In & Auxiliary Tie Rod Alignment—*See Front Suspension data.*

MODEL IDENTIFICATION

SERIAL NUMBER: Stamped on plate on left front door lock pillar post.

	1950	1951
South Bend	G-468101	G-1,000,001
Los Angeles	G-851801	G-889101
Hamilton	G-709401	G-724501

Body Symbol Letter—Used with model designation (and on body number plate) to indicate body type as follows: C, 5-Pass. Coupe; F, 2-Door Sedan; Q, 3-Pass. Coupe; S, Convertible; W. 4-Door Sedan.

ENGINE NUMBER: Stamped on pad on upper front left corner of engine block.

	1950	1951
South Bend & Los Angeles	521001	778001
Hamilton	C-10501	C-25501

NOTE—Letter "A" following engine number indicates crankshaft main bearing journals .005" Undersize.

TUNE-UP

COMPRESSION PRESSURE: 120-140 lbs. at 150 RPM.

VACUUM READING: Steady 17-18" idling at 8 MPH.

FIRING ORDER: 1-5-3-6-2-4. See diagram.

SPARK PLUG GAPS: .025" Limits .0225-.0275".
Plug Type—Champion Type J7. 14 mm.

DISTRIBUTOR: Breaker Gap—.020". Limits .018-.022".
Cam Angle—38° Closed, 22° Open.
Breaker Arm Spring Tension—17-20 ozs.
Automatic & Vacuum Advance—*See Ignition.*
Condenser Capacity—.20-.24 mfd. (IGC-4805), .21-.25 mfd. (IAT-4001).

IGNITION TIMING: 2° BTDC.
Timing Procedure—*See Ignition Timing.*
Timing Mark—Vibration dampener mark "IGN/" aligned with pointer on left side of engine.

►*CAUTION*—On IGC-4805 Distr., insert .020" feeler between modifier arm and clamp arm when tightening clamp arm to prevent binding.
Octane Selector Setting—Set to just eliminate ping when engine hot and pulling hard.

CARBURETION:
Idle Setting—½-1½ turns open. Turn screw out for richer mixture.
Idle Speed (Standard Trans.) —8-10 MPH. at normal operating temperature.
Idle Speed (Automatic Trans.)—500-550 RPM. with selector lever in "N". Adjust by turning idle adjusting screw in or out.
Float Level—⅜". Measured from top of projection on bowl cover to top of soldered seam on free end of float with needle valve seated and bowl cover assembly inverted.
Accelerating Pump—No seasonal adjustment.
Choke Setting—(Early Production Cover 170P-77S) Centered on index. (Late Production Cover 170-U 61S) 1 point lean.

Fuel Pump Pressure: 4-5 lbs. maximum.

MANIFOLD HEAT CONTROL: Automatic thermostatic type operating in stainless steel bushings.
Setting—To test coil tension, free outer end of coil from anchor post. With valve closed (counterweight up), hooked end of coil should be approx. 90° from anchor post with coil at 70°F. NOTE—To overcome sticking, lubricate valve shaft with kerosene and soda solution or Bendix Carburetor Cleaner. If necessary, shaft diameter can be reduced for .005" clearance in bushings (do not ream bushings).

VALVE TAPPET CLEARANCE: .016" All Valves, Cold.
NOTE—Self-locking tappet screws used.
Valve Timing Check—*See Valve Timing.*

STARTING: *See Battery, Starter, Generator, Regulator.*

IGNITION

IGNITION SWITCH: Mitchellock. Studebaker No. 521955.
Ignition Lock—Yale & Towne.

COIL: Auto-Lite CE-6007 or CR-6007. On engine above distributor (under spark plug cable bracket).
Ignition Current—½-1½ amps. idling, 4-5 stopped.

CONDENSER: Auto-Lite No. IG-2671 (IGC-4805).
Capacity—.20-.25 microfarad.

DISTRIBUTOR: Auto-Lite No. (Early 1950) IGC-4805, (Late 1950 & 1951) IAT-4001. Full automatic advance type with vacuum spark control.

►**"IAT" Distributor Note**—New "Pivoted Breaker Plate" type. *See Electrical Equipment Section for data.*
Breaker Gap—.020". Limits .018-.022".
Cam Angle—38° closed, 22° open.
Breaker Arm Spring Tension—17-20 ozs.
Rotation—Counter-clockwise viewed from above.

Distributor **Automatic Advance** Engine

Degrees	R.P.M.	Degrees	R.P.M.
Start	400	0	800
2	680	4	1360
4	975	8	1950
6	1265	12	2530
7	1400	14	2800

Vacuum Spark Control: (IGC-4805)—Auto-Lite Model VC-4011. Unit mounted on hold-down plate and linked to advance plate. Provides additional advance at speeds above idling except when engine accelerated or operated with wide open throttle when spark retarded by return spring in unit.

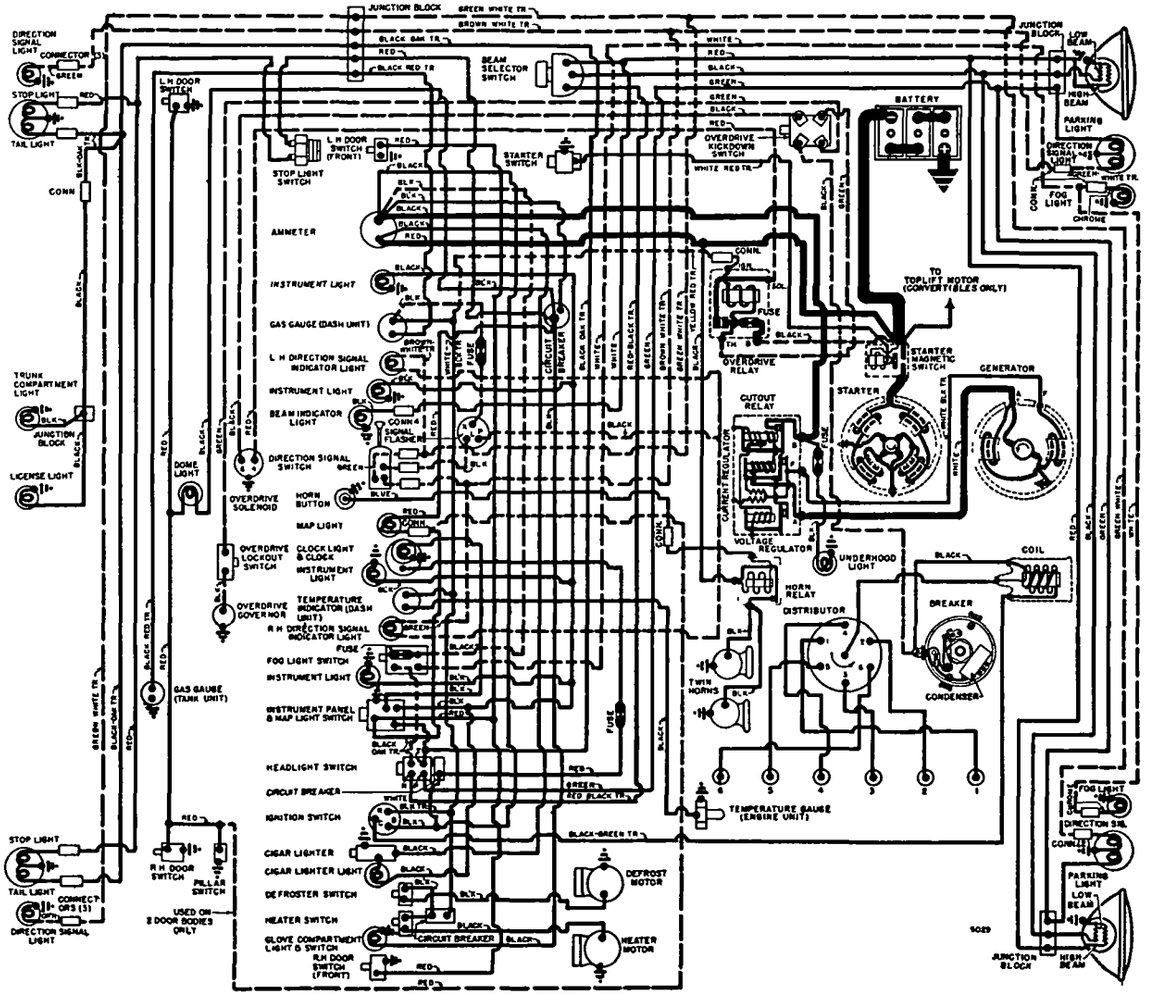

Vacuum Advance

Distr. Degrees	Eng. Degrees	Vacuum (" of HG)
Start	0°	4"
1°	2°	4⅞"
4°	8°	7½"
8°	16°	11⅛"
9°	18°	12"

Octane Selector—Provides manual adjustment at distributor (hold-down plate marked with scale) for variation in timing depending on fuel regularly used. See Ignition Timing following for adjustment.

Distributor Removal:—Mounted on left side of engine. To remove, disconnect vacuum line, take out bolt in clamp arm, lift distributor off.

Installation Note—When installing distributor, crank engine to firing position for #1 cylinder (dampener mark 'IGN' in line with pointer on the timing gear cover), sight down distributor shaft hole (distributor out) and see that distributor drive tongue in oil pump drive gear is parallel to and narrow half of offset toward camshaft, turn rotor to #1 segment, install distributor.

►*CAUTION*—On IGC-4805 Distr., insert .020" feeler between modifier arm and clamp arm when tightening clamp arm to prevent binding.

IGNITION TIMING

Std. Setting	Flywheel Degrees	Piston Pos.
All Engines	2° BTDC	.0016" BTDC.

This setting correct for regular fuel (See Octane Selector Setting for service and fuel modification).

Timing (With Neon Timing Light)—Clip timing light lead in series with #1 spark plug, direct light on vibration dampener at front of engine. Loosen hold-down plate screw, center octane selector pointer on scale, tighten hold-down screw. Run engine at idle speed, loosen clamp arm, rotate distributor until "IGN/" mark on dampener appears in line with pointer on left side of timing gear cover, tighten clamp screw. Check Octane Selector setting.

►*CAUTION*—On IGC-4805 Distr., insert .020" feeler between modifier arm and clamp arm when tightening clamp arm.

Timing (Without Neon Timing Light)—With #1 piston on compression, turn engine over until "IGN/" mark on vibration dampener lines up with pointer on left side of timing gear case. Adjust distributor as directed above.

Octane Selector Setting—After setting timing (above), loosen selector hold-down screw, advance timing by turning distributor clockwise (move pointer toward "A" end of scale) until engine "pings" when hot and pulling hard, then retard timing by turning distributor counter-clockwise (move pointer toward "R") until ping disappears.

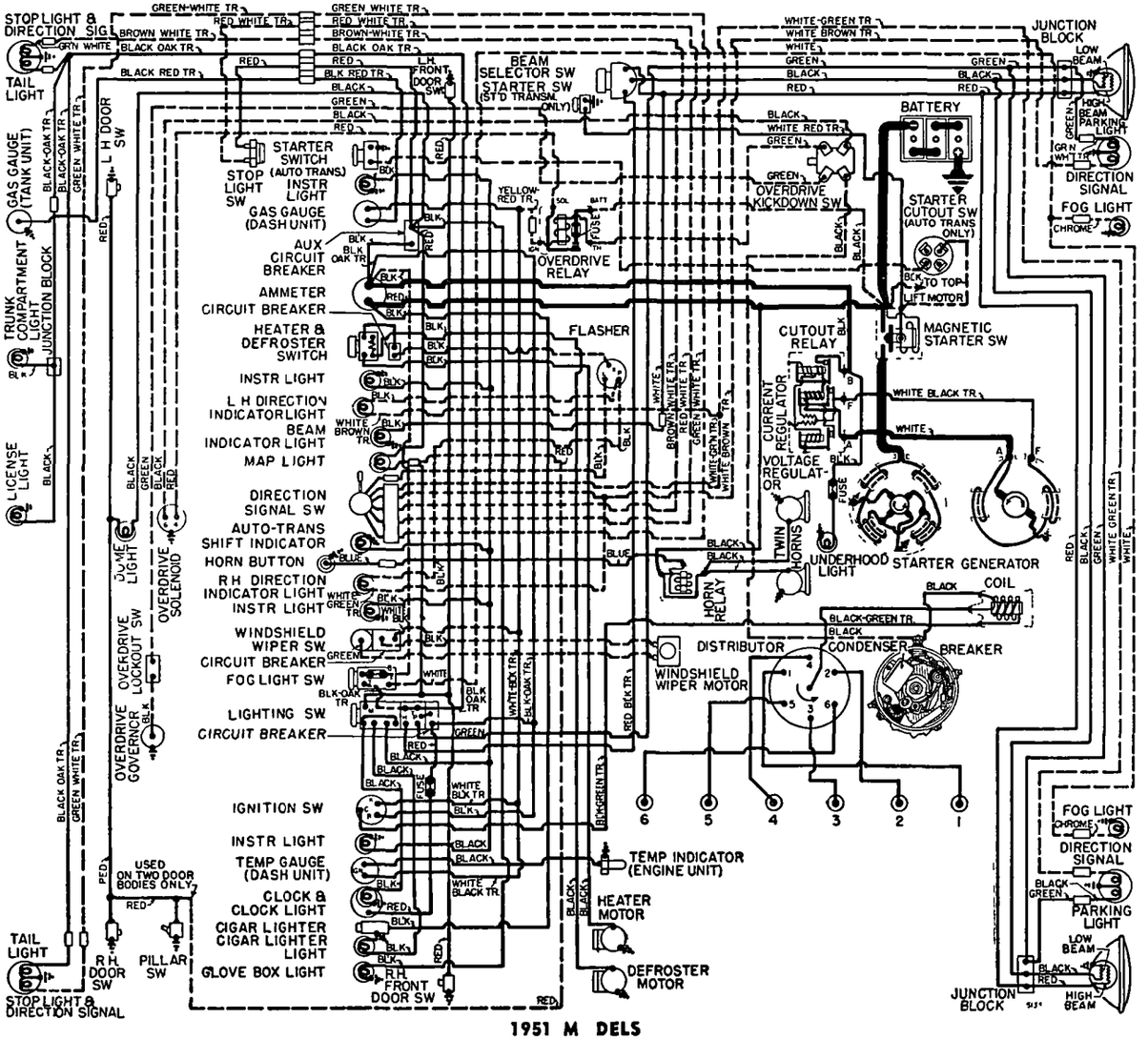

1951 M DELS

CARBURETOR

Carter WE-715S—1¼" single barrel, downdraft, with Carter Climatic Control.

Casting No. on Flange—620.

See Carburetor Section for complete data.

Settings (Idle Setting, Float Level, & Accelerating Pump): ***See Tune-Up.***

Metering Rods & Jets—***See Carter Jet Table in Carburetor Section.***

Fast Idle: Carter Single Barrel Carburetor type.

Setting—.046" between throttle valve and bore of carburetor. To check, remove thermostatic coil housing, gasket and baffle plate. Crack throttle valve and hold choke valve closed. Close throttle. Adjust by bending connector rod at lower angle.

See Carburetion Equipment Section for data.

Automatic Choke: Carter Climatic Control (Single Carburetor type).

Setting—(Early Production Cover 170P-77S) Centered on index. (Late Production Cover 170U-61S) 1 point lean.

See Carburetion Equipment Section for data.

CARB. EQUIPMENT

Air Cleaner: AC No. 1543970 Oil-wetted type Std. Filter Element AC #1. Oil-bath Air Cleaner Optl.

Servicing (Oil-wetted type)—Clean and re-oil filter element at 1000 mile intervals.

Fuel Pump (Std.): AC #1539416, diaphram type.

Optl. (Fuel & Vacuum): AC #1539218.

Pressure—4-5 lbs. maximum.

See Carburetion Equipment Section for data.

Gasoline Gauge: Stewart-Warner Electric type.

Dash Unit—Studebaker No. 522177.

Tank Unit—Studebaker No. 525548.

See Carburetion Equipment Section for data.

BATTERY

Willard (1950) HW-1-100. (1951) HDW-1-100, 6 volt, 15 plate, 100 ampere hour capacity (20 hour rate).

Starting Capacity—120 amperes for 20 minutes.

Zero Capacity—300 amperes for 3.5 minutes. Five

CONTINUED N NEXT PAGE

CONTINUED FROM PRECEDIN PAGE

Second Voltage 4.3 volts.
Grounded Terminal—Positive (+) to cyl. head.
Dimensions—L. 9 3/64". W. 6 13/16". H. 8⅝"
Location—In engine compartment on left side.

STARTER

Auto-Lite—(Early 1950) Model MZ-4151. (Late 1950 & 1951) Model MZ-4157.
Armature No.—Auto-Lite No. MZ-2211.
Drive—Barrel type Bendix No. A1792 (MZ-4151).
Rotation—Counter-clockwise at commutator end.
Brush Spring Tension—42-53 ozs. (new brushes).
Cranking Engine—150 amperes, 5.2 volts, 150 RPM.

Performance Data

Torque	R.P.M.	Volts	Amperes
0 ft. lbs.	4300	5.5	70
.65 "	2500	5.5	100
2.55 "	1325	5.0	200
4.95 "	750	4.5	300
7.65 "	220	4.0	400
7.8 "	Lock	3.0	420
11.8 "	Lock	4.0	560

Starting Switch: Magnetic switch mounted on starter and controlled by manual switch.
Std. Trans. Cars—Auto-Lite SW-4016 (Studebaker 519829) mounted on toeboard under clutch pedal, operated by fully depressing pedal.
Automatic Trans. Cars: Studebaker No. 527553 pull switch on instrument panel and Delco-Remy No. 1998882 combination starter cut-out and backing light switch mounted on steering column. Starter operative only with transmission selector lever in "N" or "P" positions.

GENERATOR

Auto-Lite—(Early 1950) GDZ-4804A. (Late 1950 & 1951) GDZ-6001A.
Armature No. (GDZ-4804A)—GDZ-2006F.
Two brush type with current-voltage control.
Charging Rate Adjustment—None. See Regulator.
Maximum Charging Rate—35 amperes, 8.0 volts, 2250 Gen. RPM. (hot), at car speed of 21.2 MPH & above with load or discharged battery (regulator setting).

Cold		Performance Data	Hot		
Amperes	Volts	R.P.M.	Amperes	Volts	R.P.M.
0	6.4	925	0	6.4	1000
5	6.65	1060	5	6.65	1150
10	6.85	1200	10	6.85	1290
15	7.05	1340	15	7.05	1430
20	7.3	1480	20	7.3	1590
25	7.55	1620	25	7.55	1750
30	7.8	1760	30	7.8	1980
35①	8.0	1900	35	8.0	2250

①—Current Regulator setting. See Regulator data.
Rotation—Counter-clockwise at commutator end.
Brush Spring Tension—35-53 ozs. (new brushes).
Field Current—1.6-1.8 amperes at 6.0 volts.
Motoring Current—4.2-4.6 amperes at 6.0 volts.
Removal: Pivot mounted at left front of engine. To remove, take out pivot and clamp bolts.
Belt Adjustment: Loosen pivot and clamp bolts, move generator out until ⅜-½" belt deflection midway between generator and fan pulleys is obtained.

REGULATOR

Auto-Lite Models—(Early 1950) VRP-4004F. (Late 1950) VRP-6001A. (1951) VRP-6005A.
Voltage & Current Typ. Consists of Cutout Relay and vibrating type Voltage & Current Regulators in case on dash.
See Electrical Equipment Section for complete data.
NOTE—Regulator case cover is sealed. Serviced on exchange basis if seals not broken (to remove cover).

Cutout Relay

Cuts In—6.4-7.0 volts (set to 6.4-6.6 volts), 10.4 MPH.
Cuts Out—4.1-4.8 volts (approx. 4-6 amps. disch.).
Contact Gap—.015" minimum.
Air Gap—.031-.034" with contacts open (check at hinge end of core).

Voltage Regulator

Setting—7.2-7.5 volts at 70°F. See Electrical Equipment Section for settings at other temperatures.
Checking (without breaking seal) & Adjustment—*See Electrical Equipment Section.*
Contact Gap—.012" min. (armature against stop pin).
Air Gap—.048-.052" with contacts just opening.

Current Regulator

Setting—VRP-4004F & VRP-6001A, 34-36 amperes (marked '35' on cover). VRP-6005A, 39-41 amperes (marked '40' on cover).
Checking (without breaking seal) & Adjustment—*See Electrical Equipment Section.*
Contact Gap & Air Gap—Same as Voltage Regulator.

LIGHTING

Headlamps: Corcoran-Brown "Sealed Beam" type.
See Electrical Equipment Section for complete data.
Adjustment—Aim upper beam straight ahead (hot spot center 3" below lamp center height at 25 ft.).
Beam Indicator—At center of speedomter dial. Lighted whenever Country (upper) beams in use.
Direction Signal: *See Electrical Equipment Section.*
Direction Signal Indicators—In face of Speedometer dial. Left or right indicator lighted when corresponding direction signal is in operation.

Switches

Lighting—Studebaker No. 526380 (1950). No. 530058 (1951).
Beam Selector—Delco-Remy No. 1997008, Studebaker No. 519246.
Stop Light—Studebaker No. 666858.
Direction Signal—Studebaker No. 520304.

MISC. ELECTRICAL

LIGHTING CIRCUIT BREAKER (On Light Switch): Studebaker No. 522014. 30-ampere thermostatic type. Protects Headlamps, Parking, Tail, & Instrument Lamps by vibrating to limit current.
Auxiliary Circuit Breaker (On Instrument Panel): 20-ampere thermostatic type. Protects Body & Stop Lamps by vibrating to limit current.
Convertible Top Circuit Breaker—30 ampere.
ACCESSORY CIRCUIT BREAKER: One 15-ampere type used on cars with Climatizer and Defroster.
FUSES: Clock—3 ampere. In clock lead.
Direction Signal—14 ampere. In Flasher lead.
Overdrive—20 ampere. On Overdrive Relay.
Glove Compt. Light—5 ampere. In lamp lead.
Under Hood Light—5 ampere. In lamp lead.
Fog Lights—20 ampere. On Fog Light Switch.
Radio—14 ampere.
HORNS: Sparton or Delco-Remy No. 1999656 (High Note), 1999655 (Low Note). Twin Airtone type horns operated by relay. Horn Current—12-15 amps. **(each).**
Canada Cars—Auto-Lite HW-4035A (High Note). HW-4036A (Low Note).
Horn Relay: Delco-Remy No. 1116775.
Contacts Close—2.75-4.0 volts.
Contact Gap—.025". **Air Gap**—.015" (closed).

ENGINE

OIL PAN REMOVAL: *See Studebaker Shop Notes.*
►*Not necessary to remove engine for pan removal.*
ENGINE SPECIFICATIONS: Six cylinder, "L" Head.
Bore—3". **Stroke**—4".
Displacement—169.6 cu. ins. **Rated H.P.**—21.6.
Developed Horsepower—85 at 4000 RPM.
Compression Ratio—7.0-1 Std.
Compression & Vacuum Reading—*See Tune-up data.*
ORIGINAL BORE & PISTONS: *See Studebaker Shop Notes.*
TIGHTENING TORQUES: *See Studebaker Shop Notes.*
CYLINDER HEAD INSTALLATION: *See Studebaker Shop Notes.*
PISTONS: Lynite aluminum alloy, Cam ground, T-slot, bearing-metal plated type. **Length**—2 29/32".
Weight—8.48 ozs. (without rings or pin).
Clearance—Selective fit (see Fitting Pistons).
Removal—Pistons and rods removed from above.
Fitting New Pistons: Insert .002" feeler, 1" wide, between piston and cylinder wall on camshaft side (piston pin parallel to camshaft, slot away from camshaft). Pull required to withdraw feeler should be 11-16 lbs.
Replacement Pistons: *See Studebaker Shop Notes.*
Installing Pistons: T-slot away from camshaft.
PISTON RINGS: Two compression (Perfect Circle #200 Top, #70 —2nd), one Oil Control (#85).

Ring	Width	End Gap	Side Clearance
Compr. #1	3/32"	.007-.017"	.0015-.002"
Compr. #2	1/8"	.007-.017"	.0015-.002"
Oil Contr. (#3)	5/32"	.007-.017"	.0015-.002"

Installing Rings: Step up top ring, step down 2nd ring.
Replacement Rings: Sets furnished Std. size and .020", .030", .040" Oversize. Single rings Std. size and .010", .020", .030", .040" Oversize.
PISTON PIN: Diameter .7491-.7495". **Length** 2⅜". Pin is locked in rod by tapered pin and locknut.
Pin Fit in Piston—.0001-.0003" clearance or light finger-push fit at room temperature (70°F).
Pin Removal & Installation: *See Studebaker Special Data.*
Replacement Pins: Std. & .0025". .005" oversize. Use Hone No. PH-1 to obtain proper piston pin fit.
NOTE—Replacement pistons fitted with pins.
CONNECTING ROD: Length 6⅜". **Weight** 20.48 ozs.
Crankpin Journal Diameter—1.81175-1.81275".
Lower Bearing—Interchangeable steel-backed, micro-babbitt lined type. No shims.
Clearance—.0005-.002". **Sideplay**—.005-.009".
Bearing Adjustment: None (no shims). Replace bearings. Do not file rods or bearing caps.
NOTE—Make certain that small tongue on bearing shells engage grooves. Palnuts used on bolt nuts.
Palnut Installation—*See Studebaker Shop Notes.*
Replacement Bearings: Bearings furnished Std. Size and .001", .005", .010", .020" Undersize.
Installing Rods: Lower bearings "offset". Install rods with narrow portion of bearing toward front of engine (#1, 3, 5), toward rear (#2, 4, 6). Numbers on

ENGINE

CONTINUED FROM PRECEDING PAGE

rods and bearing caps must be together and installed in same numbered cylinder with number and oil hole in lower end of rod toward camshaft side.

CRANKSHAFT: Four bearing type with integral counterweights. Vibration dampener on front end.
Vibration Dampener—*See Studebaker Shop Notes.*
Journal Diameters—2.4370-2.4375" (All) Std.
►*CAUTION—Journals are .005" Undersize on engines with letter "A" following Engine Number.*
Bearing Type—Removable type, steel-backed, micro-babbitt lined. No shims.
Clearance—.0005-.0025".
Rear Bearing Oil Seals—Consist of rubber ring on crankshaft; two rubber seal strips in grooves on top of bearing cap; and two specially treated wood strips in grooves on sides of bearing cap.
See "Brummer Type Oil Seal" in Studebaker Special Data.
►*CAUTION—Install new wood oil seals (above) each time rear main bearing cap removed and re-installed.*

Bearing Adjustment: None (no shims). Replace bearings. Do not file bearing caps.
NOTE—Front oil pan seal block may be removed for access to front main bearing cap by removing four lower timing gear cover retaining screws. Use only malleable iron type filler block on these cars.
►*CAUTION—Do not securely tighten timing gear cover-to-filler block screws until after oil pan screws tightened uniformly and securely.*

Replacement Bearings: Furnished as sets or single bearings Std. & .001", .005", .010", .020", .030" U. S.

End Thrust: Taken by thrust washer assembled between front main bearing and crankshaft gear. Controlled by shims between thrust washer and main bearing journal. Adjust by changing shims (.003", .005", .007" thick). **Endplay**—.003-.006".

CAMSHAFT: Four bearing type. Helical gear drive.
Journal Diameters—#1, 1.7475-1.7480"; #2, 1-7162-1.7170"; #3, 1.6857-1.6865"; #4, 1.6232-1.6240".
Bearings—Split, steel-backed, babbitted bushings.
Clearance—.0007-.0022" (#1), .0010-.0027" (others).

Bearing Adjustment: None. Replace bushings with camshaft removed. NOTE—Align bushing oil hole with oil hole in block.

Camshaft Removal: *See "Camshaft & Bearings" in Studebaker Shop Notes.*

End Thrust: Taken by thrust plate assembled on front face of engine block behind camshaft gear (spacer assembled on shaft behind gear hub).
Endplay—.003-.006". Tighten cap screws alternately a few turns at a time to prevent distortion of plate.

Timing Gears: Crankshaft gear Cast Iron, Camshaft gear Celeron with steel hub.
Backlash—.001-.003".
Replacement Gears—Camshaft gear furnished in two sizes; Standard (marked "S"), High Limit (marked "H"), Crankshaft gear furnished Standard size only.
Timing Gear Removal & Installation—*See "Timing Gears" in Studebaker Shop Notes.*

Camshaft Setting: Mesh marked tooth of camshaft gear between two marked teeth of crankshaft gear.

VALVES:	Head Diameter	Stem Diameter	Length
Intake	1 11/32"	5/16"	4 11/32"
Exhaust	1 9/32"	5/16"	4 11/32"

	Seat Angle	Lift	Stem Clearance
All Valves	45°	11/32"	.0015-.0035"

Valve Guides: Pressed in block from above with top of guide 1 3/16" below top of block. Finish ream guides to inside diameter of .312-.3125" Use Valve Stem Guide Remover and Replacer Tool J-2034. Replace worn guides if clearance greater than .0035".

Valve Springs: Install with closed coil end up. Replace springs if over 10% weaker than pressure listed.

	Spring Pressure	Length
Valve Open	93-103 lbs.	1 5/16"

NOTE—Install valve spring retainer with flange engaging flat surface on lower coil and tongue on inner diameter engaging groove in spring lock.

Valve Lifters: Mushroom type. Remove from below with camshaft out of engine. *For Camshaft Removal directions, refer to Studebaker Shop Notes.*
Clearance—.0005-.00175".
Replacement Lifters—Furnished Std. size and .0005", .001" Oversize.

VALVE TIMING

Tappet Clearance: .016" All Valves, Engine cold.
NOTE—Self-locking tappet adjusting screws used. Tappet screw tension should be 25 in. lbs. minimum.

Valve Timing: See Camshaft Setting above.
Intake Valves—Open 15° BTDC. Close 49° ALDC.
Exhaust Valves—Open 54° BLDC. Close 10° ATDC.
Valve Timing Check—Set #1 intake valve to .020". Turning engine with #6 cylinder on compression stroke the intake valve should start to open when the mark "IN-OP 1-6" on front dampener lines up with pointer.

LUBRICATION

Lubrication System: Pressure to crankshaft, connecting rod, and camshaft bearings and to valve lifters. Timing gears lubricated by oil by-passed by pump.
Crankcase Capacity—5 qts. ("Add Oil" point on oil level indicator stick is 3 qt. level).
Normal Oil Pressure—20-40 lbs. at 40 MPH.
Oil Pressure Relief Valve—On lower right front corner of engine. Opens at 40 lbs. Adjustable by inserting shims between outer end of spring and plug.

Oil Pump: Helical gear type. Mounted externally on right hand side of crankcase.
Oil Pump Removal & Installation—*See "Oil Pump" in Studebaker Shop Notes.*

Oil Pressure Gauge: Stewart-Warner Bourden tube (not electric) type.

Crankcase Ventilation: Filter element in oil filler cap (air intake) and in breather pipe on left rear of engine (air outlet).
Servicing—Wash both filter elements in kerosene and re-oil at regular intervals. NOTE—filter in outlet pipe removed by taking out cotter pin.

COOLING

Cooling System: Positive circulation with water pump mounted on front of block with fan.
Capacity—10 quarts.

Water Pump: Packless, sealed ball bearing type.
See Water Pump Section for complete data.
Removal—Slack off drive belt, take out capscrews in the fan pulley hub & remove fan blades. Disconnect hose connection, take out mounting screws in pump body flange, withdraw pump from engine.
Belt Adjustment—*See Generator Belt Adjustment.*

Thermostat: Bishop & Babcock. In water outlet on cylinder head.
Setting—Starts to open at 151-155°F.

Temperature Gauge: Stewart-Warner electric type.
Dash Unit—Studebaker No. 530051.
Engine Unit—Studebaker No. 530127 (without adapter).

CLUTCH

Borg & Beck Model 8A7 with Borglite Driven Member. Single plate, dry disc type. NOTE—Clutch assembly marked by number 980 stamped on cover.
See Clutch Section for complete data.
►*CLUTCH CHATTER & RATTLE CORRECTION—See "Clutch Notes" in Studebaker Special Data.*
Facings—Moulded Metallic type, 2 required. I. D. 5⅜". O. D. 8". Thickness .125".
►*CAUTION—Special driven member used on cars with Overdrive. Identify each type by hub damper spring color as follows:*

	Damper Spring Color.
Cars with Conventional Trans.	2 Lavender, 2 Black
Cars with Overdrive Trans.	4 Lavender

Pedal Adjustment: Pedal free travel ½" to 1". To adjust, unhook pull-back spring on outside of frame rail, loosen locknut at adjusting clevis and remove clevis pin at inner end of pedal shaft, turn clevis on rear end of pedal shaft-to-operating shaft rod for correct clearance, reassemble linkage.
Hill-Holder Note—Check setting whenever clutch pedal adjusted and adjust Hill-holder to release just as clutch engages.

Clutch Housing Removal: Remove distributor and oil level gauge adapter, remove starter and tie up out of the way (not necessary to disconnect cables), remove front floor plate, take out upper clutch housing cap screws. Remove transmission (SEE TRANSMISSION). Disconnect clutch pedal rod at operating shaft-to-release shaft sleeve, pull operating shaft out and remove sleeve. Remove parking brake cable shield clip, unhook brake pedal pullback spring from cross-member, support engine weight on jack under rear end of oil pan (use block of wood on jack to prevent damage to pan), take out engine rear support bolts, remove lower support insulators. Remove cross-member (with clutch operating shaft support bracket). Loosen exhaust pipe flange nuts at manifold, remove exhaust pipe support bracket-to-clutch housing bolts, loosen clamp and swing bracket out of the way. Take out all clutch housing bolts, remove dowel bolts at right and left center, remove clutch housing.
►**Installation Caution**—Align clutch housing to rear engine plate with two tapered drifts, then install the dowel bolts. Draw the dowel bolts in place by tightening the nuts—**do not drive them in place.**

Clutch Removal: Remove clutch housing (above), remove six screws evenly to relieve spring pressure, lift off clutch assembly and driven member.

TRANSMISSION

Warner Model AS1-T96 (Std.), AS24-T96 with R10 type Overdrive (Optl.). All helical gear type. Constant-mesh, synchro-mesh (Second & High), sliding gear (Low & Reverse).
See Transmission Section for complete data.

C NTINUED N NEXT PAGE

C NTINUED FR M PRECEDIN PAGE

Transmission Control: Remote control type with gearshift lever mounted on steering column.
See Transmission Section for complete data.

Removal: Drain transmission. Disconnect hand brake cable and move out of way for clearance. Disconnect front universal at transmission (wire caps or use clamp to prevent losing rollers). Take out center support bearing mounting bolts. Push front shaft and support to rear (will slide on splines on rear shaft). Disconnect shift rods from levers on case and speedometer cable (remove speedometer pinion). On Overdrive transmission disconnect all control wires and cable. Take out transmission to clutch housing capscrews, pull transmission straight back and remove from car.

OVERDRIVE

Warner R10 Type (part of AS24-T96 Transmission). New Governor controlled type (no centrifugal pawls) with electrical solenoid operation and throttle controlled "kick-down."
NOTE—Overdrive is new "centered ring gear" type.
See Transmission Section for complete data.
Overdrive Solenoid—Warner Model No. 3AR10B-62, Studebaker No. 521429.
Overdrive Governor—Warner Model No. AR10B-72, Studebaker No. 520454.
Control Relay—Auto-Lite HRT-4001, Studebaker No. 523297.
Throttle Kick-down Switch—(1950) Studebaker No. 515667. (1951) Studebaker No. 529479.
Lock-out Switch—Studebaker No. 521436.
Fuse—20 ampere. On Overdrive Relay.

Removal: See Std. Transmission Removal data.

AUTOMATIC TRANSMISSION

Torque converter and 3-speed automatic transmission with hydraulic control. Has mechanical parking lock and Anti-creep device which holds brakes applied when car standing and ignition "on."
See Transmission Section for complete data.
Lubrication—Check oil level every 1000 miles and maintain oil level at "Full" mark on dip stick. Drain and refill every 15,000 miles. Use **only premium type 10W engine oil (or SAE 10-10W).**
Capacity—9½ quarts.
Checking Oil Level—Oil must be warm (set parking brake, place selector lever in "L" position, idle engine until normal operating temperature reached). Remove inspection cover on front floor carpet over transmission case, clean all dirt from around inspection hole, check oil level with dip stick gauge. Add oil as required to bring level up to "Full" mark on dip stick (1 pint between "LOW" and "FULL"). *CAUTION—Do not fill above "FULL" mark.*
Draining and Refilling—*See "Studebaker Automatic Transmission" in Tranmission Section.*
Linkage Adjustment—*See "Studebaker Automatic Transmission" in Transmission Section.*

Removal: *See "Studebaker Automatic Transmission" in Transmission Section.*

UNIVERSALS

Spicer Model 1268-110X (Front & Rear), 1261-102X (intermediate). Needle bearing type. Three used with intermediate universal at propeller shaft support bearing on crossmember (see Propeller Shaft).
See Universals Section for complete data.

Propeller Shaft & Support Bearing: Two shafts used:
1) Front Shaft with intermediate universal yoke bolted on rear end (no slip-joint).
2) Rear Shaft with slip-joint on forward end at intermediate universal.
Propeller Shaft & Support Bearing Removal & Servicing—*See "Propeller Shaft" in Studebaker Shop Notes.*

REAR AXLE

Spicer Salisbury Model 23. Semi-floating, Hypoid Gear type with Hotchkiss Drive.
See Rear Axle Section for complete data.
Ratio—4.1-1 Std. 4.56-1 Optl. (Std. with Overdrive). NOTE—Rear axle ratio stamped on plate attached to axle by cover capscrew and also on ring and pinion gears.
Backlash—.003-.006". Shim adjustment.

Removal: Remove hub caps, take out cotter pin from axle nut, loosen rear wheel nuts. Place car on stands on frame just ahead of rear springs. Remove wheels, hubs and drums. Disconnect hand brake cable. Take out backing plate bolts from backing plates, free hydraulic brake line from axle housing clips (do not disconnect brake line). Backing plates and adjusting shims can then be wired to frame (do not disconnect brake line from wheel cylinders). Disconnect rear universal (wire caps or use clamp to prevent losing rollers). Remove rear spring "U" bolts, disconnect lower shock absorber links, remove rear axle assembly from car.
Axle Shaft Removal—Remove wheel, remove wheel hub (use puller J-446-A). Take out backing plate retaining bolts, remove outer oil seal. Pull backing plate out over end of axle shaft and wire plate to frame (CAUTION—do not lose adjusting shims located between backing plate and axle housing flange), pull axle shaft with Puller HM-931.

Wheel Bearing Adjustment: Use dial indicator to check axle shaft endplay. Adjust by removing backing plate (see Axle Shaft Removal above), and adding or removing shims located between backing plate and axle housing flange (shims .003" .005", .010", .030" thick). **Endplay**—.001-.005".

SHOCK ABSORBERS

Houde (Houdaille) & Monroe—Direct acting, non-adjustable type. Front shocks are mounted within coil springs.

►*NOTE—Shock absorbers cannot be refilled or repaired.*
Front (All)—(1950) Studebaker No .524787 (Std.), Studebaker No. 527169 (Heavy Duty). (1951) Studebaker No. 527924 (Std.), Studebaker No. 530971 (Heavy Duty).
Rear (All)—(1950) Studebaker No. 524816 (Std.), Studebaker No. 527170 (Heavy Duty). (1951) Studebaker No. 530766 (Std.), Studebaker No. 530972 (Heavy Duty).

FRONT SUSPENSION

Front Suspension: Independent, Coil Spring Suspension with front Shock Absorbers located within coil springs.
See Front Suspension Section for complete data.

►**FRONT END CORRECTION (For Tire Wear, Shimmy, Vibration, etc.):** *See "Steering Notes" in Studebaker Special Data.*
Kingpin Inclination—5¼° crosswise.
Caster—Neg. 1° to Neg. 2½°. Eccentric pin adjustment.
►*NOTE*—Not more than ¾° variation between wheels.
Camber—0° to +1°. Eccentric pin adjustment.
►*NOTE*—½° more Camber favored on drivers side.
Toe-In—1/16-1/8". Adjust **right hand tie rod only** for toe-in after left hand tie rod has been adjusted for wheel straight-ahead position (with steering wheel centered) and center auxiliary tie rod has been adjusted so that steering gear arm and auxiliary steering arm parallel. **RHD Car Note**—Make toe-in adjustments on left hand tie rod.

STEERING GEAR

Ross Model T-12 Cam-and-Twin Lever type.
See Steering Gear Section for complete data.

BRAKES

Service: Lockheed (Wagner Electric) Hydraulic, Self-centering, Self-adjusting type. Brakes have automatic spring-loaded adjusting wedge controlled by contact plug projecting through hole in lining of forward shoe (plug contacts drum when brakes applied). Hand lever applies rear wheel service brakes.
See Brake Section for complete data.
Drums—Composite type. Diameter 9".
Clearance—If adjustment required, see "Lockheed (Wagner) Hydraulic Self-Adjusting Brakes" in Brake Section.
Lining—Moulded type (all shoes). Width 2". Thickness 3/16". Length per wheel 18½".
Braking Power—57% Front. 43% Rear.

Hand Brake: See Service Brake data (above).

Hill-Holder: Optional Equipment on all models.
See Brake Section for complete data.

►**Anti-Creep (for Auto. Trans. Cars)** *See Brake Section for complete data.*

MISC. MECHANICAL

CONVERTIBLE TOP CONTROL: Electric type with motor mounted on left hand lift assembly (right hand lift assembly driven through flexible drive).
See Miscellaneous Section for complete data.

Windshield Wipers: Vacuum Cable operated type.
See Miscellaneous Section for complete data.

MODEL IDENTIFICATION

SERIAL NUMBER: Stamped on plate on left front door lock pillar post.

	South Bend	Los Angeles
1950 Numbers	4398601 Up	4839001 Up

Body Symbol Letter—Used with model designation (and on body number plate) to indicate body type as follows: C, 5-Pass. Coupe; F, 2-Door Sedan; Q, 3-Pass. Coupe; S, Convertible; W, 4-Door Sedan; Y, Land Cruiser.

ENGINE NUMBER: Stamped on pad on upper front left corner of engine block.
1950 Numbers—H-370001 Up.

TUNE-UP

COMPRESSION PRESSURE: 120 lbs. at 150 RPM. cranking speed for Std. 7.0-1 Head.
VACUUM READING: Steady 18-20" idling at 8 MPH.
FIRING ORDER: 1-5-3-6-2-4. See diagram.
SPARK PLUG GAPS: .025". Limits .0225-.0275".
Plug Type—Champion Type J7. 14 mm.
DISTRIBUTOR: Breaker Gap—.022".
Cam Angle—Test limits with .022" gap—31-37°.
See "Delco-Remy Cam Angle" in Electrical Equipment Section.
Breaker Arm Spring Tension—17-21 ozs.
Automatic & Vacuum Advance—*See Ignition.*
Condenser Capacity—.18-.23 microfarad.
IGNITION TIMING: 2° BTDC.
Timing Procedure—*See Ignition Timing.*
Timing Mark—Vibration Dampener mark "IGN/" aligned with pointer on gear case cover.
CARBURETION:
Idle Setting (Stromberg)—Idle screw set for smooth idle. Turn screw out for richer mixture. **(Carter)**—½-1½ turns open. Turn screw out for richer mixture.
Idle Speed (Standard Trans.)—8-10 MPH. at normal operating temperature.
Idle Speed (Auto. Trans.)—500-550 RPM. with selector lever in "N". Adjust by turning idle adjusting screw switch in or out (switch replaces regular stopscrew).
Float Level (Stromberg)—Fuel level ⅝" below top edge of float bowl with engine idling.
(Carter)—7/16" from top of projection on bowl cover to top of soldered seam on free end of float with needle valve seated and cover assembly inverted.
Accelerating Pump (Stromberg)—Center hole (med. stroke) Normal all-season setting. Inner hole (min.)—Summer, Outer hole (max.)—Winter used for temperature extremes.
(Carter)—No seasonal adjustment.
Choke Setting: Centered (at index).
Fuel Pump Pressure: 4-5 lbs. maximum.
MANIFOLD HEAT CONTROL: Automatic thermostatic type operating in stainless steel bushings.
Setting—To test coil tension, free outer end of coil from bracket on manifold. With valve closed, hooked end of coil should be approx. 90° from bracket at 70°F. Replace coil if incorrect.
NOTE—To overcome sticking, lubricate valve shaft with kerosene and soda solution or Bendix Carburetor Cleaner. If necessary, shaft diameter can be reduced for .005" clearance in bushings.
VALVE TAPPET CLEARANCE: .016" All Valves, Cold.
NOTE—Self-locking tappet screws used.
Valve Timing Check—*See Valve Timing.*
STARTING: *See Battery, Starter, Generator, Regulator.*

IGNITION

IGNITION SWITCH: Mitchellock. Studebaker No. 526396.
Ignition Lock—Yale & Towne.
COIL: Delco-Remy #1115380. On engine above distributor (under spark plug cable bracket).
CONDENSER: Delco-Remy Part No. 1869704.
Capacity—.18-.23 microfarad.
DISTRIBUTOR: Delco-Remy #1110220. Automatic and vacuum advance type with new "center-bearing" breaker plate.
►**Breaker Plate Bearing Assembly**—Plate rotates on 3 bakelite buttons on support plate with spring tension adjustment (shim washers) on underside of support plate. Pull required to move plate should be 8 ozs. min., 16 ozs. max. with breaker plate assembly out of housing.
See "Delco-Remy Center-Bearing Breaker Plate Distributor" in Electrical Equipment Section.
Breaker Gap—.022".
Cam Angle—Test limits with .022" gap—31-37°.
See "Delco-Remy Cam Angle" in Electrical Equipment Section.
Breaker Arm Spring Tension—17-21 ozs.
Rotation—Counter-clockwise viewed from above.

Automatic Advance

Degrees	Distr. R.P.M.	Degrees	Eng. R.P.M.
Start	400	2	800
11	1400	22	2800

Vacuum Spark Control: Delco-Remy No. 1116052 linked directly to breaker plate. Provides additional advance at speeds above idling except when engine

CONTINUED ON NEXT PAGE

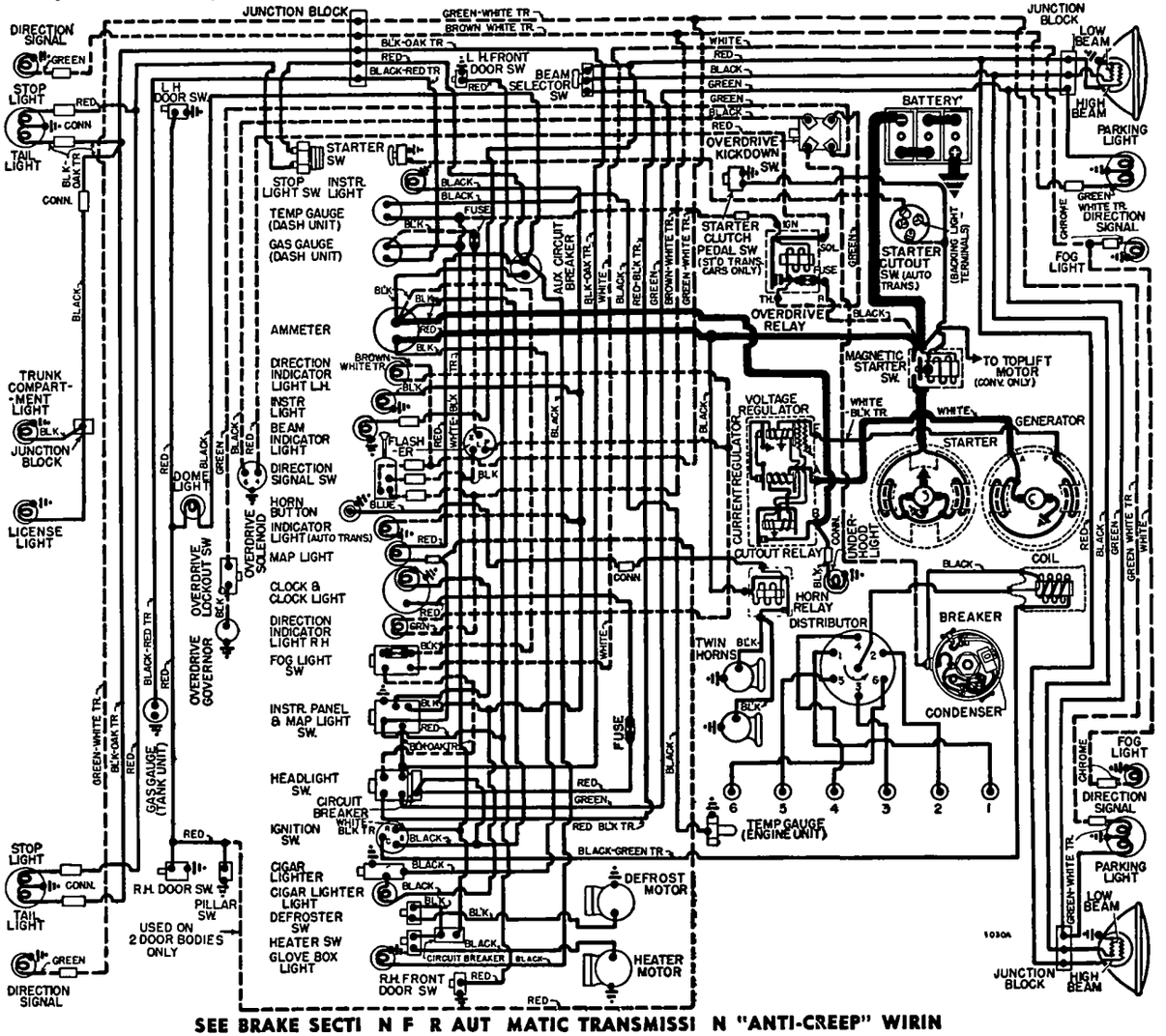

SEE BRAKE SECTI N F R AUT MATIC TRANSMISSI N "ANTI-CREEP" WIRIN

C NTINUED FR M PRECEDING PAGE

accelerated or operated with wide open throttle when spark retarded by return spring.
Plunger Travel—⅛" maximum.

Vacuum Advance

Distr. Degrees	Eng. Degrees	Vacuum (" of HG)
Start	0°	3-5"
6°	12°	9-14"

Distributor Removal: Mounted on left side of engine. To remove, disconnect vacuum line, take out bolt in clamp arm, lift distributor off.
Installation Note—When installing distributor, crank engine to firing position for #1 cylinder ('IGN' on vibration dampener in line with pointer on timing gear cover), sight down distributor shaft hole (distributor out) and see that distributor drive tongue in oil pump drive gear is 30° from the horizontal and offset toward the top, turn rotor to #1 segment, install distributor, check timing.

IGNITION TIMING

Std. Setting	Flywheel Degrees
All Engines	2° BTDC.

Timing (with Neon Timing Light)—Neon Light No. 890 recommended. Clip Neon light lead in series with #1 spark plug, idle engine and direct light on vibration dampener (at pointer on timing gear cover). Loosen clamp arm, rotate distributor until 'IGN' mark on vibration dampener lines up with pointer on timing gear cover.
Timing (without Neon Timing Light)—Turn engine over to firing position for #1 piston with 'IGN' mark on vibration dampener in line with pointer on timing gear cover and distributor rotor opposite #1 segment in distributor cap. Adjust distributor.

CARBURETOR

STROMBERG

Stromberg Model BXOV-26. 1¼" Single Barrel, Downdraft, with Fast Idle & Automatic Choke.
Code No. (on bowl cover)—6-104.
See Carburetor Section for complete data.
Settings (Idle Setting, Float Level, & Accelerating Pump): *See Tune-Up data.*
Metering Jet—*Refer to Carburetor Index for Stromberg Downdraft Carburetor Jet Specification Table.*
Automatic Transmission Throttle Linkage Adjustment: *See Studebaker Automatic Transmission in Transmission Section.*
Fast Idle: Stromberg BXOV-26 carburetor type.
See Carburetion Equipment Section for data.
Fast Idle Setting—To check, hold stopscrew against lowest step of fast idle cam, move choke valve as far as possible toward closed position, check valve opening with 11/32" drill. Adjust by bending connector.
Automatic Choke: Stromberg BXOV-26 type.
See Carburetion Equipment Section for data.
Automatic Choke Setting—'R' mark on thermostat cover in line with highest projection on housing. Shift to 'M' if engine loads up or overchokes. Use 'H' setting only if highly volatile fuels used.

CARBURETOR

CARTER WE

Carter WE-627SA (On Cars between Eng. Nos. H-376, 298 and H-386,398). 1¼" Single Barrel, Downdraft with Carter Climatic Control.
See Carburetor Section for complete data.
Settings (Idle Setting, Float Level, & Accelerating Pump): *See Tune-Up data.*
Metering Rods & Jets—*See Carter Jet Table in Carburetor Section.*
Automatic Transmission Throttle Linkage Adjustment: *See Studebaker Automatic Transmission in Transmission Section.*
Fast Idle: Carter Single Barrel Carburetor type.
See Carburetion Equipment Section for data.
Setting—.054" throttle valve opening with choke valve closed. To check, open throttle wide to make certain fast idle cam drops into position, then with choke valve closed measure clearance between edge of throttle valve and carburetor wall on side opposite idle port (valve closed to fast idle position). To adjust, bend connector rod at lower angle.
Automatic Choke: Carter Climatic Control (Single Carburetor type).
See Carburetion Equipment Section for data.
Setting—Centered (cover centered on scale).

CARB. EQUIPMENT

Air Cleaner: AC. Oil-wetted type Std., Oil-bath Cleaner Optl.
Servicing (Oil-wetted Type)—Clean and re-oil filter element at 1000 mile intervals or as required.
Servicing (Oil-bath Type)—Clean filter element and oil reservoir, fill reservoir to indicated level mark with SAE No. 40 or 50 engine oil at intervals as required by operating conditions.
Fuel Pump (Std.): AC. Combination fuel-and-vacuum pump.
Pressure—4-5 lbs. maximum.
See Carburetion Equipment Section for data.
Gasoline Gauge: Stewart-Warner Electric type.
Dash Unit—Studebaker No. 522177.
Tank Unit—Studebaker No. 525548.
See Carburetion Equipment Section for data.

BATTERY

Willard Type HW-1-100. 6 volt, 15 plate, 100 Ampere Hour Capacity (20 hour rate).
Starting Capacity—120 amperes for 20 minutes.
Grounded Terminal—Positive (+) to cylinder head.
Location—In engine compartment on left side.

STARTER

Delco-Remy Model 1107084. Armature No. 1878077.
Drive—Bendix Barrel type No. A1792.
Rotation—Counter-clockwise at commutator end.
Brush Spring Tension—24-28 ozs.

Performance Data

Torque	R.P.M.	Volts	Amperes
0 ft. lbs.	5000	5.7	65
12 "	Lock	3.4	525

Removal: Disconnect one cable from battery, and cables and wires from starter solenoid switch. Remove starter to clutch housing bolts, slip housing end of starter out of clutch housing and engine rear plate, and remove starter.
Starting Switch: Magnetic switch mounted on starter and controlled by manual switch.
Standard Trans. Cars—Switch mounted on toeboard under clutch pedal, operated by fully depressing pedal.
Automatic Trans. Cars—Pull switch under instrument panel. Starter operative only with transmission selector lever in "N" or "P" (Delco-Remy No. 1997870 Neutral Safety Switch mounted on steering column).

GENERATOR

Delco-Remy Model 1102728. Armature No. 1879002.
Two brush type with current-voltage control.
Charging Rate Adjustment—None. See Regulator.
Maximum Charging Rate—As given below.

Performance Data

	Amperes①	Volts	R.P.M.
Cold	30	8.0	1750

①—Not maximum output. See Current Regulator.
Rotation—Counter-clockwise at commutator end.
Brush Spring Tension—25 ozs. each.
Field Current—1.75-1.9 amperes at 6.0 volts.
Removal: Pivot mounted at left front of engine. To remove, take out pivot and clamp bolts.
Belt Adjustment: Loosen pivot and clamp bolts, move generator out until ⅜-½" belt deflection midway between generator and fan pulleys is obtained.

REGULATOR

Delco-Remy Models #1118380 and 1118369 (tropical export). Voltage and Current Regulators.
►*NEW "1118300 SERIES"* regulators have screw adjustment for settings and single regulator springs.
See Electrical Equipment Section for complete data.
CAUTION—Check generator for grounded field coils and leads before changing regulator settings to correct High Charging Rate or High Voltage.

Cutout Relay

Cuts In—(1118380) 5.9-6.8 volts hot (set to 6.4 volts hot), (1118369) 5.7-6.6 volts hot (set to 6.2 volts hot).
Contact Gap—.020" (same for both sets).
Air Gap—.020" (with contacts just closed).

Voltage Regulator

Setting—(1118380) 7.0-7.5 volts hot (set to 7.2 volts hot), (1118369) 6.5-7.2 volts hot (set to 6.8 volts hot). Regulator is over-compensated for temperature. Should be checked with cover in place and hot.
Air Gap—.075" with armature pressed down to point where contacts are just touching.
Checking & Adjustment—*See Electrical Equipment Section.*

Current Regulator

Setting—(1118380) 32-40 amperes hot (set to 36 hot), (1118369) 30-38 amperes hot (set to 34 hot).
Air Gap—.075" with armature pressed down to point where contacts are just touching.
Checking & Adjustment—*See Electrical Equipment Section.*

LIGHTING

Headlamps: Corcoran-Brown "Sealed Beam" type.
See Electrical Equipment Section for complete data.
Adjustment—Aim upper beam straight ahead (hot spot center 3" below lamp center height at 25 ft.).
Beam Indicator—At center of speedometer dial. Lighted whenever Country (upper) beams in use.
Direction Signal: *See Electrical Equipment Section.*
Direction Signal Indicators—In face of Speedometer dial. Left or right indicator lighted when corresponding direction signal is in operation.

Switches

Lighting—Studebaker No. 526350 (with circuit breaker).
Instrument—Studebaker No. 526351.
Beam Selector—Delco-Remy #1997008.
Direction Signal—Studebaker No. 526901P.

MISC. ELECTRICAL

LIGHTING CIRCUIT BREAKER (On Light Switch): Studebaker No. 522014.
30-Ampere thermostatic type. Protects Headlamps,

Parking, Tail, & Instrument Lamps by vibrating to limit current.
Auxiliary Circuit Breaker (On Instrument Panel): 20-ampere thermostatic type. Protects Body & Stop Lamps by vibrating to limit current.
Convertible Top Circuit Breaker—30 ampere.
ACCESSORY CIRCUIT BREAKER: One 15-ampere type used on cars with Climatizer and Defroster.
FUSES: Clock—3 ampere. In clock lead.
Direction Signal—14 ampere. In Flasher lead.
Overdrive—20 ampere. On Overdrive Relay.
Glove Compt. Light—5 ampere. In lamp lead.
Under Hood Light—5 ampere. In lamp lead.
Fog Lights—20 ampere. On Fog Light Switch.
HORNS: Sparton or Delco-Remy #1999656 (High Note), #1999655 (Low Note). Twin Airtone type horns operated by relay. Horn Current—12-15 amps
Horn Relay: Delco-Remy #1116775.
Contacts Close—2.75-4.0 volts.
Contact Gap—.025". Air Gap .015" (contacts closed).

ENGINE

OIL PAN REMOVAL: *See Studebaker Special Data.*
►*Not necessary to remove engine for pan removal.*
►**REPLACEMENT ENGINE CAUTION (for Automatic Transmission Cars):** *See Studebaker Automatic Transmission in Transmission Section.*
ENGINE SPECIFICATIONS: Six cylinder, "L" Head.
Bore—3 5/16". **Stroke**—4 3/4".
Displacement—245.6 cu. ins. **Rated H.P.**—26.33.
Developed Horsepower—102 at 3200 RPM.
Compression Ratio—7.0-1 Std.
Compression & Vacuum Reading—*See Tune-Up data.*
CYLINDER HEAD & TIGHTENING TORQUES: *See Studebaker Special Data.*
PISTONS: Lynite aluminum alloy, Cam-ground, T-slot, bearing-metal plated type. **Length** 3¾".
Original Bore & Pistons: *See Studebaker Special Data.*
Weight—14.4 ozs. (stripped).
Clearance—Selective Fit (see Fitting Pistons).
Removal—Pistons and rods removed from above.
NOTE—Car manufacturer recommends that cylinders out-of-round or tapered more than .002" be reconditioned.
Fitting New Pistons: Insert .002" feeler, 1" wide, between piston and cylinder wall on camshaft side (piston pin parallel to camshaft, slot away from camshaft). Pull required to withdraw feeler should be 14-19 lbs.
Replacement Pistons: *See Studebaker Special Data.*
Installing Pistons: T-slot away from camshaft.
PISTON RINGS: Two compression, one oil control ring per piston, all above pin. Oil drain holes provided in oil ring groove.

Ring	Width	End Gap	Side Clearance
Comp. (#1,2)	3/32"	.009-.014"	.0015-.002"
Oil Contr. (#3)	3/16"	.009-.014"	.0015-.002"

Installing Rings: Beveled side of compression rings (Sealed Power) up.
Replacement Rings: Sets furnished Std. size and .020", .030", .040" Oversize. Single rings Std. size and .010", .020", .030", .040" Oversize.
PISTON PIN: Diameter .8741-.8745". **Length** 2⅞". Pin is locked in rod by tapered pin and locknut.
Pin Fit in Piston—.0001-.0003" clearance or light finger push fit at room temperature (70°F.).
Pin Removal & Installation: *See Studebaker Special Data.*
Replacement Pins: Std. & .0025", .005" Oversize. Use Hone PH-1 to obtain proper piston pin fit.
NOTE—Replacement pistons fitted with pins.
CONNECTING ROD: Length 7 15/16". **Weight** 33.3 ozs.
Crankpin Journal Diameter—2.18675-2.18775".
Lower Bearing—Interchangeable steel-backed, micro-babbitt lined type. No shims.
Clearance—.0005-.002". **Sideplay**—.005-.009".
Bearing Adjustment: None (no shims). Replace bearings. Do not file rods or caps.
NOTE—Make certain that small tongue on bearing shells engage grooves. Palnuts used on bolt nuts.
Replacement Bearings: Bearings furnished Std. size and .001", .005", .010", .020" Undersize.
Installing Rods: Lower bearings "offset". Install rods with narrow portion of bearing toward front of engine (#1, 3, 5), toward rear (#2, 4, 6). Numbers on rods and bearing caps must be together and installed in same numbered cylinder with number and oil hole in lower end of rod toward camshaft.
CRANKSHAFT: 4 bearing, 5 integral counterweights. Vibration dampener mounted on forward end.
Vibration Dampener—*See Studebaker Special Data.*
Journal Diameters—2.8745-2.8750".
Bearings—Removable steel backed, babbitt-lined type. No shims.
Clearance—.0006-.0027".
Rear Bearing Oil Seals—Consist of rubber ring, on crankshaft; two rubber seal strips in grooves on top of bearing cap; and two specially treated wood strips in grooves on sides of bearing cap.
►*CAUTION—Install new wood oil seals (above) each time rear main bearing cap removed and re-installed.*
Bearing Adjustment: None (no shims). Replace bearings. Do not file bearing caps.
Replacement Bearings: Furnished as sets or single bearings in Std. Size and .001", .010", .020", .030" U.S.
End Thrust: Taken by thrust plate assembled between front main bearing and crankshaft gear. Controlled by shims between thrust plate and main bearing journal. Adjust by changing shims furnished .003", .005", .007" thick.
Endplay—.003-.006".
CAMSHAFT: Four bearing. Helical gear drive.
Journal Diameters—#1, 1.9975-1.9980"; #2, 1.9662-1.9670"; #3, 1.9357-1.9365"; #4, 1.1232-1.1240".
Bearings—Split steel-backed, babbitted bushings.
NOTE—Oil hole in bushings must be aligned with oil holes in engine block.
Clearance—.0007-.0022" (#1), .0010-.0027" (others).
Camshaft Removal: *See "Camshaft & Bearings" in Studebaker Special Data.*
End Thrust: Taken by thrust plate assembled on front face of engine behind camshaft gear (spacer assembled back of gear hub).
Endplay—.003-.006". Tighten capscrews alternately a few turns at a time to prevent distortion of plate.
Timing Gears: Crankshaft gear Cast Iron. Camshaft gear Celeron with steel hub. **Backlash**—.001-.003".
Replacement Gears—Camshaft gear furnished in two sizes; Standard (marked "S"), High Limit (marked "H"). Crankshaft gear Std. size only.
Timing Gear Removal & Installation—*See "Timing Gears" in Studebaker Special Data.*
Camshaft Setting: Mesh marked tooth of camshaft gear between two marked teeth on crankshaft gear.

VALVES:	Head Diameter	Stem Diameter	Length
Intake	1 15/32"	11/32"	5 7/32"
Exhaust	1 9/32"	11/32"	5 7/32"

	Seat Angle	Lift	Stem Clearance
All Valves	45°	11/32"	.0015-.0035"

Valve Guides: Pressed in block from above with upper end 1 5/32" below upper edge of valve seat and stepped end down. Ream guides to inside diameter of .3425-.3445". Replace worn guides when clearance exceeds .0035".
Valve Springs: Install with closed-coil end up. Replace springs if more than 10% weaker than test pressure listed.

	Spring Pressure	Length
Valve Open	125-145 lbs.	1 3/4"

NOTE—Dampeners used on top of all springs.
Valve Lifters: Mushroom type. Remove from below with camshaft out of engine. *For camshaft removal directions, see Studebaker Special Data.*
Valve Lifter Tension Spring—*See "Valve System" in Studebaker Special Data.*
►**Valve Chamber Baffles**—*See "Valve System" in Studebaker Special Data.*
Diameter—.624". **Clearance**—.0005-.00175".
Replacement Lifters—Std. & .0005", .001" O. S.

VALVE TIMING

Tappet Clearance: .016" All Valves, Engine Cold.
NOTE—Self-locking tappet adjusting screws used. Tappet screw tension should be 25 in. lbs. minimum.
Valve Timing: See Camshaft Setting above.
Intake Valves—Open 15° BTDC. Close 49° ALDC.
Exhaust Valves—Open 54° BLDC. Close 10° ATDC.
Valve Timing Check—Set #1 intake valve to .020". Turning engine with #6 cylinder on compression stroke the intake valve should start to open when the mark "IN-OP 1-6" on front dampener lines up with pointer.

LUBRICATION

Engine Oiling System: Pressure to crankshaft, connecting rod, and camshaft bearings, and to valve lifters. Timing gears lubricated by oil by-passed by pump. Oil pump mounted externally on right side.
Crankcase Capacity—6 quarts.
Normal Oil Pressure—20-40 lbs. at 40 MPH.
Oil Pressure Regulator—On lower right front corner of engine. Opens at 40 lbs. Adjustable by inserting shims between outer end of spring and plug.
Oil Pan Removal: *See Studebaker Special Data.*
Oil Pump: Helical gear type mounted externally on right side of engine.
Oil Pump Removal & Installation—*See "Oil Pump" in Studebaker Special Data.*
Oil Pressure Gauge: Stewart-Warner Bourden Tube (not electric) type.
Crankcase Ventilation: Filter element in oil filler cap (air intake) and in breather pipe on left rear of engine (air outlet).
Servicing—Wash both filter elements in kerosene and re-oil at regular intervals. NOTE—Filter in outlet pipe removed by taking out cotter pin.

COOLING

Cooling System: Positive circulation with water pump mounted on front of block with fan.
Capacity—13.5 qts. (15 qts. with Climatizer).
Water Pump: Packless type. No lubrication required. *See Water Pump Section for complete data.*
Removal—Slack off drive belt, take out capscrews in fan pulley hub and remove blades. Disconnect hose connection, take out mounting screws in pump.
Belt Adjustment—*See Generator Belt Adjustment.*
Thermostat: Fulton or Bishop & Babcock. In water outlet on cylinder head.

C NTINUED N NEXT PAGE

C NTINUED FR M PRECEDIN PA E

Setting—Opens at 151-155°F (Std.), 177°F (High).
Temperature Gauge: Stewart-Warner electric type.

CLUTCH

WITH STANDARD TRANSMISSION

Borg & Beck Model No. 9A7 with Borglite Driven Member. Single plate, dry disc type.
NOTE—Clutch Assembly marked by number 943
See Clutch Section for complete data.
Facings—Moulded-metallic, 2 required. I.D. 6". O.D. 9¼". Thickness ⅛".
Adjustment: Pedal free travel ½ to 1". To adjust, unhook pull-back spring on outside of frame rail, loosen locknut at adjusting clevis and remove clevis pin at inner end of pedal shaft, turn clevis on rear end of pedal shaft-to-operating shaft rod for correct clearance, reassemble linkage.
Hill-Holder Note—Check setting whenever clutch pedal adjusted and adjust Hill-holder to release just as clutch engages. Adjusting nut and locknut at end of Hill-holder operating rod.
Clutch Housing Removal: Remove distributor, remove starter and tie up out of the way (not necessary to disconnect cables), remove front floor plate, take out upper clutch housing cap screws. Remove transmission (see Transmission). Take out clevis pin in clutch operating shaft-to-release shaft sleeve, pull operating shaft out and remove sleeve. Remove parking brake cable shield clip, unhook brake pedal pullback spring from cross-member, support engine weight on jack under rear end of oil pan (use block of wood on jack to prevent damage to pan), take out engine rear support bolts, remove lower support insulators. Take out clutch operating shaft support bracket bolts. Remove cross-member. Loosen exhaust pipe flange nuts at manifold, remove exhaust pipe support bracket-to-clutch housing bolts, loosen clamp and swing bracket out of the way. Take out all clutch housing bolts, remove clutch housing.
►**Installation Caution**—Align mounting holes of the cross-member and the frame and install the retaining bolts—do not tighten the bolts until the operating shaft support bracket bolts are installed.
Clutch Removal: Remove clutch housing (above), remove six screws evenly to relieve spring pressure, lift off clutch assembly and driven member.

TRANSMISSION

STANDARD

Warner Model AS1-T86E (Std.), AS32-T86E with R10B type Overdrive (Optl.). All helical gear type. Constant-mesh, synchro-mesh (Second & High), sliding gear (Low & Reverse).
See Transmission Section for complete data.
Transmission Control: Remote control type with gearshift lever mounted on steering column.
See Transmission Section for complete data.
Removal: Drain transmission. Disconnect hand brake cable and move out of way for clearance. Disconnect front universal at transmission (wire caps or use clamp to prevent losing rollers). Take out center support bearing mounting bolts. Push front shaft and support to rear (will slide on splines on rear shaft). Disconnect shift rods from levers on case and speedometer cable (remove speedometer pinion). On Overdrive transmission disconnect all control wires and cable. Take out transmission to clutch housing capscrews, pull transmission straight back and remove from car.

OVERDRIVE

OPTI NAL WITH STD. TRANS.

Warner R10 Type (part of AS32-T86E Transmission). New Governor controlled type (no centrifugal pawls) with electrical solenoid operation and throttle controlled "kick-down."
NOTE—Overdrive is new "centered ring gear" type.
See Transmission Section for complete data.
Overdrive Control Units—*Same as Champion. See Champion 9G (1950) page for data.*
Removal: See Std. Transmission Removal data.

AUTOMATIC TRANSMISSION

OPTIONAL

Torque Converter and 3-speed automatic transmission with hydraulic control. Has mechanical parking lock and Anti-Creep device which holds brakes applied when car standing and ignition "on."
See Transmission Section for complete data.
Lubrication—Check oil level every 1000 miles and maintain oil level at "Full" mark on dip stick. Drain and refill every 15000 miles. **Use only premium type 10W engine oil** (or SAE 10-10W).
Capacity—Approximately 11½ quarts.
Checking Oil Level—Oil must be warm (set parking brake, place selector lever in "L" position, idle engine until normal operating temperature reached). Remove inspection hole cover in front floor carpet over transmission case, clean all dirt from around inspection hole, check oil level with dip stick gauge. Add oil as required to bring level up to "FULL" mark on dipstick (1 pint between Low and Full).
►*CAUTION—Do not fill above FULL mark.*
Draining & Refilling—*See "Studebaker Automatic Transmission" in Transmission Section.*
Linkage Adjustment—*See "Studebaker Automatic Transmission" in Transmission Section.*
Removal: *See "Studebaker Automatic Transmission" in Transmission Section.*

UNIVERSALS

Spicer Model 1268-111X (Front & Rear), 1261-102X (intermediate). Needle bearing type. Three used with intermediate universal at propeller shaft support bearing on crossmember (see Propeller Shaft).
See Universals Section for complete data.
Propeller Shaft & Support Bearing: Two shafts used: 1) Front Shaft with intermediate universal yoke. 2) Rear Shaft with slip-joint on forward end at intermediate universal.
Propeller Shaft & Support Bearing Removal & Servicing—*See Studebaker Special Data.*

REAR AXLE

Spicer Salisbury Model 41-2. Semi-floating, Hypoid Gear type with Hotchkiss Drive.
See Rear Axle Section for complete data.
Ratio—4.09-1 Std., 4.55-1 Optl. (Std. with Overdr.).
Ratio (with Automatic Trans.)—3.54-1
NOTE—Rear axle ratio stamped on plate attached to axle by cover capscrew and also on gears.
Backlash—.003-.006". Shim adjustment.
Removal: Remove hub caps, take out cotter pin from axle nut, loosen rear wheel nuts. Place car on stands on frame just ahead of rear springs. Remove wheels, hubs and drums. Disconnect hand brake cable. Take out backing plate bolts from backing plates, free hydraulic brake line from axle housing clips (do not disconnect brake line). Backing plates and adjusting shims can then be wired to frame (do not disconnect brake line from wheel cylinders). Disconnect rear universal (wire caps or use clamp to prevent losing rollers). Remove rear spring "U" bolts, disconnect lower shock absorber links, remove rear axle assembly from car.
Axle Shaft Removal—Remove wheel, remove wheel hub (use puller J-596-A). Take out backing plate retaining bolts, remove outer oil seal. Pull backing plate out over end of axle shaft and wire plate to frame (CAUTION—do not lose adjusting shims located between backing plate and axle housing flange). Pull axle shaft assembly (Puller HM-931).
Wheel Bearing Adjustment: Use dial indicator to check axle shaft endplay. Adjust by removing backing plate (see Axle Shaft Removal above), and adding or removing shims located between backing plate and axle housing flange (shims .003", .005", .010", .030" thick). **Endplay**—.001-.005".

SHOCK ABSORBERS

Houde (Houdaille)—Double acting, hydraulic type. Adjustable type with thermostatic control on rear.
Front—Studebaker No. 526092 (Right), 526093 (Left).
Rear—Studebaker No. 526148 (Right), 526149 (Left).
See Shock Absorber Section for complete data.
Refilling: Check at 5000 mile intervals. Fill to bottom of filler plug hole. CAUTION—Use only Houdaille Shock Absorber Fluid No. L-1404.

FRONT SUSPENSION

Independent type with coil springs.
See Front Suspension Section for complete data.
Kingpin Inclination—5¼° crosswise.
Caster——½° to —2½°. Eccentric pin adjustment.
►*NOTE*—Not more than ¾° variation between wheels.
Camber—0° to +1°. Eccentric pin adjustment.
►NOTE—½° more Camber favored on drivers side.
Toe In—1/16-1/8". Adjust **right hand tie rod only** for toe in after left hand tie rod has been adjusted for wheel straight-ahead position (with steering wheel centered) and center auxiliary tie rod has been adjusted so that steering gear arm and auxiliary steering arm parallel. **RHD Car Note**—Make toe-in adjustments on left hand tie rod.

STEERING GEAR

Ross Model T-14 Cam-and-Twin Lever type.
See Steering Gear Section for complete data.

BRAKES

Service: Lockheed (Wagner Electric) Hydraulic, Self-centering, Self-adjusting type.
See Brake Section for complete data.
Drums—Composite type. Diameter 11".
Clearance—If adjustment required, see "Lockheed (Wagner) Hydraulic Self-Adjusting Brakes" in Brake Section.
Lining—Molded type (all shoes). Width 2". Thickness 3/16". Length per wheel 22¼".
Braking Power—57% Front, 43% Rear.
Hand Brake: See Service Brake data (above).
Hill-Holder: Std. on Std. Trans. Cars. *See Brake Section*
►**Anti-Creep (for Auto. Trans. Cars)**—*See Brake Section for complete data.*

MISC. MECHANICAL

CONVERTIBLE TOP CONTROL: Electric type with motor mounted on left hand lift assembly (right hand lift assembly driven through flexible drive).
See Miscellaneous Section for complete data.
Windshield Wipers: Vacuum Cable operated type.
See Miscellaneous Section for complete data.

MODEL IDENTIFICATION

SERIAL NUMBER: Stamped on plate on left front door lock pillar post.

	South Bend	Los Angeles
1951 Numbers	8,110,001 Up	8,800,001 Up

Model Symbol & Body Number Plate—Located on engine side of dash. Model designations as follows: (C) 5 Pass. Coupe, (F) Sedan 2-Door, (Q) 3 Pass. Coupe, (S) Conv., (W) Sedan 4-Door, (Y) Land Cruiser.

ENGINE NUMBER: Stamped on boss at the top side, rear end of cylinder block, next to distributor.

1951 Numbers—V101 Up.

TUNE-UP

COMPRESSION PRESSURE: 120 to 140 lbs., at 150 RPM. (normal cranking speed). Not more than 10 lbs. variation between cylinders.

VACUUM READING: Steady 18-20" idling at 8 MPH.

FIRING ORDER: 1-8-4-3-6-5-7-2. See Diagram.

SPARK PLUG GAPS: .0325"-.0375".
Plug Type—Champion Type H-8. 14 mm.

DISTRIBUTOR: Breaker Gap—.013-.018".
Cam Angle—22-29°. Test limits with .016" gap 24-30°. *See "Delco-Remy Cam Angle" in Electrical Equipment Section.*
Breaker Arm Spring Tension—17 to 21 ozs.
Automatic & Vacuum Advance—*See Ignition Timing.*
Condenser Capacity—.18-.23 microfarad.

IGNITION TIMING: 8° BTDC.
Timing Procedure—*See Ignition Timing.*
Timing Marks—Vibration Dampener mark "IGN/" aligned with pointer on gear case cover.

CARBURETION:
Idle Setting—Initial setting 1¾ turns open, final setting midway between missing & rolling points. Adjust both screws alike, turn screws in for leaner mixture.
Idle Speed (Std. Trans.)—550-600 RPM. Equivalent to 8 to 10 MPH.
Idle Speed (Auto. Trans.)—500-550 RPM., with selector lever in "N" position. Adjust by turning idle adjusting screw switch in or out (switch replaces regular stopscrew).
Float Setting—Use KMO-No. T-24971. Place the float gauge on the cover gasket with the two lugs on the tool seated in the corresponding holes in the air horn. Bend float arms so that top of vertical tool guides are flush with the top of the floats.
Accelerating Pump—Normal setting, inner hole (nearest throttle shaft). For more fuel install rod in outer hole.

FUEL PUMP PRESSURE: 4-4¾ lbs.

MANIFOLD HEAT CONTROL: Automatic thermostatic type. Blocker type valve located in right bank exhaust pipe (diverts exhaust gas from right bank through hot spot to left side of engine when closed).
Setting—To test coil spring tension, free outer end of coil spring from bracket on manifold. With valve closed, hooked end of coil should be approx. 90° from bracket at 70°F. Replace coil if incorrect.

►*NOTE*—To overcome sticking, lubricate valve shaft with kerosene and soda solution or Bendix Carburetor Cleaner. If necessary, shaft diameter can be reduced for .005" clearance in bushings.

VALVE TAPPET CLEARANCE: .012-.014" All Valves. (Engine Hot). .014-.016" All Valves (Engine Cold). This setting supersedes previous setting.

►*EXCESSIVE VALVE CLEARANCE CORRECTION*—If difficulty is encountered to maintain a tappet clearance setting, examine tappet screws and replace those having a ¼" bore in upper end. Tappet Screw, Part No. 529400 has been modified to overcome this condition. Two types of Tappet Screws are used. One type has ¼" bore and the other a 3/16" bore. Both are satisfactory for service replacement.

►*NOTE*—Self-locking tappet screws used.

IGNITION

Ignition Switch: Mitchellock. Studebaker No. 524637.
Ignition Lock—Yale & Towne.

COIL: Delco-Remy No. 1115380. Mounted horizontally on fire wall.

CONDENSER: Delco-Remy Part No. 1869704.
Capacity—.18-.23 microfarad.

DISTRIBUTOR: Delco-Remy No. 1110822. Automatic and vacuum advance type with new "center bearing" breaker plate.

►**Breaker Plate Bearing Assembly**—Plate rotates on 3 bakelite buttons on support plate with spring tension adjustment (shim washers) on underside of support plate. Pull required to move plate should be 8 ozs. min., 16 ozs. max., with breaker plate assembly out of housing.

►*NOTE—See "Delco-Remy Center-Bearing Breaker Plate Distributor" in Electrical Equipment Section.*

CONTINUED ON NEXT PAGE

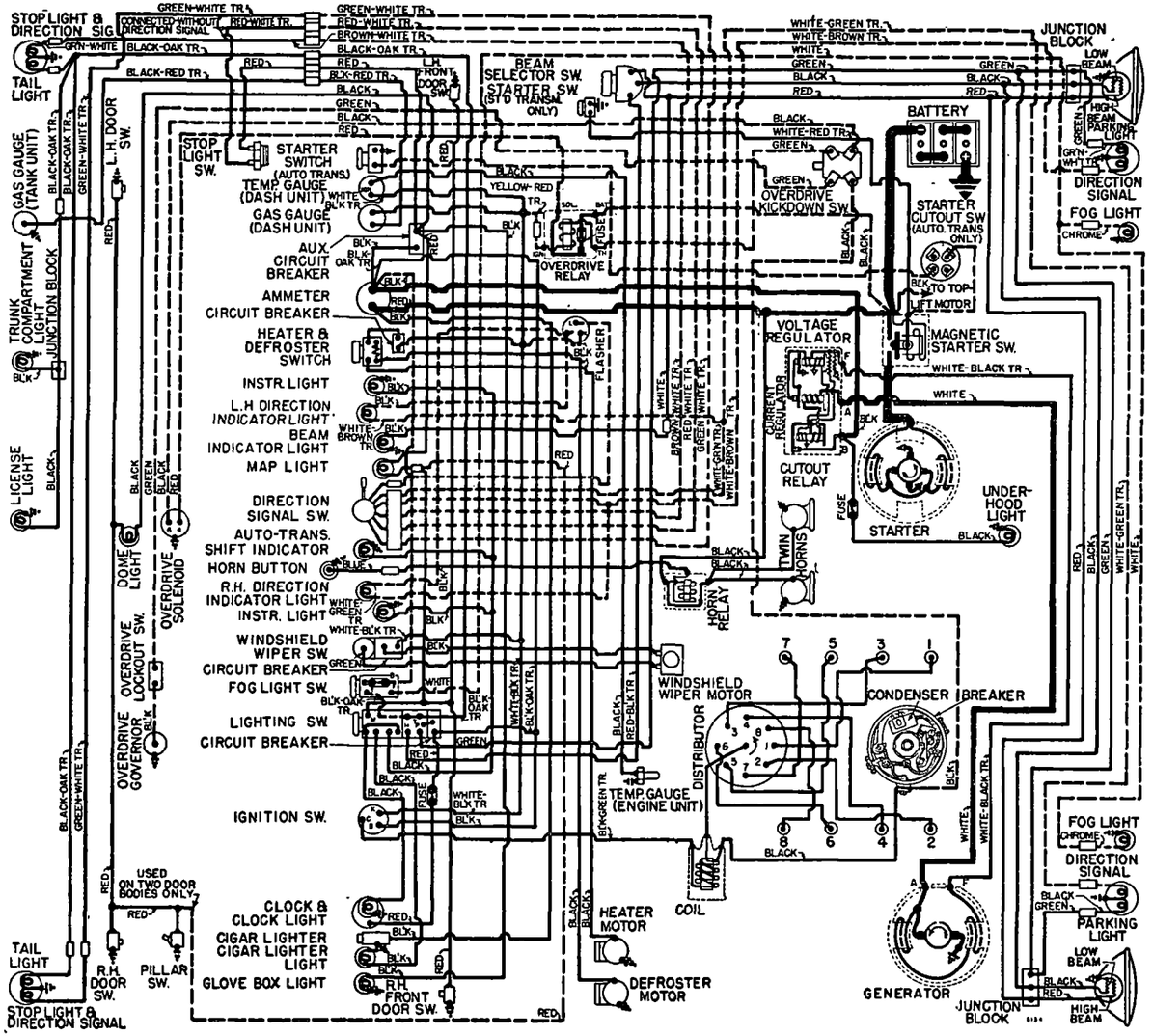

CONTINUED FR M PRECEDIN PA E

Breaker Gap—.013-.018".

Cam Angle—22-29°. Test limit with .016" gap 24-30°.

►*NOTE—See "Delco-Remy Cam Angle" in Electrical Equipment Section.*

Breaker Arm Spring Tension—17-21 ozs.

Rotation—Counter-clockwise viewed from above.

Automatic Advance

Degrees Distr.	R.P.M.	Degrees Eng.	R.P.M.
Start	250	.5	500
15	1300	30	2600

Vacuum Spark Control: Delco-Remy No. 1116058.

Plunger Travel—11/64-3/16".

Vacuum Advance

Distr. Degrees	Eng. Degrees	Vacuum (" of HG)
Start	0°	4-6"
7-9°	14-18°	12½"

Distributor Removal: Mounted between cylinder banks at rear of engine. Disconnect vacuum advance pipe and take out bolt in clamp arm to remove from engine.

Installation Note—The tongue of the distributor coupling is tapered and offset and, therefore, can be installed in the mating coupling of the intermediate shaft in only one position.

►***CAUTION—If distributor drive shaft assembly is removed or disturbed, see "Distributor Drive Shaft Assembly" in Studebaker Special Data.***

IGNITION TIMING

Std. Setting—8° BTDC. Vibration dampener marked "IGN/" at point 8° before top dead center.

Timing (with Neon Timing Light)—Neon timing light No. 890 recommended. Clip Neon light lead in series with #1 spark plug, idle engine and direct light on vibration dampener in line with pointer (at pointer on timing gear cover). Loosen clamp arm, rotate distributor until "IGN" mark on vibration dampener lines up with pointer on timing gear cover.

Timing (without Neon Timing Light)—Turn engine over to firing position for #1 piston with "IGN" mark on vibration dampener in line with pointer on timing gear cover and distributor rotor opposite #1 segment in distributor cap. Adjust distributor.

CARBURETOR

Stromberg Model AAUVB-26. 1⅛" double barrel down draft with fast idle and automatic choke. *See Carburetor Section for complete data.*

Settings (Idle Setting, Float Level, & Accelerating Pump): *See Tune-Up data.*

Automatic Transmission Throttle Linkage Adjustment —*See Studebaker Automatic Transmission in Transmission Section.*

Fast Idle: Stromberg, AAUVB Carburetor type.

Fast Idle Setting—With the stop screw on the lower step of the fast idle cam, check the fast idle adjustment by closing the choke valve until the edge of the next higher step contacts the screw. The narrow side of the choke valve should just contact a 11/32" drill held vertically against the inside surface of the air horn. To adjust the valve opening, bend the fast idle rod as required.

See Carburetion Equipment Section for complete data.

Automatic Choke: Stromberg, AAUVB Carburetor type.

Setting—Centered (inverted "V" on cover in line with boss on housing).

See Carburetion Equipment Section for complete data.

CARB. EQUIPMENT

Air Cleaner: AC. Oil-wetted type (Std.). Oil bath type (Optional).

Servicing (Oil-wetted type)—Clean and re-oil filter element at 1000 mile intervals or as required.

Servicing (Oil Bath type),—Clean filter element and oil reservoir, fill reservoir to indicated level mark with SAE No. 40 or 50 engine oil at intervals as required by operating conditions.

Fuel Pump: AC No. 1539560. Diaphragm type fuel pump.

Replacement Pump—AC No. 9560.

Pressure—4-4¾ lbs.

See Carburetion Equipment Section for complete data.

Gasoline Gauge: Stewart-Warner electric type.

Dash Unit—Studebaker No. 526738.

Tank Unit—Studebaker No. 525548.

See Carburetion Equipment Section for complete data.

BATTERY

Willard Type HDW-1-100. 6 volt, 15 plate, 100 ampere hour capacity (20 hour rate).

Starting Capacity—120 amperes for 20 minutes.

Grounded Terminal—Positive (+) to water pump attaching bolt.

Location—In engine compartment on left hand side.

STARTER

Delco-Remy No. 1107089 (Std. Trans. & Overdrive). No. 1107095 (Automatic Transmission Cars).

Armature No.—Delco-Remy 1878077 (for 1107089).

Drive—Bendix barrel type No. A1792.

Rotation—Counter-clockwise at commutator end.

Brush Spring Tension—24-28 ozs.

Performance Data

Torque	R.P.M.	Volts	Amperes
0 ft. lbs	5000	5.67	65
12 "	Lock	3.37	525

Starting Switch: Magnetic Switch, Delco-Remy No. 1494 (Studebaker 530039) mounted on dash and controlled by manual switch.

Std. Trans. Cars—Auto-Lite SW-4016 (Studebaker 519829) mounted on toeboard under clutch pedal, operated by fully depressing pedal.

Automatic Trans. Cars—Studebaker No. 527663 pull switch on instrument panel and Delco-Remy No. 1998882 combination starter cut-out and backing light switch mounted on steering column. Starter operative only with transmission selector lever in "N" or "P" positions.

GENERATOR

Delco-Remy Model 1102700. Armature No. 1880550. Two brush type with current-voltage control.

Charging Rate Adjustment—None. See Regulator.

Maximum Charging Rate—40 amperes reached at 23.6 MPH. in high gear (Std. Trans.).

Performance Data

	Amperes①	Volts	RPM.
Cold	40	8.0	1950

①—Not maximum output. See Current Regulator.

Rotation—Counter-clockwise at commutator end.

Brush Spring Tension—28 ozs. each.

Field Current—1.90-2.05 amperes at 6.0 volts.

Belt Adjustment: Hook spring type scale to the belt midway between generator and fan pulleys. Then adjust the tension on the belt so that a pull of 14 lbs. on the scale will lift the belt ½".

REGULATOR

Delco-Remy 1118392. Voltage & Current regulator.

►***NEW "1118300 SERIES"*** regulators have screw adjustment for settings and single regulator springs. *See Electrical Equipment Section for complete data.*

CAUTION—Check generator for grounded field coils and leads before changing regulator settings to correct High Charging Rate or High Voltage.

Cutout Relay

Cuts In—5.9-6.8 volts hot (set to 6.4 volts hot).

Contact Gap—.020" (same for both sets).

Air Gap—.020" (with contacts just closed).

Voltage Regulator

Setting—6.9-7.4 volts hot (set to 7.2 volts hot). Regulator is over-compensated for temperature. Should be checked with cover in place and hot.

Air Gap—.075" with armature pressed down to point where contacts just touching.

Checking and Adjustment—*See Electrical Equipment Section.*

Current Regulator

Setting—40-46 amperes hot (set to 42 hot).

Air Gap—.075" with armature pressed down to point where contacts just touching.

Checking and Adjustment—*See Electrical Equipment Section.*

LIGHTING

Headlamps: Corcoran-Brown "Sealed Beam" type. *See Electrical Equipment Section for complete data.*

Adjustment—Aim upper beam straight ahead (hot spot center 3" below lamp center height at 25 ft.).

Beam Indicator—At center of speedomter dial. Lighted whenever upper beam is in use.

Directional Signal: *See Electrical Equipment Section.*

Switches

Lighting and Instrument—Studebaker No. 530058 (with circuit breaker).

Beam Selector—Studebaker No. 519246.

Directional Signal—Studebaker No. 530468P.

MISC. ELECTRICAL

CIRCUIT BREAKERS: Lighting (On Light Switch). Studebaker No. 522014. 30 ampere thermostatic type. Protects head lamps, parking, tail, and instrument panel lamps by vibrating to limit current.

Auxiliary Circuit Breaker (On Instrument Panel). 20 ampere thermostatic type. Protects body and stop lamps by vibrating to limit current.

Convertible Top Circuit Breaker—30 ampere.

ACCESSORY CIRCUIT BREAKER: One 15 amp. type used on cars with Climatizer and Defroster.

FUSES: Clock—3 ampere. In clock lead.

Directional Signal—14 ampere. In Flasher lead.

Overdrive—20 ampere. On overdrive relay.

Glove Compartment Light—5 ampere. In lamp lead

Under Hood Light—5 ampere. In lamp lead.

Fog Lights—20 ampere On fog light switch.

HORNS: Sparton or Delco-Remy No. 1999655 (Low Note), 1999656 (High Note). Airtone twin horns with relay.

Canadian Cars—Auto-Lite HW-4035A (Low Note), HW-4036A (High Note).

Horn Current—12-15 amperes each.

Horn Relay: Delco-Remy No. 1116775.

Contacts Close—2.75-4.0 volts

Contact Gap—.025". **Air Gap** .015" (contacts closed).

ENGINE

ENGINE SPECIFICATIONS: Own make 8 cylinder "V" type valve-in-head.

Bore—3⅜". **Stroke**—3¼".

Displacement—232.6 cu. in. **Rated HP**—36.4.

Developed Horsepower—120 at 4000 RPM.

Compression Ratio—7.0-1 (Std.). 7.5-1 (Optional).

Compression & Vacuum Reading— *See Tune-Up data.*

OIL PAN REMOVAL: *See "Oil Pan Removal" in Studebaker Special Data.*

►*Not necessary to remove engine for oil pan removal.*

►**REPLACEMENT ENGINE CAUTION (For Automatic Transmission Cars):** *See "Replacement Engine" in Studebaker Special Data.*

ORIGINAL BORE AND PISTONS: *See "Original Bore & Pistons" in Studebaker Special Data.*

TIGHTENING TORQUES: *See Studebaker Special Data.*

CYLINDER HEAD INSTALLATION: *See Studebaker Special Data.*

►**Head Interchangeability**—Same cylinder head and head gasket used for right and left cylinder banks.

PISTONS: Lynite aluminum alloy. Cam ground, tin plated, full skirt "T" slot.

Weight—13.66 ozs.

Clearance—Selective fit (see Fitting Pistons).

Removal—Pistons and rods removed from above.

NOTE—Car manufacturer recommends that cylinders out of round or tapered more than .002" be reconditioned.

Fitting New Pistons: Insert .002" feeler gauge, 1" wide, between piston and cylinder wall on right side (piston T-slot toward left side of engine). Pull required to withdraw feeler should be 11-16 lbs.

Replacement Pistons: *See Studebaker Special Data.*

Installing Pistons: Install piston on rod with slot on same side as nut on piston pin clampscrew (away from oil squirt hole in rod). Install piston in cylinder with slot toward left side of engine (all pistons). See Connecting Rod Installation.

PISTON RINGS: Two compression, one oil control rings per piston, all above pin. Oil drain holes provided in oil ring groove.

Ring	Width	End Gap	Side Clearance
Comp. (#1, 2)	5/64"	.008-.016"	.0015-.002"
Oil Contr. (#3)	3/16"	.008-.016"	.0015-.002"

Installing Rings: Beveled side of compression rings (Sealed Power) up. Expander used with oil ring.

Replacement Rings: Sets furnished; Std., .020", .030", .040", Oversize. Single rings also furnished in same sizes.

PISTON PIN: Diameter .8741-.8745". Pin is locked in rod with tapered pin and lock nut.

Pin Fit in Piston—.0001-.0003" clearance or light finger push fit at room temperature (70°F.).

Pin Removal and Installation: *See Studebaker Special Data.*

Replacement Pins: Std., .0025" & .005" Oversize. Use Hone PH-1 to obtain proper piston pin fit.
NOTE—Replacement pistons fitted with pins.

CONNECTING ROD: Length 6⅝". **Weight**—23.71 ozs
Crankpin Journal Diameter—1.99925-2.00025".
Lower Bearing—Interchangeable steel-backed, micro-babbitt lined type. No shims.
Clearance—.00005-.00215". **Sideplay**—.007-.012".

Bearing Adjustment: None (no shims). Replace bearings. Do not file rods or caps.

NOTE—Make certain that small tongue on bearing shells engage grooves. Palnut used on bolt nuts.

Replacement Bearings: Bearings furnished; Std., .001", .005", .010", .020" Undersize.

Installing Rods: Number on rod and bearing cap must be on same side and rod installed in same numbered cylinder with nos. down toward oil pan (toward right on right bank rods, toward left on left bank rods) and oil squirt hole on all rods toward right of engine. Rods are offset with widest half of bearing toward rear (right bank), toward front (left bank).

►**New (Unmarked) Rod Note**—Check right and left bank rods by holding rod up (piston pin end up, oil squirt hole toward you). Left bank rod offset (widest half of bearing) will be toward right, right bank rod offset will be toward left. Mark rods by stamping number on rod and cap on oil squirt hole side (right bank rod), opposite side (left bank rod).

CAUTION—Bearing cap must be assembled on rod with groove in cap and rod on same side.

CRANKSHAFT: 4 bearing, 5 integral counterweights. Vibration dampener mounted on forward end.

Vibration Dampener—*See Studebaker Special Data.*

Journal Diameters—2.4995-2.5000".

Bearings—Removable steel backed babbitt lined type. No shims.

Clearance—.0006-.0027".

Rear Bearing Oil Seals—Three seals are used. Cork between the cap and the block, Neoprene between the cap face and the block and the "Brummer" type seal used around the crankshaft journal.
See "Rear Main Bearing Oil Seal" in Studebaker Special Data.

Bearing Adjustment: None (no shims). Replace bearings, do not file caps.

Replacement Bearings: Furnished as sets or single bearings in Std. Size and .001", .010", .020", .030" Undersize.

End Thrust: Taken by thrust plate assembled between front main bearing and crankshaft gear. Controlled by shims between thrust plate and face of main bearing journal.

End Play—.003-.006".

CAMSHAFT: Five bearing. Helical Drive gear

Journal Diameters—#1, 1.86974-1.87075"; #2, 1.85375-1.85475"; #3, 1.83875-1.83975"; #4, 1.82275-1.82375"; #5, 1.24475-1.24575".

Bearings—Split steel-backed, babbitted bushings.

►*NOTE—Oil hole in bushings must be aligned with oil holes in block.*

Clearance—.00075" to .00225" (#1), 0.001" to .00275" (all others).

Cam Shaft Removal: *See "Cam Shaft & Bearings" in Studebaker Special Data.*

End Thrust: Taken by a thrust plate located between the front camshaft bearing and the camshaft gear.

Endplay—.005" to .007". *See "Camshaft & Bearings" in Studebaker Special Data.*

Timing Gears: Crankshaft gear, cast-iron. Camshaft gear, Celeron with steel hub. **Backlash**—.001-.003".

Replacement Gears—Camshaft gear furnished in two sizes: Standard (marked "S"), High-Limit (marked "H"). Crankshaft gear Std. size only.

Timing Gear Removal and Installation—*See "Timing Gears" in Studebaker Special Data.*

Camshaft Setting: Mesh marked tooth of camshaft gear between two marked teeth on crankshaft gear.

Note—This is the position for #6 cylinder to fire.

VALVES:	Head Diam.	Stem Diam.	Length
Intake	1 13/32"	11/32".	
Exhaust	1 9/32"	11/32".	

	Seat Angle	Lift	Stem Clearance
All Valves	45°	23/64".	.0015-.0035"

NOTE—Rubber seal rings installed on all valve stems (seated in groove on valve stem within spring retainer).

Valve Stem Seal Installation—*See valve spring installation data under "Valve System" in Studebaker Special Data.*

Valve Guides: Pressed in head from underside.

Guide Removal & Installation—*See "Valve System" in Studebaker Special Data.*

Valve Springs: Pressure should be 130 lbs. ± 5 lbs. compressed to 1¾" (valve open position).

NOTE—Dampers used on bottom of all springs.

Spring Removal & Installation—*See "Valve System" in Studebaker Special Data.*

Rocker Arms: Arms are pressure-lubricated from

CONTINUED ON NEXT PAGE

ENGINE

C NTINUED FR M PRECEDIN PAGE

hollow rocker arm shafts and have oil lead to drilled passage in adjusting screw for pushrod lubrication.
Rocker Arm & Shaft Removal & Installation—*See "Valve System" in Studebaker Special Data.*

Valve Lifters: Straight barrel type. Remove from above (not necessary to remove camshaft).
Replacement Lifters—Std., & .0005", .001" Oversize.
CAUTION—When lifters removed, make certain they are re-installed in original positions.

VALVE TIMING

VALVE TAPPET CLEARANCE: .012-.014" All Valves. (Engine Hot). .014-.016" All Valves (Engine Cold). This setting supersedes previous setting.

►*EXCESSIVE VALVE CLEARANCE CORRECTION*—If difficulty is encountered to maintain a tappet clearance setting, examine tappet screws and replace those having a ¼" bore in upper end. Tappet Screw, Part No. 529400 has been modified to overcome this condition. Two types of Tappet Screws are used. One type has ¼" bore and the other a 3/16" bore. Both are satisfactory for service replacement.
NOTE—Self-locking tappet adjusting screws used. Tappet screw tension should be 30 in. lbs.

Valve Timing: See Camshaft Setting above.
Intake Valves—Open 11° BTDC. Close 53° ALDC.
Exhaust Valves—Open 50° BLDC. Close 14° ATDC.
Valve Timing Check—Set No. 1 Intake valve at .020" clearance. Turning engine with No. 6 cylinder on compression stroke, the intake valve should just start to open when the mark "IN-OP 1-6" on front dampener lines up with pointer.

LUBRICATION

Engine Oiling System: Pressure to crankshaft, connecting rods, camshaft bearings and valve lifters. Timing gears lubricated by oil by-passed through a relief valve from the front main bearing. Oil pump mounted on rear main bearing cap.
Crankcase Capacity—6 quarts.
Normal Oil Pressure—40 lbs. at 28 MPH.
Oil Pressure Regulator—Located on the right side at the front of the cylinder block slightly above the crankcase flange. Opens at 40 lbs. Not adjustable. If necessary to increase oil pressure, install new spring.

Oil Pan Removal: *See Studebaker Special Data.*

Oil Pump: Helical gear type. Mounted on rear main bearing cap.
Oil Pump Removal & Installation—*See "Oil Pump" in Studebaker Special Data.*

Oil Pressure Gauge: Stewart-Warner Bourden Tube (not electric).

Crankcase Ventilation: Filter element in oil filler cap (air intake) and breather tube at right rear of engine (air outlet). Air enters crankcase through filler tube and passes out through hole at rear into valve lifter chamber, then forward and through hole in cover baffle plate, to rear through cover and out through breather pipe.
Servicing—Wash both filter elements in kerosene and re-oil at 1000 mile intervals or more often if required by operating conditions.
►**Breather Tube Filter Note**—Remove filter element (retained in lower end of tube by cotter pin) for servicing.

COOLING

Cooling System: Positive circulation with pump mounted on front of block with fan.
Capacity—17.25 qts. (19 qts. with Climatizer).

Water Pump: Packless type. No lubrication required.
See Water Pump Section for complete data.
Removal—Remove fan belt and fan and pulley assembly. Remove all hoses from pump and take out the 4 capscrews holding pump to block. Remove pump and 4 gaskets.
Belt Adjustment—*See Generator Belt Adjustment.*

Thermostat: Bellows type. Located in water outlet in pump body.
Setting—151°-155°.

Temperature Gauge: Stewart-Warner electric type.
Dash Unit—Studebaker No. 526739.
Engine Unit—Studebaker No. 530127 (with 529456 Adapter). Located at the rear of the left bank cylinder head in the water passage cover plate.

CLUTCH

Borg & Beck Model 9A7. Cover Assy. No. 943. Single plate, dry disc type with Borglite Driven Member.
See Clutch Section for complete data.

►*CLUTCH OPERATING SHAFT RATTLE CORRECTION*—*See "Clutch Notes" in Studebaker Special Data.*

Facings—Composition, 2 required. I.D. 6", O.D. 9¼", Thickness ⅛".

Adjustment: Pedal free travel ½" to 1". To adjust, unhook pullback spring on outside of frame rail, loosen locknut at adjusting clevis and remove clevis pin at inner end of pedal shaft, turn clevis on rear end of pedal shaft-to-operating shaft rod for correct clearance, reassemble linkage.
Hill-Holder Note—Check setting whenever clutch pedal adjusted and adjust Hill-Holder to release just as clutch engages. Adjusting nut and locknut at end of Hill-Holder operating rod.

Clutch Housing Removal: Remove distributor, remove starter and tie up out of the way (not necessary to disconnect cables), remove front floor plate, take out upper clutch housing capscrews. Remove transmission (see Transmission). Take out clevis pin in clutch operating shaft-to-release shaft sleeve, pull operating shaft out and remove sleeve. Remove parking brake cable shield clip, unhook brake pedal pullback spring from cross-member, support engine weight on jack under rear end of oil pan (use block of wood on jack to prevent damage to pan), take out engine rear support bolts, remove lower support insulators. Take out clutch operating shaft support bracket bolts. Remove cross-member. Loosen exhaust pipe flange nuts at manifold, remove exhaust pipe support bracket-to-clutch housing bolts, loosen clamp and swing bracket out of the way. Take out all clutch housing bolts, remove clutch housing.

►**Installation Caution**—Align mounting holes of the cross-member and the frame and install the retaining bolts—do not tighten the bolts until the operating shaft support bracket bolts are installed.

Clutch Removal: Remove clutch housing (above), remove six screws evenly to relieve pressure, lift off clutch assembly and driven member.

TRANSMISSION

Warner Model AS53-T86E (Std.), AS54-T86E with Model R10B type Overdrive (Optional). All helical gear type. Constant-mesh, synchro-mesh (Second & High), sliding gear (Low & Reverse).
See Transmission Section for complete data.

Transmission Control—Remote control type with gear shift lever mounted on steering column.
See Transmission Section for complete data.

Removal: Drain transmission. Disconnect hand brake cable and move out of way for clearance. Disconnect front universal at transmission (wire caps or use clamps to prevent losing rollers). Take out center support bearing mounting bolts. Push front shaft and support to rear (will slide on splines on rear shaft). Disconnect shift rods from levers on case and speedometer cable (remove speedometer pinion). On Overdrive transmission disconnect all control wires and cable. Take out transmission to clutch housing capscrews, pull transmission straight back and remove from car.

OVERDRIVE

Warner R10 Type (part of AS54-T86E Transmission). New governor controlled type (no centrifugal pawls) with electrical solenoid operation and throttle controlled kick-down.
NOTE—Overdrive is new "Centered Ring Gear" type.
See Transmission Section for complete data.
Overdrive Solenoid—Warner Model No. 3AR10B-62, Studebaker No. 521429.
Overdrive Governor—Warner Model No. AR10B-72, Studebaker No. 520454.
Control Relay—Auto-Lite HRT-4001, Studebaker No. 523297.
Throttle Kick-down Switch—Studebaker No. 529479.
Lock-out Switch—Studebaker No. 521436.
Fuse—20 ampere. On overdrive relay.

Removal: See Std. Transmission removal data.

AUTOMATIC TRANSMISSION

Torque converter and 3 speed automatic transmission with hydraulic control. Has mechanical parking lock and Anti-creep device which holds brakes applied when car standing and ignition "on."
See Transmission Section for complete data.

Lubrication—Check oil level every 1000 miles and maintain oil level at "Full" mark on dip stick. Drain and refill every 15,000 miles. **Use only premium type 10W engine oil** (or SAE 10-10W).

Capacity—11½ qts.

Checking Oil Level—Oil must be warm (set parking brake, place selector lever in "L" position, idle engine until normal operating temperature reached). Remove inspection cover on front floor carpet over transmission case, clean all dirt from around inspection hole, check oil level with dip stick gauge. Add oil as required to bring level up to "FULL" mark on dip stick (1 pint between "LOW" and "FULL").

►*CAUTION—Do not fill above "FULL" mark.*

Draining and Refilling—*See "Studebaker Automatic Transmission" in Transmission Section.*

Linkage Adjustment—*See "Studebaker Automatic Transmission" in Transmission Section.*

Removal: *See "Studebaker Automatic Transmission" in Transmission Section.*

UNIVERSALS

Spicer Model 1268-111X (Front & Rear), 1261-102X (Intermediate). Needle type bearing. Three used with intermediate universal at propeller shaft support bearing on crossmember (see Propeller Shaft). *See Universals Section for complete data.*

Propeller Shaft and Support Bearing: Two shafts used. Front shaft with intermediate universal yoke. Rear shaft with slip-joint on forward end at intermediate universal.

Propeller Shaft & Support Bearing Removal & Servicing—*See Studebaker Special Data.*

REAR AXLE

Spicer Salsbury Model 41-2. Semi-floating, Hypoid Gear type with Hotchkiss drive.
See Rear Axle Section for complete data.

Ratio—4.09-1 Std., 4.55-1 Optional. (Std. with Overdrive).

Ratio with Automatic Transmission—3.54-1.

NOTE—Rear Axle Ratio stamped on plate attached to axle by cover capscrew and also on gears.

Backlash—.003-.006". Shim adjustment.

Removal: Remove hub caps, take out cotter pin from axle shaft nut, loosen rear wheel nuts. Place car on stands on frame just ahead of rear springs. Remove wheels, hubs and drums. Disconnect hand brake cable. Take out backing plate bolts from backing plate, free hydraulic brake lines from axle housing clips (do not disconnect brake lines). Backing plates and shims can then be wired to frame (do not disconnect brake lines from wheel cylinders). Disconnect rear universal (wire caps or use clamps to prevent losing rollers). Remove rear spring "U" bolts, disconnect lower shock absorber links, remove rear axle assembly from car.

Axle Shaft Removal—Remove wheel, remove wheel hub (use puller J-596-A). Take out backing plate retaining bolts, remove outer oil seal. Pull backing plate out over end of axle shaft and wire plate to frame *(CAUTION—do not lose adjusting shims located between backing plate and axle housing flange).* Pull axle shaft assembly (Puller HM-931).

Wheel Bearing Adjustment: Use dial indicator to check axle shaft end-play. Adjust by removing backing plate (see Axle Shaft Removal above), and adding or removing shims located between backing plate and axle housing flange (shims .003", .005", .010", .030" thick).

Endplay—.001-.005".

SHOCK ABSORBERS

Houde & Monroe—Direct acting, hydraulic type.

Front—Studebaker No. 527924.

Rear—Studebaker No. 530766.

FRONT SUSPENSION

Independent type with coil springs and Direct Acting shock absorbers located within the springs.
See Front Suspension Section for complete data.

Kingpin Inclination—5¼° crosswise.

Caster—Neg. 1° to Neg. 2½°. Not more than ¾° variation between wheels. Eccentric pin adjustment.

Camber—0° to Pos. 1° with ½° **more camber favored on driver's side.** Eccentric pin adjustment.

Toe-out on Turns—Inner wheel turned 23½° ± 1°, outer wheel 20°.

Toe-In—1/16" to 1/8". **Adjust right hand tie rod only** for toe-in after left hand tie rod has been adjusted for straight-ahead position (with steering wheel centered) and center auxiliary tie rod has been adjusted so the steering gear arm and auxiliary steering arm parallel. **RHD Car Note**—Make toe-in adjustments on left hand tie rod.

STEERING GEAR

Ross Model T-14 Cam-and-Twin Lever type.
See Steering Gear Section for complete data.

BRAKES

Service: Lockheed (Wagner Electric) Hydraulic, Self-centering, Self-adjusting type.
See Brake Section for complete data.

Drums—Composite type. Diameter 11".

Clearance—If adjustment required, *see "Lockheed (Wagner) Hydraulic Self-Adjusting Brakes" in Brake Section.*

Lining—Molded type (all shoes). Width 2". Thickness 3/16". Length, (Front wheels) 22¼", (Rear wheels) 18½".

Braking Power—57% Front, 43% Rear.

Hand Brake: See Service Brake data above.

Hill-Holder: Std. on Std. Trans. Cars. *See Brake Section for complete data.*

Adjustment—*See Studebaker Special Data.*

Anti-Creep (for Automatic Transmission Cars)—*See Brake Section for complete data.*

MISC. MECHANICAL

CONVERTIBLE TOP CONTROL: Electric type with motor mounted on left hand lift assembly (right hand lift driven through flexible drive).
See Miscellaneous Section for complete data.

CYLINDER HEAD
ALL MODELS

CYLINDER HEAD: Installation—Use a torque indicating wrench to tighten cylinder head stud nuts and capscrews, tighten in correct sequence as shown

Tightening Torque—See Tightening (Torque Wrench) Specifications below.

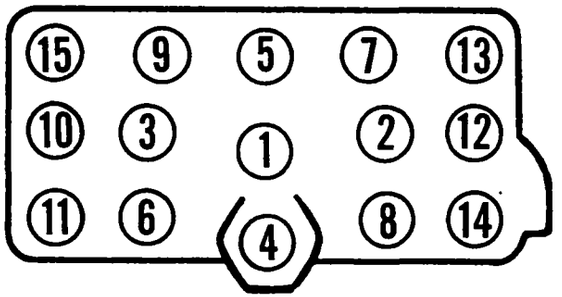

WILLYS FOUR

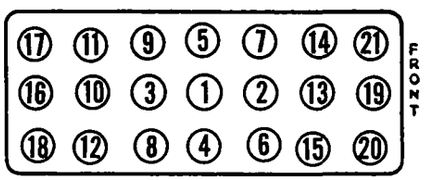

WILLYS SIX

TIGHTENING SPECIFICATIONS
ALL MODELS

TIGHTENING TORQUES: When tightening capscrews or bolt nuts retaining the parts listed below, use a torque indicating wrench and tighten to tensions listed:

	Ft.Lbs.	In.Lbs.
Cylinder Head Capscrews	65-75	780-792
Cylinder Head Stud Nuts	60-65	720-780
Main Bearing Capscrews	65-70	780-840
Con. Rod Bolts (4 cyl.-7/16")	50-55	600-660
Con. Rod Bolts (4 cyl.-⅜")	35-40	420-480
Con. Rod Bolts (6 cyl.)	25-30	300-360
Flywheel Attaching Bolts	36-40	432-480
Rear Engine Mounting Bolts	38-42	456-504
Manifold Attaching Stud Nuts (Intake & Exhaust)	31-35	372-420
Generator Bracket Bolts	31-35	372-420
Starter Mounting Capscrews	20-25	240-300
Universal Joint "U" Bolts	15-18	180-216
Spring Center Clip "U" Bolts	50-55	600-660
Spring Pivot Bolt Nut	27-30	324-360

ORIGINAL BORE & PISTONS
ALL MODELS

BORE & PISTON SIZES: Engines originally equipped at factory with special oversize pistons may be identified by code letter stamped on engine following the engine number:

"B" Pistons are .010" Oversize.

"AB"—Pistons .002" Oversize. Main and connecting rod bearings are Undersize (see Original Bearing Sizes following).

4 CYL. ENGINE

STANDARD BORE & PISTON SIZE VARIATION: bores and pistons are graded in four .0005" steps as shown in table below and are marked as follows:

Piston—Letter stamped on piston head.

Cylinder Bore—Letter stamped on top of block between valve ports and bore at center.

4 Cylinder Bore & Piston Sizes

Letter	Cylinder Bore Size	Piston Size
A	3.1255-3.1250"	3.1235-3.1230"
B	3.1260-3.1255"	3.1240-3.1235"
C	3.1265-3.1260"	3.1245-3.1240"
D	3.1270-3.1265"	3.1250-3.1245"

6 CYL. ENGINE

STANDARD BORE & PISTON SIZE VARIATION: Cylinder bore and pistons are graded in six .0004" steps and are marked as follows:

Piston—Letter stamped on piston head.

Cylinder Bore—Similar letter stamped on top of block between valve ports and bore.

ORIGINAL BEARING SIZES
ALL MODELS

MAIN & CONNECTING ROD BEARING SIZES: Engines originally equipped with special undersize mains and connecting rod bearings can be identified by code letter stamped on engine following the engine number:

"A"—Main & Con. Rod Bearings .010" Undersize.

"AB"—Main & Con. Rod Bearings .010" Undersize and Cylinders Oversize (see Orig. Bore and Pistons).

"D"—Main Bearings .010" Undersize.

"E"—Connecting Rod Bearings .010" Undersize.

CRANKSHAFT & MAIN BEARINGS
ALL MODELS

CRANKSHAFT SERVICING: Bearing Replacement—►*CAUTION*—4 Cyl. engine must be removed from car for bearing replacement (bearings "dowled" in case and crankshaft must be taken out to remove and install bearings). 6 Cyl. bearings not doweled in this manner.

Make certain that oil holes in bearings line up with oil holes in crankcase. On 4 cylinder, see that bearings fit snugly on dowel pins in crankcase and bearing caps.

Rear Bearing Oil Seal—Consists of a wick type packing installed in grooves in bearing cap and crankcase. To install new packing, insert packing in groove, use round piece of wood or steel to "roll" packing into groove, working from both ends toward center. With packing firmly seated in groove, cut off ends flush with surface. NOTE—Crankshaft must be removed to install packing in upper (crankcase) half of bearing.

Rear Bearing Cap Seal—Bearing cap sealed by cylindrical rubber packing strips inserted in holes between cap and case. When installing bearing cap, coat upper face lightly with sealing compound, insert new packing strips after cap is in place. Packing strips should protrude ¼" to provide proper compression when oil pan installed. CAUTION—Do not cut off this protruding portion of the packing.

Front (Timing Cover) Oil Seal—Braided asbestos type impregnated with graphite and oil. Seal is installed in recess in inner face of timing chain cover and retained by steel retainer. To remove seal, pry out retainer and seal assembly.

CAUTION—Always use new steel retainer when installing new seal.

FLYWHEEL

Flywheel Removal—Mounted on crankshaft flange by two special dowel bolts and four special head bolts. Whenever flywheel removed, make certain that arrow on flywheel center lines up with arrow on crankshaft flange when re-installed (to insure correct position of timing marks), tighten bolt nuts with a torque indicating wrench to 36-40 ft.lbs. and check flywheel run-out when installed. Run-out must not exceed .008".

New Flywheel or Crankshaft Installation—Taper dowel bolts should be replaced with new special snug fitting bolts supplied to eliminate necessity of reaming the special tapered holes. Assemble new parts as follows: Install flywheel on crankshaft (lining up arrows on both parts) using the four straight bolts previously used, tighten these bolts securely. Drill out tapered bolt holes with a 35/64" drill, ream these holes with a 9/16" (.5625") straight reamer, install special bolts, Part No. 116295 (with No. 52330 Lockwasher and No. 52804 Nut), in these holes and discard the tapered dowel bolts used previously. Tighten bolts to 36-40 ft.lbs. and check flywheel run-out (.008" max.).

CAMSHAFT & BEARINGS
ALL MODELS

CAMSHAFT SERVICING: Removal—Drain radiator and cylinder block, remove radiator and grille, cylinder head, manifolds, valves and valve springs. Remove oil pump, fuel pump, oil pan, crankshaft pulley (use puller), fan, governor drive belts (if equipped) and fan assembly. Remove timing gear cover, remove camshaft gear and thrust plate, block up all valve lifters (can be tied up with string to manifold studs). Remove camshaft through front of engine.

Gear Puller Tool—Use Puller Tool No. W-172 to remove gear on engines equipped with timing gears.

Camshaft Front Bearing—Consists of a steel-backed, babbitt-lined bushing which takes thrust. When installing this bushing, make certain oil hole lines up with drilled oil hole in crankcase, stake bearing in place to prevent turning in service.

Camshaft Thrust Plate—Thrust plate assembled behind gear with spacer assembled behind plate. If required, a thin shim can be installed behind spacer if too little clearance, or spacer can be dressed to provide greater clearance.

OIL PUMP
ALL MODELS

ROTOR TYPE OIL PUMP SERVICING: Pump mounted externally on left hand side of crankcase.

Pump Removal—Remove mounting screws in pump body flange, slide pump assembly out. To dis-

assemble pump, remove cover screws and lockwashers, lift off cover, remove pump outer rotor. To remove shaft and rotor assembly, file off end of pin in drive gear hub, drive pin through shaft using a small drift, remove gear, withdraw shaft and rotor from housing. To remove oil regulator, remove hexagonal-headed plug on side of housing, withdraw regulator spring and plunger. CAUTION—Do not lose adjusting shims located within plug above spring.

Pump Servicing & Assembly—Replace rotors if clearance between inner and outer rotor excessive, or if rotor bearing surface is worn or scratched. Use new body and cover gaskets. Make certain that driving gear pin is securely installed.

Pump Installation—Turn flywheel to #1 piston firing position with flywheel mark "IGN" centered in inspection hole in right front face of flywheel housing below starter. Turn distributor shaft to #1 firing position with distributor rotor finger opposite #1 terminal in distributor cap. Hold oil pump in same relative position as when installed on engine, turn pump shaft until tongue offset is upward (widest part of shaft down) and line up gear retaining pin with right hand side of slot in pump body. Slide pump into place on mounting studs, recheck rotor position. NOTE—If distributor rotor not at #1 terminal with pump installed, remove pump, turn shaft as required, and re-install.

STEERING KNUCKLE

4-WHEEL DRIVE MODELS

Steering Knuckle Bearings: The steering knuckle is mounted on two "stub" kingpins with Timken roller bearings in ball ends of axle housing. Bearings are adjustable by adding or removing shims located under kingpin bearing caps (upper cap integral with steering arm). Disassemble bearings as follows:

Disassembly—With axle shaft and universal joint out, remove 8 screws holding oil seal retainers in place on inner face of knuckle support, remove oil seal retainer halves. Remove four nuts and lockwashers on lower bearing cap, remove bearing cap and bearing adjusting shims (under cap). Remove four nuts and lock washers on upper bearing cap (steering arm), remove brake hose shield, steering arm and bearing adjusting shims (under steering arm). Remove steering knuckle (*CAUTION*—Do not allow lower bearing cone and roller assembly to fall when knuckle is pulled off).

Bearing Adjustment—Install steering knuckle on axle housing (reverse order of disassembly directions) without the oil seal, placing one each of the following shims under both the upper and lower bearing caps—.003", .005", .010", .030" (total shim thickness at each end .048"), tighten bearing cap stud nuts securely. Then check bearing tension by hooking spring scale in tie rod hole at end of steering arm and noting pull required to turn steering knuckle on axle end. This pull or bearing tension should be 25-35 in. lbs. with oil seals out. Adjust by adding or removing shims under bearing caps. *CAUTION*—Total shim thickness under upper and lower bearing caps must be equal.

Oil Seal Replacement—Felt type mounted in metal retainers bolted on inner face of steering knuckle. When replacing oil seal, make certain that spherical surface of axle housing is not scored or scratched, (smooth down any roughness with emery cloth), bolt seal retainer halves on housing using lockwashers under mounting screw heads, make certain that felts have good fit at center joint.

SPRING SHACKLES

4-WHEEL DRIVE MODELS

SPRING SHACKLES: 473-4WD, 473-HT, 4X4-73—Front end of front springs are fitted with a "U" type shackle. Rear end of rear springs use a conventional type shackle. The rear end of the front springs and the front end of the rear springs are bronze bushed and pivoted on bolts in brackets mounted on the frame.

Rubber Bushed Shackles: 473-SW, VJ, SD—Rubber bushed shackles and pivot bolts are used at both ends of the rear springs. ***DO NOT LUBRICATE.***

Pivot Bolt Installation—Install bolts with head and grease fitting toward outside, tighten bolt nut with a torque indicating wrench to 27-30 ft.lbs.

"U" Shackle Installation—Install grease seal retainer and grease seal on each leg of "U" shackle, insert shackle through inner face of frame hanger and spring eye (threaded bushings installed with hexagonal head toward outside), hold shackle tightly against frame and start upper bushing on shackle (see Bushing Caution below) taking care that bushing is not cross-threaded on shackle or in spring eye. Turn bushing on shackle approximately halfway, then start lower bushing similarly, turn both bushings in alternately and evenly until heads of bushings are snug against frame bracket and bushing in spring eye is 1/32" away from spring (measured from inside hexagonal head to spring). Lubricate bushing with high-pressure lubricant, check shackles for binding by flexing spring. If shackle is tight, remove and re-install bushing.

MODEL IDENTIFICATION

	1951 Serial No. Prefix
1950-51 Models	451-AA1
473-SW Station Wagon	451-FA1
4X473 4-Whl. Drive Sta. Wagon	451-BA1
473-VJ Jeepster	451-CA1
473-SD Sedan Delivery	451-DA1
473-HT Half-Ton Trk—Chassis	451-DA1
Cab & Chassis	451-DB1
Pickup	451-DC1
Platform Stake	451-DD1
473-4WD 4-Whl. Dr. Trk.—Chassis	451-EA1
Cab & Chassis	451-EB1
Pickup	451-EC1
Platform Stake	451-ED1

SERIAL NUMBER: (473-SW & SD, 4x473) On floor riser to left of driver's seat. (473-VJ) On under edge of cowl above glove box door. (473-HT & 4WD) On left side of dash panel.
1950 Nos.—10,001 Up (all models). No prefixes.
1951 Nos.—10,001 Up with prefix for each model as listed above.

ENGINE NUMBER: Stamped on upper front corner of engine on right side.
1950 Nos.—P-10,001 Up (except Trucks), T-10,001 Up (Trucks).

TUNE-UP

COMPRESSION PRESSURE: 135 lbs. at 185 RPM. (Std. 7.4-1 Head).

VACUUM READING: Steady 17-21" idling.

FIRING ORDER: 1-3-4-2. See diagram.

SPARK PLUG GAPS: .030".
Plug Type—Auto-Lite AN-7 or Champ. J-7. 14 mm.

DISTRIBUTOR: Breaker Gap—.020" (.018-.022")
Cam Angle—41° (closed).
Breaker Arm Spring Tension—17-20 ozs.
Automatic & Vacuum Advance—*See Ignition.*
Condenser Capacity—.20-.25 mfd. (IGW-4189A Distr.), .21-.25 mfd. (IAT-4008 Distr.).

IGNITION TIMING: TDC.
Timing Procedure—*See Ignition Timing.*
Timing Mark—Flywheel mark "TC/" (TDC setting) centered in inspection hole in right front face of housing below starter.

CARBURETION:
Idle Setting—Idle screw 1-2 turns open (turn screw out for richer mixture).
Idle Speed—600 RPM.
Float Level—5/16" top of float to gasket seat on cover with valve seated (cover assembly inverted). CAUTION—Do not compress spring in valve stem (allow float to hang freely on inverted cover).
Accelerating Pump—No seasonal adjustment.

Fuel Pump Pressure: 4½ lbs. maximum.

MANIFOLD HEAT CONTROL: No control valve used. Intake manifold is in cylinder head, controlled by head temperature.

VALVE TAPPET CLEARANCE: Intake .018". Exhaust .016" COLD.

IGNITION

IGNITION SWITCH: Douglas or Mitchellock Switch. Willys No. 641720.
Lock Cylinder—Briggs & Stratton No. 50184, Willys No. 664715.
Key Series—C250 to C499. **Groove**—No. 3.

COIL: Auto-Lite No. IG-6009 (First Cars), CR-6009 (Later Cars). On right side of engine.
Ignition Current—2.5 amperes idling, 5 stopped.

CONDENSER: Auto-Lite Part No. IGB-1025 (IGW-4189A Distr.), IAT-3076L (IAT-4008 Distr.).
Capacity—.20-.25 mfd. (IGW-4189A), .21-.25 mfd. (IAT-4008).

DISTRIBUTOR: Auto-Lite Model IGW-4189-A (First Cars), IAT-4008 (Later Cars). Full automatic advance type with separate vacuum spark control unit linked to distributor assembly.
Breaker Gap—.020". Limits .018-.022".
Cam Angle—41° (closed).
Breaker Arm Spring Tension—17-20 ozs.
Rotation—Counter-clockwise viewed from above.

Automatic Advance

Degrees	Distr. R.P.M.	Degrees	Eng. R.P.M.
Start	300	0	600
1	400	2	800
4	650	8	1300
10	1800	20	3600
11	2000	22	4000

Vacuum Spark Control Unit: Auto-Lite No. VC-4010A (IGW-4189A Distr.), IAT-2023LD (IAT-4008 Distr.). Separate unit linked to advance plate.

Vacuum Advance

Distr. Degrees	Eng. Degrees	Vacuum (" of HG)
Start	0°	4¾"
1°	2°	5⅜"
3°	6°	6¾"
4°	8°	7⅜"
5°	10°	8"

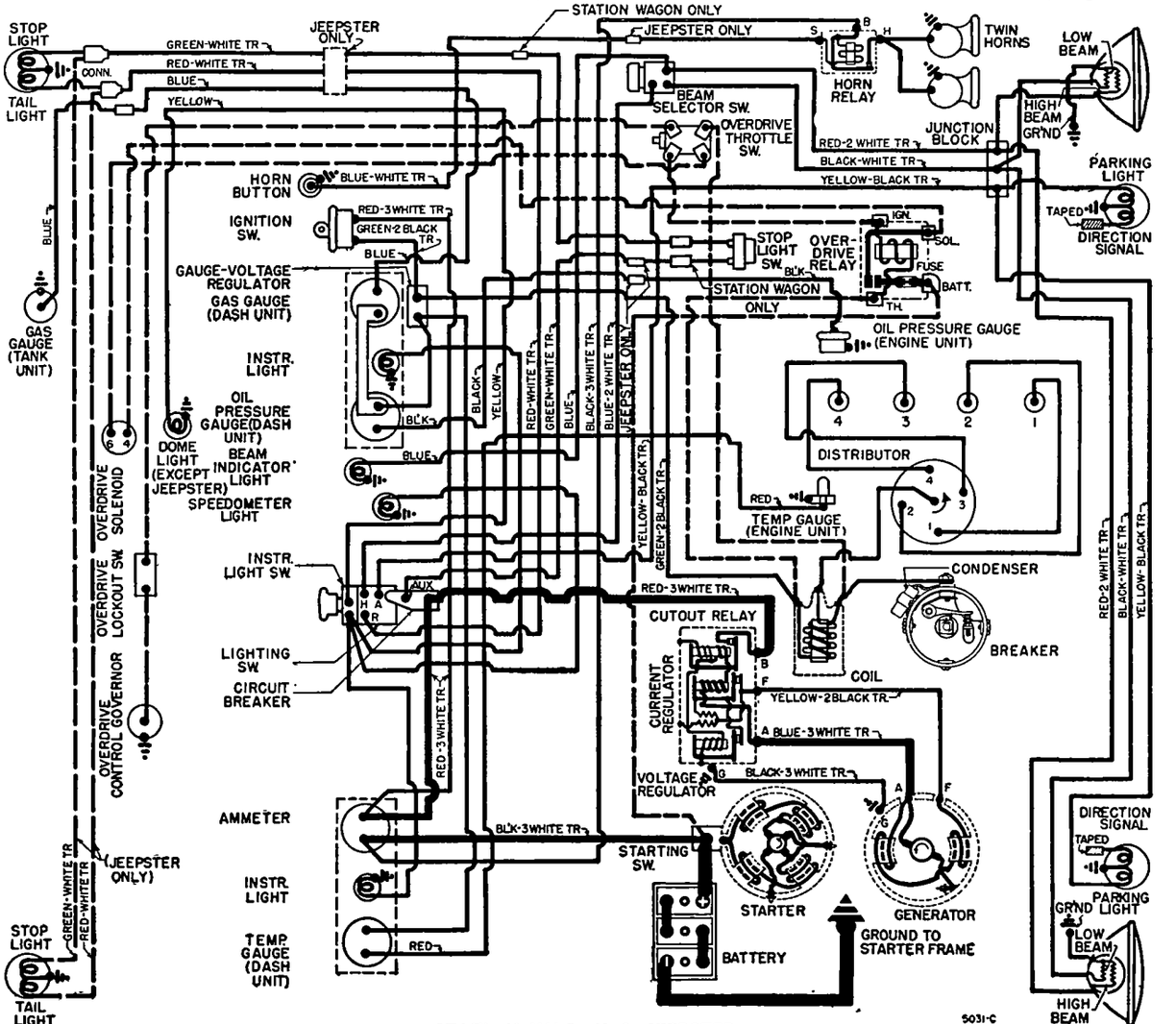

STATI N WAG N & JEEPSTER

Installation Note—If crankshaft has been turned with distributor off engine, install distributor as follows: Turn crankshaft to #1 cylinder firing position (see Timing), turn distributor shaft until rotor is at #1 segment (see diagram), install distributor on engine, rocking shaft slightly to engage drive coupling, push distributor down into place, install hold-down screw, check ignition timing.

CAUTION—If oil pump has been removed, see Oil Pump Installation under "Oil Pump" in Willys Special Data.

IGNITION TIMING

Standard Setting ..... **TDC**

Timing Marks—Flywheel mark "TC/" centered in inspection hole in right front face of housing under starter (remove inspection hole cover).

Timing (Engine not Running)—With #1 piston on compression, turn engine over until piston reaches firing position with flywheel mark "TC/" centered in inspection hole in right front face of housing, loosen advance arm clampscrew, rotate distributor until contacts begin to open, tighten clampscrew, see that rotor at #1 segment in distributor cap (see diagram), check spark plug cable connections.

Timing Using Timing Light—(Engine Running)—This method recommended by manufacturer. Direct timing light through inspection hole at flywheel, idle engine (engine must be warm), adjust distributor (as directed above) until "TC/" mark centered in inspection hole.

CARBURETOR

Carter YF. No. 768S (Early 1950), 768SA (Later 1950), 832S (Late 1950 & 1951). 1¼" Single barrel downdraft type with manual choke control and "Diaphragm" type accelerating pump and metering rod control.

Casting No. on flange—630.

See Carburetor Section for complete data.

►**768S Carburetor conversion to 768SA**—*See "Carter YF Downdraft" in Carburetor Section.*

Settings (Idle Setting, Float Level, and Accelerating Pump): *See Tune-Up data.*

Metering Rods & Jets—*See Carter Jet Table in Carburetor Section for complete data.*

Fast Idle: Interconnected linkage by which choke valve lever opens throttle to fast idle position when carburetor choked for starting.

Setting—Lip on fast idle arm should contact boss on body with choke valve wide open. Adjust by bending connector rod at offset.

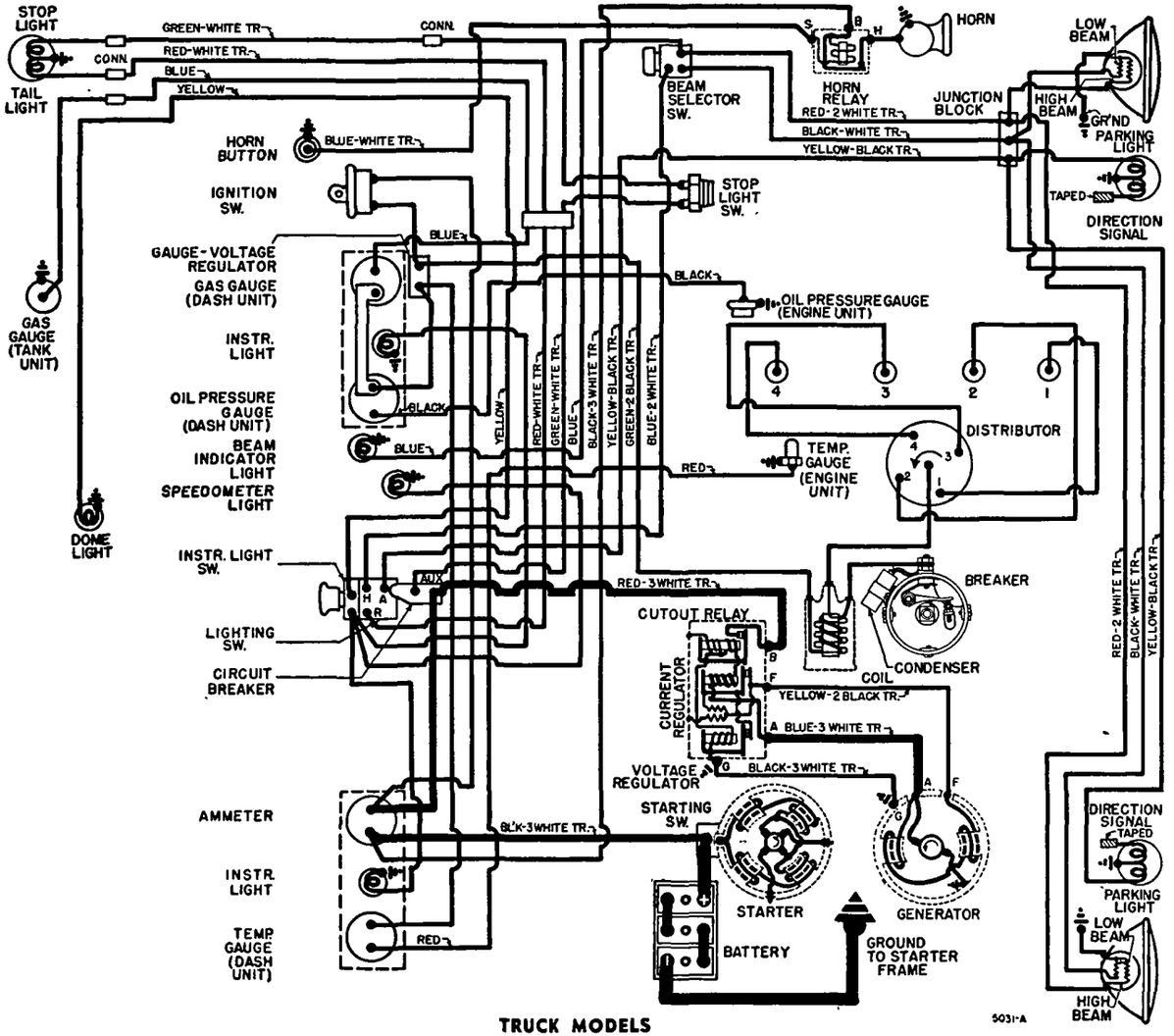

TRUCK MODELS

CARB. EQUIPMENT

Air Cleaner: (Std.) Houdaille-Hershey No. 620300 Oil-wetted type. (Optl.) Oil-bath type.

Servicing (Oil-wetted type)—Clean filter element and re-oil at 2000 mile intervals or more often if required by operating conditions.

Servicing (Oil Bath type)—Clean filter and refill with same grade oil as used in engine at 2000 mile intervals (at oil change). Capacity approx. 1¼ pts.

Fuel Pump: AC. No. 1539562 fuel-and-vacuum pump.

Pressure—3 lbs. (4½ lbs. max. at 1800 RPM.)

See Carburetion Equipment Section for data.

Gasoline Gauge: King-Seeley "CV" (Constant Voltage) type with voltage regulator.

Dash Unit—King-Seeley No. (First Cars) 45534, (Later Cars) 45727.

Tank Unit—King-Seeley No. 44506 (all).

See Carburetion Equipment Section for complete data.

BATTERY

Auto-Lite Type PN-15—6 Volt, 15 Plate, 100 Ampere Hour capacity (20 hour rate).

Starting Capacity—120 amperes for 20 minutes.

Grounded Terminal—Negative (—) grounded at starter.

Location—Right hand side of dash in engine compt.

STARTER

Auto-Lite Model MZ-4137 (First), MZ-4162 (Later).

Armature—Auto-Lite No. MZ-2214 (MZ-4137), MZ-2330 (MZ-4162).

Drive—Overrunning clutch and positive pinion shift actuated by starting pedal.

Rotation—Counter-clockwise at commutator end.

Brush Spring Tension—42-53 ozs. (new brushes).

Cranking Engine—160 RPM., 150-175 amps., 5 volts.

Performance Data

Torque	R.P.M.	Volts	Amperes
0 ft. lbs.	4300	5.5	65
2.55 "	1325	5.0	200
7.65 "	220	4.0	400
7.8 "	Lock	3.0	420

Removal: On right front face of flywheel housing. To remove, disconnect pedal linkage and cables, take out flange mounting capscrews and bolt in bracket on commutator end.

Starting Switch: Auto-Lite No. SW-2677A. Mounted on starter and operated by pinion shift lever.

See Electrical Equipment Section for complete data.

CONTINUED N NEXT PA E

CONTINUED FROM PRECEDING PAGE

GENERATOR

Auto-Lite Model GDZ-4817A (First Cars), GDZ-6001D (Later Cars). Two-brush type with voltage and current regulation.
Armature No.—Auto-Lite GDZ-2006F (GDZ-4817A). GGY-2006F (GDZ-6001D Generator).
Maximum Charging Rate—35 amperes, 8.0 volts (cold) with discharged battery (controlled by regulator).
Charging Rate Adjustment—None (see Regulator).

Cold		Performance Data	Hot		
Amperes	Volts	R.P.M.	Amperes	Volts	R.P.M.
0	6.4	925	0	6.4	1000
5	6.65	1060	5	6.65	1150
10	6.85	1200	10	6.85	1290
15	7.05	1340	15	7.05	1430
20	7.3	1480	20	7.3	1590
25	7.55	1620	25	7.55	1750
30	7.8	1760	30	7.8	1980
35	8.0	1900	35	8.0	2250

Rotation—Counter-clockwise at commutator end.
Brush Spring Tension—35-53 ozs. (new brushes).
Field Current—1.6-1.8 amperes at 6.0 volts.
Motoring Current—4.2-4.6 amperes at 6.0 volts.

Removal: Conventional pivot mounting at right front of engine. To remove, take out two pivot bolts and clamp bolt, slip off drive belt.
Belt Adjustment: 1" deflection (thumb pressure) midway between generator and pump pulleys. To adjust, loosen all mounting bolts, pull generator away from engine.

REGULATOR

Auto-Lite Model VRP-6003-A. Voltage-Current Type. Regulator case mounted on right side in engine compartment. Consists of Cutout Relay and vibrating type Voltage and Current Regulator units. NOTE—Regulator cover sealed. Warranty void if seals broken.
See Electrical Equipment Section for complete data.

Cutout Relay

Cuts In—6.4-7.0 volts (set to 6.4-6.6 volts).
Cuts Out—4.1-4.8 volts (approx. 4-6 amps. disch.).
Contact Gap—.015" minimum.
Air Gap—.031-.034" with contacts open measured at hinge end of core.

Voltage Regulator

Setting—7.35 volts (7.2-7.5) at 70°F. See Electrical Equip. Section for settings at other temperatures.
Checking (without breaking seals) & Adjustment—***See Electrical Equipment Section.***
Contact Gap—.012" min. (armature against stop pin).
Air Gap—.048-.052" with contacts just opening.

Current Regulator

Setting—34-36 amperes (marked "35" on cover).
Checking (without breaking seals) & Adjustment—***See Electrical Equipment Section.***
Contact Gap & Air Gap Same as Voltage Regulator.

LIGHTING

Headlamps: Corcoran-Brown "Sealed Beam" type. Upper and lower beams controlled by Beam Selector Switch on toeboard.
See Electrical Equipment Section for complete data.
Headlamp Adjustment—Aim upper beam straight ahead (hot spot center exactly 3" below lamp center height at 25 feet).
Beam Indicator—On left side of instrument panel. Lighted when upper beams in use.

Switches

Lighting—Willys No. 800369 (First), 801274 (Later—this switch has instrument light and dome light control by rotating switch knob).
Beam Selector—Willys No. 801903.

MISC. ELECTRICAL

LIGHTING CIRCUIT BREAKER: 30 ampere type. Mounted on lighting switch. Vibrating thermostatic type. Protects lighting circuits by vibrating to limit current. No adjustment.
HORNS: Willys No. 800512. Vibrator type twin horns operated by relay.
Horn Relay—Willys No. 643889.
GAUGE VOLTAGE REGULATOR: King-Seeley No. 45557. Thermo-bimetal interrupter unit designed to maintain a constant voltage of 5 volts (regardless of generator charging voltage fluctuation) on gauge feed circuit. Unit is mounted on instrument cluster and connected between ignition switch and gauge circuits. See Wiring Diagram.

ENGINE

ENGINE SPECIFICATIONS: Own "Hurricane" Four Cylinder "F" Head type (intake valves in head, exhaust valves in block).
Bore—3⅛". **Stroke**—4⅜".
Displacement—134.2 cu. in.
Developed H.P.—72 at 4000 RPM. **Rated H.P.**—15.63.
Compression Ratio—Cast iron heads. Painted to indicate ratio—6.9 (Blue), 7.4 (Black), 7.8 (Yellow). Used for following service.

	Domestic — Ratio — Export
Under 5000 ft.	7.4-1 — 6.9-1
Over 5000 ft.	7.8-1 — 7.4-1

CYLINDER HEAD & TIGHTENING TORQUES: ***See Willys Special Data.***
PISTONS: Lo-Ex aluminum alloy (Lynite, Bohn, Permite), "T" slot, Cam ground, brass or tin-plated type with heat insulation groove above top piston ring.
Original Bore & Pistons—***See Willys Special Data.***
Length—3¾".
Weight—12.5 ozs. without rings or pin.
Removal—Pistons and rods removed from above.
Clearance—Top Land .017-.019". Skirt .003".
Replacement Pistons: Std. and .010", .020", .030", .040" Oversize.
Fitting New Pistons: Use 003" feeler stock, ¾" wide, inserted between piston and cylinder wall on opposite side from "T" slot. Pull required to withdraw feeler must be within 5-10 lbs. at 70°F.
Installing Pistons: "T" slot toward valve (left) side of engine (opposite side from oil spray hole in connecting rod lower end).
PISTON RINGS: Two compression, one oil control ring per piston, all above pin (piston has narrow heat insulation groove above top ring groove). Oil ring groove drilled with oil drainage holes.

Ring	Width	End Gap	Side Clearance
Compression	3/32"	.008-.013"	.0005-.001"
Oil Contr.	3/16"	.008-.013"	.001-.0015"

Installing Rings: Install compression rings with mark "TOP" (on side) toward top. Rings have taper face and must be installed correctly. Top ring inner bevel edge must be up.
Replacement Rings: For Rebored Cylinders—Furnished .010", .020", .030", .040" Oversize.
Service Type Rings (for cylinders not rebored) furnished Std.—.009", .010-.019", .020-.029", .030-.039" .040-.049" Oversize
PISTON PIN: Diameter—13/32". **Length**—2 25/32".
Pin is locked in connecting rod by clampscrew.
Pin Fit in Piston—.0001-.0005" clearance or light thumb push fit with piston and pin at 70°F.
Replacement Pins: No oversizes are available.
CONNECTING ROD: Length—9 3/16".
Weight—39.41 ozs.
Original Bearing Sizes—***See Willys Special Data.***
Crankpin Journal Diameter—1.9385-1.9375".
Lower Bearing—Steel-backed, babbitt-lined, replaceable type. CAUTION—Oil spray hole in upper half of bearing must line up with hole in rod.
Clearance—.0005-.0025". **Sideplay**—.005-.009".
Bearing Adjustment: None (no shims). Replace bearings. Do not file connecting rods or bearing caps. NOTE—Replace bearings when clearance exceeds .005" or sideplay exceeds .013".
Replacement Bearings: Furnished Standard & .010", .020", .030" Undersize.
Installing Rods: Lower bearing offset. Install rods with short side of bearing toward nearest main bearing or toward front of engine (#1, 3), toward rear (#2, 4). Oil spray hole in lower end of rod toward right of engine (away from camshaft) on all rods.
CRANKSHAFT: Three bearing type with removable counterweights.
Original Bearing Sizes—***See Willys Special Data.***
Journal Diameters—2.3340".
Bearings—Steel-backed, babbitt-lined, replaceable type. Bearings shells are dowelled in bearing caps and crankcase.
Clearance—.001-.0025".
NOTE—Replace bearings when clearance exceeds .006" or when endplay exceeds .018".
Bearing Adjustment: None (no shims). Replace bearings. Do not file bearing caps. ***See Crankshaft Servicing instructions in Willys Special Data.***
NOTE—Engine must be removed from chassis for bearing replacement and crankshaft servicing.
Replacement Bearings: Furnished Standard & .010", .020", .030" Undersize.
End Thrust: Taken by flanged faces of #1 (front) bearing. Adjustable by adding or removing shims between crankshaft sprocket thrust washer and sprocket. NOTE—Crankshaft sprocket must be removed with a gear puller in order to make endplay adjustments. Adjusting shims furnished .002", .004", .010" and .030" thick.
Endplay—.004-.006".
FLYWHEEL: Removal—***See Willys Special Data.***
CAMSHAFT: Four bearing, helical gear drive.
Journal Diameters—Front (#1) 2.188", (#2) 2¼", (#3) 2 3/16", (#4) 1¾".
Bearings—Removable steel-backed, babbitt-lined bushing (front), machined in crankcase (all others).
Clearance—.001-.0025". Service limit .006" (front), .008" (all others).
End Thrust: Taken by thrust plate assembled behind gear with a spacer assembled behind plate. If required, a thin shim can be installed behind spacer if too little clearance, or spacer can be dressed to provide greater clearance.
Endplay—.003-.0055".

ENGINE

C NTINUED FROM PRECEDING PAGE

Timing Gears: Crankshaft gear, steel. Camshaft gear; fibre with steel hub.
Gear Backlash—.000-.002".

Camshaft Setting: Mesh marked tooth of camshaft gear with marked space (between teeth) on crankshaft gear.

VALVES:	Head Diameter	Stem Diameter	Length
Intake	2"	.3733-.3738"	4 25/32"
Exhaust	1 15/32"	.371 -.372"	5.710"

	Seat Angle	Lift	Stem Clearance
Intake	45°	.260"	.0007-.0022"
Exhaust	45°	.351"	.002-.00375"

Valve Rotator (Exhaust)—On exhaust valve stem. Turns valve in service to provide longer operating period between valve grinds.

Valve Guides: Removable type in block (exhaust), in cylinder head (intake).

Valve Springs: Free Length (Intake) 1 31/32", (Exhaust) 2½". Install with closed coil end upward toward block (exhaust), down towards head (intake).

Intake Valve Springs	Pressure	Length
Valve Closed	73 lbs.	1 21/32"
Valve Open	160 lbs.	1 3/8"
Exhaust Valve Springs		
Valve Closed	53 lbs.	2 7/64"
Valve Open	120 lbs.	1 3/4"

Valve Lifters: Mushroom type operating in reamed holes in block. Serviced by installing oversize lifters. Lifters furnished .004" Oversize.
Lifter Diameter—.6240-.6245".
Lifter Clearance—.0005-.002".
NOTE—Camshaft must be removed for lifter removal.

VALVE TIMING

Tappet Clearance: (Hot or Cold) .018" Intake, .016" Exhaust, (.012" with Free Type Valve).
NOTE—Self-locking tappet adjusting screws used for exhaust valves. Adjusting screw with locknut on rocker arm on cylinder head used for intake valves.

Valve Timing: See Camshaft Setting above.
Intake Valves—Open 9° BTDC. Close 50° ALDC.
Exhaust Valves—Open 47° BLDC. Close 12° ATDC.
Valve Timing Check—Set tappet clearance for No. 1 intake valve to .026". Rotate crankshaft clockwise until piston in No. 1 cylinder is ready for intake stroke. To determine this, remove cover from flywheel timing mark inspection opening in the flywheel housing directly under the starter. "IO" (intake open) position is not stamped on flywheel, but both the "TC" and the 5° "BTC" positions are marked. Intake valve opens 9° "BTC". Note distance between "TC" and 5° "BTC" marks and estimate the "IO" position (9° "BTC"). With the crankshaft in this position timing is correct if rocker arm is just tight against valve stem.
►*CAUTION*—Reset tappet clearance to .018".

LUBRICATION

Engine Oiling System: Pressure to main and connecting rod bearings, camshaft bearings, and timing chain or timing gears. Oil pump mounted externally on left hand side of crankcase.
Crankcase Capacity—4 quarts.
Oil Pressure—25 lbs. Actual—35 lbs. Gauge at 30 MPH.
Oil Pressure Regulator—Under plug on side of pump housing. Opens at 35 lbs. Adjustable by adding or removing shims located above spring in plug.

Oil Pump: Rotor type pump mounted on left side of crankcase.
Oil Pump Servicing—*See Willys Special Data.*

Oil Pressure Gauge: King-Seeley "CV" (Constant Voltage) electric type with gauge voltage regulator.
Dash Unit—King-Seeley No. (First Cars) 45537. (Later Cars) 45729.
Engine Unit—King-Seeley No. 44030 (all).
See Miscellaneous Section for complete data.

COOLING

Cooling System: Pressure type with pressure valve (relief valve) in filler cap.
Capacity—11 qts.
Pressure Valve—Radiator Filler Cap. Opens at 3¾ lbs. (3¼-4¼ lbs.).

Water Pump: Centrifugal, packless, ball bearing type.
See Water Pump Section for complete data.
Removal—Loosen and remove drive belt, disconnect hose. Remove pump mounting screws, lift out pump and fan assembly.
Belt Adjustment—*See Generator Belt Adjustment.*

Thermostat: Harrison. In outlet elbow on cylinder head. Starts to open at 145-155°F. Fully open at 170°F.

Temperature Gauge: King-Seeley "CV" (Constant Voltage) electric type with gauge voltage regulator.
Dash Unit—King-Seeley No. (First Cars) 45545, (Later Cars) 45734.
Engine Unit—King-Seeley No. 44200 (all).
See Miscellaneous Section for complete data.

CLUTCH

Auburn Model 8501-36 with Borg & Beck Driven Member. Single plate, dry disc type.
NOTE—Clutch has neoprene driving lug inserts and Return Clip Springs for quieter operation.
See Clutch Section for complete data.
Facings—Molded (flywheel side), woven (pressure plate side). I.D. 5⅛". O.D. 8½". Thickness .132-.138"

Pedal Adjustment: Pedal free travel 1" (provides 1/16" clearance between release bearing and clutch levers). To adjust, loosen locknut and turn adjusting nut on connector link at clutch fork, tighten locknut.

Removal: Remove transmission (see Transmission Removal below), remove flywheel bell housing. Mark clutch pressure plate and flywheel to insure re-installation in same position. Take out mounting screws in clutch cover flange (turn all screws out evenly), remove clutch and driven member.

TRANSMISSION

473-SW, SD, VJ, HT

Warner. Constant-mesh, synchro-mesh (Second & High), sliding gear (Low & Reverse), all helical gear

Car Model	Warner Transmission
473-SW, SD, VJ (No Overdrive)	AS37-T96
473-SW (With Overdrive)	AS28-T96
473-VJ (With Overdrive)	AS30-T96
473-HT	AS39-T96

Transmission Control (473-SW, SD, VJ): Remote control type with gearshift lever on steering column.
473-HT Note—Has floor-mounted gearshift lever.
See Transmission Section for complete data.

Removal: Remove floor boards, take off bell housing inspection cover, disconnect clutch throw-out bearing retracting spring. Disconnect transmission control rods and speedometer cable at transmission case. Disconnect propeller shaft at universal joints and remove shaft. Support engine with jack placed under bell housing, remove rear engine support bolts from cross-member under transmission case, raise rear end of engine so that transmission clears cross-member. Remove transmission to bell housing bolts, pull transmission straight back to clear clutch shaft, remove from car.

4 WHL. DR. 4X473 & 473-4WD

Warner Model AS1-T90C (with Spicer Transfer Case). 3-speed. Constant-mesh, synchro-mesh (Second & High), sliding spur gear (Low & Reverse).
Gearshift Note—Lever is floor-mounted with transfer case levers.

Transfer Case: Spicer Model 18. Two-speed auxiliary transmission and front-wheel drive unit mounted on rear of transmission case. Separate control levers provided for Low-High range (right hand lever), and front-wheel drive engagement (left hand lever).
See Transmission Section for complete data.

Removal: Transmission and transfer case are removed as an assembly. Disconnect front and rear propeller shafts at the front and rear universals. Disconnect speedometer cable at transfer case. Disconnect speedomter cable at transfer case, brake cable, transmission shift rods at transmission case levers (remote control type) or remove shift lever (floor mounted gearshift), and clutch release cable at cross-shaft bell-crank. Place support jacks under engine and transmission, remove transfer case rubber snubber bolt nut (on right side) and rear mounting bolt nuts at cross-member under transmission case. Remove floor board inspection plate. Drain radiator and loosen upper radiator hose. Remove transfer case shift lever pivot pin screw, remove pin and levers. Remove bolts holding center cross-member at frame side rails and remove cross-member (CAUTION—with cross-member removed, engine and transmission weight will rest on support jacks). Remove bolts holding transmission on bell housing, force transmission to right until ball stud end can be disengaged from end of clutch control cross-shaft. Lower support jacks under engine and transmission and slide transmission and transfer case assembly to rear until clutch shaft clears bell housing, remove assembly from beneath car.

OVERDRIVE

473-SW, SD, VJ

Warner Type R10 (part of AS28-T96 & AS30-T96 Transmissions). Solenoid operated, governor controlled type with throttle operated "kick-down." Overdrive is new "centered ring gear" type.
See Transmission Section for complete data.
Control Relay—Auto-Lite Model HRT-4001.
Overdrive Governor—Auto-Lite Model TGE-4002.
Transmission Solenoid—Delco-Remy Model 1118132.

Removal: Remove as a unit with the transmission. Removal instructions same as for regular transmission (above) after governor and solenoid wires and lock-out control cable disconnected, and overdrive case-to-cross-member bolts removed.

C NTINUED ON NEXT PA E

CONTINUED FR M PRECEDIN PAGE

UNIVERSALS

473-SW, SD, VJ, HT

Detroit Series 4100. Ball-and-trunnion type.
473-HT Note—Three universals used (two shafts with support bearing and intermediate universal at frame cross-member).
See Universals Section for complete data.

4 WHL. DR. 4X473 & 473-4WD

Front & Rear Drive Propeller Shaft Joints: Spicer needle roller bearing types as follows:

	Transmission End	Axle End
Front Drive	1261-102X	1268-104X
Rear Drive	1261-102X	1268-101X

Front Axle Shaft Joint: Bendix Constant-velocity type. One used at outer end of each drive shaft.
See Universals Section for complete data.

FRONT AXLE

4 WHL. DR. 4X473 & 473-4WD

Spicer (Salisbury) Model 25—Full-floating, hypoid gear type. Differential assembly (ring and pinion gear assembly) is identical with Spicer Model 23-2 and is serviced in same manner.
See Spicer (Salisbury) Full Floating Rear Axle in Rear Axle Section for complete data.
Ratio—5.38-1.
Backlash—.005-.007". Shim adjustment.
Removal: Support front end of car securely with a chain hoist, remove front wheels. Disconnect front shock absorbers, front brake line (at frame connection), and steering linkage (at idler lever on frame front cross-member). Disconnect propeller shaft by removing universal joint "U" bolts at axle end of shaft. Place support jacks under axle housing so that springs relieved of weight, remove nuts on spring center clip "U" bolts, remove bolts at rear end of springs and lower the springs, remove axle assembly from beneath car.
Axle Shaft & Universal Joint Assy. Removal: Remove wheel, hub cap, axle shaft nut and washer. Take out drive flange capscrews and remove flange with a puller *(CAUTION—do not lose shim pack under drive flange).* Bend lip on bearing adjusting nut lockwasher out, remove locknut, lockwasher, adjusting nut, and bearing locking washer. Remove wheel hub and bearing assembly *(CAUTION—use care not to damage oil seal).* Disconnect brake tube, take out mounting screws on backing plate, remove backing plate and wheel spindle. Pull axle shaft and universal joint assembly out of housing.
►*INSTALLATION CAUTION*—Adjust front wheel bearings and bleed brakes after installation completed.
Wheel Bearing Adjustment: Tighten inner adjusting nut until wheel binds (turn wheel while adjusting), then back nut off 1/6 turn, install lockwasher and locknut and make certain nut locked by turning lockwasher ear up. Check axle shaft endplay.
Axle Shaft Endplay Checking & Adjustment—Tighten the axle shaft nut against the flange (do not install lockwasher), swing wheel to maximum left or right position with punchmark on end of axle shaft straight up or down. Back off flange nut until clearance between nut and flange is .050" (measure with feeler gauge). Tap end of shaft with a soft hammer (shaft will move in an amount equal to the endplay). Recheck clearance between nut and flange with a feeler gauge. **Subtract this measured clearance from the original .050" clearance.** If resulting figure is less than .015", add shims to shim pack under flange, if figure is more than .035", remove shims from shim pack under flange. With correct thickness of shim pack under flange, install axle shaft lockwasher, nut, and cotter pin.

REAR AXLE

473-SW, SD, VJ

Spicer (Salisbury) Model 23-1. Semi-floating, Hypoid Gear type with Hotchkiss drive.
See Rear Axle Section for complete data.

Ratio—	Without Overdrive	With Overdrive
473-SW, SD	4.88-1	5.38-1
473-VJ	4.56-1	4.88-1

Backlash—.004-.009". Shim adjustment.
Removal: Support rear end of car securely, remove rear wheels, disconnect rear shock absorbers, rear brake line (at frame connection on right side), rear brake cables, and propeller shaft at rear universal joint. Place support jacks under axle housing so that springs relieved of weight, remove nuts on spring "U" bolts, remove pivot bolt at front end of springs, lower springs. Remove axle assembly from beneath car.
Axle Shaft Removal: Remove wheel and hub assembly (use wheel puller), disconnect brake line at wheel cylinder, remove nuts on bolts holding backing plate and brake assembly on housing, remove dust shield, oil seal, and backing plate (with brake assembly). CAUTION—Do not lose bearing adjusting shims located between backing plate and flange on housing. Remove axle shaft and wheel bearing.
Wheel Bearing Adjustment—Endplay .003-.007". Adjust by adding or removing shims between backing plate and axle housing flange at each wheel. See axle shaft removal (above).

4X473

Spicer (Salisbury) Model 41-2. Semi-floating, Hypoid Gear type with Hotchkiss Drive.
See Rear Axle Section for complete data.
Ratio—5.38-1.
Backlash—.004-.008". Shim adjustment.
Removal: Support rear end of truck securely, remove rear wheels, disconnect rear shock absorbers, rear brake line (at frame connection on right side), rear brake cables and propeller shaft at rear universal. Place support jacks under axle housing to relieve springs of weight, remove nuts on spring "U" bolts, remove pivot bolt at front end of springs, lower springs to floor. Remove axle assembly.
Axle Shaft Removal: Remove wheel and hub assembly (use wheel puller), remove nuts on bolts holding backing plate and brake assembly, remove dust shield, oil seal, and backing plate. Remove axle shaft and wheel bearing. CAUTION—Do not lose shims.
Wheel Bearing Adjustment—Endplay .003-.005". Adjust by adding or removing shims between backing plate and flange on axle housing.
NOTE—Shims installed on **left hand** end of axle housing only in production. Shims can be installed on right hand end of axle housing, if necessary, for correct endplay.

473-HT & 4WD

Timken Model 51540. Semi-floating, spiral bevel gear type with Hotchkiss drive.
Ratio—5.38-1.
Backlash—.004-.018" Shim adjustment.
Removal (incl. Axle Shaft Removal & Wheel Bearing Adjustment): Same as for Spicer axle on 4x473 (above).
See Rear Axle Section for complete data.

SHOCK ABSORBERS

Willys Nos.	Front	Rear
473-SW, SD	647502	647503
473-VJ	648203	647506
473-HT & 4WD	647504	647505

Monroe or Gabriel direct acting, hydraulic type.

FRONT SUSPENSION

473-SW, SD, VJ

Planadyne Type. Independent, linked parallelogram type with transverse spring (spring acts as lower control arm).
See Front Suspension Section for complete data.
Kingpin Inclination—5° crosswise.
Caster—1° No adjustment.
Camber—1½°. (1¼-1¾° limits).
Toe-In—1/16-1/8".
►*See Willys Front Suspension for Toe-in adjustment procedure.*

4X473, 473-HT, 473-4WD

Front Axle (473-HT): I-beam type with Reverse Elliott ends and semi-elliptic springs.
(4x473 & 473-4WD)—See FRONT AXLE above.
►**Steering Knuckle Bearing Servicing & Adjustment (4x473 & 473-4WD)**—*See Willys Special Data.*
Kingpin Inclination—7½° crosswise.
Caster—3°.
Camber—(473-HT) 1°, (4x473 & 473-4WD) 1½°.
Toe In—3/64-3/32".

STEERING GEAR

Ross Model T-12. Cam-and-Twin Lever type.
See Steering Gear Section for complete data.

BRAKES

Service Brakes: Bendix (Lockheed) Hydraulic, self-centering type. Hand lever applies rear wheel service brakes.
NOTE—These self-centered brakes do not have anchor pin adjustment.
See Brake Section for complete data.
Drums—Chrome nickel. Diameter (473-SW, SD, VJ) 10", (4x473, 473-HT & 4WD) 11".
Lining (473-SW, SD, VJ)—Molded type. Width 1.760", Thickness 3/16". Length per shoe—10 11/16" (forward shoe—all wheels), 8 15/16" (rear shoe—all wheels).
Lining (4x473, 473-HT & 4WD)—Molded type. Width 2", Thickness 3/16", Length per wheel 22 1/16".
Clearance—.008" toe, .005" heel, for each shoe.
NOTE—No anchor pin adjustment provided. Brake shoes should be centralized by hard brake application (and then released) before adjusting.
Hand Brake: See Service Brakes (above).
Adjustment—Tighten link rod adjustment (cable equalizer connector) at brake lever on frame cross-member for slight drag with hand lever set two notches "on". Release hand lever and make certain that brakes free of any drag.

MISC. MECHANICAL

Windshield Wipers: Vacuum type, cable operated.
See Miscellaneous Section for data.

MODEL IDENTIFICATION

SERIAL NUMBER: (Station Wagon) At left of driver's seat on floor riser, (Jeepster) On under edge of cowl above glove box door.
1950 Numbers—10,001 Up.
1951 Numbers—10,001 Up with model prefix as follows: 651-AA1 (673-SW Station Wagon), 651-BA1 (673-VJ Jeepster).

ENGINE NUMBER: On upper front corner of engine block on right side.
1950 Numbers—1S-10,001 Up.

TUNE-UP

COMPRESSION PRESSURE: 125 lbs. at 160 RPM.
VACUUM READING: Steady 18-21" idling at 600 RPM.
FIRING ORDER: 1-5-3-6-2-4. See diagram.
SPARK PLUG GAPS: .030".
Plug Type—Auto-Lite AN-7 or Champ. J-7. 14 mm.
DISTRIBUTOR: Breaker Gap—.020" (.018-.022").
Cam Angle—39° (closed).
Breaker Arm Spring Tension—17-20 ozs.
Automatic & Vacuum Advance—*See Ignition.*
Condenser Capacity—(IGC-4514) .20-.25 mfd. (IAT-4007) .21-.25 mfd.
IGNITION TIMING: At TDC.
Timing Procedure—*See Ignition Timing.*
Timing Mark—Grooved line on vibration dampener rim in line with pointer on timing gear cover on right side.
Octane Selector Setting—Set to just eliminate ping with engine pulling hard.
CARBURETION:
Idle Setting—Idle screw approximately 1½ turns open. Turn screw out for richer mixture.
Idle Speed—600 RPM. or 6 MPH.
Float Level—Top of float flush (plus or minus 1/32") with bottom of checking gauge C161-169 with needle valve closed (remove air horn and gasket, place gauge on top edge of bowl, press down on float lever directly above needle valve to raise float to valve closed position).
Accelerating Pump—No seasonal adjustment.
Fuel Pump Pressure: 3½-4½ lbs. at 1800 RPM.
CRANKCASE VENTILATOR: Remove and clean the vacuum control valve. *See "Crankcase Ventilator" (following Carb. Equipment) for directions.*
MANIFOLD HEAT CONTROL: Automatic thermostatic type. No adjustment. Valve must operate freely.
VALVE TAPPET CLEARANCE: .016" All Valves, Hot or Cold.
Valve Timing Check—*See Valve Timing.*
STARTING: *See Battery, Starter, Generator, Regulator.*

IGNITION

IGNITION SWITCH: Douglas or Mitchellock. Willys No. 641720.
Ignition Lock—Briggs & Stratton. B&S No. 50184.
Key Series—C250 to 499. **Groove**—No. 3.
COIL: Auto-Lite IG-6009 (First Cars), CR-6009 (Later cars). On right side of engine.
NOTE—Serial Nos. at which coil changed: (673-SW) No. 10994, (673-VJ) No. 10530.
Ignition Current—2.5 amperes idling, 5 stopped.
CONDENSER: Auto-Lite No. IG-2671 (IGC-4514 Distr.), IAT-3076L (IAT-4007 Distr.).
Capacity—(IGC-4514) .20-.25 mfd., (IAT-4007) .21-.25 mfd.

DISTRIBUTOR: Auto-Lite IGC-4514 (First cars), IAT-4007 (Later cars). Full automatic advance with vacuum spark control unit linked to distributor assembly.
NOTE—Serial Nos. at which distributor changed: (673-SW) No. 13038. (673-VJ) No. 11260.
Breaker Gap—.020". Limits .018-.022".
Cam Angle—39° closed.
Breaker Arm Spring Tension—17-20 ozs.
Rotation—Counter-clockwise viewed from above.

Automatic Advance

Degrees Distr.	R.P.M.	Degrees Eng.	R.P.M.
Start	350	0	700
1	375	2	750
7	550	14	1100
11	1300	22	2600
12	1500	24	3000

Octane Selector: 20° advance or retard adjustment at distributor. See Ignition Timing.
Vacuum Spark Control: Auto-Lite. Separate type (vacuum unit mounted on bracket, linked to quadrant on distributor). Provides additional advance at speeds above idling except when engine acelerated or operated with wide open throttle when spark retarded by return spring.

Vacuum Advance

Distr. Degrees	Eng. Degrees	Vacuum (" of HG)
Start	0°	3½"
1°	2°	5½"
3°	6°	9¼"
5°	10°	13"
6°	12°	15"

CONTINUED N NEXT PA E

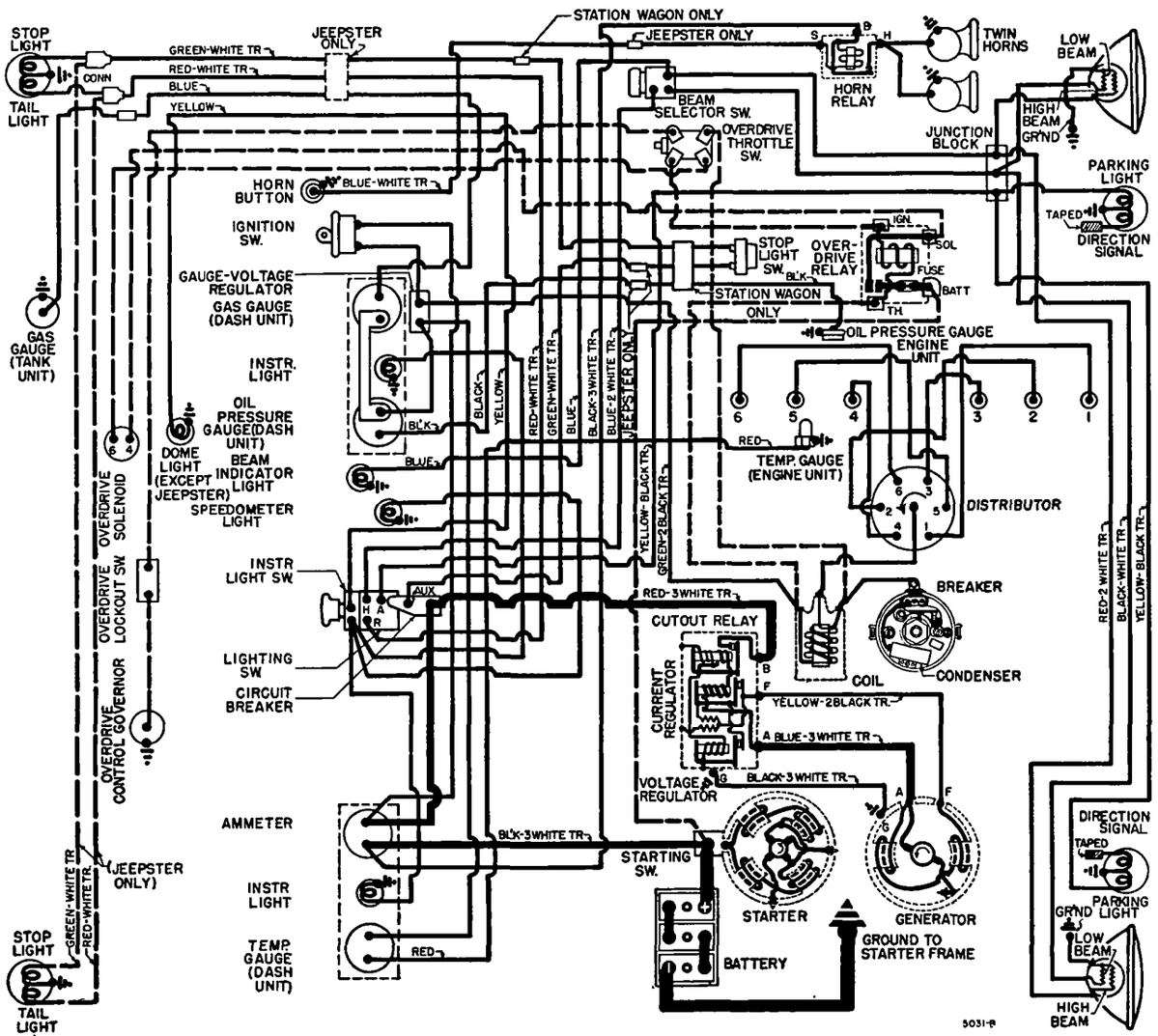

C NTINUED FROM PRECEDIN PAGE

Distributor Removal: On right side of engine. To remove, disconnect vacuum line, take out hold-down screw in vacuum unit mounting bracket.

Installation Note—If crankshaft has been turned with distributor off engine, install distributor as follows: Turn crankshaft to #1 cylinder firing position (see Timing), turn distributor shaft until rotor opposite #1 segment in cap (see diagram), install distributor on engine, rocking shaft slightly to engage drive coupling, push distributor down into place, install hold-down screw, check timing.

CAUTION—If oil pump has been removed, see Oil Pump data in Willys Special Data.

IGNITION TIMING

Std. Setting.....At Top Dead Center

NOTE—See Octane Selector Setting to compensate for special fuel and operating conditions.

Timing Marks—Line on rim of vibration dampener and pointer on timing gear cover. Flywheel also marked ("TC' on flywheel in line with horizontal center-line of inspection hole, right front face of housing.

Timing (Engine not Running)—With #1 piston on compression, turn engine until piston reaches firing position (TDC) with line on vibration dampener aligned with pointer on right side of timing gear cover. Loosen vacuum control link screw in distributor quadrant, center pointer on scale, tighten screw. Loosen clampscrew on hold-down plate, rotate entire distributor assembly until contacts begin to open, tighten clampscrew, see that rotor at #1 segment in distributor cap, check plug connections.

Timing (Using Timing Light—Engine Idling). This method recommended by manufacturer. Direct timing light at vibration dampener, idle engine (engine must be warm), adjust distributor (as directed above) until timing mark lines up with pointer.

Octane Selector Setting—If engine pings on heavy pull, loosen vacuum control link screw at distributor quadrant, retard spark slightly by rotating distributor counter-clockwise. For High Octane Fuel, spark can be advanced by rotating distributor clockwise.

CARBURETOR

Zenith Series 31, Assy. No. 11119. 1¼", Single barrel, downdraft type with manual choke control.

See Carburetor Section for complete data.

Settings (Idle Setting, Float Level, and Accelerating Pump): ***See Tune-Up data.***

Metering Jets—***See Zenith Jet Specifications in Carburetor Section.***

Fast Idle: Fast idle cam serving as stop for throttle stopscrew is linked to choke valve lever and rotated to fast idle position when choke closed for starting.

Setting—No adjustment required.

CARB. EQUIPMENT

Fuel Pump: AC No. 1539245. Diaphragm type combination fuel-and-vacuum pump.

Replacement Pump—AC No. 9245.

Pump Pressure—3½-4½ lbs. at 1800 Eng. RPM.

See Carb. Equipment Section for complete data.

Gasoline Gauge: King-Seeley "CV" (Constant Voltage) electric type with voltage regulator.

Dash Unit—King-Seeley No. (First Cars) 45534, (Later Cars) 45727.

Tank Unit—King-Seeley No. 44506 (all).

See Carburetion Equipment Section for complete data.

Air Cleaner: AC 1544113 Oil-wetted type, Element #1.

Servicing (Oil-wetted Type)—Clean filter element and re-oil at 2000 mile intervals or more often if required by operating conditions.

CRANKCASE VENTILATOR

Sealed Positive Ventilation Type. Air intake pipe (from air cleaner to oil filler pipe) furnishes clean air to crankcase, air outlet pipe (from valve cover to manifold) allows fumes from crankcase to be sucked into intake manifold. Vacuum control valve at manifold connection **must close at idling speed** for satisfactory idling performance.

NOTE—Clean Vacuum Control Valve when engine tuned up.

Cleaning Vacuum Control Valve—Remove control valve by disconnecting pipe and unscrewing valve from manifold. Disassemble valve, withdraw valve and spring, clean valve and valve seat thoroughly.

Servicing—Make certain all connecting pipes tight and that oil filler cap gasket seals cap tightly. Remove and clean control valve when tuning engine or whenever system does not operate satisfactorily.

BATTERY

Auto-Lite PN-15 or Willard HW-1-100. 6 volt, 15 plate, 100 Ampere Hour capacity (20 hr. rate).

Starting Capacity—120 amperes for 20 minutes.

Grounded Terminal—Negative (—) grounded at starter.

Engine Ground—Strap at left front engine mount.

Location—Right hand side of dash in engine compt.

STARTER

Auto-Lite Model MZ-4137 (First cars), MZ-4162 (Later Cars. Armature No. MZ-2214 (for MZ-4137).

NOTE—Serial Nos. at which starter changed: (673-SW) No. 13233, (673-VJ) No. 11286.

Armature—Auto-Lite MZ-2214 (MZ-4137), MZ-2330 (MZ-4162).

Drive—Overrunning clutch and positive pinion shift actuated by starting pedal.

Rotation—Counter-clockwise at commutator end.

Brush Spring Tension—42-53 ozs. (new brushes).

Cranking Engine—160 RPM., 150-175 amps., 5 volts.

Performance Data

Torque	R.P.M.	Volts	Amperes
0 ft. lbs.	4300	5.5	70
2.55 "	1325	5.0	200
7.65 "	220	4.0	400
7.8 "	Lock	3.0	420
4.4 "	Lock	2.0	280

Starting Switch: Auto-Lite SW-2677A. Mounted on starter and operated by pinion shift lever.

See Electrical Equipment Section for complete data.

GENERATOR

Auto-Lite Model GDZ-4817A (First cars), GDZ-6001D (Later cars). Two brush (shunt) type with voltage and current regulation.

NOTE—Serial Nos. at which generator changed: (673-SW) No. 13233. (673-VJ) No. 11286.

Armature—Auto-Lite No. GDZ-2006F (GDZ-4817A), GGY-2006F (GDZ-6001D).

Maximum Charging Rate—35 amperes, 8.0 volts (cold) with discharged battery (controlled by regulator).

Charging Rate Adjustment—None (see Regulator).

Performance Data

Cold Amperes	Volts	R.P.M.	Hot Amperes	Volts	R.P.M.
0	6.4	925	0	6.4	1000
5	6.65	1060	5	6.65	1150
10	6.85	1200	10	6.85	1290
15	7.05	1340	15	7.05	1430
20	7.3	1480	20	7.3	1590
25	7.55	1620	25	7.55	1750
30	7.8	1760	30	7.8	1980
35	8.0	1900	35	8.0	2250

Rotation—Counter-clockwise at commutator end.

Brush Spring Tension—35-53 ozs. (new brushes).

Field Current—1.60-1.78 amperes at 6.0 volts.

Motoring Current—4.2-4.6 amperes at 6.0 volts.

Belt Adjustment: 1" deflection (thumb pressure) midway between generator and pump pulleys. To adjust, loosen all mounting bolts, pull generator away from engine.

REGULATOR

Auto-Lite Model VRP-6003A. Voltage & Current type. On right side in engine compartment.

See Electrical Equipment Section for complete data.

NOTE—Regulator cover sealed. Warranty void if seals broken.

Cutout Relay

Cuts In—6.4-7.0 volts (set to 6.4-6.6 volts).

Cuts Out—4.1-4.8 volts (approx. 4-6 amps. disch.).

Contact Gap—.015" minimum.

Air Gap—.031-.034" with contacts open (measured at hinge end of core).

Voltage Regulator

Setting—7.35 (7.2-7.5) volts at 70°F. See Electrical Equipment Section for data at other temperatures.

Checking (without breaking seal) & Adjustment—***See Electrical Equipment Section.***

Contact Gap—.012" min. (armature against stop pin).

Air Gap—.048-.052" with contacts just opening.

Current Regulator

Setting—34-36 amperes (marked "35" on cover).

Checking (without breaking seal) & Adjustment—***See Electrical Equipment Section.***

Contact Gap & Air Gap—Same as Voltage Regulator.

LIGHTING

Headlamps: Corcoran-Brown "Sealed Beam" type. Upper and lower beams controlled by Beam Selector Switch on toeboard.

See Electrical Equipment Section for complete data.

Adjustment—Aim upper beam straight ahead with hot spot center 3" below lamp center height at 25 ft.

Beam Indicator—On left side of instrument panel (above Radio). Lighted when upper beams in use.

Switches

Lighting—Willys No. 800369 (First Cars), 801274 (Later Cars). NOTE—No. 801274 has instrument light and dome light control by rotating switch knob.

Beam Selector—Willys No. 801903.

MISC. ELECTRICAL

LIGHTING CIRCUIT BREAKER: 30-ampere type. Mounted on lighting switch. Vibrating thermostatic type. Protects lighting circuits by vibrating to limit current. No adjustment.

FUSES: Overdrive—20 ampere. On control relay.

GAUGE VOLTAGE REGULATOR: King-Seeley No. 45557. Thermo-bimetal interrupter which is designed to maintain constant voltage of 5 volts (regardless of generator charging voltage fluctuation) on gauge feed circuit. Unit is mounted on instrument cluster and connected between ignition switch and gauge circuits. See Wiring Diagram.

HORNS: Willys No. 800512. Vibrator type twin horns with horn relay.
Horn Relay—Willys No. 643889.

ENGINE

ENGINE SPECIFICATIONS: Own "Lightning", 6 Cyl. "L" head type.
Bore—3⅛". **Stroke**—3½".
Displacement—161 cu. ins. **Rated H.P.**—23.44.
Developed Horsepower—75 at 4000 RPM.
Compression Ratio—6.9-1. Cast iron head.
Compression & Vacuum Reading—*See Tune-Up.*

CYLINDER HEAD & TIGHTENING TORQUES: *See Willys Special Data.*

PISTONS: Aluminum alloy, "T" slot, cam ground, tin or brass plated type. **Length**—3".
Weight—9.67 ozs., stripped.
Removal—Pistons and rods removed from above.
Clearance—.016-.0185" (top), .0015" (skirt).

Replacement Pistons: Furnished .005", .015", .020", .045" Oversize.

Fitting New Pistons: Use .0015" feeler gauge ½" wide between piston and cylinder wall on side opposite slot. Pull required to withdraw feeler must be 5-10 lbs.

Installing Pistons: T-slot toward left (valve) side of engine (opposite side from oil spray hole in rod).

PISTON RINGS: Two compression rings, one oil ring per piston, all above pin. Oil drain holes in oil ring groove.

Ring	Width	End Gap	Side Clearance
Compr. (#1)	3/32"①	.010-.016"	.002-.004"
Compr. (#2)	3/32"①	.010-.016"	.0015-.0035"
Oil (#3)	3/16"②	.010-.016"	.001-.0025"

①—.0925-.0935". ②—.1860-.1865".

Installing Rings: Compression ring mark "TOP" (on side of rings) and bevel on inner edge must be UP.

Replacement Rings: Furnished in sets of Std. to .009", .010", .020", .030", .040" Oversize.

PISTON PIN: Locked in rod by clampscrew.
Diameter—.7497". **Length**—2 17/32".
Pin Fit in Piston—.0001-.0005" or a light thumb push fit at normal room temperature.
NOTE—Pin hole in piston diamond-bored to inside diameter of .7498-.7500".

Replacement Pins: Furnished Standard size only.

CONNECTING ROD: **Length**—6.343-6.347".
Crankpin Journal Diameter—1.875". *See "Original Bearing Sizes" in Willys Special Data.*
Lower Bearing—Replaceable steel-backed, babbitt lined type. No shims. CAUTION—Oil spray hole in bearing upper half must line up with oil hole in rod.
NOTE—Palnuts used as locknuts on rod bolts.
Clearance—.0004-.0025". **Sideplay**—.004-.010".

Bearing Adjustment: None (replace bearings). Do not file rods or bearing caps.
Palnut Installation—*See Willys Special Data.*

Replacement Bearings: Furnished Std. size and .010", .020" Undersize.

Installing Rods: Rods not offset. Install with oil spray hole in lower end toward right (away from camshaft) on all rods.

CRANKSHAFT: Four bearing with integral counterweights. Vibration dampener on forward end.
Journal Diameters—2.250" all Bearings. *See "Original Bearing Sizes" in Willys Special Data.*
Bearings—Replaceable steel-backed, babbitt lined type. No shims.
Clearance—.0009-.003".

Bearing Adjustment: None (replace bearings). Do not file bearing caps. Bearings can be removed and replaced without removing crankshaft.
Rear Bearing Oil Seal Servicing—*See "Crankshaft & Main Bearings" in Willys Special Data.*

Replacement Bearings: Furnished Std. size and .010", .020" Undersize.

End Thrust: Taken by #1 front bearing (flanged type) and thrustwasher in back of crankshaft gear. Adjusted by adding or removing shims behind thrust washer. Shims furnished .002" thick.
NOTE—Crankshaft gear must be removed with a gear puller for endplay adjustment.
Endplay—.004-.006".

FLYWHEEL: **Removal**—*See Willys Special Data.*

CAMSHAFT: Four bearing with helical gear drive.
Journal Diameters—#1. 1.8755-1.8760"; #2. 1.8425-1.8435"; #3. 1.8110-1.8120"; #4, 1.6245-1.6250".
Bearings—Removable steel-backed, babbitt-lined bushing (Front), machined in crankcase (all others). Front bearing reamed to 1.877" diameter.
Clearance—.001-.0025".
Camshaft Removal—*See Willys Special Data.*
End Thrust—Taken by thrust plate assembled behind camshaft gear with a spacer assembled behind plate. If required, a thin shim can be installed behind spacer if too little clearance, or spacer can be dressed to provide greater clearance.
Endplay—.003-.0055".

Timing Gears: Crankshaft gear Cast Iron. Camshaft gear Fibre with steel hub.
Gear Backlash—.000-.002".

Camshaft Setting: Mesh marked tooth of camshaft gear with marked space (between teeth) on crankshaft gear.

VALVES:	Head Diameter	Stem Diameter	Length
Intake	1 3/8"	.34075-.3415"	4½"
Exhaust	1 9/32"	.3395-.3405"	4½"

	Seat Angle	Lift	Stem Clearance
Intake	45°	.284"	.0015-.00325"
Exhaust	45°	.306"	.0025-.0045"

Valve Guides: Removable type. Remove guides from above with puller. Install new guides with driver or press guides down until upper end ⅞" below upper edge of valve seat (taper end up).

Valve Springs: Springs can be installed with either end up. Free length 1 57/64".

	Spring Pressure	Length
Valve Closed	50 lbs.	1 5/8"
Valve Open	105 lbs.	1 21/64"

Valve Lifters: Mushroom type. In reamed holes in block. Service by installing oversize lifters.
NOTE—Camshaft must be removed for lifter removal.
Camshaft Removal—*See Willys Special Data.*
Lifter Diameter—.597-.605". **Length**—2".
Clearance in Block—.0005-.002".

VALVE TIMING

Tappet Clearance: .016" All Valves, Hot or Cold.
NOTE—Adjusting screws self-locking type.

Valve Timing: See Camshaft Setting above.
Intake Valves—Open 5° BTDC. Close 44° ALDC.
Exhaust Valves—Open 47° BLDC. Close 12° ATDC.
Valve Timing Check—Set tappet clearance #1 intake valve at .020". This valve should be about to open (clearance taken up) with #1 piston 5° or .007" BTDC. with flywheel mark "5°/" centered in inspection hole in right front face of housing below starter. Reset tappet clearance to .016".

LUBRICATION

Engine Oiling System: Pressure to crankshaft, connecting rod, and camshaft bearings and to timing gears.
Crankcase Capacity—5 qts. refill.
Normal Oil Pressure—35 lbs. at 30 MPH., or 2000 RPM.
Oil Pressure Regulator—Opens at 25 lbs. Located on oil pump housing. Adjustable by adding or removing shims from above spring within plug.

Oil Pump: Internal Rotor type. Mounted externally on left side of crankcase.
Oil Pump Servicing—*See Willys Special Data.*

Oil Pressure Gauge: King-Seeley "CV" (Constant Voltage) electric type with voltage regulator.
Dash Unit—King-Seeley No. (First Cars) 45537, (Later Cars) 45729.
Engine Unit—King-Seeley No. 44030 (all).
See Miscellaneous Section for complete data.

Crankcase Ventilation: *See special data following "Carb. Equipment."*

COOLING

Cooling System: Pressure type with relief valve in radiator filler cap.
Capacity—8¾ qts. (9½ qts. with heater).
Pressure Valve—AC No. 846740. In filler cap. Opens at 3¾ lbs. (3¼-4¼ lbs.).

Water Pump: Centrifugal, packless type with special sealed ball bearing shaft (no lubrication required).
See Water Pump Section for complete data.
Removal—Loosen and remove drive belt, disconnect hose, remove pump mounting screws. Lift out pump and fan assembly.
Belt Adjustment—*See Generator Belt Adjustment.*

Thermostat: Harrison. In outlet on cylinder head. Starts to open at 145-155°F. Fully open at 173°F.

Temperature Gauge: King-Seeley "CV" (Constant Voltage) electric type with voltage regulator.
Dash Unit—King-Seeley No. (First Cars) 45545, (Later Cars) 45729.
Engine Unit—King-Seeley No. 44200 (all).
See Miscellaneous Section for complete data.

CLUTCH

Auburn Model 8501-36 with Borg & Beck Driven Member. Single plate, dry disc type.
NOTE—Clutch has neoprene driving lug inserts and Return Clip Springs for quieter operation.
See Clutch Section for complete data.
Facings—Molded (flywheel side), woven (pressure plate side). I.D. 5⅛". O.D. 8½". Thickness .132-.138".

Pedal Adjustment: Pedal free travel 1" (provides 1/16" clearance between release bearing and clutch levers). To adjust, loosen locknut and turn adjusting nut on connector link at clutch fork, tighten locknut.

Removal: Remove transmission (see Transmission

CONTINUED ON NEXT PAGE

CONTINUED FR M PRECEDING PA E

Removal), remove flywheel bell housing. Mark pressure plate and flywheel to insure correct re-installation, take out mounting screws in clutch cover flange (turn all screws out evenly), remove clutch assembly and driven member.

TRANSMISSION

Warner Model (673-SW) AS28-T96, (673-VJ) AS30-T96. Constant-mesh, synchro-mesh (Second & High), sliding gear (Low & Reverse), all helical gear type.
See Transmission Section for complete data.

Transmission Control: Remote control type with gear-shift lever on steering column.
See Transmission Section for complete data.

Removal: Remove floor boards, take off bell housing inspection cover, disconnect clutch throw-out bearing retracting spring. Disconnect transmission control rods and speedometer cable at transmission case. Disconnect propeller shaft at universal joints and remove shaft. Support engine with jack placed under bell housing, remove rear engine support bolts from cross-member under transmission case, raise rear end of engine so that transmission clears cross-member (CAUTION—use care that fan blades do not damage radiator). Remove transmission to bell housing bolts, pull transmission straight back to clear clutch shaft, remove from car.

OVERDRIVE

Warner Type R10 (part of Transmission Assy.). New solenoid operated, governor controlled type overdrive (no centrifugal pawls) with throttle operated "kick-down."
See Tranmission Section for complete data.
Control Relay—Auto-Lite Model HRT-4001.
Overdrive Governor—Auto-Lite Model TGE-4002.
Transmission Solenoid—Delco-Remy Model 1118132

Removal: Remove as a unit with the transmission. Removal instructions same as for regular transmission (above) after governor and solenoid wires and lock-out control cable disconnected and overdrive case-to-cross-member bolts removed.

UNIVERSALS

Detroit Universals Series 4100. Ball-and-trunnion type.
See Universals Section for complete data.

REAR AXLE

Spicer (Salisbury) Model 23-1. Semi-floating, Hypoid Gear type with Hotchkiss drive.
See Rear Axle Section for complete data.
Ratio—4.88-1 (without O.D.), 5.38-1 (with O.D.).
Backlash—.004-.009". Shim adjustment.

Removal: Support rear end of car securely, remove rear wheels, disconnect rear shock absorbers, rear brake line (at frame connection on right side), rear brake cables, and propeller shaft at rear universal joint. Place support jacks under axle housing so that springs relieved of weight, remove nuts on spring "U" bolts, remove pivot bolt at front end of springs, lower springs. Remove axle assembly from beneath car.

Axle Shaft Removal: Remove wheel and hub assembly (use wheel puller), disconnect brake line at wheel cylinder, remove nuts on bolts holding backing plate and brake assembly on housing, remove dust shield, oil seal, and backing plate (with brake assembly). CAUTION—Do not lose bearing adjusting shims located between backing plate and flange on housing. Remove axle shaft and wheel bearing.
Wheel Bearing Adjustment—Endplay .003-.007". Adjust by adding or removing shims between backing plate and axle housing flange at each wheel. See axle shaft removal (above).

SHOCK ABSORBERS

Monroe or Gabriel. Direct acting, hydraulic type.

	Front - —Willys No. — Rear	
673-SW	647502	647503
673-VJ	648203	647506

NOTE—Shock absorbers are sealed and cannot be dismantled for servicing or refilling.

FRONT SUSPENSION

Planadyne Type. Independent, linked parallelogram type with transverse spring (spring acts as lower control arm).
See Front Suspension Section for complete data.
Kingpin Inclination—5° crosswise.
Caster—1° No adjustment.
Camber—1°.
Toe-In—1/16-1/8".
►*See Willys Front Suspension for Toe-in adjustment procedure.*

STEERING GEAR

Ross Model T-12. Cam-and-Twin Lever type.
See Steering Gear Section for complete data.

BRAKES

Service Brakes: Bendix (Lockheed) Hydraulic, self-centering type. Hand lever applies rear wheel service brakes.
NOTE—These self-centered brakes do not have anchor pin adjustment.
See Brake Section for complete data.
Wheel Cylinders—Diameter: Front 1", Rear 7/8".
Drums—Chrome-nickel type. Diameter 10".
Lining—Moulded type (all shoes). Width 1.760". Thickness .182-.192". Length per shoe: 10 11/16" forward shoe, 8 5/16" reverse shoe.
Clearance—.008" toe, .005" heel, for each shoe.
NOTE—No anchor pin adjustment provided. Brake shoes should be centralized by hard brake application (and then released) before adjustments made.

Hand Brake: See Service Brakes (above).
Adjustment—Tighten link rod adjustment (cable equalizer connector) at brake lever on frame cross-member for slight drag with hand lever set two notches "on". Release hand lever and make certain that brakes free of any drag.

MISC. MECHANICAL

Windshield Wipers: Vacuum type, cable operated.
See Miscellaneous Section for complete data.

1950-51 CARBURETOR CAR APPLICATION INDEX

Car Model		Carburetor Make	Carburetor Model No.	Page No.
BUICK				
1950-51	40, 50	Carter WCD	725S, SA	202
	40, 50	Stromberg	AAUVB-267	229
	70	Carter WCD	726S, SA	202
	70	Stromberg	AAVB-267	229
CADILLAC				
1950	V8 All Series	Carter WCD	742S	202
1951	V8 All Series	Carter WCD	845S	202
	V8 All Series	Rochester	BB	226
CHEVROLET				
1950-51	Pass. Cars	Rochester	B	222
	Trucks (Downdraft)	Rochester	B	222
	Trucks (Updraft)	Carter (B&B)	745S	214
	Repl. Carb.	Carter YF		208
CHRYSLER				
1950	C48 Six S-M Tr.	Carter (B&B)	EX3	215
	C48 Six Auto Tr.	Carter (B&B)	E7L4	215
	C49, C50 Eight	Carter (B&B)	E7J4	215
1951	C51 Six S-M Tr.	Carter (B&B)	E9C1	215
	C51 Six Auto Tr.	Carter (B&B)	E9A1	215
	C52, C53, C54 Eight	Carter WCD	830S, SA	202
CROSLEY				
1950-51	CD & VC	Tillotson	DY-9C	228
DE SOTO				
1950	S14 S-M Trans.	Carter (B&B)	EX3	215
	S14 Auto Tr.	Carter (B&B)	E7L4	215
1950-51	S14, S15 (City Traffic)	Carter (B&B)	E7W1	215
1951	S15 S-M Tr.	Carter (B&B)	E9C1	215
	S15 Auto Tr.	Carter (B&B)	E9A1	215
DODGE				
1950-51	All S-M Tr.	Stromberg	BXVD-3	231
	All S-M Tr.	Carter (B&B)	D6P1	215
	All Auto Tr.	Stromberg	BXVES-3	231
	All Auto Tr.	Carter (B&B)	D6M1	215
FORD				
1950-51	Pass. Cars 6 Cyl. S-M Tr.	Holley-Ford	8HA-9510	219
	Pass. Cars V8 S-M Tr.	Holley-Ford	8BA-9510A	218
	Trucks 6 Cyl. (Updraft)	Holley-Ford	7HW-, 8MHW-9510A	217
	Trucks 6 Cyl. (Downdrft)	Holley-Ford	7HT-, 8MTH-9510A	219
	Trucks V8	Holley-Ford	7RT-9510A	218
1951	Pass. Cars 6 Cyl. Auto Tr.	Holley-Ford	1HA-9510A	219
	Pass. Cars V8 Auto Tr.	Holley-Ford	1BA-9510A	218
FRAZER				
1950	F-505, F-506	Carter WCD	723S	202
1951	F-515, F-516	Carter WCD	813S	204
HENRY J				
1951	Std. 4 Cyl.	Carter YF	820S, SA, SB	208
	Deluxe 6 Cyl.	Carter YF	814S, 833S, SA, SB	208
HUDSON				
1950 Early	Six	Carter WDO	647SA	207
	Eight	Carter WDO	648S	207
1950-51	Pacemaker	Carter WA1	749S	212
	Six	Carter WGD	776S	204
	Eight	Carter WGD	773S	204
KAISER				
1950	K-501, K-502	Carter WCD	723S	202
1951	K-511, K-512	Carter WGD	781S	204
LINCOLN				
1950-51	All V8	Holley-Ford	OEL-9510A	220
MERCURY				
1950-51	All V8 S-M Tr.	Holley-Ford	8CM-, 1CM-9510G	220
	All V8 Auto Tr.	Holley-Ford	1CM-9510-K, N	220
NASH				
1950	Rambler & Stsmn	Carter WA1	694S, 780S	212
1950-51	Ambassador	Carter WA1	746S	212
1951 Early	Rambler	Carter YF	757S, SA, SB	208
	Statesman	Carter YF	824S, SA, SB	208
1951 Late	Rambler	Carter YF	876S	208
	Statesman	Carter YF	877S	208
OLDSMOBILE				
1949	Late 88 & 98	Carter WGD	714SA	204
1949-50	88 & 98 Repl.	Carter WGD	714SU, 849SU	204
1950	76 Six S-M Tr.	Carter WA1	764S	212
	76 Six Auto Tr.	Carter WA1	763S, SA	212
	88 & 98 Eight	Rochester	AA	225
1951	88 & 98 Eight	Carter WGD	851S	204
	88 & 98 Eight	Rochester	BB	226
PACKARD				
1950	"2300-5" Eight	Carter WGD	728S, SA	204
	"2300-5" Super 8	Carter WDO	643 SA	207
	"2300-5" Cust. 8	Carter WDO	531SA	207
1951	200 Eight	Carter WGD	784S	204
	300 Eight	Carter WGD	767S	204
	400 Patrician	Carter WGD	767S	204
PLYMOUTH				
1950-51	All	Carter (B&B)	D6H2	215
	All (City Traffic)	Carter (B&B)	D6N2	215
PONTIAC				
1950	Six S-M Tr.	Carter WA1	717S	212
	Six Auto Tr.	Carter WA1	718S	212
1950-51	Eight S-M Tr.	Carter WCD	719S, SA	202
	Eight Auto Tr.	Carter WCD	720S, SA	202
1951	Six (All)	Rochester	BC	222
STUDEBAKER				
1950	9G Champion	Carter WE	715S	211
1950 Early	17A Commander	Carter WE	627SA	211
1950 Late	17A Commander	Stromberg	BXOV-26	232
1951	10G Champion	Carter WE	715S	211
1950-51	H Commander	Stromberg	AAUVB-26	229
WILLYS				
1950 Early	4 Cyl. Jeep CJ-3A	Carter WO	636SA	211
	4 Cyl. (exc. Jeep)	Carter WA1	613S	212
	4 Cyl. (exc. Jeep)	Carter YF	738S	208
1950-51	6 Cyl.	Carter WA1	645S	212
	4 Cyl. (exc. Jeep)	Carter YF	768S, SA; 832S	208
	6 Cyl.	Zenith	31A11	233

CARTER DUAL TYPE WCD

BUICK
①1950-51 Series 40, 50 . 725S, SA
①1950-51 Series 70..... . 726S, SA

CADILLAC
①1950 All Series 742S
1951, All Series 845S

CHRYSLER
①1951 V8 52, 53, 54... ..... 830S, SA

FRAZER & KAISER
1950 All Models 723S

PONTIAC
①1950-51 Eight S-M Trans. ...719S, SA
①1950-51 Eight H-D Trans.... 720S, SA
S-M—Synchro-mesh Transmission.
H-D—Hydra-Matic Drive Transmission.
①—*See Production Change Notes below.*

►CHANGES, CAUTIONS, CORRECTIONS

►**BUICK CARBURETOR PRODUCTION CHANGE:** Carburetors 725S & 726S superseded by 725SA & 726SA which have bowl vents faced toward rear of engine compartment. This design eliminates possibility of gasoline fumes being noticed in the car. *See 725S & 726S recommended change following.*

►**BUICK 725S & 726S CARBURETOR CHANGE (to correct complaints of gasoline odors noticeable in the car):** Remove and discard original Air Horn & Piston Housing Assembly and Air Horn Gasket, drill two ¼" holes in bowl cover to coincide with new vent hole locations in air horn (use new air horn gasket as template in locating holes), install new type Air Horn Gasket No. 121-186 and Air Horn & Piston Housing Assembly No. 6-730S. With this change, carburetors will be similar to later 725SA and 726SA models.

►**CADILLAC 1950 CARBURETOR CHANGE (to correct Detonation Complaints)**—Manufacturer recommends installation of modified Metering Rods and 1949 type Vacuum Piston Spring (furnished in kit as Cadillac Part No. 1458068 or Carter Unitized Package No. 75-772U) as part of detailed procedure to correct this complaint. *See "Detonation Complaint Correction" in Cadillac Special Data.*

Cadillac 742S Parts Changes	First Type	Later Type
Metering Rods	75-716	①75-771
Vacuum Piston Spring	61-382	61-332

①—Can be identified by two trademarks (c in circle) on rod flat.

►**CHRYSLER SLOW WARM-UP CORRECTION (830S Carbs. before April 1951):** This condition caused by air leak at thermostatic coil housing gasket. Correct by installing new gasket, special thermostatic coil housing retainer ring (63-153) installed **with flared side away from air horn,** and two special thermostatic housing retainer screws (101-82). These parts furnished in Unitized Pkg. 63-155U. **Do not re-use original thermostatic coil housing retainers and retainer screws.** Carburetors "D1" and later (April 1951) have above parts installed.

►*CAUTION—Hold thermostatic coil housing with open-end wrench on fitting when tightening heat tube connection. Use extreme care not to turn or distort cover.*

►**Pontiac (1949-50) 719S & 720S Carburetor Choke Rattle Correction**—This complaint can be corrected by installing new type Air Horn Assembly with choke valve anti-rattle feature as used on 719SA & 720SA carburetors (see description following). Part Nos. are 6-674S (719S), 6-675S (720S) and choke valves have special bleed hole in valve (#45 drill or .082" for 719S, SA); (5/32" or .156" for 720SA type used to replace original 720S valve which had .218" bleed hole). *CAUTION—Correct valve must be used on each type carburetor—SMALL bleed hole on cars with Synchro-mesh Trans., LARGE bleed hole on Hydra-Matic cars.*

►**Pontiac (1950) Carburetor Production Change**—New carburetors 719SA (Cars with Synchro-mesh Trans.), 720SA (Hydra-Matic Drive Cars) used on later cars have new Air Horn with new choke valves designed to prevent rattles.

►*CAUTION—Air Horn Assemblies and Choke Valves on these models NOT INTERCHANGEABLE and can be identified as follows:*

719SA Air Horn & Choke Valve Assy.—Part No. 6-674S. Choke Valve No. 7-166 has SMALL bleed hole in valve (#45 drill or .082" size). *This carburetor must be used on cars with Synchro-mesh Transmission.*

720SA Air Horn & Choke Valve Assy.—Part No. 6-675S. Choke Valve No. 7-167 has LARGE bleed hole in valve (5/32" or .156" size—decreased from .218" size used on 720S carburetors). *This carburetor must be used on Hydra Matic cars.*

►**CARBURETOR IDENTIFICATION (CODE NO.):** Stamped on face of flange as follows: 624 (725S & 725SA), 626 (726S & 726SA), 550 (723S, 719S, 719SA), 558 (720S, 720SA).

DESCRIPTION: Dual (double barrel), downdraft type of same design as used on corresponding previous models except for following new features:

Cadillac 845S Choke Modifier—Consists of a connector rod linking the automatic choke thermostatic coil to the throttle valve lever so that the thermostatic coil tension is lessened as the throttle valves are opened. Provides improved economy and performance during the warming up period. *See Climatic Control*

Chrysler 830S Climatic Control—Has special heat tube connection at center of thermostatic coil housing and "delayer plate" within housing which provides longer choke action during warm-up and prevents too rapid closing of the choke after engine is shut off. *See Climatic Control data below.*

ADJUSTMENT & OVERHAUL: Same as other Carter "WCD" carburetors. *See complete "Carter Dual Type WCD" Carburetors in previous release and set these carburetors to the following specifications:*

CONTINUED ON NEXT PAGE

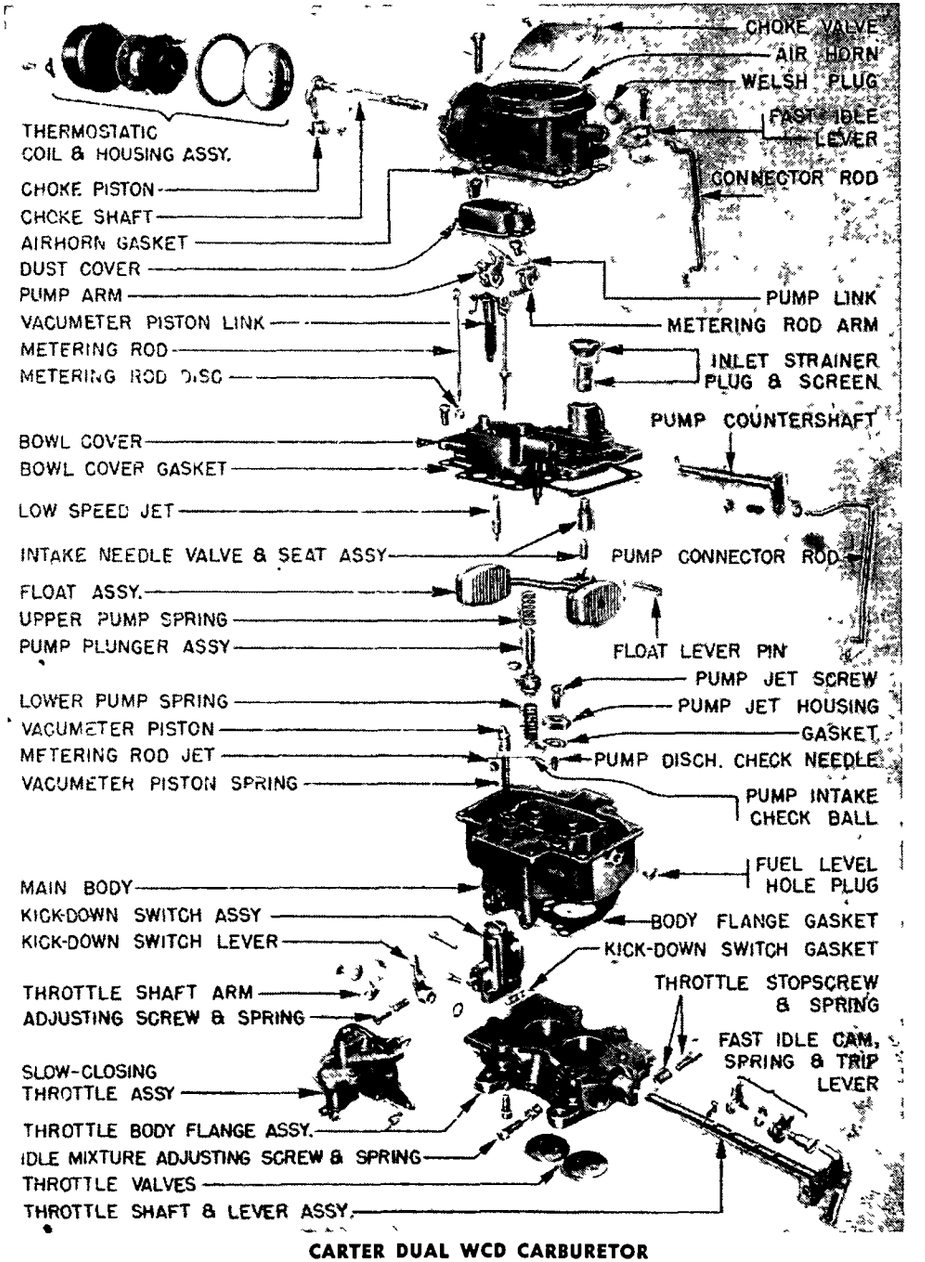

CARTER DUAL WCD CARBURETOR

CARTER DUAL TYPE WCD (C nt.)

IDLING ADJUSTMENT

Car Model	Carburetor	Idle Screw Setting	Idle Speed
Buick 40, 50	725S, 725SA	⅞-1⅜ turns open	450 RPM
Buick 70	726S, 726SA	¾-1¼ turns open	450 RPM
Cadillac	742S, 845S	¾-1¼ turns open	①
Chrysler 8	830S, 830SA	½-1½ turns open	475-500 RPM
Frazer & Kaiser	723S	1-1½ turns open	550 RPM
Pontiac 8	719S, SA; 720S, SA	¾-1¼ turns open	②

①—Synchro-mesh Trans. Cars—400 RPM. Hydra-Matic Drive Cars—375 RPM.
②—Synchro-mesh Trans. Cars—450-475 RPM. or 7-8 MPH.
Hydra-Matic Drive Cars—365-385 RPM.

ACCELERATING PUMP

Pump Stroke Checking & Adjustment—Install pump connector link in hole of pump arm which provides correct stroke for checking (see table), back out throttle lever stopscrew so that throttle valves are tightly closed (CAUTION—see that fast idle cam does not hold throttle valves open).

►***CAUTION—Pump stroke can be checked by either of the two following methods:***

(1) Gauge T109-117S Method—Invert gauge on edge of dust cover boss of bowl cover at pump plunger shaft (CAUTION—hold gauge vertical to insure correct reading). Turn knurled nut on gauge until gauge finger just touches upper end of plunger shaft. Number indicated on gauge should agree with "Gauge" figure in table below. Adjust by bending throttle connector rod at upper angle.

(2) Scale Method—Use a scale to measure distance from top of pump plunger shaft to top of dust cover boss on bowl cover. This distance should agree with "Scale" figure in table. Adjust by bending throttle connector rod at upper angle.

ACCELERATING PUMP STROKE

Car Model	Carburetor	Gauge—Reading—Scale	Pump Setting
Buick (all)	725S, SA; 726S, SA	33—20/64"	Short Stroke
Cadillac	742S, 845S	32—21/64"	Long Stroke
Chrysler 8	830S, 830SA	26—15/64"	Long Stroke
Frazer & Kaiser	723S	29—9/32"	Short Stroke
Pontiac	719S, SA; 720S, SA	32—20/64"	Short Stroke

METERING ROD SETTING

Car Model	Carburetor	Metering Rod Gauge	Length
Buick (all)	725S, SA; 726S, SA	No Gauge Req'd	(See Note)
Cadillac	742S, 845S	No Gauge Req'd	(See Note)
Chrysler 8	830S, 830SA	No Gauge Req'd	(See Note)
Frazer & Kaiser	723S	T109-163	2.940"
Pontiac	719S, SA; 720S, SA	T109-163	2.940"

►**Buick, Chrysler, Cadillac Metering Rod Note**—On these carburetors no gauge is required and metering rods should be checked and adjusted as follows: Back off throttle lever stopscrew so that throttle valves tightly closed, loosen metering rod arm clampscrew (on countershaft under dust cover on bowl cover), press down on vacumeter link until both metering rods just bottom in carburetor casting, rotate metering rod arm until finger on arm contacts lip on vacumeter link, tighten clampscrew (CAUTION—do not disturb arm position).

FLOAT LEVEL SETTING

►***CAUTION—Floats must be adjusted laterally (parallel to gauge uprights) as well as vertically (Float Level specification below).***

Car Model	Carburetor	Float Level	Checking Gauge
Buick (all)	725S, SA; 726S, SA	5/32"	T109-196
Cadillac	742S, 845S	11/64"	T109-205
Chrysler 8	830S, 830SA	11/64"	T109-205
Frazer & Kaiser	723S	①	
Pontiac	719S, SA; 720S, SA	3/16"	T109-162

①—Allow floats to hang freely on inverted cover so that spring in valve stem is not compressed. Floats should be Flush to 1/32" above edge of bowl cover.

THROTTLE VALVE SETTING

Car Model	Carburetor	Idle Port Opening	Vacuum Spark Port
Buick 40, 50	725S, 725SA	.062-.068"③	.046-.050"①
Buick 70	726S, 726SA	.072-.078"③	.060-.064"①
Cadillac	742S, 845S	.119-.125"③④	.033-.043"②
Chrysler 8	830S, 830SA	.136-.140"③	.067-.073"⑤
Frazer & Kaiser	723S	.122-.128"③	.033-.038"②
Pontiac	719S, SA; 720S, SA	.122-.128"③	.052-.056"②

①—Bottom of port above throttle valve. ②—Top of port above valve.
③—Port Opening above top edge of throttle valve.
④—Was .115-.121" on early production 742S carburetors.
⑤—.067-.073" (early production), .035-.041" (later production).

CLIMATIC CONTROL (CHOKE) SETTING

Car Model	Carburetor	Choke Setting
Buick (all)	725S, SA; 726S, SA	1 Point Rich
Cadillac ('50)	742S	1 Point Lean
Cadillac ('51)	845S	See Modifier Note
Chrysler 8	830S, 830SA	Centered
Frazer & Kaiser	723S	Centered
Pontiac	719S, SA; 720S, SA	Centered

Cadillac 845S Choke Modifier Setting—Choke and modifier adjusted together: Disconnect throttle-to-choke rod. Set climatic control 1 Point Rich (loosen retainer screws, rotate cover and coil assembly until notch on cover 1 point to left of center mark on housing, tighten retainer screws). Loosen modifier arm clampscrew, rotate metal pointer until it is in line with pointer on cover, hold pointer in this position and rotate modifier arm until scribed line on face of arm is vertical, tighten clampscrew securely. Turn throttle lever stopscrew out exactly two turns, hold choke valve open, open throttle and then close throttle completely and check metal pointer alignment with pointer on cover. If both pointers do not line up, bend connector rod until alignment secured. Turn throttle stopscrew in exactly two turns (to restore original speed setting).

FAST IDLE SETTING

►***CAUTION—Two different settings required as noted below.***

Car Model	Carburetor	(1) — Setting & Gauge No. — (2)	
Buick (all)	725S, SA; 726S, SA	.020" T109-29	.015" T109-44
Cadillac	742S, 845S	.020" T109-29	.020" T109-29
Chrysler 8	830S, 830SA	.040" T109-143	.017-.021" T109-44
Frazer & Kaiser	723S	.010" T109-200	.018" T109-44
Pontiac	719S, SA; 720S, SA	.040" T109-193	.026" T109-189

(1) Fast Idle Cam Clearance—Loosen choke valve lever clampscrew on choke shaft, insert gauge of correct thickness (See Checking Gauge (1) in table above) between lip of fast idle cam and boss on flange casting, hold choke valve tightly closed, remove all slack from linkage by pressing choke valve lever toward closed position, tighten choke valve lever clampscrew.

(2) Fast Idle Screw Setting—Hold choke valve tightly closed, tighten fast idle adjusting screw against high step of fast idle cam until throttle valve opening or clearance between edge of valve and carburetor bore on side opposite idle ports is correct (see Checking Gauge (2) in table above).

UNLOADER SETTING

►***CAUTION—Fast Idle Cam Clearance (Fast Idle Setting (1) above) must be adjusted before Unloader Setting is adjusted.***

Car Model	Carburetor	Throttle Opening	Checking Gauge
Buick (all)	725S, SA; 726S, SA	3/16"	T109-28
Cadillac	742S, 845S	7/32"	T109-106
Chrysler 8	830S, 830SA	7/32"	T109-106
Frazer & Kaiser	723S	1/8"	T109-36
Pontiac	719S, SA; 720S, SA	1/8"	T109-36

CHRYSLER SLOW-CLOSING THROTTLE (DASHPOT)

Consists of a diaphragm type unit with a plunger which contacts an arm on the throttle valve shaft and prevents a too-rapid closing of the throttle valves when the accelerator is released. Dashpot unit is a separate assembly mounted on the carburetor.

Adjustment—Check dashpot action with engine running, by shifting to Driving Range (hold car with brakes), and rapidly depressing and releasing accelerator pedal. If engine stalls, increase dashpot action by turning adjusting screw on actuating lever on throttle shaft. Maximum dashpot action is secured with screw set so that dashpot plunger can be moved inward approximately 1/16" after engine has returned to normal idle speed. If correct performance cannot be secured by adjusting dashpot, tune up engine and recheck performance.

CAR STARTER SETTING

Buick Carburetors—Switch should make contact within 30° to 45° throttle opening range. Vary shim thickness on guide block under contact spring.

►***CAUTION—Do not use less than one No. 153-11 (.018") Shim or more than three No. 153-11 (.018") Shims plus two No. 153-12 (.006") Shims.***

SERVICE PARTS

Gasket Set—Carter No. 189 (719S, 719SA, 720S, 720SA, 723S), No. 195 (725S, 726S), No. 195A (752SA, 726SA), No. 201A (742S, 845S), No. 212 (830S).
Repair Pkgs. (with Std. Metering Rods)—Carter No. 1507 (719S, 719SA, 720S, 720SA), No. 1512 (723S), No. 1515B (725S), No. 1515C (725SA), No. 1532A (726S), No. 1538 (742S).

CARTER DUAL TYPE WGD

	Carter No.
FRAZER	
1951 All Models	②813S
HUDSON	
1950-51 Six	②776S
1950-51 Eight	②773S
KAISER	
1951 All Models	②781S
LDSMOBILE	
1949 Late 88 & 98	714SA
1949-50 88 & 98 Repl	①714SU & 849SU
1951 88 & 98	851S
PACKARD	
1950 "2300-5" Series 8	②728S, SA
1951 "200"	784S
1951 "300"	767S
1951 "400" Patrician	767S

①—Replacement Pkg. (carburetor and necessary installation parts) for cars not Carter equipped.
②—See Production Change Notes below.

►CHANGES & CORRECTIONS

►**FRAZER 813S & KAISER 781S CHANGE (to correct Stalling & Hard Starting caused by Flooding):** On carburetors before June 1950 (stamped "EO" and previous and not marked by "X" on tag) with original type No. 25-173S Intake Needle & Seat Assembly, install latest type needle and seat assembly and change float level as follows:

Intake Needle & Seat Assy. No. 25-196S—Install this new type which has SOLID needle (no spring) and longer standpipe to prevent foreign material entering carburetor. Make certain that intake needle pull clip engages float lever lip. *NOTE*—25-196S can be distinguished from second type 25-185S by solid needle (both types have longer standpipe but 25-185S also has spring-loaded needle).

Float Level—Set float level at ¼" (was 7/64") using Float Level Gauge T109-31 and measuring from top of float at center to gasket seat on bowl cover with assembly inverted.

Carburetor Marking—Stamp "XX" on carburetor identification tag to indicate that above changes have been made.

Fuel Pump Pressure—Fuel pump pressure should be 3½-4½ lbs. and must not exceed 4½ lbs.

►*CAUTION*—Carburetors stamped "FO" and "GO" (June & July 1950) and also carburetors marked by an "X" on identification tag have second type No. 25-185S needle and seat assembly and need not be changed as directed above. All carburetors stamped "HO" and later (beginning August 1950) have latest type No. 25-196S needle and seat assembly and new ¼" float level setting.

►**HUDSON CARBURETOR PRODUCTION CHANGES:**

Choke Setting Change (6 Cyl. 776S)—Setting changed to 2 Point Lean (superseding original setting of 1 Point Lean).

Metering Rod Change (6 Cyl. 776S)—New Std. Rod No. 75-754 supersedes original rod No. 75-732 which is **now 1 Size Lean.** Original 1 Size Lean Rod No. 75-740 has been discontinued.

Intake Needle & Seat Assembly Change (6 & 8 Cyl. 776S & 773S)—New type No. 25-186S supersedes original No. 25-165S. This new 25-186S assembly has longer standpipe to lessen possibility of failure due to dirt or other foreign material in fuel and will correct starting difficulties due to flooding.

Other Parts Changes (6 & 8 Cyl. 776S & 773S)—Accelerating Pump Plunger, Rod, Spring, & Retainer Assembly No. 64-132S supersedes No. 64-129S (776S), No. 64-133S supersedes No. 64-130S (773S). New Pump Spring Retainer No. 63-149 supersedes No. 63-92 (all carburetors).

►**OLDSMOBILE 714S CHANGE (to correct starting difficulties due to Flooding):** New Intake Needle & Seat Assembly, Part No. 25-182S, should be installed on first cars (supersedes previous type No. 25-163S). Will also lessen possibility of failure due to dirt or other foreign material in fuel (needle seat has longer standpipe so that fuel drawn in at higher level). **When this assembly installed, stamp an "X" on carburetor identification tag.**
NOTE—This new 25-182S needle & seat assembly used on later production carburetors.

►**OLDSMOBILE 851S THROTTLE STICKING CORRECTION (Carburetors before February 1951):** On carburetors prior to Code date B1, Fast Idle Link Spring No. 61-443 should be installed on lower end of fast idle link (loop spring around connector clip, engage upper end on shank of fast idle link, engage lower end on end of connector rod). Spring will prevent throttle sticking in wide open position.
NOTE—Carburetors stamped "B1" and later have this spring installed in production and also have small boss on choke housing which acts as additional guide for fast idle link.

►**OLDSMOBILE REPLACEMENT CARBURETORS:** Packages listed above consist of one carburetor: 714S (Pkg. 714SU), 849S (Pkg. 849SU) together with No. 195-43U Installation Unit as follows:

No. 195-43U Installation Unit—Consists of the following parts needed to install carburetors on this model: 180-49 Air Cleaner Mounting Bracket, 90-17S Air Cleaner Adapter Clamp Assy., 108-48 Air Cleaner Spacer, 105A-44 Air Cleaner Nut, 86-12 Flange Stud & Air Cleaner Lockwasher, 101-280 Bracket Capscrew, 137-59 Choke Heat Tube, 99-10 Tube Compression Coupling Cone, 156-17 Elbow Fitting.

►**PACKARD 728S & 728SA PRODUCTION CHANGE:** Model 728SA has changes in calibrations as follows:
Metering Rod (Std.)—(728S) No. 75-679, (728SA) No. 75-707.
Main Nozzle—(728S) #38 drill I.D., (728SA), #30 drill I.D. NOTE—Nozzle is installed permanently and should not be removed.

►**PACKARD 767S & 784S FUEL LEAKAGE CORRECTION:** Fuel leakage at passage in main body directly below Climatic Control may be caused by loose Pump Jet & Housing assembly. To check, remove air cleaner, open throttle by hand (engine must not be running), note evidence of leakage at gasket between pump jet housing and main body casting. To correct, check gasket (replace if not in good condition), and tighten pump jet housing attaching screw using long screwdriver inserted through air horn.

►**PACKARD 767S & 784S FAST IDLE & CHOKE SETTING CHANGE:** New settings will provide slightly lower engine speed when engine is cold and will shorten period during which fast idle operates:
Fast Idle Setting—.023" (supersedes .026").
Choke Setting—1 Point Rich (supersedes 3 Rich).
Intake Nozzle & Seat Assembly Change (728S & 728SA). New type No. 25-186S supersedes first type No. 25-165S. New 25-186S assembly has longer standpipe on seat to lessen possibility of dirt or other foreign material in fuel entering carburetor and will correct starting difficulties due to flooding.

►**PACKARD 784S CARBURETOR PARTS CHANGES:** New type parts used on later carburetors as follows:
Vacuum Piston Spring—No. 61-134 (supersedes 61-135).
Accelerating Pump Lower Spring—No. 61-150 (supersedes No. 61-365).

DESCRIPTION

DESCRIPTION: Dual downdraft, horizontal air intake type (Oldsmobile), vertical air intake (other cars) type with vacuum controlled metering rods (vacumeter), spring-loaded piston type accelerating pump operated by throttle lever, well type non-adjustable anti-percolator, and Automatic Choke and Fast Idle.

Fuel System: Consists of Idle (Low Speed) Fuel System, Main (High Speed) Fuel System, and Accelerating Fuel System which operate as follows (Idle & Main Fuel Systems duplicated for each barrel):

Idle Fuel System—Fuel for idling is taken from main nozzle well up through the Idle Tube which meters the fuel and is then mixed with air admitted through idle air bleed opening in air horn. Fuel mixture passes through restricted horizontal passage and additional air is admitted through idle passage bleed opening in air horn. Fuel mixture then flows down through passage to idle discharge ports at throttle edge. For closed throttle idling, all fuel is discharged through lower port below throttle and is controlled by the Idle Adjusting Screw (upper port serves as additional air bleed). As soon as the throttle is cracked open, additional fuel is discharged through upper port also. At higher car speeds idle system drops out and all fuel is discharged by main fuel system.

Main Fuel System—Fuel enters main well through metering jet and is metered by the metering rod in this jet. Fuel then flows up through main well and is discharged through Main Discharge Nozzle located in throat of primary venturi. Anti-percolator well acts as an air bleed for the main nozzle and this air bleed action is controlled by the size and location of the anti-percolator well vents so that at high speeds practically all back bleeding of air into the system is eliminated.

Anti-Percolator Well Vents—Well is vented through pocket formed by flat on nozzle in high speed passage at inner wall of primary venturi and by restricted opening in air horn at top of well. Additional side vent opening into top of idle well prevents accumulation of vapor in this well which might cause rough idle at higher than normal operating temperatures.

ADJUSTMENT & OVERHAUL

IDLING ADJUSTMENT: Adjust only with engine warmed up so that choke valve wide open and engine idling at hot or slow idle speed (Automatic Choke and Fast Idle inoperative). Set throttle stop-screw for correct idle speed, adjust both idle adjusting screws (one for each barrel) so that engine idles smoothly. Screws control fuel mixture and should be turned in for leaner mixture, out for richer mixture. See car model page for complete tune-up data.

CONTINUED N NEXT PAGE

CARTER DUAL TYPE WGD (C nt.)

IDLE SETTING

Car & Carb.	Idle Screw	Idle Speed
Frazer 813S	½-1 turn open	①550-600 RPM
Hudson 6 776S	½-1 turn open	②540-560 RPM
Hudson 8 773S	½-1 turn open	②540-560 RPM
Kaiser 781S	½-1 turn open	①550-600 RPM
Oldsmobile 714SA	¾-1½ turns open	③425 RPM
Oldsmobile 849S	1-1½ turns open	①350 RPM
Oldsmobile 851S	¾-1¼ turns open	③425 RPM
Packard 728S, SA	1-1½ turns open	④6 MPH
Packard 784S	½-1½ turns open	④6 MPH
Packard 767S	½-1½ turns open	④6 MPH

①—425-450 RPM. on Hydra-Matic Drive cars.
②—580-600 RPM. on cars with Vacumotive Drive, Drive-Master or Super-matic Drive.
480-520 RPM. on Hydra-Matic Drive cars.
③—350 RPM. with selector lever in "Dr" position on Hydra-Matic Drive cars.
④—400 RPM. on Ultramatic Drive cars.

PERFORMANCE: Should be satisfactory if idling adjustment correctly made and metering rods adjusted.

ACCELERATING PUMP: No seasonal adjustment provided. Pump stroke should be checked and adjusted before metering rods are adjusted as follows:

Adjustment (Except Oldsmobile)—Remove the dust cover by taking out two cover screws. Back off throttle lever stopscrew so that throttle valves tightly closed, wedge choke valve in wide open position. Place Universal Pump Gauge T109-117S on edge of dust cover flange, turn knurled nut on gauge until finger at end of gauge extension just touches top of pump plunger shaft. Note gauge reading (see table below). Adjust by bending pump connector rod at upper angle near countershaft lever using tool T109-41. If gauge not used, use scale to measure disance from top edge of flange to top of plunger (see "Height" entry in table below).

Adjustment (Oldsmobile)—Remove dust cover (on bowl cover) by taking out two screws. Back off throttle lever stopscrew so that throttle valves tightly closed. Place straightedge across dust cover boss at pump arm on countershaft. Bend connector rod linking throttle lever and pump arm at upper bend in arm until upper flat surface of pump arm is parallel to straightedge.

►*CAUTION—Check Metering Rod Adjustment after adjusting Pump.*

ACCELERATING PUMP SETTING

Car & Carb.	Gauge Reading	Plunger Height
Frazer 813S		1/2"
Hudson 6 776S	46	½"
Hudson 8 773S	46	½"
Kaiser 781S		1/2"
Oldsmobile 714SA, 849S		Special (above)
Oldsmobile 851S	46	½"
Packard 728S, SA	42	15/32"
Packard 784S, 767S		15/32"

►**Pump Vent Note**—Pump jet cluster pocket is vented to outside of carburetor body casting to prevent pump jet discharge when engine operated at constant-throttle. If accelerator pedal is depressed repeatedly with engine not running, fuel will be forced out vent and appear on outside of carburetor.

METERING ROD ADJUSTMENT: Metering rods are controlled by a single spring-loaded vacuum piston (rods held down in jets for maximum economy by vacuum piston, and lifted out of jets by spring for acceleration and full power operation when vacuum decreases as throttle is opened). A lip on the metering rod arm (on pump countershaft which is linked to throttle lever) acts as a stop for the vacuum piston link and insures correct metering rod position for all throttle positions.

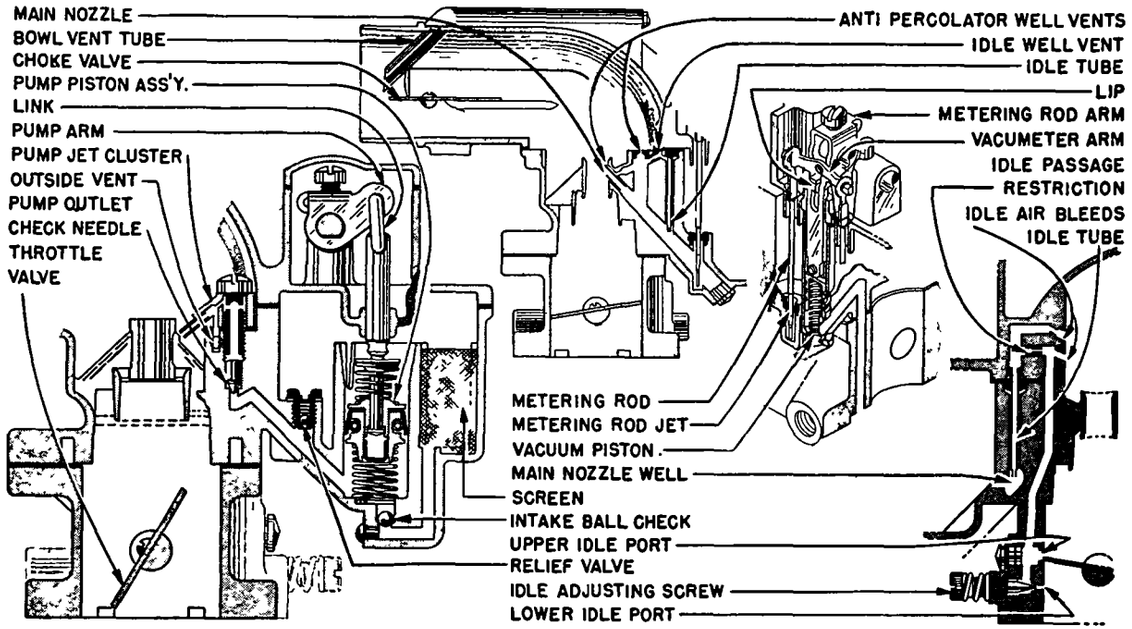

CARTER DUAL TYPE WGD CARBURETOR

►*CAUTION—Check accelerating pump before adjusting metering rod (pump adjustment disturbs metering rod setting). No metering rod gauge required.*

Adjustment—Remove dust cover (on bowl cover) by taking out two cover screws. Back off throttle lever stopscrew so that throttle valves are tightly closed. Loosen clampscrew on metering rod arm on countershaft, press down on vacumeter arm until metering rods just bottom in carburetor casting, hold rods and arm in this position, see that throttle valves closed, position metering rod arm so that lip on arm just contacts vacumeter arm, tighten clampscrew

►*CAUTION—Reset throttle stopscrew for correct idling speed after metering rod adjustment completed.*

►**Countershaft Lubrication Note**—Lubricate shaft with light graphite grease through hole in center shaft support and outer dust cover screw hole before installing dust cover.

FLOAT LEVEL: Remove the bowl cover and air horn (CAUTION—use extreme care not to damage float and jets when lifting off bowl cover), remove gasket, invert cover and allow float to hang freely. Use correct checking gauge (see table below) between gasket face of bowl cover and nearest point on float (top center of float). Adjust by bending lip on float arm at pivot point. *CAUTION—do not bend float arm.*

►**Frazer & Kaiser Caution**—Do not compress spring loaded pin in intake needle when checking float level (will result in false reading). Allow float to hang freely on inverted cover assembly.

FLOAT LEVEL

Car & Carb.	Checking Gauge	Float Level
Frazer 813S (Early)		①7/64"
Frazer 813S (Later)		②¼"
Hudson 6 776S	T109-28	3/16"
Hudson 8 773S	T109-28	3/16"
Kaiser 781S (Early)		①7/64"
Kaiser 781S (Later)		②¼"
Oldsmobile 714SA	T109-31	¼"
Oldsmobile 849S	T109-31	¼"
Oldsmobile 851S	T109-32	15/64"
Packard 728S, SA	T109-39	13/64"
Packard 784S & 767S	T109-39	13/64"

①—With No. 25-173S or 25-185S Intake Needle & Seat Assembly (Carb. stamped "GO" and earlier and without "XX" on tag indicating latest type 25-196S assy. used).
②—With new No. 25-196S Intake Needle & Seat Assy. (Carb. stamped "HO" and later or with "XX" stamped on tag indicating this assembly installed on earlier carburetors).

Needle Valve & Seat—Furnished as matched set only. Install both parts together.

Float Needle & Seat Assy.

Car & Carb.	Intake Hole Size	Part No.
Frazer 813S	#42	①25-196S
Hudson 776S & 773S	#42	②25-186S
Kaiser 781S	#42	①25-196S
Oldsmobile 714SA, 849S	#38	③25-182S
Oldsmobile 851S	#38	25-200S
Packard 728S, SA	#42	⑧25-186S
Packard 784S & 767S	#42	25-186S

①—Supersedes Nos. 25-173S & 25-185S. Can be identified by longer standpipe on seat and SOLID needle

CONTINUED ON NEXT PAGE

CARTER DUAL TYPE WGD (C nt.)

(both previous types have spring-loaded needle). See Production Change data.
②—Supersedes No. 25-165S. Can be identified by longer standpipe on seat. See Production Change
③—Supersedes No. 25-163S. Can be identified by longer standpipe on seat. See Production Change

FAST IDLE: *CAUTION*—Oldsmobile 714S & 714SA have different fast idle mechanism and are adjusted differently. Oldsmobile 851S and all other carburetors have same design fast idle mechanism.

Adjustment (Oldsmobile 714S & 714SA): *CAUTION—Two separate adjustments required as follows:*

Fast Idle Linkage—Back off fast idle screw on throttle lever until fast idle cam can be revolved freely with throttle valves closed. Loosen clampscrew on choke lever to which fast idle cam connected, use .015" feeler Gauge T109-72 between lip on fast idle cam and boss on carburetor casting, hold choke valve tightly closed, remove all slack from linkage by pressing choke lever toward closed position, tighten lever clampscrew while holding lever in this position.

Fast Idle Screw—Back off throttle lever stopscrew so that throttle valves tightly closed, revolve fast idle cam until raised projection (narrow separate step) on cam lines up with fast idle screw, turn screw in or out until it just touches this projection

NOTE—This adjustment can also be made by closing the throttle valves against a special .015" round feeler gauge (insert feeler between edge of valve and carburetor wall). Close choke valve tightly, so that high step of fast idle cam is opposite fast idle screw. Turn fast idle screw in against step on fast idle cam until feeler gauge just falls free of throttle valve (CAUTION—Carburetor must be upright and gauge free to fall out when making this adjustment).

Adjustment (Oldsmobile 851S & Other Carburetors): Remove retainer screws and retainers, thermostatic coil and housing, gasket, and baffle plate (to expose fast idle mechanism). Open throttle valve to release fast idle, then close choke valve, hold choke valve closed and close throttle valve. Invert carburetor and check clearance between edge of throttle valve and carburetor wall with correct gauge (see table below). If throttle opening not correct, adjust by bending choke connector rod at lower angle near throttle lever. Adjust Unloader.

►**Oldsmobile 851S Adjustment Note**—Adjust this model by loosening locknut and turning adjusting sleeve on connector rod.

FAST IDLE SETTING

Car & Carb.	Checking Gauge	Throttle Opening
Frazer 813S	T109-29	①.018-.023"
Hudson 6 776S	T109-189	②.026"
Hudson 8 773S	T109-189	②.026"
Kaiser 781S	T109-29	①.018-.023"
Oldsmobile 714SA, 849S		Special (above)
Oldsmobile 851S		.017"
Packard 728S, SA	T109-189	②.026"
Packard 767S, 784S	T109-189	②③.023"

①—Gauge T109-29 used for .020" & .030" settings.
②—Gauge T109-189 used for .023" & .026" settings.
③—Supersedes original setting of .026" specified for these models (use other end of same gauge).

AUTOMATIC CHOKE: Carter Climatic Control (Dual Carburetor type). *See Carburetion Equipment Section for complete data.*

CHOKE SETTING

Car	Carburetor	Choke Setting
Hudson 6	776S	①2 Points Lean
Packard 8 ('49-50)	728S	①2½ Points Lean
Packard 8 ('49-50)	728SA	①2 Points Lean
Packard (All '51)	784S, 767S	②1 Point Rich
ALL OTHER CARS		Centered (At Index)

①—Supersedes 1 Point Lean setting originally specified for this model.
②—Supersedes original setting of 3 Points Rich.

UNLOADER: *CAUTION*—Oldsmobile 714S & 714SA have different Unloader mechanism and are adjusted differently. Oldsmobile 851S and all other carburetors have same design unloader mechanism.

Adjustment (Oldsmobile 714S & 714SA): Hold throttle valve in wide open position, check choke valve opening with Gauge T109-31 (¼"). Adjust by bending lip on throttle lever using tool T109-41.

Adjustment (Oldsmobile 851S & Other Carburetors): With thermostatic coil, housing, gasket, and baffle removed, hold throttle valves wide open, close choke valve as far as possible, check choke valve opening (see table below for checking gauge and correct opening). Adjust by bending choke trip lever arm (on choke lever) using tool T109-187.

UNLOADER SETTING

Car & Carb.	Checking Gauge	Choke Opening
Frazer 813S	T109-34	9/64"
Hudson 6 776S	T109-154	5/32"
Hudson 8 773S	T109-154	5/32"
Kaiser 781S	T109-34	9/64"
Oldsmobile 714SA,851S	T109-31	¼"
Oldsmobile 849S	T109-125	7/64"
Packard (All)	T109-36	⅛"

THROTTLE VALVE SETTING: To check throttle valves, back off throttle stopscrew so that valves tightly closed. Check Idle Port Opening (above top edge of valve), and Vacuum Spark Port (Distance from top edge of valve to top of port) as follows:

THROTTLE VALVE SETTING

Car & Carb.	①Idle Port	②Vacuum Port
Frazer 813S	.135-.141"	.033-.038"
Hudson 6 776S	.157-.163"	.015-.025"
Hudson 8 773S	.157-.163"	.015-.025"
Kaiser 781S	.135-.141"	.033-.038"
Oldsmobile 714S, SA	.132-.138"	.029-.033"
Oldsmobile 849S	.132-.138"	.021-.031"
Oldsmobile 851S	.079-.085"	.029"
Packard (All)	.135-.141"	.052-.062"

①—Idle port opening above valve.
②—Top of vacuum spark port above valve.

CARBURETOR OVERHAUL: With carburetor removed from engine, disassemble, clean, and inspect all parts as follows:

Disassembly: Remove dust cover on bowl cover by taking out two attaching screws, disconnect fast idle connector rod and pump connector rod at both ends. Take out eight bowl cover and air horn attaching screws, lift air horn straight up and remove from main body casting (CAUTION—use extreme care not to damage float and jets installed in cover). Disassemble these parts as follows:

Air Horn & Bowl Cover—Remove float by taking out float hinge pin and unhooking intake needle pull clip, remove intake needle seat. Loosen setscrews on metering rod arm and pump arm, slide countershaft out of housing. Lift out metering rod arm, pump arm, pump plunger assembly, vacumeter piston and link, and metering rods, remov cover gasket. Unscrew low speed jets (Idle Tubes). Loosen clampscrew and remove choke shaft lever, take out attaching screws and remove choke valve. Take out three attaching screws, remove automatic choke cover and thermostatic coil assembly (rotate cover counterclockwise to free coil hook), remove gasket and baffle plate. Revolve choke shaft until piston clears vacuum cylinder, remove shaft and piston assembly. Take out three self-tapping screws and remove piston housing assembly from air horn casting, lift out piston housing gasket.

Main Body Casting—Take out attaching screw and remove pump jet cluster and gasket. Invert casting and catch vacumeter spring, pump discharge needle, and lower pump spring. Remove metering jets, pump relief valve assembly, and pump intake strainer. Use tool T109-56 to remove retainer ring from bottom of pump cylinder, remove pump intake check ball (under retainer ring). Take out attaching screws and remove throttle flange assembly.

►*CAUTION—Do not attempt to remove main nozzles from body casting (permanently installed in casting).*

Throttle Flange Casting—Take out attaching screw and remove pump lever from throttle shaft, remove throttle shaft retaining ring, take out attaching screws and remove throttle valves. Slide throttle shaft and lever assembly out. Remove fast idle cam assembly. Remove idle adjusting screws and springs, and idle port plugs.

Cleaning & Inspection: Wash all parts in solvent or approved carburetor cleaner, dry with air, blow out all channels and passages with compressed air. Remove carbon from flange casting bore with sandpaper (CAUTION—do not use emery cloth). Examine vacuum cylinder in automatic choke housing for dirt and carbon accumulation (if necessary, remove welch plug from base of vacuum cylinder by drilling small hole in plug and using nozzle puller T109-178 to remove plug, install new plug after cleaning cylinder). Replace all worn or damaged parts. Use all new gaskets when reassembling carburetor.

Reassembly: Reassemble carburetor by reversing disassembly directions and note the following important instructions:

Throttle Valve Installation—Back off throttle lever stopscrew, install throttle valves with trademark (small "C") toward idle ports when viewed from manifold side of casting, insert screws loosely, hold valves firmly in place with fingers and tap valves lightly to centralize them in bores, hold lever end of shaft against flange casting boss, tighten valve screws securely. Then install new retaining ring on shaft.

Pump Jet Assembly—Install pump discharge needle first (insert with point downward), use new gasket under pump jet cluster, tighten retaining screw securely. Install pump relief valve assembly. Drop pump intake ball into recess in pump cylinder, use tool T109-122U to install retainer ring.

Pump Plunger & Arm Assembly—Assemble pump link on pump countershaft arm and install pin spring retainer. Insert pump plunger stem in place in bowl cover, slide lower end of link through hole in upper end of plunger stem and revolve ½ turn. When installing bowl cover and air horn, see that lower spring installed in pump cylinder, insert pump

CONTINUED ON NEXT PAGE

CARTER DUAL TYPE WGD (C nt.)

plunger, hold pump arm in place while inserting countershaft.

Float Assembly—Make certain that intake needle is attached to float arm with pull clip when installing float. Check float level before installing bowl cover and air horn on main body casting.

Metering Rod Jets—Do not use a gasket under these jets.

Metering Rod & Vacumeter Assembly—Install metering rod spring in vacuum piston link and install vacuum piston spring in cylinder in main body casting. Install vacuum piston link through slot in bowl cover with lip on link pointing toward air horn. Install vacumeter piston on link with pin extending toward air horn. When installing bowl cover and air horn on body casting guide vacumeter piston into vacuum cylinder in body casting. Hold pump arm in position and slide countershaft in through arm and support in casting, then hold metering arm in position with lip on arm extending through slot in vacumeter link and slide countershaft through arm. Install throttle connector rod and retainers. Install both metering rods (CAUTION—see that rods enter metering jets), connect metering rod spring. Check assembly for free movement by pressing down on vacumeter link (should not bind in any position).

Choke Assembly—Make certain that new gasket installed in hot air passage in air horn, install piston housing assembly (CAUTION—attaching screws are self-tapping type and must be pulled down securely but with care not to strip threads). Install choke valve shaft and piston, rotating shaft to enter piston in cylinder. See that tapered edges of choke valve seat in air horn, hold valve with fingers and tap with screwdriver to centralize valve before tightening attaching screws. Check valve for free movement (valve should open freely of own weight). When assembling automatic choke mechanism, install flat baffle plate first (with choke lever prong extending through slot in plate), then install extruded baffle plate, gasket, cover and thermostatic coil assembly.

Starter Switch (not used on all Carburetors)—Install switch strainer in recess in throttle body, install switch ball, switch plunger (notch up), guide block, and "W" shaped switch contact spring (CAUTION re-install adjusting shims under contact spring). Install switch return spring, terminal cap assembly, hold-down clip and attaching screw. Adjust switch (see switch adjustment data below).

Adjustments—After carburetor assembled, check and adjust Accelerating Pump, Metering Rods, Fast Idle, Choke Setting, and Unloader. After carburetor installed on engine, adjust Idle setting. See adjustment instructions listed under each heading above.

STARTER SWITCH (CAR STARTER) ADJUSTMENT: Switch must make contact within throttle opening range of 30° to 45°. Check with Protractor Gauge T109-155S. Adjust by varying thickness of shims on guide block under contact spring.

►***CAUTION—Do not use less than one No. 153-11 (.018") shim or more than three No. 153-11 (.018") shims plus two No. 153-12 (.006") shims.***

REPAIR PARTS: Gasket Sets. Carter No. 193 (714SA, 849S) No. 196 (728S, 728SA, 767S, 773S, 776S, 781S, 784S, 813S, 851S).

Repair Pkgs. (with Std. Metering Rod)—Carter No. 1505A (714SA), No. 1524 (728S), No. 1525 (728SA), No. 1542 (767S), No. 1548C (781S), No. 1554A (773S), No. 1555B (776S), No. 1558B (813S), No. 1568A (784S), No. 1505B (849S), No. 1573 (851S).

CARTER DUAL TYPE WDO

Carter No.
647SA—Hudson Six, Models 501, 502 (Early 1950)
648S —Hudson Eight, Models 503, 504 (Early 1950)
643SA—Packard Super 8 "2300-5" Series (1950)
531SA—Packard Cust. 8, "2300-5" Series (1950)

►**CARBURETOR IDENTIFICATION CASTING NO.:** Stamped on face of flange as follows: 542 (647SA, 648S), 541 (643SA), 564 (531SA).

DESCRIPTION: Dual (double barrel), plain tube downdraft type of same design as carburetors used on corresponding previous models.

ADJUSTMENT & SERVICING: Same as for other "WDO Vacumeter" carburetors. ***See complete "Carter Dual Type WDO Vacumeter Type Carburetors" in previous release and set these carburetors to the following specifications:***

IDLING ADJUSTMENT

Car Model	Carburetor	Idle Screw Setting	Idle Speed
Hudson 6	647S, SA	1¼-1¾ turns open	①
Hudson 8	648S	1-1½ turns open	①
Packard Super 8	643SA	¾-1¼ turns open	②
Packard Cust. 8	531SA	1½-2 turns open	②

①—540-560 RPM. (Std.), 580-600 RPM. (With Vacumotive Drive or Drivemaster).
②—6 MPH. (Synchro-mesh Trans.), 400 RPM. (Ultramatic Drive).

ACCELERATING PUMP STROKE

Car Model	Carburetor	Pump Stroke①	Pump Setting
Hudson 6	647S, SA	18/64"	Long Stroke
Hudson 8	648S	14/64"	Long Stroke
Packard Super 8	643SA	28/64"	Non-Adjustable
Packard Cust. 8	531SA	26/64"	Short Stroke

①—Use Pump Stroke Gauge T109-117S.

METERING ROD SETTING

Checking Gauge—No. T109-113 (2.280") for all carburetors listed above.

ANTI-PERCOLATOR SETTING

Car Model	Carburetor	Checking Gauge
Hudson 6 & 8	647SA, 648S	None
Packard (all)	643SA, 531SA	T109-72 (.015")

FLOAT LEVEL SETTING

Car Model	Carburetor	Float Level	Checking Gauge
Hudson 6	647S, SA	3/16"	T109-28
Hudson 8	648S	13/64"	T109-39
Packard (all)	643SA, 531SA	5/32"	T109-154

THROTTLE VALVE SETTING

Car Model	Carburetor	Idle Port Opening	Vacuum Port
Hudson 6 & 8	647S, 647SA, 648S	.157-.163"②	.030-.040"①
Packard Super 8	643SA	.127-.133"②	.060"①
Packard Cust. 8	531SA	.152-.158"②	.050-.054"①

①—Top of port above throttle valve. ②—Port opening above throttle valve.

CLIMATIC CONTROL (CHOKE) SETTING

Car Model	Carburetor	Choke Setting
Hudson 6	647S, 647SA	1 Point Lean
Hudson 8	648S	Centered
Packard (all)	643SA, 531SA	Centered

FAST IDLE SETTING

Car Model	Carburetor	Throttle Opening	Checking Gauge
Hudson 6 & 8	647S, 647SA, 648S	.054"	①T109-193
Packard Super 8	643SA	.026"	②T109-189
Packard Cust. 8	531SA	.023-.028"	②T109-189

①—Gauge T109-193 used for both .040" and .054" settings.
②—Gauge T109-189 used for both .023" and .026" settings.

UNLOADER SETTING

Car Model	Carburetor	Choke Valve Clearance	Checking Gauge
Hudson (all)	647S, 647SA, 648S	1/4"	T109-31
Packard (all)	643SA, 531SA	11/64"	T109-166

CAR STARTER SETTING

Packard 643SA & 531SA Carburetors—Switch must make contact within 30° to 45° throttle opening (check with protractor Gauge No. T109-155S). Adjust by varying shim thickness under contact spring.

►***CAUTION—Do not use less than one No. 153-11 (.018") Shim or more than three No. 153-11 (.018") Shims plus two No. 153-12 (.006") Shims.***

SERVICE PARTS

Gasket Sets—Carter No. 149 (647SA, 648S), No. 156 (643SA, 531SA).

Repair Pkg. (Std. Metering Rods)—Carter No. 1381B (647SA), No. 1382A (648S), No. 1375B (643SA).

CARTER TYPE YF

CHEVR LET	Carter No.
Repl. Carb. (Manual Choke)	
1941-50 "216" Engine	②787S, SA, SB
1950 "235" Engine (Trucks)	788S, SA
Repl. Carb. (Automatic Choke)	
1941-50 216" Engine	756S
1950 235" Eng. (Cars & Trucks)	789S
HENRY J	
1951 4 Cyl. 513	②820S, SA, SB
1951 6 Cyl. 514	②814S, 833S, SA, SB
NASH	
1950-51 Rambler③	②757S, SA, SB
1951 Late Rambler	876S
1950-51 Statesman③	②824S, SA, SB
1951 Late Statesman	877S
WILLYS	
1950 Early "463" 4 Cyl.	738S
1950 Later "473" 4 Cyl.①	②768S, SA
1950-51 "473" 4 Cyl.①	832S

①—With new "F" Head Hurricane Engine.
②—See Production Change data following.
③—Carter "WA1" carburetor also used.

►CHANGES & CORRECTIONS

►**CHEVROLET 787S & 787SA CARBURETOR CHANGES:** 787S carburetor superseded by 787SA which has following changes:

Intake Needle & Seat Assembly—787S has conventional type seat and solid needle No. 25-33S. **787SA**—Has new seat assembly with longer standpipe and new **spring-loaded needle** No. 25-195S (includes No. 61-207 Intake Needle Spring and No. 150-98 Intake Needle Pin).

Float & Lever Assembly—787S No. 21-117S. **787SA**—New type No. 21-122S. *CAUTION—Different float level setting required for 787SA with this new float.*

Float Level Setting—Different float settings required for 787S and 787SA. *See Float Level data.*

Accelerating Pump Discharge Valve—787S—Has flat type discharge disc No. 169-22 used with No. 63-139 Disc Retainer and No. 63-138 Disc Retainer Ring. **787SA**—Has new aluminum discharge check needle No. 17-80 installed with pointed end down in pump channel.

►**NASH RECOMMENDED CHANGES ON EARLY CARBURETORS:** First type 757S & 824S carburetors can be changed for smoother engine performance up to 40 MPH. by installation of all parts contained in correct Unitized Package (different for earlier and later carburetors) as follows:

►*CAUTION—Different package (with different parts) used for first and later production carburetors.*

757S & 824S CARBURETORS stamped "FO" & "GO" (July 1950 & Earlier). Use Unitized Pkg., Carter No. 75-776U, and install all parts as listed below.

CAUTION—Do not change original Metering Rod Jet No. 120-163 used in these carburetors to any other size.

Unitized Pkg. No. 75-776U

	New Part in Pkg.	Replaced Part.
Low Speed Jet	11-202S	11-200S
Metering Rod	75-775	75-755
Bowl Cover Gasket	121-169	
Pump Diaphragm Housing	170-208S	

Carburetor Tag Note—New Identification tags (757SA & 824SA) furnished in package. **Install correct tag on carburetor to indicate above changes have been made.**

757S & 824S CARBURETORS stamped "HO" & Later (August 1950 & Later). Use Unitized Pkg., Carter No. 120-169U, and install all parts below.

Unitized Pkg. No. 120-169U

	New Part in Pkg.	Replaced Part
Low Speed Jet	11-202S	11-200S
Metering Rod	75-775	75-755
Metering Rod Jet	120-160	
Bowl Cover Gasket	121-169	
Pump Diaphragm Housing	170-208S	

Carburetor Tag Note—New Identification tags (757SB & 824SB) furnished in package. **Install correct tag on carburetor to indicate above changes have been made.**

757SA & 757SB, 824SA & 824SB CARBURETORS Have had changes made as indicated above.

►**CHEVROLET & WILLYS STUMBLE ON LIGHT ACCELERATION CORRECTION (Caused by incorrect seating of pump discharge check valve):** On all early carburetors with either Disc Check Valve or Aluminum Needle Check Valve, the original check valve (including disc retainer, and retainer ring) should be removed and discarded, and a new type aluminum check ball No. 116-25 (furnished in service pkg. listed below) should be installed:

Check Valve Pkg.

Car	Carburetor	Pkg. No.
Chevrolet	756S, 87S, 87SA, 88S, 89S	116-26U
Willys	738S, 68S, 68SA, 832S	116-27U

Check Valve Installation—With air horn and bowl cover removed, remove old retainer ring and discharge check valve parts (discard these parts). Form a new seat by using the ⅛" steel ball (furnished in package) by tapping on ball with 5/32" brass drift and light hammer, remove and discard this steel ball. Install new aluminum check ball (can be identified by dark color) and check seating of ball by pouring a few drops of gasoline in the channel on top of the ball. Gasoline should remain visible in the passage above the ball for approximately 60 seconds if a good seat has been formed. On Willys carburetors, install ball check weight No. 221-13 above ball, (weight not used on Chevrolet carburetors), install new No. 63-152 retainer ring.

►**WILLYS 768S PUMP CHANGE:** Late production 768S carburetors have new type Diaphragm Housing incorporating an accelerating pump Intake Check Valve (see illustration). These carburetors can be converted to 768SA by installation of parts furnished in unitized package as follows:

Unitized Pkg. No. 170-182U (for conversion of late type 768S Carburetors to 768SA). Contains following parts which should be **installed as a unit:**

	Carter Part No.
Pump Diaphragm Housing①	170-150
Pump Intake Strainer	30-62
Metering Rod (Later Std.)	75-750

①—Without intake check valve (has #72 drill size intake hole in diaphragm housing under strainer).

►**WILLYS 768SA CARBURETOR:** Supersedes 768S. Has same type pump Diaphragm Housing, pump intake and strainer as first type 768S (see late production 768S change above). Also has latest type 75-750 Std. Metering Rod.

DESCRIPTION

DESCRIPTION: New design, single barrel, downdraft type with diaphragm operated metering rod (vacuum and mechanically controlled), diaphragm type accelerating pump (vacuum and mechanically controlled), Anti-Percolator, Fast Idle, and manually or automatically controlled choke (Climatic Control). Diaphragm assembly (accelerating pump and metering rod control) is new design as follows:

Diaphragm Type Accelerating Pump (& Metering Rod Control)—Consists of a spring-loaded diaphragm and plunger assembly mounted in the main body casting. Lower chamber (below diaphragm) is vacuum chamber and is connected to manifold by restricted passage opening at carburetor mounting flange with a second diaphragm bleed passage opening into the mixing chamber above the throttle valve. Upper chamber (above diaphragm) is the accelerating pump chamber. Fuel enters pump through strainer screen and restricted opening in diaphragm housing (or intake check valve on some carburetors) and is discharged through a pump jet in the carburetor wall at the side of the secondary venturi (except Nash Uni-flow carburetors).

►**Nash "Uni-flo" Carburetors**—These models do not have separate pump discharge jet. Pump discharges through a spring-loaded ball check valve to the main nozzle.

ADJUSTMENT & OVERHAUL

IDLING ADJUSTMENT: Adjust only with engine warmed up and idling at hot or slow idle speed with choke valve wide open and fast idle inoperative. Idle adjusting screw controls fuel mixture and should be turned in for leaner mixture, out for richer mixture. See car model page for complete tune-up instructions.

IDLE SETTING

Car	Idle Screw Setting	Idle Speed
Chevrolet (Cars)	1-2 turns open	①
Chevrolet (Trks)	1-2 turns open	450-500 RPM
Henry J. 4 Cyl.	½-1½ turns open	550 RPM
Henry J. 6 Cyl.	1-2 turns open	550 RPM
Nash Rambler	1-2 turns open	450-500 RPM
Nash Statesman	1-2 turns open	②
Willys (738S)	¾-1¾ turns open	600 RPM
Willys (exc. 738S)	1-2 turns open	600 RPM

①—Synchro-mesh Trans. Cars 450-500 RPM.
Powerglide Cars 430-450 RPM (in Neutral "N").
②—Synchro-mesh Trans. Cars 450-500 RPM.
Hydra-Matic Drive Cars 375 RPM.

METERING ROD: Metering rod and jet meters all fuel for main nozzle. Metering rod is controlled by diaphragm assembly and by throttle lever (vacuum and mechanical control) as follows:

Metering Rod Control—Rod is hooked on metering rod arm which rests on shoulder on upper end of diaphragm assembly stem (retained by upper pump spring) so that the metering rod is lifted out of the jet as the diaphragm assembly is moved upward by the pump diaphragm spring. This movement is controlled by manifold vacuum acting on the lower face of the diaphragm. Metering rod is held down in the jet for maximum economy when manifold vacuum is high, and is raised out of the jet by the spring when manifold vacuum drops off (during acceleration, high speed, pulling, or other wide open throttle operation). The pump lifter link which is connected to the throttle lever serves as a stop for the metering rod arm (eye on upper end of link slides freely on diaphragm stem below metering rod arm) so that the metering rod is positioned in accordance with throttle opening for all constant-throttle operation.

CONTINUED N NEXT PAGE

CARTER TYPE YF (C ntinued)

Adjustment—*No Metering Rod Gauge required.* Air horn and bowl cover must be removed for access to metering rod. Back off throttle lever stopscrew so that throttle valve completely closed. Press down on upper end of diaphragm stem until diaphragm bottoms in vacuum chamber. Metering rod arm should contact lifter link flat surface between springs and at supporting lug under metering rod pin spring (see note below for first carburetors without this lug) and the metering rod should contact the bottom of the metering rod well at the same instant. Adjust by bending lip of metering rod arm to which metering rod is attached up or down.

►**Early 738S, 768S, 768SA, 787S Carburetors Note**—These carburetors do not have lug or projection on lifter link, when adjusting metering rod, make certain **metering rod arm parallel to lifter link flat.**

ANTI-PERCOLATOR: *No adjustment required.* Anti-percolator on each carburetor operates as follows:

Chevrolet Anti-percolator—Consists of a drilled passage from the anti-percolator well (opening from main nozzle passage) to the inside of the nozzle. This passage vents the main nozzle well.

Henry J. Anti-percolator—Consists of a #66 drill size well vent in body and a passage from the anti-percolator well (opening from main nozzle well) leading to a vent channel on the side of the nozzle. This passage has a #70 drill size restriction.

Nash Anti-Percolator—Consists of a .035" (757S, SA, SB; 824S, SA, SB), .028" (876S & 877S), diameter drilled hole in plug at top of the anti-percolator well, opening from main nozzle well).

Willys Anti-percolator—Consists of a .0276" drilled hole in plug at top of anti-percolator well (opening from main nozzle passage).

ACCELERATING PUMP: Diaphragm type, operated by spring, controlled by diaphragm assembly and throttle lever (vacuum and mechanical control) as described below. Two different types of pump intake valves used:

Nash (All Carbs.), Willys (Later 768S Carburetors): Have disc type intake check valve located in plug on underside of diaphragm housing with cylindrical strainer mounted on valve plug. See illustration.

Other Carburetors—Have restricted intake opening (no check valve) in diaphragm housing directly below flat strainer screen on top of housing.

Pump Discharge Check Valve—Two different types used as follows. *(See Chevrolet and Willys Stumble correction data):*

Nash (All Carbs.)—Have spring-loaded ball check valve located under plug on top face of diaphragm housing. NOTE—On these models pump discharges into main nozzle passage (no pump discharge jet).

Other Carburetors—Have disc type check valve or discharge needle located at top of pump discharge passage (in body casting under bowl cover gasket). Disc type valve has retainer above disc and retainer ring in groove in casting.

Adjustment—No seasonal adjustment provided and no pump stroke setting required.

►**Unsatisfactory Acceleration Performance**—To correct this condition, remove pump diaphragm assembly (see Disassembly data), check for wear or damaged diaphragm, clean intake screen and inlet hole under screen or make certain that intake check valve seats properly, make certain that discharge check valve seats properly, blow out all passages with air.

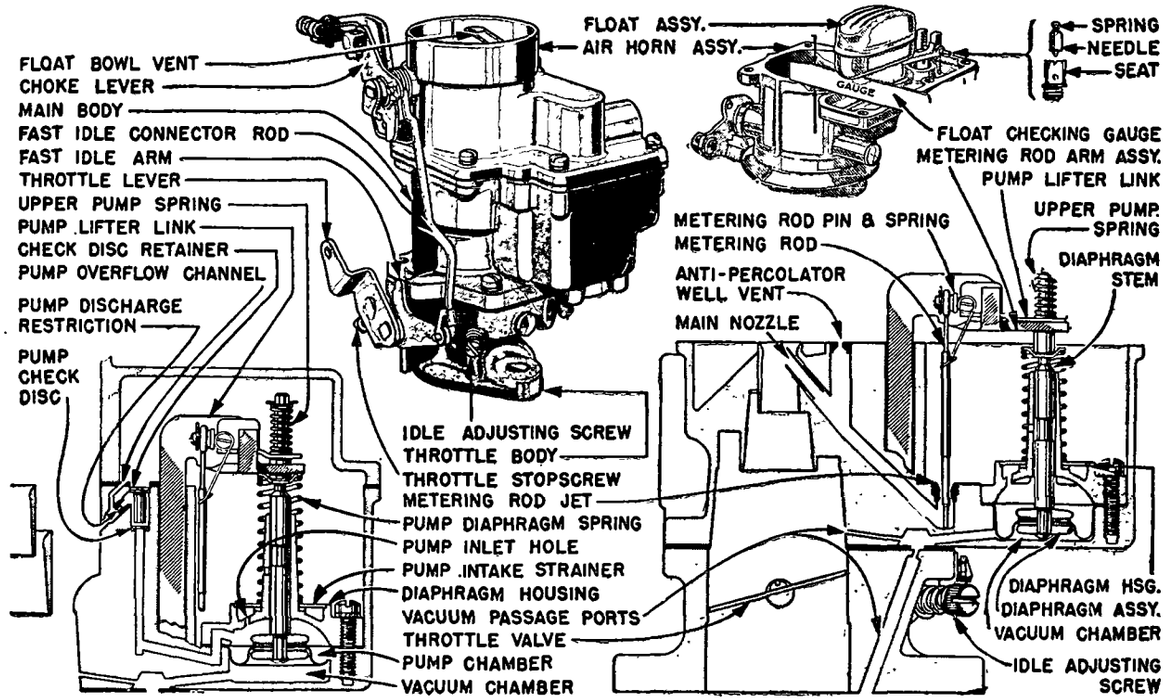

CARTER YF DOWNDRAFT CARBURETORS

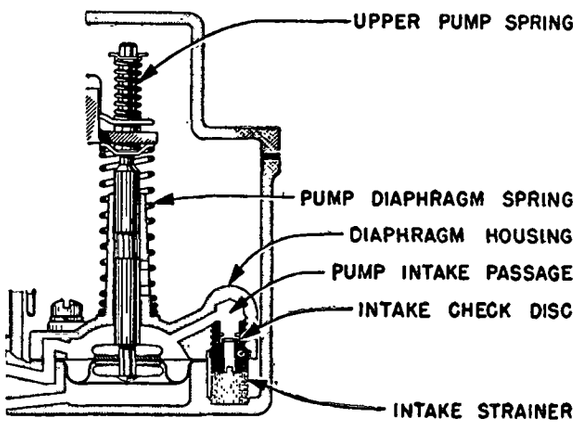

NASH & WILLYS (LATE 768S) ACCELERATING PUMP (WITH INTAKE CHECK VALVE)

FLOAT LEVEL: To check float level, remove air horn and bowl cover assembly, invert assembly allowing float to hang freely while resting against intake needle (see Caution below), measure from bowl cover to top of float (see table for setting). Adjust by bending lip which contacts intake needle—do not bend float arm.

►***CAUTION—On models with spring-loaded needle, do not compress this spring in the needle valve stem (allow to hang freely). Compressing the spring will result in false reading and incorrect float setting.***

FLOAT SETTING

Car & Carb.	Checking Gauge	Float Setting
Chevrolet (787S only)	T109-83	①1/2"
Chevrolet (All others)	T109-107	②5/16"
Henry J (All)	T109-126	9/32"
Nash (876S, 77S)	T109-107	5/16"
Nash (All others)	T109-83	1/2"
Willys (738S)	T109-126	9/32"
Willys (All others)	T109-107	5/16"

①—With No. 21-117S Float & Lever Assy. and No. 25-33S Intake Needle & Seat Assy. with **solid** needle.

②—With No. 21-122S Float & Lever Assy. and No. 25-195S Intake Needle & Seat Assy. with **spring-loaded** needle.

Float Drop (Chevrolet Carburetors)—Check travel or drop of float by holding bowl cover assembly upright and measuring from lower face of bowl cover to top of float at free end (float hanging free). Distance should be 1¼". Adjust by bending stop tabs on float arm.

Intake Needle Valve & Seat—Furnished in matched sets only (see table).

Needle Valve & Seat

Car & Carb.	Part No.
Chevrolet 787S only	25-33S
Chevrolet (All others)	25-195S
Henry J. 4 820S, SA, SB	25-197S
Henry J. 6 814S only	25-166S
Henry J. 6 833S, SA, SB	③25-197S
Nash (all)	25-189S
Willys 738S, 768S, SA	25-166S
Willys 832S	25-190S

③—Supersedes No. 25-190S.

C NTINUED N NEXT PAGE

CARTER TYPE YF (C nt.)

FAST IDLE: *CAUTION—Different design with special adjustment settings used on carburetors with automatic choke (Climatic Control):*

►**Carburetors with Manual Choke Control**—Fast idle mechanism consists of fast idle arm linked to the choke valve shaft lever with a lip which serves as the stop for the throttle stopscrew. Fast idle arm is rotated when choke valve closed for cold starting and opens throttle to fast idle position.

Adjustment—To check, hold choke valve in wide open position and check that lip on fast idle arm is in contact with boss on carburetor body casting. To adjust, bend fast idle arm rod at lower offset.

►**Carburetors with Automatic Choke Control**—Fast idle mechanism consists of a fast idle cam on the choke valve shaft and a trip lever and link assembly within the choke housing connected to the throttle lever by a connector rod. **Thermostatic coil housing, gasket, and baffle plate must be removed to check and adjust fast idle.**

Adjustment: Remove thermostatic coil housing, gasket, and baffle plate. Crack throttle valve (to allow choke valve to close), hold choke valve fully closed, close throttle valve as far as possible so that choke trip lever contacts high step of fast idle cam. Check throttle valve opening or clearance between edge of valve and carburetor wall on side opposite idle port (see table for checking gauge and throttle valve opening). If opening not correct, adjust by bending rod at lower angle using Tool T109-41.

FAST IDLE SETTING

Car & Carb.	Throttle Opening
Chevrolet 756S	.076"
Chevrolet 789S	.086"
Nash (all)	.054"

►*CAUTION—Check Unloader after adjusting Fast Idle.*

UNLOADER (Carburetors with Automatic Choke): Consists of an arm on the trip lever within the choke housing which rotates the choke valve shaft when the throttle valve is opened wide. **Thermostatic coil housing, gasket, and baffle plate must be removed to check and adjust unloader.**

Adjustment—After adjusting fast idle, hold throttle valve in wide open position, move choke valve toward closed position as far as possible (CAUTION—do not force valve closed). Check choke valve opening or clearance between lower edge of valve and air horn wall (see table below for checking gauge and choke valve opening). If opening not correct, adjust by bending arm on choke trip lever using bending tool T109-187.

UNLOADER SETTING

Car & Carb.	Checking Gauge	Choke Opening
Chevrolet (756S, 789S)	T109-28	3/16"
Nash (876S, 877S)	T109-126	9/32"
Nash (All others)	T109-28	3/16"

CHOKE (Manual Type): Offset, butterfly type valve. **Adjustment**—Adjust linkage so that valve is completely closed when choke button is pulled out. *CAUTION—Make certain that choke valve completely open when control button pushed in fully.*

AUTOMATIC CHOKE (Climatic Control): Used on Chevrolet 756S and 789S and all Nash Carburetors.

CLIMATIC CONTROL (CHOKE) SETTING

Car & Carb.	Choke Setting
Chevrolet (756S, 789S)	1 Point Lean
Nash (757S, SA, SB; 824S, SA, SB)	Centered
Nash (876S, 877S)	1 Point Lean

THROTTLE VALVE SETTING: When installing valve, check Idle Port Opening (top of port above top edge of valve), and Vacuum Spark Port Height (top of port above top edge of valve) with throttle stopscrew backed off and throttle valve tightly closed.

THROTTLE VALVE SETTING

Car & Carb.	①Idle Port	Vacuum Spark Port
Chevrolet 787S, SA	.166-.170"	②.022-.032"
Chevrolet 788S	.153-.157"	②.025-.035"
Chevrolet 756S	.166-.170"	②.022-.032"
Chevrolet 789S	.143-.147"	①.025-.035"
Henry J. 820S, SA, SB	.126-.130"	②.025-.035"
Henry J. 814S	.126-.130"	①.025-.035"
Henry J. 833S, SA, SB	.126-.130"	①.035-.045"
Nash (876S, 77S)	.142-.146"	②.021-.029"
Nash (Others)	.142-.146"	②.025-.035"
Willys (all)	.168-.172"	①.035-.045"

①—Top of port above top edge of valve.
②—Bottom of port above top edge of valve.

DISASSEMBLY: With carburetor removed from engine, proceed as follows:

►**Automatic Choke Note**—*See "Carter Climatic Control (Single Barrel Carbs.)" in Carburetion Equipment Section for automatic choke disassembly and overhaul.*

1) Remove pin springs and fast idle connector rod springs, remove fast idle connector rod. Take out air horn and bowl cover attaching screws, remove choke tube clamp, lift off air horn and gasket.

2) Take out pump disc check valve retainer ring (when used), lift out retainer and pump check valve disc or pump discharge needle. Then remove throttle shaft arm assembly from end of throttle shaft (pump connector link, shaft seal spring, dust seal washer, felt dust seal). Unscrew four pump diaphragm housing attaching screws, lift out entire pump and metering rod assembly.

3) Disassemble pump by removing attaching screws, pin spring, metering rod, upper pump spring retainer, upper pump spring, metering rod arm, pump lifter link, diaphragm spring retainer, diaphragm spring, and diaphragm housing. Remove intake strainer from housing (use knife tip to lift flat type strainer out of housing recess). On carburetors with disc type intake check valve, remove valve plug assembly. On Nash carburetors, take out plug on upper side of diaphragm housing and remove discharge check valve spring and ball.

4) Remove metering rod jet from body casting. Remove Low Speed Jet assembly.

►*CAUTION—Do not attempt to remove pressed-in parts such as Nozzle, Pump Jet and Anti-percolator Air Bleed.*

5) Take out three body flange (throttle body) attaching screws, remove throttle body from main body casting.

6) Remove idle adjustment screw and spring, idle port rivet plug, throttle lever assembly and washer, fast idle arm. Take out throttle valve attaching screws, lift valve out, remove throttle shaft, remove shaft seal by prying out seal retainer.

►*CAUTION—Do not attempt to remove vacuum passage orifice restriction which is pressed in.*

7) Remove float pin, lift out float, remove needle and seat assembly from air horn casting.

8) On carburetors with manual type choke control, take out choke valve screws, lift choke valve out, unhook choke spring, slide choke shaft out of housing. If necessary to replace choke lever assembly, pry off choke lever retainer ring (in end of shaft), remove lever assembly from shaft.

►*CAUTION—Do not attempt to remove balance vent tube.*

CLEANING & INSPECTION: Wash all parts in carburetor cleaning solution (CAUTION—do not immerse diaphragm assembly, pump check disc, or seals in the solution). Inspect all parts for wear or damage, replace if necessary. Blow out all passages with compressed air.

REASSEMBLY: Use all new gaskets. Assemble by reversing the disassembly order as given above and note the following important points:

Throttle Valve Installation—Install valve with trademark (c) toward idle port when viewed from manifold side of flange. Install screws loosely, tap valve and then hold with fingers to insure it being centralized in bore, tighten screws securely.

Metering Rod Jet Installation—NO gasket used

Pump Diaphragm Assembly Installation—Before tightening attaching screws, make certain that diaphragm is flat and edges are not wrinkled, then tighten screws evenly.

Pump Linkage—Check pump linkage to make certain that it does not bind in any position. If binding noted, loosen throttle arm clampscrew and adjust throttle arm, retighten clampscrew.

Float Intake Needle & Seat Assembly—Soak new gasket in 90 proof alcohol for 15 minutes, install and let dry on needle seat before installing this part. When installing float, make certain that shoulder on float pin is on side away from carburetor bore.

Choke Valve Installation—Install the attaching screws loosely, center valve by tapping on valve lightly and hold in this position with fingers while tightening screws securely.

Fast Idle Linkage (Manual Choke Carburetors): Install connector rod with offset end upward, and with pin spring on outside.

Fast Idle Linkage (Automatic Choke Carburetors): Install connector rod with angle end down toward throttle lever and open ends of rod in toward carburetor body.

►*CARBURETOR INSTALLATION CAUTION*—Special slotted type flange gasket must be used to install carburetor on engine. Diaphragm type metering rod and accelerating pump control will not function if this gasket not used.

REPAIR PARTS: Gasket Sets. Carter No. 200 (738S), No. 206 (768S, 768SA, 787SA, 787SB, 832S), No. 208 (756S). No. 209 (789S), No. 210A (788S, 788SA), No. 211 (820S, 820SA, 820SB, 814S, 833S, 833SA, 833SB). **Repair Pkgs. (with Std. Metering Rods):** Carter No. 1546A (738S), No. 1549A (787S), No. 1557 (768S, 768SA), No. 1559 (832S), No. 1561B (787SA), No. 1563 (756S), No. 1565B (788S), No. 1569 (789S), No. 1570 (Nash 757S & 842S—**See Caution**); No. 1571 (833S, 833SA, 833SB), No. 1572 (820S, 820SA, 820SB), No. 1581 (787SB), No. 1582 (788SA).

►**Nash No. 1570 Repair Pkg. Caution**—When using this package for early 757S & 824S carburetors stamped "FO" & "GO" (and also 757SA & 824SA carburetors), **do not install** the No. 120-160 Metering Rod Jet furnished in the package but **use Part No. 120-163** instead (same as original part).

NOTE—On later 757S and 824S carburetors stamped "HO" and later (and also 757SB & 824SB carburetors), this No. 120-160 Metering Rod can be used

CARTER TYPE WE

Carter No.

715S —Studebaker Champion, 9G (1950), 10G (1951)

627SA—Studebaker Commander 17A (1950)—First 10,000 Cars.

►**STUDEBAKER CHAMPION AUTOMATIC CHOKE CHANGE:** New type Thermostatic Coil & Housing Assembly **with different choke setting** supersedes first type used on 715S carburetors as listed below.

CAUTION—Different Choke Setting required for each type assembly.

	First Type	Later Type	Choke Setting
Thermostatic Coil & Housing Assy.	170P-77S	170U-61S	Centered
Air Horn (with Climatic Control)	6-557S	6-728S	1 Point Lean

►**CARBURETOR IDENTIFICATION (CODE NO.):** Casting number stamped on face of flange: (715S) 620, (627SA) 511.

DESCRIPTION: Single barrel, downdraft type of same design used on previous Studebaker Champion models.

ADJUSTMENT & SERVICING: Same as for previous Carter "WE" carburetors. ***See complete "Carter WE Carburetor" in previous release and set this carburetor to the following specifications:***

IDLING ADJUSTMENT

Idle Adjusting Screw Setting—½-1½ turns open.

Idle Speed (Std. Synchro-mesh Trans.)—8-10 MPH. at normal operating temp.

Idle Speed (Optl. Automatic Trans.)—500-550 RPM. with selector lever in "N" position. NOTE—On cars with "Anti-Creep," idle adjusting screw switch replaces regular idle speed adjusting screw (adjusted in same manner).

ACCELERATING PUMP SETTING

Pump Stroke—(715S) 14/64", (627SA) 20/64", Use Gauge No. T109-117S.

METERING ROD SETTING

Operating (Upper Lip) Setting—Use Gauge No. T109-102 (2.468").

Economy (Lower Lip) Setting)—Use Gauge No. T109-28 (3/16") and adjust lower lip for this 3/16" clearance between bottom of pump arm pin and top of lower lip with throttle valve seated.

ANTI-PERCOLATOR SETTING

Setting—Use Gauge T109-29 (.030") and bend rocker arm for .025" clearance (715S), .005-.015" clearance (627SA) between rocker arm lip and pump arm with this .030" throttle opening.

FLOAT LEVEL SETTING

Float Level—(715S) 3/8"—Gauge T109-80, (627SA) 7/16" from top of seam at free end of float to top of projection on bowl cover with needle valve seated invert cover assembly to check float).

THROTTLE VALVE SETTING

Idle Port Opening—Top of port .112-.116" above top edge of valve.

Vacuum Spark Port Height—Top of port .060-.070" (715S), .065-.069" (627SA) above top edge of valve.

CLIMATIC CONTROL (CHOKE) SETTING

715S (with 1st. type 170P-77S Thermostatic Coil)—Centered (At Index).

715S (with 2nd. type 170U-61S Thermostatic Coil)—1 Point Lean.

627SA—Centered (At Index).

FAST IDLE SETTING

Throttle Opening—(715S) .046", (627SA) .054" (edge of valve to wall) with choke valve held closed and throttle valve moved toward closed position as far as possible.

►***CAUTION***—Thermostatic coil housing, gasket, and baffle plate must be removed to check and adjust fast idle.

AUTOMATIC CHOKE

Setting—Centered (cover centered on scale) for all models.

UNLOADER SETTING

Choke Valve Opening—(715S) 3/16"—Gauge T109-28, (627SA) 17/64", clearance between choke valve and air horn with throttle valve wide open.

NOTE—Use Tool T109-187 to bend arm on choke trip lever for adjustment.

SERVICE PARTS

Gasket Set—Carter No. 186A.

Repair Pkgs. (with Std. Metering Rod)—Carter (715S) No. 1504, (627SA) 1520.

CARTER TYPE WO

Carter No.

636SA—Willys Universal Jeep, Model CJ-3A (1950-51)
Willys 4-Whl. Drive Sta. Wgn. 4x4-63 (Early 1950)

►**CARBURETOR IDENTIFICATION (CODE NO.):** 505 stamped on flange.

DESCRIPTION: Single barrel, downdraft type of same design as carburetor used on corresponding previous models.

ADJUSTMENT & SERVICING: Same as for other Carter "WO" carburetors. ***See complete "Carter WO" carburetors in previous release and set this carburetor to the following specifications:***

IDLING ADJUSTMENT

Idle Adjusting Screw Setting—1-2 turns open.

Idle Speed—600 RPM. or 8 MPH.

ACCELERATING PUMP

Pump Stroke—17/64". Use Gauge No. T109-117S.

METERING ROD SETTING

Checking Gauge—No. T109-26 (2.718").

FLOAT LEVEL

Setting—⅜" (Gauge No. T109-80) from top of float at free end to gasket seat on cover with valve seated (invert assembly to check level).

►***CAUTION—Do not compress spring in needle valve stem (allow float to hang freely). Compressing spring will result in false reading.***

THROTTLE VALVE SETTING

Idle Port Opening—.086-.090" above upper edge of valve.

Vacuum Spark Port Height—Top of port .056-.062" above top edge of valve.

SERVICE PARTS

Gasket Set—Carter No. 175A. **Repair Pkg. (Std.)**—Carter No. 1355C.

CARTER TYPE WA-1

HUDSON	Carter No.
1950 Pacemaker 500	749S
1951 Pcmkr. 3A, 4A, 11A	749S
NASH	
①1950-51 Rambler	②694S, 780S
①1950-51 Statesman	②694S, 780S
1950-51 Amb. 6	②746S
OLDSMOBILE	
1950 Six S-M Trans	764S
1950 Six H-D Trans.	②763S, SA

PONTIAC	Carter No.
1950 Six S-M Trans.	717S
1950 Six H-D Trans.	718S
WILLYS	
1950 Early 4 Cyl.	613S
1950 Early 6 Cyl. 6-63	645S
1950-51 6 Cyl. 673-SW, VJ	645S

①—Carter "YF" carburetors also used.
②—*See Production Change Notes below.*
S-M—Synchro-mesh Transmission.
H-D—Hydra-Matic Drive Trans.

►**CARBURETOR IDENTIFICATION CODE NO.:** Stamped on flange as follows: 682 (749S), 298 (694S), 779 (780S), 290 (746S), 538 (763S, SA; 764S), 388 (717S), 592 (718S), 485 (613S, 645S).

►**NASH CARBURETOR PARTS & SPECIFICATIONS CHANGES:**

780S Choke Setting Change—Should be Centered (At Index). Supersedes original setting of 2 Points Rich.

694S & 780S Parts Change—New Choke Lever, Link, & Screw Assembly No 14-406S supersedes first type No. 14-223S. *NOTE*—New assembly does not have lock-out lip on link and no lock-out adjustment required when this assembly installed.

746S Anti-Percolator Setting Change—Setting should be .030" (was .020").

DESCRIPTION: Single barrel, downdraft, vacumeter carburetors of same design used on previous car models. All Nash carburetors are "Uniflo Jet" type with accelerating pump discharging through main nozzle (no pump jet).

ADJUSTMENT & SERVICING: Same as for previous Carter "WA-1" carburetors. *See complete "Carter WA-1 Carburetor" in previous release and set these carburetors to the following specifications:*

IDLING ADJUSTMENT

Car Model	Carburetor	Idle Screw Setting	Idle Speed
Hudson	749S	½-1½ turns open	①
Nash (exc. Amb.)	694S, 780S	¾-1¾ turns open	②
Nash Amb.	746S	½-1½ turns open	②
Oldsmobile 6	763S, SA; 764S	½-1½ turns open	③
Pontiac 6	717S, 718S	½-1½ turns open	④
Willys 4	613S	½-1½ turns open	600 RPM, 6 MPH
Willys 6	645S	1-2 turns open	600 RPM, 6 MPH

①—540-560 RPM. (Std.), 580-600 RPM. (With Drive-Master Transmission).
②—450-500 RPM. (Std. Trans.), 375 RPM. (With Hydra-Matic Drive).
③—425 RPM. (Std. Trans.), 350 RPM. with selector lever in "Dr" range (With Hydra-Matic Drive Transmission).
④—450-475 RPM. (Std. Trans.), 365-385 RPM. (With Hydra-Matic Drive Trans.).

ACCELERATING PUMP STROKE

Car Model	Carburetor	Pump Stroke①	Pump Setting
Hudson	749S	16/64"	Short Stroke
Nash (exc. Amb.)	694S, 780S	25/64"②	Long Stroke
Nash Amb.	746S	27/64"	Long Stroke
Oldsmobile 6	763S, 763SA	16/64"	Non-Adjustable
Oldsmobile 6	764S	16/64"	Non-Adjustable
Pontiac 6	717S, 718S	17/64".	Medium Stroke
Willys 4 & 6	613S, 645S	11/64".	Non-Adjustable

①—Use Pump Stroke Gauge No. T109-117S.
②—Supersedes 23/64" originally specified for this model.

METERING ROD SETTING

Checking Gauge—No. T109-102 (2.468") for all carburetors listed above.

ANTI-PERCOLATOR SETTING

Car Model	Carburetor	Checking Gauge	Throttle Opening
Hudson	749S	T109-29	.020"
Nash (all)	694S, 780S, 746S	T109-29	①.030"
Oldsmobile 6	763S, 763SA, 764S	T109-29	.020"
Pontiac 6	717S, 718S	T109-29	.030"
Willys 4 & 6	613S, 645S	T109-29	.030"

①—Supersedes .020" setting originally specified for 746S.
NOTE—Gauge No. T109-29 used for both .020" and .030" settings.

FLOAT LEVEL SETTING

Car Model	Carburetor	Checking Gauge	Float Level
Hudson	749S	T109-83	1/2"
Nash (all)	694S, 780S, 746S	T109-83	1/2"
Oldsmobile 6	763S, SA; 764S	T109-83	1/2"
Pontiac 6	717S, 718S	T109-81	7/16"
Willys 4 & 6	613S, 645S	T109-107	5/16"

►*WILLYS CAUTION*—On Willys carburetors, use care not to compress spring in needle valve stem, allow float to hang freely on inverted cover when checking float level (compressing spring will cause false reading).

THROTTLE VALVE SETTING

Car Model	Carburetor	Idle Port Opening	Vacuum Port
Hudson	749S	.136-.140"②	.020"④
Nash (exc. Amb.)	694S, 780S	.153-.157"③	.021-.029"④
Nash Amb.	746S	.137-.141"②	.020-.030"④
Oldsmobile 6	763S, 763SA, 764S	.136-.140"②	.050"③
Pontiac 6	717S, 718S	.166-.170"③	.022-.027"④
Willys 4 & 6	613S, 645S	.198-.202"	.036-.044"③⑤

①—Idle Port Opening below valve.
②—Idle Port Opening above valve.
③—Top of Port above valve.
④—Bottom of Port above valve.
⑤—Except first production 613S—.020-.028".

CLIMATIC CONTROL (CHOKE) SETTING

Car Model	Carburetor	Choke Setting
Hudson	749S	Centered (At Index)
Nash Rambler & Statesman	694S	2 Points Rich
Nash Rambler & Statesman	780S	②Centered (At Index)
Nash Amb.	746S.	Centered (At Index)
Oldsmobile 6	763S, SA; 764S	Centered (At Index)
Pontiac 6	717S, 718S	3 Points Rich

②—Supersedes original setting of 2 Points Rich.
NOTE—No Climatic Control used on Willys 613S and 645S carburetors.

FAST IDLE SETTING

Checking Gauge—No. T109-85 for all models. Set for 5/8" choke valve opening with throttle valve closed and fast idle cam rotated so that first step is against (but not on) throttle stopscrew.

NOTE—This setting does not apply to Willys 613S and 645S carburetors (no adjustment required on these models).

UNLOADER SETTING

Car Model	Carburetor	Checking Gauge	Choke Valve Clearance
Hudson	749S	T109-81	7/16"
Nash (exc. Amb.)	694S, 780S	T109-81	7/16"
Nash Amb.	746S	T109-82	31/64"
Oldsmobile 6	763S, 763SA	T109-80	3/8"
Oldsmobile 6	764S	T109-81	7/16"
Pontiac 6	717S, 718S.	T109-107	5/16"

NOTE—No Unloader used on Willys 613S and 645S carburetors.

LOCK-OUT ADJUSTMENT

CAUTION—This adjustment required only on carburetors which have lip on lower end of link (part of Choke Lever, Link, & Screw Assy.) which engages lug on throttle lever so that choke valve locks in wide open position when both the throttle valve and choke valve are wide open. See Nash 694S & 780S Parts Change above.

Adjustment—Bend lip at lower end of fast idle link so that clearance between lip and throttle lever lock lug is 1/32".

SERVICE PARTS

Gasket Sets—Carter No. 139A (694S, 746S, 780S), No. 146 (717S, 718S), No. 157A (763S, 763SA, 764S), No. 159A (613S, 645S), No. 198 (749S).

Repair Pkgs. (with Std. Metering Rod)—Carter No. 1360B (613S), No. 1366A (717S), No. 1388A (718S), No. 1385A (645S), No. 1501A (694S, 780S), No. 1518 (746S), No. 1535 (749S), No. 1536 (763S, 763SA), No. 1537 (764S).

1950-51 CARTER DOWNDRAFT CARBURETOR JET SPECIFICATIONS

Car Model	Yr.	Carb. No.	Marking	Metering Rod 1 Size Lean Standard Part No.	Marking	1 Size Lean Part No.	Marking	2 Sizes Lean Part No.	Met. Rod Jet Size	Part No.	Main Nozzle Size	Part No.	Low Spd. Jet Tube Size	Part No.	Pump Jet Size	Part No.
BUICK 40, 50	1950-51	725S, SA	—	75-685	—	75-702	—	75-703(11)	.082"	120-158	—	(10)	#65	11-185S	#74	48-165S
BUICK 70	1950-51	726S, SA	—	75-677	—	75-717	—	75-718(11)	.082"	120-158	—	(10)	#68	11-183S	#74	48-165S
CADILLAC V8	1950	742S	—	(26)	—	75-729	—	75-730	.089"	120-159	—	(10)	#70	11-196S	#72	48-171S
CADILLAC V8	1951	845S	—	75-716	—	75-729	—	75-730	.089"	120-159	—	(10)	#70	11-196S	#72	48-171S
CHEVROLET Repl.	1950-51	756S	—	75-678	—	75-736	—	75-737	.091"	120-155	1285"	(10)	#66	11-213S	#72	—
CHEVROLET Repl.	1950-51	789S	—	75-678	—	75-736	—	75-737	.095"	120-155	1285"	(10)	#66	11-213S	#72	—
CHEVROLET Repl.	1950-51	787S, SA	—	75-678	—	75-736	—	75-737	.091"	120-155	1285"	(10)	#68	11-197S	#72	—
CHEVROLET Repl.	1950-51	787SB	—	75-787	—	75-788	—	75-789	.091"	120-155	1285"	(10)	#68	11-197S	#75	—
CHEVROLET Repl.	1950-51	788S	—	75-678	—	75-736	—	75-737	.095"	120-167	1285"	(10)	#66	11-213S	#72	—
CHEVROLET Repl.	1950-51	788SA	—	75-790	—	75-795	—	75-796	.095"	120-162	—	(10)	#66	11-213S	#75	—
CHRYSLER V8	1951	830S, SA	—	75-765	—	75-769	—	75-770	.089"	120-159	—	(10)	.0295"	11-221S	#74	48-180
FRAZER	1950	723S	—	75-669	—	75-694	—	75-695	.0846"	120-125S	—	(10)	#66	11-191S	#74	48-158S
FRAZER	1951	813S	—	75-748	—	75-759	—	75-738	.086"	120-165	—	(10)	#68	11-195S	#74	48-169S
HUDSON Six	1950	647SA	—	75-686	—	75-623	—	75-624(9)	.086"	120-121S	(12)	12-248	#67	11-168S	#74	—
HUDSON Eight	1950	648S	—	75-607	—	75-627	—	75-628(16)	.086"	120-121S	(40)	12-312	#68	11-160S	#74	—
HUDSON Pcm.	1950-51	749S	—	75-704	—	75-712	—	75-713(45)	.1015"	120-15S	(6)	12-280S	#65	11-165S	#72	48-72
HUDSON Six	1950-51	776S	—	75-754	—	75-732	—	75-741(46)	.089"	120-159	#30	(10)	#66	11-198S	#74	48-174S
HUDSON Eight	1950-51	773S	—	75-724	—	75-744	—	75-745(47)	.089"	120-159	#30	(10)	#66	11-198S	#74	48-174S
HENRY J Four	1951	820S, SA, SB	—	75-762	—	75-781	—	75-782	.089"	120-159	—	(10)	#70	11-202S	#75	—
HENRY J Six	Early 1951	814S	—	75-749	—	75-783	—	75-784	.0935"	120-166	—	(10)	#70	11-202S	#75	—
HENRY J Six	Late 1951	833S, SA, SB	—	75-749	—	75-783	—	75-784	.0935"	120-166	—	(10)	#70	11-202S	#75	—
KAISER	1950	723S	—	75-669	—	75-694	—	75-695	.0846"	120-125S	—	(10)	#66	11-191S	#74	48-158S
KAISER	1951	781S	—	75-734	—	75-738	—	75-739	.086"	120-165	—	(10)	#68	11-195S	#74	48-169S
NASH Rmbl & Statsmn	1950	694S	—	75-646	—	75-660	—	75-661	.103"	120-117S	.086"	12-307	#69	11-162S	—	—
NASH Rmbl & Statsmn	1950	780S	—	75-646	—	75-660	—	75-661	.103"	120-117S	.0885"	12-307	#69	11-162S	—	—
NASH Ambass.	1950-51	746S	—	75-650	—	75-658	—	75-659	.0995"	120-133S	(39)	12-326	#64	11-174S	—	—
NASH Rambler	1951	757S, SA	—	75-775	—	75-791	—	75-792	.098"	120-163	—	(10)	#70	11-202S	—	—
NASH Rambler	1951	757SB	—	75-775	—	75-791	—	75-792	.096"	120-160	—	(10)	#70	11-202S	—	—
NASH Stsmn.	1951	824S, SA	—	75-775	—	75-791	—	75-792	.098"	120-163	—	(10)	#70	11-202S	—	—
NASH Stsmn.	1951	824SB	—	75-775	—	75-791	—	75-792	.096"	120-160	—	(10)	#70	11-202S	—	—
NASH Rambler	Late 1951	876S	—	75-779	—	—	—	—	.01236"	120-170	—	(10)	#70	11-202S	—	—
NASH Stsmn.	Late 1951	877S	—	75-779	—	—	—	—	.01236"	120-170	—	(10)	#70	11-202S	—	—
OLDSMOBILE 6	1950	764S	—	75-651	—	75-512	—	75-513(17)	.1015"	120-15S	(6)	12-280S	#65	11-206S	#72	48-72
OLDSMOBILE 6(18)	1950	763S	—	75-719	—	75-512	—	75-513(17)	.1015"	120-15S	(6)	12-280S	#65	11-206S	#72	48-72
OLDSMOBILE 6(18)	1950	763SA	—	75-651	—	75-512	—	75-513(17)	.1015"	120-15S	(6)	12-280S	#65	11-206S	#72	48-72
OLDSMOBILE 8 Rpl	1949-50	849S	—	75-763	—	75-706	—	—	.096"	120-160	—	(10)	#70	11-199S	#70	48-157S
OLDSMOBILE 8	1951	851S	—	75-766	—	—	—	—	.089"	120-159	—	(10)	#65	11-216S	#70	48-157S
PACKARD Eight	1950	728S	—	75-679	—	75-709	—	75-710	.089"	120-159	#38	(10)	#66	11-198S	#74	48-169S
PACKARD Eight	1950	728SA	—	75-707	—	75-721	—	75-722	.089"	120-159	#30	(10)	#66	11-198S	#74	48-169S
PACKARD Super 8	1950	643SA	—	75-606	—	75-620	—	75-621	.09055"	120-139S	(19)	12-311	#70	11-163S	#72	—
PACKARD Cust. 8	1950	531SA	—	75-616	—	75-639	—	75-640	.09055"	120-139S	(38)	12-259	#70	11-163S	#72	—
PACKARD 200 8	1951	784S	—	75-722	—	75-767	—	75-768	.089"	120-159	—	(10)	#67	11-211S	#74	48-169S
PACKARD 300, 400	1951	767S	—	75-764	—	75-777	—	75-778	.089"	120-159	—	(10)	#67	11-211S	#74	48-169S

(6)—Inner (screw) Nozzle #31 or .120", Outer (slip) Nozzle .110".
(9)—Three Sizes Lean—No. 75-625.
(10)—Nozzle assembled permanently in carburetor. **Do not remove.**
(11)—High Altitude only.
(12)—Closed Tip. Top hole .028" (45° angle), Lower hole .0635" (60° angle).
(16)—Three Sizes Lean—No. 75-629.
(17)—Three Sizes Lean—No. 75-514.
(18)—Used on cars with Automatic Transmission.
(19)—Closed Tip. Top hole .0292" (45° angle), Lower hole .0635" (60° angle).
(24)—Idle Well Jet #61 drill, Part No. 43-67.
(26)—No. 75-771 with 61-332 Vacuum Piston Spring, No. 75-716 with 61-226 Vacuum Piston Spring.
(38)—Closed Tip. Top hole .035" (45° angle), Lower hole .089" (60° angle).
(39)—Closed Tip. Top hole .035" (45° angle), Lower hole .0945" (60° angle).
(40)—Closed Tip. Top hole .037" (45° angle), Lower hole .071" (60° angle).
(42)—Closed Tip. Top hole .021" (45° angle), Lower hole .081" (70° angle).
(45)—.0635" (early production), .061" (later production).
(46)—Three Sizes Lean—No. 75-672.
(47)—Three Sizes Lean—No. 75-714.
(48)—Three Sizes Lean—No. 75-742.
(Three Sizes Lean—No. 75-746.
(Closed Tip. Top hole .020" (45° angle), Lower hole .070" (60° angle).

1950-51 CARTER DOWNDRAFT CARBURETOR JET SPECIFICATIONS

Car Model	Yr.	Carb. No.	Metering Rod Standard Marking	Metering Rod Standard Part No.	Metering Rod 1 Size Lean Marking	Metering Rod 1 Size Lean Part No.	Metering Rod 2 Sizes Lean Marking	Metering Rod 2 Sizes Lean Part No.	Met. Rod Jet Size	Met. Rod Jet Part No.	Main Nozzle Size	Main Nozzle Part No.	Low Spd. Jet Tube Size	Low Spd. Jet Tube Part No.	Pump Jet Size	Pump Jet Part No.
PONTIAC Six	1950	717S	—	75-528	—	75-582	—	75-583	.0995"	120-133S	㊽	12-286	#67	11-168S	#72	48-72
PONTIAC Six⑱	1950	718S	—	75-528	—	75-582	—	75-583	.0995"	120-133S	㊽	12-286	#67	11-168S	#72	48-72
PONTIAC Eight	1950-51	719S, SA	—	75-664	—	75-683	—	75-684	.082"	120-65S	—	⑩	#68	11-183S	#74	48-143S
PONTIAC Eight⑱	1950-51	720S, SA	—	75-664	—	75-683	—	75-684	.082"	120-65S	—	⑩	#68	11-183S	#74	48-143S
STUDEBAKER Comm.	1950	627SA	—	75-725	—	75-726	—	75-727	.098"	120-67S	㊲	12-271	#67	11-168S	#71	48-90
STUDEBAKER Ch.	1950-51	715S	—	75-652	—	75-666	—	75-667㊷	.095"	120-129S	㉜	12-263	.02925"	11-186S	#73	48-161
WILLYS Jeep	1950-51	636SA	—	75-547	—	75-548	—	—	.070"	120-151S	.096"	12-323	#69㉔	11-186S	#73	48-84
WILLYS Four	1950	613S	—	75-589	—	75-601	—	75-618	.098"	120-67S	.086"	12-307	#66	11-167S	#71	48-122
WILLYS Four	1950	738S	—	75-708	—	75-720	—	—	.096"	120-160	—	⑩	#68	11-160S	#72	—
WILLYS Six	1950	645S	—	75-609	—	—	—	—	.098"	120-67S	.086"	12-307	#66	11-167S	#71	48-122
WILLYS Four	1951	768S, SA	—	75-750	—	75-735	—	75-751	.096"	120-160	—	⑩	#70	11-163S	#72	—
WILLYS Four	1951	832S	—	75-735	—	75-750	—	75-751	.096"	120-160	—	⑩	#70	11-163S	#72	—

⑩—Nozzle assembled permanently in carburetor. **Do not remove.**
⑱—Used on cars with Automatic Transmission.
㉔—Idle Well Jet #61 drill, Part No. 43-67.
㉜—Closed Tip. Top hole .035" (45° angle), Lower hole .089" (60° angle).
㊲—Closed Tip. Top hole .035" (45° angle), Lower hole .0945" (60° angle).
㊷—Three Sizes Lean—No. 75-672.
㊽—Closed Tip. Top hole .020" (45° angle), Lower hole .070" (60° angle).

1950-51 CARTER (B&B) UPDRAFT CARBURETORS

Carter No. **CHEVROLET MODELS**

745S—Forward Control, ¾ Ton Series 3742 & 1 Ton 3942 (1950-51)
Cab-Over-Engine, 1½ Ton Series 5100S, 5400S, 5700S (1950-51)
Cab-Over-Engine, 2 Ton Series 5100, 5400, 5700 (1950-51)

►**ACCESS TO CARBURETOR (for Adjustment or Removal):**
Forward Control Models—Remove toe pan attaching screws, disconnect wires at stop light switch, disconnect accelerator pedal rod from throttle control rod, remove toe pan.
Cab-Over-Engine Models—Remove rear half of left fender skirt.

DESCRIPTION: Plain tube, updraft type of same design as used on previous Chevrolet models.

ADJUSTMENT & SERVICING: ***See complete "Carter (BB) Updraft Type" carburetor in previous release and set this carburetor to the following specifications:***

IDLING ADJUSTMENT

Idle Screw Setting—½-1½ turns open (turn screw out for richer mixture).
Idle Speed—450-500 RPM. with warm engine.

ACCELERATING PUMP

Pump Seasonal Setting—Short Stroke—Summer, Long Stroke—Winter.
Pump Stroke—9/16" (Short Stroke) with connecting screw in holes in throttle lever and pump link nearest throttle shaft, 1" (Long Stroke) with screw in holes farthest from shaft.

FLOAT LEVEL SETTING

Float Level—0-1/32" (Carter Gauge T109-49 or Chevrolet J-818-13A) from top of float to top edge of bowl with needle valve seated.
CAUTION—Use 1/32" side of gauge (other side used for 1/16" settings).
Intake Needle & Seat Assembly—Carter No. 25-44S (intake hole size #38).

THROTTLE VALVE SETTING

Idle Port—.005-.009" from top of lower idle port to lower edge of throttle valve.
Vacuum Spark Port—.000-.004" from top of port to lower edge of throttle valve.
NOTE—Above specifications apply with throttle valve tightly closed.

SERVICE PARTS

Gasket Set—Carter No. 202.
Repair Pkg. (with Std. Metering Jet)—Carter No. 1539.

1950-51 CARTER (B&B) UPDRAFT CARBURETOR JET SPECIFICATIONS

Car Model	Yr.	Carb. No.	Main Metering Screw Flow	Main Metering Screw Standard Part No.	Main Metering Screw 1 Size Lean Part No.	Main Metering Screw 2 Sizes Lean Part No.	Main Nozzle Size	Main Nozzle Part No.	Stepup Jet Power Orifice Size	Stepup Jet Power Orifice Part No.	Idle Orifice Tube Size	Idle Orifice Tube Part No.	Idle Passage Tube	Pump Size	Valve Part No.
CHEVROLET Trk㉛	1950-51	745S	.339-343cc.	159-10	5%	159-29	10%	159-35	㉜	12-344	.0394"	162-17	.031"	123-58	123-45	.0635"	149-65S

㉛—Cab-over-Engine & Forward-Control Trucks.
㉜—Discharge Jet size .148-.150".

CARTER (B&B) DOWNDRAFT TYPES

CHRYSLER	Carter No.
1950 C48 Six Synchro-mesh Trans.	EX3①
1950 C48 Six Automatic Trans.	E7L4
1950 C49, C50 Eight Automatic Trans.	E7J4
1951 C51 Six Synchro-mesh Trans.	E9C1
1951 C51 Six Automatic Trans.	E9A1
DE SOTO	
1950 S14 Synchro-mesh Trans.	EX3①
1950 S14 Automatic Trans.	E7L4
1950-51 S14, S15 City Traffic	E7W1
1951 S15 Synchro-mesh Trans.	E9C1
1951 S15 Automatic Trans.	E9A1
DODGE	
1950-51 All Synchro-mesh Trans.	D6P1
1950-51 All Automatic Trans.	D6M1
PLYMOUTH	
1950-51 All Standard Equip.	D6H2
1950-51 All City Traffic	D6N2

①—Replacement Carburetor EX3R.

DESCRIPTION: Single barrel, plain tube, downdraft types of same design as used on previous models except for new built-in AUTOMATIC CHOKE (E9A1 & E9C1) as described below. Carburetors have following features:

Automatic Choke (E9A1 & E9C1)—Carter Climatic Control of special Chrysler design (choke similar to that used on 8 Cyl. Chrysler, fast idle is different type). *See Choke and Fast Idle data below.*

Throttle Kick-down Switch (E9A1, E7J4, E7L4, D6M1)—*See separate "Chrysler, DeSoto, Dodge Kick-down Switch" data.*

Slow-Closing Throttle (E9A1, E7J4, E7L4, D6M1)—Solenoid type (non-adjustable). *See complete "Chrysler, DeSoto, Dodge Slow-Closing Throttle" in previous release.*

Slow-Closing Throttle (Dodge D6P1)—Adjustable type. *See Setting below.*

ADJUSTMENT & OVERHAUL: Same as for previous Carter (B&B) carburetors. *See complete "Carter (B&B) Downdraft Type" carburetor in previous release and set these carburetors to the following specifications:*

IDLING ADJUSTMENT

Adjust only when engine warmed up to operating temperature with choke valve wide open and fast idle inoperative. *See car model pages for complete tune-up data.*

Idle Screw Setting—Approximately ½-1½ turns open. Turn screw out for richer mixture.

Idle Speed (Synchro-mesh Trans. Cars)—6 MPH.

Idle Speed (Automatic Trans. Cars)—450-475 RPM. (1950), 475-500 RPM. (1951).

ACCELERATING PUMP

Seasonal Setting—Three holes in throttle lever for pump link connector—Inner Hole (minimum stroke), Center Hole (medium stroke), Outer Hole (maximum stroke). See car model pages for recommended seasonal settings.

Pump Stroke Adjustment—Use Pump Gauge T109-117S. Bend horizontal portion of pump connector link for correct stroke as follows:

Pump Stroke Setting

Car Model	Carburetor	Pump Stroke	Pump Setting
Chrysler & DeSoto	EX3, EX3R	20/64"①	Medium Stroke
Chrysler & DeSoto	E7L4, E9A1, E9C1		See Note
Chrysler 8	E7J4	26/64"	Medium Stroke
DeSoto	E7W1	26/64"	Medium Stroke
Dodge & Plymouth	D6H2, N2, M1, P1	22/64"	Medium Stroke

①—Supersedes 26/64" setting originally specified for these models.

E7L4, E9A1, E9C1 Note—No gauge required. Arm at upper end of pump lifter should be at right angles to lifter shaft. Bend arm up or down as required using tool T109-41.

FLOAT LEVEL SETTING

All Carburetors—5/64" plus or minus 1/64" top of float below top edge of bowl. Use Gauge T109-50 placed on top edge of bowl. Gauge will insure both ends of float being set uniformly.

CONTINUED ON NEXT PAGE

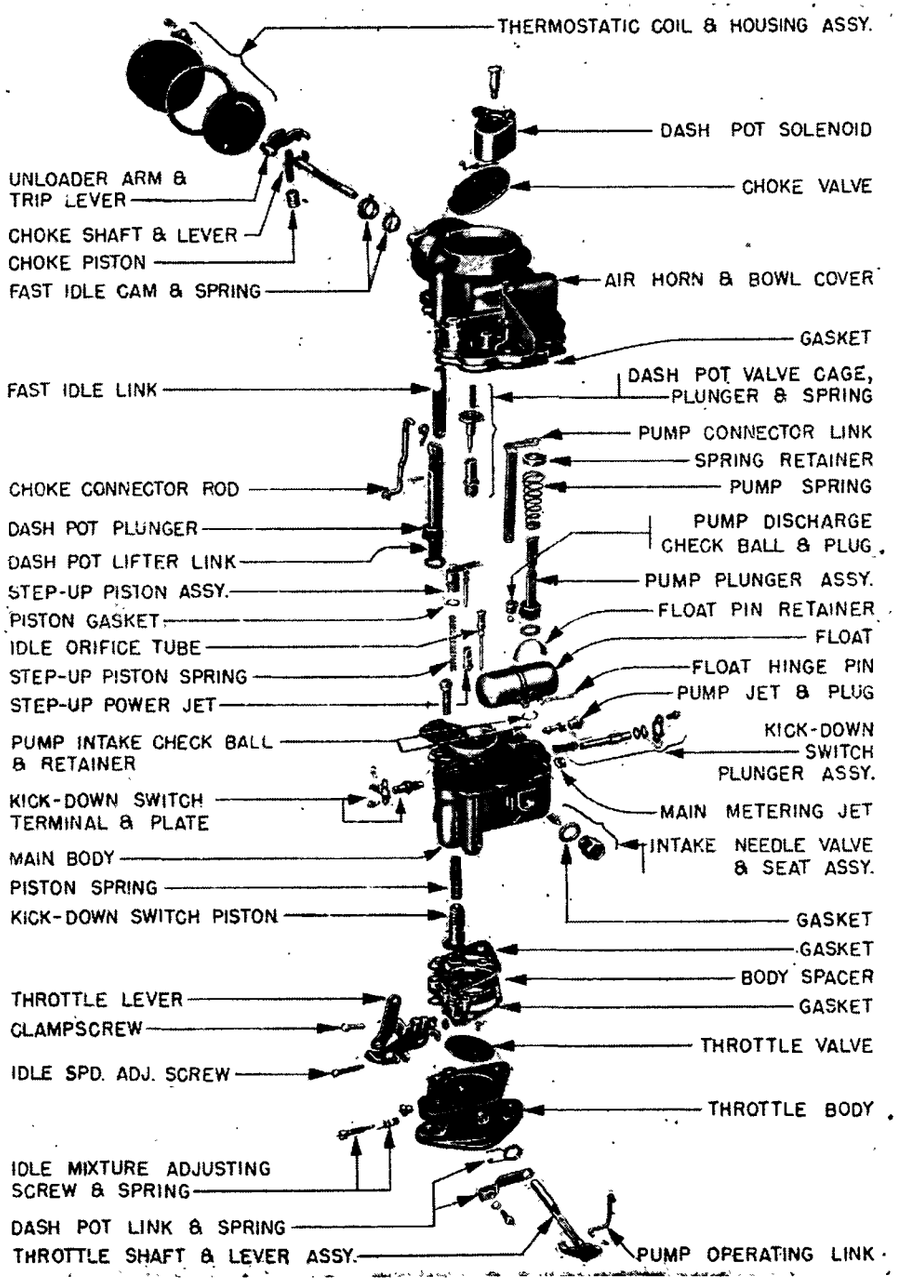

CARTER (B&B) DOWNDRAFT CARBURETOR (WITH CLIMATIC CONTROL)

CARTER (B&B) DOWNDRAFT (C nt.)

THROTTLE VALVE SETTING

Car Model	Carburetor	Idle Port Height③	Vacuum Spark Port
Chrysler & DeSoto	EX3	.118-.122"	③.052-.058"
Chrysler & DeSoto	E7L4	.118-.122"	③④.012-.018"
Chrysler & DeSoto	E9A1, E9C1	.118-.122"	③.012-.018
Chrysler	E7J4	.130-.134"	③.052-.058"
DeSoto	E7W1	.093-.097"	③.052-.058"
Dodge & Plymouth	D6H2, N2, M1, P1	.021-.027"	②.021-.027"

②—Bottom of port above top edge of valve.
③—Top of port above top edge of valve.
④—Late production (.052-.058" on early production carburetors).

DASHPOT (SLOW CLOSING THROTTLE) ADJUSTMENT

Chrysler, DeSoto, & Dodge D6M1—Non-adjustable (solenoid type).

Dodge D6P1 Carburetor—5 full turns of the adjusting screw out from the inner closed position. Adjusting screw located on top of bowl cover.

FAST IDLE ADJUSTMENT
E9A1, E9C1 Carburetors

Setting—.015-.019" throttle opening with fast idle cam in fast idle position. Use gauge T109-44 (.015" and .018" settings).

Checking & Adjustment—Remove thermostatic coil housing assembly, gasket, and baffle plate (for access to fast idle cam). Back out throttle lever stopscrew so that throttle valve closes tightly. Open throttle valve, close choke valve, then close throttle valve (this will allow fast idle cam to revolve to fast idle position). Check clearance between edge of throttle valve and carburetor wall on side opposite idle ports using Gauge T109-44. If this clearance not .015-.019", adjust by bending choke connector rod at lower angle near throttle lever using bending tool T109-41.

Other Carburetors

No adjustment required. Fast idle cam is rotated to fast idle position when choke valve is closed for cold starting.

UNLOADER ADJUSTMENT
E9A1, E9C1 Carburetors

Setting—5/32" choke valve opening with throttle valve tightly closed. Use gauge T109-154 (5/32" setting).

Checking & Adjustment—*After Fast Idle adjustment completed*, hold throttle valve wide open, close choke valve as far as possible without forcing (CAUTION—do not force valve past point where choke trip lever is against choke valve lever). Check clearance between upper edge of choke valve and air horn wall using Gauge T109-154. If this clearance not 5/32", adjust by bending arm on choke trip lever using bending tool T109-187.

CAUTION—After Unloader adjustment completed, install and adjust automatic choke as follows:

AUTOMATIC CHOKE SETTING
E9A1, E9C1 Carburetors

Setting—Centered (index mark on housing centered on scale on choke body on air horn).

Installation Note—Install thermostatic housing and coil assembly with indicator mark on housing pointing straight down, turn assembly in counter-clockwise direction until correct setting secured (this is necessary to engage thermostatic coil hook with prong on shaft lever), tighten mounting screws securely, connect heat tube.

►***CAUTION—Use two wrenches and hold heat tube fitting in choke housing from turning while tightening heat tube coupling. Use great care not to turn or distort choke housing.***

SERVICE PARTS: Gasket Sets—Carter No. 137A, (EX3, EX3R, E7W1), No. 164A (E7L4), No. 187 (D6P1), No. 199 (D6M1), No. 203 (D6H2, D6N2), No. 213 (E9A1), No. 214 (E9C1).

Repair Package—Carter No. 1511A (E7J4), No. 1513A (D6H2), No. 1526 (D6P1), No. 1527 (D6M1), No. 1528 (E7L4), No. 1541 (E7W1), No. 1543 (D6N2).

1950-51 CARTER (B&B) DOWNDRAFT CARBURETOR JET SPECIFICATIONS

Car Model	Yr.	Carb. No.	Main Metering Jet Standard Flow	Main Metering Jet Standard Part No.	Main Metering Jet 1 Size Lean Less	Main Metering Jet 1 Size Lean Part No.	Main Metering Jet 2 Sizes Lean Less	Main Metering Jet 2 Sizes Lean Part No.	Main Vent Air Bleed Size	Tube Assem. Part No.	Stepup Jet Power Orifice Size	Stepup Jet Power Orifice Part No.	Idle Orifice Tube Size	Idle Orifice Tube Part No.	Pump Jet Assembly Jet Size	Pump Jet Assembly Part No.
CHRYSLER Six⑭	1950	EX3㉙	.315-319cc.	224-13S㉖	—	224-14S㉗	—	224-15S㉘	.0315"	145-13	.0413"	149-56S	.0276"	123-31S	.0413"	48-167
CHRYSLER Six⑮	1950	E7L4	.315-319cc.	224-13S	—	224-14S	—	224-15S	.0315"	145-13	.0413"	149-56S	.0276"	123-31S	.0413"	48-167
CHRYSLER Eight	1950	E7J4	.332-336cc.	224-10S	—	224-13S	—	224-14S	.0354"	145-13	.0433"	149-105S	.0276"	123-31S	.0374"	48-75
CHRYSLER Six⑭	1951	E9C, C1	315-319cc.	224-13S	—	224-14S	—	224-15S	.0315"	145-13	.0374"	149-70S	.0295"	123-39S	.0413"	48-167
CHRYSLER Six⑮	1951	E9A1	.315-319cc.	224-13S	—	224-14S	—	224-15S	.0315"	145-13	.0374"	149-70S	.0295"	123-39S	.0413"	48-167
DE SOTO⑭	1950	EX3㉙	.315-319cc.	224-13S㉖	—	224-14S㉗	—	224-15S㉘	.0315"	145-13	.0413"	149-56S	.0276"	123-31S	.0413"	48-167
DE SOTO⑮	1950	E7L4	315-319cc.	224-13S	—	224-14S	—	224-15S	.0315"	145-13	.0413"	149-56S	.0276"	123-31S	.0413"	48-167
DE SOTO㉑	1950-51	E7W1	.315-319cc.	224-13S	—	224-14S	—	224-15S	.0315"	145-13	.0315"	149-46S	.0236"	123-59S	.0413"	48-167
DE SOTO⑭	1951	E9C, C1	315-319cc.	224-13S	—	224-14S	—	224-15S	.0315"	145-13	.0374"	149-70S	.0295"	123-39S	.0413"	48-167
DE SOTO⑮	1951	E9A1	315-319cc.	224-13S	—	224-14S	—	224-15S	.0315"	145-13	.0374"	149-70S	.0295"	123-39S	.0413"	48-167
DODGE⑭	1950-51	D6P1	256cc.	224-11S	—	224-17S	—	224-18S	.0315"	145-17	#65	149-41S	.0276"	123-31S	.0276"	48-103
DODGE⑮	1950-51	D6M1	256cc.	224-11S	—	224-17S	—	224-18S	.0315"	145-17	#65	149-41S	.0276"	123-31S	.0276"	48-103
PLYMOUTH	1950-51	D6H2	256cc.	224-11S	—	224-17S	—	224-18S	.0315"	145-17	#65	149-41S	.0276"	123-31S	.0276"	48-103
PLYMOUTH㉑	1950-51	D6N2	256cc.	224-11S	—	224-17S	—	224-18S	.0315"	145-17	#71	149-50S	.0276"	123-31S	.0276"	48-103

⑭—Cars with Synchro-mesh Transmission.
⑮—Cars with Automatic Transmission.
㉑—City Traffic.
㉖—Part No. 224-13S supersedes former No. 159-89S.
㉗—Part No. 224-14S supersedes former No. 159-87S.
㉘—Part No. 224-15S supersedes former No. 159-63S.
㉙—Carburetors EX1, EX1R, EX2, EX2R, EX3 all superseded by EX3R.

HOLLEY (FORD) 6 CYL. UPDRAFT TYPE

FORD C-O-E & PARCEL DLVRY. TRK.	Carb. No.
1950-51 F3 Parcel Del. ("H" Eng.)	7HW-9510-A
1950-51 F5 & F6 C-O-E ("H" Eng.)	7HW-9510-A
1950-51 F6 C-O-E ("M" Eng.)	8MWH-9510-A

DESCRIPTION: Single barrel, plain tube, updraft type with throttle operated accelerating pump and vacuum controlled power valve or economizer.

Idle System—Fuel for idling is taken from main jet well up through a channel to discharge ports at the throttle edge. This fuel is controlled by the Idle Discharge Needle. This system operates for closed throttle idling and slow speed operation.

Main (Driving Range) System—At intermediate speeds, fuel metered by main metering jet at bottom of main jet well is discharged through the main nozzle in the venturi throat.

Power System—Consists of a spring-loaded power jet controlled by a spring-loaded vacuum piston. At normal operating speeds and throttle openings, piston is held up at upper end of stroke by manifold vacuum and power jet is closed. At wide open throttle, or whenever throttle opened for acceleration, drop in manifold vacuum allows piston to move down, opening power jet and permitting greater fuel flow to main nozzle (this fuel metered by power jet and by-passes main metering jet).

Accelerating System—Pump cylinder and piston located in float bowl, operated by inverted "L" shaped pump rod linked to a second rod which is linked to the throttle valve lever. Fuel is drawn into pump cylinder through ball check valve in lower end of cylinder when throttle is closed and is discharged past outlet check valve needle when throttle opened for acceleration.

IDLE ADJUSTMENT: Idle adjusting needle valve controls idle fuel mixture. Adjust only when engine thoroughly warmed up so that choke valve wide open and throttle kicker inoperative. See car model page for complete tune-up instructions.
Idle Mixture Setting—Turn idle adjusting needle in until engine runs unevenly, then turn screw out until engine runs smoothly.
Idle Speed—Set throttle stopscrew for 475-500 RPM. idle speed at operating temperatures.

ACCELERATING PUMP: Throttle lever has three holes for actuating rod link connection as follows:
Inner (Upper Hole)—Min. stroke for hot weather.
Center (Lower) Hole—Medium stroke for average operating conditions.
Outer Hole—Maximum stroke for cold weather.

POWER VALVE (ECONOMIZER): No adjustment.

MAIN METERING JET: Non-adjustable type located at lower end of main nozzle well. Accessible by removing plug below float bowl. See Holley (Ford) Updraft Carburetor Jet Specifications.

FLOAT LEVEL: Fuel Level—Fuel level in bowl should be .500" (½") plus or minus .032" (1/32") below top edge of bowl with needle valve seated.

Float Level Setting: To check setting, remove air horn and float assembly from carburetor, invert assembly, use float gauge (Holley 82R-9-2) to measure from face of cover to bottom of float. Should be 1.180-1.200" (All)

Adjustment—Use bending tool to bend float arm.
►***CAUTION—Both floats must be set alike and floats must not be twisted to avoid possibility of floats rubbing on sides of bowl.***

THROTTLE KICKER: Consists of a spring-loaded lever on the side of the carburetor which rides on a cam surface on the choke valve lever and has an adjustable screw at the upper end which contacts lever on throttle valve shaft.
Adjustment—Should not be required if adjusting screw at upper end of kicker lever not disturbed.

CHOKE: Offset type butterfly valve with poppet type relief valve. Adjust linkage so that valve closed when choke button pulled out fully.

REPAIR PARTS: Separate kits furnished (one for jets, one for other parts) containing all necessary parts for carburetor overhaul as follows:
Repair Kit (Metering Jets)—Ford No. 7HW-9995 contains one 5GA-9533-A Main Metering Jet, one 7HA-9594 Power Jet and necessary gaskets.
Repair Kit (Other Parts)—Ford No. 7HW-9590.
Gasket Sets—Ford No. 7HW-9502.

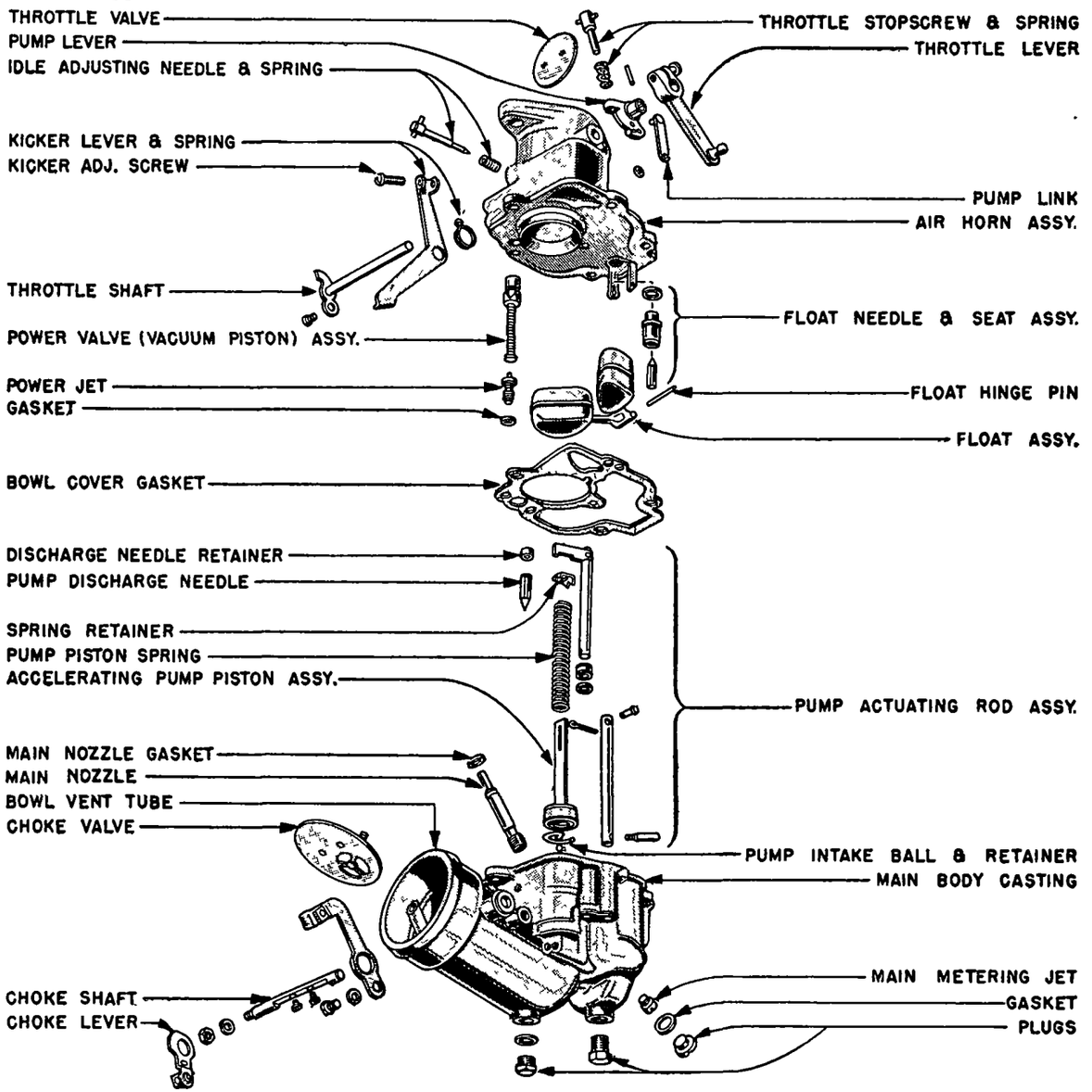

H LLEY (FORD) UPDRAFT CARBURETOR

FORD V8 DUAL DOWNDRAFT TYPE

V8 PASS. CAR MODELS	Ford Part No.
1950-51 Cars with Std. Synchro-mesh Trans.	8BA-9510-A
1951 Cars with Fordomatic Trans.	1BA-9510-A
V8 TRUCK M DELS	
1950-51 F-1, 2, 3, 4, 5, 6 Conv. Trucks	7RT-9510-A

►**ANTI-STALL DASHPOT (1BA-9510A CARB.):** Used on cars with Fordomatic Transmission. See Description and Anti-stall Adjustment below.

DESCRIPTION: Double barrel downdraft type of same design as used on previous models with vacuum connection for distributor advance control (all models) and Anti-stall Dashpot (1BA-9510A) as follows:

Distributor Vacuum Connection: This connection located on the side of carburetor main body casting. Channel in carburetor casting terminates at two ports (1) in throat of main venturi, (2) in carburetor wall directly above throttle valve and resultant vacuum is combination of suction at these two points which provides correct advance for all engine operating conditions and speeds (see distributor advance data on car model page).

Anti-stall Dashpot (1BA-9510A Carb.)—Consists of a diaphragm type dashpot with spring loaded plunger which engages a screw on the throttle lever as the lever moves toward the closed position and slows the throttle lever movement (controlled by rate of air bleed from dashpot) to prevent the engine stalling. Engaging screw on throttle lever is adjustable.

ADJUSTMENT & SERVICING: ***See complete "Holley (Ford) V8, Lincoln, Mercury" Carburetor in previous release and set these carburetors to following specifications:***

IDLING ADJUSTMENT

Idle Screw Setting—Both screws must be adjusted alike. Preliminary setting 1 turn open. After engine warmed up to normal operating temperature (choke valve wide open, fast idle inoperative), adjust both screws for highest steady vacuum reading. If vacuum gauge not used, turn screws out until engine begins to roll, then turn screws in until engine speed falls off, finally turn screws out to smooth idling position.

Idle Speed (Synchro-mesh Trans. Cars)—475-500 RPM.

Idle Speed (Fordomatic Trans. Cars)—425 RPM. with selector lever in neutral "N" position.

►***NOTE—Check Anti-stall setting on cars with Fordomatic Transmission.***

ANTI-STALL DASHPOT (1BA-9510A CARB.)

Setting—.038-.040" clearance between dashpot plunger and head of adjusting screw on throttle lever with throttle valve closed and dashpot plunger bottomed in dashpot. To adjust, hold throttle lever in closed position, loosen adjusting screw locknut, turn screw out (counter-clockwise) until dashpot plunger bottoms in dashpot, then turn screw in (clockwise) 1¼ turns, tighten locknut. This will give correct clearance of .038-.040".

ECONOMIZER (POWER VALVE)

Valve opens when manifold vacuum drops to 6-6½". No adjustment is required.

ACCELERATING PUMP

Seasonal Adjustment—Engage pump link in proper hole in throttle lever (holes numbered 1-2-3 from throttle shaft outward):
#2 (Center hole)—Normal operation.
#1 (Inner hole)—Hot weather.
#3 (Outer hole)—Cold weather.

FLOAT LEVEL SETTING

Float Checking Gauge Note—When using Gauge 9550-A, invert cover assembly with gasket removed, mount gauge on cover. The 1.353" (GO) end of the gauge should pass over the float while the 1.322" (NO GO) end of the gauge should not. Check both ends of the float and adjust so that both ends are same height.

Float Level Setting	"Go" — Height — "No Go"
All Carburetors (using 9550A Gauge)	1.353" — 1.322"

Fuel Level Setting	Fuel Level (below top of bowl)
All Carburetors	.687" (11/16") ± .032" (1/32")

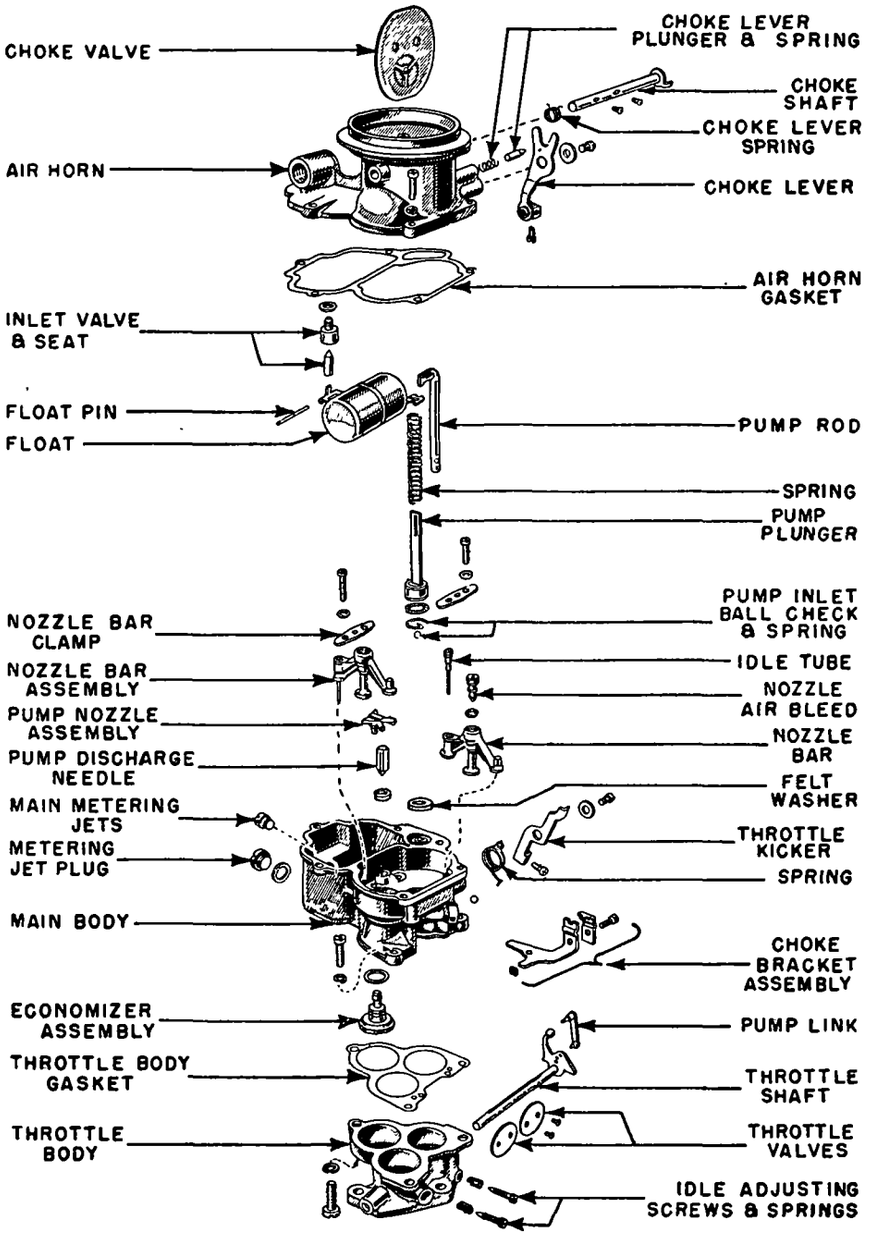

HOLLEY (FORD) V8 DUAL DOWNDRAFT CARBURETOR

SERVICE PARTS

►***REPAIR KIT NOTE—Jets furnished in kits are correct size for use in altitude range noted below.***

Carburetor	Repair Kit Part No.
8BA-9510A & 7RT-9510A (Up to 5000 ft.)	8BA-9590A
8BA-9510A & 7RT-9510A (5000 to 10000 ft.)	8BA-9590B

Gasket Sets—No. 21A-9502 (8BA-9510A & 7RT-9510A Carb.).

FORD 6 CYL. DOWNDRAFT TYPE

6 CYL. PASS. CAR MODELS	Ford Part No.
1950-51 Cars with Std. Synchro-mesh Trans.	8HA-9510①
1951 Cars with Fordomatic Trans.	1HA-9510-A
6 CYL. TRUCK MODELS	
1950-51 F-1, 2, 3, 4, 5, 6 Conv. Trucks with "H" Engine	7HT-9510-A
1950-51 F-6 Conv. Trucks with "M" Engine	8MTH-9510-A

①—See Production Change (below) for models used.

►**1950 CARB. 8HA-9510 METERING JET PRODUCTION CHANGE:** Main Metering Jet changed in production on these carburetors as listed below. *NOTE*—Carburetor model designation indicates Altitude range and correct metering jet for this use.

6 Cyl. Main Metering Jets

		Early 1950		Late 1950 & 1951	
Carb No.	Altitude Range	Size	Part No.	Size	Part No.
8HA-9510-A②	Up to 5000 ft.	.065"	5GA-9533A	.064"	1GA-9533A
8HA-9510-B	5000-10000 ft.	.063"	5GA-9533B	.062"	1GA-9533B
8HA-9510-C	10000-15000 ft.	.061"	5GA-9533C	.060"	1GA-9533C
8HA-9510-D	Over 15000 ft.	.059"	5GA-9533D	.058"	1GA-9533D

②—Replaced by 8HA-9509-A (Carb. Assy. less choke lever).

►**ANTI-STALL DASHPOT (1HA-9510A CARB.):** Used on cars with Fordomatic Transmission. See Description and Anti-stall Adjustment below.

DESCRIPTION: Single barrel downdraft type of same design as used on previous models with vacuum connection for distributor advance control (all models) and Anti-stall Dashpot (1HA-9510A) as follows:

Anti-stall Dashpot (1HA-9510A Carb.)—Consists of a diaphragm type dashpot with spring loaded plunger which engages a screw on the throttle lever as the lever moves toward the closed position and slows the throttle lever movement (controlled by rate of air bleed from dashpot) to prevent the engine stalling.

ADJUSTMENT & SERVICING: ***See complete "Holley (Ford) Six Cyl. Downdraft Type" Carburetor in previous release and set these carburetors to following specifications:***

IDLING ADJUSTMENT

Idle Screw Setting—Preliminary setting 1 turn open. After engine warmed up to normal operating temperature (choke valve wide open, fast idle inoperative), adjust screw for highest steady vacuum reading. If vacuum gauge not used, turn screw out until engine begins to roll, then turn screw in until engine speed falls off, finally turn screw out to smooth idling position.

Idle Speed (Synchro-mesh Trans. Cars)—475-500 RPM.

Idle Speed (Fordomatic Trans).—425 RPM. (selector lever in neutral "N").

►***NOTE—Check Anti-stall setting on cars with Fordomatic Transmission.***

ANTI-STALL DASHPOT (1HA-9510A CARB.)

Setting—.038-.040" clearance between dashpot plunger and head of adjusting screw on throttle lever with throttle valve closed and dashpot plunger bottomed in dashpot. To adjust, hold throttle lever in closed position, loosen adjusting screw locknut, turn screw out (counter-clockwise) until dashpot plunger bottoms in dashpot, then turn screw in (clockwise) 1¼ turns, tighten locknut. This will give correct clearance of .038-.040".

ECONOMIZER (POWER VALVE)

Valve opens when manifold vacuum drops to approximately 6½-7½". No adjustment is required.

ACCELERATING PUMP

Seasonal Adjustment—Engage pump link in proper hole in throttle lever (holes numbered 1-2-3 from throttle shaft outward):

#2 (center)—normal. #1 (inner)—hot weather. #3 (outer)—cold weather.

FLOAT LEVEL SETTING

Float Checking Gauge Note—When using Gauge 9550-A, invert cover assembly with gasket removed, mount gauge on cover. The 1.353" (GO) end of the gauge should pass over the float while the 1.322" (NO GO) end of the gauge should not. Check both ends of the float and adjust so that both ends are same height.

Float Level Setting

Carburetor	Checking Gauge	"Go" — Height — "No Go"
All except 8MTH-9510A	9550-A	1.353" — 1.322"
8MTH-9510A		See Fuel Level

Fuel Level Setting

Carburetor	Fuel Level (below top of bowl)
All except 8MTH-9510A	.687" (11/16") ±.032" (1/32")
8MTH-9510A	.720" (23/32") ±.032" (1/32")

SERVICE PARTS

►***REPAIR KIT NOTE—Jets furnished in kits are correct size for use in altitude range***

Carburetor	Repair Kit Part No.
8HA-9510A (Up to 5000 ft.)	7HA-9590A
8HA-9510B (5000 to 10000 ft.)	7HA-9590B
7HT-9510A (Up to 5000 ft.)	7HT-9590A
7HT-9510A (5000 to 10000 ft.)	7HT-9590B
8MTH-9510A	8MTH-9590

Gasket Sets—Ford No. 7HA-9502 (8HA-9509A, 8HA-9510A, 7HT-9510A Carb.), No. 8MTH-9502 (8MTH-9510A Carb.).

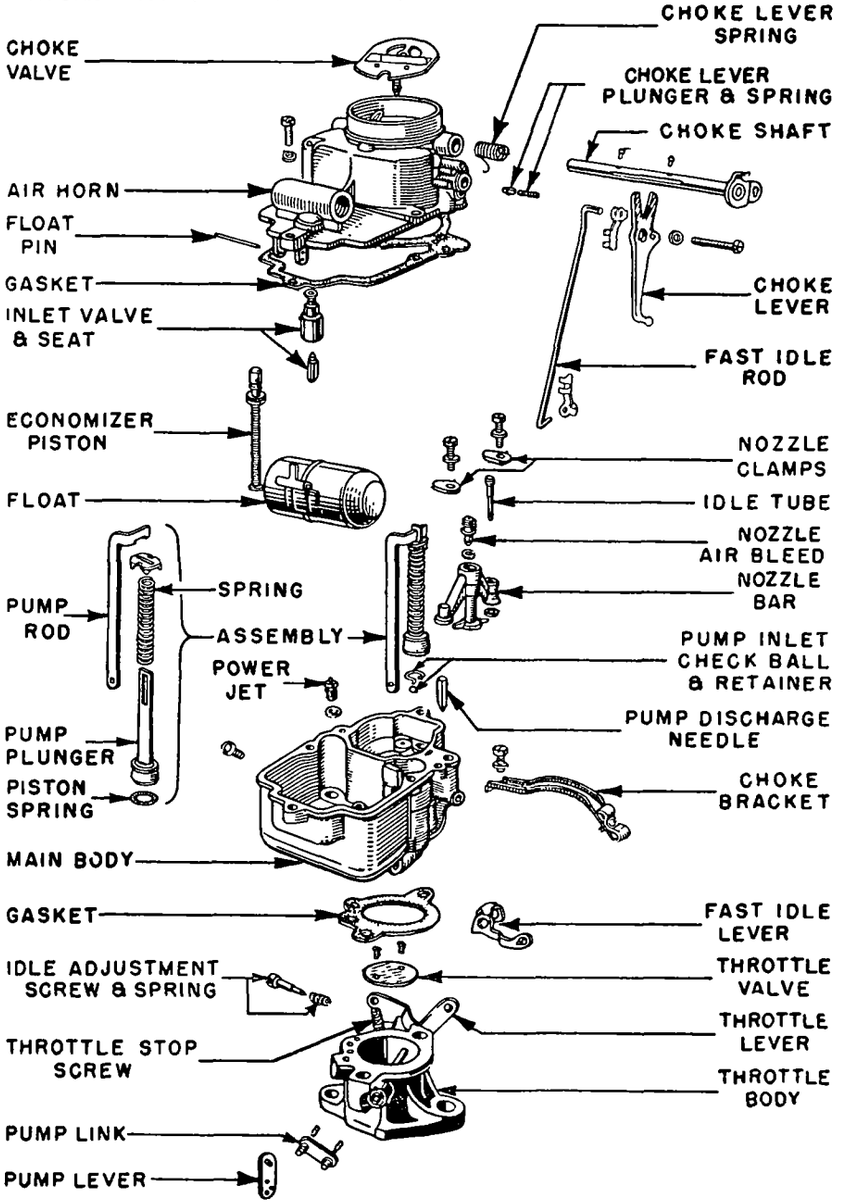

HOLLEY (FORD) 6 CYL. DOWNDRAFT CARBURETOR

LINCOLN & MERCURY DUAL CONCENTRIC TYPE

LINCOLN 1950-51 Cars with Hydra-Matic Drive.
Carburetor Stamped 10-49 & Later①
(With Separate Choke Control)

OEL-9510-A	0 to 5000 Ft. Alt.
OEL-9510-B	5000 to 10000 Ft. Alt.
OEL-9510-C	10000 to 15000 Ft. Alt

MERCURY 1950-51 Cars with Synchro-mesh Trans.
Carburetor Stamped 8-49 to 7-50①

8CM-9510-G	0 to 5000 Ft. Alt.
8CM-9510-H	5000 to 10000 Ft. Alt.
8CM-9510-J	10000 to 15000 Ft. Alt.

Carburetor Stamped 7-50 & Later①

1CM-9510-G	0 to 5000 Ft. Alt.
1CM-9510-H	5000 to 10000 Ft. Alt.
1CM-9510-J	10000 to 15000 Ft. Alt.

MERCURY 1950 Cars with Merc-O-Matic Trans.
Carburetors Stamped 8-50 & Later①

1CM-9510-K	0 to 5000 Ft. Alt.
1CM-9510-L	5000 to 10000 Ft. Alt.
1CM-9510-M	10000 to 15000 Ft. Alt.

MERCURY 1950-51 Cars with Merc-O-Matic Trans.
Carburetors with Separate Choke Control

1CM-9510-N	0 to 5000 Ft. Alt.
1CM-9510-P	5000 to 10000 Ft. Alt.
1CM-9510-R	10000 to 15000 Ft. Alt.

①—Manufacture date stamped on top of air horn.

►**LINCOLN & MERCURY FLOAT NEEDLE VALVE CHANGE (Orig. Production Carb. stamped 8-50 & Later):** New type Float Needle & Seat Assy. used. Float needle has wire clip which hooks over float arm so needle is positively actuated by float.

INSTALLATION CAUTION—Make certain that wire clip on needle is hooked over float arm.

►**LINCOLN & MERCURY REPLACEMENT FLOAT NEEDLE VALVE:** Use new type Float Needle & Seat Assy. (see Production Change Note above) for replacement on ALL carburetors. This assembly is Part No. 1CM-9564A (Steel Needle) or 1CM-9564B (Nylon Needle).

►**MERCURY "1CM" SERIES CARBURETOR:** These carburetors have new vacuum system for distributor control and new non-interchangeable parts as listed below. These **changes cannot be made on prior carburetor models and "1CM" carburetors cannot be used for replacement on earlier models.**

Distributor Control Vacuum System (1CM Carbs. stamped 6-50 & Later): Plug at bottom of vacuum passage in carburetor replaced by screw pin with loose Nylon ball in passage above pin. When vacuum at venturi port (upper end of passage) reaches a sufficiently high point as at nearly wide open throttle and high speed, the Nylon ball travels to the top of the passage and cuts off the bleed effect of the port at the throttle valve. This results in higher vacuum at distributor and maintains maximum spark advance.

New 1CM Carburetor Parts: Following parts not interchangeable on prior carburetors: Throttle Shaft & Lever. 1CM-9927, Fast Idle Cam 1CM-9597.

DESCRIPTION: "Dual Concentric" downdraft types of same design used on preceding models except that all Lincoln and later Mercury Carburetors have separately mounted Automatic Choke Control and Mercury carburetors used on Merc-O-Matic Transmission cars have Dashpot Assembly as follows:

Automatic Choke Control (No. OEL-9851): Separate unit mounted on the inlet manifold and linked to the carburetor choke valve shaft by a connector rod. This choke assembly is similar to previous type unit mounted on carburetor air horn.

Anti-stall Dashpot (Mercury): Consists of a diaphragm type dashpot with a spring-loaded plunger which engages a screw on the throttle lever as the lever moves toward the closed position. This slows the throttle lever movement (controlled by rate of air bleed from dashpot) to prevent engine stalling. Screw on throttle lever is adjustable.

ADJUSTMENT & OVERHAUL: *See complete "Lincoln & Mercury Dual Concentric Carburetor" in previous release and set carburetors to following specifications.*

IDLING ADJUSTMENT

Idle Screw Setting—After engine warmed up to normal operating temperature (choke valve wide open, fast idle inoperative), adjust both screws for highest steady vacuum reading. If gauge not used, set for smooth idle. Turn screws out for richer mixture.

CONTINUED ON NEXT PAGE

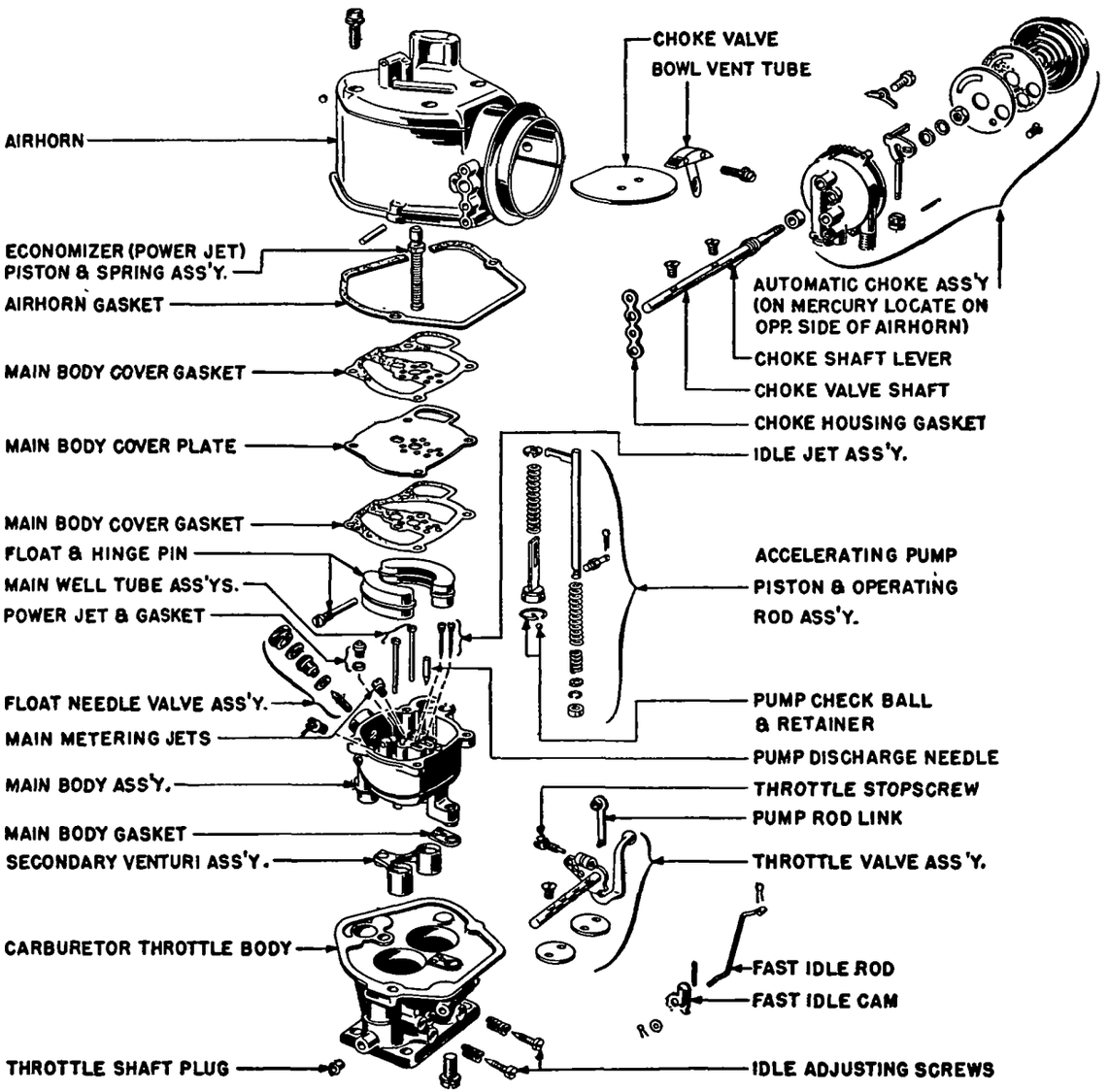

LINCOLN & MERCURY DUAL CONCENTRIC CARBURETOR

LINCOLN & MERCURY DUAL CONCENTRIC (C nt.)

IDLE SPEED

Lincoln & Mercury (Std. Trans.)—400-450 RPM.
Lincoln (Hydra-Matic Drive)—375 RPM.
Mercury (Merc-O-Matic Trans.)—425 RPM. max.

►*Check Dashpot Setting on Merc-O-Matic Trans. cars.*

DASHPOT ADJUSTMENT

(Mercury Cars with Merc-O-Matic Trans.)

Setting—To adjust dashpot (with engine not running), first turn adjusting screw on throttle lever in to limit of adjustment, hold throttle valves fully closed and turn idle speed adjusting screw until it just contacts lowest step (hot or slow idle speed position) of fast idle cam. Turn dashpot adjusting screw out against the dashpot plunger until throttle valves begin to open (idle speed screw will begin to leave fast idle cam), finally **turn dashpot screw in one complete turn for correct plunger clearance.**

►*CAUTION—Reset Idle Speed after completing dashpot adjustment.*

POWER VALVE

Valve opens when manifold vacuum drops to approximately 5-7". No adjustment required.

ACCELERATING PUMP

Seasonal Adjustment—Engage pump link in proper hole in throttle lever:
Center Hole—Normal operating conditions.
Inner Hole—Extremely hot weather.
Outer Hole—Extremely cold weather.

FLOAT LEVEL SETTING

Fuel Level—½" (.500") ±1/32" (.023") below top edge of main body with 3½-4½ lbs. fuel pump pressure.
Checking Fuel Level—Use Gauge 9550-B with air horn and bowl cover assembly, gaskets, and cover plate removed. Place gauge on top edge of main body with gauging pins extending down into bowl. Fuel level should be at least even with longer "GO" pin, but should not be as high as shorter "NO GO" pin on gauge. Adjust by bending tab on float lever which contacts float needle.
Intake Needle, Seat & Gasket Assy.—Use only new type No. 1CM-9564A (Steel Needle) or 1CM-9564B (Nylon Needle) with wire clip for attachment to float lever (CAUTION—see that wire clip hooked over float lever).

NOTE—Above type assembly supersedes previous type and should be used on all carburetors.

AUTOMATIC CHOKE SETTING

Setting—Centered with mark on cover in line with longer center line of scale on housing. Setting can be varied not more than 1 graduation Rich or Lean for special operating conditions.

SERVICE PARTS

►*REPAIR KIT NOTE*—Jets furnished in Metering Kits listed below are Std. (for 0 to 5000 Ft. Alt.). Use same kit for other altitudes but CHANGE MAIN METERING JET to correct type as listed below.

Metering Jet Kits

Lincoln—No. 8EL-9995D (for OEL-9510-A Carb.) This kit has No. 8EL-9533-A Main Metering Jet. Use same kit for other carburetors but sbstitute different jet on other carburetors as follows:

Carburetor	Main Metering Jet
OEL-9510-B	No. 8EL-9533B
OEL-9510-C	No. 8EL-9533C

Mercury—No. 8CM-9995D (for 8CM-9510-G, 1CM-9510-G, 1CM-9510-K, 1CM-9510-N Carb.). This kit has No. 8CM-9533D Main Metering Jet. Use this kit but substitute different jet on other carburetors.

Carburetor	Main Metering Jet
8CM-9510-H, 1CM-9510-H, L, P	No. 8CM-9533E
8CM-9510-J. 1CM-9510-J, M, R	No. 8CM-9533F

Repair Parts Kits

Mercury—No. 8CM-9590B (all carbs.).
NOTE—This kit contains all necessary overhaul parts other than gaskets and metering jets.

Gasket Kits

Lincoln & Mercury—No. 8CM-9502 (all carbs.).

1950-51 HOLLEY (FORD) DOWNDRAFT CARBURETOR JET SPECIFICATIONS

Car Model	Year	Carburetor Model	Venturi Size	Main Metering Jet Size	Main Metering Jet Part No.	Main Discharge Nozzle Part Number Left Hand	Main Discharge Nozzle Part Number Right Hand	Nozzle Air Bleed Plug Part No.	Economizer Assembly Part No.	Idle Tube Size	Idle Tube Part No.	Pump Nozzle Size	Pump Nozzle Part No.
FORD 6 Std. Tr.	1950-51	8HA-9510-A		.064"㉓	1GA-9533-A⑲		7HA-9920㉒	1GA-9924	1GA-9904-B⑳	.64cc.	1GA-9542-B		
FORD 6 Auto Tr.	1951	1HA-9510-A		.064"	1GA-9533-A⑲		7HA-9920㉒	1GA-9924	1GA-9904-B⑳	.64cc.	1GA-9542-B		
FORD V8 Std. Tr.	1950-51	8BA-9510-A		.051"	59A-9533-A㉑	91A-9923-B	91A-9922B.	78-9924	78-9904	54cc.	78-9542	#69	78-9577
FORD V8 Auto. Tr.	1951	1BA-9510-A		.051".	59A-9533-A㉑	91A-9923-B	91A-9922B.	78-9924	78-9904	54cc.	78-9542	#69	78-9577
FORD Truck V8 "R"	1950-51	7RT-9510-A		.051".	59A-9533-A㉑	91A-9923-B	91A-9922B.	78-9924	78-9904	54cc.	78-9542	#69	78-9577
FORD Truck 6 "H"	1950-51	7HT-9510-A		.064"	1GA-9533-A⑲		1GA-9920⑱	1GA-9924	1GA-9904-B⑳	.64cc.	1GA-9542-B		
FORD Truck 6 "M"	1950-51	8MTH-9510		.064"	1GA-9533-A⑲		8MTH-9920	1GA-9924	1GA-9904-B⑳	.64cc.	1GA-9542-B		
LINCOLN V8	1950-51	OEL-9510-A⑯		.055".	8EL-9533-A⑨			8EL-9991	8CM-9904-B⑬	54cc.	8CM-9542	#70	
MERCURY V8 Std. Tr.	1950-51	8CM-9510-G⑯		.049"	8CM-9533-D⑩			8CM-9991B.	8CM-9904B⑬	54cc.	8CM-9542	#70	
MERCURY V8 Std. Tr.	1950-51	1CM-9510-G⑯		.049"	8CM-9533-D⑩			8CM-9991B	8CM-9904B⑬	54cc.	8CM-9542	#70	
MERCURY V8 Auto Tr.	1951	1CM-9510-K⑯		.049".	8CM-9533-D⑩			8CM-9991B	8CM-9904B⑬	54cc.	8CM-9542	#70	
MERCURY V8 Auto Tr.	1951	1CM-9510-N⑯		.049"	8CM-9533-D⑩			8CM-9991B.	8CM-9904B⑬	54cc.	8CM-9542	#70	

⑨—Use 8EL-9533-B (.053") for 5000 to 10000 ft. altitude.
8EL-9533-C (.051") for 10000 to 15000 ft. altitude.
⑩—Use .047" Part No. 8CM-9533-E for 5000 to 10000 ft. altitude and .045" Part No. 8CM-9533-F for 10000 to 15000 ft. altitude.
⑬—Supersedes Nos. 8EL-9904-A & 8EL-9904-B.
⑯—See Carburetor Data for various models used.
⑱—Has 7/16" diameter base. 7HA-9920 with ¾" diameter base also used.
⑲—Use 1GA-9533-B (.062") for 5000 to 10000 ft. altitude
1GA-9533-C (.060") for 10000 to 15000 ft. altitude
1GA-9533-D (.058") for over 15000 ft. altitude.
⑳—1GA-9904-B supersedes 1GA-9904-A.
㉑—Use 59A-9533-B (.049") for 5000 to 10000 ft. altitude.
59A-9533-C (.047") for 10000 to 15000 ft. altitude.
59A-9533-D (.045") for over 15000 ft. altitude.
㉒—Has ¾" diameter base. ㉓—Early 1950 Cars .065".

1950-51 HOLLEY (FORD) UPDRAFT CARBURETOR JET SPECIFICATIONS

Car Model	Year	Carb.	Main Metering Jet Size	Main Metering Jet Part No.	Main Nozzle Size	Main Nozzle Part No.	Idle Jet Size	Idle Jet Part No.	Power Jet Size	Power Jet Part No.
FORD 6 C-O-E "H"	1950-51	7HW-9510-A	.065"㉛	5GA-9533-A		8HW-9530		8HW-9542-A		7HA-9594
FORD 6 C-O-E "M"	1950-51	8MWH-9510-A	.065"㉛	5GA-9533-A		8MWH-9530-A		8HW-9542-A		7HA-9594

㉛—Use 5GA-9533-B for 5,000-10,000 ft. altitude & 5GA-9533-C for 10,000-15,000 ft. altitude.

ROCHESTER B & BC (CHEVROLET & PONTIAC)

ORIGINAL EQUIP. CARBURETORS

CHEVROLET	Carburetor No.
1949-51 Cars & Trucks (216" Eng.)	①7002050
1950 Early Powerglide Cars	⑥7002051
1950-51 Later Powerglide Cars	⑦7003060
1950-51 Trucks (235" Eng)	7002051
PONTIAC	
1951 Six (All Models)	⑤7002870

CHEVROLET REPL. CARBURETORS

Models	Carburetor—Part No.—Unit Pkg.
1932-36	....7002050.....②7002539
1937-40	.....7001374.....③7002540
1941-49 (All Engs).	..7002050.....②7002539
1950 (216" Eng.)	.....7002050.....②7002539
1950 (235" Eng.)	.....7002051.....④

①—For replacement, use Unit Pkg. No. 7002539.
②—Includes Insulator No. 3692797 & Gasket 839632.
③—Includes Insulator No. 3692797.
④—No Unit Pkg. required. If new insulator required, use No. 3692799.
⑤—Same carburetor used on Synchro-mesh Trans. and Hydra-Matic Drive cars.
⑥—See Throttle Return Check Installation Note.
⑦With Throttle Return Check.

►CHANGES, CAUTIONS, CORRECTIONS

►**CARBURETOR IDENTIFICATION**—Carburetors similar in appearance but have part number embossed on brass tag attached by one air horn screw and **also have last two digits of part number stamped on air horn.**

►**CHEVROLET CARBURETOR INSULATOR & GASKET INSTALLATION CAUTION:** Use gasket only on 1932-36 cars where gasket used (discard gasket when heat insulator used). When installing insulator, remove and discard old insulator and inner metal sleeve. Install new insulator (or gasket) with two **vacuum ports upward** (next to carburetor). ***CAUTION—Incorrect gasket or insulator installation will cause rich mixture and poor gasoline mileage (by allowing power jet to operate all of the time).***

►**ENGINE STALLING WHILE PARKING (EARLY POWERGLIDE CARS with 7002051 Carburetor):** Can be corrected by installing Throttle Return Check No. 7003220 (as used on later 7003060 carburetors). Requires installation of new type Throttle Body Assembly No. 7003235 (with contact arm on throttle lever for throttle check operation). ***See Throttle Return Check data below.***

►**CHEVROLET ENGINE STALLING ON SUDDEN STOPS OR RAPID DECELERATION:** May be caused by incorrect adjustment or leakage. If condition not corrected by tuning up engine and adjusting carburetor (idle mixture and idle speed adjustment), remove carburetor and check for leakage as follows:

1) Leakage at Vacuum Channel or Carburetor Throat caused by incorrect sealing of Air Horn Gasket. Fill bowl with fuel, tip carburetor to left and roll back slightly on mounting flange until vacuum channel hole is at lowest point, check for fuel leakage from vacuum channel outlet at mounting flange face. Tilt carburetor in all directions and check for leakage in throat at gasket edge. If leaks noted, remove air horn assembly, remove floats, replace air horn gasket (and main well support gasket on first carburetors) with new rubberized Air Horn Gasket No. 7002894 (7003060 Carb.—may be identified by ⅛" round notch at edge of one bowl opening), No. 7002799 (Others). Check and adjust float level.

2) Leakage at Vacuum Power Piston. To check install carburetor on engine with manifold heat insulator **upside down** (will shut off vacuum channel). If this corrects stalling, leakage past piston is indicated. Correct by replacing air horn. CAUTION—heat insulator must be correctly installed when carburetor replaced on engine (two cut-out vacuum ports upward next to carburetor flange).

►**CHEVROLET ENGINE STALL OR HARD TO START WHEN HOT (Cars with 7002050 & 7002051 Carburetors):** May be experienced in hot weather after prolonged high speed driving. **On Powerglide cars,** correct by installing later type 7003060 carburetor with new design bowl vents and Throttle Return Check. **On other cars** with 7002050 carburetor (& Powerglide cars if 7003060 carburetor not available), provide additional bowl vent by drilling air horn as follows:

7002050 & 7002051 Bowl Vent—Remove air horn from carburetor, drill ¼" diameter hole in air horn tower over top of accelerating pump plunger locating hole on side of tower ¼" down from top and 1" forward from rear edge of tower. Carefully clean all drill chips from air horn and recheck float level when re-installing air horn.

7002051 Carburetor Note—Install new Throttle Body and Throttle Return Check when making above correction on these carburetors.

►**CHEVROLET ENGINE ROUGH IDLE:** If engine stalls when hot, see stalling correction above. If rough idle cannot be corrected by tuning up engine and cleaning out all fuel passages (blow out with compressed air), check for air leaks as follows: Examine main well support for burrs preventing tight connection at support mounting face, see that support is securely attached to air horn. Check for leak at upper seat of power piston by removing air cleaner and placing moistened finger over power piston vent passage in air horn (inside air horn toward right front edge and approximately 2" down). If engine idle smooths out when vent closed, air leak is indicated. Correct by replacing air horn and power piston.

►**CHEVROLET ENGINE SPEED EXCESSIVE WHEN CHOKE IN USE (Early 1950 Cars & Trucks):** Caused by design of choke lever (has definite raised portion on cam in area where kick lever contacts cam in full choke position). Correct by installing later design No. 7002888 Choke Lever & Swivel Assy. (supersedes No. 7002084) or file approximately .038" off choke lever cam, starting at point where kick lever contacts cam in full choke position and blending back to zero at point ⅛" from starting point where kick lever contacts cam in no choke position. NOTE—Reworking of cam will result in approximately 1/16" throttle opening in full choke position (can be checked by inserting 1/16" drill between valve and carburetor wall).

►**CHEVROLET ENGINE SURGE AT 22-35 MPH. (Pass. Cars with 216" Engine):** Correct by tuning up engine with particular attention to following points:
Ignition Timing—Set at 5° BTDC. with octane selector at "0." Avoid excessive spark advance.
Spark Plug Gap—Increase gap to .040". Avoid excessively close plug gaps.
Tight Engine—Do not attempt to correct surge on cars until engine has been run 1000 miles or more.

►**CHEVROLET HESITATION ON ACCELERATION:** Check for clogged pump passages (blow out with air), check pump plunger leather (replace if creased or not sufficently flexible to contact entire surface of cylinder), check seating of vent check ball in plunger (replace plunger if ball sticking or not seating). Check pump outlet check ball for leakage by operating pump with air horn removed. Fuel should remain on top of brass outlet guide. If fuel seeps back into bowl, remove pump guide and reseat ball by tapping lightly with brass rod. If ball seat pitted, replace bowl casting.

►**CHEVROLET CARBURETOR BOWL COVER GASKET CHANGE:** New gasket, No. 7002799 (superseding No. 7002114), used which incorporates main well support gasket. When this gasket used, gasket can not be removed for float setting (see float setting change following).

►**CHEVROLET FLOAT SETTING CHANGE:** Float level setting changed to 1 5/16" **measured with the bowl cover gasket in place** (new cover gasket described above cannot be removed for float level setting check). See FLOAT LEVEL data.

►**PONTIAC CARBURETOR INSTALLATION CAUTION:** Same carburetor used on all cars but throttle connector rod should be connected to **right hand** hole in throttle lever on Synchro-mesh Trans. cars, and to **left hand** hole on Hydra-Matic Drive cars (facing throttle lever side of carburetor).

DESCRIPTION

DESCRIPTION: Plain tube, downdraft type of new design with concentric fuel bowl, double float, vacuum controlled power system, and fast idle and throttle kicker linkage for starting and warming up.

Automatic Choke (Pontiac Model BC Carburetor): Consists of a thermostatic coil and vacuum piston assembly mounted in housing on air horn and linked to the choke valve shaft. Choke has two external tube connections—**Heat Suction Tube** from the choke housing to carburetor throttle body, **Heat Tube** from choke housing to manifold stove. Fast Idle and Unloader mechanism is linked to lever on opposite end of choke valve shaft.

Throttle Return Check (Chevrolet 7003060 Carb.): Consists of a spring-loaded diaphragm type dashpot mounted on the carburetor with an adjustable plunger which contacts an arm on the throttle lever and prevents throttle valve closing too rapidly when accelerator pedal released. ***See Throttle Return Check data below.***

ADJUSTMENT & OVERHAUL

IDLE ADJUSTMENT: If carburetor out of adjustment, turn idle adjusting screw in until it is seated, then back screw out 1½ turns. Start engine and allow it to idle until thoroughly warm. Then adjust with choke valve wide open and fast idle inoperative.
Idle Screw Setting—Set for smooth idle. Final setting should not be more than ½ turn in or out from initial 1½ turns open position.
Idle Speed (Chevrolet)—450-500 RPM. (With Std. Synchro-mesh Trans.), 430-450 RPM. (with Powerglide Trans.), engine at normal operating temperature.
Idle Speed (Pontiac)—450-475 RPM. or 7-8 MPH. in high gear (with Std. Synchro-mesh Trans.), 365-385 RPM. (with Hydra-Matic Drive), engine at normal operating temperatures and automatic choke and fast idle inoperative.

C NTINUED ON NEXT PAGE

ROCHESTER B & BC (C nt.)

ACCELERATING PUMP: Not necessary to check pump. No seasonal adjustment provided.

►***CHEVROLET PUMP LINK CAUTION***—Design was changed in production and special type used on each carburetor:

Chevrolet Accelerating Pump Link

Carburetor	First Type Link	Later Type Link
7002050 & 7001374	7002353	③7002820
7002051	7002355①	②④7002821
7003060		②④7002821

①—Has shallow groove machined on upper end.
②—Has shallow groove machined on center.
③—Length .840". ④—Length .805".

POWER JET: Valve opens when manifold vacuum drops below 5" of mercury. No adjustment required.

►***CHEVROLET POWER VALVE PISTON SPRING CAUTION:*** Correct type must be used on each carburetor:

Power Valve Piston Spring

Carburetor	Length	Weight	Part No.
7002050 & 7001374	2 3/16"	4½ ozs.	①7002071
7002051 & 7003060	2 17/64"	5 ozs.	②7002366
7002870			7002896

①—Wire Diameter .014".
②—Wire Diameter .015". Copper flash marking.

FLOAT LEVEL: ***CAUTION—Two adjustments required: (1) Float Level Setting, (2) Float Drop or Travel.***

►**Chevrolet Float Level Note**—First type Float Level Gauge J-4186 can be used but should be placed on **top of gasket** (do not remove gasket). New Gauge No. 3696192 checks both floats for height and alignment in single operation.

►**Pontiac Caution**—When removing bowl cover, disconnect heat suction tube at upper coupling nut using care **not to disturb seal at lower end of tube.**

Float Level Setting: Measure from bottom of each float to gasket on bowl cover (do not remove gasket) with needle valve closed (float and cover assembly inverted). To check float level, remove air horn and float assembly and invert **with cover gasket in place.** Install gauge (see table below) in position over floats (on Chevrolet, center tang on gauge will enter main discharge nozzle). Bend float arms vertically so that each float just touches top of cut-out in gauge. On Chevrolet, bend float arms horizontally so that each float is centered in gauge cut-out (this adjustment made as part of float drop setting on Pontiac). Check setting by tilting assembly 90° to each side and make certain that floats are still centered in gauge, recheck float level. This alignment of floats is neecssary to insure that floats will not rub on sides of bowl.

►***CAUTION—Both floats must be set exactly alike.***

Chevrolet Float Travel (Drop) Setting—1¾" from cover gasket to the bottom of each float with the floats in extreme lower position. To check, hold assembly in upright position so that floats drop to bottom of travel, measure from gasket seat on cover to bottom of floats. If distance not within limits, adjust by bending float tang on float lever.

Pontiac Float Travel (Drop) Setting—¼" from cover gasket to top of each float with the floats in extreme lower position. Use float level gauge (below) to check float travel. Hold air horn assembly right side up with floats hanging freely. Install gauge with flat side up against cover gasket and small cut-out in gauge over main discharge nozzle. Bend float tang at rear of float arm so that tops of both floats just contact bottom of cut-outs in gauge (gauge should slide freely between cover gasket and floats). Bend float arms horizontally so that each float is centered in gauge cut-out (this alignment necessary to insure that floats will not rub on sides of bowl).

►***CAUTION—Recheck float level after adjusting float travel.***

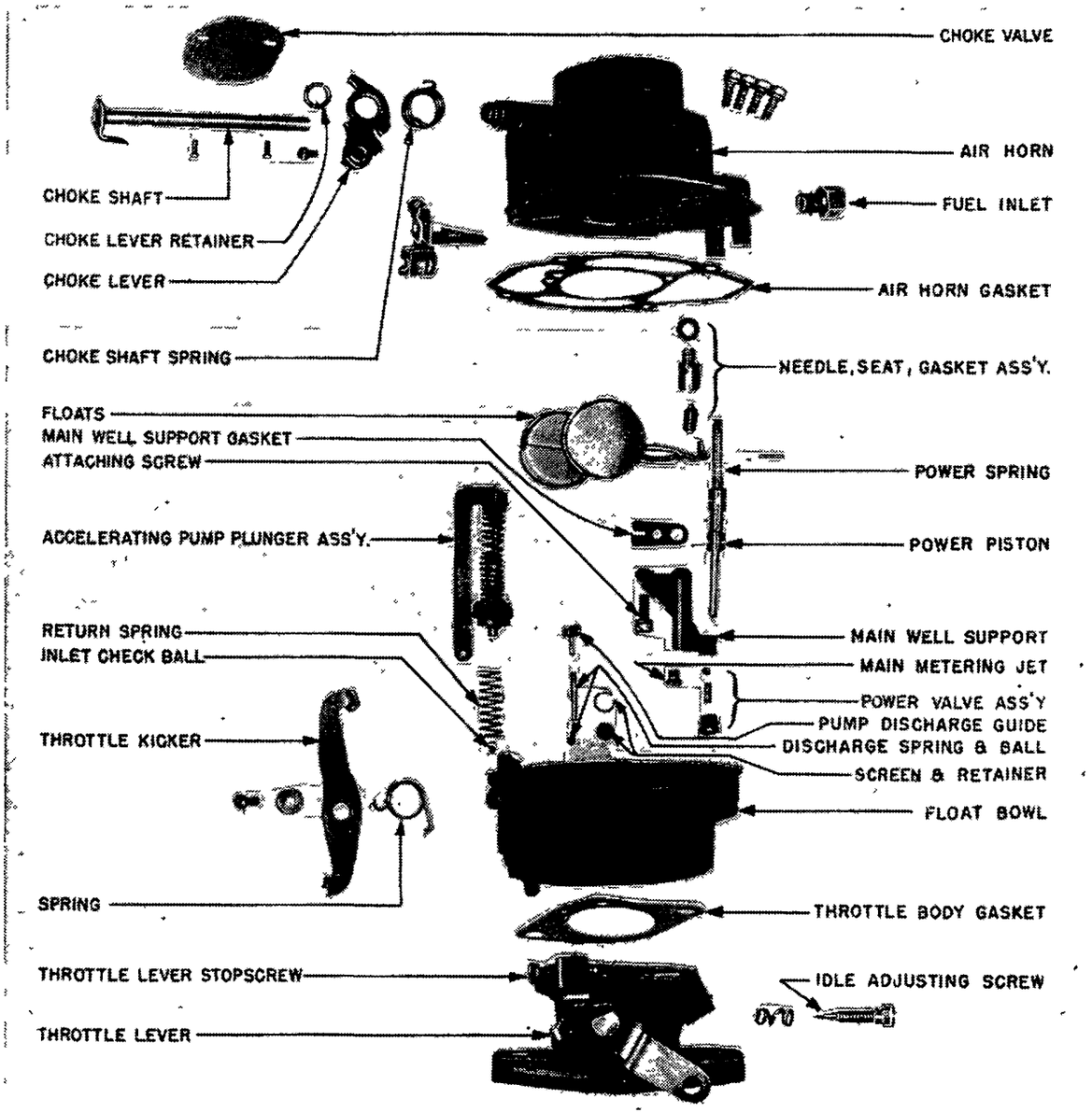

ROCHESTER MODEL B (CHEVROLET) CARBURETOR (PONTIAC SIMILAR)

Float Level Setting

Car & Carb.	Float Level	Checking Gauge
Chevrolet (all)	1 5/16"	①3696192
Pontiac 7002870	1 1/4"	J-4554

①—Supersedes Gauge No. J-4186.

►**Chevrolet Air Horn Installation Caution:** When re-installing air horn assembly, hold throttle kicker in

CONTINUED N NEXT PAGE

ROCHESTER B & BC (C nt.)

vertical position (against spring tension) while lowering air horn on body casting.

Float Needle Valve & Seat: Furnished as matched sets.

►*CAUTION*—Correct type must be used on each carburetor.

Carburetor	Float Needle Valve & Seat Size	Part No.
7002050 & 7001374	.076"	①7002358
7002051 & 7003060	.091"	②7002359
7002870		③7002885

①—Marked by one groove on O. D. of seat.
②—Marked by two grooves on O. D. of seat.
③—Used with No. 7002849 Float Valve Clip by which intake needle is clipped to float arm.

THROTTLE VALVE SETTING: Distance from top of valve to **bottom** of each idle port hole (No. of holes not same on all carburetor models) is as follows with throttle valve correctly installed.

Carburetor	Idle Port Distances Top	Center	Bottom
7002050 & 7001374	.065"	.033"	.0105"
7002051	None	None	.006"

THROTTLE KICKER (CHEVROLET): Consists of a spring-loaded kicker lever mounted on the side of the bowl casting. Lower end of kicker lever acts as a stop for the throttle lever stopscrew and upper end bears against fast idle cam which is integral with the choke valve lever. Rotation of cam as choke valve is closed for cold starting rocks the kicker lever and opening throttle for fast idle.

Adjustment—Not required. Operation will be satisfactory if parts correctly assembled.

FAST IDLE (PONTIAC): Consists of a stepped fast idle cam linked to the choke valve and serving as a stop for the throttle lever stopscrew. Stopscrew engages high step of cam when choke valve is closed for cold starting so that the throttle valve is opened to fast idle position. Rotation of the cam as the choke valve opens causes the stopscrew to rest on successively lower steps of the cam and allows the throttle to close to the final hot or slow idle position. Adjustment required only when linkage disconnected (to establish correct relationship between fast idle cam and choke valve positions).

Adjustment—To check setting, rotate fast idle cam until throttle stopscrew rests on second (next to highest) step of cam. Check choke valve opening or clearance between lower edge of valve and air horn wall. This clearance should be equal to thickness of small end of Gauge J-4553 (.059"). If not correct, adjust by bending connector rod using tool J-4552.

UNLOADER (PONTIAC): Consists of a tang on the throttle lever which engages the fast idle cam and opens the choke valve to correct flooding when the throttle valve is opened wide.

Adjustment—To check setting, hold throttle in wide open position, check choke valve opening or clearance between lower edge of valve and air horn wall. This clearance should be equal to thickness of large end of Gauge J-4553 (.221"). If not correct, bend tang on throttle lever using bending tool J-4552.

CHOKE (Chevrolet—Manual Type): Offset, semi-automatic type valve (lever is spring-loaded on shaft so that valve is free to assume correct position during warming up period).

Adjustment—With control wire retainer screw on choke lever loosened, see that choke button on instrument panel pushed all the way in, hold choke valve wide open, tighten retainer screw.

THROTTLE RETURN CHECK (CHEVROLET): Used on 7003060 Carburetor, can be installed on 7002051 if new No. 7003235 Throttle Body Assy. also installed.

Installation: Install carburetor and Throttle Return Check Unit on manifold (return check held in place by one mounting stud nut), check alignment of return check plunger adjusting screw with contact arm on throttle lever and bend bracket or contact arm as necessary to center the adjusting screw on radius or contact arm. Make certain that latest type No. 3695705 Throttle Return Spring (with ½" loop at each end) is used.

CAUTION—No. 3685718 Throttle Return Spring (with 1½" loop at each end) was used on first cars but is now used only on truck engines.

Adjustment: Place transmission selector lever in "Park" position, run engine at fast idle until warmed up. Connect tachometer. Adjust carburetor idle mixture and idle speed screws for smooth idle at 430-450 RPM. Insert .090" feeler gauge between carburetor choke lever cam and fast idle lever on air horn. Use 9/32" wrench to hold throttle return check shaft from turning, turn throttle return check adjusting screw in until it just contacts the throttle lever contact arm (NOTE—adjusting screw is self-locking type). Recheck carburetor settings.

CHOKE (Pontiac—Automatic Type): Thermostatic coil and vacuum piston type mounted in housing on air horn.

Choke Setting—Centered (At Index). Scribed line on cover should be in line with longer center mark of scale on housing.

CARBURETOR OVERHAUL: With carburetor removed from engine, disassemble, clean, and inspect all parts as follows:

Disassembly: ***CAUTION—Choke assembly on Chevrolet (manual with throttle kicker) and on Pontiac (automatic) disassembled differently as follows:***

Chevrolet Air Horn & Choke Assembly—Take out 4 air horn and bowl cover attaching screws, remove choke control bracket. Hold throttle kicker in vertical position (free of fast idle cam), lift air horn and bowl cover assembly straight up taking care not to damage floats. Choke valve and shaft can be disassembled, if necessary, after bowl cover parts have been disassembled (below).

Pontiac Air Horn & Choke Assembly—Loosen ½" brass fitting on upper end of heat suction tube at automatic choke housing (CAUTION—use care not to disturb tube seal in throttle valve body). Remove three choke cover attaching screws, rotate cover counter-clockwise to free thermostatic coil hook from choke valve tang, lift off cover and thermostatic coil assembly, remove cover gasket and baffle plate. Free fast idle connector rod retainers and remove rod. Remove retaining screw on opposite end of choke valve shaft, carefully pry off choke trip lever, spacing washer, and counterweight. Take out two choke valve screws, remove valve, rotate choke shaft clockwise until vacuum piston clears bore in housing, withdraw shaft and piston assembly from air horn. Piston can be removed from shaft by taking out piston pin. Take out two choke housing attaching screws, remove choke housing and gasket from air horn. Take out 6 air horn and bowl cover attaching screws, lift air horn and bowl cover assembly straight up using care not to damage floats.

Bowl Cover Disassembly. Remove float hinge pin and lift off float assembly, remove float needle (on Pontiac, needle is clipped to the float arm), remove needle seat and gasket. Remove the main metering jet and power valve from main well support (CAUTION—do not lose ball and spring when removing power valve). Take out main well support attaching screw, lift off support, remove gasket, lift out power piston and spring.

►***CAUTION—Do not remove idle tube which is pressed in bowl cover (serviced as an assembly).***

Chevrolet Choke Valve. For choke valve servicing or replacement, remove choke valve screws, lift valve out. Remove retainer ring from groove in shaft boss on air horn, slide shaft, spring, and lever assembly out of air horn casting.

Float Body. On Chevrolet, remove screw, lift off throttle kicker lever and spring. Hold pump plunger down in cylinder, remove cotter pin or hairpin retainer from pump link, remove link from throttle lever and pump plunger, lift pump plunger from bowl, lift out return spring. Remove ball check from bottom of pump cylinder. Turn pump discharge guide until it can be removed, remove discharge spring and ball check by inverting assembly and allowing these parts to fall out. Remove pump intake screen retainer and screen.

Throttle Body—After disassembling float body, take out two throttle body attaching screws, lift throttle body off. Unscrew idle adjusting screw and remove screw and spring. On Pontiac carburetor, take out attaching screw and remove fast idle cam.

►***PONTIAC HEAT SUCTION TUBE CAUTION***—Do not remove tube or disturb tube seal in throttle body. If seal is loose, seal can be tightened or new seal installed after carburetor completely reassembled.

►***THROTTLE VALVE CAUTION***—Do not remove throttle valve. Valve is close fit and idle discharge holes are drilled in close relationship to valve. This will be disturbed if valve and shaft removed.

Cleaning & Inspection: Wash all parts EXCEPT automatic choke housing, coil, and pump plunger, in carburetor cleaning solvent and dry with air. Blow out all passages with air and inspect for carbon deposits. Inspect all parts for wear or damage.

►***CAUTION—Do not use wire or drills to clean out drilled passages or calibrated jets and restrictions.***

►*NOTE*—Replace Throttle Body Assembly if throttle arm or shaft excessively worn or damaged. Do not attempt to remove and replace throttle valve.

Reassembly: Use new gaskets. Reassemble carburetor by reversing disassembly directions and note the following important points:

Chevrolet Choke Valve Installation—Center the valve in air horn with mark "RP" facing upward before tightening attaching screws. Turn choke shaft spring clockwise until outer hooked end engages upper end of choke lever (loose lever to which choke control attached), wind up inner end of spring approximately ½ turn and hook over end of choke shaft lever.

Pontiac Choke Valve Installation—After air horn assembled on bowl casting, install choke housing using new gasket and tightening attaching screws securely. Place NEW packing on upper end of heat

CONTINUED ON NEXT PAGE

ROCHESTER B & BC (C nt.)

suction tube and tighten coupling nut (if new seal required on lower end of tube see data below). Install choke valve shaft and vacuum piston assembly, rotate shaft counter-clockwise to enter piston in bore in housing, install choke valve on shaft with mark "RP" upward, center valve in air horn before tightening attaching screws. Install baffle plate and choke housing gasket, install choke cover and thermostatic coil, rotate cover clockwise until coil hook engages tang on choke shaft lever and index mark on cover is aligned with center mark of scale on housing, tighten three cover screws. Install counterweight on opposite end of shaft with tang facing in toward choke housing, install spacing washer, trip lever (with tang over tang on counterweight with choke valve fully open), tighten screw in end of shaft. Install fast idle connector rod with cotter pin end of rod at fast idle cam, connect rod and check entire choke system for free movement. *NOTE*—Choke valve should be closed at temperature of 75°F.

►**Pontiac Heat Suction Tube Seal Servicing**—If tightening of loose seal does not correct leaks at this point (check with gasoline while engine idling—leak will cause engine to roll or stall), install new seal as directed below.

Tightening Tube Seal—Use installing tool J-4551 to tap seal down evenly around tube.

Installing New Tube Seal—Loosen throttle body-to-bowl casting screws, insert flared end of heat suction tube and seal into hole in throttle body and tap seal down lightly with tool J-4551 (rotate tube while tapping seal to insure starting uniformly into hole in throttle body). Tighten coupling nut at upper end of tube finger tight, using NEW packing on tube. Use hammer and tool J-4551 to spread seal securely in throttle body (rotate tool to secure uniform spreading of seal). Loosen coupling nut at upper end of tube, check tube tightness in throttle body (tube should not turn), tighten coupling nut securely, tighten throttle body attaching screws. Check seal for leaks after carburetor installed on engine.

Accelerating Pump Ball Checks—Install aluminum intake check ball in bottom of pump cylinder, see that ball lifts freely from its seat. Install steel outlet check ball in outlet passage in bowl casting, tap ball lightly with hard fibre or brass rod to seat it, then make certain that ball lifts freely from its seat. Install bronze spring on top of outlet ball, index end of discharge guide in spring and press guide down until top is flush with bowl surface.

Float Assembly—Install air horn and bowl cover gasket before installing floats. Make certain that tang on the float lever faces up toward cover. Adjust float level and float travel before installing air horn on float body.

Adjustment—When carburetor assembled, set idle adjusting screw 1½ turns open. After carburetor installed and engine warmed up, adjust idle as directed under Idle Adjustment. Check and adjust Fast Idle, Unloader, and Choke Setting (Pontiac).

REPAIR PARTS: Gasket Kit—No. 7002377 (Chevrolet), No. 7001391 (Pontiac).

Repair Kit—No. 7002379 (Chevrolet 7002050 Carb.), No. 7002378 (Chevrolet 7002051 Carb.), No. 7001377 (Chevrolet 7001374 Carb.), No. 7001392 (Pontiac).

ROCHESTER AA (OLDSMOBILE)

OLDSMOBILE **Carburetor No.**

1950 Series 88 & 98.....**7002570**

DESCRIPTION: 1950 carburetor design changed from 1949 for increased performance. Principal change is in accelerating pump design which permits Pump Jet Targeting before carburetor completely reassembled.

See Accelerating Pump data below.

ADJUSTMENTS & OVERHAUL: *See complete "Rochester (Oldsmobile) Dual Carburetor" in previous release and note following new specifications and procedures:*

IDLING ADJUSTMENT

Idle Screw Setting—Approximately 1 turn open. Adjust both screws alike for smooth idle. Turn screws out for richer mixture.

Idle Speed (Synchro-mesh Cars)—425 RPM.

Idle Speed (Hydra-Matic Cars)—350 RPM. with selector lever in "Dr" position.

POWER VALVE SETTING

No adjustment provided. Power valve opens when manifold vacuum drops below 8".

ACCELERATING PUMP SETTING

Seasonal Adjustment—Center hole (medium stroke) recommended. Inner Hole (maximum stroke) and Outer Hole (minimum can be used as required).

Pump Actuating Lever Adjustment—Back off throttle lever stopscrew and fast idle screw so that throttle valves tightly closed. With pump connector link in CENTER hole of pump arm, disconnect rod from throttle lever, pull down on rod to place pump in full cocked diaphragm position. Bend rod, as required, until top edge of rod is flush with bottom edge of hole in throttle lever.

Pump Targeting Adjustment—Check before assembling bowl and cover housing on carburetor. Place small amount of fuel in carburetor, operate pump by hand, note fuel discharge. Discharge jets must strike small splashers (raised bosses) cast on bowl to give fan-shaped spray. Adjust by bending pump jets slightly.

FLOAT LEVEL SETTING

Float Level—23/32" from top of seam on free end of float to gasket seat on cover with cover assembly inverted and needle valve seated. Check with cover assembly inverted and gasket removed using scale or Gauge BT-35 (marked line on square end of gauge) to measure from cover to top of float seam with float hanging freely. Adjust by bending float arm at point between needle valve and float (CAUTION—do not bend front of float).

Float Balance Spring Tension—To check, hold cover assembly right side up and horizontal. Bottom of float at free end should be ⅛" **above** bottom of power valve stem. Adjust by bending tang on float arm which engages balance spring.

AUTOMATIC CHOKE SETTING

Setting—Centered (Index mark on cover aligned with index mark on housing).

►**Choke Coil Housing Gasket Note**—1950 gasket is wider than Early 1949 type to insure proper fit around housing circumference and should always be used as service replacement on 1949-50 carburetors.

Choke Rod Adjustment—To check, turn fast idle screw until it contacts first or intermediate step of fast idle cam, see that choke trip lever is in contact with counterweight on choke shaft. Measure choke valve opening using first or "C" step of Gauge BT-35 (.147" or #26 drill size). To adjust, use Bending Tool BT-18 to bend connector rod slightly (CAUTION—Rod must not rub or bind on housing).

UNLOADER SETTING

Setting—.220" choke opening with throttle valve wide open. To check, hold throttle valve wide open, see that choke trip lever is in contact with counterweight tang on choke shaft, measure choke valve opening using second or "D" step of NEW BT-35 Gauge. To adjust, use Bending Tool BT-18 to bend tang on throttle lever slightly.

FAST IDLE SETTING

Setting (Carburetor off Engine)—.023" throttle valve opening with choke valve closed and fast idle screw on high step of fast idle cam. To check, move

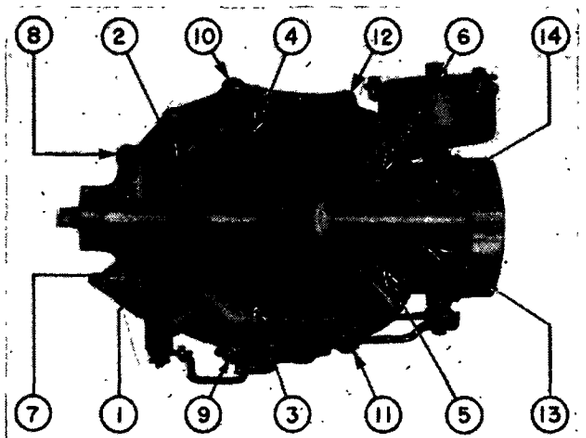

BOWL COVER SCREW TIGHTENING SEQUENCE

fast idle cam so that choke valve fully closed, hold throttle lever in closed position so that fast idle screw against high step of cam. Measure throttle valve opening using wire gauge section of NEW BT-35 Gauge. To adjust, turn fast idle screw in or out until throttle opening equal to gauge (.023").

Setting (Carburetor on Engine)—500 RPM. engine idle speed with fast idle screw on lowest point of low step of fast idle cam. Adjust only when engine and transmission are hot. To adjust, open throttle valve partially, rotate fast idle cam so that low step of cam under fast idle screw, close throttle so that screw contacts lowest point of this step on cam. Turn fast idle screw in or out for engine speed of exactly 500 RPM.

►*CARBURETOR REASSEMBLY CAUTIONS:*

Main Well Tube Installation—Part No. 7002124. Have "key" pinched in upper end of tube and this key must enter slot cast in float bowl.

CAUTION—These keyed type Main Well Tubes must not be used in previous type carburetor without mating slot in bowl.

Bowl Cover Screw Tightening—Cover screws must be tightened in correct sequence (see illustration) to prevent possibility of leaks at bowl cover.

SERVICE PARTS: Gasket Set—No. 7001849.

Repair Part Kit—No. 7001376.

ROCHESTER BB (CADILLAC & OLDSMOBILE)

CADILLAC	Carburetor No.
1951 All Series	7003200
OLDSMOBILE	
1951 88 & 98	7002900

DESCRIPTION: Dual or double barrel, plain tube downdraft type with concentric fuel bowl and double floats, vacuum controlled power system, fast idle and automatic choke. Carburetor used on Cadillac has special "Choke Modifier" which prevents loading up or excessively rich mixture during warming up period.

Idle Fuel System—Fuel is drawn from main nozzle cross-bar in air horn and mixed with air admitted through air bleed holes in cross-bar. Fuel mixture is then metered by Idle Tube (pressed in end of cross-bar) and taken down through passage to idle ports at the edge of each throttle valve. For closed throttle idling, fuel is discharged through lower ports (below throttle) and is controlled by the idle adjusting screw. As soon as the throttle valve is opened, additional fuel is discharged through the upper ports (above throttle) also.

Main Fuel System—As the throttle valves are opened and suction increases at the main discharge nozzles under the cross-bar, fuel mixture is discharged through these nozzles and the idle system drops out. This fuel is metered by the Main Metering Jet and is mixed with air admitted through the air bleeds in the cross-bar. Main fuel system supplies all fuel required for normal operation below 75 MPH. and is supplemented by the Accelerating Pump (sudden acceleration) or Power System (for full power or wide open throttle operation).

Power System—Consists of a plunger type valve controlled by a spring-loaded vacuum piston which provides additional fuel flow to main nozzles when the valve is open. Vacuum piston is normally held up at the top of its stroke by manifold vacuum so that the power valve is held closed by the spring below the valve plunger. Whenever the manifold vacuum drops below 7" (sudden acceleration or driving speeds above 60-75 MPH.), the piston spring forces the piston down and opens the power valve. The additional fuel admitted through the valve is metered by the Power Restriction in the channel leading to the Main Well Passage.

Accelerating Pump System—Spring-loaded piston type which provides sustained discharge regardless of rate of throttle opening (pump plunger is spring-loaded on plunger stem with second spring below plunger). Fuel is drawn into pump cylinder through strainer screen and ball type intake check valve and is discharged through ball type outlet check valve and pump jet at side of secondary venturi in each carburetor barrel.

Pump Vapor Vent—Consists of a ball type check valve in the pump plunger which allows any vapor in the pump cylinder to escape through a passage in the plunger and return to the bowl. This check valve is closed during normal pump operation.

IDLE ADJUSTMENT: Adjust only with engine warmed up so that choke valve wide open and fast idle inoperative (idling at hot or slow idle speed). Set throttle stopscrew for correct idle speed, adjust both idle adjusting screws so that engine idles smoothly. Screws control fuel mixture and should be turned out for richer mixture. Recheck idle speed. See car model page for complete tune-up instructions.

Idle Setting—Screws approx. 1½ turns open.

Idle Speed—	Synchro-mesh Trans.	Hydra-Matic
Cadillac	400 RPM	375 RPM. (in "Dr")
Oldsmobile	425 RPM	350 RPM. (in "Dr")

ACCELERATING PUMP: Pump is operated by throttle lever through a connector rod and rocker arm linkage. No seasonal adjustment is provided and no Targeting of the pump jets is required but pump rod setting should be checked and adjusted to insure correct pump stroke and delivery.

Pump Rod Adjustment—Disconnect choke rod from fast idle cam or back out fast idle screw, back out throttle stopscrew so that throttle valves are fully closed, disconnect connector rod at pump rocker arm. Hold rocker arm down so that pump plunger is in extreme up position. Use bending tool to bend connector rod until bottom edge of rod end is flush with top edge of hole in rocker arm (rod "too long" by amount equal to diameter of hole). Connect rod.

►***CAUTION—Idle speed (and fast idle setting if screw disturbed) must be reset after this adjustment.***

POWER VALVE ASSEMBLY: Not adjustable. Valve opens when manifold vacuum drops to 7" (at road speed of 60-70 MPH. or upon rapid acceleration).

FLOAT LEVEL: ***CAUTION—Two adjustments required:***
Float Level—With air horn and bowl cover assembly removed and inverted (CAUTION—DO NOT remove cover gasket), install float level gauge over floats with locating tangs on gauge inserted in secondary venturi. Bend float arms until both floats are equal vertically, then bend float button (which contacts float needle) until both floats just touch upper edge of cutout in gauge. Finally bend float arms horizontally until each float is centered between gauge legs (CAUTION—this adjustment necessary to prevent floats hanging up on float bowl walls). Tilt air horn assembly 90° to each side and make certain that floats do not touch gauge legs in either position.

Float Level Gauge

Cadillac	J-4715
Oldsmobile	BT-51

Float Tension—Hold air horn and bowl cover assembly right side up with floats hanging free. Measure distance from underside of cover gasket to bottom edge of floats using float level gauge (place one leg of gauge against gasket, scribed line on gauge should be even with bottom of float). If this distance (1⅝") not correct, bend float tang at rear of float **toward** balance spring to lessen the distance, or **away** from spring to increase distance.

AUTOMATIC CHOKE: ***CAUTION—Cadillac has "Choke Modifier" which must be adjusted as part of choke setting.***

CHOKE SETTING

Cadillac	2 Points Lean
Oldsmobile (Synchro-mesh Cars)	2 Points Rich
Oldsmobile (Hydra-Matic Cars)	Centered

Cadillac Choke & Modifier Setting: Back off fast idle screw and throttle stopscrew so that throttle valves tightly closed. Loosen choke modifier lever retaining screw, rotate index pointer counter-clockwise until choke valve closes (choke valve should be almost closed at 75°F. when pointer aligned with long scribed line on cover), then set pointer 2 graduations Lean (clockwise from scribed line on cover) and tighten retainer screw.

►***CAUTION—If choke valve does not close when pointer rotated (above), thermostatic coil is not engaging choke valve lever in housing.***

Oldsmobile Choke Setting: Loosen heat tube coupling on choke cover, loosen three cover retainer screws and **free the toothed retainer from the serrations on the cover,** rotate cover until index mark on cover is aligned with center graduation of scale on housing (centered setting) or correct number of graduations on Rich side (Rich setting), engage toothed retainer with serrations in cover, tighten all retainer screws, tighten heat tube coupling.

►***CAUTION—Use care not to rotate or distort choke cover when tightening heat tube coupling.***

FAST IDLE: ***CAUTION—Two adjustments required and must be made in DIFFERENT SEQUENCE on Cadillac and Oldsmobile:***

Cadillac: Adjust in following order:

1) Fast Idle Adjustment—Carburetor on Engine. Hold throttle partly open and rotate fast idle cam until fast idle screw rests on high step of cam, adjust screw so that engine runs at 1500 RPM. (engine must be at normal operating temperature).

Carburetor off Engine—Rotate fast idle cam until choke valve is fully closed, hold throttle lever in closed position so that fast idle screw rests on highest step of fast idle cam. Adjust fast idle screw until throttle valve opening (clearance between edge of valve and carburetor bore on side opposite idle ports) is exactly .0295" (measure with wire gauge on Tool J-4716).

2) Choke Rod Adjustment—Hold choke valve open, close throttle valve, then move choke valve toward closed position until fast idle screw contacts edge of fast idle cam. With choke valve in this position, measure clearance between lower edge of choke valve and flat on inside of air horn using wide step of gauge J-4716 (.620"). If clearance not correct, adjust by bending choke rod.

Oldsmobile: Adjust in following order:

1) Choke Rod Adjustment—Rotate fast idle cam until intermediate step (short center step) is under fast idle screw. With choke cover set at center index mark and choke shaft trip lever in contact with choke counterweight, choke valve should be slightly open. Measure this opening (clearance between lower edge of valve and air horn wall) with smaller "A" end section of Gauge BT-49 (.177"). If clearance not correct, bend rod at lower bend near fast idle cam.

►***CAUTION—Choke rod must not rub against side of housing in any position.***

2) Fast Idle Adjustment—Carburetor on Engine. Rotate fast idle cam so that fast idle screw rests on extreme end of lowest step of fast idle cam, adjust screw so that engine runs at 500 RPM.

Carburetor off Engine—With choke cover set at center index mark, hold choke valve and throttle valves closed so that fast idle screw rests on highest step of fast idle cam, adjust screw for throttle valve opening (clearance between lower edge of valve and carburetor wall on side opposite idle ports) of .026" (measure with wire gauge on Tool BT-49).

C NTINUED N NEXT PAGE

ROCHESTER BB (C nt.)

UNLOADER: Consists of a tang on the throttle lever which engages the fast idle cam and opens the choke valve when the throttle lever is moved to the wide open position. Check unloader after setting automatic choke and adjusting choke rod.

Checking & Adjustment—Move throttle lever to wide open position, measure choke valve opening (clearance between lower edge of valve and inner wall of air horn) with gauge listed below. If opening not correct, adjust by bending tang on fast idle cam (Cadillac), tang on throttle lever (Oldsmobile).

UNLOADER SETTING

	Tool No.	Choke Opening
Cadillac	J-4176	.515"①
Oldsmobile	BT-49	.209"②

①—Use smaller step of gauge.
②—Use intermediate "B" step of gauge.

THROTTLE VALVE SETTING: It is recommended that throttle valves not be removed from throttle body and that **Throttle Body & Valves be replaced as an assembly** whenever wear noted at throttle valve, shaft or shaft bore in body.

CARBURETOR OVERHAUL: With carburetor off engine, proceed as follows:

Disassembly: On Cadillac carburetors, first disconnect choke modifier rod from lever on choke cover and remove lever and pointer by taking out retainer screw in lever.

Automatic Choke & Choke Valve—Disconnect choke suction tube by loosening coupling nut at choke housing (CAUTION—use care not to disturb seal at lower end of tube). Take out three cover screws and retainers and lift off choke cover and thermostatic coil assembly, lift out choke baffle plate. Remove choke valve from shaft. Disconnect choke rod from fast idle cam, then take out screw in end of choke shaft and pry trip lever, spacing washer, and choke counterweight and rod assembly off shaft. Rotate choke shaft counter-clockwise until piston is free, then withdraw shaft and piston assembly (piston can be removed from shaft lever by removing piston pin). Remove choke housing and gasket by taking out two attaching screws within housing.

Air Horn & Bowl Cover—Disconnect and remove pump actuating rod. Disconnect pump plunger stem from rocker arm, remove rocker arm. Remove fuel inlet fitting, strainer nut, and strainer. Take out four lower cover screws (carburetor inverted), four upper cover screws, lift cover assembly off carefully (if necessary, tap cover lightly to break seal). Take out float hinge pin and remove float assembly with intake needle attached (CAUTION—use care not to damage float balance spring). Press pump plunger rubber seal through cover and remove pump plunger and seal, then remove seal from plunger. Remove intake needle seat and gasket with ½" screwdriver. Remove both main metering jets from main well support, then remove power valve plug, spring, and valve from support, remove support and lift off cover gasket. Remove power valve vacuum piston and spring from cover. Take out secondary venturi cluster attaching screw, lift off cluster (CAUTION—do not damage locating tongue on cluster). Carefully remove float balance spring and clips.

►***CAUTION—Do not attempt to remove Idle Tube from cross bar.***

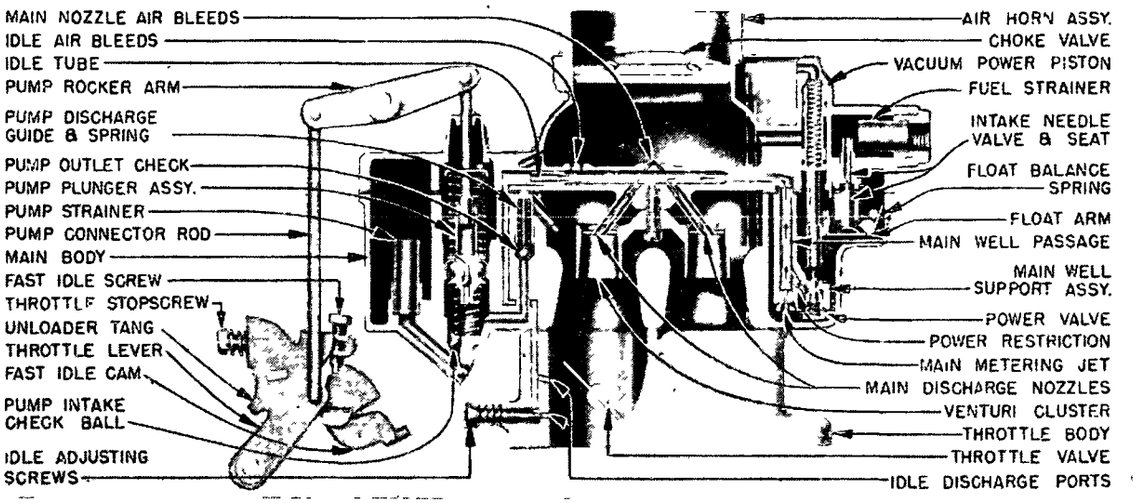

ROCHESTER MODEL BB CARBURETOR

Bowl (Main Body)—Lift pump return spring out of pump cylinder, then invert bowl while holding pump discharge guide in place and remove pump intake check ball (will fall out of cylinder). Remove pump screen. Invert bowl and remove pump discharge guide, spring, and outlet check ball. Take out four bowl-to-throttle body attaching screws, separate throttle body and gasket from bowl.

►***CAUTION—Do not remove heat suction tube from throttle body and use extreme care not to disturb tube seal.***

Throttle Body—Remove both idle adjusting screws and springs. Take out fast idle cam screw and remove cam. On Cadillac carburetors, take out choke modifier rod lever screw and remove lever and rod. Remove throttle stopscrew and fast idle adjusting screw from throttle lever.

►***CAUTION—Do not remove throttle valves or throttle shaft (replace throttle body assembly if wear noted in these parts).***

Cleaning & Inspection: Clean carburetor castings and metal parts except choke coil, housing, and pump plunger with carburetor cleaning solvent. Clean pump plunger with clean gasoline only. Blow out all passages in castings with compressed air. Clean or replace all filter screens. Inspect all parts for wear and replace as necessary. Inspect tightness of suction tube seal in throttle body (seal can be tightened after carburetor reassembled) and condition of packing in coupling nut at upper end of tube. Replace packing if tightly compressed or distorted.

►***CAUTION—Do not use wire or drills to clean passages and jets.***

Reassembly: Use new gaskets (see Service Parts data below). Reassemble carburetor by reversing the disassembly procedure and note the following points:

Float Assembly—Tang on float arm must be on OUTSIDE of float balance spring. Adjust float level and float tension before installing air horn on bowl casting.

Main Well Support Assembly—Install gasket on cover and align all cover and gasket holes before installing support. Install vacuum power piston and spring first, then place support over power piston (CAUTION—main well guide sleeves must be aligned in cover) and tighten both support screws evenly. Hold power piston up in cylinder when installing power valve, spring, and plug in support.

Pump Check Ball Installation—Install the SMALL ALUMINUM inlet check ball in the bottom of the pump cylinder and the LARGE STEEL discharge check ball in the pump discharge passage below the discharge spring and guide.

Choke Valve Assembly Install valve with "RP" mark up or outward, use new screws to attach valve. Install choke shaft counterweight with "RP" mark outward, then install spacing washer and trip lever with tang on lever on top of counterweight tang. Assemble offset end of choke rod to counterweight. Check entire choke assembly for free movement.

►**Suction Tube Seal Replacement**—If new seal required due to loose seal or damaged tube, install seal **after carburetor completely assembled.** Loosen throttle body-to-bowl attaching screws, place new seal on lower end of suction tube and against the flared end of the tube, insert tube and seal in throttle body recess using tool J-4551 (Cadillac), BT-45 (Oldsmobile) to start seal evenly in throttle body (tap lightly on seal while rotating tool). Position tube and tighten coupling nut at upper end finger-tight. Then use tool and hammer to spread seal securely in throttle body (rotate tool to insure uniform spreading of seal). Tighten coupling nut at upper end of tube securely, tighten throttle body-to-bowl attaching screws.

Carburetor Adjustments: After carburetor assembled, check and adjust: Accelerating Pump Rod, Automatic Choke, Fast Idle, Unloader, Idle mixture (set both screws 1½ turns open for preliminary setting). After carburetor installed on engine, adjust idle mixture and hot or slow idle speed.

SERVICE PARTS: Gasket Sets—No. 7001393 (all).

Repair Kit—No. 7001399 (Cadillac), 7001390 (Oldsmobile).

1950-51 ROCHESTER CARBURETOR JET SPECIFICATIONS

Car Model	Year	Carb.	Main Metering Jet Standard Size	Main Metering Jet Standard Part No.	Main Metering Jet 1 Size Lean Size	Main Metering Jet 1 Size Lean Part No.	Main Metering Jet 1 Size Rich Size	Main Metering Jet 1 Size Rich Part No.	Main Well Tubes Size	Main Well Tubes Part No.	Power Valve Part No.	Idle Tube Size	Idle Tube Part No.	Pump Disch. Valve Size	Pump Disch. Valve Part No.
CADILLAC	1951	7003200	.046"	7002646								.055"	①	.026"	③
CHEVROLET Repl.	1937-40	7001374	.052"	7002652	.051"	7002651	.053"	7001498	.030"	②	7002360	.093"	①	.028"	③
CHEVROLET Repl.	1941-50	7002050	.051"	7002651	.050"	7002650	.052"	7002652	.038"	②	7002360	.082"	①	.028"	③
CHEVROLET All	1949	7002050	.051"	7002651	.050"	7002650	.052"	7002652	.038"	②	7002360	.082"	①	.028"	③
CHEVROLET 216 Eng.	1950-51	7002050	.051"	7002651	.050"	7002650	.052"	7002652	.038"	②	7002360	.082"	①	.028"	③
CHEVROLET 235" Eng.	1950	7002051	.058"	7002658	.057"	7002657	.059"	7002659	.040"	②	7002360	.061"	①	.031"	③
CHEVROLET 235 Eng.	1950-51	7003060	.058"	7002658	.057"	7002657	.059"	7002659		②			①		③
OLDSMOBILE 8	1949	7001570	.054"	7001607	.053"	7001498	.055"	7001860	—	④7001675	7001608	—	7001494	—	7001674
OLDSMOBILE 8	1950	7002570	.054"	7001607	.053"	7001498	.055"	7001860	—	⑤7002124	7001608	—	7001494	—	7001674
OLDSMOBILE 8	1951	7002900		7002951							7002360				
PONTIAC	1951	7002870		7002958		7002957									

①—Pressed in cross-bar in Air Horn Assy. **Do not remove.**
②—Power Valve Restriction Tube (pressed in Main Well Support).
③—Pump Discharge Jet pressed in Air Horn Assy. **Do not remove.**
④—No. 7001675 furnished for service on all carburetors
(New keyed type used in production after April 1949)
⑤—Use No. 7001675 for service (this "keyed" type not furnished).

1950-51 TILLOTSON CARBURETORS

TILLOTSON MODEL DY-9C

Crosley, All Models (1950-51)

►CHANGES, CAUTIONS, CORRECTIONS

DESCRIPTION: Plain tube, downdraft type similar to design used on corresponding previous models with new Fast Idle mechanism as follows:

Fast Idle—Consists of an adjustable rod linking the fast idle lever on the choke valve shaft with the throttle lever so that the throttle valve is opened to fast idle position when choke valve closed for cold starting and warming up.

ADJUSTMENT & SERVICING: *See complete "Tillotson Models DY-9A, DY-9B" Carburetor in previous release and set this carburetor to the following specifications:*

ADJUSTMENT

Preliminary Adjustment—To warm up engine, set Main Adjustment Screw 2¾ turns open, Idle Adjustment Screw 1¼ turns open. After engine thoroughly warm, readjust as follows:

Main (Power Range) Adjustment—2-2⅛ turns open. Adjust with throttle approximately half-open. Turn screw in until engine begins to lose speed, then turn screw out until speed and power are at maximum.

Idle Adjustment—Approximately 1 turn open. Adjust with engine idling slightly faster than normal. Turn screw in until engine begins to lose speed and miss, then turn screw out until engine runs smoothly.

Idle Speed—700 RPM. or 7-8 MPH.

FLOAT LEVEL

►*CAUTION*—Before removing Upper Body Assembly to check or adjust float level, take out Idle Adjustment Screw and remove Idle Tube from adjustment screw hole. Idle Tube and Main nozzle will be damaged by disassembly if this is not done.

Float Level—1 27/64" from face of air horn gasket to top of raised seam on bottom of float with needle valve seated (3/16" clearance between top of float and air horn gasket). To check float level, remove Upper Body Assembly (see Caution above), invert assembly and allow floats to hang freely (this will seat needle valve without compressing spring in valve stem). **Adjust both floats equally** by bending each float lever arm.

►*CAUTION—Do not compress spring in intake valve stem when checking float level (compressing spring will cause false reading and incorrect setting).*

Fuel Level—23/32" below top edge of bowl or just below lower edge of fuel level inspection plug hole on side of bowl.

FAST IDLE

Adjustment—Back off throttle lever stopscrew so that throttle valve tightly closed. Hold throttle valve in this closed position, hold choke valve wide open, loosen setscrew on adjusting collar on fast idle connector rod (at throttle lever trunnion), position collar on rod so that it is against trunnion, tighten setscrew.

►*CAUTION*—Reset idle speed after making this adjustment.

SERVICE PARTS

Gasket Set—Tillotson No. 07144 (Crosley No. 207516).
Repair Parts Kit—Tillotson No. 08613 (Crosley No. 300939).

STROMBERG "AAUVB" & "AAVB" MODELS

MODEL AAUVB-26
Stromberg No.
380278—Studebaker V8, Commander & Land Cruiser Model H (1951)

MODEL AAUVB-267
380257—Buick, Series 40, 50 (1950-51)—See Production Changes

MODEL AAVB-267
380258—Buick, Series 70 (1950-51)—See Production Changes

►CHANGES, CAUTIONS, CORRECTIONS

►**BUICK AAUVB-267 & AAVB-267 CARBURETOR PRODUCTION CHANGES:** Parts changes have been made at two different points in production so that three different types of each carburetor may be found in service as identified by CODE NO. (See Code number explanation). Make recommended changes when servicing earlier carburetors as follows:

Code No. 7-88 & 7-89 Carburetors (1st type)—Install torsion spring, No. 385569, on pump lever and change Code No. to 7-88A and 7-89A. To install spring, take out pump lever attaching screw, slip spring over lever boss on carburetor, re-install lever, engage hooked end of spring under short end of lever. Remove air horn attaching screw directly under pump lever, align looped end of spring with this screw hole and re-install screw.

Code No. 7-88A & 7-89A Carburetors (2nd type)—Have Pump Lever Torsion Spring (as recommended for installation on 1st type 7-88 & 7-89 carburetors above). No other changes recommended.

►*CAUTION—New parts listed below for later 7-88B & 7-89B are not interchangeable and can not be installed on these earlier 7-88A & 7-89A carburetors.*

Code No. 7-88B & 7-89B Carburetors (3rd type)—Have new parts listed below which are NOT INTERCHANGEABLE with similar parts used on earlier carburetors.

►*CAUTION—Correct parts must be used on each type carburetor.*

Parts Changes:	7-88, 7-88A, 7-89, 7-89A Carb.	7-88B, 7-89B Carb.
Accelerating Pump Lever	P-24677	385589
Accelerating Pump Rod	385352	385592
Start-Aid Lever	P-24462	385606
Start-Aid Spring	P-24681	385607
Starter Switch Assy.	385000	①385611
Switch Contact Guide Spring	385006	385610
Switch Housing	385031	①385063
Assistor Spring	385569	385605

①—Identified by letter "A" on housing. Not interchangeable with first type because of new contact guide spring design.

►**STUDEBAKER RECOMMENDED CHANGES (First Code 6-107 Carburetors):** When servicing these carburetors, manufacturer recommends that following new type parts be installed (or old parts reworked as indicated) and that new settings be used as listed below.

Part:	Original Code 6-107	Later Code 6-107A
Main Metering Jet	P-24473 (.044")	P-24473 (.045")
Power By-Pass Jet	P-21657 (#56)	P-24674 (#60)
Vacuum Piston, Link, Lever	385580	①385579
Thermostat Cover Assy	385638	①385778
Fast Idle Cam	385593	②385593
Fuel Inlet Strainer & Clip		385360 & 385355

①—First type part can be reworked—see below.
②—Marked by "1" stamped on end of highest step on cam.

Vacuum Piston Change—Rework first type piston by drilling # 54 hole in center of piston head. When re-installing piston, make certain that piston and cylinder are thoroughly clean and that piston moves freely in cylinder **without any type of lubrication.**

Thermostat Cover Assy.—Thermostat cover plate (behind thermostatic coil) must be removed (not used on later 385778 assy.). To remove plate, break staking on center of hub retaining thermostatic coil end, remove thermostatic coil, remove and discard cover plate. Replace thermostatic coil making certain that

C NTINUED ON NEXT PA E

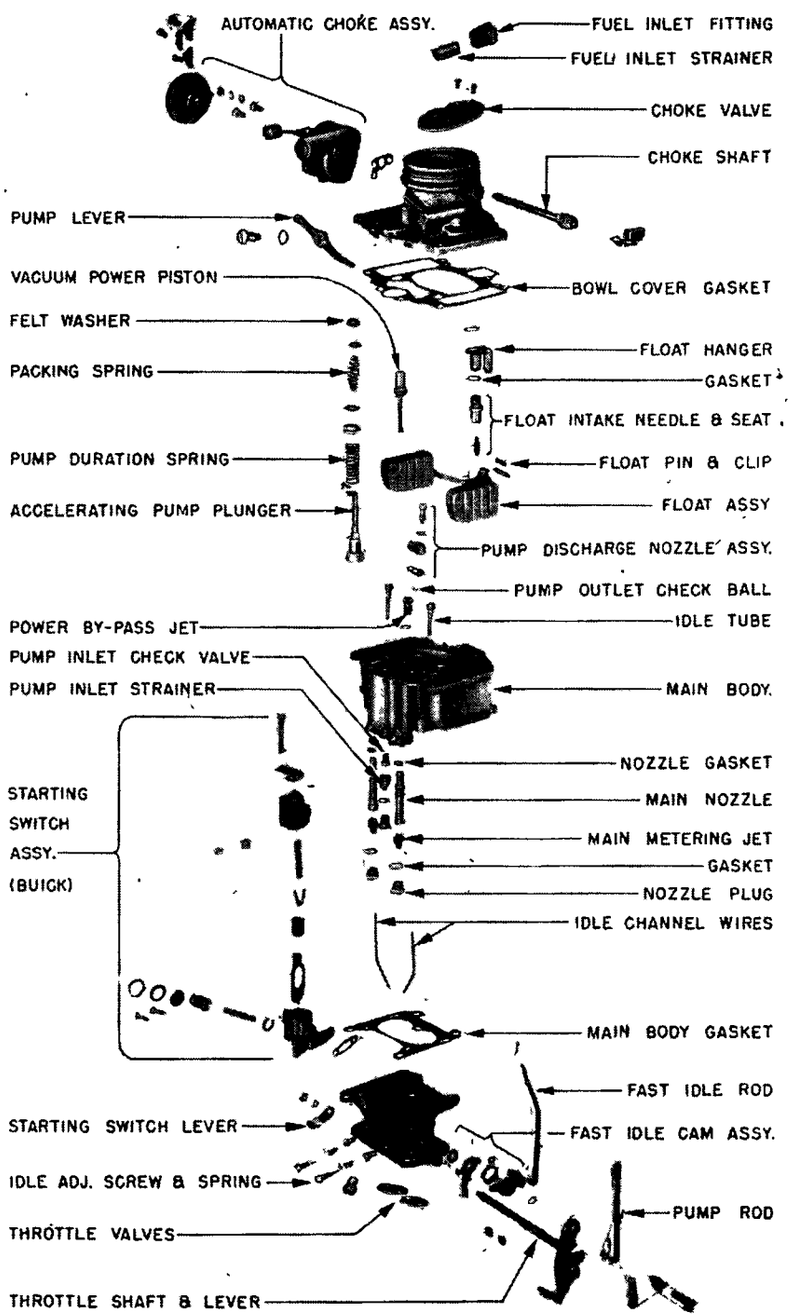

STROMBERG "AAUVB" & "AAVB" CARBURETOR

STROMBERG "AAUVB" & "AAVB" (C nt.)

hook on end of coil is adjacent to inverted "V" mark on edge of cover, restake end of hub with small punch to retain coil.

Fast Idle Cam—Install new fast idle cam (same part number as original type) identified by figure "1" stamped on highest step of cam. This new cam provides faster idle speed during warm-up period.

Fuel Inlet Strainer & Clip—Install these parts at the fuel inlet (same parts as used for accelerating pump inlet).

Carburetor Code Marking—After above parts installed, add letter "A" to 6-107 code number on float chamber cover.

Automatic Choke Setting—Set all Code 6-107A carburetors **2 Notches Lean.**

►**STUDEBAKER LATER PRODUCTION CODE 6-107A CARBURETORS**—Have all parts and changes recommended for earlier 6-107 carburetors installed in production.

►**CARBURETOR CODE (IDENTIFICATION) NO.:** Stamped on bowl cover above fuel level inspection hole plug as follows: **Buick AAUVB-267**—7-88, 7-88A, or 7-88B (see Production Changes), **Studebaker AAUVB-26**—6-107, **Buick AAVB-267**—7-89, 7-89A, or 7-89B (see Production Changes).

DESCRIPTION: Dual barrel, downdraft types. Similar in design to "AAV" carburetors used on previous Buick models. These carburetors have Fast Idle and Automatic Choke and Buick models have vacuum controlled starter switch mounted on carburetor.

IDLING ADJUSTMENT

Idle Screw Setting—Both screws should be adjusted equally and set approximately midway between the inner point (lean) and outer point (rich) where engine begins to run unevenly. Approximate setting shown in table below will enable engine to be started and warmed up for final adjustment.

Car Model	Idle Screw Setting	Idle Speed
Buick (all)	Approx 1½ turns open	450 RPM①
Studebaker	Approx. 1¾ turns open	②

①—Same setting for both Synchro-mesh & Dynaflow Trans.
②—550-600 RPM. (Synchro-mesh Trans.), 500-550 RPM. (Auto-Trans.).

ACCELERATING PUMP

Car Model	Carburetor	Pump Capacity	Pump Setting
Buick 40, 50	AAUVB-267	11-15 cc. (F), 15-19 cc. (S)	Medium
Buick 70	AAVB-267	10-14 cc. (F), 15-19 cc. (S)	Medium
Studebaker	AAUVB-26	11-14 cc. (S)	Minimum

Recommended Setting—Buick—Center Hole (Medium Stroke), Studebaker—Inner Hole (Minimum Stroke).

NOTE—Pump capacity as shown is for 10 strokes, Fast (F), Slow (S).

ECONOMIZER SETTING

Does not require adjustment. Valve opens with manifold vacuum of 4-6" of mercury, corresponding to a car speed of 65-70 MPH.

FLOAT LEVEL SETTING

Float Setting Note—When using gauge (see table), adjust floats **vertically** for float setting shown, adjust **laterally** so that sides of floats parallel to gauge without any drag (necessary to prevent floats dragging on sides of bowl). Correct float setting should give correct fuel level (below).

Car Model	Checking Gauge	Float Setting (On Gauge)
Buick (all)	T-24971	5/64" Above③
Studebaker	T-24971	5/64" Above③

③—Top of float (inverted) above top of gauge guides.

Fuel Level—21/32" below top edge of bowl with pressure of 5 lbs. Can be checked by removing inspection plug on side of bowl and checking fuel level with respect to inspection hole as follows:

Buick (First AAUVB-267 & AAVB-267 Carbs.)—On carburetors with plain inspection hole boss (no horizontal rib), fuel level should be 1/32-1/16" **below** bottom of threads in inspection hole.

Buick (Later AAUVB-267 & AAVB-267 Carbs.)—On carburetors with 1/4" long horizontal rib on each side of inspection hole boss, fuel level should be **even** with bottom of threads in inspection hole.

Studebaker AAUVB-26 Carb.—Fuel level should be even with bottom of threads in inspection hole.

THROTTLE VALVE SETTING

NOTE—When checking valve position, insert drill rod of size noted in idle port and vacuum spark port, check clearance or distance from edge of valve to drill (all specifications are plus or minus .004").

Car Model	Carburetor	Idle Port Setting—Drill	Vacuum Port Setting—Drill
Buick 40, 50	AAUVB-267	.030"—#58	.080"—#58
Buick 70	AAVB-267	.015"—#60	.055"—#58
Studebaker	AAUVB-26	.040"—#58	.020"—#58

FAST IDLE SETTING

Buick AAUVB-267 & AAVB-267: ***CAUTION—Two different settings required:***

Fast Idle Cam—Close choke valve against #26 drill (.147"), see that fast idle cam spring holds cam upward against end of fast idle rod. Close throttle until stopscrew contacts fast idle cam. If screw does not just clear edge of highest step on cam and bear against second step, adjust by bending fast idle rod at the large curve.

Lever Clearance—Close choke valve against #53 drill, adjust clearance between ear on locking lever on throttle valve shaft and lug on loose lever on fast idle cam stud so that these levers just clear as throttle valve is opened and closed. Adjustment is made by bending end of loose lever up or down as required.

Studebaker AAUVB-26 Fast Idle: Hold throttle valve stopscrew against lowest lobe of fast idle cam. Move choke valve as far as possible toward closed position (CAUTION—do not force valve past point at which stopscrew comes up against step on fast idle cam). Measure choke valve opening by inserting 11/32" drill rod (Tool T-25085) between edge of choke valve and air horn wall. If opening not correct, adjust by bending connector rod at horizontal bend below choke valve lever.

UNLOADER (CHOKE RELEASE) SETTING

Setting—To check, open throttle wide, measure choke valve opening or clearance between edge of valve and air horn wall using drill rod or tool as specified in table below. If opening not correct, adjust by bending ear on throttle lever which contacts lug on fast idle cam.

Car Model	Unloader Setting Checking Gauge	Choke Valve Opening
Buick (all)	T-25086	(9/64") .140"
Studebaker	T-25086	(9/64") .140"

AUTOMATIC CHOKE SETTING

Setting (Buick)—Centered (inverted "V" mark on cover in line with end of projection on housing). NOTE—Buick thermostat assembly marked "23".

Setting (Studebaker)—***CAUTION—Two different settings used (see production change note):***

First Code 6-107 Carb.—Centered.

Later Code 6-107A Carb.—2 Notches Lean.

►***ADJUSTMENT CAUTION***—Heat tube connection and cover screws must be loosened to adjust choke setting. Use extreme care not to rotate or distort cover when tightening heat tube connection.

SERVICE PARTS

Gasket Sets—Stromberg No. 382370 (Buick AAUVB-267 & AAVB-267), No. 382367 (Studebaker).

Repair Parts Kits—Stromberg No. RK-151 (Buick AAUVB-267), No. RK-152 (Buick AAVB-267), No. RK-163 (Studebaker AAUVB-26).

STARTING SWITCH (BUICK MODELS)

See complete "Stromberg Starting Switch" in previous release.

Checking Switch Timing (On Car)—Check and set hot or slow idle speed at 8 MPH. With engine not running, insert #65 drill or small wire through center of screen to operate vacuum piston (CAUTION—Do not remove screen). Close throttle, push vacuum piston in to inner position, hold piston in while opening throttle (will lock piston in inner position). While holding throttle open, remove wire used to operate piston, place 5/64" spacer between idle stopscrew and fast idle cam (hold cam in cold idle position). Close throttle so that spacer holds cam in position. Turn ignition "On". Open throttle (hold spacer in position to prevent it dropping out as throttle opened). **Engine should not crank.** Install 3/64" spacer in place between idle stopscrew and fast idle cam (hold cam in cold idle position) and close throttle against spacer. Turn ignition "On". Open throttle. **Engine should crank.** If engine does not crank with 3/64" spacer, or if engine does crank with 5/64" spacer, adjust by bending lip on operating lever on throttle shaft.

Setting Switch (Off Car)—Make approximate adjustment by inserting #43 drill rod (Series 40, 50), #41 drill rod (Series 70), between edge of throttle valve and carburetor wall and closing throttle against drill. Bend tang on switch operating lever so that it just touches switch slide. **This is approximate adjustment only** and should be rechecked (above) after carburetor installed on car.

STROMBERG MODELS BXVD-3 & BXVES-3

Part No. **MODEL BXVD-3**

380249—Dodge, All U. S. Cars with Synchro-mesh Trans. (1950-51)

380253—Dodge, All Can. Cars with Synchro-Mesh Trans. (1950-51)

MODEL BXVES-3

380251—Dodge, All U. S. Cars with Gyromatic Trans. (1950-51)

380268—Dodge, All Can. Cars with Gyromatic Trans. (1950-51)

►CHANGES, CAUTIONS, CORRECTIONS

CARBURETOR IDENTIFICATION (CODE) NOTE: Code number stamped on bowl can be used to identify models with various production changes as listed below:

BXVD-3 No. 380249—Code 3-93, 3-93A, 3-93B, 3-93C & later.

BXVD-3 No. 380253—Code 3-97, 3-97A, 3-97B, & later.

BXVES-3 No. 380251—Code 3-95, 3-95A, 3-95B, 3-95C, 3-95D, 3-95E, 3-95F & later.

BXVES-3 No. 380268—Code 3-103, 3-103A & later.

►**MAIN BODY & VACUUM PISTON PRODUCTION CHANGE (All Carburetors):** Beginning with early 1951 production, new Main Body casting with new longer Vacuum Power Piston used on all carburetors listed above. First type Main Body will not be furnished for service and new type Main Body **with new longer Vacuum Power Piston** must be used when replacement of main body required. Old and new type parts can be identified as follows:

Main Body—Bottom of by-pass jet boss (below float bowl) is **7/16" above** bottom of dashpot on first type main body, and is even with bottom of dashpot on new type main body.

Vacuum Power Piston	Part No.	Over-all Length
First Type	P-24201	2 5/32"
Later Type	385527	2 9/16"

NOTE—When new main body and new vacuum power piston installed, code number stamped on carburetor should be changed to show the latest number (code when this change occurred in production) as follows: No. 380249—Code 3-93C & Later, No. 380253—Code 3-97B & Later, No. 380251—Code 3-95F & Later, No. 380268—Code 3-103A & Later.

►**BXVD-3 & BXVES-3 CARBURETOR PRODUCTION CHANGES:** Later carburetors have various parts differences due to production changes as listed below. Correct type parts must be used on each individual carburetor.

See "Main Body & Vacuum Piston Production Change" also (above) for new replacement parts for these early carburetors (as used in production on later carburetors).

U. S. BXVD-3 No. 380349 Carburetor Changes

Parts Changed	Code 3-93 Carb.	Code 3-93A & 3-93B Carb.
Main Body Assembly	385057	385386
Main Body Gasket	P-24037	385384
Throttle Body Assembly	382902	385387
Main Body Insulator Spacer	384677	385385

Canadian BXVD-3 No. 380253 Carburetor Changes

Parts Changed	Code 3-97 Carb.	Code 3-97A Carb.
Main Body Assembly	385057	385386
Main Body Gasket	P-24037	385384
Throttle Body Assembly	382902	385387
Main Body Insulator Spacer	384677	385385

U. S. BXVES-3 No. 380251 Carburetor Changes

Parts Changed	Carburetor Code Nos. 3-95, 3-95A, 3-95B	3-95C, 3-95D	3-95E
Main Body Assembly	385166	385372	385372
Main Body Gasket	P-24037	P-24037	385390
Contact Piston Spring	385162①	385155②	385155
Terminal Block Assy.	385133③	385133③	385438

①—Marked by Blue color. See Kick-down switch change following.
②—Not colored. May be identified by free length of 1 3/8".
③—Includes No. 903899 Wire Clamp Screw & No. 384450 Lockwasher.

►**EARLY BXVES-3 KICK-DOWN SWITCH CHANGE (For Improved Transmission Performance):** On first Code 3-95 & 3-95A carburetors, original No. 385146 Kick-down Switch Contact Piston Spring should be replaced by No. 385162 spring which is colored with Blue dye for identification. This new spring raises kick-down speed limit to 35-43 MPH. (was 40 MPH.). When this change made, **stamp letter "B" next to stamped code no. 3-95 on bowl cover near fuel inlet** (this spring used in regular production on Code 3-95B carburetors).

►***CAUTION—Do not use this No. 385162 spring on Code 3-95C and later carburetors (have new uncolored spring with free length of 1..3/8").***

DESCRIPTION: Single barrel downdraft types of same design as carburetors used on previous models except for new Kick-down Switch (BXVES-3 only).

Slow-Closing Throttle (Dashpot)—Dashpot and piston in float bowl linked to throttle lever with adjusting screw on control lever under float bowl. See complete "Dodge Slow-Closing Throttle" in previous release and note adjustment directions below.

Kick-down Switch (Model BXVES-3 only)—Same design as switch used on Chrysler cars with Stromberg carburetors. See complete "Chrysler & DeSoto Kick-down Switch" in previous release and note adjustment directions below.

ADJUSTMENT & SERVICING: ***See complete "Stromberg Models BXV-3, BXVD-3" Carburetors in previous release and set these carburetors to the following specifications:***

Idle Adjustment: Idle screw set for smooth running (between inner Lean or Missing point and outer Rich or Rolling point).

Idle Speed (BXVD-3—Synchro-mesh Cars)—6 MPH.

Idle Speed (BXVES-3—Gyromatic Cars)—450-475 Engine RPM.

Accelerating Pump Capacity: 11-14 cc. per 10 slow strokes (pump travel ¼-9/32") with pump set for medium stroke (middle setting).

Recommended Setting—Center hole (medium stroke) summer, outer hole (maximum stroke) winter.

Economizer Setting—Valve opens with manifold vacuum of 3-5" corresponding to car speed of 65-70 MPH.

Float Level: Fuel level ⅝" below top edge of bowl with 3 lbs. pressure. NOTE—Use Tool T-24733 to adjust float.

Throttle Valve Setting: Edge of valve Flush (plus .006", minus .000") from #58 drill in idle port, and flush with two #58 drills in vacuum spark ports.

Fast Idle Setting: No adjustment required.

Slow-Closing Throttle (Dashpot) Setting: (BXVD-3) 5/16-11/32", (BXVES-3) 13/32-7/16" piston travel with all slack removed from linkage.

Adjustment—Turn adjusting screw in lever under float bowl OUT to lengthen stroke or IN to shorten stroke.

Kick-down Switch Setting (BXVES-3): 5/32" min. switch plunger travel up to point where throttle valve is wide open, and 1/64" over-travel of the plunger at this position.

Adjustment—Bend tang on throttle lever which contacts switch plunger.

SERVICE PARTS: Gasket Sets—Stromberg No. J-5968-G (First No. 380249 Code 3-93 Carbs.), No. 382369 (Later No. 380249 Code 3-93A & Later Carbs. and all No. 380253 Carbs.), No. 382371 (All BXVES-3 No. 380251 & 380268 Carbs.).

Repair Kits (incl. Gaskets)—Stromberg No. RK-148 (First No. 380249 Code 3-93 Carbs.), No. RK-159 (Later No. 380249 Code 3-93A & Later Carbs.), No. RK-150 (No. 380253 Carbs.), No. RK-149 (No. 380251 Carbs.), No. RK-161 (No. 380268 Carbs.).

Stromberg No. **STROMBERG MODEL BX V-26**

380178—Studebaker Comm. & Land Cruiser 17A (1950)—After 10,000 cars.
Carter "WE" carburetor used on first 10,000 cars.

►CHANGES, CAUTIONS, CORRECTIONS

►**CARBURETOR NO. 380036 & 380178 REPLACEMENT PARTS CHANGE:** New type Accelerating Pump Piston, Duration Spring, and Pump Spring have superseded parts formerly furnished for these carburetors. **All of these parts must be installed as an assembly** when servicing the above carburetors and are furnished in Repair Parts Kit No. RK-112.

Parts Changed:	New Part No.	Superseded Part No.
Accelerating Pump Piston	385100	382485
Pump Duration Spring (Upper)	385164	P-24102
Pump Spring (Lower)	385102	Not Used

►**CARBURETOR CODE (IDENTIFICATION) NOTE:** Code No. 6-104 stamped on bowl. This number changed to 6-104D when new pump parts (above) installed.

DESCRIPTION: Plain tube downdraft type of same design as used on corresponding previous car models.

ADJUSTMENT & SERVICING: Same as for previous Stromberg "BXOV-26" carburetors. ***See complete "Stromberg BXOV-26" Carburetor article in previous release and set this carburetor to the following specifications:***

Idle Adjustment—Idle screw set for smooth running (between inner Lean r missing point, and outer Rich or rolling point).

Idle Speed (Synchro-mesh Trans. Cars)—8-10 MPH. in high gear.

Idle Speed (Auto. Trans. Cars)—500-550 RPM. with selector lever in "N".

Accelerating Pump Capacity—5-8 cc. per 10 fast strokes, 11-14 cc. per 10 slow strokes with pump set for medium stroke (middle setting).

Economizer Setting—Valve opens with manifold vacuum of 4-6".

Float Level—Fuel level ⅝" below top edge of bowl with 3 lbs. pressure. NOTE—Use Tool T-24733 to adjust float.

Throttle Valve Setting—Edge of valve .010" ± .004" from #60 drill in idle port, and Flush with #56 drill in upper vacuum spark port.

Fast Idle Setting—With fast idle screw on lowest step of fast idle cam, move choke valve toward closed position as far as possible (do not force beyond position where screw contacts second step of cam), measure choke valve opening with 11/32" drill rod between edge of valve and wall. If opening not correct, adjust by bending connector rod.

Automatic Choke Setting—Mark "R" on coil housing cover in line with projection on housing. NOTE—Set at mark "M" if carburetor loads up or overchokes with std. "R" setting. Use setting "H" only for highly volatile fuels.

Service Parts—Gasket Set No. J-5652-G. Repair Parts Kit No. RK-112.

1950-51 STROMBERG CARBURETOR JET SPECIFICATIONS

Car Model	Year	Carb. No.	Venturi Size	Main Metering Jet Size	Main Metering Jet Part No.	By-Pass Jet Size	By-Pass Jet Part No.	Main Discharge Jet Size	Main Discharge Jet Part No.	H.S. Bldr.	Idle Tube Size	Idle Tube Part No.	Idle Air Bld. Jet Size	Idle Air Bld. Jet Part No.	Pump Discharge Nozzle Size	Pump Discharge Nozzle Part No.
BUICK 40, 50	1950-51	AAUVB-267	1 1/32"	.047"	P-24673	#54	P-21197	#32-28	P-24670	#70⑭	#65	382572	#40㊸	385350	#68	P-24594
BUICK 70	1950-51	AAVB-267	1 1/8"	.051"	P-24673	#56	382454	#32-28	P-24670	#70⑭	#68	P-21962	#42⑨	P-24683	#68	P-24594
DODGE Fld. Dr.	1950-51	..BXVD-3	1 7/32"	.061"	P-19442	#60	385449	#28-36	382897	#68㉓	#70	P-21778	#54	P-20470⑱	#70	——
DODGE Fld. Dr. Canada	1950-51	..BXVD-3	1 7/32"	.062"	P-19442	#54	P-21197	#28-32	385192	#68㉓	#70	P-21778	#54	P-20470⑱	#70	——
DODGE㊺	1950-51	..BXVES-3	1 7/32"	.061"	P-19442	#60	385449	#28-36	382897	#68㉓	#70	P-21778	#54	P-20470⑱	#70	——
DODGE㊺ Canada	1950-51	..BXVES-3	1 7/32"	.062"	P-19442	#54	P-21197	#28-32	385192	#68㉓	#70	P-21778	#54	P-20470⑱	#70	——
STUDEBAKER V8	1950-51	..AAUVB-26	1 1/32"	.044"	P-24773	#56	P-21657	#28-36	385636	#70⑭	#65	382572	#40㊸	385350	#70	385637

⑨—#65 in main body also.
⑭—Part No. P-23985.
⑱—Discharge Reducer. Also uses Pump By-Pass Jet 2 #56, Part No. P-24062.
㉓—Part No. P-24315.
㊸—#58 in main body also.
㊺—Cars with Gyromatic Transmission.

ZENITH MODEL 31 A11

WILLYS — **Zenith Assy. No.**
1950-51 673-SW & 673-VJ 11119

►CHANGES, CAUTIONS, CORRECTIONS

►**ZENITH 31-SERIES CARBURETOR IDENTIFICATION:** These carburetors built in "31A" and "31B" styles in the sizes listed below.

31A—Throttle and choke shafts parallel.

31B—Throttle and choke shafts at right angles.

Size Marking	Nominal Size	Flange Size
10	1¼"	1¼"
11	1⅜"	1¼"
12	1½"	1½"

►**CARBURETOR FLANGE GASKET CAUTION**—Correct type of flange gasket must be used when installing carburetor on engine. **Gaskets must not be interchanged** as use of gasket which blanks off vacuum channel into intake manifold will result in failure of the accelerating pump and constant operation of the vacuum power valve with consequent rich mixture and poor gasoline economy.
Gasket No. C141-18—Use on **engines without governor.** Gasket has four cut-out slots at rim of center hole to provide opening for vacuum channel regardless of gasket position on manifold flange.
Gasket No. C141-4-3—Use only on **engines with "sandwich" type governor.** This gasket has slotted hole at either end designed to complete vacuum channel to manifold through governor body.

DESCRIPTION: Single barrel, plain tube, downdraft type with double venturi and vacuum controlled accelerating pump and power jet system. Carburetor is balanced with float bowl vented in air horn.

Fuel System: Consists of the following systems:

Idle Fuel System—Fuel for idling is taken from main jet well up through the Idle Tube and is metered by a restriction at the upper end of the tube. In the cross-channel at the upper end of the tube the fuel is mixed with air admitted through the Idle Air Bleed opening in the carburetor wall below the choke valve. Fuel mixture is then taken down through a passage to the idle discharge ports at the throttle edge. For closed throttle idling, fuel is discharged through the lower port and is controlled by the idle adjusting needle. Under these conditions, the upper port serves as an additional air bleed. As soon as the throttle is opened, additional fuel is discharged through the upper port also. Idle system supplies all fuel up to approximately ¼-throttle opening when High Speed System takes over.

High Speed System—Supplies fuel for driving range above approximately ¼-throttle opening. Consists of a discharge nozzle or tube opening into the throat of the secondary venturi through which fuel is discharged into the air stream. This fuel mixture is supplied by the Main Jet System (¼ to ¾ throttle opening) and is supplemented by the Power Jet System (¾ to full throttle) as follows:

Main Jet System—Fuel is metered by the Main Jet at the bottom of the metering well and is mixed with air admitted through the well vent opening in the air horn below the choke valve (vent tube is concentric with Idle Tube and is part of this assembly).

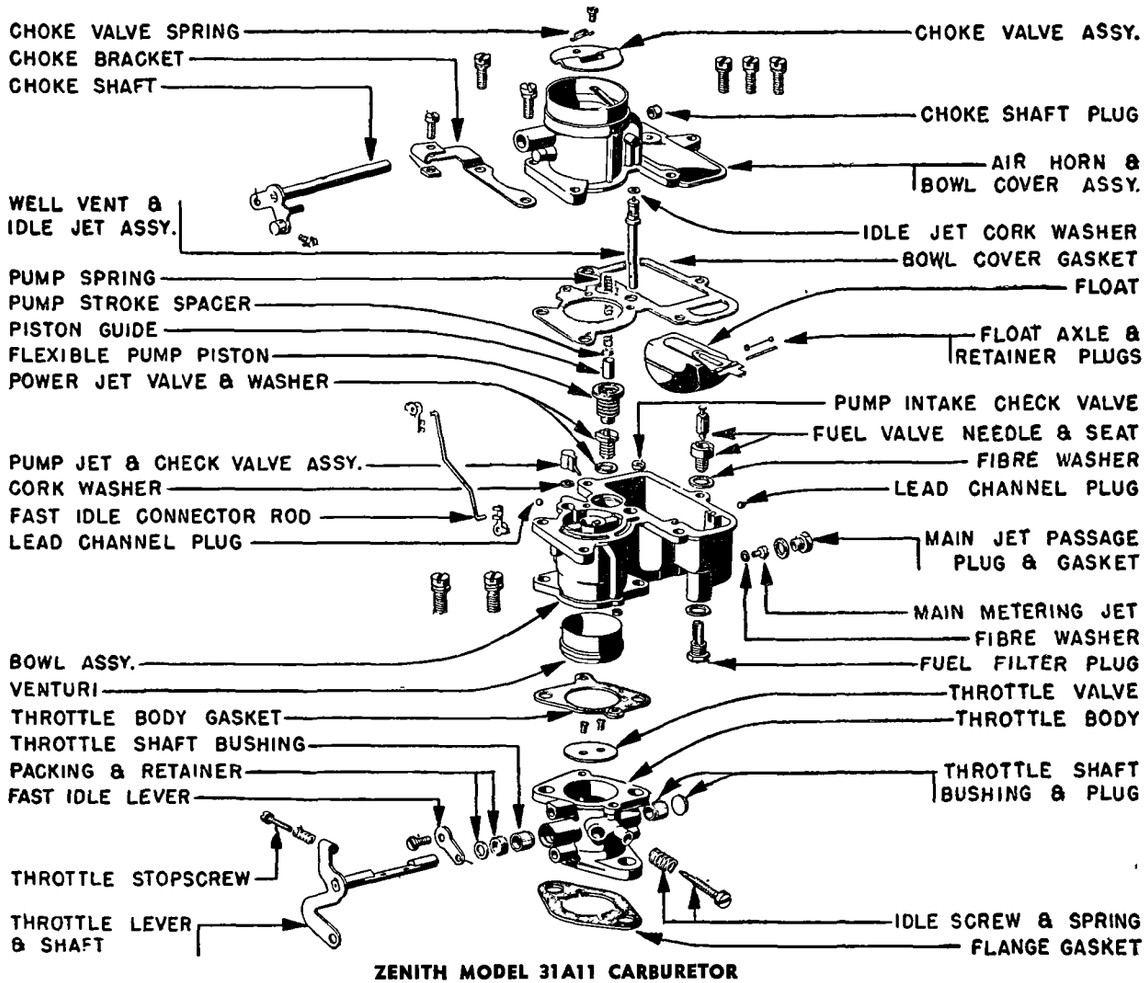

ZENITH MODEL 31A11 CARBURETOR

Power Jet System—Consists of a Power Valve in the bottom of the accelerating pump cylinder which is controlled by a spring-loaded vacuum piston assembly (this flexible piston is also the accelerating pump plunger). Valve is normally closed (piston held up against spring tension by the manifold vacuum). Whenever manifold vacuum drops below 6" (wide open throttle or high speed operation), the piston opens the valve and allows fuel to flow through the accelerating pump directly to the metering well. This fuel is metered by the metering orifice in the power jet valve.

Accelerating Pump System—Pump is vacuum controlled and spring operated and is combined with the power jet system (pump flexible piston operates power valve). Fuel is drawn into pump cylinder through intake check valve in bottom of float bowl and is discharged through outlet check valve and accelerator jet in carburetor wall at side of secondary venturi. Pump plunger (flexible piston) stroke is adjustable by changing the stroke spacer in the pump spring guide.

IDLING ADJUSTMENT: Adjust only when engine is warm (choke valve wide open, fast idle inoperative). Set throttle lever stopscrew for correct idle speed, adjust idle adjusting screw for smooth idling, recheck idle speed.

Idle Screw Setting—Approximately 1½ turns open.

CAUTION—Screw controls fuel mixture and should be turned OUT for richer mixture.

Idle Speed—600 RPM. or 6 MPH.

POWER JET (ECONOMIZER): No adjustment required. Power valve is normally closed and opens when manifold vacuum falls below 6".

CONTINUED ON NEXT PAGE

ZENITH 31A11 (C nt.)

ACCELERATING PUMP: No seasonal adjustment provided. Pump stroke is adjustable by changing stroke spacer in pump spring guide.

NOTE—Pump must be disassembled (see Overhaul data) to make this change.

FLOAT LEVEL: Use Float Level Gauge C161-169 to check float level. Remove air horn and bowl cover, remove gasket. Install gauge on top edge of bowl over center of float, press down firmly on float arm directly over intake needle. Top of float should be flush with bottom edge of gauge (plus or minus 1/32").

FAST IDLE: Consists of a fast idle cam (advance lever) linked to the choke valve and serving as a stop for the throttle stopscrew. Cam is rotated when the choke is closed for starting and opens the throttle to the fast idle position. No adjustment is required.

►*CAUTION—Fast idle cam must be in the hot or slow idle position (stopscrew resting on low point of cam) when adjusting idle speed.*

CHOKE: Choke valve is manually controlled. Valve is spring-loaded on shaft and is free to open slightly against spring tension when engine begins to fire. Adjust control cable so that valve is fully closed when choke button is pulled out and is fully open when button pushed in. See that fast idle cam is rotated to the point where throttle stopscrew rests on high point of cam when choke valve is fully closed.

DISASSEMBLY: The three main castings are separated and disassembled and reassembled as units:

Air Horn & Bowl Cover—Take out fast idle cam screw, disconnect connector rod at choke valve lever. Remove air horn and bowl cover attaching screws, raise assembly slightly to free cover gasket, then lift straight up using care not to damage float and other protruding parts. File off riveted end of choke valve screw, remove screw, unhook and remove spring. Withdraw choke shaft and lever, lift out choke valve.

►*CAUTION*—Do not remove bowl vent tube in air horn, pump guide tube, channel plugs, choke shaft plug, or identification disc.

Fuel Bowl (Main Body)—Lift out metering well, well vent and idle tube (single assembly), remove cork gasket from top of unit. Lift off bowl cover gasket. Lift out flexible pump piston, piston guide, pump stroke spacer, and pump spring as a unit (CAUTION—use fingers only, do not pry these parts out). Lift out accelerator jet and check valve assembly and cork washer. Remove float, float axle, retainer plugs, and intake needle as a group by inserting forked end of tool under float axle and prying axle and retainers up out of bowl. Remove intake needle seat and fibre washer (C161-85 wrench). Remove power jet valve and fibre washer from bottom of pump cylinder (C-161-121 wrench). Remove pump intake check valve from bottom of bowl by screwing C161-25 extractor firmly into valve and striking cross-bar sharply to pull valve (CAUTION—be sure check valve disc is removed from channel). Remove main jet passage plug and fibre washer from outside of casting under bowl, then remove main jet and fibre washer from this channel (C161-83 wrench). Remove filter plug and fibre washer from under float bowl, take off filter screen. Remove two lead channel plugs by drilling #46 hole in each plug and using C161-21 extractor tool to pull plugs out. Take out fuel bowl-to-throttle body attaching screws, lift fuel bowl off, invert bowl and remove venturi from lower end. Do not remove idle channel bushing unless replacement required.

►*CAUTION*—Do not remove secondary venturi (pressed in fuel body) or accelerator channel brass plug.

Throttle Body—Unscrew idle adjusting needle and spring. File off riveted ends of throttle valve screws, remove screws, lift out throttle valve. Withdraw throttle shaft and lever, remove shaft packing washer and retainer from lever end of shaft recess. Use 5/16" rod inserted through shaft hole to drive out plug in opposite shaft hole.

►*CAUTION*—If throttle shaft and bushings being replaced, remove old bushings only as new bushings installed (old bushing must be used to line-ream new bushing). See Reassembly data.

CLEANING & INSPECTION OF PARTS: Clean all metal parts with cleaning solution and rinse in solvent. Blow out all passages with air and clean carbon deposits from carburetor bore and idle ports. Do not use wire or drills to clean jets or metering restrictions. Inspect all parts and replace if worn. Replace following parts whenever carburetor is being overhauled: Intake Needle & Seat Assy., Flexible Pump Piston, Power Valve & Jet, Choke Valve Spring, Pump Intake Check Valve, Pump Outlet Check Valve & Jet, all Gaskets and Fibre Washers.

REASSEMBLY: Reassemble carburetor by reversing disassembly procedure and note following important points:

Throttle Shaft Bushing Replacement—Remove one old bushing by threading 3/8" fine thread tap into bushing and using 5/16" rod inserted through opposite shaft hole to drive bushing out. Install new bushing using C161-72-3 driver. Line-ream this bushing with C161-71-3 reamer using opposite bushing as a guide. Repeat this procedure to install opposite bushing. Install plug in shaft hole (opposite end from throttle shaft lever) and stake plug in place.

Throttle Valve—Install throttle shaft with packing and retainer in throttle body, turn shaft to wide open position with cut-out on shaft facing away from idle discharge ports, insert throttle valve with bevel on leading edge away from idle ports, close throttle valve and center the valve so that bevel fits carburetor bore snugly, start throttle valve screws, tighten screws **while pressing in on end of shaft** to insure packing being in place.

Float & Intake Needle Valve—Engage slotted end of float lever with knot end of intake needle, slip float axle through float lever, lower axle into casting slots, install axle retainer plugs using a flat end punch to seat plugs in slots. Plug height tolerance is 1/64" above machined surface of casting.

Pump Inlet Check Valve—Install valve with disc side down, use C161-161 driver to seat valve flush with casting.

Pump Outlet Check Valve & Jet—Install cork washer first, then install check valve and jet assembly **with open end down.** Assembly should extend approximately 1/64" above surface of bowl casting.

Accelerating Pump Assembly—Install flexible pump piston, piston guide, pump stroke spacer (see note), and pump spring in this order in the pump cylinder. See that piston flange fits evenly in recess at top of pump cylinder.

►**Pump Stroke Spacer Note**—This part controls pump stroke and pump discharge. Parts used as regular equipment on Willys is Part No. C63-193-2 and provides one-half stroke.

Metering Well, Well Vent, & Idle Jet Assy.—This unit should be installed **after** the bowl gasket has been installed and shoulder should seat on top of gasket.

Choke Valve—With choke valve in closed position and choke shaft rotated clockwise until lever is against its stop, install screw through eye of choke valve spring but **do not tighten** screw completely (spring must be free). Rivet the end of the screw using a flat end punch held in a vise as a mandril to support the screw and to prevent bending the choke shaft. Then hold choke in open position and hook end of spring over anchor clip on valve.

SERVICE PARTS: Gasket Set—Zenith No. C181-313. **Repair Parts Kit**—Zenith No. K-11119.

ZENITH JET SPECIFICATIONS

Willys 31 All Carb. No. 11119

Part	Size	Part No.
Venturi	#28	B38-67--28
Main Jet	#28	C52-7--28
Idle Tube & Well Vent	①	C66-92-1-1
Power Jet Valve	#30	C97-28--30
Fuel Valve Seat	#40	C81-57--40
Accelerating Jet②	#12	C41-27--12
Pump Stroke Spacer	③	C63-193-2

①—Idle Jet Size stamped on end, Well Vent Size stamped on side near the end.

②—Includes Pump Check Valve in assy.

③—Provides ½ pump stroke.

KING-SEELEY "CV" CONSTANT VOLTAGE GASOLINE, OIL PRESSURE, & TEMPERATURE GAUGES.

DESCRIPTION & OPERATION: King-Seeley "CV" or constant-voltage gauges differ from previous types in that the tank and engine units (senders) consist of variable resistances (rheostats) which regulate the current in the heating coil of the receivers (dash units) and control the deflection of the bi-metal arm linked to the gauge pointer. All dash units are of similar design. The feature of these gauges is the "Gauge Voltage Regulator" which regulates input voltage in the gauge circuits and insures accurate gauge readings regardless of the line voltage fluctuations.

Gauge Voltage Regulator: Consists of a vibrating unit (contacts controlled by bi-metal arm on which a heater winding is located) connected in the line between the ignition switch and the gauges. Regulator produces a pulsating voltage, at an effective constant amperage value, of 5.0 volts for all normal input voltage variations (between 5.6 and 8.0 volts). Input voltages lower than 5.0 volts will result in proportionately lower gauge readings while voltages greater than 8.0 volts will not affect gauge accuracy but will overload regulator contacts and may cause premature wear. Regulator is temperature compensated and is intended to be mounted near the gauge dash units and at approximately the same ambient temperature.

Gauge Indicators (Dash Units): All units are of similar design. Gauge pointer is linked to a bi-metal arm on which a heater coil is wound. This coil is connected in series with the tank or engine unit rheostat so that the gauge reading is in proportion to the current in the circuit (zero reading with maximum resistance and minimum current, high reading with minimum resistance and maximum current).

Gauge Tank & Engine Units (Senders): All units are not of same design:

Fuel Gauge Tank Unit—The rheostat contactor acts as a ground for the gauge circuit and is linked to the gauge float so that it sweeps across the resistance as the float follows the level of fuel in the tank When the tank is empty the entire resistance is in the gauge circuit and the current is at a minimum. When the float rises as the tank is filled, the resistance is cut out of the gauge circuit and the increase in current causes the dash unit to read higher.

Oil Pressure Gauge Engine Unit—Operates in same manner as fuel gauge (above) except that rheostat contactor is linked to a diaphragm which is deflected by the engine oil pressure.

Temperature Gauge Engine Unit—New design (no moving parts). Gauge circuit is grounded through a small block of special sintered material which has a variable resistance in response to temperature changes. This block is sealed in the end of the engine unit bulb in close contact to the engine coolant. It has a comparatively high resistance when cold so that the current in the gauge circuit is, at a minimum. This resistance decreases as the engine temperature increases and the consequent increase in current in the gauge circuit causes the dash unit to read higher.

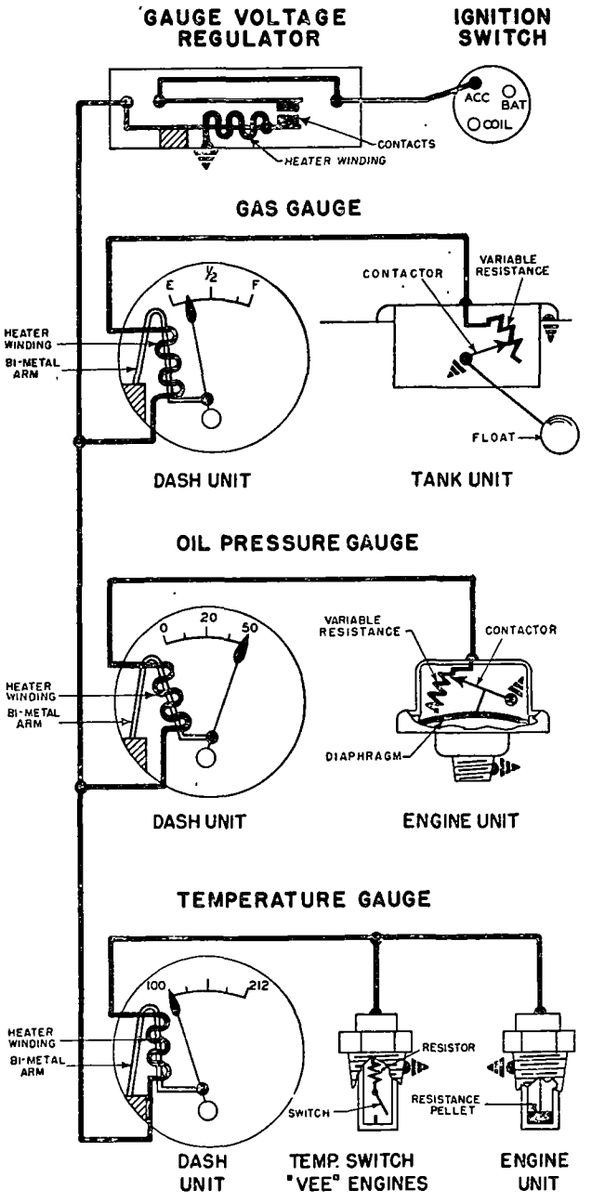

KING-SEELEY GAUGE CIRCUITS

►**Auxiliary Temperature Gauge Switch (for "V" Engines)**—The regular temperature gauge engine unit is mounted in one block of the engine, and the auxiliary switch is intended to be mounted in the other block as a warning of abnormal temperatures in this block. Switch is connected in parallel with the regular engine unit (see diagram) and consists of a switch (normally open) and resistance. At high temperatures, the switch closes and the resistance is shunted across the regular engine unit and causing the dash unit to read "hot."

TROUBLE SHOOTING: Units should not be removed from the car until testing has been done to determine which units are defective. See Testing (following).

All Gauges read Too High or Too Low—Voltage Regulator defective (see Regulator Test) or not properly grounded (regulator MUST be grounded). Battery voltage at regulator (or ignition switch) below 5.0 volts (check with voltmeter).

►***CAUTION—Gauge Voltage Regulator provides an intermittent voltage averaging 5.0 volts and regulator output voltage can not be tested with a voltmeter.***

One Gauge Reads Too High or Too Low—Test unit as directed below.

TESTING: Use a Fuel Level Gauge Tank Unit which is known to be OK. as a test unit. Connect one test lead to the terminal on the unit and a second test lead to the case to act as a ground wire (CAUTION—unit will not operate if not properly grounded). Make tests as follows:

Voltage Regulator: Requires use of an OK. dash unit also. Connect these test units together (dash unit and tank unit) in normal manner and ground tank unit, connect the other dash unit terminal to the output terminal of the voltage regulator. Check battery voltage (must be within operating limits). Hold tank unit float in Empty position, turn on ignition switch, note reading on test dash unit (should read Empty). Start engine and run at faster than normal idle speed. Gauge reading should not change if voltage regulator functioning normally. Move tank unit float to Full position. Dash unit gauge should read Full. If voltage regulator not operating correctly, replace unit.

Gauge Units: Disconnect lead at tank or engine unit on car and hook test unit in circuit at this point (CAUTION—make certain test unit is grounded.) Move test unit float to Empty position, turn on ignition switch, note dash unit reading (gauge pointer should be at lower end of scale—Empty, Zero, Cold, etc.). Move float to Full position, gauge pointer should then be at upper end of scale. If dash unit reads OK. in both positions, replace original tank or engine unit with correct type unit. If dash unit does not test OK., connect test unit directly to terminal on dash unit (eliminating the car wire). If dash unit then tests OK., check lead between dash unit and tank or engine unit for broken wire or shorted insulation and replace this wire. If dash unit still does not function correctly, replace original dash unit with correct type unit.

REPAIRING UNITS: Repair or calibration of units is not practical in the field and defective units should be replaced.

AUTO-LITE "IAT" TYPE

►**EARLY "IAT" DISTRIBUTOR BREAKER PLATE BINDING (Causing Low Gas Mileage, Spark Knock, or Engine Noise):** Caused by breaker plate ground wire screw being too long and binding on support plate (preventing proper advancing and retarding of breaker plate by the vacuum control unit). Correct this condition by removing ground screw and grinding off lower end sufficiently to provide clearance when screw tightened down.

NOTE—Later "IAT" distributors have oblong slot in support plate at this breaker plate ground wire screw to provide clearance.

DESCRIPTION: Auto-Lite "IAT" distributors have new type breaker plate-and-support plate assembly for vacuum spark control (vacuum control unit mounted on distributor housing and linked directly to breaker plate). This assembly consists of a support plate rigidly mounted in the distributor housing and a separate breaker plate on which the contact assembly and condenser are mounted. Breaker plate is pivoted on support plate at a point under the condenser and rests on brass supports on the support plate. A tension spring on the underside of the support plate provides constant uniform friction between the two plates and governs the action of the vacuum unit in rotating the plate to advance or retard the spark.

►*REPLACEMENT NOTE*—Breaker plate and support plate not furnished separately and must be replaced as an assembly if either part damaged or worn.

DISASSEMBLY: Remove distributor cap and rotor. Remove wire clip from vacuum unit link post on breaker plate, take out vacuum unit mounting screws on side of housing, tip vacuum unit to disengage link from breaker plate, remove unit (see Vacuum Unit data below for disassembly of this unit). Disassemble and remove terminal screw, take out three support plate mounting screws (including two cap spring clips), lift breaker plate assembly out. To disassemble breaker plate, remove terminal screw to disconnect connector wire and condenser pigtail, lift breaker arm off its pivot, take out condenser mounting screw and remove condenser, remove contact plate lockscrew and plain washer (this is also ground wire screw) and lift stationary contact plate off, disconnect ground wire from support plate (CAUTION—this completes breaker plate disassembly sinces plates **not furnished separately**). Remove oil wick from center of cam, remove spring lock from upper end of shaft (below wick in cam), lift cam out. Disconnect and remove weight control spring from cam, unhook both weight springs from anchor posts, lift advance weights out. Remove cam spacer from shaft. Drive out pin in collar at lower end of shaft, press shaft out of collar and housing. Remove upper and lower thrust washers.

OVERHAUL: Replace housing and bushings or install new bushings when shaft sideplay exceeds .005". Fit new bushings to .0005" maximum clearance. Use special tool (Auto-Lite LH-222) when installing upper bushing to insure proper positioning of the bushing in the housing bore and drill the oil feed hole at the oiler location through the bushing. Soak both bushings in engine oil for 15 minutes and drain before installing shaft. Shaft endplay should be .003" minimum, .010" maximum (with shaft collar riveted in place).

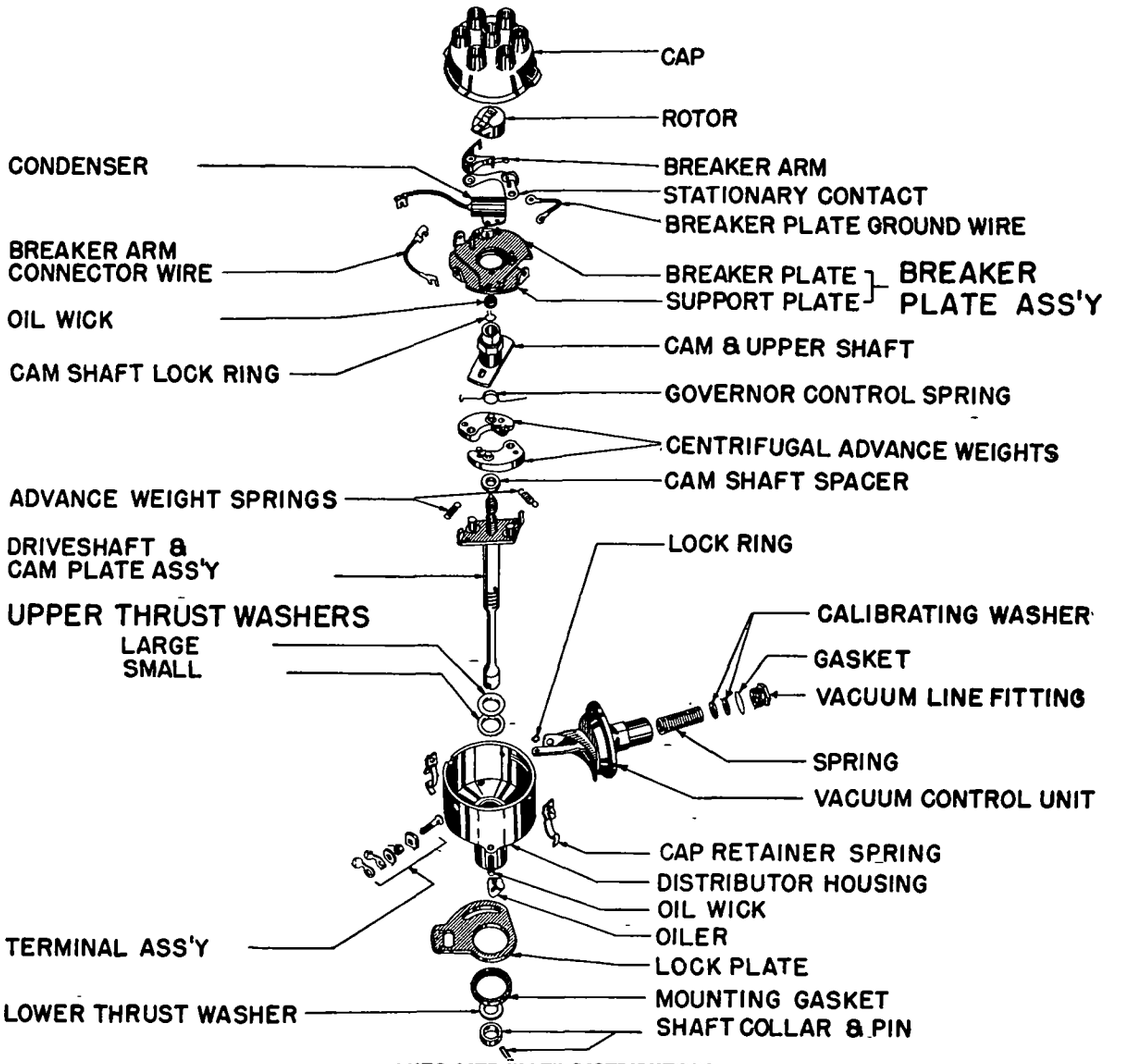

AUTO-LITE "IAT" DISTRIBUTORS

REASSEMBLY: Install all parts in reverse order of disassembly data above and note the following important points:

Lubrication—When assemblying parts, place a small amount of grease in bearing bore just above bearing and apply light film of grease to upper drive shaft washer, lubricate advance weight mechanism sparingly with medium engine oil, place one drop of light oil on each of the breaker plate support bearings and on pivot bearing (press on retainer spring under support plate to expose slight gap between spring and washer and apply drop of oil to washer). After assembly completed, place one drop of light oil on breaker arm pivot pin (operate arm several times, then remove excess oil), place 5 drops of medium oil on felt in center of cam and 3-5 drops in oiler on side of housing, apply light film of grease to breaker cam.

Cam & Advance Weight Installation—After advance weights and weight springs installed, install weight control spring on cam plate, position the cam on the shaft so that flat on cam is on same side as thicker portion on end of drive shaft and free end of weight control spring is against driving lug so that spring is under tension. Install spring lock on upper end of drive shaft to retain cam.

VACUUM CONTROL UNIT: Disassembly is limited to removal of the vacuum line fitting which will permit withdrawal of the calibrating washers and spring. Performance is controlled by the number and thickness of these calibrating washers which are furnished in thicknesses of .010", .032", .065". When reassembling unit, use **same number and thickness of washers as were removed.**

AUTO-LITE "IAR" & "IAP" DISTRIBUTORS

"IAP" & "IAR" CAP POPPING OFF CORRECTION

►**DISTRIBUTOR CAP POPPING OFF CORRECTION (Early "IAP" & "IAR" Distributors):** May be caused by one or both of the following conditions and can be corrected as indicated:

Distributor Cap Hold-down Spring Clips Incorrectly Formed—Lip at upper end of spring clip fitting into recess in cap may have too large a radius to permit spring to seat securely in cap recess. Correct by pinching the spring together at the end.

Ruptured Vacuum Control Unit Diaphragm (allowing fuel vapor to collect in distributor and blow cap off when ignited by spark)—Install new vacuum control unit and make certain that mounting bracket has ventilating hole on underside (see illustration). If bracket does not have this ventilating hole, **drill a 5/32" hole at this point.**

NOTE—This ventilating hole provided in production on later distributors.

DISTRIBUTOR PRODUCTION CHANGES

►**DISTRIBUTOR DRIVE SHAFT & CAM PRODUCTION CHANGE (All Distributors listed below):** A change was made in the following parts from staked to welded construction: **Drive Shaft & Weight Plate Assy.** and also **Distributor Cam Assembly.** Both type parts will be found in service and are interchangeable providing that correct washers (and anti-rattle spring in some cases) are used as listed below. When installing above parts, determine type of construction by inspection and select proper washers for use with these parts as follows:

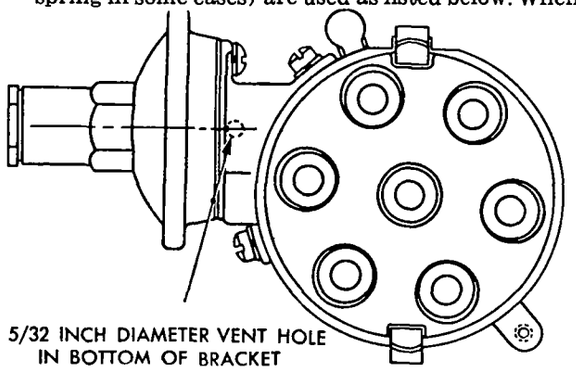

DISTRIBUTOR VENT HOLE LOCATION

Thrust Washer Below Weight Plate①

Distributor	Staked Shaft	Welded Shaft
IGC, IGS, IGT, IGW	IG-90	IGS-104
IGB, IGC, IGP, IGR, IGS, IGT	IGB-162	IGS-104
IGW	IGW-46	IGS-104

Thrust Washer Above Weight Plate②

IGC, IGP, IGR, IGS, IGT	IGK-26	IGS-99
IGW	IGW-36	IGW-92
IGW	IGW-59	IGW-92

Anti-rattle Spring

L.H. (all)	IGE-36	IGT-69
R.H. (all)	IGE-35	IGT-70

①—Between distributor base and weight plate on shaft.

②—Between weight plate on shaft and cam assembly.

Staked Cam & Welded Shaft—When installing welded shaft in distributor with staked cam, change both washers as indicated above.

Welded Cam with Staked or Welded Shaft—Change anti-rattle spring (if used) as indicated above.

CAM ANGLES

BREAKER POINT CAM ANGLE

CAM ANGLE (or DWELL): Cam Angle is the term used to indicate the number of degrees the distributor cam turns while the contact points are closed, during the ignition function for one cylinder of an engine. On a six cylinder distributor 60° covers the ignition function for one cylinder (1/6 of 360°), on an eight 45° (1/8 of 360°). On the six with a 36° cam angle this means the points are closed 36° (of the 60°) and open 24°. *See Diagram.* With the distributor in good condition the manufacturers specified point gap clearance provides the necessary cam angle for good coil operation throughout the speed range. Correct point closed period (cam angle) is important because it governs the time allowed for current to saturate the coil, which in turn governs coil output. As the speed of the engine increases the closed period time is also shortened, resulting in a weaker spark at high speeds. Although the coil output drops at high speeds there is sufficient spark strength to cover the engine requirements **providing the point gap and cam angle are set correctly.** At high speeds compression pressure tapers off due to decreased volumetric efficiency, and the weaker spark is still sufficiently strong enough to operate the engine satisfactorily.

Changing the Cam Angle—Increasing the point gap setting decreases the cam angle, and vice versa. Worn distributor parts causing sloppy point action also decreases cam angle.

Checking Distributor Condition with the Cam Angle Meter—Cam angle readings should not vary over 2° when the engine is accelerated from idle to high speed. A greater variation indicates worn distributor parts, high resistance, weak breaker arm spring, sloppy breaker plate bearings, etc.

Setting Point Gaps—Setting points with a cam angle meter, disregarding gap clearance is not recommended due to the many variables affecting cam angle readings. Point gaps must be set within the manufacturers specified limits. Using a dial gauge clamped to the distributor housing with the dial pointer (in line with the contacts) resting on the breaker arm, is the most accurate method of measuring gap clearance. Feeler gauges can also be used, but are not as accurate as the dial gauge.

AUTO-LITE

AUTO-LITE CONTACT GAP SETTINGS: Auto-Lite contact gap settings generally include a range such as .013-.017". The preferred setting in this case would be .015". Where one figure only (for example .017") is given, this is the preferred setting. A .002" plus or minus deviation from this setting is permissible, to allow for distributor wear.

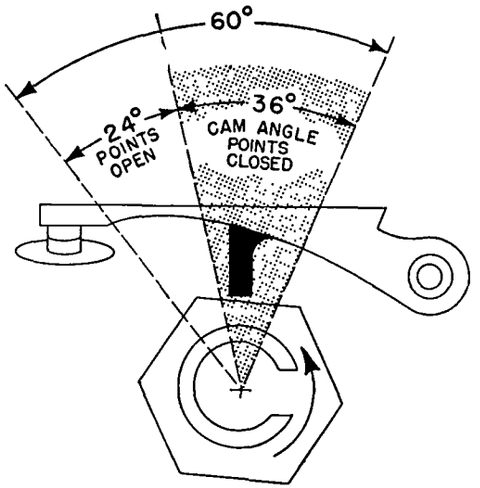

TYPICAL 6 CYL. CAM AN LE

Installing New Points—To allow for wear-in of the breaker arm rubbing block an additional .002" wider gap (over the preferred setting) is recommended, when installing new points.

DELCO-REMY

CAM ANGLE: For greater accuracy Delco-Remy specifies a Cam Angle Range to be used in checking distributors. This cam angle varies with different distributors although the point gap setting may be the same.

Delco-Remy Cam Angle Specifications are listed as specifications "A"-"B"-"C"-"D"-"E" covering the different distributors. The following table is used:

Spec.	Point Setting	Cam Angle Range
"A"	.022"	31°-37°
"B"	.022"	25°-34°
"C"	.016"	21°-30°
"D"	.022"	27°-37°
"E"	.016"	16°-23°

►**Point Settings**—***The point settings given in the table are not the operating settings of the points, but are used for test purposes only.***

The cam angle range shown in the table is broad enough to cover the variables affecting cam angle readings. The cam angle range shown is a test setting. With the specified point setting shown in the table the cam angle should be within the range shown in table.

►***Distributors that are set to the test point setting, and do not fall within the cam angle range specified should be removed and checked on a distributor testing machine for worn parts, weak breaker arm springs, high resistance, etc.***

►***It is most important that the operating point gap be within limits specified by the manufacturer.***

CHRYSLER, DESOTO, DODGE KICK-DOWN SWITCH

►**Carter Kickdown Switch Parts Change (for Improved Performance):** Set of switch parts for improved operation furnished by Carter as Unitized Package No. 195-47U and should be used when reconditioning Carter carburetors (except E7L4).

►**1949 Dodge Kickdown Switch Change for Improved Transmission Performance (Carter D6M1 & Stromberg BXVES-3 Code 3-95 & 3-95A Carburetors):** Kickdown Switch springs furnished which raise kickdown speed limit from 40-43 MPH. **Carter and Stromberg spring not interchangeable** but can be identified as follows:

Carter—No. 61-399 (Dodge 1320082). Wire diameter .400", marked by blue dye (Stromberg spring also blue but lighter wire).

Stromberg—No. 385162 (Dodge 1320081). Wire diameter .350", marked by blue dye (Carter spring also blue but heavier wire). Spring free length 1 5/16". **This spring used in production on Code 3-95B carburetors.**

►***CODE 3-95C & LATER CARBURETOR CAUTION***—These carburetors have new type uncolored spring (free length 1⅜") **and should not be changed.**

►***CARTER CARBURETOR KICKDOWN SWITCH CAUTION—(Except Chrysler V8).*** Kickdown piston spring has been carefully calibrated to provide 40-45 MPH. lockout.. DO NOT STRETCH OR DISTORT. One or two fiber washers may be found in piston spring cavity. The addition of each washer raises kickdown speed approximately 2 MPH. DO NOT USE MORE THAN A TOTAL OF THREE WASHERS.

DESCRIPTION & OPERATION: *See complete "Chrysler-DeSoto-Dodge-Plymouth Kickdown Switch" in previous release.*

DELCO-REMY AUTOMATIC DRIVE

NASH MODELS	Starter	Drive Assy.
Rambler (1950)	1109459	1915041
Rambler RHD. (1950)	1109461	1915041
Rambler & Statesman (1951)	1109463	1917888
Rambler & Stsmn. RHD (1951)	1109464	1917888
Statesman Hydra-Matic (1951)	1109465	1917948

DESCRIPTION: Delco Remy Automatic Drive operates on the principle of a screw shaft drive, as used on Bendix Drive. The pinion is spring loaded, and if tooth abutment occurs, continued rotation of the armature results in the pinion turning and meshing with the flywheel teeth. By this method cranking motor force is not applied against the face of the teeth until pinion is in cranking position. When pinion reaches cranking position, the spring-loaded detent plunger in the threaded sleeve drops into place and locks the pinion in this position. The starter armature drives the pinion through the drive spring in the threaded sleeve which absorbs the shock of engagement. When the engine starts to fire, the starter is driven at increased speed and at 4000 RPM. the centrifugal force lifts detent plunger out of engagement to unlock the pinion. The pinion moves out of mesh with the flywheel ring gear and in the "at rest" position the jaw on the pinion assembly comes up against the jaw on the stop collar.

INSTALLATION OR REPLACEMENT DRIVE: Furnished as a completely assembled unit ready for installation. Remove old drive by prying lock ring out of groove in stop collar and pushing pin out far enough to clear armature shaft (on first drives without this lock ring, pin is staked in place and must be driven out), then slide drive off shaft. Clean armature shaft thoroughly, coat shaft with film of 5W engine oil (if 5W not available use 10W plus 10% kerosene). Make certain that thrustwasher in place on shaft. Pry lock ring out of groove on new drive, slide pin out to clear shaft hole, install new drive on armature shaft, push pin through armature shaft hole (if pin tight, rotate shaft 180° and insert pin through opposite end of shaft hole), install lock ring. Rotate pinion into cranking position and check for proper operation of detent plunger (pinion should be locked in this position by plunger). Check and adjust endplay as follows:

Drive Endplay: .010-.035". To check endplay with pinion in cranking position (locked by detent plunger), pull pinion firmly back toward barrel until all endplay is taken up, measure clearance between end of pinion and face of thrustwasher with a feeler gauge. If clearance not .010-.035", remove drive and install service thrustwasher of correct thickness. Thrustwashers furnished as follows: No. 1914999 (.062" thick), No. 1917886 (.041" thick).

DISASSEMBLY: Pry lock ring out of groove in stop collar and push pin out far enough to clear armature shaft (on first drives without this lock ring, pin is staked in place and must be driven out), slide drive assembly off armature shaft. Pull pin out and remove stop collar. Slip end of return spring from notch in head of screw sleeve, thread the screw sleeve in a clockwise direction out of the pinion spring and collar assembly. Disengage the return spring from the hole in the threaded sleeve. This completes the disassembly.

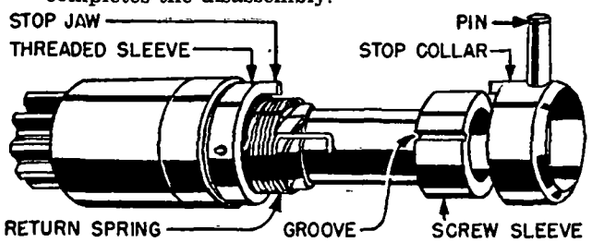

DELCO-REMY STARTER DRIVE

REASSEMBLY: Install the short end of the return spring in the locating hole of the threaded sleeve. Align the milled groove in the threads of the screw sleeve with the detent plunger on the threaded sleeve, rotate screw sleeve in a countr-clockwise direction until it locks against the detent plunger, lift detent plunger, continue to rotate screw sleeve until it bottoms in the threaded sleeve. Rotate free end of return spring in direction to tighten spring until end lines up with groove in screw sleeve, engage spring end in groove, install stop collar on sleeve (will lock spring end in place) with stop jaw on collar in line with stop jaw on threaded sleeve, rotate threaded sleeve approximately ¼ turn clockwise to align hole in sleeve and hole in collar, insert pin through one side of collar and into screw sleeve hole (pin and lock ring will be finally installed when drive installed on starter).

Installation Note—See Installation of Replacement Drive above.

CHRYSLER V8 TYPE

DESCRIPTION & OPERATION: Unit is mounted on carburetor throttle body and is vacuum controlled by a limit piston in which is inserted a blocker plate, Switch can be operated only below 40 to 45 MPH. with wide open throttle. Above this speed, vacuum in main venturi moves the piston and blocker plate up, thus limiting travel of plunger so that snap action switch can not operate.

DISASSEMBLY: Remove kickdown push rod plate screws and lift out push rod, spring, metal washer, gasket and plate. Remove the limit piston plug, gasket, limit spring, piston and blocker plate. Take off switch cover and lift off snap action switch and gasket. Clean all parts with solvent and dry with air. Install cleaned piston and blocker plate in cylinder (less spring). Cover opening and shake housing; piston and plate should slide freely.

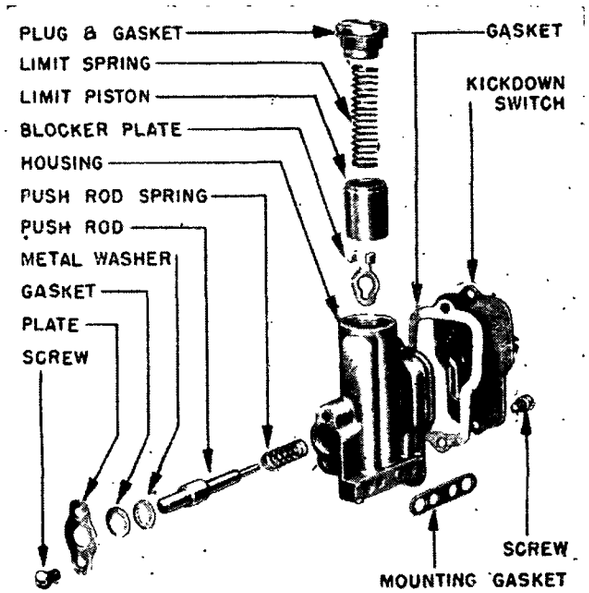

CHRYSLER V8 KICK-DOWN SWITCH

►***CAUTION—Do not distort piston spring.***

REASSEMBLY: Install switch unit, using a new gasget and insert blocker plate in piston and install piston, spring, gasket and plug. Tighten securely. Install kickdown switch plunger, metal washer, gasket, plate and screws. Blow out passages in throttle body and install complete assembly, using a new gasket.

TESTING (After Installation): Connect 6 volt test lamp between switch terminal and negative side of battery. Slowly push plunger in, listening for the "click" of the switch snapping to its closed position. Test lamp should light at same time "click" is heard. If light does not light or plunger requires excessive pressure, replace switch. Road test car to make sure kickdown is operating below 40 MPH. but prevented above 45 MPH.

ANTI-CREEP

Studebaker 1950-51 Models with Automatic Transmission.

►**ANTI-CREEP RELEASE SWITCH NOTE:** On 1950 Commander models, this switch also controls the engine idle speed and is called the "Carburetor Idle Speed Adjustment Screw Switch" (see illustration). On other models, switch is mounted as follows:

Champion—Release switch is mounted on accelerator cross shaft bracket on dash. Switch contacts are closed by the cross shaft lever when accelerator pedal is released (closed throttle), and open when the accelerator pedal is depressed to open the carburetor throttle.

1950 Commander—Release Switch or "Carburetor Idle Speed Adjustment Screw Switch" mounted on carburetor throttle lever and replaces the customary throttle idle speed stopscrew. When accelerator pedal is released, switch contacts are closed and the switch also positions the throttle valve for correct engine idle speed. When the accelerator pedal is depressed to open the carburetor throttle, the switch contacts open.

1951 Commander—Release Switch is mounted on accelerator cross-shaft bracket on dash (similar to Champion).

DESCRIPTION: The Anti-Creep system performs the same function as the Hill-Holder used on earlier models. The system comprises a Solenoid Valve, Pressure Control Switch, and a Release Switch (see Carburetor Idle Speed Adjustment Screw Switch data above). When ignition is on, or when engine is idling and the car is not in motion and the brakes are applied, the rear wheel brakes will remain on, after releasing the brake pedal, until the accelerator is pressed down again. Whenever the car is in forward motion the Anti-Creep system is inoperative and brakes function normally.

OPERATION: The solenoid valve mounted on rear of master cylinder holds brake pressure on the rear brakes whenever the Anti-Creep circuit is closed. The pressure control switch which is operated by automatic transmission rear pump pressure, opens the Anti-Creep circuit when the car is moving forward, and closes the circuit when the car is stationary, or moving in reverse. The release switch opens or closes the circuit as the accelerator is depressed or released. With the ignition "on", the accelerator released (release switch closed), and the car stationary (pressure control switch closed), the Anti-creep circuit is completed through these switches and the solenoid valve is energized. When the brakes are applied under these conditions, the anti-creep solenoid valve will retain approximately 200 pounds per square inch pressure at the rear wheel brakes to prevent "creeping." When the accelerator pedal is depressed, the circuit is open at the idle adjusting screw switch allowing the solenoid to de-energize thereby releasing the brakes instantly. When the car is moving forward, normal brake operation is not affected since the rear pump pressure holds open the Anti-Creep pressure control switch, preventing solenoid from energizing.

CONTROL UNITS REMOVAL & INSTALLATION: If operation not satisfactory and checking indicates units defective, remove and replace as follows:

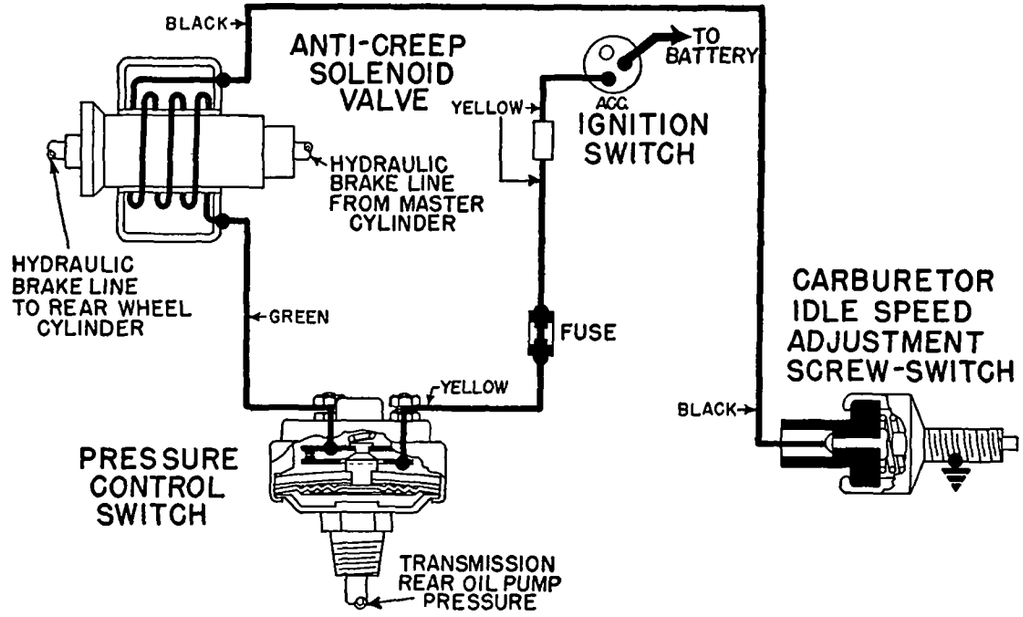

ANTI-CREEP CONTROL UNIT WIRING DIAGRAM

Release Switch: To remove switch, disconnect switch lead, loosen locknut and unscrew switch from accelerator cross shaft bracket on dash (Champion), carburetor throttle lever (Commander).

►***CAUTION—Switch must be adjusted when re-installed on car.***

Pressure Control Switch—To remove, disconnect switch leads, unscrew switch from transmission case.

Solenoid Valve: To remove, disconnect all leads, disconnect brake line at solenoid valve outlet. Take out screw mounting solenoid valve on adapter, lift unit out. Install solenoid valve in same manner.

►***CAUTION—Bleed brakes after installing solenoid valve and connecting brake line.***

ADJUSTMENT: Release switch (Carburetor Idle Speed Adjustment Screw Switch on Commander) is the only point requiring adjustment. Switch is adjusted differently on each model:

Champion Release Switch—Disconnect wire at Release Switch on accelerator cross shaft bracket on dash, hold contact plate on cross shaft lever firmly against end of switch, measure distance from face of contact plate to face of cross shaft bracket. If this measurement not ¼", adjust by loosening locknut and turning switch in or out of bracket, tighten locknut after adjustment completed.

NOTE—If this ¼" clearance cannot be secured by adjusting switch, disconnect accelerator cross shaft-to-transmission rod at transmission end and check pushrod and cross shaft for interference.

Do not bend contact plate or cross shaft bracket to secure correct switch setting.

1950 Commander Carburetor Idle Speed Adjustment Switch—Switch also controls engine idle speed and must be adjusted only with engine warm. With engine warmed up (choke valve wide open, fast idle inoperative), disconnect wire at switch on carburetor throttle lever, place selector lever in Neutral "N" position, turn switch in or out of carburetor lever until engine speed is 500-550 RPM.

1951 Commander Release Switch—After transmission linkage adjustment has been completed, loosen switch locknut and screw the switch into the bracket until switch plunger just contacts the plate. Connect switch wire, turn on ignition, screw switch in until an audible click is heard in the anti-creep solenoid. Tighten switch locknut.

CHECKING OPERATION: With rear wheels stationary, ignition switch on, and the accelerator fully released, depress the brake pedal firmly and release. Rear wheel brakes should now be set, preventing the rear wheels from turning. The rear wheel brakes should release when the ignition key is turned off or the accelerator is depressed.

►**Anti-Creep Fails to Operate**—Make certain that idle speed adjusted to 500-550 RPM. maximum with engine warm, and that throttle return spring returns throttle to its stop when accelerator released. Remove black wire from idle adjusting screw switch. Turn ignition key on. Using an ammeter, check the amperage draw from the black wire terminal to ground. Amperage draw should be between 1.2-2.2 amperes. If no reading is obtained, check the fuse or wiring for open circuit.

CHRYSLER VACU-EASE BRAKE POWER UNIT

Chrysler Six, 8 Pass. Sedan Limousine (1949-50-51)
Chrysler Eight, C46 (1949), C49 (1950)
Chrysler New Yorker C52, Imp. C54 (1951)
DeSoto 8 Pass. Sedan & Limousine (1949-50-51)

►**PRODUCTION CHANGE NOTE:** Two types used
Internal Valve—1949 and early 1950.
External Valve—Late 1950 and 1951.

DESCRIPTION: Internal Valve Type—This unit is similar in construction to the Vacdraulic Power Unit. Primary and secondary cylinders can be removed without disturbing the diaphragm housing, Fluid return system has outside cross-over line.
External Valve Type—The valve housing and cylinder unit are mounted as an assembly on one end of the main diaphragm housing. The valve housing assembly controls the relative air pressures on both sides of diaphragm. Fluid return system built-in.
NOTE—The External Valve Type unit can be used to replace the Internal Valve Type by using an Adapter Kit, Chrysler Part No. 1321149.

ADJUSTMENT: None required.

►*CAUTION:* Repair of the vacuum and air valves in the field is not recommended by the manufacturer, since these parts are specially calibrated.

INTERNAL VALVE TYPE UNIT OVERHAUL: All that is generally required is a minor overhaul as follows. ***Cleanliness is extremely important.***

Disassembly: After removing the unit from the car tape up the air and vacuum connections to keep out dirt. Remove the cross-over line and cylinder end caps. Mount the unit, primary end down, on a box or a short length of 4" pipe. Remove 4 nuts holding the secondary cylinder to housing. Remove cotter pin, fluid check valve ball, spring, and trip rod. Remove the cup retainer washer, secondary cup and spring. Remove the fluid seal with a hook, being careful not to scratch the control piston. Invert the unit and remove the primary cylinder. Remove the snap ring, cup retaining washer, primary retaining cup and piston ring. Using pliers and screwdriver remove the annealed ring from the end of the piston being careful not to damage the ring groove, and remove the seal with a hook. Examine parts for scores, chipping, or out-of-round. Always replace the cups and seals regardless of condition. Cylinders should be mirror smooth. Light scratches can be smoothed out with crocus cloth, but badly scored cylinders must be replaced.
Diaphragm Unit—To examine the diaphragm with the unit disassembled as above, mark both halves of the diaphragm housing, remove the clamp ring and unfasten the housing keys. Maintain pressure on the housing to keep the return spring under control. Housing should be dry inside. If wet with fluid, seals are leaking. Check diaphragm for cracks or leaks. When installing a new diaphragm, fit it snugly to the power piston flange, with the nub on the diaphragm fitting into the locating hole in piston. Connect hose to valve and inlet connections, holding power piston and diaphragm assembly so that locating tab on diaphragm is lined up with the locating slot in housing. This will prevent twisting the hose when assembling. Place housings together and install clamp ring, tapping ring all around with a rawhide mallet to seat ring, tighten all nuts.

Reassembly: Install the secondary end first. Lubricate the control piston and seal with silicone grease

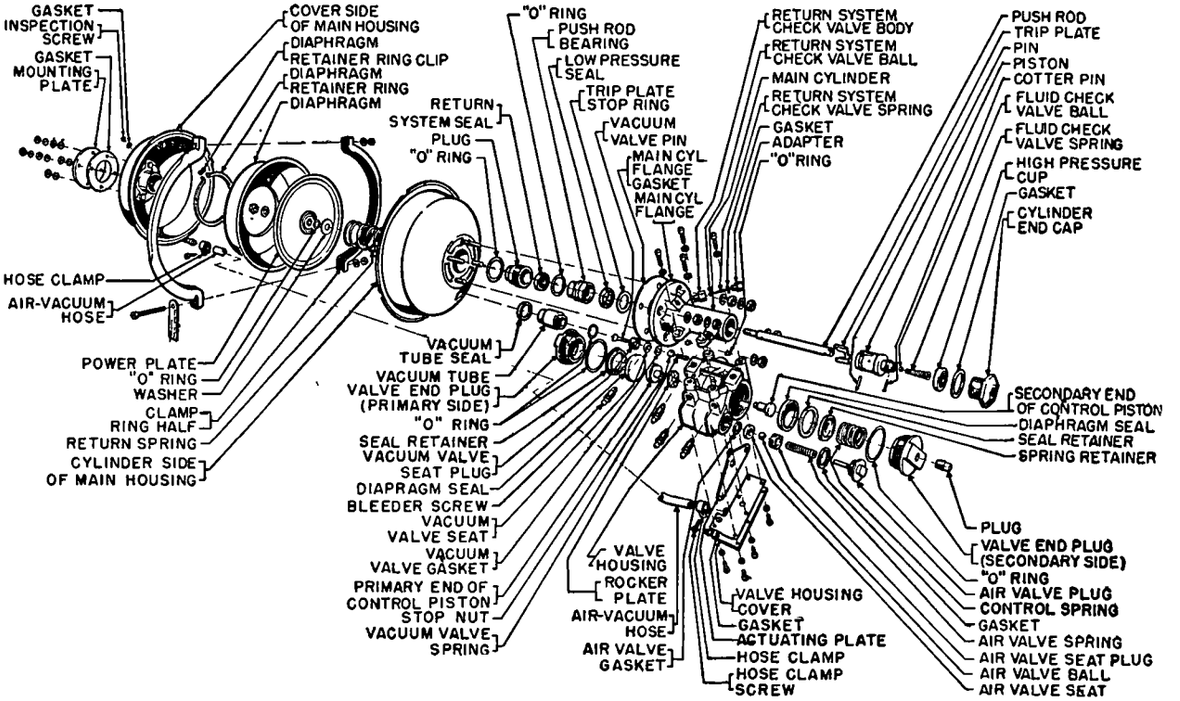

EXTERNAL VALVE TYPE VACU-EASE POWER UNIT

or castor oil. NOTE—The secondary seal has a ¾" inside diameter and the primary seal ½" inside diameter. Install the seal in the cylinder seat with the metal case down, lip up. Slide the piston ring, cup (with lip up), and retaining washer onto the end of the control piston. Drop the valve check ball into the end of the piston and install the ball spring (small end to ball). Install spring retaining cotter pin. Install new cylinder flange gasket, and apply a small amount of brake fluid on the cylinder wall and outer lip of the secondary cup. Install cylinder, aligning the elbow fitting with the inlet tube on housing. Install mounting nuts. Reach underneath and press the power piston up toward the secondary end to align the cylinder. Release the piston and tighten the cylinder nuts evenly to 150 inch pounds torque. Invert the unit and lubricate the piston and seal with silicone grease or castor oil. Install seal, with metal case down (lip up). Install annealed retaining ring in groove, using the minimum amount of pressure possible to close the ring. Install the primary piston ring, cup (with lip up), retaining washer, and snap ring. Lubricate cylinder wall and primary cup outer lip with brake fluid and assemble the primary clyinder as given for the secondary cylinder. Install trip rod in center of the control piston, insert copper gasket, trip rod stop plate, cap copper gasket, and cap. Mount the unit with the cap in the vise and tighten the other end cap to 80 ft. lbs. torque.

EXTERNAL VALVE TYPE UNIT OVERHAUL: After removing the unit from the car, proceed as follows. ***Cleanliness is extremely important.***

Disassembly: Clamp unit in vise (grip four mounting screws). Loosen cylinder end cap and clamp on hose. Remove four Allen head screws holding valve housing to cylinder, and remove housing. Invert the unit, mark both halves of housing, remove clamp ring and disassemble cover side of main housing from cylinder side. Remove hex nut from center of power plate and lift off plate and diaphragm assembly. Remove small "O" ring and washer from end of push rod and remove return spring. Remove the four cylinder-to-main housing nuts, and remove cylinder. Clamp cylinder in vise with push rod end up. Screw special protective "thimble" (included in repair kit) on threads of push rod end, unscrew return system seal retaining plug and remove it. Pull the push rod out of the cylinder. Remove cylinder end cap and examine cylinder walls. Remove light scratches with crocus cloth, and clean with alcohol. Replace badly scored cylinders. Remove cotter pin, fluid check valve ball and spring, and bronze bearing from push rod.

Reassembly: Remove secondary cup from piston being careful not to scratch the anodized aluminum surface, and replace with a new one. Drop check valve ball in piston, install ball spring (small end to ball) and install cotter pin. Lubricate piston and cylinder with brake fluid, insert push rod and piston assembly from cap end of cylinder. Install cylinder cap with new copper gasket, finger tight. Clamp cylinder, push rod end up in vise, and install stop plate washer. Remove primary cup from inside

CONTINUED ON NEXT PAGE

VACU-EASE POWER UNIT (C ntinu d)

bronze bearing, and "O" ring from outside of bronze bearing, and replace with new cup and ring. Lubricate bronze bearing and slide into cylinder over push rod with primary cup down. Press down lightly with thumb. Lubricate inner lip of retaining seal, slide seal and plug assembly over end of push rod. Screw retaining plug into cylinder and tighten. Place cylinder in vise and tighten end cap to 110 ft. lbs. torque. Remove special thimble nut from threads on push rod. Replace "O" ring seal, and cylinder flange gasket between cylinder and main housing. Remove cylinder from vise and assemble to main housing with flat side of cylinder facing the short studs. Install lock washers and nuts and tighten to 150 ft. lbs. torque. Clamp assembly in the vise with push rod end up, and install flat washer first, and a new small "O" ring on end of push rod. Install spring in boss of power plate and press plate and diaphragm down over end of push rod against spring. Secure assembly to push rod with nut and lock washer tightened to 40 inch pounds torque. Assemble the two halves of the housing (lining up marks). See that cross-over tube rests in slot in cylinder side of main housing. Install clamp ring. Tighten clamp ring bolts, being careful to center cross-over line between ears of clamp ring. Pull vacuum tube out of valve housing and replace "O" ring and rubber grommet. Lubricate "O" ring only, and re-install vacuum tube, "O" ring first, into valve housing. Replace "O" rings used between valve housing and cylinder. Reconnect housing hose. Fasten the valve housing to cylinder.

TROUBLE SHOOTING: Brakes do not Release Properly—With engine shut off, pump the brake pedal several times to remove all vacuum from the power unit, and check brakes for release. If still not released crack the line from the master cylinder. If this releases the brakes, the trouble is not in the power unit. If the brakes are not released, crack the line between the power unit and the wheel cylinders. If this releases the brakes, the trouble is in the power unit. This trouble is caused by the fluid check valve not opening. Check the valve ball trip rod operation and ball spring, see that small end of spring bears on ball.

Unit does not Boost—With engine running press the pedal down and listen for a rush of air through the power unit air cleaner. If no rush of air is heard, check if vacuum is present at the unit by disconnecting the line. If no vacuum is reaching the unit, check for plugged line, or defective vacuum check valve (at the engine manifold). If a rush of air is heard at the unit air cleaner when the pedal is depressed and booster still is inoperative, it indicates (on the internal valve type unit) the secondary fluid check valve is not seating. Remove the secondary cylinder and examine the ball check valve. On the external valve type unit this condition would indicate the fluid check valve is not seating. If with engine running, a continuous rush of air is heard without operating the brake pedal it indicates the diaphragm is punctured, or the vacuum hose (internal valve type only) inside unit is leaking. On the external valve type unit it may also be caused by a leaky cross-over line between housing and front cover.

BENDIX HYDRAULIC

Buick, All Series (1950-51)—See Note
Cadillac, All Series (1950-51)—See Note
Hudson 6 & 8, All Models (1950-51)
Nash Ambassador, 5060 & 5160 (1950-51)
Oldsmobile 6 & 8, All Series (1950-51)
Packard, All "2300-5" & "2400" (1950-51)
Pontiac 6 & 8, All Models (1950-51)

►**BUICK 1951 SERIES 70 "SEGMENTED" LINING:** Shoe lining consists of three segments bonded to the shoe (rivited lining on other models). See car model page for lining specifications.

►**CADILLAC 1951 SERIES 60S, 61, 62 "SELF-ADJUSTING" ANCHOR:** Spring-loaded, slipper type anchor used which automatically centers the shoes within the brake drum (see illustration). This anchor automatically compensates for lining wear and no anchor pin adjustment is required.

DESCRIPTION: Single anchor, "No-Eccentric", hydraulic type of same design used on corresponding previous models (except Buick and Cadillac features above).

ADJUSTMENT & SERVICING: *See complete "Bendix Hydraulic Type. Single Anchor (Without Eccentric Adjustment)" in previous release and note the following new specifications and procedures:*

Minor Wear Adjustment: Check and adjust brake pedal clearance (see Brake Pedal Adjustment), release hand brake lever and see that cables are free and are not holding rear brakes on. At each wheel, expand brake shoes by turning adjusting screw up until wheel can just be turned by hand, adjust hand brake (cars where hand brake adjusted with shoes "expanded"—see Hand Brake Adjustment), then back adjusting screw off the number of notches or "clicks" as shown in table below. Check wheel for freedom from drag (if drag noted, tap backing plate to assist centralizing of shoes, then recheck).

Adjusting Screw Setting

Buick	①15 Notches
Cadillac (All '50, 75 & 86 '51)	12 Notches
Cadillac (60S, 61, 62 '51)	16 Notches
Hudson, Nash	14 Notches
Oldsmobile, Packard	16 Notches
Pontiac	14 Notches

①—17 Notches maximum.

Major or New Lining Adjustment: *CAUTION—Different procedures recommended as follows:*

Buick—Turn adjusting screw up to expand shoes until wheel can just be turned with both hands (if wheel off, drum should just turn with long bar). Adjust anchor pin as follows: Loosen anchor pin nut just enough to allow anchor pin to slide in the slotted hole (CAUTION—loosening nut too much will allow springs to tilt the pin), rap backing plate with hammer adjacent to anchor pin to insure pin assuming central position between shoes, tighten anchor pin nut securely, then recheck drag (if this has changed, repeat anchor pin adjustment). Check and adjust hand brake (see Hand Brake Adjustment). Adjust shoe clearance by backing off adjusting screw in wheel 15 notches or "clicks." Wheel should be free of any drag (corret light drag by backing off screw 1-2 notches additional).

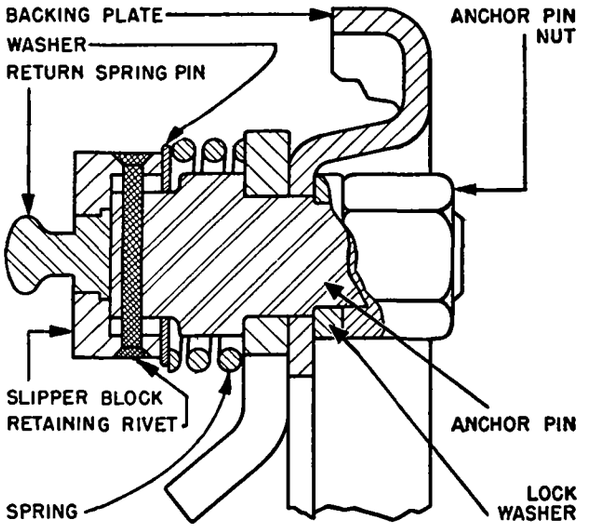

CADILLAC "SELF-ADJUSTING" ANCHOR

Cadillac 60S, 61, 62 (1951) with Self-adjusting Anchor Pin—Same as Minor Wear Adjustment above except that hand brake cables should be loosened at equalizer turnbuckle to insure slack in cables. *Anchor pin on these models does not require adjustment.*

Cadillac (All '50, 75 & 86 '51), Hudson, Nash, Oldsmobile, Pontiac—Insert .015" feeler gauge through slot in drum at point 1½" from adjusting screw end of **secondary (rear) shoe,** turn adjusting screw up to expand shoes until feeler gauge tightly gripped (to move primary (front) shoe out against drum), then back adjusting screw off until only a slight drag is felt on the feeler gauge (will insure .015" clearance at this point). Check clearance at point 1½" from anchor pin end of this same secondary shoe. If .015" feeler does not have equal or slightly heavier drag at this point, adjust anchor pin (see notes below on slotted and eccentric type anchors) for correct .015" clearance at this point, tighten anchor pin nut to 75 ft. lbs. torque. Adjust hand brake, check and adjust brake pedal clearance (below).

Eccentric Anchor Pin—Pin has squared end and can be turned with a wrench after nut has been loosened. Turn pin in direction of forward wheel rotation to decrease shoe clearance. End of anchor pin is beveled and high point indicates high side of eccentric cam. Hold pin with wrench when tightening nut.

Slotted Anchor Pin—Anchor pin hole in backing plate is slotted. To adjust, loosen anchor pin nut and tap pin out toward drum to decrease shoe clearance.

Packard—Check position of anchor pin cam before making adjustments ("high" side of slotted anchor pin must be on rear side of slot—if pin incorrectly assembled, loosen locknut and turn pin 180°). Turn brake shoe adjusting screw up until wheel is

CONTINUED ON NEXT PAGE

BENDIX HYDRAULIC (Cont.)

just locked, then back screw off exactly 6 notches or "clicks." Adjust anchor pin by loosening locknut and turning pin forward or backward until wheel is free, then hold anchor pin from turning and tighten locknut securely. Again turn adjusting screw up until wheel is just locked, then back screw off exactly 16 notches or "clicks" for correct shoe clearance. NOTE—Clearance can be checked by inserting .010" feeler gauge through slot in drum if desired.

Brake Shoe Clearance

Buick	①.015"
Cadillac	②.007-.010"
Hudson, Nash, Oldsmobile	①.015"
Packard	.010"
Pontiac	①.015"

①—At each end of secondary shoe with primary shoe out against drum.
②—Or .015" at each end of secondary shoe with primary shoe out against drum.

Hand (Parking) Brake Adjustment: ***CAUTION—Brake shoes must be expanded on some cars when adjusting hand brake cables. Adjust each car as follows:***

Buick—With rear wheel brake shoes expanded so that wheels can just be turned by hand, place hand lever in fully released position, hold brake lever cable to prevent twisting and tighten nut at rear wheel cable sheave (under torque tube) to remove all slack from cables. Back off brake shoe adjusting screw 15 notches or "clicks" for correct shoe clearance and check wheels for drag.

Cadillac—Do not expand rear brake shoes. Loosen locknut on rod at rear wheel cable equalizer at cross-member on frame, turn up nut on rear end of rod until cables are taut, tighten locknut. Check adjustment by using spring scale hooked to hand brake lever to apply brakes with 50-60 lbs. pull. In this position, measure distance hand lever has traveled from released position which should be 2¼". If not correct, readjust cables at equalizer.

Hudson—With rear wheel brake shoes expanded so that wheels can just be turned by hand, pull hand lever "on" two notches and check clearance between hand brake cable lever and end of slot in lever guide plate on frame cross-member. If this clearance not ⅛", loosen locknut and adjust hand brake cable clevis. Pull each rear brake cable tight and adjust clevis on forward end of cable so that clevis pin can just be inserted with all slack removed from cable. Connect cables, release hand lever, back off adjusting screw in each wheel 14 notches for correct shoe clearance, check brake equalization.

Nash—Do not expand rear brake shoes. Pull hand brake handle "on" exactly 4" (measure from face of bracket to handle). At rear wheel cable equalizer, loosen forward nut and tighten rear nut on hand lever cable fitting until rear brakes are fully applied, then tighten forward nut. Release hand lever and check brakes for freedom from drag.

Oldsmobile—With hand lever in released position, disconnect wheel cables at equalizer link on intermediate lever in frame cross-member, adjust each wheel cable by loosening locknut and turning clevis so that all slack removed from cable and equalizer link is parallel to propeller shaft when cables reconnected. CAUTION—Install clevis pins with heads upward.

Packard—With rear brake shoes expanded so that wheels can just be turned by hand, tighten adjusting nut at rear of cable equalizer on intermediate lever in frame x-member to remove all slack from cables. Back off adjusting screw 16 notches to provide correct shoe clearance, check brakes for freedom from drag.

Pontiac—Check adjustment and equalization by applying brakes with hand lever (brake shoes must not be expanded by adjusting screw). If hand brake lever movement required to lock wheels is more than ⅝", adjust cables as follows: With hand lever released, remove cable equalizer pin and shift pin to correct hole in equalizer so that slack removed from cables (fine adjustment can be secured by loosening clevis nut and turning clevis on forward cable end at intermediate lever). With correct adjustment, clevis pin at equalizer should move up and down with thumb and finger pressure. To equalize brakes, loosen clampscrews at cable spreader (open clamp with screwdriver to permit cable to move), apply brakes several times with hand lever, tighten clampscrews.

Brake Pedal Adjustment: See that pedal has correct clearance or free travel in released position as follows:

Buick—Clearance between pedal shank and underside of toeboard should be 1" with master cylinder pushrod back against its stop.

Cadillac—Rubber grommet on pedal under toeboard should be compressed to not less than ¾" with pedal rod against stop in master cylinder. This will permit ⅛" free play between end of pedal rod and master cylinder piston.

Hudson—Pedal shank clearance at toeboard should be exactly ¼-⅜". Adjust by loosening pedal link clevis nut and turning clevis. See that master cylinder piston rod is against stop after setting pedal.

Nash—¼-½" pedal free travel in released position. Adjust by loosening locknut and turning pedal rod.

Oldsmobile—Sponge rubber bumper on pedal under toeboard should be compressed not more than 3/16" with master cylinder pushrod against stop. Adjust by loosening locknut and turning pushrod.

Packard—¼-½" pedal free travel in released position. Adjust by loosening locknut and turning pedal rod.

Pontiac—Distance from floor mat to underside of brake pedal pad should be 4½" (4⅜" plus ⅛", minus 0) with brakes released and master cylinder pushrod against stop.

Clutch Pedal Adjusting Note—On Synchro-mesh transmission cars, adjust clutch pedal to same height as brake pedal.

Hudson Mechanical Follow-up: Brake pedal pullrod must be adjusted to provide correct "follow-up" action when brakes applied hydraulically.

Brake Pedal Pullrod Adjustment—With brakes released, check clearance between rear side of pedal pullrod slide link retainer pin and the rear end of the slot in the slide link. This distance should be 1¼". To adjust, loosen locknut and turn clevis on forward end of pullrod.

BENDIX (LOCKHEED) HYDRAULIC SELF-CENTERING

Frazer & Kaiser, All Models (1950-51)
Henry J, 4 & 6 Cyl. Models (1951)
Nash, Statesman & Rambler, All Series (1950-51)
Willys, All Models exc. Jeep (1950-51)

DESCRIPTION: "Self-centering" hydraulic type with non-adjustable anchor ramps for each shoe.

ADJUSTMENT & SERVICING: ***See complete "Bendix (Lockheed) Hydraulic Self-centering" Brakes in previous release and adjust as follows:***

Brake Shoe Adjustment (For Wear or New Linings):
►***CAUTION—Brake shoes must be "centralized" by several hard brake applications before adjusting.***
Adjust eccentric for each brake shoe (see Frazer & Kaiser Note below), turn eccentric out until brake shoe firmly applied and wheel is locked, then back eccentric off until wheel just rotates freely without drag. Shoe clearance will then be approx. .010".

►**Frazer & Kaiser Adjustment Note**—Eccentric cams have locknuts which must be loosened before adjustment can be made.

Hand Brake Adjustment: Remove all slack from rear wheel brake cable as follows:

Fraser & Kaiser—With hand lever in released position, back off locknut on front cable end fitting in front of wheel cable connector under car, tighten adjusting nut (back of wheel cable connector) to remove all slack from cables, tighten locknut.

Henry J—Place hand lever in fully released position. Tighten nut on rear end of **front** cable at intermediate lever on frame cross-member until perpendicular distance between front cable and rear cable rod is 4⅝-4¾". Then pull hand lever "on" three notches and tighten rear cable by taking up adjustment nut at cable equalizer on rear end of cable rod until slight drag secured at rear wheels. Release hand lever, check wheels for freedom from drag.

Nash Rambler—Pull hand lever "on" two notches, loosen front nut on adjusting rod at rear cable equalizer, tighten rear nut to remove all slack from cables, then tighten front nut to lock adjustment. Release hand lever and check rear wheels for freedom from drag.

Nash Statesman—Pull hand brake handle "on" exactly 4" (measure from face of bracket to handle). At rear wheel cable equalizer, loosen forward nut, tighten rear nut on front cable fitting until rear brakes are fully applied, then tighten front nut to lock adjustment. Release hand lever and check rear wheels for freedom from drag.

Willys—Pull hand lever "on" three notches, loosen front nut on connecting link between intermediate lever on frame cross-member and rear cable equalizer, tighten rear nut on link until slight drag noted at each rear wheel, then tighten front nut to lock adjustment. Release hand lever and check rear wheels for freedom from drag.

Brake Pedal Adjustment: Adjust master cylinder pushrod by loosening locknut and turning rod for following pedal free travel with master cylinder piston and pushrod back against stop:

Brake Pedal Free Travel

Frazer & Kaiser	½-¾"
Henry J	1-1¼"
Nash Rambler & Statesman	¼-½"
Willys	½" min.

CHEVROLET BENDIX HYDRAULIC

Chevrolet, All Pass. Car Models (1951)
Chevrolet Half-Ton Truck, Model JP (1951)

DESCRIPTION: Duo-servo, single anchor, hydraulic type (Bendix type **without** eccentric adjustment). Hand (parking) lever applies the rear wheel service brakes through a cable linkage connected to a lever-and-strut mechanism in the rear wheel brakes.

►**ADJUSTMENT NOTE**—Adjustments are made differently for wear (Minor Adjustment) and for new lining or shoe assemblies (Major Adjustment). Major adjustment should also be made whenever a minor adjustment does not give satisfactory brake operation.

MINOR ADJUSTMENT (For Wear): Jack up all four wheels clear of the floor, remove adjusting hole cover on backing plates (spring snap cover—pry out). Relieve parking brake cable tension to insure brake shoes being up against anchor (On Pass. Cars, loosen front check nut on forward end of each wheel cable; on Half-Ton, disconnect cables by removing clevis pins). At each wheel, insert special adjusting tool J-4707 or screwdriver through adjusting hole to engage notched adjusting screw, expand brake shoes by turning up adjusting screw (move tool handle toward center of wheel) until light brake drag secured, then back off adjusting screw 14 notches or "clicks" for running clearance. Adjust parking brake, check and adjust brake pedal clearance or free travel.

MAJOR ADJUSTMENT (For New or Relined Shoes): Support car on stands and remove all four wheels (for access to clearance checking slot in drums). Check and adjust brake pedal clearance or free travel. Relieve parking brake cable tension to insure brake shoes being up aaginst anchor (On Pass. Cars, loosen front check nut on forward end of each wheel cable; on Half-Ton, disconnect cables by removing clevis pins). At each wheel, loosen anchor pin nut just enough to allow pin to shift in slotted hole (CAUTION—if nut loosened too much, brake springs will tilt pin). Use adjusting tool J-4707 or screwdriver inserted through adjusting hole on backing plate to expand shoes (move tool handle toward center of wheel) until heavy drag secured on drum. Tap anchor pin and backing plate lightly to insure pin shifting to center the brake shoes. If this changes brake drag, tighten adjusting screw several notches and repeat tapping on anchor pin. When drag remains constant, tighten anchor pin nut securely. Back off adjusting screw **10 notches** or "clicks," check clearance at each end of secondary (rear) shoe with .010" feeler gauge inserted through slot in drum. If clearance not equal at both ends of shoe, tap anchor pin up or down to equalize clearance, then tighten anchor pin nut to 60-80 ft. lbs. Install wheels. At each wheel, tighten brake adjusting screw until light brake drag secured, then back adjusting screw off 14 notches or "clicks" for correct running clearance. Adjust parking brake cables. Test brakes.

HAND (PARKING) BRAKE ADJUSTMENT: *CAUTION —Pass. Cars and Trucks adjusted differently:*

Pass. Cars—Pull hand brake handle "on" 7 clicks of the pawls (CAUTION—this is not 7 notches). Loosen both check nuts at forward end of each wheel cable, tighten front nuts against clevis plates to tighten each cable until moderate drag secured at each rear wheel, tighten rear nuts securely to lock adjustment. Set hand brake handle 2 clicks from fully released position. No brake drag should be noticed in this position.

Half-Ton Truck—Set parking brake foot pedal in fully released position. Adjust pedal pull rod clevis so that clearance between brake cross-shaft and frame cross-member at center is ⅛". Depress foot pedal 1½". Pull each wheel cable forward out of the conduit as far as possible, loosen locknut and adjust clevis on forward end of cable until hole in clevis lines up with hole in cross-shaft outer lever, connect cables. Depress foot pedal until heavy drag noted, check both wheels for equal drag, readjust wheel cable clevis as necessary. Release foot pedal, check clearance between release rod handle and rod support bracket. This clearance should be ½", correct by adjusting handle.

BLEEDING BRAKE SYSTEM: *See complete "Hydraulic Brake Servicing" in previous release.*

BRAKE SHOE REPLACEMENT: Bonded linings used. Factory bonded shoes recommended for replacement.

Removal: Loosen or disconnect parking brake cables. Remove brake drums. Unhook brake shoe retracting springs from anchor pin (KM0526 tool), remove brake shoe hold-down pins and springs (J-4712 tool). Spread shoes to free them from wheel cylinder connecting links, lift shoe assembly off (CAUTION—stops on backing plate will prevent wheel cylinder pistons coming out but brake pedal must not be depressed with brake drum off). Remove adjusting screw and spring to separate shoes. Remove parking brake strut, remove parking brake lever from secondary (rear) shoe of rear wheel brakes.

Installation: On rear wheels only, lubricate parking brake cables, lubricate fulcrum end of parking brake lever and bolt with Lubriplate or brake lube, mount lever on secondary (rear) shoe and make certain that lever moves freely. Lubricate adjusting screw threads and socket end, assemble adjusting screw and spring on shoes (CAUTION—adjusting screw and socket must be adjacent to primary or front shoe on **left side**, adjacent to secondary or rear shoe on **right side** for correct alignment with adjusting hole in backing plate). Install shoe assembly on backing plate, engage shoes with wheel cylinder connecting links, and connect hold-down pins and springs (CAUTION—Primary shoe which has **shorter lining** must be toward front of car). On rear brakes, connect cable to parking brake lever and install strut between lever and primary shoe as shoes are installed. Install brake shoe retracting springs (CAUTION—use new springs if old springs nicked, distorted, or weak). Pull shoes away from backing plate and lubricate contact surfaces with thin coat of Lubriplate or brake lube. After drums installed, make Major Adjustment (see above).

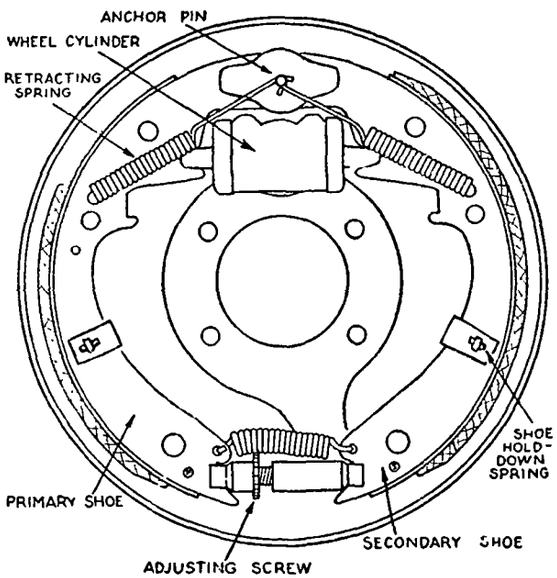

FRONT BRAKE ASSY.

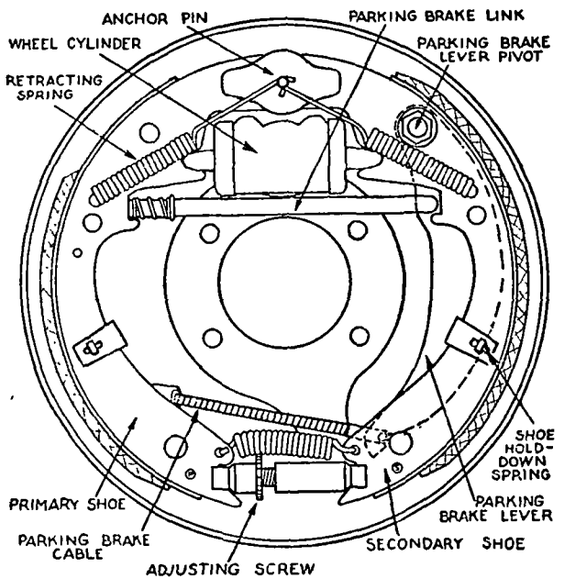

REAR BRAKE ASSY.

CHEVROLET TWINPLEX

Chevrolet 1½ & 2 Ton Truck (1951)—Rear Only.

►**FRONT WHEEL BRAKE NOTE**—Front wheel brakes are same Chevrolet-hydraulic type used on previous models.

DESCRIPTION: "Twinplex" hydraulic brakes are two-cylinder, four-anchor type (each shoe anchored at each end and linked to wheel cylinder at each end). All shoes are radially self-centering and self-energizing for both forward and reverse wheel motion. Wheel cylinders are double-acting type and are mounted vertically (one at front and one at rear of brake assembly) and are connected together by a hydraulic line. Brake shoes are mounted above and below wheel cylinders with each end linked to the wheel cylinder pistons. Each shoe has one primary or sliding pivot anchor and one secondary or adjustable anchor, and **two different pull back springs** (see illustration).

ADJUSTMENT: Each shoe has one adjustment (adjusting screw at adjustable anchor end) and adjustment is the same both for wear and for new or relined shoe clearance.

Brake Shoe Adjustment: Jack up both rear wheels, remove adjusting hole covers from backing plates (two holes at each wheel—one for each shoe). Use tool J-4707 or screwdriver inserted through rear (lower shoe) adjusting hole and turn adjusting screw up (move outer end of tool toward center of wheel) until light brake drag is felt on wheel, then back adjusting screw off 3 notches or "clicks" for correct running clearance. Adjust upper shoe similarly by inserting tool through front adjusting hole.

Brake Pedal Adjustment: Pedal clearance or distance between top of pedal arm and underside of toeboard should be 13/16" with pedal released and master cylinder piston against its stop. To adjust, loosen locknut at pedal clevis and turn master cylinder pushrod (knurled section provided on rod ahead of the boot).

Hand (Parking) Brake Adjustment: Independent type on propeller shaft at rear of transmission. *See Chevrolet Special Data in car model section.*

BLEEDING BRAKE SYSTEM: ***CAUTION—Pressure Bleeder Tank should be used and following procedure should be followed:***

1) Back off adjusting screw on upper shoe of both rear wheel brakes all the way.
2) Fill master cylinder reservoir to top of filler plug opening, connect pressure bleeder to main cylinder, maintain 20 lbs. air pressure on tank during entire bleeding operation.
3) Bleed the system at **each of the following points in order** until all air bubbles disappear (use bleeder tube with end submerged in fluid in bleeder jar). NOTE—Omits steps 4, 5, 12 and 13 **if Hydrovac Power Unit not used.**
4) Bleed Hydrovac hydraulic (slave) cylinder at bleeder valve on outlet fitting to which the wheel cylinder line is attached.
5) Bleed Hydrovac control valve at bleeder valve on control valve housing.
6) Bleed **rear** wheel cylinder in left rear wheel.
7) Bleed **front** wheel cylinder in left rear wheel.
8) Bleed wheel cylinder in left front wheel (one only).
9) Bleed **rear** wheel cylinder in right rear wheel.
10) Bleed **front** wheel cylinder in right rear wheel.
11) Bleed wheel cylinder in right front wheel (one only).
12) Repeat step 4 (bleed Hydrovac slave cylinder).
13) Repeat step 5 (bleed Hydrovac control valve).
14) Adjust upper brake shoe in each rear wheel (see Adjustment), make several hard brake applications to centralize shoes, then readjust all brake shoes.
15) Depress brake pedal with 75 lbs. pressure and check pedal clearance or distance from toeboard to underside of pedal pad in this position. Clearance should be not less than 3½". If pedal clearance less than 3½", repeat entire bleeding procedure.

BRAKE SHOE REPLACEMENT: Brake linings are riveted type and can be installed in the field after shoes have been removed.

Removal: Support rear end of truck on stands, remove rear wheels, back off adjusting screw for each shoe (two per wheel), remove brake drums by taking out 3 retaining screws on face of drum. Disconnect and remove all shoe pull back springs, remove hold-down nut on washer on web of each shoe. Disengage shoes from wheel cylinder links and lift shoes out.

►***CAUTION—Stops on backing plate will prevent wheel cylinder pistons from coming out but brake pedal must not be depressed when drums are off.***

Installation: Lubricate shoe primary (sliding pivot) anchors and all shoe bearing surfaces on brake flange plate with light film of Lubriplate or Brake Lube. Install shoes, engaging ends of shoes with anchors and slotted ends of wheel cylinder links, and making certain that hold-down bolt enters hole in shoe web. Lubricate hold-down bolts and washers lightly with Lubriplate or Brake Lube, install washer and nut on each hold-down bolt and tighten nuts loosely. Install shoe pull back springs (*CAUTION*—see illustration and Note below for correct spring installation). Tighten each hold-down bolt nut until clearance between edge of shoe and contact face on flange plate is .010" (measure with feeler gauge). Install brake drums and adjust brakes (see Adjustment).

►**Brake Shoe Pull Back Spring Note**—Different spring used at each end of shoe and springs must be installed correctly:

Spring at Primary (Sliding Pivot) Anchor End of Shoe—10¾ coil, 90 lb. type, painted BLACK for identification, with LARGE hook at shoe end of spring. Install spring with this **large hook engaging small hole** in shoe web.

CAUTION—This spring must not be engaged in larger manufacturing hole in web adjacent to proper spring hole.

Spring at Secondary (Adjustable) Anchor End of Shoe—11¼ coil, 70 lb. type, painted GREEN for identification, with SMALL hook at shoe end of spring. Install this spring with this smaller hook engaging the large hole in the shoe web adjacent to the shoe adjusting wheel.

►***CAUTION—Interchanging springs or incorrect installation will result in uneven brake shoe wear and unsatisfactory brake operation.***

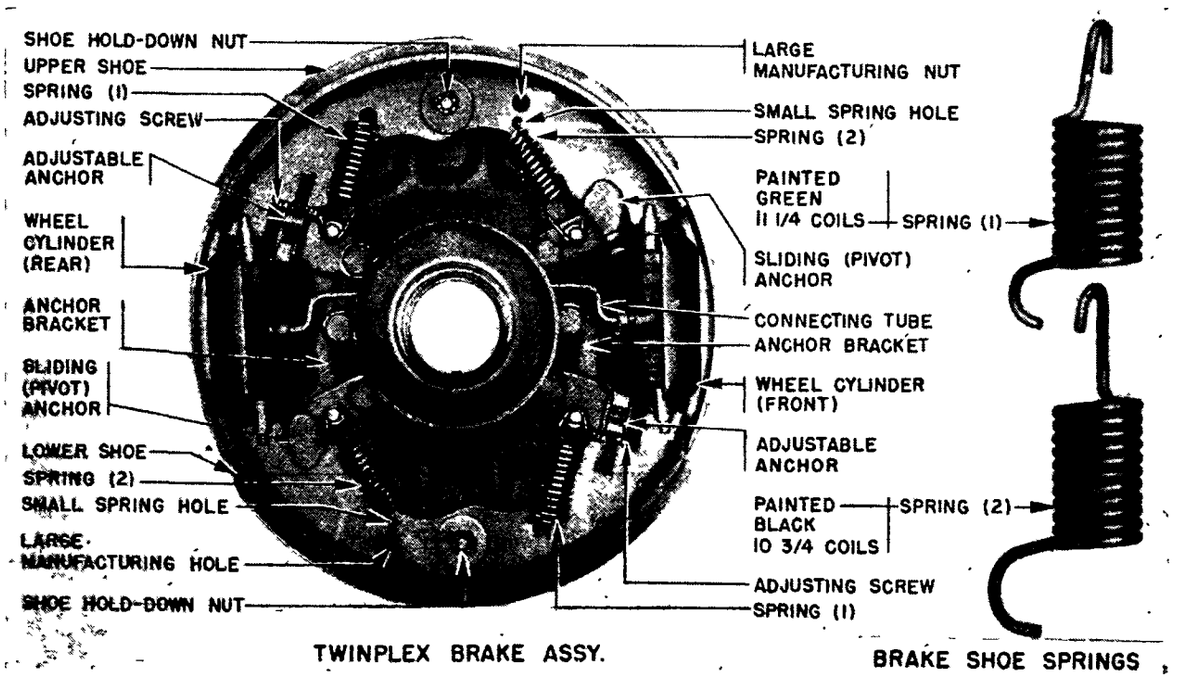

CHEVROLET TWINPLEX BRAKE ASSY.

CHEVROLET (OWN) HYDRAULIC

All Pass. Car Models (1950)①
Half-Ton Truck Model HP (1950)①
All 3/4, 1, 1½, 2 Ton Trucks (1950-51)②
①—New Bendix-Chevrolet Brakes used on 1951 models.
②—Front wheels only on 1951 1½ & 2 Ton (new Twinplex Brakes on rear wheels).

►**TRUCK BRAKE BOOSTER NOTE:** Hydrovac Power Unit is Std. or Optl. on 1½ Ton and 2 Ton Trucks. *See "Hydrovac Power Unit" in previous release.*

DESCRIPTION: Two-shoe, hydraulic type of same design as used on corresponding previous models.

ADJUSTMENT, RELINING BRAKES, & SERVICING: *See complete "Chevrolet Hydraulic" Brake in previous release and adjust brakes to following specifications:*

Brake Shoe Adjustment: Turn eccentric adjusting wheel for each shoe (on ends of wheel cylinder accessible through slot in backing plate) up until brakes drag slightly, then back wheel off **4 notches (Pas. Cars), 5 notches (Trucks)** for running clearance. On Truck rear wheels, with adujsting pinion shaft on backing plate, turn hexagonal head of shaft clockwise until shoe drags slightly, then back shaft off ⅔ **turn** (four sides of the hexagonal head) for running clearance.

Hand (Parking) Brake Adjustment: Remove all slack from cable as follows:

Pass. Cars—Place hand lever in fully released position, loosen check nut (rear nut) on cable end fitting at idler lever on frame cross-member, pull wheel cable forward out of conduit until a positive stop is felt, hold cable and tighten forward nut against clevis plate, tighten rear check nut. Check rear brakes for freedom from drag and equal braking.

Half-Ton & ¾-Ton Truck—This pedal-operated brake adjusted in same manner as other trucks (below) and release rod handle (under instrument panel) must be adjusted for ½" minimum clearance at support bracket.

Other Trucks—Place hand lever in fully released position, disconnect rear wheel cables at cross-shaft levers on frame by taking out clevis pin, loosen lock nut, pull cable out of conduit by hand until a positive stop is felt, adjust clevis on cable end, tighten locknut and install clevis pin.

Brake Pedal Adjustment: 7/16" (Pass. Cars), 13/16" (Trucks) clearance between pedal shank and bottom of toeboard depression at pedal with brakes released and master cylinder pushrod against its stop. Adjust as follows:

Pass. Cars—Loosen check nut on eccentric pedal bolt, turn bolt, tighten check nut to 20-25 ft. lbs.

►*CAUTION*—If correct 7/16" clearance cannot be secured by turning eccentric bolt, adjust by installing shims under front or rear master cylinder mounting bolts.

Trucks—Loosen locknut at pushrod clevis, turn pushrod (knurled section provided on rod for adjustment), tighten locknut.

LOCKHEED-CHRYSLER "SAFEGUARD"

Chrysler Six, All Models (1950-51)

Chrysler Eight, C-49-1 & C-49-2 (1950)

Chrysler Eight, C-52 & C-54 (1951)

DeSoto, All Models (1950-51)

Dodge, All Models (1950-51)

Plymouth, All Models (1950-51)

►**BRAKE SQUEAK & SQUEAL CORRECTIONS:** On all models, if this condition cannot be corrected by proper adjustment of the brakes, check the following points and note also the specific recommendations for each car model. It is recommended that both front wheels be checked first as it has been found that only front wheels squeak in most cases. **Brake Shoe Alignment**—Check brake shoes for distortion and twisting and for straightness of the shoe web (use a surface plate). Correct or replace shoes.

Brake Shoe Clearance at Cam Pin—Incorrect clearance between brake shoe and eccentric cam pin will cause misalignment of shoe with consequent wear on edge of lining and squeaking and vibration as brakes are applied. Too little clearance (long cam pin) will result in wear on **inner** edge of lining, too much clearance (short cam pin) will result in wear on **outer** edge of lining. Check the cam pin height (Brake Shoe Adjusting Gauge can be adapted to this purpose). Top of pin should be same height as flat surface at rear of wheel cylinder (front brakes), face of flat spacer under anchor bolt (rear brakes). If pin is too high, file off head of pin or "dimple" shoe web (see Notes below) for clearance. If pin too low, "dimple" shoe web in opposite direction (see Notes below) or bend spring guide outward to relieve pressure on shoe (CAUTION—spring tension must not be less than 15 lbs. measured with spring scale).

"Dimpling" of Brake Shoe for Pin Clearance—Support shoe web on end of pipe or wrench socket (at point directly over cam pin), strike web with ball end of ball peen hammer. Dimple side next to cam pin for increased clearance, opposite side for decreased clearance.

Dodge Insulating Washer Installation for Cam Pin Clearance—Install special insulating washer over head of cam pin to support shoe web so that shoe does not contact pin (file pin if contact is apparent). When making height gauge readings, use face of washer as indicating point rather than top of pin. Readings should be from zero to minus .020" (support plate can be bent to secure this height).

Grooving Brake Lining (Chrysler & Dodge)—If above procedures do not correct squeaks (make certain that brake drum dampener springs are in place also), lining can be grooved to secure more perfect contact between lining and drum as follows: Clamp brake shoe in vise, scribe diagonal line on face of lining beginning at point ⅞" in from side at one end and ⅞" from opposite side at opposite end. Cut groove approximately .050" wide (use two fine hacksaw blades clamped together in holder) completely through lining to face of brake shoe.

►*CAUTION—Do not attempt to groove riveted lining or any of the edge-bonded, wire-backed, cycle-bonded linings.*

Slotting Brake Shoes (Dodge)—If grooving does not correct squeaks, toe end of shoes can be slotted to depth of 1⅜". Use hacksaw blade to cut web loose from shoe table (lining surface) cutting as close to the table as possible.

►*CAUTION—Do not slot front brake shoes which have four ⅝" holes through the shoe table.*

DESCRIPTION: Two-cylinder (front), single double-acting cylinder (rear), hydraulic type of same design used on preivous models.

ADJUSTMENT & SERVICING: *See complete "Lockheed-Chrysler 'Safe-Guard' Hydraulic" Brake in previous release and adjust these brakes to following specifications:*

Minor (Wear) Adjustment: Turn eccentric for each shoe out until shoe is solid against drum and wheel is locked, then back eccenric off until wheel is free.

Major (New Lining) Adjustment: Use adjusting gauge MT-19-C, or feeler gauges and cutaway drum, adjust eccentric and anchor pin for each shoe to following clearances:

Brake Shoe Clearance
(Heel & Toe—All Front & Rear Shoes)

Chrysler, DeSoto, Dodge, Plymouth..... .006"

Hand Brake Adjustment: Hand brake is independent type on driveshaft at rear of transmission. *See car model pages & Chrysler Special Data.*

Brake Pedal Adjustment: ⅛-¼" free travel with brakes released and master cylinder pushrod against its stop.

CHRYSLER DISC BRAKE

Chrysler Town & Country C49-3 (1950)
Chrysler Crown Imp. C47 (1949), C50 (1950)
Chrysler Imperial, C53 (1951)

DESCRIPTION: The Chrysler Disc Brake is hydraulically operated, self-energizing. The brake assembly which is enclosed in a rotating housing, utilizes two lined pressure plates in the form of annular rings which move apart, contacting the inner surfaces of the rotating housing. The housing is split and is held together by 10 bolts around the outside. The plate assembly, which carries two hydraulic cylinders, is mounted on a spider attached to the front wheel spindle body and the rear brake spider on the rear axle housing flange. Automatic brake adjusters are built into the assembly. Brake lining segments are used, bonded to the outer surface of each pressure plate. Two hydraulic wheel cylinders move push rods operating against bosses on the outer plate to provide plate movement. 1¼" cylinders are used on the front brakes and 1" cylinders on the rear brakes.

OPERATION: When the outer plate is rotated with respect to the inner plate by movement of the wheel cylinder push rods, steel balls between the pressure plates are forced up on ramps located on the inside surfaces of the plates. The movement of the balls up the ramps forces the pressure plates apart and contact is made between the lining and the inner surfaces of the brake housing.

Self-Energization: The self-energization action is obtained by utilizing the friction force that tends to rotate the pressure plates in the direction of brake housing rotation when contact is established between the linings and the brake housing. When the brakes are applied, the outer plate is rotated forward by the action of the brake cylinder push rods and the plates are separated. During forward motion of the car, the inner plate is held rigid. Therefore, when the linings contact the housing, only the outer plate is free to move. The resulting additional forward movement of the outer plate, with respect to the inner plate, forces the balls higher on the ramps and consequently provides greater pressure contact between the plates and the housing. Thus some of the energy due to forward motion of the car is used to increase the braking effect. When the car is in reverse, the outer plate becomes the fixed plate on the rear wheels, and self-energization is provided by the movement of the inner plate when it contacts the housing. The front wheel brakes are not self-energizing when in reverse, as the inner plate is still the fixed plate.

Automatic Wheel Brake Adjusters: This self-adjusting mechanism automatically compensates for lining wear. Thus, the desired clearance is maintained at all times between the pressure plates and the brake housing, and full pedal effectiveness is provided. Two identical automatic adjusters are mounted opposite each other on the inside surface of each inner pressure plate. The adjusters are identical in operation for either front or rear brakes. Two lugs are provided on the inside surface of each outer pressure plate, and are placed so as to straddle the automatic adjusters. Refer to Illustr. Each self-adjusting unit is composed of a bracket (which is riveted to the inner pressure plate) with two guide flanges, a rod, a lubricating washer, 11 steel adjuster balls, an adjuster washer, a bushing and a sleeve. When the brakes are applied, the outer plate is rotated with respect to the inner plate and lug "B" contacts the adjuster rod. Refer to Figure 4. If the brake linings are new, the linings contact the brake housing before the adjuster rod is pushed forward. However, if the linings have worn, lug "B" pushes the adjuster rod through the bracket guide flanges until the linings contact the brake housing, and the relative rotation of the outer plate stops. When the brakes are released, the brake return springs cause the outer plate to tend to return to its former position with respect to the inner plate. However, when lug "A" comes into contact with the adjuster rod, the locking action provided by the automatic adjuster prevents the adjuster rod from being pushed back, and the outer plate cannot return completely to its former position. Because the difference between the length of the rod and the distance between the finished surfaces of the lugs has been calculated to provide the desired clearance between the linings and the housing when the brakes are released, proper clearance is maintained regardless of the wear on the linings.

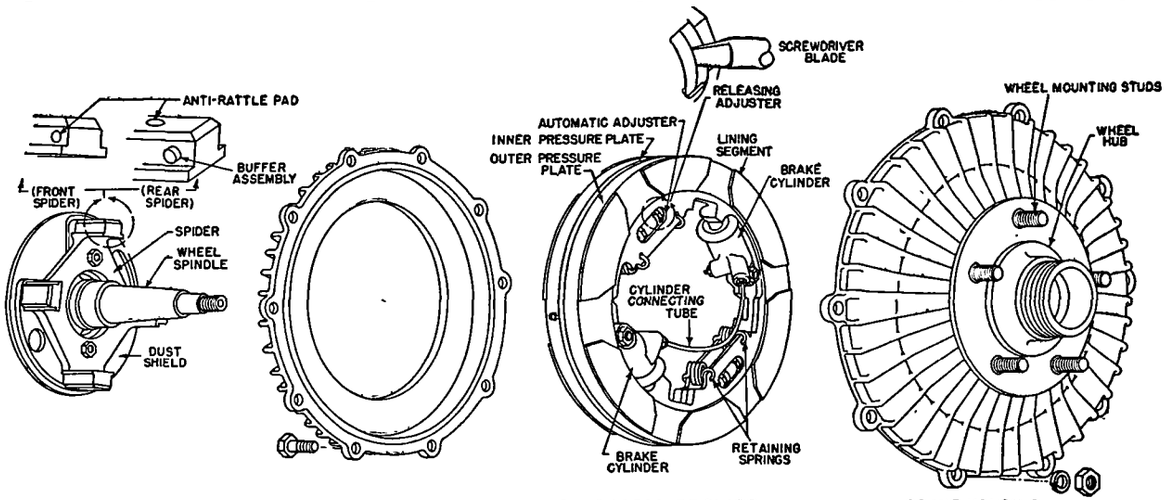

CHRYSLER DISC BRAKE MAIN UNITS

ADJUSTMENT: Self-adjusters are used and no service adjustments are necessary.

Brake Pedal: ⅛-¼" free travel. Adjust by loosening locknut on master cylinder end of pedal rod and turning large adjusting nut.

Parking (Hand) Brake: Independent type. See Car Model pages for adjustment data.

REPAIR DATA: ***CAUTION—None of the parts on four wheel disc brake assemblies are interchangeable. When more than one assembly is being serviced at one time, care should therefore be taken to keep the parts of each assembly separated from the others.***

Wheel Brake Cylinders: Front brake cylinders are 1¼" diameter and rear cylinders are 1" diameter. Two cylinders are used on each brake.

Bleeding Brakes: While bleeding brakes it is important to keep the master cylinder full of fluid. A long rubber hose **must** be used on bleeding screw while bleeding screw is open. Bleed only one cylinder at a time. Best results are obtained by bleeding all four lower cylinders first and then bleeding all four upper cylinders.

►***CAUTION: After brakes are thoroughly bled, the brake pedal may still be low. Driving the car and applying the brakes a few times will set up the automatic adjustment and provide a good pedal operation.***

BRAKE LINING: To replace the lining it is necessary to remove the plate assembly. See disassembly procedure following. Segment type brake lining is used, bonded to the pressure plates.

►***CAUTION: When new linings have been installed, erratic operation may prevail for a few miles of operation. Car should be driven and brakes operated until normal brake applications result in smooth straight stops. This may take up to twenty-five or thirty miles of driving.***

Disassembly of the Front Disc Brake: Remove dampener spring and clips. Remove the ten bolts around brake housing. The inner and outer housings are matched sets. A cut-out is cast in each housing so that both halves can be mated to their original position. Remove dust cap and wheel bearing nut. Separate inner and outer housings by tapping lightly, at one of the attaching bolt hole flanges, with a fibre-nose hammer. When housings separate, remove outer wheel bearing. Pull off the hub and outer brake housing. Disconnect front brake hose from the tube at frame connection. The hose should be held down to drain fluid. Remove the brake tube dust grommet (2 metal screws) from the dust shield and slide the grommet off the brake tube. (On late C-47 and on all C-49 Town and Country and C-50 models, the dust grommet will not have to be removed from dust shield.) Cover open end of brake tube with absorbent cloth to prevent brake fluid leakage on brake parts. Remove brake pressure plate assembly. Place the assembly on a clean surface or cloth on the bench. Keep plates and lining clean.

Assembly of the Front Disc Brake: Install inner half of brake housing. Prior to installing pressure plate assembly, release both self-adjusters. Release auto-

CONTINUED ON NEXT PAGE

CHRYSLER DISC BRAKE (C ntinu d)

matic adjusters by inserting a thin shank screwdriver between the release sleeve in the automatic adjuster and the adjuster guide of each adjuster, and then twisting both screwdrivers. See Illustr.. The pressure plates will then snap back into fully released position. Install brake pressure plate assembly. Install brake tube dust grommet. Connect brake tube to frame connection. Install assembly of hub and outer brake housing. Inner and outer brake housing are matched and balanced as an assembly so that it is necessary to line up the mating cutout or marks on each housing. Install outer wheel bearing, washer, and nut. Adjust bearing, install cotter pin and replace dust cap. Install the ten housing bolts, lock washers and nuts. Install dampener spring and clips.

Disassembly of the Rear Disc Brake: Disassembly procedure for the rear brake is similar to the front brake procedure, except as follows: After removing the 10 housing bolts, remove the outer housing with a hub puller. Remove axle key to prevent scoring the oil seals. When the pressure plates are removed two buffer assemblies mounted in the brake spider will fall out.

Assembly of the Rear Disc Brake: Rear brake assembly procedure is similar to the front brake procedure except as follows: Before installing the spider, check the inside face of the seal assembly. It must be flush with the inside face of the spider. Wrap a piece of wax paper over axle shaft to cover key slot. This will prevent cutting the seal lip. Then install spider and seal assembly in correct position—aligning buffer loading pin holes in spider to correspond with holes in dust shield. Install inner half of brake housing. Prior to installing pressure plate assembly, release both self-adjusters. (See Assembly of the Front Disc Brake.) Insert the two buffer assemblies in spider anchors. **NOTE: Be sure lock groove in buffer is facing dust shield.** Using a pair of water pump pliers, hold buffer in compressed position, in spider leg, and while fully compressed insert lock pin (round stock 3/16" dia. by 1½" long with blunt ends) through hole in dust shield, so the buffer will remain in compressed position when pliers are released. Install brake pressure plate assembly. After brake pressure plate assembly is in position, remove buffer lock pins. Install brake tube dust grommet (C-47 only) and connect brake hose to the tube at axle housing connection. Place hub and outer brake housing assembly in position on axle shaft, and line up key way. Insert key and drive into position with fibre-tipped hammer.

Disassembly of Inner and Outer Pressure Plates: Release automatic adjusters. By inserting a thin shank screwdriver between the release sleeve in the automatic adjuster and the adjuster guide of each adjuster, and then twisting both screwdrivers, the pressure plates will snap back into fully released position. (See Illustr.) Remove the four pressure plate retaining springs. These coil springs perform the same function as the return spring in the shoe-type brake in that they pull the pressure plates together when hydraulic pressure is released and prevent the plates from maintaining friction contact with the brake housing. A "V" slot cut into one side of a screwdriver will greatly assist in spring removal. The discs can now be separated.

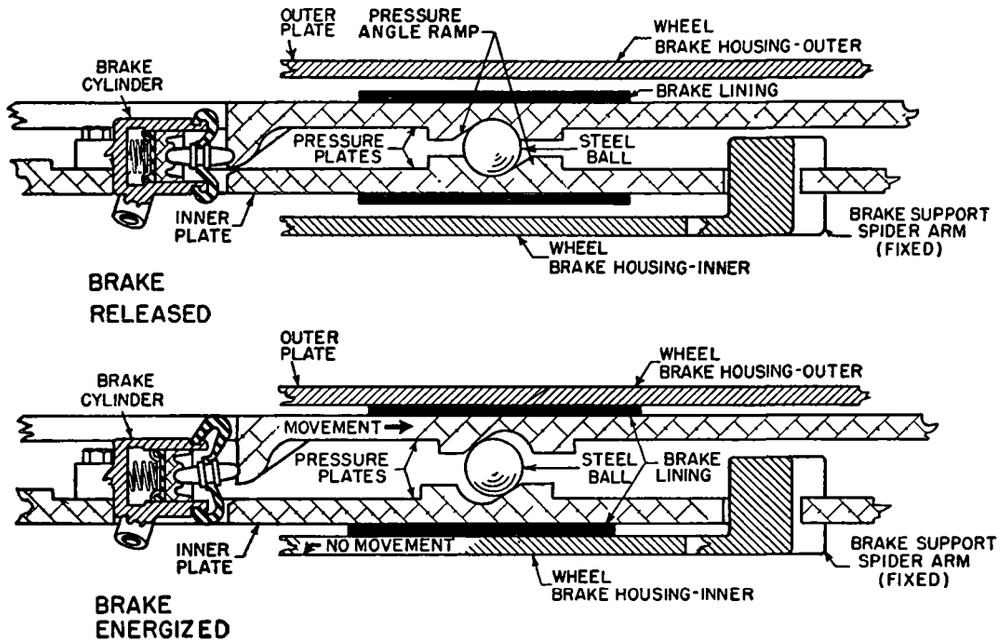

PRESSURE PLATE ASSEMBLY RELEASED & ENERGIZED

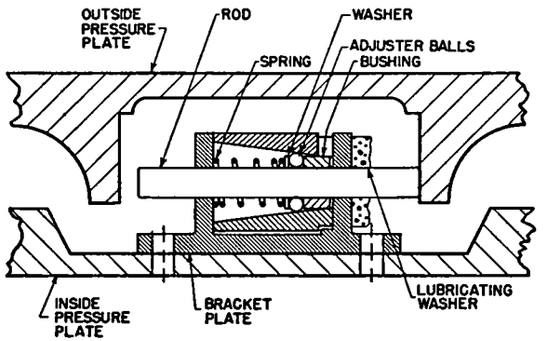

AUTOMATIC ADJUSTER

Assembly of Inner and Outer Pressure Plates: With the wheel cylinders and automatic adjusters properly installed on the inner pressure plate, place the six steel pressure expanding balls (7/8" dia.) in the six ramps. Place outer plate into position in inner plate. It will be necessary to cock the wheel cylinder push rods slightly when positioning the outer plate. Automatic adjuster rods must also be centered so that operating lugs on the outer plate will straddle the rods. Install the four pressure plate retaining springs.

Disassembly of Automatic Adjuster: (See Illustr.) The rod in the automatic adjuster will only move in one direction and can be pulled out by hand. The adjuster sleeve can then be removed by sliding the sleeve out from between the bracket guides. It is not necessary to remove the bracket from inner pressure plate.

►***CAUTION:*** ***Hold a finger over each end of the sleeve during removal so that steel balls, washers, etc. inside will not be lost.***

Assembly of Automatic Adjuster: To assemble the automatic adjuster, it will be necessary to make a dummy shaft out of round stock ¼" in diameter by ¾" long chamfered on one end to use in place of the adjuster rod which is installed later. Place adjuster sleeve (slotted end down) upright on finger and insert dummy shaft (chamfered end up) in sleeve. Place bushing over dummy shaft. NOTE: Dummy shaft and bushing can be held in proper positions by placing the large end of a common paper clip around the shaft at the slotted end of the adjuster sleeve. Install the eleven adjuster balls around dummy shaft. Tap lightly to position balls. Install adjuster washer on top of balls. Place the adjuster spring over the shaft above washer. Holding thumb over spring, carefully remove paper clip, holding dummy shaft. Continue to hold pressure on spring —compress sufficiently to slide sleeve into position on the bracket. NOTE: The sleeve is grooved and the bracket is stepped, so that installation can be made the right way only. Align sleeve assembly so that dummy shaft is in line with the holes in the bracket guides. Insert the adjuster rod into the stepped end of bracket and force dummy shaft out. Push the adjuster rod through the adjuster until adjuster is in the center of the rod. Install lubricating washer on adjuster rod at stepped end of adjuster bracket.

Buffer Assemblies: The buffers which are used on the rear brakes only, control the clocking motion of the outer pressure plate.

►***CAUTION:*** ***Buffer assemblies are calibrated units. If defective replace the complete buffer assembly. When intalling buffers in the spider arm be sure the lock groove in buffer faces the dust shield (backing plate).***

FORD-BENDIX HYDRAULIC (FORD, LINCOLN, MERCURY)

Ford Pass. Cars, 6 Cyl. & V8 (1950-51)
Ford Half-Ton, Series F-1 (1950-51)
Ford 3/4 Ton, F-2 & F-3 (Late 1951)—Rear Wheels
Lincoln & Cosmopolitan, All (1950-51)
Mercury, All Models (1950-51)

►**FORD F-2 & F-3 TRUCK NOTE**—These brakes used only on REAR WHEELS of LATE 1951 trucks. Lockheed Double Anchor brakes used in early 1951.

►**FORD HAND BRAKE LINKAGE CHANGE (To lessen effort required to set hand brake on First cars):** On first cars, pull required to set brake can be decreased by drilling new hole in equalizer lever and shifting wheel cable connector to this new hole.

Passenger Cars—Drill new 5/16" hole 13/32" from existing hole toward pivot end of lever.

Station Wagon & Convertible—Drill new 5/16" hole at point 9/16" from center of existing hole toward pivot end of lever (new hole center will be 1¼" from center of pivoting notch in lever).

►*NOTE—This change made in production on later cars.*

►*CAUTION*—If above procedure does not correct complaints of hand brake being hard to apply, remove hand lever assembly, check for burrs on hand brake shaft, clean up shaft with round file, apply light film of lubricant when reassembling.

►**FORD HAND BRAKE CABLE INTERFERENCE CORRECTION (on First Cars):** If cable or conduit rubs on frame or tires, correct these points:

Cable rubbing on intermediate cross-member—Bend rear edge of lower flange on cross-member slightly at point just above cable for clearance.

Cable Conduit rubbing on tires or striking carrier plate—Remove cable conduit clip on frame, revolve conduit toward center of car (twist conduit at carrier plate if necessary), re-install clip.

Cable Equalizer twisting—If equalizer twists on adjustment bolt, install additional nut on adjustment bolt in front of equalizer, tighten this nut **after** hand brake adjustment completed so that equalizer clamped firmly between nuts.

►**LINCOLN & MERCURY HAND BRAKE LINKAGE CHANGE (for improved operation on First Cars):**

Re-route Brake Cable. Disconnect cable at lever, remove all clips down to spring clip at center of frame "X" member (do not disturb this clip), re-route cable and install new clips as follows: Install No. E.D. 11A-17278 clip at transmission case bottom rear shifter cover bolt, E.D. 353364-SB at brake master cylinder front bolt (route cable over top of steering column tube, install clip E.D. 353364-SA at upper rear corner of front fender apron (on Lincoln 121" WB, use clip 11A-14598 installed on fender apron 1½" to rear of wiring harness clip), route cable through hole in dash (use 91A-14602-A1 rubber grommet) attach cable and adjust hand brake.

►*CAUTION—Avoid all sharp bends and kinks*

Re-locate Cable Connection on Hand Lever (Mercury only)—Drill new 5/16" hole in hand brake lever at point 1.38" from center of pivot hole in lever and shift cable connection to this new hole.

Lubricate Hand Brake Control—Lubricate pivoting points with Lubriplate or equivalent

Align Hand Brake Control—To insure alignment, **first** attach hand brake lever at body bracket, **second** attach ratchet bar housing assembly to instrument panel with **hand lever fully released.**

ADJUSTMENT & SERVICING: *See complete "Ford-Bendix Hydraulic (Ford, Lincoln, Mercury)" Brake in previous release and adjust as follows:*

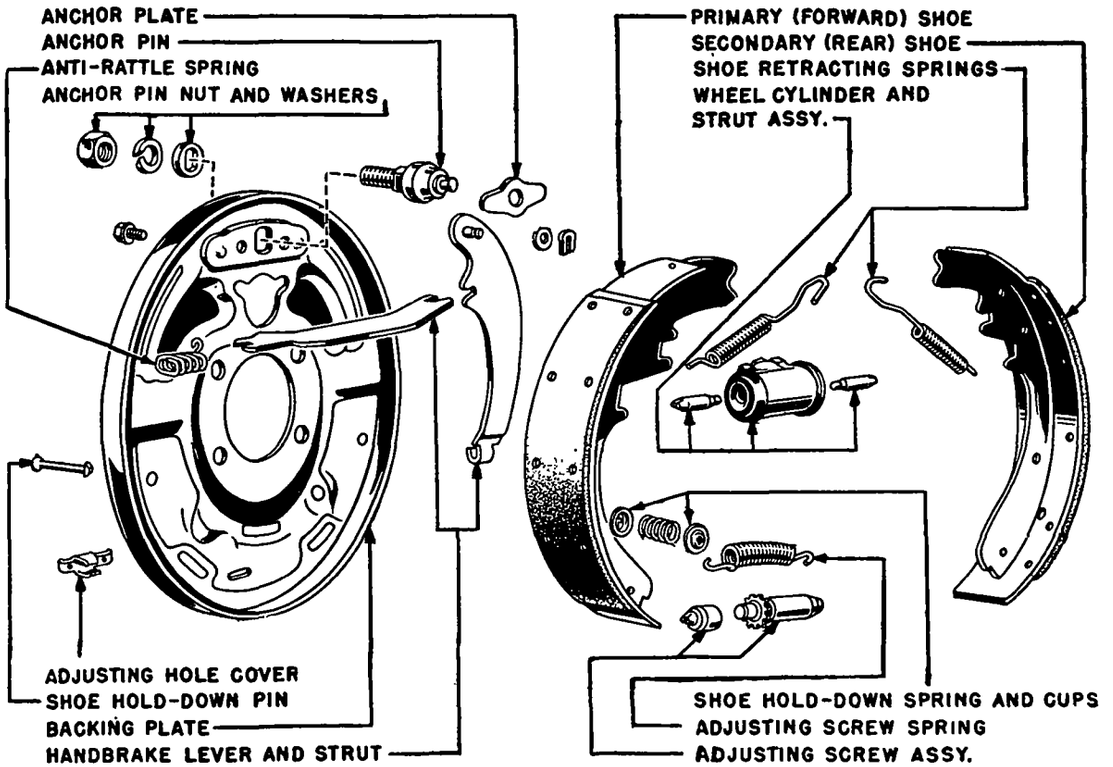

Minor (Wear) Adjustment: *CAUTION—Recommended procedure for Ford is not same as Lincoln & Mercury.*

Ford—Turn up adjusting screw for each wheel (accessible through slot in backing plate) until brake drum can just be turned by hand, then back off adjusting screw 14 notches or "clicks" until shoes are just free and wheel revolves without drag.

Lincoln & Mercury—Use feeler gauge to set shoe clearance at .010". See Major Adjustment for data.

Major (New Lining) Adjustment: *CAUTION—Recommended setting not same for all models.*

Ford—Wedge primary shoe out against drum by inserting .010" feeler through slot in drum at center of secondary shoe and expanding shoes by turning adjusting screw. Then adjust adjusting screw and anchor pin (slotted type) for .010" clearance at each end of secondary shoe (1½" from each end of shoe).

Lincoln & Mercury—Shoe clearance should be .010" at all points. Check by inserting .010" feeler through slot in brake drum and measuring clearance at several points. Adjust by turning adjusting screw accessible through slot in backing plate and by shifting anchor pin if necessary (pin hole is slotted, loosen locknut and tap pin out).

Brake Pedal Adjustment: Pedal must have more than ¼", but less than ½", free travel measured at pedal pad before master cylinder piston begins to move.

Ford (Pass. Cars)—Loosen locknut and turn eccentric bolt linking brake pedal to master cylinder pushrod. Locknut must be securely tightened.

Ford (Trucks)—Loosen locknut on master cylinder pushrod, remove clevis pin at brake pedal, turn pushrod in or out as necessary, tighten locknut.

Lincoln & Mercury—Loosen locknut on master cylinder end of pedal rod, turn connecting link.

Hand (Parking) Brake Adjustment: *CAUTION—See Production Change Notes above.*

Ford (Passenger Cars), Lincoln, Mercury—Place hand lever in fully released position, check position of parking brake equalizer lever on frame cross-member. If lever pin not aligned horizontally with respect to cross-member, adjust front cable by turning equalizer lever nut (on end of cable). Remove slack from rear wheel cables by loosening forward nut on equalizer rod (to which cables attached) and tightening rear nut.

►*CAUTION—make certain that rear brake shoes are not pulled away from anchors and that brakes do not drag*

Ford (F-1 Truck)—After adjusting brake shoes, place hand lever in fully released position. Depress brake pedal to point where rear brakes firmly applied and hold pedal in this position. Adjust each rear wheel brake cable to remove all slack (loosen locknut and turn clevis at equalizer lever end of cable). Release brake pedal and make certain that brakes do not drag. Apply hand brake and check position of equalizer bolt. If bolt not centered in slot, readjust rear wheel cables. With hand lever released, adjust hand lever-to-equalizer cable so that ½" movement of hand lever is necessary to take up all slack in cables.

Ford Truck (F-2 & F-3)—These models have independent brake on propeller shaft behind transsion. *See Ford Special Data for adjustment.*

LOCKHEED HYDRAULIC DOUBLE ANCHOR

Crosley, Models CD & VC (1950-51)
Willys Jeep, Model CJ-3A (1950-51)

►**CROSLEY NOTE**—This brake used beginning 1950 Serial No. CD-204209 and VC-20654. Goodyear-Hawley hydraulic brakes used previously.

DESCRIPTION: Double-anchor, hydraulic type of same design as used previously.

ADJUSTMENT & SERVICING: *See complete "Lockheed Hydraulic, Double Anchor Type" in previous release and adjust these brakes to following specifications:*

Minor (Wear) Adjustment: Loosen locknut on adjusting eccentric for each brake shoe, turn eccentric up until shoe contacts drum, then back eccentric off until wheel turns freely, tighten eccentric locknut.

Major (New Lining) Adjustment: Use feeler gauges inserted through slot in drum, adjust eccentric and anchor pin for each shoe to following clearances:

Brake Shoe Clearance

Crosley	.005" (heel), .008" (toe).
Willys Jeep	.005" (heel), .008" (toe).

Brake Pedal Adjustment: Pedal free travel should be ½" min. To adjust, disconnect pedal rod at brake pedal, loosen locknut at master cylinder end of rod, turn rod in or out as required, tighten locknut and re-connect rod.

Parking (Hand) Brake Adjustment: Willys hand brake is independent type on propeller shaft.

Willys Adjustment—*See Willys Jeep car model page.*

FORD-LOCKHEED HYDRAULIC

Ford 3/4 Ton, F-2 (1950-51) ①
Ford 3/4 Ton Spec., F-3 (1950-51) ②
Ford 3/4 Ton, Parcel Del. F-3 (1950-51) ③
Ford 1 Ton F-4, 1½ Ton F-5, 2 Ton F-6 (1950-51)
①—"Self-centering" type front and rear.
②—"Self-centering" type front only.
③—Adjustable anchor type front and rear.

►**FORD F-2 & F-3 TRUCK NOTE**—Late 1951 trucks have Ford-Bendix Uni-servo and Self-energizing single-anchor brakes.

DESCRIPTION: Double-anchor, hydraulic type.

"Self-centering"—Brake shoes have slotted holes and special anchor pin bushings so that shoes are centered when brakes are applied. No anchor pin adjustment required on this type.

Adjustable Anchor—Brake shoes are mounted on eccentric bushings on anchor pin so that turning the anchor pin moves the shoe toward or away from the drum.

ADJUSTMENT & OVERHAUL: *See complete "Ford-Lockheed Hydraulic" Brake in previous release and adjust as follows:*

Minor (Wear) Adjustment: At each wheel, turn adjusting cam for each shoe outward at the top until brake drags, then turn cam in opposite direction until wheel is just free. Check and adjust brake pedal clearance and hand brake.

Major (Relined Brake) Adjustment: *This adjustment not required on trucks with "self-centering brakes."* At each wheel, loosen anchor pin locknut for each shoe, turn anchor pin (use wrench on flatted end of pin) until shoe clearance is .007" at heel of each shoe, tighten anchor pin locknut. Adjust eccentric cam (see Minor Adjustment) until clearance at toe of shoe is .010". Check and adjust brake pedal clearance and hand brake.

Brake Pedal Adjustment: Brake pedal free play should be ¼" min., ½" max. To adjust, loosen locknut on master cylinder pushrod, remove clevis pin at brake pedal, turn pushrod in or out as necessary, tighten locknut and re-install clevis pin.

Hand (Parking) Brake Adjustment: Independent brake on propeller shaft behind transmission.

See Ford Special Data for adjustment.

FORD-BENDIX "UNI-SERVO" HYDRAULIC

Ford 3/4 Ton, F-2 & F-3 (Late 1951)—Front Only.

►**FORD F-3 TRUCK NOTE**—These brakes used only on FRONT WHEELS OF LATE 1951 trucks. Rear wheel brakes are Ford-Bendix Self-energizing type.

DESCRIPTION: Bendix "Uni-servo," single anchor, hydraulic type with single-acting wheel cylinder mounted on the backing plate and actuating the primary shoe through a strut (no direct connection to secondary shoe). Brake shoes are conventional Bendix type (joined by adjusting screw at lower end, single anchor between shoes at upper end with retracting springs hooked to each shoe and anchor pin). Wheel cylinder has single piston and cup with a return spring seated in the end of the cylinder.

ADJUSTMENT: Minor (wear) and Major (new or relined shoes) Adjustments are exactly the same as for the Ford-Bendix Self-energizing brakes used on the rear wheels of these trucks. *See "Ford-Bendix" data following.*

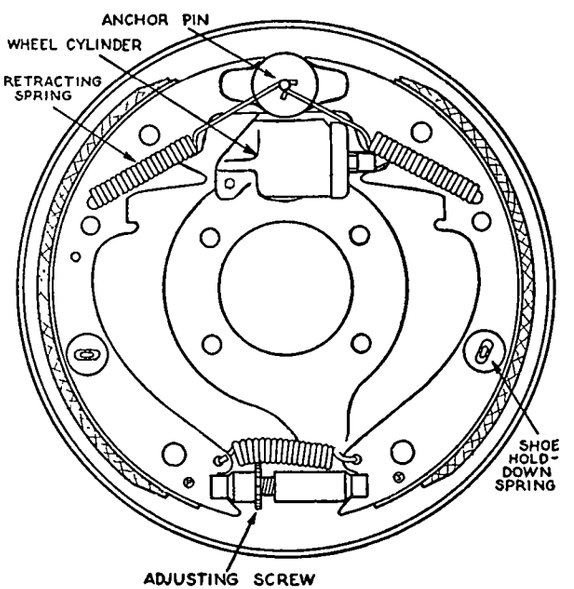

UNI-SERVO BRAKE ASSY.

LOCKHEED (WAGNER) HYDRAULIC SELF-ADJUSTING

Frazer & Kaiser (1949-50)—Some Cars.
Studebaker Champ. & Comm., All Models (1950-51)

►**FRAZER & KAISER NOTE**—Bendix (Lockheed) Self-centering Brakes also used on these cars.

DESCRIPTION: Two-shoe, hydraulic type with "self-centering" shoes and "self-adjusting" mechanism for forward shoes only. Same design as used on corresponding previous models.

ADJUSTMENT & SERVICING: *See complete "Lockheed (Wagner) Hydraulic Self-Adjusting" Brakes in previous release and adjust these brakes to following specifications:*

Initial Adjustment (New or Relined Brakes): Adjust brake shoe eccentrics as directed below. Parking brake must be released when adjusting.

►*CAUTION—Do not turn eccentric up more than necessary for slight brake drag. Excessive shoe pressure against drum may damage self-adjusting mechanism.*

Brake Shoe Adjustment: *If required in service (noted by loss of pedal reserve), adjust each shoe as follows:*

Reverse Shoes—Turn eccentric out until brake shoe drags, then back eccentric off until wheel just turns freely. If adjustment of all reverse shoes does not provide adequate pedal reserve, then check and adjust forward shoes.

Forward Shoes—Check self-adjusting mechanism for correct operation first. Disconnect shoe return spring, pull shoe out so that self-adjusting lever clears eccentric, manually depress contact plug and fully retract adjusting wedge. Hold wedge in retracted position and see that contact plug moves up and down freely. Release wedge, depress contact plug and check to see that adjusting wedge advances upward. If self-adjusting mechanism operates correctly, reconnect shoe return spring, **set contact plug by depressing plug until it is flush or one notch below** surface of lining. Adjust shoe by turning eccentric outward until brake shoe drags, then back eccentric off until wheel just turns freely.

►*CAUTION—Contact plug must be depressed (flush or one notch below lining surface) when adjusting forward shoes (will cause over-adjustment of brake shoe on first application otherwise).*

Brake Pedal Adjustment: Adjust pedal pushrod by loosening locknut and turning rod for following pedal free travel:

Frazer & Kaiser—½-¾" pedal free travel.

Studebaker—⅛-¼" pedal free travel.

Hand (Parking) Brake Adjustment:

Frazer & Kaiser—With hand lever in released position, loosen locknut and tighten rear nut on forward cable fitting at wheel cable equalizer yoke to take up all slack in cables. Make certain that brakes do not drag.

Studebaker—Pull hand lever "on" four notches, back off front nut and tighten rear nut on cable clip under car until heavy drag noted at rear wheels, tighten front nut. Release hand lever and check wheels for freedom from drag.

AUBURN

Auburn No.
9251-12 Dodge, All Models (1950-51)①
9251-15 Frazer & Kaiser, All Models (1950)①
9251-18 Frazer & Kaiser, All Models (1951)①
8501-37 Henry J, All 4 & 6 Cyl. Models (1951)②
9251-17 Plymouth, All Models (1950-51)①
8501-36 Willys, All 4 Cyl. "473" Models (1950-51)
Willys, All 6 Cyl. "673" Models (1950-51)
①—Borg & Beck clutch also used.
②—Rockford Clutch also used.

DESCRIPTION: Single plate dry disc type of same design used on corresponding previous models (Henry J type similar to Willys clutch).

REMOVAL OF CLUTCH: *See "Clutch" on car model page.*

DISASSEMBLY & REASSEMBLY: *See complete "Auburn (Atwood)" Clutch in previous release and note following specifications:*

Clutch Spring Specifications

Car Model	Spring Pressure & Length
Dodge	215 lbs. at 1 13/16"
Frazer & Kaiser	251 lbs. at 1 13/16"
Henry J	211 lbs. at 1 9/16"
Plymouth	234 lbs. at 1 13/16"
Willys	230 lbs. at 1 9/16"

Release Lever Settings

All Models	1 15/16" ± 1/32"

DRIVEN MEMBER: *See car model pages for facing specifications.*

Car Model	Driven Member	Auburn No.
Dodge		9252-13
Frazer		9252-29
Henry J		8502-24
Kaiser		9252-31
Plymouth		9252-28
Willys		See Borg & Beck

BUICK

SERIES 40 & 50 (1950-51)—Synchro-mesh Cars.

DESCRIPTION: Single-plate, "Crown-spring" type.

REMOVAL: *See "Clutch" on car model page.*

SERVICING: *See complete "Buick (Own) Crown-spring" clutch in previous release. Note the following precautions and inspection limits:*

Disassembly Caution—Mark cover, pressure plate, and crown spring with paint before disassembling, and reassemble in same relative positions.

Clutch Cover Inspection—Check height of spring retainer ears by placing cover on flat surface and measuring from surface to top surface of each ear. Distance should be 1 5/8". Correct by bending the ears (CAUTION—use care not to crack or distort cover). Replace cover if cracked or distorted.

Crown Spring Inspection—Check for excessive flattening of the spring due to taking on a permanent set by placing spring on flat surface and measuring height of top surface of spring at inner rim. Normal height is 1 13/16" and height should not be less than 1 11/16".

BORG & BECK MODELS 8A7, 9A7, 10A6, 10A7, 11A6

	Borg & Beck Nos. Model	Assy.②
CHRYSLER		
1950-51 Six (S-M Trans.)	10A7	930
1950-51 Six (Auto. Trans.)	9A7	953
1950 Eight C49 & C50	10A6	961
DE SOTO		
1950 S14 (S-M Trans.)	10A7	957
1950 S14 (Auto. Trans.)	9A7	952
1950 S14 Taxicab	11A6	994
1951 S15 (S-M Trans.)	10A7	930
1951 S15 (Auto. Trans.)	9A7	953
DODGE		
1950-51 All Models①	9A7	952
1950-51 Heavy Duty	10A7	957
1950-51 Taxicab	11A6	931
FRAZER		
1950-51 All Models①	9A7	951
KAISER		
1950-51 All Models①	9A7	951
1950-51 Taxicab	10A7	948
MERCURY		
1950 (S-M Trans.)	10A7	988
1951 Early (S-M Trans.)	10A7	1310
1951 Later (S-M Trans.)	10A7	1318
NASH		
1950-51 Rambler	8A7	987
1950-51 Statesman (S-M Trans.)	8A7	987
1950-51 Ambassador (S-M Trans.)	10A7	950
OLDSMOBILE		
1950 Six (S-M Trans.)	10A7	927
PLYMOUTH		
1950-51 All Models①	9A7	926
1950-51 Heavy Duty	10A7	957
1950-51 Taxicab	11A6	931
STUDEBAKER		
1950-51 Champion (S-M Trans.)	8A7	980
1950-51 Commander (S-M Trans.)	9A7	943

①—Auburn Clutch also used on these models.
②—Assy. No. stamped on cover assembly.
S-M Trans.—Cars with Synchro-mesh Trans.
Auto Trans.—Chrysler, DeSoto, Dodge cars with automatic Trans. (no clutch used on other car models with automatic transmissions).

REMOVAL OF CLUTCH: *See "Clutch" on car model page.*

►**BORG & BECK DRIVEN MEMBER (On Other Cars):** Used with other clutches on following cars:

Borg & Beck Driven Member

Car Model	Borg & Beck Part No.
Buick 40, 50 (Long also used)	381776
Henry J (Rockford Clutch)	381947
Willys 4 Cyl. (exc. Jeep)	381580
Willys 4 Cyl. Jeep	381623
Willys 6 Cyl.	381777

DISASSEMBLY, REASSEMBLY, & ADJUSTMENT: *See complete "Borg & Beck Models 8A7, 9A7, 10A7, 11A6" Clutch in previous release and note following specifications:*

Clutch Spring Specifications

Clutch Assy.	Spring No. & Color	Pressure & Lgth.
926	9—Lavender	150 lbs. @ 1½"
927	9—Light Green	175 lbs. @ 1 11/16"
930	9—Light Blue	165 lbs. @ 1 11/16"
931	(8—Purple	135 lbs. @ 1 11/16"
	(4—Green	110 lbs. @ 1 11/16"
943	9—Yellow	140 lbs. @ 1½"
948	9—Light Blue	165 lbs. @ 1 11/16"
951, 952	9—Tan	160 lbs. @ 1½"
953	9—Orange	170 lbs. @ 1½"
950, 957	9—No Color	155 lbs. @ 1 11/16"
961	12—Light Blue	165 lbs. @ 1 11/16"
980	(3—Orange	170 lbs. @ 1½"
	(3—Red	195 lbs. @ 1½"
987	6—Red	195 lbs. @ 1½"
988	(6—No Color	155 lbs. @ 1 11/16"
	(3—Purple	135 lbs. @ 1 11/16"
994	(8—Purple	135 lbs. @ 1 11/16"
	(4—Green	110 lbs. @ 1 11/16"

Spring Pressures are plus or minus 5 lbs.

►*RELEASE LEVER SETTING CAUTION*—Lever settings below supersede previous specifications for these models.

CONTINUED ON NEXT PAGE

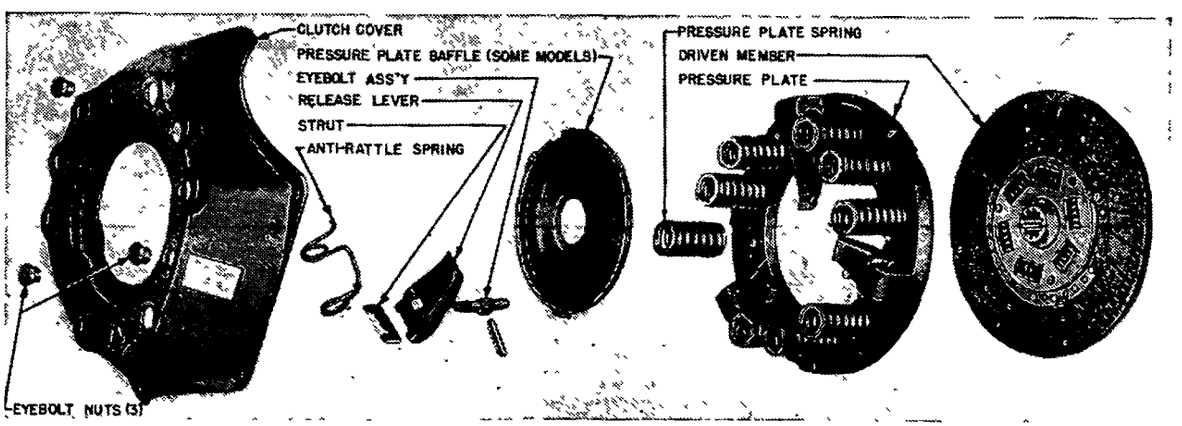

B RG & BECK CLUTCH ASSY.

BORG & BECK 8A7, 9A7, 10A6 10A7, 11A6 (C nt.)

Release Lever Settings
(For use with Borg-Warner Fixture UF-300)

Clutch Assy.	Lever Height
926, 943, 951, 952, 953, 988	2 3/16"
927	See Note
930, 931, 957	③2 1/8"
948	2 1/16"
950	2 5/32"
961, 994	2 1/8"
987	2 9/32"

③—1/16" higher when Baffle is used.

►**927 Note**—Calibrated sleeve cannot be used (will not clear levers) and special extension sleeve "3Z" must be used (this sleeve is proper height for adjusting levers). Install indicating plate on sleeve with counterbored side up, then stand calibrated sleeve on surface plate of fixture with adjusting arm or indicating bracket flush with bottom of sleeve. Adjust levers to this height.

(For use with Chrysler Fixture C-585A)

Clutch Assy.	Spacer No.
926, 952, 953, 961	#20
930, 957	#21
931	#19

DRIVEN MEMBER: *See car model pages for facing specifications.*

HUDSON

6 & 8 CYL., ALL MODELS (1950-51)

DESCRIPTION: Single-plate, cork-insert disc operating in oil.

►***CAUTION—Two different clutch sizes used on these models as follows:***

Car Model	Clutch Size
Pacemaker Std.	9"
Pacemaker (O.D., Drive-master, Super-Matic)	10"
Other Models (with Synchro-mesh Trans.)	10"

SERVICING, INSTALLATION & ADJUSTMENT: See complete "Hudson" Clutch in previous release and note the following specifications:

Clutch Springs

	No. Used	Pressure & Length
9" Clutch		
Inner	6	75-80 lbs. at 1 5/8"
Outer	9	130-140 lbs. at 1 5/8"
10" Clutch		
Inner	3	75-80 lbs. at 1 5/8"
Outer	12	130-140 lbs. at 1 5/8"

Driven Member

9" Clutch Type	90 cork inserts
10" Clutch Type	108 cork inserts

ROCKFORD

MODEL 6TS

Crosley (Early 1950)① R4608

MODEL 6½TS

Crosley (Late 1950 & 1951)② 165299

MODEL 8½RM

Henry J, 4 Cyl. 513, 6 Cyl. 514 (1951) 165264

DESCRIPTION: Single-plate, three-lever type with three pressure plate springs under levers (TS), six springs positioned in pairs adjacent to levers (RM).

REMOVAL: *See "Clutch" on car model page.*

OVERHAUL: *See "Rockford" Clutch in previous release.*

BORG & BECK MODELS 9.5E, 10E

CHRYSLER	Borg & Beck Nos. Model	Assy.①
1951 Eight C52 & C54	9.5E	1213
1951 Eight C53	10E	1211

①—Assy. No. stamped on cover for identification.

DESCRIPTION: Single plate dry disc type. Similar in design to Borg & Beck "A" type clutches except for the "Strap Drive" which consists of flat straps within the cover which are riveted at one end to the cover and bolted at the other end to the pressure plate. The straps deflect during pressure plate movement (for disengagement and engagement of the clutch) without rubbing contact and provide positive drive without friction or noise.

REMOVAL OF CLUTCH: *See "Clutch" on car model page.*

DISASSEMBLY & REASSEMBLY: Same as for Borg & Beck "A" clutches except that capscrews and washers in the drive straps which retain the pressure plate within the cover must also be removed to permit the cover to be lifted off (these screws accessible through holes in cover). Use the following specifications for these clutch models:

Clutch Spring Specifications

Clutch Assy.	Spring No. & Color	Pressure & Lgth.
1211	12—Grey	250 lbs. @ 1 45/64"
1213	(6—Orange	①170 lbs. @ 1½"
	(6—Red	②195 lbs. @ 1½"

①Plus or minus 5 lbs. ②—Plus or minus 6 lbs.

Release Lever Setting
(Using Chrysler C-585 Clutch Fixture)

Clutch Assy.	Spacer No.
1211	#42
1213	#43

DRIVEN MEMBER: *See car model page for facing specifications.*

Clutch Assy.	Driven Member	Borg & Beck No.
1211		11938
1213		11957

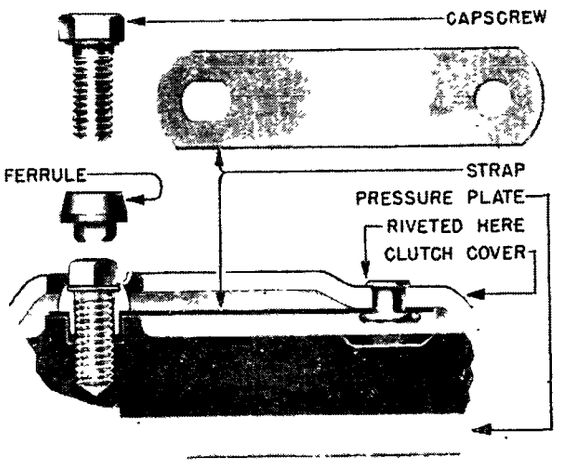

BORG & BECK 9.5E & 10E PRESSURE PLATE DRIVE STRAPS

CHEVROLET

CHEVROLET MODEL:	Clutch Assy. No.
Pass. Cars (Synchro-mesh Trans.)	①838955
Half-Ton Truck	①838955
Other Trucks	838956

①—No. 838956 (11") clutch Optl.

►**1941-49 REPLACEMENT DRIVEN MEMBER NOTE:** Discs and facings listed below for 1950-51 models supersede parts previously listed for 1941-49 cars and trucks.

DESCRIPTION: Single-plate "Diaphragm Spring."

►***CAUTION—Two different clutch sizes used and parts (including driven member) not interchangeable.***

against arm. Center shaft in arm (distance from

Clutch Part Nos.

Assy. No.	Clutch Cover	④Pressure Plate
838955 (9")	838953②	838948
838956 (11")	838954③	838949

Driven Member (Disc & Facings)

Pass. Car & Half-Ton	Part No.
1941-51 Std. 9" O.D. Moulded	⑤3835216
1941-51 Std. 9" O.D. Woven	⑥3835343
1941-51 H.D. 10¾" O.D. Moulded	3835453
Trucks (except Half-Ton)	
1938-51 (216" Eng.) 10¾" O.D. Moulded	3835453
1946-51 (235" Eng.) 10¾" O.D. Woven	⑦3835454

②—O.D. 11 7/16". ③—O.D. 13 1/16".
④—This Part No. cast in the plate.
⑤—Except 1941 Half-Ton No. 3847450.
⑥—Except 1941 Half-Ton No. 3847530.
⑦—Identified by Blue or Yellow paint on entire rear face of hub or by two spots of blue or yellow paint on rear face of spring retainer.

REMOVAL: *See "Clutch" on car model pages.*

SERVICING: *See complete "Chevrolet (Own)" Clutch in previous release.*

LONG "CF" 9½CF, 10CF, 11CF

	Long Model	Nos. Assy. No.
Cadillac		
1950-51 60S, 61, 62 (S-M)	11CF-10½TI	L5167
1950-51 75 (S-M)	11CF-TI	L5167
1950-51 86 Comm'l (S-M)	11CF-TI	L5152
FORD (Pass. Cars)		
1950-51 6 Cyl. & V8 (S-M)	9½CF-TS	268594
1950-51 Police & Taxicab	10CF-TI	L5222
FORD (Trucks)		
1950-51 F-1 3-Spd. Trans.	10CF-TI	L5222
1950-51 F-1 4SG Trans.	11CF-CI	L1440
1950-51 F-2,3,4,5,6 4SG Trans.	11CF-CI	L1440
1950-51 F-2,3,4,5,6 4HG Trans.		
1950-51 F-5, 6 School Bus	11CF-CI	L1478
1950-51 All H.D.	11CF-CI	L1478
LINCOLN		
1950-51 All (S-M)	11CF-10½TI	267044
OLDSMOBILE		
1950-51 88 & 98 (S-M)	11CF-10½TI	L5167
PACKARD		
1950 Eight (S-M)	10CF-TI	267954
1950 Super 8 (S-M)	11CF-10½TI	268349
1950 Cust. 8 (S-M)	11CF-TI	267953
1951 200 (S-M)	10CF-TI	267954
1951 300 (S-M)	11CF-10½TI	268349
1951 400 (S-M)	11CF-TI	267953

S-M—Cars with Synchro-mesh Trans. (no clutch used on cars with automatic transmissions).

4SG—4-Speed Transmission with **Spur** Gears.
4HG—4-Speed Transmission with **Helical** Gears.

REMOVAL OF CLUTCH: *See "Clutch" on car model page.*

DISASSEMBLY, REASSEMBLY, & ADJUSTMENT: *See complete "Long 9CF, 9½CF, 10CF, 11CF" Clutch in previous release and note following specifications:*

Clutch Spring Specifications

Cover Assy.	Spring No. & Color	Pressure⑨
L1440	9—Gray	115 lbs. ± 5 lbs.
L1478	9—Black	135 lbs. ± 5 lbs.
L5152	9—Orange	175 lbs. ± 5 lbs.
L5167	9—Yellow	147½ lbs. ± 2½ lbs.
L5222	9—Blue	130 lbs. ± 5 lbs.
267044	9—Yellow	147½ lbs. ± 2½ lbs.
267953	12—Orange	175 lbs. ± 5 lbs.
267954	9—Pink	155 lbs. ± 5 lbs.
268349	9—Tan	163 lbs. ± 5 lbs.
268594	6—Pea Green	175 lbs. ± 5 lbs.

⑨—Spring Pressure at length of 1 9/16".

►*RELEASE LEVER SETTING CAUTION*—Lever settings below supersede previous specifications for these clutches.

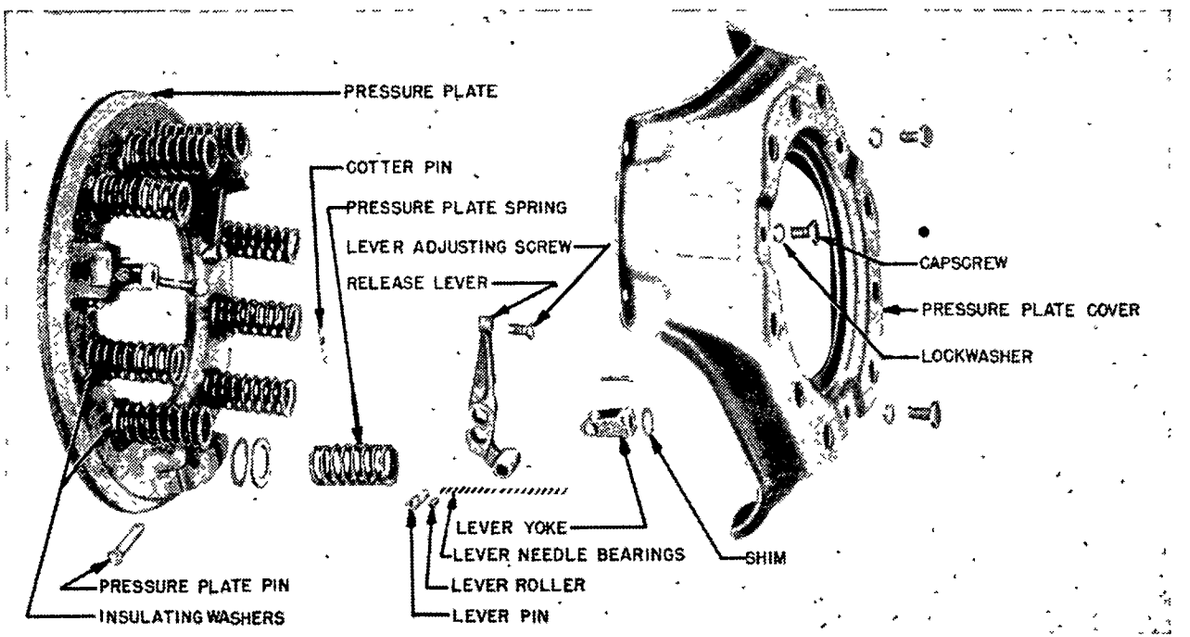

LONG "CF" CLUTCH ASSY.

Release Lever Settings
(For use with Borg-Warner Fixture UF-300)

Clutch Assy.	Lever Height
L1440 & L1478	2 7/32"⑩
L5152 & L5167	1 7/8"
L5222	1 31/32"
267044	1 3/4"
267953 & 268349	1 15/16"
267954	1 31/32"
268594	1 31/32"⑪

⑩—Plus or minus 1/32" for L1440.
⑪—If dial indicator used, use 3X indicating plate and set levers at 2 5/16".

DRIVEN MEMBER: *See car model pages for facing specifications.*

►**LONG DRIVEN MEMBER (On Other Cars):** Used with clutches of other makes on following:

Long Driven Member

Car Model	Long Part No.
Buick 40, 50 (Borg & Beck also used)	CD890
Pontiac 6 Std. (9½")	CD874
Pontiac 6 H.D. & Taxicab (10")	⑫289571
Pontiac 8 Std. & H.D.	289257

⑫—Used with regular 8 Cyl. Cover Assy.

►**FORD & LONG CLUTCH PART NOS.** Ford and Lincoln Part Nos. for each clutch Cover Assy. and **correct Driven Member Part No.** for each model and type of service are as follows:

Clutch Cover Assy.

Ford Model	Long No.	Ford No.
6 & V8 Pass. Cars	268594	8A-7563-A①
Police & Taxicab	L5222	19A-7563-A②
F1 Trk. (3-Spd. Trans.)	L5222	19A-7563-A②
All Trk. (4SG Trans.)	L1440	51-7563-A
All Trk. (4HG Trans.)		8MTH-7563-A
School Bus & Optl. Trk.	L1478	81B-7563-A
Lincoln S-M Cars	267044	8EL-7563

Driven Member

6 Cyl. Pass. Car	288824	8HA-7550-A③
6 Cyl. with O.D.	288925	8HA-7550-B④
V8 Pass. Car	288825	8BA-7550-A⑤
6 Cyl. Police & Taxi	289306	8HAS-7550-A③
6 Cyl. Police & Taxi O.D.	280520	8HAS-7550-B④
V8 Police & Taxi	289305	8BAS-7550-B⑤
F1 Trk. (3-Spd. Trans.)	CD870	51A-7550-A⑥
All Trk. (4SG Trans.)	CD606	59T-7550-A⑦
All Trk. (4HG Trans.)	CD607	59T-7550-B⑧
School Bus & Optl. Trk.	CD607	59T-7550-B⑧
Lincoln S-M Cars	287045	8EL-7550

①—Orange Ident. Mark. ②—White Ident. Mark.
③—Aluminum Springs. ④—Black Springs.
⑤—Orange Springs. ⑥—Gray Springs.
⑦—Black Springs and Molded Facings.
⑧—Black Springs and Woven Facings.
S-M—Cars with Synchro-mesh Trans. (no clutch used on cars with automatic transmissions).
4SG—4-Speed Transmission with **Spur** Gears.
4HG—4-Speed Transmission with **Helical** Gears.

BUICK

ALL SERIES (1950-51)

CHECKING & ADJUSTMENT: Before checking front end, check and adjust front wheel bearings, wheel run-out, tire inflation, and front end trim dimension, and see that car is at curb weight.

Tire Inflation: 24 lbs. (Cold—after standing for 3 hours or driven less than 1 mile), 26 lbs. (after car driven more than 3 miles at less than 40 MPH), 28 lbs. (after car driven 3 miles at more than 40 MPH).

Trim (Front Spring) Dimension. Bounce front end of car up and down several times to check for binding in suspension system, allow springs to assume natural position. With car at curb weight, measure from lower edge of frame cross-member (at bumper bracket) vertically to top edge of lower control arm. If trim dimension not within limits, install special shims on low springs or replace springs.

Front Trim Dimension

All Models exc. 56C, 56R, 75R, 76C, 76R.....3¾-4¼"
Models 56C, 56R, 75R, 76C, 76R.....3½-4"

Kingpin Inclination: 4¼° crosswise with ⅜° Camber.

Caster: Pos. ¾° (limits Pos. ¼° to Pos. 1½°) and equal on both sides of car within ½°.
Adjustment—Remove lubricant fitting from bushing at outer end of upper suspension arm, (front bushing on right side, rear bushing on left side of car), loosen clamp bolt in upper edge of knuckle support, insert Allen wrench through lubricant fitting hole, turn pivot pin to adjust caster (CAUTION—Camber will be changed unless pin rotated in complete turns only, check camber after adjusting caster). Check toe-in if caster changed more than ¼° (¼ turn of pivot pin).

Camber: Pos. ⅜° (limits Pos. ⅞° to Neg. ⅝°) and equal on both sides of car within ¾°.
Adjustment—Adjust in same manner as Caster (above) except that eccentric pin should be turned only slightly from point where correct caster secured. (entire range of adjustment secured in ½ revolution of the pin).

Toe-In: 1/16" to 1/8".
Adjustment—Loosen clamp bolt at outer end of each tie rod, turn adjusting sleeve in outer end of **each tie rod equally** but in opposite directions (⅜ turn of adjusting sleeve on each side will change toe-in ⅛").

Steering Geometry (toe-out on turns): With outer wheel turned exactly 20°, inner wheel should be turned 21½° ± ¾°.

FRONT SPRINGS: Springs have small coil at **upper end** and are installed with rubberized fabric insulator between upper end of spring and frame.

1950-51 Front Springs

Car Model	Spring Part No.
All 40, 50 (Synchro-mesh Trans.)	1314950
All 40, 50 (Dynaflow Drive)	1335808
70 (Dynaflow Drive)	1340981
50 & 70 (Ambulance & Funeral Cars)	1336961

Spring Identification—Part No. is stamped on one end coil.

Spring Height Correction: Use special shims, Part No. 1310413 (⅛" thick). If spring too low (front trim dimensions not within limits), install not more than three of these shims between upper end of spring and frame.

►*CAUTION*—If more than three shims required to correct spring height, replace spring.

CADILLAC

ALL SERIES (1950-51)

►**FRONT SPRING NOISE CORRECTION:** If click, scrape or grind noted (particularly on low speed brake application) correct as follows:

Seating Spring in Upper Seat—Drive car at moderate speed and apply brakes sharply (will cause spring to center itself in upper seat) or use pry bar to push upper end of spring onto its seat.

Insufficient Clearance at Lower Cross-Member flanged opening—After spring seated properly, check clearance between spring and lip of flanged opening in lower cross-member. Correct by bending lip on flange (CAUTION—do not use heat and bend lip only in area where contact occurs).

Installation of Spring Insulator (On New Cars). Will provide temporary relief (spring noise may disappear after approximately 300 miles.) Remove spring and seat, clean off all dirt and undercoating. Cut a spring rubber insulator (No. 1456575) open, place one cut end of insulator even with tangent end of spring, thread insulator on top of #1 spring coil, tape insulator to spring (avoid points of contact between spring and upper spring seat), reinstall spring.

DESCRIPTION: New design independent "parallelogram" type with coil springs and direct acting shock absorbers mounted independently of upper control arm. Upper control arm is new design mounted on frame bracket shaft in same manner as lower control arm. Shock absorbers can be removed and installed without disturbing upper control arm assembly.

ADJUSTMENT: Before making adjustments, check tire pressures (see data below), front wheel bearing adjustment, check for run-out and high spots (3/64" maximum in each case), wheel and tire balance, and spring height. Make certain that entire suspension system operates freely without binding or excessive play, place wheels in straight-ahead position and see that car is at curb weight. Then check and adjust following points in order:

Tire Inflation—(60S, 61, 62) 24 lbs. front and rear, (75) 28 lbs. front and rear, (86 Comm'l) 24 lbs. front, 30 lbs. rear.

Front Spring Height—See that car is at curb weight (full tank of gasoline, no load in trunk or car), normalize spring position by working bumper up and down and release slowly so that car assumes normal position. Then check distance from center of front lower rivet on rubber bumper bracket on

CONTINUED ON NEXT PAGE

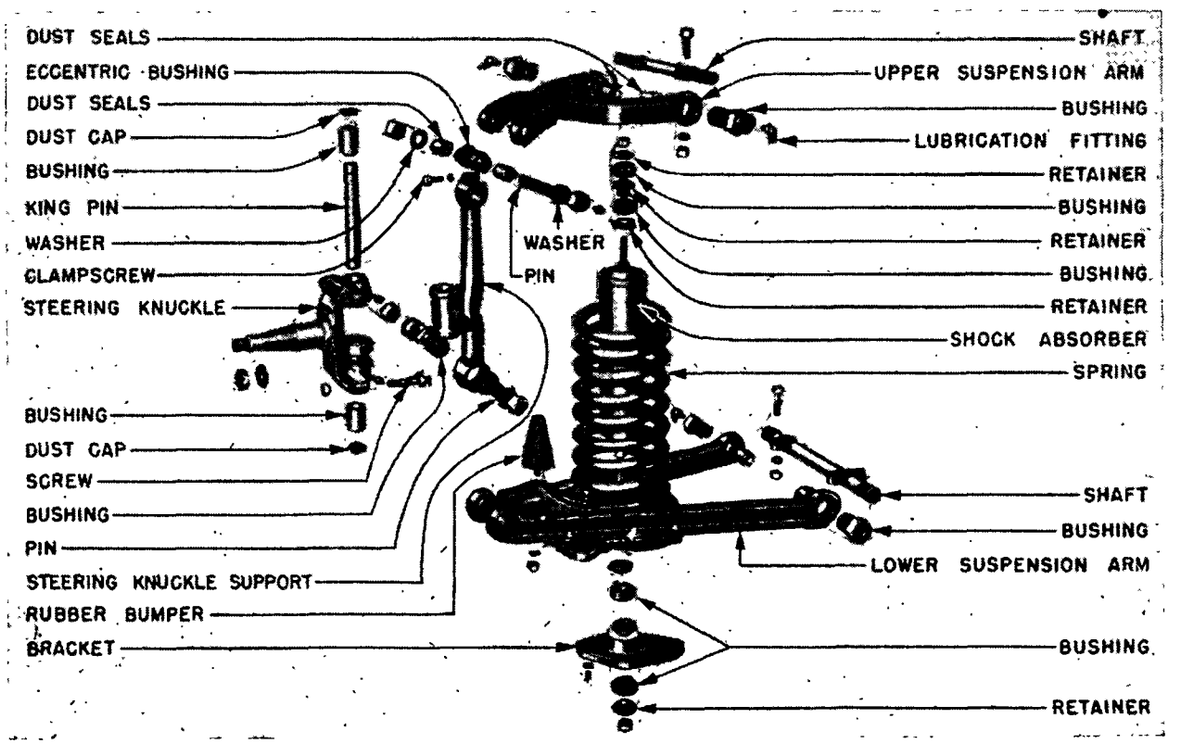

CADILLAC FRONT SUSPENSION

CADILLAC (C ntinu d)

frame to top surface of lower control arm spring seat directly below this rivet. Correct heights are listed in table below and should be equal on both sides of car within 3/8". Correct height by installing shim between bottom of spring and spring seat on low side of car or replace springs. See Spring data.

►*CAUTION—Do not replace springs to correct excessive height during first 2000 miles (springs settle considerably during this period).*

Front Spring Heights

Car Model	Spring Height
60S, 61, 62 Sedan	4¾-5½"
75 Sedan	5⅜-6⅛"
86 Comm'l	5⅜-6⅛"

Front Wheel Run-out—Mark point of maximum run-out on tire, turn wheel so that this mark is at front or rear when checking Caster and Camber, at top or bottom when checking Toe-In and Toe-Out.

Kingpin Inclination: 5°51' crosswise, all models.

Caster: 0° ± ½° (limits Neg. ½° to Pos. ½°). Must be equal on both sides of car within ½°.

Adjustment—Loosen clampscrew in upper end of knuckle support, use special wrench, Adjusting Tool KMO-366 or J-4691 (see Tool Note), to turn eccentric bushing on pivot pin. (NOTE—hexagonal head on bushing for wrench engagement located at rear end of bushing on early 1950 cars, front end on later cars). Turn eccentric bushing in **complete turns only** until correct caster secured, tighten clampscrew.

►**Adjusting Tool Note**—KMO-366 is special thin open-end wrench, J-4691 is special "crow-foot" wrench with square drive opening and can be used on all cars (regardless of bushing head location).

►*CAUTION—Camber will be disturbed unless bushing rotated in complete turns only.*

►*ADDITIONAL RANGE OF ADJUSTMENT*—If correct caster cannot be secured within limits of eccentric bushing rotation, additional range of adjustment can be secured by disconnecting lower support arm inner mounting shaft at frame cross-member and turning shaft in the arm (moving shaft to rear will increase positive caster).

Camber: 0° ± ⅜° (limits Neg. ⅜° to Pos. ⅜°). Must be equal on both sides of car within ½°.

Adjustment—Same as for Caster (above). Turn eccentric bushing not more than ½ turn in either direction from point where correct caster is secured.

►*CAUTION—Entire range of camber adjustment secured in ½ turn of the eccentric bushing.*

Toe-In: 1/32-3/32" with car at rest. Check with wheels in straight-ahead position and point of maximum wheel run-out vertically up or down.

Adjustment—Loosen clampscrews and turn Adjuster at outer end of **each tie-rod equally** (turning adjuster in direction of forward wheel rotation will decrease toe-in). Tighten clampscrews.

►*CAUTION—Open side of adjuster clamps must be over open side of adjuster when clampscrews tightened.*

SHOCK ABSORBER REPLACEMENT: *Not necessary to disturb Front Suspension Assembly.* Remove upper retaining nut, retainer, and rubber grommet from upper spring seat tower in engine compartment (NOTE—use wrench on squared upper stem of shock absorber to prevent it turning while loosening nut). Remove two bolts retaining lower shock absorber bracket on lower face of spring seat on lower control arm, then withdraw shock absorber and bracket assembly through hole in spring seat. Remove lower bracket by taking off retaining nut, grommets and retainers from shock absorber stem.

►**Installation Note**—See illustration for correct assembly of grommets and retainers on shock absorber stem. Use wrench on squared upper stem of shock absorber to prevent unit turning while tightening retaining nuts.

COIL SPRING REPLACEMENT: Support front end of car on jack under center of front cross-member, use second jack under suspension arm to support spring which is being removed. Disconnect front stabilizer link on same side of car. Remove shock absorber (see data above). Remove nut on lower pivot pin, unscrew pin from lower control arm and knuckle support. Lower jack under suspension arm until spring tension relieved, remove jack, lift spring out. Install spring by reversing this procedure.

►**Spring Installation Caution**—Install spring with open (tanged) end upward and seated in upper seat so that tang parallel with raised area on cross-member and visible through correct hole in the cross-member (right front spring tang visible through rear hole, left front spring tang visible through front hole). Hold spring in this position while raising lower suspension arm, drive or pry bottom of spring into its seat on lower arm (will not seat freely with arm lowered and spring fully extended).

FRONT STABILIZER REMOVAL & INSTALLATION: Disconnect link by removing nut on lower end and withdrawing link bolt from above (CAUTION—note location of retainers and grommets at upper and lower ends of link and replace in exact same order). Remove bolts from two frame mounting brackets, remove stabilizer. Remove rubber bushings from stabilizer brackets and bar (these bushings serviced separately). Install stabilizer by reversing above procedure.

SPRINGS: Part number is stamped on end coil and springs are color-marked for identification.

1950-51 Spring Specifications

Car Model	Part No.	Color Mark
60S, 62 Convt.	1456022	White
61	1456017	None
62 exc. Convt.	1456018	Green
75	1456020	Pink
86 Comm'l	1456021	Yellow

Spring Height Adjusting Shim—No. 1457838.

CHEVROLET

ALL PASS. CAR MODELS (1950-51)

CHECKING & ADJUSTMENT: First check entire front end for excessive play and wear, check steering gear adjustment, wheel bearing adjustment, tire inflation pressure (see data below), wheel balance, and run-out (run-out should not exceed 1/16", then place car on level floor and check front end specifications as follows:

Tire Inflation Pressure: (Cold):
Pass. Cars—24 lbs. front & rear.
Station Wagon & Sedan Delivery—26 lbs. front, 30 lbs. rear.

Riding (Spring) Height: Rock car sidewise several times and allow it to settle, then measure vertical distance from center of pivot pin at each end of lower control arm to floor. Difference between these two measurements should be 1⅝" ± ¼". If difference between measurements less than this amount, or if unequal on both sides of car, install spring shims or replace springs (see Spring data).

Kingpin Inclination: 4° ± ½° crosswise.

Caster: Pos. ½° ± ½°.
Adjustment—Loosen clamp bolt in upper end of knuckle support, remove lubricant fitting from rear bushing at outer end of upper control arm, insert Allen wrench through hole, turn pivot bolt until exact caster setting secured, then adjust camber.

Camber: Pos. ½° ± ½°.
Adjustment—After adjusting Caster (above), rotate pivot bolt not more than ½ turn in either direction to secure correct camber. Entire range of adjustment is secured in ½ turn of the pivot bolt.

Toe-In: 0 to ⅛".
Adjustment—Loosen clamp bolts at each end of **left hand tie rod** and turn rod (right hand tie rod is one-piece non-adjustable type), tighten clamp bolts to 8-12 ft. lbs.

►*CAUTION—Align tie rod ends before tightening clamp bolts (ball studs will bind if not aligned).*

Steering Geometry (Toe-out on Turns): With outer wheel turned 20°, inner wheel should be turned 24° ± 2°. No adjustment (replace steering arm if incorrect).

DISASSEMBLY & PARTS REPLACEMENT: *See complete Chevrolet Front Suspension in previous release.*

SPRINGS: Springs have one end ground flat which should be placed at top with shim (when used) between top of spring and spring seat in cross-member. Lower end not ground and should be fitted in recess in spring seat on lower control arm.

1950-51 Spring Specifications

	Color Mark	Part No.
Cabriolet (Convt.)	Black	3694210
Others (Synchro-mesh Trans.)	Yellow	3694612
All (Powerglide Trans.)	Black	3694210

Spring Height Correction—If spring height too low (riding height less than 1⅝"), install not more than two No. 3691424 Shims (1/16" thick) on top of the spring.

►*CAUTION*—If more than two shims required to secure correct riding height, replace spring (additional shims will cause spring coils to bottom before rubber bumper on lower control arm stops arm movement).

►*REPLACEMENT SPRING CAUTION*—Shims furnished with new spring (wired to spring) must be installed with the spring (riding height will not be correct if shims omitted).

CHRYSLER, DE SOTO, DODGE & PLYMOUTH

All Chrysler, DeSoto, Dodge, Plymouth (1950-51)

CHECKING & ADJUSTMENT: Before checking front end, check and adjust front wheel bearings, wheel run-out, tire inflation, and front spring height (to level car sideways).

Tire Inflation: 24 lbs. Cold (all models).

Front Spring Height: With car on level floor, measure vertical distance from inner and outer end of lower control arm to floor (center of control arm pin at outer end, center of grease fitting in control arm pivot bar at inner end). The **difference** between these two measurements should be **equal on both sides of the car within ¼".** If not within this limit, check rear end of car for unequal spring heights by measuring from spring plate to frame on each side (front spring height will be affected if rear spring heights differ more than ¾"). Correct front spring height by installing **not more than two spacer shims** on top of low spring (see Springs).

►*CAUTION—Installation of shims will change Camber (see Camber Adjustment).*

Kingpin Inclination: No adjustment.
1950 All 6 Cyl. Models—4¾-6° crosswise.
1950 Chrysler 8—6¼-7½° crosswise.
1951 All 6 Cyl. Models—5-6½° crosswise.
1951 Chrysler 8—(C52, C54) 5-6½°, (C53) 6½-8°.

Caster: *CAUTION—All Models not set alike.*
Chrysler & DeSoto—Neg. 2° (limits Neg. 1° to Neg. 3°). This is **reverse** caster.
Dodge & Plymouth—0° (limits Neg. 1° to Pos. 1°).
Adjustment—See Camber adjustment. Caster should be correct if all suspension parts correctly assembled.

Camber: *CAUTION—1950 & 1951 cars not set alike.*
1950 Models—0° to Pos. ¾° with camber on left side ¼-½° **greater** than on right side of car.
1951 Models—Neg ⅜° to Pos. ⅜° with camber on left side ¼-½° **greater** than on right side of car.

Adjustment—Loosen clampscrew in upper end of knuckle support, turn eccentric bushing (use special "crow-foot" wrench C-611 or C-619) not more than ½ revolution from point where correct caster is secured (entire range of adjustment secured in ½ turn of the bushing), tighten clampscrew.

►*CAUTION*—Bushing must not be turned so as to bind against either side of upper control arm (keep bushing centered in control arm as nearly as possible).

►*ADDITIONAL RANGE OF ADJUSTMENT*—If correct camber cannot be secured by turning eccentric bushing within limits given above, not more than two spacer shims can be installed at top of each front spring. Each shim will increase camber approximately ¼° (Chrysler), ½° (others).

Toe-In: 0" preferred, limits 0" to 1/16".

Adjustment (Chrysler & DeSoto)—Check tie rods for equal length, adjust toe-in by loosening clamp bolt at both ends of each tie rod and turning **both tie rods equally.** Before tightening clamp bolts, make certain that rod is against same side of ball stud at each end of rod (to prevent binding on turns).

Adjustment (Dodge & Plymouth)—Loosen clamp bolt at both ends of each tie rod, adjust toe-in by turning **both tie rods equally.** NOTE—One long (right hand) and one short (left hand) tie rod are used, connected directly to steering gear pitman arm.

Steering Geometry (toe-out on turns): With outer wheel turned exactly 20°, inner wheel should be turned 21½° ± 1°.

SPRINGS: Part number is stamped on springs for identification (last digit of number indicated by like number of grind marks).

►*CAUTION*—Different springs used on right and left side of car on some models. Spring Part No. indicates a definite relationship in regard to car height (higher spring number will raise car higher). Car can also be raised by installing spacer shim on top of spring (between spring seat and silencer). ***Not more than two spacer shims should be used.***

SPRING SPECIFICATIONS

1950 Chrysler Models

Car Model	Left	Right
C48 Sedan & Club Coupe	1318187	1318186
C48 Spec. Club Coupe & Convt.	1140284	1140283
C48 Station Wagon	1140284	1140283
C48 7 Pass. Models	1127983	1127983
C49 All Models	1127983	1127983
C50 All Models	1134324	1134324

1951 Chrysler Models

C51 Sedan & Club Coupe	1318186	1318185
C51 Spec. Club Coupe & Convt.	1140283	1140282
C51 Station Wagon	1140283	1140282
C51 Heavy Duty on above	1141016	1141015
C51 8 Pass. & Limo. Std.	1127984	1127983
C51 8 Pass. & Limo. H.D.	1138944	1138943
C52 Sedan & Club Coupe	1127983	1127982
C52 Spec. Club Coupe & Convt.	1127984	1127983
C53 All Models	1134324	1134323
C54 All Models	1127984	1127983
C52 & C54 Heavy Duty	1138944	1138943
C53 Heavy Duty	1138945	1138945

1950 DeSoto Models

S14 Sedan, Club Coupe, Carryall	1318186	1318185
S14 Spec. Club Coupe & Convt	1140283	1140283
S14 Station Wagon	1140283	1140283
S14 7 Pass. Sedan	1127983	1127981
S14 7 Pass. Suburban	1138943	1138942

1951 De Soto Models

S15 Sedan, Club Coupe, Carryall	1318185	1318184
S15 Spec. Club Coupe & Convt.	1140282	1140282
S15 Station Wagon	1140282	1140282
S15 Heavy Duty on above	1141016	1141015
S15 8 Pass Sedan	1127983	1127982
S15 Suburban	1138942	1138942
S15 8 Pass. & Subn. H D.	1138944	1138943

1950 Dodge Models

D33	1123243	1123242
D34 Sedan & Club Coupe	864845	864844
D34 Spec. Club Coupe & Convt.	1318185	1318185
D34 Station Wagon	1318185	1318185
D34 7 Pass. Sedan	1127981	1127981

1951 Dodge Models

D41 Std.	1123242	1123241
D41 Heavy Duty	1139002	1139001
D42 Sedan & Club Coupe	864844	864843
D42 Spec. Club Cpe. & Sta. Wgn	1318184	1318184
D42 Heavy Duty on above	1141014	1141013
D42 8 Pass. Sedan	1127982	1127981
D42 8 Pass. Heavy Duty	1138943	1138942

1950 Plymouth Models

P19 exc. Suburban	1123242	1123241
P19 Suburban (15" Wheels)	1123243	1123242
P20 exc. Convt.	1123244	1123243
P20 Convt. Coupe	1123244	1123244

1951 Plymouth Models

P22 exc. Subn. with 18" Whls.	1123241	1123241
P22 Heavy Duty on above	1139001	1139001
P22 Suburban with 18" Whls	1139001	1139001
P23 except Convt.	1123243	1123242
P23 Convt.	1123244	1123243
P23 Heavy Duty	1139002	1139001

FORD, LINCOLN, MERCURY

Ford Pass. Cars & Station Wagon (1950-51)
Lincoln & Cosmopolitan (1950-51)
Mercury Models (1950-51)

►**FORD FRONT SUSPENSION NOISE CORRECTION:** Popping (when brakes applied) or chucking noise in front end. May be caused by incorrect Caster Adjustment resulting in caster adjusting bushing striking lower support arm. *See Caster Adjustment.*

►**FORD RIDING HEIGHT & CAR LEVELING CORRECTION:** Incorrect height or list to one side may be caused by use of unmatched springs or incorrect spring height. *See Ford Riding Height and Spring data below.*

►**FORD, LINCOLN, MERCURY FRONT SPRING PRODUCTION CHANGES:** *See Spring data below.*

DESCRIPTION: Same design as used on previous models except as follows:

Ford 1950-51 Lower Suspension Arm—Lower arm and bumper redesigned (bumper plate 9/16" higher than on 1949 cars or approximately 1" above the arm).

Ford 1950-51 Stabilizer Assembly—New design mounted directly on lower control arm on each side of car (no frame connection). Can be installed on 1949 cars. *See Front Stabilizer data below.*

CHECKING & ADJUSTMENT: First check wheel bearing adjustment, wheel spindle wear, tire inflation pressure (see data below), wheel run-out and balance (run-out should not exceed ⅛"), steering linkage and steering gear for excessive looseness or play, then place car on level floor and check front end specifications with car at curb weight as follows:

Tire Inflation Pressure: For each tire size (Cold):
Ford 6 00x16—Front 28 lbs , Rear 25 lbs.
Ford 6.70x15—Front 24 lbs., Rear 21 lbs.
Ford Sta. Wagon 7.10x15 6 Ply—Front 25 lbs., Rear 30 lbs.
Mercury 7.10x15 4 Ply—Front & Rear 24 lbs.
Mercury Sta. Wagon 7.10x15 6 Ply—Front & Rear 30 lbs.
Lincoln 8.20x15—Front & Rear 24 lbs.

Ford Riding Height (Frame Height at Curb Weight): Before checking front end specifications, check frame height on level floor at curb weight (full tank of fuel but no passenger load) as follows:

C NTINUED N NEXT PAGE

FORD, LINCOLN, MERCURY (C ntinu d)

Front End Height—Lightly jounce **rear** end of car several times to allow car to assume natural position. Measure from floor to center of lower support arm pivot pins at inner and outer ends of arm on each side of car. Height at inner end of arm should be ⅛" to 1" greater than height at outer end.. **If inner end ⅛" greater to ¼" less than outer end,** install shim on spring (see Springs). **If inner end more than ¼" less than outer end,** replace spring (see Springs).

Lincoln & Mercury Riding Height: With car at curb weight, measure distance from floor to center of lower control arm pivot pins at inner and outer ends of arm. Height at outer end of arm should be 1" less than at inner end of arm and measurement should be same on both sides of car. If distance not correct, or unequal, correct by shimming or replacing springs (see Springs).

Kingpin Inclination:
Ford (incl. Sta. Wgn.)—5¼° (4¾-5¾° crosswise).
Lincoln & Mercury—5° crosswise with ¾° camber.

Camber: Ford (incl. Sta. Wgn.) Pos ¼° to Pos. ¾° preferred (limits 0° to Pos. 1°) with maximum variation between wheels of ¼°.
Lincoln & Mercury—0° to Pos. ¾° with maximum variation between wheels of ¼°.
Adjustment—Must be made exactly as follows to avoid possibility of binding and noise in front suspension system (see Noise Correction Note).
1) Back off clampscrew in **upper** end of spindle support one turn to free the bushing.
2) Install tool No. 3046-N (crow-foot wrench) on hexagonal head of bushing in **upper end** of spindle support, use wrench on tool boss to turn bushing for desired camber. Bushing is eccentric and entire range of adjustment should be secured within ½ turn.
3) Make certain that spindle support is against shoulder on bushing, tighten clampscrew to 25-30 ft. lbs.

►*CAUTION—Clampscrew must not bind on side of groove in bushing (will prevent bushing being held securely and will permit it to move in service).*
If correct camber setting not obtained within range of camber bushing movement (½ turn), check all suspension parts for misalignment or wear.

Caster: Ford (exc. Sta. Wgn) Pos. ½° to Neg. 1° with maximum variation between wheels of ½°.
Ford Sta. Wagon—Neg. ¼° preferred (limits Neg. ¼° to Neg. 1¾°) with maximum variation between wheels of ½°.
Lincoln & Mercury—Pos. ½° to Neg. 1° with maximum variation between wheels of ½°.
Adjustment—Must be made exactly as follows to avoid possibility of binding and noise in front suspension system (see Noise Correction Note).
1) Back off clampscrew in **lower** end of spindle support one turn to free bushing.
2) Install tool No. 3089-N (crow-foot wrench) on hexagonal head of bushing in **lower end** of spindle support, use wrench on tool boss to turn bushing for desired caster. On Ford models, additional range of adjustment can be secured by rotating upper and lower support arm inner shafts (see Ford Adjustment Note below).
3) Make certain that spindle support is against shoulder on bushing, tighten clampscrew to 25-30 ft. lbs.

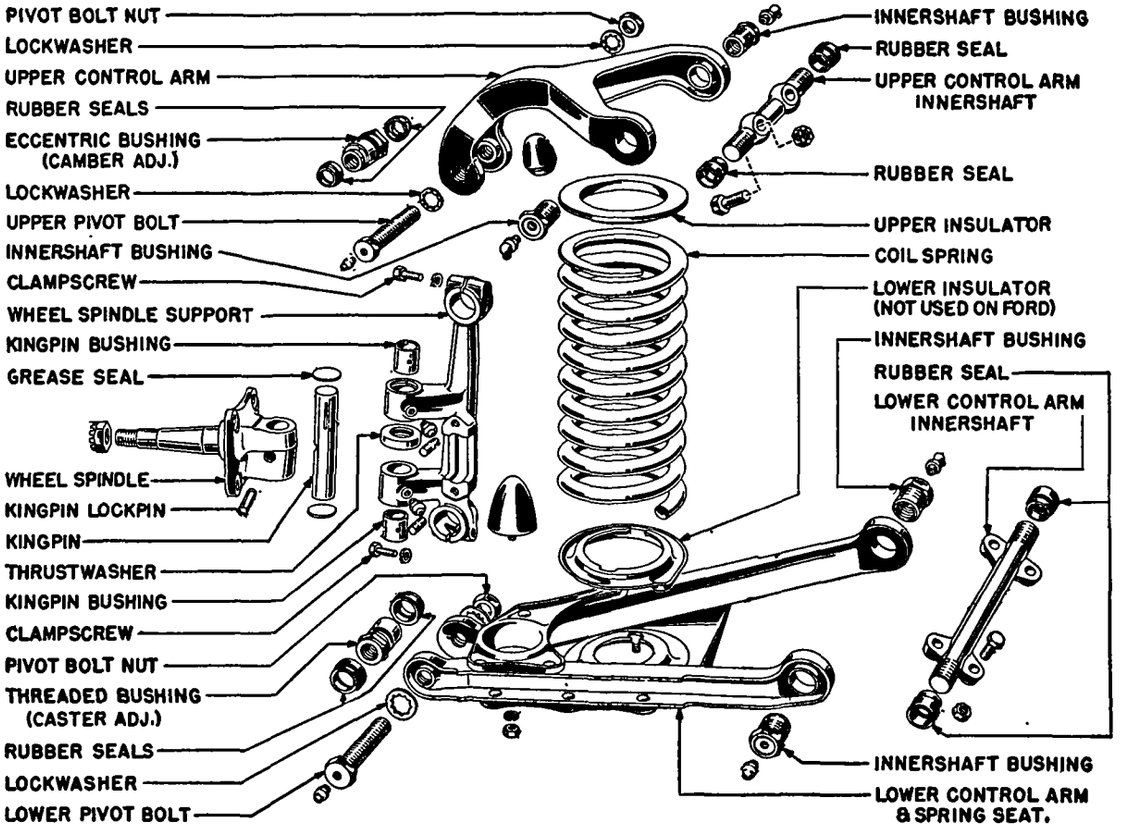

FORD, LINCOLN, MERCURY FRONT SUSPENSION

►*CAUTION—Maximum movement of caster adjustment bushing is ⅛" either way from center (bushing must not bind against support arm). If correct caster setting cannot be secured within range of bushing travel, check all suspension parts for misalignment or wear. Clampscrew must not bind on side of groove in bushing (will prevent bushing being held securely and will permit it to move in service).*

►*FORD CASTER ADJUSTMENT NOTE*—Additional range of adjustment may be secured as follows:

Lower Support Arm Inner Shaft—Provides ¼° change in caster by rotating the inner shaft **one complete turn** clockwise (to increase caster) or counter-clockwise (to decrease caster) viewing shaft from forward end.

Upper Support Arm Inner Shaft—Provides ⅛°, ¼°, or ⅜° change in caster by rotating the inner shaft **½, 1, or 1½ complete turns** counter-clockwise (to increase caster) or clockwise (to decrease caster) viewing shaft from forward end.

CAUTION—Inner shafts must not be turned within ¼ turn of bushing at either end when making above adjustment (shaft must have at least ¼ turn free movement in each direction to prevent binding).

Toe-In: Ford (incl. Sta. Wgn). 1/16-1/8" **toe-in.**
Lincoln & Mercury—3/32-5/32" **toe-in.**
Adjustment—With steering wheel turned to center position and with both front wheels positioned "straight-ahead," loosen clamp bolts on adjusting sleeve at outer end of each tie rod, **turn both adjusting sleeves equally to set toe-in.**

►*FORD ADJUSTMENT NOTE*—If steering wheel spoke not horizontal with wheels "straight-ahead," shorten one tie rod and lengthen opposite rod to align steering wheel and adjust toe-in.

Steering Geometry (Toe-out on Turns): On Lincoln & Mercury, with outer wheel turned exactly 20°, inner wheel should be turned 23½° ± ½°. No adjustment provided. Check suspension system for bent parts if incorrect.

SHOCK ABSORBER, SPRING, & CONTROL ARM REPLACEMENT: *See complete "Ford, Lincoln, Mercury" Front Suspension in previous release for all data except Ford Front Stabilizer:*

Ford Front Stabilizer: New design clamped directly to each lower control arm at two points (no frame connection).

Removal & Installation—Take out two stabilizer retainer-to-control arm bolts on each arm, remove retainers, lift stabilizer assembly off, slide insulators off stabilizer bar. When assembling stabilzer,

C NTINUED N NEXT PAGE

FORD, LINCOLN, MERCURY (Continued)

use hydraulic brake fluid on insulators when sliding insulators on bar.

►**Installing 1950-51 Stabilizer on 1949 Cars**—Remove and discard old stabilizer. Drill .32" hole (#11 drill) in web of each lower arm assembly at point .78" up from lower face of arm and 7/8" out from outer face of lower spring seat flange. Position stabilizer on lower control arms with **offset upward** (to provide clearance), make certain that projections on clamps engage drilled holes in arms and that clamp bolts are at top. Install outer retainers with bolt hole at the bottom.

SPRINGS: Springs have upper end ground flat and are marked for identification as follows:

Part No. & Color Marks—Part number marked on outer diameter of flat end of spring coil and spring also paint marked (one or more daubs of special color) as listed in Spring table below.

Low & High Limit Spring Marks—Springs are graded in low and high limit groups and marked by GRIND MARK on flat end of spring as follows:

Low Limit Spring—1 Grind Mark.

High Limit Spring—2 Grind Marks.

►*SPRING INSTALLATION CAUTION—Springs on both sides of car must be matched (both springs same—Low Limit or High Limit). Car will have visible list toward low limit spring side and camber adjustment will be difficult if unlike springs used.*

Ford Spring Shim Installation (to correct Riding Height): If riding height not correct (see Riding Height data) but within limits which can be corrected by installation of shim, install one shim (Part No. 8A-5355) between top of spring and spring insulator on low side of car.

►*CAUTION—Do not install more than ONE shim on the spring (spring will not be held in place if more than one shim used).*

1950-51 Spring Specifications

Ford Models

	Part No.①	Color Mark
1950 Std. (exc. Convt.)	8A-5310-B	White
	8A-5310-D	3 Yellow
1950 Convt. (First)	8A-5310-C	②
1950 Convt. (Later)	0A-5310	3 Aluminum
1950 H.D. (exc. Convt.)	8A-5310-F	3 Red
1951 Std. (exc. below)	1A-5310-A	Yellow
1951 Convt.	1A-5310-B	Red
1951 Station Wagon	1A-5310-C	Blue
1951 H.D. (exc. Convt.)	1A-5310-C	Blue

Lincoln 0L & 1L

1950-51 Std.	8L-5310-A	Red
1950-51 H.D.	8L-5310-B	Blue

Lincoln Cossmopolitan 0H & 1H

1950 Std. (exc. Convt.)	8H-5310-B	White
1950 Convt.	0H-5310-A	Orange
1950-51 H.D.	8L-5310-B	Blue
1951 Std. (exc. Convt.)	1H-5310-A	Gray
1951 H.D. (exc. Convt.)	1H-5310-B	Brown
1951 Convt. Std.	1H-5310-C	Orange
1951 Convt. H.D.	1H-5310-D	Purple

Mercury Models

1950-51 Std. (exc. Sta. Wgn.)	8M-5310-C	Yellow
1950-51 Station Wagon	8M-5310-D	Green
1950-51 H.D.	8M-5310-D	Green

①—Number and color of paint marks.

②—2 Yellow or Blue marks. This spring superseded by No. 0A-5310 in pairs only.

FRAZER & KAISER

All Frazer & Kaiser Models (1950-51)

DESCRIPTION: Independent, linked parallelogram type with coil springs and direct acting shock absorbers. Suspension system is made up of the following units:

Upper (Short) Control Arm—Pivoted on short mounting shaft bolted on top of frame side rail at inner end and linked to top of knuckle support by eccentric pin at outer end (eccentric pin is the camber adjustment). Threaded bushings are used at pivot points.

Lower (Long) Control Arm—Pivoted on mounting shaft bolted to underside of frame cross-member at inner end and linked to lower end of knuckle support by bolt at outer end. Threaded bushings are used at pivot points.

Coil Spring—Mounted on spring seat on lower control arm with upper end in special spring seat on frame.

Shock Absorber—Direct acting type mounted within the coil spring. Rubber bushings used at both ends. NOTE—Shock absorber can be removed without disturbing front suspension assembly (see Shock Absorber data below).

CHECKING & ADJUSTMENT: Check front wheel bearing adjustment, tire inflation pressure, steering gear adjustment, shock absorber action, and steering linkage for correct adjustment and freedom of movement, check front wheels and tires for run-out (maximum ¼" measured at center of tire sidewall, ⅛" measured at wheel rim), front and rear wheels and axles for alignment. Place car on level floor, check front springs for sag (see Spring data), then make following checks and adjustments in order given below.

Tire Inflation: Check and inflate tires to following pressures (Cold) before checking front end:
6.70x15 & 7.10x15—24 lbs. front & rear.

Spring Deflection (Frame Height): Bounce front end of car up and down several times to check for binding in suspension system, then measure from top edge of lower control arm vertically upward to lower face of frame side rail at same point on each side of car. Measurements must be equal within ⅜". If difference more than ⅜", install shim on low spring or replace springs (see Spring data).

Kingpin Inclination: 5½°. Limits 4¾-5¾° crosswise.

Caster: 0° desired, limits Neg. 1° to Pos. 1°.

Adjustment—Loosen clamp bolt in upper end of knuckle support, remove lubricant fitting from front bushing at outer end of upper control arm, use wrench KF-25 (Allen wrench) inserted through fitting hole to turn upper pivot pin in **complete revolutions only** (to avoid disturbing camber adjustment). Check Camber.

►*CAUTION*—After adjusting, check control arm for clearance at each side of support. This clearance necessary to prevent binding.

Camber: (1950) Pos. ¼° desired, (1951) Pos. ½° desired. Limits 0° to Pos. ¾°.

Adjustment—Same as for Caster (above) except that eccentric pivot pin should be turned not more than ½ revolution from point where correct caster secured (entire range of adjustment secured in ½ revolution of the pin).

Toe-In: (1950) 0" desired, limits 0" to 1/16". (1951) ⅛" desired, limits 1/16" to ⅛".

Adjustment—Loosen clamp bolts at each end of both tie rods, turn **both tie rods equally.**

Steering Geometry (Toe-out on turns): With outer wheel turned 20°, inner wheel should be turned exactly 23°. No adjustment.

SHOCK ABSORBER REPLACEMENT: Raise car with jack placed under front cross-member to relieve tension on spring. Disconnect shock absorber at bottom by taking off nut on mounting stud and removing retainer, cushion, and lower half of shock absorber support. Compress shock absorber until lower mounting stud clears upper half of support on spring seat, remove support through spring coils. Disconnect shock absorber upper mounting by removing nut on top of upper control arm mounting bracket, lower shock absorber through hole in spring seat. Replace shock absorber in same manner. Make certain that retainers installed on mounting cushions.

UPPER CONTROL ARM REPLACEMENT: Support car on jacks under frame, remove front wheel. Install jack under spring seat to hold spring and lower arm. Remove lockscrew in upper end of knuckl support. Remove bushings in outer end of upper control arm, use Allen wrench to unscrew eccentric pin from knuckle support. Take out mounting screws in pivot shaft at inner end of control arm,

►*CAUTION—Do not lose camber adjustment shims under pivot shaft. These shims must be re-installed to maintain correct camber (not used on first cars).*

Pivot Shaft Bushing Installation: Install new bushings if old parts worn. To install bushings on pivot shaft at inner end of arm, assemble pivot shaft, new seals, and new bushings loosely in arm. Install Upper Suspension Arm Assembly Gauge, KF-7, tighten gauge setscrews to support control arm. Use thread cutting lubricant on bushings (bushings cut own thread), turn bushings in tight.

LOWER CONTROL ARM REPLACEMENT: Support car with jack under frame to rear to suspension unit. Disconnect front sway-eliminator link at spring seat, remove shock absorber (see above). Place jack under lower spring seat to support arm and spring. Take out pivot shaft mounting screws at inner end of arm. Relieve spring tension by lowering jack under spring seat. Disconnect control arm at knuckle support by unscrewing bolt from knuckle support bushing and arm. Lift out arm, spring, spring insulators.

►*CAUTION—Do not disturb bushing in lower end of knuckle support unless this bushing being replaced.*

Pivot Shaft Bushing Installation: Same as for upper control arm pivot shaft bushings (see data above), except that Lower Suspension Arm Assembly Gauge, KF-9, should be installed on inner end of arm to spread arm correctly while bushings being turned

KINGPIN BEARING REPLACEMENT: Disconnect steering arm. Drill ¼" hole in expansion plug above kingpin, pry plug out. Drive out kingpin locking pin, then drive kingpin and lower expansion plug out at bottom. Replace kingpin needle bearings with Driver KF-12. Install thrust bearing with open face down toward steering knuckle, install shims between knuckle support and thrust bearing, as required, so that pull required to turn steering knuckle is 2-5 lbs. measured at outer cotter pin hole.

SPRINGS: Springs are paint-marked on end coil for identification.

CONTINUED N NEXT PA E

FRAZER & KAISER (C nt.)

1950 Spring Specifications

Model	Color Mark	Part No.
All 4-Dr. Sdn.	Green	204354
Heavy Duty & Exp.	Yellow	203466
Convertible	Orange	205776
Utility & Virginian	Brown	206363
Taxicab	Yellow	203466

Spacer Installation (to correct Spring Height): Spacer can be installed between upper end of spring and spring seat of low springs to correct spring deflection on 1949 & later cars only (these cars have modified upper spring seat).

HENRY J

4 Cyl. Model 513 & 6 Cyl. 514 (1951)

DESCRIPTION: Independent, linked parallelogram type with coil springs, and direct acting shock absorbers mounted within the springs. Suspension system is made up of the following units:

Upper (Short) Control Arm—Pivoted at inner end on short mounting shaft bolted on inner side of shock absorber mounting bracket on frame side rail (camber and caster adjusting shims between shaft and bracket) with threaded bushing and rubber seal on each end of shaft. Arm is pivoted at outer end on a bolt threaded through the arm and through a threaded bushing in the upper end of the steering knuckle support. Bushing is locked in knuckle support by a clampscrew and a rubber seal is used on the bolt at each side of the buhsing.

Lower (long) Control Arm—Pivoted at inner and outer ends in same manner as upper arm (above.) Lower control arm shaft is bolted directly to the frame cross-member.

Coil Spring—Mounted on spring seat on lower control arm with upper end seated in pocket in frame side rail.

Shock Absorber—Direct acting hydraulic type mounted within coil spring with upper end bolted to shock absorber support on frame and lower end bolted to mounting plate on lower control arm spring seat. NOTE—Shock absorber can be removed without disturbing front suspension system.

Sway Eliminator—Consists of a bar clamped directly to each lower control arm. Bar does not have any frame connection.

CHECKING & ADJUSTMENT: First check front wheel bearing adjustment, tire inflation pressure, steering gear adjustment, shock absorber action, and steering linkage for correct adjustment and freedom of movement, wheel and tire run-out, and front springs for sagging (car must be level crosswise). Make following checks with car on level floor:

Tire Inflation: 24 lbs. Cold, front and rear.

King Pin Inclination—4½° (limits 4° to 4¾°).

Caster: 0° desired (limits Neg. 1° to Pos. 1°). Controlled by shims on upper control arm inner shaft mounting bolts.

Adjustment—Loosen upper control arm inner shaft mounting bolts, install "half-shim" (on one bolt only) between shaft and mounting bracket placing shim at forward bolt to increase positive caster, or at rear bolt to increase negative caster.

►***CAUTION—do not disturb the "whole-shims" which are camber adjustment.***

Camber: Pos. ½° desired (limits Pos. ¼° to Pos. 1°). Controlled by shims on upper control arm inner shaft mounting bolts.

Adjustment—Loosen upper control arm inner shaft mounting bolts, install "whole-shims" (on both bolts) between shaft and mounting bracket to decrease camber, remove shim to increase camber. Same shim thickness must be added or removed at both shaft mounting bolts (use only "whole-shims" for this adjustment).

►***CAUTION—do not disturb the "half-shims" (at one bolt only) which are caster adjustment.***

Toe-In: ¼" desired (limits 3/16" to ¼").

Adjustment—Place steering wheel in centered posion with wheel spoke horizontal. Adjust right and left tie rods, as necessary, until both front wheels in straight-ahead position, then adjust toe-in by turning adjusting sleeve on each tie rod equally.

Toe-out on Turns: With inner wheel turned 20°, outer wheel should be turned 17°31'. No adjustment. Check for bent steering arms if toe-out incorrect.

HUDSON

6 & 8 CYL., ALL MODELS (1950-51)

CHECKING & ADJUSTMENT: First check and adjust front wheel bearings, tire inflation, wheel and tire run-out, spring height, steering gear adjustment, and entire suspension system for free operation. Place car on level floor and check following:

Tire Inflation: 26 lbs. Front, 24 lbs. Rear. Cold.

Spring Height: Rock car several times sideways, allow car to settle, measure from top of rubber bumper seat on lower control arm to bottom of upper rebound bumper bracket on frame on each side of car. This dimension should be 4¼". If not equal within ½" on both sides of car, replace one or both springs.

Kingpin Inclination: 3° 36' crosswise.

Camber: Pos. ½° (limits Pos. ½° to Pos. 1½°). Must be equal on both sides of car within ½°.

Adjustment—Loosen clampscrew in upper end of knuckle support, use special tool KMO-366 (special thin open-end wrench) to turn eccentric bushing on pivot pin at outer end of upper control arm **not more than ½ turn** from point where correct caster secured, tighten clampscrew.

►***CAUTION—Set camber with least possible change in caster (entire range of adjustment secured in ½ turn of eccentric bushing).***

Caster: Pos. 1° (limits Pos. ½° to Pos. 1½°). Must be equal on both sides of car within ½°.

Adjustment—Same as for camber adjustment (above) except that bushing should be turned in complete turns only to avoid disturbing camber. One complete turn of the bushing changes caster ½°.

►***CAUTION—Caster adjustment will affect camber unless bushing turned in complete turns only.***

Toe-In: 0" to 1/16".

Adjustment—Adjust both tie rods equally with steering wheel set in center straight-ahead position.

Toe-out on Turns: With inner wheel turned 30°, outer wheel should be turned 25° with not more than ½° variation between right and left turn. No adjustment provided (check for bent steering arm if incorrect).

SERVICING (REPLACEMENT OF PARTS): ***See complete "Hudson" Front Suspension in previous release.***

SPRINGS: May be identified by Part No. stamped on top coil. "Light Scale" springs are standard and "Heavy Scale" springs optional on all models.

NASH STATESMAN & AMBASSADOR

STATESMAN & AMBASSADOR SERIES (1950-51)

►**FRONT SUSPENSION ASSEMBLY UNIT REMOVAL:** If required for overhaul or repair, entire front suspension assembly can be removed as a unit by taking out four bolts which hold the unit on the right and left body sills.

►***CAUTION***—All parts of the rubber insulated mounting bolts must be correctly assembled when installing suspension assembly.

CHECKING & ADJUSTMENT: First check wheel bearing adjustment, steering gear adjustment, tire inflation pressure (see data below), wheel and tire balance and run-out, then place car on level floor and check following specifications:

Tire Inflation Pressure: 24 lbs. front & rear.

Kingpin Inclination: 8½° crosswise.

Caster: 0° to Pos. ½° NOTE—Machined bosses provided on steering knuckle pin for mounting of J-1377 Caster & Camber Gauge.

Adjustment—Loosen nuts at inner ends of upper control arm pivot bar frame mounting bolts, insert "C" washers between frame bracket and pivot bar at front bolt to decrease caster, or at rear bolt to increase caster. Check camber after completing adjustment.

►**Adjusting "C" Washer Note**—These washers furnished 1/16" and 1/8" thick. One 1/16" washer will change caster approximately 1/3°.

Camber: 0° desired, limits Neg. ¼° to Pos. ¼°.

NOTE—Machined bosses provided on steering knuckle pin for mounting of J-1377 Caster & Camber Gauge.

Adjustment—Adjust in same manner as Caster (above) except that washers should be added (to increase Camber) or removed (to decrease Camber) **equally at front and rear pivot bar bolts** to avoid disturbing caster setting.

Toe-In: 1/8" to 3/16".

Adjustment—Loosen clamp bolt at each end of adjusting sleeves on both tie rods, turn adjusting sleeves on **both tie rods equally.**

Toe-out on turns: With outer wheel turned 20°, inner wheel should be turned 23½° (Statesman), 23° (Amb.) plus ½° minus 0°. Check for bent steering arm if incorrect.

Steering Arm Check—Place straightedge across back of brake support plate, measure from this straightedge to center of steering arm ball stud. should be 4 3/16" (Statesman), 4 5/16" (Amb.). Replace arm if incorrect.

REPLACEMENT OF PARTS (DISASSEMBLY & REASSEMBLY): See "1949-50 Nash" Front Suspension in previous release.

SPRINGS: ***CAUTION—Springs used on each series have special load rating and are not interchangeable between series.***

NASH RAMBLER

RAMBLER, ALL SERIES (1950-51)

DESCRIPTION: Independent linked parallelogram type with new type coil spring and shock absorber mounting as follows:

Coil Spring: Spring mounted **above** upper control arm with lower end piloted in spring seat mounted on knuckle support upper trunnion and upper end piloted on spring seat in frame.

Shock Absorber: Upper end mounted on bracket which is part of upper control arm pivot bar. Lower end is bolted in lower control arm.

►**CONTROL ARM ASSY. INTERCHANGEABILITY CAUTION:** Upper and Lower Control Arm Assemblies are interchangeable from right to left **except that front and rear horizontal arms are not interchangeable** (have 2° twist at inner end) and must be installed in pairs (one stamped "R", one stamped "L").

►**CHECKING GAUGE NOTE:** Flat gauge points provided on knuckle support pin for mounting of Gauge J-1377 to check Caster and Camber.

CHECKING & ADJUSTMENT: First check wheel bearing adjustment, steering gear adjustment, tire inflation pressure, wheel and tire balance and run-out, then place car on level floor and check following specifications:

Kingpin Inclination: 8½° crosswise. No adjustment.

Caster: 1° desired. Limits Pos. ¾° to Pos. 1¼°.
Adjustment—Loosen nuts on **lower** control arm frame mounted pivot bar bolts, add shims to pack on **rear mounting bolt to decrease caster, or front mounting bolt to increase caster.** Tighten bolt nuts securely after adjusting.

Camber: ½° desired. Limits Pos. ¼° to Pos. ¾°.
Adjustment—Adjust in same manner as Caster (above), except that shims should be **added or removed at both bolts equally** (to avoid disturbing caster). Add shims at both bolts equally to increase camber, remove shims to decrease camber.

Toe-In: ¼" desired. Limits ⅛" to ¼".
Adjustment—Loosen clamp bolts at each end of adjusting tube on outer end of **each tie rod,** turn both adjusting tubes equally.

Toe-Out on Turns: With outer wheel turned 20°, inner wheel should be turned 22½°, plus ½°, minus 0°. Check for bent steering arm if incorrect.

SHOCK ABSORBER REPLACEMENT: ***Not necessary to disturb Front Suspension Assembly.*** Remove bolts in upper and lower control arms which pass through shock absorber eyes, remove shock absorber.

COIL SPRING REPLACEMENT: Use Front Spring Compressor Set J-1608 or KMO-735 (same tools used on "600" suspension springs). Install compressor on spring with car weight on wheels, then raise front end of car so that suspension unit assembly drops down and frees spring, lift spring out.

KNUCKLE SUPPORT PIN ASSEMBLY: Bolt spring seat to upper trunnion first, tightening retaining bolt securely. Screw knuckle support into trunnion until it is tight, **then back knuckle support out one complete turn** to prevent pin bottoming in trunnion when front wheels turned). Screw knuckle support into lower trunnion until clearance of approximately ¼" is provided between upper edge of seal seat on support and trunnion.

SPRINGS: Heavier spring used on left side of car. Springs are installed with rubber cushion at top and bottom to prevent road noises being transmitted to body.

Spring Specifications

	Load	Height
Right	755 lbs. ±20 lbs.	10⅜"
Left	810 lbs. ±22 lbs.	10⅜"

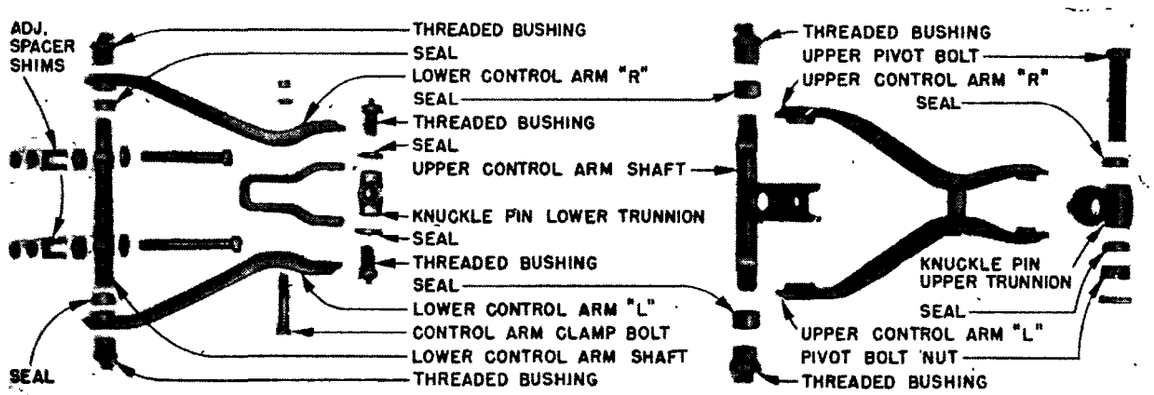

RAMBLER CONTROL ARM ASSEMBLIES

OLDSMOBILE

6 CYL., SERIES 76 (1950)
8 CYL., SERIES 88 & 98 (1950-51)

CHECKING & ADJUSTMENT: First check and adjust front wheel bearings, wheel and tire run-out (must not exceed ⅛"), front wheel balance, tire inflation, shock absorber action, and frame height. Then place car on level floor and check as follows:

Tire Inflation: 24 lbs. Front & Rear (all except 98 Convt.), 22 lbs. Front & Rear (98 Convt.).

Frame Height: Grasp front bumper at center and raise and lower front end of car several times to allow frame to come to normal level. Note any uneven action on right and left sides of car.

Kingpin Inclination: 4°29'47" crosswise.

Caster: 0° to Neg. ¾° (machined boss on top of knuckle support 0" to 5/64" forward of boss on lower end of support).
Adjustment—Loosen clamp bolt in upper end of knuckle support, remove lubricant fitting from front bushing at outer end of upper control arm, use Allen wrench (Tool J-720) inserted through fitting hole to turn eccentric pivot pin (turn pin clockwise to increase caster), turning pin **in complete revolutions only** to avoid disturbing camber adjustment.

Camber: Neg. ¾° to Pos. ¾° (new car limits Neg. ¼° to Pos. ¾°.)
Adjustment—Same as for Caster (above) except that eccentric pivot pin should be turned not more than ½ revolution from point where correct caster secured (entire range of adjustment secured in ½ revolution of the pin).

Toe-In: 1/16" to 1/8".
Adjustment—Loosen clamp bolts at each end of adjusting tube on outer end of each tie rod, turn adjusting tubes on **both tie rods** equally.

Toe-Out on Turns: With outer wheel turned exactly 20°, inner wheel should be turned 23°±½°. No adjustment (check for bent steering arm if incorrect).

SERVICING (DISASSEMBLY & REASSEMBLY): ***See complete "Oldsmobile 1940-50" Front Suspension in previous release.***

►***CAUTION***—Spring must be installed with flat (ground) end up and centered in four lugs on crossmember. Springs are marked for identification by paint-mark or part number on outside of one end coil.

1950 Spring Specifications

Car Model	Color Mark & Part No.
76 exc. Sta. Wgn. & Convt.	Red—509040
76 Sta. Wgn. & Convt.	Grey & Yellow—511138
88 Sedans & Club Coupe	Grey & Yellow—511138
88 Convt. & Holiday Coupe	Yellow & Brown—558865
88 Station Wagon	Red & Blue—558864
98 exc. Convt. & Holiday	Green & Aluminum—558789
98 Holiday Coupe	Green & Blue—558790
98 Convt.	Yellow & Aluminum—559362

1951 Spring Specifications

88 (all)	Grey & Yellow—511138
Super 88 exc. Convt.	Red & Yellow—511755
Super 88 Convt.	Blue & Yellow—512928
98 Sedan	Green & Aluminum—558789
98 Holiday Coupe	Blue & Green—558790
98 Convt.	Red & Aluminum—559362

Color Mark—Consists of one or two paint daubs on one spring coil.

PACKARD

ALL "2400 SERIES (1951)

DESCRIPTION: Independent, parallelogram "Broad-Beam" type with new design Upper Support Arm and Direct Acting Shock Absorbers as follows:

Upper Support Arm—Forked type pressed steel welded assembly. Arm is pivoted at inner end on bushings threaded in the arm and on the pivot shaft which is bolted on top of shock absorber mounting bracket on frame side rail. Similar bushings are used at the outer end of the arm with a pivot pin threaded in the bushings and through the upper end of the steering knuckle support. This pin has an eccentric center section in the knuckle support and controls caster and camber. Pin is locked in the knuckle support by a clamp bolt.

Shock Absorbers—Direct acting type mounted within the coil springs. Upper end of shock absorber is bolted to mounting bracket on frame side rail and lower end is bolted to mounting plate bolted on bottom of lower spring seat on lower support arm. *NOTE*—shock absorbers can be removed without disturbing suspension system.

CHECKING & ADJUSTMENT: First check and adjust front wheel bearings, wheel and tire balance and run-out, and tire inflation. Place car on level floor and check following:

Tire Inflation: 24 lbs. Cold, Front and Rear.

Kingpin Inclination: 5°50′ crosswise.

Caster: Negative 1° ± ½° (limits Neg. ½° to Neg. 1½°).
Adjustment—Remove lubrication fitting in bushing at forward end of upper support arm outer pivot pin, use Allen wrench inserted through this hole to turn the pivot pin in **complete revolutions only.**

►***CAUTION—Pin is eccentric and will disturb camber setting unless it is rotated in full turns only.***

Camber: 0° ± ½° (limits Neg. ½° to Pos. ½°).
Adjustment—Same as for Caster (above) except that eccentric pin should be turned **not more than one-half revolution** from point where correct caster setting secured. Entire range of adjustment is secured in ½ turn of the pin.

►***CAUTION—Caster will be disturbed if pin turned more than one-half revolution.***

Toe-In: 0″, plus 1/16″, minus 0″ (0″ to 1/16″ range).
Adjustment—Loosen clamp bolts at each end of adjusting sleeve at outer end of each tie rod, turn adjusting sleeves on **both tie rods** equally.

SHOCK ABSORBER REPLACEMENT: Remove nut on upper mounting stud on top of mounting bracket on frame side rail, take out two bolts in lower mounting plate under lower spring seat, withdraw shock absorber and mounting plate assembly through hole in lower spring seat. Install shock absorber in same manner.

►***CAUTION—Make certain that rubber grommets and cup-shaped washers correctly assembled on upper and lower mounting studs.***

COIL SPRING REPLACEMENT: Remove shock absorber (above) and disconnect stabilizer on side of car on which spring being removed. Raise front wheel 3-4″ off floor and support car with stand under frame side rail. Place hydraulic jack under lower support arm inner pivot shaft, take out four pivot shaft mounting bolts, lower the support arm and shaft assembly until the spring is free, then lift spring out.

►***SPRING INSTALLATION CAUTION***—Flattened end of spring must be upward and end of lower coil must be seated in recess in lower spring seat so as to cover the drain hole in the spring seat.

UPPER SUPPORT ARM REPLACEMENT: Support front end on jack placed under lower support arm, remove wheel and tire assembly. Unscrew front and rear bushings on outer pivot pin. Remove clamp bolt from upper end of knuckle support, unscrew pivot pin from support. Remove two mounting bolts from support arm inner shaft, lift support arm assembly off. To remove shaft from support arm, unscrew bushing from arm at each end of shaft.

►***INSTALLATION CAUTION***—When installing inner pivot shaft bushings in arm, use Spreader Tool J-3957 to maintain arm alignment while screwing bushings in. After installing support arm on frame, hold knuckle support centered in arm while screwing bushings in arm and on pivot pin. Make certain rubber seals installed at inner end of each bushing.

LOWER SUPPORT ARM REPLACEMENT: Remove shock absorber and coil spring (see directions above). Remove nut and lockwasher from rear end of lower pivot bolt at outer end of arm, unscrew bolt from knuckle support and support arm, lift support arm assembly off. Remove pivot shaft by unscrewing bushing from arm at each end of shaft.

►***INSTALLATION CAUTION***—When installing pivot shaft bushings in arm, use Spreader Tool J-1052 to maintain support alignment. Install rubber seal at inner end of each bushing.

SPRINGS:	Part No.	Load Rating
200 exc. Convt.	395720	2040x90
200 Convt.	382374	2180x90
300 & 400	382374	2180x90

PONTIAC

6 & 8, ALL MODELS (1950-51)

►**REBOUND NOISE CORRECTION—If upper control arm strikes frame on extreme rebounds (causing loud metallic noise), standard steering knuckle support upper control arm rubber bumper can be replaced by special higher bumper which will prevent this contact (NOTE—Change bumpers on both sides**

Upper Control Arm Bumper

Standard (1¾″ long)	Part No. 1298323
Special (2¼″ long)	Part No. 3687670

DESCRIPTION: Same design as used on 1949 car models (with direct acting shock absorbers).

CHECKING & ADJUSTMENT: First check entire front end for wear and excessive play, inflate tires to correct pressures (see data below), check steering gear adjustment, wheel bearing adjustment, wheel and tire balance and run-out (run-out should not exceed 1/8″). Place car on level floor, "jounce" car at rear and front (see Leveling instructions) and check frame height. Then check and adjust all front end specifications in following order:

Leveling Frame: Jounce the car at the rear and then at the front end by grasping the bumper and rais- and lowering the car violently at beginning to loosen up the suspension action and then with diminishing pressure until it finally comes to rest. Then measure frame height.

Frame Height—Measure vertical distance from underside of frame rail to top of lower control arm on each side of car. Distance should be the same n on each side of car. Unequal heights indicate sagged springs. See spring data.

Tire Inflation Pressure: For each tire size (Cold)
7.10x15 (Std.)—24 lbs. Front & Rear.
7.60x15 (Optl.)—22 lbs. Front, 20 lbs. Rear.
7.10x15 (Sta. Wgn. & Sedan Del.)—28 lbs. Front, 30 lbs. Rear.

Kingpin Inclination: 5° (4¾-5¼°) crosswise.

Caster: Neg. ¾° preferred, limits Neg. ½° to Neg. 1°.
Adjustment—Loosen clamp bolt in upper end of knuckle support, use special wrench J-2998 to engage hexagonal head of bushing on pivot bolt in upper end of support, adjust caster by turning bushing in complete turns only to avoid disturbing camber.

►***CAUTION—Clearance must be maintained between ends of bushing and control arm throughout suspension unit travel. Check for binding when adjusting caster.***

Camber: 0° preferred, limits Neg. ¼° to Pos. ¼°.
Adjustment—Same as for Caster (above) except that eccentric bushing should be turned not more than ½ revolution from point where correct caster secured (entire range of adjustment secured in ½ revolution of the bushing).

►***ADDITIONAL RANGE OF ADJUSTMENT—If correct camber cannot be secured by above adjustment, greater range of adjustment can be secured by taking out mounting capscrews in upper control arm shaft (on frame bracket at inner end of arm) and turning shaft over so that offset mounting holes tend to move shaft and control arm outward. This will provide approximately 2/3° additional camber.***

►***NOTE—Control arm shaft is installed at factory with notch on side of shaft toward engine. When shaft turned over for increased camber, notch will be outward or toward wheel.***

Toe-In: 0″ to 1/16″ measured 9″ above floor.
Adjustment—Loosen clamp bolts at each end of adjusting sleeve at outer end of each tie rod, turn adjusting sleeves on both tie rods equally.

Toe-out on Turns: With inner wheel turned exactly 20°, outer wheel should be turned 18-19°. No adjustment. Check for bent steering arms if not correct.

SHOCK ABSORBER REPLACEMENT: *Not necessary to disturb Front Suspension Assembly.* Shock absorbers can be removed from below or above as desired.

Removal (from below)—Remove locknut and retainer nut on shock absorber upper stem at mounting bracket on frame, lift off upper grommet retainer and upper grommet (NOTE—If shock absorber turns when removing retainer nut, remove unit from above—see directions below). Remove three screws holding shock absorber lower mounting bracket on underside of spring seat on lower control arm, lower shock absorber and mounting bracket assembly out through hole in spring seat.

Removal (from above)—Jack up car, remove locknut and retainer nut from shock absorber lower stem at mounting bracket on underside of lower control arm (use pliers inserted through spring coil to keep shock absorber from turning), remove lower

C NTINUED N NEXT PA E

PONTIAC (C nt.)

grommet retainer and lower grommet. Remove two nuts on shock absorber upper mounting bracket studs, lift shock absorber and upper mounting bracket assembly up and out through opening in frame above front wheel.

►*INSTALLATION CAUTION*—Hold shock absorber from turning (with pliers inserted between spring coils) when tightening mounting nuts.

COIL SPRING REPLACEMENT: Disconnect lower end of stabilizer link and remove shock absorber on side on which spring being removed. Lift front end of car with chain hoist or with jacks placed under frame side rails. Place additional jack under lower spring seat on control arm. Disconnect lower control arm from knuckle support by removing locknut and unscrewing lower pivot bolt. Lift car slowly (or lower jack under control arm) to relieve spring tension, lift spring out.

►*INSTALLATION CAUTION*—Install spring with flatted end at top and centered within positioning lugs on cross-member. See that end coil at bottom is fitted into spring recess in lower spring seat.

UPPER CONTROL ARM REPLACEMENT: ***Upper pivot pin and eccentric bushing can be replaced without removing control arm from car.***

Removal: Support car with jack placed under lower control arm, remove wheel and tire. Remove shock absorber and upper bracket (see Shock Absorber Replacement). Take off nut on rear end of upper pivot pin, unscrew threaded pivot pin from knuckle support and control arm (CAUTION—wire knuckle support to frame to prevent damage to brake hose). Loosen clamp bolt in knuckle support, unscrew eccentric bushing from support. Take out two bolts mounting inner control arm shaft on frame, lift off control arm and shaft assembly.

Pivot Shaft Installation: Use spreader tool J-4251 to expand inner end of control arm to 7½" (measured between outer faces of arm). Position pivot shaft (with new rubber seal on each end) in control arm, lubricate shaft threads with chassis lubricant, start bushing on shaft and into eye in arm at same time, tighten bushing to 326-380 ft.lbs. torque and make certain that bushing flange firmly seated against arm. Center pivot shaft in arm (distance from shaft mounting hole center to outer face of arm should be 2" ± 3/64" at each end). Install second bushing. Remove tool and check control arm dimension (7½ ± 1/16" between outer faces of arm at pivot shaft), check pivot shaft position and center shaft by rotating it in the bushings. Check pivot shaft for freedom of movement (frictional drag of shaft should not exceed 12 lb.in.).

Upper Pivot Pin & Eccentric Bushing Installation: Install new rubber seal on inner face of control arm eyes (slip end of seal over boss, double other end back to allow clearance for assembly). Install eccentric bushing in knuckle support. Hold knuckle support centered in upper control arm, thread pivot pin through control arm and bushing (coat pin threads with chassis lubricant, see that one lockwasher placed under head of pin) and tighten pin against arm with 40 ft.lbs. torque, then install pivot pin nut and lockwasher and tighten nut to 40 ft.lbs. torque. Turn ends of seals back to cover pivot pin threads.

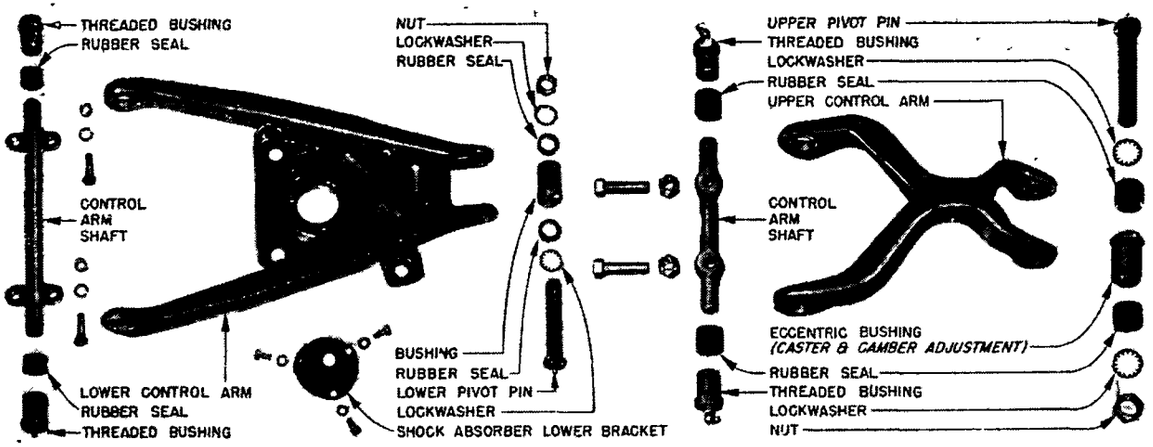

PONTIAC CONTROL ARM ASSEMBLIES

►***CAUTION—Head of pivot pin and pivot pin nut must both be securely seated against face of control arm (use more than 40 ft.lbs. tightening torque if necessary).***

Control Arm Installation: Notch on side of inner pivot shaft should face toward center of car (camber will be increased 2/3° if shaft turned over—see Camber Adjustment). Tighten pivot shaft mounting bolt nuts to 60-65 ft.lbs. torque.

LOWER CONTROL ARM REPLACEMENT: ***Lower pivot pin and bushing can be replaced without removing control arm from car.***

Removal: Remove shock absorber (see shock absorber data), then proceed as for front spring removal (above). After spring removed, remove nut on rear end of lower pivot pin, unscrew pivot pin from knuckle support and control arm, lift control arm and pivot shaft assembly out.

Pivot Shaft Installation: Use spreader tool J-1052 to expand inner end of control arm to 11½" (measured between inner faces of arm). Position pivot shaft (with new rubber seal on each end) in control arm, lubricate shaft threads with chassis lubricant, start one bushing on shaft and into threads in arm at same time, tighten bushing to 385-455 ft.lbs. torque and make certain that bushing flange firmly seated against arm. Center shaft in arm (distance from shaft mounting hole centers to inner face of arm should be 1½" ± 3/64" at each end). Install second bushing similarly. Remove tool and check control arm dimension (11½" ± 1/32" between inner faces of arm at pivot shaft), check pivot shaft position and centralize it by rotating shaft in bushings.

Lower Pivot Pin & Bushing Installation: Install new bushing in lower end of knuckle support and tighten to 250 ft.lbs. (CAUTION—Bushings must be firmly tightened and bushing shoulder must be seated against support). Position new rubber seal on each end of bushing, hold knuckle support centered in lower control arm, thread pivot pin through control arm and bushing (coat pin threads with chassis lubricant, see that one lockwasher placed under head of pin) and tighten pin against arm with 40 ft.lbs. torque, then install pivot pin nut and lockwasher and tighten nut to 40 ft.lbs. torque. Check knuckle support for centralized position (distance from end of bushing to inner face of control arm must be equal within one thread or ⅛" at each end of bushing).

KNUCKLE SUPPORT REMOVAL (For Kingpin Bushing Replacement): Take out brake backing plate mounting bolts and hang backing plate up out of the way (not necessary to disconnect brake line). Then remove upper and lower pivot pins (see Upper & Lower Control Arm replacement data).

SPRINGS: Springs have upper end flattened and lower end must be fitted in recess in lower seat. Color marks located on outside surface of spring center coil (if service springs not color marked, part number will be found on outside surface within 8" of top end measured on outer circumference).

Spring Specifications

Synchro-mesh Trans. Cars

Car Model	Color Mark
6 Cyl. Sedans, Sedan & Bus. Coupe	Red
6 Cyl. Convertible	Gray
6 Cyl. Sta. Wgn. & Sedan Del.	Green
6 Cyl. Taxicab & Police	Red & Yellow
8 Cyl. Sedans, Sedan & Bus. Coupe	Gray
8 Cyl. Convertible	Green & Brown
8 Cyl. Sta. Wgn. & Sedan Del.	Gray & Yellow
8 Cyl. Taxicab & Police	Blue & Yellow

Hydra-Matic Drive Cars

6 Cyl. Sedans, Sedan & Bus. Coupe	Gray
6 Cyl. Convertible	Green & Brown
6 Cyl. Sta. Wgn. & Sedan Del.	Blue & Yellow
8 Cyl. Sedans, Sedan & Bus. Coupe	Green & Brown
8 Cyl. Convertible	Blue & Yellow
8 Cyl. Sta. Wgn. & Sed. Del.	Red & Yellow

STUDEBAKER

ALL MODELS (1950-51)

DESCRIPTION: Independent, parallelogram type with coil springs. Shock absorbers are direct acting type mounted within coil spring (except 1950 Commander—Rotary type).

CHECKING & ADJUSTMENT: First check (and adjust if necessary) front wheel bearings, steering gear, shock absorber action, steering arm and tie rod ends for looseness. Inflate tires to correct pressure. Place car on level floor when checking following specifications:

Tire Inflation: Different tires used on each model.
Champion (1950-51)—26 lbs. Front, 24 lbs. Rear.
Comm. (1950)—24 lbs. Front, 20 lbs. Rear.
Comm. (1951)—26 lbs. Front, 22 lbs. Rear.

Kingpin Inclination: 5¼° crosswise. Check camber if kingpin inclination not correct.

Caster: *CAUTION—All models not set alike.*
Champion (1950)—Neg. ½° (limits 0° to Neg. 1°).
Champ. (1951) & Comm. (1950-51)—Neg. 2° (limits Neg 1½° to Neg. 2½°).
CAUTION—Variation between wheels should not exceed ¾°.
Adjustment—Loosen clamp bolt in kingpin (knuckle support) at upper control arm pivot pin, remove lubrication fitting from front bushing of upper control arm outer pivot pin, insert Allen wrench through fitting hole and turn pivot pin until exact caster setting secured. Then adjust camber.

►*CAUTION—Camber will be disturbed by caster adjustment unless pivot pin rotated in complete turns only.*

Camber: 0° to Positive 1° (all models).

►*CAUTION—Manufacturer recommends ½° more camber on driver's side of car than on opposite side.*
Adjustment—After adjusting Caster (above), rotate pivot pin not more than ½ turn in either direction to secure correct camber. Recheck caster after camber adjusted (caster will be slightly changed but should be within limits specified).

►*CAUTION—Entire range of camber adjustment secured within ½ turn of pivot pin.*

Toe-In: 1/16/ to ⅛" (all models).

►*CAUTION—Tie rods must be adjusted in following order when making toe-in adjustment.*

(1) Left Hand Tie Rod (Wheel straight-ahead position). Turn steering wheel so that cam lever shaft is on "high" mid-point of cam (midway between end positions). If steering wheel spokes not horizontal in this position, remove and reposition wheel on shaft. Check left hand front wheel for straight ahead position by stretching string between front and rear bumpers on left side of car with 1 7/32" block (1950 Champion), ¾" block (1950 Commander), 1¼" block (All 1951 models) between sidewall of rear tire and string to compensate for difference in tread of rear wheel. If string does not contact tire sidewall at front and rear of front wheel, **adjust left tie rod** as required until wheel points straight ahead.

(2) Right Hand Tie Rod (Toe-In adjustment)—Without disturbing position of left hand wheel, check toe-in and **adjust right tie rod** for correct **1/16-1/8" toe-in.**

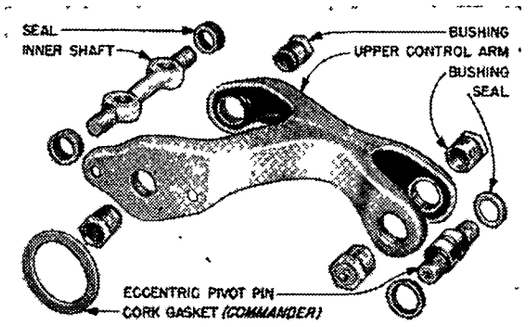

1950 UPPER CONTROL ARM ASSEMBLY

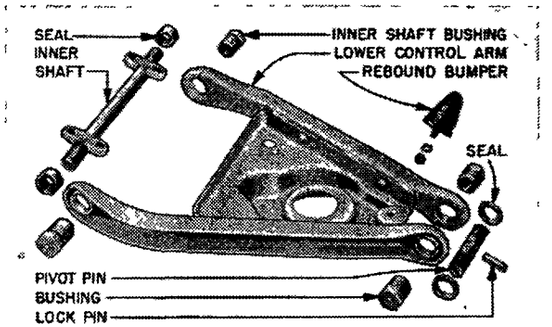

1950 LOWER CONTROL ARM ASSEMBLY

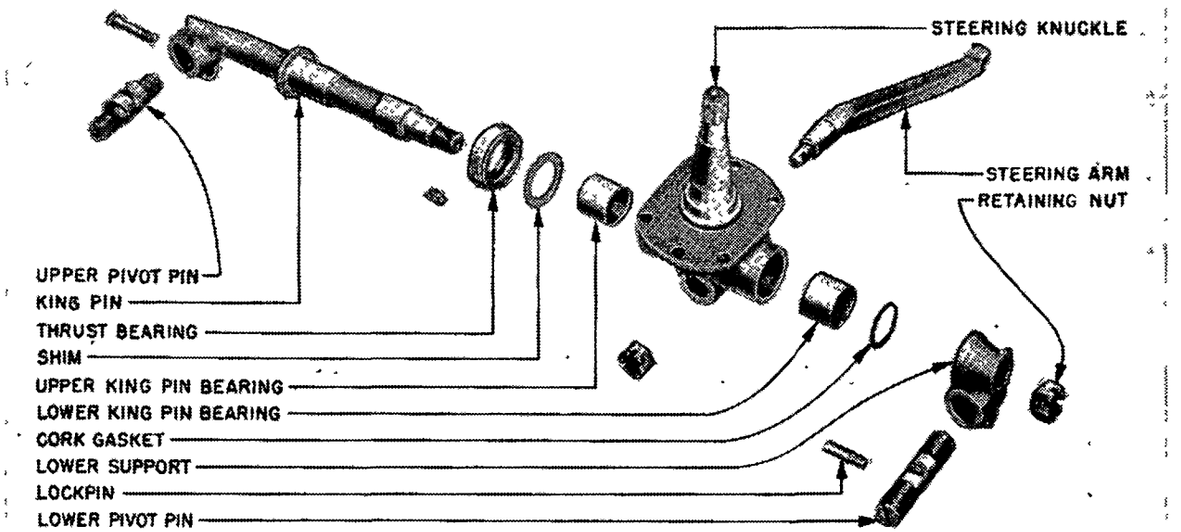

KINGPIN (KNUCKLE SUPPORT) ASSEMBLY

►*RHD. CAR NOTE*—On right hand drive cars, reverse above instructions, setting right wheel in straight ahead position, and adjusting toe-in on left wheel.

Toe-out on Turns: With outer wheel turned exactly 20°, inner wheel should be turned 23½°±1°. No adjustment. Check for bent steering arms if incorrect.

SHOCK ABSORBER REPLACEMENT: Can be removed and installed without disturbing other parts of front suspension system as follows:

Champion (1950-51), Commander (1951): Remove locknut and retaining nut from shock absorber upper mounting shaft using wrench on flats on end of shaft to prevent shock absorber turning (these nuts located on top of upper mounting bracket within arch of upper control arm). Lift off grommet retainer, rubber grommet and grommet seat. Remove the nuts from the bolts retaining lower mounting plate on underside of lower control arm, pull shock absorber and mounting plate down and out of spring as an assembly. Install shock absorber in same manner using care that rubber grommets, grommet seats and retainers correctly installed on upper and lower mounting shafts.

Commander (1950): Remove shock absorber link nut at lower end of link arm (on inner side of frame side rail), free link from bolt and remove washers, rubber grommets, spacer, and grommet retainers (CAUTION—note location of these parts to insure re-installation in same order). Remove two bolts mounting shock absorber on end of upper control arm, remove shock absorber and cork grease seal. Install shock absorber in same manner.

COIL SPRING REPLACEMENT: To remove spring, raise front end of car and support it on jacks under frame side rails to rear of engine support crossmember. Place a hydraulic jack under mounting

CONTINUED ON NEXT PAGE

STUDEBAKER (C nt.)

shaft at inner end of lower control arm. Disconnect stabilizer shaft at lower control arm, remove rubber bumper from arm (to prevent interference with spring). Remove front shock absorber (except on 1950 Commander—see Shock Absorber Replacement above). Take out four bolts mounting lower control arm shaft on cross-member (jack will hold arm in place), lower the jack until spring tension is relieved, remove jack, swing lower control arm out of the way, remove spring. Remove upper and lower spring pads. Install spring in same manner.

LOWER CONTROL ARM REPLACEMENT: 1950 and 1951 arms not identical but service operations are the same on both types.

Removal: Remove shock absorber and coil spring (see data above). Unscrew threaded bushings from outer end of control arm, drive out lockpin in lower support which locks pivot pin, then drive pivot pin out of support and lower control arm (CAUTION—use brass drift to avoid damaging pivot pin). Remove lower control arm and inner shaft assembly, clamp assembly in vise, unscrew inner shaft bushings, remove inner shaft and seals from arm.

Pivot Shaft Installation: Install new seal on each end of pivot shaft and position shaft in end of control arm. Use spreader tool J-2043 (1950), J-4677 (1951) installed on inner end of control arm to spread arm .015" (turn tool up finger tight, then turn 1/2 turn additional which will spread arms .015"). Hold shaft centered in arm and install bushings, tighten bushings to 170 ft. lbs. minimum torque. Remove tool and check to see that arm turns freely on shaft.

Pivot Pin Installation: Outer end of control arm must also be spread .015" when installing bushings (see Control Arm Reassembly following).

Reassembly & Installation: Establish desired dimension at outer end of control arm by measuring between outer faces of arm with calipers **with .015" feeler** placed between arm and one leg of calipers, lock calipers for use in checking arm after spreading. Position arm on lower end of knuckle support, install pivot pin in support with new seal on each end of pin, align slot in pin with lock pin hole in support (end of pin slotted for screwdriver blade), install lock pin. Use spreader tool J-2044 to spread outer end of arm until calipers just slip over arm ***without the .015" feeler gauge.*** Install bushings and tighten to 170 ft. lbs. minimum torque. Remove tool and check to see that arm turns freely on pin.

UPPER CONTROL ARM REPLACEMENT: ***1950 and 1951 arms not identical but service operations are similar for both types.***

Removal: On 1950 Commander, disconnect shock absorber arm from frame bracket. Support car on jack under outer end of lower control arm. Remove wheel and tire. Unscrew both threaded bushings from outer end of control arm. On 1950 models, remove clamp bolt in upper end of knuckle support and remove the pivot pin (not necessary on 1951 cars where arm can be maneuvered off over ends of pin). Mark top front end of inner pivot shaft to insure re-installation in same position, take out shaft mounting bolts and washers, lift control arm and shaft assembly off car. Clamp control arm in vise. On 1950 Commander, take out mounting bolts and remove shock absorber and cork gasket from arm. On all models, unscrew both pivot shaft bushings, lift out pivot shaft and seals.

Pivot Shaft Installation: Install new seal on each end of pivot shaft and position shaft in control arm. Use spreader tool J-3957 (with adapter blocks J-3957-7 & J-3957-8 on 1951 cars). On 1950 cars, tighten tool hand-tight and then turn tool hex one additional complete turn to spread arm .090". On 1951 cars, tighten tool hand-tight and then turn tool hex 1/3 (two flats) additional turn to spread arm .015". Hold shaft centered in arm with marked end in same relative position as originally, install both bushings, tighten bushings to 170 ft. lbs. minimum torque. Remove tool and make certain arm moves freely on shaft.

Pivot Pin Installation: Outer end of control arm must also be spread .015" when installing bushings (see Control Arm Reassembly following).

Reassembly & Installation: Install control arm and pivot shaft on frame making certain that shaft installed in exactly same position as originally (in accordance with marks made before removal). Spread outer end of control arm .015" using Spreader Tool J-2044 and calipers in same procedure as for lower control arm (see Lower Control Reassembly & Installation above). Insert pivot pin in upper end of knuckle support (hexagonal socket for adjusting wrench toward front of car) with new seal on each end of pin, align clamp bolt groove in pin with hole in support, install clamp bolt and tighten securely. Hold knuckle support centered in control arm, install bushings, tighten bushings securely to 170 ft. lbs. minimum torque. On 1950 Commander, install shock absorber making certain that cork gasket is in place, connect shock absorber arm link to frame bracket.

SPRINGS: Springs are installed with rubber pad in spring seat recess in front cross-member (upper) and lower control arm (lower).

Spring Identification—Springs are paint marked (solid color or across two center coils) for identification as listed below. Heavy duty springs are marked similarly.

Spring Specifications

Car Model	Free Length③	Color Mark & Part No.
Champ. ('50-51) Std.	14¼"	①Black—526120
Champ. ('50-51) H.D.	14¼"	②Yellow—526122
Comm. ('50) Std.	15½"	Red—526121
Comm. ('50) H.D.	15"	White—526123
Comm. ('51) Std.	14½"	Green—526124
Comm. ('51) H.D.	14½"	Blue—526125

①—Solid Black with no color marking.
②—Solid Black with additional Yellow color mark.
③—Plus or minus 5/32".

WILLYS

All 4 Cyl. & 6 Cyl. Jeep Station Wagon, Jeepster, & Sedan Del. Models (1950-51)

DESCRIPTION: Independent, Planadyne type of same design used on previous models.

CHECKING & ADJUSTMENT: Check front wheel bearing adjustment, tire inflation pressure, steering gear adjustment, shock absorber action, and steering linkage for correct adjustment and freedom of movement first, then check front suspension system as follows:

Tire Inflation: Check and inflate each size tire as follows:
(6.00x15 & 6.50x15)—24 lbs. frt., 28 lbs. rear.
(6.70-15)—20 lbs. front, 24 lbs. rear.

Kingpin Inclination: 5° crosswise.

Caster: 1°. No adjustment (determined by design of front suspension units—correct by replacing necessary parts).

Camber: 1½° (4 Cyl.), 1° (6 Cyl.). Controlled by shims under each control arm mounting bracket.

►***CAUTION***—Number and thickness of shims under both brackets on same side of car must be equal.

To Adjust—Loosen upper control arm frame bracket mounting screws, remove shims from between bracket and frame (to decrease camber), add shims (to increase camber) **equally at each bracket.** Shims are furnished in thicknesses of .060" and .120" and are slotted to facilitate adjustment (bolts need not be completely removed).

Toe-In: 1/16-1/8" at curb weight (car ready for road with full tank of fuel and spare tire, but without load).

►***CAUTION—Toe-in varies slightly with load and should be checked and adjusted exactly as follows:***

To Check Toe-In: Jack up front wheels, chalk center of tread over entire circumference of both front tires, use pencil to scribe a line at exact center of tread over entire circumference of tires (hold pencil on steady rest while rotating tire). Turn wheels to straight ahead position with steering gear on high midpoint of cam and steering wheel spoke parallel to windshield, lower car so that weight rests on wheels and load or weight down the front end of the car so that the **front spring main leaf is flat** (measure with straightedge below leaf). Roll car forward and backward to allow all parts to assume natural position. Check distance between marks on tires at front and rear of wheels and adjust to ZERO TOE-IN (equal distances at front and rear) under these conditions. NOTE—With toe-in set at ZERO under above loading conditions, toe-in will be 1/8-3/16" when load removed (dependent on arch of front spring).

To Adjust Toe-In: Loosen clamps on adjusting sleeve on each tie rod and turn adjusting sleeves on **both tie rods equally** when setting toe-in.

SUSPENSION DISASSEMBLY: ***See complete "Willys Planadyne" Suspension in previous release.***

SPRINGS: Std.—"Dow" type with rubber inserts in forged cups at ends of spring leaves (Inserts flexed by spring leaf movement).
CAUTION—Do not lubricate "Dow" type springs.

BUICK REAR AXLE

ALL SERIES (1950-51)

►**REAR AXLE LEAKAGE CAUTION:** Oil leaks may occur at front pinion bearing unless following precautions observed:

Oil Leakage into Propeller Shaft (causing shaft unbalance)—Can be prevented by properly sealing pinion shaft when propeller shaft installed. *See Pinion & Propeller Shaft Assembly below.*

Oil Leakage into Torque Tube (and transmission)—Can be corrected by installing special oil seal in front of pinion front bearing. *See Pinion Bearing Oil Seal Installation below.*

Oil Leakage at Torque Tube & Housing Mounting Flange—Correct by disconnecting torque tube and installing new gasket (gasket is made of special material—DO NOT use any substitutes for this gasket).

►*CAUTION*—Do not remove torque tube from carrier housing for any other reason than gasket replacement to correct oil leakage. These parts are matched and aligned during manufacture and are not furnished separately.

DESCRIPTION: Hypoid gear type with **double roller** bearing at pinion end of pinion shaft (as used on 1949 cars).

REMOVAL OF AXLE: *See "Rear Axle" on car model page.*

OVERHAUL: *See complete "Buick Hypoid" Axle in previous release and note the following specifications and special procedures:*

Pinion Setting—Use J-681-A or J-2197 Pinion Setting Gauge to determine necessary shim thickness. Shims furnished in .001" steps from .010" to .019" thick.

Standard Pinion Setting

J-681-A Gauge	.379"
J-2197 Gauge	.802"

Ring & Pinion Gear Backlash—.008-.010" (not less than .008" at minimum point, not more than .012" at maximum point).

Differential Bearing Pre-load—2½-3 notches tight (after adjuster first tightened to 4-5 notches tight to seat bearings and adjuster properly).

Pinion Gear & Propeller Shaft Assembly: Install parts on pinion shaft in following order: rear bearing spacer, two roller bearings, bearing lock sleeve (thick end toward spline or forward), front ball-bearing (shielded side toward spline or forward). Press front bearing solidly against shoulder on pinion shaft using a tube of proper diameter to press on inner race only (CAUTION—do not attempt to drive bearing in place). Install bearing locknut with thin side toward spline or forward (OIL SEAL CAUTION—If oil seal installed on nut, see Pinion Bearing Oil Seal Installation data below), tighten nut to 150 ft. lbs. torque minimum, stake thin edge of nut down into notch in pinion shaft. Seal end of pinion shaft (see note below), press pinion into propeller shaft (use Press J-1292-B) until coupling pin holes are aligned, install new coupling pin, rivet both ends of pin securely. Check assembly for straightness and correct as required.

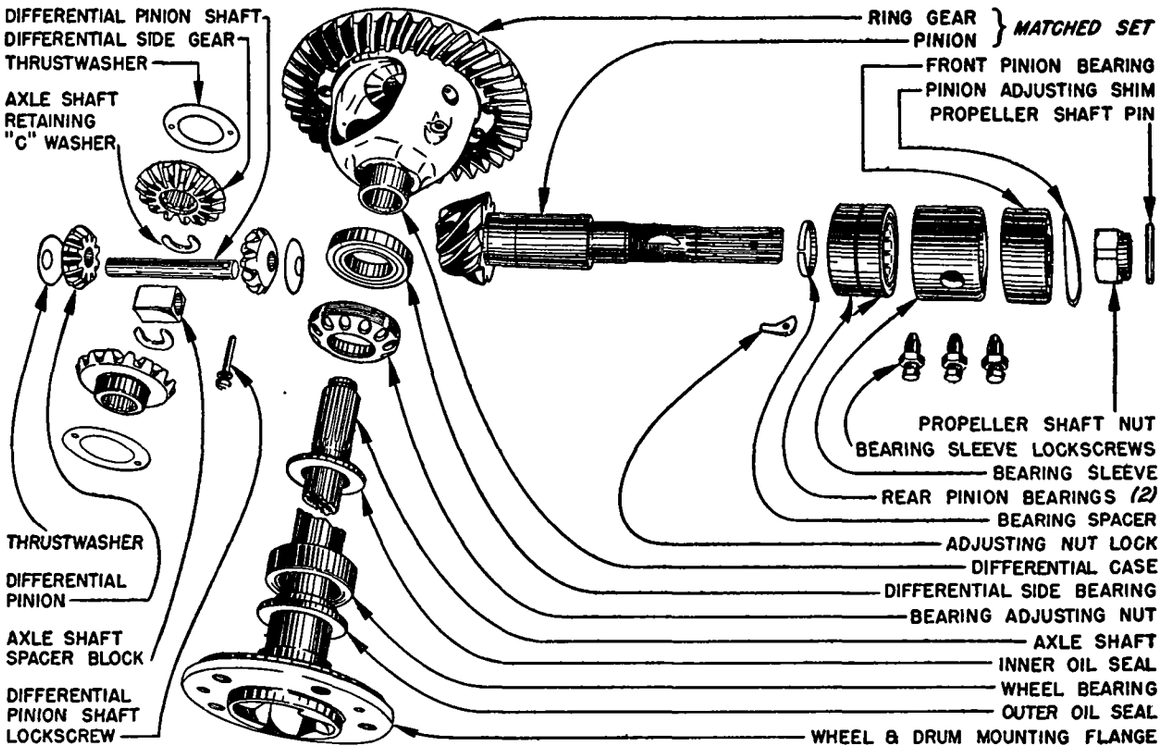

BUICK HYPOID DIFFERENTIAL GEAR & PINION ASSY.

►**Pinion Sealing Note**—Splined joint must be sealed to prevent lubricant entering propeller shaft and causing unbalanced condition. Seal shaft by dipping end in Presstite Sealer (Permatex or white lead may also be used) before assembling propeller shaft. Pinion shaft MUST NOT be a loose fit in propeller shaft.

Pinion & Propeller Shaft Straightening: *Assembly must be checked and straightened whenever pinion and shaft installed regardless of whether NEW or OLD parts used.*

Checking & Straightening (Using Fixture)—Fixture can be made up by using any Buick Differential Carrier (1940-50 type) mounted on bracket on bench so that shaft will be parallel to bench top when pinion and shaft assembly installed in carrier. Mount pinion and shaft assembly in carrier in usual manner being careful to tighten pinion bearing lockscrews evenly and securely. Mount dial indicator so as to indicate run-out on shaft at point just to rear of splines on forward end. Turn shaft by hand from pinion end. If run-out exceeds .015", spring shaft by hand until run-out within this .015".

Checking & Straightening (Using V-blocks)—Support pinion and shaft assembly on V-blocks at each end (forward block just to rear of splines at forward end of shaft, rear block under pinion rear roller bearing race). Use dial indicator to measure run-out at points 3" in from each end of shaft tube (CAUTION—do not allow unevenness of tube surface to cause indicator to bounce indicating wrong reading). If run-out not within .005" at these two points, straighten tube by exerting pressure on center of tube (support tube at same point at front end and under bearing lock sleeve at rear for straightening). Then check run-out at center of shaft tube. If run-out exceeds .010" at this point, straighten tube while supporting it on blocks at tube weld point at each end. Then check run-out at pinion front ball bearing. If run-out exceeds .001", support shaft at forward V-block and at bearing lock sleeve at rear end, exert pressure at weld points on rear end of tube. Recheck all run-out points, then check run-out at extreme forward end of shaft. Run-out at this point should be less than .002" total indicator reading.

►*CAUTION—More than .002" run-out at forward end of shaft will cause rapid wear of universal joint bushing and possible leakage of transmission case lubricant into rear axle.*

Pinion Bearing Oil Seal Installation: This oil seal furnished in kit, Part No. 1393999 (seal and special pinion nut), and can be installed on all 1940 and later cars to correct oil seepage from rear axle into torque tube or propeller shaft. Installation of oil seal on 1950 and previous cars requires fitting of the seal as follows:

C NTINUED N NEXT PAGE

BUICK REAR AXLE (C nt.)

1950 & Earlier Cars—Fitting of seal will be easier if holding tool made up of 3 1/16" diameter hardwood block approximately 14" long with 2 7/8" circular depression 1/16" deep on end used (place seal in recess, use wood screw and 2" diameter washer to hold seal in place on end of block). Drive seal lightly into carrier bore (CAUTION—do not use excessive force). If seal will not start in carrier bore, reduce outside diameter of seal slightly by light filing or emery cloth (CAUTION—remove all filings and emery dust by thorough washing). After seal driven into carrier bore, remove and check for proper fit (outer surface should show light scratch marks evenly around entire circumference). If seal loose (not marked as above), expand seal by denting bead on rear side at six evenly spaced points using a light hammer (CAUTION—retain original bead height as much as possible since bead spaces seal from front bearing shield). After seal properly fitted, install seal on pinion nut with lip of leather seal pointing **away from** hexagonal portion of nut. Assemble pinion and propeller shaft in usual manner.

CAUTION—If seal has been fitted by denting bead, apply sealing compound (Permatex No. 2) to outer surface and allow to dry until gummy just prior to final installation of assembly in carrier **Avoid excessive use of sealer** (must not be allowed to get down between shims and affect pinion position).

1951 Cars—Carrier bore is finished to proper size for seal and no fitting required. Install seal on pinion nut with lip of leather seal pointing away from hexagonal portion of nut and assemble pinion and propeller shaft in usual manner.

BUICK REAR SUSPENSION

SERIES 40, 50, 70 (1950-51)

DESCRIPTION: Coil spring type of same design used on previous models.

TRIM DIMENSION: Before measuring rear spring trim dimensions, bounce rear end of car up and down several times to make certain suspension is not binding and to allow springs to assume natural position. Then measure from top of axle housing to top of bumper clip on frame siderail to rear of bumper. If trim dimension not correct with car at curb weight, replace spring.

Rear Trim Dimension

All Models (except following)	5 13/16" - 6 9/16"
75R (1950); 56C, 76C, 76R (1950-51)	5½-6¼"
56R, 59, 79 (1950-51)	5⅝-6⅜"
46C (1951)	5½-6¼"

►*NEW CAR CAUTION—Add ⅜" when checking NEW car.*

REAR AXLE RADIUS ROD: Radius rod need not be removed for Rear Axle removal (disconnect rod at right hand end) but should be removed and checked for straightness and twist when new rubber bushings installed.

Removal—Support rear end of car on jacks under axle housing so that weight of car is on springs. take off nuts and washers on radius rod pins (at each end of rod), remove pin support at right end and frame bracket brace (pin support on 1951 Series 40) at left end of rod. Remove rod and bushings from pin on frame bracket.

Checking Rod—Check rod and replace if not within these limits:

Hole Diameter—1⅛" (both ends).

Straightness—⅛" maximum bow permissible. Holes must be parallel with each other within plus or minus ⅜" measured 18" out from bar.

Length—Center-to-center length must be: 36" (except Series 40 1951), 37 9/32" (Series 40 1951). Allowable variation plus or minus 1/32".

►*CAUTION—If radius rod cannot be straightened WITHOUT HEATING, replace rod.*

Installation—Reverse removal procedure, using new rubber bushings. **Car weight must be on rear springs when tightening pin nuts** (to insure that rubber bushings will be clamped in neutral position).

REAR AXLE STRUT ROD REPLACEMENT CAUTION: Replacement torque tubes are furnished without holes drilled for strut rod rivets in the mounting bracket. Drill these holes only after rear axle housing, torque tube, and strut rods have been assembled. With strut rods in normal position (without up or down strain), drill bracket to match holes in strut rod with ½" drill, then drill through strut rods and bracket with 9/16" drill, install No. 1312923 bolts with lockwashers and thin nuts.

SPRING REPLACEMENT: Disconnect links from rear shock absorber arms, hoist rear end of car until all load removed from rear springs, support car on jack stands placed under frame. Remove bolts and clamps at upper and lower end of spring (CAUTION—lower bolts have left hand thread), remove spring. Install spring in same manner.

SPRING SPECIFICATIONS: Special 200 lb. and 500 lb. Overload Rear Springs are available for use with trailers or when heavy loads carried in car.
NOTE—To determine overload, weigh rear end of car at curb weight (no load except full fuel tank and spare tire and wheel in trunk), attach trailer and re-weigh rear end of car. Difference in weight is the Overload.

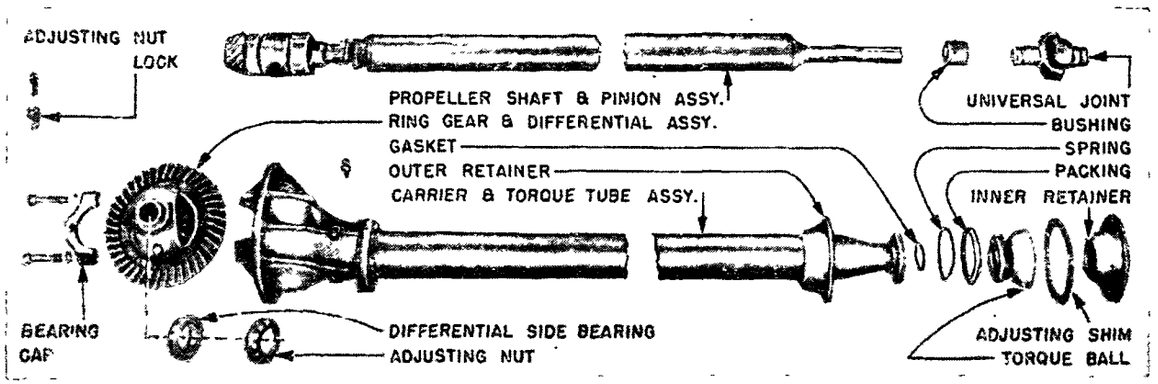

BUICK HYPOID AXLE & PROPELLER SHAFT ASSY.

►*CAUTION—Manufacturer does not recommend overloading rear axle in excess of 500 lbs.*

1950 Rear Spring Part Nos.

Model	Std. Spring	Overload Springs 200 Lb.	500 Lb.
41, 43	1340742	1341974	1315231
41D, 43D①	1341972	1341974	1315231
46, 46S	1340741	1341974	1315231
46D①	1341973	1341974	1315231
51, 56C, 56R	1341972	1341974	1315231
52	1341972③		1315233
56S①	1341973	1341974	1315231
59	1315231	1315233	
71, 75R, 76R①	1341974		1315233
71, 75R, 76R②	1341975		1315233
72, 76C	1341974④		1315233
76S	1341975		1315233
79	1315233		
50 & 70⑤	1336960		

1951 Rear Spring Part Nos.

Model	Std. Spring	Overload Springs 200 Lb.	500 Lb.
40	1343328	1341974	1315231
51, 56R	1343329	1341974	1315231
52	1341972	1341976	1315233
56C	1341972	1341974	1315231
56S	1343328	1341974	1315231
59	1315231	1315233	
73R	1341974	1310399	
76C	1341974	1341976	
76R	1341975	1341976	
79	1315233		
50 & 70⑤	1336960		

①—Early cars. ②—Later cars.
③—No. 1341974 on early Model 52 cars.
④—No. 1341976 on early Model 72 cars.
⑤—Ambulance and Funeral Cars.

CADILLAC

V8, ALL SERIES (1950-51)

►**AXLE IDENTIFICATION:** Gear ratios indicated by number stamped on bottom of differential case directly below pinion shaft:

Ratio	Marking
3.77-1 (Std. on 1950 Series 61)	None
3.77-1 (Std. on 1950-51 Series 75)	7
3.36-1	6
4.27-1 (Std. on 86 Comm'l)	4

►**AXLE SHAFT NOTE:** Shafts on all series (except 86) are integral-flange type (used beginning 1949). *See Removal & Installation data below.*

►**REAR AXLE SERVICE CAUTION**—Manufacturer recommends that all service on the Differential Carrier Assembly other than oil seal or universal joint yoke replacement (and necessary pinion bearing pre-load adjustment) be handled by replacement of the complete assembly. ***No disassembly or adjustment of this unit should be attempted in the field.***

►**PINION BEARING ADJUSTMENT CAUTION:** Pinion bearing adjustment (pre-load) controlled by rear universal yoke nut which compresses spacer or sleeve between pinion bearings.

►*CAUTION*—Loosening or removal of the pinion shaft nut (for oil seal or yoke replacement) will disturb pinion bearing pre-load and exact procedure detailed below must be followed to avoid overloading bearings or collapsing bearing spacer.

REMOVAL OF AXLE: *See Rear Axle on car model page.*

PINION OIL SEAL OR UNIVERSAL YOKE REPLACEMENT:

►***CAUTION—Pinion bearing pre-load (turning torque) must be measured before pinion shaft nut loosened.***

Pinion Bearing Pre-load Measurement: With rear wheels and brake drums removed and propeller shaft disconnected at rear universal, drain axle lubricant, measure inch-pounds torque required to turn pinion shaft using a 50-inch pound torque wrench with special socket J-2571-1 and Adapter J-2571-2 on pinion shaft nut. Before taking a torque wrench reading, rotate pinion shaft ¼ turn in each direction (to free pinion and overcome initial high starting torque), then note torque reading while rotating shaft at least ½ turn and **record this torque reading.** Repeat above check at least eight times to insure accurate check over entire circumference of ring gear, calculate the **average of all torque readings for use when retightening nut.**

Removal of Yoke & Oil Seal: Mark yoke and pinion shaft with a punch for re-installation of yoke in same position on shaft. Install Yoke Holding Tool J-2659, insert special socket J-2571-1 through hole in holding tool, use ¾" drive wrench to remove pinion nut. Drive yoke off pinion shaft splines. Use Oil Seal Remover Tool J-2623 to remove oil seal. Remove staking burrs from pinion shaft with small file or ⅞" x 14 thread die (CAUTION—protect bearing from chips by wrapping cloth around shaft). Try new pinion nut for free turning.

Installation of Oil Seal: Coat outer edge of seal and retainer with good sealer, use Oil Seal Installer Tool J-1357 to drive seal into carrier. Install yoke (CAUTION—line up marks made before disassembly), install new pinion nut. Hold yoke with tool J-2659, tighten pinion nut to 200 ft. lbs., measure and adjust bearing pre-load or turning torque as follows:

Pinion Bearing Pre-load Adjustment: After pinoin nut tightened to 200 ft. lbs. (above), measure pinion bearing pre-load in exactly the same manner as followed before pinion nut loosened (see directions above). Average turning torque (for all readings) at this time should be 5 inch-pounds ±2 lbs. greater than average turning torque recorded before nut loosened. If turning torque too low, tighten nut approximately 30° (½ one flat), and again measure turning torque. Repeat this procedure until correct torque obtained, then stake pinion shaft into nut.

►***CAUTION—Do not overtighten pinion nut and never back off nut to reduce the pre-load.***

Pinion Bearing Pre-load
(Pinion shaft Turning Torque)

New Assembly	50 in. lbs. max.
After 1000 miles (used Oil Seal)	15 in. lbs. max.
After 1000 miles (new Oil Seal)	20 in. lbs. max.

AXLE SHAFT REPLACEMENT: Data below applies to "flanged" type axle shafts (Series 86 axle shafts with separate wheel hub are serviced in same manner as previous models).

Wheel Bearing Replacement—When replacing axle shaft oil seal, inspect wheel bearing for loss of lubricant (bearings are "sealed type" and lubricant may have been washed out by axle lubricant leaking past oil seal). If wheel bearing spins freely (indicating lack of lubricant), replace bearing.

Axle Shaft Removal & Installation: With wheel removed, take out retaining screws and remove the brake drum. Remove nuts and lockwashers mounting bearing retainer and backing plate on rear axle housing. Use puller J-942-1 (with slide hammer tool J-2619) to remove axle shaft using great care not to damage oil seal or disturb position of backing plate.

Wheel Bearing Replacement—Bearings are sealed type and should be inspected for loss of lubricant. A bearing that spins freely should be replaced.

Bearing Removal & Installation—Use cold chisel and hammer to nick spacer next to bearing (not necessary to split spacer), slip spacer off shaft. Use special Bearing Remover & Replacer Tool J-2986 (place "U" shaped part of tool under bearing, place square part of tool around bearing to prevent it exploding), press bearing off shaft in arbor press. Install new bearing on shaft with same tool, pressing bearing on until it not quite touches shoulder on shaft, then press new spacer on shaft against bearing.

Axle Shaft Oil Seal Replacement—Make certain that all nicks and burrs removed from counterbore into which seal fits, polish shaft on which seal leather bears. Dip new seals in clean engine oil, coat inner surface of oil seal leather with chassis lubricant, coat outer suface of oil seal metal shell with sealer compound. Use tool J-1355A (axles with separate wheel hub), J-3069 (axles with flanged shaft without wheel hub) to install seal in housing.

DIFFERENTIAL CARRIER ASSEMBLY OVERHAUL: Manufacturer recommends that all services other than oil seal or universal joint yoke replacement (above) should be handled by replacement of the assembly. No attempt should be made to disassemble or adjust the carrier assembly in the field.

Carrier Assembly Installation—When installing carrier, tighten capscrews to 30-35 ft. lbs. If oil leaks noted between carrier flange and housing, correct by installing extra gasket at this point with sealing compound on gaskets. **Do not tighten capscrews excessively to correct oil leaks.**

CHEVROLET TRUCK FULL-FLOATING

All ¾, 1, 1½, 2 Ton Trucks (1950-51)

►**BRAKE DRUM (¾, 1 TON) NOTE**—Brake drum is held to hub with two slotted screws. A soft paper gasket is used between drum and hub.

►**1951 BRAKE DRUM (1½ & 2 TON) CHANGE**—Rear drums are now held on hub with three slotted screws making it unnecessary to remove hub before removing drum. A soft paper gasket is used between drum and hub.

DESCRIPTION: Full-Floating hypoid gear type with Hotchkiss Drive. Same design as used on correspond previous truck models.

REMOVAL OF AXLE: *See Rear Axle on car model page.*

AXLE SHAFT, PROPELLER SHAFT, & AXLE DISASSEMBLY & REASSEMBLY: *See complete "Chevrolet Truck Hypoid Full-Floating" Rear Axle in previous release.*

CHEVROLET TRUCK TWO-SPEED

1½ & 2 Ton (1950-51) Optl. Equip.

DESCRIPTION: Hypoid gear, double reduction type of same design used on corresponding previous models.

REMOVAL OF AXLE: *See Rear Axle on car model page for removal of carrier assembly from truck.*

AXLE SHAFT REPLACEMENT & WHEEL BEARING ADJUSTMENT: *See "Chevrolet Truck Two-Speed Hypoid" Rear Axle in previous release.*

AXLE DISASSEMBLY & REASSEMBLY: *See "Chevrolet Two-Speed Hypoid" Rear Axle in previous release.*

CHEVROLET SEMI-FLOATING (PASS. CAR & HALF-TON)

ALL PASS. CARS & HALF-TON TRUCK (1950-51)

►**INSTALLATION OF 1951 TORQUE TUBE & CARRIER ASSEMBLY ON PREVIOUS MODELS:** This new assembly can be installed on all previous models except that on 1941-50 Convertibles, frame must be reworked to provide adequate clearance at the "X" section (new torque tube has O.D. of 3¼" increased from 2 13/16").

►**Torque Tube Bushing Note**—1951 Torque Tube has "press fit" type bushings and data below on this type will apply to all cars with this new torque tube and carrier assembly.

►**UNIVERSAL JOINT & PROPELLER SHAFT BUSHING LUBRICATION CAUTION (Powerglide Cars):** These parts lubricated from transmission output shaft through drilled passage in special universal joint retaining bolt, Part No. 3690869 (bolt drilled completely through and has special flat-head nail in hole to keep oil passage open). If universal joint or bushing lubrication trouble experienced, make certain that drilled bolt used and that nail is free in oil passage (1/32-1/16" clearance between head of nail and head of bolt).

►*CAUTION—Plain bolt used for transmission run-in at factory must be replaced by this special drilled bolt when transmission installed in car.*

►**PROPELLER SHAFT BUSHING CAUTION:** Pressed-in type busings used on 1950-51 cars and half-ton truck (except early 1950 production) **must be used on these models only** (doweled type bushings continued for previous models).

See Propeller Shaft Bushing data below.

REMOVAL OF AXLE: *See Rear Axle on car model pages.*

OVERHAUL: *See complete "Chevrolet Hypoid Semi-floating" Rear Axle in previous release and note following specifications and new service procedures:*

Axle Shaft Endplay—Free fit to .014" clearance. Controlled by spacer block between inner ends of axle shafts. Blocks furnished as follows:

Part No.	Pass. Car Spacer Blocks	Size
597251		Narrow (1.012")
473603		(1.0195" & 1.0295")
597254①		Wide (1.0345")

Truck Spacer Blocks

370217	Narrow (1.1485")
372515	Wide (1.1575" & 1.1675")

①—Marked by blue paint on rough side.

Pinion Setting—.033" shim thickness std. (one .015" shim, one .018" shim). Can be varied from .024" to .042" as required (shims furnished .012", .015", .018", .021" thick).

Ring & Pinion Gear Backlash—.005-.007" (Pass. Cars), .005-.008" (Truck).

Differential Bearing Pre-load—1 notch min., 2 notches max. tight from point where adjusting nut snug against bearing.

►**Bearing Cap Tightening Caution**—Use torque wrench and tighten bearing cap bolts to 65-80 ft.lbs. (Pass. Cars), 115-135 ft.lbs. (Truck).

Pinion & Propeller Shaft Assembly: Pinion splines have been revised to provide tighter (2000-10000 lbs.) press fit in propeller shaft and following procedure required (new tool can be used on previous models):

Disassembly—Drive out coupling pin (center-punch riveted end of pin and drill end of rivet to clear countersink). Install tool J-4548 (remover and replacer tool) on assembly, separate pinion from propeller shaft by **turning both nuts on tool evenly.**

Reassembly—Use tool J-4548 to press pinion in propeller shaft with coupling pin holes in pinion shaft and propeller shaft aligned (tool has reversible adapter on endplate which can be used to center pinions with either counterbored or centered ends). Install new coupling pin and rivet both ends of pin securely.

Propeller Shaft Bushings: *CAUTION—Both "doweled" type and "press fit" bushings have been used as follows:*

"Doweled" Bushings (Early 1950 & Previous Models)—Doweled type replacement bushings (see listing below) must be used on these models where **doweled bushings used originally** to prevent possibility of interference between torque tube and torque ball sleeve (tube may be expanded by installation of bushing). *These bushings removed and installed in same manner as on previous models.*

"Press Fit" Bushings (1950-51 Models)—These bushings used in production and torque tube finish-ground after installation to prevent possibility of interference mentioned above. Use press fit type replacement bushings (see listing below) for these models and remove and install these bushings as follows:

"Press Fit" Bushing Removal & Installation—Use special Puller J-4258 (see note for 1951 models below) to remove both bushings and oil seal from torque tube. Install new parts in following order: Oil Seal (use Driver J-968, placing seal on driver with free side of leather toward head of driver), Rear Bushing (use Driver J-4259 **with spacer washer** on driver), Front Bushing (use Driver J-4290). Drive bushings in until stop on driver is against end of torque tube. Drivers will position bushings correctly.

►**Bushing Puller J-4258 Note**—This tool designed originally for 1950 type pressed bushings and interference will be noted when used on 1951 bushings (bushings have larger O.D. for use in new larger-diameater and thinner-wall torque tube) unless sleeve diameter of tool increased .040" (increase I.D. of sleeve from 1.750" to 1.795" ± .005"). New tools will have this increased sleeve diameter.

Replacement Torque Tube Bushings

"Doweled" Type

Car Model	Front No.	Rear No.
1940-50 Pass. Cars	3652601	3652328
1940-50 Half-Ton	595007	②3652328

"Press Fit" Type

1950 Pass. Cars	3691484	3691475
1950 Half-Ton	3691490	3691475
1951 Pass. Cars	3694732	3694733
1951 Half-Ton	3694761	3694733

②—Except 1947 No. 3686064.

CHRYSLER, DE SOTO, DODGE & PLYMOUTH

Chrysler, All Models (1950-51) See Note.
DeSoto, All Models (1950-51)
Dodge Pass Cars, All Models (1950-51)
Plymouth, All Models (1950-51)

►**NOTE**—1951 Chrysler V8 Models use the "barrel type" differential case. Adjustments are the same as for regular rear axle. For Disassembly & Reassembly, *See "Chrysler (Crown Imperial)" Rear Axle in previous release.*

DESCRIPTION: Hypoid gear, semi-floating type with Hotchkiss Drive.

AXLE REMOVAL: *See Rear Axle on car model page.*

AXLE SHAFT REPLACEMENT & WHEEL BEARING ADJUSTMENT: *See "Chrysler Hypoid" Rear Axle in previous release.*

DISASSEMBLY & REASSEMBLY: *See "Chrysler Hypoid" Rear Axle in previous release. Note following adjustment procedures:*

Pinion Bearing Pre-load: 15-25 in. lbs. turning torque (or bearings .0015-.0020" tight) measured **without oil seal** but with pinion assembled in carrier.

Pinion Bearing Adjustment (With Dial Indicator): Completely assemble pinion in carrier housing but do not install oil seal, then check pinion shaft endplay with dial indicator. If no endplay, take off pinion shaft nut, pull oil seal (see below), remove front bearing, add shims to give positive endplay reading, reassemble and check endplay (universal yoke flange must be in place and nut on shaft tight). Remove shims equal to observed endplay plus .002" shim thickness which will give correct bearing draw or pre-load. Check pre-load with torque wrench noting turning torque required to rotate shaft which should be 15-25 in. lbs. After adjustment completed and oil seal installed, tighten companion flange nut to 175 ft. lbs.

NOTE—These shims furnished in thicknesses of .010", .0125", .015", .018".

Pinion Bearing Pre-load Check (With Tool C-758-D): With bearing cups installed in carrier housing, slide rear bearing and spacer over main body of C-758-D tool and insert in carrier. Install adjusting shims and front bearing on end of tool, install compression sleeve, centralizing washer, and compression nut over main body and tighten to 180-320 ft. lbs. (use holding tool C-784 and torque wrench). Spin main body in carrier to seat bearings. Then use in. lb.-reading torque wrench to turn main body and note wrench reading which should be 15-25 in. lbs. Adjust by adding or removing shims until correct reading secured. **Adjust Pinion Setting (following) before removing tool.**

Pinion Setting: Pinions marked "0" (standard) or "+" or "—" followed by figure (1 to 4) indicating necessary correction for other than standard "0" pinions. When installing new pinion of same marking as old pinion, use same spacer thickness for this new pinion. If new pinion marked "+" or "—" used to replace "0" standard pinion, use thinner washer (+ pinion), thicker washer (— pinion) than the washer used with the original pinion. The difference in thickness from the original washer should be equal

CONTINUED ON NEXT PAGE

CHRYSLER, DE SOTO, DODGE & PLYMOUTH (C nt.)

in thousandths to the figure following the + or — mark on the pinion. Pinion position is controlled by spacer, installed on shaft between pinion and rear bearing. Pinion must be removed from carrier housing and bearings removed from shaft to change washer (or shims as used on some models) to correct pinion setting and gear mesh. See Ring & Pinion Gear Adjustment below also.

Washer Note—Pinion adjusting washers furnished in following thicknesses: (Chrysler 6 exc. 8 Pass. & Sta. Wgn.) .0885", .090", 092",. 094"; (Chrysler 8 & 6. 8 Pass. & Sta. Wgn.) .088", .090", .092", .094"; (DeSoto, Dodge, & Plymouth) .084", .086", .088", .090", .092", .094". Shims (when used) furnished .010",. 0125", .015", .018" thick.

Pinion Setting (With Tool C-758-D)—After checking pinion bearing pre-load (above) and **without removing tool**, place gauge block on top of tool body and tighten in place (gauge block takes place of pinion). Assemble cross bore gauge bar in carrier in place of carrier assembly, tighten adjusting nut capscrews to hold bar in place. Select spacer washer equal in thickness to clearance between gauge block and gauge bar. This is correct thickness for standard pinion (see Pinion Setting data above). Install this spacer washer on pinion shaft (or correct spacer thickness in accordance with pinion marking) when installing pinion in carrier.

FORD TRUCK FULL-FLOATING (SPIRAL BEVEL)

F-2, F-3, F-4, F-5 Trucks & F-6 School Bus

►**F-4, F-5 PINION SHAFT PRODUCTION CHANGE**—Two different pinion shaft assemblies used. Early type has tapered shaft, later type has splined shaft. See below for disassembly & assembly.

DESCRIPTION: Full floating, spiral bevel gear type with Hotchkiss Drive. Split type housing of same design as used on corresponding previous models.

REAR AXLE REMOVAL: *See Rear Axle on car model page.*

AXLE SHAFT REPLACEMENT, WHEEL BEARING ADJUSTMENT & OVERHAUL: *See complete "Ford Truck Full-Floating" (Hotchkiss Drive) in previous release.* (Except as noted below.)

SPLINED PINION SHAFT: Disassembly—Hold universal joint flange with Tool 4851, then remove cotter pin, nut and washer from drive pinion shaft. Remove flange, using Tool 4858-Q. Remove bearing cover and oil seal assembly and take out pinion and cage assembly, using puller screws in holes provided in cage. Tap drive pinion out of cage, then remove outer bearing from cage. Remove bearing spacers from pinion and remove rear pinion bearing. Remove pilot bearing, using Tool 4625-D. Remove oil seal assembly from bearing cover, then remove bearing cups from cage assembly.

Reassembly—Press pilot bearing on end of shaft, using a sleeve that applies pressure evenly to inner race of bearing. Install pilot bearing lock ring and press firmly into groove. Press bearing cups into cage until seated against shoulders. Lubricate with rear axle lubricant. Install rear bearing on shaft and insert pinion and bearing assembly into bearing cage. Install spacer or spacer combination on pinion shaft then press front bearing firmly against spacer.

Preload Check—Place pinion and cage assembly in vise and intall universal joint flange and tighten to 300-400 ft. lbs. torque. Wrap a soft wire around pinion bearing cage, and using a pound-pull scale, pull on a horizontal line. If rotating torque is not 12-18 inch lbs., install a thinner spacer to increase the preload, or a thicker spacer to decrease the preload. Install a new oil seal bearing cover. Position pinion and cage assembly over studs on housing and tap into place with a soft hammer. Tighten nuts to 70-90 ft. lbs.

FORD TRUCK FULL-FLOATING (HYPOID GEAR)

F-6 Trucks (1950-51) Exc. School Bus

DESCRIPTION: Hypoid gear type with full-floating axles and Hotchkiss drive, similar to SPIRAL BEVEL rear axle.

REMOVAL OF AXLE: *See "Rear Axle" on car model page.*

AXLE SHAFT REPLACEMENT & WHEEL BEARING ADJUSTMENT: It is not necessary to remove wheels and hubs.

Axle Shafts—Remove axle shaft stud nuts and lock washers. Turn two shaft pulling bolts (located between stud hole) in evenly to loosen axle shaft from hub. Tap axle shaft in center of flange to loosen dowels and remove dowels. Pull shaft from housing. To install, place new gasket on hub and install axle shaft in housing, rotating axle to line up spline with splines in side gears. Install tapered dowels, lock washers and nuts on studs and tighten securely.

Wheel Bearing Adjustment—Remove axle shaft (above) bearing lock nut and lock washer. Tighten wheel bearing adjusting nut while rotating wheel back and forth, until a noticeable drag is felt. Back off adjusting nut ⅛ turn. Install bearing lock washer (NOTE—If adjusting nut is equipped with a dowel, make sure lock washer fits over dowel). Install bearing lock nut and tighten. If flange type lock washer is used, bend one flange over adjusting nut and one over lock nut. Install axle shafts.

Wheel Bearing Assembly—To disassemble, remove axle shaft, adjusting locknut, washer and adjusting nut. Remove wheel hub. Tap out inner bearing cone and grease retainer. Bearing races may be tapped out, using a brass drift. To re-assemble, install inner bearing race and bearing cone, install oil seal. Install outer race and bearing cone. Install axle on hub and adjust bearings (see above).

RING GEAR BACKLASH: .006-.012". Adjustment by shims behind bearing cups in axle housing.

OVERHAUL OF REAR AXLE ASSEMBLY:

Disassembly: Remove axle shafts and wheel hubs. Insert a length of pipe slightly smaller than axle shaft in left axle tube (facing front of truck) so as to engage differential case to prevent it dropping. Remove nuts and bolts from housing and separate it. Remove differential assembly, and pipe from housing.

Differential Disassembly—Mark differential case halves with a punch. Cut lock wires, remove nuts and separate case. Remove spider, pinions, side gears and thrust washers. Remove differential bearings using Tool 4221-K. Centerpunch rivet heads and drill thru rivet head with a drill 1/32" larger than rivet body. Press rivets out and remove ring

CONTINUED ON NEXT PAGE

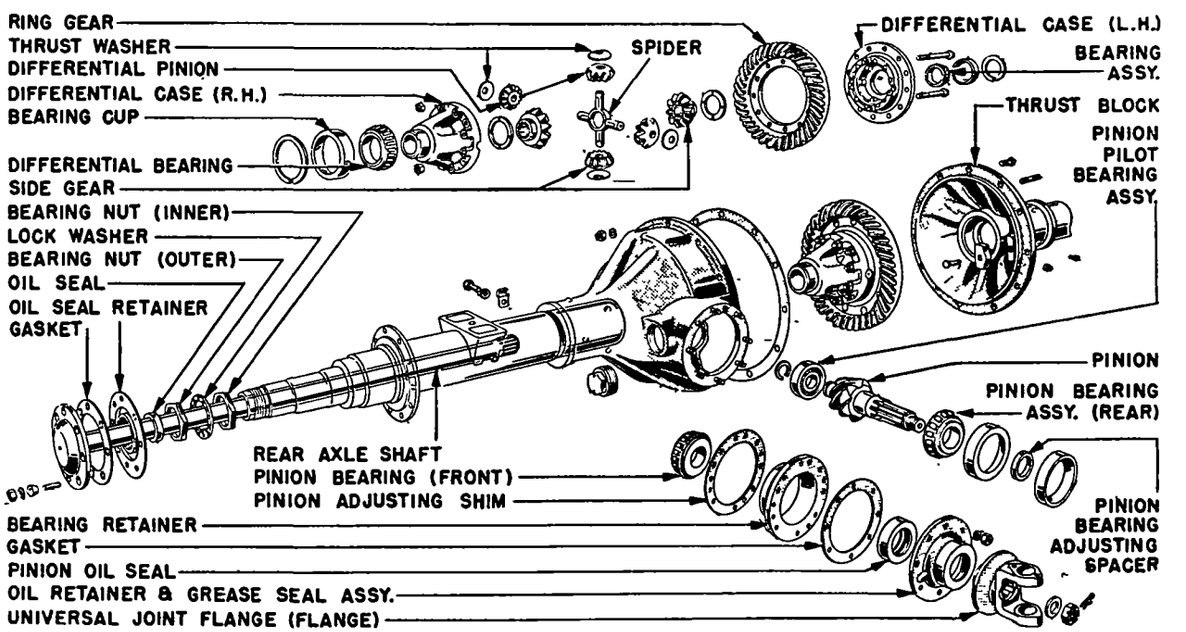

F RD TRUCK FULL-FL ATIN HYP ID GEAR REAR AXLE

FORD TRUCK FULL-FLOATING HYPOID GEAR (Cont.)

gear. Using a suitable puller, remove bearing cups from each side of axle housing. *(CAUTION—Keep spacers found behind each cup together, and wire them to their respective axle housing half).*

Drive Pinion Cage Assembly Removal—Hold universal joint flange with Tool 4851, and remove nut and washer from pinion shaft. Use a suitable puller and remove universal joint flange. Remove drive pinion bearing cover and oil seal assembly. Remove drive pinion and cage assembly, using puller screws in holes provided in cage.

►*CAUTION—Do not drive pinion from inner end as this will damage bearing lock ring groove.*

Drive Pinion and Cage Disassembly—Tap or press drive pinion from cage assembly. Remove outer bearing from cage and remove spacer or spacer combination from pinion. Remove inner pinion bearing and then remove snap ring retaining pilot bearing on shaft. Using Tool 4625-D mount pinion shaft in arbor press and remove pilot bearing from shaft. Remove oil seal from bearing cover, and remove bearing cups from cage assembly.

Reassembly of Rear Axle:

Drive Pinion Cage Reassembly—Press pilot bearing on end of pinion shaft, using a sleeve to apply pressure evenly to bearing inner race. Install snap ring and press into groove securely. Install bearing cups in bearing cage and press to seat them on cage shoulders. Lubricate bearings and cups with light oil and install rear bearing on pinion shank and insert drive pinion and bearing assembly in bearing cage. Install spacer or spacer combination on pinion shank and press front bearing firmly against spacer.

Drive Pinion Bearing Pre-Load Check—Install a sleeve on drive pinion shank that will apply pressure to pinion bearing inner race. Place pinion and cage assembly in a press and apply 25,000 lbs. pressure on the bearing. Wrap a soft wire around the cage and attach a pound-pull scale to wire. Pull on the scale on a horizontal line. It should require 12-18 inch lbs. to keep the cage rotating. If rotating torque is not between 12-18 inch lbs., install a thinner spacer to increase or a thicker spacer to decrease the pre-load. If a press is not available, the yoke may be installed and the pinion nut tightened to 300-400 ft. lbs., for checking the pre-load. After pre-load is checked and is satisfactory, install new oil seal in drive pinion bearing cover, using Tool 1175-D. *(NOTE—Soak new seal in oil at least one-half hour before installing).* Install drive pinion bearing cover, yoke, nut, and washer. Tighten nut to 300-400 ft. lbs. and install cotter pin.

Differential Reassembly—Position ring gear on case, making sure it is tight on case pilot. Install rivets and upset them cold. Head should be ⅛" larger than rivet hole, after forming. Pre-formed head of rivet should be about 1/16" smaller in diameter than the formed head. Excessive pressure will distort case and result in gear eccentricity. Lubricate all parts with gear lubricant. Position a thrust washer and side gear in ring gear half of differential case assembly. Place spider with the pinions and thrust washers in position on the side gear. Install remaining side gear and thrust washer. Align marks on each half of case and place two halves together. Install the bolts and nuts and tighten to 80-110 ft. lbs. Lock nuts with lock wire. Install differential case bearings, using a press or suitable driver.

Differential Bearing Pre-Load Adjustment—Remove thrust block from housing. Install differential bearing cups and spacers in their original position in differential housing. *(CAUTION—Install spacers with chamfered edge toward machined surface in housing).* Insert pipe used in disassembly through the housing half. Place differential and gear assembly over the pipe and slide assembly into position in housing. Install new flange gasket and position the other half of housing half in place and secure the two halves together with 6 bolts evenly spaced. Install dial indicator on housing so that dial shaft extends through thrust block pin hole and contacts ring gear. Using two screw drivers, check differential assembly end play. Should be 0.000-0.005".

NOTE—Both the differential bearing pre-load and gear lash are controlled by selective spacers, available in .004" thickness, which are installed between bearing cups and axle housing halves).

It is necessary to separate the housing halves and remove the differential bearing cups each time spacer thickness is changed. The gear may be moved toward the pinion, to decrease gear lash, by decreasing spacer thickness in case half and increasing spacer thickness in cover half. Reversing this procedure will move gear away from pinion to increase gear lash. (**IMPORTANT**—Increase or decrease thickness of spacer used in COVER half of housing to obtain a free rotating gear with from .000-.005" end play. AFTER END PLAY HAS BEEN ESTABLISHED, add spacer to equal .008" **PLUS THE END PLAY**). After endplay has been established, separate axle housing and move differential assembly out on support far enough to permit installation of drive pinion and cage assembly. Install the thrust block.

Pinion Cage Installation—Position drive pinion and cage assembly on rear axle housing studs and tap cage into place with soft hammer. Install nuts and tighten to 70-90 ft. lbs.

Gear Backlash Check—After correct preload has been established, install six bolts evenly spaced in housing and tighten to 85-95 ft. lbs. Install a dial indicator so indicator shaft will rest on one side of universal joint yoke approximately 2" from centerline of pinion shaft. Check movement for backlash. The amount indicated at this point will be double the actual amount. Shift the spacer used in back of the differential bearing cups in axle housing, DECREASING the thickness of spacer used, on side TOWARD which gear is to be moved, and increasing the thickness of the opposite spacer EXACTLY the same amount as required to obtain a backlash of .006-.012" (dial will read .012-.024"). After correct backlash is obtained, install remaining housing bolts and tighten to 85-95 ft. lbs.

FORD TRUCK TWO-SPEED

Optional Equipment on:
1½-Ton Truck, Series F-5 (1950-51)
2-Ton Truck, Series F-6 (1950-51)

DESCRIPTION: Full-floating, spiral bevel gear type with two-speed planetary gears. Same design as used on previous models.

AXLE SHAFT REPLACEMENT, WHEEL BEARING ADJUSTMENT, & AXLE OVERHAUL: *See complete "Ford Truck Two-Speed" Rear Axle in previous release.*

F RD PASSENGER CARS (EXCEPT STATION WAGON)

6 Cyl. & V8 Pass. Cars exc. Sta. Wgn. (1950-51)
6 Cyl. & V8 Sedan Delivery (1950-51)

►CHANGES, CAUTI NS, C RRECTIONS

►**PINION BEARING PRE-LOAD ADJUSTMENT:** NEW bearings require different pre-load than old bearings, (**See "Pinion Bearing Pre-Load Adjustment" following.**

►**PINION SHAFT OIL SLINGER PRODUCTION CHANGE**—A new oil slinger used beginning Late 1950. Slinger is installed between universal joint flange and front bearing assembly.

►**1949-50 PINION SHAFT OIL SLINGER INSTALLATION**—The above slinger can be installed on all 1949 and Early 1950 Pass. cars.

►**PINION GEAR PRODUCTION CHANGE:** New type pinion gear with provision for installation of pinion adjusting shims on pinion shaft (between gear shoulder and rear bearing cone) used on late cars and furnished for replacement on all cars as listed below. These Ring-and-Pinion Gear Sets are interchangeable with previous type gears but are installed and adjusted differently as described below.

Ring and Pinion Gear Kits
(Includes shim selection)

Ratio	Kit Number
3.73-1	8A-44208-C
4.10-1	8A-44208-D

►*CAUTION*—Special adjusting shims furnished for use with above gears (fit on pinion shaft between gear and rear bearing cone).

►**CARRIER-TO-HOUSING BOLT TIGHTENING CAUTION:** Special self-locking bolts, No. 350584-S, and self-locking nuts, No. 34445-S8, used to mount carrier in axle housing. These nuts should be tightened to 30-35 ft. lbs.

►*LEAK CORRECTION CAUTION*—If leaks occur at carrier mounting flange, correct by using Permatex on both sides of gasket, **do not tighten mounting bolts excessively** (will not correct leaks).

►**EXCESSIVE AXLE SHAFT ENDPLAY CORRECTION (Causing "Clunk" when car in motion):** Check for excessive endplay (use depth gauge through hole in axle shaft flange). If endplay more than .030", correct by installing special shim between bearing outer race and bearing seat in housing (endplay must be not less than .005").

DESCRIPTION: Semi-floating, hypoid gear, Hotchkiss Drive type with **separate Differential Carrier Assembly** which can be removed for work.

AXLE SHAFT REPLACEMENT: Remove wheel, remove brake drum (retained by Tinnerman nuts n wheel studs). Remove nuts on axle retainer plate bolts (work through hole in flange), use Axle Shaft Puller 4235-P to pull axle shaft and bearing assembly out. Use care not to damage oil seal or dislodg backing plate (install one nut to retain backing plate). Check wheel bearing and oil seal in housing.

►*CAUTION—Do not disturb wheel bearing or retainer unless replacement required (cannot be reinstalled).*

Wheel Bearing Replacement: Use special Axle Bearing Retainer Remover No. 2240-N to loosen bearing retainer, remove retainer from shaft. Use puller to remove bearing, or grind through both races and lift off bearing (NOTE—bearing cannot be re-used,

C NTINUED ON NEXT PA E

FORD PASS. CARS (C nt.)

always install new bearing). To install bearing, place retainer plate on shaft, use tool No. 1225-N to press NEW bearing firmly in place against shoulder on shaft, press retainer ring firmly against bearing.

REMOVAL OF AXLE: *See "Rear Axle" on car model page.*

AXLE DISASSEMBLY: Remove axle shafts (see above), remove nuts on carrier mounting bolts, lift carrier out of housing. Mark right and left hand differential bearing caps and adjusting nuts to insure correct reassembly. Remove bearing cap screws, lift off bearing caps, remove adjusting nuts, lift differential assembly out of carrier. To remove drive pinion, take off nut on pinion shaft at universal joint flange, pull flange off shaft. Remove pinion, rear bearing, and bearing spacer through rear of carrier. Discard spacer (new spacer must be used in reassembly). Use puller No. 4628-P to remove front and rear bearing cups from carrier bore (CAUTION Save and re-install pinion adjusting shims.

Pinion Bearing Assembly (First Type Pinion with Shims in Carrier behind Bearing Cup): Lubricate bearings and thrust washers with hypoid gear oil. Install the front and rear bearing cups in carrier using Replacer No. 4628-N to seat cups firmly against shoulders in housing (CAUTION—Re-install shims in housing behind rear bearing cup—these shims control pinion setting). Press rear bearing cone and roller assembly on pinion shaft, install NEW bearing spacer on shaft, insert assembly in carrier. On front end of shaft, install front bearing cone and rollers, oil seal, universal joint flange, washer, and nut. Adjust pinion bearings and check pinion setting (gear mesh).

Pinion Setting (First Type Pinion)—Check pinion setting when new parts installed or if same number and thickness of shims, as removed from behind bearing cup not re-installed. Pinion must be installed (see above). Mount Pinion Depth Gauge Tool 4610-A or 4610-P so pinion plate contacts face of pinion (clamp to flat surface of housing, using clamp screw and bolt provided, see that semi-circular supports of depth gauge seat evenly in differential side bearing bores). Use micrometer to measure distance from underside of pinion plate to top of crosspiece on depth gauge. *(CAUTION—when using Tool 4610-A, subtract .5" from micrometer reading).* If pinion depth exceeds 2" ± .002", shims equal to the exceeded amount must be installed back of pinion bearing cup. Shims of .003", .005", .010", and .020" are available.

Pinion Bearing Assembly (Later Type Pinion with Shims on Pinion Shaft behind Bearing Cone): Install front and rear bearing cups in carrier using Replacer No. 4648-N to seat cups firmly against shoulders in carrier (NOTE—no shims installed behind rear bearing cup with this pinion). Measure distance from face of pinion to rear face of shoulder on back of gear with a micrometer (do not place micrometer on etched portion of pinion face) and **record this measurement** for use in pinion setting. Press rear bearing on pinion shaft (do not install shims at this time), insert pinion in carrier, install front bearing, universal joint flange, washer and nut, tighten nut for bearing pre-load of 15-20 in.lbs. (special checking pre-load). Check pinion setting (see below) to determine correct shim thickness required. Remove pinion assembly from carrier, remove rear bearing using tool 4221-N, install correct shim thickness on pinion shaft against shoulder on gear with **ears on shims facing shoulder** on gear. Re-install pinion in carrier (CAUTION—same bearings must be installed as were used in determining correct pinion shim thickness), install NEW bearing spacer, front bearing, oil seal, universal joint flange and nut. Adjust pinion bearing pre-load.

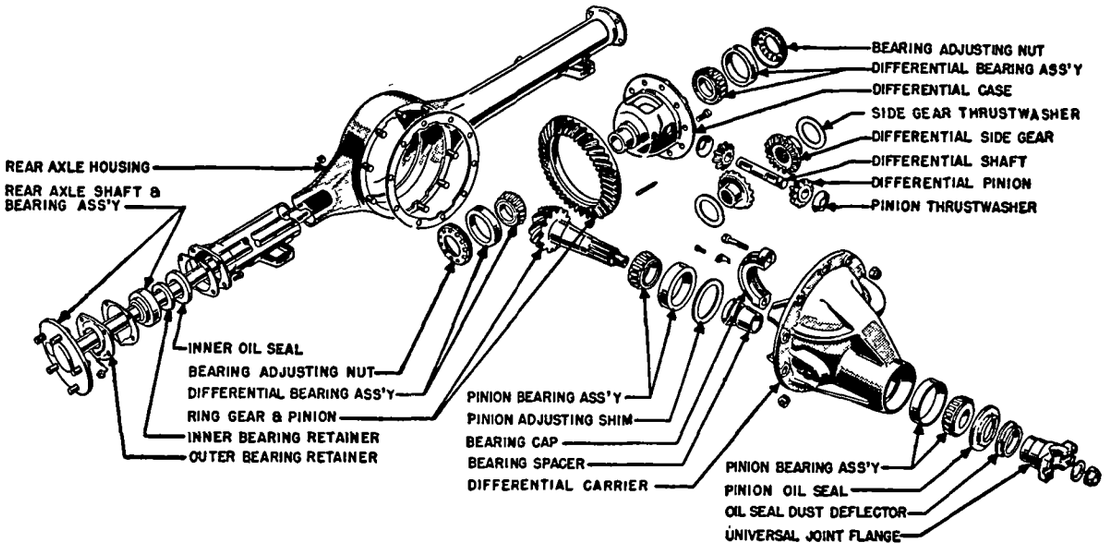

FORD PASSENGER CAR REAR AXLE

Pinion Setting (Later Type Pinion)—Use tool 4610-A or 4610-P to check pinion depth (NOTE—add .5" to micrometer reading if 4610-P used). With pinion installed in carrier **without shims**, measure pinion depth with above tool, **add** this figure to distance from face of pinion-to-face of shoulder as recorded before pinion installed in carrier (above), and **subtract** 4.095 from this sum. Then add or subtract a figure dependent on pinion marking as detailed below, and the final result will be the correct shim thickness required for installation between the pinion gear shoulder and the rear bearing cone.

Pinion Marking under 15—If number etched on face of pinion is less than 15 (.015"), **subtract this number from 15**, and **add** the result in determining the pinion shim thickness (above).

Pinion Marking Over 15—If number etched on face of pinion is greater than 15 (.015"), **subtract 15 from this number**, and **subtract** the result in determining the pinion shim thickness (above).

Pinion Bearing Pre-load Adjustment: See table below for settings. Tighten nut on end of pinion shaft and **rotate pinion shaft while tightening nut** to insure proper seating of bearings. When bearing spacer is felt to begin to collapse, rotate pinion shaft several times, then measure turning torque required to turn pinion shaft, tighten nut until correct torque is secured as follows:

Pinion Bearing Pre-load (turning torque)

New Bearings	22-28 in.lbs.
Old Bearings (First Pinion)①	10-15 in.lbs.
Old Bearings (Later Pinion)①	13-18 in.lbs.

①—After 1000 miles or more of service.

►*CAUTION—Install a new pinion bearing spacer each time the pinion nut is tightened to specified torque.*

Differential Assembly: If assembly being dismantled, remove ring gear mounting capscrews, tap ring gear off case with a brass hammer. Drive differential pinion shaft lockpin out **from ring gear side of case**, slide shaft out, remove side gears, pinions, and thrust washers. Use Puller 4221-N to remove differential side bearing cone and roller assemblies. When reassembling, install differential side gears and pinions with thrust washer behind each gear, stake pinion shaft lockpin to prevent pin working out. Tighten ring gear mounting screws evenly to 35-40 ft. lbs. Use Driver 4222-N to install side bearings.

Differential Bearing & Ring Gear Backlash Adjustment: When installing differential assembly in carrier, move ring gear toward pinion until all backlash taken up, place adjusting nuts squarely against bearing cups and make certain they are properly meshed in carrier threads, install bearing caps (note markings), tighten bearing cap screws just enough to hold caps in place. Turn **left** hand adjusting nut in until ring gear backlash is zero (turn gear while securing this setting). Turn **right** hand adjusting nut in until it is snug, then **tighten** adjusting nut additional 1½-2½ notches for correct bearing pre-load. Check ring gear backlash and gear mesh (below), then tighten bearing cap screws to 70-80 ft. lbs., install adjusting nut locks.

Ring Gear Backlash & Gear Mesh: Differential bearing adjustment (above) should give correct gear backlash of .005-.008". Measure backlash with a dial indicator. If less than .005", back off left hand adjusting nut and tighten right hand nut exactly same number of notches to avoid disturbing bearing pre-load adjustment. If backlash more than .008", back off right hand adjusting nut and tighten left hand nut in same manner. After all adjustments completed, paint gear teeth with red lead and rotate gears in both directions to check tooth contact.

LINCOLN, MERCURY, & FORD STATION WAGON & F-1 TRUCK

Ford 6 Cyl. & V8 Station Wagon (1950-51)
Ford Half-Ton Trucks, Series F-1 (1950-51)
Lincoln & Cosmopolitan (1950-51)
Mercury (1950-51)

►CHANGES, CAUTIONS, CORRECTIONS

►**REAR AXLE PRODUCTION CHANGE (Except Lincoln & Cosmopolitan)**—Entered production (Mercury) June 1950, (Ford F-1 Truck) Late 1950, (Ford Station Wagon) Start of 1951 production. Ring gear diameter changed from 9¼" to 8½". Bolt circle diameter changed from 5⅝" to 6⅝". Axle ratios remain approximately the same although number of teeth on ring gear and pinion have been decreased. Housing has also been changed. Parts are not interchangeable with previous axle.

►*AXLE IDENTIFICATION*—Late type axle can be identified by "hexagonal" shaped cover.

►*NOTE*—These axles are Spicer (Salisbury) Models 53 (Lincoln 1950-51), 41-5 (Ford Sta. Wgn. Early 1950, Mercury & Ford F-1 Truck, Early 1950), 44-1 (Ford Station Wagon, Mercury & Ford F-1 Truck, Late 1950 & 1951).

►**PINION GAUGE READING (Axle with 8½" Diameter Ring Gear)**—For Standard pinions marked "0". Gauge reading should be .625.

►**RING GEAR MOUNTING BOLT PRODUCTION CHANGE:** New type bolts No. 350634-S, used to mount ring gear on differential case, beginning January 1949. When installing new parts on axles prior to this date, change ring gear bolts to new type (can be done by working through inspection cover hole and changing two bolts at a time), tighten new bolts to 40-50 ft. lbs. torque.

►*MOUNTING BOLT IDENTIFICATION NOTE*—New type bolts (above) can be identified by following marks on head: "A" or "F" in circle, "H" (plain letter), "C" with radiating lines, or radiating lines without a letter. All other marked bolts are old type.

►*CAUTION*—Approximately 400,000 of the new type capscrews (above) have been sent to the field without markings. These screws are black and are screw machine products. Identification can be made by circular tool marks on head.. Future screws will have notches cut around the head for identification.

DESCRIPTION: Semi-Floating, hypoid gear, Hotchkiss drive type. **This axle does not have a separate Differential Carrier Assembly.**

AXLE SHAFT REPLACEMENT: Remove wheel, remove brake drum by taking out three capscrews. Disconnect hydraulic brake line at backing plate. Rotate axle shaft until hole in shaft flange lines up with one of four bolts mounting backing plate and bearing retainer on housing, remove all bolts. Use Tool 4235-A to remove axle shaft and bearing assembly out of housing. Use care not to damage oil seal or dislodge backing plate (if oil seal being replaced, backing plate can be lifted off and laid on floor without disconnecting parking brake cable).

Wheel Bearing Replacement: Cut bearing retainer ring with chisel, slide ring off shaft, use special Tool 4234 to press bearing off shaft in arbor press. When cleaning parts, **do not** wash pre-lubricated wheel bearing with solvents (will remove lubricant). Press bearing on shaft, using Tool 4234, then press on new wheel bearing retainer ring. (CAUTION—do not attempt to press bearing and retainer on in one operation).

Oil Seal Replacement: Use Tool 4245-B to install seal in housing. Use great care to keep seal square with housing while installing and rear seal lightly against shoulder in housing. Apply cup grease to seal surface before installing axle shaft.

Axle Shaft Installation: Use great care not to damage oil seal when inserting axle shaft. Tighten bearing retainer and backing plate bolts to 65-70 ft. lbs., tighten brake drum capscrews to 12-17 ft. lbs.
CAUTION—Bleed brakes after connecting brake lines

REMOVAL OF AXLE: *See "Rear Axle" on car model page.*

REAR AXLE DISASSEMBLY & OVERHAUL: *See complete "Lincoln, Mercury & Ford" Rear Axle in previous release.*

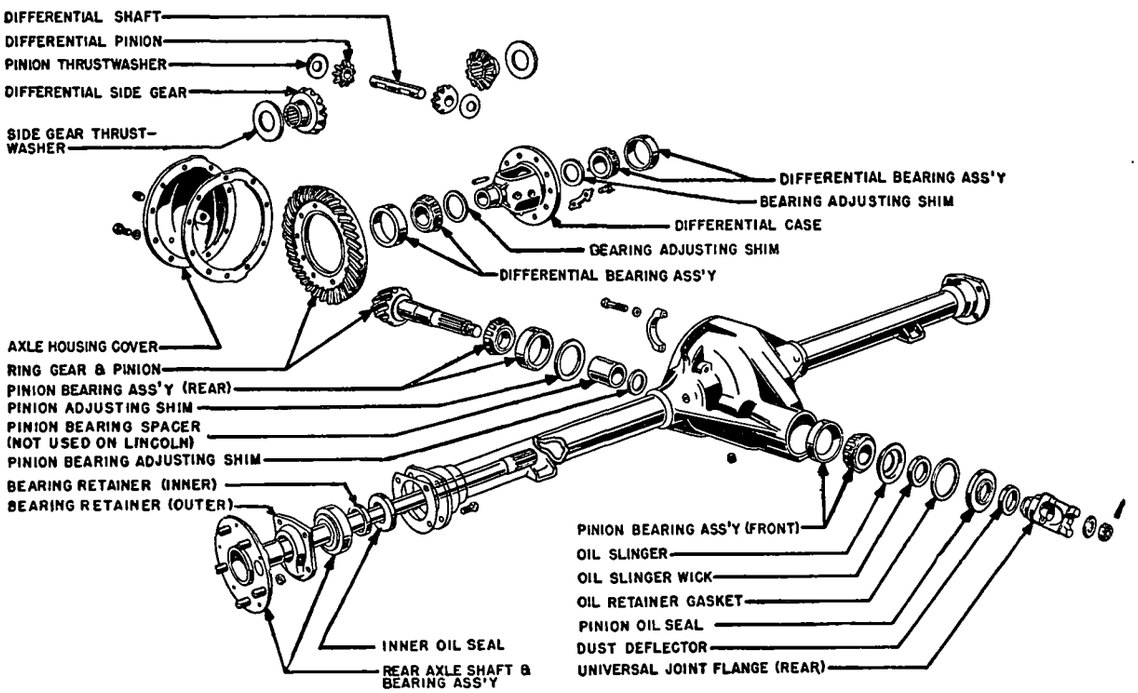

LINCOLN & MERCURY, F RD STATION WAGON (& F-1 TRUCK) REAR AXLE

HUDSON

Six & Eight, All Models (1950-51)

REAR AXLE IDENTIFICATION: Differential case part number and axle ratio indicated by marking on right front side of carrier flange.

Axle Ratio	Diff. Case No.	Marking
3 9/11 - 1	F-303716	①9-11
4 1/10 - 1	F-300291	1-10
4 5/9 - 1	F-300291	5-9

①—See Caution following.

►**DIFFERENTIAL CASE ASSEMBLY (3 9/11-1 RATIO) CAUTION:** Ring gear mounting flange on this carrier machined to **.062" greater depth** (to allow for greater pinion diameter on this axle) and this differential case assy, must be used for 3 9/11-1 ratio only. Case may be identified by marking (above) and by ⅛"x1/32" chamfer on outer corner of ring gear mounting face (this chamfer not found on first units).

►**PINION OIL SEAL CHANGE:** Several types have been used and must be installed by unit assemblies with correct type Dirt Shield & Universal Joint Flange. See Pinion Oil Seal data following:

Oil Seal Part No.	Dirt Shield & Flange No.
300312	161012 or 301817
301959①	301817 or 300308
303843	303842

①—This seal can be used with new type 303842 Dirt Shield & Flange but is not recommended (will not provide improved sealing of new 303843 Oil Seal).

DESCRIPTION: Semi-floating, Hypoid gear, Hotchkiss Drive type with separate differential assembly.

REMOVAL OF AXLE: *See Rear Axle on car model page.*

AXLE SHAFT REPLACEMENT, DISASSEMBLY & OVERHAUL: *See "Hudson Hypoid" Transmission in previous release.*

PACKARD

Eight & Super Eight, All Models (1950)
200, 300 & 400, All Models (1951)

DESCRIPTION: Semi-floating, hypoid gear type of same design used on previous models.

REMOVAL OF AXLE: *See "Rear Axle" on car model pages.*

DISASSEMBLY & OVERHAUL: *See "Packard Hypoid" Rear Axle in previous release.*

NASH STATESMAN & AMBASSADOR REAR AXLE

Statesman, All Models (1950-51)
Ambassador, All Models (1950-51)

►CHANGES & CORRECTIONS

►**1951 AMBASSADOR DIFFERENTIAL SIDE BEARING ADJUSTMENT PRODUCTION CHANGE:** Effective with car serial No. R-601152 (11-39 ratio), R-601349 (9-40 ratio) and R-606549 (10-41 ratio) side bearing adjusting nut has been eliminated. Adjustment is now made in same manner as Statesman & Rambler Rear Axles.

►**1950-51 PINION SHAFT PRODUCTION CHANGE:** Effective with following car serial Nos. Statesman K-376736 (8-35 ratio), K-380141 (8-39 ratio), Ambassador R-607425 (11-39 ratio), R-610875 (9-40 ratio), and R-619089 (10-41 ratio), a new type pinion gear is used. Pinion bearing spacer has been eliminated. *See "Pinion Bearing Preload Adjustment"*

►**1950 REAR AXLE VENT PRODUCTION CHANGE:** Rear axle is now vented by a .067" diameter hole located on rear side of rear axle tube. Previous vent was under rear spring seat. ***Where there is evidence of water entering previous type axle, seal the hole with body sealer around spring locating pin, drill a new hole in rear side of tube approx 8⅞" from brake backing plate. Use No. 51 drill.***

►**1950 DIFFERENTIAL CAP SCREW LOCK WIRES ELIMINATED:** Wires have been replaced by shakeproof lock washers.

►**1950 AMBASSADOR INNER OIL SEAL PRODUCTION CHANGE:** New type felt oil seal replaces leather type previously used.

►**1951 HYDRA-MATIC CARS PROPELLER SHAFT:** Beginning with 1951 production a solid one-piece shaft is used and the center-bearing is eliminated.

DESCRIPTION: Semi-floating, hypoid gear type with torque tube drive.

REMOVAL OF AXLE: *See Rear Axle on car model page.*

DISASSEMBLY & REASSEMBLY OF REAR AXLE: *See complete "Nash Hypoid" Rear Axle in previous release and note following points.*

Propeller Shaft Center Bearing (1950-51 Except 1951 Hydra-Matic cars)—*1951 HYDRA-MATIC CARS DO NOT HAVE CENTER BEARING.* Prelubricated type ball bearing retained on propeller shaft by snap ring on each side and rubber mounted in torque tube. To remove bearing, take out snap ring, drive bearing off **toward front end** of shaft (forward end of shaft .003" undersize to facilitate removal and installation). Install new bearing in same manner and see that new snap rings properly seated to hold bearing in position.

►**REAR AXLE IDENTIFICATION TAG:** Ring and pinion gear ratio stamped on tag attached to axle housing by one differential housing cover bolt.

►***CAUTION—Tag should be kept with axle parts and re-installed when axle reassembled. Install new tag (furnished with gear sets) when axle ratios changed.***

Pinion Bearing Disassembly: Before pinion shaft can be removed, propeller shaft must be disconnected by loosening coupling nut on rear end of shaft. Then remove the oil seal from housing, bend back lip of pinion nut locking plate, loosen nut. On Ambassador models, remove nut on forward end of pinion shaft at coupling flange, pull coupling flange from shaft, lift off oil seal (held in place by torque tube flange).

Pinion Disassembly—Tap on pinion shaft with soft hammer to loosen front bearing cone, remove bearing cone and roller assembly, remove shims located behind bearing cone, **note number and thickness of these shims** which c ontrol bearing adjustment. Remove pinion and rear bearing assembly through rear of housing. Use long drift to drive pinion bearing cups from housing (recess provided behind each cup for this purpoes). Use pinion bearing tool J-2244 (Statesman), tool J-2245 (all Amb. models) to remove rear bearing from pinion shaft, **note number and thickness of washers or shims on shaft behind bearing** which control pinion settingn (gear mesh). To remove differential side bearing cone and roller assemblies, use special puller J-2497, being careful that puller does not contact roller cage or damage shims in back of left hand bearing (these shims control ring and pinion gear backlash).

►**PINION BEARING REASSEMBLY & ADJUSTMENT NOTE:** Late 1950-51 cars do not have a pinion bearing spacer. The bearing preload is now controlled by a selected thickness shim installed between front bearing and shoulder on pinion shaft. Adjusting shims in the following thicknesses will be provided for service: .053, .054, .056, .058, .059, .063, .064, 066, .068, .069". Procedure is same as for previous models.

Pinion Bearing Reassembly: Bearing adjustment is controlled by shims on the pinion shaft between spacer and forward bearing cone. When installing pinion, install correct washer and shim pack for correct pinion mesh (see Pinion Setting below) on shaft against pinion, install rear bearing cone and bearing spacer. Install sufficient shims on shaft in front of spacer to insure positive endplay of shaft when installed in housing, install front bearing cone, shaft coupling flange (Ambassador) or special tool (splined sleeve) and tighten nut on shaft securely. Then check bearing adjustment as directed below. NOTE—Do not install oil seal until after bearing adjustment has been made.

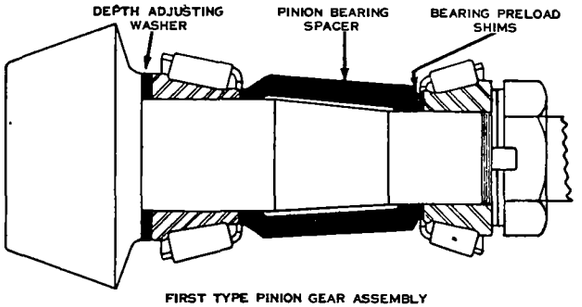

FIRST TYPE PINION GEAR ASSEMBLY

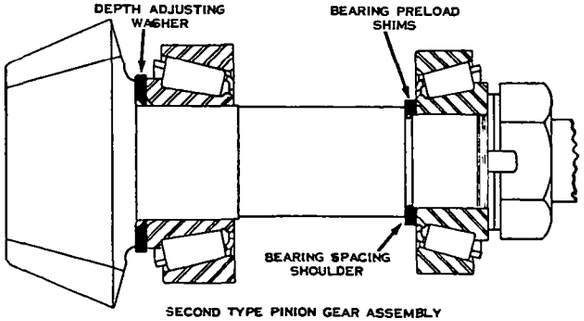

SECOND TYPE PINION GEAR ASSEMBLY

NASH PINI N GEAR ASSEMBLIES

►**PINION BEARING PRELOAD (NEW TYPE PINION):** Statesman 12-14 inch lbs., Ambassador 15-20 inch lbs.

Pinion Bearing Pre-load Adjustment with Tool J-2496: With pinion installed in axle housing (make certain that spacer and bearing adjustment shims in place on shaft between bearing cones), install tool on end of shaft in place of the coupling flange, tighten pinion shaft nut securely. Attach spring scale to exact center of tool handle (will provide 6" arm), check torque required to turn pinion shaft. See table below for desired torque reading. If **less than lower figure,** remove shims from between spacer and front bearing cone, if **greater than higher figure,** add shims at this same point. When bearing adjustment completed, install new oil seal, install coupling flange (Ambassador), see that pinion nut tightened to 105-110 ft. lbs.

Pinion Bearing Pre-load

Model	Pinion Shaft Turning Torque
Statesman	12-14 in. lbs.
Ambassador (Early type)	15-18 in. lbs.
Ambassador (Late type)	15-20 in. lbs.

Differential Bearing Assembly: Use special puller J-2497 to remove bearing cone and roller assemblies from differential case. Note number and thickness of shims located behind each bearing cone (On early 1950 Ambassador with early type rear axle, no shims used on right hand side). These shims control ring and pinion gear backlash, and bearing adjustment (except early 1950 Ambassador) and must be re-installed in same position when bearing replaced. If new parts installed, adjust bearings and gear backlash as follows:

Differential Bearing Adjusting Shim Note—These shims furnished in thicknesses of .075", .080", .085", .090", .095".

Differential Bearing Adjustment (Statesman & Late 1950 & 1951 Ambassador): Bearing pre-load should be .004-.006" and this is controlled by shims between the side bearing cups and axle housing at each side. To determine shim thickness, install carrier in housing with one .075" shim at each side, check end-play. If end-play noted, install next thicker shim on each side and recheck. With endplay just taken up, **install .005" thicker shim on right hand side** which will provide correct bearing preload of .004-.006". Tighten bearing cap screws to 55-60 ft. lbs. Check ring gear backlash with a dial indicator, finally check gear mesh by painting gear teeth with red lead and rotating gears.

NASH REAR SUSPENSION

Statesman (1950-51)
Ambassador (1950-51)

DESCRIPTION: Special coil spring type with springs insulated by rubber cushions at top (in body) and at lower end (at spring seat on axle housing). Direct acting shock absorbers are mounted within springs and a stabilizer is used to maintain rear axle alignment.

REMOVAL & INSTALLATION OF SPRING & SHOCK ABSORBER: *See complete "Nash Rear Suspension" in Previous release.*

NASH RAMBLER

Nash Rambler (1950-51)

►**RING GEAR & PINION RATIO PRODUCTION CHANGE:** Effective at car Serial No. D-44617, Suburban & Station Wagon with standard transmission, rear axle ratio changed to 3.8-1 (9-34).

DESCRIPTION: Hypoid gear, semi-floating type with Hotchkiss Drive. This axle similar to type used on Nash "600" and Statesman except that carrier housing and pinion shaft modified for use with separate propeller shaft (with front and rear universals) and without torque tube.

AXLE REMOVAL: *See "Rear Axle" on car model page.*

AXLE SHAFT REPLACEMENT & WHEEL BEARING ADJUSTMENT: Use Adapter J-2498-14 with regular axle shaft puller J-2498 for this model. Procedure is same as for other Nash models (see preceding data). **Axle Shaft Endplay**—.002-.004".

PROPELLER SHAFT REMOVAL: Loosen coupling nut on rear end of rear universal joint yoke, use soft hammer to tap universal joint and propeller shaft assembly off pinion shaft.

REAR AXLE OVERHAUL: *See Nash "600" and Statesman data (preceding) and note following special procedures and specifications:*

Pinion Assembly Installation: Insert pinion shaft assembly (pinion, pinion setting shims, and rear bearing) through rear of housing, then install bearing adjusting shims (same thickness as were removed when axle disassembled) and front bearing on forward end of shaft. Install bearing washer and pinion nut but **do not install oil seal,** tighten pinion nut to 90-95 ft. lbs. Check and adjust bearing pre-load. After bearing adjustment completed, lock pinion nut to prevent loosening, install oil seal (use installer J-4485).

Pinion Bearing Pre-load: 12-14 in. lbs. turning torque or pull required to rotate pinion shaft (bearings .003" tight).

Checking Bearing Pre-load—Use torque wrench or pinion holding tool J-2496 and spring scale to rotate pinion shaft. If bearings correctly set .003" tight, turning torque or pull should be not less than 12 in. lbs. or more than 14 in. lbs.

Adjusting Bearing Pre-load—Pre-load controlled by shims on pinion shaft behind front bearing cone. use two shims only, varying thickness of each shim to secure total thickness of .106" to .138" for correct .003" tight bearing adjustment and 12-14 in. lbs. pre-load. If pre-load less than 12 in. lbs., decrease shim thickness. If pre-load greater than 14 in. lbs., increase shim thickness.

OLDSMOBILE REAR AXLE

Six & Eight, All Models (1950-51)

►CHANGES, CAUTIONS, CORRECTIONS

►**PINION BEARING PRE-LOAD CAUTION: Pinion bearing pre-load must be adjusted** whenever universal joint companion flange nut on pinion shaft loosened (pre-load controlled by this nut and will be disturbed when nut loosened for any reason).

►**DIFFERENTIAL GEAR THRUST WASHER CHANGE (Installation of 1950 Washers on previous cars):** New Parco-lubricated metal thrustwashers as used on 1950 cars should be installed to replace previous type fiber washers whenever axles being rebuilt. These new washers furnished Standard & Oversize as Part No. 513714 (Side Gear Washer), No. 500517 (Pinion Washer).

►**PINION BEARING SPACER CHANGE:** Pinion bearing spacer changed from one piece type to two-piece type No. 510524 (Front), 510525 (Rear). See Pinion Bearing Assembly data and illustration.

►**SPECIAL "PILOTED" AXLE CARRIER & HOUSING ASSEMBLIES (All 1950-51 8 Cyl., Special 1950 6 Cyl. 3.9-1 Axle):** Special differential carrier has machined diameter at differential bearing pedestal caps which pilots in welded supports in axle housing. These carriers and housings must be used together and only **Carriers with machined pedestal caps and Housings with welded supports must be used on above cars.**

►***CARRIER & HOUSING INSTALLATION CAUTION: On all cars with "Piloted" type carrier and housing, special differential side bearing adjustment and carrier installation procedure required. See data below.***

AXLE IDENTIFICATION: Rear axle ratio and date of manufacture are stamped on underside of differential housing. First digit designates ratio (see table below), second digit designates month ("A" for January, "B" for February, etc.). Last digit designates year ("0"—1950. "1"—1951, etc.).

Code	Ratio	Code	Ratio
1	5.55-1 (41-9)	6	3.64-1 (40-11)
2	4.30-1 (43-10)	8	3.42-1 (41-12)
3	4.10-1 (41-10)	9	3.23-1 (42-13)
4	3.90-1 (39-10)		

►**"Piloted" Axle Housing Caution**—Housing with pedestal cap support plates (welded on inner face of carrier mounting flange at each side) **must only be used with special piloted carrier** (with machined pedestal caps) and can be identified by support plates and by different overall lengths as follows:

Model	Axle Housing Overall Length
76 (NO Support Plates)	54 27/32"
76 & 88 (WITH Support Plates)	54 27/32"
98 (WITH Support Plates)	57 11/32"

DESCRIPTION: Semi-floating hypoid gear type of same design used on previous models with "piloted" type axle housing (see above).)

REMOVAL OF AXLE: *See Rear Axle on car model page.*

PINION SHAFT OIL SEAL RENEWAL (Without Disassembly of Rear Axle): Mark pinion shaft nut before loosening it and **retighten to exact same position** after oil seal installed (see oil seal data below). This will avoid necessity of resetting the pinion bearing pre-load. If new companion flange being installed, see Pinion Bearing Pre-load Adjustment below.

Oil Seal Installation—Always install new oil seal (old seal will be damaged by removal). Lubricate seal leather with oil and coat outer diameter of seal with Permatex No. 3 or similar sealer, tap seal in place in housing bore.

►**IMPORTANT SERVICE CAUTION:** Pinion bearing pre-load is controlled by universal joint companion flange nut on pinion shaft and bearing adjustment will be disturbed when this nut is loosened. **Pinion bearings must be adjusted each time companion flange nut is disturbed.**

DISASSEMBLY & REASSEMBLY: *See complete "Oldsmobile Hypoid" Rear Axle in previous release and note following points:*

Pinion Bearing Pre-load Adjustment: Use J-2933 Companion Flange Holding Tool on flange, tighten nut on pinion shaft until bearing endplay is taken up (companion flange is felt to contact spacer), then tighten nut slowly (not more than 1/6 turn at a time), turning pinion shaft frequently to seat bearing rollers, and check bearing pre-load by measuring the pull required to turn the pinion shaft in inch-pounds (use torque indicating wrench or spring scale J-544-A attached to companion flange holding tool). **Tighten nut only until correct bear-**

C NTINUED N NEXT PA E

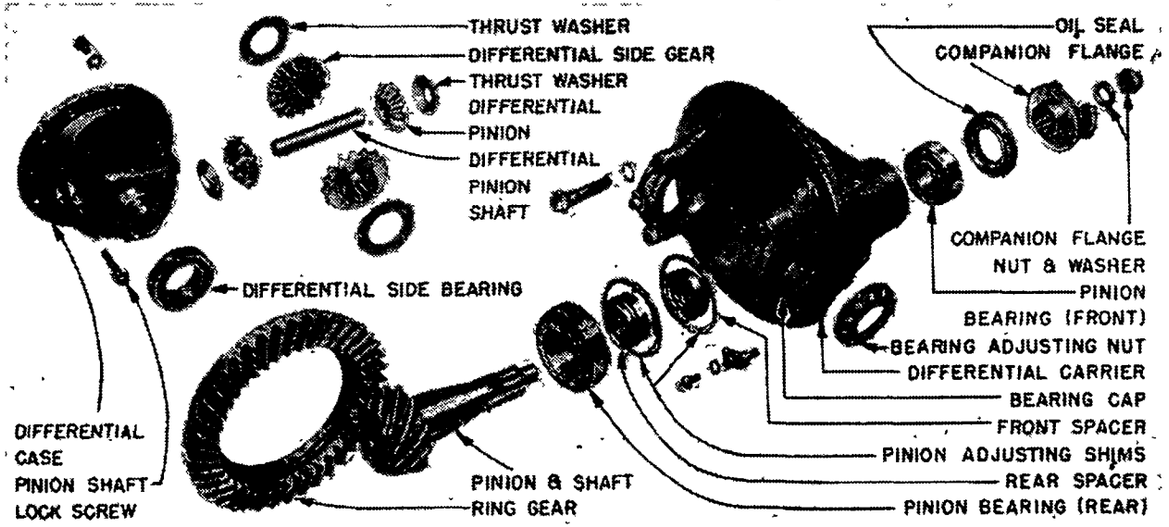

OLDSMOBILE HYP ID GEAR REAR AXLE (WITH TW -PIECE PINI N SPACER)

OLDSMOBILE REAR AXLE (C nt.)

ing pre-load is secured as listed below. After completing pre-load adjustment, secure the nut by staking end of pinion shaft into nut recesses.

Pinion Bearing Pre-load Setting

Pinion Bearings	Bearing Pre-load
New Bearings	27-37 in.lbs.
Old Bearings①	15-20 in.lbs.

①—After several thousand miles usage.

►*CAUTION*—Do not exceed maximum (37 in.lbs.) specification when adjusting pre-load. If this figure exceeded by tightening nut excessively, disassemble axle and install new spacer.

►**Pinion Bearing Spacer Shim Note**—A shim (.037" to .045" thick) is used between spacer and front bearing cone on some axles. This shim must be re-installed if same spacer is re-used (discard shim if new spacer used). A new spacer must be used when: 1) New Ring Gear & Pinion set installed, 2) Any part of either pinion bearing is changed, 3) New Carrier casting installed, or 4) Pinion adjusting shim thickness increased.

Pinion Setting: Standard shim thickness for each carrier is indicated by mark on carrier flange as follows: D5—.015", D4—.014", D3—.013", D2—.012", D1—.011", 0 (Std.)—.010", S1—.009", S2—.008", S3—.007", S4—.006", S5—.005", (NOTE—"D" indicates carrier deeper, "S" that carrier shallower than standard). To this standard shim thickness (which is correct for all standard or unmarked pinions), add additional shims (when pinion marked +) or subtract shims (when pinion marked —) equal in amount to the figure following this + or — mark on end of the pinion (figures indicate shim thickness in thousandths). This total shim thickness will correctly position pinion for proper mesh with ring gear and shims should be installed in carrier ahead of rear pinion bearing cup. Shims are furnished in sizes listed below and should be used in combination for required thickness.

Shim Thickness	Part No.	Identification Color
.002"	509263	Plain
.003"	509264	①Blue
.004"	509265	②Copper
.005"	509266	Plain
.010"	509267	Plain

①—Or plain color with one punched hole.
②—Or plain color with two punched holes.

Differential Bearing Adjustment: ***CAUTION—On "Piloted" type carriers, Pedestal Cap Clearance must also be checked and adjusted.***

Differential Bearing Setting—2-4 notches tight from point where bearing race just starts to turn with adjusting nut.

Pedestal Cap Clearance (All "Piloted" Carriers): After differential bearing adjustment completed and with bearing capscrews correctly tightened to 70-75 ft.lbs., install special ring gauge, Tool BT-23, over pedestal caps so that it rests on machined surface at outer side of each cap. Hold gauge against one cap, measure clearance between gauge and opposite cap with a feeler gauge. Clearance at this point must be .005". Correct by re-adjusting differential bearings (above).

NOTE— If correct clearance of .005" cannot be secured within range of bearing adjusting nut (2-4 notches tight), loosen bearing cap screws and tap bearing caps lightly in or out with a soft hammer.

►*CAUTION*—Bearing cap screws must be loosened to allow adjusting nuts to be turned and must always be tightened to 70-75 ft.lbs. before checking clearance.

"Piloted" Carrier Installation in Axle Housing:

►*CAUTION—Piloted carriers must be installed as follows due to close fit between carrier pedestal caps and support plates in housing.*

1—Carefully clean mounting face of carrier and housing, install new gasket (No. 556042).

2—Install three pilot studs, Tool BT-24, in two bottom holes and one top hole of housing.

3—Install carrier over pilot studs. Use four 7/16"—20x1½" capscrews (install two on each side of housing) to draw carrier into place in housing.

4—Remove pilot studs, install six regular 7/16"x1" carrier mounting capscrews, then remove temporary screws and install four regular capscrews in these holes.

5—Tighten all mounting screws evenly to 40-45 ft.lbs.

Ring & Pinion Gear Adjustment: Backlash should be .003-.006". Adjust by backing off one differential bearing adjusting nut and tightening opposite nut exactly equal amount to avoid disturbing differential bearing adjustment. See Pinion Setting and Differential Bearing Adjustment data.

NOTE—Bearing adjusting nut locks can be bent slightly, if necessary, to engage slot in nut if nut not exactly aligned with lock after backlash and bearing adjustment correctly set.

OLDSMOBILE REAR SUSPENSION

Six & Eight, All Models (1950)
88 Series, All Models (Exc. Super 88) (1951)

NOTE—TWO TYPES OF REAR SUSPENSION USED IN 1951: *See "Semi-Eliptical Type"*

COIL SPRING TYPE

DESCRIPTION: Coil spring type with support arms

REMOVAL & INSTALLATION: *See "Oldsmobile Rear Suspension" in previous release.*

1950-51 Rear Spring Specifications

Car Model	Part No.	Color Mark
76 & 88 4-Dr. Sedan	557585	Yellow & Brown
76 & 88 Conv. & Holiday	557585	Yellow & Brown
76 & 88 Sta. Wgn.	1310399	Red
76 & 88 Other Models	417865	Green & Orange
76 & 88 Export Optl.	1317790	Red & Brown
98 Exc. Conv.	1340742	Rust
98 Conv.	558829	Green & Yellow

SEMI-ELLIPTICAL SPRING TYPE

Super 88, All Models (1951)
98 Series, All Models (1951)

DESCRIPTION: Conventional semi-eliptical type springs with oil saturated anti-squeak liners and metal covers. Direct Acting type shock absorbers mounted in front of rear axle.

REMOVAL & INSTALLATION: Same as all conventional type semi-eliptical springs. (INSTALLATION NOTE—Insert only outer rubber bushing in front spring eye before placing spring in hanger. Inner bushing can be inserted into spring eye thru hole in front hanger after spring is in place).

Spring Numbers and Color Code

Model	Part No.	Color
Super 88 (exc. Deluxe Conv.)	559817	Green
Super 88 (Deluxe Conv.)	559818	Blue
98 (Exc. Deluxe Conv.)	559819	White
98 (Deluxe Conv.)	559820	Red

PONTIAC

Six & Eight, All Models (1950-51)

►CHANGES, CAUTIONS, CORRECTIONS

►**PINION BEARING PRELOAD CAUTION**—Pinion bearing preload is controlled by universal joint companion flange nut on pinion shaft and bearing adjustment will be disturbed when this nut is loosened. **Pinion bearings must be adjusted each time companion flange nut is disturbed.**

►**PINION BEARING PRE-LOAD CHANGE:** ***Pinion bearing pre-load for bearings in service (after several thousand miles of use) should be 10-12 in. lbs. (supersedes original specification of 15-20 in. lbs.).*** When re-adjusting bearings (necessary whenever universal joint companion flange nut loosened), set bearings to this new 10-12 in. lb. specification.

►***CAUTION—Above setting of 10-12 in. lbs. applies only to bearings AFTER several thousand miles of use. Pre-load for NEW BEARINGS should be 27-37 in. lbs.***

►**PINION BEARING SPACER CHANGE:** ***Pinion bearing spacer changed from one-piece type to two-piece type No. 510524 (Front), 510525 (Rear).*** See directions below for correct installation of these spacers.

►**AXLE IDENTIFICATION NOTE:** Rear axles are marked to indicate gear ratios as listed below. See car model pages for Std. & Optl. gear ratios.

Pontiac Markings: Paint mark on end of right hand axle shaft indicates gear ratio as follows: Violet (3.63-1 Ratio), Red (3.9-1 Ratio), Green (4.1-1 Ratio), White (4.3-1 Ratio), Yellow (4.55-1 Ratio).

DESCRIPTION: Hypoid gear, semi-floating type. Design similar to axle used on previous models.

REMOVAL OF AXLE: *See Rear Axle on car model page.*

DISASSEMBLY & REASSEMBLY: *See complete "Pontiac Rear Axle" in previous release and note following points.*

PINION SHAFT OIL SEAL RENEWAL (Without Disassembly of Rear Axle): Mark pinion shaft nut before loosening it and retighten to exact same position after oil seal installed (see oil seal data below). This will avoid necessity of resetting the pinion bearing pre-load. If new companion flange being installed, see Pinion Bearing Pre-load Adjustment below.

Oil Seal Installation—Always install new oil seal (old seal will be damaged by removal). Lubricate seal leather with oil and coat outer diameter of seal with Permatex No. 3 or similar sealer, tap seal in place in housing bore.

Pinion Bearing Assembly: Pinion bearing cups are press fit in housing. Rear pinion bearing cone is press fit on pinion shaft, front bearing cone is light press fit to close sliding fit on shaft. Replace bearings if rough when rotated with hand pressure. Use J-2934 Pinion Bearing Removing Plates and J-358-1 Holder in an arbor press to remove rear bearing cone and roller assembly, J-2935 Installing Plate and same holder to install new bearing (bearing must seat solidly against shoulder on shaft). Install correct pinion adjusting shim pack (see Pinion Setting data below) against shoulder of rear bearing bore in carrier, press rear bearing cup in place using J-2937 Rear Pinion Bearing Outer Race Installer and J-2940 Handle, then install front bearing cup using J-2939 Front Pinion Bearing Outer Rac In-

C NTINUED ON NEXT PA E

PONTIAC (C ntinued)

staller and J-2940 Handle. Place compressible spacer (and shim—see note below) or new type two-piece spacer (see Spacer Note below) on the pinion shaft, insert pinion in carrier, install front bearing cone and roller assembly (use arbor press if press fit). Install oil seal, first oiling seal leather and coating outer diameter of seal with Permatex 3 or similar compound, tap seal in place using Bearing Installing Plate J-2935 to protect seal), install companion flange, oil the pinion shaft threads and face of the nut, turn nut on shaft loosely, then adjust bearing pre-load by tightening nut (below).

►**Two-piece Pinion Bearing Spacer Installation**—When installing two-piece pinion bearing spacer, first install the smaller rear spacer (No. 510524) with lighter end section (adjacent to collapsible portion of sleeve) against rear pinion bearing cone; install front spacer (No. 510525) with end on which chamfer is on outer diameter against front pinion bearing cone (end on which chamfer is on inner diameter should be against rear spacer). This installation will insure spacers seating solidly against each other and bearing cones.

►**Pinion Bearing Spacer Shim Note**—A shim (.037" to .045" thick) is used between spacer and front bearing cone on some axles. **This shim must be reinstalled if the same spacer is re-used (discard shim if new spacer is used). A new spacer must be used when: 1) New Ring Gear & Pinion set installed, 2) Any part of either pinion bearing is changed, 3) New Carrier casting installed, 4) Pinion adjusting shim thickness increased.**

Pinion Bearing Pre-load Adjustment: Use J-2933 Companion Flange Holding Tool on flange, tighten nut on pinion shaft until bearing endplay is taken up (companion flange is felt to contact spacer), then tighten nut slowly, turning pinion shaft frequently to seat bearing rollers, and check bearing pre-load by measuring the pull required to turn the pinion shaft in inch-pounds (use torque indicating wrench or spring scale attached to companion flange holding tool). **Tighten nut only until correct bearing pre-load is secured as listed below. After completing pre-load adjustment, secure the nut by staking end of pinion shaft into nut recesses.**

Pinion Bearing Pre-load Setting

Pinion Bearings	Bearing Pre-load
New Bearings	27-37 in. lbs.
Old Bearings①	②10-12 in. lbs.

①—After several thousand miles usage.
②—Supersedes original specification of 15-20 in. lbs.

►*CAUTION*—When adjusting bearing pre-load, do not exceed maximum (37 inch-pound) specification. If this figure exceeded by tightening nut excessively, disassemble axle and install new spacer.

Pinion Setting: Standard shim thickness for each carrier is indicated by mark on carrier flange as follows: D5—.015", D4—.014", D3—.013", D2—.012", D1—.011", 0 (Std.)—.010", S1—.009", S2—.008", S3—.007", S4—.006", S5—.005" (NOTE—"D" indicates carrier deeper. "S" that carrier shallower than standard). To this standard shim thickness (which is correct for all standard or unmarked pinions), add additional shims (when pinion marked +) or subtract shims (when pinion marked —) equal in amount to the figure following this + or — mark on end of the pinion (figures indicate shim thickness in thousandths). This total shim thickness will correctly position pinion for proper mesh with ring gear and shims should be installed in carrier ahead of rear pinion bearing cup. Shims are furnished in sizes listed below and should be used in combination for required thickness.

Shim Thickness	Part No.	Identification Color
.002"	509263	Plain
.003"	509264	①Blue
.004"	509265	②Copper
.005"	509266	Plain
.010"	509267	Plain

①—Or plain color with **one** punched hole.
②—Or plain color with **two** punched holes.

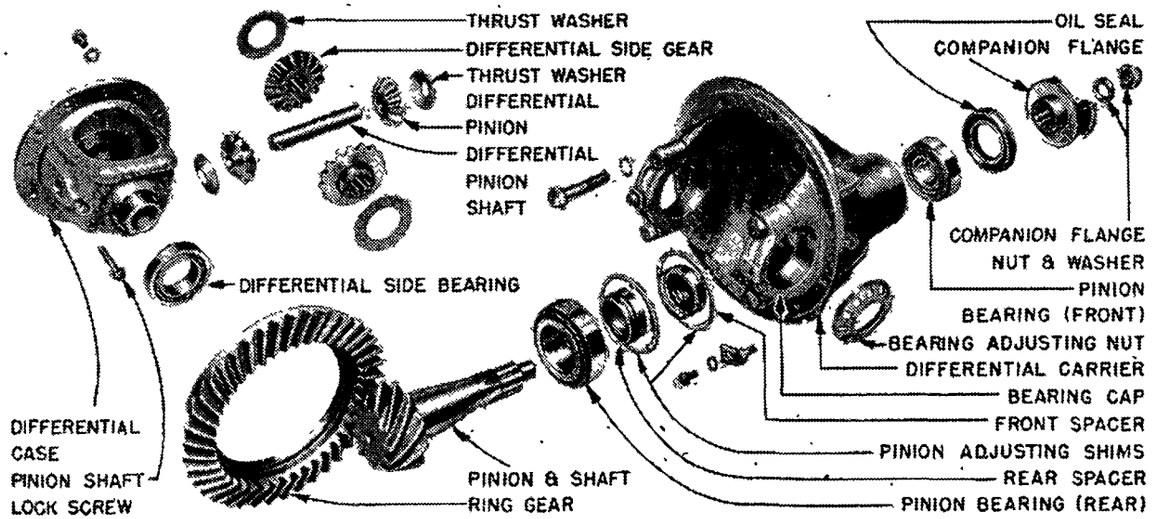

PONTIAC HYPOID GEAR REAR AXLE (WITH TWO-PIECE PINION SPACER)

SPICER REAR AXLE

	Spicer Model
CROSLEY	
1950-51	11
FRAZER & KAISER	
1950-51 (With Synchro-mesh Trans.)	41-2
1951 Early (Hydra-Matic Trans.)	41-7
1951 Late (Hydra-Matic Trans.)	44-2
HENRY J	
1951 4 & 6 Cyl.	23-6
STUDEBAKER	
1950 Champion 9G	23
1950 Comm. 17A (Synchro-mesh Trans.)	41-2
1950 Comm. 17A (Automatic Trans.)	41-7
1951 Champion 10G	23-1
1951 Comm. H	44-3
WILLYS	
1950-51 Sta. Wgn. & Jeepster	23-1
1950 Early Jeep & 4 Whl. Dr. Sta. Wgn.	41-2
1950-51 Jeep & 4 Whl. Dr. Sta. Wgn.	44-2
1950 Early 473-HT Truck	41-6
1950-51 473-HT Truck	44-4

►**LINCOLN, MERCURY, FORD STATION WAGON & F-1 TRUCK REAR AXLES:** *See Ford, Lincoln, Mercury Rear Axle.*

DESCRIPTION: Hypoid (except Crosley), semi-floating type of same design as used on corresponding previous models.

REMOVAL OF AXLE: *See Rear Axle on car model page.*

OVERHAUL (Disassembly & Reassembly): *See complete "Spicer (Salisbury) Hypoid Semi-floating" and "Spicer (Salisbury) Spiral Bevel" Rear Axles in previous release and set these axles to the following specifications:*

Ring & Pinion Gear Backlash: (Crosley) .003-.008", Frazer, Kaiser, Studebaker) .003-.006", (Willys) .004-.009".

Pinion Bearing Adjustment: (All Models) Slight drag when rotated by hand. NOTE—ring gear should be removed so that there is no load on pinion.

Pinion Setting: (Frazer, Kaiser, Studebaker & Willys) .719" Gauge Reading for standard pinions (pinions marked "0").

Differential Side Bearing Adjustment: (Frazer, Kaiser, Studebaker, Willys)—.008" tight bearing pre-load (.008" additional shim thickness after all side play removed from differential bearings).

Crosley Note—.003-.006" tight bearing pre-load. With this adjustment, ring gear should rotate with fairly heavy drag when rotated by hand.

TIMKEN REAR AXLE

Willys Truck, Models 2WD, 4WD (1950)
Willys Truck, Model 473-4WD (1950-51)

DESCRIPTION: Spiral bevel, semi-floating type of same design used on corresponding previous models.

REMOVAL OF AXLE: *See Rear Axle on car model page.*

AXLE SHAFT REMOVAL & WHEEL BEARING ADJUSTMENT: Same as for other Willys models. *See "Timken Semi-Floating" Axle in previous data.*

DISASSEMBLY & REASSEMBLY: *See complete "Timkin Semi-floating" Rear Axle in previous release and set these axles to following specifications:*

Ring & Pinion Gear Backlash—.004-.018".

Pinon Bearing Pre-load—12-18 in. lbs. turning torque (adjusted by tightening pinion bearing adjusting nut).

Pinion Setting—Not adjustable.

CHRYSLER (GEMMER) HYDRAGUIDE POWER STEERING

Chrysler Imperial, C53 8 Pass. (1951)—Std.

Chrysler New Yorker, C52 (1951)—Optl.

Chrysler Imperial, C54 (1951)—Optl.

DESCRIPTION: Consists of a conventional Worm-and-Roller type steering gear with a hydraulic power system (right and left turn pistons) and a hydraulic control system (right and left turn distributing valves and reaction valves) built in the steering gear housing. Hydraulic pressure for this system is supplied by a combined oil pump and reservoir mounted on the generator commutator end plate and driven by the generator armature shaft. These units have the following features:

Steering Gear Worm-and-Roller—Worm shaft is separate and mounted on taper roller bearings in steering gear housing with a special gear on the upper end of the shaft which meshes with a similar gear on the extension of the steering wheel shaft. This extension shaft has a flexible synthetic rubber cushioned coupling at the point where it is connected to the steering wheel shaft and is carried on a special spherical bearing which allows the gear on the lower end to "float" (this floating action actuates the hydraulic control valves). Roller shaft is mounted on needle roller bearings and has a conventional double-tooth roller which is meshed with the worm. This shaft also has an additional "Power Arm" splined on the shaft and locked by a setscrew and locknut. This power arm has a needle bearing mounted roller which is in contact with the hydraulic power cylinder pistons. The hydraulic power acting through this arm tends to rotate the roller shaft and lessen the manual effort required.

Hydraulic Power Cylinders—Consists of a Right Turn Cylinder and a Left Turn Cylinder (actually one double-ended cylinder) located on either side of the power arm so that movement of the piston in each cylinder is transmitted directly to the power arm through a hardened steel pin in the piston. Each piston is single acting and both pistons are yoked together. Pistons are sealed by a special piston ring consisting of a "T" section synthetic rubber ring backed up by a split laminated plastic ring on each side (plastic rings are normally not in contact with the cylinder wall but expand when pressure applied and prevent extrusion of the rubber ring).

Control Valve Assembly—Consists of a "Distributor Valve" and "Reaction Valve" for each cylinder. Valves are mounted in the steering gear housing around the valve operating block on the steering wheel extension shaft and are actuated by the movement of the block as the steering wheel is turned. The distributor valve directs the hydraulic oil to the proper cylinder and the recation valve controls the oil flow and pressure in the cylinder to regulate the ratio between manual and hydraulic torque when making a turn (this valve controls the return line from the cylinder to the reservoir).

Oil Pump & Reservoir Assemply—Pump is rotor type and operates continuously when the engine is operating. Oil delivered by the pump for steering gear operation is controlled by a Flow Control Valve (spring-loaded piston type valve with orifice in valve head) so that uniform delivery is maintained regardless of the engine and pump speed. Maximum pump pressure is regulated by a Relief Valve (spring-loaded ball check valve) which by-passes the oil back to the inlet side of the pump. Whenever oil is not required for steering gear operation, the pump delivery is by-passed back to the inlet side of the pump through these valves. Oil return from the steering gear is connected to the filter inlet (in the reservoir) so that the oil is filtered each time it passes through the system. Filter cartridge is standard replaceable type. The oil reservoir is located on top of the pump housing and both control valves are built in the pump housing.

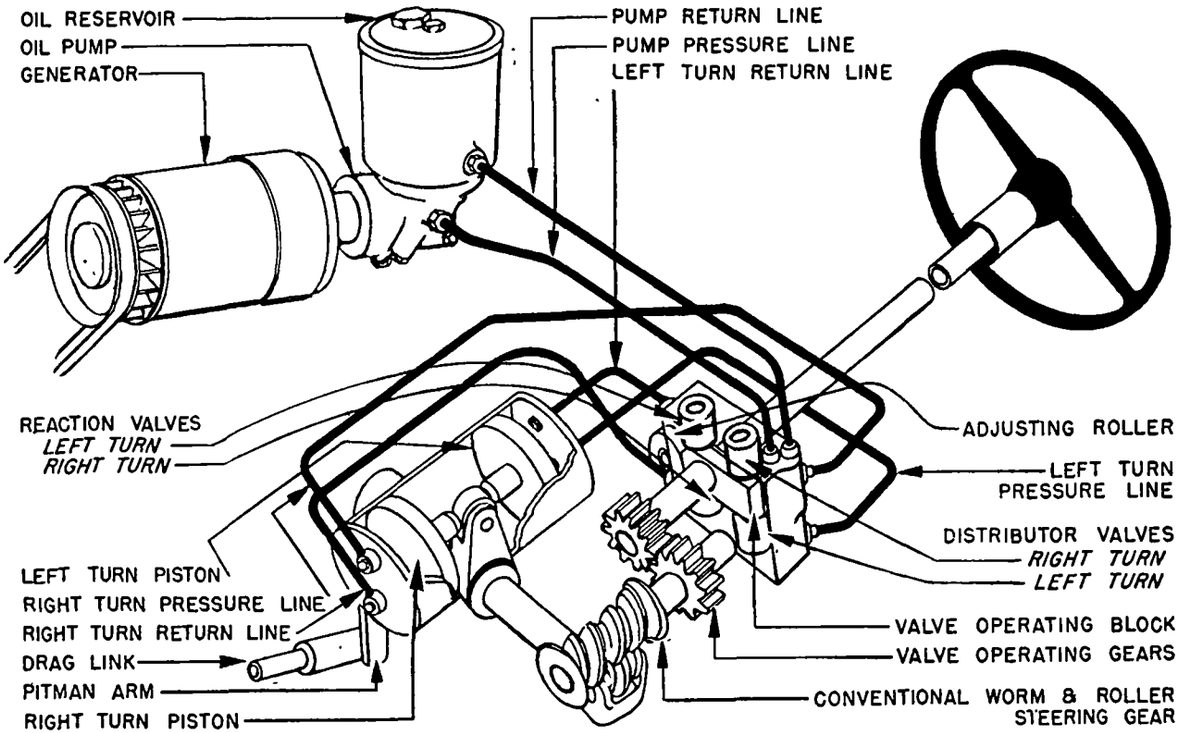

HYDRAGUIDE STEERING GEAR HYDRAULIC CIRCUITS

OPERATION: Whenever the hydraulic power system is not operating (engine not running, etc.), the steering gear operates in the same manner as on other cars and the car can be steered normally. However, when hydraulic power is available (whenever engine is running), approximately 40% less wheel movement is required in making a turn (16.4 ratio with Hydraguide, 20.4 on other cars), and 75-80% less effort is required. Power application is instantaneous in response to steering wheel movement and is released whenever the steering wheel is released (car straightens out in conventional manner when wheel is released after completing a turn). At the same time, the power system resists road shocks transmitted through the front wheels since it responds to the reversal of torque in the steering wheel extension shaft (at the valve block) which occurs under these conditions. Control of the power system is effected by utilizing the "torque reaction" in the gears at the lower end of the steering wheel extension shaft.

Steering Wheel Shaft "Torque Reaction": The torque developed by turning the steering wheel causes a torque reaction in the gears at the lower end of the steering wheel extension shaft which tends to move the gears out of mesh. The mounting of the extension shaft and upper gear (flexible coupling and spherical bearing on shaft) is designed to permit a slight sidewise movement although any backward movement is prevented by the back-up roller behind the valve block. This sidewise motion of the shaft and valve block operates the hydraulic valves. The torque and torque reaction continue only as long as the steering wheel is being turned to steer the car and ceases when the wheel movement is stopped. Consequently, power application occurs only during wheel movement while this torque reaction is present.

Power Application: The sequence of valve operation during power application consists of the following steps. However, this sequence can be interrupted by stopping the steering wheel movement, or reversed by turning the steering wheel in the opposite direction.

1) **Neutral (Steering wheel stationary)**—In this position, there is no torque at the steering wheel

CONTINUED ON NEXT PAGE

CHRYSLER (GEMMER) HYDRAGUIDE (C ntinu d)

extension shaft (reaction shaft) gears and the shaft and valve block are centered between the valves. The entire system is filled with oil but an equilibrium exists with no pressure differences to cause movement of the power pistons. The pump operates (with engine running) but oil delivered by the pump is by-passed back to the intake side of the pump by the Flow Control and relief valves.

2) Full Distributor (Steering wheel rotated to turn car)—As the steering wheel is turned, the extension shaft tends to move sidewise (due to flexible mounting on the spherical bearing and special elliptoid tooth design of mating gears—shaft cannot move gears back out of mesh due to the back-up roller behind the valve block which prevents movement in this direction). This sidewise movement of the shaft tends to move the valve block sidewise but, due to the fact that the shaft center is closer to the reaction valve, the block tends to rotate on the shaft so that the **distributor valve must always be fully open before the reaction valve begins to open.** Valves are operated by hydraulic pressure on the valve piston within the valve (valve moves out toward valve block in opening) and only slight movement (.003") is required to open the valve sufficiently to start application of hydraulic power by directing oil to the proper cylinder.

3) Partial Power—At this point, the distributor valve is fully open and full hydraulic pressure is applied to the piston in the proper turn cylinder. However

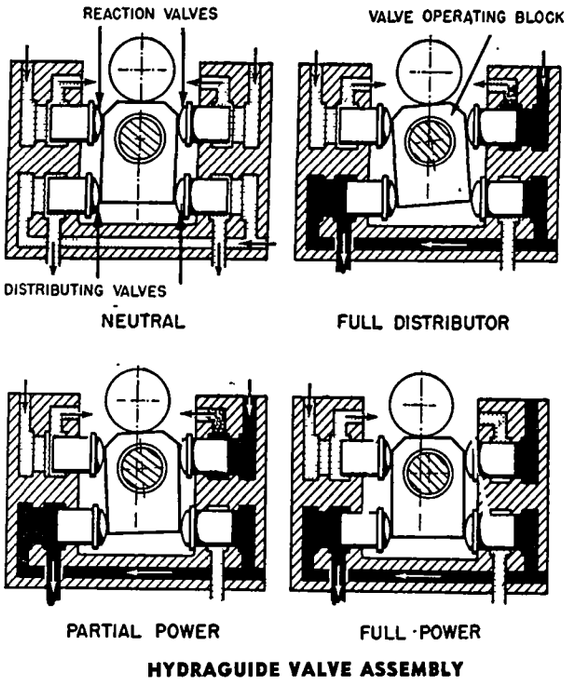

HYDRAGUIDE VALVE ASSEMBLY

the actual power application is controlled by the amount of opening of the Reaction Valve for the same cylinder (which controls the fluid return from the cylinder to the reservior) and also the Reaction Valve for the opposite cylinder (which controls the outward flow of fluid from the opposite cylinder).

4) Full Power—With continued movement of the steering wheel and maximum torque at the reaction shaft gears, the valve block assumes a fully displaced position sidewise. In this position, the Distributor Valve for the proper turn cylinder is fully open, the Reaction Valve for this cylinder is fully closed, and the Reaction Valve for the opposite cylinder is fully open (permitting a free flow the fluid in this cylinder back to the reservoir so that there is no resistance to the movement of the opposite piston). This condition continues only while the steering wheel is being turned. As soon as the wheel movement stops, the system tends to return to Neutral; or if the wheel is turned in the opposite direction, the power application is reversed.

ADJUSTMENT: Steering gear adjustments are conventional and similar to other push-pull type gears with the addition of the eccentric adjustment for the back-up roller on the valve block:

Worm Roller Bearing Adjustment—Controlled by shims under lower cover plate which bears against lower bearing cup.

Roller Shaft Endplay and Worm-&-Roller Mesh—Controlled by "push-pull" adjusting screw on side cover (necessary to remove adjusting screw cap nut and disengage locking plate before screw can be turned).

1950-51 TRANSMISSION INDEX

	Page
BUICK	
Dynaflow Drive	283
Synchro-mesh	295
CADILLAC	
Hydra-Matic Drive	324
Synchro-mesh	296
CHEVROLET PASS. CARS	
Powerglide	297
Synchro-mesh	305
CHEVROLET TRUCKS	
3-speed	305
4-speed	305
CHRYSLER	
Automatic Trans.	306
Fluid-Torque Drive	309
Synchro-mesh	310
CR SLEY	
Transmission	278
DE SOTO & DODGE	
Automatic Trans.	306
Synchro-mesh	310
FORD PASS. CARS	
Fordomatic	311
Synchro-mesh	321
Overdrive	321
Overdrive Control	282
FORD TRUCKS	
3-speed	321
4-speed (Spur Gear)	323
4-speed (Synchro-mesh)	322
FRAZER	
Hydra-Matic Drive	324
Synchro-mesh (Warner)	278
Overdrive (Warner R10)	280
Overdrive Control	282
HENRY J	
Synchro-mesh	278
Overdrive (Warner R10)	280
Overdrive Control	282
HUDSON	
Hydra-Matic Drive	324
Drive-Master	323
Super-Matic Drive	323
Synchro-mesh	323
Overdrive (Warner R10)	280
Overdrive Control	282
KAISER	
Hydra-Matic Drive	324
Synchro-mesh (Warner)	278
Overdrive (Warner R10)	280
Overdrive Control	282
LINCOLN	
Hydra-Matic Drive	324
Synchro-mesh	321
Overdrive	321
Overdrive Control	282
MERCURY	
Mercomatic	311
Synchro-mesh	321
Overdrive	321
Overdrive Control	282
NASH	Page
Hydra-Matic Drive	324
Synchro-mesh	
Rambler & Ambassador	278
Statesman	323
Overdrive (Warner R10)	280
Overdrive Control	282
OLDSMOBILE	
Hydra-Matic Drive	324
Synchro-mesh (6 Cyl.)	295
Synchro-mesh (8 Cyl.)	296
Transmission Control (8)	296
PACKARD	
Ultramatic	342
Synchro-mesh	348
Overdrive (Warner R11)	280
Overdrive Control	282
PLYMOUTH	
Synchro-mesh	310
PONTIAC	
Hydra-Matic	324
Synchro-mesh	295
STUDEBAKER	
Automatic Trans.	349
Synchro-mesh (Warner)	278
Overdrive (Warner R10)	280
Overdrive Control	282
WILLYS	
Synchro-mesh (Warner)	278
Overdrive (Warner R10)	280
Overdrive Control	282
Transfer Case (Spicer)	
Jeep & 4WD Truck	See 1949 Data

1950-51 WARNER TRANSMISSIONS

WITH UT OVERDRIVE

	Warner Model
CR SLEY	
1950-51	AS1-T92
HENRY J	
1951	AS40-T96
FRAZER & KAISER	
1950	AS23-T86E
1951	AS49-T86E
NASH	
Ambassador (1950-51)	AS25-T86E
Rambler (1950-51)	AS35-T96
STUDEBAKER	
Champion (1950-51)	AS1-T96
Commander (1950)	AS1-T86E
Commander (1951)	AS53-T86E
WILLYS	
Jeep CJ3A (1950-51)	AS1-T90C
Station Wagon 4-63, 6-63 (1950)	AS1-T90E
Station Wagon 4x4-73 (1950-51)	AS1-T90C
Station Wagon 473-SW, 673-SW (1950-51)	AS37-T96
Sedan Delivery 4-63 (1950)	AS1-T90E
Sedan Delivery 473-SD (1950-51)	AS37-T96
Jeepster VJ-3 (1950)	AS1-T96E
Jeepster 473-VJ, 673-VJ (1950-51)	AS37-T96
Truck 2-WD (1950)	AS1-T90E
Truck 473-HT (1950-51)	AS39-T96
Truck 4-WD (1950)	AS1-T90C
Truck 473-4WD (1950-51)	AS1-T90C

WITH OVERDRIVE

	Warner Model
HENRY J	
1951	①AS41-T96
FRAZER & KAISER	
1950	AS24-T86E
1951	①AS50-T86E
NASH	
Ambassador (Early 1950)	AS26-T86
Ambassador (Late 1950)	①AS46-T86E
Ambassador (1951)	①AS46-T86E
Rambler (1950-51)	①AS36-T96
STUDEBAKER	
Champion (1950-51)	①AS24-T96
Commander (1950)	①AS32-T86E
Commander (1951)	①AS54-T86E
WILLYS	
Station Wagon 4-63 (1950)	①AS28-T96
Station Wagon 6-63 (1950)	①AS28-T96
Station Wgn. 473-SW, 673-SW (1950-51)	①AS28-T96
Jeepster VJ-3 (1950)	①AS28-T96
Jeepster 473-VJ, 673-VJ (1950-51)	①AS30-T96

①—Centered Ring Gear.

►**LINCOLN 1950-51 TRANSMISSION:** *See "1950-51 Ford-Lincoln-Mercury Transmission" data.*

►**Steering Column Mtd. Gearshift**—Used on all cars except Crosley & Willys Jeep. *See individual "Transmission Control" data.*

►**Willys 4-Wheel Drive Transfer Case**—Two-speed (Spicer Model 18) Transfer Case on transmission

►***CAUTION—Transfer case must be partly dismantled before it can be removed from the transmission.***

DESCRIPTION: 3-speed, all helical gear type (except Crosley & Willys—See Notes). Constant-mesh, synchro-mesh (Second & High), sliding gear (Low & Reverse). Synchronizers are Double-Blocker, Double-Spring type.

Crosley Transmission—Similar to other types except that no synchronizing mechanism is used (second-speed gear shifted forward to engage clutch teeth on main drive gear for High) and gears are spur type. Torque tube is bolted on rear end of case with adapter for universal joint. This transmission disassembled in same manner as other types after torque tube or adapter removed (disregard all synchronizer data).

Willys 4-Whl. Drive & Truck Note—Transmission has spur type sliding gear and floor-mounted gearshift (entire gearshift mechanism lifts off as unit with top cover). Transfer case is mounted on rear end (see Willys Transfer Case Note above).

REMOVAL OF TRANSMISSION: *See "Transmission" on car model page.*

DISASSEMBLY OF TRANSMISSION (With Overdrive): Remove overdrive case *(see "Warner R-10 Overdrive" following)*, and then proceed as outlined

C NTINUED N NEXT PAGE

WARNER TRANSMISSIONS (C ntinued)

in DISASSEMBLY OF TRANSMISSION (Without Overdrive), below.

DISASSEMBLY OF TRANSMISSION (Without Overdrive): Take out cover screws, remove cover and gasket. Mark synchronizer parts (rings, sleeve, hub) to insure reassembly in same relative positions. Take out capscrews and remove bearing retainer on front of case. On Studebaker & Nash, take out bearing snap rings on bearing and shaft, install special Synchronizer Ring Protector J-3042 (Nash), J-2040 (Stude. Champ.), J-2039 (Stude. Comm.) to prevent damage to synchronizer, use Puller J-1298N (Nash), Plate J-1298 and Puller HM-925 (Studebaker) to remove bearing from shaft. (NOTE—on other cars, gear and bearing assembly can be removed after countergear cluster has been dropped to provide clearance). Take out rear bearing retainer capscrews, remove bearing retainer from shaft (on models where bearing mounted in recess in retainer, pry retainer out so that puller can be engaged, use puller to remove retainer). Slide speedometer gear off mainshaft (if gear does not come out with retainer and bearing assembly). Tip mainshaft toward right as far as possible (on models where rear bearing mounted directly in case, move shaft to rear until bearing clears case), disengage Second & High Shift Fork and Low & Reverse Shift Shoe and lift these parts out. On models where opening in rear of case permits, withdraw complete mainshaft assembly through this rear opening. On other models, remove main drive gear (lift gear through top of case if bearing removed previously, otherwise tap gear and bearing assembly out through front of case using a soft drift and taking care not to damage gear teeth). If mainshaft cannot be removed as an assembly, remove snap ring from groove at forward end of shaft, slide synchronizer assembly, second speed gear, and sliding gear off shaft (lift these parts out through top of case), remove mainshaft through rear of case. Lift out countergear assembly. Drive reverse idler shaft out at rear of case (use brass drift), lift gear and bushing out. To remove shifter shaft assemblies, remove levers on outer ends of shafts, drive out lockpins in shaft bosses on side of case, push shaft and lever assemblies through and remove from case. (CAUTION—do not lose detent balls, spring and interlock plunger located in boss in case between lever sectors).

►**Nash Mainshaft & Bearing Retainer Disassembly Note**—To remove shaft from retainer (extension housing), remove bearing snap ring from groove in retainer, press shaft out toward front (bearing and speedometer gear will come out with shaft). To remove bearing from shaft, remove snap ring at rear of speedometer gear, remove gear, remove woodruff key from slot in shaft, then press bearing off shaft. If shaft bushing in retainer requires replacement, see Reassembly data.

REASSEMBLY OF TRANSMISSION: Reverse the disassembly directions given above and note special data on all sub-assemblies as follows:

Shift Mechanism: Install complete detent and interlock assembly (plunger, spring, poppet balls, and spacer pin on Frazer & Kaiser) in boss in case, insert shift shaft and levers from within, insert shift shaft lockpins loosely in holes in case to hold levers

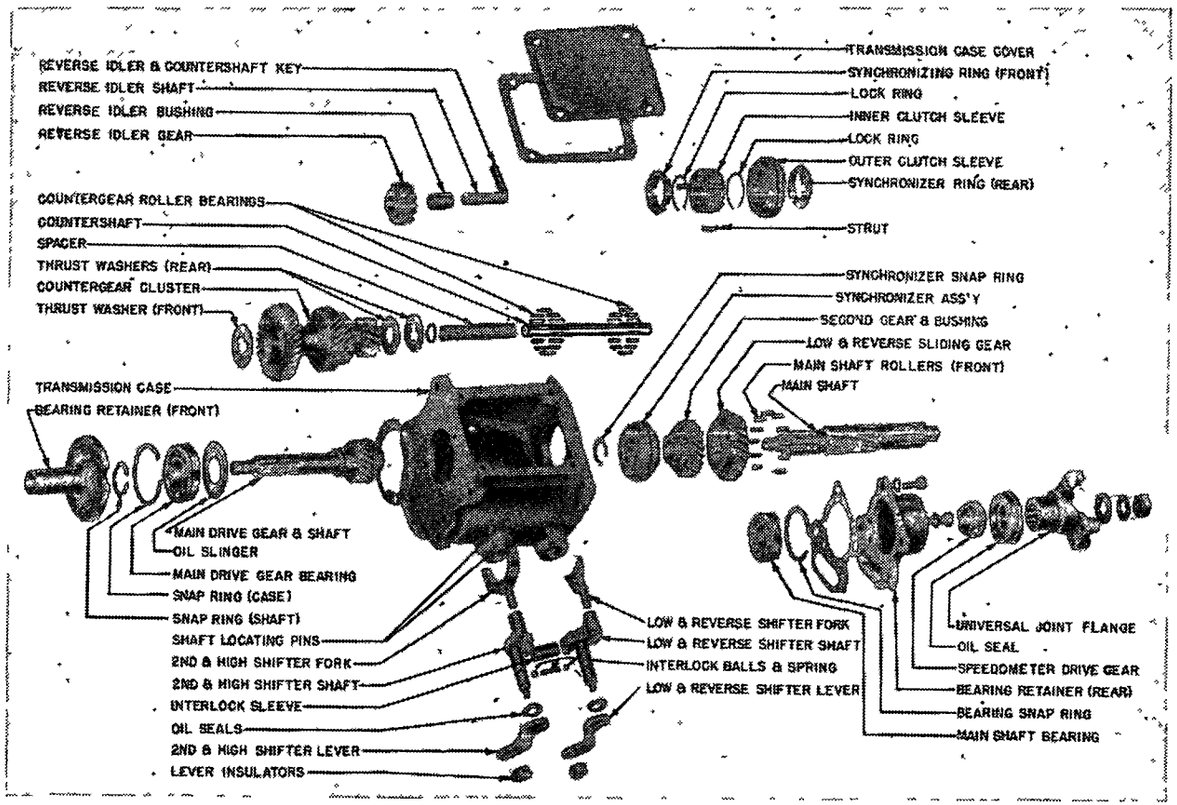

WARNER TRANSMISSION (WITHOUT OVERDRIVE)

in place, check and adjust interlock plunger clearance (see below), then drive shaft lockpins down into place, install new oil seal on outer end of each shaft, install outer levers.

Interlock Plunger Clearance—.001-.007" (Willys & Nash), .001-.005" (All Others) clearance between end of plunger and shift lever sector with one lever in neutral and other lever in any gear. To check, place one lever in neutral, move other lever to any gear position, use feeler gauge between end of plunger and lever sector. Adjust by installing plunger of correct length. Plunger furnished in five lengths and marked for identification as follows: Unmarked —1.299", A—1.295", B—1.291", C—1.287", D—1.033".

Reverse Idler Gear & Shaft: Position gear with offset (longer end of hub) toward front of case, drive shaft in until lockplate slot lines up with rear face of case.

Countergear Cluster: To assemble, install dummy shaft and spacer in gear cluster, install bearing rollers and bearing retainer washer in each end of gear, using grease to retain parts (see Willys note below), install bronze thrust washer on each end with tongue of front washer forward (to engage notch in case), tongue of rear washer forward (to engage notch in gear), install steel thrust washer on rear and install entire assembly in case. Drive countershaft in from rear (pushing dummy shaft out at forward end) until lockplate slot lines up with rear face of case. Check countergear endplay which should be .002-.006" (Frazer & Kaiser), .012-.018" (Willys Jeep & Trucks). Install lockplate to retain countershaft and reverse idler shaft.

Willys Jeep & 4T Truck Bearings—Countershaft has double bearings (two sets of bearing rollers in tandem) at each end of countergear. Install one set of bearing rollers, bearing washer, second set of rollers, second bearing washer, at each end.

Main Drive Gear Assembly: If removed and installed as an assembly, this assembly must be re-installed before countershaft inserted (countergear cluster at bottom of case to provide clearance). Use driver to install bearing on shaft. On Nash & Studebaker, install gear without bearing using Synchronizer Protector Ring J-3042 (Nash), J-2040 (Champ.), J-2039 (Comm.) when driving bearing on shaft and into case. Select snap rings (large ring on bearing, small ring on shaft) for snug fit without endplay. Bearing snap ring furnished .086", .089", .092", .095" thick. With main drive gear installed in case, select gasket of correct thickness (furnished in four thicknesses) so that retainer will be tight fit on case when installed.

►***CAUTION—Bearing must not have endplay on shaft or in case.***

CONTINUED ON NEXT PAGE

WARNER TRANSMISSIONS (C ntinued)

Mainshaft Assembly: When installing mainshaft in case, make certain that pilot bearing rollers in place in recess of main drive gear (use cup grease to hold rollers until shaft inserted). Install sliding gear with shift fork channel toward rear (Studebaker Champion and Willys 4-63 & 6-63) toward front (All others), engage shifter shoe in gear (shifter shoe offset should be in same direction as gear channel above). Install second speed gear with clutch teeth toward front, install synchronizer (see data below) with clutch sleeve offset toward front, install snap ring in shaft groove to retain these assemblies. Engage second-high shifter fork in channel in synchronizer sleeve.

Synchronizer Assembly—If synchronizer dismantled, assemble parts according to marks made previously. Install spring in each end of hub with free end of each spring engaging the same strut and springs pointing in opposite directions. Make certain that struts engage slots in synchronizer rings. Install snap ring in groove at forward end of shaft. Check endplay of synchronizer and second speed gear assembly with a feeler gauge between back face of gear and shoulder on shaft. Endplay should be .003-.014" (Frazer & Kaiser), .003-.010" (Nash) and is controlled by snap ring thickness.

Rear Bearing Retainer: On models where rear bearing mounted in retainer, bearing can be lifted out after snap ring removed (speedometer gear accessible with bearing out). Oil seal should be replaced with special driver. When reassembling, make certain that bearing snap ring is snug fit in groove (furnished .086", .089", .092", .095" thick). When installing retainer, use new gasket, tap retainer in place on shaft with special driver (see special Nash Note below), install universal joint companion flange, flat washer, lockwasher, and nut. Tighten nut securely.

►***CAUTION—Speedometer drive gear will slip if companion flange nut not securely tightened.***

►**Nash Bearing Retainer Note**—Bearing retainer has extension housing with additional driveshaft bearing (Oilite bushing) in front of oil seal at rear end of housing. To replace bushing (with oil seal removed), assemble felt oil ring on bushing, press bushing in from rear end of housing until shoulder on bushing is ¼" from shoulder in bearing cap (CAUTION—this clearance necessary to prevent compressing oil ring). To assemble retainer, install bearing on mainshaft, install speedometer gear (CAUTION—see that woodruff key in place in shaft groove within gear), install snap ring in shaft groove selecting ring for snug fit so that bearing is tight on shaft. Install shaft assembly in bearing retainer and install snap ring to retain bearing selecting snap ring for snug fit so that shaft and bearing do not have any endplay in retainer.

Transmission Cover & Gasket Installation: Some transmissions are vented by means of holes in cover gasket and hole in cover. These parts must be installed as follows:

Nash—Gasket and cover marked "FRONT". Install with marks toward engine.

Studebaker—Install gasket with two holes toward rear of case, cover with single hole toward front.

►***CAUTION—Gasket and cover must be correctly installed to prevent lubricant loss through this vent.***

WARNER R10 & R11 OVERDRIVES

TYPE R10

	Warner Model
HENRY J	
1951	①②AS41-T96
HUDSON	
Early 1950	③AS2-R10D
Late 1950 & 1951	①③AS3-R10D
FRAZER & KAISER	
1950	②AS24-T86E
1951	①②AS50-T86E
NASH	
Ambassador (Early 1950)	②AS26-T86
Ambassador (Late 1950 & 1951)	①②AS46-T86E
Statesman (Early 1950)	③AS6-R10B
Statesman (Late 1950 & 1951)	①③AS8-R10B
Rambler (1950-51)	①②AS36-T96
STUDEBAKER	
Champion (1950-51)	①②AS24-T96
Commander (1950)	①②AS32-T86E
Commander (1951)	①②AS54-T86E
WILLYS	
Sta. Wgn. 4-63, 6-63 (1950)	①②AS28-T96
Sta. Wgn. 473-SW, 673-SW (1950-51)	①②AS28-T96
Jeepster VJ-3 (1950)	①②AS28-T96
Jeepster 473-VJ, 673-VJ (1950-51)	①②AS30-T96

TYPE R11

PACKARD	
Eight "2300-5" Series (1950)	③AS3-R11
Super 8 "2300-5" Series (1950)	③AS4-R11
200 & 300 "2400" Series (1951)	③AS6-R11

①—With Centered Ring Gear.
②—Transmission with Type R10 Overdrive Unit.
③—Overdrive unit only (used with car manufacturer's own transmission).

►**1950-51 FORD, LINCOLN, MERCURY**—*See "Ford, Lincoln, Mercury (Warner R10)."*

►**INSTALLATION OF R11 OVERDRIVE ON PREVIOUS MODELS (to replace original R9 Assembly)**—R11 Overdrive Assembly and other necessary parts furnished in kits (Part No. 410603 for 2201, 02, 11, 22, 32; No. 410604 for 2206, 13, 26, 33). Install these assemblies as follows:

"2100" Series Cars

1. Remove transmission cover and change Direct & Second Speed Shifter Fork Shaft. Install new shaft No. 379004 or remove shaft from old cover and install in new one.
2. Install Overdrive Assembly and control units in same manner as on "2200" series (following).

"2200" Series Cars

1. Remove old Overdrive Relay. Cut off all six wires close to harness and tape wire ends.
2. Drill 9/64" hole at point 1½" toward center of car from outer attaching screw hole of relay, use rubber spacer at this hole and install new Relay.
3. Remove old Kick-down Switch. Cut off wires and tape wire ends. Install new Kick-down Switch.
4. Install new Wiring Harness along main wiring harness and attach with strap clamps (8 provided). Connect harness wires at relay, starter, ignition coil, kickdown switch, ignition switch and lockout switch. *See Warner R11 Overdrive data for wiring diagram.*
5. Check type of front universal joint and if car equipped with Spicer Universal, remove flange from old overdrive and install this flange on new R11 overdrive (Overdrive furnished with flange for Mechanics Universal—not necessary to make this change if car has Mechanics universals).
6. Install R11 Transmission and Overdrive assembly. Re-install rear engine support channel **turned end-for-end** so that lockout cable bracket holes are on left side.
7. Cut solenoid wires and governor OVERDRIVE wire close to old harness and tape wire ends. Do not cut governor ELECTROMATIC CLUTCH wire. Connect wires in new auxiliary harness to solenoid and governor, connect Electromatic Clutch wire in old harness to governor.

►***CAUTION—Do not disturb Electromatic Clutch wire in old harness. This wire must be connected to governor.***

8. Replace original speedometer pinion with correct replacement type: No. 412442 (17 tooth), No. 412443 (18 tooth), No. 412444 (19 tooth).

►***CAUTION—Speedometer gear in R11 overdrive is different than R9 type and will not operate with R9 pinion.***

9. Move overdrive lockout cable to left side of engine and install new cable bracket and clamp at support channel mounting holes. Install cable clamps at Electromatic Clutch control valve rear mounting screw hole and at lower flywheel cover mounting screw hole.

►**CENTERED RING GEAR ON OVERDRIVE OUTPUT SHAFT**—Overdrive does not have output shaft front bearing (see illustration for location). Output shaft is piloted at planetary ring gear in a machined flange which is integral with the transmission case.

DESCRIPTION: Overdrive is solenoid operated type (no centrifugal pawls) with governor control and accelerator controlled "kick-down." Engagement and disengagement is effected by movement of the sun gear pawl, the solenoid plunger pushing the pawl in to engage the sun gear for overdrive, and withdrawing the pawl for direct drive (direct drive below the cut-in speed and "kick-down" direct drive). See Overdrive Control section below for data. All models are similar except as follows:

Hudson R10 Overdrive—Has sun gear pawl interlock plunger which engages notch in pawl to prevent pawl movement when overdrive locked out (on other R10 overdrives, pawl locked out directly by shifter rail).

Studebaker & Willys R10 Overdrives—See "Driveshaft Bearing Change Note" above for latest type overdrive without driveshaft front bearing.

Packard R11 Overdrive—Similar in design to R10 Overdrives except that pinion cage assembly and free-wheel cam retained on mainshaft by conventional snap rings fitted in grooves in shaft (instead of "C" washer clips used on R10) and special reverse plunger with offset arm installed on shifter rail.

REMOVAL OF OVERDRIVE (from Car): *See "Overdrive" on car model page.*

DISASSEMBLY OF OVERDRIVE: Remove Lock-out Switch, remove governor by unscrewing it from housing. On Nash models, take out mounting screws and remove Torque Tube Adapter, remove oil seal with Puller J-2497, then remove snap ring from shaft directly in back of driveshaft rear bearing. On all other cars, remove nut on rear end of shaft, use puller to remove universal joint companion flange. Drive out tapered pin holding control lever shaft in overdrive case, pull shaft out as far as possible to disengage operating cam from shift rail. Remove four mounting screws holding overdrive case

CONTINUED N NEXT PA E

WARNER R10 & R11 OVERDRIVES (Continued)

on transmission case, withdraw case while **tapping on rear end of shaft with a soft hammer** to prevent the shaft coming off with the housing (this would allow free-wheel rollers to drop out). Then disassemble each part of the overdrive as follows:

Overdrive Solenoid—Remove mounting capscrews and lockwashers at mounting flange, **rotate solenoid** clockwise ¼ turn to disengage plunger from pawl, withdraw solenoid and plunger assembly.

Overdrive Case (incl. control parts)—Remove reverse lock-up spring from housing, take off nut and remove control lever from shaft, remove control shaft from within case, remove shaft oil seal. If both bearings remain within case (see "Driveshaft Bearing Change" above), use brass drift to tap front bearing out, lift out speedometer and governor drive gears, remove oil seal from rear of case, take out rear bearing rear snap ring, use brass drift to tap bearing out at rear of case.

NOTE—On Nash, speedometer and governor gears are keyed on shaft and these gears will remain on the shaft with the front bearing when overdrive case is removed leaving rear bearing to be removed as directed above.

Driveshaft & Planetary Gears—Install one screw to hold adapter plate in position on transmission case. Pull driveshaft off to rear (CAUTION—catch free-wheel rollers as they fall out). Ring gear can be removed from driveshaft by taking out snap ring at rear end of gear. Remove retaining clip ("C" washer) from shaft at rear of free-wheel cam, slide free-wheel unit and pinion cage assembly off rear of shaft (these units can be separated by taking out retaining clip or "C" washer at rear of pinion cage). Remove overdrive sun gear and shift rail assembly as a unit by sliding them off rear of shaft.

►**Packard Note**—To remove free-wheel cam and pinion cage assemblies, remove snap ring from shaft groove, slide free-wheel cam and pinion cage assembly off shaft, remove and tag snap ring in groove directly ahead of pinion cage assembly (CAUTION—this snap ring must not be interchanged with snap ring which retains free-wheel cam).

Adapter Plate Sun Gear Parts—Remove large snap ring from adapter plate (in front of sun gear cover plate), withdraw sun gear cover plate, sun gear blocker assembly (with balk ring), and solenoid pawl. NOTE—Adapter plate is removed as a unit with transmission mainshaft, gears, and synchronizer. Do not disturb adapter plate unless transmission being disassembled.

REASSEMBLY OF OVERDRIVE: Assemble parts in reverse order from disassembly directions (above) and note the following important points:

Transmission Mainshaft Rear Bearing Installation—After installing bearing on shaft, select proper thickness snap ring so that bearing will have no endplay when snap ring installed in shaft groove Insert baffle in adapter, install mainshaft and bearing, select snap ring of correct thickness (furnished in various thicknesses) so that there will be no clearance between ring and bearing when snap ring installed in adapter groove.

►***CAUTION—Bearing must not have endplay on shaft or in adapter plate.***

Sun Gear Blocker, Pawl & Solenoid—Install pawl with notched side upward, rotate blocker assembly so that opening in balk ring is opposite pawl. When installing solenoid, insert plunger stem with solenoid turned 90° from mounting position, then rotate solenoid 90° counter-clockwise to engage pawl and install mounting screws.

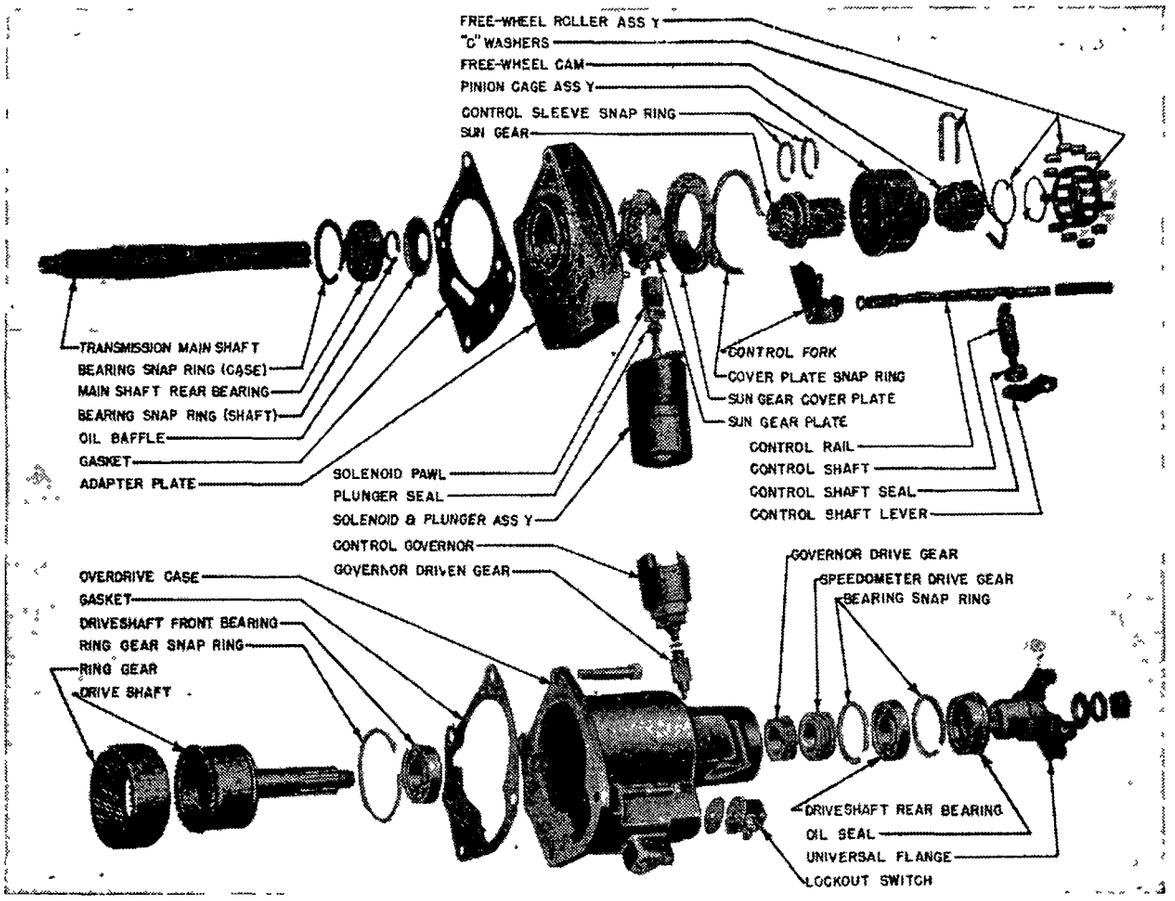

WARNER TYPE R10 OVERDRIVE
(CENTERED RING GEAR DOES NOT HAVE DRIVESHAFT FRONT BEARING)

►**Hudson Interlock Plunger Note**—Interlock plunger must engage notch on side of pawl. This plunger furnished in six lengths for selective fitting so that clearance between end of plunger and side of pawl should be .008-.021" with opposite end of plunger contacting shifter rail (not sleeve). Check with pawl fully engaged in slot in sun gear.

Free-Wheel Assembly—If free-wheel cam retainer and springs removed from free-wheel cam, first note position of springs and replace in exactly same positions. Springs must place tension on cam so that it is held normally in a counter-clockwise position (viewed from rear) in retainer with rollers on "high" ends of cam ramps (outward or engaged position).

Overdrive Pinion & Free-Wheel Installation—With these parts installed on shaft, and retaining clips ("C" washers) properly installed, insert freewheeling rollers in cage and use heavy grease to hold them in position, turn cage and rollers counterclockwise to low or disengaged position (use a rubber band looped around assembly to provide sufficient pressure on rollers to hold them in this position against the spring tension), then install driveshaft and ring gear assembly.

►**Packard Note**—If new snap ring installed in groove in shaft ahead of pinion cage assembly, this ring must be .062"±.002" thick (not variable). After installing pinion cage and free-wheel cam, select snap ring of correct thickness for installation in groove back of free-wheel cam so that these parts have no endplay on shaft. This snap ring furnished .062", .068", .074" thick.

Overdrive Case and Control Mechanism—Make certain that rear bearing snap rings are properly

CONTINUED NEXT PAGE

WARNER R10 & R11 OVERDRIVES (C ntinued)

seated and snug in grooves (rear snap ring furnished in various thicknesses). On Nash, install front bearing and speedometer and governor drive gears on driveshaft (CAUTION—make certain that woodruff key in place in shaft to position both gears) On other cars, install speedometer and governor gears in rear end of case, then tap front bearing in place. Install new shifter shaft oil seal in recess in case, then install shifter shaft from within case. When installing case, see that shift fork properly engaged in sun gear shifting collar and that shift rail parts correctly assembled. After case installed, push shifter shaft in to engage notch in shift rail, install shifter shaft lockpin, check operation of shift mechanism for correct operation without binding. On Nash, install snap ring in driveshaft groove directly back of rear bearing, install oil seal. On all models except Nash, install universal companion flange.

OVERDRIVE CONTROL: *See Warner Type R10 & R11 Overdrive control data (following).*

TRANSMISSION DISASSEMBLY & REASSEMBLY: *See Warner Overdrive Transmission data.*

WARNER OVERDRIVE CONTROL

Ford 6 & V8 Models (1950-51) *See Note.*
Frazer & Kaiser (1950-51)
Henry J (1951)
Hudson 6 & 8 (1950-51)
Lincoln & Mercury (1950-51) *See Note*
Nash (1950-51)
Packard (1950-51)
Studebaker (1950-51)
Willys (1950-51)

►*NOTE*—1951 Ford & Mercury with AS4-R10E overdrive do not have Lockout Switch.

DESCRIPTION: Control units consist of a Governor (cut-in speed controlled by closing of governor contacts, cut-out speed by opening of contacts), Solenoid (solenoid pushes pawl in to engage overdrive, return spring on solenoid plunger pulls pawl out to disengage overdrive). Throttle Kick-down Switch (switch breaks solenoid circuit when accelerator pedal fully depressed causing overdrive to disengage for "kick-down" direct drive), Control Relay, and Lock-out Switch (switch mounted on overdrive case and actuated by control shaft to open governor circuit when overdrive "locked out" by control button on instrument panel). Adjust units as follows:

Governor: Various types used as follows:

	Cut-In Speed MPH	Part No.
Ford	26	Ford No. 8M-6943
Frazer & Kaiser	26 5	K-F No. 200908
Henry J	23.5	
Hudson	18 5-21	①A-L No TGA-4002
Lincoln & Mercury	26	L-M No. 8M-6943
Nash Ambassador	29	Warner No. AR10B-72
Nash Statesman	29	Warner No. AR10B-72E
Packard	22	Packard No. 418447
Studebaker	31-32	Stude No. 520454
Willys	29	A-L No. TGE-4002

①—Auto-Lite TGA-4002 (All models without Drive-Master), TGB-4001 (Pacemaker 500 with Drive-Master), TGB-4003 superseded by TGB-4004 (501, 2, 3, 4, with Drive-Master).

Adjustment—Governor should be replaced if overdrive cut-in speed is not correct (see table above).

►*CAUTION—Before replacing governor* (if overdrive does not engage, or if cut-in and cut-out speeds not correct, make certain that universal joint companion flange nut on rear end of overdrive driveshaft is tight Looseness of this nut will allow governor and speedometer drive gears to slip on overdrive shaft.

Solenoid: Delco-Remy Part Nos as follows·

Car Model	Solenoid Part No.
Ford 1950-51 (Exc. St. Wgn. & Conv.)	D-R No. 1118132
Ford 1950 (Sta. Wgn. & Conv.)	D-R No. 1118138
Ford 1951 (Sta. Wgn. & Conv.)	D-R No. 1118155
Frazer & Kaiser 1950	D-R No. 1118132
Frazer & Kaiser 1951	D-R No. 1118155
Hudson 1950	①D-R No. 1118134, 147
Hudson 1951	①D-R No. 1118155
Lincoln & Mercury 1950	D-R No. 1118132
Lincoln & Mercury 1951	D-R No 1118155
Nash 1950	D-R No. 1118132
Nash 1951	D-R No. 1118155
Packard 1950	D-R No. 1118005
Packard 1951	D-R No. 1118132, 155
Studebaker 1950	D-R No. 1118132
Studebaker 1951	D-R No. 1118155

①—1950-51 have "two-terminal" solenoid which is not the same as the "four-terminal" type used on previous models.

►*SOLENOID REMOVAL CAUTION*—Solenoid must be disengaged from pawl for removal as follows: Take out two mounting capscrews, rotate solenoid clockwise ½-turn to disengage plunger from pawl (will align plunger flats with pawl slot), withdraw solenoid and plunger assembly.

Control Relay: All relays are single unit type as listed below.

Car Model	Control Relay Part No.
Ford (all models)	Ford No. 8M-6915
Frazer & Kaiser	Auto-Lite HRT-4001, 4001A
Hudson	Hudson No. BT303107
Lincoln & Mercury	L-M No. 8M-6915
Nash	Auto-Lite HRT-4101
Packard	RBM, Model 3600-2
Studebaker	Auto-Lite HRT-4001
Willys	Auto-Lite HRT-4001

HRT-4001, 4001A, 4101 Specifications

Contacts Close—4.0 volts maximum. Adjust by bending lower spring hanger to change spring tension.
Contacts Open—.6-1.0 volt. Adjust by varying height of stationary contact (relays designed to open slow).
Contact Gap—.015" minimum.
Air Gap—.031-.034" with contacts open. Adjust by bending armature stop.

Throttle Kick-down Switch: Switch is mounted so that switch plunger is actuated by accelerator pedal or by throttle linkage (contacts plunger in wide open position, additional movement of pedal actuates switch by depressing plunger).
Adjustment—Loosen locknut on threaded switch stem, turn switch up or down so that accelerator pedal (or linkage) just contacts switch plunger with accelerator linkage and carburetor throttle valve in wide open position. Make certain that accelerator pedal has sufficient travel to actuate switch.

Lock-out Switch: No adjustment. Contacts open (governor circuit broken) when overdrive locked out.

Overdrive Fuse: In cartridge type holder or on fuse block attached to control relay on all cars.

Fuse Capacity	
Ford, Lincoln, Mercury	30 amperes
Frazer, Kaiser, Nash	20 amperes
Hudson	30 amperes
Packard	30 amperes
Studebaker, Willys	20 amperes

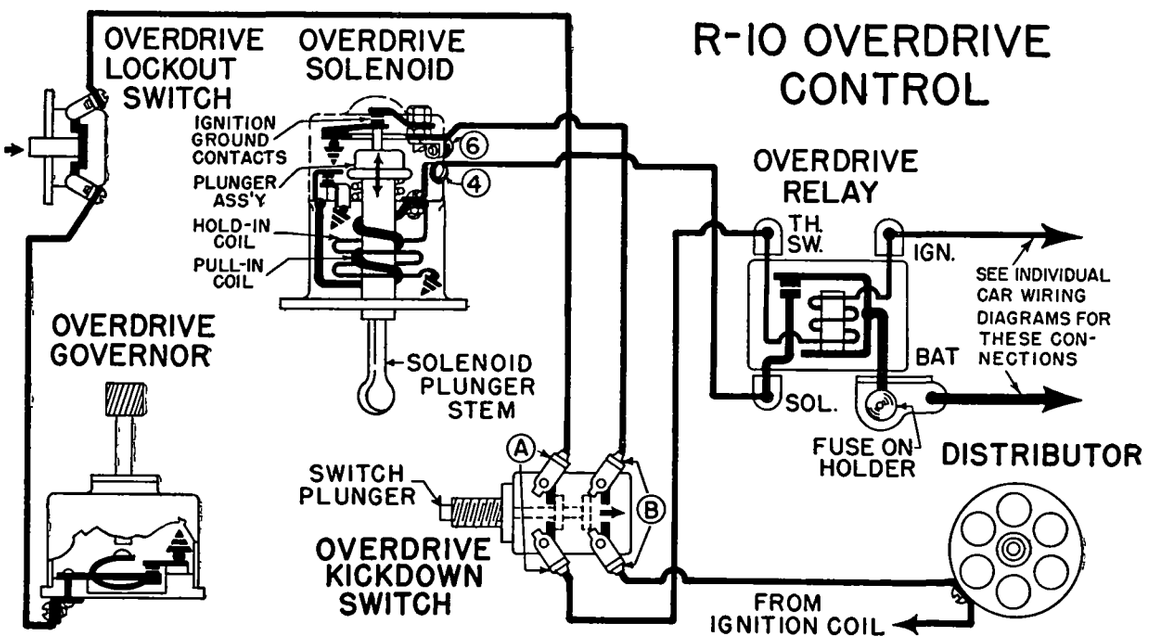

BUICK DYNAFLOW DRIVE

Series 40 & 50 (1949-51)—Optl.
Series 70 (1948-51)—Std.

►CHANGES, CAUTIONS, CORRECTIONS

►**TRANSMISSION IDENTIFICATION (For Production Change & Parts Interchangeability Data):** Serial No. (first cars) or Identification No. (later cars) stamped on bottom face of transmission case on left side to rear of High Accumulator as listed below.

IDENTIFICATION NO. CAUTION—Where identification number used instead of serial number (prefix C, D, E and later), the **number following this letter (1, 2, 3 etc.) indicates a production change** and is not a serial number for that particular transmission.

	Serial Numbers
1948 & Early 1949 Series 70	A-1 to A-98355
Early 1949 Series 50	B-1 to B-52325
	Identification No.
Late 1949 Series 50	D-1, 2, 3 etc.
Late 1949 & 1950 Series 70	C-1, 2, 3 etc.
1950 Series 40 & 50	E-1, 2, 3 etc.

►**ENGINE & TRANSMISSION VIBRATION CORRECTION (When Repl. Crankshaft or Flywheel Installed):** If vibration due to change in balance by installation of new parts, correct by installing balance weights on primary pump cover. *See instructions at end of TRANSMISSION INSTALLATION data.*

►**STARTING ENGINE BY TOWING OR PUSHING CAR:** On Dynaflow cars, place control lever in neutral "N" position until car reaches a speed of 15 MPH. and then move lever to "L" position, or when car reaches a speed of 30 MPH. move lever to "D" position, to crank engine. Place lever in neutral "N" position to warm up engine.

►**USE OF EMERGENCY LOW FOR ADDITIONAL BRAKING ON GRADES:** Car speed should be reduced to below 40 MPH. before control lever is moved from Drive "D" to Low "L".

►**TOWING DYNAFLOW CARS:** If Dynaflow Drive disabled, **car must not be towed with control lever in any driving range.** Car can be towed with lever in Neutral "N" position only at speeds **under 30 MPH.** but long distance tows not recommended.

Neutral Safety Strap Installation—Can be installed over shift lever to lock transmission in neutral for towing when neutral position cannot be obtained or held by means of regular transmission control.

►**FRONT OIL PUMP & RELATED CHANGES (Beginning Trans. No. A-56000 & B1):** New cast iron type pump cover (and shorter heavier pump body with two locating dowels) supersedes previous type with recessed steel cover. **When installing this new cast iron pump cover to replace recessed steel cover, install all related parts as follows:**

Converter Primary Pump—New **shorter** primary pump must be used with cast iron pump cover. Can be identified by length of 1 13/16" from FLAT face of flange to end (first type 1⅞" from STEP on flange to end).

Reaction Shaft Flange—New ⅛" longer studs must be used with cast iron pump cover. These longer studs can be used with recessed steel cover

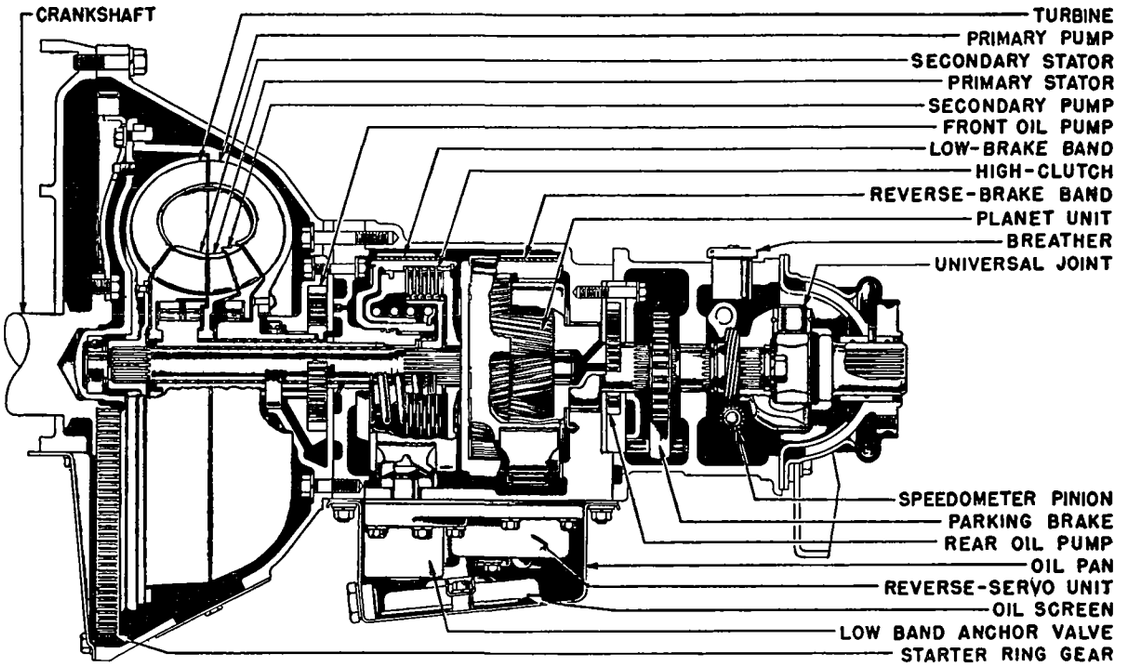

BUICK DYNAFLOW DRIVE

(added length will not cause interference). First type Reaction Shaft Flange can be used by installing new square head bolts. See Reaction Shaft Bolt change.

►**FRONT PUMP INTERCHANGEABILITY:** Only new heavier pump body (see above) furnished for service in two types for all installations:
1) Without Dowels and Dowel Holes—Use with first type recessed steel pump cover.
2) With Dowels—Use with new cast iron pump cover.

►**REACTION SHAFT FLANGE BOLT CHANGE (Beginning Trans. No. A-86000 & B-29000):** First type pump mounting studs with welded nuts superseded by square head bolts. Bolts can be installed to replace studs by running a 5/16" drill through the tapped stud holes, reaming holes to 21/64", and pressing in new square head bolts.
CAUTION—Holes must not be reamed oversize and flange must be supported when pressing bolts in. **Bolts must be press fit in flange.**

►**REAR OIL PUMP CHANGE (Beginning Trans. No. A-36000 & B-1):** Pump changed from separate body-and-cover design to one-piece integral type. **This new one-piece pump can be used to replace original type.**

►**VALVE & SERVO BODY CHANGES:** ***Three types used in production and for leakage corrections:***
1) Trans. No. A-1 to A-2999—Has been replaced by second type (following) as service correction for oil leaks. **Install second type Valve & Servo Body with second type Anchor Piston whenever this first type removed for any reason.**
CAUTION—Change transmission number by adding "-3" to number when above parts installed.

2) Trans. No. A-3000 to A-41999—May be identified by added ribs, change of left center bolt to a stud, adding of stud at center lower flange, and adding of boss and screw on lower flange. These changes require change in spacer plate and gaskets, and longer bolts where ribbing added. Low Band Anchor Piston changed from servo body spacer plate to transmission case (diameter of holes in spacer plate and gasket increased) and width of piston top land increased.

3) Trans. No. A-42000 & B-1 Up—New type which can not be installed in earlier transmissions due to changes in transmission case. May be identified by change of left center stud back to a bolt (same as 1), addition of bolt and copper washer in center, and Allen head screw added between low band anchor and reverse servo pistons.

NOTE—Beginning Trans. No. C-5, D-5, E-5; servo body spacer plate upper gasket changed due to change in case at reverse band anchor (see Reverse Ring Gear and Reverse Anchor Change Note).

►**OIL PAN & OIL SCREEN CHANGES:** First type oil screen and integral suction pipe superseded by **separate** screen and suction pipe beginning Trans. No. C-1 & D-1. **New type screen can be used to replace earlier type** and has rubber grommet at center for snug fit on suction pipe. New type suction pipe has cork gasket and coil spring for sealing.

New Oil Pan & Filler Pipe (Beginning Trans. No. C-2 & D-2): Pan has filler pipe extending forward on right side of car so that oil level can be checked and oil added from under-hood. This pan and oil

C NTINUED N NEXT PA E

BUICK DYNAFLOW DRIVE (C nt.)

filler can be installed on early cars if second type oil screen and separate suction pipe also used.

CAUTION—Filler pipe connecting hose is neoprene type marked by red stripe to prevent confusion with regular hose used between thermostat housing and water pump.

►**TRANSMISSION CASE CHANGES:** ***Various types used which are interchangeable only when other changes made as follows:***

1) Beginning Trans. No. A-42000 & B-1—Two tapped holes added for additional valve and servo body bolts (see 3rd. type Valve & Servo Body data above).

2) Beginning Trans. No. C-2 & D-2—Oil filler base removed (used with new oil pan having extended under-hood filler pipe). See Oil Pan Changes.

3) Beginning Trans. No. C-5, D-5, E-5—Transmission case openings changed to fit new forged type reverse band anchor. See Reverse Band Anchor Changes (following).

►*TRANSMISSION CASE REPLACEMENT CAUTION*—Only latest type case (3 above) furnished for service. May be used with either 2nd. or 3rd. type Valve & Servo Body but **must be used with new type Oil Pan & Under-hood Filler Pipe and forged type Reverse Band Anchor.**

►**REVERSE RING GEAR CHANGE (Beginning Trans. No. A-42275 & B-1):** Separate front thrustwasher eliminated and reverse ring gear width increased 1/16" to compensate for this thickness. First type Narrow Ring Gear (2 11/16" overall) **must never be used without thrustwasher.** Later type Wider Ring Gear (2 3/4" overall) can be used in earlier transmissions by discarding original thrustwasher but **thrustwasher must never be used with this wider ring gear.**

►**REVERSE BAND ANCHOR CHANGE (Beginning Trans. No. C-5, D-5, E-5):** New one-piece forged anchor superseded previous two-piece type and is used with new band which has full width ends. These new parts require use of new transmission case with enlarged opening and new servo body spacer plate upper gasket (see Transmission Case Changes above).

►*REVERSE ANCHOR REPLACEMENT CAUTION—**It is recommended that forged type anchor be used to replace earlier type whenever transmission disassembled for any reason.*** Forged type anchor may be used with early type narrow-end reverse band but **transmission case must be altered as directed below.** NOTE—only forged type Reverse Anchor and corresponding type Reverse Band and Transmission Case furnished for service.

Transmission Case Alteration (for installation of Forged Reverse Band Anchor)—Remove solid web between two reverse anchor openings in case by cutting grooves approximately 1/32" deep with a chisel (leave semi-circular area around hole near edge of new opening—anchor has notch to clear this area) between the openings and then knocking out web by tapping on center with hammer. File all edges to remove burrs and ridges. (CAUTION—keep chips and filings out of case). Check to see that operating lever works freely between ears on anchor and that servo body spacer plate screws are securely tightened.

CAUTION—On Trans. No. A-1 to A-2999, install second type Valve & Servo Body when making above changes.

►**LOW ACCUMULATOR SPRING & CAP CHANGE (Beginning Trans. No. C-5, D-5, E-5):** See illustration for latest type springs and cap used to provide softer engagement of Low Band and smoother Low Range Shift. **These new parts can be used to replace earlier type parts.**

►**PRIMARY PUMP COVER & FLYWHEEL BOLT CHANGE:** Various types used as listed below and **all primary pump-to-cover bolts must be of same length and installed in same locations as originally to maintain converter balance.**

1) Trans. before No. C-3, D-3, E-3—Short bolts (15/16") used without balance weights and where balance weights thin enough to allow full thread engagement, longer bolts (1 5/32") used with thick balance weights.

2) Trans. beginning No. C-3, D-3, E-3—All bolts 1 5/32" (same bolts as used to attach converter to flywheel).

3) Trans. beginning No. C-4, D-4, E-4—New nuts 21/64" thick used (supersedes 17/64" nuts). Only these new thicker nuts furnished for service.

CAUTION—New 21/64" nuts cannot be installed individually. If one nut used to replace earlier 17/64" type, REPLACE ALL NUTS.

►**PARKING LOCK APPLY SPRING CHANGE (Beginning Trans. No. A-11064 & B-1):** New 3-coil type spring used (supersedes earlier 2-coil type). New spring requires new parking lock operating lever assembly with 1/16" longer spring step. Only the new 3-coil spring is furnished for service.

►*PARKING LOCK REPLACEMENT CAUTION*—Manufacturer recommends that new 3-coil spring be installed on early cars whenever it is necessary to repair parking lock pawl. **New Parking Lock Operating Lever (with 1/16" longer spring step) must also be installed when spring changed.**

DESCRIPTION

The Dynaflow Drive consists of: (1) Torque Converter Assembly mounted directly on the flywheel in the bell housing, and (2) Planetary Gear Unit mounted in the transmission case directly behind the torque converter. Torque Converter action is entirely automatic while the Planetary Unit is controlled by the driver through a Control Lever on the steering wheel (provides Emergency Low, Reverse, Neutral, and Parking—see Operation below). The operation and control of the transmission is through hydraulic system for which oil pressure is supplied by two oil pumps built in the transmission (forward pump in recess in rear face of bell housing, rear pump in recess at rear of transmission case). An oil cooler on the side of the transmission case maintains oil at operating temperature.

Torque Converter Description: Torque converter consists of the five independent rotating members listed and the operation of the unit varies in accordance with car speed and load conditions as described below (transition from one type of operation to another is gradual so these phases should not be considered as distinct "steps").

(1) Primary Pump (Driving Member). Integral with rear half of case bolted directly on flywheel. Pump is positively driven by the crankshaft at engine speed at all times.

(2) Turbine (Driven Member). Splined on converter shaft and transmits drive to transmission.

(3) Secondary Pump. Mounted n primary pump hub with overrunning "free-wheel" clutch which allows this pump to rotate faster than primary pump when unit is operating as a torque converter.

(4 & 5) Primary & Secondary Stators. Mounted on stationary "reaction" shaft (tubular shaft fixed in transmission case) with overrunning "free-wheeling" clutch in each stator hub. Stators are locked or held stationary when unit is operating as a torque converter (reaction members) but free-wheel when torque multiplication not required.

Planetary Unit Description: Planetary unit consists of parts listed below. Operation of unit depends on the position of the Shift Control Valve (linked to control lever on steering column) which directs application of hydraulic pressure in the planetary unit hydraulic mechanism as described below.

(1) Sun Gears—Consist of two gears in tandem on drive (input) shaft. Front Sun Gear (Low Range Reaction Gear) is integral with the Direct Drive Clutch (locked to shaft when clutch engaged) and meshes with the Reverse Planet Pinions. Rear Sun Gear (Reverse Sun Gear) is splined on the drive shaft (acts as driving gear for Low & Reverse) and meshes with the Low Planet Pinions.

(2) Planetary Pinions—Consist of three Reverse Planet Pinions (larger short gears) and three Low Planet Pinions (smaller long gears) mounted alternately on the Planet Carrier and all meshing together. The Reverse Planet Pinions mesh with the forward sun gear (Low Range Reaction Gear) and with the Reverse Gear (large internal gear controlled by the Reverse Brake Band). The Low Planet Pinions mesh with the rear sun gear (Reverse Sun Gear). The Planet Carrier is integral with the output shaft.

(3) Low Range Drum & Clutch—Mounted on drive shaft in front of the planetary pinion. Inner clutch member is splined on drive shaft and rotates with the shaft. Outer clutch member incorporates the Low Range drum and front sun gear (Low Range Reaction Gear) as well as the clutch engaging hydraulic piston and disengaging spring. Clutch engagement is controlled by the High Accumulator which permits rapid initial movement and smooth final engagement. A ball check valve is built in the clutch piston to insure complete draining of oil from the chamber when clutch disengaged for Reverse and Neutral. Check valve is positively closed by contact between ball and steel clutch plate when clutch engaged.

(4) Low Range Brake Band & Engaging Mechanism—Band holds Low Range Drum and front sun gear (Low Reaction Gear) stationary when it is applied by the servo "apply" piston acting through the lever and strut engaging one end of the band (servo action is controlled by the Anchor Piston and "Lo" Accumulator). This action requires a boosted oil pressure of 180 lbs. (normal pressure 90 lbs.) which is secured by boosting the Pressure Regulator Valve spring pressure hydraulically. Low Range operation also requires that the clutch be disengaged and this disengagement is secured by opening the clutch pressure line (Anchor Piston acts in conjunction with Shift Control Valve).

(5) Reverse Brake Band & Engaging Mechanism—Band holds Reverse Gear (internal gear) stationary when it is applied by the servo "apply" piston acting

CONTINUED N NEXT PA E

BUICK DYNAFLOW DRIVE (Cont.)

through the lever and struts engaging both ends f the band.

Oil Pumps & Hydraulic Control System: See the Hydraulic Circuit illustration for details of Dynaflow control units. These units operate as follows:

Front Oil Pump—This pump is driven by the engine and is of large capacity to provide necessary pressure and volume of oil for starting, low speed, and reverse operation. At car speeds above 45 MPH., rear pump takes over and front pump idles (oil bypassed back to suction side through oil pressure regulator). A check valve in the pump delivery line prevents oil bleeding back through the idling pump.

Rear Oil Pump—This pump driven from output shaft (driven by rear wheels when car pushed or towed) to operate direct drive clutch and fill torque converter when front pump not operating. Acts in conjunction with front pump at speeds below 45 MPH. and supplies all oil at speeds above 45 MPH. when front pump idles.

Pressure Regulator Valve—Controls pressure in main oil supply line (see Converter & Lubrication Pressure Regulator below) and limits pressure to 90 lbs. (80-90 lbs.) except when pressure boosted for Low Range operation. This boost is effected by supplementing regulator spring pressure with hydraulic pressure (acting on regulator stem piston) which increases pressure in system to 180 lbs. (160-180 lbs.).

Converter & Lubrication Pressure Regulator—Converter is filled with oil from metering orifice in Pressure Regulator Valve and returns to the oil sump through the Oil Cooler and Converter Pressure Regulator which maintains pressure in this circuit at 50 lbs. Oil is bled from this circuit at the regulator for lubrication of the transmission units (front oil line for Low Range Drum Bushing and Clutch Plates, rear oil line for Transmission Rear Bushing, Planetary Gears, Rear Bearing Retainer Bushing, and Universal Joint). Pressure in the lubrication circuits is maintained at 15 lbs. by the regulator.

Shift Control Valve—This valve is controlled by lever on steering wheel and directs oil flow for planetary unit operation (see Planetary Unit Operation above).

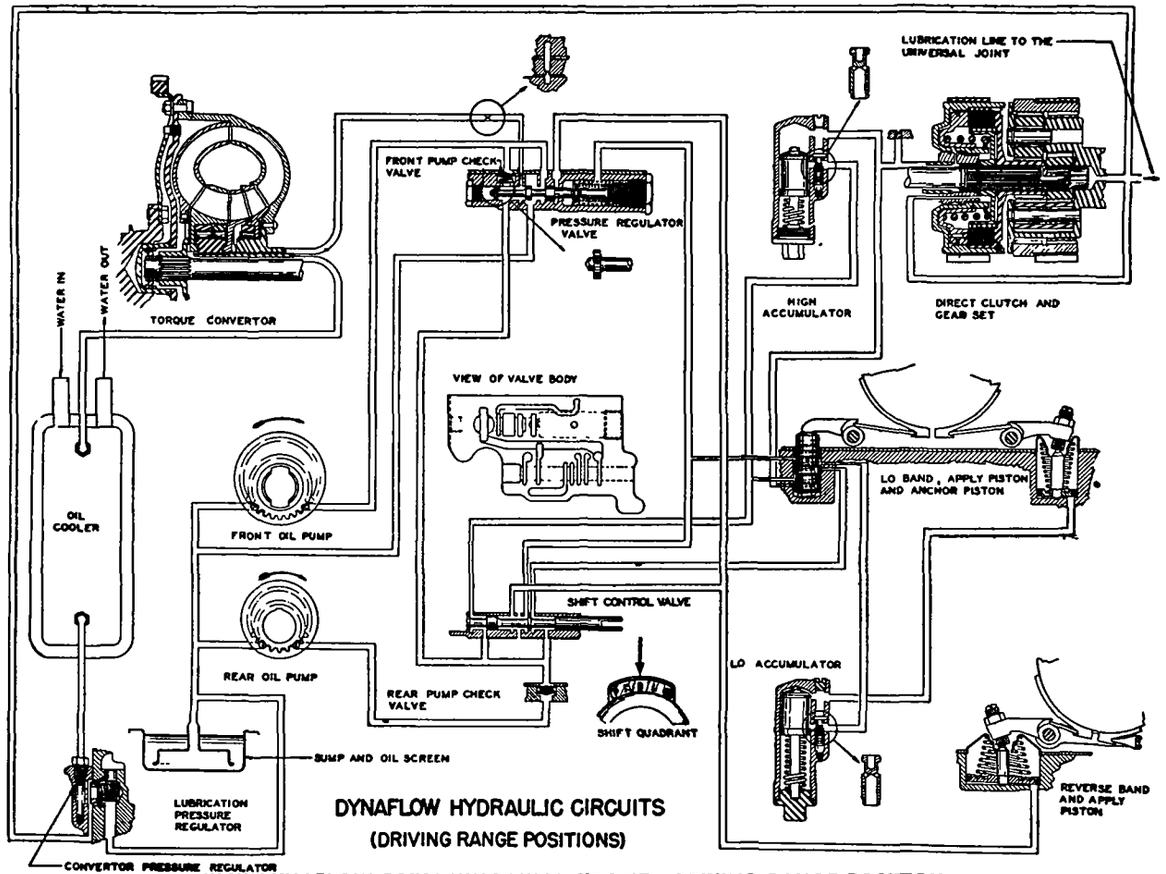

BUICK DYNAFLOW DRIVE HYDRAULIC CIRCUIT—DRIVING RANGE POSITION

OPERATION

Dynaflow Drive Torque Converter automatically provides a torque multiplication ranging from an equivalent gear reduction of 2.24-2.4 to 1 (for Starting, Heavy Loads, and Acceleration) to an equivalent "High" 1 to 1 ratio (for Light Loads and Steady Driving when torque converter acts as a simple Fluid Coupling). The Planetary unit is controlled by the driver and provides definite gear ratios (in addition to the varying ratio of the torque converter) depending on the control lever position as follows:

Drive Range ("D" Lever Position)—Bands are released and clutch is engaged. This locks the front sun gear to the drive shaft, and as rear sun gear is splined on the drive shaft, no rotation of the gears is possible (both gears meshed with reverse pinions and tend to rotate pinions at two different speeds). The entire planetary gear assembly turns as a unit and the output shaft rotates at the same speed as the input shaft with resultant gear ratio of 1-1.

Low Range ("L" Lever Position)—Low Rang Band is applied and clutch is disengaged (band holds front sun gear stationary). Drive shaft turns rear sun gear which meshes with Low Planet Pinions, and as these pinions also mesh with the Reverse Pinions which mesh with the stationary front sun gear, the reverse pinions "walk" around the sun gear rotating the Planet Carrier and output shaft in the same direction as input shaft but at slower speed to provide a gear reduction of 1.82-1.

Reverse ("R" Lever Position)—Reverse Band is applied and clutch is disengaged (band holds internal Reverse Gear stationary). Drive shaft turns rear sun gear which meshes with Low Planet Pinions, and as these pinions also mesh with the Reverse Pinions which mesh with the stationary internal gear, these Reverse Pinions move around the gear in a direction opposite to their direction of rotation, rotating the Planet Carrier and output shaft in opposite direction to input shaft and at slower speed to provide a gear reduction of 1.82-1.

Neutral ("N" Lever Position)—Both bands are released and clutch is disengaged. With all gears free to spin, no power is transmitted through the planetary unit and output shaft is stationary.

Parking Mechanism Operation: Control lever is linked to a stationary pawl anchored in the transmission case. Moving lever to park "P" position, engages pawl with ratchet wheel splined on output shaft in bearing retainer housing at rear of transmission and locks the drive shaft.

LUBRICATION

Check oil level and add oil as required at 1000 mil intervals, drain and refill at 15000 mil intervals.

►*CAUTION—Oil must be warm and engine must be idling when checking oil level, warm up oil before draining.*

Checking Oil Level: With oil warm and engine idling with control lever in Parking "P" position, check oil level as indicated on oil level rod in filler hole (see locations below). If level more than 1" below "FULL" mark, add recommended oil to bring level up to FULL mark on rod. Distance between upper FULL mark on rod and the lower LOW (1948-49), ADD OIL (1950 & Later) mark is 1" or equal to approximately 1 pint of oil, oil level must never be above "FULL" mark.

►*CAUTION—If oil level is consistently low when checked (indicating loss of 1 pint or more per 1000 miles), check transmission thoroughly for oil leaks.*

CONTINUED ON NEXT PAGE

BUICK DYNAFLOW DRIVE (C nt.)

►**Oil Gauge Rod Location**—Changed during 1949:

1948 & Early 1949 Cars—On right side of transmission case under front floor, accessible by lifting floor mat and removing floor pan cover.

Beginning Late 1949 Cars—In engine compt. between battery and engine, accessible by lifting right side of hood.

►***CAUTION—Do not confuse Dynaflow Oil Gauge Rod with Engine Oil Gauge Rod located near this same point.***

Draining & Refilling: With oil warm, drain transmission case by removing drain plug in oil pan, drain torque converter, after removing bell housing cover for access to drain plugs, by loosening one plug and turning converter until second plug is downward and removing this plug. Re-install and tighten all drain plugs. Install 3 quarts of recommended oil through filler opening in case. Start engine and allow it to idle with control lever in Parking "P" position, add additional oil to bring level up to point 1¾" below "FULL" mark on oil gauge rod. Recheck oil level after transmission warmed up. Oil level should then be at full mark on rod.

►***CAUTION—DO NOT FLUSH transmission when changing oil.***

Capacity—(40, 50) 8½ qts. (70) 10 qts. *NOTE*—1¾ pints additional required if transmission completely dry (after overhaul etc.).

Recommended Oil—Use only "Special Buick Oil for Dynaflow Drive" or "Automatic Transmission Fluid, Type A" with AQ-ATF number embossed on can.

LINKAGE ADJUSTMENT

LINKAGE ADJUSTMENT: Adjust all units in order and exactly as follows:

Manual Control Linkage: Transmission must be thoroughly warmed up (driven approximately 20 miles under traffic conditions with frequent starts and stops) and oil level must be correct. Then proceed as follows:

(1) Place shift control level in Neutral "N" with detent plunger centered in detent notch, move lever until stop pin is against stop in dial housing, note movement of dial pointer. Repeat this operation in Low "L" position. Dial pointer movement should be approximately equal in both positions. If not, loosen control detent mounting bolts on steering column jacket, shift detent until dial pointer travel is equal. Place lever in Low "L" position, carefully bend dial pointer, if necessary, so pointer is in line with "L" on dial.

(2) Check parking mechanism by placing car on ramp or steep grade with control lever in Parking "P". Parking lock should hold securely. Place control lever in Neutral "N" and allow car to roll. If "clicking" ratchet noise heard, or if parking lock did not hold car on grade, adjust as follows: Place control lever in Parking "P" position, disconnect shift rod from shift idler lever on steering column, pull forward on rod and move car slightly to make certain locking pawl fully engaged (CAUTION—do not jerk on rod). Check movement at lower end of shift lever on left side of transmission case by pressing forward on lever (against spring tension) until definite stop is felt. This movement should be 1/8-3/16" beyond the parking "P" position. If spring travel not within these limits, control valve is out of adjustment (requires removal of torque ball). If spring travel correct, pull shift rod forward against stop, adjust shift rod clevis until clevis pin can just be entered in hole in idler lever with control detent engaged in Parking "P" position, then **lengthen rod by unscrewing clevis 3 full turns,** connect rod temporarily (may require readjustment in next step).

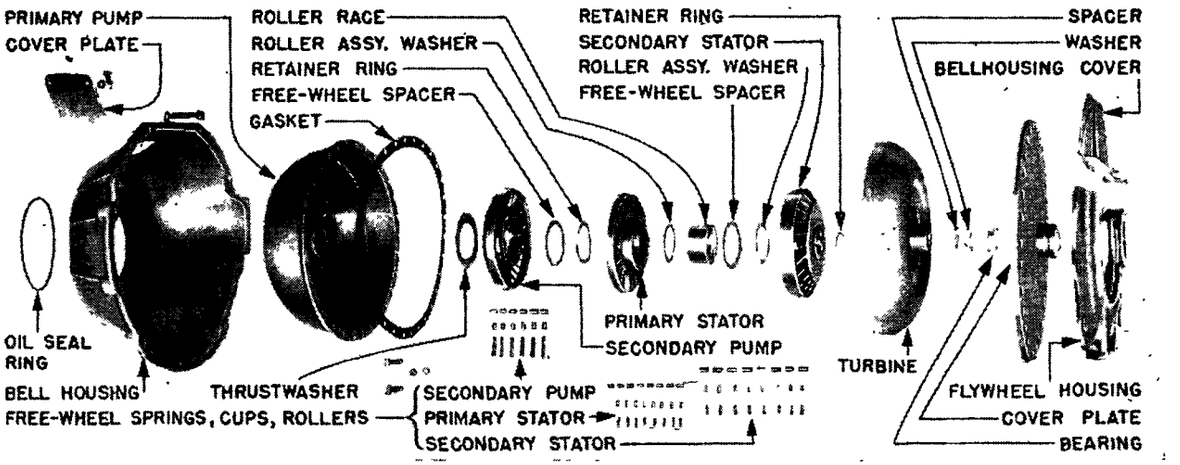

DYNAFLOW DRIVE TORQUE CONVERTER & BELL HOUSING

(3) Place shift control lever in Neutral "N" position with detent fully engaged, install Shift Control Linkage Adjustment Gauge No. J3085 on dial housing with line under "N" centered on dial pointer. With transmission warm and engine idling at 600 RPM., move control lever from Neutral "N" to Drive "D" position slowly. Clutch should engage (noted by immediate decrease in engine speed) when tip of dial pointer is behind long gauge mark midway between "N" and "D" on speed ratio dial (width of mark is allowable variation in shift point). Move control lever from Drive "D" to Neutral "N" position slowly. Clutch should disengage (noted by immediate increase in engine speed) when tip of pointer is behind midway mark on gauge. If clutch engagement and disengagement points not correct, readjust clevis on shift rod at shift lever (see (2) above), being careful not to disturb Parking adjustment. Do not connect shift rod permanently until adjustment (4) completed.

►***CAUTION—When making above adjustment, do not change shift rod length so much that parking lock fails to hold or pawl contacts ratchet wheel in Neutral (check as directed in (2) above).***

(4) Check operation in Low "L" and Reverse "R" positions. Detents should be engaged and shift points should occur when tip of dial pointer is directly behind mark midway between "D" & "L" (Low), midway between "L" & "R" (Reverse). If shifts do not occur at correct points, check for bent transmission shift lever, bent valve operating upper lever, or lever loose or incorrectly seated on shaft.

(5) After above adjustments completed, tighten clevis nut on shift rod clevis and permanently install clevis pin with plain washer and spring washer on each side of clevis.

►***CAUTION—Neutral Safety Switch and Back-up Light Switch must be checked after changing control detent and shift rod adjustments.***

Throttle Linkage & Dash Pot—Must work freely and smoothly. *See adjustment data under "Carburetor" on Buick car model pages.*

Starter Vacuum Switch: If operation not correct after carburetor linkage and dash pot adjustments made, *see Carter WCD and Stromberg AAV-167 & AAV-267 or Stromberg AAUVB-267 & AAVB-267 carburetor data for checking and adjustment of switch.*

Neutral Safety Switch: Located on control lever linkage at lower end of steering column and connected in starter control circuit so that starter operative only with Dynaflow control lever in Neutral "N" or park "P" position. Switch should be closed in neutral and should remain closed until lever moved toward Drive position enough to move outer end of control lever pointer 5/32" (if switch opens with less than ⅛" pointer travel, starter may not operate in neutral; if more than 3/16" pointer travel required to open switch, starter may operate in Drive "D" position and cause starter to move car). Check and adjust switch as follows:

Checking Neutral Switch—Ground coil terminal on distributor so that engine can be cranked without starting. Firmly set parking brake. Place Dynaflow control lever in neutral "N" position (check to see that detent firmly engaged). Install Shift Control Linkage Adjustment Gauge J3085 on dial housing so that short line under "N" is centered on dial pointer. Move control lever to Driving "D" position, turn ignition on, depress accelerator pedal to close starter vacuum switch. Move control lever slowly from "D" toward "N", note position of center of dial pointer at instant starter begins to operate, release accelerator pedal. Center of dial pointer should be within limits of short line to right of "N" mark on gauge (provides required limits of 1/8-3/16" out of neutral). If not within these limits, adjust as directed below.

Adjust Neutral Switch—Place control lever so

CONTINUED N NEXT PAGE

BUICK DYNAFLOW DRIVE (C nt.)

dial pointer centered on short line to right of "N" mark on gauge J3085 and hold the lever in this position while adjusting. Loosen the two mounting bolts on switch bracket at lower end of steering column, raise switch up as far as possible. With ignition switch turned on and accelerator pedal depressed, tap switch down until starter just begins to operate, then tighten switch mounting bolts being careful not to change switch position. Recheck switch adjustment.

Back-up Light Switch: Check and adjust after transmission control detent adjusted as follows:

1948 Switch—Place control lever in Reverse "R" position, check clearance between switch operating arm and nearest edge of switch mounting bracket. If this clearance not 15/32", loosen two switch mounting screws and shift switch on bracket (screw holes are slotted).

1949 & Later—Place control lever in Low "L" position, check clearance between switch operating arm and lower edge of control shaft lower lever. If this clearance not 0" to 1/16", loosen two switch mounting screws and shift switch on bracket (screw holes slotted).

BAND ADJUSTMENT

LOW & REVERSE BAND ADJUSTMENT: Adjust only if chatter or slip in low and reverse severe or objectionable, (slight chatter as car starts in reverse, disappearing when car in motion, is normal). Adjust bands as follows:

(1) Remove front floor mat, insulation pad, and transmission opening cover from floor pan.

(2) Use tool J2655 to remove band adjusting cover and gasket (Covers are shallow sheet metal cups on upper right (Low), left (Reverse) of transmission case.

(3) Loosen locknut and turn adjusting screw clockwise until considerable resistance felt indicating that band in full contact with drum or ring gear.

(4) Back off screw until trace of endplay noted when prying up on locknut with screwdriver, then **back off screw additional six complete turns,** hold screw from turning and tighten locknut snug.

(5) Note position of adjusting screw slot, use torque wrench to tighten locknut to 20-25 ft. lbs., check screw slot to make certain that screw position not changed.

(6) Install band adjusting cover **using new gasket.**

NOTE—Both Low and Reverse Bands adjusted alike as directed above.

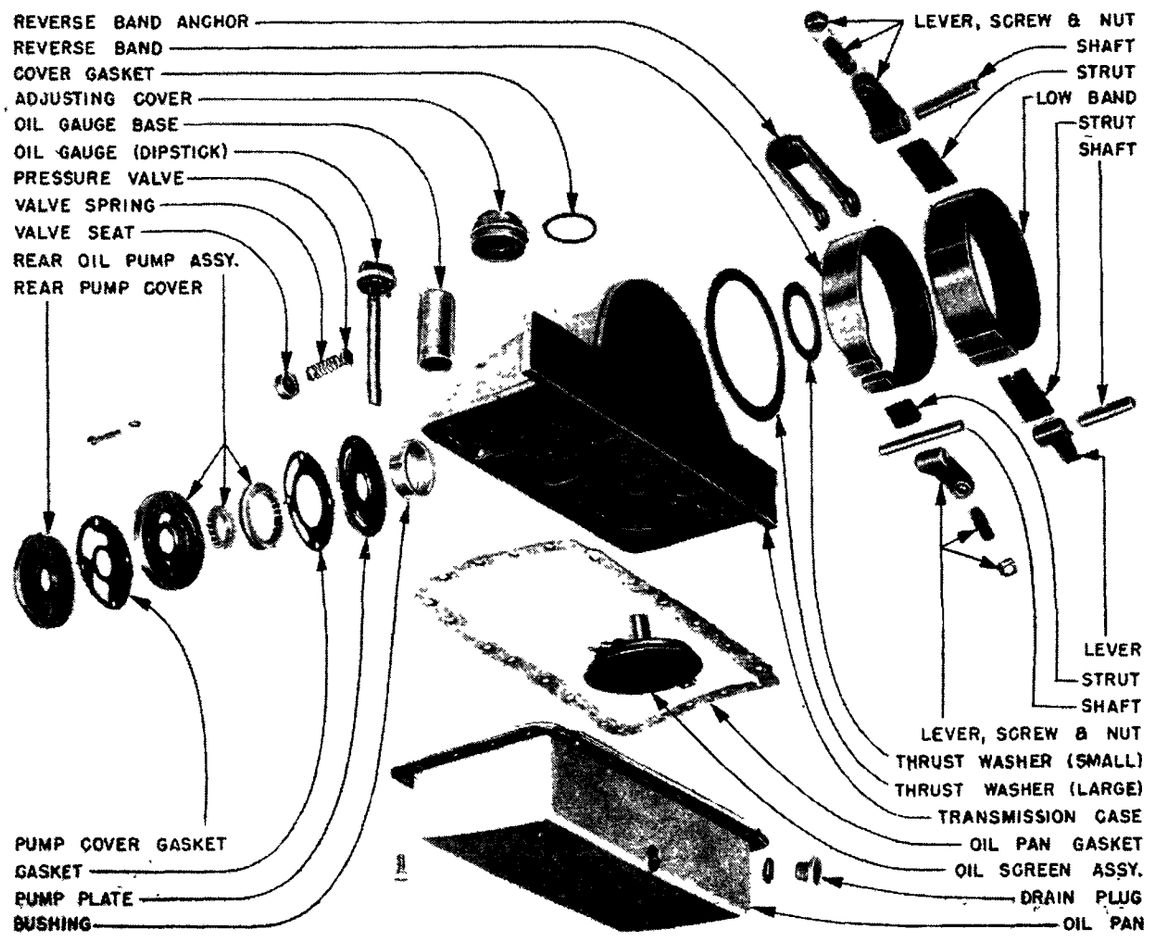

TRANSMISSION CASE, REAR OIL PUMP, & SERVO BAND ASSYS.

TESTING HYDRAULIC UNITS

If performance not satisfactory, make following tests **with transmission thoroughly warmed up and at operating temperature:**

Oil Level: Check oil level, add fluid as necessary to bring level up to FULL mark on dipstick, recheck performance with correct oil level. If car has been losing oil at rate of 1 pint or more each 1000 miles, make thorough check for oil leaks.

Manual Control Linkage: Check and adjust manual control linkage. See Linkage Adjustment.

Hydraulic Control System Pressures: Use Transmission Oil Pressure Gauge J-2575. Support rear end of car solidly with wheels off floor so that transmission can be operated. Remove transmission cover in floor pan for access to pressure take-off points. Connect gauge and make tests as follows:

Front Oil Pump—Connect pressure gauge at pipe plug opening on left side of reaction shaft flange. Run engine at 500 RPM., check pressure with selector lever in **Low, Drive, and Reverse range.** Repeat tests at 1000 RPM. and at 1800 RPM. in **Low and Drive Range only.** See table below for correct pressures. Low or erratic pump pressure indicates air leaks in suction line, improper pressure regulator valve action, or excessive pump clearances.

Front Oil Pump Pressures

Selector Lever—	Low	Drive	Reverse
500 RPM.	100 lbs.	90 lbs.	100 lbs.
1000 RPM.	160 lbs.	90 lbs.	
1800 RPM.	180 lbs.	90 lbs.	

Rear Oil Pump—Connect pressure gauge at pipe plug opening in lower flange at front end of rear bearing retainer. Run engine at 500 RPM., check pressure with selector in **Low & Drive Range.** Repeat test at 1000 RPM. and 1800 RPM. See table below for correct pressures. Low or erratic pump pressure indicates air leaks in suction line (this will affect both pumps), improper pressure regulator valve action, excessive pump clearances, or leak in valve and servo body passages between pump and regulator valve.

Rear Oil Pump Pressures

Selector Lever—	Low	Drive
500 RPM.	75 lbs.	90 lbs.
1000 RPM.	125 lbs.	90 lbs.
1800 RPM.	175 lbs.	90 lbs.

High Accumulator—Connect pressure gauge at pipe plug opening on top of accumulator body (left side of car). Place selector lever in **Drive** range. Run engine and check pressure at 500 RPM. (should be 80 lbs.), and at 1000 RPM. and 1800 RPM. (should be 85 lbs.). Low accumulator pressures may be caused by leakage past accumulator body gasket. If accumulator pressure more than 10 lbs. lower than

CONTINUED N NEXT PA E

BUICK DYNAFLOW DRIVE (C nt.)

front oil pump pressure, check for leakage between accumulator and multiple disc clutch and for restricted or plugged metering orifice in accumulator dump valve.

Low Accumulator—Connect pressure gauge at pipe plug opening on top of accumulator body (right side of car). Place selector lever in **Low** range. Run engine and check pressure at 500 RPM. (should be 90 lbs.), at 1000 RPM. (should be 150 lbs.), and at 1800 RPM. (should be 170 lbs.). Low accumulator pressures may be caused by leakage past accumulator body gasket. If accumulator pressure more than 10 lbs. lower than rear oil pump pressure, check for leakage between accumulator and low servo and for restricted or plugged metering orifice in accumulator dump valve.

TROUBLE SHOOTING

CAR WILL NOT MOVE (Rear wheels may be locked or free).

1) With selector in any Range (rear wheels free).

If car will not move for 1-8 minutes after standing over night—Check front pump oil pressure (see Testing) after allowing car to stand for several hours. If zero pressure noted, check pump for excessive clearances allowing pump to lose its prime. Check alignment of bell housing and converter primary pump hub.

►*CAUTION—If this condition found, inspect Clutch and Bands for excessive wear due to slippage caused by low oil pressure.*

If car will not move after extended operation in Reverse—Check for air leaks in pump suction line (at rear oil pump gaskets), or excessive clearance in front pump (at pump gears and cover). Check alignment of bell housing and converter primary pump hub.

2) With selector in any Range (rear wheels locked). Parking lock engaged. Broken parts in transmission or rear axle. Parking brake applied.

3) With selector in Drive Range. Check front oil pump pressure and High Accumulator pressure. If OK, check for sticking Low Band Anchor Piston, remove and inspect Clutch for worn or sticking clutch plates, leaking clutch seal rings. If High Accumulator pressure low, also check rear pump Check Valve for correct installation and proper seating, check for leaks at accumulator body gasket, reaction flange gasket, clutch piston outer seal and clutch ball check valve, and leaks at sealing rings on reaction shaft flange and low drum.

4) With selector in Reverse Range. Check reverse band for displaced operating strut caused by too loose adjustment, improper installation, or broken band anchor (indicated by free up and down movement of band operating lever). If band assembly OK (no free movement of lever), check servo operation by running engine and shifting into Reverse. Remove Valve & Servo Body and check for reverse servo piston seal leaks.

EXCESSIVE SLIPPAGE (High engine speed in relation to car speed, or poor acceleration).

1) In all Speed Ranges. Low oil level. Incorrect manual control linkage adjustment. Air leak in oil pump suction pipe at oil screen sealing ring. Low front oil pump pressure caused by wear or excessive clearances in pump. Leaks at front pump cover or reaction shaft flange, pressure regulator valve, Valve & Servo Body gasket. Pressure regulator valve defective.

2) In Drive Range. Incorrect manual control linkage adjustment. If High Accumulator pressure low, check for leak at accumulator body gasket; if gasket OK, check for leaking clutch sealing rings, sticking clutch piston, worn or sticking clutch plates.

3) In Low Range. Incorrect manual control linkage adjustment. Incorrect low band adjustment. Low band and drum worn or scored. If Low Accumulator pressure low, check for leak at accumulator body gasket; if gasket OK, remove Valve & Servo Body and check for gasket leaks or leaks at low servo piston seal.

4) In Reverse Range. Incorrect manual control linkage adjustment. Reverse band out of adjustment, strut out of place, or anchor broken. If front oil pump pressure low, remove Valve & Servo Body and check for gasket leaks and leaking reverse servo piston seal.

CAR CREEPS (Forward or Backward).

1) Creeps forward with selector in Neutral. Incorrect manual control linkage adjusment. Sticking low servo piston (check by removing low band adjustment cover). Sticking clutch caused by warped, binding, or incorrectly assembled clutch plates (not stacked properly with "dish" in same direction).

If Car Creeps only when engine accelerated to 2500 RPM—Check clutch vent ball checks in clutch piston and reaction shaft flange.

2) Creeps forward with selector in Reverse or backward with selector in Low. Incorrect manual control linkage adjustment.

SHIFTS ARE ROUGH.

1) Low-to-Drive Shift. Incorrect Low Band adjustment. If High Accumulator pressure low, check for leak at accumulator body gasket and for dump valve or accumulator piston sticking down (top land of piston should be visible through top port in body). Sticking low band anchor piston (remove Valve & Servo Body to check), or incorrect piston location (see piston shimming data in Valve & Servo Body Reassembly). Valve & Servo Body gasket leaks. Clutch plates worn or binding.

EXCESSIVE CHATTER OR CLUNK WHEN STARTING

►*CAUTION—Slight "clunk" when shifting into Low or Reverse is normal, and slight chatter when car starting to move in reverse (disappearing as soon as car in motion) is also normal.*

1) In Low & Reverse Range. Incorrect Low or Reverse Band adjustment. Engine and transmission mountings loose or incorrectly adjusted, thrust pad at transmission mounting broken (see Engine Mountings in Buick Special Data). Clutch plates warped, sticking, or incorrectly assembled (not stacked properly with "dish" in same direction). Reverse ring gear bushing worn. Planet pinion needle bearing rough.

NOISE IN TRANSMISSION.

►*CAUTION—Hum or low whine in Neutral or Parking is normal (due to free rotation of all planetary gears) and slight hum in Low and Reverse may be expected.*

1) Buzzing Noise. Low oil level. Front pump check valve hanging up on edge of gasket between valve and servo bodies. If noise noticed in Parking or Neutral, pressure regulator valve clearance in body may be excessive or orifice in valve land oversize (correct by replacing valve and body).

2) Clicking Noise. If noticed in all ranges, may be caused by foreign material in converter. If noticed only when car in motion, may be caused by parking lock pawl contacting ratchet wheel due to incorrect manual control linkage adjustment.

3) Abnormal Hum or Whine (see Caution above). If noted in all ranges, may be caused by worn parts or excessive front pump clearances (front pump noise will increase in Low and decrease at car speeds above 45 MPH. in Direct Drive). Check front pump for excessive clearances by testing for low pump pressure. If noise noted in all ranges except Direct Drive, may be caused by trouble in planetary gears (gears locked out in Direct Drive).

4) Squealing or Screeching following installation of Front Oil Pump. Pump driving gear installed backward. On transmissions before Serial No. A-56000, may be caused by installation of thick front pump cover **without changing** converter primary pump (see Production Change note on Front Oil Pump & Related Changes).

►*CAUTION—Above condition must be corrected WITHOUT FURTHER OPERATION OF TRANSMISSION or severe damage will result.*

REMOVAL FROM CAR

Transmission and Torque Converter are removed as a unit as follows:

1) Remove bell housing dowel bolt to rear of starter solenoid using an offset brass drift and working from under the hood on the right side (this bolt cannot be removed from beneath car).

2) Support car securely on stands under frame with frame rails at least 20" above floor.

3) Disconnect torque tube at torque tube ball and move rear axle back to disengage propeller shaft from universal joint.

4) Remove bell housing cover and bell housing hand hole cover.

5) Drain converter and transmission oil pan (see draining data under LUBRICATION).

6) Disconnect oil cooler pipes at transmission case connectors, free oil cooler bracket from transmission and tie oil cooler up to frame out of the way.

NOTE—Oil cooler can be removed by disconnecting water hose connections.

7) Disconnect oil filler pipe (later under-hood type) at hose connector. Disconnect transmission control rod at both ends and remove rod. Disconnect speedometer cable.

8) Disconnect thrust pad from transmission support by removing three nuts and taking out plate and adjusting shims. Remove two bolts and plate attaching mounting pad to transmission support.

9) Install engine support bar under rear end of engine oil pan, adjust support snugly under pan.

NOTE—Support bar can be made up of piece of 2x4 straight grain hardwood with 5/8" bolt at each end (bolts 25" center-to-center). Bolts should have 2½" hook at upper end to engage frame side rail and

CONTINUED N NEXT PAGE

BUICK DYNAFLOW DRIVE (C nt.)

sufficient threaded length at lower end to allow support bar to be adjusted under oil pan.

10) Install hoist in front compartment (will require removal of floor pan opening cover) or transmission jack to support transmission weight.

11) Raise engine and transmission with engine support bar (9) and jack or hoist (10) to relieve load on transmission support. Remove support by taking out bolts in frame X-member, remove thrust pad from thrust plate on transmission.

12) Mark flywheel, converter primary pump, and cover with paint to insure reassembly in exact same relative positions.

CAUTION—This is necessary to maintain balance.

13) Disconnect converter from flywheel by taking off nuts on mounting bolts (nuts on front face of flywheel and are accessible through housing cover opening on front of bell housing).

14) Lower engine and transmission just enough so that top bolts in bell housing are accessible (can be removed from above if floor pan cover removed), disconnect bell housing by taking out all attaching bolts.

►*CAUTION—Make certain that both engine and transmission securely supported before loosening these bolts.*

15) Move transmission straight back to disengage converter pump cover from crankshaft, then lower transmission and remove from beneath car.

DISASSEMBLY

►**DISASSEMBLY CAUTION:** ***CLEANLINESS IS EXTREMELY IMPORTANT when disassembling and working on transmission. Thoroughly clean exterior before disassembling, use CLEAN tools on a CLEAN workbench, provide CLEAN storage space for all parts, and separate parts to avoid nicking or burring of ground and polished surfaces.***

DISASSEMBLY OF TRANSMISSION (into Major Components): With transmission on bench, first remove shift lever by taking off retaining nut and lockwasher on shaft while holding lever forward (to avoid strain on linkage), remove oil cooler and pipes if this unit removed with transmission, remove both band adjustment covers and gaskets using Remover Tool J-2655, remove oil gauge rod (first type transmission). Remove both pipe plugs in primary cover to completely drain converter. Then place transmission on bench with oil pan upward and remove various sub-assemblies as follows:

Converter & Bell Housing Removal—Take out all primary pump cover nuts and bolts (CAUTION—insert punch in drive bolt holes through bell housing hand hole to keep cover from turning), screw three 5/16"-18 capscrews into tapped holes in pump cover to loosen cover, remove cover. Remove converter spacer and shim washers (on input shaft or in bearing recess in pump cover). Press on end of input shaft (to prevent shaft coming out) and withdraw converter turbine. Check stators for freewheel clutch slippage before removing these parts (stators should rotate freely in clockwise direction but lock when turned in opposite direction), use narrow pointed tool to remove retaining ring from reaction shaft, **remove both stators as a single unit** (CAUTION—separating stators will allow clutch parts to fly out). Check secondary pump for freewheel clutch slippage (pump should rotate freely in clockwise direction but lock when turned in opposite direction). Pull primary and secondary pumps off reaction shaft and **immediately** check for evidence of oil leakage (streaks of fresh oil on back of primary pump and fresh oil running down face of front oil pump indicate leakage past oil pump seal—if leakage noted, check for loose bell housing bolts). Take out bell housing attaching bolts, remove bell housing, check rubber oil seal for uniform compression (if seal not compressed uniformly, check around oil pump and in bell housing opening for burrs or foreign material preventing uniform seal compression). *See Overhaul data for disassembly of converter stators and pump.*

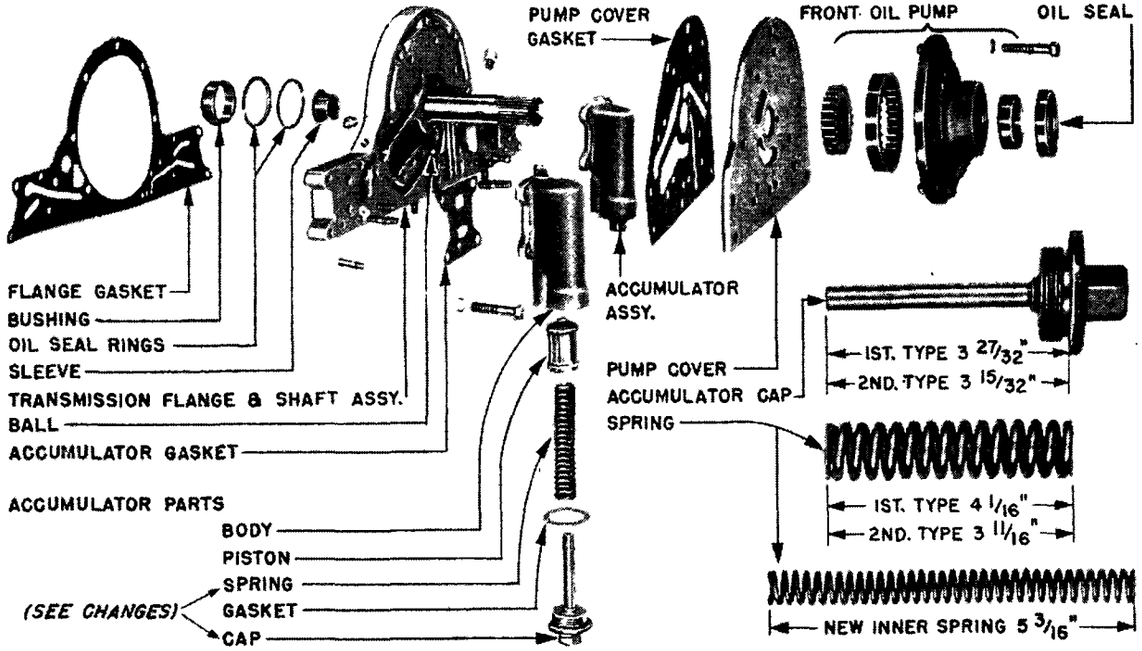

REACTION SHAFT FLANGE, ACCUMULATOR, & FRONT OIL PUMP ASSY.

Oil Pan and Valve & Servo Body Removal—***Not necessary to remove other parts prior to this operation.*** Remove oil pan and gasket. On transmissions with first type oil screen, examine oil screen suction pipe impression on sealing ring in servo body recess (ring should show full impression of end of suction pipe indicating no air leakage at this point). Remove sealing ring. Disconnect valve operating rod from upper valve operating lever by inserting screwdriver blade through hole in case and pressing rod away from lever (ball stud on lever engages spring socket in rod). On transmissions with second type oil screen, lift screen away from suction pipe, remove suction pipe spring support and retaining spring, remove suction pipe and cork gasket from recess in servo body. Loosen all valve and servo body attaching screws slightly but **do not loosen slotted safety nuts on valve-to-servo body studs,** turn all screws out evenly to relieve anchor piston spring tension, pry assembly upward lightly to free gasket, push shift control valve and lower operating lever inward to align lever with transmission case opening, lift assembly off while supporting anchor piston to prevent it from falling out (slotted end of shift control valve has sharp edges and should be avoided when lifting on assembly). Remove gasket and check for evidence of oil leaks. Remove reverse band operating strut (support strut with finger extended through adjustment hole to prevent it falling into case, release strut by raising operating lever). *See Overhaul data for disassembly of valve & servo body.*

Reaction Shaft Flange, Front Oil Pump, and Accumulator Removal—***Converter & Bell Housing and Oil pan must be removed first but Valve & Servo Body need not be disturbed.*** Loosen **but do not remove** both accumulator body caps (will facilitate removal later). Remove three attaching capscrews from each accumulator body but **do not disturb stud nut.** Remove capscrews extending through front oil pump cover but **do not remove stud nuts** (first type has one capscrew and two stud nuts, later type has two capscrews and one stud nut). Tap lightly on rear of accumulator bodies with fiber hammer to loosen reaction shaft flange, remove assembly and gasket from case leaving input shaft in transmission. Examine gasket for uneven impression or other evidence of oil leaks.

Input Shaft, Clutch, & Low Range Band Removal: ***All parts listed in preceding removal sections must be removed first.*** Pull input shaft and clutch hub front thrustwasher out of transmission (thrustwasher will come out on shaft), then lift out clutch assem-

CONTINUED ON NEXT PAGE

BUICK DYNAFLOW DRIVE (C nt.)

bly. Use screwdriver to block low band anchor lever down, install Band Installing Clip J-2595 across band strut flanges to keep band compressed, release the lever and lift band out of case, lift out band struts (will drop down in case when band removed). Remove the low band anchor lever and operating lever by threading a ¼-20 capscrew in end of each lever shaft and pulling shafts out of case. *See Overhaul data for clutch disassembly.*

Torque Ball & Universal Joint Removal: ***Does not require removal of any other parts first.*** Remove torque ball rubber boot. Take out attaching bolts in thrust plate, remove thrust plate and gasket, torque ball inner and outer retainers, and paper adjusting shims. Remove speedometer driven gear and sleeve assembly. Lock drive shaft by engaging parking lock pawl (use shift lever to press forward on shift lever shaft while turning universal joint until pawl engages), remove universal joint bolt, lockwasher, and flat washer, pull universal joint using puller J-682A (40, 50), J-859A (70).

Rear Bearing Retainer & Parking Lock Ratchet Wheel Removal: ***Torque Ball, Universal Joint, and Oil Pan must be removed first.*** Disconnect valve operating rod from upper operating lever by inserting screwdriver through hole in case and pressing rod away from lever (ball stud on lever engages spring socket in rod). Remove universal joint retaining ring from slot in output shaft (use screwdriver and hammer to free ends of this lock ring). Take out retaining bolts and remove rear bearing retainer and gasket, check gasket for evidence of oil leakage. Take out ratchet wheel outer retaining ring (use snap ring pliers to free ring), slide ratchet wheel off output shaft, remove inner retaining ring. *See Overhaul data for disassembly of rear bearing retainer.*

Rear Oil Pump and Lubrication Oil Pressure Regulator Valve Removal: ***Rear Bearing Retainer (preceding) must be removed first.*** Take out retaining bolts and remove pump body and gears as an assembly (on first transmissions, separate cover and gasket used). Check gaskets for evidence of oil leakage. Remove pump drive key from shaft recess, remove rubber cushion located under drive key with a pointed tool. If possible, lift off rear pump plate and gasket (if plate sticks, tap plate out **after planetary gear set removed**). Check gasket for evidence of oil leakage. Remove lubrication pressure oil regulator valve seat from rear face of transmission case (use special drag link socket to turn valve seat out), remove valve and spring.

Planetary Gear Set, Reverse Ring Gear, and Reverse Brake Band Removal: ***All parts listed in preceding removal sections must be removed first.*** Pull planetary gear set out through front of transmission case. Lift out reverse ring gear and two planet carrier thrust washers (if these parts did not come out with planetary gear set). If rear oil pump plate and gasket not removed previously (see above), tap out with hammer handle inserted through front of case. Remove reverse band operating lever by threading a ¼"-20 capscrew into tapped hole in anchor shaft and pulling shaft out, then lift out lever. Rotate reverse band toward adjusting hole until anchor accessible, disengage and lift out anchor. Compress reverse band and install Band Installing Clip J-2595 across strut flanges to hold band compressed, lift band out. Remove reverse ring gear thrust washer from case. *See Overhaul data for disassembly of Planetary Gear Set.*

OVERHAUL

After all Converter and Transmission Major Components removed from transmission case, disassemble and overhaul these units as follows:

Converter Stators & Pump: Disassembly. Rotate primary and secondary stators in opposite directions while slowly pulling them apart (CAUTION—do not allow free-wheeling rollers and springs to fly out). Remove free-wheel race (may remain in either stator), remove roller spacer from secondary stator, remove all free-wheel rollers, springs, and spring cups, remove roller assembling washer from primary stator. Take out secondary pump retaining ring and free-wheel roller spacer, withdraw secondary pump from primary pump (rotate in clockwise direction to free the free-wheel rollers), remove free-wheel rollers, springs, and spring cups, lift out secondary pump thrust washer (will be found in primary pump or on secondary pump).

Inspection—Wash all parts in clean solvent and dry with air. Examine all parts for wear, scoring, nicks, or other damage. Replace input shaft pilot bearing if worn or rough. Remove small nicks on free-wheel rollers and race by stoning and polishing with crocus cloth. Remove nicks on pump and stator blades with a fine file.

Reassembly—Install secondary pump thrust-washer over primary pump hub, insert free-wheel springs and spring cups in secondary pump, install secondary pump over primary pump hub with springs outward (rotate pump clockwise to facilitate installation), compress springs with thin narrow tool and insert all free-wheel rollers. Install roller spacer and retaining ring to hold secondary pump in place. Check installation by rotating secondary pump (should turn freely in clockwise direction but lock in opposite direction). Install free-wheel springs, cups, and race in secondary stator (old race in same direction as before as indicated by wear pattern, new race either end first). Depress springs and cups with thin tool and install long rollers, then install roller spacer around race and over rollers.

CONTINUED ON NEXT PAGE

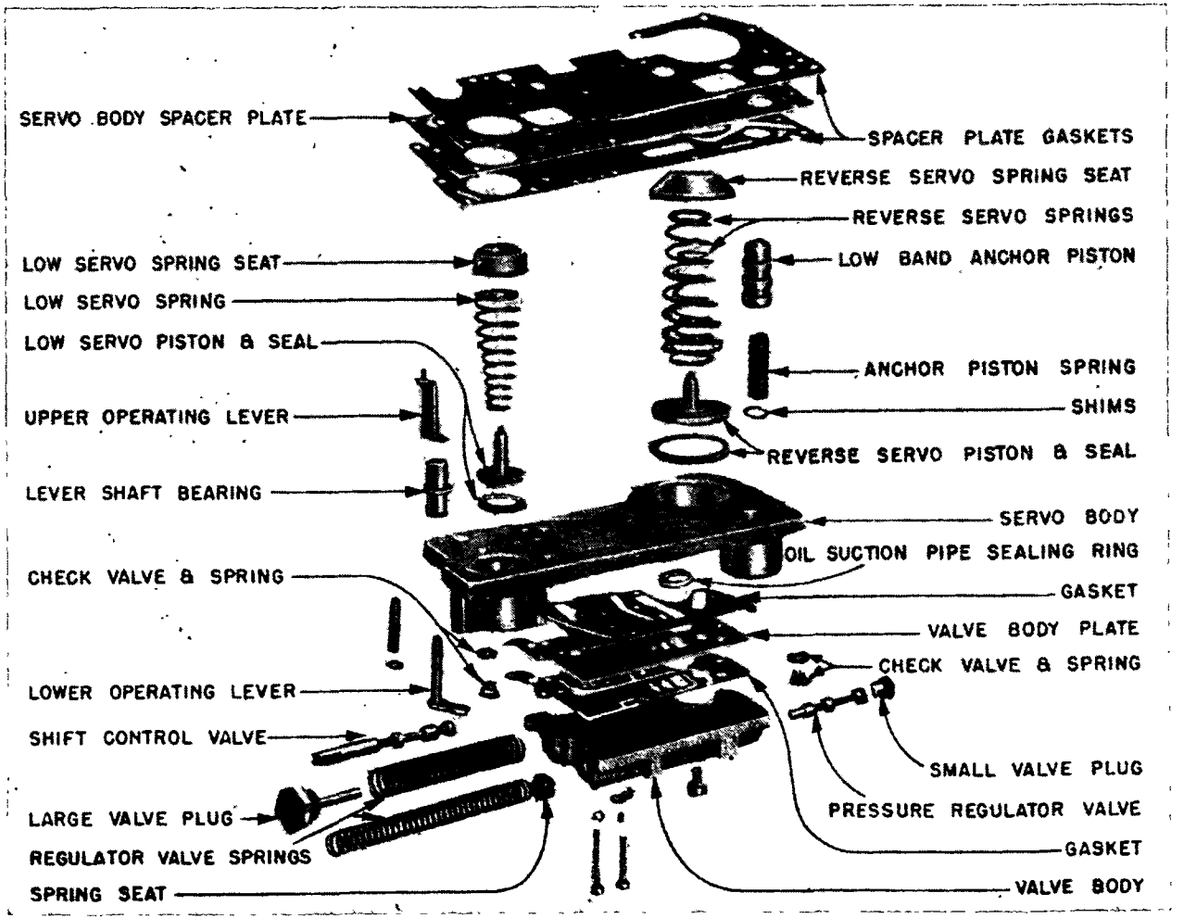

VALVE & SERVO B DY ASSY.

BUICK DYNAFLOW DRIVE (C nt.)

Install free-wheel springs and cups in primary stator, install Primary Stator Assembly Tool J-3081 (40, 50), J-2592 (70) in stator with three tool points between roller recesses, place roller assembly washer flat on tool. Depress springs and cups with thin tool, install **short** rollers (first roller next to one tool leg, next roller diametrically opposite, then alternate rollers until all installed). Remove assembly tool by turning tool until one end can be pushed into roller recess which will free other tool legs without disturbing assembling washer. Install primary stator on secondary stator by placing secondary stator on bench with rollers facing upwards, lower primary stator (rollers downward) squarely on secondary stator while twisting it in counter-clockwise direction.

Valve & Servo Bodies: Disassembly. ***On Trans. A-2999 and earlier, replace Valve & Servo Body with 2nd. type and install later type Anchor Piston also as described in Production Change notes.*** **Lift low band anchor piston,** spring, and shims from servo body (wrap piston in clean cloth to prevent damage). Remove safety nuts and washers from body studs, lift off valve body and gasket, examine gasket for evidence of oil leakage. Remove shift control valve from valve body and rear pump delivery check valve and spring from servo body. Remove large pressure regulator valve plug from valve body (CAUTION—hold plug to prevent it flying off due to heavy spring pressure), remove springs and spring seat. Remove small valve plug and lift out pressure regulator valve. Remove valve body plate and gasket, examine gasket for evidence of oil leakage. Lift out front pump delivery check valve and spring. Take off nut and lockwasher attaching upper and lower valve operating levers in servo body and remove levers. Use wooden block placed across low and reverse servo spring seats to hold them in place with springs compressed while taking out spacer plate attaching screws, carefully relieve spring pressure (CAUTION—use care not to spring spacer plate or allow servo springs to fly out), lift off spacer plate and gasket, examine gasket for evidence of oil leakage. Lift out low and reverse servo spring seats, springs, and pistons. On early transmissions where low band anchor piston retained by spacer plate, remove this piston, spring, and shims.

Inspection—Wash valve and servo bodies and parts with clean solvent, blow out all passages and dry parts with air. Inspect bodies for cracks, damaged gasket surfaces, and scored piston and valve cylinders. Inspect valves and pistons for nicks, scores, scratches, or rounded shoulders (edges must be sharp to keep out foreign material which might cause sticking). Replace worn or damaged piston seals.

►**Piston Seal Installation Caution**—Lip on seal must fit over SMALLER diameter land on piston.

Reassembly—Install low and reverse servo pistons in servo body (CAUTION—use care not to damage seals), check to see that pistons move freely in body. Install piston springs and spring seats (small end of low servo spring in groove in piston, large end of both reverse servo springs in grooves in piston). Use new spacer plate gasket, compress servo springs and tighten all spacer plate attaching screws uniformly. Check anchor piston for free movement (if spacer plate or gasket interfere, loosen all spacer plate screws and tap plate to provide uniform clearance around piston, retighten screws uniformly). Check anchor piston height with Anchor Piston Gauge J-2657 **and a .010" feeler gauge** (gauge made for first type pistons and is .010" too high). Distance from top face of spacer plate to top edge of top land on piston should be .080-.090" (equal to "Go" and "No Go" legs of gauge with .010" feeler between gauge and piston land). Adjust height by adding or removing shims between spring and piston (if height too great with all shims removed, grind off end of spring). Install both upper and lower operating levers with lower lever pointing to low servo cylinder and upper lever to reverse servo piston spring seat, tighten lever shaft nut to 5-7 ft. lbs. torque. Install front pump delivery check valve spring (large end down), and valve (ridged side up), then install valve body plate using new gasket and making sure that valve seats against plate (must not hang on gasket). Install pressure regulator spring seat, inner and outer springs, and valve plug in valve body, tighten plug to 20-25 ft. lbs. torque. Install pressure regulator valve (see that oil orifice in end land is clear and place this land outward), tighten valve plug to 20-25 ft. lbs. torque. Install shift control valve with slotted end of valve pointing toward large pressure regulator plug. Install rear pump delivery check valve (ridged face inward), and spring (large end upward). Install valve body on servo body using new gasket (CAUTION—see that pump delivery check valve spring below gasket), tighten all stud nuts to 11-15 ft. lbs. torque.

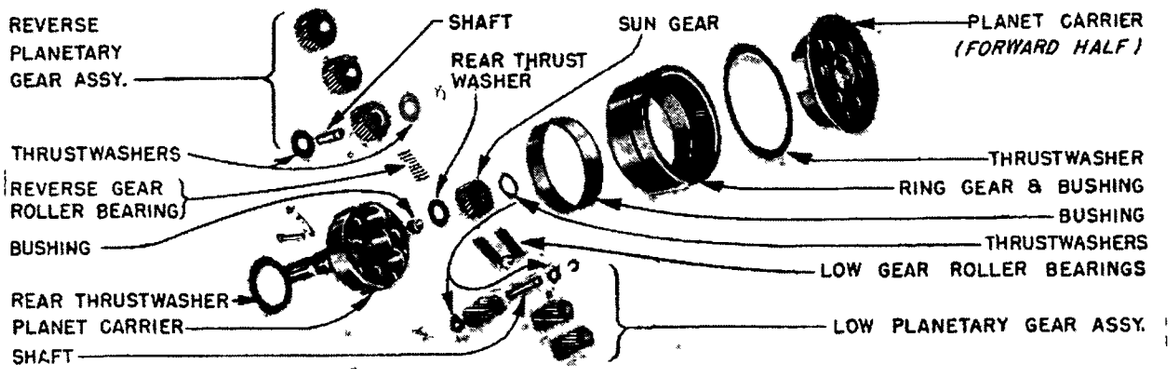

PLANETARY UNIT ASSY.

Oil Screen & Oil Pan: Mark first type screen (mounted in oil pan) to insure re-installation in same position. Clean screen and pan thoroughly, check for cracks or holes in screen and for bent pan flanges. When re-installing screen in pan, check oil suction pipe height by placing straightedge (Gauge J-2596 can be used) across pan flanges and measuring from lower edge of straightedge to top of pipe. If this distance not 17/32", adjust by bending screen mounting brackets.

Reaction Shaft Flange & Oil Pump: Disassembly. Remove high and low accumulators and gaskets, check gaskets for oil leakage. Check oil pump mounting nuts for tightness (loose nuts may have been causing oil leakage), remove nuts, take out pump body and gears (tap body lightly with soft hammer if necessary). Lift off pump cover and gasket, check gasket for evidence of oil leakage. Remove check ball from clutch feed passage in reaction flange if ball free to fall out (do not remove ball if retained by peened edges of hole).

Oil Pump Inspection & Repair—Clean pump parts with solvent and dry with air. Check pump gears and mounting faces of body and cover for excessive wear. Check front pump bushing for excessive wear or looseness which will require replacement of pump assembly (NOTE—Check flywheel and primary pump hub run-out and bell housing misalignment if bushing worn or loose). Check front oil pump seal and replace if damaged or any evidence of leakage noted. Drive out old seal, coat outside of new seal with Permatex #3, start seal in place with deep groove in retainer outward, tap seal into place with wood block and mallet. Check following clearances and replace pump parts if excessive:

Pump Gear Side Clearance—Place straightedge across face of pump body and gears. Clearance between face of gears and straightedge should be .001-.002" (check with feeler gauge).

Pump Gear Clearances—Check pump gears with feeler gauge between gear teeth and crescent while pressing gear away from crescent. Clearance should be .003-.006" (all driven gears), .006-.009" (front pump driving gear), .004-.006" (rear pump driving gear).

Pump Cover Gear Wear—Replace cover if gear bearing area scored or worn to depth of more than .001".

Reaction Shaft Flange Inspection—Clean flange in solvent, blow out all passages and dry with air. Check mounting surface of flange for low spots with straightedge (Gauge J-2596) and feeler gauge, replace if out more than .002". Inspect mating face of transmission case similarly and replace case if it cannot be trued up within .002". Check both surfaces for nicks and burrs, remove these with a mill file. Check bronze bushing on reaction flange rear hub and cast iron sleeve within hub, replace reaction shaft flange if these parts scored or worn excessively. Check oil sealing rings and replace if damaged (rings have interlocked ends and are released by

C NTINUED ON NEXT PA E

BUICK DYNAFLOW DRIVE (C nt.)

compressing ring and depressing one end while raising the other). Check all studs for tightness, replace if threads damaged or stripped (step studs furnished—can be installed by tapping out hole). When replacing oil pump attaching studs on transmission before No. A-86000 and B-29000, install later type square head bolts (see Production Change notes).

Reassembly—Install pump cover on reaction flange using new gasket (make certain that check ball in clutch feed passage first). Lubricate pump gears and install in pump body with **beveled side of driving gear outward** so that it will be against cover when pump installed (CAUTION—reversal of gear will cause severe damage to transmission). Install oil pump on reaction shaft flange, seating pump body squarely in recess in cover (first type) or engaging locating dowels in dowel holes (second type), use lockwashers under nuts, tighten nuts (or new type bolts) to 5 ft. lbs. torque in correct sequence (see note below), then fully tighten nuts to 25-30 ft. lbs. torque in same sequence, finally tighten cover attaching stud nut to 25-30 ft. lbs. torque.

►**Front Pump Tightening Sequence**—Tighten nuts in following order: Top, Bottom, Right Center, Left Upper Center, Right Lower Center, Left Lower Center, Right Upper Center.

High & Low Accumulators: Disassembly. ***See illustration & Production Change note for two types of Low Accumulator Springs and Cap used.*** Remove cap from accumulator (caps loosened during disassembly), lift out gasket, spring, and piston. Remove pipe plug in top of accumulator body, use screwdriver blade to depress dump valve and relieve spring pressure on valve retaining pin, remove pin, withdraw valve and spring.

Inspection—Clean all parts with solvent, blow out all passages and dry with air. Check parts for excessive wear, scoring, nicks, burrs, and other damage. Remove nicks and burrs from pistons and valves by stoning but **do not round off sharp edges of pistons and valves** (edges must be sharp to keep out foreign material which might cause sticking). Check mounting face of acumulator body for flatness with a straightedge (face can be trued up by using emery cloth on a surface plate but all traces of emery must be removed). Replace accumulator assembly if body, piston, or valves worn (these parts not furnished separately).

Reassembly—Lubricate all parts before installation. Install dump valve with narrow land outward, and piston with open end outward and using care not to force piston into place. Use new gasket under caps and tighten caps finger-tight (caps tightened to 40-50 ft. lbs. torque **after** reaction flange assembly re-installed in transmission).

Multiple Disc Clutch & Input Shaft: Disassembly. Remove retainer ring from reaction gear flange, use pointed tool to remove three flange driving keys. Lift out Low Range Reaction Gear, Thrustwasher, Clutch Hub, and all 10 Clutch Plates. Install Clutch Spring Compressor J-2590 in clutch drum placing slot in compressor ring over ends of spring seat retainer ring, compress spring sufficiently to remove retainer ring, release clutch spring pressure (CAUTION—use care that spring seat does not hang up in retainer ring groove in drum). Remove compressor, lift out spring seat and spring. Tap drum, open end down, on block of wood to dislodge clutch piston

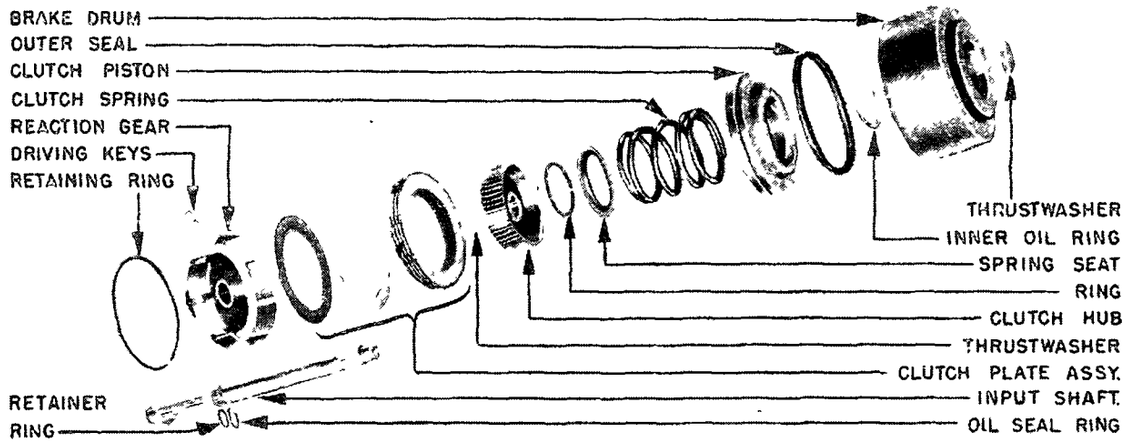

DIRECT DRIVE CLUTCH ASSY.

(CAUTION—if check ball in piston unseated during this operation, snap ball back in place).

Inspection—Wash parts in solvent and dry with air (CAUTION—use only gasoline or kerosene on clutch bands and plates—do not use chemical degreasers or commercial solvents). Inspect and replace all clutch plates which are worn, scored, burred, or warped (CAUTION—new plates must slide freely on clutch hub—tight plates will prevent full disengagement). Inspect oil seal ring on clutch hub and replace if damaged (ring has interlocked ends and is released by compressing ring and depressing one end while raising the other). Replace clutch piston outer seal if hardened, broken, or with turned lip (install new seal with lip extending over smaller diameter piston land). **See Piston Seal Note below.** Inspect Low Range Band and replace if worn smooth without visible grooves. Inspect oil seal ring and replace if damaged (same type ring with interlocked ends as used on clutch hub). Check to make sure retaining ring in place in shaft groove.

►**Piston Seal Note**—When replacing piston seal on transmission below No. A-3000, it will be necessary to **replace piston also** since only later type wider seal furnished for service (seal width increased from .104" to .113" and piston groove increased from .112" to .116").

Reassembly—Lubricate piston seal and inner surface of drum with light oil, install piston using extreme care not to distort or turn lip of seal. Top of piston should be approximately even with shoulder in drum when installed. Install clutch spring, use Compressor J-2590 to compress spring, install spring retaining ring in groove in drum, remove compressor. Place reaction gear on bench with flange upward and install all clutch parts in following order: Clutch Hub Thrustwasher, Clutch Hub (open end upward), and all clutch plates (see Clutch Plate Caution below). Bottom clutch plate should be internally splined (faced) type and top clutch plate externally splined (plain steel) type with the two types alternating in the assembly. Install drum and clutch piston assembly over reaction gear and clutch assembly with driving key recesses in drum and gear flange aligned. After drum pressed evenly in place, fully align driving key recesses by tapping reaction gear flange, install three driving keys and flange retainer ring.

Clutch Plate Caution—Externally splined (plain steel) clutch plates are concave or "dished" and **these plates must all be installed with "dished" face in same direction** (either up or down). Check each plate with a straightedge and stack plates with dished faces in the same direction before beginning installation.

NOTE—Internally splined (faced) clutch plates are flat and can be installed in either direction.

Rear Bearing Retainer, Universal Joint, & Torque Ball: Disassembly. Disconnect valve operating rod clevis from valve operating cross-shaft inside retainer housing (clevis pin on transmissions before No. C-1 & D-1, snap fastener on later cars), withdraw rod through forward end of housing. Disconnect parking lock operating rod from cross-shaft by unscrewing rod end from lever. Remove cross-shaft bearing using a box wrench (CAUTION—loose fitting socket or end wrench will distort bearing), remove cross-shaft. Remove parking lock pawl shaft by screwing ¼"-20 capscrew into shaft and pulling shaft out. Tap parking lock operating lever toward front of retainer (use long punch), remove operating lever shaft, operating lever, lever and pawl assembly, and apply spring from retainer. Use a socket or box wrench to remove converter pressure valve connector from side of bearing retainer (CAUTION—end wrench will distort connector).

Main Bearing Retainer Inspection—Wash all parts in solvent and dry with air. Check converter pressure valve for nicks, scoring, and wear. Check spring for distortion and special connector for distortion or stripped threads. Check parking brake pawl, pawl locking link, and ratchet wheel for worn

C NTINUED ON NEXT PA E

BUICK DYNAFLOW DRIVE (Cont.)

teeth, cracks, or other damage preventing positive locking. Check valve operating cross-shaft and bearing for wear, remove and discard rubber seal in bearing. Inspect ouput shaft bushing in retainer for wear scoring, check clearance by inserting output shaft in bushing. Clearance should be .001-.006". Replace bushing with Bushing Remover & Replacer Tool J-2997 (not necessary to ream new bushing).

Universal Joint Inspection—Check for wear and excessive play between spider pins and bushings (should be .002-.004"). Check yokes for wear on shaft splines. Front yoke must be tight fit on output shaft (play will allow "snap" between forward and reverse), rear yoke backlash on propeller shaft should be .0005-.0045". Rear yoke clearance in torque ball bushing should be .004-.006" and bearing surfaces must not be scored.

Torque Ball Inspection—Replace torque ball and retainers if bearing surfaces scored or pitted. Inspect oil seal and replace if worn (use seal which has been soaked in neatsfoot oil, press seal squarely into place until flush with torque ball flange and with feather edge of seal pointing into torque ball. Check universal rear yoke for excessive wear at point where seal bears.

Reassembly—Install converter pressure valve spring, valve (closed end outward), and special connector. Assemble locking pawl and lever assembly, apply spring, and parking lock operating lever & rod using a dummy shaft for this purpose (dummy shaft can be made up of 7/16" round stock, 1½" long, with ⅛" chamfer on one end), place this assembly in position in bearing retainer and install operating shaft through retainer and lever. Install parking lock pawl shaft through bearing retainer and lock pawl **with tapped end outward.** Install valve operating cross-shaft and cross-shaft bearing with **new rubber seal** in bearing (grooved side inward). Connect parking lock operating rod to cross-shaft lever (use lockwasher on threaded rod end) but do not connect valve operating rod and lever to cross-shaft until rear bearing retainer being assembled to transmission case.

Planetary Gear Set: Disassembly. Remove reverse ring front thrustwasher (not used on later transmissions beginning with No. A-42475 & B-1—see Production Change Notes for interchangeability of first and later type reverse gears). Take out three planet carrier screws and special lockwashers (use 7/32" Allen wrench), separate front and rear halves of planet carrier (hold carrier by output shaft, tap down on flange on front end). Lift out sun gear rear thrustwasher and reverse sun gear. Remove all planet pinion assemblies (three long low pinions, three short reverse pinions) by tapping shaft out of front half of carrier using care not to lose steel ball imbedded in end of each shaft to prevent shaft rotating in carrier. Disassemble pinion assemblies by removing thrustwashers and shafts from pinions and then taking out bearing rollers (long pinions have two sets of rollers separated by spacer, short pinions have one set of rollers).

Inspection: Wash all parts in solvent and dry with air. Inspect planet pinion shaft and rollers, replace if worn. Inspect all gear teeth for wear, remove all nicks and burrs by stoning. Replace bushing in rear end of planet carrier if worn or scored (use Bushing Remover J-3197, Bushing Replacer J-2996—new bushing may be installed either end first and need not be reamed). Inspect reverse band anchor for cracks. If anchor is first two-piece type, rework transmission case and install later forged type anchor (see Production Change notes). Replace reverse band if cracked or the lining worn smooth.

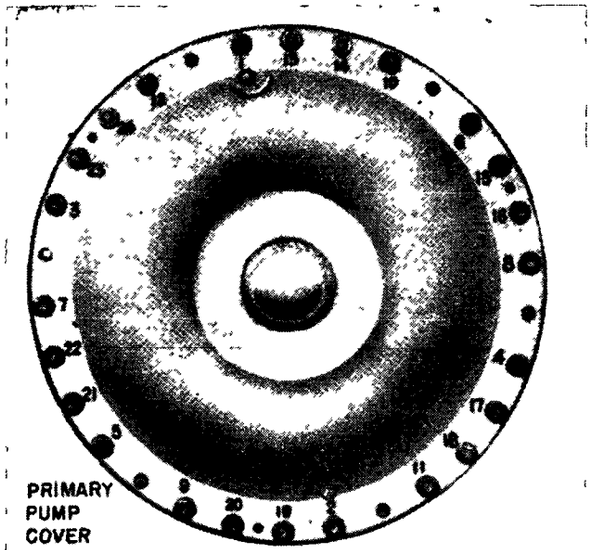

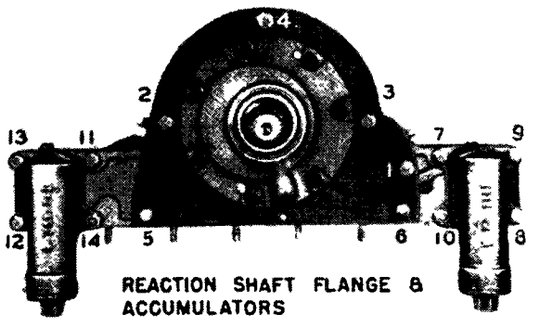

REACTION SHAFT FLANGE & ACCUMULATORS

BOLT TIGHTENING SEQUENCES

Reassembly—Assemble each planet pinion with its bearing rollers, thrust washers, and shaft (24 rollers in each reverse pinion, 20 rollers at each end of low pinion and separated by a spacer). Make certain that thrustwasher installed at each end of each pinion (lower washer against retaining ring on shaft, upper washer on outer end of shaft). Install planet pinion assemblies in carrier making certain that **steel ball imbedded in lower end of each shaft** (necessary to prevent shafts turning). Install reverse sun gear with bronze thrustwasher on top of gear, align assembly marks on both planet carrier halves when installing upper half (numbers stamped on dividing line during production), make certain that special lockwasher used on each carrier screw, tighten screws evenly to 25-30 ft. lbs. torque. Install reverse ring gear thrustwasher (first transmissions only—see Production Change notes for gears on which thrustwasher must be used), install reverse ring gear.

Flywheel & Primary Pump Run-out and Bell Housing Alignment Check: ***Make this check if front oil pump noisy, bushing and oil seal worn, or if oil leakage noted at Converter or Front Oil Pump Body.***

Flywheel Run-out—Remove all burrs from around drilled holes in face of flywheel, mount dial indicator on flywheel housing with strip of .005" shim stock between dial indicator and face of flywheel (clamp shim stock under a flywheel housing bolt so that it covers bolt holes and provides smooth surface for dial indicator pick-up. Turn flywheel **holding end thrust in one direction.** Run-out should not exceed .005". If excessive run-out cannot be corrected by tapping high side with mallet or by removing flywheel and cleaning up burrs at crankshaft flange mounting holes, install new flywheel and re-check run-out.

Primary Pump Hub Run-out—With converter primary pump and bell housing installed, mount dial indicator on bell housing so that it bears against primary pump hub. If run-out exceeds .007" when flywheel turned, mark flywheel and primary pump, remove and re-install pump at point 180° from first position. If pump run-out still exceeds .007", install new primary pump and recheck run-out. When position found where run-out is less than .007", mark flywheel and pump with paint and **align these marks when transmission is finally re-installed.**

Bell Housing Alignment—Mount dial indicator on oil pump driving lug on rear end of converter primary pump hub (CAUTION—do not clamp indicator on bearing surface) so that it bears against rear face of bell housing at 3¾" radius. Rotate flywheel **holding end thrust in one direction.** Run-out should not exceed .005". Mount dial indicator so as to bear against inner edge of pilot hole in bell housing and repeat test. Run-out should not exceed .004".

REASSEMBLY

After overhaul of Major Components, make certain that all parts absolutely clean, oil moving parts with 10-W engine oil before installation, use ALL NEW GASKETS & SEALS. Tighten all parts evenly to specified torque and in correct sequence (see illustrations). Proceed in reverse order of disassembly directions and note all of following points:

Planetary Gear Set Installation: After reverse ring gear thrustwasher and reverse band installed in case (with Installing Clip J-2595 on band), rotate band 45° toward servo opening, insert anchor and engage hooked end of band, then rotate assembly back into position. Position band operating lever in place with strut shoulder toward inside of case, install anchor shaft **with tapped end outward.** If installation correctly made, adjustment screw will be centered in servo opening (lever has offset end). See that planet carrier front (steel) thrustwasher installed on carrier with three tangs engaging holes in carrier, install rear (bronze) thrustwasher in case with three tangs engaging holes in case, then install planet carrier. If correctly installed, chamfer on output shaft journal will be flush with rear end of transmission case bushing.

Rear Oil Pump & Lubrication Oil Pressure Regulator Valve Installation: Install rear gasket (gasket with LARGER hole—do not confuse with cover gasket)

CONTINUED N NEXT PAGE

BUICK DYNAFLOW DRIVE (C nt.)

and plate on transmission case with bolt holes aligned, install drive key cushion and key in output shaft, then install driving gear to engage key (old gear should face in same direction as before, new gear with either face in). On first transmissions with separate cover, use cover gasket (with SMALLER hole) under cover. Tighten attaching bolts to 5 ft. lbs. torque in following sequence: Top, Bottom, Right, Left; then retighten bolts to 25-30 ft.lbs. torque in same sequence. Check pump for free operation by rotating output shaft. Install lubrication oil check valve assembly in case.

►*CAUTION—On first transmissions with separate pump cover, cover must be centered on body to allow rear bearing retainer to be installed.*

Parking Lock Ratchet Wheel & Rear Bearing Retainer: Make certain that retaining ring installed on each side of ratchet wheel on output shaft, insert valve operating rod through square hole in front face of bearing retainer and connect rod to cross-shaft lever, then install rear bearing retainer and gasket, tighten attaching bolts evenly to 35-40 ft.lbs.

Low Brake Band, Clutch, & Input Shaft Installation: Install low band operating lever and anchor lever with strut shoulders of levers toward inside of case and tapped ends of shaft outward (operating lever on side of case having large servo opening, anchor lever on opposite side). Install low band struts in ends of levers with notched ends together using two wooden blocks (1" x 2" x 3½") to support struts and band while assembling. Install low band with J-2595 band installing clip holding band compressed (CAUTION—used band must be installed in original position with point of heavier wear at anchor end, new band can be installed either way). With struts engaging ends of band (notches on struts must straddle pins on band), apply operating lever and remove clip. Place bronze reaction gear thrust-washer on sun gear, install clutch assembly (use wire hook to lift low band if clutch does not go down fully), place bronze thrustwasher on front face of clutch hub. Install input shaft (make certain that oil seal ring ends properly locked and that retaining ring installed in shaft groove). If shaft does not go down into place, make certain all four thrust-washers are properly centered.

Reaction Shaft Flange, Front Oil Pump, & Accumulator Installation: Install special guide pin (see Guide Pin Note below) in accumulator bolt hole at each end of flange on transmission case. Install new gasket over guide pins so that **all holes in gasket and case aligned** (CAUTION—gasket can be installed incorrectly). Check oil seal rings on reaction shaft flange for correct installation with ends locked, install flange using care not to damage these seal rings. Install low accumulator (on same side as low band operating lever), and high accumulator (opposite side) making certain that **holes in gasket and flange match.** Coat accumulator bolt threads lightly with Permatex #3, install bolts and nuts with lockwashers but **do not tighten,** remove guide pins. Install three special bolts (⅜"-16 x 2") with plain washers in #2, 3, 4 positions (see Tightening Sequence illustration) for assembly purposes (these bolts removed after assembly completed), install regular pump cover bolts, nuts, and lockwashers at positions #1, 5, 6 (CAUTION—Coat #5 bolt threads with Permatex #3). Tighten all bolts and nuts

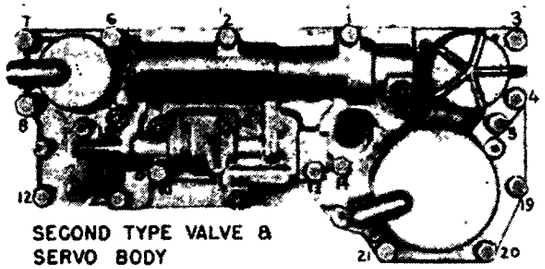

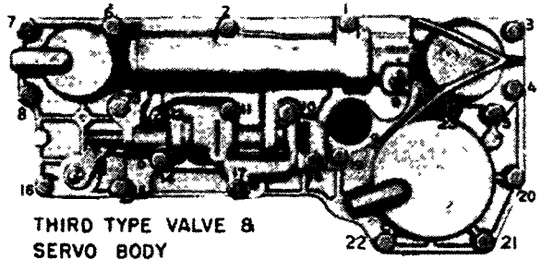

BOLT TIGHTENING SEQUENCES

(1-14) to 5 ft.lbs. torque in sequence shown in the illustration, then tighten #1 through #4 to 35-40 ft.lbs. and all remaining nuts and bolts to 20-25 ft.lbs. torque in the same sequence. Remove the three special bolts (#2, 3, 4). Tighten accumulator body caps to 40-50 ft.lbs. torque. Check flange gasket and trim lower edge flush with bottom face of transmission case if it projects.

►**Guide Pin Note**—These 5/16" guide pins can be made up from 5/16" round stock, 2½" long, with 5/16"-18 thread ½" long on one end and screwdriver slot on opposite end (chamfer this end slightly).

Valve & Servo Body Installation: With transmission inverted on bench, raise reverse band operating lever and insert strut between lever and end of band (CAUTION—rounded ends of strut must be against band and lever). After strut installed, **do not raise lever while installing valve and servo body** (will allow strut to fall into case). Install two 5/16" guide pins (same pins as used for reaction shaft flange—see above) in case to guide each end of servo body, install spacer plate gasket over guide pins. Install valve and servo body on case (hold anchor piston from falling out and move shift control valve and lower operating lever inward to align upper lever with opening in case). Engage control valve pin in slot in operating lever. Install correct length bolts and lockwashers in all mounting holes (see Tightening Sequence illustration for **each type** valve & servo body), remove guide pins. Install operating lever stop (used only on transmissions with first type oil screen). If second type oil screen used, install cork gasket, suction pipe, spring, and spring support (attached by valve body bolt and stud nut). Tighten all attaching bolts and nuts to 5 ft.lbs. torque in **correct sequence for particular type valve & servo body used** (see illustration), then fully tighten all ¼" bolts and nuts to 11-15 ft.lbs. and all 5/16" bolts to 15-20 ft.lbs. torque in same sequence (CAUTION—when tightening nuts and bolts adjacent to shift control valve, operate valve to make sure that it does not bind—if necessary, readjust bolts to lower torque limit to correct binding). Connect valve operating rod to upper operating lever by reaching into case with Linkage Hook-up Finger J-2591 and pulling upward on rod to engage ball in socket. Install shift lever on cross-shaft temporarily to check and adjust linkage. Valve linkage must operate freely. Move lever toward front of transmission to engage parking lock. Pawl must fully engage ratchet wheel and pawl lock must be in full contact with pawl in this position. Push shift control valve away from stop pin until all play in linkage is just taken up, check clearance between end of valve and stop pin with feeler gauge. Clearance should be .030-.040" and spring travel at end of shift lever should be 1/8-3/16". Adjust by turning clevis on end of valve operating rod. After adjusting, make certain clevis locknut tightened and that clevis pin secured with cotter pin (first type—snap fastener used on later transmissions).

Oil Pan Installation: If first type oil screen used, check suction pipe fit in servo body (see below). Coat area on transmission case where case cut away under oil pan gasket thinly with Permatex #3. Install oil pan with new gasket, use heavy duty internal-tooth lockwashers on oil pan bolts and stud nuts, tighten all bolts and nuts evenly to 15-18 ft.lbs.

Oil Screen Suction Pipe Check—*Required for first type oil screen only.* Install new sealing ring in servo body recess, coat upper edge of suction pipe with red lead, install oil pan with new gasket using two 5/16" guide pins (same pins used for reaction shaft flange installation—see above) in case to guide each end of pan. Install two oil pan bolts and two stud nuts, tighten securely. Remove pan and check pipe contact impression on sealing ring. Pipe must have full 100% contact to prevent air leaks at this point. Adjust by adjusting screen mounting brackets.

►*CAUTION—Do not change oil pipe height setting (17/32" below top edge of pan flange) when making above adjustments.*

Universal Joint Installation: Make certain that joint retaining ring fully seated in groove in output shaft before installing universal joint. If universal cannot be seated firmly against retaining ring by hand, use Replacer J-865 (40, 50), J-855 (70) to press universal on shaft. Tighten universal joint bolt to 30-35 ft.lbs.

►*CAUTION—Oil passage in bolt must be clear (for universal joint lubrication).*

Torque Ball Installation & Adjustment: *See "Torque Ball Adjustment" in Buick Special Data in Car Model Section for complete data and also note:*

Torque Ball Tightness—Pull of 10-35 ft.lbs. on spring scale attached 5 5/8" from rear end of universal joint should be required to move torque ball when all bolts are tight.

Torque Ball Shims—Shims furnished for tightness adjustment (above) in four thicknesses and marked by notches on outer edge as follows:

3 Notches .....000-.006"	1 Notch .....011-.013"
2 Notches .....009-.011"	None .....013-.015"

Bell Housing & Torque Converter Installation: *Converter clearance must be checked and adjusted during this procedure.*

1) See that front oil pump seal ring installed around pump body on pump cover. Install bell housing (use lockwashers on bolts & stud) coating threads of lower right bolt lightly with Permatex #3 (this bolt

CONTINUED ON NEXT PAGE

BUICK DYNAFLOW (C nt.)

hole opens into transmission), tighten all bolts evenly to 35-40 ft.lbs. torque.

2) Support primary pump cover firmly on blocks, install bearing plug of Converter Clearance Gauge J-3045 (40, 50), J-2596 (70) in pump cover ball bearing, place gauge bar across cover with stepped ends resting on flat surface of cover flange between bolt holes but **do not exert pressure on bar,** carefully measure clearance between gauging step at center of bar and top of plug with a feeler gauge. Rotate gauge bar 90° around pump cover and repeat clearance check. **Average** these two clearances and **make a record of this figure** for use in step (5) below.

3) Place stators and turbine in position in primary pump, place assembly on bench with turbine hub up. Place gauge bar on assembly with stepped ends resting on flat surface of pump flange between bolt holes, measure clearance between gauge step at center of bar and top edge of turbine hub, **make a record of this figure** for use in step (5) below.

4) Install primary and secondary pump assembly on transmission reaction shaft (rock pump to engage pump hub lugs with oil pump driving gear slots), install primary and secondary stator assembly on shaft, install retaining ring in shaft groove.

5) Add the clearance figures obtained in steps (2) and (3) above, select correct .018" shim washer and .060" spacer combination for this total clearance figure as listed in shim chart below, install washers and spacers on input shaft (this takes up clearance between turbine hub and bearing in cover).

Converter Clearance Shim Chart

Series 40, 50 (Gauge J-3045)

Total Clearance	.018" Washer	.060" Spacer
.000 to .016"	0	0
.017 to .034"	1	0
.035 to .052"	2	0
.053 to .059"	3	0
.060 to .077"	0	1
.078 to .095"	1	1
.096 to .113"	2	1
.114 to .131"	3	1
.132 to .137"	0	2

Series 70 (Gauge J-2596)

.075 to .081"	0	1
.082 to .099"	1	1
.100 to .117"	2	1
.118 to .135"	3	1
.136 to .153"	4	1
.154 to .171"	5	1

6) Install primary pump cover with new gasket. Insert pump cover bolts beginning with two holes in line with converter drain plugs and omitting bolt in every **fifth** hole clockwise around cover (CAUTION—install all bolts with nuts on pump cover side and use longer bolts through balance weights on pump flange). *See Primary Pump Cover & Flywheel Bolt Change data.*

7) Tighten all primary pump cover bolts to 5 ft.lbs. torque in correct sequence (see illustration) using a screwdriver blade between flat side of bolt head and primary pump to prevent bolt digging into pump, finally tighten all bolts to 30-35 ft.lbs. torque in same sequence. Install converter drain plugs.

Shift Lever Installation: Hold lever forward while tightening nut on cross-shaft to prevent damaging internal linkage.

Band Adjustment: Adjust Low and Reverse Bands. *See Band Adjustment.*

INSTALLATION IN CAR

After transmission and torque converter completely assembled, install unit in reverse order of removal procedure and note following important points:

Alignment of Parts—See that flywheel, converter primary pump, and converter cover positioned so that paint marks (as made for removal) will be aligned when transmission installed.

►*CAUTION—This alignment necessary to maintain converter assembly balance.*

Bell Housing Mounting Bolt Installation—Install the two bell housing dowel bolts first, then install remaining bolts and tighten evenly to 45-55 ft. lbs. torque. After car lowered to floor, install lockwasher and nut on right hand bell housing dowel bolt working from under the engine hood.

NOTE—Crankcase ventilator outlet pipe support is attached to lower right bolt. On cars where exhaust pipe hanger attached to lower left bolts, install and tighten regular bolt nuts, then use additional nuts to attach exhaust pipe hanger.

Transmission Support & Thrust Pad Installation & Adjustment—*See ENGINE MOUNTING in Buick Special Data.*

Converter Mounting Bolt Installation—Use correct type bolts and nuts (see Primary Pump Cover & Flywheel Bolt Change) and make certain that balance weights (if used) correctly located under bolt heads, tighten bolts to 25-30 ft. lbs. torque.

Final Road Test—After transmission installed and all adjustments made, road test car by driving approximately 20 miles with frequent starts and stops to duplicate heavy traffic conditions. After transmission thoroughly warmed up, check transmission and all oil lines and connections for leaks. If vibration noted due to unbalance of replacement parts, correct this condition as follows:

►**ENGINE & TRANSMISSION VIBRATION CORRECTION:** Remove bell housing cover and bell housing hand hole cover for access to converter primary pump-to-cover bolts, determine location and weight of necessary balance weights as follows:

1) Install one .060" balance weight (medium weight —see table) under heads of two primary pump-to-cover bolts which are immediately to left of one of the converter-to-flywheel bolts, tighten bolts to 25-30 ft. lbs. torque. Check vibration by running engine at critical speed with selector lever in Park "P" position. Stop engine and remove balance weight, retighten bolts to 25-30 ft. lbs. torque.

2) Repeat entire procedure (1 above) with balance weight installed under the two bolts immediately to left of **each of the six converter-to-flywheel bolts** to determine which location of the balance weight produces the least vibration.

3) At the location where least vibration noted (2 above), install balance weight of correct thickness to eliminate all vibration.

Part No.	Balance Weights	Thickness
1337196		.0345"
1337197		.060"
1337198		.120"

►*CAUTION*—On transmissions before Identification No. C-3 & D-3, 1 5/32" long converter-to-flywheel bolts may have to be substituted for shorter 15/16" long converter pump-to-cover bolts to enable thick balance weights to be installed.

4) After balance weights finally installed and cover bolts tightened to correct 25-30 ft. lbs. torque, spot the center of hole in each weight with 5/32" drill, then use No. 32 (.116") drill to drill hole ⅜" deep in pump flange. Install drive screw (No. 145067—⅜" long or No. 450543—½" long depending on weight thickness) in this hole to permanently attach weight to pump flange.

►*IF VIBRATION CAN NOT BE ELIMINATED by above procedure, replace new part which caused the unbalance and repeat balancing procedure.*

Shift Rod Installation—Check and adjust linkage when installing shift rod. See LINKAGE ADJUSTMENT.

Filling Transmission—See LUBRICATION.

Road Testing Car—After installation completed, road test car by driving approximately 20 MPH. with frequent starts and stops (heavy traffic conditions) to thoroughly warm up transmission. Check transmission carefully for oil leaks, recheck oil level.

BUICK, OLDSMOBILE, PONTIAC SYNCHRO-MESH

Buick Series 40 & 50 (1950-51)
Oldsmobile Six, Series 76 (1950)
Pontiac 6 & 8, All Models (1950-51)

►**OPTL. TRANSMISSION NOTE:** Dynaflow Drive (Buick), Hydra-Matic Drive (Oldsmobile & Pontiac) Optl. on these models. *See separate Dynaflow and Hydra-Matic Drive data.*

DESCRIPTION: Three-speed, constant-mesh, synchro-mesh type of same design used on corresponding previous models.

►*1950 PONTIAC 6 SECOND TO HIGH SHIFTING COMPLAINT:* Possibly caused by one of the following conditions. (1) Binding of clutch driven plate hub on splines of transmission main drive gear. (2) Clutch driven plate sticking to flywheel, caused by oil leak at rear main or transmission front seal. (3) Sticking of clutch plate due to vacuum between members. Correct this condition by filing grooves in clutch plate, using a 1950 Eight cylinder clutch plate as a guide.

REMOVAL OF TRANSMISSION: *See "Transmission" on car model page.*

DISASSEMBLY & REASSEMBLY: *See complete "1940-48 Buick-Oldsmobile-Pontiac Synchro-mesh" Transmission in previous release.*

CADILLAC & OLDSMOBILE 8 (SYNCHRO-MESH)

Cadillac V8 All Series (1950-51)
Oldsmobile 8, Series 88 & 98 (1950)
Oldsmobile 8, Series 88 & 98 (1951)—See Note.

►*1950 CADILLAC SYNCHRONIZER PRODUCTION CHANGE:* Cone angle on clutch shaft, 2nd speed gear, and synchronizer sliding coupling has been changed to eliminate gear clashing, beginning with Engine No. 2M-258 and 8M-203. *(CAUTION*—Do not use on earlier type transmissions unless all three parts are replaced). New parts can be identified as follows:
Clutch Shaft—No tool marks (in line with gear teeth) on contacting surface of cone.
Second Speed Gear—Machined groove cut in rear side of gear hub.
Synchronizer Coupling—Letter "A" stamped on synchronizing drum which contacts second speed gear.

►*NOTE*—1951 Oldsmobile 8, Series 88 & 98 transmission is similar to 1950 models, however, a DIFFERENT SHIFTING SYSTEM IS USED. (Same as used before 1950 models).

DESCRIPTION: Constant-mesh, synchro-mesh, all helical gears (low-reverse sliding gear). Main drive gear and shaft mounted on ball bearing in front of case which takes gear thrust. Mainshaft mounted on roller bearing at front end and roller bearing at rear end which takes gear thrust (shaft integral with mainshaft with additional ball bearings at rear end of extension housing). Second speed gear positioned on main shaft by shoulder at rear, thrust washer and snap ring at front. Counter gear cluster mounted on needle bearings on stationary shaft with thrust washer at each end. Gears are engaged by sliding clutch sleeve which is splined to shaft and engages clutch teeth inside synchronizer cones on the second speed and main drive gears.

TRANSMISSION REMOVAL: *See "Transmission" on car model page.*

DISASSEMBLY: Remove speedometer driven gear and sleeve assembly. Take out extension housing capscrews, remove housing and bushing assembly. Remove transmission lower cover (CAUTION—note location of two longer screws which lock countershaft and reverse idler shaft). Check cluster gear endplay with feeler gauge (for selection of correct thrustwashers when re-installing gears). Push countershaft out through rear of case with tool J-1184 leaving tool in cluster gear to retain bearing roller assembly. Remove cluster gear assembly and thrustwashers from case. Take out lockscrew on front of case, remove bearing lock ring from drive gear bearing outer race. Slide mainshaft and rear bearing out through rear of case as far as possible and tip assembly to one side to provide clearance. Tap drive gear and bearing back into transmission case and remove through opening in case (CAUTION—use care not to damage mainshaft assembly). Slide syncronizer unit off end of mainshaft and remove from case. Remove second speed gear lock ring from mainshaft groove, slide second speed gear, thrustwasher, and low speed gear off shaft while withdrawing mainshaft and rear bearing through rear of case. Lift out second speed gear and low speed gear (turn gear to free it from shifting lever shoe). To remove reverse idler gear, tap shaft out through back of case (or use tool J-1010 to push shaft out), lift out reverse idler gear and thrustwashers. Remove shifter levers from outer ends of shifter shafts, remove shifter lever shafts from within case.

►*CAUTION—Do not lose interlock springs, balls, or tubes when removing shifter shafts.*

REASSEMBLY: Reverse disassembly directions and note following data on sub-assemblies:

Mainshaft Rear Bearing: If bearing being replaced, use tool J-4390 to remove speedometer drive gear from shaft, remove bearing snap ring, remove bearing by jarring end of shaft on wood block or press bearing off in arbor press. Use tool J-4390 to press or tap new bearing against shoulder on shaft, install snap ring, then install speedometer drive gear similarly.

Mainshaft & Second Speed Gear Assembly. Cannot be installed as an assembly (to install, reverse disassembly directions above). See that second speed gear thrustwasher installed with key engaged in groove in shaft. Use new lock ring to retain second speed gear (install ring with J-1466A pliers). Low gear backlash on mainshaft splines should be .004-.007" (new), .010" (worn limit). Synchronizer hub backlash on mainshaft splines should be .0005-.001" (new), .003" (worn limit). Second speed gear clearance on mainshaft should be .001-.0015" (new), .00175" (worn limit), and endplay should be .004-.008" (new), .012" (worn limit).

Synchronizing Unit:—Should not be dismantled and cannot be serviced except for removal of detent springs (installed directly below each pin cam and accessible without dismantling unit). To remove detent spring, pry top edge of spring out of gear, push spring out of groove. Install new springs with long end of spring facing long end of gear, pull coupling up in place over springs.

Main Drive Gear & Clutch Shaft Bearing:—Bearing is press fit on shaft. To replace bearing, remove snap ring from shaft groove, jar end of shaft on wood block to remove bearing or press shaft off in arbor press. Press new bearing on shaft (CAUTION—press on inner race only), install snap ring. To remove mainshaft pilot bearing rollers from drive gear recess, remove and discard locking ring (use new locking ring when installing rollers).

Counter Gear Cluster:—Bearings are loose needle type and will fall out when shaft is removed. Use special loading tool J-1184, assemble bearings (rollers and retaining washer at each end) before installing counter gear. Leave tool in gear until it is pushed out by countershaft when shaft inserted. Install thrust washer at each end with steel spacer between thrust washer and case at rear. See that locking screw hole in countershaft lines up with cover screw hole so that shaft will be locked in place when cover screws installed and that new cork seal installed in groove near rear end of shaft to prevent oil leaks. Countergear endplay should be .005-.012" (new), .018" (worn limit).
NOTE—If endplay exceeds .018", install special oversize thrust washers.

Reverse Idler Gear:—Clearance on shaft should be .005-.010" (new), .015" (worn limit). When installing shaft, use special tool J-1010 to align front thrust washer (thrust washers are steel-backed, babbitt faced type), see that thrust washers installed at each end of shaft with prongs on washers engaging slots in case, use new cork seal in groove on rear end of shaft to prevent oil leaks, align locking screw hole in shaft and case (shaft locked by cover screw). Endplay should be .005-.010" (new), .015" (worn limit).

Extension Housing & Oil Seal (Cadillac): Install extension housing on transmission case and tighten screws securely. Then install oil seal in rear end of housing using tool J-1942. Extension housing bushings are not furnished separately and housing should be replaced if bushing requires replacing.

Extension Housing & Oil Seal (Oldsmobile): Bronze bushing in housing is furnished separately and can be replaced. Remove old bushing with tool J-1150-4, install new bushing using same tool and adapter J-1150-5 (stop guide which will position bushing correctly). **New bushing must be reamed** using Reamer Tool J-1450 and pilots J-1450-2 (rear) and J-1450-7 (front—this pilot must be tightened in place with clamps J-1450-8).

Oil Seal Replacement—Pry old seal out, start new seal squarely in bore by tapping lightly on outer edge, then drive seal into place with tool J-1354.

OLDSMOBILE 8 TRANSMISSION CONTROL

OLDSMOBILE 8, Series 88 & 98 (1950): ***Horizontal adjustment only required unless shift lever bowl disturbed.***
Horizontal Adjustment—With both rods disconnected at transmission case shift levers, move selector lever to neutral, lift lever up midway through crossover travel (shifter key will lock both lower shift levers), move shift lever so that knob approximately 1 3/16" above steering wheel horizontal center line, **hold lever in this position while adjusting.** Place both transmission case levers in neutral, adjust clevis on each rod so that rods can just be connected without disturbing lever positions, connect rods, check operation. If selector lever travel in neutral not smooth, or interference noted during the cross-over, re-check adjustment. Readjust either rod slightly to secure smooth operation.
Vertical Adjustment (when selector lever bowl removed or disturbed)—Disconnect both rods at shift levers on transmission case, allow lower (Low & Reverse) lever to swing counter-clockwise as far as possible (so that keyway out of alignment with key on shift tube). Remove horn button, steering wheel and direction signal switch assembly. Press shift lever tube assembly down until key contacts lower shift lever (pull up on selector lever in neutral), turn adjusting screw directly above selector lever in until it is tight against lever, then back screw off ½ turn and stake securely to prevent loosening in service.
NOTE—This setting will position lever for vertical clearance of approximately 3 21/32" from top edge of steering wheel to centerline of lever knob with lever at rest in neutral (1/64" clearance between key in shift tube and lower lever).

OLDSMOBILE 8, Series 88 & 98 (1951): Adjust shifting linkage as follows:
Shift Lever Adjustment—Place shift lever (on transmission) in neutral, and adjust clevis on shift rod to obtain a dimension of 1¼" from horizontal centerline of steering wheel to centerline of hand control lever knob (Hand control lever above steering wheel centerline).
Selector Lever Adjustment—With selector lever against rear stop and hand control lever in neutral, adjust selector rod clevis so that clevis pin will easily enter hole in lever on steering column. Remove this clevis pin and lengthen selector rod by turning clevis three full turns out, replace pin.

CHEVROLET POWERGLIDE

Deluxe Pass. Car Models (1950-51)

►CHANGES, CAUTIONS, CORRECTIONS

►**STARTING ENGINE BY PUSHING CAR:** Pushing recommended rather than towing car. Place selector lever in Neutral "N" position. When car reaches speed of approximately 15 MPH., move lever to "L" position to crank engine, then move lever to "N" position to warm up engine.
Wet or Icy Road Caution—Push car until speed of 20 MPH. reached, then place lever in "D" position to crank engine (do not use "L" position).

►**TRANSMISSION LOCKING OR SLIPPING OUT OF PARK "P" POSITION:** Correct as follows:
Locking in "P" Position—May be caused by slight depression at top of cam ramp on parking pawl which makes disengagement of cam roller difficult. Correct by disassembling transmission and replacing parking pawl. See Disassembly data.
Slipping out of "P" Position—May be caused by weak apply spring on parking lock lever shaft which allows detent pin to ride out of detent in parking lock pawl. Correct by disassembling transmission and replacing Parking Lock Lever Shaft & Apply Spring Assembly. See Disassembly data.

►**UNIVERSAL JOINT & PROPELLER SHAFT BUSHING LUBRICATION CAUTION ON POWERGLIDE CARS:** These parts lubricated from transmission output shaft through drilled passage in special universal joint retaining bolt No. 3690869 (bolt drilled completely through and has special flat head nail in hole to keep oil passage open). If universal or bushing lubrication trouble experienced, make certain that drilled bolt used and that nail is free in oil passage (1/32-1/16" clearance between head of nail and head of bolt).
CAUTION—Plain bolt used for transmission run-in at factory must be replaced by this special drilled bolt when transmission installed in car.

►**TRANSMISSION CASE PIPE PLUG CHANGE (To eliminate leakage and for easy removal in the field):** All square-head and slotted-head plugs in transmission case have been replaced by special hex-head dry seal plug No. 444613 (same type as used for fuel tank drain plug).

►**CONVERTER OIL LEAK (INTO TRANSMISSION HOUSING) CORRECTION:** Correct by replacing primary pump "O" ring seal. See Turbine Disassembly for data.
CAUTION—Primary pump and pump hub balanced as an assembly and must be marked first and reassembled to these marks to maintain balance.

►**POWERGLIDE OIL COOLER CAUTION:** Whenever broken parts or other foreign material found in transmission oil, or if transmission temperatures excessive, check oil cooler and lines for clogged passages. Replace cooler if circulation restricted.

►**PUMP CHECK VALVE CHANGE:** New valve assembly with changed contour of tab ends which cover pump inlet ports now used to insure proper installation of valve in body. This valve interchangeable with first type.
CAUTION—When installing check valve, see that tab end of valve does not extend beyond face of valve body (turn valve over and re-install, or grind edge of tab off slightly to prevent interference with valve body gasket).

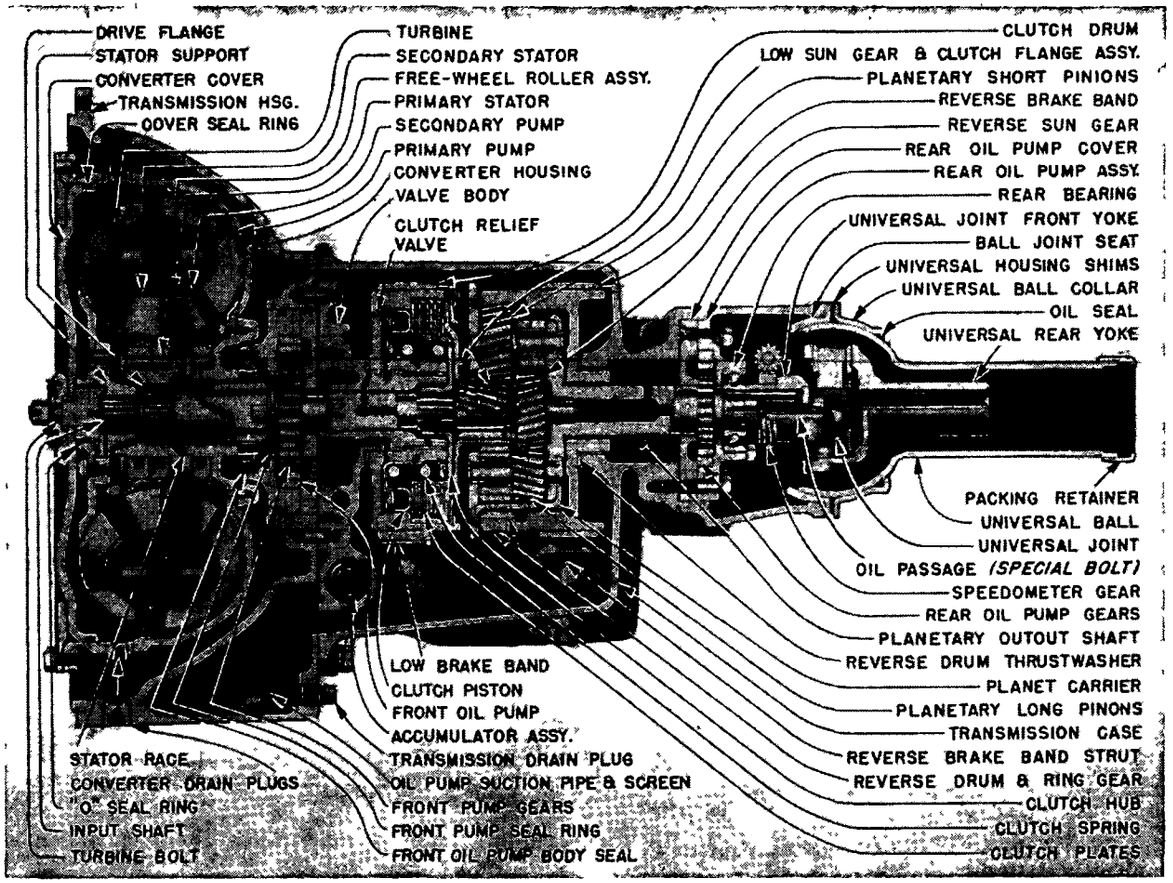

POWERGLIDE TRANSMISSION ASSEMBLY

►**REPLACEMENT LOW SERVO PISTON CAUTION:** Stamped metal piston, Part No. 3689820, furnished for replacement differs from regular cast iron production piston (cast iron piston has thicker head and requires larger piston return spring) and **special Piston Return Spring, Part No. 3689840, must be used with this stamped metal replacement piston.** Springs can be identified as follows:

Cast iron piston Return Spring——I.D. 59/64" and length of 5 coils.

Stamped metal piston Return Spring—I.D. 11/16" and length of 6 2/3 coils.

CAUTION—Piston return spring must be replaced with correct type when replacement piston installed to replace cast iron piston.

►**REPLACEMENT LOW & REVERSE BAND CAUTION:** New 1951 type Low & Reverse Band (heavier construction at slots on anchor end) furnished for replacement use on 1950-51 transmissions and new **1951 Low & Reverse Band Link and Low & Reverse Band Strut must be installed when new Low & Reverse band installed in 1950 transmissions.**

	1950 Prod. Part	①1950 Repl. Part
Band Assembly	3689821	3694493
Band Strut	3689827	3694491
Band Link	3689814	3694492

①—Same part as used in 1951 production.

CAUTION—All three parts above must be installed as a unit in 1950 transmissions.

►**TRANSMISSION GASKET CAUTION:** Gasket Kit 3695236 should be stored flat in warm dry place to insure gaskets fitting properly when installed. This is important for Servo Cover Gasket No. 3692966 and Valve Body Gasket No. 3693098 (cut from dry stock).

DESCRIPTION

Powerglide transmission is an automatic type and consists of a Torque Converter and a Planetary gear unit providing automatic operation in the Drive range, and additional Low, Reverse, Neutral, and Parking positions controlled by the operator.

Torque Converter: This assembly mounted in a housing which replaces the flywheel used on cars with conventional transmission and consists of the units

C NTINUED ON NEXT PAGE

CHEVROLET POWERGLIDE (C nt.)

listed below. Torque converter operation is entirely automatic and unit operates as a torque converter (for starting and low speed operation) or as a fluid coupling (at higher car speeds). The change from one type of operation to the other, and also the operational phases of each unit as described below, are governed entirely by the car operating conditions and do not occur simultaneously or at any set car speed.

Primary Pump (Driving Member): Mounted directly on engine crankshaft (bolted within turbine cover) and rotates at engine speed to transmit engine power to the turbine through the medium of the converter oil.

Turbine (Driven Member): In converter housing directly ahead of primary pump and driven by oil flow from the pump. Turbine hub is splined on input shaft through which power is transmitted into the planetary gear unit (for Low and Reverse operation), or directly through to the propeller shaft (for Drive Range operation).

Primary & Secondary Stators: Two similar units consisting of sets of curved vanes located between inner ends of turbine and secondary pump vanes. Each stator is mounted on a free-wheeling unit on a stationary stator support. Stators are locked or held stationary when unit is operating as a torque converter and act to redirect the oil flow from the turbine to the secondary pump thus supplying the torque multiplication. When the turbine speed becomes equal to the pump speed, stators rotate freely with the other members (rotation permitted by free-wheel units) without torque multiplication and the converter operates as a simple fluid coupling.

Secondary Pump: Consists of a set of curved vanes mounted on a free-wheel unit on the primary pump hub just ahead of the inner end of the primary pump vanes (between pump and primary stator). Secondary pump overruns the primary pump when unit operating as a torque converter but is locked to the primary pump and operates with it to provide greater pump capacity when unit operating as a fluid coupling.

Planetary Transmission: Consists of a double planetary gear set, controlling bands, servo mechanisms, and a multiple disc clutch all located within the transmission case.

Planetary Sun Gears: Two separate gears, Front (Low) Sun Gear and Rear (Reverse) Sun Gear are mounted in tandem within the planetary unit. Front sun gear is part of the clutch flange assembly (locked to input shaft when clutch engaged) and meshes with the short planetary pinions. Rear sun gear is splined on rear end of input shaft (acts as driving gear for Low & Reverse) and meshes with the long planetary pinions.

Planetary Pinions: Assembly consists of three short (Reverse) pinions and three long (Low) pinions mounted alternately in the Planet Carrier and all meshing together. The short Reverse Pinions mesh with the front Low Sun Gear and with the Reverse Ring Gear (internal gear controlled by the reverse brake band). The long Low Range Pinions mesh with the rear Reverse Sun Gear.

Multiple Disc Clutch & Low Range Drum: This assembly mounted on input shaft ahead of planetary pinion assembly. Clutch hub (inner member) is splined on input shaft and rotates with the shaft. Clutch drum (outer member) is locked to the front Low Sun Gear. Clutch is engaged by a hydraulic piston within the clutch drum and locks the Low Sun Gear to the input shaft. Clutch is disengaged by a spring and allows the sun gear to revolve freely (except when sun gear held stationary by application of the Low Brake Band). A relief valve is located in the front face of the clutch drum to insure complete drainage of oil from the clutch cylinder when clutch is disengaged. This valve is positively opened by the clutch piston in the disengaged position and is held closed by a spring in the engaged position.

Low Range Brake Band & Servo Mechanism: Band holds front sun gear stationary when it is applied on the clutch drum by the Low Servo which consists of a hydraulic piston linked to one end of the band by a strut. The opposite end of the band is held stationary by a strut and anchor which has an adjusting screw for band adjustment.

Reverse Brake Band & Servo Mechanism: Band holds the Reverse Ring Gear stationary when it is applied on the reverse drum (integral with the gear) by the Reverse Servo which consists of a hydraulic piston linked to the band by a lever-and-link mechanism. One end of the band is held stationary by a strut and anchor which has an adjusting screw for band adjustment.

Oil Pumps: Two pumps used to supply oil pressure for hydraulic controls, oil supply for torque converter and transmission lubrication.

Front Pump—Internal-external gear type mounted between the transmission and torque converter and driven directly by the converter primary pump through a tongue-and-slot coupling. This pump has relatively large capacity and begins to operate as soon as the engine started, supplying oil to the torque converter and for transmission lubrication. It also supplies oil pressure for hydraulic controls during idling, low speed, and reverse operation.

Rear Pump—Internal-external gear type mounted in rear end of transmission case and driven by the output shaft. Pump operates whenever rear wheels are turning and supplies oil pressure for transmission operation when pushing car to start engine. At car speeds above 15 MPH., rear pump normally supplies all oil pressure for transmission operation and front pump idles (pressure regulator valve bypasses front pump output by connecting output line to pump suction line).

Hydraulic Controls: Consist of manual and automatic Control Valves, Accumulator, and Vacuum & Hydraulic Modulator.

Manual Valve—Linked to transmission selector lever on steering column and controls oil pressure supply to servo mechanisms, multiple disc clutch, and modulator as required for operation in each range (Park, N, D, L, R depending on selector lever position).

Pressure Regulator Valve—Spring-loaded type with extended stem contacting modulator lever. Valve has following functions: 1) Controls maximum pressure of both oil pumps (and allows front pump to by-pass when rear oil pump takes over), 2) Controls oil pressure requirements for transmission operation (modulator acting on this valve "boosts" oil pressure as required for Low & Reverse Band application), 3) Supplies oil to Converter and prevents oil draining out of converter case when engine not running.

Vacuum & Hydraulic Modulator—Vacuum modulator consists of a spring-loaded, diaphragm type vacuum unit mounted on the transmission case with the vacuum chamber connected to the engine intake manifold. Diaphragm is connected to a lever bearing on the pressure regulator valve stem so that diaphragm movement tends to modify the action of the regulator valve springs in accordance with load requirements which affect engine vacuum. With light loads and high vacuum, no pressure is

CONTINUED ON NEXT PAGE

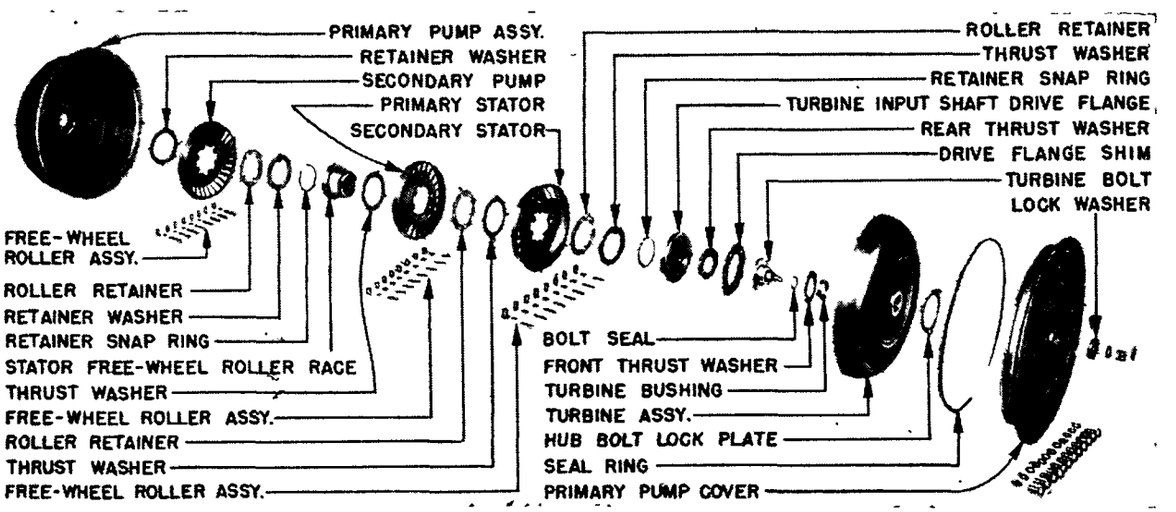

TORQUE C NVERTER

CHEVROLET POWERGLIDE (C nt.)

exerted on the valve stem and valve is controlled entirely by the valve springs. With increase in load and decrease in manifold vacuum, modulator lever exerts pressure on the valve stem and assists the valve springs which has the effect of increasing hydraulic pressures within the transmission. Hydraulic modulator is built-in the vacuum modulator diaphragm plunger (hydraulic plunger and body assembly). Oil pressure expands this plunger and body assembly and increases modulator pressure when selector lever placed in Low or Reverse position (manual valve directs oil pressure to hydraulic modulator).

Accumulator—Consists of a surge chamber in the hydraulic line between the manual valve and the hydraulic modulator. Accumulator cushions the band application when shifting into Low or Reverse.

Pump Check Valve—This valve controls oil delivery from each pump and prevents oil from the operating pump bleeding back through the pump that is not operating (cuts off rear pump at low speed and when operating in reverse).

By-Pass & Lubrication Check Valve—By-pass valve controls oil flow from converter to oil cooler. With oil temperature below 240°F., by-pass valve remains open so that oil goes directly to transmission lubrication system (through lubrication check valve) without passing through oil cooler. When oil temperature reaches 240°F., by-pass valve closes and oil flows through oil cooler and then returns to the lubrication check valve for use in the transmission lubrication system.

Parking Mechanism: Consists of a pawl controlled by the transmission selector lever which engages gear teeth cut on edge of planet carrier and locks the planet carrier to the transmission case when selector lever placed in Park position.

OPERATION

Powerglide Torque Converter automatically provides a torque multiplication ranging from 2.2-1 (maximum for starting and acceleration) to 1-1 (normal driving range with torque converter acting as a fluid coupling). This torque multiplication is supplemented by the planetary gears when selector lever placed in Low or Reverse range (gears provide 1.82-1 reduction). Transmission operation in each range is as follows:

Neutral "N" Position—Multiple disc clutch, Low Brake Band, and Reverse Brake Band are all released so that gears are free to spin. Drive is not transmitted through transmission and this "N" position can be used to start and warm up engine with car standing still.

Low Range "L" Position—Multiple Disc Clutch is released and Low Brake Band is applied so that the front sun gear is held stationary. Power is transmitted through the reverse sun gear to the planetary pinions which "walk" around the stationary sun gear. This results in a 1.82-1 gear reduction between the input and output shafts.

Drive Range "D" Position—Multiple Disc Clutch is engaged and both brake bands are released. In this position both of the sun gears are locked to the input shaft so that the entire planetary gear system is locked and revolves as a unit. Power is then transmitted straight through from input shaft to output shaft with no gear reduction.

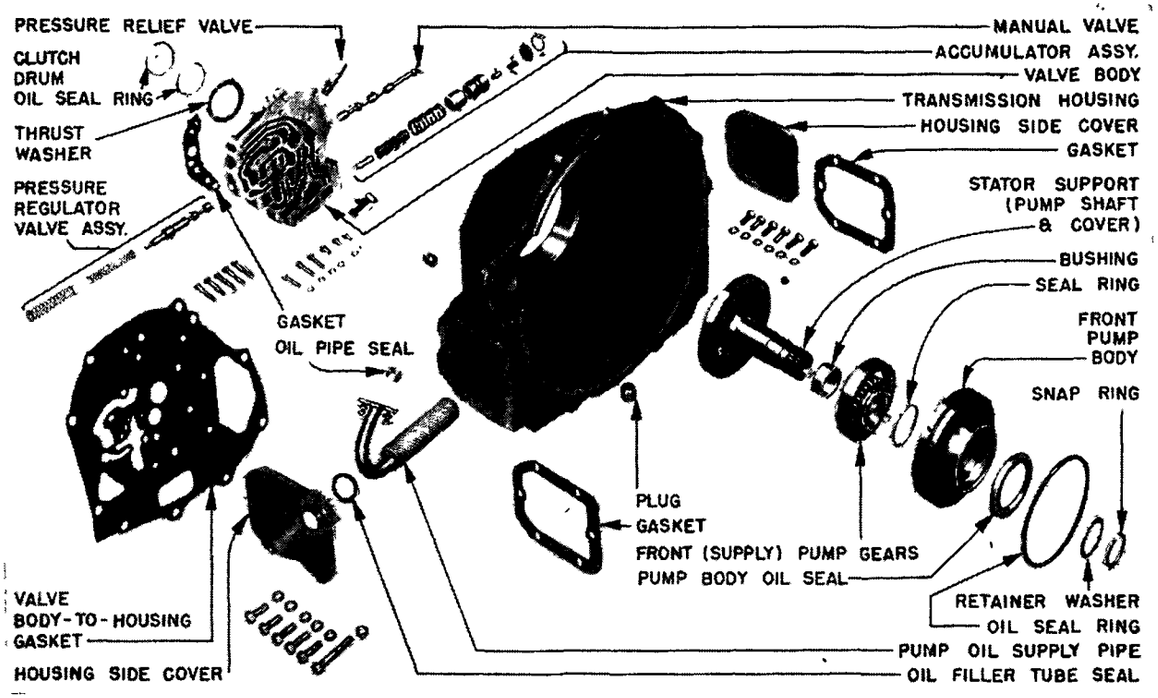

TURBINE HOUSING, FRONT OIL PUMP, & VALVE BODY ASSEMBLY

Reverse Range "R" Position—Multiple Disc Clutch and Low Brake band are released, Reverse Brake Band is applied. Power is transmitted through the Reverse Sun Gear to the planetary pinions which "walk" around the stationary Reverse Ring Gear. This results in reverse rotation and a 1.82-1 gear reduction between the input and output shafts.

Parking "Park" Position—Parking pawl engages gear teeth cut on edge of planet carrier and locks carrier to transmission case. Planet carrier is integral with output shaft so that shaft and rear wheels are held stationary.

CAUTION—Park position of selector lever should never be engaged when car is in motion.

LUBRICATION

The transmission oil level should be checked at 1000 mile intervals and oil should be changed at 15,000 mile intervals (Oil Suction Screen should be removed and cleaned at oil-change time).

Recommended Oil—Use only Automatic Transmission Oil Type "A" (in sealed containers with "AQ-ATF" number).

Capacity—Approximately 9 qts.

Checking Oil Level—Check only with transmission warm and engine idling with selector lever in "N" position (NOTE—this procedure supersedes original recommendation that selector lever be placed in "D" drive position). Check with dipstick located on right side in engine compartment. Add fluid only when level falls to "ADD ONE QUART" mark on dipstick, fill only to "FULL" mark on stick.

►***CAUTION—High fluid level (above FULL mark) will cause foaming and loss of fluid.***

►**Low Oil Level**—May be caused by external leaks or leak at universal joint seal allowing fluid to leak back into rear axle (can be checked by noting if rear axle lubricant level too high). Correct by replacing universal joint seal.

Draining & Refilling—Warm up transmission. Drain transmission by removing drain plug in rear face of transmission housing under case. On first cars with converter lubrication check valve, fold back floor mat, remove toe pan plate, turn engine over until one converter drain plug is at top, remove this plug (later cars have only one drain plug). Then drain converter by taking out plug on bottom of housing, turning converter until drain plug visible through hole, and removing drain plug. Clean dirt away from filler tube housing cover on right side of transmission, remove this side cover, remove oil suction screen and seal and clean thoroughly in cleaning solvent. Replace screen and side cover using **new pipe seal and gasket.** Replace all drain plugs. Install 3 qts. new fluid through filler tube (Oil Filler Tube and Funnel J-4264 will facilitate filling, since this assembly vented and transmission case is not). Start engine and allow it to idle with selector lever in N (Neutral), add additional 6 qts. fluid. Allow engine to idle for several moments. Check oil level (see above), make certain that oil level is up to "FULL" mark on dipstick.

C NTINUED N NEXT PA E

CHEVROLET POWERGLIDE (C nt.)

LINKAGE ADJUSTMENT

LINKAGE ADJUSTMENT: Make following adjustments in order:

Control Lever Clearance: 3/32-1/8" clearance between lower edge of control lever and top upper support cover. To adjust, remove screws attaching upper support to mast jacket, screw support up or down, as necessary, until clearance correct, re-install support screws.

Control Lever Position: 1 1/2" ± 5/16" between upper face of control lever knob and lower face of steering wheel with selector lever in "R" reverse position. To adjust, loosen lower support clamp bolts, move lower support up or down, as necessary. Tighten clamp bolts.

Reverse Stop Clearance: 3/64" clearance between Reverse Stop on control shaft lower support and lower lever with selector lever in "R" reverse position. To adjust, loosen control rod swivel, make certain that manual control valve lever on left side of transmission is in top detent position, and selector lever in "R" position, move selector lever as necessary for correct clearance, then tighten control rod swivel.

Neutral Safety Switch: Located on bracket on lower end of lower support assembly on steering column. To adjust, loosen two switch assembly mounting screws. Place selector lever in neutral, make certain that switch clip is over flats on end of shifter shaft. Insert locating pin through holes in switch mounting bracket and locating plate. Tighten switch mounting screws, remove locating pin.

BAND ADJUSTMENT

BAND ADJUSTMENT: Not ordinarily required in service. Use adjusting tool J-4277 (combination screwdriver and locknut wrench) to adjust bands.

►*REASSEMBLY NOTE—See Reassembly data for band setting when assembling transmission.*

Low Servo Band—Adjusting screw located on left side of transmission case. Tighten adjusting screw until band is tight, then **back screw off 3 turns,** tighten locknut.

Reverse Band—Adjusting screw located on right side of case **under servo cover.** With servo cover removed, turn adjusting screw in slowly and **at the same time** check endplay in linkage by pushing and pulling on servo return spring directly below adjusting screw. Continue to turn screw in until endplay is just taken up (at this point band must be free on drum so that drum can be easily rotated by hand), then **back adjusting screw off ⅛-¼ turn** and tighten locknut.

►*CAUTION—Above procedure supersedes previous instructions and will provide sensitive adjustment without possibility of false settings.*

TROUBLE SHOOTING

EXCESSIVE SLIPPAGE (High engine speed in relation to car speed, poor acceleration, or engine runs away on turns).

1) In all Speed Ranges—Low oil level. Incorrect control linkage adjustment. Air leak in oil pump suction pipe. Low front oil pump pressure.

2) In Drive Range—Incorrect control linkage adjustment. Damaged or leaking clutch piston seal (worn or burned clutch plates resulting from partially engaged clutch).

3) In Low Range—Incorrect control linkage adjustment. Low Band out of adjustment. Sticking accumulator valve, modulator lever, or modulator valve. Damaged or worn low servo piston ring (resulting in poor band application).

CAR CREEPS (Forward or Backward).

1) With Control Lever in Neutral—Incorrect control linkage adjustment. Clutch piston vent valve stuck closed. Clutch plates sticking or incorrectly assembled (not "stacked" in correct order).

2) Creeps forward with Control Lever in Reverse or backward with Lever in Low—Incorrect control linkage adjustment.

CAR WILL NOT MOVE (Rear Wheels may be locked or free).

1) With Control Lever in any range (rear wheels free). If this occurs at other times than after reversing car, see causes listed under EXCESSIVE SLIPPAGE above. If this occurs only after reversing car (indicating loss of front pump pressure) check: Rear pump air leakage into front pump suction line (causing front pump to lose its prime). Rear pump gasket leakage. Front pump clearance excessive.

2) With Control Lever in any range (rear wheels locked). Parking pawl lock engaged. Broken parts in transmission. Parking brake applied.

3) With Control Lever in Drive Range (rear wheels free). If engine runs away and transmission is hot, check for: Low radiator water level, clogged oil cooler, sticking thermostatic valve, or dragging Low Range Band (causing over-expansion of clutch parts due to excessive heat).

SHIFTS ARE ROUGH.

1) Low-to-Drive Shift (car in motion). Incorrect Low Band adjustment. Clutch plates worn or binding. Modulator control lever or piston sticking (will cause excessive pressures). Accumulator dump valve orifice plugged.

If engine speeds up during this shift—Check for incorrect low band adjustment and worn or binding clutch plates.

2) Drive-to-Low Shift. Incorrect Low Band adjustment. Accumulator piston stuck closed. Modulator control lever or piston stuck (will cause excessive pressure).

3) Neutral-to-Reverse. Incorrect reverse band adjustment. Accumulator piston stuck closed. Modulator control lever or piston stuck (will cause excessive pressure).

CHATTERS WHEN STARTING.

1) In Low Range. Incorrect Low Band adjustment. Worn or rough band, scored drum. Clutch not disengaging properly due to distorted or binding plates, sticking clutch piston, or sticking piston vent valve.

2) In Drive Range. Incorrect Low Band or Reverse Band adjustment. Bands worn or rough, drums scored.

3) In Reverse Range. Incorrect Reverse Band adjustment. Worn or rough band, scored drum. Reverse ring gear and drum bushing worn or damaged.

REVERSE OPERATION JERKY OR DRAGGING.

1) Clutch plates are incorrectly assembled (not "stacked" properly) or sticking. Clutch piston vent valve stuck closed.

NOISE IN TRANSMISSION.

1) Buzzing Noise (All Ranges). Low oil level. Pump gear interference with crescent in pump. Pump check valve not seating.

2) Ringing Noise in Converter. Low oil level. Air leak in pump suction line (pipe not seated properly) resulting in low oil level in converter. Pressure regulator valve stuck (closing converter inlet port). Leakage in oil line between front pump and regulator valve.

3) Clicking Noise. Incorrect manual linkage adjustment (causing interference between parking lock pawl and gear).

4) Whining Noise. Transmission gear teeth worn. Pump gear clearance excessive or pump gear bushings worn.

FUEL CONSUMPTION EXCESSIVE.

1) Transmission Causes. Converter stator or secondary pump free-wheeling cams and roller incorrectly

CONTINUED N NEXT PA E

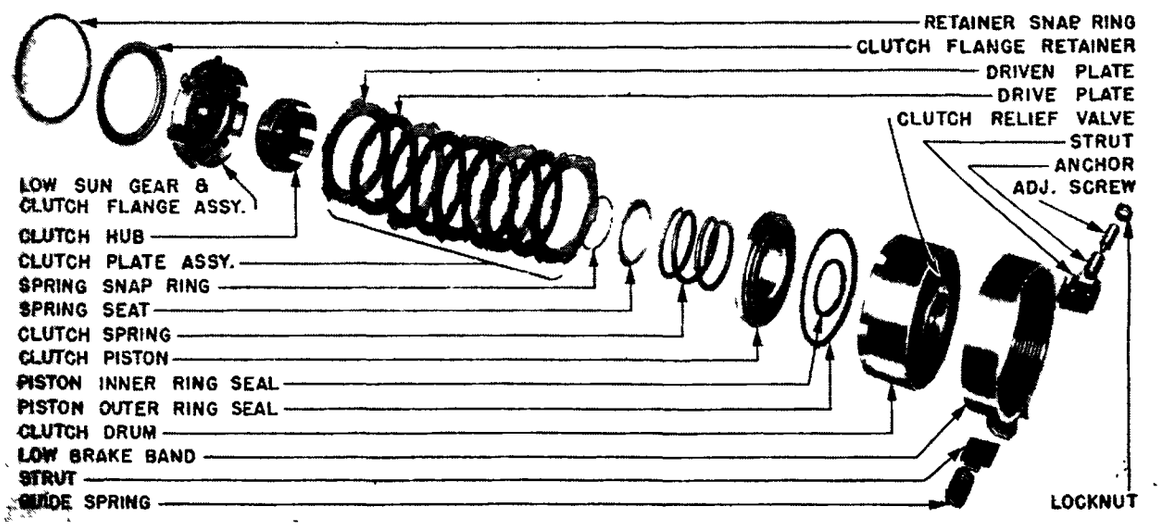

MULTIPLE DISC CLUTCH & L W BAND ASSEMBLY

CHEVROLET POWERGLIDE (C nt.)

assembled. Converter secondary pump locked to primary pump hub. Clutch piston vent valve stuck open.

TESTING

►*TESTING CAUTION*—Transmission oil level must be checked and corrected (see LUBRICATION) and transmission must be warmed up before tests are made.

Warming Up Transmission: Transmission must be warmed up by road driving or in the shop exactly as follows before checking for oil leaks or trouble.

Road Warm-Up—Drive car approximately 10 miles with frequent starts and stops to approximate heavy-traffic conditions.

Shop Warm-Up—Set hand brake tight to hold car, place selector lever in "D" range, start engine and run for 15 minutes at 750 RPM. At end of 15 minutes, transmission will be warmed up sufficiently for testing regardless of initial temperature.

►*NOTE—Above supersedes original procedures for shop warm-up of transmission.*

Stall Test: Connect tachometer to engine, apply brakes to lock rear wheels. Test as follows:

►*CAUTION—Do not test longer than 10 seconds in each range, or converter overheating will result.*

Place selector lever in each range in turn as noted below. Depress accelerator and run engine speed up as high as it will go. If engine speed exceeds 1560-1610 RPM, slippage is indicated as follows:

Selector Lever in "D" Range—Clutch slippage.

Selector Lever in "L" Range—Low Band slippage.

Selector Lever in "R" Range—Reverse Band slippage.

Engine Speed Low (During Stall Test)—If several hundred RPM., less than minimum stall speed, secondary pump may be frozen on its hub.

Oil Pressure Gauge Checks: Use Gauge J-4268 to check all operating pressures in transmission. Remove floor mat and transmission hole cover, clean all dirt away from pressure take-off points.

►*CAUTION—Transmission must be warmed up before tests made (see above).*

Low Range Servo—Connect gauge to low servo apply outlet (lower front of servo cover in right side and pointing slightly forward). Use tachometer to set engine idle speed at 400-425 RPM. At this speed, pressure should be 40-45 lbs. (selector lever in "D" range), and 125-150 lbs. (selector lever in "L" range). Apply brakes to lock rear wheels, increase engine speed to stall-speed of 1560-1610 RPM. At this speed, pressure should be 75-100 lbs. although 70 lbs. satisfactory (selector lever in "D" range) and 160-200 lbs. (selector lever in "L" range). Shut off engine and remove gauge.

Reverse Servo—Connect gauge to reverse servo apply outlet (bottom of transmission case at right rear). Idle engine at 400-425 RPM. At this speed, pressure should be 125-150 lbs. (selector lever in "R" range). Apply brakes to lock rear wheels, increase engine speed to stall-speed of 1560-1610 RPM. At this speed pressure should be 160-200 lbs. (selector lever in "R" range). Shut off engine, remove gauge.

Rear Oil Pump—Connect gauge at rear pump outlet (on rear of transmission case to right of universal ball housing). Block rear wheels up clear of floor. Start engine, place selector lever in "D" range, increase engine speed to 30 MPH on speedometer. Rear pump pressure should be 50-75 lbs. Place selector lever in "L" position. Pressure should be 140-180 lbs.

Road Tests: When down shifting from "D" to "L" range at 40 MPH (fully released accelerator), definite tire chirp should be noted. If chirp not noted, or if engine runs away, Low Accumulator or Modulator lines are faulty.

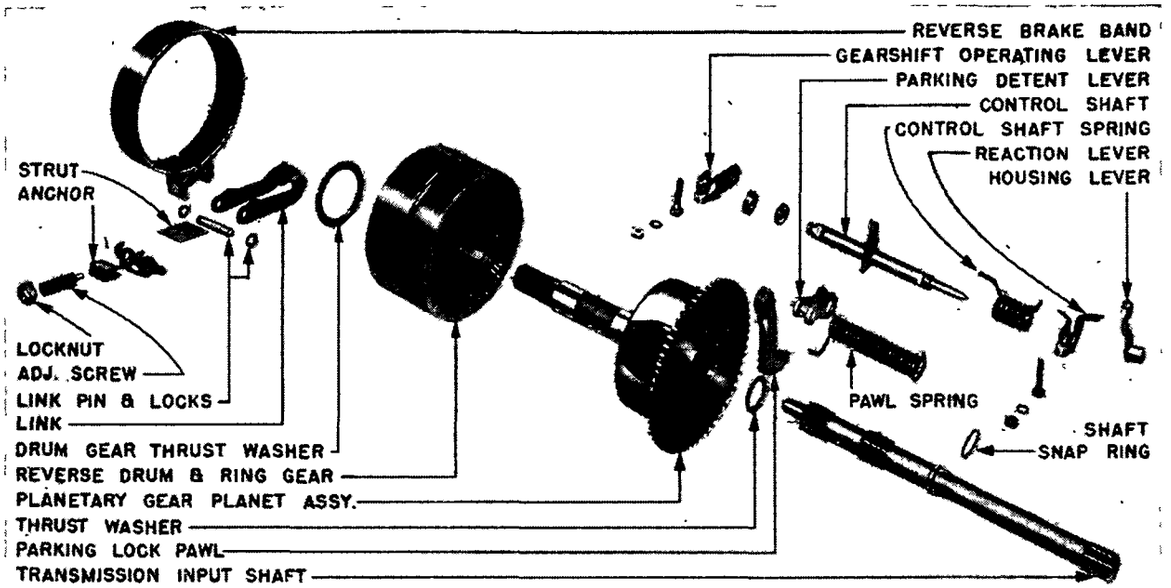

PLANET CARRIER ASSEMBLY, REVERSE BAND & PARKING LOCK MECHANISM

REMOVAL FROM CAR

Transmission & Torque Converter are removed as an assembly:

1) Raise car and support securely on jack stands. Remove floor mat and transmission cover plate, remove toe pan plate.

2) Take out three top turbine housing attaching bolts (through toe pan hole).

3) Disconnect speedomter cable at transmission, and hand brake rod from cross-shaft. Drop cross-shaft, brake cables, and spring.

4) Free universal joint collar by taking out cap screws on back of transmission case, slide ball and collar back on shaft. Support propeller shaft with jack, take out front universal trunnion bearing cap screws, split universal, lower front end of propeller shaft.

5) Take out two upper right transmission-to-converter housing bolts, install lift sling (J-4262) and attach cable of J-4279 hoist positioned in front compartment. Attach lift chain (part of hoist assembly) to two top universal joint collar screws at rear of transmission.

6) Drain transmission and turbine (see Draining instructions). Disconnect transmission oil cooler lines and vacuum line.

7) Take out two lower turbine housing attaching bolts. Remove flywheel cover and flywheel underpan extension.

8) Remove all spark plugs. Disconnect exhaust pipe at manifold, disconnect muffler support. Tie exhaust pipe and muffler to left frame side member out of the way.

9) Disconnect both short and long shift rods at transmission levers, tie long shift rod up out of the way. Remove bell crank lever and stud from transmission case.

10) Remove all six flywheel-to-converter bolts working through housing opening on left side (use tool J-4281 to turn engine crankshaft and align each bolt with housing opening for access).

11) Clean all dirt from around filler tube and dipstick fitting on transmission side cover, remove housing bolt holding filler tube, remove filler tube and dip stick.

►*CAUTION—Cover the filler tube opening with masking tape or plug with rubber stopper to keep out dirt.*

12) Support engine with jack under oil pan. Remove transmission-to-rear support bolts, remove the transmission support.

13) Take out all remaining turbine housing bolts (lift or lower engine, as necessary, for access to bolts).

14) Move transmission straight back to clear flywheel pilot from flywheel.

►*CAUTION—Use extreme care not to damage flywheel pilot.*

15) Lower transmission slightly, lift rear end as far as possible and secure by hooking lift chain in notch on back of hoist. Use pry bar between transmission and right side of floor opening to clear serv cover bolts. Repeat this process (lowering front end f transmission and lifting rear end) until lubrication by-pass valve plug clears floor opening.

16) Lower transmission and remove from beneath car.

►*CAUTION—Transmission must not be allowed to strike against flywheel.*

CONTINUED N NEXT PA E

CHEVROLET POWERGLIDE (C nt.)

DISASSEMBLY—TRANSMISSION

►**DISASSEMBLY & REASSEMBLY CAUTION:** ***CLEANLINESS IS EXTREMELY IMPORTANT when opening up transmission. Thoroughly CLEAN exterior of case first, CLEAN each part as removed with cleaning solvent or gasoline and dry with air—do not use wiping cloths which will leave lint on parts. Store all parts in clean storage bins.***

DISASSEMBLY OF TRANSMISSION (Into Major Units): With transmission on bench (fixture J-3361 recommended for holding transmission), remove all units from transmission case as follows:

1) Take out right side cover attaching bolts, remove side cover and oil suction screen.

2) Install locking strap on turbine to hold unit stationary (install bolt in one flywheel attaching hole to hold strap). Remove all turbine cover bolts. Thread three 10/32x2" T-screws (part of J-3387 Pilot Stud Set) into three tapped holes in turbine cover to loosen cover, remove cover and turbine assembly. Remove primary and secondary stators as a unit, test for slippage of free-wheel clutches by rotating units by hand (should rotate freely in one direction but lock when turned in opposite direction). Check secondary pump free-wheeling clutch for slippage in same manner as stators. Take out converter retaining ring and washer. Slide primary pump from stator support and examine pump hub for bearing surface damage.

3) Take out Modulator assembly attaching bolts on right side of case, lift Modulator assembly off.

►***CAUTION—Use care that hydraulic plunger and body do not fall out of modulator when it is removed.***

4) Loosen all servo cover bolts slightly and break servo cover loose if it sticks to case (reverse servo spring and pressure regulator spring bear against cover) **using care not to allow cover to tip** which may damage or break tip of pressure regulator valve. Use guide bolts to maintain cover alignment or turn all cover bolts out evenly while exerting pressure on cover, then lift cover and gasket straight off until cover clears tip of pressure regulator valve. Remove reverse servo spring and pressure regulator springs, lift regulator valve out.

►***CAUTION—Handle valve carefully to prevent damage and store it by itself to avoid nicking or scratching of the polished surfaces.***

5) Loosen low band adjusting screw locknut and tighten adjusting screw until low band grips clutch assembly to hold it in place. Take out transmission-to-turbine housing bolts, separate turbine housing from transmission.

6) Remove manual valve from valve body on rear of turbine housing, remove manual valve lever, remove bronze thrustwasher from valve body delivery sleeve. Take out bolts attaching valve body to turbine housing and also pump-to-valve body bolts, remove valve body and gasket.

►***CAUTION—Handle manual valve carefully to prevent damage and store it by itself to avoid nicking or scratching of the polished surfaces.***

7) Remove front pump from turbine housing using J-4263 pump driver tool.

8) Loosen low servo band adjusting screw to free clutch assembly, lift input shaft and clutch assembly out of transmission case.

9) Back off low servo band adjusting screw until band is free, lift out servo band and strut assembly, remove low servo piston and release spring.

10) Take out universal joint retainer bolt on rear end of output shaft, remove lockwasher and plain washer, slide universal joint yoke off shaft. Use soft hammer to tap output shaft forward, remove planet carrier assembly from transmission. Lift out reverse brake drum.

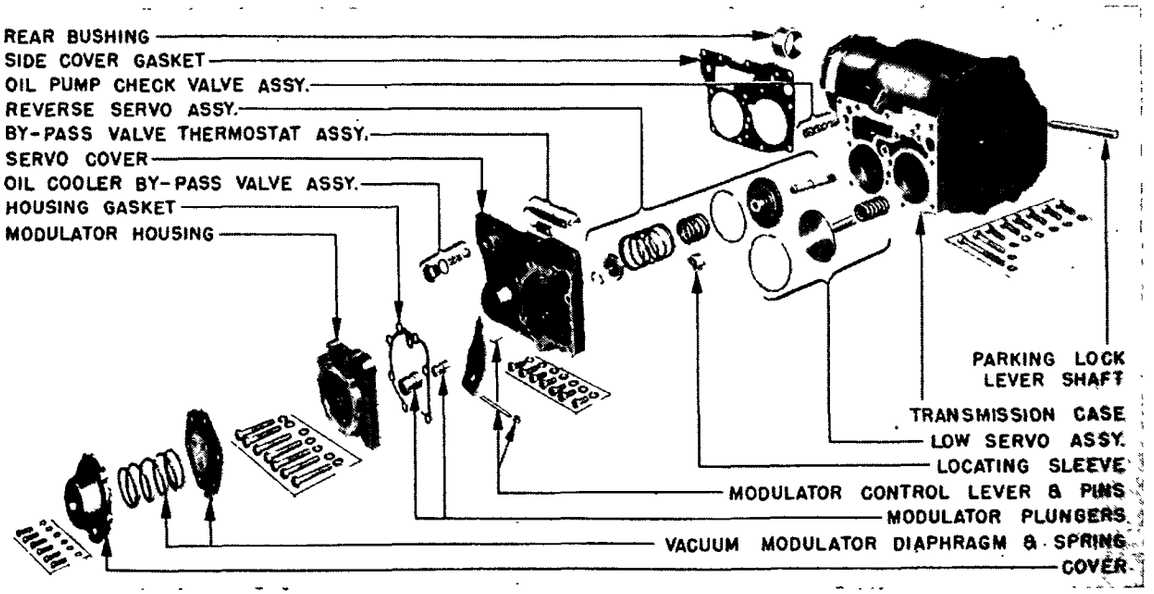

TRANSMISSION CASE, SERV C VER, & M DULAT R ASSEMBLY

11) Loosen reverse servo band locknut, back off adjusting screw until band is free, remove reverse servo band and servo piston.

12) Take out rear pump attaching screws, remove rear pump assembly and gasket.

13) Use parking lock pawl spring tool J-3383 to rotate spring and unhook end from case. Remove spring and parking lock pawl, lever shaft and apply spring assembly.

14) Remove all lubrication check valve parts: sleeve, ball seat, ball, spring.

►***For disassembly of all above units, see OVERHAUL data***

OVERHAUL

►**"O" RING SEAL CAUTION:** ***These seals must be discarded when removed and a new seal installed exactly as directed below.*** "O" ring rubber seals are special design and are installed with side clearance in ring groove so that oil pressure on seal deforms the rubber and extrudes a portion of the rubber into the clearance space between the mating parts to provide a positive seal against loss of oil pressure. Seals **must not be re-used.**

"O" Ring Seal Installation—Make certain that parts are clean and that burrs and sharp edges are removed. Seal must be free of any twists (place ring on flat surface and allow it to assume natural position) and **must not be twisted during installation.** Engage one side of ring in groove, pull other side straight back until it can be fitted in groove without twisting. Work ring against trailing edge of groove (last side to enter when parts assembled) using flat tool entered between ring and leading edge of groove to move ring without twisting. Lubricate "0" ring and parts with transmission oil.

Converter Primary Pump: Disassembly. Remove stator race thrust snap ring (use snap ring pliers KMO-410), remove thrustwasher. Rotate secondary pump clockwise to release free-wheel clutch, withdraw secondary pump. Remove free-wheel cam roller and spring retainer, remove cam rollers, spring retainers, springs, and thrustwasher.

Inspection—Wash all parts in cleaning solvent and dry with air. Inspect cam rollers and inner and outer primary pump hubs for scoring or galling. Check roller springs for distortion, spring retainers for wear or damage, pump vanes for looseness.

Reassembly—Install free-wheel cam roller and spring retainer with prongs to rear. Assemble rollers, spring retainers, and springs in cam pockets with spring retainer curvature fitting curvature of unit, then install cam thrustwasher (CAUTION—hold retainer on opposite side to prevent its being pushed out of position). Use loading tool J-3362 to install secondary pump on primary pump hub. Check installation (should turn freely in clockwise direction and lock in opposite direction).

Primary & Secondary Stators: Disassembly. Remove stator race snap ring and thrustwasher, rotate secondary stator clockwise and withdraw from stator race, then remove stator race similarly from primary stator (CAUTION—use care not to lose cam rollers and springs). Remove cam roller and spring retainer from stators, remove cam rollers, springs, and spring retainers.

Inspection—Wash all parts in solvent and dry with air. Check cam rollers and stator hub for galling or scoring, check roller springs and retainers for

CONTINUED N NEXT PA E

CHEVROLET POWERGLIDE (C nt.)

distortion or damage. Check stators for loose or damaged vanes.

Reassembly—Install cam rollers and spring retainer in secondary stator (this retainer has LONG tabs), then install cam rollers, springs, and spring retainers with retainer curvature corresponding to hub curvature. Install cam thrustwasher. Repeat this entire procedure for primary stator. Place loading tool J-3362 on stator race, slide primary stator over tool and onto race with thrustwasher down, **rotating stator clockwise during installation** to prevent pushing cam rollers out of position; install secondary stator, with thrustwasher down, following same procedure. Install bronze thrustwasher and snap ring. Check assembly by rotating stators. Both stators should turn freely on race in clockwise direction but lock in opposite direction.

Converter Turbine: Disassembly. Remove "O" seal ring from cover. Remove turbine bolt nut and washers, lift cover off bolt. Bend down lockplate ears and remove three turbine hub capscrews. Lift out turbine hub and bolt, remove bolt and thrustwashers from hub. Remove "O" seal ring from bolt.

Inspection—Discard seal rings, wash all parts in solvent and dry with air. Check bolt, hub and thrustwasher for scoring or wear. Check turbine for loose or damaged vanes. Check turbine hub bushing for excessive wear and replace bushing as follows: **Turbine Hub Bushing Replacement**—Precision type bushing, No. 3689929, furnished for service. Press old bushing out of turbine hub with tool J-4375, use same tool set to install new bushing. Support turbine on special collar of tool set (has three locating pins to center turbine) on arbor press with turbine vanes downward, place new bushing on small end of driver and press bushing in place in turbine hub. New bushing need not be reamed.

Reassembly—Install new "O" seal on turbine bolt (see "O" ring installation note). Install **thick** thrustwasher (next to turbine—lugs engage holes in turbine), turbine bolt, thin thrustwasher, and turbine hub (with three dowels engaging holes in turbine) in this order. Install new lockplate and three turbine hub capscrews, tighten screws securely and lock in place. Check and adjust turbine bolt endplay (see data below). Install turbine cover, assemble slotted washer (nibs engaging locating hole in pilot), flat washer, and nut on turbine bolt. Tighten nut securely and lock with cotter key. Install new "O" seal ring on turbine cover.

Turbine Bolt Endplay Adjustment—Check endplay with dial indicator mounted on end of bolt after bolt assembled in turbine. Endplay should be .002-.016". Adjust by installing shims (No. 3691922—.014", No. 3691923—.019") between turbine and input shaft drive flange, as required, for this endplay.

►***CAUTION—Transmissions beginning No. HT-19226-B24 do not use above shims but endplay limits for these transmissions are also .002-.016".***

Multiple Disc Clutch: Disassembly. Remove clutch flange retainer ring and retainer, lift out low sun gear and clutch flange assembly, clutch hub, and all clutch plates. Place clutch drum in arbor press (CAUTION—use care not to damage pressure relief valve on end of drum), use tool J-3364 to compress clutch spring, remove clutch spring snap ring (use KMO-410 snap ring pliers), release spring pressure, remove spring seat and spring. Remove clutch piston by rapping drum face down on wood block. Remove piston outer seal ring from piston and inner seal ring from clutch drum hub.

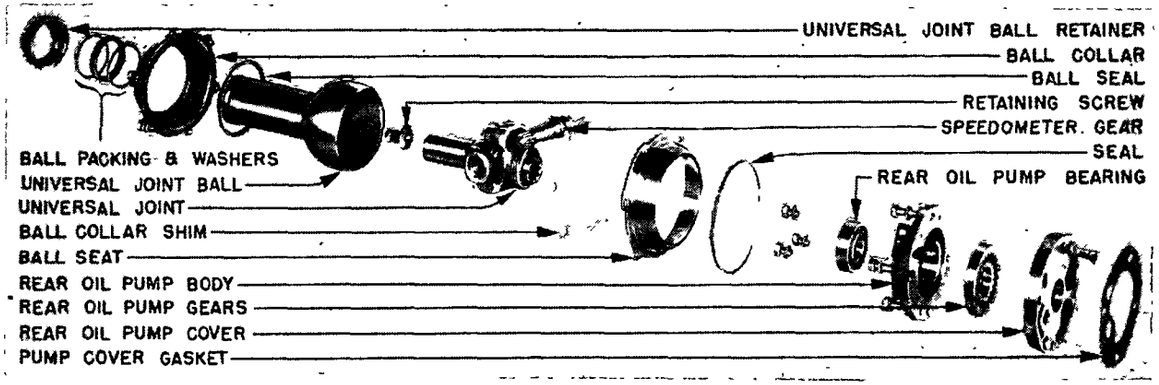

REAR OIL PUMP, UNIVERSAL JOINT, & JOINT BALL

Inspection—Wash all parts in solvent and dry with air. Inspect drum brake band surface for excessive scoring or burring, and drum bushing for scoring or wear. Examine clutch hub and clutch flange for galling (see Note below for installation of special thrustwasher to prevent this trouble developing in service). Slight galling can be cleaned up with emery cloth. See that clutch flange has no radial play in drum slots and that plates are free fit over clutch hub and in clutch flange. Check clutch plates for burning and wear. Check low sun gear for nicked, burred, or scored teeth. Check relief valve for free operation. Replace damaged valve by cutting off rivet heads with a sharp chisel, driving out old rivets with a small punch, and installing new valve with two new rivets (CAUTION—support drum securely while peening over rivets).

►**Clutch Hub Thrustwasher Note**—New .020" thick spring-steel thrustwasher, No. 3694444, now installed between clutch hub and clutch flange to prevent galling. This washer can be installed on earlier transmissions if galling noted at this point when transmission being overhauled. Install washer with four equally spaced tabs engage slots in clutch hub which will prevent washer riding on mainshaft.

Reassembly—Install new outer ring seal on piston (lip of seal toward oil pressure end of piston) and new inner ring seal on clutch drum inner hub (lip in toward bottom of clutch chamber). Lubricate inner diameter of clutch drum and seals with transmission oil, install piston (CAUTION—use feeler gauge to seat outer seal ring in drum without damaging seal lip). Install clutch spring and spring seat, compress spring with J-3364 tool in arbor press (CAUTION—see that spring seat does not hang up in snap ring groove), install snap ring. Place clutch hub in clutch flange (open side up), install all clutch plates, starting with steel plate with concave or "dished" side down toward clutch flange, and alternating steel and composition plates. Install clutch drum assembly over flange assembly, invert and install clutch flange retainer and retainer ring. Check endplay with feeler gauge inserted in drive slot in drum below clutch flange drive lug. Maximum allowable endplay is .013" and is adjusted by selecting clutch flange retainer of correct thickness (.055", .064", .073").

Modulator: Disassembly. First lift out hydraulic plunger and body assembly (CAUTION—do not allow plunger to drop out or assembly to be damaged). Take out outer cover attaching screws **while holding cover down** against spring pressure, lift off cover, diaphragm spring, and diaphragm.

Inspection—Wash all parts in solvent, blow out all passages and dry with air. Check diaphragm and outer cover for cracks. Inspect hydraulic plunger and body for wear, nicks or scoring. See that plunger operates freely in body and body is free in modulator.

Reassembly—Place assembly tool J-4261 (centering plug) in modulator body in place of hydraulic plunger and body, assemble diaphragm and spring, install two 10-24x3" guide pins in opposite cover holes, install attaching screws and tighten evenly and securely, remove guide pins and install screws in these holes. Remove assembly tool, install hydraulic plunger and body (body against diaphragm, plunger pointing out).

Servo Cover: Disassembly. Take out retaining screw and remove lubrication valve bi-metal strip and retainer. Take out lubrication by-pass valve plug and copper gasket, remove by-pass ball spring and ball. Do not remove modulator control lever.

Inspection—Wash all parts in solvent, blow out all passages and dry with air. Inspect cover for cracks and nicks or burrs on mounting face. Check by-pass ball spring and valve bi-metal strip for distortion. See that modulator lever operates freely without binding.

Reassembly—Install valve by-pass ball, spring, and plug (use new gasket), tighten plug securely. Install bi-metal strip retainer, bi-metal, and retaining screw.

Front Oil Pump: Disassembly. Remove stator support from pump body, lift out pump gears (CAUTION—gears not heat-treated and must be handled carefully to avoid nicking or marring). Remove seal ring from drive gear (compress one end into groove and push other end out to free interlocked ends). Remove and discard "O" seal ring on pump body.

Inspection—Wash all parts with solvent, blow out all passages and dry with air. Check drive gear oil ring and ring groove for nicks and burrs (ring must be free in groove), and check ring in pump body bore (hooked ring ends must have clearance). In-

C NTINUED N NEXT PA E

CHEVROLET POWERGLIDE (C nt.)

spect pump body and face of stator support for nicks, burrs, or scoring. Inspect oil seal in pump body and replace if worn or damaged (pry out old seal, use Driver J-4240 to install new seal). Install pump gears and check all clearances with feeler gauges:

Driven Gear Clearance—.0025-.0055" clearance between outer diameter of gear and pump body.

Gear-and-Crescent Clearance—Check by pressing gear away from crescent and inserting feeler gauge between end of gear teeth and face of crescent. Should be .003-.009" (Internal Gear).

Gear End Clearance—Check with feeler gauge inserted between gear face and straightedge on face of pump housing. Should be .0005-.0015".

Reassembly—Install new "O" seal ring in pump body (see "O" Ring Installation Note), install drive gear seal ring and pump gears (lubricate gears with transmission oil—insert drive gear with drive lugs extending through oil seal). Assemble stator support on body and align mounting holes.

Rear Oil Pump: Disassembly. Take out two flat head screws in pump body plate, remove plate, lift out pump gears. Do not remove ball bearing unless new bearing to be installed.

Inspection—Wash parts in solvent, blow out oil delivery holes and dry parts with air. Inspect rear bearing for roughness (to replace bearing, take out 3 capscrews, drive old bearing out, press new bearing in place). Inspect pump body and cover for nicks or burrs, inspect gears and check gear clearances with feeler gauges:

Driven Gear Clearance—.003-.007" clearance between outer diameter of gear and pump body.

Gear & Crescent Clearance—Check by pressing gear away from crescent and inserting feeler gauge between end of gear teeth and crescent. Clearance should be .002-.009" (Internal Gear).

Gear End Clearance—Check with feeler gauge inserted between gear face and straightedge placed across face of pump housing. Clearance should be .0005-.0015".

Reassembly—Lubricate gears with transmission oil and install in body. Install pump body plate and tighten two flat-head screws.

Valve Body: Disassembly. Use special pliers J-4245 to remove special snap ring in end of accumulator cylinder, remove accumulator valve spring washer and all accumulator valve parts from valve body. Remove two oil seal rings from valve body hub (rings have interlocking ends, released by pressing one end into groove and pushing other end out). Unscrew and remove pressure relief valve assembly.

Inspection—Wash all parts in solvent, blow out all passages and dry with air. Check accumulator body, piston, and body for scoring, see that these parts operate freely. Check small fibre valve in accumulator valve body for free operation. Check springs for distortion. Inspect oil seal rings for nicks and burrs, see that rings are free in grooves and that hooked ends have clearance in clutch drum bore (check by installing rings in drum).

Reassembly—Install all accumulator parts in valve body (CAUTION—accumulator piston must seat over inner and outer accumulator springs and special snap ring must seat firmly in snap ring groove in valve body). Install both oil seal rings in hub grooves. Install pressure relief valve assembly and tighten securely.

Low Servo Piston: Low servo piston and spring can be lifted out after servo cover removed. Check piston ring gap by installing ring in cylinder. Gap should be .005-.010".

Reverse Servo Piston: Disassembly. Place assembly in bench press with spring end up, use tool J-3377 to compress spring (position tool legs on spring retainer), remove retainer key locks. Release spring tension, lift off retainer, springs, and piston.

Checking & Reassembly—Check piston ring gap by installing ring in cylinder. Gap should be .005-.010". Assemble parts on piston stem and use tool J-3377 to compress springs. Make certain key locks fully engaged in groove in stem.

Planet Carrier Assembly: ***Furnished as an assembly and should not be disassembled.***

Inspection—Wash in solvent, blow out all passages and dry with air. Inspect all gear teeth for nicks, scoring, or other damage. Check end clearance of planetary pinions with feeler gauge (endplay should be .006-.030"). Check reverse sun gear rear thrustwasher for wear and damage. Inspect drum bushing for wear, scoring, or damage; check outer diameter of drum for scoring or burning.

Input Shaft: Inspect shaft splines for wear, nicks, or other damage; check spline fit in clutch hub, reverse sun gear, and turbine hub. Inspect oil seal ring for wear and free fit in shaft groove, remove ring (compress one end and expand the other to free interlocked ends), install ring in valve body bore and check clearance of hooked ends, re-install ring on shaft.

Transmission Case & Rear Bushing: Check case for cracks, inspect rear bushing for wear or damage and replace if necessary.

Bushing Replacement—Press old bushing out using tool J-4275 in an arbor press (place case on press with rear end upward). Install rear oil pump in case so that rear bearing can be used as a pilot in installing new bushing. Place case on press with front end upward, assemble bushing on Installer Tool J-4276 (square end of bushing against shoulder on tool), enter tool pilot in rear bearing, press new bushing into place. Bushing is precision type and does not require reaming.

Low & Reverse Brake Bands: Inspect bands for wear, cracks, and scored or burnt lining. Lining is bonded to band. Inspect linkage for wear.

REASSEMBLY

After all Major Units reassembled (see OVERHAUL), make certain that all parts and units are absolutely clean and all moving parts lubricated, use all NEW GASKETS & SEALS, and tighten all parts evenly to specified torques. Proceed in reverse order of disassembly directions and note the following important points:

Valve Body & Front Oil Pump Installation: Install suction screen in converter housing oil sump. Install two ¼-20 x 3½" guide pins in valve body attaching holes in housing, install valve body and new gasket over guide pins, tighten attaching bolts evenly (in criss-cross pattern) to 10 ft. lbs. torque EXCEPT bolt over pressure regulator valve tightened to 8 ft. lbs, torque (CAUTION—check manual valve and pressure regulator valve for free operation after all bolts tightened). Align bolt holes in stator support and front pump body assembly, install two ¼-20 x 3½" guide pins through pump body, then use driver J-4263 to seat assembly in converter housing (CAUTION—See "O" Ring installation note). Install five pump mounting self-locking bolts through valve body, tighten the two bolts over pressure regulator valve to 8 ft. lbs. torque, and remaining bolts to 10 ft. lbs. torque.

►***CAUTION—Check pressure regulator valve, manual valve, and front pump for free operation after all bolts tightened.***

Rear Oil Pump, Planet Carrier & Output Shaft, Reverse Servo Installation: Install two 5/16-18 x 3" guide pins in two rear pump attaching bolt holes in rear end of transmission case, install pump and new gasket over guide pins aligning oil suction and delivery holes, tighten all pump mounting bolts evenly and securely. Install reverse servo piston (use Ring Compressor J-3365 to avoid damage to piston ring) with notch on shaft toward front of transmission. Install reverse brake band and strut assembly in case with thin end of band away from piston, thread adjusting screw in case until it indexes with hole in anchor. Place bronze thrustwasher on reverse drum hub, install drum within reverse band in case. Position rear pump drive gear with lug at top, install planet carrier assembly in case with slot in shaft aligned with pump gear lug. Check planet carrier for correct position and seating of pump gear lug by measuring output shaft for ⅞" minimum protrusion through rear bearing. Install universal joint yoke on shaft and tighten universal bolt securely (this will draw planet carrier into its seat).

Reverse Servo Band Adjustment: Use tool J-4277 (combination screwdriver and locknut wrench). Tighten adjusting screw slowly and at the same time, check endplay in linkage by pushing and pulling on servo return spring. Continue to turn screw in until endplay is just taken up (at this point band must be free on drum and drum should be easily rotated by hand), then back adjusting screw off ⅛-¼ turn and tighten locknut.

►***CAUTION—Above procedure supersedes previous instructions and will provide sensitive adjustment.***

Sun Gear Endplay Adjustment: After planet carrier assembly installed in case, determine thickness of sun gear thrustwasher needed for correct transmission endplay to .007-.035" as follows:

(1) Measure distance from face of transmission case flange to face of reverse sun gear in planetary unit with tool J-4260 by placing bar of tool against case flange and extending tool stem until it contacts face of gear, tighten thumbscrew to retain this tool setting.

(2) Install bronze thrustwasher and clutch assembly on oil delivery sleeve on rear of converter housing.

(3) Without disturbing tool setting secured in step (1), place .095" thick steel washer over tool pilot (short plug on tool bar), install tool over clutch assembly with tool pilot entered in low sun gear and tool stem against gasket on rear face of housing. Measure clearance between face of low sun gear and steel washer on tool pilot with a feeler gauge. If clearance not within .007-.035", repeat this procedure with .120" or .145" steel washer on tool pilot (see Note below on .070" washer). On transmissions before No. HT-3837-A3, if .070" washer required to bring clearance within limits f .007-.035", replace Low Sun Gear and Flang Assembly with later type

C NTINUED N NEXT PAGE

CHEVROLET POWERGLIDE (C nt.)

parts and repeat above procedure (these later parts will not require less than .095" thick washer).

►**Tool Washer Note**—This tool originally furnished with three washers—.070", .095", .120" thick. The .070" washer is now obsolete (.070" bronze thrustwashers not furnished) and tool sets now furnished with .145" washer instead (.095" and .120" washers continued). This .145" washer is available to replace .070" washer on early tool sets.

(4) When correct clearance of .007-.035" obtained in step (3), note thickness of steel washer used on tool and select bronze thrustwasher of same thickness for installation on input shaft splines when this shaft installed (see below). Remove clutch assembly and thrustwasher from oil delivery tube.

►**Low Sun Gear Thrustwasher Note**—This bronze thrustwasher now furnished in three thicknesses as f llows: No. 3689772—.095", No. 3689770—.120", No. 3694433—.145". The .070" thrustwasher is not now furnished for service.

►*EARLY TRANSMISSION CAUTION*—On Transmissions before No. HT-3837-A3, if .070" thrustwasher required for correct clearance (3 above), replace Low Sun Gear and Flange Assembly with later type parts (new parts will not require less than .095" thrustwasher).

Parking Lock Mechanism Installation: Install parking lock lever shaft and apply spring assembly in case, place small seal over end of shaft and into counterbore in case with small lip on seal toward inside of case, install flat washer and lever on shaft pressing lever in until clearance between lever and washer is .000" to .010", then tighten lever clamp-screw. Install parking lock pawl over pawl support rod, install pawl spring. Use tool J-3383 to wind up pawl spring until end catches on inside of case.

Low Servo & Input Shaft Assembly Installation: Install input shaft in clutch assembly, place bronze thrustwasher of correct thickness (as selected in "Sun Gear Endplay Adjustment" above) on rear end of input shaft aligning missing spline opening on washer with oil hole in reverse sun gear splines on shaft. Install entire assembly in transmission case, indexing input shaft pilot with pilot in output shaft and meshing low sun gear with short pinions in planet carrier. Assemble low servo piston release spring on servo piston shaft, install assembly in case (CAUTION—use Ring Compressor J-3365 to avoid damage to piston ring). Install low brake band over clutch drum with thin end of band toward piston, place strut guide spring over end of piston stem, install strut with one end engaging slotted end of piston stem and other end engaging brake band. Install second strut similarly with one end engaging band and opposite end engaging slotted anchor with anchor fitted over end of adjusting screw in transmission case. Install speedometer driven gear. Do not adjust low band at this time.

Transmission & Turbine Housing Assembly: Install manual valve in valve body, install manual valve inner lever in turbine housing and engage lever pin in valve slot, position valve so that uter end is 1½" from face of valve body (reverse position). Install new valve body-to-case gasket on valve body. Raise transmission manual valve lever to top detent position (reverse) to align reaction lever with manual valve inner lever. Install clutch drum thrustwasher over oil delivery sleeve. Install two ⅜"-16 x 3¾" guide pins in turbine housing, install transmission assembly over guide pins, making certain that reaction lever engages manual valve inner lever properly (CAUTION—remove left hand sump cover to check this engagement). Install transmission case-to-turbine housing bolts and tighten evenly and securely.

Servo Cover Installation: Install lubrication check valve parts: spring, ball, ball seat (with radius toward ball), lubrication sleeve. Install two 5/16"-18 x 3" guide pins in servo cover mounting bolt holes, install new gasket over guide pins. Install pressure regulator valve and assemble inner and outer valve springs on valve stem. Install large return spring on reverse servo piston rod. Install servo cover over guide pins (CAUTION—see that regulator and servo springs seat properly in pockets in cover), apply pressure to cover to compress springs, install and tighten all servo cover bolts. Install modulator cover with new gasket, tighten modulator bolts evenly and securely.

Low Servo Band Adjustment: Using tool J-4277 (combination screwdriver and locknut wrench), tighten adjusting screw until band is tight, then back screw off 3 complete turns, tighten locknut.

Converter Assembly: Align front oil pump drive gear tangs with drive slots in primary pump hub, install primary pump in turbine housing (CAUTION—see that drive tangs and slots engaged—face of primary pump will be flush with face of bell housing if properly installed), install retaining washer and snap ring in stator support. Install stator assembly (CAUTION—smaller primary stator must be to rear). Install two 5/16"-24 x 1½" guide pins in primary pump bolt holes, align dowel pin hole in cover with dowel in primary pump, install turbine cover on primary pump, remove guide pins and install cover capscrews, installing one capscrew on each side of dowel, then skipping one hole (for flywheel attaching bolt), and installing screws in next two holes, repeating this order around cover rim. This will leave six evenly spaced holes around cover for flywheel attaching bolts (when transmission installed in car). Tighten capscrews evenly and securely. Install sump cover and new gasket on right side of housing.

Universal Joint Ball Adjustment: Before installing transmission, determine thickness of shims required for universal ball adjustment: Install ball seat and "O" ring, ball, and collar with sufficient shim thickness under collar for smooth firm fit of the ball (add shims if too tight, remove shims if too loose). Remove ball assembly and save shim pack for later installation.

INSTALLATION IN CAR

►**Balance Mark Caution**—When installing transmission on car, "X" mark stamped on front face of torque converter cover (lightest point of assembly) must be lined up with "X" mark stamped on face of flywheel (heaviest point) to nearest bolt hole.

Flywheel Pilot Caution—Lubricate pilot with Lubri-plate and use extreme care not to damage pilot by bumping or scratching when raising transmission into place.

Flywheel Attaching Bolt Installation—Turn flywheel until one bolt hole visible in bell housing opening, install one 5/16"-24 guide pin in corresponding hole in turbine cover, carefully guid pin through flywheel hole as transmissi n raised into position, install all turbine housing-to-bell housing bolts, tighten bolts evenly and securely. Remove guide pin, install all six flywheel-to-turbine cover bolts (rotate flywheel with J-4281 indexing tool for access to bolt holes), tighten bolts evenly and securely.

CHEVROLET 3-SPD. SYNCHRO-MESH (PASS. CARS & TRUCKS)

Pass. Cars & Sedan Delivery (1950-51)
Half-Ton & ¾-Ton Trucks (1950-51)

►**OPTIONAL PASS. CAR TRANSMISSION NOTE:** Powerglide is optional equipment on deluxe models. *See separate Powerglide data.*

►**Truck Rear Bearing Support**—Universal joint front flange supported in bearing support assembly secured to rear end of transmission case by a square head pipe plug. Should the bushing in assembly become worn, it will be necessary to replace the assembly. Speedometer drive gear is mounted on forward end of universal spacer (ahead of universal yoke) with a spacer installed ahead of gear (between front side of gear and rear side of mainshaft ball-bearing).

TRANSMISSION REMOVAL: *See "Transmission" on car model page.*

TRANSMISSION DISASSEMBLY & REASSEMBLY: *See complete "Chevrolet 3-Speed" Transmission in previous release.*

CHEVROLET 4-SPD. SYNCHRO-MESH (TRUCKS)

1, 1½, 2-Ton Truck Models (1950-51). Optional equipment on ½ & ¾-Ton Models

►**INSTALLATION ON ½ & ¾-TON TRUCKS:** When this transmission installed on these models, regular Rear Bearing Retainer (No. 591701) must be replaced by No. 591679.

TRANSMISSION REMOVAL: *See "Transmission" on car model page.*

TRANSMISSION DISASSEMBLY & REASSEMBLY: *See complete "Chevrolet Truck 4-Speed Helical Gear (Synchro-mesh)" Transmission in previous release.*

CHRYSLER PRESTOMATIC & FLUID-MATIC, DE SOTO TIP-TOE SHIFT, DODGE GYROMATIC

Chrysler 6, Models C48 (1950), C51 (1951)
Chrysler 8, C49 & 50 (1950), C52, 53, 54 (1951)
De Soto, Models S14 (1950), S15 (1951)
Dodge, Model D34 (1950), D42 (1951)

►**STARTING ENGINE BY PUSHING OR TOWING CAR:** Turn ignition on, place gearshift lever in Low Range, disengage clutch and do not engage clutch until car speed is approximately 10 MPH. At this speed, transmission will automatically shift into 2nd Speed and engine will be cranked.

►**KICK-DOWN SWITCH CHANGE (For Improved Transmission Operation):** *See "Chrysler, DeSoto, Dodge Kick-down Switch" in Electrical Equipment Section.*

DESCRIPTION: Own make, semi-automatic, 4-speed transmission with hydraulic actuation and electrical control. Transmission is similar to design used on corresponding previous models but control units (hydraulic and electrical) have been simplified and operate as follows:

Hydraulic Shift Mechanism: Spring-loaded, hydraulically actuated piston of same design as used previously except that piston acts as the oil pump pressure relief valve by uncovering two 3/8" relief holes in cylinder wall when in forward (2nd. or 4th. Speed) position thus limiting oil pressure to approximately 38-40 lbs.

Hydraulic Control Units: Hydraulic system has been simplified with new type pump and valves as follows:

Oil Pump—Gerotor type (concentric gears) mounted on mainshaft in transmission case extension housing and driven directly by a pin in the rear end of the mainshaft. Pump is accesible after extension housing and mainshaft bearing retainer removed.

Shuttle Valve—Located in extension housing. Prevents long periods of ignition interruption which might be caused by failure of solenoid to open main control valve on downshifts. Under these conditions, spring under shuttle valve forces valve upward so that oil trapped behind direct speed piston is returned to transmission case, permitting return spring to move piston back.

Main Control Valve—Spring-loaded ball type which is held off its seat by solenoid plunger when solenoid is energized (1st. or 3rd. Speed) so that oil from pump is by-passed directly back into the transmission case. When solenoid de-energized (2nd. or 4th. Speed), ball is held on seat by spring and oil pressure directed to direct speed piston for automatic shift.

Electrical Control Units: No control relay is used and new control circuits and units operate as follows:

Main Control Valve Solenoid—Solenoid plunger opens valve when solenoid energized, and permits spring to close valve when solenoid de-energized.

Governor—Centrifugal weight type driven from transmission countershaft. Contacts are closed with governor at rest so that solenoid circuit completed to ground (solenoid energized). When contacts open, circuit is broken and solenoid de-energized. Contact opening (for upshifts) and closing (for downshift) occur at following car speeds:

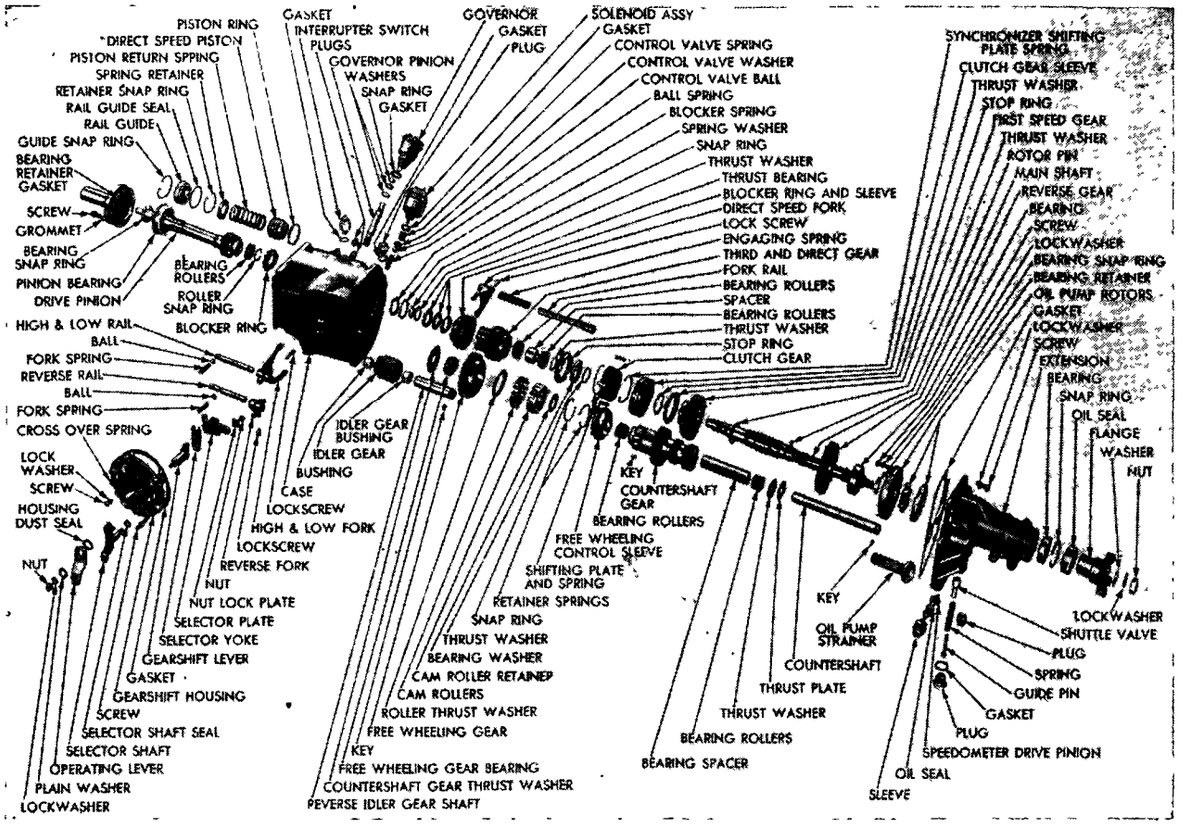

CHRYSLER, DE SOTO, DODGE AUTOMATIC TRANSMISSION (WITH SLEEVE TYPE SYNCHRONIZER)

Automatic Shifting Speeds

Upshifts①		Downshifts②	
1st. to 2nd.	8 MPH.	2nd. to 1st.	6 MPH.
3rd. to 4th.	14 MPH.	4th. to 3rd.	12 MPH.

①—Governor contacts open.
②—Governor contacts close.

Kickdown Switch—On carburetor. Contacts are normally open but can be closed by fully depressing accelerator pedal. Closing of contacts completes solenoid circuit to ground, energizing solenoid, and causing transmission to downshift (from 4th. to 3rd., or 2nd. to 1st.). This "kickdown" downshift only occurs at car speeds below 40 MPH. (4th. Speed) or correspondingly lower speed in 2nd. Speed (at higher car speeds, switch contact is held up out of engagement by manifold vacuum).

See "Chrysler, DeSoto, Dodge Kick-down Switch" in Electrical Equipment Section.

Ignition Interrupter Switch—Mounted on transmission and operated by direct speed piston. Switch momentarily grounds ignition coil and interrupts ignition to permit downshifts to be completed. Resistor connected in switch circuit prevents ignition circuit energizing solenoid when switch closed momentarily during upshifts (which would prevent completion of automatic upshift).

Circuit Breaker & Resistor—Thermostatic vibrating type circuit breaker connected in transmission control circuit feed (line from ignition switch side of coil) to protect circuit from overload (replaces fuse used on previous models). Resistor is 12 ohm type and is connected in Interrupter Switch circuit to prevent ignition circuit energizing solenoid when contacts closed (see Ignition Interrupter Switch).

LUBRICATION: Check oil level in transmission every 1000 miles or 30 days, drain and refill every 10000 miles or once each year, maintain oil level even with bottom of filler plug hole.

Recommended Oil—Use only 10W Engine Oil.

Capacity—3 pints (refill).

►***CAUTION—Add additional ½ pint (3½ pints total) whenever transmission extension housing removed and drained (additional oil will work back into extension housing in service).***

C NTINUED ON NEXT PA E

CHRYSLER PRESTOMATIC & FLUID-MATIC, DE SOTO TIP-TOE SHIFT, DODGE GYROMATIC (C nt.)

REMOVAL OF TRANSMISSION: *See "Transmission" on individual car model pages.*

DISASSEMBLY OF TRANSMISSION: With transmission off car and Governor, Solenoid, and Interrupter Switch removed, proceed as follows:

1) Remove governor drive pinion from case using long-nosed pliers.

2) Place gearshift controls in Neutral, remove capscrews, lift off Gearshift Housing assembly.

3) Slide manual clutch gear sleeve and reverse idler gear backward so that mainshaft is locked, remove nut, lockwasher, and washer from rear end of shaft (in hand brake drum), use Puller C-452 to remove propeller shaft flange and drum assembly.

4) Take out capscrews attaching extension housing on back of transmission case, remove extension housing and mainshaft as an assembly (Direct Speed Clutch will slide off Third & Direct Speed Gear and remain in case—note that sleeve and gear are paint-marked to insure correct reassembly), remove housing gasket.

5) Use Puller C-604 to remove reverse idler gear shaft through rear of case (CAUTION—do not lose shaft key), lift gear out.

6) Remove direct speed blocker ring from forward end of direct speed clutch sleeve, take out upper plug on right side of transmission case, insert a screwdriver in this hole and pry fork backward just enough to allow direct speed clutch sleeve to be withdrawn. Loosen locking screw in fork, work direct speed gearshift rail backward and out of case, remove fork and spring.

7) Remove snap ring retaining direct speed gearshift rail guide (on front of case), remove guide. Install spring tool (C-714) to compress piston return spring, remove spring retaining snap ring (use long-nosed pliers through guide hole in front of case), relieve spring tension and remove tool, withdraw spring retainer, spring, piston, and rail ring through front of case.

8) Drive countershaft out through rear of case using Arbor C-716 (leave arbor within gear cluster to retain bearing rollers), allow countergear cluster to drop down in case. Remove main drive gear bearing retainer and gasket by taking out capscrews on front of case. Pull drive gear and bearing assembly out toward front.

9) Lift countergear cluster up and remove through rear of case (CAUTION—do not lose thrustwashers on ends of cluster).

10) Disassemble the various sub-assemblies:

Mainshaft Disassembly (Sleeve Type Synchronizer)—Remove speedometer driven gear, press mainshaft assembly out toward front of extension housing. Remove direct speed blocker spring and washer from forward end of shaft, remove snap ring, slide 3rd and direct speed gear off end of shaft (Caution—Use care not to lose bearing rollers, spacer, bearing front thrust washer, and needle bearing washer), remove rear thrust washer. Remove clutch gear synchronizer snap ring and front stop ring, remove clutch gear sleeve assembly as a unit, remove rear snap ring. Remove 1st speed gear front thrust washer, slide gear off, remove rear thrust washer. Remove oil pump drive pin from rear end of shaft, remove rear bearing snap ring, press ring bearing and reverse gear off end of shaft.

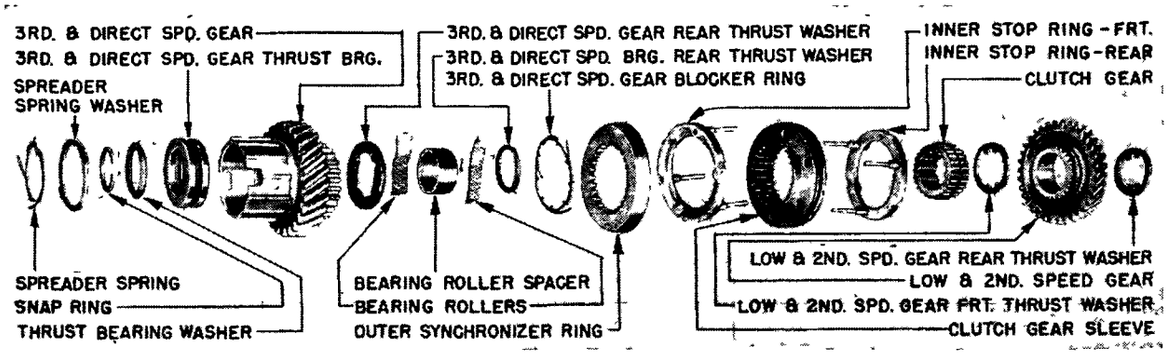

PIN TYPE SYNCHRONIZER

Mainshaft Disassembly (Pin-Type Synchronizer)—Remove 3rd and Direct speed gear blocker ring spreader spring, washer, snap ring and thrust washer. Before removing the 3rd and Direct speed gear assembly, place it over a clean pan to prevent losing any of the parts. (72 bearing rollers). Remove 3rd and Direct speed gear needle bearing, thrust washer and gear thrust washer. Remove outer synchronizer stop ring, front inner stop ring assembly, clutch gear sleeve and inner synchronizer stop ring. (CAUTION—Care must be taken not to damage the threads on either cone faces of inner stop rings. RINGS ARE NOT INTERCHANGEABLE). Remove clutch gear (hub). Remove 2nd gear front thrust washer, gear and rear thrust washer.

►*CAUTION—Do not change the relative position of these thrust washers. These washers are not identical and must be reassembled in the same position.*

Extension Housing Disassembly: Remove the capscrews holding mainshaft bearing retainer in front face of housing, lift off bearing retainer and oil pump inner and outer rotors. Remove shuttle valve retainer plug (on bottom of housing), withdraw valve parts (guide pin, spring, and valve). Remove oil seal, take out rear bearing snap ring, drive rear bearing out at rear of housing.

Countergear Cluster Disassembly: Stand the assembly on end with free-wheeling gear upward. Remove bronze thrustwasher and steel bearing washer. Slide free-wheeling control sleeve up and remove gear. Remove cam roller thrustwasher, gear bearing rollers and free-wheeling cam rollers, cam roller retainer, cam roller retainer springs (CAUTION—use extreme care not to distort springs), free-wheeling control sleeve and key. If countergear bearing rollers being replaced, remove arbor from within gear cluster, remove front and rear bearing rollers and bearing spacer.

REASSEMBLY OF TRANSMISSION: Reverse the disassembly data above and note the following important points:

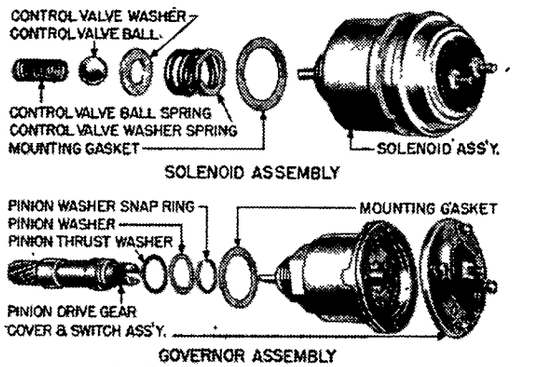

SOLENOID & GOVERN R ASSEMBLY

Countershaft Free-wheeling Gear Assembly: Install the key and free-wheeling control sleeve on forward end of gear cluster, hook anchor ends of both springs in holes in gear cluster so that springs wrap around in right hand direction from anchor end. Place roller cage over gear with lugs over spring anchors, rotate cage clockwise until lugs are over slots in control sleeve, make certain that spring ends have snapped into grooves in cage. Slide control sleeve forward until cage lugs fully engage sleeve. Install free-wheeling rollers (use cup grease to hold rollers in position), install thrustwasher, slide free-wheeling gear on gear cluster, install gear bearing rollers (45 rollers), install steel thrustwasher and bronze thrustwasher (steel washer next to gear).

Countergear Cluster Installation: Place the assembly in bottom of case making certain that steel and bronze thrustwashers in place at each end of assembly (steel washer next to gear, bronze washer next to case). **After main drive gear has been installed,** lift assembly up and insert countershaft from rear (pushing arbor out through front of case), make certain that thrustwashers in place and that countershaft locking key installed in slot in rear end of

C NTINUED N NEXT PA E

CHRYSLER PRESTOMATIC & FLUID-MATIC, DE SOTO TIP-TOE SHIFT, D DGE GYROMATIC (C nt.)

shaft. Check gear cluster endplay which should be .002-.008". Adjust by installing bronze thrustwashers of correct thickness (.087", .090", .093", .096" thick).

Main Drive Gear Installation: Install the main drive gear assembly in case, then install bearing retainer without any gasket, tighten retainer capscrews. Measure clearance between retainer flange and face of case with a feeler gauge, select a gasket of same thickness as measured clearance (or nearest oversize), remove retainer and re-install with this gasket under the flange, use rubber gasket on each retainer capscrew.

►*CAUTION—Rubber gaskets must be used on retainer capscrews and these screws securely tightened to prevent oil leaks at this point.*

Mainshaft Assembly (Sleeve Type Synchronizer): Note following points when assembling parts on shaft.

Rear Bearing Snap Ring—Select thickest snap ring which can be installed to obtain minimum endplay. This snap ring furnished .087", .093", .098" thick.

3rd.-&-Direct Speed Gear Assembly—Install rear thrust washer with recess side toward rear of shaft and indexed with shaft splines. Assemble bearings in gear as follows: insert thrust bearing in gear race with largest hole first with grooved end toward front of shaft, then install set of 36 bearing rollers in forward end of gear (use cup grease to hold rollers in place), insert bearing spacer, install second set of 36 bearing rollers, install needle bearing thrustwasher. Install gear and bearing assembly on shaft, install thrust bearing, washer, and snap ring (use thimble tool C-717 to install snap ring, drive ring into position with driver portion of tool and soft mallet). Then check gear endplay as follows:

3rd.-&-Direct Speed Gear Endplay—Check clearance between bearing thrust washer and snap ring with a feeler gauge. If not within .003-.008", select snap ring of correct thickness to give this endplay. Ring furnished .087", .092", .097", .101" thick.

Extension Housing—If oil seal being replaced, use puller C-748 to remove old seal, drive new oil seal into housing until it protrudes 3/32" beyond rear face of housing. When installing extension housing on mainshaft, see that oil pump drive pin aligned with slot in oil pump inner rotor.

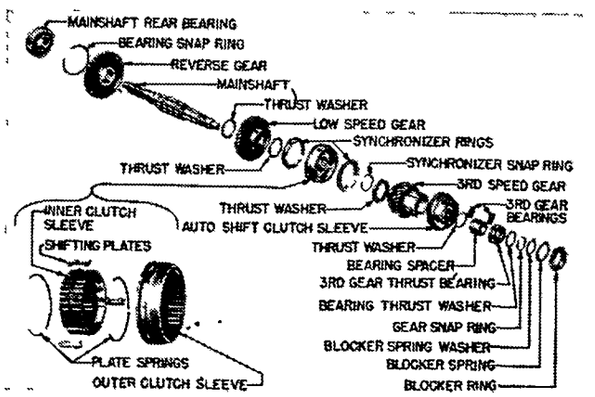

MAINSHAFT DISASSEMBLED

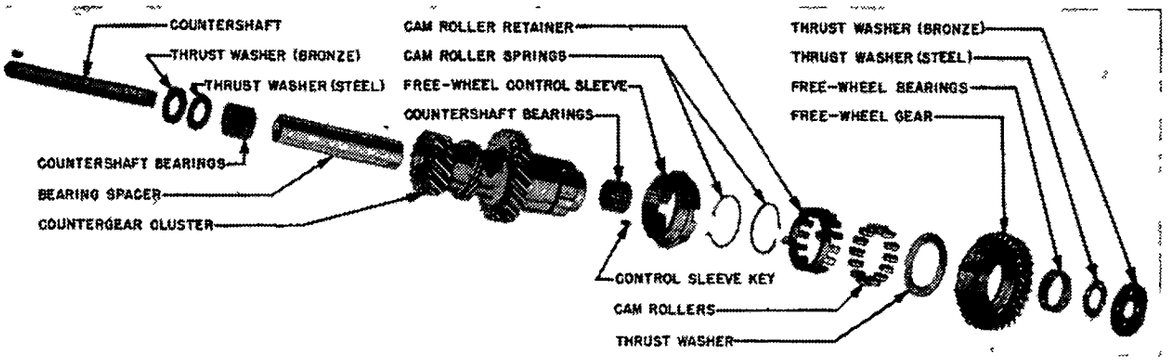

COUNTERSHAFT GEAR ASSEMBLY

Mainshaft & Extension Housing Installation: See that free-wheel control sleeve is back toward rear of case and engaged in groove of direct speed clutch sleeve. Position blocker ring in direct speed clutch sleeve with large end of taper forward and anchor lugs back, install blocker spring and blocker spring washer (coat lightly with grease to hold in place). Insert mainshaft assembly through rear of case, align paint marks on clutch sleeve and gear (see Note below), and index teeth on gear hub with center tooth in sleeve. See that lugs on blocker ring are aligned with slots in gear hub. Tighten capscrews to 30-35 ft. lbs. torque.

►*CAUTION—Do not force mainshaft assembly into place (shaft should enter freely if parts aligned as above).*

Mainshaft Assembly (Pin-Type Synchronizer): Reverse Disassembly instructions and note the following points.

Clutch Gear & Clutch Gear Sleeve—To insure a sliding fit, index grind mark on clutch gear sleeve teeth (with paint mark on clutch gear tooth) so they are mated. Assemble the clutch gear and clutch gear sleeve. Make certain that both the extended portion of sleeve hub and shoulder side of clutch gear are facing up when installed.

Thrust Bearing Assembly—When installing, make certain the bearing race with largest inside diameter is installed first.

Extension Case—Reinstall extension case and main shaft assembly to transmission case, making certain that paint mark on direct speed clutch sleeve is properly aligned with paint mark on 3rd & Direct speed gear.

►*CAUTION—Do not force extension housing against transmission case, as blocker ring might become damaged. If housing does not move freely into position, the blocker ring is not indexed in 3rd speed gear slots. This ring should be properly indexed before housing is installed.*

►**Direct Speed Clutch Sleeve & Gear Marks—These marks ar made in production after selective matching for approximately .005" min. backlash.**

NOTE—If new parts being installed, match parts for correct backlash and mark them to insure correct installation.

Direct Speed Shift Rail Installation: Install the shaft with offset screwdriver slot in rear end horizontal and smallest shoulder toward side of case. This is necessary to position setscrew hole in rail properly

TESTING: Before checking transmission, make certain that engine tuned up so that it idles smoothly at 450-475 RPM. and that throttle linkage operates freely. Check oil level in transmission case (see LUBRICATION above). Raise right side of front floor mat, remove floor panel access cover over transmission. Inspect all control wiring and tighten connections. Use test lamp with insulated leads and make following tests in order given:

1) Circuit Breaker & Wiring—Connect test lamp, between ignition coil side of circuit breaker and ground. Lamp should light when ignition turned on. If not, check connections and replace wire. Connect test lamp between solenoid side of circuit breaker and ground. Lamp should light when ignition switch turned on. If not, replace circuit breaker (NOTE—if circuit breaker clicks indicating a ground, check solenoid and slow-closing throttle unit and wires connecting these units for short-circuit or ground). Connect test lamp between red-wire terminal of solenoid and ground. Lamp should light when ignition turned on. If not, replace this red wire. Connect test lamp between brown-wire terminal of slow-closing throttle unit and ground. Lamp should light when ignition turned on. If not, replace wire.

2) Slow-closing Throttle (Anti-Stall)—Turn ignition switch on. Place a steel screwdriver on peened rivet head on coil (on top of carburetor). If no magnetic "pull" noted, replace slow-closing throttle.

See "Chrysler, DeSoto, Dodge Slow-Closing Throttle" in Carburetion Equipment Section.

3) Solenoid—Connect test lamp between two solenoid terminals. Lamp should light with ignition n

C NTINUED ON NEXT PAGE

CHRYSLER PRESTOMATIC & FLUID-MATIC, DE SOTO TIP-TOE SHIFT, DODGE GYROMATIC (Cont.)

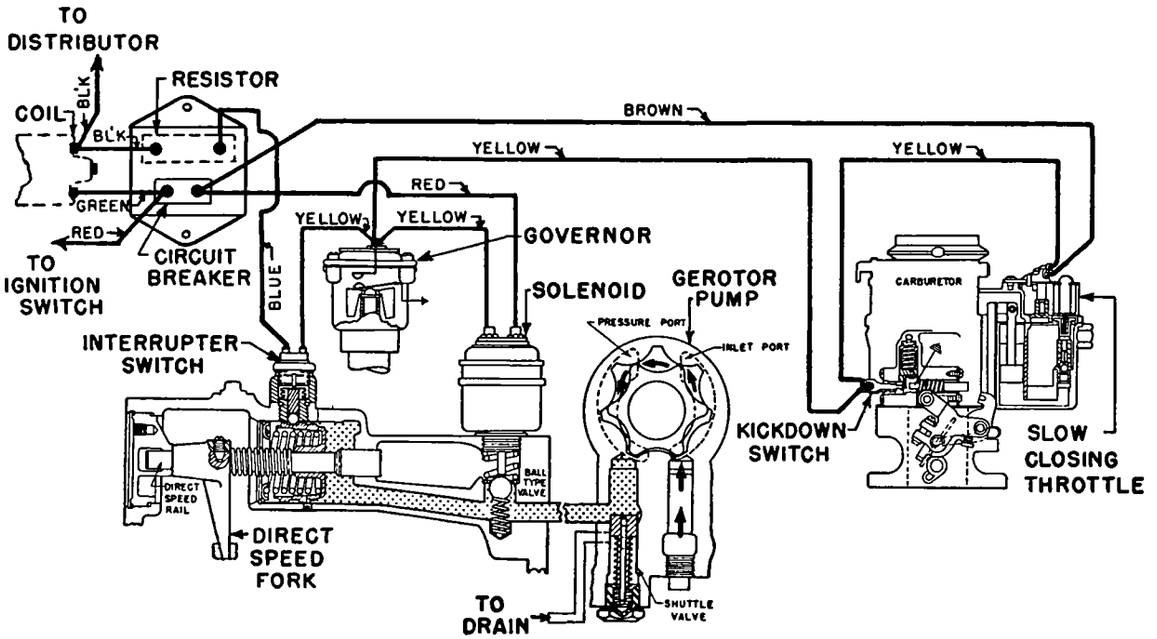

TRANSMISSION CONTROL UNIT WIRING DIAGRAM

(indicates that circuits to and from solenoid are operating). Hold steel screwdriver or other steel tool against solenoid body. Turn ignition on and off. If no magnetic "pull" noted with ignition on, remove solenoid and test as follows: Connect solenoid to a battery independently of the car wiring. Solenoid plunger should move outward and force of 25 lbs. should be required to push plunger in. If not, replace solenoid.

4) **Governor**—Connect test lamp between governor terminal and red-wire (feed) terminal on solenoid. Lamp should light with ignition on (if not, governor contacts are open). Raise rear end of car and securely block car so that engine can be run with transmission engaged. Start engine, place gearshift lever in High Range, accelerate engine to 14 MPH. and note test lamp. Lamp should go out at approximately 14 MPH. (governor contacts opening) and should come on again when speed dropped to approximately 12 MPH. (governor contacts closing). If governor does not operate correctly, remove and examine governor cover and switch assembly. Leave car blocked up and transmission in High Range for tests (5) and (6) following.

►**Replacement Governor Note**—Governor Cover & Switch Assembly, No. 1126639, furnished separately for replacement (n t necessary to replace entire unit if trouble found in switch).

5) **Kickdown Switch**—With test lamp connected as for governor test (above), run engine at car speed between 15 MPH. and 40 MPH., push kickdown switch plunger in by hand. Lamp should light with plunger in (contacts closed) and should go out when plunger released (contacts open).
See "Chrysler, DeSoto, Dodge Kick-down Switch" in Electrical Equipment Section.

6) **Ignition Interrupter Switch**—Disconnect blue-wire at interrupter switch terminal, connect test lamp between this switch terminal and red-wire terminal on solenoid. Run engine with gearshift lever in High Range, accelerate engine to 15 MPH., then slowly decelerate to 8 MPH. On deceleration, from approximately 12 MPH. to 10 MPH., test lamp should show a faint glow (switch contacts closed).

7) **Ignition Interrupter Resistor**—With engine running, ground blue wire at resistor or at interrupter switch terminal. Engine should stall. If engine continues to run, check resistor and wires from resistor to coil and to interrupter switch for open-circuit.

Hydraulic System Test: Disconnect both wires at interrupter switch, remove switch. Block up rear of car so that engine can be run with transmission engaged. Place gearshift control in Low Range. Operate engine and slowly accelerate while watching direct speed piston through interrupter switch hole. Piston should move forward just enough to cover this hole at 8 MPH. indicating that oil pressure is correct (38-40 lbs.). If piston does not move forward at approximately 8 MPH., piston is stuck or worn or oil pump is not functioning.

CHRYSLER FLUID-TORQUE DRIVE

Chrysler Eight, Models C52, C53, C54 (1951)
Std. or Optl. with "Fluid-Matic" Transmission

DESCRIPTION: The "Fluid-Torque Drive" (Torque Converter) consists of four elements: an impeller (driving member), a turbine (driven member) and two reaction members (stators), which provide a maximum torque multiplication of 2.34-1 (starting torque) to 1.0-1 (driving torque). The converter housing is attached to the rear end of the crankshaft through a flexible steel disc which permits some flexibility. The starter ring gear is mounted on the rim of the flexible disc. The turbine shaft is connected through a splined shaft to the clutch driving plate.
Oiling System—The oil is delivered to the converter housing under approx. 30 lbs. pressure by a geared pump and control valve body mounted on the converter stationary support plate. The oil is drawn from the oil reservoir (mounted under clutch housing) and delivered to converter housing and then to the oil cooler (mounted at the water pump flange) where it is cooled by water from the radiator and an air blast from the fan, before its return to the reservoir.

OPERATION: The impeller being integral with the converter housing and driven by the engine forces oil toward the turbine causing it to rotate in the same direction. The turbine is mounted on a forged steel hub which is splined to the turbine shaft and clutch drive plate transmitting power to the transmission. The two stators are mounted between the impeller and turbine and are provided with overriding clutches that allow them to rotate only in the direction of impeller travel. At low car speeds (maximum torque) both stators remain stationary and control the direction of oil flow toward the turbine. When turbine speed approaches impeller speed (low torque) both stators 'free-wheel' in the direction of rotation and all elements in the converter rotate as a unit.

LUBRICATION: Check oil level in reservoir every 1000 miles and change oil every 10,000 miles. Manufacturer recommends MOPAR Fluid Drive Fluid.
Draining—Remove plug from converter oil reservoir and from bottom of converter. When oil has drained, rotate converter 180°, remove the other plug and drain remaining oil.
Refilling—Replace plugs in converter. Fill oil reservoir to level of hole with MOPAR Fluid Drive Fluid. Start engine and run between 500 and 700 RPM. Continue adding fluid to reservoir until oil level remains at bottom of filler opening. Replace filler plug in reservoir. To eliminate air bubbles from oil, shift transmission into high range and apply parking brake. Then run engine between 500 and 700 RPM. for not over two minutes. Check oil level and replenish to bring oil level up to bottom of filler hole.

REMOVAL: Drain oil reservoir and remove reservoir from bottom of clutch housing. Remove starter from front of flywheel housing and remove lower half of flywheel housing pan. Drain converter and disconnect oil lines from converter support plate. Remove transmission *(see Transmission Removal on individual*

CONTINUED ON NEXT PA E

CHRYSLER FLUID-TORQUE DRIVE (C ntinued)

car model page). Remove clutch *(see Clutch Removal on individual car model page).* Pull clutch driving plate and converter support plate assembly from converter and flywheel housing. Remove the six converter drive plate-to-converter attaching cap screws and remove converter.

►*TORQUE CONVERTER UNIT REPAIR NOTE*—Torque converter unit is sealed and no adjustments or repairs are necessary except periodic draining and refilling. Replace complete converter unit if repairs are required.

OVERHAUL: Torque Converter Support Plate.

Disassembly—Remove six pump body cap screws and remove pump body from support plate by dropping two steel dowels 1¼" long by ¼" dia. into the two tapped holes in pump body. Screw in two ⅜" by 16 thread cap screws against dowels and jack pump body out evenly from support plate. Lift stator shaft and transfer plate from support plate. Remove oil seal from turbine shaft and remove small inner snap ring. Place wooden blocks under outer perimeter of support plate and strike turbine shaft with soft hammer to jar support plate loose from shaft. Remove turbine shaft bearing outer snap ring from bearing, and drive bearing out of support plate by inserting a driving tool that will drive against the inner race of bearing from the seal side of the plate.

Reassembly—Position bearing over bore and with a flat wooden block, drive bearing into support plate as far as possible. Completely seat bearing in bore by driving against the outer race. Install large turbine shaft bearing outer snap ring to outside diameter of bearing. Install new seal in opposite side of support plate by driving it in with a wooden block until flush with support plate face. Install support and bearing assembly on turbine shaft by driving on inner race of bearing with a tubular driver. Install small turbine shaft bearing inner snap ring. (NOTE—This snap ring is available in three sizes and the size giving the tightest fit should be used). Install turbine shaft oil seal ring and lock in place. Install stator shaft and flange assembly in support plate, making sure that it slides completely over the oil seal ring on turbine shaft, and taking care not to damage seal ring. (NOTE—Make sure that all bolt holes in stator shaft flange are in proper alignment with bolt holes in support plate.) Install oil pump transfer plate over stator shaft with large counterbore down and with bolt holes in proper alignment with holes in stator shaft flange and support plate. Coat oil pump body with chassis lubricant and install oil pump gear in body, then install pinion in pump body with counterbore of pinion facing bushing in pump body. Using a flat piece of steel and a feeler gauge, check to see that the clearance is .0012" to .0032" between pump body face and face of gears. Pack chassis lubricant between teeth of pump gears so pump will not have to be primed. Coat seal ring on pump body and the chamfer on the support plate with chassis lubricant, then install pump body on top of transfer plate in support plate. Install cap screws and tighten down evenly.

INSTALLATION: Mount converter to converter drive plate positioning offset hole in converter to match offset hole in drive plate and install six attaching cap screws finger tight. Line up the two slots in pump pinion gear so that they index with the two oil pump drive lugs on converter when converter support plate and clutch driving plate is assembled to converter. Then, assemble the support plate and clutch driving plate assembly to the converter so that the external splines on turbine shaft index with the internal splines of the turbine in the converter, and so the external splines on the stator shaft will index with internal splines of the stators in the converter. *(CAUTION*—If difficulty is experienced in indexing these parts, rotate converter while pushing in on support and clutch driving plate assembly. Under no circumstances should the clutch housing cap screws be installed until after the face of support plate is flush with flywheel housing). Hold converter support plate and clutch driving plate assembly up in position and tighten the six converter-to-converter drive plate cap screws. *(CAUTION*—Make sure all oil has been cleaned from clutch assembly). Install clutch and transmission. Lubricate rubber oil seals with chassis lubricant and install the three connectors in their holes in converter reservoir and install reservoir.

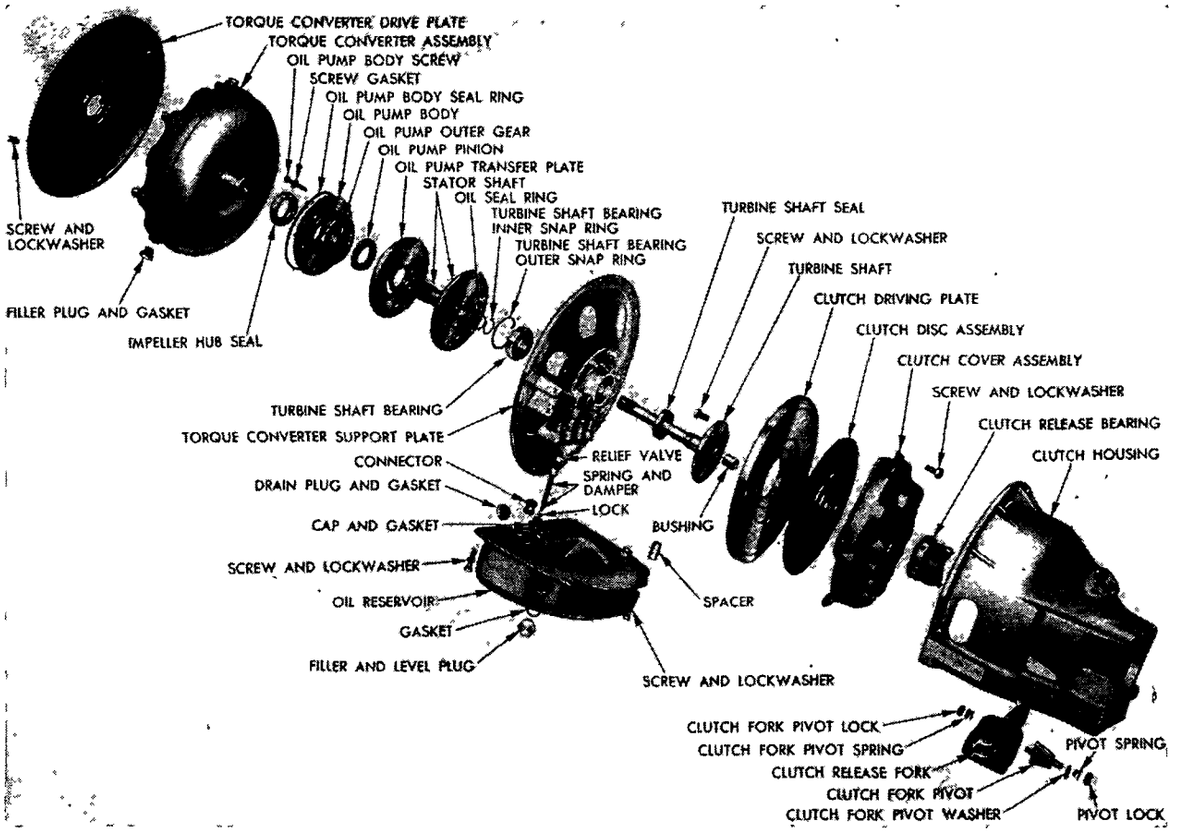

CHRYSLER FLUID-TORQUE DRIVE ASSEMBLY

CHRYSLER, DE SOTO, DODGE & PLYMOUTH SYNCHRO-MESH

Chrysler (1950-51)
Dodge (1950-51)
De Soto (1950-51)
Plymouth (1950-51)

►**HARD SHIFTING CORRECTION:** If hard shifting complaints can not be corrected by transmission control adjustment, replace original type stamped synchronizer plates with new solid machined type plates (furnished in packages with needed springs).

DESCRIPTION: Three-speed, constant-mesh, synchro-mesh type of same design used on previous models.

TRANSMISSION REMOVAL: *See "Transmission" on car model page.*

TRANSMISSION DISASSEMBLY & REASSEMBLY: *See complete "Chrysler, Dodge, De Soto, Plymouth (Synchro-mesh) Transmission" in previous release.*

FORDOMATIC & MERCOMATIC TRANSMISSION

Ford, 6 Cyl. & V8 Pass. Cars (1951)
Mercury, Model 1M (1951)

►CHANGES, CAUTIONS, CORRECTIONS

►**STARTING ENGINE BY TOWING OR PUSHING CAR:** Pushing is recommended. Place selector lever in Neutral "N" position, turn on ignition. When car speed reaches approximately 20 MPH., move selector lever to LO and car will crank engine.

►**TOWING:** Do not tow car at speeds in excess of 40 MPH. and observe following precautions:
If Transmission Operating Properly—Place selector lever in Neutral "N" position. Car can be towed normally for distances not to exceed 12 miles. **For greater distances, use same procedure as for inoperative transmission.**
If Transmission Inoperative—Tow car with rear wheels lifted off road, or disconnect and remove propeller shaft and protect rear end of transmission from entry of dirt (U-joint Knuckle 1M-4841 can be installed and wired in place for this purpose).

►**FORD THROTTLE LINKAGE PRODUCTION CHANGE:** Original design "B" throttle linkage has been revised to provide quieter and more efficient operation. ***New design "C" throttle linkage requires different adjustment procedure (see ADJUSTMENT data).***

►**INSTALLATION OF LATER TYPE THROTTLE LINKAGE ON EARLY FORD CARS (Replacement of "B" design by "C" Throttle Linkage):** Will provide quieter and more efficient operation.
Parts Required: All attaching bolts and screws (except bolt at "X"—see illustration) are re-used and following new parts required:

Part	Ford No.
Accelerator Shaft Assy.	1BA-9725-C
Trans. Control-to-Accel. Shaft Assy.	1BA-77230-B
Accelerator Shaft Hanger Support	1BA-99838-A
Bolt & Nut (5/16-24 x 3/4)	20347-S8 & 33909-S8
Lockwasher for above	34806-S7
Bolt (3/8-16 x 1 1/2 Hex. Hd.)	20468-S8

Installation—Remove old accelerator shaft assembly, transmission control-to-accelerator shaft assembly, and accelerator shaft bracket; discard these parts. Install new transmission control-to-accelerator shaft assembly using attaching parts from old assembly except that new 20468-S8 (1½") bolt should be installed at "Y" (see illustration) in place of old 1 5/8" bolt. Attach new accelerator shaft assembly to dash, using screws from old assembly, connect these two assemblies together using new accelerator shaft hanger support (see illustration inset for correct location of these parts). The support will lift the shaft hanger bracket (while attaching bolt being tightened) to bring upper surface of hanger bracket in contact with under surface of mounting bracket (CAUTION—support will be bent in this tightening operation and must be straightened or replaced **if a second tightening of the attaching bolt is necessary**). Connect all linkage shafts to original connecting rods and adjust linkage (see Linkage Adjustment).

DESCRIPTION

The Ford and Mercury automatic transmission consists of a hydraulic torque converter and an automatic transmission which provides automatic operation in the "Dr" range and additional Low, Reverse, Neutral and Parking positions controlled manually.

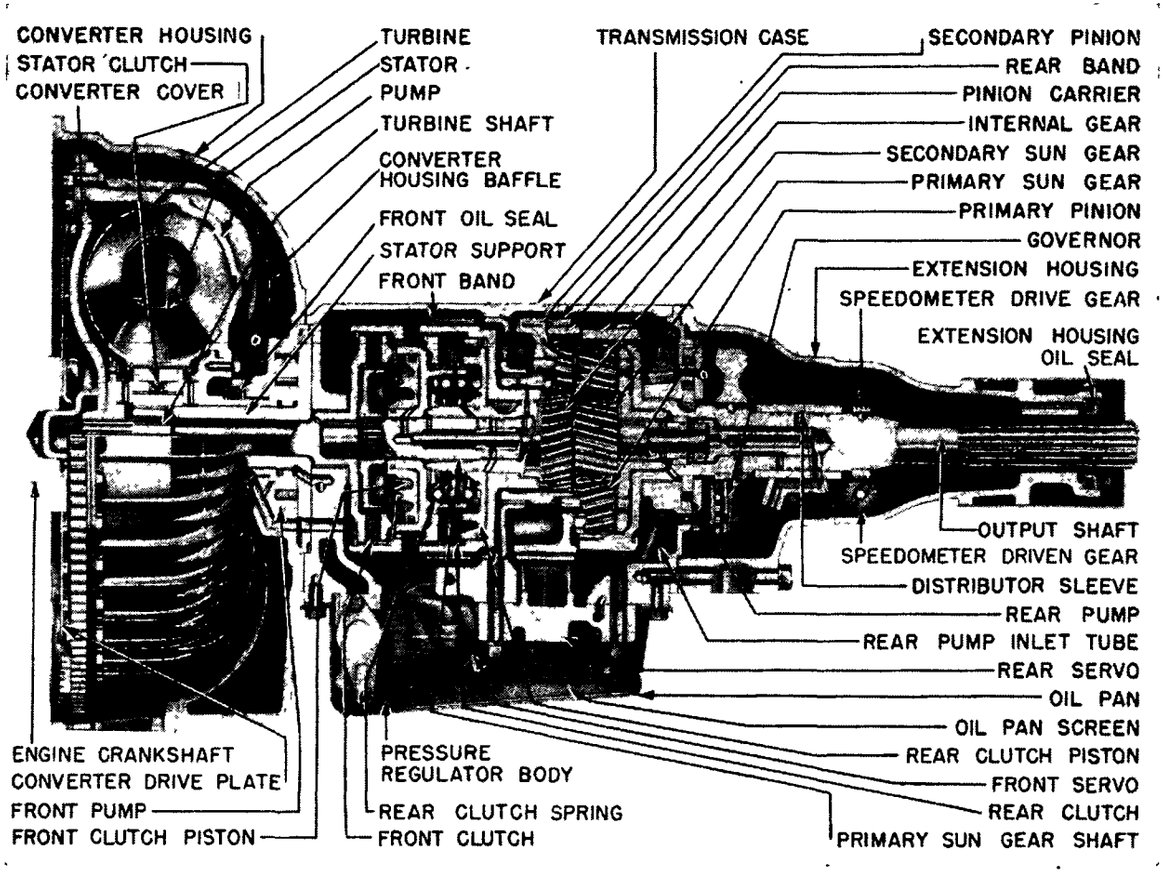

FORDOMATIC & MERCOMATIC TRANSMISSION

Torque Converter: Mounted in a housing and connected to rear end of crankshaft in place of the conventional flywheel, and consists of the Torque Units listed below. Torque converter is fully automatic in its operation, acting as torque converter for low speed and starting operations (when input torque is less than output torque), and as a fulid coupling at higher car speeds (when input and output torque are equal). The change from torque converter to fluid coupling and the operating phases of each torque converter unit is governed by the car operating conditions and do not occur together or at any particular time.

Pump (Driving Member)—Mounted on engine crankshaft and bolted to converter cover. Pump rotates at engine speed to transmit engine power to turbine thru the medium of converter oil.

Turbine (Driven Member)—Splined to output shaft forward of converter pump and driven by oil flow from converter pump. Turbine transmits power to the planetary gears (Low, Intermediate & Reverse) and to the propeller shaft (Driving Range).

Stator—Consists of reaction blades and a one way clutch mounted on the converter cover hub. The Stator redirects the fluid flow to turbine, increasing torque for low and starting speeds (when input torque is less than output torque) being held from rotating in a direction opposite to the pump and turbine by the one way clutch. At higher speeds (when input torque equals output torque) the Stator rotates in the same direction and at the same speed as the pump and turbine causing the torque converter to automatically become fluid coupling.

Planetary Transmission: Hydraulically controlled planetary transmission employs a gearset of the compound type consisting of long and short pinions, two sun gears and a single internal gear, providing three forward speeds and one reverse. Controlling bands, multiple disc clutches and servo mechanisms are within the transmission case.

Planetary Pinion Assembly—Consists of three Primary Pinions (Short) and three Secondary Pinions (Long) mounted in a pinion carrier. The Primary Pinion is driven by the Primary Sun Gear and

CONTINUED ON NEXT PAGE

FORDOMATIC & MERCOMATIC (C ntinued)

drives the Secondary Pinion which is meshed with the Secondary Sun Gear and the Internal Gear. The pinion carrier is controlled by the Rear Servo and the Rear Band.

Primary Sun Gear—Integral with Primary Sun Gear shaft which is splined to the driven flange of the Front Clutch unit. Power is transmitted thru this gear to the Pinion assembly (Low & Intermediate Range).

Secondary Sun Gear—Located forward of the Primary Sun Gear and in mesh with the Secondary (Long) Pinions. Mounting is on a hub connected to the driven flange of the Rear Clutch. Power transmitted from the Rear Clutch to Secondary Pinions (Reverse).

Front Clutch—Front (input) member of clutch is integral with Turbine Shaft and is splined to Front Clutch drum. The Front Clutch drum is formed so that it is also the inner (input) member of the Rear Clutch. Front Clutch hub (output) is splined to the Primary Sun Gear Shaft. The Front Clutch is engaged by a hydraulic piston within the clutch drum and locks the Primary Sun Gear Shaft to the Turbine Shaft. Clutch is engaged for all forward speeds and is disengaged by an internal spring for neutral and reverse.

Multiple Rear Clutch—Clutch Drum (output) is integral with the Secondary Sun Gear and is provided with a brake band and operating servo. Clutch Hub (input) member is integral with the front clutch drum. When clutch is engaged, the Secondary Sun Gear is locked to the Turbine Shaft. Clutch engagement is by a hydraulic piston within the unit. A coil spring between the hub and the drum provides the release.

Front Brake Band and Servo Assembly—Band holds the Secondary Sun Gear stationary when it is applied on the clutch drum by the Servo which consists of a hydraulic piston linked to band. One end of the band is held stationary by a strut and anchor which has an adjusting screw for band adjustment. Servo is fluid applied and spring released.

Rear Brake Band and Servo Assembly—Band holds planet carrier stationary when it is applied by the rear Servo which consists of a hydraulic piston linked to one end of the brake band. The opposite end is held stationary by a strut and anchor.

Oil Pumps: Two pumps used to supply oil pressure for hydraulic controls, oil supply for converter and transmission lubrication.

Front Pump—Internal - External gear type mounted between the transmission and torque converter and driven by the converter pump through a tongue and slot coupling. This pump has a large capacity and begins to operate as soon as the engine is started, supplying oil to the torque converter and for transmission lubrication and hydraulic controls.

Rear Pump—Internal-External gear type mounted at the rear of transmission and driven by the output shaft. Pump operates whenever rear wheels are turning and supplements the front pump volume. When car reaches sufficient speed, two ball check valves open and allow the oil from the rear pump to enter the hydraulic system.

Hydraulic Controls: Consist of manual and automatic valves, controlling the operation of the transmission servos and clutches.

Control Pressure Regulator—As pump speed varies, spring loaded valve maintains constant pressure. Excess volume is returned to oil pan.

Manual Valve—Control pressure is directed to manual control valve for proper distribution to accomplish the performance desired. Valve is actuated from the selector lever on the steering column.

Throttle Valve—Actuated by the accelerator through linkage. Control Pressure is directed to the throttle valve from the Control Pressure Regulator Valve. As the accelerator is depressed, moving the Throttle Valve towards the open position modifies the Control Pressure in proportion to the degree of throttle opening.

Shift Valve—Automatically changes the speed from Intermediate to High. Valve is spring loaded and is controlled by Governor Pressure and Throttle Pressure.

Hydraulic Governor—Mounted on output shaft at rear of transmission. Rotation of the Governor Valve causes centrifugal force to act on the valve plunger and regulate the pressure in direct proportion to the car speed.
regulates a pressure in proportion to the degree of throttle opening.

Front Servo Apply Regulator Valve—Provides for smooth changes between Intermediate and High speed, by controlling the flow of oil to the Front Servo. Valve is controlled by throttle pressure.

3-2 Control Valve—Provided for Down-Shifting from High to Intermediate on either open or closed throttle.

Down-Shift Valve—Operated by accelerator pedal. Allows speed change from High to Intermediate by depressing the accelerator pedal past it's fully open position.

Parking Mechanism: Consists of a locking pawl actuated by the Transmission Selector Lever which engages gear teeth cut into the face of the Internal Gear flange of the output shaft, and locks the output shaft to the transmission case.

OPERATION

Torque converter automatically provides a torque multiplication ranging from 2.1-1 (maximum for starting and acceleration) to 1.0-1 (normal driving range with torque converter acting as fluid coupling). This torque multiplication is supplemented by the planetary gears when selector lever placed in "Drive," "Low" and "Reverse" Range. Transmission operates in each range as follows:

Neutral Range—Front and Rear Clutches fully released, and Front and Rear Brake Bands fully released so that gears are free to turn. Drive is not transmitted through transmission and this "N" position can be used to start and warm up engine.

Drive Range—Car starts in Intermediate Gear with Front Clutch applied locking the Primary Gear to the Turbine Shaft and the Front Band applied, holding Secondary Sun Gear stationary, the power flow is from the Turbine Shaft through the Front Clutch to the Primary Pinion to the Secondary Pinions to the Internal Gear to the Output Shaft. As car speed is increased to a certain point, the Front Band is released and the Rear Clutch is applied automatically causing the transmission to change to direct (1.0—1) drive. The power flow in "High" is from the Turbine Shaft through the Front and Rear Clutches to the Planetary Gear which are locked together and rotates as a unit, causing the Output Shaft to rotate at engine speed.

Low Range—Front Clutch applied, locking the Turbine Shaft to the Primary Sun Gear, and the Rear Band applied, holding the Pinion Carrier stationary, the flow of power is from the Turbine Shaft through the Front Clutch to the Primary Pinions, to the Secondary Pinions, to the Internal Gear and out the Output Shaft at the ratio of 2.44-1.

Reverse Range—Rear Clutch applied, locking the Turbine Shaft to the Secondary Sun Gear and the Rear Band applied, holding the Pinion Carrier stationary, the flow of power is from the Turbine Shaft through the Rear Clutch to the Secondary Sun Gear, to the Secondary Pinions, to the Internal Gear. The Secondary Pinions acting as idlers on stationary axis, drive the Internal Gear in a reverse direction.

LUBRICATION

►*CAUTION:* Transmission oil level should be checked at 1000 mile intervals and should be changed at 15000 mile intervals.
Recommended Oil—Part No. 8L-19582-C, Automatic Transmission Oil "A", in sealed containers.
Capacity—Approximately 9 qts.
Checking Fluid Level—Apply emergency brake, place the transmission selector lever in neutral ("N") position, then run the engine at idle speed approximately four minutes. Clean all dirt and lint from the right hand section of the floor mat, then roll the mat back to gain access to the fluid level indicator inspection plate. Clean the area around the cover plate to prevent dirt getting into the transmission. Remove the four screws and the cover plate. With the emergency brake applied and the engine running at slow idle, move the selector lever to the park (P) position. When the engine and transmission have reached normal operating temperature, move the lever through all ranges to assure fluid distribution throughout the transmission. Clean all dirt from the fluid level indicator cap. Turn the cap ½ turn counterclockwise with pliers, then remove the indicator. Wipe the indicator clean and insert in the transmission, making sure the indicator is seated and locked. Remove the indicator and read the fluid level. If necessary to add fluid, use only Automatic Transmission Fluid, Type A, in the amount sufficient to raise the fluid level to the full mark on the indicator. Replace the indicator, making sure it is firmly seated and tightened. Install the inspection plate and replace floor mat.
►**Check for Oil Leaks**—Inspect the bottom of the floor pan at the rear of the transmission for evidence of fluid. If fluid is found here, the rear extension housing seal is leaking between the two sections of the telescopic shield. Replace the seal. Check the speedometer cable connection at the transmission and replace the rubber seal if necessary. Check the governor inspection plate and install a new gasket if necessary. Leaking around the oil pan gasket generally can be stopped by tightening the attaching bolts to proper torque (12-17 ft.lbs.). If necessary install a new gasket. Inspect the drain plug, tighten to 20-25 ft.lbs. torque. If tightening does not stop the leak replace plug. (NOTE—The drain plug

CONTINUED N NEXT PAGE

FORDOMATIC & MERCOMATIC (C ntinu d)

gasket is not serviced separately). If leakage is evident at either the throttle lever shaft or manual lever shaft, replace either of the seals. Inspect the two hexhead pipe plugs at each side of the transmission case at the front. If either plug shows leakage, tighten to 7-15 ft.lbs. torque. Inspect the discharge air duct for evidence of fluid. If transmission fluid is found, check the converter nuts for proper torque (25-28 ft.lbs.).

►***CAUTION—Fluid found in the discharge air duct may be engine oil that has leaked past the rear main bearing. Be sure to determine which type of leak exists.***

Drainage and Refilling—Remove converter housing lower plate and drain converter by removing one drain plug, then rotate the engine 180° and remove the second drain plug. Remove transmission bottom pan drain plug and drain fluid from the transmission. Allow to drain thoroughly. Install converter and transmission drain plugs, then add 3 qts. of automatic transmission fluid, start engine and allow to idle two minutes. Add 6 qts. of fluid and bring transmission to operating temperature. Place selector lever in parking (P) position and check oil level. If level is not up to dip stick level mark, add as required.

►***CAUTION—Correct level to dipstick "Oil Level Mark" rather than the number of quarts added.***

LINKAGE ADJUSTMENT

►*FORD THROTTLE LINKAGE CHANGE CAUTION*—Two types of linkage used which require DIFFERENT adjustment procedure (see illustration for identification of linkage type used on car being adjusted).

MAKE ADJUSTMENTS IN FOLLOWING ORDER:

CARBURETOR IDLE SPEED: With engine at normal operating temperature (choke valve wide open and fast idle inoperative) and selector lever in Neutral "N" position, set throttle stopscrew for idle speed of 415-425 RPM.

►*CAUTION*—If Anti-stall dashpot adjusting screw prevents correct idle setting being obtained by holding throttle open, loosen locknut and turn adjusting screw in to provide clearance at dashpot rod. Adjust anti-stall after idle speed adjustment completed.

ANTI-STALL: *CAUTION—Ford and Mercury adjusted differently:*

Ford Adjustment—Loosen the dashpot adjusting screw locknut (on throttle lever), hold throttle lever in closed position, turn adjusting screw out (counter-clockwise) until the screw causes the dashpot rod to bottom in the dashpot (additional movement of screw will cause throttle valve to open), **then turn the adjusting screw in 1½-2 turns** and tighten the locknut. This will provide correct clearance of .045-.064" between dashpot rod and adjusting screw (apparent only when rod bottomed in dashpot).

NOTE—Above setting supersedes earlier data.

Mercury Adjustment—Back throttle stopscrew off until throttle valves are tightly closed with the screw just contacting the lowest step of the fast idle cam (cam in hot or slow idle position). Loosen dashpot adjusting screw locknut (on throttle lever), turn adjusting screw out (counter-clockwise) until throttle stopscrew just begins to leave the fast idle cam (when dashpot rod bottomed in dashpot), **then turn adjusting screw in one complete turn** and tighten the locknut.

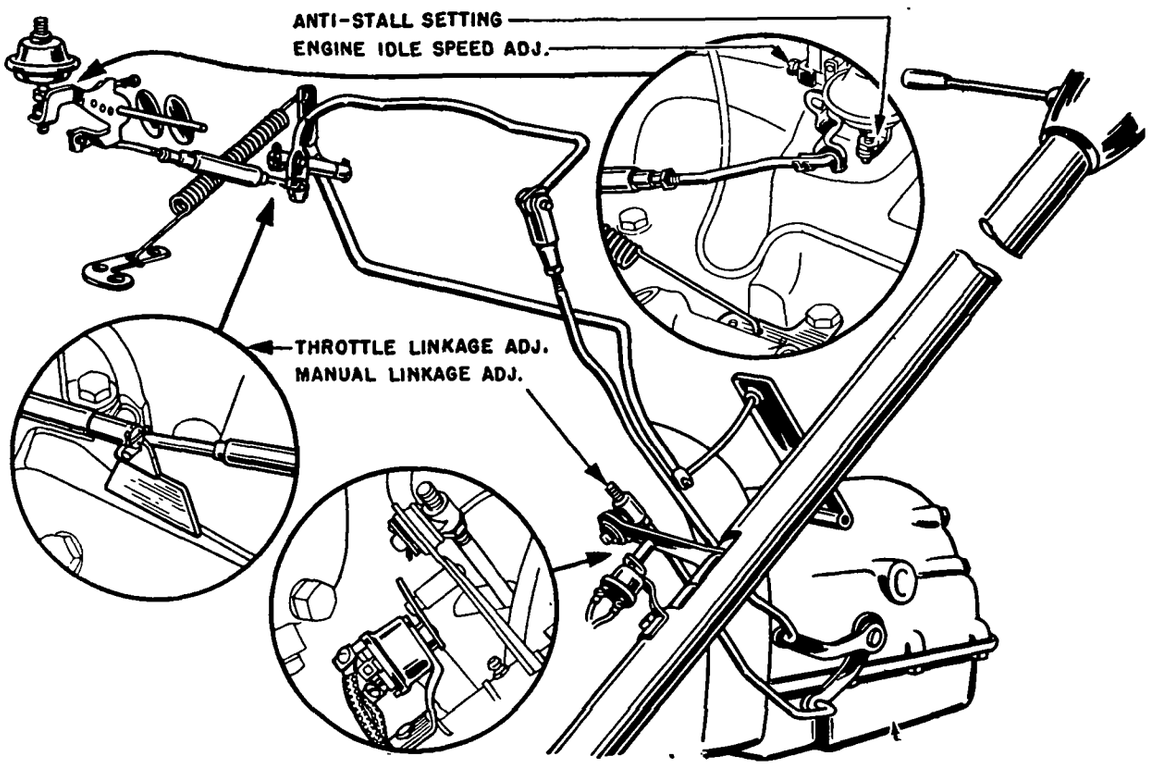

FORDOMATIC & MERCOMATIC TRANSMISSION CONTROL LINKAGE

►*CAUTION—Reset carburetor idle speed after dashpot adjustment completed.*

THROTTLE LINKAGE: *CAUTION—Later Ford cars with "C" design linkage adjusted differently than Ford with "B" linkage.*

Ford ("B" design linkage) & Mercury Adjustment:

1) Disconnect rod and remove the clip from the carburetor to Z-bar rod at the Z-bar end. Reinsert the rod in the Z-bar lever and place tool No. 77230 (Mercury), tool No. 77230F (Ford), on the end of the rod. With the tool resting on the finished surface of the cylinder block, adjust the rod length to hold carburetor throttle lever against the idle stop. Remove the tool and assemble the rod to the Z-bar with the clip.

CAUTION—Be sure that the adjusting tool rests on the clean, finished surface, not on the manifold gasket or foreign matter.

2) At the Z-bar, remove cotter pin and clevis pin from the upper end of the Z-bar-to-transmission rod and pull upward gently but firmly on the rod from the transmission throttle lever to hold the lever against the stop. Adjust the clevis so that the clevis pin will freely enter the clevis and Z-bar hole. **Lengthen the rod by turning the clevis counter-clockwise 2½ full turns,** then assemble the rod to the Z-bar with the clevis pin and cotter pin. Lock the clevis on the rod with locknut while holding the clevis in alignment to prevent binding.

Ford ("C" Design linkage) Adjustment:

1) Check position of accelerator Z-bar-to-carburetor connecting link. If link is not parallel to centerline of engine, loosen locknut and turn link adjustment screw (see illustration) until link position is correct, tighten locknut while holding the screw.

2) Check position of accelerator shaft hanger support in relation to accelerator shaft. If support is not perpendicular to shaft, loosen bolt securing support to engine bracket and move top of support to correct position, tighten the bolt **while holding two horizontal legs of support together** with vise-grip pliers.

3) Install special adjusting tool 77230-FA on rear end of carburetor-to-Z-bar rod with slot in tool engaging end of rod and leg at rear of tool behind accelerator shaft and make certain that tool rests on finished surface of cylinder block (CAUTION—see that block is clean and that gauge is not resting on manifold gasket). Hold the rod at the bottom of the slot in the gauge, loosen locknut on adjustment bolt in Z-bar bracket, turn adjusting bolt until tool leg just touches accelerator shaft, tighten locknut.

4) With tool in place on carburetor-to-Z-bar rod, loosen the locknut on the rod, turn barrel on rod

C NTINUED N NEXT PAGE

FORDOMATIC & MERCOMATIC (C ntinu d)

until idle adjustment screw (throttle stopscrew) just touches its stop when rod is held at bottom of tool slot, then tighten the locknut. Remove the adjusting tool.

5) Remove cotter pin and clevis pin from upper end of Z-bar-to-transmission rod, pull gently but firmly upward on rod to hold transmission lever against its stop, adjust clevis on rod until clevis pin freely enters holes in clevis and Z-bar, **then lengthen rod by turning clevis 2½ full turns** counter-clockwise (off) rod. Assemble rod to Z-bar with clevis pin and cotter pin, tighten clevis locknut.

6) Lubricate all bearing points in linkage and check for free operation throughout entire range without binding. Check and reset engine idle speed.

Check operation of car after all adjustments completed. If clutch or band slippage occurs at part throttle, increase transmission-to-Z-bar rod adjustment (5 above) to 3 full turns **but do not exceed 3½ turns.**

MANUAL LINKAGE: Disconnect the manual rod from the transmission selector arm at the upper end. Position the selector lever so that the indicator at the steering wheel is down against the stop in the drive position. Position the transmission manual lever in the drive (Dr) position (second position from the bottom). Adjust the rod length so that the sleeve trunnion freely enters the grommet in the selector arm. **Lengthen the rod by turning the sleeve one full turn counter-clockwise.** Reassemble the rod to the selector arm and lock sleeve nut with locknut. Check alignment of the pointer for all positions of the selector lever.

STARTER NEUTRAL SWITCH: Loosen the neutral switch to steering column attaching screws. Position the switch so that the starter circuit is closed when the selector lever is in the neutral (N) position. Check the starter circuit in all selector lever positions. NOTE—The circuit must be open in all positions except neutral.

BAND ADJUSTMENT

FRONT BAND ADJUSTMENT: Drain fluid from pan and remove pan, using a drain can with a fine mesh screen. Remove fluid screen from transmission and loosen the front servo adjusting screw locknut TWO FULL TURNS, using a 11/16" wrench. Using front band adjusting tool No. 7225, insert gauge block between servo piston and adjusting screw and tighten adjusting screw until wrench overruns. Back off adjusting screw exactly ONE COMPLETE TURN and remove gauge block. While holding adjusting screw stationary, tighten locknut clockwise (20-25 ft.lbs.). Install fluid screen and install pan using new gasket. Install the drain plug and refill transmission to "Full" mark using fluid drained from transmission before disassembly. (Add new fluid as necessary).

REAR BAND ADJUSTMENT: Fold back floor mat to expose right side of floor pan and remove access hole cover on right side of transmission floor pan. Using rear band adjusting tool No. 7195, loosen rear band adjusting screw locknut. Using "T" handle of tool No. 7195, tighten rear band adjusting screw until wrench overruns. (If screw was found to be tighter than wrench capacity (10 ft. lbs.), loosen several turns and retighten until wrench overruns). Back off adjusting screw 1½ turns. While holding adjusting screw stationary, tighten adjusting screw locknut (35-40 ft.lbs.).

TESTING & TROUBLE SHOOTING

STALL TEST: The stall test is made in the drive range and the reverse range. The test determines whether the bands and clutches are holding properly.

►***CAUTION—While making the test never hold the throttle open longer than 5 seconds and RELEASE THROTTLE IMMEDIATELY if speed exceeds 1565 RPM. (indicating band or clutch slippage).***

Connect a tachometer to read on the high scale, and make sure the engine is idling properly (425 RPM) at normal operating temperature. Firmly apply the brake pedal with the left foot, place the selector lever in drive (Dr) range, and press the accelerator all the way down to the floor. The engine speed should be 1365-1565 RPM. (Ford), 1400-1600 RPM. (Mercury). If engine speed is below this lower RPM., tune up the engine and repeat test. If engine speed exceeds the higher figure, release the accelerator immediately because it indicates the front band or clutch is slipping. Repeat the test with the selector lever in reverse (R) position. If slippage occurs, it is the rear band or rear clutch. Release the accelerator immediately. If the stall test shows proper band and clutch operation, proceed with the shift point test. If slippage is evident, make a pressure test.

SHIFT TEST: Select a smooth level road for the test. First check the shift from intermediate to high with a light throttle. Place the selector in drive (Dr) position and starting from a standstill, apply the accelerator lightly but steadily. The shift from intermediate-to-high should occur at the correct MPH. Allow the car to decelerate until downshift from high-to-intermediate occurs. See table for correct shifting speeds. With the selector lever still in drive (Dr) position, press down hard on the accelerator until the car shifts from intermediate to high. See table for correct shifting speeds. Reduce the car speed to a point below 50 MPH., then press the accelerator pedal quickly to the floor. This action engages the kickdown valve which shifts the transmission from high to intermediate. The kickdown shift occurs only with the car in high gear and at a speed below the full throttle (kick-down) point as shown in the table below.

FORD & MERCURY SHIFT SPEEDS

Automatic Shifts

	Min. Throttle	Full Throttle
2-3 Upshift	14-19 MPH	64-69 MPH.
3-2 Downshift	7-3 MPH	①Below 55 MPH.

Manual Shift ("Dr" to "Lo")

3-2 (Intermediate)	Above 23-27 MPH.
3-1 (Low)	Below 23-27 MPH.

①—Forced downshift or "kick-down."

OPERATING PRESSURE TEST: Set the parking brake firmly and hoist the car until the rear wheels clear the floor. Remove the converter air intake duct and screen. Disconnect the throttle linkage at the outer throttle lever. Remove the ¼" pipe plug located near the throttle levers, then connect the pressure gauge so that it can be read under the car. Position the throttle lever protractor gauge over the throttle lever shaft, locating the large elongated hole over the large shaft to the rear of the control lever. Set the indicator gauge to 0° and lock in place with the knurled thumb screw. Hold the throttle lever against the stop (up) and insert the gauge pin through the small elongated hole in the gauge and the hole in the throttle lever. If the gauge pin enters these two holes freely the throttle mechanism has not been distorted and need not be replaced. Replace the throttle control mechanism if it is distorted. With the throttle lever still held against the stop (up), lock the throttle lever to the gauge by tightening the thumb screw on the gauge. Remove the gauge pin, then loosen the knurled screw and advance the lever fully (down). The lever should travel 28°-33°. Use an engine tachometer and set the engine idle speed to 600 RPM. by adjusting the idle adjusting screw. Make tests in Reverse "R" and Drive "Dr" positions as follows:

Reverse Test—With engine idling at 600 RPM., place selector lever in Reverse "R" position. Observe the pressure at 0° throttle lever position. The pressure should be 60-80 p.s.i. From underneath the car advance the throttle lever slowly and observe the angular reading at the point the pressure begins to rise. Pressure rise should begin between 3½-4½° throttle advance. Continue to advance the throttle lever slowly until maximum pressure is indicated (should be 140-165 lbs.) and observe angular reading which should be 4½-7½°.

Drive Test—Place selector lever in Drive "Dr" position and repeat above test procedure. Maximum pressure should be 120-145 lbs. with angular reading of 7-10½°.

After above tests completed, remove protractor gauge and pressure gauge, re-install pipe plug. Connect the link to the throttle lever using a new cotter pin. Install converter air intake and duct. Reset engine idle speed to 425 RPM. and adjust throttle linkage. *See Linkage Adjustment.*

MINOR REPAIRS (TRANSMISSION IN CAR)

The following transmission units can be removed for repairs while the transmission remains in the car. Raise car on hoist for these operations.

►**NOTE:** For disassembly and overhaul of the following units, see "Overhaul (All Transmission Units)."

Governor Removal: Remove governor inspection cover from extension housing. Rotate the drive shaft to bring governor body in line with inspection hole. Remove the two screws that secure governor body to sleeve. Remove governor.

►***CAUTION—Use care not to drop bolts or governor valve into housing.***

Installation—Lubricate governor valve and install into governor body. Install assembly on governor sleeve and install attaching bolts. Install inspection cover using new gasket.

►**NOTE:** For the following operations, remove transmission fluid level indicator. Remove transmission drain plug and drain the fluid into a clean container using a fine mesh wire screen for straining. (fluid may be re-used). Then remove transmission oil pan.

CONTINUED ON NEXT PAGE

FORDOMATIC & MERCOMATIC (C ntinu d)

Front Servo Removal: Loosen lubrication tube from pressure regulator and rear pump and remove. (NOTE—If necessary, tap tube with soft hammer to remove—*CAUTION*—Do not bend or distort tube). Loosen control valve body attaching bolts. Remove servo attaching bolt and while holding servo strut with fingers, remove servo assembly.

Installation—Position servo band forward in case with band ends down. Position servo strut with large end indexing with servo actuating lever and small end indexing with band end. Rotate band, strut and servo into position, indexing tubes from valve body to servo, and anchor end of band with anchor in case. Install attaching bolt, tightening to 30-35 ft.lbs. Tighten control valve attaching bolts to 8-10 ft.lbs. Install lubrication tube and adjust servo band. See "Front Band Adjustment." Install pan using new gasket. Tighten screws to 12-17 ft.lbs. Fill transmission to correct level with fluid.

Rear Servo Removal: Remove lubrication tube from rear pump and regulator. (NOTE—If necessary tap tube with soft hammer to remove). Remove rear pump intake tube and remove rear servo attaching bolts. While holding strut with fingers, remove servo from case.

Installation—Position servo anchor strut and rotate servo band to engage strut. Hold in position with fingers. Position actuating lever strut and install servo and install servo attaching bolts, tightening to 40-45 ft.lbs. Install rear pump intake tube. Adjust servo band. *See "Rear Servo Adjustment."* Install pan using new gasket and tighten screws to 12-17 ft.lbs. Fill transmission with fluid.

Control Assembly Removal: Remove compensator pressure tube and control pressure tube from valve body and regulator. Loosen front servo attaching bolt several turns and remove the valve body attaching bolts. Remove valve body by disengaging tubes to front servo.

Installation—Install valve body. Use care to index servo tubes, inner throttle lever between lever stop and downshift valve, manual valve with actuating pin and at the same time push throttle valve in to clear case. Install valve body attaching bolts. Tighten to 8-10 ft.lbs. Tighten front servo attaching bolt to 30-35 ft.lbs. Install control pressure tube in valve body and regulator and install compensator tube in valve body and regulator. Install pan using new gasket and tighten screws to 12-17 ft.lbs. Fill transmission to correct level with fluid.

Pressure Regulator Removal: Remove lubrication tube. Remove control pressure tube and compensator tube from valve body and regulator. Remove pressure regulator spring retainer. *(CAUTION*—Maintain pressure on retainer to prevent springs flying out). Remove control pressure valve. Remove regulator body attaching screws and remove regulator body.

Installation—Install regulator body and attaching bolts and tighten to 17-22 ft.lbs. Install converter valve and control pressure valve. Install valve springs and retainer. Install compensator pressure tube and control pressure tube in regulator and valve bodies. Install lubrication tube. Install pan using new gasket and install transmission drain plug. Fill transmission to correct level with fluid.

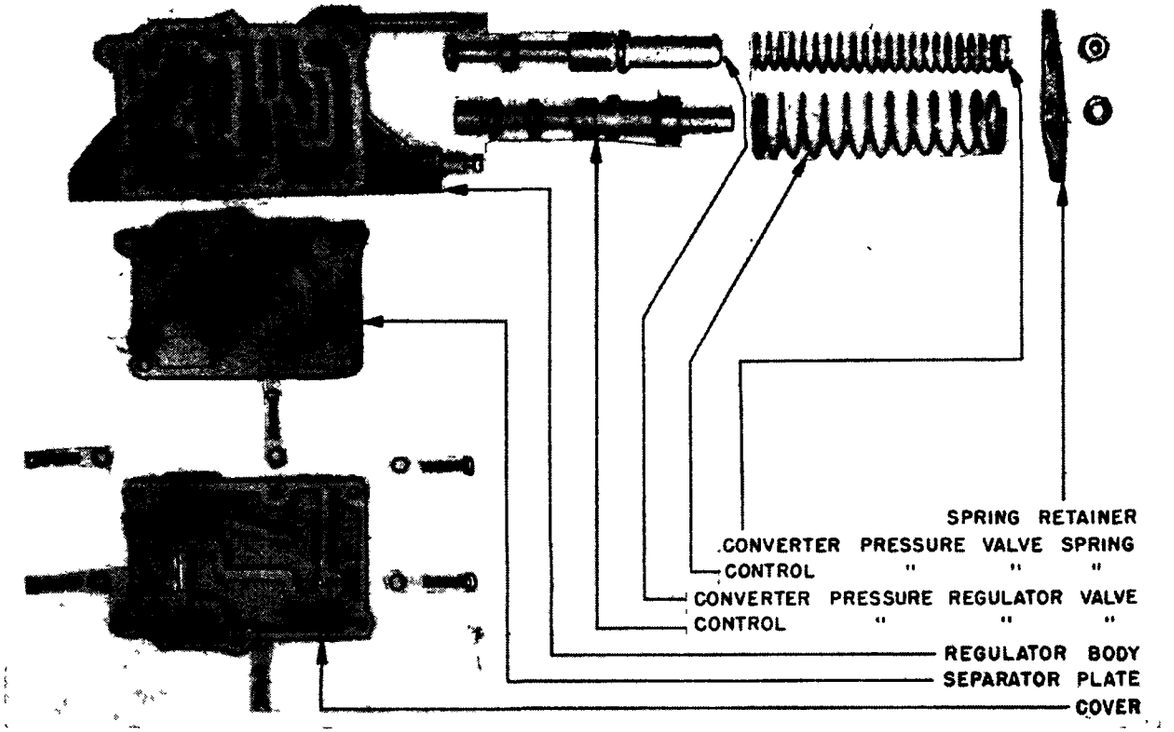

FORDOMATIC & MERCOMATIC PRESSURE REGULATOR

Throttle and Manual Controls Removal: Remove control pressure and compensator pressure tubes. Loosen front servo attaching bolt and remove control valve assembly. Disconnect throttle and manual rods from outer levers. Remove throttle lever shaft nut and inner lever. Remove outer throttle lever and shaft. Remove parking mechanism actuating rod and detent lever nut. Remove detent, ball and spring. Remove outer manual lever and shaft.

Installation—Install manual shaft seal, using tool IP-77288. Install outer manual lever and shaft. Install detent and attaching nut, detent ball and spring. Install parking mechanism actuating rod and secure with cotter pins. Install new throttle shaft seal, outer throttle lever and shaft. Install inner throttle lever and attaching nut. Connect manual and throttle rods to outer levers. Check linkage for free movement. Install control valve assembly, tighten bolts to 8-10 ft.lbs. Tighten front servo attaching bolt to 30-35 ft.lbs. Install compensator tube and pressure control tube and install pan, using new gasket. Tighten pan drain plug to 20-25 ft.lbs., and refill transmission to correct level. Check manual and throttle lever adjustments. *See "Manual and Throttle Lever Adjustment."* Road test car and check shift points.

NOTE: Transmission may be removed without removing the converter. *See "Transmission Removal (Less Converter Assembly)".*

REMOVAL FROM CAR

TRANSMISSION REMOVAL (Less Converter Assembly): Follow the above instructions to the point where "Lift has been lowered to allow engine to rest on support tool." At this point, reposition the lift under assembly and raise lift to relieve weight of the transmission. Remove the four bolts holding the transmission to the converter housing. Remove the transmission by sliding the assembly toward the rear of car sufficiently to disengage turbine shaft. Lower the assembly and remove from under the car.

Installation—See "Transmission Installation" below.

TRANSMISSION & CONVERTER REMOVAL: Remove spark plugs from engine. Place car on support stands with all four wheels approximately 12" above the floor. Disconnect manual linkage at transmission manual lever and disconnect throttle linkage at transmission throttle lever. Disconnect speedometer at extension housing and disconnect the drive shaft at rear universal joint flange and remove drive shaft and universal joint from transmission output shaft. Remove air duct from converter housing and take off converter housing lower plate. Drain converter by removing one drain plug, then rotate engine 180° and remove the second drain plug. Remove transmission bottom pan drain plug and drain transmission. Remove rear engine mount to frame crossmember bolts. Position trans-

CONTINUED ON NEXT PAGE

FORDOMATIC & MERCOMATIC (C ntinu d)

mission lift under transmission and raise engine and transmission sufficiently to install engine support tool ST-0714. Remove rear engine mount from transmission and remove the detachable frame crossmember from the frame "X" member. Lower lift under transmission to allow the engine to rest on support tool. Reposition transmission lift under assembly and raise lift just enough to relieve the weight of the transmission on the engine. Remove starter and upper converter housing plate with seal. Remove the six bolts securing the converter housing to the engine block. Remove the transmission and converter assembly by sliding the assembly towards the rear of car sufficiently to disengage the converter housing dowels and converter cover pilot. Secure converter to converter housing to prevent damage to converter. Lower the assembly and remove from under car.

►**NOTE**—Before disassembly of the transmission, clean transmission thoroughly to avoid the possibility of road dirt entering the mechanism.

TORQUE CONVERTER REMOVAL (From Transmission): Grasp converter cover with both hands and pull straight out. *(CAUTION*—To prevent damage to front seals, do not rock assembly from side to side). Remove converter housing attaching bolts and remove housing from transmission.

See "Torque Converter Overhaul."

►***DISASSEMBLY & REASSEMBLY CAUTION: CLEANLINESS IS EXTREMELY IMPORTANT WHEN OPENING UP TRANSMISSION. Thoroughly clean outside of case first. CLEAN each part as removed with cleaning fluid or gasoline and dry with air—wiping cloths will leave lint on parts.***

►***CAUTION: Care must be exercised when handling parts to avoid burrs on bearing surfaces. If mating parts do not assemble freely, DO NOT USE FORCE. Examine the parts for the cause of the difficulty.***

►***CAUTION: Use automatic transmission fluid Type "A" only to lubricate parts on assembly. Under no circumstances should other lubricants be used.***

►**NOTE**—New gaskets must be used on assembly. Tighten bolts and screws to the correct torque specifications.

VERHAUL—TORQUE CONVERTER

Disassembly—Remove converter cover attaching bolts and nuts. Remove cover and gasket. Remove bronze thrust washer from turbine and lift turbine out of pump housing. Lift stator out of pump housing. *(CAUTION*—Note position of stator when removing so that it can be installed in the same manner). Remove thrust washers from pump hub and from turbine hub. Remove the one way clutch inner race from stator and take out the snap ring retaining outer hub to stator. *(CAUTION*—Do not burr snap ring groove). Remove outer hub, sprag assembly and outer race and then remove snap ring retaining inner hub to stator. Remove inner hub.

Inspection—Inspect all converter blades for looseness, and check thrust surfaces for scores and splines for burrs and wear. Inspect seal surfaces and front pump driving lugs for wear. Inspect sprag assembly for worn or broken sprags or broken or distorted spring.

Assembly—Install stator inner hub and snap ring. Turn assembly over and install sprag assembly into outer race. *(CAUTION*—Make sure sprags are pointed in the right direction). Install outer race and sprag assembly into stator. Install outer hub and snap ring. Insert tool IP-7946, tapered side first into sprag assembly while rotating tool counterclockwise to position sprags. Install inner race with spline section up. Guide tool IP-7946 with hand while pushing inner race into position. Check stator for clockwise rotation while holding inner race. Install thrust washer into hub of converter pump and install stator with "Front" (Stamped into face of stator) up. Install thrust washer into hub of turbine and install turbine. Install bronze thrust washer on turbine hub. Position converter cover using new washer and install the 28 cover to pump body attaching bolts and tighten to 25-28 ft.lbs. Install converter housing on transmission and tighten to 40-45 ft.lbs. Mount the converter assembly on the turbine shaft and press it firmly into position. *(CAUTION*—Do not rock the assembly, as the seals may be damaged).

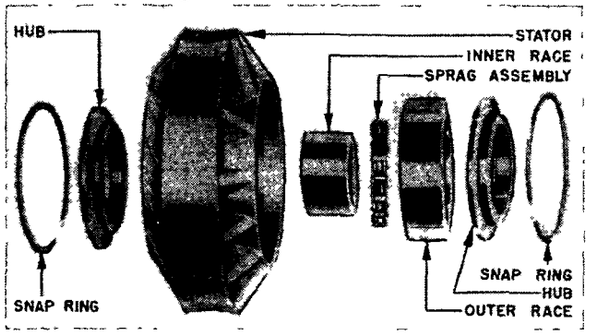

CONVERTER STATOR UNIT (DISASSEMBLED)

DISASSEMBLY—TRANSMISSION

DISASSEMBLY OF TRANSMISSION (Into Major Units): With transmission on bench fixture, (tool No. 7000-C-D recommended for holding transmission), remove all transmission units as follows:

1) Remove pan and gasket and take out fluid screen.
2) Remove pressure regulator spring retainer, regulator springs, control pressure and converter pressure regulator valves.

►***CAUTION—Maintain pressure on retainer to prevent valve springs from flying out.***

3) Loosen pressure regulator and valve body attaching bolts, and remove lubrication tube from pressure regulator and rear pump. NOTE—If necessary tap tube with soft hammer to remove.

►***CAUTION—Do not bend or distort tube.***

4) Remove rear pump intake tube, being careful not to bend or distort it.
5) Remove compensator pressure tube (small) and control pressure tube (large) from pressure regulator and valve body. NOTE—If necessary, tap tube with hammer.
6) Loosen front and rear servo band adjusting screws five turns and loosen front servo attaching bolt three turns. Remove valve body attaching bolts and raise valve body to clear case and disengage valve body servo tubes. Remove valve body.
7) Remove front servo attaching bolt. Hold front servo strut with fingers and lift servo assembly from case. NOTE—Remove tubes if they should remain in servo.
8) Remove regulator body attaching bolts and washers and remove regulator body from case.
9) Remove rear servo attaching bolts and while holding actuating and anchor struts with fingers, lift servo from case. *(CAUTION*—Do not permit struts to drop into case).
10) Mount dial indicator on front pump so that contact rests on end of turbine shaft. Use Extension tool IP-77067. Insert tool IP-7657 into extension block and with a large screwdriver pry front clutch cylinder to rear of transmission. Set dial indicator to zero (0). Remove screwdriver and pry units toward front of transmission by inserting screwdriver between large internal and rear clutch drum. Record instrument reading. End play should be .010" to .029". Remove indicator and support.
11) Remove front pump attaching bolts and remove front pump assembly. (NOTE—If pump is tight in case, use soft hammer to loosen pump). Remove pump to case gasket.
12) Remove extension housing. *(CAUTION*—Guide housing to avoid damage to rear oil seal).
13) Remove speedometer drive gear snap ring from output shaft and take off the speedometer drive gear. *(CAUTION*—Do not lose drive ball).
14) Remove fluid distributor attaching bolts and slide distributor and tube from transmission. Remove distributor sleeve from output shaft.
15) Remove governor snap ring from shaft and slide governor assembly from output shaft. *(CAUTION*—Use care so as not to damage seal rings on output shaft. Do not lose governor drive ball).
16) Remove rear pump discharge tube using tool IP-77869 and remove pump from case. Remove extension housing and pump gaskets. Remove rear pump drive key from output shaft. Remove bronze thrust washer from output shaft. (NOTE—Washer may come off with pump). Hold rear drum forward and remove the output shaft.
17) Remove selective thrust washer from rear of pinion carrier.

►**NOTE**—If endplay was not within specifications replace washer with one of proper thickness. Selective washers are furnished in the following sizes: .063-.061", .069-.067", .076-.074", .083-.081".

18) Remove four seal rings from output shaft and two seal rings from primary sun gear shaft. *(CAUTION*—Do not distort rings).
19) Remove pinion carrier from case and remove bronze thrust washer from sun gear shaft.
20) Mark rear band position so that it can be assembled in the same position, and remove from case.
21) Remove special bolts (one each side) from outside of transmission case and remove center support from case.
22) Remove rear and front clutch assemblies from transmission case as a unit. Install clutch assembly into bench fixture, tool No. IP-77530 and remove thrust washer from front of turbine shaft. Remove the front band from case. Lift front clutch assembly from primary gear shaft. *(CAUTION*—Do not rock assembly while lifting to prevent damage to seal rings).
23) Remove bronze and steel thrust washers from primary sun gear shaft and then remove the front clutch seal rings from primary sun gear shaft. Lift rear clutch assembly from shaft. *(CAUTION*—Do

C NTINUED N NEXT PAGE

FORDOMATIC & MERCOMATIC (C ntinued)

not rock assembly while lifting to prevent damage to seal rings). Remove rear clutch seal rings and thrust washers from shaft.

OVERHAUL (ALL TRANSMISSION UNITS)

Front Clutch: Disassembly. Remove clutch cover snap ring and remove turbine shaft from clutch drum. Remove thrust washer and take out clutch hub. Remove three (3) bronze, two (2) steel clutch plates and pressure plate. Using arbor press and tool IP-77565 depress clutch release spring and remove snap ring. Clutch release spring can now be removed. Place splined end of primary sun gear shaft in clutch piston bore, entering it as far as it will go, and apply air pressure to the hole in the opposite end of the primary shaft, forcing clutch piston out of the cylinder. *(CAUTION*—Hold hand over piston to prevent damage). Remove inner seal from clutch cylinder and outer seal from clutch piston. These two seals should be discarded and not re-used.

Inspection—Inspect clutch cylinder, thrust surfaces, piston bore and clutch plate serrations for scores or burrs. Check fluid passages for obstructions. Check clutch release spring for distortion and cracks. Inspect bronze clutch plates for scored bearing surfaces, and fit on clutch hub serrations. Inspect steel plates for scored surfaces, and fit of serrations in the clutch drum. Check pressure plate for scored bearing surfaces. Check clutch hub thrust surfaces and bronze thrust washers for scored surfaces. Check clutch hub splines and turbine shaft splines for wear. Inspect clutch cover bearing surfaces for scores. Inspect all bushings for wear or scores.

►***DO NOT REASSEMBLE CLUTCH AT THIS TIME (parts installed during reassembly of clutches & shafts).***

Rear Clutch: Disassembly. Remove clutch pressure plate snap ring and remove pressure plate. Remove the four (4) bronze and four (4) steel clutch plates from drum. Using arbor press and tool IP-77515, depress clutch release spring and remove clutch release spring retainer snap ring. *(CAUTION*—Guide spring retainer while releasing press to prevent retainer interfering with snap ring groove). Remove retainer and released spring. Place splined end of primary sun gear shaft in clutch piston bore, entering it as far as it will go, and apply air pressure to the hole in the opposite end of the primary shaft, forcing clutch piston out of the cylinder. *(CAUTION* —Hold hand over piston to prevent damage). Remove inner seal from clutch piston. These two seals should be discarded and not re-used.

Inspection—See "Front Clutch Inspection." Follow same procedures.

►**NOTE**—Steel plates in rear clutch are "coned," and are not interchangeable with front clutch plates.

►***CAUTION—Check "coning." Position plates on flat surface with "dished" side down and insert feeler gauge under inside edge. Tolerance .010-.014". Replace plates if not within these limits.***

►**NOTE**—Rear clutch steel plates are identified by three open spots in the teeth.

Assembly—Install inner seal ring in groove in drum and outer seal in groove in piston. Install piston in clutch drum using automatic transmission fluid as a lubricant to facilitate assembly. *(CAUTION*—Make sure seals are not twisted or distorted during assembly). Install four steel and four bronze clutch plates alternately, starting with a steel plate convex side up. (NOTE—Lubricate plates as they are installed). Install clutch pressure plate with bearing surface down. Install snap ring making sure it is fully seated in groove. Install clutch release spring and position retainer on spring. Using tool IP-77515 in arbor press, compress clutch spring and install snap ring. *(CAUTION*—While compressing spring, guide retainer to avoid interference of retainer with snap ring groove). Make sure snap ring is fully seated in groove.

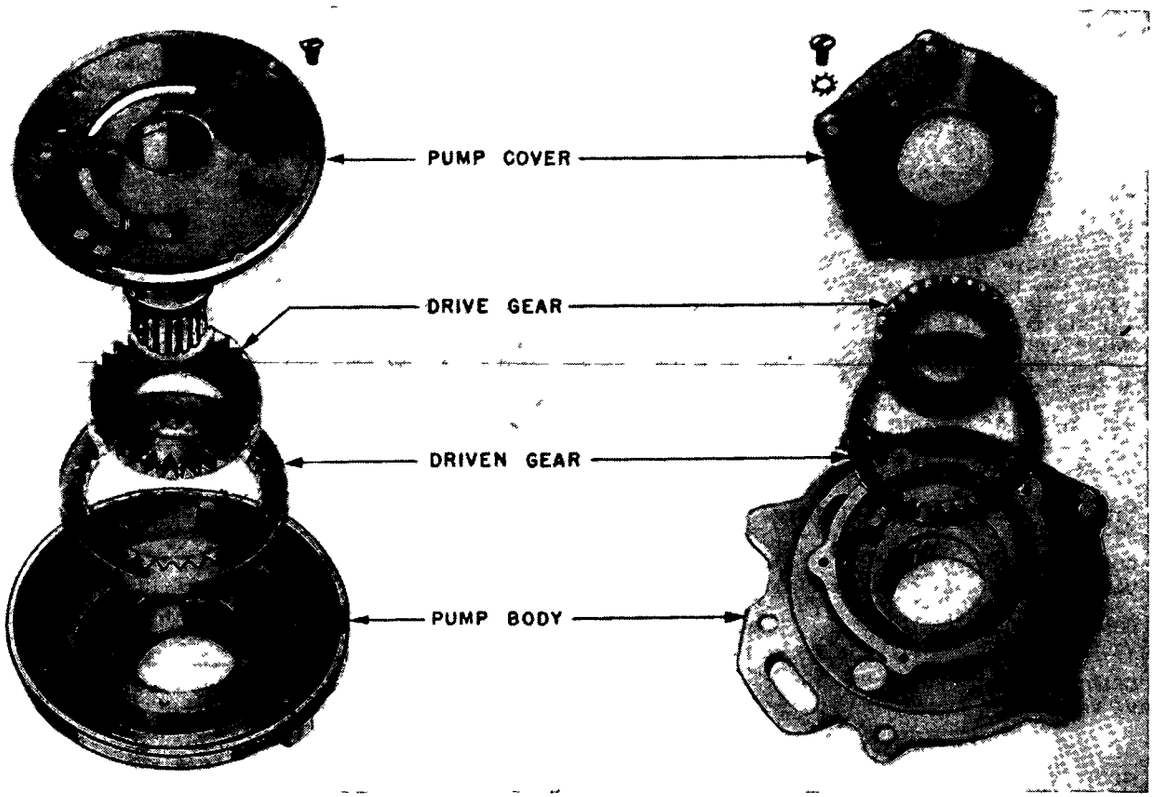

FRONT OIL PUMP — REAR OIL PUMP

FORDOMATIC & MERCOMATIC HYDRAULIC PUMPS

Front Pump Disassembly: Remove pump cover attaching screws and remove cover with stator support. Mark the driven gear with Prussian Blue to assure correct assembly and remove drive and driven gears from pump body. To remove seal from pump body, mount the pump body on transmission case and using tool 4235-A remove the seal.

►*CAUTION*—Extreme care must be taken not to scratch or mar pump gears or bearing surfaces.

Inspection—Inspect bushing, gear pockets and crescent for scores. Inspect front cover, pump body, gear teeth and stator support splines for burrs. Check splines and bushings for burrs, scoring or wear. Replace any parts found to be defective.

Assembly—Using tool IP-77837 install new pump front seal. Install pump driven gear into pump body noting position of gear as marked on disassembly. Install pump cover, attaching screws and lockwashers. Check pump for free movement.

Rear Pump Disassembly: Remove screws and lockwashers securing pump cover to pump body and remove cover. Using Prussian Blue, mark pump drive and driven gears to assure correct assembly, and remove gears from body.

►***CAUTION—Handle pump parts with care to avoid scratching or marring.***

Inspection—Inspect all pump parts for excessive wear, scores or burrs. Check fluid passages for obstructions.

Assembly—Install pump driven gear into pump body, positioning gears as marked on disassembly. Install drive gear into position as marked. Install pump cover, attaching screws and lockwashers. Tighten to 17-22 ft.lbs. Check for free movement of pump.

Regulator Pressure Body Disassembly: Remove regulator cover and remove separator plate.

Inspection—Inspect regulator body and cover mating surfaces. Check fluid passages in body and

C NTINUED N NEXT PAGE

FORDOMATIC & MERCOMATIC (C ntinu d)

fluid passage holes in separator plate for obstructions. Inspect valves and valve bores for scoring and check freedom of valves in valve bores. Check regulator valve springs for distortion.

Assembly—Wash thoroughly in clean solvent and blow dry with air. Position separator plate on regulator and install regulator cover and attaching screws.

Control Valve Disassembly: Remove manual valve. Take out one screw attaching separator plate to valve body. Remove upper body front plate. (NOTE —Plate is spring loaded, apply pressure to plate while removing attaching screws). Remove compensator sleeve, plug and compensator spring, modulator valve spring and valve, downshift valve and spring, compensator valve. Remove the upper body side plate and take out the throttle valve and modulator plug. Remove the lower body side plate. (NOTE—Plate is spring loaded, apply pressure to plate while removing attaching screws). 3-2 control valve and spring, low inhibitor valve and spring and governor plug can now be removed. Remove end body. (NOTE—End body is spring loaded. Apply pressure to body while removing attaching screws). Remove regulator plug and shift valve plugs from end body. Remove end body plate noting position of countersunk head attaching screw. Shift valve outer and inner spring, shift valve, low regulator valve and transition valve can now come out. Remove attaching bolts and separate bodies. Remove separator plate from upper body and remove check valve seat from lower body.

Inspection—Thoroughly clean all parts in clean solvent and blow dry with air. DO NOT USE CLOTHS FOR WIPING PARTS. Lint left by a cloth can cause a valve to operate poorly.

►*CAUTION—Handle all parts carefully to avoid scoring, burrs, and distortion.*

►**NOTE**—It is permissible to use crocus cloth to polish valves.

►*CAUTION—Avoid rounding sharp edges of valves and plugs.*

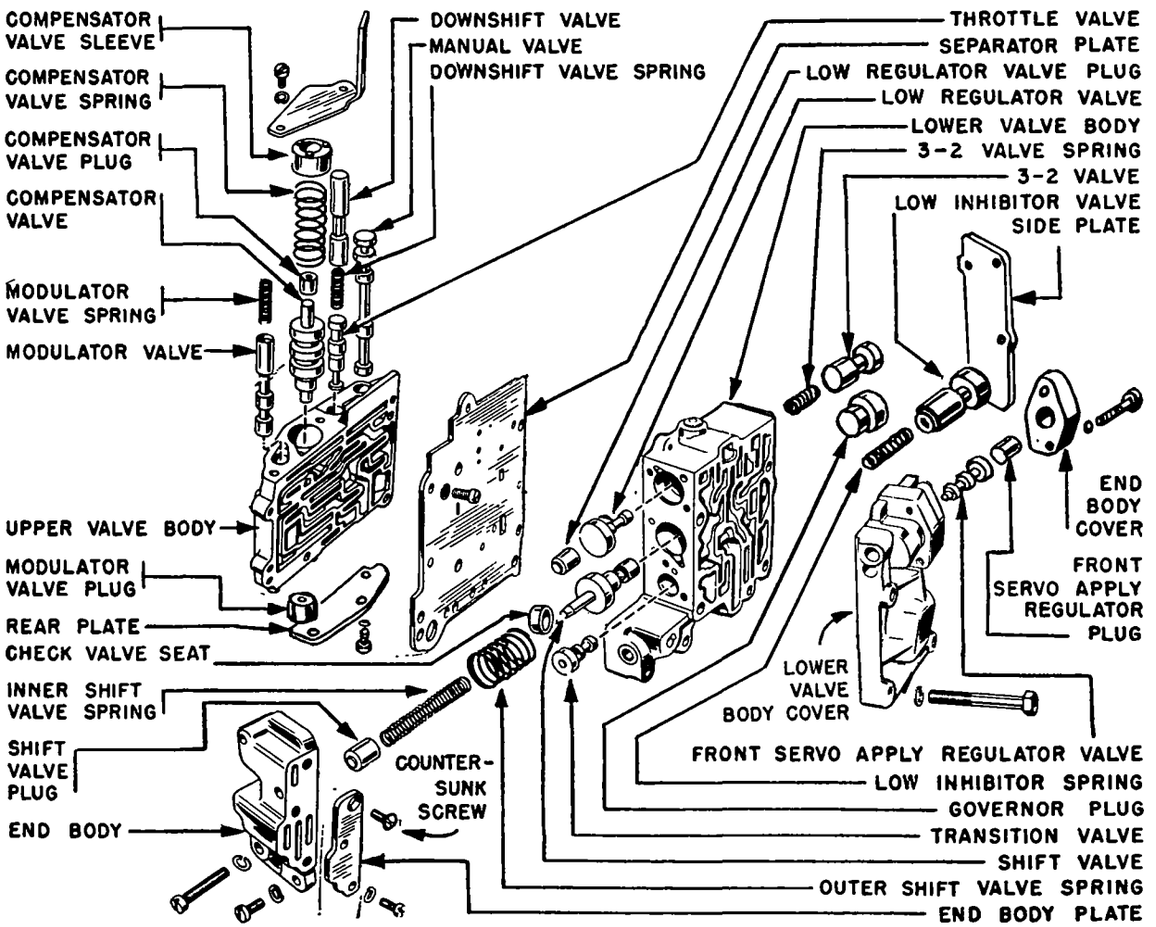

F RDOMATIC & MERCOMATIC CONTROL VALVE ASSEMBLY

►**NOTE**—Valves must fall of their own weight into their respective bores.

Inspect all mating surfaces for burrs, scratches and for flatness. Check all passages for obstructions. Inspect all valves and valve bores for scoring, and check for free movement of valves in bores. Examine springs for distortion.

Assembly—Arrange all parts in their correct position relative to assembly.

►**NOTE**—Use care when installing valves and plugs in their bores to avoid shearing of soft body castings. Rotate plugs and valves when entering them in their bores.

Install separator plate on upper body and enter but do not tighten screws. Install check valve seat in lower body then position lower body on upper body. Install lower body attaching bolts and tighten to 4-6 ft.lbs. Tighten separator plate screws.

►*CAUTION—Excessive tightening of these bolts may distort valve bodies, causing valves or plugs to stick.*

Install plate on end body. Check for correct position of countersunk head screw. Install low regulator and shift valve plugs in end body. Install transition valve in lower body and install low regulator valve and shift valve. Install shift valve inner and outer springs, and install end body on lower body. Install governor plug, low inhibitor valve and spring, 3-2 control valve and install lower body side plate. Install modulator valve plug in upper body. (NOTE—Install plug with flat surface towards valve). Install throttle valve. Mount the upper body rear plate on the upper body and install the modulator spring and valve, compensator valve and spring, and downshift valve and spring. Install plug in compensator valve sleeve and install assembly in body. Install upper body front plate. Install separator plate to lower body with the one screw, and install the manual valve.

Governor Disassembly: Remove governor body attaching screws and remove body from counterwieght. Remove governor valve and governor side plate.

Inspection—Inspect valve and valve bore for scores and check free movement of valve in bore. Inspect all fluid passages for obstructions. Inspect mating surfaces for burrs and distortion.

Assembly—Install governor valve in bore of governor body and install body cover plate and attaching screws. Mount governor body on counterweight. (NOTE—Make sure fluid passages in body line up with passages in counterweight). Install body attaching screws.

Front Servo Disassembly: Remove servo piston guide snap ring. *(CAUTION*—Servo piston is spring loaded, apply pressure to piston when removing snap ring). Remove servo piston and guide from servo body. (NOTE—If necessary, tap servo piston guide slightly with soft hammer to remove from servo body). Remove servo spring, servo guide and seal rings from piston and guide.

Inspection—Inspect servo body for cracks. Inspect piston and piston bore for scores. Check fluid passages for obstructions. Check actuating lever for free movement and inspect for wear. (NOTE—If necessary to replace actuating lever or shaft, remove retaining pin and push shaft out of bracket). Inspect threads in lever and on adjusting screw. Check servo spring and servo band for distortion. Inspect servo band lining for excessive wear and

CONTINUED ON NEXT PAGE

FORDOMATIC & MERCOMATIC (C ntinu d)

bond to metal band. (NOTE—Band should be replaced if worn to a point where grooves are not clearly evident). Inspect bands for cracks and distortion.

Assembly—Install servo spring in body. Install new, large and small seal rings on servo piston and new seal rings on servo guide. Install guide on servo piston. *(CAUTION*—Use care not to distort seals). Install piston and guide assembly into piston body. (NOTE—Lubricate parts to facilitate assembly). Install adjusting screw and locknut in actuating lever if previously removed. Press cover down and then install snap ring. *(CAUTION*—Make sure snap ring is fully seated in groove).

Rear Servo Disassembly: Using ⅛" pin punch, remove servo actuating lever shaft retaining pin and remove shaft and actuating lever. While pressing down on servo spring retainer, remove snap ring. NOTE—Release pressure on retainer slowly, to avoid snap ring from flying out. Remove retainer and servo spring. Use air pressure to force piston out of servo body. *(CAUTION*—Hold hand over piston to prevent damage). Remove piston seal ring.

Inspection—See "Front Servo Inspection."

Assembly—Install new seal ring on servo piston and install piston into servo body. (NOTE—Lubricate parts to facilitate assembly). Install servo spring with small coiled end against servo piston. Install spring retainer and compress spring and install snap ring. *(CAUTION*—Make sure snap ring is fully seated in groove). Install actuating lever with socket in lever bearing on piston stem and install lever shaft, aligning the retainer pin holes, and install pin. Check actuating lever for free movement.

Distributor Sleeve Inspection—Inspect all passages for obstructions. Inspect sleeve bore for scores or excessive ring wear. Inspect mating surfaces for burrs and flatness. Check fit of fluid tubes. NOTE—Make sure spacer is on center tube.

Pinion Carrier Inspection—Inspect servo band surface for scores. Inspect inner bushing for scores. Check free movement of pinions on pins and inspect for worn or broken teeth. Check pinion end play. Should be .010 to .020". Pinion pins should be a tight fit in carrier. NOTE—The planet carrier is serviced as an assembly.

Primary Sun Gear and Shaft Inspection—Inspect sun gear for broken or worn teeth. Inspect thrust surfaces and journals for scores. Check fluid passages for obstruction and leakage. Inspect ring grooves and splines for burrs or wear.

Output Shaft Inspection—Inspect external parking gear teeth for damage. Inspect ring grooves and splines for burrs or wear.

Extension Housing Inspection—Inspect housing for cracks and inspect drive shaft slip yoke bearing surface for scores. Inspect gasket surfaces for burrs. Remove rear seal, using tool 4235-A. (NOTE—Rear seal may be replaced without removing the transmission from car). Using tool IP-7675 install new seal in extension housing. (NOTE—Position felt side of seal to rear). Remove inspection cover and gasket and inspect fluid baffle for tight fit in housing.

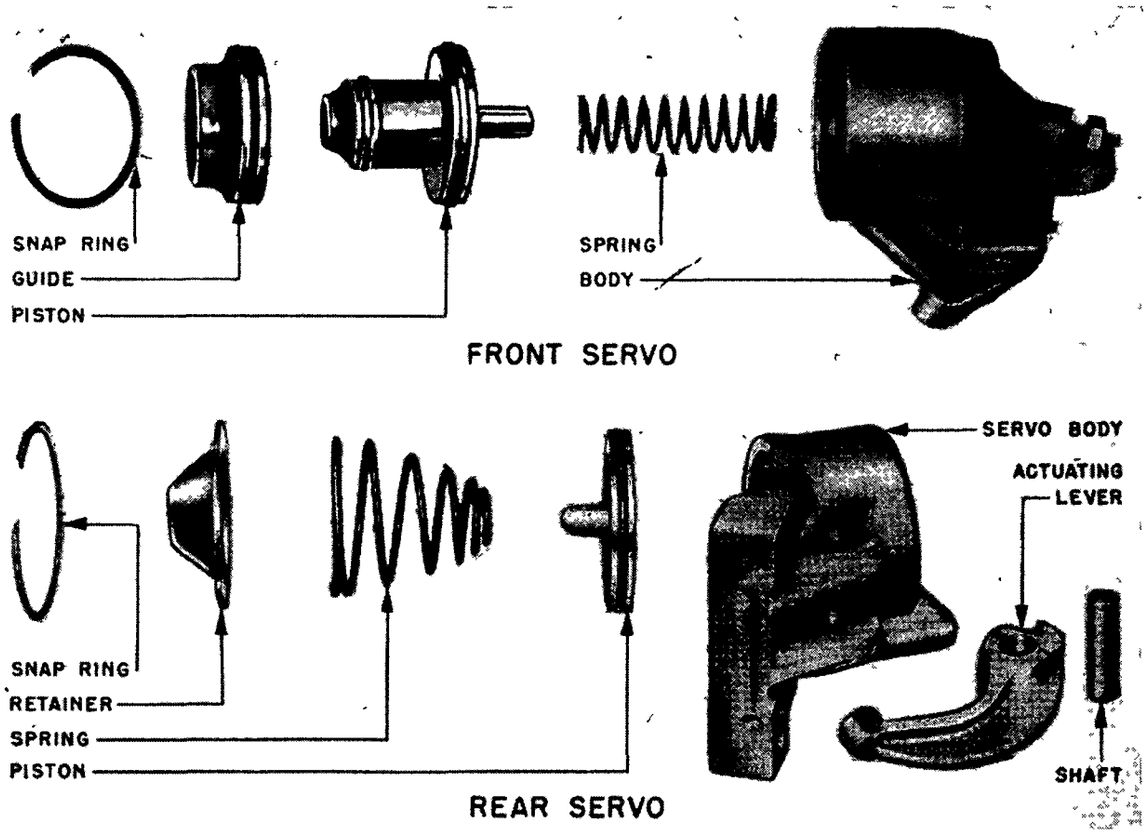

Transmission Case Linkage Disassembly: Remove throttle lever nut and take off inner and outer throttle levers. Remove throttle lever shaft seal from counterbore in manual lever shaft. Remove parking mechanism actuating rod, detent ball and spring. Remove manual lever shaft nut, detent and outer manual lever and shaft. Remove torsion lever retainer clip and take off torsion lever assembly. Disassemble torsion lever assembly by rotating lever while holding spring. Disengage pawl return spring from toggle link pin and remove pin. Remove pawl pin by working pawl fore and aft until pin protrudes from case. Remove toggle pin retainer clip, toggle pin, pawl return spring, spring retainer and link. Remove toggle lever pin by tapping lever toward rear of case and remove pin and lever. Remove manual shaft seal and transmission vent.

Inspection—Inspect case for cracks, and stripped threads. Inspect gasket and bearing and mating surfaces for burrs. Check bushings for scores and all fluid passages for obstructions. Examine each part of the parking mechanism for wear or distortion.

Assembly—Assemble toggle lever, link, pawl return spring and pawl and install assembly in transmission case. Install toggle lever and pawl pins. Install torsion lever assembly. (NOTE—Use screwdriver to position spring on torsion lever). Install washer and retainer clip. Using tool IP-77288 install new manual shaft seal in case. Install manual lever and shaft in case and mount the detent lever and attaching nut. Install detent spring and ball. (NOTE—Use a piece of tubing to depress balls and spring while rotating detent). Install parking mechanism actuating rod and secure with cotter pins. Install new seal on throttle lever shaft and install throttle lever and shaft in case. Install inner throttle lever and attaching nut. Check operation of linkage for free movement. Install transmission vent.

REASSEMBLY—TRANSMISSION (AFTER OVERHAUL OF UNITS)

Preliminary Assembly of Clutches & Shafts: Position primary gear shaft in bench fixture IP-77530, and install bronze thrust washer against thrust face of primary gear. Install two rings in grooves of primary shaft next to primary gear. Check rings for free movement in grooves. Install rear clutch assembly on primary gear shaft. Lubricate parts to facilitate assembly. *(CAUTION*—Center rings on shaft to prevent breaking). Install steel and bronze thrust washers on primary sun gear shaft. Install seal rings in the two upper grooves on shaft and check for free movement in grooves. Install new inner seal in groove in clutch cylinder and new outer seal in groove in piston. Install piston in clutch cylinder. (NOTE—Make sure steel bearing ring is on piston). Install release spring with concave side

CONTINUED ON NEXT PAGE

FORDOMATIC & MERCOMATIC (Continued)

up. Using tool IP-77565 in arbor press, compress release spring and install snap ring. (NOTE—Make sure snap ring is fully seated in groove). Install front clutch cylinder on primary sun gear shaft by rotating clutch units to mesh rear clutch plates with serrations on clutch hub. *(CAUTION*—Use care to avoid breaking rings). Install clutch hub with deep counterbore down. Install bronze thrust washer on clutch hub. Install pressure plate and then three (3) bronze and two (2) steel clutch plates alternately, starting with a bronze plate. Lubricate plates as they are installed. Install turbine shaft and snap ring. (NOTE—Make sure snap ring is fully seated in groove). Install bronze thrust washer on turbine shaft.

Clutch & Shaft Assembly and Front Servo Band: Install front servo band in transmission case indexing anchor end with anchor case. Insert the front and rear clutch assembly into transmission case from the rear while positioning servo band on drum. *(CAUTION*—Hold units together while making installation). Install center support into case, aligning hole in center support with hole in right hand side of case, and install special support bolts in right and left hand holes.

Rear Servo Band: Position rear servo band in case, according to indicating mark made at disassembly, with strut ends up. Install bronze thrust washer behind primary sun gear.

Pinion Carrier: While meshing planet pinions on sun gears, position rear band over carrier drum. Install two seal rings on sun gear shaft and check for free movement. Install selective washer on rear of pinion and hold in place with fluid.

Output Shaft: Install output shaft, carefully meshing internal gears with pinions. *(CAUTION*—Position seal rings on primary shaft with gaps up to prevent breakage during installation of output shaft).

Rear Pump: Install four rings into distributor sleeve and check ring gap. Position rear pump drive key in keyway on output shaft. Position new front and rear gaskets on pump body. Install thrust washer on pump body with bronze side up. Make sure to index thrust washer tangs with bosses on pump body. Install rear pump. *(CAUTION*—Use care to index drive key with keyway in pump drive gear).

Governor: Position governor drive ball in pocket in output shaft. Retain in place with fluid. Install governor assembly, indexing groove with ball in output shaft. (NOTE—Governor installed with body plate toward front of trransmission). Install snap ring and install distributor sleeve on output shaft. Mount distributor and tubes on distributor sleeve making sure fluid passages in sleeve and distributor index. Install attaching bolts and lock washers and tighten finger tight. With tubes positioned into transmission case up to the spacer on center tube, tighten distributor attaching bolts to 8-10 ft.lbs. Position speedometer drive gear ball into pocket of output shaft and install speedometer gear with chamfered side towards front of transmission. Install snap ring.

Extension Housing: Use tool IP-7657 to center housing over output shaft and install housing. Install attaching bolts and tighten finger tight. Install new seal ring on rear pump discharge pipe and using tool IP-77869 install pipe. (NOTE—Make sure pipe is in position and below upper surface of transmission case). Tighten extension housing attaching bolts to 30-35 ft. lbs. Install governor inspection cover using a new gasket.

Front Pump: Install new front pump gasket into counterbore in transmission case and install front pump. Line up dowel hole in pump with dowel in case. Install attaching bolts and tighten to 17-22 ft.lbs.

►**NOTE:** Recheck Transmission End Play. *See "Transmission assembly" for complete details.*

Rear Servo: Position servo anchor strut and rotate rear band to engage strut. Hold in position with fingers. Position servo actuating lever strut and install servo and attaching bolts. Tighten to 40-45 ft.lbs.

Front Servo: Position front band forward in case with band ends up. Position servo strut with slotted end indexing with servo actuating lever and small end indexing with band end. Rotate band, strut and servo into position engaging anchor end of band with anchor pin in case. Locate servo on dowel in case and install attaching bolt. (NOTE—tighten bolt only two or three threads). Install servo tubes.

Pressure Regulator Body: Install pressure regulator body and attaching bolts. Tighten to 17-22 ft.lbs. Install control and converter pressure regulator valves in valve body. Install control and converter valve springs, retainer and retainer attaching nut and lockwasher. Install new seal ring on rear pump intake tube and install tube in case.

Control Valve: Install control valve assembly using care to index servo tubes with control valve—index inner throttle lever between throttle lever stop and downshift valve—and at the same time push throttle valve in to clear transmission case. *(CAUTION*—Make sure manual valve indexes with actuating pin in manual detent lever). Install large tube into valve body and regulator. Install control pressure compensator tube and lubrication tube. Install control valve body attaching bolts. Tighten to 8-10 ft.lbs. Tighten front servo attaching bolts to 30-35 ft.lbs.

Fluid Screen and Pan: Position fluid screen over inlet tubes of front and rear pumps. Mount pan on transmission case and tighten attaching bolts to 12-17 ft.lbs. Tighten fluid drain plug to 20-25 ft.lbs. and install fluid level indicator.

INSTALLATION IN CAR

TRANSMISSION AND CONVERTER: Mount transmission assembly and converter on lift and position under car. Raise assembly and move forward into position. *(CAUTION*—Guide assembly to avoid damage to flexible drive plate and converter pilot). Install converter housing attaching bolts and tighten to 40-45 ft.lbs. Install the 6 bolts attaching the converter to the flexible drive plate and tighten to 25-28 ft.lbs. Install the detachable frame crossmember to "X" member and install engine rear mount to transmission. Raise engine and transmission and remove engine support tool. Lower engine and transmission and install rear engine mount to crossmember bolts and remove lift. Connect the speedometer cable at the extension housing. Connect the throttle and manual linkage to the transmission levers and adjust the throttle and manual linkage. Install converter housing upper plate with new seal. Install starter, converter and transmission drain plugs, converter lower housing plate and the air duct. Install drive shaft. (NOTE—Lubricate front universal joint slip yoke with transmission fluid to facilitate assembly). Check operation of neutral switch. Remove supports and lower car to floor. Install spark plugs. Fill transmission with fluid as per instructions and road test the car for correct operation and shift points.

TRANSMISSION (Converter in Car): Install two guide pins, ST-0711, into top transmission-to-converter housing attaching bolt holes. Mount transmission on lift and position under car. Rotate engine to position front pump drive lugs, on converter pump housing in a vertical position. Rotate transmission front pump to position slots in pump drive gear in a vertical position. Apply lubriplate to seal surface on converter pump cover hub and raise transmission and move towards front of car. *(CAUTION*—Use care to index turbine shaft splines with splines in turbine hub, and lugs on converter pump with slots in front pump drive gear). Install two lower transmission to converter housing attaching bolts. Tighten to 40-45 ft.lbs. Install detachable crossmember in "X" member and rear engine mount to transmission. Raise engine and transmission sufficiently to remove engine support fixtures. Lower unit to crossmember and install rear engine mount to crossmember bolts. Install drive shaft. (NOTE—Lubricate front universal slip yoke with transmission fluid to facilitate assembly). Connect speedometer cable at extension housing. Connect manual and throttle linkage to transmission manual and throttle levers, and adjust. Install drain plug and lower car to floor. Fill transmission and road test for correct operation and shift points.

FORD, LINCOLN, MERCURY SYNCHRO-MESH

Ford 6 & V8 Pass. Car Models (1950-51)
Lincoln & Cosmopolitan—See Note.
Mercury V8 Models

►*CAUTION*—1951 Ford transmission parts are not interchangeable with previous models.

►**Lincoln Transmission Note**—Transmission is Warner Type AS1-T85B (No Overdrive). AS2-T85B (With Overdrive).

►**Ford Transmission Noisy**—This condition may be traced to the intermediate and high shifter fork rubbing on the bottom of the groove in the synchro-mesh sleeve. Correction can be made by grinding away just enough material from the inside diameter of the fork where shiny spots indicate interference.

DESCRIPTION: Three-speed, all helical gear type with constant-mesh synchro-mesh (Second & High), sliding gear (Low & Reverse). Overdrive is optional. Std. transmission has extension housing at rear which has rear engine mounting. Mainshaft extends through extension housing with splines at rear end for propeller shaft engagement (front universal yoke hub slides on shaft—no-slip joint used

REMOVAL OF TRANSMISSION: *See "Transmission" on car model page.*

TRANSMISSION DISASSEMBLY & REASSEMBLY: *See complete "Ford, Lincoln, Mercury" transmission article in previous release.*

FORD, LINCOLN, MERCURY (WARNER) OVERDRIVE

Car Model	Warner Model
Ford 6 & V8 Pass. Cars (1950)	①AS1-R10E
Ford 6 & V8 Pass. Cars (1951)	①②AS4-R10E
Ford Sta. Wgn. & Conv. (1950-51)	①AS3-R10E
Lincoln & Cosmopolitan (1950-51)	③AS2-T85B
Mercury (1950)	①AS1-R10C
Mercury (1951)	①②AS4-R10E

①—Overdrive Unit only (Ford Transmission).
②—Overdrive Lockout switch not used.
③—Transmission with R10 Type Overdrive.

►**1951 OVERDRIVE LOCKOUT SWITCH ELIMINATED**—AS4-R10E overdrive unit does not have the Lockout switch. Governor unit is wired direct to Kick-down switch. Overhaul procedure is same as previous model.

DESCRIPTION: Solenoid operated type similar in design to other Warner Type R10 Overdrives except for different overdrive case and rear bearing construction which requires different disassembly directions as given below. Overdrive used on Ford Station Wagons and Convertible models has special solenoid and adapter.

REMOVAL OF OVERDRIVE: *See "Overdrive" on car model page.*

DISASSEMBLY & REASSEMBLY OF OVERDRIVE: *See complete "Ford, Lincoln, Mercury (Warner) Overdrive" article in previous release.*

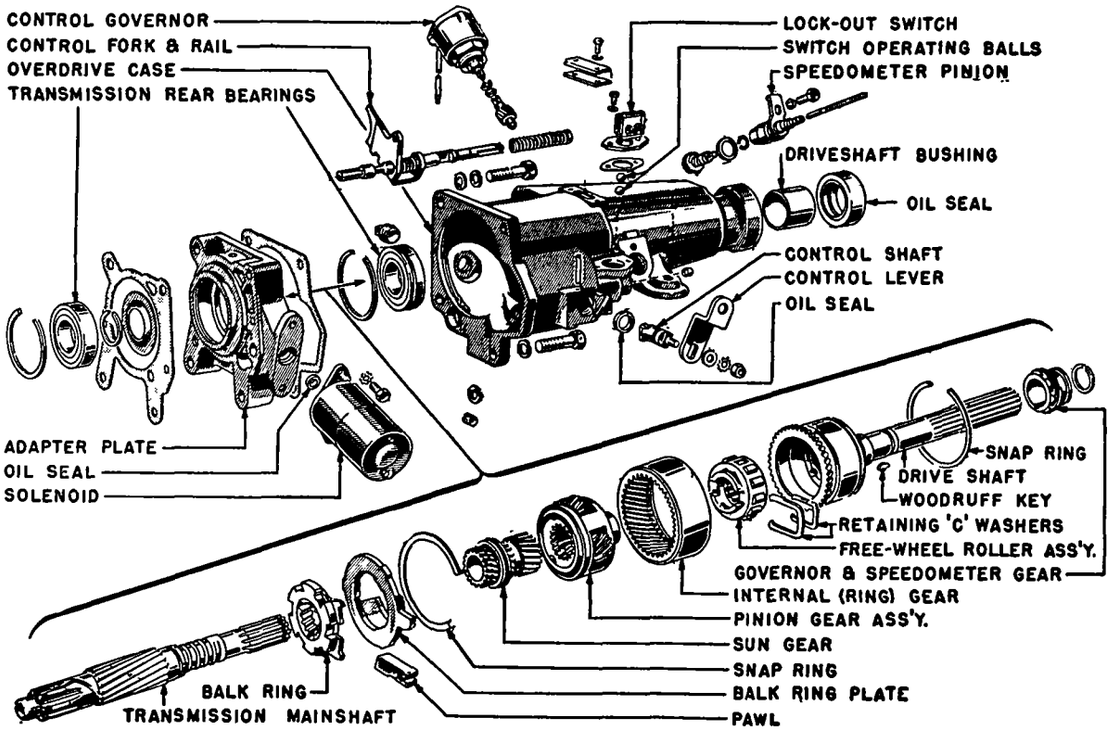

F RD & MERCURY (WARNER) VERDRIVE
►L CK- UT SWITCH N T USED N 1951 M DEL

FORD TRUCK 3-SPEED

①½ Ton Truck F-1 (1950-51)
②3/4 Ton Truck F-2 & F-3 (1950)
③Parcel Delivery F-3 (1950-51)

Optl. (With floorboard shift) on F-1, 2, 3, 4, 5 (1951).
①Early 1950 Trucks did not have remote control.
②With floorboard shift. ③Remote control shift.

DESCRIPTION: Constant-mesh, synchro-mesh, helical gears (Second & High), sliding spur gear (Low & Reverse).

►*NOTE*—This transmission made in both Light Duty (Std. F-1), Heavy Duty (Optl. F-1).

REMOVAL: *See 1950-51 car model page.*

DISASSEMBLY & REASSEMBLY: *See "Ford, Lincoln, Mercury & Ford Truck 3-Speed" Transmission in previous release.*

►*NOTE*—Except as indicated below, Overhaul procedures are the same on Heavy Duty transmission as on the Light Duty transmission.

Clutch Housing—Bolted to transmission case.

Main Shaft Removal—Remove countershaft locking plate at rear of transmission.

REMOTE CONTROL GEARSHIFT HOUSING DISASSEMBLY: Two types used as follows:

Parcel Delivery F-3: Remove seelctor lever assembly and shifter shaft outer lever from housing. Remove lockwires and screws attaching shifter shafts to forks. Insert a drift into lock screw hole in one of the shifter shafts and gently tap shaft and expansion plug out of housing. (*CAUTION*—Hold plunger spring and ball hole to avoid losing parts). Remove other shaft in same manner and tag both shafts and housing holes so parts will be reassembled in correct manner. Remove snap rings on shaft. Tap on inner lever until shaft key is exposed, then remove key. Slide shaft out of housing, and remove inner lever. Remove plunger plug and plunger.

½-Ton Truck F-1—Remove shifter shaft retaining pins and levers from camshaft, and pull shifter fork and cams out of housing. With cams removed, interlock balls, retainer, and springs will fall out of housing. Pull shifter forks out of cam and remove oil seals from housing.

REMOTE GEARSHIFT HOUSING REASSEMBLY:

Parcel Delivery F-3—Slide plunger into position in housing and install plug. Install shifter shaft spring, shaft inner lever and shaft in housing. Press spring away from inner lever and insert key in shaft. Align key with keyway in inner lever, then force lever over key. Install a snap ring at each side of lever. Drop a shaft lock plunger spring and ball through one of the housing holes, then place proper fork in position. Move ball down with a drift and slide correct shaft into housing and fork. Install lock screw in fork and shaft and secure with lock wire. Install remaining shaft and fork in a like manner. Install expansion plug in housing at ends of each shaft. Place selector lever assembly on stud in housing and install spacer, lock washer and nut. Install outer lever on shaft and secure in place.

½-Ton Truck F-1—Place one shifting cam in position in gearshift housing. Assemble interlock spring and balls in retainer and install assembly in gearshift housing. Place other cam assembly in position in housing. Install oil seals in housing. Install gearshift levers on camshafts, then install retaining pins. Assemble shifter forks to cams.

FORD TRUCK 4-SPEED (SYNCHRO-MESH)

Standard Equip.—1951 2-Ton F-6 (With 6 cyl. "M" engine).

Optional Equip.—1951 1-Ton F-4, 1½-Ton F-5, 2-Ton F-6 (With 8 cyl. "R" or 6 cyl. "H" engine).

DESCRIPTION: Four-speed constant-mesh, synchro-mesh, helical gears (Second, Third & Fourth). Sliding spur gears (First & Reverse). Synchronizer assemblies are the conventional friction ring and sleeve type.

TRANSMISSION REMOVAL: *See "Transmission" on truck model page.*

TRANSMISSION DISASSEMBLY: Remove parking brake assembly. Remove speedometer driven gear retaining nut and the driven gear. Remove rear bearing retainer and gasket (noting location of longest retainer-to-case bolt). Remove reverse idler shaft and countershaft retainer plate from rear of case. Slide speedometer drive gear and spacer off main shaft. Remove gear shift housing assembly and gasket. Unhook clutch release bearing return spring and remove release bearing and hub assembly. Remove capscrews from front bearing retainer and the nuts from clutch housing-to-case attaching bolts then remove clutch housing and retainer from case. Remove snap ring from main drive gear bearing and from main drive gear and then remove the bearing using Tool 7025-C (Puller). Remove oil baffle and the snap ring from rear main shaft bearing and pull the bearing with Tool 7025-C. Drive countershaft from case, working from the front, using dummy shaft, Tool 7111-A. *(CAUTION—Keep dummy shaft in contact with countershaft to avoid dropping needle bearings).* Allow cluster to remain in bottom of case. Remove main drive gear through the front end of case, then remove synchronizer blocker ring and needle bearings from gear. Pull reverse idler shaft out of case, using Tool 7140. Slide reverse shifter fork off shaft and remove from case. Tilt main shaft assembly and remove through top of case. Take out reverse idler gear. Position case with power take-off side next to bench. Roll cluster gear assembly toward top of case until cluster gear small end can be pushed through main shaft bearing bore in case. Using extreme care not to disturb needle bearings, remove gear assembly out of case.

DISASSEMBLY OF COMPONENT PARTS:

Main Shaft: Remove third and high synchronizer snap ring from main shaft, then slide third and high speed synchronizer assembly and third speed gear off shaft. Remove second speed synchronizer snap ring and slide second speed synchronizer hub gear off synchronizer, using care not to lose balls, springs and plates. Pull synchronizer hub off shaft. Remove snap ring at rear of second speed gear and remove gear, spacer, rollers and thrust washers from shaft.

Cluster Gear: Remove dummy shaft, 88 bearing rollers, bearing spacer washers and bearing spacer.

Gearshift Housing: Remove gearshift lever cap, then lift lever out of cover. Remove lock wires and lock screws, shifter forks and shifter shaft gates. Remove expansion plugs from front end of housing and tap shifter shafts out of housing while holding one hand over holes in housing to prevent loosing springs and steel balls. Remove two lock plungers.

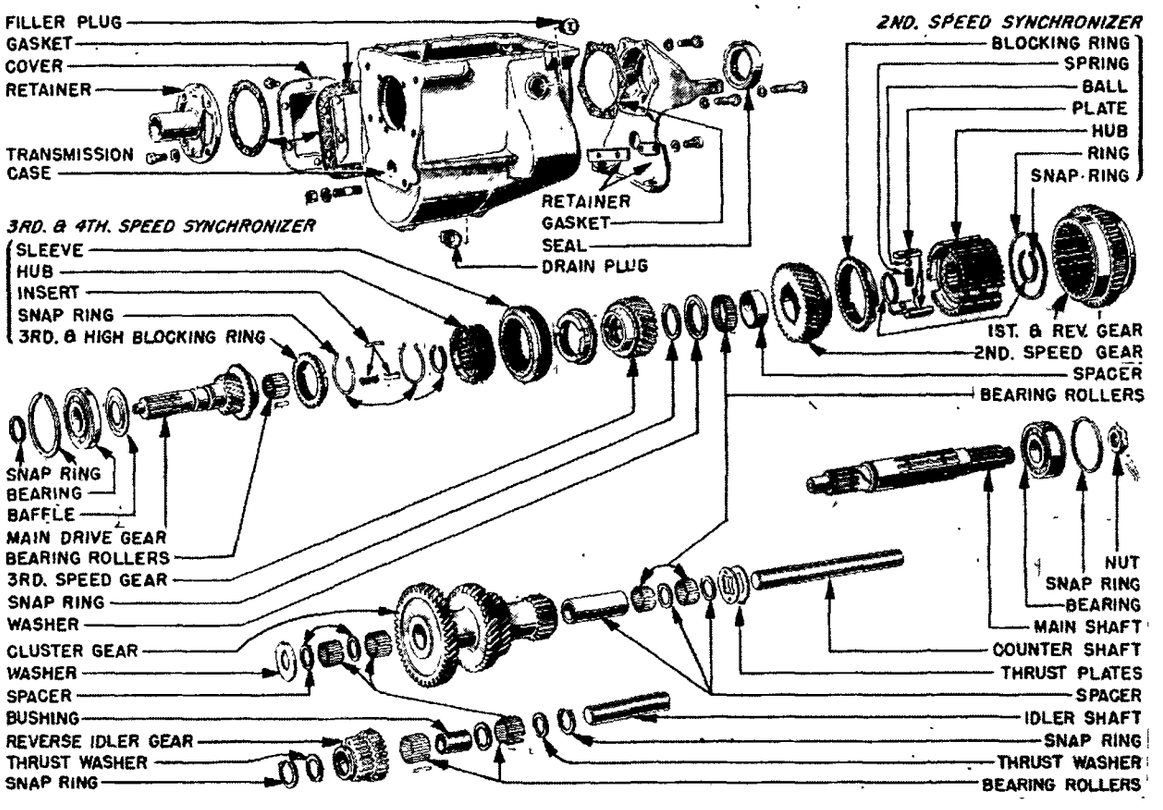

FORD TRUCK 4-SPEED SYNCHRO-MESH TRANSMISSION

REASSEMBLY OF COMPONENT PARTS:

Cluster Gear: Slide the long spacer into cluster gear and then insert dummy shaft into spacer. Hold cluster gear in a vertical position and install 22 bearing rollers. Install spacer washer on top of rollers and then install 22 bearing rollers and a spacer washer on top of rollers. Hold a large thrust washer against end of cluster gear to keep rollers from falling out, and invert the gear assembly. Install bearing rollers in opposite end as described above.

Main Shaft: Install second speed gear thrust washer on main shaft. Hold shaft in vertical position and slide second speed gear on main shaft. Insert second speed gear bearing rollers in gear, then slide spacer into gear hub. Install spacer snap ring in groove of main shaft. *(CAUTION—Do not invert shaft. Rollers will slide out of shaft).* Press second speed synchronizer hub on shaft and install snap ring. Place main shaft in vertical position in a vice. Position synchronizer springs and plates in hub and place second speed synchronizer ring on hub. Hold ring above hub spring and ball holes and position one ball at a time in hub. Push down to depress ball into hole and slide ring down to retain ball in hub, then repeat the foregoing procedure and install remaining two balls. Remove main shaft from vice and install the third speed gear, and sychronizer blocking ring on shaft. Install a snap ring at each end of hub with spring openings staggered. Place synchronizer inserts on sleeve and slide the assembly onto main shaft, making sure slots in blocker ring are in line with the inserts. Install front snap ring.

Gearshift Housing: Place spring on reverse gate plunger and install plunger and spring in reverse gate. Press plunger through the gate and secure it with the clip. Place reverse gate plunger ball and spring in poppet hole. Compress the spring and install cotter pin. Place shifter shaft lock plunger spring and steel ball into reverse shifter shaft hole in housing. Press down on ball with a long, narrow drift, then position reverse shifter shaft so reverse arm notch does not slide over the ball, and insert shaft part way into housing. Slide reverse shaft gate onto shaft, and drive shaft into housing until ball snaps into groove of shaft. Install lock screw and lock wire to secure gate to shaft. Insert the two interlock plungers into pockets between shifter shaft holes. Place the spring and a steel ball into the first and second shifter shaft hole. Press down on steel ball, then insert shifter shaft part way into

CONTINUED ON NEXT PAGE

FORD TRUCK 4-SPEED (SYNCHRO-MESH) C ntinued

housing. Slide first and second gear shifter fork onto shaft so the offset of fork is toward rear of housing. Push shaft all the way into housing until ball snaps into place in groove. Install lock screw and wire to secure fork. Install third and high shifter shaft in same manner, then install expansion plugs in shaft bores.

TRANSMISSION REASSEMBLY: Lubricate all parts with transmission lubricant. Enter countershaft into hole in rear of case and tap shaft until forward end is flush with inside of case. Slot in end of shaft must be at rear and faced toward idler gear shaft. Position case with power take-off plate downward. Hold the two thrust washers at each end of cluster gear and install gear in bottom of case, then install the third thrust washer between case and rear washer. Position idler gear shaft into case with slot at rear and faced toward countershaft and while holding reverse idler gear in position, tap shaft until slot is aligned with rear face of case. Align cluster gear with holes in case and push the dummy shaft out through front of case with countershaft. *(CAUTION*—Be sure to keep cluster gear in contact with dummy shaft to prevent bearing from dropping into gear). Align slot in countershaft with rear edge of case. Install main shaft pilot bearing rollers in main drive gear, and position gear in front bearing bore, working from inside the case. Position the stop yoke Tool No. 2025-D to prevent jamming synchronizer rings. Install oil baffle and main shaft bearing on shaft and drive bearing into position with Tool 7065-A, install snap ring. Using same tool, drive rear bearing on shaft and into rear bearing bore, then install rear bearing snap ring. Install main drive gear snap ring on shaft. Install front bearing retainer and clutch housing on front of transmission. Install gear shift housing and gasket. Install idler and countershaft retainer plate, securing with two capscrews. Install rear bearing retainer and new gasket making sure the longest screw is installed in correct hole. Install speedometer drive gear and spacer on end of main shaft and install driven gear and retaining nut. Install flange and parking brake drum and tighten nut, locking in place with cotter pin.

FORD TRUCK 4-SPEED (SPUR GEAR)

Standard Equip.—1950-51 F-2, F-3, F-4 & F-5

Standard Equip.—1950-51 F-6 (Exc. 1951 with "M" Series Engine)

Optional Equip.—1950-51 F-1

DESCRIPTION: Four-speed sliding spur gear type of same design used on previous models.

DISASSEMBLY & REASSEMBLY: *See complete "Ford Truck 4-Speed" Transmission in previous release.*

HUDSON SYNCHRO-MESH

Six & Eight, All Models (1950-51)

►**SECOND & HIGH SHIFT RAIL PRODUCTION CHANGE (To Correct Slipping out of Gear)**—New type shift rail Hudson Part No. 303832 & Lock ball spring Part No. 303847 entered production at car Serial No. 500-26338. Replace older type parts when overhauling transmission.

DESCRIPTION: Three-speed, constant-mesh, synchro-mesh type of same design used on previous models.

DISASSEMBLY & REASSEMBLY: *See complete "Hudson Synchro-mesh" Transmission in previous release.*

HUDSON DRIVE-MASTER

Hudson Pacemaker 500 (1950), 4A (1951) Optl.
Hudson Super Six 501 (1950), 5A (1951) Optl.

DRIVE-MASTER FUSE CHANGE: 10 ampere fuse used on first cars should be replaced with 15 ampere fuse as used on later cars. This fuse located on back of switch.

►**OVERDRIVE TRANSMISSION NOTE:** Overdrive is separate option and may be found installed on cars with Drive-Master Transmission. Overdrive unit is Warner Type R10D. *See Warner Type R10 Overdrive data.*

DESCRIPTION: Drive-Master transmission consists of a conventional 3-speed transmission with automatic controls as follows:

Vacumotive Drive: Automatic clutch control similar to type used on cars without Drive-Master. *See "Hudson Vacumotive Drive" in previous release.*

Drive-Master Control Units: Similar to design used on previous Hudson models except for different mounting of units and necessary linkage changes as follows:

Transmission Power Unit—Complete unit (Power Cylinder, Transfer Diaphragm Cylinder, and Solenoid Valves) mounted on bracket bolted on left side of engine block.
Transmission Switch—Mounted on power unit mounting bracket on left side of engine.

Transfer Mechanism—Mounted on bracket on rear of power unit mounting. Unit is new design three-lever type with power lever (inner) linked to power cylinder by non-adjustable strap, manual lever (outer) linked to gearshift lever on steering column, and center gear engagement lever linked to shift lever on transmission case by new adjustable rod. This center lever has transfer key (operated by Transfer Diaphragm Cylinder) by which lever is locked to inner lever (for automatic shifting), or outer lever (for manual shifting). Detent ball and spring is provided for both inner and outer levers to positively locate them in each gear position.

CHECKING & ADJUSTMENT: *See complete "Hudson Drive-Master" in previous release.*

REMOVAL & INSTALLATION OF DRIVE-MASTER: *See complete "Hudson Drive-Master" in previous release.*

HUDSON SUPER-MATIC DRIVE

Hudson Pacemaker 500 (1950), 4A (1951) Optl.
Hudson Super Six 501 (1950), 5A (1951) Optl.

DESCRIPTION: Super-Matic Drive consists of a three-speed transmission and overdrive unit with automatic shift mechanism and automatic clutch control. With this installation, whenever Super-Matic "On" button is pushed in, and Automatic 4th-Speed Button pushed in, operation is entirely automatic and controlled by the accelerator pedal (shifts up-and-down through 2nd-3rd-4th automatically and dependent on accelerator pedal position and car speed). An ultra-low gear is also provided and is engaged manually when required. *NOTE*—Fourth speed can be locked out when desired by pulling out Automatic 4th-Speed Button (provides automatic 2nd-3rd up-and-down shifts) or entire automatic shifting can be cut out by pressing Super-Matic "Off" button (car is then operated conventionally by using clutch pedal and gearshift lever).

Upshift Speeds

2nd-to-3rd①	Above 14 MPH.
3rd-to-4th①	Above 22 MPH.

Downshift Speeds

4th-to-3rd (Normal)	18 MPH.
4th-to-3rd (Kick-down)	②
3rd-to-2nd	12 MPH.

①—Engaged by releasing accelerator pedal momentarily.
②—At any speed above 18 MPH. by fully depressing accelerator pedal.

DISASSEMBLY & OVERHAUL: Super-Matic Drive units can be serviced separately as follows:

Clutch Control: *See "Hudson Vacumotive Drive" in previous release.*

Automatic Shift Control: *See "Hudson Drive-Master" in previous release.*

Transmission: *See "Hudson Transmission" in previous release.*

Overdrive: *See "Warner R10 Overdrive" data on page 280.*

NASH STATESMAN SYNCHRO-MESH

Nash Statesman (1950-51)

DESCRIPTION: Three-speed, all helical gear type with constant-mesh, synchro-mesh (Second & High), sliding gear (Low & Reverse).

REMOVAL: *See 1950-51 Nash car pages.*

DISASSEMBLY & REASSEMBLY: *See "Nash Synchro-mesh Transmission" in previous release.*

HYDRA-MATIC DRAINING & REFILLING

FOR ALL 1950-51 HYDRA-MATIC CARS

Lubrication Intervals: (All Cars)—**Check Fluid** every 2000 miles. **Drain & Refill** every 25,000 miles.

►**Oil Level Indicator Air Cleaner**—Clean the mesh type air cleaner (in dipstick cap) every 10000 miles or twice each year.

Checking Fluid Level: Check only with engine warm and idling at hot or slow idle speed (choke valve open, fast idle inoperative).

1) With transmission oil hot, run engine for at least 2 minutes with selector lever in "N" (to insure fluid coupling being filled so that true oil level reading will be secured).

2) Turn back floor mat and remove cover over dipstick location (right front of transmission). Clean all dirt and lint from around opening and dipstick to prevent this dirt entering transmission when dipstick removed.

3) With engine idling, and selector lever in "N", check fluid level reading on dipstick.

4) Add fluid as required to bring level up to full "F" mark on dipstick. *NOTE*—Approximately 1½ pints required to raise level from "L" to "F".

►*CAUTION—Do not fill above "F" mark on dipstick (may cause foaming when oil is hot).*

Draining & Refilling: Drain oil only when transmission warm (immediately after operation).

1) Remove flywheel housing lower cover (or hand hole cover on Cadillac), turn fluid coupling until drain plug in torus cover points downward, remove plug and drain fluid coupling.

2) Remove drain plug at rear end of transmission oil pan and drain transmission case.

3) **Replace both drain plugs and tighten securely.**

4) Install 8 qts. new Hydra-Matic fluid (7 qts. on Frazer, Kaiser, Nash) through dipstick opening on top of case.

5) Start engine and run it at speed equivalent to 20 MPH. for at least 1½ minutes with selector in "N" (to fill fluid coupling). Return engine to slow idle speed.

6) Check fluid level (see above), add fluid to bring level up to "F" mark on dipstick (approximately 3-4 qts. required).

►*CAUTION—Correct level should be determined by dipstick reading rather than exact amount of fluid added* and level must always be checked.

Fluid Capacity: Approximately 11 qts. (refill), 12 qts. (after transmission disassembled).

Recommended Fluid: Hydra-Matic Fluid as furnished by car manufacturer or Automatic Transmission Fluid Type "A" as furnished in containers bearing "AQ-ATF" symbol.

►*FLUSHING CAUTION—Flushing of the unit is not required. Use only regular Hydra-Matic fluid for this purpose.*

LINKAGE ADJUSTMENT

F R ALL 1950-51 HYDRA-MATIC CARS

►*LINKAGE ADJUSTMENT CAUTION: Adjustments must be made in correct order and exactly as shown below for each car model.*

1950-51 CADILLAC

(1) Manual Control Linkage—Disconnect manual control rod from control lever on transmission case. Move control lever to drive position (move lever fully forward, then move lever toward rear until first detent position is reached). Place slecetor lever on steering column against stop in "DR" position. Adjust clevis on transmission end of control rod until clevis pin can just be inserted freely through clevis and lever. Connect control rod.

(2) Throttle Lever Position—Disconnect throttle rod at throttle lever on transmission case. Check lever position by installing checking gauge, Tool J-3065, on rear face of transmission case with long leg of tool extending forward along left side of case. Move throttle lever to extreme rear position. Insert clevis pin through hole in lever and hole in checking gauge. If pin does not enter hole in gauge freely, bend lever as required using bending tool J-2029. Remove gauge and reconnect throttle rod to throttle lever.

(3) Throttle Control Linkage—Disconnect carburetor throttle rod at dash relay lever by removing spring clip and freeing trunnion from lever. Install ¼" drill rod through hole in relay lever and hole in bracket to position lever. See that carburetor throttle lever in correct hot or slow idle position (stopscrew against stop and set for correct 375 RPM. idling speed), adjust trunnion on rear end of throttle rod until trunnion enters relay lever freely, connect trunnion and install spring clip. Back off both nuts on throttle rod at carburetor throttle lever, push on end of rod so that transmission throttle lever and valve is against its stop, turn rear nut on throttle rod up against the carburetor throttle lever trunnion, then back the nut off 4 complete turns (1950), 3½ complete turns (1951), finally tighten the front nut on the rod securely against trunnion. Check to see that linkage moves freely. Remove drill rod from relay lever. Check and adjust accelerator pedal position.

(4) Accelerator Pedal Position—Depress pedal fully and see that it touches floor mat with slight pressure when carburetor throttle valve wide open (NOTE—if floor mat removed, allow ½" clearance between pedal and floor in wide open position). Adjust pedal position, as required, by changing length of pedal to relay lever rod (adjusting trunnion located at pedal end of rod).

(5) Neutral Switch—Adjust position of switch so that starter operative (switch closed) only when selector lever in "N" position.

►*CAUTION—Do not move switch so far in neutral position that travel of lower lever is limited by switch arm in the reverse position.*

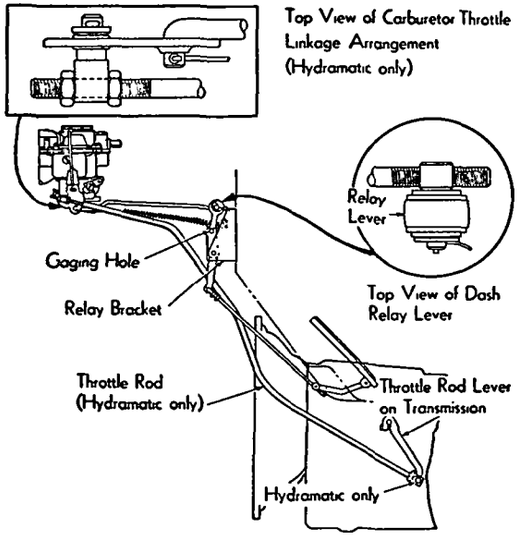

CADILLAC HYDRA-MATIC C NTR L LINKA E

1951 FRAZER & KAISER

Throttle Control Linkage:

1) Disconnect rear throttle rod from throttle lever (longer lever) on left side of transmission.

2) **Carburetor Rod**—Loosen carburetor extension shaft lock bolt in slot in upper bellcrank on left side of cylinder head, install Linkage Adjustment Pin KF-91 through holes in bellcrank and bracket. With engine temperature at 150-160° (choke valve wide open, fast idle inoperative) and transmission warm, set engine idle speed at 425-450 RPM. with selector lever in N. Tighten carburetor extension shaft lock bolt so that shaft is locked to bellcrank. **Do not remove adjustment pin at this time.**

3) **Front Throttle Rod**—Check alignment of holes in lower bellcrank and bracket on left side of crankcase below starter. If Linkage Adjustment Pin KF-91 can not be inserted freely through both holes, disconnect front throttle rod from lower bellcrank and adjust length of rod so that pin can be inserted after rod connected. Connect rod and install pin. **Do not remove adjustment pins until all adjustments completed.**

4) **Transmission Throttle Lever**—Tighten clamp bolt on throttle lever on transmission case to 12-15 ft. lbs. torque. Check lever position by installing Throttle Lever Checking Gauge KF-78 flat against machined surface on back of case with gauging leg extending forward along transmission side cover (CAUTION—clean transmission case surface before installing gauge). Move throttle lever to rear position against stop and install clevis pin in hole in lever as gauging point, move gauge upward toward lever. Notch in gauge should align with pin in lever and inner face of lever should just touch outer face of gauge. Bend lever with Bending Tool KF-79 to secure this position. Remove gauge.

5) **Rear Throttle Rod**—Connect rear rod to throttle lever on transmission (loosen trunnion nuts to align rod and lever) with anti-rattle spring between rod and lever. Adjust trunnion on rod to rear (turn front nut against trunnion) until throttle lever seats lightly against stop in rear position, then **shorten rod by backing off trunnion front nut two full turns,** lock adjustment by turning rear nut up securely against trunnion. Remove Linkage Adjustment Pins from the upper and lower bellcranks.

6) **Accelerator Pedal Rod**—Hold carburetor throttle valve in wide open position. Adjust accelerator pedal rod (turn adjusting sleeve on rod to rear of upper bellcrank on cylinder head) so that clearance between pedal and floor mat is approximately ¼".

Selector Lever (Manual Control) Linkage:

1) On Kaiser cars, hold selector lever firmly down in "Lo" position and tighten control shaft upper bracket clampscrew securely.

NOTE—Not required on Frazer cars.

C NTINUED N NEXT PA E

HYDRA-MATIC LINKAGE ADJUSTMENT (C ntinu d)

2) Back off both locknuts at control rod trunnion (at control shaft lever on steering column on Kaiser, at idler bellcrank lever below starter on Frazer). Tighten shift lever clamp bolt on left side of transmission case to 10-13 ft. lbs. torque.
3) Place selector lever in "Lo" position, move shift lever on transmission to extreme rear position and then move lever forward to **first** detent position (this is Lo). Turn forward locknut finger tight against trunnion, then **lengthen rod by turning locknut one additional full turn,** tighten both locknuts against trunnion securely (CAUTION—do not change trunnion position on rod).

Neutral Safety Switch (Kaiser only):

NOTE—Switch on Frazer is non-adjustable).

1) Place selector lever in "Dr" position. Loosen lockscrew on neutral safety switch bracket (screw hole slotted to permit adjustment), adjust switch position so that starter will not operate when starting button pressed.
2) Place selector lever in "N" position. Check clearance between neutral safety switch arm and stop on switch bracket. Clearance should be 1/16" and starter should operate when starting button is pressed.
3) Tighten lockscrew securely.

1950-51 HUDSON

Throttle Control Linkage:

1) Check engine idle speed and set at 480-520 RPM. with engine at normal operating temperature (fast idle inoperative), transmission warm, and selector lever in neutral "N" position.
2) **Carburetor Throttle Rod**—Make certain carburetor throttle closed with stopscrew against stop in hot or slow idle position. Adjust length of accelerator cross shaft operating rod (connecting carburetor extension shaft lever on left side of cylinder head to bellcrank on left rear side of engine) by backing off one trunnion nut and tightening opposite nut on forward end of rod until gauge pin J-2544 can be entered freely through hole in bellcrank and hole in cylinder block boss (6 Cyl.) or hole in throttle support assembly (8 Cyl.) at rear end of rod. Tighten both trunnion nuts securely and recheck setting. Remove gauge pin.
3) **Transmission Throttle Lever**—Disconnect throttle rod at throttle lever (outer longer lever) on side of transmission case. Tighten lever clamp bolt to 10-15 ft. lbs. torque. Check lever position by installing Throttle Lever Checking Fixture J-2195 on back of case with gauging leg extending forward along transmission side cover (CAUTION—clean transmission case surface before installing gauge). Move throttle lever to extreme rear position against its stop. Gauge pin should enter hole in throttle lever freely and inner face of lever should be against larger diameter of gauge rod. Bend lever, as required, to secure this position using bending tool J-3310. Remove gauge and connect rod to lever.
4) **Transmission Throttle Rod**—Disconnect rod by removing trunnion cotter pin and washer from accelerator pedal link bellcrank on left rear side of cylinder block. Position bellcrank by inserting gauge pin J-2544 through hole in accelerator bellcrank and hole in cylinder block boss (6 Cyl.) or hole in throttle support assembly (8 Cyl.). Move transmission throttle lever to rear position against stop by pressing back on rod. Adjust trunnion position on rod (back off one nut, tighten opposite nut) until trunnion pin freely enters hole in bellcrank. Connect trunnion to bellcrank, then **shorten rod by backing off rear nut exactly 1½ turns,** tighten front nut securely. Remove gauge pin from bellcrank.
5) **Accelerator Pedal Rod**—Back off trunnion nuts on accelerator pedal rod at accelerator pedal link bellcrank on left side of cylinder block. Hold carburetor throttle valve in wide open position, depress accelerator pedal fully against its stop, turn rear nut up against trunnion, **then lengthen rod by turning nut up ¼" further,** tighten front nut against trunnion. This will provide approximately 1/16" clearance between accelerator pedal and its stop.

Manual Control Linkage:

1) Tighten upper and lower control tube brackets on steering column securely. Disconnect transmission shift rod at lower lever on steering column.
2) Position transmission shift lever in "Lo" by pressing backward on shift rod until lever is in extreme rear position against stop and then pulling rod forward until lever reaches **first detent position** (this is "Lo").
3) Place selector lever on steering column in "Lo" position by pulling lever toward reverse as far as possible without lifting the lever.
4) Adjust length of shift rod by turning clevis on forward end of rod until clevis pin hole aligned with hole in steering column lever without disturbing position of either lever, then **increase length of rod by turning clevis one complete turn** off rod, connect rod to lever and tighten clevis locknut. Check all positions of selector lever to make certain that each position indexes properly on dial.

Neutral Safety Switch:

1) Place selector lever in neutral "N" position.
2) Loosen safety switch mounting bracket screw, shift safety switch and bracket (screw hole is slotted to permit this adjustment) until clearance between switch lever and stop on bracket is 1/16", tighten mounting screw.
3) Check operation of switch. Starter should operate when ignition switch turned on and starter button depressed. **Starter should not operate** with selector lever in any other position (check in the "Dr" position).

1950-51 LINCOLN

Throttle Control Linkage:

1) Check and adjust engine idle speed to 375-400 RPM. with engine at normal operating temperature (fast idle inoperative), transmission warm, and selector lever in neutral "N" position. Shut engine off.
2) Disconnect retracting spring hooked to carburetor throttle rod, disconnect rod at carburetor throttle lever. Disconnect upper throttle rod at bellcrank lever (lower end). Disconnect lower throttle rod at throttle lever on left side of transmission case.
3) **Transmission Throttle Lever**—Check lever position by installing Gauge J-3298 on back of case with gauging leg extending forward along transmission side cover. Move lever to extreme rear position against its stop. Clevis pin in lever hole should align with notch in gauge and inner face of lever should just touch outer face of gauge. Bend lever with tool J-3310 to secure this position.
4) Install Gauge Pin J-2544 through hole in bellcrank lever and bracket (see illustration) to align lever. Leave pin in place while making following adjustments.
5) **Carburetor Throttle Rod**—Connect rod to carburetor throttle lever (adjust ball socket by turning screw in until snug on carburetor lever ball, then back off 1-2 cotter pin holes and install cotter pin). Connect retracting spring from dash to nearest nib on carburetor rod.
6) **Upper Throttle Rod**—With gauge pin inserted in bellcrank lever on left side of engine, hold carburetor throttle lever in closed position with stopscrew on low point of fast idle cam (hot or slow idle position), adjust fitting on lower end of upper throttle rod so that rod can be connected to bellcrank lever without disturbing throttle position. Connect rod.

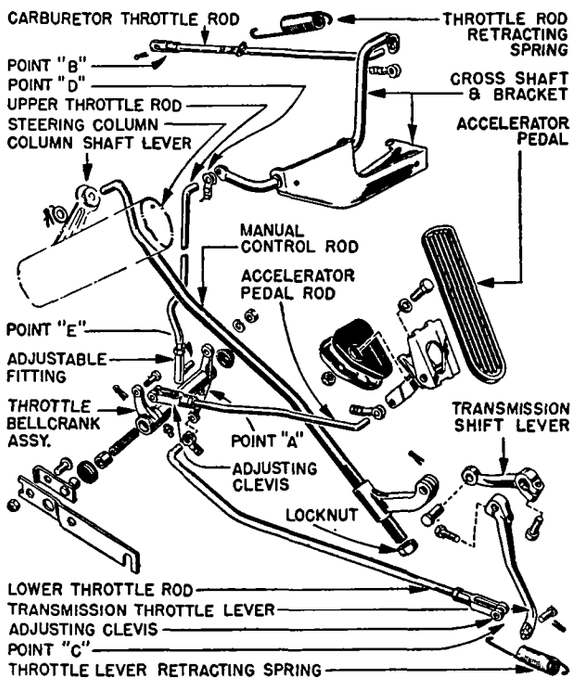

LINCOLN HYDRA-MATIC CONTROL LINKAGE

7) **Lower Throttle Rod**—With gauge pin inserted in bellcrank lever on left side of engine, connect retracting spring at transmission throttle lever and frame cross-member (spring will hold lever in rear position while making adjustment). Adjust clevis on rear end of lower throttle rod until clevis pin will just enter clevis and hole in throttle lever freely, **then shorten rod by turning clevis 6 turns on the rod.** Connect rod and tighten clevis locknut.
8) **Accelerator Pedal Rod**—With gauge pin inserted in bellcrank lever on left side of engine, adjust clevis

CONTINUED ON NEXT PAGE

HYDRA-MATIC LINKAGE ADJUSTMENT (C n.inued)

on forward end of pedal rod so that tip of accelerator pedal pad is exactly 3⅞" from top of the floor carpet, connect rod and tighten clevis locknut. Remove gauge pin from bellcrank lever.

9) Check entire throttle linkage for free operation without binding. Make certain that carburetor throttle rod returns throttle valves to hot or slow idle position against stop with engine at normal operating temperature.

10) 3-4 Shift Point—Check shift point by operating car on level road with minimum throttle. **This 3-4 shift must occur at 23 MPH.** Adjust by makjng slight readjustment of lower throttle rod clevis at transmission throttle lever. Increase length of rod to lower the 3-4 shift point, decrease length to raise shift point.

►***CAUTION—Throttle rod clevis must not be turned more than 7 turns (one turn more than standard setting of 6 turns) from point where throttle lever is against its stop.***

Manual Control Linkage:

1) Disconnect manual control rod from shift lever (short lever) on side of transmission case, place shift lever in "Lo" position (move lever to extreme rear position, then move lever forward to first detent position which is Lo).

2) Place selector lever in "Lo" against the low range stop.

3) Loosen locknut and adjust clevis on rear end of manual control rod until clevis pin can just be inserted freely through clevis and hole in lever without disturbing the rod or lever positions, **then lengthen rod by turning clevis one complete turn,** connect rod and tighten clevis locknut.

Neutral Safety Switch:

1) Loosen switch bracket mounting screws (on steering column directly below column shaft lever).

2) Place selector lever in "Dr" position. Rotate switch and bracket assembly (mounting screw holes are slotted) so that starter circuit is open. Then move selector lever to "N" position and make certain that starter circuit is closed. Tighten switch mounting screws.

►***CAUTION—Starter circuit must be open in all selector positions except neutral "N".***

1950-51 NASH

►*1951 ADJUSTMENT CAUTION:* A single Throttle Control Rod is used (instead of Upper & Lower rods with connecting bellcrank on left side of crankcase) and **step (4) is not required when adjusting throttle control linkage on 1951 cars.**

Throttle Control Linkage:

1) Disconnect throttle rod (rear rod on 1950 cars) from throttle lever on left side of transmission.

2) Check engine idle speed and set to 375 RPM. with engine warm (fast idle inoperative), transmission warm, and selector lever in neutral "N" position.

3) **Carburetor Throttle Link Rod**—Disconnect link rod at upper bellcrank on left side of cylinder head. Install adjusting pin J-4158 through holes in the upper bellcrank and the mounting bracket. Adjust clevis on bellcrank end of carburetor throttle lever link so that clevis pin enters clevis and bellcrank without moving throttle lever stopscrew away from its stop, tighten locknut and connect rod. Do not remove adjusting pin from bellcrank.

►**1951 Note**—Disregard step (4) on these cars (single throttle rod is adjusted in same manner as Rear Throttle Rod in step (6) below.

4) **Front Throttle Rod**—With the upper bellcrank locked by adjusting pin, check position of lower bellcrank on left side of crankcase below starter by inserting a second J-4158 adjusting pin through holes in bellcrank and support bracket. If pin does not enter holes freely, disconnect throttle rod at upper bellcrank, install adjusting pin in lower bellcrank, adjust rod length by loosening locknut and turning trunnion end on upper end of rod. Tighten locknut and connect rod. Do not remove adjusting pins until following adjustments have been completed.

5) **Transmission Throttle Lever Position**—See that clamp bolt on throttle lever on transmission case is tight, place Throttle Lever Checking Gauge J-2545 flat against machined surface on back of case with gauging leg extending forward along transmission side cover. Install clevis pin in hole at outer end of throttle lever, hold lever against stop in extreme rear position. Move gauge upward. Notch on gauge should pass over pin in lever and inner face of lever should just touch outer face of gauge. Bend lever as required using Bending Tool J-3310.

►***CAUTION—Do not twist lever or spring shaft when adjusting.***

6) **Rear Throttle Rod**—With bellcranks locked by the adjusting pins, hold throttle lever on transmission case in extreme rear position against the stop, adjust trunnion on transmission end of rear throttle rod by backing off one trunnion nut and tightening opposite nut until trunnion pin enters hole in throttle lever freely, then **back off forward trunnion nut two complete turns,** tighten rear nut securely (this will "shorten" rod), connect rod to throttle lever, remove adjusting pins from upper and lower bellcranks.

Starter Switch:

1) Place selector lever in Neutral "N" position. Check alignment of operating plunger (spring-loaded pin) on side of operating lever on steering column and starting switch plunger (must be in line so that switch plunger depressed by operating plunger when selector lever lifted upward in "N" position).

2) Adjust switch to align plunger by loosening switch bracket mounting screws and shifting switch bracket on steering column (holes are slotted to permit this adjustment).

Manual Control (Selector Lever) Linkage:

1) Place steering wheel selector lever in "Lo" position and see that operating lever on steering column is against low range stop (right side) of notch in starter switch bracket.

2) Disconnect control rod at shift lever on left side of transmission case.

3) Move transmission shift lever to "L" position (place lever in extreme rear "R" position, then move lever forward until next detent position is reached), adjust clevis on transmission end of control rod until clevis pin enters hole in lever freely, then **lengthen rod by turning clevis off one complete turn,** tighten locknut and connect rod.

1950 OLDSMOBILE 6

(1) Manual Control Linkage—Same as for 8 Cyl. models (following).

(2) Throttle Control Linkage—See that carburetor set for correct hot or slow idle speed of exactly 350 RPM. with selector lever in "DR" position. Use safety lock tool J-4396 installed on accelerator pedal to prevent accidentally racing engine when warming up engine and transmission prior to setting idle speed. Then adjust linkage in following order:

Transmission Throttle Lever—Disconnect lower throttle rod from lever on side of transmission case. Install checking tool J-2195 on machined surface on rear face of transmission case with gauging rod extending forward toward lever. Hold throttle lever back against stop. If small end of tool does not enter hole in lever freely in this position, bend lever as required using tool J-2029. Do not connect throttle rod to lever at this point.

Carburetor Throttle Rod (B)—Disconnect rod (B) at carburetor throttle valve lever. Align bellcrank (C) with index plate (D) by inserting Gauge BT-25 through holes in lever and plate. Hold carburetor throttle lever in slow idle position, bend rod (B) using tool GA-38 so that it can be connected without disturbing lever positions. Connect rod. Gauge BT-25 should now slip in and out of holes in lever and index plate freely. Remove gauge.

Lower Throttle Rod (A)—See that carburetor in slow idle position (throttle lever against stop), hold transmission throttle lever fully back against its stop, adjust length of rod (A) by loosening locknut and turning clevis until clevis pin enters hole in lever freely, then **shorten rod by one full turn of the clevis,** tighten locknut and connect rod.

1950 Intermediate Throttle Rod (E)—Disconnect rod (E) from bellcrank lever by taking out cotter pin at forward end, install special "U" gauge on accelerator pedal rod to prevent pedal bottoming on grommet retainer on floor (make gauge up from piece of ⅜" flat stock). Pull rod (E) forward until accelerator pedal pad rests firmly on gauge (floor mat must be away from pedal), hold carburetor throttle wide open, adjust rod by turning it in or out of clevis on rear end until it can be just entered in bellcrank, connect rod, tighten clevis locknut, remove gauge.

(3) Throttle Cracker Linkage—Disconnect coil to distributor lead (to prevent starting engine), press starter button to fully engage starter drive (solenoid pinion shift). With starter fully engaged, loosen locknut and turn adjusting screw (T) on lever on side of engine for clearance of .062-.085" between carburetor throttle stopscrew and high step of fast idle cam (cam turned to cold or fast idle position).

(4) Bellcrank & Index Plate Clearance—Bend stop lug on index plate (D) so that clearance between lug and lip on bellcrank (C) is 1/32-1/16" with bellcrank in full open position as limited by transmission throttle lever.

(5) Starter Safety Switch Adjustment—Same as for 8 cyl. models (following).

CONTINUED ON NEXT PAGE

HYDRA-MATIC LINKAGE ADJUSTMENT (C ntinu d)

1950-51 OLDSMOBILE 8

(1) Manual Control Linkage—Loosen clevis locknut at rear end of lower control rod (from steering column to intermediate lever on frame cross-member) and disconnect this rod at the intermediate lever (relay rod from intermediate lever to transmission lever is non-adjustable). Adjust as follows:

Lower Control Rod—Place transmission control lever in "LO" position (move lever all the way forward to Neutral, then move lever back to the second detent "LO" position). Place steering column selector lever at end of Lo range against stop which prevents movement into Reverse without raising lever (pull down on lower control rod until stop is felt). Adjust clevis on lower end of lower control rod until pin can just be slipped freely through clevis and intermediate lever without disturbing lever positions, **then lengthen rod by turning clevis one full turn (1950), two full turns (1951)**, tighten locknut and connect rod.

(2) Throttle Control Linkage—See that carburetor set for correct hot or slow idle speed of exactly 350 RPM. with selector lever in "DR" position. Use safety lock tool J-4396 installed on accelerator pedal to prevent accidentally racing engine when warming up engine and transmission prior to setting idle speed. Then adjust linkage in following order:

Transmission Throttle Lever—Disconnect lower throttle rod from lever on side of transmission case. Install checking tool J-2195 on machined surface on rear face of transmission case with gauging rod extending forward toward lever. Hold throttle lever back against stop. If small end of tool does not enter hole in lever freely in this position, bend lever as required using tool J-2029. Do not connect rod to lever at this point.

Upper Throttle Rod (G)—Disconnect rod (G) from lever (H). Insert gauge BT-25 through three holes in cross shaft assembly. Adjust rod (G) in or out of clevis at forward end until rod can be connected without moving carburetor throttle lever from its hot or slow idle position. Tighten clevis locknut, connect rod, remove gauge from lever.

►*CAUTION—If clevis at forward end of rod (G) disconnected, this clevis must be installed with open side facing away from engine.*

Lower Throttle Rod—See that carburetor is in slow idle position (throttle lever against stop), hold transmission lever fully back against its stop, adjust length of the rod by loosening locknut and turning clevis until clevis pin enters hole in lever freely, **then shorten rod by one full turn of the clevis**, tighten locknut and connect rod.

Intermediate Throttle Rod (B)—Disconnect rod at lever (C) on dash. See that carburetor throttle lever in hot or slow idle position (throttle lever against stop), adjust clevis on rod so that distance from rear face of lever (C) to bottom of depression in dash is 5/16-3/8" (88), 7/32-9/32" (98), tighten clevis locknut and connect rod.

►*CAUTION—Clevis on upper end of rod (E) must be installed with open side facing toward engine.*

1950 88 Accelerator Pedal Rod (E)—This model has idler lever on dash and additional short adjustable rod between this lever and lever (C). Install special "U" gauge on accelerator pedal rod to prevent pedal bottoming on grommet retainer on floor (make gauge up from piece of ⅜" flat stock). Disconnect this short rod from lever (C), depress accelerator pedal until it bottoms on gauge (floor mat must be away from pedal), hold carburetor throttle wide open, adjust clevis on upper end of rod until it can just be connected to pin on lever (C), tighten clevis locknut, connect rod, remove gauge.

►*CAUTION—Clevis on upper end of rod must be installed with open face toward engine.*

1951 88 Accelerator Pedal Rod (E)—Same design as 1950 88 but adjusted differently: Disconnect short rod from lever (C), depress accelerator pedal until clearance between face of rod boss on underside of pedal and floor mat is ¼" (CAUTION—floor mat must be in place), hold carburetor throttle valve in wide open position, adjust clevis on upper end of short rod so that it just slides over pin on bracket, tighten clevis locknut and connect rod.

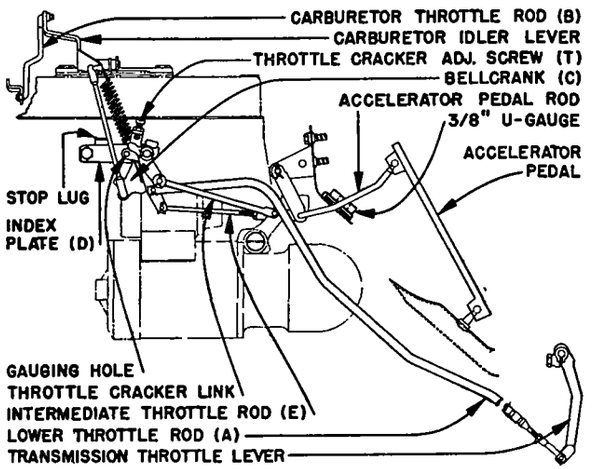

1950 OLDSMOBILE 6 CONTROL LINKAGE

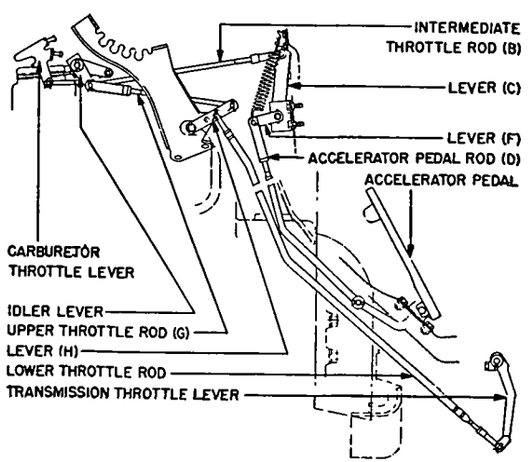

1950-51 OLDSMOBILE 8 CONTROL LINKAGE

►*CAUTION—Clevis on upper end of rod must be installed with open face AWAY from engine.*

1950-51 98 Accelerator Pedal Rod (E)—See illustration. Disconnect accelerator pedal rod (D) from lever on dash. Depress accelerator pedal until clearance between tip of pedal and floor mat is ¼" (CAUTION—floor mat must be in place), hold carburetor throttle valve in wide open position, adjust clevis on upper end of rod (D) until it slides over pin in bracket, tighten clevis locknut and connect rod.

►*CAUTION—Clevis on upper end of rod must be installed with open face AWAY from engine.*

►**Throttle Cracker Note**—No throttle cracker (as used on 6 cyl. cars) is used. When starting cold engine, first opening of throttle allows fast idle cam to rotate so that special starting step of cam holds throttle open for starting. When starting hot engine, open throttle approximately 1/3 by depressing accelerator pedal.

(3) Starter Safety Switch Adjustment—Loosen switch bracket locking screw just enough so that slotted bracket can be moved. Place selector lever on steering wheel in "N" neutral position. Adjust switch by moving bracket so that clearance between lever and stop is 1/16-1/32", tighten bracket screw.

1950-51 PONTIAC

(1) Carburetor Throttle Rod—Disconnect throttle rod at throttle lever (outer lever) on left side of transmission case. Check and adjust engine idle speed to 365-385 RPM. hot or slow idle with engine at 150-160°F., transmission warm, and selector lever in Neutral "N". Install adjusting pin through holes in carburetor intermediate lever on left side of cylinder head and lever bracket. Adjust nuts at trunnion on carburetor throttle rod (back off one nut, tighten opposite nut) until adjusting pin is free with carburetor throttle lever stopscrew against its stop. Tighten trunnion nuts but **do not remove adjusting pin.**

(2) Transmission Throttle Front Rod—Check adjustment by inserting second J-2544 adjusting pin through holes in idler lever (left side of crankcase **below** starter) and lever bracket. If pin does not enter both holes freely, adjust length of transmission throttle front rod at trunnion on upper end of this rod (back off one nut, tighten opposite nut), then tighten both nuts securely, remove both adjusting pins (intermediate lever and idler lever).

(3) Accelerator Pedal Rod—Loosen front locknut on pedal rod at throttle control idler lever on left side of engine, depress accelerator pedal until carburetor throttle is just wide open, check clearance between lower face of accelerator pedal and floor mat. If clearance not ¼" at closest point, adjust pedal by turning rear nut at trunnion on forward end of rod in or out as required, then tighten front nut securely.

(4) Transmission Throttle Lever Position—With rear rod disconnected at transmission case throttle lever, check tightness of lever clamp bolt (12-15 ft. lbs. torque), check lever position by installing Checking Gauge J-2545 flat against machined rear face of transmission case with edge of gauge against side cover flange. Install trunnion pin in lever, hold lever in extreme rear position, move gauge upward, align gauge with trunnion pin. Inside face of throttle control lever should just touch outer side face

CONTINUED ON NEXT PAGE

HYDRA-MATIC LINKAGE ADJUSTMENT (C ntinued)

of gauge and pin in lever should enter slot in gauge freely. Adjust by bending lever with tool J-2807.

(5) Transmission Throttle Rear Rod—After checking and adjusting transmission throttle lever, connect rear rod trunnion at lever, loosen rear locknut on trunnion, adjust rod length by turning front locknut toward trunnion until throttle lever is just back against its stop, then **shorten rod by backing off front nut one turn,** tighten rear nut securely.

(6) Manual Control Linkage—Hold selector lever under steering wheel down in "LO" position firmly, tighten control shaft upper bracket clampscrew securely. Back off both trunnion checknuts at forward end of manual control rod (at steering column control shaft lever), place manual control lever on transmission case in "LO" (move lever forward from extreme rear to second position where detent is felt to engage). With both levers held in "LO" position, tighten rear (lower) nut against trunnion finger tight, then **lengthen rod by turning nut up one additional turn,** tighten forward checknut against trunnion securely.

(7) Starter Neutralizer Switch—Place selector lever in "DR" position. Loosen switch bracket clampscrew (on steering column at lower end of selector shaft), shift switch and bracket (screw hole is slotted) until starter does not operate when starter button depressed. Move selector lever to "N" position. Check to see that switch arm does not touch stop on switch bracket, and that starter operates when starter button depressed. Tighten bracket clampscrew.

HYDRA-MATIC BAND ADJUSTMENT

ALL 1950-51 HYDRA-MATIC CARS

►*BAND ADJUSTMENT CAUTION: Do not attempt to adjust bands EXTERNALLY (without removing oil pan) unless Adjusting Tool J-2681 (or Kaiser-Frazer No. KF-96) and accurate Tachometer are used. Otherwise remove oil pan and use special servo gauges.*

ADJUSTMENT—EXTERNALLY using Adjusting Tool J-2681 (or Kaiser-Frazer KF-96) and Tachometer:

1) Block front wheels securely and set hand brake firmly to prevent car moving while adjusting.
2) Remove front floor mat and adjusting hole cover over adjusting screws on left side of transmission.
3) Run engine until temperature is normal and engine idles at hot or slow idle speed of 375-400 RPM.
4) Connect and adjust tachometer for accurate recording of engine speed.
5) Place selector lever in "DR" position.
6) Adjust carburetor throttle stopscrew so that engine idles at exactly 700 RPM. Then adjust bands:

Front Band (After steps 1 through 6):

7F Install the adjusting tool on front band adjusting screw, loosen adjusting screw locknut (turn long handle while holding short handle stationary).
8F) Loosen band adjusting screw (turn short handle) until engine speed increases to 900-1000 RPM., (800-900 Hudson. This makes it unnecessary to back adjusting screw all the way out).

►*NOTE*—If no increase in engine speed noted when adjusting screw loosened, band has probably been slipping in service. Remove oil pan and inspect band and drum. With pan off, adjust bands as directed in ADJUSTMENT—WITH PAN OFF below and disregard following steps.

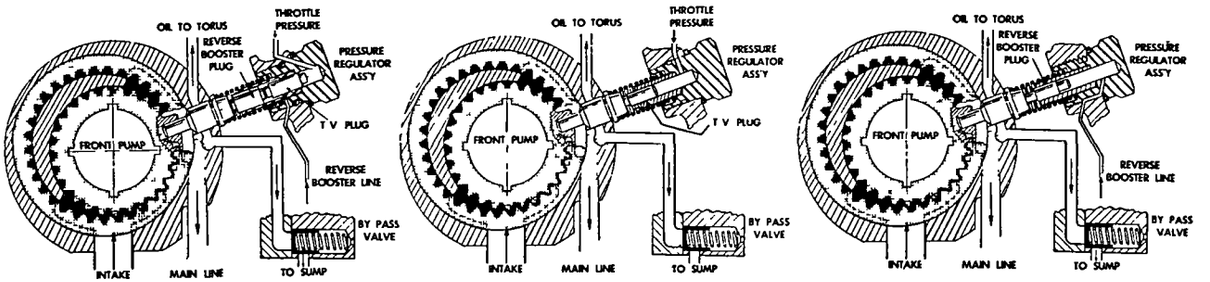

MODULATED PRESSURE & HYDRAULIC REVERSE | MODULATED PRESSURE & MECHANICAL REVERSE | NOT MODULATED PRESSURE & HYDRAULIC REVERSE

HYDRA-MATIC PRESSURE REGULATOR VALVE ASSEMBLY

9F) Tighten band adjusting screw slowly until engine speed drops to 700 RPM., loosen adjusting screw until engine speed increases, then tighten adjusting screw until engine speed again drops to exactly 700 RPM., watch tachometer for 30 seconds to note any increase in engine speed. If increase noted, tighten adjusting screw 1/10 turn. Repeat this procedure until engine speed remains at 700 RPM. for at least 30 seconds,
10F) Set counter on adjusting tool to 00. Hold locknut stationary, **tighten adjusting screw exactly 5½ turns until tool counter reads 5.5,** hold adjusting screw from turning, tighten locknut securely.

Rear Band (After steps 1 through 6):

7R) Install the adjusting tool on rear band adjusting screw, loosen adjusting screw locknut (turn long handle while holding short handle stationary).
8R) Loosen band adjusting screw (turn short handle) until engine speed increases to 900-1000 RPM., (800-900 Hudson. This makes it unnecessary to back adjusting screw all the way out).

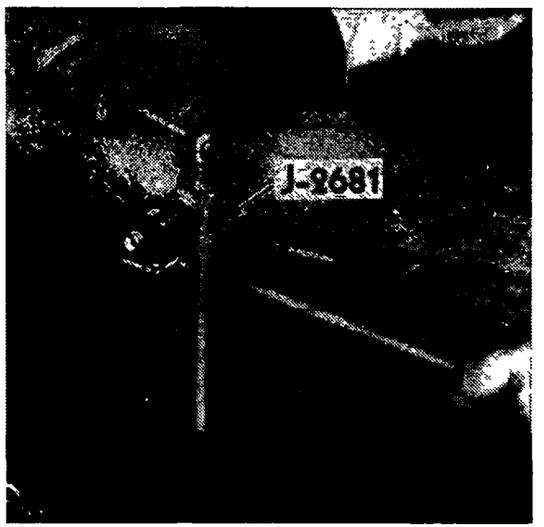

HYDRA-MATIC BAND ADJUSTING TO L J-2681

NOTE—If no increase in engine speed noted when adjusting screw loosened, band has probably been slipping in service. Remove oil pan and inspect band and drum. With pan off, adjust bands as directed in ADJUSTMENT—WITH PAN OFF below and disregard following steps.
9R) Tighten band adjusting screw slowly until engine speed drops to 700 RPM., loosen adjusting screw until engine speed increases, then tighten adjusting screw until engine speed again drops to exactly 700 RPM., watch tachometer for 30 seconds to note any increase in engine speed. If increase noted, tighten adjusting screw 1/10 turn. Repeat this procedure until engine speed remains at 700 RPM. for at least 30 seconds.
10R) Place selector lever in "N" position.
11R) Set counter on adjusting tool to 00. Hold locknut stationary, **tighten band adjusting screw exactly 2 turns until tool counter reads 2.0.**
12R) Place selector lever in "DR" position. Hold band adjusting screw from turning, tighten locknut securely.

After Front & Rear Bands Adjusted.

Reset engine idle speed as follows:

	Idle Speed	Selector Lever
Cadillac	375 RPM	Drive "Dr"
Frazer & Kaiser	425-450 RPM	Neutral "N"
Hudson	480-520 RPM	Neutral "N"
Lincoln, Nash	375 RPM	Neutral "N"
Oldsmobile	350 RPM	Drive "Dr"
Pontiac	365-385 RPM	Neutral "N"

ADJUSTMENT—WITH OIL PAN OFF Using Servo Gauges J-1693 & J-5071 (Kaiser-Frazer KF-92 & KF-77): Drain transmission case by removing plug at rear of oil pan, remove pan, remove front compartment floor mat and floor hole cover over band adjusting screws. Adjust each band:

Front Band (Gauge J-1693 or Kaiser-Frazer KF-92):

1) Loosen locknut and back off front band adjusting screw approximately 5 turns. Make certain that band is centered on drum.
2) Remove pipe plug from bottom of front servo.
3) Loosen hexagonal headed adjusting screw on gauge by hand until approximately ⅛" of adjusting screw threads are exposed above gauge body. Screw gauge into pipe plug hole in front servo **by hand**
4) Tighten hexagonal adjusting screw on gauge by hand until gauge stem is felt to just touch piston

C NTINUED N NEXT PAGE

HYDRA-MATIC BAND ADJUSTMENT (C ntinu d)

in servo, then continue to tighten adjusting screw with a wrench **exactly six full turns** from point where stem first contacted piston.

5) Tighten front band adjusting screw until knurled washer on gauge (at upper end of hexagonal adjusting screw) is just free to turn. Hold band adjusting screw from turning and securely tighten adjusting screw locknut.

6) Loosen gauge adjusting screw **at least six turns,** remove gauge from servo. Install pipe plug in servo and tighten securely.

Rear Band (Gauge J-5071 or Kaiser-Frazer KF-77):

1) Place the gauge on the finished surface of the Accumulator body with leg of gauge resting on rear servo stem.

2) Loosen locknut and back off rear band adjusting screw until face of actuating lever (which contacts servo stem) is well away from the face of the gauge.

3) Tighten band adjusting screw until face of band actuating lever just contacts gauge.

►***CAUTION—If adjusting screw turned too far when making this adjustment, back screw off SEVERAL TURNS and repeat adjustment.***

4) Hold band adjusting screw from turning and tighten adjusting screw locknut securely. Remove gauge.

HYDRA-MATIC TESTING
ALL 1950-51 HYDRA-MATIC CARS

For test and repair purposes, the first basic types of Hydramatic Transmissions are identified below.

Hydra-Matic Types

1—Not Modulated Pressure. Mechanical Reverse.
2—Modulated Pressure. Mechanical Reverse.
3—Not Modulated Pressure. Hydraulic Reverse.
4—Modulated Pressure. Hydraulic Reverse.
5—"WHIRLAWAY" Either Type 2 or Type 4).

This transmission is basically the same as other Hydramatic transmissions except for arrangement of shifts in "Dr" Range. (1 & 2 "Lo" Range, 2, 3, 4, "Dr" Range).

MODULATED PRESSURE: Main line or throttle pressure is regulated by the pressure regulator valve, depending on throttle pressure. This throttle pressure acts upon a throttle valve pressure plug house within pressure regulator. Inner end of plug bears against pressure regulator which controls main line pressure, adding force to the pressure regulator spring thus adding to main line pressure. (See illustrations).

HYDRAULIC REVERSE: Consists of a cone clutch arrangement within the reverse unit and allows for "Rocking" the car without danger of clashing gears. Transmisisons with hydraulic reverse can be identified by trying to shift into reverse with the car moving forward. Gears will clash and resistance will be apparent on cars without hydraulic reverse.

►***CAUTION—Before performing any Hydramatic tests check fluid level in transmission and bring up to "FULL" mark on indicator, using recommended fluid only. Check engine idle and set at recommended speed.***

ROAD TEST: If possible, choose a route that includes a hilly section to test for open throttle upshift, slippage and throttle downshift points, and a level section for upshift point tests. Refer to Hydramatic Shift Point Speeds (below) for correct shift point

HYDRA-MATIC SHIFT POINTS IN M.P.H.
(Select r L ver as Indicated)

CADILLAC 60S, 61, 62

UPSHIFTS:		1-2	2-3	3-4
Minimum Throttle	("Dr")	5-7	11-14	16-20
Full Throttle	("Dr")	9-15	26-35	59-67
Minimum Throttle	("Lo")	7-14		
Full Throttle	("Lo")	21-27		
DOWNSHIFTS:		**4-3**	**3-2**	**2-1**
Closed Throttle	①("Dr")	17-13		
Full Throttle	("Dr")	20-17	13-10	9-5
Closed Throttle	("Lo")			10-8
Full Throttle	("Lo")			15-11
Forced	("Dr")	62-13		

①3-1 Closed Throttle Downshift, 9-3 M.P.H.
Lockout—4-2 Shift, 49-39 M.P.H.

CADILLAC 75, 86

UPSHIFTS:		1-2	2-3	3-4
Minimum Throttle	("Dr")	5-6	10-13	15-19
Full Throttle	("Dr")	9-14	25-33	55-63
Minimum Throttle	("Lo")	7-13		
Full Throttle	("Lo")	20-25		
DOWNSHIFTS:		**4-3**	**3-2**	**2-1**
Closed Throttle	①("Dr")	16-12		
Full Throttle	("Dr")	19-16	12-10	9-5
Closed Throttle	("Lo")			10-8
Full Throttle	("Lo")			14-10
Forced	("Dr")	58-12		

①3-1 Closed Throttle Downshift, 9-3 M.P.H.
Lockout—4-2 Shift, 47-37 M.P.H.

HUDSON

UPSHIFTS:		1-2	2-3	3-4
Minimum Throttle	("Dr")	4-8	10-14	15-20
Full Throttle	("Dr")	10-15	27-35	58-66
Full Throttle	("Lo")	22-27		
DOWNSHIFTS:		**4-3**	**3-2**	**2-1**
Closed Throttle	("Dr")	15-11	8-5	5-3
Full Throttle	("Dr")	19-16	14-10	10-5
Forced Throttle	("Dr")	60-15		
Closed Throttle	("Lo")			9-5
Full Throttle	("Lo")			14-10

Lockout—4-2 Shift, 48-38 M.P.H.

FRAZER & KAISER

UPSHIFTS:		1-2	2-3	3-4
Minimum Throttle	("Dr")	4-8	10-14	15-20
Full Throttle	("Dr")	14-18	27-35	58-66
Full Throttle	("Lo")	22-27		
DOWNSHIFTS:		**4-3**	**3-2**	**2-1**
Closed Throttle	("Dr")	15-11	8-3	3-1
Full Throttle	("Dr")	19-16	13-10	9-5
Forced Throttle	("Dr")	60-15		
Closed Throttle	("Lo")			9-5
Full Throttle	("Lo")			14-10

Lockout—4-2 Shift, 48-39 M.P.H.

LINCOLN

UPSHIFTS:		1-2	2-3	3-4
Minimum Throttle	("Dr")	5-7	11-17	19-25
Full Throttle	("Dr")	10-18	26-35	62-67
Full Throttle	("Lo")	24-28		
Light Throttle	("Lo")	9-14		
DOWNSHIFTS:		**4-3**	**3-2**	**2-1**
Closed Throttle	①("Dr")	17-13		
Full Throttle	("Dr")	20-17	13-10	9-5
Forced Throttle	("Dr")	62-19		
Closed Throttle	("Lo")			10-8
Full Throttle	("Lo")			15-11

①3-1 Closed Throttle Downshift, 9-3 M.P.H.
Lockout—4-2 Shift, 47-37 M.P.H.

NASH

UPSHIFTS:		1-2	2-3	3-4
Minimum Throttle	("Dr")	4-8	10-14	15-20
Full Throttle	("Dr")	14-18	27-35	58-66
Minimum Throttle	("Lo")	14-17		
Full Throttle	("Lo")	22-27		
DOWNSHIFTS:		**4-3**	**3-2**	**2-1**
Closed Throttle	①("Dr")	15-11		
Full Throttle	("Dr")	19-16	13-10	9-5
Forced Throttle	("Dr")	60-15		
Closed Throttle	("Lo")			9-5
Full Throttle	("Lo")			14-10

①—3-1 Closed Throttle Downshift, 7-2 M.P.H.
Lockout—4-2 Shift, 48-39 M.P.H.

OLDSMOBILE 76 (Early 1950)

UPSHIFTS:		1-2	2-3	3-4
"Dr"①		5-15	10-30	22-68
"Lo"①		17-30		
DOWNSHIFTS:		**4-3**	**3-2**	**2-1**
Closed Throttle②	("Dr")	15-12		
Full Throttle	("Dr")	19-17	12-10	8-6
Closed Throttle	("Lo")			6-3
Full Throttle	("Lo")			12-10
Forced	("Dr")	63-13		

①Dependent on throttle pressure.
②3-1 Closed Throttle Downshift, 4-2 M.P.H.
Lockout—4-2 Shift, 45-50 M.P.H.

OLDSMOBILE 76 & 98 (Except 76 Early (1950)

UPSHIFTS:		1-2	2-3
"Dr"①		10-30	22-68
"Lo"①		13-23	
DOWNSHIFT:		**3-2**	**2-1**
Closed Throttle	("Dr")	15-12	10-2
Full Throttle	("Dr")	19-17	12-10
Closed Throttle	("Lo")		6-3
Full Throttle	("Lo")		12-10
Forced	("Dr")	58-13	

①Dependent on throttle pressure.
Lockout—3 ("Dr"), 2 ("Lo"), 40-44 M.P.H.

OLDSMOBILE 88

UPSHIFTS:		1-2	2-3
"Dr"①		10-32	25-72
"Lo"①		13-23	
DOWNSHIFT:		**3-2**	**2-1**
Closed Throttle	("Dr")	15-12	10-2
Full Throttle	("Dr")	21-19	12-10
Closed Throttle	("Lo")		6-3
Full Throttle	("Lo")		12-10
Forced	("Dr")	60-13	

①Dependent on throttle pressure.
Lockout—3 ("Dr"), 2 "Lo") 43-48 M.P.H.

PONTIAC

UPSHIFTS:		1-2	2-3	3-4
Minimum Throttle	("Dr")	4-8	9-13	14-18
Full Throttle	("Dr")	9-14	25-35	60-75
Minimum Throttle	("Lo")	16-21		
Full Throttle	("Lo")	19-24		
DOWNSHIFTS:		**4-3**	**3-2**	**2-1**
Closed Throttle	("Dr")	14-10		
Full Throttle	("Dr")	18-14	12-9	8-4
Closed Throttle	("Lo")			6-3
Full Throttle	("Lo")			14-10
Forced	("Dr")	60-15		

Lockout—4-2 Shift, 48-40 M.P.H.

CONTINUED ON NEXT PAGE

HYDRA-MATIC TESTING (C nt.)

STALL TEST: This test can be made to determine engine performance, transmission band slippage or damaged torus member. Engine speed must remain between test limits for normal engine and transmission operation (See Table below.) Bring engine to normal operating temperature and connect electric tachometer. Place selector lever in "Dr" position, set hand and foot brakes securely and depress accelerator pedal to floor. ***(CAUTION—Extreme care must be used in making this test. NEVER HOLD THROTTLE OPEN MORE THAN ONE MINUTE. If engine speed EXCEEDS maximum limit by more than 200 RPM, close throttle immediately).***

STALL TEST LIMITS

Car	Minimum RPM	Maximum RPM
Cadillac	1500	1700
Hudson	1450	1650
Kaiser-Frazer	1450	1650
Lincoln	1350	1600
Nash	1450	1650
Oldsmobile "6"	1500	1600
Oldsmobile "8"	1700	1800
Pontiac	1400	1600

Engines operating within test limits indicate transmission and engine are normal.

If engine speed is BELOW MINIMUM limit, engine needs tune-up. (NOTE—Low engine RPM will result if torus members are damaged and are locked together). If engine speed goes ABOVE MAXIMUM limit, bands are slipping, fluid level low, or torus check valve or front pump relief valve sticking or missing. Before adjusting bands make valve check (below).

Checking Valves—Set hand brake and run engine for 1½ minutes, then with engine idling check fluid level (Selector lever in "N" position), see that fluid is at "FULL" mark on indicator. Shut off engine and wait ten minutes. Re-check fluid level with engine off. If the fluid level has not raised more than ½", torus check valve and front pump relief valve are operating satisfactorily. Test shift points (See Hydramatic Shift Points).

MAIN OIL PRESSURE (Cars WITHOUT Modulated Pressure): Remove front floor mat and hole cover plate over band adjusting screw. Remove plug from transmission case (between band adjusting screws), using 7/16" six point socket. Install Pressure Gauge (Kent-Moore No. J-2540). With transmission oil warm, start engine and run at 1000 R.P.M. Oil pressure should be 75 to 90 lbs. Apply both hand and foot brakes and move selector lever from "N" to "Dr", "Lo" and "R". Oil pressure should remain equal at all positions.

►*NOTE*—Rear Oil Pump may be checked separately by driving the car at 30 to 40 M.P.H. in Third speed in "Dr" range. Move selector lever to "N" and turn the ignition key off. Pressure on gauge should not be less than 55 lbs.

MAIN OIL PRESSURE (Cars WITH Modulated Pressure, Except Oldsmobile)—

Zero Throttle Pressure—At 30 M.P.H. in fourth speed, with Zero Throttle, oil line pressure should be 55 to 72 lbs. (Cadillac 60-72 lbs..)

Full Throttle Pressure—Full throttle pressure in fourth speed at 30 M.P.H. (full throttle without going thru detent) should be between 75 and 105 lbs. (Cadillac 20 to 35 lbs. higher than zero throttle pressure test reading). Use brake to hold car at 30 M.P.H.

►*NOTE*—Rear oil Pump may be checked in the same manner as cars without Modulated Pressure.

Oldsmobile: Place selector lever in "Dr" and set engine idle at EXACTLY 350 R.P.M. Pressure should not be less than 35 lbs.

Line Pressure Modulation Test (Oldsmobile)—With selector lever in "Dr" and car traveling at 30 M.P.H. in third gear, pressure on gauge should not be less than 60 lbs., and should increase at least 20 lbs., as throttle position is changed from zero to full throttle.

REVERSE PRESSURE (Cars WITH Hydraulic Reverse): Install pressure gauge (see Main Oil Pressure above). Make sure Pressure Regulation is normal in forward speeds, then note pressure in "Dr" and "Lo" with engine idling at normal speed. Move lever to "R". Pressure should be as high or higher than in "Dr" or "Lo". Apply brakes and accelerate engine to half throttle. The pressure should gradually increase to 125 lbs., minimum. If the pressure does not check satisfactorily, a leak in the reverse oil system or a poorly operated pressure regulator is indicated.

HYDRA-MATIC TROUBLE SHOOTING & DIAGNOSIS

ALL 1946-51 HYDRA-MATIC CARS

►***NOTE—75% of all troubles can be corrected by external adjustments and oil level. Over 80% of the remainder of troubles can be corrected with transmission in the car. See "HYDRAULIC OVERHAUL" following.***

LIGHT THROTTLE SHIFT POINTS HIGH: (With Full Throttle Shift points normal)—Throttle linkage adjusted incorrectly. Adjust throttle linkage and check for worn or loose control rods.

FULL THROTTLE SHIFT POINTS: (Either too high or too low or do not occur)—Governor valves not operating properly, leakage at governor assembly, broken oil rings or missing governor balancing plug. Governor ring lands might be worn. Correct by freeing valves, check for warped surfaces. Replace parts as necessary.

NO THROTTLE DOWNSHIFT IN "Dr" RANGE: (From 4 th to 3rd (3rd to 2nd Oldsmobile) above 20 M.P.H.)—Insufficient accelerator travel due to interference of throttle linkage or at floor carpet. Throttle controls improperly adjusted or lever bent or loose on shaft. Spring lock in downshift valve may be missing.

TRANSMISSION DOES NOT RESPOND TO SHIFT LEVER POSITION: Pin which picks up manual valve in valve body is not operating in groove in manual valve. To check, shift selector lever into reverse. If severe clashing results or if lever goes into reverse but car locks up and fails to move backwards, pickup pin is not operating manual valve. Remove side cover and engage pin.

TRANSMISSION FAILS TO DRIVE CAR: Usually caused by failure of one or both bands to be applied. Check for low oil pressure. Front or rear band adjustment incorrect. Manual valve mispositioned, or sticking torus check valve. See Oil Pressure Tests.

ERRATIC RESPONSE TO SHIFT LEVER: Inner manual control valve lever loose on shaft. Replace lever assembly.

HUNTING: Adjust throttle linkage, check valve assembly and clean thoroughly and reface.

HAS SECOND AND FOURTH SPEED ONLY: (1st & 3rd speed Oldsmobile)—Clean and reface valve assembly. Check front unit for possible locking.

ALL SHIFTS ROUGH: Adjust throttle linkage and servo bands. Clean and reface valve assembly. Check transmission passages for leaks. Check oil pressure.

TWO-THREE SHIFT ROUGH: ***(1-2 shift Oldsmobile Whirlaway)***—Follow instructions under ALL SHIFTS ROUGH and in addition, check front and rear servos.

NO FOUR-THREE DOWNSHIFT: ***(3-2 Oldsmobile Whirlaway)***—Adjust throttle linkage. Inspect, clean and reface control valve assembly.

SLIPS AFTER FOUR-THREE DOWNSHIFT: ***(3-2 Oldsmobile Whirlaway)***—Check front servo.

WILL NOT SHIFT, STAYS IN SAME GEAR: Check valve assembly and governor. Front or rear units not operating properly. Check for possible locking.

SHIFTS ABOVE SECOND SPEED (IN LOW RANGE): Adjust manual linkage. Check control valve assembly and governor.

SLIPS IN VARIOUS SPEEDS: Check fluid level and oil pressure. Adjust servo bands, clean control valve assembly.

SLIPS OUT OF REVERSE: (Except cars with hydraulic type reverse). Overhaul reverse anchor.

LOCKS UP ON REVERSE COAST: Check oil pressure. Clean and reface control valve assembly. Rear servo not operating properly.

CREEPS FORWARD WHEN IN "R" POSITION: Rear unit not operating correctly. Excessive drag in rear clutch.

CLASHES WHEN PROPERLY SHIFTED TO "R": Engine idle speed too fast. Control valve plugged or dirty. Reverse anchor not operating correctly.

NO DRIVE WHEN ENGINE IS FIRST STARTED: Check fluid coupling and front pump. Test oil pressure.

CREEPS EXCESSIVELY IN "Dr": Engine idle speed too high.

CAR WILL NOT BACK UP: (Unless throttle is opened excessively)—Rear band not released due to low oil pressure caused by leakage or compensator valve auxiliary plug pin missing.

BANDS APPLIED VIOLENTLY, ENGINE SPEEDS UP: Low oil pressure or level. Pressure regulating valve sticking. Front pump may not be operating properly or there is a bad oil leak in the system. Check oil pressure and oil level. Free up pressure regulator valve or install new valve.

CONTINUED ON NEXT PAGE

HYDRA-MATIC TROUBLE SHOOTING & DIAGNOSIS (C nt.)

SEVERE "CLUNK" ON 3-2 DOWNSHIFT AT HIGH SPEED WITH CLOSED THROTTLE: *(2-1 downshift Oldsmobile Whirlaway)*—Rear check valve is not operating properly. Check valve may be broken. Stuck or broken ring in accumulator piston. Rear clutch piston may also be binding on its pilot.

CARS WITH HYDRAULIC REVERSE

CLICKING OR RATCHETING NOISE: (With selector lever in Reverse and car moving forward 2 to 4 M.P.H.).—This condition is due to parking pawl trying to engage reverse internal gear. This condition is usually the result of a sharp drop in line pressure. Check as follows:

1) Reverse check valve located in detent plunger housing should be firmly attached to housing by a rivet. Opposite end should extend ¼" above face of housing in free position. Hole (.062") should line up with hole in detent plunger spacer. Face of valve should be flat against spacer when installed. Replace assembly if necessary.

2) Parking blocker piston return spring stop seat should be ½" to 17/32" from face of bracket. The parking blocker spring should never be altered. If distorted, it should be replaced.

►*NOTE*—A second type spring stop and a new spring are now being used. The stop has a fixed setting and is mounted under both bracket bolts. The new spring has a free length of 1".

NO DRIVE IN REVERSE: This condition will occur if front servo exhaust body spacer is installed in reverse. Under this condition oil pressure does not increase when selector lever is placed in Reverse position. Pressure will increase to 150-170 lbs. when transmission shifts from 1 to 2.

SELECTOR LEVER WILL NOT GO INTO REVERSE: Governor G-2 valve stuck in open position. Clean governor assembly.

LOW OIL PRESSURE, SLIPPAGE, DELAYED AND ERRATIC UPSHIFTS: These conditions will exist when one or the other of the two ¼" cup shaped plugs are missing from the parking bracket. (CAUTION—These plugs are not service parts and should never be removed). If plugs are loose or missing, replace assembly.

REVERSE CONE ENGAGES WHEN IN DRIVE: This condition can occur when there is excessive leakage into the reverse apply circuit. Check for leakage as follows:

1) Check front servo exhaust valve for proper fit in exhaust body. Clearance should be .002".

2) Inspect detent retainer spacer and valve body surfaces that contact spacer. Replace control valve if necessary.

3) Check Throttle Valve plug in Pressure Regulator for excessive clearance. If greater than .002" replace Regulator plug assembly.

SELECTOR LEVER HARD TO SHIFT: Disconnect gear shift control rod from transmission and test linkage for free movement. If linkage is normal, outer control valve body may be distorted. A binding condition may also be caused by a rough surface on the end of manual valve detent plunger or a rough surface on the notches of the control lever that contact the detent plunger. Polishing these surfaces may correct the trouble.

HYDRA-MATIC REMOVAL & INSTALLATION
FOR ALL 1950-51 HYDRA-MATIC CARS

1950-51 CADILLAC

Removal: Support car with all wheels approximately 12" above floor. Remove floor carpet & pads, front seat cushion, and center floor pan. Disconnect propeller shaft at rear universal joint, remove shaft and front universal joint and yoke, remove flywheel housing pan. Drain transmission and fluid flywheel by taking out both drain plugs. Support rear end of engine with jack under oil pan (use block of wood on jack or use special Engine Support Stand Tool. Install Transmission Hoist, Tool J-1636B, in front compartment over floor pan opening, screw eyebolt securely into top of transmission. attach hoist cable hook to eyebolt, lift transmission just enough to take strain off rear support. Disconnect rear support at transmission extension housing, remove the bracket cross-member carrying the support. Remove throttle rod and manual shift rod from levers on the transmission case, remove both levers and the lower relay lever from flywheel housing. Disconnect speedometer cable at rear of transmission. Remove spark plugs and starter from engine. Remove 30 capscrews holding fluid coupling cover to flywheel, push cover toward rear of car to disengage flywheel dowels (CAUTION—Do not pry cover away from flywheel). Lower the jack under the engine until top of bell housing is flush with top of opening in floor pan. Remove the bolts holding bell housing to engine crankcase. Remove transmission and bell housing as a unit by moving it to the rear and lowering it to the floor.

Installation: Make certain that face of flywheel and torus cover are clean and free from all nicks or burrs, install NEW gasket on face of flywheel (use grease to retain gasket—do not use shellac or sealing compounds). Raise transmission in place carefully, make certain that mainshaft enters pilot bearing and that dowels in crankcase enter holes in housing squarely, align flywheel and torus cover so that large dowel pin and large dowel hole (marked by yellow paint) are at top and small dowel pin and small hole at the bottom. Install four flywheel housing-to-crankcase screws and tighten evenly to 45-50 ft. lbs. Install one torus cover screw adjacent to each dowel pin and tighten these screws just snug, install two more cover screws (90° from first two screws) and tighten these just snug (CAUTION—this procedure necessary to insure evenly applied pressure which will prevent leaks). Install all remaining torus cover screws, tighten all screws evenly to 20-25 ft. lbs. torque. Check torus cover drain plug tightness before installing flywheel lower cover. Raise engine approximately 1" (use jack and wooden block under oil pan), install engine rear support bracket, lower engine, connect support. Install and connect propeller shaft, speedometer cable, starter, spark plugs, transmission throttle lever and manual control lever. Fill transmission with Hydra-Matic fluid and adjust linkage. *See separate instructions.*

1951 FRAZER & KAISER

Removal: Raise car and support it on stands. Drain transmission case (remove oil pan drain plug). Disconnect speedometer cable and housing at rear bearing retainer, rear throttle rod and manual control rods at levers on transmission case. Disconnect propeller shaft at center bearing (Frazer), rear universal joint yoke (Kaiser), remove shaft by sliding front universal yoke out of transmission case. Install Support Fixture KF-104 under rear of engine and turn up support studs to remove engine weight from cross-member (CAUTION—do not raise engine more than enough to take weight off cross-member). Disconnect hand brake cable from bracket on cross-member, free engine from support cushions, remove cross-member with engine support cushions attached. Take off flywheel lower cover, drain fluid coupling by removing drain plug in torus cover. Remove throttle lever (Long lever) from transmission case. Mark torus cover and flywheel to insure reassembly in same position (CAUTION—necessary to maintain balance), remove all torus cover-to-flywheel attaching bolts. Lower engine slightly so that upper housing attaching bolts are accessible. Use transmission support jack (KF-106) under transmission to support transmission weight and remove strain from mounting bolts, remove all housing mounting bolts. Thread one 9/16"-12 bolt into housing bolt hole directly above dowel pin on each side of housing, turn up bolts evenly until dowel pins are freed from front housing, then remove these bolts. Move transmission straight back until it is free, then lower it carefully (CAUTION—turn flywheel so that end of mainshaft passes between two bolts), remove transmission from beneath car.

Installation: See that face of flywheel and torus cover mounting flange are clean and free from nicks or burrs, install NEW gasket on face of flywheel (use grease to retain gasket—do not use shellac or sealing compounds). Turn flywheel so that one dowel pin approximately 4" below edge of front flywheel housing. Carefully raise transmission in place and guide mainshaft pilot into pilot bearing in crankshaft. Align torus cover and flywheel marks (made at removal), push transmission forward until dowels in flywheel rear housing enter holes in front housing. Install attaching bolts and lockwashers in rear flywheel housing and tighten securely. Install all (30) torus cover-to-flywheel bolts and tighten finger tight (CAUTION—these are special alloy steel bolts), tighten these bolts in following order to insure even pressure and prevent leaks:

(1) Tighten one bolt adjacent to each dowel to 12-15 ft. lbs. torque.

(2) Tighten two bolts located 90° from dowels (evenly spaced between first two bolts) to 12-15 ft. lbs. torque.

(3) Tighten all bolts in rotation to 20-25 ft. lbs.

(4) Retighten all bolts in rotation to 30-35 ft. lbs.

Check tightness of torus cover and transmission oil pan drain plugs, install flywheel housing lower cover. Install engine support cross-member and connect engine support cushions. Install and connect transmission throttle lever, connect manual control rod. Connect speedometer cable and hand brake cable. Fill transmission with Hydra-Matic fluid and adjust linkage. *See separate instructions.*

1950-51 HUDSON

Removal: Disconnect battery ground cable first.

1) Disconnect starter cable and remove starter.

2) Take out bolt attaching breather pipe to valve

CONTINUED ON NEXT PAGE

HYDRA-MATIC REMOVAL & INSTALLATION (Cont.)

chamber cover and bracket-to-flywheel housing bolt, remove breather pipe.
3) Turn back floor mat to expose two upper floor opening covers and remove covers for access to top flywheel housing-to-engine bolts, remove these two bolts.
4) Raise car and support securely on jack stands.
5) Disconnect propeller shaft at rear universal joint and at front universal joint (CAUTION—tape journal bearing cups to universal journal to avoid losing bearings). Take out center bolt attaching center bearing support and slide propeller shaft to rear to provide clearance at transmission.
6) Disconnect speedometer cable at transmission rear bearing retainer. Disconnect rear throttle rod and manual control rod from levers on side of transmission case.
7) Remove left hand engine side rear stone guard by taking out 4 self-tapping screws.
8) Disconnect return spring at hand brake cable lever and cable clevis at pull rod slide link, remove cable retainer clip at engine support cross-member, pull cable forward and through the cross-member.
9) Take out two bolts attaching each engine rear support insulator to cross-member. Install transmission support jack under transmission case (hydraulic hoist with transmission cradle), raise transmission just enough to remove weight from cross-member. Disconnect and remove cross-member (4 screws on bottom and 3 on top at each end).
10) Install Engine Holding Fixture J-4651 to support engine weight (holes provided in frame side rail just below steering housing support and in same location on opposite side for engagement of support hooks), adjust support hooks so that front end of engine clears center tie rod by approximately ½" and weight of engine is supported by fixture.
11) Remove flywheel housing lower dust cover, drain fluid coupling by removing drain plug in torus cover.
12) With engine supported by fixture and transmission supported by jack, remove all torus cover attaching screws, remove flywheel housing lower right hand bolt (use ⅝" universal socket and 14" extension) leaving the bolt in the hole, remove lower left hand bolt (use 9/16" universal socket and 14" extension).
13) Pull transmission straight back until transmission shaft pilot clears pilot bushing in flywheel, then lower transmission carefully (CAUTION—use care that shaft does not strike flywheel bolts).

Installation: Reverse the removal procedure above and note the following important points:
Torus Cover & Flywheel Gasket—Make certain face of flywheel and torus cover mounting flange are clean and free from nicks and burrs. Use petrolatum to hold NEW gasket on face of flywheel (DO NOT use shellac or sealing compounds).
Flywheel Housing Bolts—Tighten all four bolts evenly to 40-50 ft. lbs. torque.
Torus Cover Bolts—After all bolts have been installed, tighten bolts in following order to insure even pressure and to prevent leaks:
(1) Tighten one bolt adjacent to each dowel pin to 12-15 ft. lbs. torque.
(2) Tighten two bolts located 90° from dowel pins (equally spaced between first two bolts) to 12-15 ft. lbs. torque.
(3) Tighten all bolts in rotation to 20-25 ft. lbs.
(4) Retighten all bolts in rotation to 26-31 ft. lbs.
Engine Support Cross-member—Install and tighten bolts in engine rear support insulators **first**, then install screws mounting cross-member on frame.
Filling Transmission with Fluid—*See REFILLING.*
Transmission Linkage—Connect throttle and manual control rods and adjust linkage. ***See separate instructions.***

1950-51 LINCOLN

Removal: Support car securely with all four wheels approximately 8" off floor.
2) Remove front seat and front floor carpet, disconnect throttle rod at accelerator pedal, remove front floor pan cover.
3) Disconnect propeller shaft at rear universal joint, remove propeller shaft and universal joint from transmission spline shaft.
4) Remove flywheel housing pan and engine plate. Drain transmission case (drain plug at rear of pan) and fluid coupling (drain plug in torus cover).
5) Disconnect rear motor mount from frame cross-member and remove the bottom half of the rubber mount.
6) Place jack under rear end of engine oil pan with wooden block on jack to prevent damage to pan, raise engine sufficiently to install engine support.
7) Remove detachable cross-member from frame X-member. Lower jack under engine until engine rests on support.
8) Install transmission lifting hoist over floor pan opening in front compartment (adjust legs of hoist to fit car and attach cables to floor pan to prevent tipping of hoist). Screw eyebolt securely in tapped hole in top of transmission case, attach cable hook, take up slack in cable so that weight of transmission and fluid coupling taken off engine support.
9) Disconnect manual control rod and lower throttle rod at levers on side of transmission case, remove throttle lever (longer lever) to prevent damaging lever during removal of transmission. Disconnect speedometer cable at rear of transmission.
10) Remove spark plugs from engine. Disconnect and remove starter motor.
11) Take out 30 5/16" capscrews mounting torus cover on flywheel, push cover toward rear of car to disengage locating dowel pins.
►*CAUTION—Do not pry cover away from flywheel (will damage gasket surface on cover and flywheel).*
12) Take out 6 bolts mounting flywheel housing on engine.
13) Remove transmission and flywheel housing as an assembly by moving unit toward rear of car until flywheel housing dowels and main shaft are disengaged, then lower assembly (tilt front end down and move it forward to free transmission bearing extension from frame cross-member) and remove from beneath car.

Installation: Make certain that face of flywheel and torus cover mounting flange are clean and free of all nicks and burrs.
1) Install NEW gasket on face of flywheel using grease to retain gasket (DO NOT use shellac or sealing compounds).
2) Raise transmission in place carefully, make certain that mainshaft enters pilot bearing and that dowels in engine enter holes in housing squarely, align flywheel and torus cover so that large dowel pin and large dowel hole are at the top.
3) Install six flywheel housing-to-engine bolts and tighten evenly to 45-50 ft. lbs. torque.
4) Install one torus cover screw adjacent to each dowel pin in flywheel and tighten these screws just snug, then install two more screws (at 90° from first two) and tighten these just snug (CAUTION—this procedure necessary to insure evenly applied pressure which will prevent leaks). Install remaining torus cover screws, tighten all screws evenly to 20-25 ft. lbs. torque.
5) Check torus cover drain plug tightness, install flywheel housing pan and engine plate.
6) Raise engine approximately 1" (use jack and wooden block under oil pan), install frame cross-member, lower engine into place, install engine mount.
7) Install and connect propeller shaft, speedometer cable, starter, spark plugs, transmission throttle lever. Connect manual control lever rod.
8) Fill transmission with Hydra-Matic fluid and adjust linkage. ***See separate instructions.***

1950-51 NASH

Removal: Raise car and support securely on stands (support rear of car at body side sills and place hydraulic jack under rear axle assembly).
2) Drain transmission case and fluid coupling (remove flywheel lower cover for access to drain plug.
3) Remove accelerator pedal and front compartment floor mat, take out screws in floor hole cover and remove cover.
4) Disconnect hand brake cable at adjusting yoke, disconnect speedometer cable and housing at transmission adapter, disconnect rear throttle rod and manual control rod at levers on left side of transmission case, remove rear brake hydraulic hose bracket from floor pan to prevent damage to lines.
5) Disconnect torque tube from rear bearing retainer by taking out flange mounting bolts, disconnect propeller shaft by sliding universal joint yoke to rear and free of transmission driveshaft, move torque tube out of the way.
6) Place jack under rear end of engine oil pan (use block of wood on jack to prevent damage to pan), or use special Engine Support Fixture J-4179 installed under engine to support engine so that all weight removed from rear engine support cross-member.
►*CAUTION—Do not raise engine more than necessary to remove engine support cross-member.*
7) Remove rear engine support cross-member (take out bolts in rear bearing retainer so that rubber cushion removed as unit with cross-member).
8) Loosen clamp bolt and remove throttle control lever (longer lever) from left side of transmission
9) Remove 30 capscrews and lockwashers mounting torus cover on rear face of flywheel.
10) Lower engine slightly so that upper housing attaching bolts accessible through floor pan opening. Install special transmission holding tool J-2808 on hydraulic jack (CAUTION—tool must be securely fastened to jack pad), place jack under transmission with tool securely engaging transmission case oil pan, lift transmission just enough to remove weight from mounting bolts in flywheel housing.

C NTINUED ON NEXT PAGE

HYDRA-MATIC REMOVAL & INSTALLATION (Cont.)

11) Remove attaching bolts, nuts, and lockwashers holding rear flywheel housing on front housing, take out upper rear stud on each side, use two 9/16" USS bolts to disengage dowels (screw one bolt evenly into each of above stud holes until dowels are free of front housing, then remove bolts).

12) Move transmission to rear until it is free, then lower assembly (CAUTION—turn flywheel so that end of mainshaft passes between two of the flywheel-to-crankshaft bolts), remove transmission from beneath car.

Installation: Reverse the removal procedure above and note the following important points:

Torus Cover & Flywheel Gasket—Make certain that face of flywheel and mounting flange on torus cover are clean and free from all nicks and burrs. Install NEW gasket on face of flywheel (use petrolatum to hold gasket—DO NOT use Shellac or sealers).

Transmission Alignment—Turn flywheel so that one dowel pin is approximately 4" below lower edge of front housing (so that mainshaft will pass between two crankshaft bolts) and turn torus cover so that dowel pin hole is in corresponding position. Lift transmission into place carefully, guide mainshaft pilot into pilot bushing and push transmission forward so that dowels in rear flywheel housing enter holes in front housing squarely.

Flywheel Housing Bolts—Install all rear flywheel housing-to-front housing bolts and stud nuts and tighten evenly and securely (NOTE—Rear engine mountings must be installed on lower studs before nuts are tightened).

Torus Cover Bolts—Install all bolts and tighten finger tight, then tighten these bolts in following order to insure even pressure and avoid leaks:

(1) Tighten one bolt adjacent to each dowel pin to 12-15 ft. lbs. torque.

(2) Tighten two bolts located 90° from dowel pins (equally spaced between first two) to 12-15 ft. lbs.

(3) Tighten all bolts in rotation to 20-25 ft. lbs.

(4) Retighten all bolts in rotation to 30-35 ft. lbs.

Filling Transmission with Fluid—*See REFILLING.*

Transmission Linkage—Connect manual control rod. Install throttle lever and connect rear throttle rod. Adjust linkage. *See separate instructions.*

1950-51 OLDSMOBILE

Removal: Use twin-post hoist to raise car, or support car securely on jack stands.

1) Remove transmission oil pan plug and drain transmission case.

2) On 8 Cyl. cars only, disconnect engine side pans at rear and drop these down for access to starter, disconnect starter wiring and remove starter.

3) On 8 Cyl. cars only, free exhaust pipe bracket and crankcase ventilator bracket from lower flywheel housing and remove housing. Remove flywheel housing pan.

4) Drain fluid coupling by removing drain plug from torus cover.

5) Disconnect propeller shaft at rear universal joint, pull shaft to rear to disengage forward end from transmission.

6) Disconnect speedometer cable at transmission case. Free intermediate lever bracket from frame cross-member by taking out two bolts.

7) Install special transmission lift (hydraulic jack and transmission cradle) under transmission and raise transmission and engine just enough to remove weight from engine support cross-member.

8) Free engine mounts from cross-member by taking out two bolts (left side), two capscrews (right side). Take out three cross-member to frame bolts at each side. Lift engine approximately ½" and remove cross-member (CAUTION—do not lift engine more than necessary to remove cross-member). Then lower engine just enough (approx. 1½") for access to upper rear bellhousing-to-front bellhousingcapscrews (CAUTION—do not lower engine more than 1½" unless upper radiator hose and exhaust pipe-to-manifold connections are loosened).

9) Disconnect manual control rod and throttle rod from levers on side of transmission case, remove throttle lever to prevent damaging lever during transmission removal.

10) Remove all torus cover-to-flywheel capscrews

11) Install Rear Engine Support BT-28 to support engine when transmission taken out. Remove rear bell housing-to-front bellhousing capscrews.

12) Move transmission to rear and lower it to the floor. CAUTION—Turn flywheel so that end of mainshaft passes between two flywheel bolts.

Installation: Reverse the removal procedure above and note the following important points:

Torus Cover & Flywheel Gasket—Make certain face of flywheel and torus cover mounting flange are clean and free from nicks and burrs. Use vaseline to hold NEW gasket in place on face of flywheel (DO NOT use shellac or sealing compounds).

Torus Cover Alignment & Tightening—On 6 Cyl. cars, engage paint-marked dowel pin in flywheel with dowel pin hole in cover which is also paint-marked (both dowel pins are same size but original paint-marked position must be maintained for correct run-out and balance). On 8 Cyl. cars, one dowel pin is larger than the other and this larger dowel must engage the larger dowel pin hole. Install all torus cover screws and tighten snugly, then tighten all screws evenly to 30 ft. lbs. torque.

Filling Transmission with Fluid—*See REFILLING.*

Transmission Linkage—Connect manual control rod. Install throttle lever and connect rear throttle rod. Adjust linkage. *See separate instructions.*

1950-51 PONTIAC

Removal: Support car on stands with all wheels 8" above floor. Drain transmission oil pan. Remove accelerator pedal, front floor mat, and transmission hole cover in floor. Disconnect speedometer cable and housing at transmission. Disconnect propeller shaft at rear universal and remove by sliding it to rear and free of transmission output shaft. Remove flywheel housing bottom cover (remove crankcase ventilator outlet pipe and loosen exhaust pipe bracket to aid cover removal). Drain fluid coupling by removing plug in cover. Disconnect hand brake cables at idler lever and remove lever (not required on Convertibles). Disconnect shift lever control rod from inner lever on transmission case, remove throttle control (outer) lever. Remove all (30) torus cover-to-flywheel bolts and lockwashers (work through pan opening in housing). Disconnect two rear engine mountings and reinforcing plates from cross-member, disconnect shift control lever bracket from cross-member. Use a jack under the rear end of the engine oil pan (place 4x4x10" wood block on jack to prevent damage to pan), raise rear end of engine until rear mountings ½" above cross-member (CAUTION—do not raise engine more than necessary for cross-member removal). Take out three cross-member mounting bolts on each side of car, remove reinforcing plates from inside frame side rails, remove cross-member (tap down at both ends until right end rests on exhaust pipe, tap left end down clear of side rail, lift right end over exhaust pipe). Lower rear end of engine until rear flywheel housing attaching bolts accessible through hole in floor. Use hydraulic jack and tool J-2808 (special transmission mounting fixture—fixture must be securely fastened on jack pad) and lift transmission slightly to remove stress on mounting bolts. Take out six rear housing-to-front flywheel housing bolts (two lower bolts on each side also retain engine rear mountings). Thread a 9/16"-12 bolt in center hole in each side of housing (directly above dowel pins) to remove dowel pins from rear housing (remove bolts when dowels are free). On all models except Convertibles (see Convertible Note below), remove transmission by moving it toward the rear and lowering it to the floor (CAUTION—to prevent mainshaft striking flywheel mounting bolts when lowering transmission, turn flywheel so that shaft passes down between two bolts).

Convertible Transmission Removal Note—Use a rope looped around rear end of transmission and extending through floor pan hole to inside of car to guide transmission. Remove speedometer driven gear, shaft, and sleeve assembly. With transmission moved to rear to clear engine, raise rear end of engine as high as possible (CAUTION—do not allow end of transmission main shaft to scrape on face of flywheel). Tilt transmission down at front (lift rear end with guide rope), and remove from beneath car.

Installation: Reverse the removal procedure given above and note the following important points:

Torus Cover & Flywheel Gasket—Make certain face of flywheel and torus cover mounting flange are clean and free from nicks or burrs. Install NEW gasket on face of flywheel (use petrolatum to hold gasket—DO NOT use Shellac or sealers).

Transmission Alignment—Turn flywheel so that one dowel pin is approximately 4" below left side of front flywheel housing (so that mainshaft will pass between two crankshaft bolts), turn torus cover so that dowel pin hole is in corresponding position. Lift transmission into place carefully guiding mainshaft into pilot bearing (CAUTION—see that pilot bearing spacer in place on end of mainshaft).

Flywheel Housing Bolts—Install and tighten all six bolts securely with rear engine mountings installed on lower bolt on each side.

Torus Cover Bolts—Install all bolts and tighten finger-tight, then tighten these bolts in following order to insure even pressure and avoid leaks:

(1) Tighten one bolt adjacent to each dowel pin to 12-15 ft. lbs. torque.

(2) Tighten two bolts located 90° from dowel pins (equally spaced between first two) to 12-15 ft. lbs.

(3) Tighten all bolts in rotation to 20-25 ft. lbs.

(4) Retighten all bolts in rotation to 30-35 ft. lbs.

Filling Transmission with Fluid—*See REFILLING.*

Transmission Linkage—Connect manual control rod. Install throttle lever and connect rear throttle rod. Adjust linkage. *See separate instructions.*

CONTINUED ON NEXT PAGE

HYDRA-MATIC OVERHAUL

ALL 1946-51 HYDRA-MATIC CARS

DISASSEMBLY OF TRANSMISSION

Torus, Torus Cover, Bell Housing. Move manual control lever on side of transmission toward rear to reverse position and remove oil level indicator from case. Straighten main shaft nut lock plate (using a chisel and light hammer) and remove the main shaft nut. Slide driven torus member off transmission shaft (*CAUTION:*—If torus member sticks, tap end of mainshaft with rawhide hammer while pulling torus on hub). Remove driving torus snap ring and driving torus assembly. Torus cover member plate can then be removed.

►*CAUTION:* Do not attempt to remove torus cover and driving torus by pulling and pushing on torus cover in a rough manner as this will possibly result in a broken oil seal ring. Instead, work hub of torus cover back thru oil seals gently, and then pull torus cover forward with a quick jerk.

Take out the four capscrews and lock washers holding the flywheel housing to front of transmission case. Remove flywheel housing and gaskets. Take out the ⅛" oil pressure line plug from transmission case, and place transmission into holding device.

Manual Lever, Oil Pan and Side Cover. Loosen lock screw holding manual lever to shaft and remove lever. Drive out open type driven torus retainer ring from main shaft using Tool J-1458, being careful main shaft is not damaged. Remove all capscrews from oil pan and side cover and remove oil pan and side cover from transmission. Lift oil pump screen from rear pump intake pipe. Straighten two front intake pipe bolt locks and loosen the two capscrews while lifting slightly on the pipe to avoid dropping capscrews into transmission case. Remove intake pipe from case.

Parking Brake Bracket and Control Valve (Cars with Hydraulic Type Reverse): Back off front and rear band adjusting screws at least 5 turns and remove parking brake pawl support bolt from rear of case and position anchor down in case as far as possible (Pawl can not be removed at this time). Remove pressure regulator reverse oil pipe (Do not bend pipe). Loosen two bolts holding parking brake bracket assembly to transmission case and place detent control lever in "L" position. Unhook parking brake release spring from pin assembly and inside oil pipe. Remove four bolts holding control valve assembly to transmission case and work control valve assembly toward front of case to remove governor pipes and reverse clutch pipe. Remove bolts from brake bracket assembly and remove piston release spring and stop. Carefully remove sleeve from governor to avoid damage to oil rings. Remove parking pawls from case.

Servos and Rear Oil Pump (Cars with Hydraulic Type Reverse). Remove front and rear servo attaching bolts and rear oil pump attaching bolts. Separate front and rear servo at oil transfer pipe by moving rear servo toward rear of transmission, then remove servo and rear pump discharge pipe. Remove front pump delivery pipe by pulling straight up from front pump. Position governor so that large round end is toward front of transmission and position one reverse drive flange attaching bolt up. Remove rear pump and governor by moving toward control valve assembly side of transmission base.

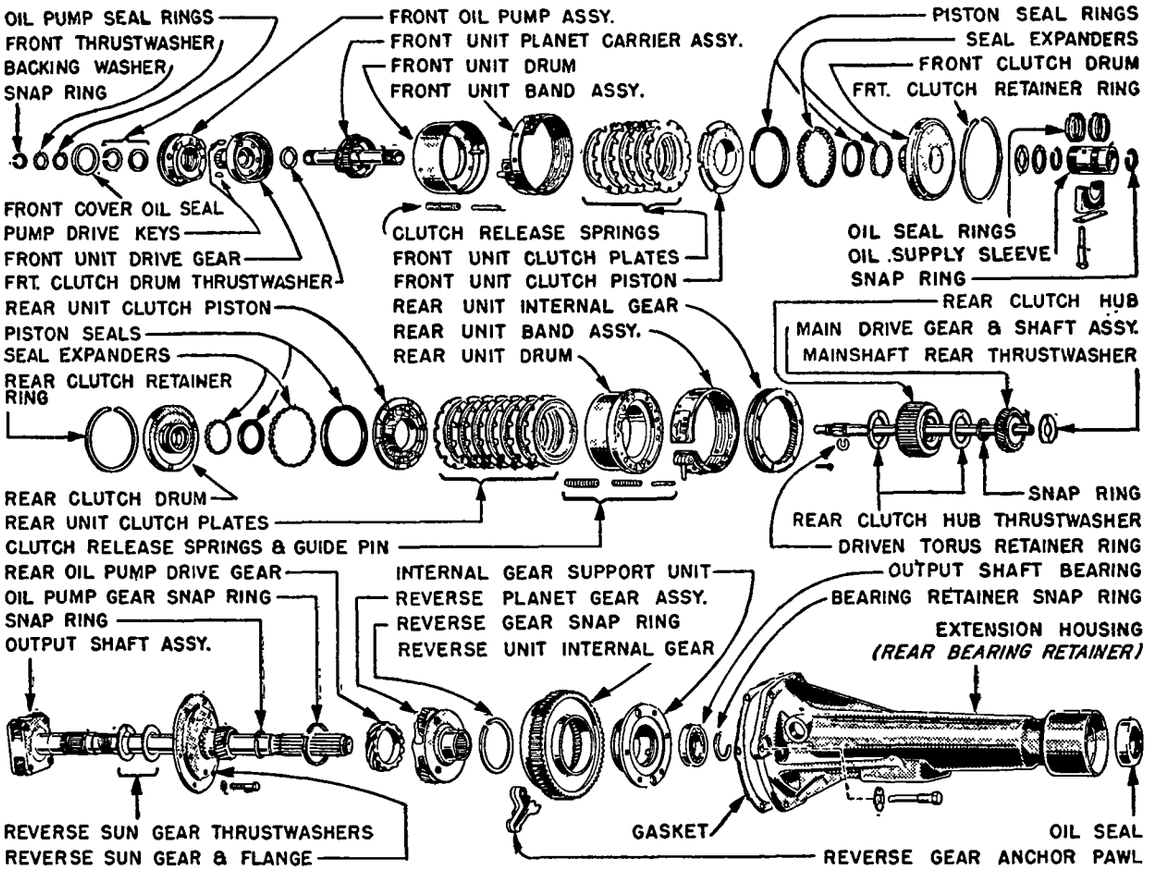

HYDRA-MATIC FRONT UNIT, REAR UNIT, & REVERSE DRIVE ASSY. (WITHOUT HYDRAULIC REVERSE)

Servos and Control Units. Hold rear pump discharge pipe brass fitting in front servo and loosen pipe nut. (Do not remove pipe from coupling). Loosen front and rear band adjusting lock nuts, then loosen adjusting screws approximately five turns each. Remove front and rear servo attaching screws and take both servos out as a unit. **NOTE:**—As servos are lifted from the case, the rear pump discharge pipe will rotate in the coupling and fall free without bending the pipe. (The pipe is connected in the same manner when installing the servos to the transmission case). Remove the rear pump discharge pipe from the pump, then remove the front delivery pipe.

Main Oil, Control Valve Body. *NOTE:*—Governor runout may be checked at this point before removal of oil control body. (See "Governor Runout Check" instructions). Position manual control detent lever so steel ball is in the "LO" range detent position, then remove four valve body mounting screws. Remove control body by sliding forward along transmission case. Oil delivery pipes from valve body to governor sleeve may come off with valve body. If they do not come off with valve body, they should be pulled out of governor sleeve at this time.

Reverse Shifter Bracket Assembly. Remove mounting bolts and take off the reverse shifter bracket, being careful not to lose the shims, spring or roller.

Rear Oil Pump and Governor Assembly. Remove the two screws holding the rear oil pump and governor to transmission case. Rear oil pump and governor can be removed as an assembly by positioning one reverse drive flange attaching screw up. Governor must be rotated so that the large round governor weight is toward the front of the transmission while removing the assembly. Take the assembly from the case by moving it toward control valve assembly side of the case and raising rear of pump to clear case.

Pressure Regulator Assembly. Remove pressure regulator plug, spring and valve from side of transmission case, holding it under pressure during removal as it is under spring tension.

Front Oil Pump and Front Unit Drive Gear. Remove

CONTINUED ON NEXT PAGE

HYDRA-MATIC OVERHAUL (C nt.)

snap ring holding front unit drive gear on front end of intermediate shaft and remove steel and bronze thrustwashers from shaft. (**NOTE**:—These washers have a smaller diameter than similar washers used in the transmission and should be kept separate). Remove front pump retaining screws and copper washers from its counterbore. Snap ring pliers can be used for this. Front pump, gasket and front unit drive gear will now come off as an assembly. Remove bronze thrustwasher in front of planet carrier.

Check End Clearance of Main Shaft. Install main shaft End Play Guide J-2587 over main shaft and front planet carrier and set up dial indicator on transmission case using Tool J-1465. Insert screwdriver between front clutch drum and center bearing cap, holding front planet unit forward. The screwdriver should be placed at an angle to prevent damage to oil delivery sleeve. Move shaft back and forth. End Clearance should be .004" to .005". Be sure to get just the float in the shaft. Do not force hard enough to compress clutch release springs. (**NOTE**:—Record amount of end clearance so the proper size washer can be installed when transmission is reassembled). Remove indicator and special tools.

Reverse Gear Assembly and Main Shaft (Cars without Hydraulic Type Reverse): Loosen rear bearing retainer to reverse internal gear support attaching bolts. This aids in the disassembly after removal of rear bearing retainer from transmission case. Remove reverse drive flange attaching bolts and straighten reverse anchor support bolt lock. Then remove the reverse anchor support bolt and reverse anchor. Remove rear bearing attaching bolts and remove reverse assembly from transmission case. If assembly sticks, tap front end of main shaft with soft hammer.

►*CAUTION:* The selective washer may stick to the main shaft or it may remain in the counterbore of the output shaft. Be sure to remove this washer when reverse assembly is removed.

Reverse Assembly and Main Shaft (Cars with Hydraulic Type Reverse): Remove rear bearing retainer oil seal and take out six center gear and drive flange attaching bolts. (Drive flange can be held from turning by bracing screw driver under drive flange bolt head). Install Tool J-2173 between center bearing cap and rear clutch drum to prevent drum from moving forward. Remove five bolts attaching rear bearing retainer to transmission case and carefully remove reverse assembly from transmission case. (If shaft sticks, tap on front end of drive shaft with rawhide hammer. *CAUTION*—The selective washer may stick to the main shaft or it may remain in the counter bore of the output shaft. Be sure to remove this washer when reverse assembly is removed. Remove stationary cone lock key).

Front and Rear Units. Install rear hub holding Tool J-2174 to rear unit drum, using a reverse drive flange attaching screw. Bend back edges of lock plate under two center bearing cap mounting screws, remove screws and bearing cap. Lift both front and rear planetary assemblies, with bands, from transmission case.

OVERHAUL OF UNITS

OVERHAUL: Transmission Units.

Front Servo Unit, Disassembly. Separate front and rear servos from oil delivery pipes, then remove two capscrews holding front band release band to servo body, and remove front band release cylinder. Booster spring, retracting spring retainer and retracting spring can now be removed. Take front band release piston from cylinder and remove servo piston from servo body.

►*CAUTION:* Piston assembly must not be disassembled at it is furnished as a complete unit. Remove pipe plug and lock wire holding 4 to 3 valve in place, and take valve from servo body.

Rear Servo Unit, Disassembly. Place rear servo in press and bring ram down to rest on spring retainer. Remove two retainer screws and lockwashers holding spring retainer to servo body. Release press slowly until servo springs are released, then remove servo from press. Take out servo spring retainer, accumulator spring, compensator piston and two compensator springs. Remove accumulator body and piston assembly from servo body. Rest the accumulator body on a vise with copper jaws and tap accumulator piston thru spring and accumulator body. Booster spring and booster piston can be taken from body.

►*NOTE:* To replace a broken or leaking check valve in the accumulator, drive out the rivet holding check valve in place and remove check valve and plunger. Clean body and passages and install plunger. Install check valve, inserting the notch in the valve under the shoulder at the small end of the plunger. Insert new rivet thru valve and into body. Peen the rivet.

►*NOTE:* Small bleed hole in valve must be over hole in body.

Oil Control Valve Body, Disassembly. (*CAUTION:*—Manual lever detent ball is under tension and may become lost unless care is taken to remove detent spring and steel ball). Move manual control lever slowly past reverse position while holding fingers around casting to catch spring and ball. Remove seal and two springs from manual control shaft.

►*CAUTION:* Extreme care must be taken in handling the main control valve assembly. Never grip the casting in a vise or use force in removing or installing valves or plugs. It is suggested the valve body be laid flat on a clean paper for disassembling. Remove the two screws holding inner and outer valve body castings together. Separate castings and remove separator plate. Remove three screws holding governor pipe end casting to valve body and take off the pipe end casting and separator. Remove cover plate from regulator plug casting. Take out the three screws holding regulator plug end cast-

CONTINUED ON NEXT PAGE

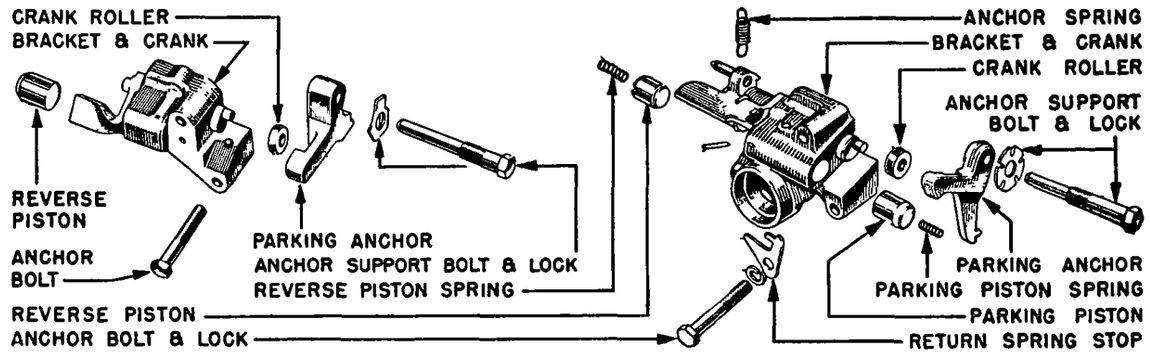

REVERSE BLOCKER ASSEMBLY

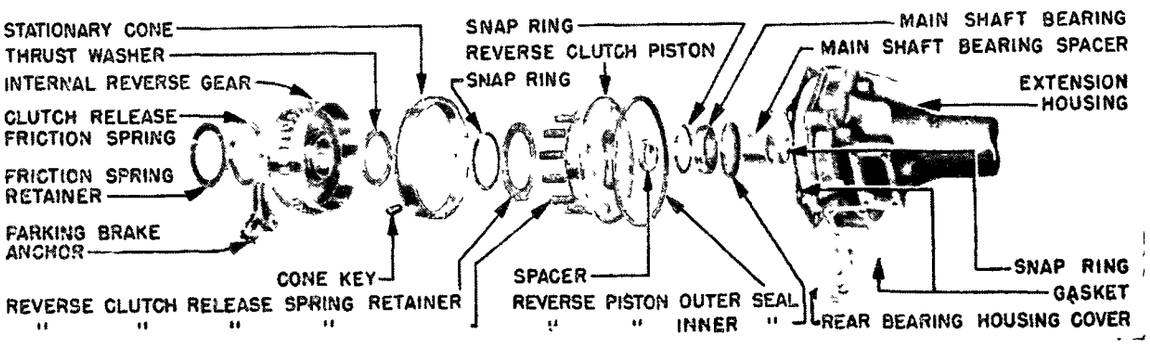

HYDRAULIC TYPE REVERSE ASSEMBLY

HYDRA-MATIC OVERHAUL (C nt.)

ing to inner casting and remove end casting. Hold regulator casting and inner valve body together while removing screws to avoid springs jumping out of place. Remove 1st and 2nd regulator plug spring, 2nd to 3rd shifter valve spring and 3rd to 4th shifter valve spring. Remove the three shifter valves. Valves should be free to move from body by pushing on opposite ends against governor plugs with fingers. Remove three governor plugs. Take off detent ball and spring retainer and remove steel plate over compensator valve and throttle detent plug in outer body. Remove compensator valve, spring, and detent plug from outer valve body. Double transition valve will now slide out. Remove "T" valve, throttle valve spring and throttle valve. Remove the spring holding compensator valve auxiliary plug in place. Compensator valve can now be removed by inserting a ⅛" punch into hole in plug and using another punch to push valve from body.

►*CAUTION:* Since this plug is short, be careful not to let it drop from punch and become lodged in valve body.

Rear Oil Pump and Governor Assembly, Disassembly. Remove plug from governor oil delivery sleeve and pull sleeve off governor body. Mark edge of governor body and edge of governor drive flange so they may be reinstalled in the same position. Remove governor body from drive flange and remove oil seal rings from governor body, being very careful not to damage rings while they are being removed.

►*CAUTION:* Do not attempt to remove the governor weights.

Remove two screws retaining small governor plunger and bushing, and take out small governor plunger stop. Pull governor plunger and bushing assembly from body. Remove the four bolts holding rear pump cover to pump body and take off cover, internal tooth oil pump can then be removed.

Front Oil Pump Unit Drive Gear, Disassembly. Remove front pump from front unit drive gear; tap gear with composition hammer if necessary. Hold front pump assembly with Tool J-2184-1. (*CAUTION:*—No attempt should ever be made to hold pump body by inserting bar into the intake bore or pressure regulator piston bore.) Remove two 1" long and one ⅝" long screws and copper washers from front pump cover, using an offset screwdriver. Remove one 1⅜" screw and copper washer from rear of pump. Take front pump cover from body. (*CAUTION:*—Tap lightly with a soft hammer at dowel area but *DO NOT PRY WITH A SCREWDRIVER AS THIS WILL DAMAGE THE LAPPED SURFACE.)* Use care not to drop gears out of gear pocket when cover is removed. Remove by-pass valve and spring from pump body and take out both internal and external pump gears. Remove oil seal from pump cover and take two oil seal rings from front cover.

CAUTION:—Mark top face of driven gear (outer) with Prussian Blue for identification when reassembling.

Reverse Gear and Main Shaft Disassembly (Cars without Hydraulic Type Reverse): Remove the speedometer driven gear and sleeve assembly from rear bearing retainer. Take out the five internal gear support bolts and copper washers. Lift up rear bearing and remove by tapping end of output shaft with soft hammer. Remove open type snap ring from back of ball bearing on output shaft. Lift gear, support and output shaft as an assembly and bump end of output shaft on block of wood. This will allow weight of internal gear and support to bump speedometer drive gear off end of output shaft. Remove reverse internal gear support snap ring and internal gear. With a soft hammer tap the ball bearing from internal gear support.

(*CAUTION:*—Keep snap ring spread to avoid damage to splines.) Lift reverse center gear and flange assembly from output shaft.

►*CAUTION:*—Do not disassemble the reverse center gear and drive flange assembly as this is serviced as a complete unit.

Remove steel and bronze thrustwashers from output shaft and remove bearing retainer seal.

Reverse Gear and Main Shaft Disassembly (Cars with Hydraulic Reverse): Remove stationary cone lock key and speedometer driven gear and sleeve assembly from rear bearing retainer. Remove snap ring on output shaft inside of rear bearing retainer at ball bearing. (This snap ring is smaller than other snap rings used in transmission). With output shaft standing on carrier end, remove bearing retainer from output shaft (It may be necessary to tap output shaft with soft hammer while holding rear bearing retainer to separate units). Remove reverse internal gear and stationary cone from rear bearing retainer by compressing stationary cone by hand. Remove snap ring locating ball bearing in rear bearing retainer. (Install new snap ring when assembling). Remove ball bearing from retainer and with Tool J-4670, compress reverse cone clutch release coil springs and remove large snap ring. Take out spring retainer and coil springs (6). Pull reverse piston straight out (do not attempt to turn piston as it is located by four dowel pins). Remove outer oil seal from reverse piston and inner oil seal from hub of rear bearing retainer and take large thrust washer from reverse intenal gear. By using large snap ring pliers, expand stationary cone and remove from internal gear, then remove clutch release flat spring and retainer. Remove snap ring holding planet carrier to output shaft and remove carrier, now remove the remaining snap ring and remove sun gear and drive flange assembly from output shaft.

Rear Unit and Front Unit from Intermediate Shaft. Remove both bands and place intermediate shaft with front and rear planet assemblies into holding fixture J-2190. Remove rear clutch hub snap ring lift rear unit and rear clutch hub as an assembly from intermediate shaft. Remove rear clutch hub front snap ring from intermediate shaft and take off oil delivery sleeve. Remove snap ring back of front unit center gear. (*CAUTION:*—Hold snap ring open to avoid damaging bearing surface on shaft.) Front unit can now be taken from shaft. Remove steel and bronze thrustwashers from drum back of

CONTINUED ON NEXT PAGE

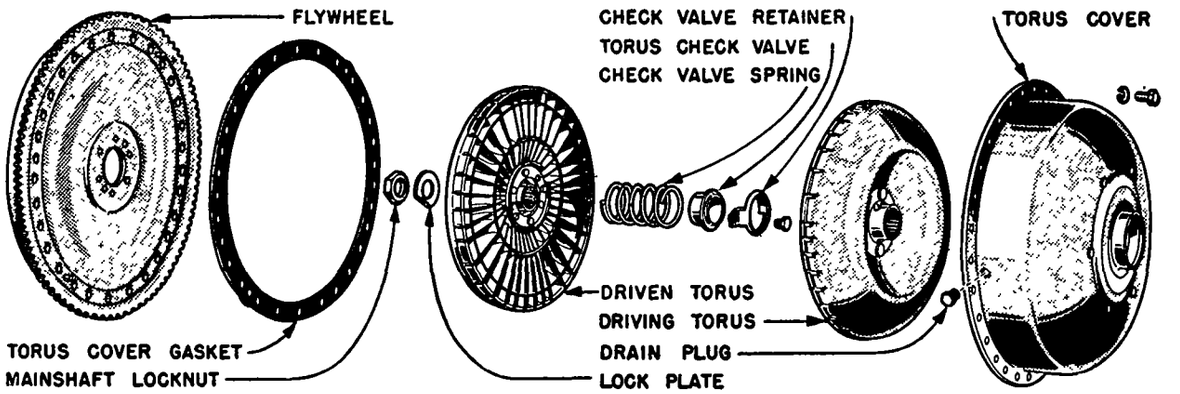

HYDRA-MATIC TORUS ASSEMBLY

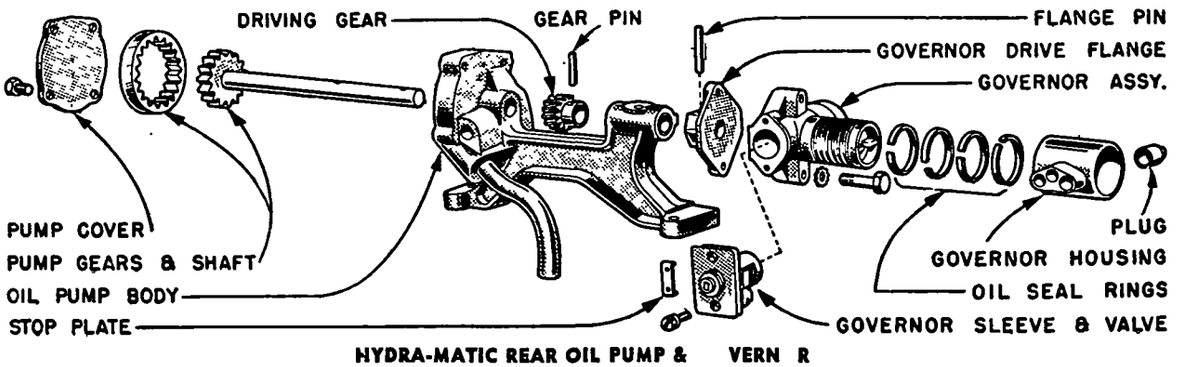

HYDRA-MATIC REAR OIL PUMP & VERN R

HYDRA-MATIC OVERHAUL (C nt.)

front unit center gear. (NOTE: These washers are similar to those used ahead of the front unit and should not become mixed.)

Front Unit, Disassembly. Place front unit in press and apply enough pressure to allow the snap ring to be removed. Take assembly from press and separate the drums by tapping front face of center gear with soft hammer. (*CAUTION:* Use care not to lose springs.) Remove annular piston from clutch drum by bumping front face of center gear on soft wood block. Take out the six inner and six outer clutch release springs. Remove three composition and three steel clutch plates.

NOTE: Lincoln and Oldsmobile 8, use four composition and four steel clutch plates.

With a blunt edge screwdriver, remove rubber seal and brass liner from annular piston and clutch drum piston.

Rear Unit, Disassembly. Remove rear clutch hub Tool J-2174, and take clutch hub and front thrustwasher from drum. Place rear unit in press and remove drum retainer snap ring. Remove the assembly from press and separate the drums by tapping lightly on rear thrust face of drum with block of wood and light hammer. Tap clutch drum on block of wood and remove annular piston. Remove six inner and six outer clutch release springs with guide pins. (NOTE: Front and rear clutch release springs are interchangeable, but guide pins are used only in rear unit.) Remove six composition and six steel clutch plates.

NOTE: Lincoln and Oldsmobile 8, use seven composition and seven steel clutch plates.

Remove two filister head cap screws that retain rear unit internal gear to drum and remove internal gear by tapping lightly with a soft hammer. Remove seals and brass liner from piston.

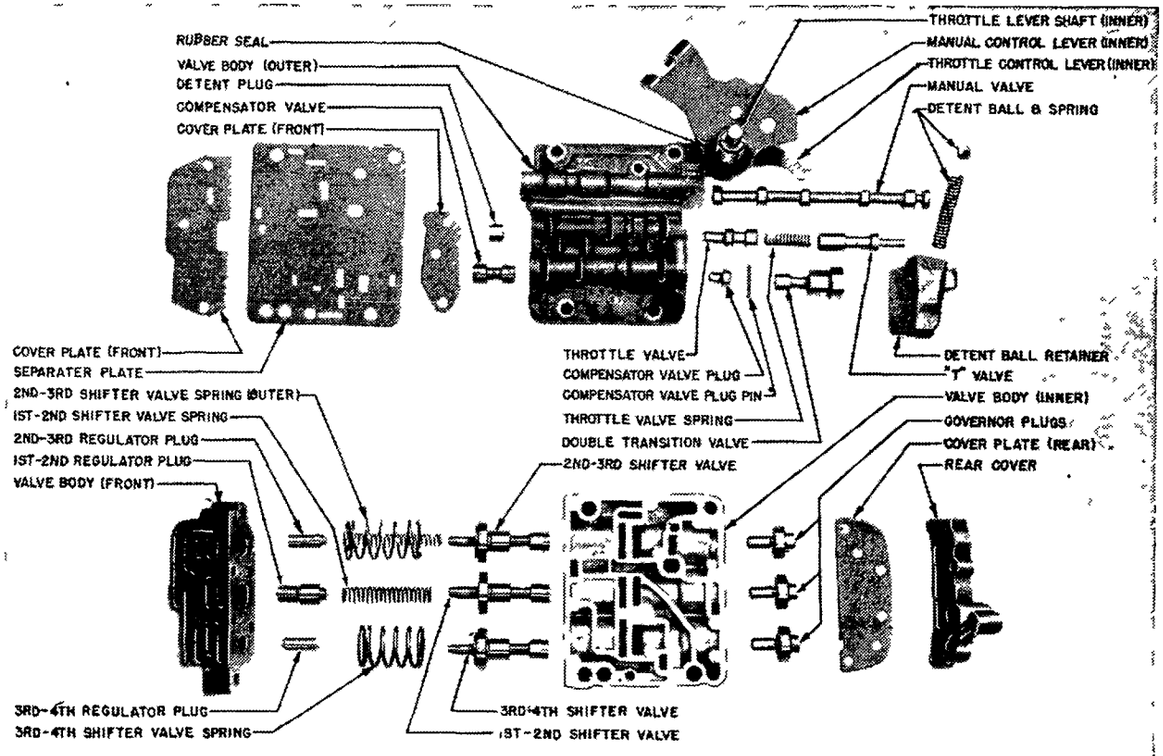

HYDRA-MATIC DRIVE CONTROL VALVE ASSY. (FIRST TYPE)

ASSEMBLY OF UNITS

ASSEMBLY: Before assembly of transmission and the component units is attempted, a thorough inspection should be made of each part. It is very important to distinguish between parts that are simply "worn in" and those worn to the extent they effect the operation of the unit. Only worn, broken or damaged parts should be replaced.

Clean the transmission case with cleaning fluid and blow out all holes and passages. Inspect case for cracks and stripped threads. Inspect oil delivery sleeve for scored bearing surfaces. Insert a wire through both oil delivery sleeve holes to check for open passages into the opening between oil seal and ring grooves. Check rings for freedom in grooves and for damage. Install oil delivery sleeve with dowel holes toward case and tighten cap with dowel on one of the two holes. Apply oil on each side of the bearing cap. Apply air pressure to two clutch holes in side of case. If movement of oil on delivery sleeve is observed, leakage is indicated. Attempt correction by installing a new oil delivery sleeve. If new sleeve leaks, dress bearing cap down with fine emery cloth on surface plate until sleeve does not leak. Remove bearing cap and oil delivery sleeve and inspect adjusting screws (band anchor stop) and threads in case.

Pressure Regulator Valve. Inspect pressure regulator valve, spring and gasket for damage. Valve must have free fit in front pump body and end coils of spring must fit freely over valve.

►**Modulated Pressure Regulator Assembly.** Overhaul of this unit is the same as for previous models. A modulated oil line valve has been added to this assembly, fitting into the plug, which is now sealed with a neoprene gasket. **Do not use this type regulator valve on earlier models.**

Front Unit Assembly: Inspect both bands for burned or worn lining and check steel bands for distortion or cracks, inspect strut on rear band for alignment and free pivoting. The rear band is furnished with strut attached. Inspect anchor ends of front band for broken welds or worn sockets.

CAUTION: Do not pry either band open or distort band in any manner as they are surface ground at the factory for drum fit.

Place intermediate shaft assembly in holding fixture J-2187 with clutch hub up. Place front unit drum over hub to rest on pinion gears with drive pin up. Install clutch into front drum, alternating plates, beginning with a composition (drive) plate and finish with a steel (driven) plate. Assemble the driven plates with square notches over the drive pins. (*NOTE:* Apply Hydra-Matic oil to face of each plate surface as assembled.) Install inner and outer clutch release springs thru plates into holes in drum unit. Now take the clutch drum and install new inner brass expander into ring groove in clutch drum, with expanding ring down. While holding brass expander in position, work new inner piston rubber seal into ring groove with lip down, over brass expander. (*CAUTION:* Work expander well back into position under seal so brass edges are not exposed.) Place new large rubber seal over front piston beyond seal groove. Install new large brass expander in piston, work seal well into groove. Install piston into clutch drum resting on large outer seal. Align square notches in piston with holes in drum. While applying pressure slightly to piston, guide seal into bore with flat side of blunt screwdriver. Install front clutch drum and piston assembly over intermediate shaft into front drum assembly. (*CAUTION:* Be sure clutch release springs enter into recesses of clutch piston.) Lift front unit assembly off intermediate shaft, place in press and press clutch drum below snap ring groove. Install clutch drum snap ring, positioning gap of snap ring between two snap ring holes. (*CAUTION:* Snap ring must be well seated into groove to prevent interferance with ledge on drum.) Release assembly from press and tap face of sun gear with a soft hammer so the clutch drum will seat against the snap ring. Remove intermediate shaft from holding fixture and insert hub into drive plates and drum by rolling drum on bench while

CONTINUED N NEXT PAGE

HYDRA-MATIC OVERHAUL (C nt.)

pressing firmly into position. Place assembly into holding fixture and install bronze, then steel thrustwasher over intermediate shaft. NOTE: Locating lug on steel washer must fit over flat portion of shaft. Install snap ring.

►*CAUTION:* If flakes of facing material can be removed by scratching the surface with thumbnail, the plate should be replaced. Discoloration is not an indication of failure.

Rear Unit, Assembly. Place rear unit drum, less internal gear, on the bench with drive pin up and install the drive and driven plates into drum beginning with a composition (drive) and finish with a steel (driven) plate. Assemble driven plate with square notches over drive pins. (NOTE: Apply Hydra-Matic oil to face of each plate as assembled.) Position new inner rubber seal on clutch drum above groove. Install new small brass expander into ring groove of clutch drum with expander ring down. While holding the brass expander in position, work the rubber seal into ring groove with lip down over brass expander. (*CAUTION:*—Work brass expander well back into position under seal so brass edges are not exposed.) Place new large rubber seal over rear piston beyond ring groove and install new large brass expander in piston with lips up. While holding expander in position, work rubber seal with lip well up into groove. Place piston into clutch drum resting on outer rubber seal. Align square notches in piston with holes in drum. While applying slight hand pressure to piston, guide seal into bore with a blunt screwdriver. Install rear clutch drum and piston assembly over drive pins into drum unit. Install clutch drum snap ring, positioning gap of ring between two drive pin holes. (NOTE: With a wooden block and hammer, tap clutch drum until clutch seats against snap ring.) Install inner and outer clutch release springs and guide pins. Assemble rear unit inernal gear to rear drum, locating on dowel, and install and tighten two filister head screws. Install front bronze thrustwasher into deep counterbore in rear clutch hub and retain with grease. Install rear hub and thrustwasher into clutch drive plates. Rotate hub and drum on bench to mesh splines with teeth of plates. Install rear clutch hub holding Tool J-2174 on rear drum to hold hub in place. Install oil delivery sleeve over intermediate shaft with long bearing up. Compress exposed oil delivery sleeve rings with ring compressor J-1537 and tap oil delivery sleeve into bore of front clutch drum with soft hammer. Install rear clutch hub front snap ring into second groove on intermediate shaft, and install snap ring.

Reverse Unit Reassembly (Cars without Hydraulic Reverse): Install the steel then the bronze thrust washer into thrust washer retainer on reverse sun gear and flange assembly. Retain in place with grease. Install output shaft into reverse sun gear and drive flange assembly, seating shaft firmly against washers, then holding shaft firmly against washers, stand shaft on pinion end. Install sun gear snap ring. Place reverse planet carrier over output shaft with bronze oil pump gear down, meshing pinion with sun gear. Assemble reverse internal gear on gear support and install large snap ring. Place internal gear and support over output shaft meshing internal teeth with pinions. Place ball bearing over output shaft and tap into counterbore of internal gear support. Install open type snap ring in groove of output shaft behind inner race of ball bearing. Install a new bearing retainer seal. Slide rear bearing over output shaft and line up attaching bolt holes in retainer with bolt holes in internal gear support. Tap housing in place with a soft hammer. Dip threads of five attaching bolts, and copper washers in Permatex No. 3. Install bolts and tighten finger tight. Final tightening is done with retainer in case.

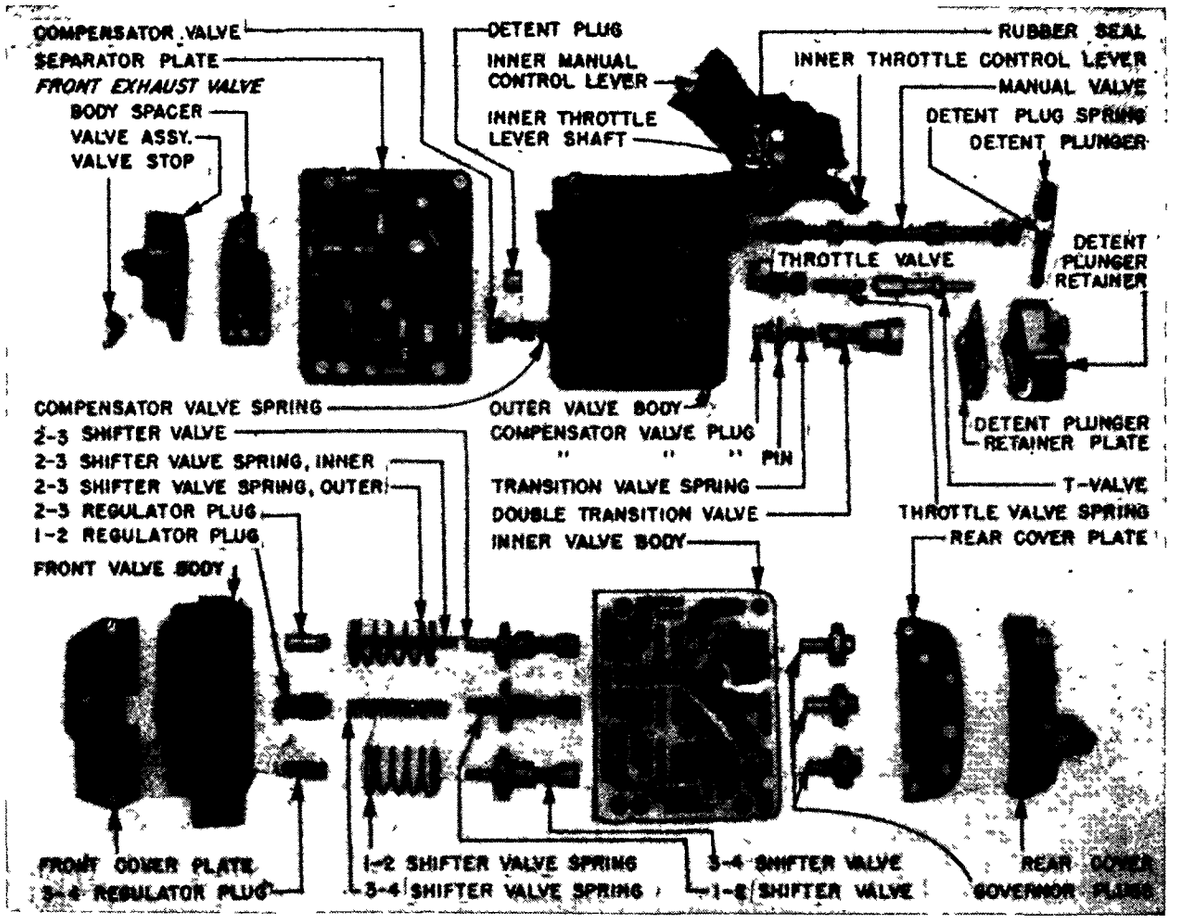

HYDRA-MATIC DRIVE CONTROL VALVE ASSY. (LATER TYPE)

Reverse Unit Reassembly (Cars with Hydraulic Type Reverse): Hold reverse center gear in left hand with drive flange up; install the steel thrust washer, and then the bronze thrust washer in drive flange recess. Still holding reverse center gear in left hand, insert output shaft end through drive flange and center gear until carrier bottoms on the two thrust washers. Hold drive flange and center gear tightly against the carrier to keep thrust washers from moving and set assembly on the bench with carrier end down. (*CAUTION*—Do not pick up this assembly until completely assembled to prevent washers from slipping out of place). Install reverse planet carrier over output shaft with bronze drive gear down, meshing pinions with the sun gear. (Be certain unit is bottomed against reverse planet carrier snap ring). Install snap ring on output shaft to position planet carrier. Install reverse clutch release flat spring and spring retainer on internal gear side of reverse internal gear. Make certain spring is in recess. If retainer tips are misaligned, preventing centering, use new retainer. Install reverse stationary cone on reverse internal gear cone, using large snap ring pliers to spread stationary cone. (*CAUTION*—Do not spread cone more than necessary.) Install large bronze thrust washer over collar of internal gear. Install outer seal on cone piston with seal lip toward flat side of piston, and work well into groove. Install inner seal with lip down and work well into groove. Install reverse cone piston in rear bearing retainer (using Tool J-4752) so it rests on the four dowel pins. Turn the reverse cone piston until the four dowel pins are aligned with holes in piston and carefully push piston into retainer. (*CAUTION*—Use extreme care when installing, to prevent damage to seal). To make cer-

C NTINUED N NEXT PAGE

HYDRA-MATIC OVERHAUL (C nt.)

tain piston is fully seated, lay a straight edge across face of piston and measure from straight edge to face of rear bearing retainer. The measurement should be 3/8" to 13/32". Install the six clutch coil springs and spring retainer. Compress springs with Tool J-4670 and install large snap ring, holding retainer in place, and remove tool. Install ball type bearing in rear bearing retainer, making sure bearing is fully and squarely seated. Install new large special type snap ring in rear bearing retainer, locating ball bearing. Install internal gear and stationary cone into rear bearing retainer, compressing cone by hand (Position keyway of stationary cone so it will line up with keyway in case when installed.) With output shaft standing on carrier end, place rear bearing retainer over ouptput shaft and mesh carrier gears with internal gear. (*CAUTION*—Use care to prevent damage to bushing and ball bearing in rear bearing retainer Install snap ring on output shaft, locking rear bearing retainer to output shaft (This snap ring is smaller than other snap rings used in transmission). Install speedometer gear in rear bearing retainer and install retainer gasket. Install stationary cone to case lock key, holding in place with petrolatum until installing in case.

Front Pump Assembly. Inspect pump drive and driven gears for damaged teeth or scored end surfaces. Inspect pump body for scored gear pockets and check all passages for obstruction. Be sure small drilled hole at end of pressure regulator valve bore is open. Inspect bushing in body for wear or scores. Slight wear of the bushing in the front pump body is permissable as long as the wear is not sufficient to effect the operation of the transmission. If excessive wear is present on one side of the pump bushing, a careful check should be made of the torus cover runout at the hub which must not exceed .005" total dial indicator reading. Inspect pump cover for scored surfaces, loose dowels, or obstructed passages. Check oil seals for damage and freedom in grooves, and inspect front drive gear for scored surfaces, worn bushings, or damaged teeth. Relief valve must be free in bore and free length of spring must be 1-25/64".

CAUTION: If any of the following parts are damaged, it will be necessary to replace the complete pump assembly. Pump gears, body, cover, or front drive gear bushing in pump body.

If necessary, install new oil seal rings in pump cover. *CAUTION:* Check new ring gap in torus cover before installing rings in pump cover. (Gap .001" to .007".) New seal in pump cover must be installed with step side up. Drive seal into place with Tool J-2170. Apply sealing compound around edge of cover and seal. Using Permatex No. 3. Lubricate both pump gears with Hydra-Matic fluid and install both gears in gear pockets of body. (Be sure Prussian Blue side of driven gear is up.) Install the relief valve spring, and relief valve into pump body. Press down on valve and insert feeler stock in slot to hold valve down. Install pump body, locating over dowels. Apply sealing compound under heads of screws. Install screws and new copper washers. Hold pump with Tool J-2184-1 and tighten screws to 12-15 lbs. ft. torque. Remove feeler stock from relief valve. Turn pump assembly over and install screw using a new copper washer. Torque to 12-15 lbs. ft. Assemble the front pump over front drive gear, aligning keys to keyway.

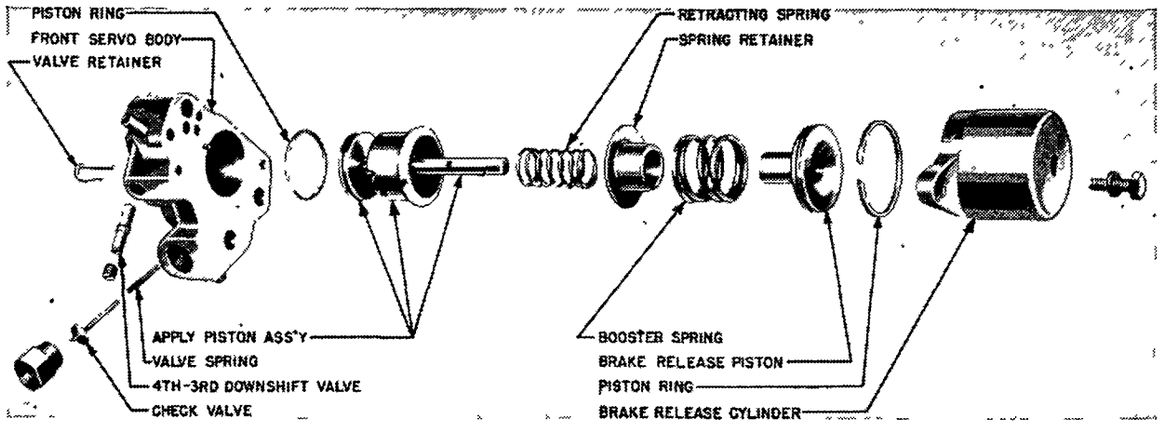

HYDRA-MATIC DRIVE FRONT SERVO

Governor and Rear Pump, Assembly. Inspect pump gears for damaged teeth and check cover and gear pockets in body for scores. Inspect ring lands and rings for freedom in grooves. If lands are damaged or worn thin replace the complete governor assembly. Inspect both G-1 (round shaped) and G-2 (square shaped) governor valves for free movement. Both plungers should have a free movement of from .118" to .148". Inspect oil delivery sleeve for ring scores and governor plug for freedom in its bore. Install pump driven gear (inner) and shaft with (inner) drive gear in pump body, sliding (outer) driven gear on shaft. Install pump cover. Install governor drive flange on pump shaft. Line up holes in gear and drive flange within pump shaft and install new pins. Peen ends of pins using Tool J-2183-1 and S-2183-2. (*CAUTION:* Height of peened end of pins must not exceed .070".) Install G-2 governor plunger and bushing assembly in governor body, with slot in bushing for governor plunger stop, up. Install and tighten G-2 governor plunger and bushing assembly attaching screws and lock washers. While holding G-2 plunger in, install the plunger stop with the two small holes up. (*CAUTION:* Be sure stop does not extend above surface of governor body.) If needed, install governor oil seal rings on governor body. Check ring gap in oil delivery sleeve (Gap .001" to .007"). Install oil delivery sleeve with chamfer next to governor body; use care not to damage rings while compressing them into oil delivery sleeve. Position governor assembly on drive flange, lining up locating marks. Install governor body to flange bolts and lockwashers. Tighten to 6 to 8 lbs. ft. torque. Install governor sleeve plug.

►**Oldsmobile 8, and Late 6 Cyl. (1950)** Equipped with larger front oil pump and is not interchangeable with older models.

Front Servo, Assembly. Inspect all parts for scores, broken rings, freedom of ring in grooves and dirt in passages. Inspect servo springs for distortion of collapsed coils. Booster spring length 61/64", retracting spring length 1-33/64". Install and tighten brass fitting into servo body. Install 4 to 3 valve into bore of body and align slot with hole for valve retainer and install retainer. Install screw plug over 4 to 3 valve and install dowel pin if removed from servo body. Install servo piston into body and align slot in sleeve over dowel pin. Install front band release piston into cylinder, using care when compressing ring. Place booster spring over front band release piston and place retracting spring retainer over piston stem on booster spring. Place retracting spring over piston stem. Place band release cylinder assembly on servo body. Cylinder should seat squarely on body before bolts are installed. Insert and tighten attaching bolts and lockwashers.

►**Modulated Front Servo Assembly.** Apply piston increased in size, and ball check replaced with a flat valve. **Do not use on earlier models.**

Rear Servo, Assembly. Inspect actuating lever for free operation and worn socket. Check servo body, pistons, and accumulator body for scores. Clean all passages. Be sure check valve is not broken and the check valve plunger is free. Inspect all servo springs for damage or collapsed coils. Free length of springs in the rear servo are: Rear servo spring, 4¼". Compensator Piston Inner spring, 3-25/32". Compensator Outer spring 3-15/32". Accumulator apply spring, 1-15/64". Booster spring, 1-19/32". Install accumulator piston in accumulator body, using care not to damage piston ring. Install accumulator apply spring over stem with small tapered end seating against shoulder. Install booster spring in booster piston. Make sure spring fits snuggly in recess in bottom of booster piston. Install booster piston in accumulator body. Install accumulator assembly in servo body using care not to break the booster piston ring. Place two compensator springs in bore of accumulator piston and install compensator piston over springs. Place servo spring and retainer with attaching bolts and lock washers in position and place complete assembly into press. Slowly compress springs while tightening mounting screws. (*CAUTION:* Use extreme care to avoid breaking oil seal rings on compensator piston.) Test operation of servo by applying air pressure in the rear band release passage.

CONTINUED N NEXT PA E

HYDRA-MATIC OVERHAUL (C nt.)

►**Modulated Rear Servo Assembly.** New "Quick Dump" feature eliminates long pause shifting to reverse. **Do not use on earlier models.**

Driven Torus Check Valve, Assembly. Position torus check valve spring over hub of driven torus member and place check valve over hub. Place check valve retainer over valve and press assembly against torus hub and tighten in place with attaching bolts. Bend ends of retainer against flats of bolts. Press down on valve to check for free movement.

Oil Control Valve, Assembly. Before inspecting the valve bodies and valves, clean thoroughly with gasoline. Inspect all vales carefully to see they are not damaged and are free from burrs. Burrs can be removed by using fine crocus cloth. (*CAUTION:*—This type of valve has sharp edges to prevent dirt from wedging between valve and body. Therefore, when removing burrs, do not round off corners and edges.) Check all moving parts of valve for free movement in their bores and operating positions.

►*NOTE:*—The manual control valve is the only valve furnished separately. If it becomes necessary to replace one of the other valves or one of the bodys, a complete front or rear valve body assembly may be replaced. The spacer plate between the inner and outer body assemblies is also furnished separately. Check the fit of the throttle valve inside lever and shaft in hub of the inside manual control lever on the outer valve body. If the shaft binds in the hub or is excessively worn, or if the oil seal is missing or damaged, repairs are necessary. Proceed as follows: Drive out throttle valve shaft pin. Replace the throttle valve inside lever and shaft and oil seal. To assemble control valve, carefully assemble compensator auxiliary plug into the outer valve body, using a punch to hold plug. Install plug pin. Install throttle valve, throttle valve spring, "T" valve and detent plug. Install compensator valve and spring and double transition valve. Check for freeness. Install outer valve body front plate on outer valve body being sure the inner throttle lever is inside of stop, and install screws holding retainer to valve body. Install the manual control lever. To do this: Rotate inside manual control lever counterclockwise past the reverse position. Insert manual valve detent spring in bore of detent ball retainer. Insert detent ball over spring. Push ball and spring into bore with fingers while rotating manual control lever clockwise into "LO" position. Install manual shaft seal inner washer with small inside diameter over manual control shaft, dish up. Install manual shaft seal outer washer with large inside diameter over manual control shaft, dish down. Install the rubber manual shaft seal over the shaft with lip extending into the inside diameter of outer washer. *(See Control Valve Assembly Illustration.)* Install regulator plugs 1-2, 2-3, and 3-4 in front valve body and check for freeness. Install the three governor plugs in inner valve body. Install shifter valves 1-2, 2-3 and 3-4 in inner valve body and check for freeness. Install inner valve body plate and valve body rear cover on body. Install 1-2 regulator plug spring in valve body. 2-3 valve spring, 2-3 regulator plug spring and 3-4 valve spring can be installed. Lay front valve body and inner valve body on clean surface, line up regulator springs in inner body with regulator plugs in front body. Compress springs with front body and install attaching screws. Position front body plate on front body and install

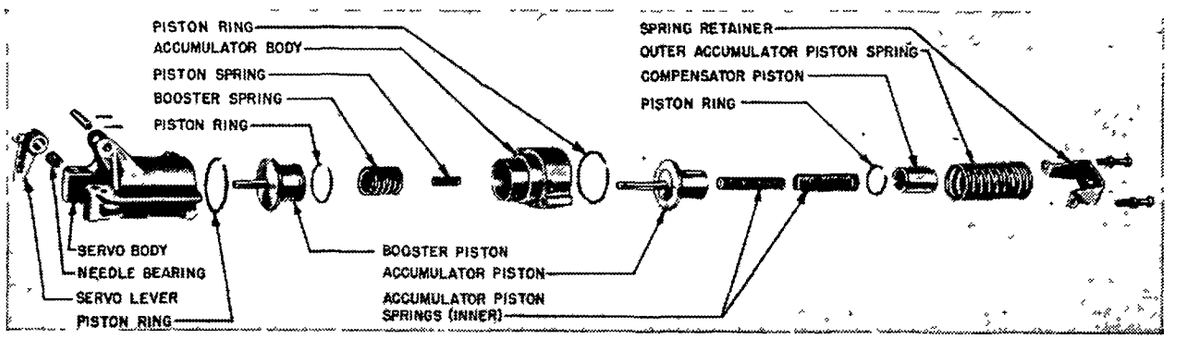

HYDRA-MATIC DRIVE REAR SERVO

screws. Be sure plate does not extend over face of inner body. Position the valve body spacer plate on the inner body, position outer body on spacer plate and insert the four valve body to transmission case attaching bolts through valve bodies and spacer plate to hold spacer plate in position while tightening the inner and outer valve body attaching screws.

►*CAUTION:*—Make sure all assembly screws are tight in valve body by double checking.

►**Modulated Oil Control Valve Assembly.** Identified by **three** attaching bolts instead of **two.** Oldsmobile 8, will not interchange with older models.

►*CAUTION:*—Do not use early model oil control valve assemblies on modulated transmission.

REASSEMBLY OF TRANSMISSION (INSTALLATION OF UNITS)

INSTALLATION OF UNITS IN TRANSMISSION CASE.

Front and Rear Units. Remove front and rear units from holding stand and position front band over front unit drum so short anchor end will be positioned to fit over adjusting screw when units are placed in case. Install suitable spring or wire to hold front band on front drum. Install front and rear units in case by lowering front end of intermediate shaft into case first. Remove spring and position anchor end of band over adjusting screw. Position center bearing cap over oil delivery sleeve. Lightly tap bearing cap in place. Install a new center bearing cap lock plate under attaching bolts and tighten to 40-50 lbs. ft. torque. Bend lock plate up around bolts, using large pliers. (*CAUTION:* Do not use screwdriver to pry corners of lockplate up, as this may damage lapped edge of transmission case.) Install screwdriver between center bearing cap and rear clutch drum to keep drum from moving forward. Remove rear clutch hub holding tool from drum. Position rear clutch hub rear thrustwasher in the counterbore of rear hub and retain with grease. Install correct size washer in counterbore of output shaft and retain in place with grease. (NOTE: If main shaft did not have correct end clearance prior to disassembly, select proper washer to bring end clearance within limits of .004-.015".) Selective washers are furnished in the following six sizes:

Mark	Size	Mark	Size
1	.055-.059	4	.079-.083
2	.063-.067	5	.087-.091
3	.071-.075	6	.095-.099

Install a new rear bearing retainer to transmission case gasket on retainer, align holes and retain in place with grease. Install main shaft in output shaft and position reverse assembly into rear end of transmission case so mounting bolt holes aligned.

►*NOTE:* Revolve output shaft to facilitate meshing planet gears with rear unit internal gears. Position reverse anchor in transmission case and install reverse anchor support bolt and lock. Do not tighten bolt. Start rear bearing retainer to case attaching bolts and lockwashers. Align holes in reverse flange and rear durm and install reverse drive flange bolts and lockwashers. After two bolts are entered finger tight, remove screwdriver. Tighten bolts to 10-13 lbs. ft. torque. (*CAUTION:* Tighten the six bolts evenly without distorting flange.) Push rear bearing retainer against case, then tighten mounting bolts and rear anchor support bolts evenly to 28-33 lbs. ft. torque. Turn up anchor support bolt locks. Tighten rear bearing retainer to reverse internal gear support bolts to 28-33 lbs. ft. torque. Test for freeness by turning mainshaft, output shaft and front and rear drum units.

Front Pump and Front Drive Gear. Position bronze thrustwasher over intermediate shaft and place pump cover gasket over front pump cover. Install front pump and front drive gear assembly over intermediate shaft. Align locating counterbore in pump cover with counterbore in case. Install pump locating washer in counterbore and install pump attaching bolts (with flat copper washer) finger tight. (NOTE: These bolts will be tightened after front servo is installed.) Install the bronze, then the steel thrustwasher over intermediate shaft against front end of front drive gear. Install snap ring holding thrustwashers in place. Install open type snap ring in groove on main shaft.

Governor and Rear Pump Assembly (Cars with Hydraulic Type Reverse): Before installing the rear pump, make certain the pump to case mating surface is free of nicks and burrs, and that attaching bolt holes in the case have a good chamfer. Position large round governor weight to front of transmission and locate one reverse drive flange attaching bolt up, to provide clearance for pump and governor assembly to slide into case.

Governor and Rear Pump. Position the large round governor weight to the front of transmission and locate one reverse flange attaching bolt up, to provide clearance for pump and governor assembly to slide into transmission case. Slide the pump and

C NTINUED N NEXT PAGE

HYDRA-MATIC OVERHAUL (C nt.)

governor assembly into position in case and install and tighten attaching bolts and lockwashers to 15-18 lbs. ft. torque.

Oil Control Valve. Install three oil delivery pipes into holes in governor oil delivery sleeve and pull oil delivery sleeve out ⅛". With inside manual lever in "LO" position, push control valve assembly onto oil delivery pipes. Lower control valve assembly into position and push delivery sleeve in to bring control valve assembly against case. Install attaching bolts and lockwashers and tighten to 6-8 lbs. ft. torque. (NOTE:—Be sure governor oil delivery sleeve plug is in place.)

Check Governor Runout. Mount dial indicator on side of transmission case so that point of indicator rests against governor oil delivery sleeve. Rotate main shaft several revolutions and note runout of sleeve as measured on indicator. Total runout should not exceed .005". If within this limit, check no further. If runout exceeds .005", mark position of governor body on drive flange. Remove control valve assembly and remove bolts holding governor body to drive flange. Rotate main shaft and note runout of drive flange as measured on dial indicator. This should not exceed .002". If runout exceeds this limit, replace governor drive flange, gear set, or complete rear pump assembly. If runout of flange is less than .002", rotate governor body 180° from original position and reinstall governor body on flange. Recheck for runout, and if limit is still exceeded, replace governor and sleeve.

Reverse Shifter Bracket Installation (Cars without Hydraulic Reverse): Position retracting spring & roller on bracket assembly and assemble bracket and shims to transmission case. Tighten bolts to 15-18 lbs. ft. torque. Check backlash between reverse internal gear and anchor as follows: Install reverse gear backlash gauge J-2650 and dial indicator. Place inside manual lever in reverse position and hold reverse anchor against bolt with screwdriver to remove float. Rock reverse gear with Gauge and take reading on dial indicator. Remove or install shims between reverse bracket and transmission case to obtain correct backlash of .016" to .049". To increase backlash add shims.

►**Reverse Shifter Bracket and Blocker Piston.** Retracting spring eliminated. Blocker piston now a steel stamping. Assembly can be used on earlier models.

Front & Rear Servo Installation (Cars without Hydraulic Reverse): Install front pump discharge pipe in front pump body and insert plain end of rear pump discharge pipe into hole in rear pump. Position front servo with piston stem in socket on end of front band, place servo on front pump discharge pipe, enter rear pump discharge pipe into brass fitting in servo. Lower servo on case. Enter front servo attaching bolts and lockwashers. Do not enter more than 2 or 3 turns. Place rear servo in position engaging rear band strut with actuating lever while entering oil transfer pipe from front servo. Enter rear servo attaching bolts, then tighten all four servo bolts to 23-28 lbs. ft. torque. Tighten coupling end of rear pump discharge pipe in front servo. Install front pump intake pipe to front pump, using a new gasket and attaching bolt locks. Tighten bolts to 10-12 lbs. ft. torque and bend locks up against flat of bolts. Tighten front pump attaching bolts, with copper washers to 10-13 lbs. ft. torque. (NOTE:—Cover should protrude .003" to .015" out of case. If cover protrudes less than .003" add a pump cover gasket to allow cover to protrude within limits.

Front and Rear Servos (Cars with Hydraulic Reverse): Install front pump delivery pipe in front pump body and position front servo with piston stem in slot on end of front band; place serve on front pump delivery pipe and push servo into position against case. Enter front servo attaching bolts and lock washers about three threads. Enter rear pump discharge pipe into passage in front servo and rear pump. Place rear servo in position, engaging rear band strut with actuating lever while entering oil transfer pipe from front servo. Enter rear servo attaching bolts and tighten. Install rear pump bolts and tighten. Check governor runout (see below). Install front pump intake pipe to front pump, using a new gasket and attaching bolt locks. Tighten attaching front pump intake pipe bolts and secure locks by bending up against bolt heads. Tighten to front pump attaching bolts. **NOTE**—Cover should protrude .003" to .015" out of case. If less than .003", add a pump cover gasket.

Parking Brake Bracket and Control Valve (Cars with Hydraulic Type Reverse): Remove parking brake pawl support bolt from case (this bolt was previously installed to insure alignment of threads). Install pawl into position in case, but let pawl slide down as far as possible. DO NOT INSTALL PARKING BRAKE PAWL SUPPORT BOLT. Install three oil delivery pipes into parking brake bracket assembly, then place chamfered side of oil delivery sleeve over end of the governor and press gently on, guiding rings into the oil delivery sleeve. Install blocker piston spring, piston release spring stop and start bracket to case bolts into case. Install roller on pawl crank, raise pawl to position and install support bolt and lock plate. Tighten bolt and bend lock plate over flat of bolt. Install pawl return spring over inside oil delivery pipe and hook other end over parking brake lever pin. Install reverse clutch pipe with "L" end in rear of transmission case, then install control valve assembly over three oil delivery pipes and reverse clutch pipe and start bolts. Press valve body and bracket assembly against case and tighten the bolts evenly. Torque to 6-8 ft.lbs. With the rear pump bolts and parking bracket bolts loose, install governor to sleeve aligning tool J-4731 over governor. Turn rear pump to several positions and rotate the tool in each position to be certain no bind exists. Shift the rear pump or parking bracket slightly if necessary to relieve bind. Tighten the rear pump and parking bracket bolts to 15-18 ft. lbs. Install pressure regulator reverse oil pipe.

Adjust Front Band. Remove the pipe plug from front servo. Loosen adjusting screw of Gauge J-1693, until ⅛" of threads are exposed above gauge body. Install gauge, tightening by **hand only.** Tighten the gauge adjusting screw with fingers until the stem of the gauge is felt to **just** touch piston in front servo. (NOTE:—While tightening screw, be sure band is lined up over drum.) Tighten adjusting screw on gauge, six complete turns from the point where it was felt by hand that stem **just** touched piston. Tighten front band adjusting screw until knurled washer on top of adjusting gauge is just free to turn. Hold band adjusting screw and tighten band adjusting screw lock nut securely to 40-50 lbs. ft. torque. Loosen gauge adjusting screw at least six full turns, remove gauge, install pipe plug.

Adjust Rear Band. With rear band centered on drum, tighten band adjusting screw until actuating lever contacts face of Gauge J-5071. (*CAUTION:* Do not go beyond adjustment. If adjusting screw is accidentally turned beyond adjustment, loosen two or three turns and repeat adjustment.) Hold band adjusting screw and tighten lock nut to 40-50 lbs. ft. torque.

Pressure Regulator and Pressure Line Plug. Place a new gasket over pressure regulator plug. With regulator valve and guide assembled into spring, locate valve on seat in front pump. Apply pressure on regulator plug and tighten in transmission case to 40-50 lbs. ft. torque. Apply sealing compound (Permatex No. 3) to threads of oil pressure line pipe plug and install plug between band adjusting screws.

Side Cover and Outer Manual Lever. Place a new gasket on side cover and retain in place with grease. Position side cover over manual shaft. Install attaching bolts with copper washers finger tight. Shift cover to centralize manual shaft in hole and tighten bolts to 10-12 lbs. ft. torque. (NOTE:—Throttle lever (outer) was removed from shaft at the time the transmission was removed from the car. Reinstall on shaft after transmission is installed in car (will prevent bending lever).

Transmission Oil Screen and Pan. Slide oil screen over front pump intake pipe and position over rear pump intake pipe. Install oil pan on transmission case, using a new gasket, and tighten attaching bolts to 10-13 lbs. ft. torque. Install new drain plug screw gasket and tighten plug to 35-45 lbs. ft. torque.

Flywheel housing, Torus Cover and Members. Position transmission case to flywheel housing gasket against face of transmission. Position flywheel housing on front of transmission and install attaching bolts and lockwashers. Tighten to 80-90 lbs. ft. torque. Apply light film of Lubriplate to seal surface on torus cover and install torus on splines of front drive gear. Push on cover evenly, without rocking, to prevent damage to oil seal rings. Install drive torus on intermediate shaft and install snap ring. Install driven torus on main shaft against open snap ring. Move manual lever into reverse position and install new main shaft lockplate with ear over flat on torus hub. Install main shaft nut and tighten to 15-20 lbs. ft. torque. Bend lockplate up against nut. Install oil level indicator.

INSTALLATION IN CAR

See REMOVAL & INSTALLATION data (beginning on Page 331.)

PACKARD ULTRAMATIC DRIVE

Eight & Super 8, "2300" Series (1949-50)
Custom Eight, "2300" Series (1949-50)
200 & 300 Eight, "2400" Series (1951)
400 Patrician Eight, "2400" Series (1951)

►CHANGES, CAUTIONS, CORRECTIONS

►**STARTING ENGINE BY PUSHING CAR:** If this procedure required for Ultramatic cars, place selector lever in neutral "N" position, turn on ignition. When car has attained speed of 25 MPH., move selector lever to high range "H" position. The car will then crank the engine.

►**TOWING ULTRAMATIC DRIVE CARS:** Cars can be towed with selector lever in Neutral "N" position, **providing Ultramatic Drive unit is not damaged and oil level in unit is normal.** Car should not be towed at speed greater than 30 MPH., and should not be towed for any great distance (less than 300 miles). **If selector lever cannot be placed in Neutral,** or if transmission oil level low, disconnect drive shaft at rear end and securely fasten it up to frame so that it cannot move to the rear (CAUTION—rearward movement will allow front end to slip off transmission mainshaft splines and drop down).

►**CONTROL VALVE LINKAGE PRODUCTION CHANGES:** Following changes made in production require new settings and linkage adjustment procedures as detailed under LINKAGE ADJUSTMENT:

Control Valve Lever & Link Change—First type two-piece adjustable link superseded by one-piece solid link. With first type link, rear land of control valve should be ¾" out of control valve lower body. With second type solid link, rear land of control valve should be 5/16" out of control valve lower body with detent lever in reverse position. *See Control Valve Link Adjustment under Transmission Reassembly.*

Throttle Valve Lever Change—Beginning with Transmission unit No. 106958 (Eight), 6486 (Super & Cust. 8), woodruff key previously used to locate throttle valve outer lever on shaft in transmission case was eliminated to allow lever to be rotated on shaft for adjustment. On earlier transmissions, this key can be removed and discarded if new Throttle Valve Lever Adjusting Gauge PU-334 used to adjust lever. *See Throttle Linkage Adjustment.*

►**REACTOR SHAFT ENDPLAY CHANGE:** Original endplay setting of .018-.022" changed to .010-.015" to provide more running clearance for direct drive clutch driven plate and prevent any tendency of clutch to "hang on." Thrust washers for control of shaft endplay now furnished in .005" steps from .070" to .115" (superseding washers in .010" steps from .060" to .090"). *See Converter reassembly data.*

►**1951 GOVERNOR REMOVAL CAUTION:** Governor cannot be removed from Ultramatic transmission on car as a unit due to small clearance between governor and frame "X" member. Remove governor as follows: Take out governor housing-to-driveshaft retaining screws, remove housing. Then remove adapter by taking out retaining screws and maneuvering adapter out of transmission case. Install adapter and governor housing in same manner. Tighten adapter screws to 7½-8½ ft. lbs. and housing screws to 6-7½ ft. lbs. Pull screws up evenly and check valves in governor housing for free movement after screws tightened.

►**REPLACEMENT OIL COOLER FITTING CAUTION (Early Custom Eight Cars):** Original 90° type elbow fittings not furnished for service (later 45° type, Part No. G444184, furnished for all cars) and following precautions must be observed when replacing flexible hose between oil cooler and intake and return lines on these cars: Turn a new 45° fitting into original 90° elbow at cooler (if necessary to replace oil cooler fitting, solder 45° elbow into cooler tank). Slack off the two forward tubing support brackets, force forward end of tubing back and fix its position so that flexible hose connections are as straight as possible (keep rear tubing brackets tight so that slack taken up by tubing without changing position of rear hose connections), tighten forward tubing support brackets.

DESCRIPTION

Ultramatic Drive is a Torque Converter and Planetary Gear type transmission consisting of the following units:

Torque Converter & Direct Speed Clutch: This assembly is contained in a case mounted on the rear face of the flywheel and consists of the units listed below. Torque converter and direct speed clutch action is automatic and is controlled by the hydraulic system (see Operation—below, and Hydraulic Circuit illustration).

Converter Pump (Driving Member)—Integral with rear section of torque converter case bolted directly on flywheel and positively driven at crankshaft speed. Pump is supported at rear end on hollow shaft carried in babbitted bearing in the bell housing (front oil pump is splined on rear end of shaft and shaft is grooved to provide oil channel into converter).

Turbine (Driven Member)—Two-section type consisting of a First Turbine bolted on a flanged hub which is splined on forward end of converter shaft (direct speed clutch driven member also bolted to this flanged hub), and a Second Turbine bolted to the first turbine with clearance between the two in which the Reactor is located.

Reactor (Stationary Member)—Consists of a set of curved vanes placed between the first and second turbines. Reactor is mounted on a short tubular shaft with an overrunning clutch in the mounting flange at the rear end of the shaft. Reactor is locked or held stationary when unit is operating as a Torque Converter but the overrunning clutch allows the reactor to "free-wheel" or rotate freely at steady car speeds so that the torque converter acts as a fluid coupling except when Direct Drive Clutch locks the entire unit for positive drive.

Direct Speed Clutch—Consists of a hydraulically operated oil-cushioned single plate clutch in forward section of torque converter housing. Clutch driven member is bolted to turbine mounting flange and clutch driving plates are locked in torque converter housing (lugs on plates engage slots in housing), so that the torque converter pump and turbine are positively locked together for positive drive when clutch is engaged. Clutch is engaged hydraulically by admitting oil into housing in front of forward driving plate (plate acts as a hydraulic piston).

Planetary Gear Unit: This assembly is contained in the transmission case directly behind the torque converter and is controlled by the driver through a selector lever directly below the steering wheel. It provides Emergency Low, Reverse, Neutral, and Parking (see Operation below). Operation and control of the transmission is through a hydraulic system for which oil pressure is supplied by two oil pumps built in the transmission (forward oil pump in recess in bell housing and driven by converter pump shaft, rear oil pump in recess at rear of transmission case and driven by output shaft). An oil cooler built in the lower tank of the radiator controls the temperature of the oil. Planetary assembly consists of the following units:

Sun Gears—Consist of two helical gears in tandem on drive (input) shaft with a ball thrust bearing between the gears. Front Sun Gear (Low Range Reaction Gear) is integral with a flange splined in the Low Range Drum so that the gear is locked to the shaft when the clutch is engaged (High Range) and is held stationary to serve as a reaction member for the short planetary pinoins which mesh with it when the low range drum band is applied (Low Range). Rear Sun Gear (Driving Sun Gear) is splined directly on the input shaft and meshes with the long planetary pinions.

Planetary Pinions—Consist of three short large gears and three long smaller gears mounted alternately around the planetary cage and all meshing together. The short pinions mesh with the forward sun gear (Low Range Reaction Gear) and with the Planetary Ring Gear which is integral with the Reverse Drum. The long pinions mesh with the rear sun gear (Driving Sun Gear). Planetary cage is integral with the output shaft.

Low Range Drum & High Range Clutch Assembly—Mounted on input shaft directly in front of planetary pinion cage. Inner clutch member is splined on input shaft and rotates with the shaft. Outer clutch member incorporates the Low Range Drum and front sun gear as well as the clutch engaging hydraulic piston and disengaging spring. Clutch driving plates (with facings) are waved to assist disengagement and spring-controlled oil vents in the hydraulic piston are also uncovered when clutch is disengaged.

Low Range Brake Band & Engaging Mechanism—Band holds Low Range Drum and front sun gear stationary when it is applied by the Low Range Brake Piston acting through a lever and strut engaging one end of the band. Opposite end of band is anchored by adjusting screw on side of case.

Reverse Drum Band & Engaging Mechanism—Same design as Low Range Band (above). Band holds reverse drum and Planetary Ring Gear Stationary when it is applied.

Parking Brake Mechanism: Consists of a gear splined on the transmission output shaft at the rear of the transmission case and a pawl which engages the gear to prevent rotation of the shaft when the selector lever placed in "P" parking position. Pawl is operated by a locking lever actuated by the control valve cross-shaft and lever in the transmission case.

OPERATION

The torque converter assembly automatically provides a torque multiplication ranging from approximately 2 1/3 to 1 (for Starting & Heavy Loads) to an equivalent "High" 1 to 1 ratio (for Steady Driving

CONTINUED ON NEXT PAGE

PACKARD ULTRAMATIC (C nt.)

& Light Loads) and is locked out by the Direct Speed Clutch at speeds above 15 MPH. in High Range operation under normal driving conditions (can be unlocked or "kicked down" at car speeds under 50 MPH. at the will of the operator). Planetary Unit is controlled by the operator and provides definite gear ratios (in addition to the varying ratio of the Torque Converter) depending upon the selector lever position. This control is effected through the hydraulic control system (see illustration) by means of oil pressure supplied by the two oil pumps in the transmission case.

LUBRICATION

Check transmission fluid level every 1000 miles and add fluid as required to maintain level at FULL mark on dip stick. Drain and replace fluid at 25000 mile intervals (CAUTION—this 25000 mile interval supersedes original recommendation of 10000 or 15000 mile periods).

►***CAUTION—Fluid must only be checked at normal operating temperatures and after engine has been idling at 800 RPM. for at least 1 minute with selector lever in "N" position.***

Checking Fluid Level—With fluid at normal operating temperature, place selector lever in "N" position, idle engine at 800 RPM. for at least 1 minute, check level by removing dip stick from filler hole on left side of transmission (accessible from beneath car—turn cap ½ turn counter-clockwise before withdrawing it). Add fluid as required to bring level up to FULL mark on stick.

►**Transmission Filling Note**—Fluid can be installed through filler tube (from beneath car) if oil gun or pump with flexible hose or curved spout used. If this equipment not available, fold back rear corner of front floor mat, remove filler hole cover from transmission cover in floor, and remove filler hole plug in upper rear end of transmission case. Fluid can be poured in through this opening.

Draining & Replacing Fluid—Remove front lower flywheel housing. Loosen one converter drain plug (to act as a vent), then rotate flywheel 180° to bring second drain plug to lowest point, remove this plug and drain converter case. Remove transmission case drain plug (at forward end of transmission oil pan), drain case. Replace and tighten all drain plugs, replace flywheel housing. Install 7 qts. of fluid through dip stick opening using curved oil gun (or through plug hole in top of case at rear, accessible by removing cover in transmission floor cover). Idle engine at 800 RPM. for at least 2 minutes with selector lever in "N" neutral (to fill converter case). Check fluid level as directed above, add sufficient fluid to bring level up to FULL mark on dip stick (capacity is approximately 12 qts.). Run engine at 800 RPM. for one minute, recheck level.

►***CAUTION—Amount of fluid installed should be determined by dip stick reading rather than actual number of quarts.***

Recommended Fluid—Packard Ultramatic Drive Fluid or any Type "A" Automatic Transmission Fluid which has an AQ-ATF number embossed on container.

LINKAGE ADJUSTMENT

LINKAGE ADJUSTMENT: First check entire gearshift control and throttle linkage for free operation without binding or lost motion due to wear. Replace all worn or damaged parts. Warm up engine and transmission. Set engine idle speed at 375 RPM. with choke valve wide open and fast idle inoperative and selector lever in "H" high range. Set hand brake to hold car. Then adjust linkage as follows:

Selector Control: Disconnect control rod clevis at outer lever on left side of transmission case. Place selector lever on steering column in "L" Low Range position, move transmission control lever to low range position and make certain that detent plunger engages detent well (can be determined by feel). Adjust clevis on control rod so that clearance between steering column stop lever and low range stop is .030" to .040", tighten locknut, connect rod. Check by shifting to other positions and making certain that shifts to Neutral "N," Reverse "R," and Park "P" are possible without permanent over-travel when contacting stops.

1949-50 Throttle Linkage ("2300" & "2300-5" Series):

CAUTION—Different checking gauges and special procedures required for some cars as follows:

1) Throttle Cross Shaft-to-Carburetor Rod—Install Checking Gauge PU-333 (Eight), PU-332 (Super 8—see Note below), PU-312 (Custom Eight) over throttle cross shaft and end of carburetor rod. Adjust rod length by loosening locknut and turning the spring-loaded throttle override until forward end of gauge rests on upper milled surface of carburetor throttle body. Tighten locknut and remove gauge. This adjustment will provide correct angle of cross shaft lever.

►**Super 8 Gauge PU-332 Note**—If gauge does not fit properly due to interference between gauge and starter switch on carburetor, grind off inner edge of square end of gauge at 45° angle to distance of ⅛" from corner on each side

►**Throttle Valve Lever Adjustment Note**—Procedure below is new and when applied to cars before Trans. No. 106958 (Eight), No. 6486 (Super & Cust.), it will be necessary to **remove and discard** the Woodruff key which positioned the throttle valve outer lever on shaft on right side of transmission case. This key is omitted on transmissions after above numbers.

2) **Throttle Valve Lever**—***CAUTION—First cars must be modified as follows before adjustment can be made:***

Adjustment—Use new Lever Adjusting Gauge No. PU-334 and proceed as follows: Disconnect both front and rear rods from relay lever on right side of transmission bell housing by taking out clevis pin. Move rear rod toward rear of car until throttle valve lever reaches rear limit of travel. Hold lever back against the stop in this position, install gauge over end of rod and relay lever, note whether pin on gauge enters these holes freely. If not, on first transmissions with woodruff key in valve lever shaft (see Note above), remove lever and discard key, replace lever. On all models, tighten lever clampscrew just enough so that lever will rotate with shaft until stop is reached and will then slip on shaft. Rotate lever toward front until stop is reached, **continue to rotate lever toward front ⅛ turn**, then rotate lever toward rear until stop is reached. Check lever position with gauge and continue to rotate lever toward rear until gauge pin enters lever rod hole freely, tighten lever clampscrew to 80 ft. lbs. torque, remove gauge, connect both rods to relay lever. Check throttle cross-shaft to throttle valve rod and adjust as follows:

CONTINUED N NEXT PAGE

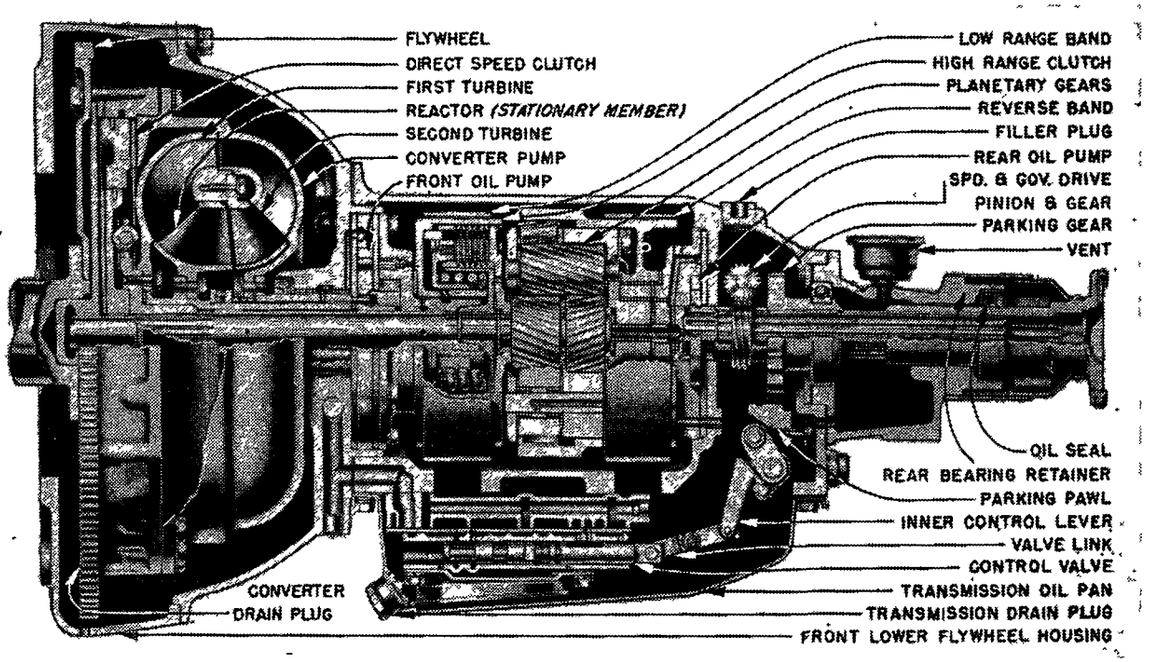

PACKARD ULTRAMATIC DRIVE

PACKARD ULTRAMATIC (C nt.)

Carburetor Throttle Rod—Adjust throttle cross-shaft to carburetor rod by loosening locknut and turning the spring-loaded throttle over-ride until cross-shaft bellcrank at manifold end of shaft leans forward 13½° at top from perpendicular through the shaft center-line. On Eight and Super Eight models, special gauges available for this adjustment: PU-333 (Eight), PU-332 (Super 8).

3) **Throttle Cross Shaft-to-Throttle Valve Rod**—Disconnect rod at upper (cross shaft) lever end, push rod downward lightly to seat transmission throttle valve plunger against stop. Adjust clevis on rod so that rod is **5/32" short** (pin hole in rod clevis 5/32" short of alignment with pin hole in lever—can be checked with Gauge PU-326). Tighten clevis locknut and connect rod. NOTE—The 5/32" movement of rod necessary to align holes for installation of clevis pin will move throttle valve plunger .050" from its stop.

4) **Relay Lever-to-Cross Shaft Rod**—Depress accelerator pedal until carburetor throttle is just wide open, check clearance between accelerator pedal push rod lever and spring-loaded stop on left side of engine. This clearance should be .050". Adjust by turning adjusting sleeve on relay lever end of rod.

1951 Throttle Linkage ("2400" Series). Adjust linkage in following order:

1) **Throttle Cross Shaft-to-Carburetor Rod**—Install Checking Gauge PU-364 (all models) on milled surfaces on top of cylinder head directly ahead of cross shaft bracket. Adjust cross shaft lever-to-carburetor rod by loosening locknut and turning the spring-loaded throttle override until short bend at rear of rod protrudes through hole in lever and enters hole in gauge. Tighten locknut and remove gauge. This adjustment will provide correct angle of cross shaft lever.

2) **Throttle Valve Lever.** Disconnect relay rod from throttle valve lever on right side at rear of transmission by taking out clevis pin. Loosen lever clampscrew just enough so that lever will rotate with shaft until stop is reached and will then turn on shaft. Rotate lever forward until it is horizontal, then rotate lever in opposite direction toward rear until valve is closed against the throttle valve spring but **without compressing the spring.** Using care not to compress the spring, continue to rotate lever toward rear until piece of 3/16" rod can be inserted through holes in lever and relay rod and when this rod is snug in both holes, tighten lever clampscrew to 80 ft. lbs. torque. Remove the 3/16" rod, connect relay rod to lever with regular clevis pin.

3) **Accelerator Relay Rod-to-Cross Shaft Lever.** Adjust rod length so that clearance between cam on cross shaft lever and kickdown stop plunger on left side of engine is .031" with wide open throttle.

Starter Safety Switch: Mounted on left side of transmission case. Circuit through switch should be completed (so that starter can be operated) with gearshift selector lever in "N" or "P" position.

BAND ADJUSTMENT

BAND ADJUSTMENT: Adjusting screw and locknut for each band located on outside of transmission case—left side (Low Range Band), right side (Reverse Band). Both bands are adjusted alike.

Adjustment—Loosen locknut on band adjusting screw, use Torque Wrench to tighten adjusting screw (clockwise rotation) to 20 ft. lbs. torque, then

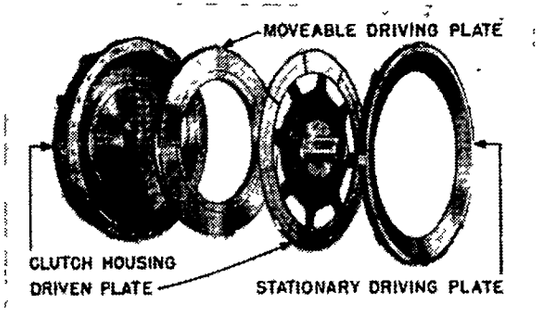

ULTRAMATIC DRIVE DIRECT SPEED CLUTCH

back off adjusting screw 1¾ complete turns, tighten locknut to torque of 25-30 ft. lbs.

TESTING HYDRAULIC UNITS

►*CAUTION*—Before making following tests, check fluid level in transmission, road test car by driving under conditions simulating heavy traffic and highway operation (frequent stops and starts, low speed, medium speed, and accelerating). If transmission does not operate satisfactorily after engine and transmission thoroughly warmed up, make the hydraulic test outlined below exactly as directed.

NOTE—Hydraulic pressure gauge with 0-100 psi. scale and flexible line 48" long with ⅛" male pipe fitting are required for these tests (except Reverse Application Test for which 0-200 or 0-300 psi. gauge MUST be used. Pressure Test Gauge Set, No. PU-300, provides all gauges needed for these tests.

Front Pump Regulated Pressure: Remove floor mat and inspection cover in floor panel, remove pipe plug on lower left side of transmission bell housing, install ⅛" pipe reducer and connect gauge line, support gauge in front compartment so that it can be read while running engine. Start engine and operate it at 600 RPM. Gauge reading should be 80-85 lbs. If pressure correct, disconnect gauge, remove reducer, replace pipe plug.

►**Gauge Fitting Note**—Pipe plug (above) is ¼" (first cars), ⅜" (later cars), and the correct ¼" to ⅛" or ⅜" to ⅛" reducer must be used to connect gauge.

High Range Clutch Pressure: Remove ⅛" pipe plug at center of lower rear end of transmission bell housing (just to right of front pump outlet passage plug), connect gauge at this point. Test car on road with gearshift lever in "H" High Range. Pressure should be approximately 35-43 lbs. (throttle closed), and approximately 85 lbs. with throttle wide open. Repeat test with gearshift lever in Low Range, then shift to High Range and again repeat test. If pressures correct, disconnect gauge and replace plug.

Direct Drive Clutch Pressure: Remove ⅛" pipe plug just to right of center on lower rear end of transmission bell housing (just to right of high range passage plug above), connect gauge at this point. Test car on road with gearshift lever in High Range. Accelerate car slowly with light throttle opening. At speed of 15 to 18 MPH., with light engine load and steady driving, clutch should engage and gaug reading should be approximately 33-41 lbs. at this point. With full throttle, clutch should engage at approximately 56 MPH. and gauge reading should be approximately 85 lbs. If pressure correct, disconnect gauge and replace plug.

Front Oil Pump Relief Valve Boost Pressure: Remove ⅛" pipe plug, at lower right rear end of transmission bell housing, connect gauge at this point. Start engine and run at 600-1000 RPM. Gauge reading should be 65-75 lbs. If pressure correct, disconnect gauge and replace plug.

Hydraulic Governor Pressure: Remove ⅛" pipe plug at right rear end of transmission case (just to rear of governor housing), connect gauge at this point. Test car on road at speeds above 15 MPH. Gauge reading should be in direct proportion to car speed and range from 31 lbs. at 15 MPH. to 61 lbs. at 56 MPH. If pressures correct in proportion to car speed as noted above, disconnect gauge and replace plug.

Converter Inlet Pressure: Remove the ⅛" pipe plug at upper left side of bell housing, connect gauge at this point. Start engine and operate it at 600 RPM. Gauge reading should be 60-75 lbs. If pressure correct, disconnect gauge and replace plug.

►***CAUTION FOR MAKING FOLLOWING TESTS: Gauge must be connected within transmission case as follows:*** Drain oil from case, remove oil pan, insert flexible gauge line through oil filler opening on left side of case, connect gauge at correct plug hole for each test, re-install oil pan, fill transmission case with fluid so that car can be operated. After tests completed, pan must again be removed to disconnect gauge.

►***NOTE—Following three tests can be made at one time if three gauges used.***

Throttle Valve Pressure: See Caution above. Remove ⅛" pipe plug from throttle valve body (right side of control valve lower body in transmission case), connect gauge at this plug hole. Test car on road at various throttle openings. Gauge reading should be in direct proportion to throttle opening and should range from 24-28 lbs. at closed throttle to 55-63 lbs. at full or wide open throttle. If pressures correct and in proportion to throttle opening, disconnect gauge and replace plug.

Low Range Application Pressure: See Caution abov . Remove ⅛" pipe plug from low range cylinder body (right front end of control valve upper body in transmission case), connect gauge at this plug hole. Test car on road under heavy traffic conditions (frequent stops, starts in Low Range, acceleration, and shifts to High Range). Gauge reading should be approximately 37-45 lbs. when low band application starts at light throttle, and 80-90 lbs. at full throttle. If pressures correct, disconnect gauge and replace plug.

Reverse Application Pressure: ***CAUTION—0 to 200 psi. gauge required for this test.*** See gauge connecting Caution above. Remove ⅛" pipe plug from reverse cylinder body (at left rear end of control valve upper body), connect gauge at this plug hole. Test car on road by making frequent stops and engaging Reverse in normal manner. Gauge reading should be 160-180 lbs. with gearshift lever in Reverse and car moving backward with engine speed of 1500 RPM. If pressure correct, disconnect gauge and replace plug.

►***If above tests indicate that transmission not operating satisfactorily, see Disassembly data.***

CONTINUED N NEXT PAGE

PACKARD ULTRAMATIC (C nt.)

REMOVAL FROM CAR

Transmission and Converter are removed as an assembly as follows:

1) Place control lever in "N" neutral position, remove front seat cushion, install covers on front seat back and door trim panels, remove front floor mat and floor transmission inspection cover.

2) Raise both ends of car and support it securely at all four wheels.

3) Remove lower flywheel housing and drain both Torque Converter and Transmission case (see draining data under "Lubrication" above).

4) Disconnect gear selector linkage and transmission throttle linkage, oil cooler lines, speedometer cable, and starter safety switch leads.

5) Disconnect propeller shaft at front and rear universal joints, remove shaft. Disconnect parking brake cable at equalizer lever.

6) Support rear end of engine with a hydraulic jack placed under rear end of oil pan (CAUTION—use block of wood on jack to prevent damage to oil pan). Raise engine and transmission just enough to remove load from engine supports.

7) Remove engine snubber. Remove both rear engine support insulators. NOTE—On 2300 Series cars, remove engine rear support channel and bracket assembly.

8) Place transmission lift under transmission or use special hoist (see Note), make certain that lift adapter fits properly around transmission oil pan. Take up transmission weight on lift or hoist.

►**Transmission Hoist Note**—If the special hoist is used, install special lift bracket on transmission case or use sling around case, install lifting hoist over opening in floor panel, connect hoist cable to bracket or sling, take up transmission weight with hoist by tightening hoist cable until it is just taut.

9) Mark flywheel and converter housing to insure re-installation in same relative positions, remove flywheel-to-direct drive clutch housing bolts, tap clutch housing to loosen it from flywheel and slide converter to the rear.

10) Remove transmission bell housing-to-flywheel housing bolts. Secure converter to transmission bell housing to prevent it falling out during transmission removal. Slide transmission to rear until clutch housing is clear of flywheel.

11) Lower transmission to floor and remove from beneath car.

12) Remove converter assembly from transmission.

►*TRANSMISSION OVERHAUL NOTE*—Converter and transmission are disassembled and serviced separately as follows:

Converter and Transmission —can be overhauled as separate units after removal from the car.

OVERHAUL—TORQUE CONVERTER

►*CAUTION—Check Reactor Shaft Endplay before disassembling converter to determine if new Thrust Washer needed for reassembly.*

Reactor Shaft Endplay Check: With converter on bench, pump end up, mount dial indicator on pump (use special clamp PU-306) with pointer contacting end of reactor shaft, measure reactor shaft endplay. Should be .010-.015" (CAUTION—this supersedes original specification of .018-.022"). This endplay adjusted by installing thrustwasher of correct thickness between reactor and front turbine when reassembling converter.

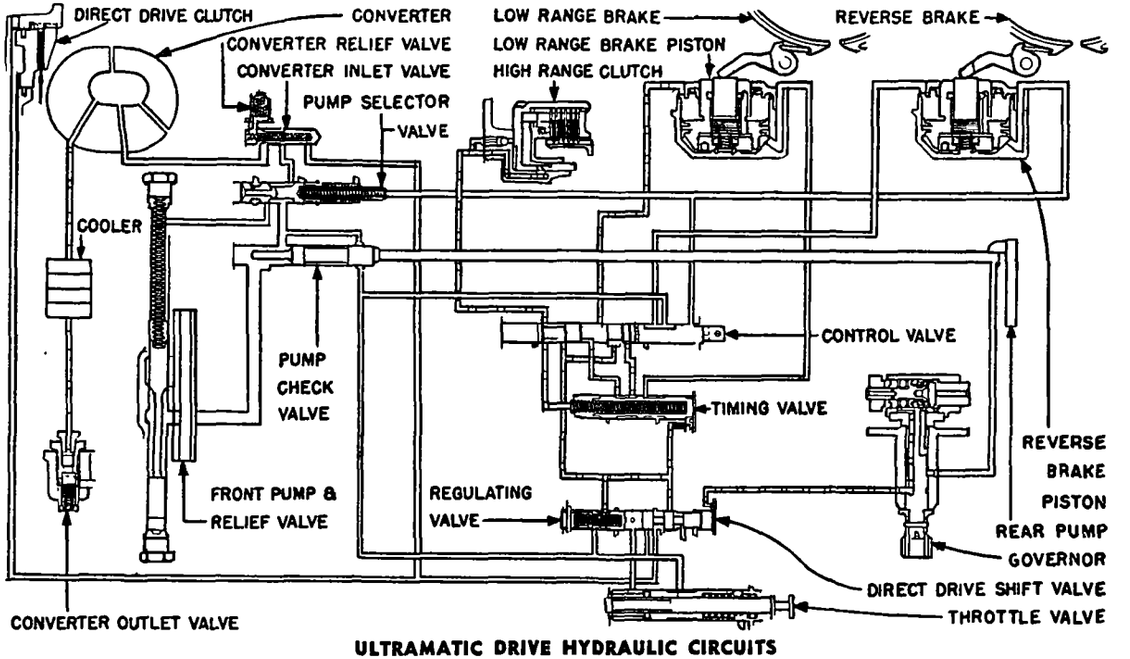

ULTRAMATIC DRIVE HYDRAULIC CIRCUITS

Disassembly: Take out converter pump-to-clutch housing capscrews (CAUTION—these are special capscrews and must not be interchanged with others of same size). Loosen pump by tapping with a plastic hammer, slip off converter pump and thrust ball bearing and spacer. Bend back turbine capscrew lock tabs, remove capscrews mounting second turbine on first turbine, loosen second turbine by tapping it with plastic hammer and lift off. Remove Reactor. Bend back lock tabs and remove capscrews mounting first turbine on direct speed clutch driven plate hub, lift turbine out, remove thrustwasher which seats in turbine flange hole (NOTE—this is the selective thickness washer which controls reactor endplay). Remove direct clutch stationary driving plate (take out lock ring), lift out clutch driven plate. Remove clutch moveable driving plate and piston by inverting housing and bumping it on bench (on first cars, plate can be removed by threading ¼" capscrews in puller holes in plate and lifting plate out).

►*CAUTION—Use care not to damage piston rings located on inner diameter of clutch housing and on outer diameter of piston.*

Cleaning & Inspection: Wash all parts in clear gasoline or kerosene and dry with compressed air. Inspect all contact and mounting surfaces for nicks, burrs, distortion, warping, or low spots. Inspect all bolts and capscrews for worn threads, see that bolt holes not worn or cracked. Inspect machined area around vanes, torus ring, and turbine hub for indications of wear or rubbing condition indicating worn bearings or thrust plates. Check clutch driven plate for worn facings, loose springs, worn splines or worn thrust bearing. Inspect clutch movable plate and piston rings. Check ring gap with feeler gauge (gap should be .003-.012" when installed in housing). Inspect all bearing surfaces for wear, pits, and scores. Clean and inspect oil passage leading from input shaft bearing to direct drive clutch piston.

Reassembly: Use all new gaskets. Install direct drive clutch piston in housing making certain that rings are free in grooves and centered to facilitate installation, see that driving lugs do not bind in grooves. Install clutch driven plate and stationary driving plate (install lock ring if used). Install first turbine using new lock plate under mounting capscrews and tightening screws to 12-15 ft. lbs. torque. Install thrustwasher of correct thickness for desired endplay of .010-.015" (see Reactor Shaft Endplay Check and Thrustwasher Note below) using cup grease to hold washer in place (CAUTION—see that ears on washer engage recesses in turbine hub). Install reactor and shaft. Install second turbine using new lock plates under capscrews and tightening screws to 6-7½ ft. lbs. torque. Install ball thrust bearing on reactor shaft using cup grease to hold bearing in place. Install bearing spacer in end of pump shaft, install converter pump with new gasket under mounting flange, tighten pump mounting capscrews to 10-12 ft. lbs. torque. Check assembly for free rotation of the clutch driven plate by spinning plate with a dummy input shaft (plate must be free of any drag).

►*CAUTION—Make certain that all capscrews locked by turning lock plate tabs up against screw heads.*

►**Reactor Shaft Thrustwasher Note**—This washer

C NTINUED N NEXT PA E

PACKARD ULTRAMATIC (C nt.)

furnished in .005" thickness steps from .070" to .115". (Part Nos. 423190 to 423199 inclusive).

NOTE—Above thrustwashers supersede former type furnished in .010" steps from .060" to .090".

DISASSEMBLY—TRANSMISSION

Disassembly: Remove oil pan and gasket. Install hold-down tool PU-308 on Low and Reverse band levers (will prevent band struts dropping when the valve assembly is removed), then remove the oil screen. Disconnect control valve link, remove the control valve lower body separator, and upper body as an assembly (this assembly need not be disassembled further unless required). Take out 8 capscrews and remove bell housing and gasket. Loosen low range band adjusting screw, remove high range clutch assembly, remove front sun gear thrust bearing. Remove the hold-down fixture from low range band lever (CAUTION—use care that struts do not drop down in case), remove low range band struts, then remove low range band. Remove governor cover on right side of case, take out governor adapter attaching screws, remove governor assembly. Remove speedometer drive pinion and retainer. Take out rear bearing retainer capscrews, remove retainer by pulling it off output shaft. Remove converter outlet valve. Take out snap ring at rear of parking gear. Remove parking gear, speedometer gear, and spacers from shaft. Remove entire planetary unit and output shaft assembly through front end of transmission case. Loosen reverse band adjusting screw, lift out reverse drum and planetary ring gear. Remove hold-down fixture from reverse band lever, lift out reverse band struts, remove reverse band. Remove rear oil pump from recess on rear end of transmission case. This completes removal of all units from transmission case. For further disassembly and overhaul of units, proceed as follows:

OVERHAUL (ALL TRANSMISSION UNITS)

After disassembling transmission (above), the various units can be disassembled for inspection and overhaul as follows:

Planetary Unit—Remove capscrews attaching forward and rear halves of planetary cage, remove forward half of cage by tapping it sharply with a plastic hammer. Move short planetary pinion shaft to rear and remove locking woodruff key. Remove the three short planetary pinions, shafts, thrust washers, and roller bearings as an assembly. Remove rear (driving) sun gear and thrust washer. Move long planetary pinion shaft to rear and remove locking woodruff key. Then remove the long planetary pinions, shafts, thrust washers, and roller bearings as an assembly.

High Range Clutch—Remove large snap ring from low range drum, remove low range reaction sun gear and flange from drum. Remove clutch hub and input shaft, and clutch plates. Use tool PU-304 to compress clutch piston return spring, remove retaining snap ring, relieve spring tension, remove spring and seat. Dislodge and remove clutch piston by bumping low range drum on a wooden block (piston side down). Remove outer piston ring from the piston and inner piston ring from inner hub of low range drum. Remove snap ring on input shaft at rear of clutch hub, remove clutch hub from shaft.

Bell Housing—Take out eight capscrews, remove the front oil pump and the reactor overrunning clutch housing assembly (CAUTION—do not disassemble the overrunning clutch). Remove front pump relief valve and spring, and oil pressure passage plugs (threaded plugs).

Front Oil Pump—Take out two screws retaining pump on reactor overrunning clutch housing. Remove front cover plate, pump body, and rotors. Separate pump body and rotors, separate pump rear plate from reactor housing.

Rear Oil Pump—Remove cover plate, lift out inner and outer rotors (CAUTION—Keep these rotors separate from front pump parts, rear pump rotors are smaller and are not interchangeable).

Reactor Overrunning Clutch—Do not disassemble this unit (replace if worn or inoperative). See Inspection data.

Control Valve—CAUTION—use extreme care to keep working area and all parts CLEAN when working on control valve assembly. Separate lower valve body, separator, and upper valve body (CAUTION—do not clamp valve body or parts in a vise which may mar contact surfaces or crack body). Remove throttle valve piston spring seat screws, remove the throttle valve, piston spacer, spring, and seat. Remove the control valve and link (use a slight twisting motion). Remove low range and reverse cylinder bodies and pistons from the upper valve body. Remove plate at rear end of timing valve bore, remove timing valve and spring. Remove plate at rear end of direct drive shift valve bore, remove shift valve piston. Remove pins at the forward end and at the center of the modulating valve bore, remove modulating valve, guide, and direct drive shift valve. Remove plate at forward end of upper valve body, remove pump check valve, pump selector valve, and converter inlet valve.

Hydraulic Governor—Take out two capscrews attaching governor housing to drive shaft flange, separate housing from flange. Check governor driveshaft-to-adapter endplay which should be .010-.018" and side clearance which should be .0005-.002". If clearances not correct, disassemble driveshaft by driving out pin in driving gear, press gear off, remove shaft from adapter. Check governor valves for free operation by pressing valve in to inner limit of travel and noting whether spring pushes it out to outer limit of travel without drag when released, pull vent valve flyweight and valve to outer limit of travel and noting whether spring returns these parts to inner limit of travel without drag when released. If valves stick or excessive looseness noted, disassemble valves as follows: Pull vent valve to outer limit of travel, remove small snap ring, remove flyweight. Remove valve support snap ring, remove valve support, outlet valve and springs, lift governor valve out through vent valve support opening.

Cleaning: Clean all transmission parts (except rear ball bearing) in solvent cleaner such as clear gasoline or naptha. Wash all valve parts in separate container. Dry all parts with clean compressed air. Blow out all oil passages with compressed air (CAUTION—do not use wire or drills to clean out passages and ports which would damage metering openings and change calibrations).

Inspection: Inspect all parts for wear and defects with special attention to the following:

Gears—Inspect teeth for wear, scores, nicks, burrs, pits, and chipped teeth. Inspect bearing surfaces and splines for wear and scoring.

Bearings & Thrust Washers—Check for roughness, flat spots, pits, and scores. Check bearings for excessive looseness due to wear. See Reassembly data for selection of thrust washers for correct clearances or endplay.

Drums & Bands—Check for wear, scoring, nicks, or out-of-round. Check low range drum clutch plate splines and inner hub surfaces.

Pistons & Rings—Inspect pistons and rings for wear, scores, nicks, and burrs. Check ring gap of all piston rings with **rings in full contact with cylinder walls.** Rings can be filed if gaps too small.

Piston Ring Gaps

High Range Inner Ring	.007-.015"
High Range Outer Ring	.010-.020"
Direct Drive Rings (Inner & Outer)	①.002-.016"

①—.012" or less preferred.

Valve Body & Valves—Check all valve body bores for wear with plug gauges PU-324. Check mating surfaces of lower body, separator plate, and upper body for evidence of oil leakage caused by low spots or unevenness (lap on a surface plate using 4OOA wet or dry sandpaper and kerosene). Valves should be free from scores, must not bind, or be excessively loose (valves should move through entire travel in bore of own weight).

High Range Clutch—Check for correct 10-plate or 12-plate clutch type (see Note below). Inspect clutch plates for wear, scores, nicks, burrs, and for correct "wave."

►**Clutch Assembly Note**—Two types used which must not be interchanged except as follows:

No. 423085 (10-Plate)—Can be identified by star. This clutch **must not** be used in place of 12-plate clutch but the 12-plate type can be used to replace the 10-plate clutch.

No. 421893 (12-Plate)—Not marked. This clutch *must* be used on Models 2302, 2306, 2322, 2332, 2333, 2402, 2406, and 2413.

Reactor Overrunning Clutch—Inspect condition of sprags and clutch races (slip circular coil spring from front end of sprags and withdraw one sprag with long-nosed pliers to make this inspection). If worn, pitted, or brinelled, install new assembly.

Reassembly of Parts: Reassemble all sub-assemblies by reversing disassembly directions and note following important details:

►***OIL SEAL & GASKET CAUTION***—Use all new seals and gaskets. **Do not open** gasket envelope until ready to install (gaskets will absorb moisture and expand so they will not fit). If gaskets have absorbed moisture, dry them out in an electric oven at 175-200°F. (do not use gas oven which emits moisture from combustion).

Transmission Case—Install following parts in case before installing sub-assemblies: Parking gear lever, pawl, and linkage; low range band lever and pivot pin; reverse band lever and pivot pin. Install throttle valve operating cross-shaft seal in case, then install throttle valve inner operating lever and shaft, woodruff key and outer lever, lock lever with

C NTINUED N NEXT PAGE

PACKARD ULTRAMATIC (C nt.)

clamp bolt. Install new control valve operating cross-shaft seal in case, then install cross-shaft, inner operating lever and parking ratchet spring-load, lock inner lever in place with lockscrew and nut. Install selector detent, starter safety switch, and converter outlet valve.

Hydraulic Governor—If new shaft being installed, insert shaft and flange in adapter, press on driving gear until endplay between gear and adapter is .010-.018", drill ⅛" hole in shaft and press in new pin to retain gear. After all parts installed, see that valves operate freely (see disassembly check). Make certain housing seats firmly and evenly on drive shaft flange, tighten two attaching screws to 6½-7 ft. lbs.

Control Valve Assembly—Install converter inlet valve and spring, pump selector valve and spring, and pump check valve in forward end of upper valve body; install retaining plate and screws. Install direct drive clutch shift valve through forward end of bore in lower valve body, install stop pin at center of bore; install modulating valve and guide, install retaining pin, install direct drive shift valve piston at rear of bore, install retaining plate and screws. Install timing valve and spring, install retaining plate and screws. Install control valve and link (use slight twisting motion). Install throttle valve, piston, spacer, spring and seat, tighten seat attaching screws evenly. Assemble upper and lower valve bodies and seperator plate (CAUTION—make certain correct length screws installed in each position), tighten screws to 6-7½ ft. lbs. torque. Install low range and reverse piston upper seal retaining and snap rings, assemble fast-acting pistons, seats and retainers in the low range and reverse pistons and install seals on both pistons, then install these assemblies in cylinder body (CAUTION—moisten seals with Ultramatic fluid). Assemble pistons and cylinder bodies on control valve upper body (CAUTION—see that piston does not damage upper seal) using round-headed Phillips screws.

►***NOTE***—**All valves not spring-loaded should move within control valve body of own weight.**

Reactor Overrunning Clutch—***See Bushing production change & replacement bushing note.*** If clutch disassembled, install in following order: Hold inner curved side at top toward left, and curved side at bottom toward right (use rubber band to hold them in place) and see that sprags lean counter-clockwise or toward left at top. Install coil spreader spring at each end of sprags. Install assembly in housing allowing housing to slip off rubber band (CAUTION—make certain that spreader springs remain in place). Check for correct assembly by making certain that inner race will rotate in clockwise direction (viewed from front) but locks when turned in counter-clockwise direction.

►**Reaction Clutch Housing Bushing Note**—***Three types of Housing & Bushing Assemblies have been used as follows:***

(1) No. 421641 with non-replaceable thin wall bushings. This type was superseded by No. 423220.
(2) No. 423220 with both non-replaceable thin-wall bushings (housing bore less than 1.250"), and replaceable thick-wall bushings (housing bore 1.250"). Thick-wall bushings furnished under Part No. 410989 and can be replaced with bushing tools. This 423220 housing sueprseded by No. 410986.
(3) No. 410986 with replaceable thick-wall bushings. Bushings are No. 410989 (same as second type housing) and can be replaced with bushing tools.

Front & Rear Oil Pump—See that correct rotors installed in each pump. Rotors in front pump mesh at the bottom (inner rotor in rear pump automatically aligned by output shaft. Tighten front pump attaching screws to 7½-8½ ft. lbs. torque.

Bell Housing—***CAUTION***—after reactor overrunning clutch installed, do not tip housing down toward front, will allow assembly to fall out. Install front oil pump making certain that oil passages line up, install overrunning clutch, tighten retaining screws to 12-15 ft. lbs. Install front pump relief valve, make certain that valve operates freely, then install valve retaining plug, and relief valve spring and plug. Install all oil passage plugs. Install new converter pump shaft seal in housing.

High Range Clutch—***See Bushing production change & replacement bushing note (below).*** Install outer piston ring on piston and inner ring on drum journal, centralize inner ring on hub, use a ring compressor to guide outer ring when installing piston. See that clutch release spring end seats in piston, use compressing tool to compress spring while installing spring retainer and snap ring. Coat clutch hub thrust washer with cup grease before installing, install snap ring on input shaft ahead of clutch hub, then install clutch hub, thrust washer, and rear snap ring. Install clutch hub and input shaft in low range drum. Install clutch plates (start with steel plate, install driving and driven plates alternately). Install front sun gear and flange, and retaining snap ring (CAUTION—make sure snap ring seated in groove).

►**High Range Clutch Housing Note**—***Two types of Housing and Bushing Assemblies (requiring different Clutch Piston Inner Ring) have been used as follows:***
(1) No. 421638 Housing Assembly (with non-replaceable thin-wall bushings) used with Piston Inner Ring No. 421072. If bushing wear excessive, replace above parts with Kit No. 410987 (consists of second type Housing No. 423366 and later design Piston Ring No. 423367).
(2) No. 423366 Housing Assembly (with replaceable thick-wall bushings) used **with new No. 423367 Clutch Piston Inner Ring** (this ring can also be used with first type housing but first No. 421072 ring must not be used with the second type housing). This housing has bushing bore of 2.000" ± .0005" (.062" larger than first type). Replacement bushings are furnished (No. 410990) and can be installed with regular bushing tools.

Planetary Unit—Assemble each planetary pinion with spacer, roller bearings, and thrust washers on its shaft (spacer at center, 19 rollers and thrust washer at each end—use clean cup grease to hold rollers and thrust washers in place). Hold output shaft horizontal, install long planetary pinion assemblies in planetary cage (push shafts far enough in to insert woodruff key, then push shafts forward so that they are locked by keys). Install rear thrust washer on rear sun gear, then install these parts in planetary cage (CAUTION—washer must seat in cage). Install short planetary pinion assemblies with **chamfered end to front** and lock shafts with woodruff keys in same manner as long pinions. Install front half of planetary cage (CAUTION—line up marks on both halves), tighten large capscrews to 25-30 ft. lbs. and small capscrews to 12-15 ft. lbs., lock all screws by bending up tabs on lock plate.

REASSEMBLY—TRANSMISSION (AFTER OVERHAUL F UNITS)

Reassembly of Transmission—Install parts by reversing order of disassembly and note following important instructions:

Rear Oil Pump—Install rear oil pump in case, see that all oil passages line up, tighten capscrews evenly to 12-15 ft. lbs.

Planetary Unit Installation—Coat reverse drum thrust washer with cup grease and place it on rear oil pump body journal. Install reverse band and struts, install band lever holding fixture PU-308 to retain these parts. Install reverse drum using care not to score the drum bushing. Install planetary unit through front of case and make certain that it is against reverse drum thrust surface. Install speedometer driving gear spacer, speedometer gear, parking gear spacer, parking gear, and transmission output shaft rear bearing; install parking gear snap ring. Install new oil seal in rear bearing retainer, install retainer, tighten attaching capscrews to 12-15 ft. lbs. Install governor, tighten adapter attaching capscrews evenly to 7½-8½ ft. lbs. Use new cover gasket when installing governor cover, tighten cover capscrews evenly to 6-7½ ft. lbs. Install speedometer drive pinion and retainer.

High Range Clutch Installation (& Endplay Adjustment)—Install low range band, and driving sun gear front thrust ball bearing (use cup grease to hold bearing in place). Install high range clutch unit through front of case and make certain that it is seated against thrust bearing with sun gear in mesh with planetary pinions. Install low range band struts and install band lever holding fixture PU-308 to retain these parts. Use gauge PU-302 to measure the following distances (gauge is double ended and different end used for each measurement):
(1) Mount gauge PU-302 on transmission mounting face of bell housing **with gasket removed,** set gauge to measure distance from milled rear face of bell housing to milled surface at rear face of reactor overrunning clutch housing, lock gauge cylinder in this position.
(2) Invert gauge on front face of transmission case, measure distance from forward face of low range drum thrust surface to milled front face of transmission case. Gauge micrometer reading will indicate correct thickness of thrust washer required.

►***CAUTION—On "2400" Series cars, output shaft and rear housing MUST BE INSTALLED in case when above measurement made (false reading will be obtained if measured before these parts installed).***

From gauge reading (above), select a low range drum thrust washer of correct thickness (furnished in .010" thickness steps from .085" to .135"), install this washer (use cup grease to hold it in place), install bell housing using a **new gasket,** tighten attaching capscrews evenly to 45-50 ft. lbs.

►***ENDPLAY CAUTION***—**End clearance is controlled by thickness of bell housing gasket and will be .008-.018" if correct thrust washer selected as directed above, and new gasket used when installing bell housing.**

CONTINUED ON NEXT PAGE

PACKARD ULTRAMATIC (C nt.)

Control Valve Assembly—Install control valve assembly, using correct length capscrew in each hole, tighten screws finger tight (CAUTION—see that throttle valve collar engages operating lever). Remove the two oil pump screen attaching screws, tighten all remaining control valve body and cylinder body capscrews evenly to 12-15 ft. lbs. Connect control valve link to cross-shaft inner lever, adjust link (see below). **After control valve adjusted,** install oil pump screen, tighten two attaching screws to 10-12 ft. lbs. Remove holding fixture PU-308 from low range and reverse band levers.

Control Valve Link Adjustment (First Type Two-piece Adjustable Link): Place the selector control valve inner lever in Reverse "R" position and make certain that detent fully engaged in detent well. Use gauge PU-316 installed on rear land of control valve, adjust link (loosen clamp bolt holding link sections together), so that rear land of valve is ¾" out of control valve lower body. In this position, distance from center of link pin to control valve lower body should be 1.28". Make certain that link clamp bolt is securely tightened.

Control Valve Adjustment (Later Type Solid Link): Place selector control valve inner lever in Reverse "R" position and make certain that detent fully engaged in detent well. Use gauge PU-316B installed on the control valve, loosen detent lever capscrew, position control valve so that distance from face of valve body to shoulder on valve is exactly 5/16", tighten lever clampscrew to 50 ft.lbs. torque. Control lever shaft should have approximately .045" endplay (controlled by detent lever position on shaft). If necessary to adjust endplay, loosen detent lever clampscrew and move lever using care **not to disturb valve setting of 5/16".**

Oil Pan Installation—Use new gasket, tighten attaching capscrews evenly to 12-15 ft. lbs.

Band Adjustment—Adjust both bands. *See Adjustment data.*

INSTALLATION IN CAR

After transmission completely assembled, install converter on transmission input shaft and fasten converter to bell housing to prevent it falling off while transmission being installed. Install transmission and converter assembly by reversing the removal procedure and note the following:

Transmission Pilot Studs—Use two pilot studs in forward face of clutch housing to guide it onto flywheel.

►*CAUTION—Make certain that converter drain plug lined up with opening in flywheel.*

Tightening Torques—Tighten clutch housing-to-flywheel capscrews to 25-30 ft. lbs. Tighten transmission bell housing-to-flywheel housing capscrews to 25-30 ft. lbs. (CAUTION—bell housing must be held tightly against flywheel housing while tightening these screws).

Filling Transmission—See Lubrication data.

►*CAUTION—Transmission must have at least 7 qts. of fluid before engine is started.*

Adjusting Linkage—See Linkage Adjustment.

PACKARD SYNCHRO-MESH

Eight & Super Eight, All Models (1950)
200 & 300, All Models (1951)

►**ULTRAMATIC DRIVE NOTE**—Automatic transmission optional on above models. *See "Packard Ultramatic Drive" on Page 342.*

►**OVERDRIVE NOTE:** *See "Warner R11" Overdrive on page 280.*

DESCRIPTION: Constant-mesh, synchro-mesh (2nd. & High), constant-mesh (Low) helical gears, sliding spur gear (Reverse). Second-speed & Low-speed gears are mounted on special double-row ball bearings on mainshaft (furnished as assembly with shaft). Second and high are engeged by synchronizer unit on mainshaft, low speed gear by clutch teeth in sliding reverse gear which engage clutch teeth on low gear hub.

REMOVAL OF TRANSMISSION: *See "Transmission" on car model page.*

DISASSEMBLY OF TRANSMISSION: Take out mounting screws and lift off cover and shifter assembly. Remove nut on rear end of mainshaft at universal joint yoke and remove yoke from shaft (nut not used on later cars where yoke is free on mainshaft splines). Remove rear bearing retainer, take out snap ring and slide speedometer gear off Take out mounting screws and remove front bearing retainer. Drive countershaft out (see Note below), remove main drive gear and bearing through front of case. Move mainshaft assembly to rear until rear bearing free of case, tap bearing off shaft, then remove mainshaft through top of case. Lift counter gear cluster and thrustwashers out through top of case. To remove reverse idler gear, remove retaining capscrew and washers on rear end of shaft, drive shaft out through rear of case (use drift inserted through front of case), lift out reverse gear. Remove two countershaft thrust springs, use small punch to drive out thrust spring plugs.

Countershaft Note—Shaft must be driven out toward front (key in forward end of shaft engages slot in front end of transmission case). Use J-2559 countershaft assembly bar to drive shaft out and leave tool in counter gear cluster to retain bearing rollers until re-installed. Overdrive Model—Remove overdrive case drain plug (on rear end of case at bottom) and insert J-2559 tool through this hole to drive countershaft out.

OVERHAUL: Disassemble and overhaul all sub-assemblies as follows:

Synchronizer Unit: To disassemble, press outer sleeve off inner clutch hub by hand (CAUTION—use care not to lose detent plungers and springs which will fly out). Remove three retainer springs, lift out synchronizer rings. When reassembling, use Clamp J-2563 to hold plungers and springs in place, install synchronizer sleeve with wider shoulder of external groove on opposite end from extended hub of inner sleeve.

REASSEMBLY: After overhaul of sub-assemblies:

Synchronizer Travel Adjustment—Check clearance between lug on second-high shifter fork and stop on cover with shift lever in High Gear position. Clearance should be .005" min., .010" max. Adjust by bending lug. CAUTION—If clearance greater than .010", outer clutch sleeve may move too far forward which will allow synchronizer balls and springs to fly out (requiring removing cover & reassembling).

Mainshaft, Low & Second Speed Gear Assembly:—Both low and second speed gears are furnished as an assembly with the mainshaft and should not be removed. These gears are constant-mesh type and are mounted on double row ball bearings on shaft

CONTINUED ON NEXT PAGE

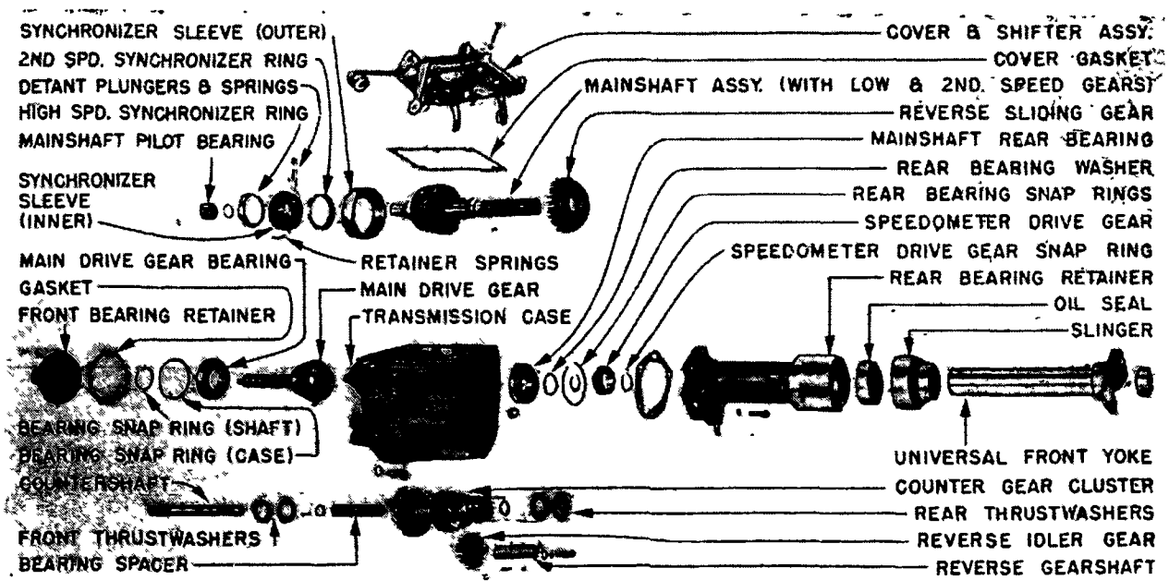

PACKARD 6 & 8 TRANSMISSI N

PACKARD SYNCHRO-MESH (C nt.)

Mainshaft Assembly: Install synchronizer on forward end of shaft with wider shoulder of external groove toward second speed gear, then install front bearing spacer on shaft. Install reverse gear on rear end of shaft with shifter groove toward rear or away from low speed gear.

Reverse Idler Gear: Align woodruff key in shaft with slot in case, tap shaft into case until it engages gear, install gear, drive shaft in until key is seated, secure shaft with plain washer, lockwasher, and capscrew.

Countergear Assembly: If roller bearings removed, first install assembly bar J-2559 in gear cluster, install bearing spacer, assemble 25 rollers in each end (use grease to retain rollers), install end plate and thrustwasher on each end of gear cluster. Install assembly in bottom of transmission case. **After main drive gear installed,** raise assembly up and insert countershaft through front of case aligning woodruff key with slot in case, drive shaft into place which will push assembly bar out at rear. Install two countershaft thrust springs in openings in case and install thrust spring plugs.

►*CAUTION*—Lips on countershaft thrustwashers must point upward and engage grooves in case.

Main Drive Gear Assembly: Install bearing and retaining ring on drive gear shaft, install snap ring. Install mainshaft pilot bearing in recess in rear end of gear.

Main Drive Gear & Mainshaft Installation: Place mainshaft assembly in case with rear end of shaft extending out through bearing hole, install rear bearing and retaining ring on shaft and tap bearing into place in case. Install main drive gear in case and enter mainshaft in front bearing. Install main drive gear bearing retainer using new gasket and aligning drain passage in cover with hole in case, tighten retainer capscrews. Install rear bearing plain washer, snap ring, speedometer drive gear (CAUTION—see that gear key in place), and gear snap ring.

Shifter Mechanism:—Yokes on horizontal shafts in cover engage synchronizer clutch sleeve (front shaft), low speed gear clutch and reverse gear (rear shaft) directly without intermediate linkage. Interlock Assembly—If bracket removed, install parts as follows: Place interlock ball spacer and detent ball spring in bracket (interlock spacer toward center, detent ball spring toward outer edge of cover). Place cover on bench with top down, position forks so that center neutral grooves are in line, install bracket (CAUTION—hold detent and interlock balls in position in bracket, pull shoe ends of both forks together and push down on bracket at the same time so that balls engage center grooves. Install bracket retaining screw.

High-Gear Shifter Lever Travel—Clearance between lug on shifter lever and transmission case cover must be correctly set to prevent excessive lever travel which will allow synchronizer poppet balls and springs to jump out in high gear position. check by shifting to second speed position, and then into high, checking clearance between stops on fork and stop pads in cover in each position. With detent ball seated in groove, clearance should be not less than .002". If clearance not .002" or greater, file or scrape stop pads in cover. Clearance must not exceed .010".

STUDEBAKER AUTOMATIC TRANSMISSION

Champion, Model 9G (1950), 10G (1951)
Comm. & Land Cruiser, 17A (1950), H (1951)

►CHANGES, CAUTIONS, CORRECTIONS

►**1951 COMMANDER ACCELERATOR LINKAGE CHANGE (Serial No. 8133626 Up):** Following parts changed to provide smoother accelerator operation: Accelerator Bellcrank Lever & Bracket Assembly, Accelerator Bellcrank Lever-to-Transmission Rod, Accelerator Cross-shaft Assembly.

►**GOVERNOR LEVER PRODUCTION CHANGE:** Governor control lever now has **two** holes for accelerator cross-shaft-to-transmission rod ball joint connection. On 1951 transmissions below Serial No. SCO-31007 (with first type **one-hole** lever), new **two-hole** lever No. 529078 **should be installed.**

►*CAUTION—See Linkage Adjustment directions for connection at this lever (rod must be connected in proper hole and all cars not connected alike).*

►**TRANSMISSION OIL PAN PRODUCTION CHANGE:** Beginning Champion Serial No. 20171, Commander No. 45792, oil pan with reinforced flange used. This pan requires ⅛" longer oil pan screws and can be installed on earlier cars if kit No. 31-0510 used (includes 14 new longer screws).

►**STARTING ENGINE BY PUSHING CAR:** Turn ignition key ON, depress and release accelerator pedal once (to set automatic choke), place transmission selector lever in Neutral "N" position. Push car until speed of 15-20 MPH. is reached, then move selector lever to Drive "D" or Low "L" position.
CAUTION—Pushing to start engine recommended rather than towing (car may overtake tow car when engine starts).

►**TOWING CARS WITH AUTOMATIC TRANSMISSION:** Place transmission selector lever in Neutral "N" position and **do not tow car in excess of 30 MPH.**

►**TRANSMISSION SERIAL NO. NOTE**—Separate Torque Converter Nos. and Transmission Nos. used:
Torque Converter—Stamped on engine side of flywheel adjacent to flywheel ring gear.
Transmission—On metal plate on left side of transmission case below oil level gauge.

►**REPLACEMENT ENGINE CAUTION:** Special replacement engines (Complete or Stripped Assy.) with **special Crankshaft-to-Converter Bolts** furnished for cars with Automatic Transmission. *Engines must not be interchanged between std. Synchro-mesh and Automatic Trans. cars except as follows:*
Champion Engines—Std. Stripped Engine (526685 or 530862) would require changing of Crankshaft and Crankshaft Bolts for use with Automatic Transmission and this is not recommended. Automatic Trans. Stripped Engine (530350 or 530865) can be used with std. synchro-mesh trans. by installing std. Crankshaft-to-Flywheel Bolts No. 194542 (replacing special No. 526851 Crankshaft to Converter Bolts).
Comm. & Land Cruiser—Std. 1950 Stripped Engine (525852) can be used in emergency with Automatic Transmission by removing portion of engine front plate, and installing special Crankshaft-to-Converter Bolts No. 526851 (replacing std. Crankshaft-to-Flywheel Bolts).

►*CAUTION—Special Crankshaft-to-Converter Bolts No. 526851 must always be used for mounting of automatic transmission Converter on flywheel (converter will be damaged if regular bolts used).*

DESCRIPTION

Transmission consists of Torque Converter Assembly (torque converter and Direct Speed Clutch) and a planetary type transmission (3-speed and Reverse) which is hydraulically controlled. Transmission has a pawl-and-gear Parking lock mechanism and is fitted with an electrically controlled, solenoid operated "Anti-Creep" device by which the brakes are held on while the car is standing (operative whenever ignition turned on).

►**Champion & Commander Differences:** Transmissions are similar design but have following differences:

Torque Converter—11" diameter (Champion), 12" (Comm.). Direct Drive Clutch is also proportionately smaller on Champion. Torque converter cooling air intake has screened opening on left side (Champion), flexible air duct (Comm.).

Transmission Oil Capacity—Approx. 9½ qts. (Champion), 11½ qts. (Comm.). *See Lubrication data.*

Low Band Servo—Single piston type (Champion), double piston type (Comm.).

Planetary Multiple Disc Clutch—Three-disc type (Champion), four-disc type (Comm.).

Extension Housing—Champion governor extension housing does not have direct drive latching mechanism (used on Comm.), and has heavier governor spring. Speedometer pinion has 27 teeth (Champion), 24 teeth (Comm.).

Torque Converter & Direct Speed Clutch: Assembly is mounted in a case which replaces the flywheel used on cars with standard transmission and consists of the units listed below. Torque converter is air-cooled by air drawn in through duct on left side of case (vanes on outer surface of converter case circulate air) and discharged through louvres on bottom of housing. Torque converter and direct speed clutch action is automatic and controlled by the hydraulic system (see Operation—below, and Hydraulic Circuit illustration).

Converter Impeller (Driving Member)—Integral with rear section of converter case bolted on engine drive plate on end of crankshaft. Impeller is supported at rear end by sleeve extending through bushing in forward end of front oil pump housing (behind oil seal). This sleeve engages the inner gear of the front oil pump and drives the pump. Impeller rotates at engine speed.

Turbine (Driven Member)—In converter case directly in front of impeller and driven by oil flow from the impeller. Turbine hub is splined on tubular driveshaft which is integral with the front planetary ring gear so that power is transmitted to this unit when the converter is operating.

Stator (Stationary Member)—Consists of a set of curved vanes placed between the inner ends of the turbine and impeller vanes. Stator is mounted on a free-wheeling unit which is mounted on a stationary shaft carried in the front retainer of the transmission case. Stator is locked or held stationary when unit is operating as a torque converter and acts to "boost" the oil returned to the impeller thus supplying the torque multiplication. When turbine speed equals impeller speed, stator rotates freely with the other members (rotation permitted by free-wheel unit) without any torque multiplication.

CONTINUED ON NEXT PA E

STUDEBAKER AUTOMATIC TRANSMISSION (C nt.)

Direct Drive Clutch—Consists of a hydraulically operated single plate clutch in forward end of torque converter housing. Clutch driven member is splined on forward end of transmission mainshaft and clutch driving plates are locked in converter housing (plates engage dowels and studs in housing) so that the transmission mainshaft is driven directly by the crankshaft when the clutch is engaged, thus locking out the torque converter. Clutch is engaged hydraulically by oil under pressure in chamber in front of forward pressure plate (oil enters and leaves this chamber through oil channel in hollow mainshaft).

Planetary Transmission: Consists of planetary gear sets, bands, and servo mechanisms, multiple disc clutch, free-wheeling units, governor, oil pumps, and control valves located in transmission case.

Front Planetary Unit & Clutch—Gears are conventional (inner sun gear, planetary pinion assy. and outer ring gear) with outer ring gear driven by torque converter turbine, planetary pinion assembly driving rear planetary ring gear, and sun gear controlled by Low Band and Multiple Disc Clutch. Sun gear is held stationary by the Low Band (in Low position) so that power is transmitted through the gears, or is locked to the planetary pinion assembly by the multiple disc clutch (in Intermediate and Direct positions) so that the entire planetary unit revolves as an assembly to transmit power directly without gear reduction. In reverse position, the planetary pinion assembly is held stationary by the Reverse Band and power is transmitted through the gears and in a **reverse** direction.

Rear Planetary Unit—Gears are conventional (inner sun gear, planetary pinion assy. and outer ring gear) with outer ring gear driven by front unit planetary pinion assembly, planetary pinion assembly driving transmission mainshaft (pinion plate splined on shaft), and sun gear controlled by the Low Band or Forward Band through free-wheel units on the gear hub. Sun gear is held stationary by the Forward Band in all forward speeds (Low, Intermediate, and Direct positions) so that power is transmitted through the gears with these modifications: In Intermediate position, the forward free-wheel unit permits the front planetary unit (which is locked out) to over-run the rear planetary sun gear (which is held stationary). In Direct drive position, gears are by-passed by the engagement of the Direct Speed Clutch and the sun gear turns freely with the other gears although the Forward Band is applied (this rotation permitted by the rear free-wheel unit in the forward band drum hub). In Reverse position, the sun gear is driven by the front planetary unit and the ring gear is held stationary by the Reverse Band (along with the front planetary pinion assy.) so that power is transmitted through the planetary pinion assembly.

Parking Brake Mechanism—Consists of a pawl controlled by the transmission selector lever which engages a gear on the rear end of the transmission mainshaft and locks the shaft when selector lever is placed in Parking "P" position. An interlock piston (see illustration) operating from oil pressure supplied by the rear oil pump prevents engagement of the pawl if car is moving forward at speed greater than 3-5 MPH. to prevent accidental engagement of the parking lock.

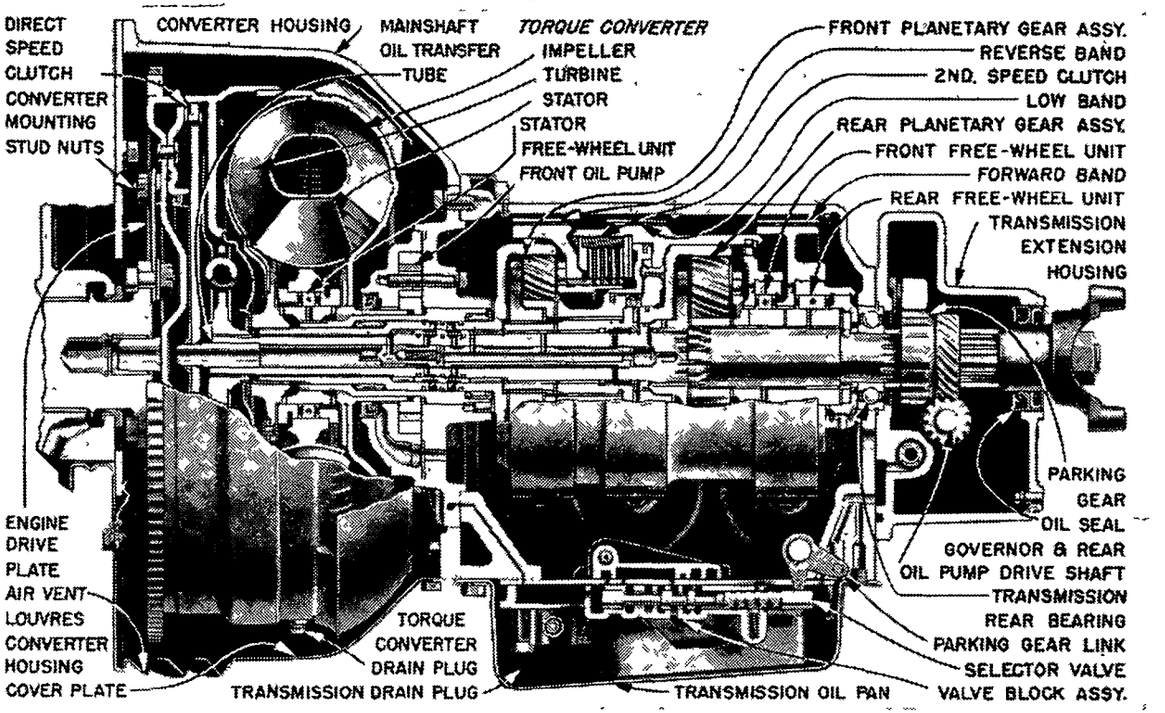

STUDEBAKER AUTOMATIC TRANSMISSION SECTIONAL VIEW

Anti-Creep System—Consists of a solenoid controlled valve in the hydraulic brake line to the rear wheels which is controlled by the Pressure Switch in the transmission and an Idle Adjustment Screw switch on the carburetor (replaces regular throttle stop-screw) or on accelerator cross shaft bracket.
See "ANTI-CREEP" in Brake Section for data.

Oil Pumps: Two pumps used to provide oil pressure for hydraulic controls, oil supply for torque converter, and transmission lubrication:

Front Pump—External-internal gear type, in front of transmission case and driven by the engine. Pump starts to operate as soon as engine started and supplies oil to torque converter and for transmission lubrication. Also supplies oil pressure for hydraulic controls during Idling, Low Speed, and Reverse operation. Pump pressure is controlled by Front Pump Relief Valve.

Rear Pump—Mounted externally on right side of transmission extension housing and driven from same cross-shaft as governor. Pump is driven from the propeller shaft and operates whenever rear wheels are turning. Supplies oil pressure for transmission operation when pushing car to start engine, and at higher car speeds (when rear pump takes over, rear pump relief valve by-passes front pump output to oil pan so that front pump idles).

Hydraulic Controls: Consist of a governor in the transmission extension housing, and a valve assembly contained in the Valve Block mounted on lower face of transmission case within oil pan.

Governor—Fly-ball type. Actuates governor valve to control Direct Speed Clutch operation. A governor lever is linked to the accelerator linkage so that governor action can be overridden for "kick-down" to intermediate gear, or upshift to Direct speed delayed by the operator.

Front Pump Relief Valve—Regulates front pump pressure at 80 lbs. for all forward driving ranges (P, N, D, L) and boosts pump pressure to 200 lbs. for reverse (R) operation.

Rear Pump Relief Valve—Regulates rear pump pressure at 80 lbs. Also by-passes front pump output to oil pan (so that front pump idles) when rear pressure sufficient to operate transmission.

Converter Valve—Supplies oil to converter assembly at pressure of 27 lbs. to maintain oil level.

Selector Valve—Linked to transmission selector lever on steering column and controls oil pressure supply to servo mechanisms, multiple disc clutch, and direct drive clutch as required for operation in each range (P, N, D, L, R depending on selector lever position).

Reverse Shuttle Valve—Provides for smooth engagement of reverse band.

Reverse Interlock Valve—Prevents application of reverse band when car is moving forward.

Parking Interlock Piston—Blocks engagement of parking gear pawl when car is moving forward and prevents accidental engagement of parking lock.

C NTINUED N NEXT PA E

STUDEBAKER AUTOMATIC TRANSMISSION (C nt.)

OPERATION

Torque Converter Assembly automatically provides a torque multiplication ranging from 2.16-1 (maximum when turbine stationary and impeller turning at 1450 RPM. or normal stall speed) to 1-1 (when turbine and impeller speeds approximately equal. At car speed of 18 MPH. (depending on throttle position—see table), engagement of Direct Speed Clutch locks out the torque converter completely. The planetary transmission is controlled by the operator and provides the following gear ratios:

Neutral "N" Position—All bands and clutches are released so that no power is transmitted through transmission. Car can be moved freely if brakes not applied (will be held on by Anti-creep after they have once been applied but can be released by turning ignition off or by opening the throttle)

Low "L" Position (used primarily for extra power on steep grades, engine braking when descending grades, fast acceleration from standing start, or "rocking" car out of sand or snow). The Low and Forward bands are applied and power is transmitted through both planetary gear sets in tandem providing a total ratio of approximately 4.6-1 (converter torque multiplication of approximately 2-1 plus gear reduction of 2.3-1).

►*OPERATION CAUTION*—When Low used for engine braking on grades, **car speed should be brought below 40 MPH.** before moving selector lever to "L" position. When Low used for fast starts, selector lever should be moved to "D" position **before reaching car speed of 40 MPH. and without releasing accelerator.**

Drive "D" Position—Provides two ratios depending on car speed and throttle position as follows: **Intermediate**—*See Shift Speed Table for effective car speeds.* Forward Band & Multiple Disc Clutch applied so that forward planetary gear set is locked out and power is transmitted through rear planetary gear set providing a total ratiio of approximately 2.9-1 (converter torque multiplication of approximately 2-1 plus gear reduction of 1.4-1). **Direct**—*See Shift Speed Table for effective car speeds.* The Direct Speed Clutch engages and this locks out the Torque Converter and also the Planetary Gear unit to provide positive drive of 1-1 ratio.

Direct-to-Intermediate Downshift—At car speeds below 55 MPH. (Champion), 50 MPH. (Comm.), the transmission can be "kicked down" from Direct to Intermediate for additional power for hill climbing or passing by fully depressing accelerator pedal. Transmission will remain in Intermediate until throttle released momentarily or lock-out speed of 65 MPH. (Champ.), 58 MPH. (Comm.) reached.

►**Champion Note**—Transmission can be downshifted as above in the 18 MPH.-to-30 MPH. range as desired by a greater than normal accelerator pedal pressure.

Reverse "R" Position—Reverse band is applied in two stages ("boosted" oil pressure of 200 lbs. on servo inner piston applies band, shuttle valve then directs oil pressure to servo outer piston also to assist band in absorbing the high reaction torque). Power is transmitted through both planetary units in tandem to provide reverse rotation and a total ratio of approximately 4-1 (converter torque multiplication of 2-1 plus gear reduction of 2-1).

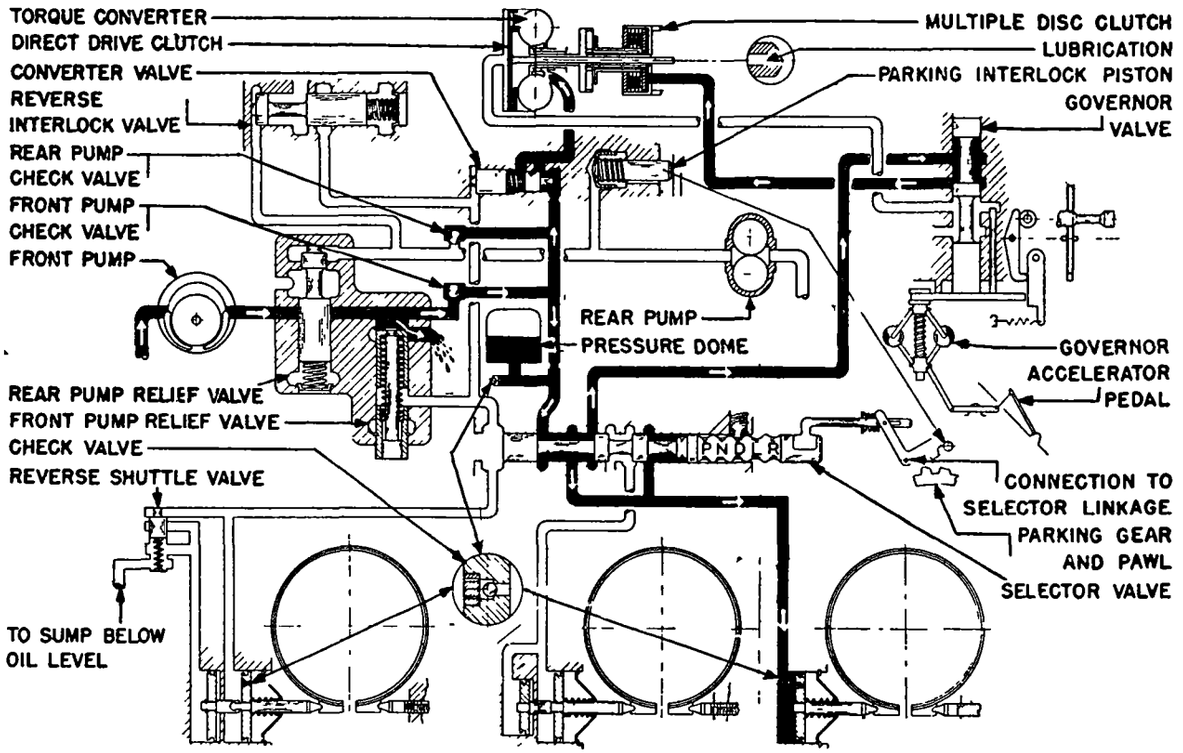

AUTOMATIC TRANSMISSION HYDRAULIC CIRCUITS—INTERMEDIATE DRIVE POSITION

Parking "P" Position—Similar to neutral position (all bands and clutches released) and in addition the parking pawl (linked to selector lever) is engaged in parking gear on rear end of mainshaft so that propeller shaft and rear wheels locked.

Car Shifting Speed Table

Upshift (Intermediate-to-Direct)

	Normal — Throttle	Wide-Open
Champion	22 MPH	65 MPH. max.
Commander	18 MPH.	58 MPH. max.

Downshift (Direct-to-Intermediate)

Champion	18 MPH.	①below 55 MPH.
Commander	12 MPH.	①below 50 MPH.

①—Forced "kick-down" downshift.

LUBRICATION

Check transmission oil level every 1000 miles and add oil as required to maintain level at "FULL" mark on dip-stick. Drain and replace oil at 15000 mile intervals or once a year.

Checking Oil Level—Oil must be warm (set parking brake, place selector lever in "L" position, idle engine until normal operating temperature reached). Remove inspection hole cover in front floor carpet over transmission case, clean all dirt from around inspection hole, check oil level with dip-stick gauge. **With engine idling and selector lever in "L" position,** add oil, as required, to bring level up to "FULL" on dipstick (1 pint between "Low" and "Full").

►*CAUTION—Do not fill above FULL mark.*

Recommended Oil—Use only **premium type 10W engine oil** (or premium type SAE 10-10W engine oil). Special fluids are not required.

Draining & Refilling—Oil must be warm (set parking brake, place selector lever in "L" position, idle engine until normal operating temperature reached). Stop engine, remove inspection hole cover in front floor carpet, clean all dirt from around inspection hole, remove oil level gauge dipstick. Drain transmission oil pan by removing drain plug at left front corner of pan. Remove converter housing lower cover plate, turn converter until drain plug down, drain converter by taking out this plug (draining facilitated by removing converter pressure take-off plug on left side of transmission case). Re-install all drain plugs, install converter housing cover plate. Install 5 quarts oil (Champion), 6 quarts of oil (Commander), through the dipstick hole on top of transmission case. Start engine and allow it to idle for approximately 1 minute with selector lever in "L" position to fill converter housing, then add three additional quarts of oil, finally check oil level **with engine idling and selector lever in "L" position,** add oil to bring level up to FULL mark on dipstick.

►*CAUTION—Capacity is approx. 9½ qts. (Champion), 11½ qts. (Comm.) but actual amount installed should be determined by oil level reading on dipstick.*

CONTINUED ON NEXT PAGE

STUDEBAKER AUTOMATIC TRANSMISSION (C nt.)

Oil Pan & Oil Screen Removal & Installation: Drain transmission case (see above).

Removal & Cleaning—Remove parking brake bellcrank from crossmember under transmission case (not necessary on Champion). Remove all oil pan capscrews, remove oil pan. Remove spring clip holding oil screen in screen housing on bottom of valve block assembly, remove screen and clean with compressed air.

Installation—Install oil screen in housing and see that spring clip installed properly to hold screen in place. Use a **new pan gasket but DO NOT use any type of sealing compound when installing pan** (heavy mineral grease or Lubriplate may be used to hold gasket in place). Tighten all oil pan mounting screws to 10-13 ft.lbs. Install parking brake bellcrank.

LINKAGE ADJUSTMENT

LINKAGE ADJUSTMENT: *CAUTION—All models not adjustable alike and 1951 Commander linkage change requires new adjustment procedure on these cars.*

Accelerator Linkage (Champion): Make certain that engine idle speed set to 500-550 RPM. (warm engine with choke valve open and fast idle inoperative).

1) Disconnect accelerator cross shaft-to-bellcrank rod by removing clevis pin at cross shaft end of rod. Disconnect wire at Anti-creep Switch on cross shaft bracket.

2) Hold contact plate on cross shaft lever firmly against end of Anti-creep Switch, measure distance between contact plate and cross shaft bracket. If this measurement not ¼", adjust switch by loosening locknut and turning switch in or out of bracket, tighten locknut after correct ¼" clearance secured. *NOTE*—If ¼" clearance cannot be secured by adjusting switch, disconnect accelerator cross shaft-to-transmission rod at transmission end and check push rod and cross shaft for interference. *Do not bend contact plate or cross shaft bracket to secure correct switch setting.*

3) Connect accelerator cross shaft-to-bellcrank rod by installing clevis pin but **do not** install cotter pin at this time. Make certain that carburetor throttle valve in fully closed position (stopscrew on low end of fast idle cam and choke valve wide open).

4) With accelerator control fully released, and carburetor throttle in fully closed slow idle position, check position of spring-loaded swivel on accelerator bellcrank end of carbureor throttle rod. Swivel should be close to **but not touching** the swivel sleeve on the carburetor side of the rod. If swivel position not correct, disconnect accelerator cross shaft-to-bellcrank rod by removing clevis pin, loosen locknut on bellcrank rod clevis, adjust clevis on rod until carburetor rod swivel position is correct, tighten clevis locknut, connect bellcrank rod and install clevis cotter pin.

5) Place selector lever in Park "P" position. Set Adjusting Tool J-4391 at maximum length, hook one end of tool over cross shaft lever to which the transmission rod is connected, hook opposite end of tool over upper right rear corner of battery box (this will rotate lever and partially open carburetor throttle). Shorten tool length by turning the turnbuckle until carburetor throttle valve is just wide open (at this point further movement will compress spring on throttle rod without changing throttle position). Leave tool in place to hold throttle linkage in this position while making adjustments (6).

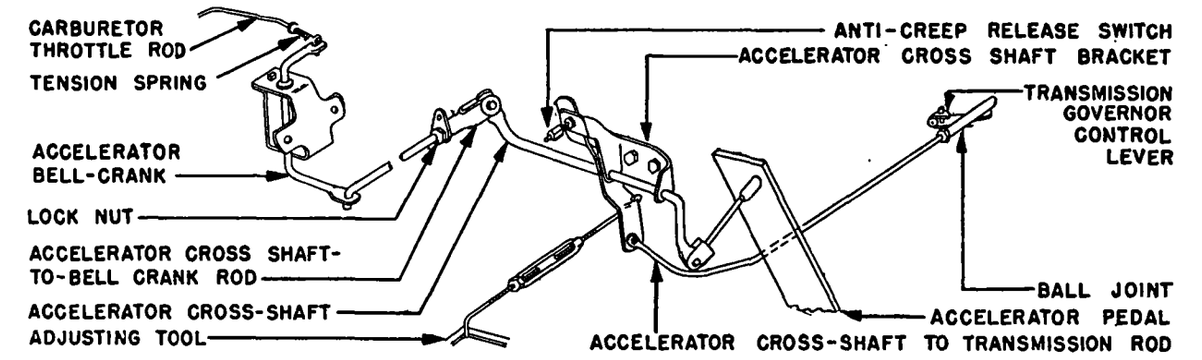

1950-51 CHAMPION ACCELERATOR LINKAGE

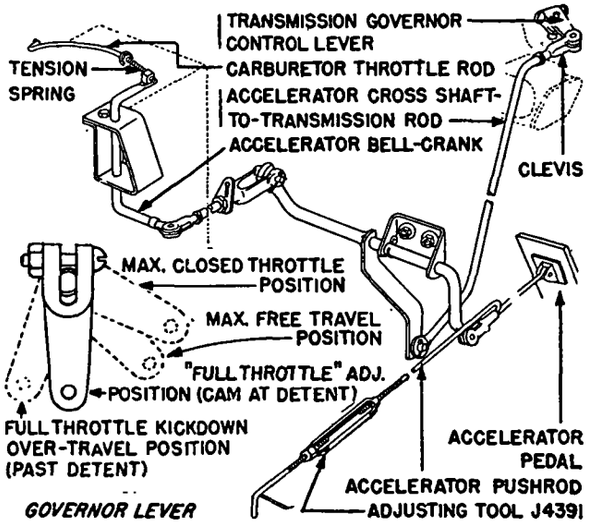

1950 COMMANDER ACCELERATOR LINKAGE

6) Disconnect accelerator cross shaft-to-transmission rod at ball joint on governor control lever at transmission case. Move governor control lever forward or clockwise until detent resistance is felt. Adjust rod length by loosening locknut and turning ball joint on rod end until rod can be connected to OUTER hole in lever without disturbing lever position (this is full throttle position). Connect rod. Remove adjusting tool from cross-shaft lever.

►*CAUTION—Governor lever has two holes and rod must be connected at OUTER hole. See Governor Lever Production Change Note for data on this new two-hole lever.*

7) Check entire linkage adjustment as follows: Depress accelerator pedal fully (CAUTION—floor mat must be in place), hold pedal in this position. Disconnect rod at governor control lever on transmission, see that lever is in extreme forward position. Without connecting rod, fully release accelerator pedal, position governor lever in line with rod ball joint and make certain that governor lever has at least ¼" free travel in forward direction from this point before spring pressure is felt. If this adjustment correct, connect rod to governor lever. If adjustment not correct (governor lever does not have full forward travel, or proper free travel), recheck entire linkage adjustment. If this does not correct trouble, check linkage for binding, distortion, or interference.

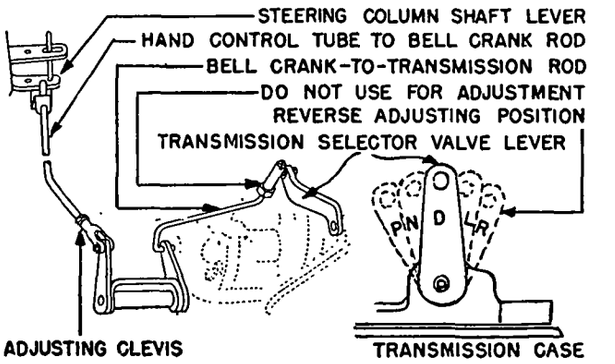

SELECTOR (HAND CONTROL) LINKAGE

Accelerator Linkage (1950 Commander): See that engine idle speed set to 500-550 RPM. (Warm engine with choke valve wide open and fast idle inoperative). Then proceed as follows:

1) Hook one end of adjusting tool J4391 on lower end of accelerator pedal pushrod, other end over lower right rear corner of battery box (see illustration). Adjust tool length by turning turnbuckle until carburetor throttle valve is just wide open (additional shortening of tool will cause compression of tension spring on bellcrank-to-carburetor throttle rod **which is not desired**).

2) With linkage positioned as above, disconnect control rod at governor lever on transmission case by taking out clevis pin, move governor control lever forward or clockwise until detent resistance is felt (see illustration). Adjust rod length by turning

C NTINUED ON NEXT PAGE

STUDEBAKER AUTOMATIC TRANSMISSION (C nt.)

clevis until clevis pin slips freely through hole in clevis and **outer hole** in lever. Install clevis pin but do not install cotter pin until final check completed.

►***CAUTION—Governor lever has two holes and rod must be connected at OUTER hole. See Governor Lever Production Change Note for data on this new two-hole lever.***

3) Remove adjusting tool from accelerator push-rod. With floor mat in place, fully depress accelerator pedal and hold pedal in this position. Remove clevis pin from governor control lever, make certain that lever is at forward end of travel. If it is not, see (5).

4) Release accelerator pedal. Remove clevis pin from governor control lever, make certain that lever has at least ¼" free travel in forward direction before spring pressure is felt. If it does not, see (5).

5) If governor lever does not have full forward travel (3 above), or if free travel is not correct (4 above), recheck entire linkage adjustment, check for binding, interference, or distortion in linkage. After correcting any trouble, **install clevis pin and cotter pin.**

Accelerator Linkage (1951 Commander):

CAUTION—New linkage used beginning Serial No. 8133626 (requires different connection for rod at Governor Control Lever). See step 6.

1) Make certain that engine idle speed set to 500-550 RPM (warm engine with choke valve wide open and fast idle inoperative).

2) Loosen Anti-Creep Release Switch locknut (on cross-shaft bracket), disconnect wire at switch, back off switch several turns for clearance.

3) See that accelerator is in fully released position and throttle stopscrew on low step of fast idle cam. Check clearance between end of cross shaft-to-carburetor rod and firewall (between end of rod and reinforcing rib on firewall). Clearance must be ⅛" minimum ¼" maximum. Adjust by loosening locknut at carburetor lever trunnion and adjusting rod.

4) Use special tool hooked over accelerator pedal shaft and into hole in cowl flange directly above wiring harness to hold carburetor throttle valve in wide open position (this tool must be made up in shop) or hold accelerator linkage in this wide open position as follows: Disconnect accelerator pull-back springs, place sufficient weight on accelerator pedal to fully open carburetor throttle valve but **make certain over-travel spring on cross-shaft-to-carburetor rod not compressed** (swivel sleeve on rod should just start to move away from washer).

5) Disconnect accelerator cross shaft-to-transmission rod ball joint from governor lever on tranmsission case. Examine Governor Lever on transmission case to make certain it is latest two-hole type (See Governor Lever Production Change Note) and install this new lever on transmissions prior to Serial No. SCO-31007.

6) Move governor lever forward (clockwise) until resistance of detent is felt, check rod adjustment. Ball joint stud should slip easily into proper hole in lever (CAUTION—see **different setting** for earlier and later cars below). Adjust rod, as necessary, by loosening locknut and turning ball joint on rod. Tighten locknut securely and connect rod but **do not install ball joint stud nut at this time.**

Governor Lever Connection

Cars before Serial No. 8133626 (first type accelerator linkage)—INNER hole.

Cars beginning Serial No. 8133626 (Revised accelerator linkage)—OUTER hole.

7) Release accelerator pedal (remove tool or weight from pedal and connect pull back springs).

Check linkage operation as follows:

8) See that floor mat in place, depress accelerator fully (kick-down position) and hold pedal in this position. Slip ball joint stud out of governor lever on transmission, see that lever is at **end of forward travel.** Reconnect ball joint.

9) Release accelerator pedal. Slip ball joint stud out of governor lever, see that lever has at least ¼" free travel in forward direction before spring pressure felt. Reconnect ball joint, install stud nut.

10) If lever does not have full forward travel (8 above) or if free travel not correct (9 above), check entire linkage for binding, distortion or interference, and correct as necessary. If cross shaft-to-transmission rod interferes with car floor pan, remove front splash pan and bend floor pan out of the way—**do not bend linkage** to correct interference. Check all linkage mounting bolts for tightness.

11) Adjust Anti-creep Release Switch by turning switch into bracket until switch plunger just contacts the plate. Install wire, turn on ignition, adjust switch in or out until a click is heard in the solenoid. Tighten switch locknut.

Selector (Hand Control) Linkage: All models adjusted similarly as follows:

1) Place selector lever in Reverse "R" position. Remove clevis pin from bellcrank end of steering column tube-to-bellcrank rod.

2) Measure length of bellcrank lever-to-transmission lever rod. This length must be 7 5/16" (all 1950 cars), 7 9/16" (1951 cars—see note below) measured from center of fixed end at bellcrank (forward) end of rod to center of adjustable joint at transmission (rear) end of rod. Adjust by loosening locknut and turning adjustable joint on rod.

►***1951 SETTING NOTE***—This 7 9/16" setting supersedes earlier specification of 7⅝" on 1951 cars. Tool J-4602 (for 7⅝" setting) can be used to make this adjustment if **ball joint is turned back one full turn** after having been set to 7⅝" with the tool (this will give 7 9/16" setting).

►***CAUTION—After rod length correctly set (above), DO NOT change rod length when making adjustments.***

3) Disconnect steering column tube-to-bellcrank rod by taking out clevis pin at bellcrank, move valve selector lever on transmission case to reverse (extreme rear) position. Adjust length of steering column tube-to-bellcrank rod by turning clevis on bellcrank end of rod until clevis pin enters hole in clevis and bellcrank freely (CAUTION—do not change length of bellcrank-to-transmission lever rod). Do not install clevis pin at this time.

4) Set selector lever on steering column in Parking "P" position, move valve selector lever on transmission case to park (extreme forward) position and check to see that parking pawl engaged (propeller shaft should be locked). Check adjustment by slipping clevis pin through clevis at rear end of steering column tube-to-bellcrank rod and bellcrank. If pin enters both holes freely, connect rod. If not, readjust as follows:

5) If adjustment not correct in parking position (4 above) after having been correctly set in reverse position (3 above), readjust rod by turning clevis **not more than ½ turn** in either direction for best possible compromise in both reverse and park position. If satisfactory setting not possible within these limits, check entire linkage for wear, looseness, or distortion.

ANTI-CREEP ADJUSTMENT: For adjustments other than Release Switch (part of linkage adjustment above), *see "Anti-Creep" in Brake Section.*

BAND ADJUSTMENT

BAND ADJUSTMENT: Check and adjust all bands (Forward, Low, Reverse) in same manner using Band Adjusting Tool J4285 (plug gauge) to check the band setting.

Checking Bands—Remove capscrew and copper gasket from pressure take-off hole in servo mechanism of band being checked (see illustration). Carefully screw the adjusting tool J4285 into this hole, noting that indicator plug in tool handle moves outward as tool is turned in. With correct setting, indicator plug will be flush with end of tool handle when shoulder on tool contacts transmission case (see CAUTION below). If indicator is not flush with tool handle in this position, adjust band.

►***CAUTION***—If indicator plug reaches a flush position before adjusting tool fully screwed into transmission case, **BACK OFF band adjusting screw on p-posite side of case 2 TURNS** before screwing tool fully into position. This is an indication that band adjustment was too tight and tool will be damaged if indicator plug forced beyond end of tool handle.

Adjusting Bands—With adjusting tool in place to check band setting (above), loosen locknut on band adjusting screw (see illustration), turn adjusting screw in until indicator plug in adjusting tool handle is just flush with end of handle, tighten locknut being careful that adjusting screw does not turn. Remove adjusting tool and replace capscrew using new copper gasket under screw head.

►***CAUTION—Do not use any type of sealing compound on this capscrew.***

TESTING HYDRAULIC UNITS

If transmission operation not satisfactory, check operation of oil pumps and control units by testing hydraulic control pressures.

Testing Tool Note—Pressure gauge and fittings for connecting gauge at various points on transmission are required for these tests. This equipment furnished as Tool No. J4270 (gauge & fittings).

►*TESTING CAUTION*—When making following tests, DO NOT run engine at speed greater than idle for more than 30 seconds with selector lever in "D," "L" or "R" and rear wheels stationary (will cause overheating of engine). DO NOT use white lead or any type of sealing compound when replacing pipe plugs.

Front Oil Pump Pressure: With engine stopped, remove Allen-head pipe plug in oil pan flange on front of transmission case, install pressure gauge fitting and connect gauge at this point. Connect electric tachometer to engine. Place selector lever in "P" or "N" position, start engine and bring speed up to 1000 RPM. At this speed gauge reading should be 60 lbs. minimum. Stop engine, disconnect gauge and replace pipe plug, tighten plug to 15-18 ft. lbs.

CONTINUED ON NEXT PAGE

STUDEBAKER AUTOMATIC TRANSMISSION (C nt.)

►*CAUTION—Do not use white lead or any type of sealing compound on these plugs.*

Forward Band Servo Pressure: With engine stopped, remove capscrew and copper washer from forward band servo coverplate (see illustration). Install pressure gauge fitting and connect gauge at this point. Connect electric tachometer to engine. With engine running, apply foot brake and hand brake firmly to hold car, move selector lever to "D" position. Gradually increase engine speed to 1000 RPM. At this speed gauge reading should be 60 lbs. minimum. Stop engine, disconnect gauge, replace capscrew using **new** copper washer, tighten screw to 28-33 ft. lbs.

►*See TESTING CAUTION above.*

Reverse Band Servo Pressure: With engine stopped, disconnect bellcrank-to-transmission selector valve lever rod at bellcrank, move selector valve lever on transmission to reverse "R" position. Remove capscrew and copper washer from reverse band servo cover (see illustration), install pressure gauge fitting and connect gauge at this point. Connect electric tachometer to engine. Apply foot brake and hand brake firmly to hold car **before starting engine.** Start engine and increase speed to 1000 RPM. At this speed gauge reading should be 160 lbs. minimum. Stop engine, disconnect gauge, replace capscrew using **new** copper gasket, tighten screw to 28-33 ft. lbs.

►*See TESTING CAUTION above.*

Low Band Servo Pressure: With engine stopped, remove capscrew and copper gasket from low band servo cover (see illustration), install pressure gauge fitting and connect gauge at this point. Connect electric tachometer to engine. With engine running, apply foot brake and hand brake firmly to hold car, move selector lever to "L" position. Increase engine speed to 1000 RPM. At this speed gauge reading should be 60 lbs. minimum. Stop engine, disconnect gauge, replace capscrew using **new** copper gasket, tighten screw to 28-33 ft. lbs.

►*See TESTING CAUTION above.*

Multiple Disc Clutch Pressure: With engine stopped, remove ⅛" pipe plug from mounting flange on rear face of extension housing on transmission case, install pressure gauge fitting and connect gauge at this point. Connect electric tachometer to engine. With engine running, apply foot brake and hand brake firmly to hold car, move selector lever to "D" position. Increase engine speed to 1000 RPM. At this speed, gauge reading should be 60 lbs. minimum. Stop engine, disconnect gauge, replace pipe plug, tighten plug to 15-18 ft. lbs.

►*See TESTING CAUTION above.*

Torque Converter Pressure: With engine stopped, remove ¼" pipe plug at torque converter pressure take-off point (see illustration), install pressure gauge fitting and connect gauge at this point (NOTE—selector valve lever rod may be disconnected for ease in making this connection). Connect electric tachometer to engine. Place selector valve lever in neutral "N" position. Run engine at 1000 RPM. At this speed, gauge reading should be 25-35 lbs. For further check, jack up rear wheels securely so they are free to rotate, place selector lever in drive "D" position, run engine at 1500 RPM.

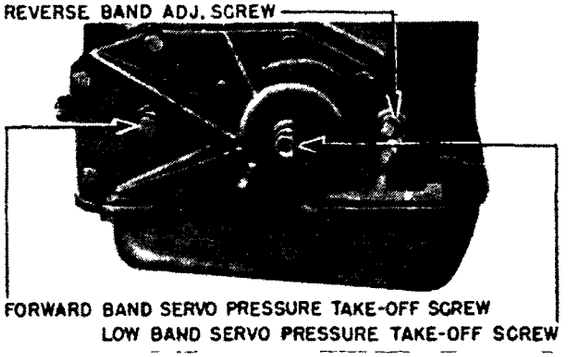

LEFT SIDE OF TRANSMISSION CHECKING & ADJUSTMENT POINTS

At this speed, gauge reading should likewise be 25-35 lbs. Stop engine, disconnect gauge, replace pipe plug, tighten plug to 6-7 ft. lbs.

►*CAUTION—Do not use white lead or any type of sealing compound on these plugs.*

Direct Drive Clutch Pressure: With engine stopped, remove Allen-head pipe plug in oil pan flange on rear of transmission case, install pressure gauge fitting and connect gauge at this point. Connect electric tachometer to engine. Block up rear end of car securely so that wheels are free to rotate. Run engine at idle speed, place selector lever in "D" position. Gauge reading should be 0 lbs. Increase engine speed to 1500 RPM. while watching the gauge. At approximately 1200 RPM., gauge should indicate rapid pressure rise (shift to direct drive) and gauge reading should then be 60 lbs. minimum. Decrease engine speed and again watch gauge. When speedometer indicates 10-12 MPH., gauge reading should drop to 0 (downshift to intermediate drive). Stop engine, disconnect gauge, replace pipe plug, tighten plug to 15-18 ft. lbs.

►*CAUTION—Do not use white lead or any type of sealing compound on these plugs.*

Rear Pump Pressure: With engine stopped, disconnect leads at Anti-creep Pressure Switch on rear of transmission, remove switch. Install pressure, gauge fitting and connect gauge at this point. Run engine with brakes set to hold rear wheels stationary. Gauge reading should be 0 lbs. with rear wheels not turning. Block up rear of car securely so that rear wheels are free to rotate. With engine idling, place selector lever in drive "D" position, increase engine speed while watching gauge. Pump pressure should build up steadily as indicated by increasing gauge reading, and should be 60 lbs. minimum at 20 MPH. Stop engine, disconnect gauge, re-install Anti-creep pressure switch and connect wiring.

►*CAUTION—Do not use white lead or any type of sealing compound when installing pressure switch.*

REMOVAL FROM CAR

►*CAUTION—Transmission Assembly and Torque Converter Assembly are removed SEPARATELY as follows:*

TRANSMISSION REMOVAL:

1) Drain oil from transmission case and torque converter housing. See LUBRICATION data.
2) Disconnect propeller shaft at front and rear ends

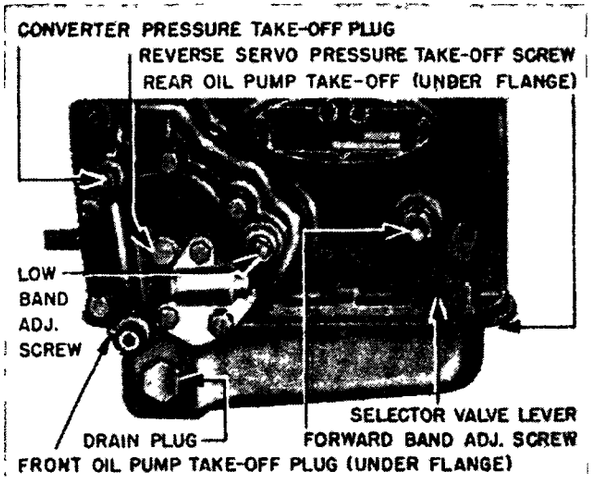

RIGHT SIDE OF TRANSMISSION

by taking out bearing cup U-bolts (CAUTION—wire bearing cups in place to prevent them dropping off), and removing nuts from center bearing support-to-crossmember studs. Move entire propeller shaft assembly to the rear and out of the way.
3) On Champion, disconnect parking brake, cable clevis at parking brake bellcrank. On Commander, disconnect parking brake forward cable from bellcrank on cross member, disconnect bellcrank bracket by taking out mounting bolts, move bellcrank and cable assembly to rear and fasten up out of the way.
4) Disconnect transmission control rods by taking out clevis pins at selector valve lever and governor control lever on transmission case.
5) Remove speedometer cable and pinion assembly from transmission. Disconnect Anti-creep cables from solenoid switch on rear of transmission, free Anti-creep harness from clip on transmission case.
6) Remove converter housing lower cover plate. Remove nuts from two lower transmission case-to-converter housing studs (accessible from within converter housing with cover off).
7) Place transmission lift with adapter in position under transmission case (see NOTE). Do not disturb adapter adjustment knobs after saddle-to-transmission oil pan flange alignment has once been set.
Lift & Adapter Note—Two types available: Model 63 (Lift Type Hoist J4385 & Adapter J4287), and Model 27 (Floor Type Hoist J3389 & Adapter J4287). This tool essential to maintain transmission alignment during removal and installation and to handle transmission weight of approximately 220 lbs.
8) Take out two upper transmission case-to-converter housing capscrews, install Pilot Studs No. J4284 in these holes.
9) Slide transmission assembly to rear out of converter housing and torque converter, then lower transmission and remove from beneath car.
NOTE—If main shaft oil transfer tube (in forward end of transmission mainshaft) does not come out with transmission, remove tube from converter using a long-nosed pliers.

C NTINUED N NEXT PAGE

STUDEBAKER AUTOMATIC TRANSMISSION (C nt.)

TORQUE CONVERTER REMOVAL (After transmission removed from car):

1) Take out starter mounting screws and pull starter forward until free of engine rear plate. Drain radiator sufficiently to remove upper radiator hose.

2) Disconnect converter housing air intake hose by loosening hose clamp at frame side rail and pulling hose free of clamp. Disconnect engine exhaust pipe at manifold, loosen bolts and nuts from clamp holding exhaust pipe to converter housing bracket.

3) Disconnect steering column tube-to-bellcrank rod by taking out clevis pin at bellcrank, disconnect both pull-back springs. Disconnect parking brake conduit from conduit hook on crossmember.

4) Place engine support saddle (see Note) under engine approximately 3-5" forward of engine rear plate, support engine weight with hydraulic jack under support saddle (hydraulic jack should be used to permit engine lowering for converter removal. **Support Saddle Note**—Saddle can be made up from iron or wood block capable of supporting 600 lbs. Dimensions for wood saddle made from 4" thick plank: Width 14½", Height 9¼" at front edge, 8¾" at rear (top surface should slant down ½" from front to rear). Center cut-out 9" wide and 7" high (so that saddle clears oil pan and weight is carried on oil pan flanges).

5) Raise engine so that weight carried on support saddle (above). Disconnect fender-to-crossmember brace, take out crossmember mounting bolts, remove engine mounting-to-crossmember bolt nuts and remove crossmember (leave engine mountings attached to converter housing).

6) Lower rear end of engine approximately 3" to provide clearance for converter housing removal.

►*CAUTION*—Do not allow oil pan to strike steering bellcrank and tie rod ends. If additional clearance required, loosen nuts holding bellcrank to engine front crossmember, drop bellcrank down.

7) Remove small filler plate on engine rear plate. Take out all converter housing-to-engine rear plate capscrews. Remove converter housing from dowels.

►***CAUTION—Use care not to damage or distort dowels or converter blower.***

8) Remove nuts and plain washers from converter mounting studs (on front of engine drive plate, accessible through filler plate cut-out in engine rear plate). Lift converter assembly out.

INSTALLATION IN CAR

►*NEW ENGINE CAUTION:* If new engine installed in car, make certain that engine has special flywheel bolts, No. 526851, required for use with Torque Converter. **Use of any other bolts will damage Torque Converter.** ***See "Replacement Engine" data in Studebaker Special Data.***

TORQUE CONVERTER INSTALLATION:

1) Align one of the two "o" marks on front face of converter assembly with "o" mark on engine drive plate, install converter on drive plate and install washers and nuts on mounting studs **loosely.**

►***CAUTION—Do not securely tighten nuts until step (3).***

2) Thoroughly clean mating surfaces of engine rear plate and converter housing, install converter housing (CAUTION—make certain that housing engages dowels and that dowels and converter blower are not damaged). Install top three housing-to-rear plate capscrews, then raise engine and install remaining housing capscrews, tighten all screws to 28-32 ft. lbs.

3) Position Converter Aligning Flange J4286 in bore of converter housing and over pump drive fingers on torque converter assembly, install two top transmission mounting capscrews to hold aligning flange in place. **Rotate torque converter assembly through two complete revolutions** to center assembly, then tighten all converter-to-drive plate nuts to 23-28 ft. lbs. (work through filler plate cut-out in engine rear plate). Install filler plate. Remove aligning flange.

4) Install crossmember on frame, lower engine and install nuts on rear engine mountings, connect fender braces.

5) Connect parking brake conduit to hook on crossmember. Connect steering column tube-to-bellcrank rod, install two pull-back springs. Connect exhaust pipe at engine manifold, tighten exhaust pipe-to-converter housing bracket bolts and nuts. Install converter housing air intake hose in clamp at frame side rail, tighten clamp screws. Connect upper radiator hose and re-install starter.

TRANSMISSION INSTALLATION (After Torque Converter installed):

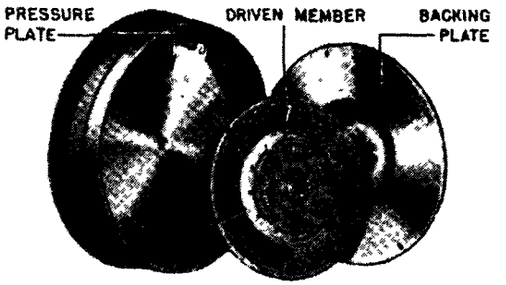

DIRECT SPEED CLUTCH

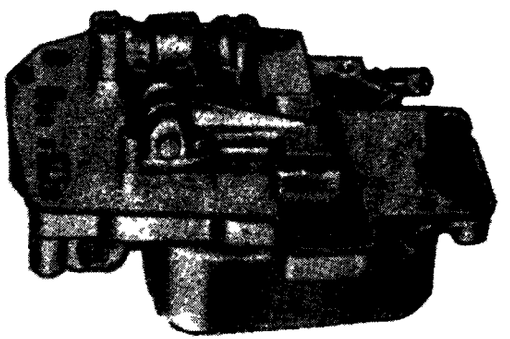

VALVE BLOCK ASSEMBLY

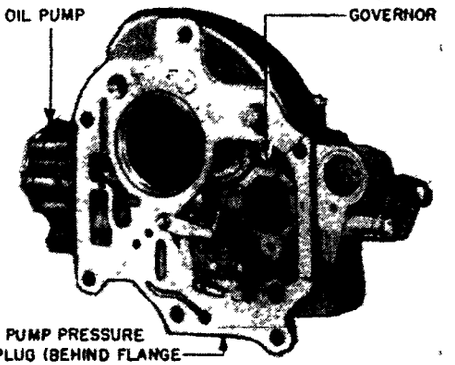

TRANSMISSION EXTENSION HOUSING

►***CAUTION—Splines on transmission shafts must be aligned with splines in Torque Converter as follows BEFORE attempting to install transmission.***

1) Align splines on transmission shafts with Spline Allgnment Fixture J4283. Loosen fixture thumbscrew, install fixture over shaft splines on front end of transmission case inserting fixture into transmission as far as possible and aligning positioning arm sector with one of lower transmission mounting studs, move arm and shaft (turn universal joint companion flange) until positioning pin slips easily over mounting stud, tighten thumbscrew to lock positioning arm in place on sector. Remove fixture from transmission case carefully and **without moving shaft splines out of position.** Install oil transfer tube in end of mainshaft.

2) Align splines in Torque Converter Assembly by installing alignment fixture (after positioning arm has been set in (1) above), working the fixture into the converter until all splines are lined up on the fixture. Rotate torque converter members and spline alignment fixture until positioning pin slips easily into transmission mounting stud hole **corresponding to same lower transmission case stud on which fixture was aligned in (1) above.** Remove fixture carefully and **without moving splines out of position.**

3) Install two Transmission Pilot Studs J4284 in upper transmission mounting screw holes in converter housing. Raise transmission assembly to correct height and angle (on special hoist), carefully slide transmission into place using pilot studs as a guide and using care not to disturb spline alignment (CAUTION—do not disturb universal joint companion flange position).

4) Remove pilot studs and install two upper mounting capscrews, install nuts on lower mounting studs, tighten all screws and nuts to 23-28 ft. lbs.

5) Install Anti-creep wiring harness and connect wires to Pressure Switch on transmission. Install speedometer pinion and cable assembly. Install parking brake bellcrank on crossmember and connect parking brake cable. Install propeller shaft, connect front and rear universal joints and center bearing support stud nuts.

6) Install transmission control rods (selector valve lever rod and governor control lever rod) and adjust linkage. ***See LINKAGE ADJUSTMENT data.***

7) Fill transmission with oil—***see LUBRICATION***—and check operation.

CARBURETOR INDEX

BALL & BALL CARBURETORS Page
All Models ..... See Carter (B&B)

BUICK CARBURETORS
Compound Carburetion 1507
Carter Compound Carb. 1511
Stromberg Compound Carb. 1509
Other Types See Carter & Stromberg

CARTER CARBURETORS
W1 Downdraft 1516
W1 Downdraft (Chevrolet) 1513
W1 Downdraft (Vacumeter) 1518
W1 Downdraft (Cast Iron) 1520
WA-1 Downdraft 1522
WE Downdraft 1526
WO Downdraft 1528
WCD Dual Downdraft 1538
WDO Dual Downdraft 1530
WDO (Vacumeter) 1534

CARTER JET SPECIFICATIONS
All Downdraft Types 1542

CARTER (B&B) CARBURETORS
B&B Updraft (Chevrolet) 1553
B&B Downdraft (1936) 1547
B&B Downdraft (1937-39) 1548
B&B Downdraft (1940-48) 1550

CARTER (B&B) JET SPECIFICATIONS
B&B Updraft 1554
B&B Downdraft 1554

CHANDLER-GR VES CARBURETORS Page
Ford & Mercury ..... See Holley
Lincoln ..... See Holley
A-2, AOC-2 Single Barrel 1564
A-25, AOC-25 Single Barrel 1563

CHANDLER-GROVES JET SPECIFICATIONS
A-2, A-25, AOC-2, AOC-25 1565

CHEVROLET CARBURETORS
Updraft Types 1553
Downdraft Types 1513

COMPOUND CARBURETION
1941-42 Buick 1507

DETROIT CARBURETORS
51 1566

FORD CARBURETORS
4 Cylinder 1567
6 Cylinder 1556
V-8 (Stromberg) 1578
V-8 (Holley) 1558
Lincoln (Stromberg) 1578
Lincoln (Holley) 1558, 60
Mercury (Holley) 1558, 60

HOLLEY CARBURETORS
Ford 6 Cyl. Type 1556
Ford V-8 AA-7/8, AA-1 1558
Lincoln AA-1 1558
Lincoln "Concentric" 1560
Mercury 1558

HOLLEY (C NTINUED) Page
Mercury "Concentric" 1560
A-25, AOC-25 1563
A-2, AOC-2 1564

HOLLEY JET SPECIFICATIONS
Ford, Lincoln, Mercury 1562
Other Types 1565

MARVEL CARBURETORS
B, B2, B2SU, BB Downdraft 1568
C2, C3 Downdraft 1570
CD1B, CD2B Downdraft 1571
TSX (Ford 4 Cyl.) 1567

MARVEL JET SPECIFICATIONS
Updraft 1567
Downdraft 1572

STROMBERG CARBURETORS
AX-2 Downdraft 1583
AA-1, AA-2 Downdraft 1585
AA-25 Downdraft 1586
AAOV-1 Downdraft 1587
AAO-161 Downdraft 1584
AAV-1, AAV-2 Downdraft 1588
AAV-16, AAV-26 Downdraft 1590
AAV-167, AAV-267 Downdraft 1590
AAV-25 Downdraft 1586
AAVS-2 Downdraft 1588
BXO-26 Downdraft 1592
BXOV-26 Downdraft 1593

STROMBERG (C NTINUED) Page
BXV-3, BXVD-3 Downdraft 1595
EX-22 Downdraft 1574
EX-23 Downdraft 1577
EX-32 Downdraft 1574
EX-32 (Pierce Arrow 12) 1575
EXV-2, EXV-3 Downdraft 1576
EE-7/8, EE-1 Downdraft 1578
EE-14, EE-15 Downdraft 1579
EE-16 Downdraft 1580
EE-22, EE-3 Downdraft 1581
EE-23 Downdraft 1582
EE-25 Downdraft 1579
UU-3 Updraft 1573

STROMBERG JET SPECIFICATI NS
Updraft 1573
Downdraft 1596

TILLOTSON CARBURET RS
D-1E Downdraft 1599
DY-1A Downdraft 1600
DY-9A, DY-9B Downdraft 1601
M10B, M10BX Updraft 1599
U-1A Downdraft 1602
U-1B Downdraft 1603

ZENITH CARBURET RS
61-A5 1605
28BV10 1604

ZENITH JET SPECIFICATI NS
All Types 1605

CARBURETOR CAR APPLICATION INDEX

Car Model		Carburetor Make	Carburetor Model No.	Page No.
AMERICAR				
All Models				See Willys
AUBURN				
1936-37	6-54	Stromberg	EX-22	1574
1936-37	8-52	Stromberg	EE-1	1578
1936-37	8-52 Supercharged	Stromberg	EX-32	1574
AUSTIN				
All Models				See Bantam
BANTAM				
1937-38	60	Tillotson	M-10B	1599
1939	60	Tillotson	M-10BX	1599
1940-41	63, 65 Super 4	Zenith	61A5	1605
BUICK				
1936	40	Stromberg	EE-1	1578
1936	60, 80, 90	Stromberg	EE-22	1581
1937	40	Stromberg	AA-1	1585
1937	40	Marvel	BD-1 10-1749, 50	1569
1937	60, 80, 90	Stromberg	AA-2	1585
1937	60, 80, 90	Marvel	BD-1S 10-1751, 52	1569

Car Model		Carburetor Make	Carburetor Model N .	Page No.
BUICK (Continued)				
1938	40	Stromberg	AAV-1	1588
1937-38	40	Marvel	CD-1B 10-1796, 97	1571
1938	60, 80, 90	Stromberg	AAV-2	1588
1937-38	60, 80, 90	Marvel	CD-2B 10-1798, 99	1571
1939	40	Carter WDO Vacm.	419-S, 40-S	1534
1939	60, 80, 90	Stromberg	AAV-26	1590
1940	40, 50	Carter WDO Vacm.	440-S, 74-S	1534
1940	40, 50	Stromberg	AAV-16	1590
1940	60, 70, 80, 90	Carter WDO Vacm.	448-S	1534
1940	60, 70, 80, 90	Stromberg	AAV-26	1590
1941	All Models	Compound Carburetion		1507
1941	40 Std. Equip.	Carter WCD	487-S	1538
1941	40 Std. Equip.	Stromberg	AAV-16	1590
1941 Early	40 Optl., 50 Std.	Carter WCD	509-S & 510-S	1511
1941 Late	40 Optl., 50 Std.	Carter WCD	528-S & 529-S	1511
1941	40 Optl., 50 Std.	Stromberg	AAV-16 & AA-1	1509
1941 Early	60, 70, 90	Carter WCD	490-S & 491-S	1511
1941 Late	60, 70, 90	Carter WCD	533-S & 534-S	1511

C NTINUED ON NEXT PAGE

CARBURETOR CAR APPLICATION INDEX

Car Model	Carburetor Mak	Carburetor Model No.	Page No.
BUICK (C ntinu d)			
1941 60, 70, 90	Stromberg	AAV-16 & AA-1	1509
1942 Early All Models	Compound Carburetion		1507
1942 Early 40 Std. Equip	Carter WCD	487-S	1538
1942 40 Std., Late 50	Stromberg	AAV-16	1590
1942 40 Optl., Early 50	Carter WCD	528-S & 529-S, 43-S	1511
1942 40 Optl., Early 50	Stromberg	AAV-16 & AA-1	1509
1942 Late 40, 50	Carter WCD	551-S	1538
1942 Early 60, 70, 90	Carter WCD	533-S & 534-S, 44-S	1511
1942 Late 60, 70, 90	Carter WCD	549-S	1538
1942 Early 60, 70, 90	Stromberg	AAV-16 & AA-1	1509
1942 Late 60, 70, 90	Stromberg	AAV-26	1590
1946-47 40, 50	Carter WCD	608-S	1538
1946-47 40, 50	Stromberg	AAV-16	1590
1946-47 70	Carter WCD	609-S	1538
1946-47 70	Stromberg	AAV-26	1590
1947 Late 40, 50	Carter WCD	608-SA	1538
1947 Late 70	Carter WCD	609-SA	1538
1948 40, 50	Carter WCD	608-SC	1538
1948 40, 50	Carter WCD	663-S	1538
1948 40, 50	Stromberg	AAV-167	1590
1948 70	Carter WCD	609-SC	1538
1948 70	Carter WCD	664-S	1538
1948 70	Stromberg	AAV-267	1590
CADILLAC			
1936 60, 70, 75 V8	Stromberg	EE-25	1579
1936 80, 85 V12	Detroit	(2) 51	1566
1936 90 V16	Detroit	(2) 51	1566
1937 60, 65, 70, 75 V8	Stromberg	AA-25	1586
1937 85 V12, 90 V16	Detroit	(2) 51	1566
1938 60, 60S V8	Stromberg	AAV-25	1586
1938 65, 75 V8	Stromberg	AAV-25	1586
1938 90 V16	Carter WDO	407-S, 408-S	1530
1939 60S, 61, 75 V8	Stromberg	AAV-26	1590
1939-40 90 V16	Carter WDO	407-S, 408-S	1530
1940 V8 All Models	Stromberg	AAV-26	1590
1941 V8 All Models	Carter WDO Vacm	506-S	1534
1941 V8 All Models	Stromberg	AAV-26	1590
1942 V8 All Models	Carter WCD	486-S	1538
1942 V8 All Models	Stromberg	AAV-26	1590
1946-47 V8 All Models	Carter WCD	595-S	1538
1946-47 V8 All Models	Stromberg	AAV-26	1590
1948 V8 All Series	Carter WCD	595-SA	1538
1948 V8 All Series	Stromberg	AAV-26	1590
CHEVROLET			
1936 Early FA,FB,FC,FD; R	Carter W1	319-S	1513
1936 Late FA,FB,FC,FD; R	Carter W1	334-S	1513
1936 "V" Econ. Engine	Carter W1	335-S	1513
1937 GA,GB,GC; S Trk	Carter W1	346-S	1513
1937-38 "V" Econ. Engine	Carter W1	358-S	1513
1938 HA,B,C,D,E; T Trk	Carter W1	391-S	1513
1937-38 C-O-E Truck	Carter (BB)	376-S, 412-S	1553
1939 JA, B, C, D, E; V Trk	Carter W1	420-S	1513
CHEVROLET (Continued)			
1939 "V" Econ. Engine	Carter W1	434-S	1513
1939 VE-H C-O-E Truck	Carter (BB)	412-S, 447-S	1553
1940 KA,H,B,C,D,E; W Trk	Carter W1	420-S	1513
1940 "V" Econ. Engine	Carter W1	434-S	1513
1940 WE-H C-O-E Truck	Carter (BB)	447-S	1553
1940 Dubl-Duti Trucks	Carter (BB)	447-S	1553
1941 Pass. Cars & Trucks	Carter W1	483-S, 574-S	1513
1941 C-O-E Trucks	Carter (BB)	489-S	1553
1941 AJ Dubl-Duti Truck	Carter (BB)	489-S	1553
1941 With Econ. Engine	Carter W1	492-S	1513
1942 Pass. Cars & Trucks	Carter W1	483-S, 574-S	1513
1942 With Econ. Engine	Carter W1	492-S	1513
1942 C-O-E Trucks	Carter (BB)	517-S	1553
1946-47 Pass. Cars	Carter W1	574-S	1513
1946-47 With Econ. Engine	Carter W1	616-S	1513
1946-47 Trucks (exc. COE)	Carter W1	574-S	1513
1946-47 C-O-E Trucks	Carter (BB)	517-S	1553
1948 Pass. Cars	Carter W1	574-S	1513
1948 With Econ. Engine	Carter W1	616-S	1513
1948 Trucks (Downdraft)	Carter W1	574-S	1513
1948 Trucks (Updraft)	Carter (BB)	517-S, 699-S	1553
CHRYSLER			
1936 C7 Six	Carter (B&B)	E6G1	1547
1936 C8, C9 Eight	Stromberg	EXV-3	1576
1936 C10, C11 Imp. Eight	Stromberg	EE-22	1581
1937 Early C16 Six	Carter (B&B)	E6I1	1548
1937 Late C16 Six	Carter (B&B)	E6K1, 2, 3, 4	1548
1937 C14, C15 Eight	Stromberg	AAOV-1	1587
1937 C14 Eight	Carter WDO	373-S	1530
1937 C17 Airflow Eight	Stromberg	EE-22	1581
1938 C18 Six	Carter (B&B)	E6M1	1548
1938 C19, C20 Eight	Stromberg	AAV-2	1588
1939 C22 Six	Carter (B&B)	E6N1, E6N2	1548
1939 C23, C24 Eight	Stromberg	AAV-2	1588
1940 C25 Six	Carter (B&B)	E6S1, 1*, 2	1550
1940 C26, C27 Eight	Stromberg	AAV-2	1588
1941 C28 Six Std	Carter (B&B)	E6S2, S3, W1	1550
1941 C28 Six Fluid Drive	Carter (B&B)	EA1	1550
1941 C28 Six Vac. Trans	Carter (B&B)	E6T1,T2,U1,U2	1550
1941 C30, C33 Eight	Stromberg	AAV-2	1588
1942 C34 Six Std	Carter (B&B)	EE1	1550
1942 C34 Six Fluid Drive	Carter (B&B)	EF1	1550
1942 C34 Six Vac. Trans	Carter (B&B)	EG1	1550
1942 C36, C37 Eight	Stromberg	AAV-2	1588
1946-47 C38 Six Std	Carter (B&B)	EX1	1550
1946-47 C38 Six Hydr. Trans	Carter (B&B)	EV1	1550
1946-47 C39, C40 Eight	Carter (B&B)	E7A1	1550
1946-47 C39, C40 Eight	Stromberg	AAVS-2	1588
1948 C38 Six Std. Trans	Carter (B&B)	EX1	1550
1948 C38 Six Hydr. Trans	Carter (B&B)	EV1	1550
1948 C39, C40 Eight	Stromberg	AAVS-2	1588
1948 C39, C40 Eight	Carter (B&B)	E7A1	1550

CARBURETOR CAR APPLICATION INDEX

Car Model		Carburetor Make	Carburetor Model No.	Page No.
CORD				
1936-37	810, 812	Stromberg	EE-15	1579
1937	812 Supercharged	Stromberg	AA-25	1586
CROSLEY				
1939-40	A	Tillotson	DY-1A	1600
1941	CB41	Tillotson	DY-1A	1600
1942	CB42	Tillotson	DY-1A	1600
1947	CC47	Tillotson	DY-9A, 9B	1601
1948	CC	Tillotson	DY-9B	1601
DE SOTO				
1936	S1, S2	Carter (B&B)	E6G1	1547
1937 Early	S3	Carter (B&B)	E6I1	1548
1937 Late	S3	Carter (B&B)	E6K1, 2, 3, 4	1548
1938	S5	Carter (B&B)	E6M1, L1	1548
1939	S6	Carter (B&B)	E6N1, E6N2	1548
1940	S7	Carter (B&B)	E6N2, 3	1550
1941	S8 Standard	Carter (B&B)	E6N3, S2, S3	1550
1941	S8 Fluid Drive	Carter (B&B)	EB1	1550
1941	S8 Simpl. Trans.	Carter (B&B)	E6V1, U1, U2	1550
1942	S10 Standard	Carter (B&B)	EE1	1550
1942	S10 Fluid Drive	Carter (B&B)	EF1	1550
1942	S10 Simpl. Trans.	Carter (B&B)	EG1	1550
1946-47	S11 Std. Trans.	Carter (B&B)	EX1	1550
1946-47	S11 Hydr. Trans.	Carter (B&B)	EV1	1550
1947-48	S11 Fluid Drive	Stromberg	BXVD-3	1595
1948	S11 Std. Trans.	Carter (B&B)	EX1	1550
1948	S11 Hydr. Trans.	Carter (B&B)	EV1	1550
DODGE				
1936-37	D2 ('36), D5 ('37)	Stromberg	EXV-2	1576
1938	D8	Stromberg	EXV-2	1576
1939-40	D11 ('39), D14,17 ('40)	Stromberg	BXV-3	1595
1941	D19 Standard	Stromberg	BXV-3	1595
1941	D19 Fluid Drive	Stromberg	BXVD-3	1595
1942	D22 Standard	Stromberg	BXV-3	1595
1942	D22 Fluid Drive	Stromberg	BXVD-3	1595
1946-47	D24 Std.	Stromberg	BXV-3	1595
1946-47	D24 Fluid Drive	Stromberg	BXVD-3	1595
1946-47	D24 Fluid Drive	Carter (B&B)	D6J1	1550
1948	D24 Std. Equip.	Stromberg	BXV-3	1595
1948	D24 Fluid Drive	Stromberg	BXVD-3	1595
1948	D24 Fluid Drive	Carter (B&B)	D6J1	1550
DUESENBERG				
1936-37	J	Stromberg	EE-3	1581
1936-37	SJ Supercharged	Stromberg	UU-3	1573
FORD				
1936	V8 All Models	Stromberg	EE-1	1578
1937	73, 4, 5 '60' V8	Stromberg	EE-⅞	1578
1937	77, 8, 9 '85' V8	Stromberg	EE-1	1578
1938	82A, C, Y '60' V8	Stromberg	EE-⅞	1578
1938 Early	81 Models '85' V8	Stromberg	EE-1	1578
1938 Late	81 Models '85' V8	Holley-Ford		1558
FORD (Continued)				
1939 Early	922 Models '60' V8	Stromberg	EE-⅞	1578
1939 Late	922 Models '60' V8	Holley-Ford		1558
1939	91 Models '85' V8	Holley-Ford		1558
1940	022 Models '60' V8	Holley-Ford		1558
1940	01 Models '85' V8	Holley-Ford		1558
1941	4 Cylinder Models	Marvel-Schebler	TSX	1567
1941	6 Cylinder Models	Holley-Ford		1556
1941	V8 '90' Models	Holley-Ford		1558
1942	4 Cylinder Models	Marvel-Schebler	TSX	1567
1942	6 Cylinder Models	Holley-Ford		1556
1942	V8 '90' Models	Holley-Ford		1558
1942-45	Jeep, Army GPW	Carter WO	539-S	1528
1944-45	V8 '100' Truck	Holley-Ford		1558
1946-47	6 Cyl. Pass. Cars	Holley-Ford		1556
1946-47	V8 Pass. Cars	Holley-Ford		1558
1946-47	Trucks (V8)	Holley-Ford		1558
1946-47	Trucks (6 Cyl.)	Holley-Ford		1556
1948	6 Cyl. Pass. Cars	Holley-Ford		1556
1948	V8 Pass. Cars	Holley-Ford		1558
1948	Trucks (6 Cyl. & V8)	Holley-Ford		1558
1949	6 Cyl. Pass. Cars	Holley-Ford		1558
1949	V8 Pass. Cars	Holley-Ford		1558
FRAZER				
1947	F-47, F-47C	Carter WA-1	610S,22S,22SA	1522
1947	F-47, F-47C	Carter W1	574-S	1513
1947-48	All Models	Carter WA-1	622-S, SA, SB	1522
1947-48	All Models	Carter W1	574-S	1513
1948	Manhattan (Optl.)	Carter WCD	685-S, SA	1538
GRAHAM				
1936	80, 80A Crusader	Marvel	B2SU 10-1673, 90	1568
1936	90, 90A Cavalier	Marvel	B2 10-1678, 91	1568
1936	110 Supercharger	Marvel	B3 10-1680, 92	1568
1937	85 Crusader	Marvel	B2SU 10-1690	1568
1937	95 Cavalier	Marvel	B2 10-1691	1568
1937	116, 120 Supercharger	Marvel	B3 10-1744	1568
1938-39	96	Marvel	C2 10-1808	1570
1938-39	97 Supercharger	Marvel	C3 10-1809	1570
1940	103	Carter WA-1	472-S	1522
1940	107 Supercharger	Carter WA-1	473-S	1522
1940	109 Hollywood Schgr.	Carter WDO	488-S	1530
1941	109 Hollywood Schgr.	Carter WDO	488-S	1530
1941	113 Hollywood	Carter WA-1	472-S	1522
HUDSON				
1936	63 Six	Carter W1	329-S	1516
1936	64, 5, 6, 7 Eight	Carter W1	330-S	1516
1937	73 Six	Carter WDO	344-S, 377-S	1530
1937	74, 5, 6, 7 Eight	Carter WDO	344-S, 377-S	1530
1938	89 '112' Six	Carter W1 Vacm.	411-S, 17-S	1518
1938	83 Six	Carter WDO	402-S	1530
1938	84, 5, 7 Eight	Carter WDO	402-S	1530

CONTINUED ON NEXT PAGE

CARBURETOR CAR APPLICATION INDEX

Car Model		Carburetor Make	Carburetor Model No.	Page No.
HUDSON (Continued)				
1939	90 '112' Six	Carter	W1 Vacm	437-S, 38-S 1518
1939	90, 98 Business Cars	Carter	W1 Vacm	437-S, 38-S 1518
1939	91 Pacemaker Six	Carter	W1 Vacm	437-S, 38-S 1518
1939 Early	92 Six	Carter	W1 Vacm	437-S, 38-S 1518
1939 Late	92 Six	Carter	WDO Vacm	430-S 1534
1939	93 Cntry. Club Six	Carter	WDO Vacm	430-S 1534
1939	95, 97 Eight	Carter	WDO Vacm	430-S 1534
1940	40P, 40T Six	Carter	WA-1 Vacm	454-S 1522
1940	40, 48 Business Cars	Carter	WA-1 Vacm	454-S 1522
1940 Early	41, 43 Six	Carter	WDO Vacm	430-SV 1534
1940 Late	41, 43 Six	Carter	WDO Vacm	461-S 1534
1940	44, 45, 47 Eight	Carter	WDO Vacm	455-S 1534
1941	10, 18 Business Cars	Carter	WA-1 Vacm	454-S 1522
1941 Early	11, 12 Six	Carter	WDO Vacm.	461-S 1534
1941 Late	11, 12 Six	Carter	WDO Vacm.	501-S 1534
1941 Early	14, 15, 17 Eight	Carter	WDO Vacm	455-S 1534
1941 Late	14, 15, 17 Eight	Carter	WDO Vacm	502-S 1534
1942	20, 28 Business Cars	Carter	WA1 Vacm.	454-S 1522
1942	21, 22 Six	Carter	WDO Vacm.	501-S 1534
1942	24, 25, 27 Eight	Carter	WDO Vacm.	502-S 1534
1946	51, 52, 58 Six	Carter	WDO Vacm.	501-S 1534
1946	53, 54 Eight	Carter	WDO Vacm.	502-S 1534
1947	171, 172, 178 Six	Carter	WDO Vacm.	501-S 1534
1947	173, 174 Eight	Carter	WDO Vacm.	502-S 1534
1948	481, 482 Six	Carter	WDO Vacm	647-S 1534
1948	483, 484 Eight	Carter	WDO Vacm	648-S 1534
HUPMOBILE				
1936	618-G Six	Carter	W1	333-S 1516
1936	621-N Eight	Carter	WDO	317-S 1530
1938-39	822-E, 922-E Six	Carter	W1 Vacm	398-S 1518
1938-39	825-H, 925-H Eight	Carter	WDO	399-S 1530
1939-40	R Skylark Six	Carter	W1 Vacm	398-S 1518
JEEP				
1942-45	Ford GPW & Willys MB	Carter	WO	539-S 1528
Later Models				See Willys
KAISER				
1947	K-100, K-101	Carter	WA-1	610S,22S,22SA 1522
1947	K-100, K-101	Carter	W1	574-S 1513
1947-48	All Models	Carter	WA-1	622-S, SA, SB 1522
1947-48	All Models	Carter	W1	574-S 1513
1948	Custom (Optl.)	Carter	WCD	685-S, SA 1538
LAFAYETTE				
All Models				See Nash-Lafayette
LA SALLE				
1936	36-50	Stromberg	EE-15	1579
1937	37-50 V8	Stromberg	AA-25	1586
1937	37-50 V8	Carter	WDO	374-S 1530
1938	38-50 V8	Carter	WDO	392-S 1530
1939	39-50 V8	Carter	WDO	423-S 1530
1940	40-50, 52 V8	Carter	WDO Vacm	460-S 1534
LINCOLN				
1935-40	V-12	Stromberg	EE-22	1581
LINCOLN (ZEPHYR)				
1936	H Zephyr	Stromberg	EE-1	1578
1937	HB Zephyr	Stromberg	EE-1	1578
1938 Early	86 H Zephyr	Stromberg	EE-1	1578
1938 Late	86 H Zephyr	Holley-Ford		1558
1939	96H Zephyr	Holley-Ford		1558
1940	06H Zephyr & Cont'l	Holley-Ford		1558
1941	16H Zephyr & Cont'l	Holley-Ford		1558
1941	168H Custom	Holley-Ford		1558
1942	26H Zephyr & Cont'l	Holley-Ford		1558
1942	268H Custom	Holley-Ford		1558
1946-47	66H Lincoln & Cont'l	Holley-Ford		1558
1948	V12 Lincoln & Cont'l	Holley-Ford		1558
1949	9EH, 9EL V8	Holley-Ford		1560
MERCURY				
1939	99A V8	Holley-Ford		1558
1940	09A V8	Holley-Ford		1558
1941	19A V8	Holley-Ford		1558
1942	29A V8	Holley-Ford		1558
1946-47	69M V8	Holley-Ford		1558
1948	89M V8	Holley-Ford		1558
1949	9CM V8	Holley-Ford		1560
NASH				
1936	3640 '400'	Stromberg	EX-22	1574
1936	3620 Amb. Six	Stromberg	EX-32	1574
1936	3640A '400' Six	Stromberg	AX-2	1583
1936	3680 Amb. Eight	Stromberg	EE-1	1578
1937	3720 Amb. Six	Stromberg	EX-32	1574
1937	3780 Amb. Eight	Stromberg	EE-1	1578
1938	3820 Amb. Six	Marvel	C2 10-1802	1570
1938	3880 Amb. Eight	Stromberg	EE-1	1578
1939	3920 Amb. Six	Carter	WA-1	435-S 1522
1939	3980 Amb. Eight	Carter	WDO	436-S 1530
1940	4020 Amb. Six	Carter	WA-1	435-S 1522
1940	4080 Amb. Eight	Carter	WDO	465-S 1530
1941	4140 '600' Six	Carter	(B&B)	513-S 1550
1941	4160 Amb. Six	Carter	WA-1	435-S 1522
1941	4180 Amb. Eight	Carter	WDO	511-S 1530
1942	4240 '600' Six	Carter	(BB)	513-S 1550
1942	4260 Amb. Six	Carter	WA-1	464-S 1522
1942	4280 Amb. Eight	Carter	WDO	538-S 1530
1946	4640 '600' Six	Carter	WA-1 Vacm	611-S 1522
1946	4660 Amb. Six	Carter	WA-1	464-S 1522
1947	4740 '600' Six	Carter	WA-1 Vacm.	611-S 1522
1947	4760 Amb. Six	Carter	WA-1	464-S 1522
1948	4840 '600' Six	Carter	WA-1 Vacm	662-S, SA 1522
1948	4860 Amb. Six	Carter	WA-1	464-S 1522

CARBURETOR CAR APPLICATION INDEX

Car Model		Carburetor Make	Carburetor Model No.	Page No.
NASH-LAFAYETTE				
1936	3610	Marvel	B10-1603	1568
1936 Late	3610	Stromberg	AX-2	1583
1937	3710	Stromberg	AX-2	1583
1938	3810	Stromberg	AX-2	1583
1939	3910	Stromberg	EE-1	1578
1940	4010	Carter WDO	458-S	1530
Later Models				See Nash
OLDSMOBILE				
1936	F-36 Six	Carter W1	327-S, 39-S, 42-S	1516
1936	L-36 Eight	Carter WDO	328-S, 341-S	1530
1937	F-37 Six	Carter W1	351-S, 385-S	1516
1937	L-37 Eight	Carter WDO	345-S, 67-S, 86-S	1530
1938	F-38 Std. Equip.	Carter W1	385-S	1516
1938	F-38 Special Equip.	Carter W1 Vacm	388-S	1518
1938 Early	L-38 Eight	Carter WDO	386-S	1530
1938 Late	L-38 Eight	Carter WDO Vacm	389-S	1534
1939 Early	F, G-39 Six Std. Equip.	Carter W1	385-S	1516
1939 Late	F, G-39 Six Std. Equip.	Carter WA-1	426-S	1522
1939	F, G-39 Six Spec. Equip.	Carter WA-1 Vacm	425-S	1522
1939	L-39 Eight	Carter WDO Vacm	389-S	1534
1940	F, G-40 Six Std. Equip.	Carter WA-1 Vacm	466-S	1522
1940	F, G-40 Six Spec. Equip.	Carter WA-1 Vacm	467-S	1522
1940	L-40 Eight Std. Equip.	Carter WDO Vacm	389-S	1534
1940	L-40 Eight Spec. Equip.	Carter WDO Vacm	471-S	1534
1941	66, 76, 96 Six Std.	Carter WA-1 Vacm	504-S	1522
1941	66, 76, 96 Six Special	Carter WA-1 Vacm.	481-S	1522
1941	68, 78, 98 Eight Std.	Carter WDO Vacm.	503-S	1534
1941	68, 78, 98 Eight Special	Carter WDO Vacm.	480-S	1534
1942	66, 76 Std.	Carter WA-1 Vacm	504-S	1522
1942	66, 76 Six Std. Equip.	Carter W1 Vacm	523-S	1520
1942	66, 76 Six Spec. Equip.	Carter WA1 Vacm.	481-S	1522
1942	68, 78, 98 Eight Std.	Carter WDO Vacm.	503-S	1534
1942	68, 78, 98 Eight Special	Carter WDO Vacm.	480-S	1534
1946-47	66, 76 Std.	Carter WA-1 Vacm.	504-S	1522
1946-47	66, 76 Spec. (H-D)	Carter WA-1 Vacm.	481-S	1522
1946-47	68, 78, 98 Std.	Carter WDO Vacm.	503-S	1534
1946-47	68, 78, 98 Spec. (H-D)	Carter WDO Vacm.	480-S	1534
1947	68, 78, 98 Eight (H-D)	Carter WCD	665-S	1538
1948	66, 76 Six Std.	Carter WA-1 Vacm	504-S	1522
1948	66, 76 Spec. (H-D)	Carter WA-1 Vacm	651-S	1522
1948	68, 78 Eight Std.	Carter WDO Vacm	503-S, SA	1534
1948	68, 78 Spec. (H-D)	Carter WDO Vacm	650-S, SA	1534
1948	98 Futuramic Std.	Carter WDO Vacm	503-S, SA	1534
1948	98 Futuramic Spec. (H-D)	Carter WDO Vacm	650-S, SA	1534
OVERLAND				
All Models				See Willys
PACKARD				
1936	120-B Eight	Stromberg	EE-14	1579
1936	1400, 1, 2 Eight	Stromberg	EE-23	1582
1936	1403, 4, 5 Super Eight	Stromberg	EE-23	1582
1936	1406, 7, 8 Twelve	Stromberg	EE-3	1581
PACKARD (Continued)				
1937	115-C Six	Holley (Ch. Groves)	AOC-2	1564
1937	120-C Eight	Stromberg	EE-14	1579
1937	120-C Eight	Carter WDO	366-S	1530
1937	1500, 1, 2 Super Eight	Stromberg	EE-23	1582
1937	1506, 7, 8 Twelve	Stromberg	EE-3	1581
1938 Early	1600 Six	Holley (Ch. Groves)	AOC-2	1564
1938 Late	1600 Six	Holley (Ch. Groves)	AOC-25	1563
1938	1601, 2 '120' Eight	Stromberg	EE-14	1579
1938	1603, 4, 5 Super Eight	Stromberg	EE-23	1582
1938	1607, 8 Twelve	Stromberg	EE-3	1581
1939	1700 Six	Holley (Ch. Groves)	AOC-25	1563
1939	1701, 1A, 2 '120' Eight	Stromberg	EE-16	1580
1939	1703, 3A, 5 Super Eight	Stromberg	EE-23	1582
1939	1707, 8 Twelve	Stromberg	EE-3	1581
1940	1800 Six	Stromberg	BXOV-26	1593
1940	1801, 1A, '120' Eight	Stromberg	EE-16	1580
1940	1803, 3A, 4, 5 Super 8	Stromberg	AAV-26	1590
1940	1806, 7, 8, Super 8	Stromberg	AAV-26	1590
1941	1951 Clipper Eight	Carter WDO Vacm.	512-S	1534
1941	1900 '110' Six	Stromberg	BXOV-26	1593
1941	1901,1A '120' Eight	Carter WDO Vacm	478-S	1534
1941	1903,3A,4,5 '160' Super 8	Stromberg	AAV-26	1590
1941	1906, 7, 8 '180' Super 8	Stromberg	AAV-26	1590
1942	2000, 10, 20, 30 '110' 6	Carter WA1 Vacm.	530-S	1522
1942	2001, 1A, 11, 21 '120' 8	Carter WDO Vacm.	512-S	1534
1942	All '160' & '180' Super 8	Carter WDO Vacm.	531-S	1534
1946-47	2100, 2130 Six	Carter WA-1 Vacm	530-S	1522
1946-47	2101, 2111 Eight	Carter WDO Vacm.	512-S	1534
1946-47	2103, 23 Super 8	Carter WDO Vacm.	531-S	1534
1946-47	2106, 26 Cust. 8	Carter WDO Vacm.	531-S	1534
1948	2201, 2211 Eight	Carter WDO Vacm	644-S, SA	1534
1948	2202, 2232 Super 8	Carter WDO Vacm	643-S, SA	1534
1948	2206, 2233 Cust. 8	Carter WDO Vacm	531-S, SA	1534
PIERCE ARROW				
1936	1601 Eight	Stromberg	EE-3	1581
1936	1602, 3 Twelve	Stromberg	(2) EX-32	1575
1937	1701 Eight	Stromberg	EE-3	1581
1937	1702, 3 Twelve	Stromberg	(2) EX-32	1575
1938	1801 Eight	Stromberg	EE-3	1581
1938	1802, 3 Twelve	Stromberg	(2) EX-32	1575
PLYMOUTH				
1936	P1, P2	Carter (B&B)	C6E1, E2	1547
1936	P1, P2 Econ. Models	Carter (B&B)	B6F1, G1	1547
1937	P3, P4	Carter (B&B)	C6F1 to 5, H1	1548
1937	P3, PT50 Comm'l	Holley (Ch. Groves)	A-2	1564
1937	P3 Econ. Model	Carter (B&B)	B6F1, G1	1548
1938	P5 Standard	Holley (Ch. Groves)	A-25	1563
1938	P6 Deluxe	Carter (B&B)	C6J1, K1	1548
1938	P5, P6 Econ Models	Carter (B&B)	B6H1, J1	1548
1938	PT57 Comm'l	Holley (Ch. Groves)	A-25	1563

CONTINUED ON NEXT PAGE

CARBURETOR CAR APPLICATION INDEX

Car Model		Carburetor Make	Carburetor Model No.	Page No.
PLYM UTH (C ntinued)				
1939	P7, P8	Carter (B&B)	D6A1, A2, C1, C2	1548
1939	P7, P8 Econ. Models	Carter (B&B)	B6K1, M1	1548
1940	P9, P10	Carter (B&B)	D6A2, D6C2	1550
1940	P9, P10 Econ. Models	Carter (B&B)	B6P1, B6R1	1550
1941	P11, P12	Carter (B&B)	D6A2, D6C2	1550
1941	P11, P12 Econ. Models	Carter (B&B)	B6P1,R1,T1,U1	1550
1942	P14	Carter (B&B)	D6G1	1550
1942	P14 Econ. Models	Carter (B&B)	B6T1,U1,V1,W1	1550
1946-47	P15	Carter (B&B)	D6G1	1550
1946-47	P15	Stromberg	BXV-3	1595
1946-47	P15 Econ. Models	Carter (B&B)	B6V1,W1	1550
1948	P15	Carter (B&B)	D6G1	1550
1948	P15	Stromberg	BXV-3	1595
1948	P15	Carter W1	574-S	1513
1948	P15 Econ. Models	Carter (B&B)	B6V1, W1	1550
P NTIAC				
1936	36-26A, B Six	Carter W1	324-S	1516
1936	36-28 Eight	Carter W1	322-S	1516
1936	Taxicab	Carter W1	340-S	1516
1937	37-26CA Six	Carter W1	352-S	1516
1937	37-28CA Eight	Carter W1	350-S	1516
1937	Taxicab	Carter W1 Vacm	364-S	1518
1938	38-26DA Six	Carter W1 Vacm	401-S	1518
1938	38-28DA Eight	Carter W1 Vacm	400-S	1518
1939	39-25, 26 Six	Carter WA-1	433-S	1522
1939	39-28 Eight	Carter WA-1	432-S	1522
1940	40-25, 26 Six	Carter WA-1	463-S	1522
1940	40-28 Deluxe Eight	Carter WA-1	462-S	1522
1940	40-29 Torpedo Eight	Carter WDO	469-S	1530
1941	41-24, 25, 26 Six	Carter WA-1	494-S	1522
1941	41-27, 28, 29 Eight	Carter WDO	469-SM	1530
1942 Early	42-25, 26 Six	Carter WA1	494-S	1522
1942 Late	42-25, 26 Six	Carter W1 Vacm.	545-S	1520
1942	42-25, 26 Six (Canada)	Carter W1 Vacm.	521-S	1520
1942	42-27, 28 Eight	Carter WDO	540-S, 548-S	1530
1946	46-25, 26 Six	Carter WA-1 Vacm.	537-S	1522
1946	46-27, 28 Eight	Carter WDO	548-S	1530
1947	47-25, 26 Six	Carter WA-1 Vacm.	537-S	1522
1947	47-27, 28 Eight	Carter WCD	630-S	1538
1948	48-25, 26 Six	Carter WA-1 Vacm	537-S	1522
1948	48-25, 26 Spec. (H-D)	Carter WA-1 Vacm	652-S	1522
1948	48-27, 28 Eight	Carter WCD	630-S, SA, SB	1538
1948	48-27, 28 Spec. (H-D)	Carter WCD	653-S	1538
STUDEBAKER				
1936	3A, 4A Dictator	Stromberg	EX-23	1577
1936	2C President	Stromberg	EE-1	1578
1937	5A, 6A Dictator	Stromberg	EX-23	1577
1937	5A, 6A Dictator	Carter W1	371-S	1516
1937	3C President	Stromberg	EE-1	1578
1938	7A, 8A Six	Stromberg	BXO-26	1592
1938	4C President	Stromberg	AAO-161	1584
1939 Early	G Champion	Carter WO	444-S	1528
1939 Late	G Champion	Carter WO	453-S	1528
1939-40	9A, 10A Commander	Stromberg	BXO-26	1592
STUDEBAKER (Continued)				
1939-40	5C, 6C President	Stromberg	AAO-161	1584
1940	2G Champion	Carter WO	468-S	1528
1940	10A Commander	Carter WA-1 Vacm	410-S	1522
1940	6C President	Carter WDO	409-S	1530
1941	3G Champion	Carter WA-1 Vacm	496-S	1522
1941	11A Commander	Carter WA-1 Vacm	410-S	1522
1941	11A Commander	Stromberg	BXOV-26	1593
1941	7C President	Carter WDO	409-S	1530
1941	7C President	Stromberg	AAV-26	1590
1942	4G Champion	Carter WA1 Vacm.	496-S	1522
1942	12A Commander	Stromberg	BXOV-26	1593
1942	8C President	Stromberg	AAV-26	1590
1946	5G Champion	Carter WE	532-S	1526
1947	6G Champion	Carter WE	532-S	1526
1947	14A Commander	Stromberg	BXOV-26	1593
1948 Early	7G Champion	Carter WE	532-S	1526
1948 Late	7G Champion	Carter WE	661-S	1526
1948	15A Commander	Stromberg	BXOV-26	1593
TERRAPLANE				
1936	61 Deluxe	Carter W1	331-S	1516
1936	62 Custom	Carter W1	329-S	1516
1937	70 Comm'l, 71 Deluxe	Carter W1	348-S	1516
1937	72 Super	Carter WDO	344-S, 377-S	1530
1938	80,88 Comm'l, 81 Deluxe	Carter W1 Vacm	397-S	1518
1938	82 Super	Carter WDO	402-S	1530
Later Models			See Hudson	
WILLYS				
1936	77	Tillotson	D-1E	1599
1937	37	Tillotson	U-1A	1602
1938-39	38 ('38), 48 ('39)	Tillotson	U-1A	1602
1939	39 Overland Speedway	Tillotson	U-1B	1603
1940	440 Speedway & Deluxe	Carter WO	450-S	1528
1940	440, 440P Comm'l	Tillotson	U-1B	1603
1941	441 Americar	Carter WO	507-S	1528
1941	441, 441P Comm'l	Carter WO	507-S	1528
1942	442 Americar	Carter WO	507-S	1528
1942	442, 442P Comm'l	Carter WO	507-S	1528
1942-45	Jeep, Army MB	Carter WO	539-S	1528
1946-47	Jeep, Civ. CJ-2A	Carter WO	596-S, 636-S	1528
1946-47	Jeep Sta. Wagon 4-63	Carter WA-1 Vacm.	613-S	1522
1946-47	Jeep Sedan Del. 4-63	Carter WA-1 Vacm.	613-S	1522
1946-47	Jeep Truck 2T, 4T	Carter WO	636-S	1528
1948	Jeep, Civ. CJ-2A	Carter WO	636-SA	1528
1948 Early	Jeep Sta. Wagon 4-63	Carter WA-1 Vacm	613-S	1522
1948 Late	Jeep Sta. Wagon 4-63	Zenith	28BV10	1604
1948	Jeep Sta. Sedan 6-63	Carter WA-1 Vacm	645-S	1522
1948	Jeepster VJ-2	Carter WA-1 Vacm	613-S	1522
1948	Jeep Sedan Del. 4-63	Carter WA-1 Vacm	613-S	1522
1948	Jeep Truck 2T, 4T	Carter WO	636-SA	1528
WILLYS-OVERLAND				
All Models			See Willys	
ZEPHYR				
All Models			See Lincoln (Zephyr)	

BUICK COMPOUND CARBURETION SYSTEM

COMPOUND CARBURETOR EQUIPMENT: Buick Compound cars are equipped With two Carter or two Stromberg carburetors as listed below. A single Carter or Stromberg carburetor is used on all Series 40, 40A, and 40B cars (except 41SE and 46SSE) as standard equipment with Compound Carburetion optional. ***Refer to Carter WCD and Stromberg AAV-16, AAV-26 Carburetor articles for all data on these single carburetors.***

CARTER (BUICK COMPOUND) CARBURETORS
(Carter Type WCD)

	Series 40, 40A, 40B, 50		Series 60, 70, 90	
	Front	Rear	Front	Rear
1941 First Type	509-S	510-S	490-S	491-S
1941 Later Type①	528-S②	529-S②	533-S②	534-S②
1942 First Type	528-S	529-S	533-S	534-S
1942 Later Type	528-S	543-S	533-S	544-S

STROMBERG (BUICK COMPOUND) CARBURETORS
(Model AAV-16 Front, AA-1 Rear)

1941 First Type	Code 7-42	Code 7-43	Code 7-39	Code 7-41
1941 Second Type	Code 7-42A	Code 7-43	Code 7-39A	Code 7-41
1941 Third Type	Code 7-42B	Code 7-43A	Code 7-39B	Code 7-41A
1941 Latest Type	Code 7-46	Code 7-47	Code 7-44	Code 7-45
1942 First Type	Code 7-59	Code 7-56	Code 7-60	Code 7-55
1942 Second Type	Code 7-59A	Code 7-56A	Code 7-60A	Code 7-55A

①—Beginning with the following Engine Numbers: 40, 50—No. 4349790 to 4351799 and all engines after No. 4356175. 60, 70, 90—No. 4329468 and up.

②—Should be used to replace carburetor listed directly above (First 1941).

Stromberg Code Number—Code number is stamped on bowl cover directly above fuel level inspection plug.

Rear Carburetor Note—These carburetors are similar to front or main carburetors except that they have Idle System and Main Nozzle System only (No Fast Idle, Accelerating Pump, Economizer, or Automatic Choke.

►FIELD & PRODUCTION CHANGES

►**Compression Ratio Change (Early 1941 Cars)**—New cylinder heads (combustion chamber milled out .032" for greater volume) were used on all Compound Carburetion Engines. See table below for gasket data and compression ratio of engines with each type head. This change was effective as follows:
Series 40, 50—Eng. Nos. 4208269 to 4210399 & Eng. No. 4215901 Up.
Series 60, 70, 90—Eng. No. 4197602 and up.

Series 40 (With Single Carburetor)—Same cylinder head as used on Compound Carburetion Engines (above) used on this model on all engines after Engine No. 4220016. New thinner cylinder head gasket used with this new head so that compression ratio approximately unchanged. See table below for compression ratio and gasket data.

	1st Type Head		2nd Type Head	
Car Model	Ratio	Gasket No.	Ratio	Gasket No.
40 (Single Carburetor)	6.5-1	1321396 (.070")	6.4-1	1323288 (.050")
40, 50 (Compd. Carb.)	7.0-1	1320433 (.015")	6.7-1	1320433 (.015")
60, 70, 90 (Compd. Carb.)	7.0-1	1320436 (.015")	6.7-1	1320436 (.015")

►**Lowering Compression Ratio to Correct Spark Rap on First Compound Carburetion Engines**—Compression ratio of first 1941 engines (see above) with 7.0-1 compression ratio may be lowered by installation of special thicker head gaskets as follows: **Series 40,50**—Install No. 1323288 gasket (.050" thick—this is production gasket used on later Series 40 engines with Single Carburetor) which will lower compression ratio to 6.67-1. **Series 60, 70, 90**—Install No. 1297992 gasket (this is 1940 gasket and is .050" thick) which will lower compression ratio to 6.68-1. ***Refer to Buick Special Shop Notes in car model section for gasket installation instructions.***

►**Spark Plug Change (Early 1941 Cars)**—First cars were equipped with 10 mm. spark plugs but all such installations have been changed to 14 mm. type used on later 1941 and all 1942 cars.

►**Intake Manifold Gasket Change (Early 1941 Cars)**—Vellumoid gasket used up to following engine numbers: Series 40 (Single Carb.) Before Engine No. 4240254, **Series 40, 50 (Compound Carburetion)**—Before No. 4246537, **Series 60, 70, 90 (Compound Carburetion)**—Before No. 4231957. Cars on which three thin gaskets, or one thick gasket, are used (marked with white stripe 1" wide on front leg of manifold) will operate satisfactorily but steel gasket only should be used for service replacement. This steel gasket (used on later engines) will prevent leaks which may develop at operating temperatures and under driving conditions which may not be apparent when tuning up engine.

Steel Intake Manifold Gasket—Used on all engines after following engine numbers: Series 40 (Single Carburetor)—No. 4240254, Series 40, 50 (Compound Carburetion)—No. 4246537, Series 60, 70, 90 (Compound Carburetion)—No. 4231957.

►**Intake Manifold Gasket Installation**—Use only steel gasket (above) and install gasket exactly as follows: Tighten both the intake manifold and exhaust manifold securely to cylinder head, and **then tighten intake manifold to exhaust manifold.** Check carburetor mounting bolt nuts for tightness. Retighten all manifold nuts after engine has been warmed up.

►**Carter & Stromberg Carburetor Production Changes:** ***See "Carter Carburetors for Buick Compound Cars" and "Stromberg Carburetors for Buick Compound Cars" (following).***

►**SINGLE CARBURETORS ON LATE 1942 CARS**—Beginning with Engine No. 4540297, a single dual carburetor was used on all cars as follows:

LATE 1942 CARBURETORS

Model	Carter Model	Stromberg Model
42-40A, 40B, 50	WCD 551-S	AAV-16 Code 7-37 or 7-66
42-60, 70, 90	WCD 549-S	AAV-26 Code 7-57

Refer to Carter WCD Carburetor and Stromberg AAV-16, AAV-26 Carburetor articles for data on these models.

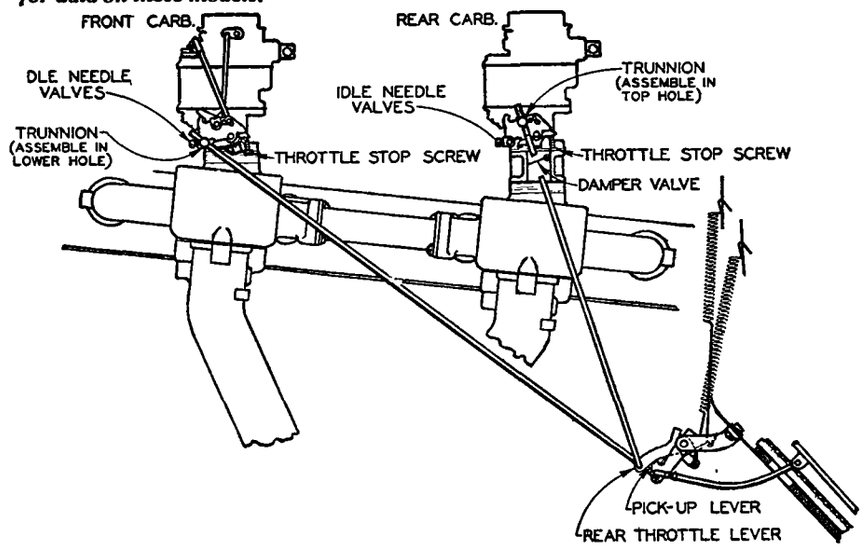

DESCRIPTION & OPERATION

DESCRIPTION: "Compound Carburetion" consists of two dual carburetors installed on one dual manifold so that the inner barrel of both carburetors feeds the inner branch of the manifold (Cylinders 3, 4, 5, 6) and the outer barrel of both carburetors feeds the outer branch of the manifold (Cylinders 1, 2, 7, 8). Carburetor throttle valves are connected to the accelerator pedal by an overrunning type of linkage so that only the front carburetor throttle valves open (front carburetor operates alone) until a position is reached corresponding to 75 MPH. car speed. At this point, the rear carburetor throttle valves also open and both carburetors operate together and feed equally when wide open throttle position is reached. The rear carburetor has an automatic damper valve below the throttle valve and controlled by a counterweight. This valve is opened by the air flow through the carburetor and controls the manner in which the rear carburetor cuts in when car is operated with wide open throttle (see Full Throttle Operation below). Damper valve is a loose fit so that rear carburetor idles in the customary manner with this damper valve closed.

Damper Valve Lockout (1942 Compound Carburetion)—New thermostatic lockout lever mounted n bracket on damper valve assembly of rear carburetor. Lockout lever engages pin on damper valve weight and prevents rear carbu-

CONTINUED ON NEXT PAGE

BUICK COMPOUND CARBURETION SYSTEM (C nt.)

retor operating until engine has warmed up sufficiently so that choke valve on front carburetor is nearly open. At temperature of 110° F. (plus or minus 2°), lever disengages from weight pin so that rear carburetor functions normally. See Adjustment data below for Lockout Lever checking and adjusting directions.

OPERATION: The two carburetors act together but due to the damper valve action (rear carburetor), operation at Part and Full Throttle is different as follows:

Part Throttle Operation:—For closed throttle idling and car speeds up to 22 MPH, idling systems of both carburetors operate together (damper valve clearance allows rear carburetor to operate even though valve is closed). As accelerator pedal is depressed, throttle valve of front carburetor only opens and this carburetor operates alone until a car speed of 75 MPH. is reached. At this point, the accelerator linkage opens the rear carburetor throttle valve so that when wide open throttle position is reached both carburetors are feeding equally to provide maximum power (rear carburetor damper valve opened by air flow).

Full Throttle Operation:—If accelerator pedal is fully depressed for wide open throttle operation at low car speeds, damper valve controls manner in which rear carburetor cuts in as follows: At speeds below 15 MPH. main metering system of front carburetor operates normally but damper valve prevents main metering system of rear carburetor operating. At 15-20 MPH., damper valve begins to open and rear carburetor main metering system begins to operate. At 35-40 MPH., damper valve is wide open and both carburetors feed equally.

NOTE—Above action occurs only with engine temperature of 110°F or above with damper valve lockout disengaged (see Description above for explanation of Damper Valve Lockout action).

ADJUSTMENT PROCEDURE ON CAR

►*CAUTION—Make ALL adjustments in following order:*

(1) ENGINE ADJUSTMENTS

Check and adjust all of the following items (see car model page for instructions): (1) Spark Plug Gap, (2) Valve Tappet Clearance or Lash, (3) Distributor settings and Ignition Timing, (4) Manifold Heat Control.

(2) LINKAGE ADJUSTMENTS

Carburetor Throttle Linkage: Floor mat must be in place when the linkage adjusted (mat serves as stop for pedal in wide open position). Carburetors should be cold (if carburetors warm, hold de-loader cam in position so that it contacts carburetor lever as throttle is opened while making adjustments). Adjust front carburetor throttle rod length by changing trunnion position on rod so that throttle valves and throttle lever are in wide open position with accelerator pedal depressed to floor mat (de-loader must be in operation so that normal load exerted on throttle rod), make certain that throttle rod trunnion installed in lower hole on lever. Adjust rear carburetor throttle rod length in same manner so that rear carburetor throttle valves are also wide open with accelerator pedal depressed to floor mat, make certain that throttle rod trunnion is installed in upper hole on lever. CAUTION—When making these adjustments, accelerator pedal should be depressed while sitting in driver's seat (reaching through car door will cause pedal to strike raised portion of floor and result in incorrect adjustment). Rear carburetor rod should be disconnected while adjusting front carburetor rod and should be prevented from striking engine pan which will interfere with adjustment (rod can be looped up by rubber band). De-loader can be placed in operation to apply normal load on linkage while making adjustment by holding choke valves in closed position. After rods adjusted, see that both rods operate freely, do not bind or interfere with return springs, and that rods operate freely and return to fully closed position (bend both legs of cotter pin in rear throttle trunnion toward front of car to prevent interference with throttle lever ear). If throttles do not return to closed position, check lower ends of throttle return springs to see if they are contacting lower side of levers attached to dash brackets, and if necessary, hook both return springs in upper hole on dash.

(3) DAMPER VALVE ADJUSTMENT

Damper Valve Lockout Lever:—To check adjustment, drive car during warm up period (start with cold engine) and note performance during full throttle accelerations at 15-25 MPH. If light spit or sag in acceleration noted between 15 and 20 MPH., particularly as engine warms up, lockout lever is releasing too soon. If acceleration is satisfactory, check lockout lever position after driving approximately 4 miles. If lever has disengaged from damper valve weight pin, lockout lever is not releasing too late. If above tests indicate lockout lever adjustment is incorrect, remove damper valve assembly and adjust as follows:

Adjustment—Immerse damper valve assembly in pan of water with accurate thermometer and note performance as temperature is increased. Lockout lever should not disengage from damper valve weight pin below 108° F. and must be disengaged and free of the pin at 112° F. (Std. setting 110° plus or minus 2°). To adjust, loosen two screws mounting lockout lever bracket on damper valve assembly, pivot bracket on lower screw so as to increase lever tension (to raise disengagement temperature), or decrease lever tension (to lower disengagement temperature). Tighten both mounting screws securely and recheck performance.

(4) CARBURETOR ADJUSTMENT

Idle Adjustment: Engines must be thoroughly warmed up so that the automatic choke and fast idle are inoperative when adjustments are made. Hot or slow idle speed should be set at 8-10 MPH. To secure equal adjustment on both carburetors, proceed exactly as follows: With engine not running, back off throttle adjusting screw on each carburetor until throttle valves are completely closed, ends of adjusting screws should barely contact thin section of fast idle cam (front carburetor), carburetor throttle body (rear carburetor), then turn each screw in exactly ¾ turn so that throttle valves on both carburetors are opened same amount. Turn all idle mixture adjusting screws (two on each carburetor) in until they are lightly seated (do not force screws beyond closed position which will ring or otherwise damage screws and seats), then open each screw (turn screws out) exactly one turn. Start engine, adjust each idle mixture screw for best performance (do not turn screws more than ⅛ turn at a time). Finally, adjust throttle stopscrew on each carburetor for correct idle speed (Carter recommends that this adjustment be made on rear carburetor only to assure rear carburetor functioning on idle).

NOTE—If vacuum gauge is used when adjusting carburetors, adjust idle mixture screws so that gauge reading is 1" less than maximum reading.

Float Level: Fuel level in float bowl should be even with bottom of inspection hole plug on side of bowl casting with engine idling.

Accelerating Pump, Fast Idle, Automatic Choke & Other Adjustments: *See "Carter Carburetors for Buick Compound Cars" and "Stromberg Carburetors for Buick Compound Cars" (following).*

STROMBERG CARBURETORS FOR BUICK COMPOUND CARS

COMPOUND CARBURETOR EQUIPMENT

	Series 40, 40A, 40B, 50		Series 60, 70, 90	
	AAV-16 (Front)	AA-1 (Rear)	AAV-16 (Front)	AA-1 (Rear)
1941 First Type	Code 7-42	Code 7-43	Code 7-39	Code 7-41
1941 Second Type	Code 7-42A	Code 7-43	Code 7-39A	Code 7-41
1941 Third Type	Code 7-42B	Code 7-43A	Code 7-39B	Code 7-41A
1941 Latest Type	Code 7-46	Code 7-47	Code 7-44	Code 7-45
1942 First Type	Code 7-59	Code 7-56	Code 7-60	Code 7-55
1942 Second Type①	Code 7-59A	Code 7-56A	Code 7-60A	Code 7-55A

①—Before Engine No. 4540297. Single carburetor used after this number.

NOTE: Code Number Identification Mark. Code number is stamped on bowl cover directly above fuel level inspection plug and can be used to identify each model.

Delco-Remy Vacuum Switch—Switch for starter control is mounted on carburetor and operated by throttle valve shaft. *See Delco-Remy Vacuum Switch article in Electrical Equipment Section for adjustment and servicing data.*

►CARBURETOR FIELD & PRODUCTION CHANGES

►**Code 7-42 & 7-39 (First Front Carburetors) Changes to correct Off-idle Leanness**—If slight off-idle leanness develops on early 1941 cars with these carburetors, this can be corrected by installing special service throttle valves, Part No. 382698, 7¾° type notched valves which provide same idle hole clearance of .010" as later 7-42A & 7-39A models with new No. 382600 throttle valve (this 382600 valve must not be installed on these 7-42 & 7-39 carburetors). Also make changes listed below for 7-42A and 7-39A carburetors to bring these 7-42 and 7-39 models up to later 7-42B and 7-39B specifications.

►**Code 7-42 & 7-39A (Front Carburetor), 7-43 & 7-41 (Rear Carburetor) Change for Better Idling Performance and Improved Hot Starting**—These front carburetors only (7-42A & 7-39A) have new type, Part No. 382600, 6° notched throttle valves and new Idle Hole clearance of .010". For better idling performance and improved hot starting, all of these carburetors (front & rear) should have the following new parts installed or jet and air bleed holes changed as follows: Idle Tube—#65 Part No. 382806 (was #70 Part No. P-19424), Idle Air Bleed in Main Body—#65 (7-42A & 7-43), #60 (7-39A & 7-41), (was #70 on all models), Secondary (upper) Idle Discharge Hole—#58 (was #60), and new External Float Bowl Vent (drilled hole in carburetor casting—not used on carburetors originally). Make these changes as follows:

Idle Tube—Dismantle carburetor and remove air horn and float bowl cover assembly (see Servicing directions below). Unscrew old idle tubes and install new type tubes as specified above.

Idle Air Bleed—With carburetor dismantled for Idle Tube replacement (above), use wire drill in pin vise (#65 drill for Series 40,50 Code 7-42A & 7-43 Carburetors, #60 drill for Series 60,70,90 Code 7-39A & 7-41 Carburetors) and drill out idle air bleed hole (in boss in float bowl adjacent to idle tube) by hand. NOTE—Air bleed provided for each barrel, both holes must be enlarged.

Secondary Idle Discharge Hole—Remove welch plugs in holes on rear side of throttle body directly across from idle holes. Use #58 drill (all models) in pin vise, insert drill through hole from which welch plug removed and drill out the secondary or upper idle discharge hole in the carburetor wall. NOTE—Both idle holes in each carburetor must be enlarged.

Float Bowl Vent—On all carburetors, prick punch center of boss to left (facing gasoline inlet connection) and above gasoline inlet connection on air horn and bowl cover casting, drill hole at this point with #46 drill (all models) so it connects with bowl vent channel in casting for additional external vent.

►**Code 7-43B & 7-39B (Front Carburetors), 7-43A & 7-41A (Rear Carburetors) Note:** These include all changes as listed above for Code 7-42A, 7-39A, 7-43, 7-41 models (New Idle Tube, new size Idle Air Bleed and Secondary Idle Discharge Hole, new External Bowl Vent). Equivalent to latest types (below).

►**Code 7-46 & 7-44 (Front Carburetors), 7-47 & 7-45 (Rear Carburetors) Note:** models are same as Code 7-43B, 7-39B, 7-43A, 7-41A models listed above except that External Float Bowl Vent is slightly different design and either of these latest designs should operate satisfactorily on Compound Carburetion engines.

►**Code 7-59A & 7-60A (Front Carburetors), 7-55A & 7-66A (Rear Carburetors) Note:** Carburetors differ from models used on first cars (Code number without A) in that a different size Idle Discharge Nozzle is used (First Type—No. 60, Later Type—No. 56-53). Idle Discharge Nozzle is installed in lower idle discharge port and also forms the seat for the idle adjusting screw.

►**Single Carburetors on Late 1942 Cars**—Beginning with Engine No. 4540297, a single dual carburetor was used on all cars.
See "Stromberg AAV-16, 167; AAV-26, 267" Carburetor.

DESCRIPTION

DESCRIPTION: Front (AAV-16) and Rear (AA-1) carburetors are of similar design but have special features as follows:

Front (AAV-16) Carburetor: Aircraft type, duplex, downdraft carburetor. Similar to other AAV-16 & AAV-26 carburetors used on previous Buick models.

1942 Changes—Carburetors used on 1942 cars differ from design used on 1941 cars in the following particulars:

Idle Channel Wire—Consists of a restricting wire installed in the idle fuel channel in the carburetor throttle body and main body casting. Used on all 1942 Buick carburetor models. CAUTION—When servicing these carburetors, make certain that idle channel wire is in place when carburetor is re-assembled.

Idle Discharge Nozzle (Compound Carburetion Carburetors only)—Consists of a special discharge nozzle and idle adjusting screw seat installed in the lower idle discharge port of both front and rear carburetors. Refer to Production Change Note (above) for first and later type nozzles.

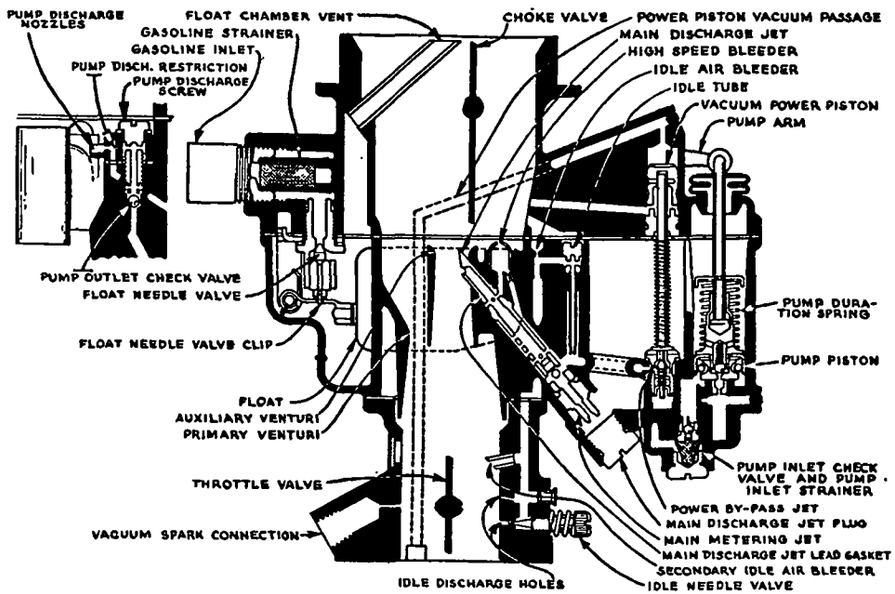

Rear (AA-1) Carburetor: These models (used on Compound Carburetion cars only) are basically the same as the front carburetors (AAV-16) but do not have Vacuum Economizer (power by-pass jet), accelerating pump, choke valve and automatic choke, fast idle, or vacuum switch mounting provision. See separate article on Buick Compound Carburetion for description of manner in which these carburetors supplement front carburetors for Compound Carburetion.

CONTINUED ON NEXT PAGE

STROMBERG CARBURETORS (BUICK COMPOUND) C nt.

CARBURETOR ADJUSTMENT & OVERHAUL

IDLE ADJUSTMENT (ALL MODELS): *See "Buick Compound Carburetion System" (preceding) for carburetor Idle Adjustment and other adjustments which should be made BEFORE the carburetor is adjusted.*

METERING JETS:—Metering jets are non-adjustable type located under plug at lower end of main nozzles. See Stromberg Jet Specification Table for data.

ACCELERATING PUMP (AAV-16):—Same type as used on other AAV carburetor (operated by throttle lever through walking-beam connector, piston spring-loaded on plunger stem with duration spring to prolong pump discharge).

Pump Capacity—With pump rod connected in center hole on throttle lever (medium stroke), capacity should be 11-15 cc. per 10 strokes when operated fast or 16-20 cc. per 10 strokes when operated slowly (all models). Use No. T-24972 Pump Capacity Burette Gauge to check the pump capacity.

Pump Seasonal Adjustment—Throttle lever has three holes for pump connector rod engagement. Medium stroke (with rod connected in center hole) is standard for use with regular fuel. If carburetor is lean on acceleration, connect rod in outer hole for maximum stroke, if carburetor charge is too rich or engine loads up on acceleration, connect rod in inner hole for minimum stroke.

VACUUM ECONOMIZER (AAV-16):—Consists of a vacuum piston controlled power by-pass valve similar to design used on other AAV carburetor models. No adjustment required.

Setting—Vacuum piston opens valve with manifold vacuum of 5-6" of HG (mercury) corresponding to car speed of 65-70 MPH.

FAST IDLE & CHOKE RELEASE (AAV-16):—Consists of Start-aid loose lever and fast idle cam assembly (spring connected) mounted on the carburetor so that the cam serves as a stop for the throttle stopscrew. Cam is linked to choke valve by connector rod and is rotated to the fast idle position (stopscrew on highest step of cam) when the choke valve closes for cold starting. As the engine warms up and the choke valve opens, fast idle cam rotates (with stop-screw resting on successively lower steps of cam) so that the throttle valves close to the hot or slow idle position with the engine warmed up.

Adjustment—Close choke valve on #53 drill rod (.0595"), open and close throttle valve and note if ear on locking lever on throttle valve shaft clears lug on loose lever on fast idle cam stud. Adjust by bending connector rod near upper end so that locking lever ear and loose lever lug just clear.

Choke Release (Unloader) Adjustment—Hold throttle valve wide open, check choke valve opening by inserting 11/64" drill rod (Tool T-25057) between edge of valve and air horn wall. Adjust by bending ear of throttle lever which engages lug on fast idle cam so that choke valve opening is .156-.187".

FLOAT LEVEL:—To check float level, remove bowl cover and float assembly, invert cover, install Float Level Checking Gauge, No. T-24971, on gasket. Tops of both floats should be 1/32" below tops of gauge guides and sides of floats should be tangent to gauge guides without any drag (this is important to prevent floats dragging on sides of float bowl). Adjust by bending float arm. Use extreme care to secure equal setting for both floats.

Fuel Level—Fuel level in float bowl should be 19/32" below top edge (gasket seat) of bowl or even with the lower edge of the inspection hole on the side of the bowl with the engine idling (5 lbs. pressure).

Float Needle Valve & Seat—Part No. P-22498 (all models). Furnished as matched sets only. Make certain that needle valve is clipped to float lever.

Float Bowl Vent—Bowl is vented to outside atmosphere through vent tube in air horn below air cleaner to insure 'balanced' operation.

THROTTLE VALVE SETTING (ALL MODELS):—Throttle valves on Compound Carburetion Front Carburetors changed in production (See Special Service Note above) and throttle valve setting is different on each type. CAUTION—When special service throttle valves installed on first (Code 7-42 and 7-39) carburetors, throttle valve setting is same as later (Code 7-42A and 7-39A) carburetors with new type throttle valves. To check throttle valve location, insert #60 drill in idle port, measure from drill to edge of throttle valve with valves tightly closed (stopscrew backed off). Setting for each model as follows:

THROTTLE VALVE SETTING

Carburetor Model	Code No.	Throttle Valve	Setting
AAV-16 (Compd. Carb.) ①	7-42, 7-39	382246-6°	.022"
AAV-16 (Compd. Carb.) ②	7-42, 7-39	382698-7¾°	.010"
AAV-16 (Compd. Carb.)	7-42A,B; 7-39A,B	382600-6°	.010"
AAV-16 (Compd. Carb.)	7-46, 7-44	382600-6°	.010"
AAV-16 (Compd. Carb.)	7-59, A; 7-60, A	382600—6°	.010"
AA-1 (Compd. Carb.) Rear	7-43,A; 7-41,A	382246-5°	.022"
AA-1 (Compd. Carb.) Rear	7-47, 7-45	382246-5°	.022"
AA-1 (Compd. Carb.)	7-55, A; 7-56, A	382246—5°	.022"

①—With original throttle valve. ②—With new service replacement valve.

NOTE—All Idle Port figures are plus or minus .004".

CHOKE (AAV-16):—Stromberg Automatic Type. *Refer to Carburetion Equipment Index for "Stromberg Automatic Choke, AAV-16, AAV-26 Type" for data.*

Choke Setting—Inverted 'V' mark on thermostat cover should be set at the reference mark on housing (centered) on all models. Setting may be varied not more than two notches to improve warming up performance under special operating conditions (use of highly volatile fuel, etc.). Adjust by loosening three cover screws and rotating cover. CAUTION—Do not use excessive pressure when installing heat tube connection (may cause cover to shift).

NOTE—Thermostat cover assembly stamped '6' for identification.

SERVICING (ALL MODELS):—Serviced in same manner as Stromberg Model AAV-16 carburetor. Refer to Stromberg Model AAV-16, AAV-26 Carburetor article in this section for complete instructions. Model AA-1 serviced in same manner as AAV-16 except no choke system, vacuum economizer, or accelerating pump is used.

SERVICE PARTS:—Gasket Set—No. 382398 (AAV-16 Compd. Carburetors), No. 382399 (AA-1 Compd. Carburetors).

Repair Parts Kits—No. RK-114 (AAV-16 Compd. Carburetor—Series 40, 50), No. RK-116 (AAV-16 Compd. Carburetor—Series 60, 70, 90), No. RK-124 (AA-1 Compd. Carburetor—Series 40, 50), No. RK-123 (AA-1 Compd. Carburetor—Series 60, 70, 90).

CARTER CARBURETORS FOR BUICK COMPOUND CARS

COMPOUND CARBURETOR EQUIPMENT

	Series 40, 40A, 40B, 50		Series 60, 70, 90	
	Front	Rear	Front	Rear
1941 First Type	509-S	510-S	490-S	491-S
1941 Second Type①	528-S	529-S	533-S	534-S
1942 First Type	528-S	529-S	533-S	534-S
1942 Second Type②	528-S	543-S	533-S	544-S

①—Used on all cars with following Engine Numbers: **Series 40,40A,50**—No. 4349790 to 4351799 and all engines after No. 4356175. **Series 60,70,90**—All Engines after No. 4329468. These models used to replace first carburetors.

②—Before Eng. No. 4540297. Single carburetor used on all cars after this number.

NOTE: Carburetor Model Identification: These models may be identified by body casting number stamped on face of body flange as follows: No. 324 (490-S, 509-S, 528-S, 533-S—Front Carburetors), No. 346 (491-S, 510-S, 529-S, 534-S—Rear Carburetors), No. 409 (543-S, 544-S—Rear Carburetors).

Carter Car Starter—Switch for starter control built-in on Models 487-S, 490-S, 509-S, 528-S, 533-S. ***Refer to Electrical Equipment Index for 'Carter Car Starter' for complete adjustment and servicing data.***

►CARBURETOR FIELD & PRODUCTION CHANGES

►**Replacement Carburetors for Early 1941 Types**—Carburetors listed "1941 Second Type" in equipment listing above should be used to replace early 1941 (1941 First Type) carburetors.

►**Float Level Change on First Carburetors**—Two float types used with different float settings for each type. With first type float (which has cross-rib reinforcement) before approximately Nov. 1, 1940, float level should be set at 9/64". Carburetors after Nov. 1, 1940 (beginning with carburetors marked 'LO' in second square of brass inspection tag on carburetor) have new float with 11 vertical-rib reinforcements and float level should be set at 3/16". See Float Level section below for checking and adjustment directions.

►**Models 529S & 534S Rear Carburetor Change to Correct Rough Idle on Rough Roads:**—*Carburetors used in 1941 and early 1942 production* were changed to carburetors used on 1941 and early 1942 cars were changed in production to include new Needle, Seat, & Bracket Assembly No. 25-111S (supersedes No. 25-108S) to overcome any tendency of float to bob on rough roads which allows fuel level to rise in bowl and cause rough idle. Carburetors on which this part has been installed are marked by round hole punched in inspection tag (before October 1941) or by letter 'K' stamped on tag. This new part can be installed on first type carburetors (cast iron bowl cover types) by removing bowl cover and air horn assembly. CAUTION—When this new needle, seat, and bracket assembly is installed, lip on float which limits float travel must be bent sufficiently to permit float to drop ½ inch and pull clip on needle must be removed. Check float level (see data below).

►**Models 543S & 544S Rear Carburetor Note**—Carburetors used on late 1942 Buick Compound Carburetion cars are similar to earlier 529-S, 534-S types except that they are regularly fitted with the new Needle, Seat & Bracket Assembly No. 25-111S so that no change is required.

►**1942 Carburetor Mounting Gasket Caution**—All 1942 carburetors are of "three-bolt" type and the same gaskets are used on all series. Use moulded insulating fibre gasket between manifold and carburetor flange (Single Carburetors and front carburetor of Compound Carburetion units), and between manifold and Damper Valve Assembly (rear carburetor of Compound Carburetion units). Use thin gasket between Damper Valve Assembly and carburetor flange (rear carburetor of Compound Carburetion units).

►**Low Speed Jet (Buick Compound Carburetors) Caution**—Low Speed Jet on all Compound Carburetion Carburetors is #65 drill size and is marked by figure '65' stamped on side. The '70' marking stamped on the bottom of the hexagonal portion of the jet does not indicate size and should be disregarded.

DESCRIPTI N

DESCRIPTION: All carburetors are "WCD" type but front and rear carburetors have special features as follows:

Front Carburetors (Models 490S, 509S, 528S, 533S): Plain tube, dual, downdraft. Differ from other Carter Vacumeter type dual carburetors mainly in that they have a new design concentric float bowl and double float, new permanently assembled main nozzles, high pressure type spring operated accelerating pump, and built-in Carter Car Starter (vacuum switch for starting motor control). Conventional plunger type anti-percolators are not used but carburetor is fitted with Fast Idle and Climatic Control (automatic choke). ***See Carter Climatic Control article in Carburetion Equipment Section for automatic choke servicing data.***

Rear Carburetors (Special Models 491S, 510S, 529S, 534S, 543S, 544S): These carburetors are basically the same as the front carburetor models but do not have metering rods (metering jet only used), accelerating pump, choke valve, Fast Idle, Climatic Control, or Carter Car Starter. See article on Buick Compound Carburetion (preceding) for description of manner in which these carburetors supplement the front carburetors of Compound Carburetion engines.

CARBURETOR ADJUSTMENT & OVERHAUL

IDLE ADJUSTMENT (ALL MODELS): ***See "Buick Compound Carburetion System" (preceding) for carburetor Idle Adjustment and other adjustments which should be made BEFORE the carburetor is adjusted.***

PERFORMANCE:—Should be satisfactory if idling adjustment correctly made. Special lean metering rods furnished for special operating conditions (see Carter Jet Specification table for complete data). IMPORTANT—Special metering rod for Altitude use only is furnished in conjunction with a special altitude metering jet which should be installed in rear carburetor at same time to insure balanced operation of both carburetors.

ACCELERATING PUMP (Models 490-S, 509-S, 528-S, 533-S):—High pressure type with spring operated lever. Seasonal adjustment provided only on 528-S, 533-S.

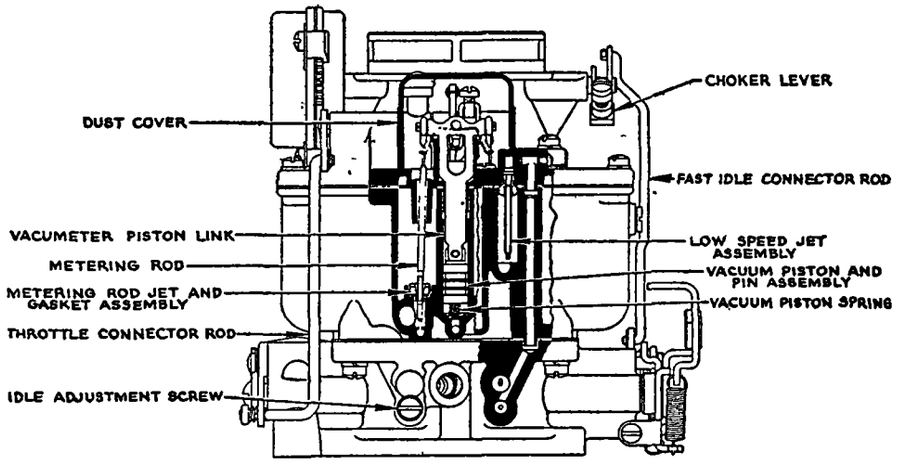

Seasonal Adjustment (528-S, 533-S)—Pump arm on bowl cover (under dust cover) has two holes for pump link engagement. Connect link in inner hole (short radius) for short stroke and minimum discharge, outer hole (long radius) for long stroke and maximum discharge (this setting standard for ordinary fuels). When highly volatile fuels are used or if engine staggers on acceleration, shift connector link to inner hole for shorter stroke and minimum discharge.

Pump Stroke Adjustment—See table below for correct plunger travel (from closed throttle to wide open position). To check stroke, back off throttle stop-screw so that throttle valves tightly closed, take out screws and remove dust cover, place pump gauge T109-117S (see Note below) in inverted position on upper edge of dust cover boss on carburetor so that lip on lower end of indicator arm rests on top surface of connector link in upper end of pump plunger stem. Note gauge reading. Open throttle wide and again note gauge reading. Difference between two readings is pump stroke (in 64th of an inch) and should agree with specifications in table below. To adjust stroke, bend connector rod slightly at lower angle near throttle lever. CAUTION—When checking stroke n Models 528-S, 533-S, make certain that pump link properly connected for correct stroke as indicated in table.

CONTINUED ON NEXT PAGE

CARTER CARBURETORS (BUICK COMPOUND) C nt.

ACCELERATING PUMP SETTING

Car Model	Carburetor	Pump Stroke	Pump Link Connection
All Compd. Carb. (First)	490-S, 509-S	21/64"	Not Adjustable
40,40A,50 Compd. (Later)	528-S	16/64" (¼")	Long Stroke
60,70,90 Compd. (Later)	533-S	14/64" (7/32")	Short Stroke

Pump Gauge Note—All pump gauges after Sept. 15, 1940 have new type indicator arm with gauging lips on both ends as required when checking these models. Earlier T109-117S gauges can be brought up to date by installing this new type indicator arm, Part No. T109-153.

METERING ROD ADJUSTMENT (Models 490-S, 509-S, 528-S, 533-S):—Metering rods are controlled by a single spring-loaded vacuum piston (rods held down in metering jets for maximum economy by manifold vacuum, and lifted out of jets by spring for acceleration and full power operation when vacuum decreases as throttle is opened). Lip on metering rod arm (on pump operating lever shaft which is linked to throttle lever) acts as stop for vacuum piston link and insures correct metering rod position for particular throttle opening. Metering rod setting should be checked whenever rods removed or changed and when carburetor is overhauled.

Metering Rod Setting—To check metering rods, take out retaining screws and remove dust cover, disconnect metering rod springs and remove both rods, install one metering rod gauge, T109-152 (2.440"), in place of rods. With throttle stopscrew backed off so that throttle valves tightly closed, press down lightly n vacuum piston link. Clearance between shoulder of notch on gauge and part of vacuum piston link on which metering rods hang should be less than .005" and lip of vacuum piston link should rest on lip of metering rod arm on pump operating lever shaft. To adjust, bend lip of metering rod arm until it contacts lip n vacuum piston link. Remove gauge, re-install metering rods, connect springs, install dust cover and reset throttle stopscrew.

FLOAT LEVEL (ALL MODELS):—**Fuel Level**—Should be even with lower edge of fuel level inspection hole on side of float bowl (remove inspection plug).

Float Level (490-S, 491-S, 509-S, 510-S)—Two different settings used. On float with cross-rib reinforcement (before Nov. 1, 1940), distance from float seam (measured at top center—both sides equal) to lower edge of bowl cover should be 9/64" (Gauge T109-160) with needle valve seated. On carburetors after Nov. 1, 1940 (beginning with carburetors marked 'LO' on brass inspection tag) with float with 11 vertical-rib reinforcement, float level should be 3/16" (T109-162) measured as above. Floats must be checked both laterally and vertically to insure correct height and to prevent dragging on sides of bowl as follows: With bowl cover assembly removed, remove gasket, invert cover so that needle valve is seated, place correct gauge (T109-160 or T109-162) directly under floats with notched portions of gauge fitted over machined surface of casting. Floats should just touch vertical sides of gauge and just clear horizontal portion. Adjust by bending float arm (do not bend floats) and use extreme care to secure same setting n both floats.

Float Level (Models 528-S, 529-S, 533-S, 534-S, 543-S, 544-S):—Float level should be 3/16". Use Gauge T109-162, check and adjust floats exactly as directed above for earlier carburetors with second type float.

Needle Valve & Seat—Furnished only in matched sets, Part No. 25-80S (490-S, 491-S, 509-S, 510-S), No. 25-105S (528-S, 533-S), No. 25-111S (529-S, 534-S, 543-S, 544-S). The No. 25-105S type is a 'push-pull' design with the needle valve linked to the float lever lip by a wire clip.

NOTE—On first 529-S and 534-S carburetors, a No. 25-108S Needle Valve and Seat was used but has been superseded by the 25-111S type. See Special Service Notes and Production Changes (at beginning of article) for directions on installing this new part on these carburetors.

Bowl Vent (Models 490-S, 509-S)—Bowl is vented to air horn for 'balanced' operation by 7/32" inside diameter balance vent tube which opens into air horn.

Bowl Vent (Models 528-S, 529-S, 533-S, 534-S)—Balance types with 7/32" inside diameter and secondary .125" diameter vent to air horn. Bowl is also vented to outside atmosphere by #35 drill hole (early production), two #47 drill holes (Late 1941 and Early 1942 production), No. 47 drill hole—throttle lever side and No. 55 drill hole—opposite side (Late 1942 production).

Bowl Vent (Models 543-S, 544-S)—Balance types with 7/32" inside diameter and secondary .125" diameter vents inside air horn. Bowl is also vented to outside atmosphere through two drilled holes (No. 47 drill—throttle lever side, No. 55 drill—opposite side).

THROTTLE VALVE SETTING:—Install valves with trademark (small 'c' in circle) toward manifold and on idle port side of bore, use new screws and install screws loosely. With throttle stopscrew backed off, tap valves lightly with screwdriver to centralize them in bore, then tighten attaching screws.

Idle Port Opening—On all models, idle port opening should be .067-.073" above top edge of throttle valve with valve closed tightly.

Vacuum Spark Port Height—Bottom of vacuum spark port should be .035-.039" above top edge of valve (Models 490-S, 509-S, 528-S, 533-S).
NOTE—Vacuum spark port is not used on Compound Carburetion rear carburetors (Models 491-S, 510-S, 529-S, 534-S, 543-S, 544-S).

FAST IDLE (490-S, 509-S, 528-S, 533-S):—Consists of a fast idle cam and trip lever assembly. The cam engages the fast idle screw on the throttle shaft dog and collar assembly. Cam trip lever is linked to the choke valve shaft by a connector rod so that the cam is rotated to the fast idle position when the choke valve closes for cold starting. As the choke valve opens, trip lever is revolved and spring returns fast idle cam to off position and throttle valves return to hot or slow idle speed position (controlled by stopscrew).

Adjustment—With choke valve tightly closed, adjust fast idle screw so that clearance between throttle valve and carburetor bore on side opposite port is .015" (490-S, 533-S), .012" (509-S, 528-S). When adjusting back off the throttle stopscrew, then back off fast idle adjusting screw until it just contacts high point of fast idle cam (choke valve closed and fast idle cam in fast idle position), finally turn fast idle screw in 2½ turns (all models) which will provide correct throttle opening. Reset throttle stopscrew for correct hot or slow idle speed.

CHOKE (490-S, 509-S, 528-S, 533-S):—Carter Climatic Control. Refer to Carburetion Equipment Index for "Carter Climatic Control" for complete servicing and adjustment directions.

NOTE—No choke valve or choke mechanism is used on Compound Carburetion rear carburetors (Models 491-S, 510-S, 529-S, 543-S, 544-S).

Choke Setting—Reference mark on thermostat coil housing should be centered on scale on choke housing (all models).

Unloader:—Consists of an ear on the throttle lever which engages fast idle cam so as to open choke valve when throttle valve is opened wide.

Adjustment—Two separate adjustments required as follows: First, loosen screw on choke valve shaft lever, insert .010" feeler between lip on fast idle cam and boss on carburetor flange casting, hold choke valve tightly closed and tighten lever screw. Secondly, with throttle valves wide open, adjust unloader lip on throttle lever so that choke valve opening or clearance between upper edge of choke valve and air horn wall is 3/16" (use T109-28 gauge for all models).

SERVICING (499-S, 509-S, 528-S, 533-S):—These front carburetors are serviced in the same manner as other Carter "WCD" models. Refer to article on Carter Dual "WCD" Carburetors in this section for complete instructions.

SERVICING (491-S, 510-S, 529-S, 534-S, 543-S, 544-S):—These rear carburetors serviced in same manner as front carburetors (above) except that disassembly is simplified by the fact that no metering rods, choke system, or accelerating pump system is used.

Disassembly—Take out attaching screws and remove air horn, remove strainer nut and gasket, and strainer. Take out attaching screws and remove bowl cover assembly. Remove float pin, float and lever assembly, intake needle and seat assembly, and bowl cover gasket. Remove both low speed jet assemblies, body flange assembly and gasket. CAUTION—Do not attempt to remove main nozzles—these are permanently installed in carburetor casting. Take out attaching screws and remove body flange casting and gasket. Remove throttle valves, throttle centering screw, throttle shaft and lever assembly. Remove idle adjusting screws, springs, and idle port rivet plugs.

SERVICE PARTS:—**Gasket Sets.** Part No. 154 (528-S, 533-S Front Carburetors), No. 155A (529-S, 534-S, 543-S, 544-S Rear Carburetors).

Repair Packages (With Std. Metering Rods)—No. 1315A (528-S, 529-S, 543-S Series 40, 50 Carbs.), N . 1316A (533-S, 534-S, 544-S Series 60, 70, 90 Carbs.).

CARTER TYPE W1 (CHEVROLET)

	Carter No.
CHEVROLET	
1936 Cars & Trucks	319S, 34S
1936 Repl. Carb.	①569S
1936 Economy Engine	335S
1937 Cars & Trucks	346S
1938 Cars & Trucks	391S
1937-38 Economy Engine	358S
1939-40 Cars & Trucks	420S
1939-40 Economy Engine	434S
1940-41 Govt. Truck	387S, ②518S
1941-43 Cars & Trucks	③483S, 574S
1941-43 Economy Engine	492S
CHEVROLET (Cont.)	
1941-43 Govt. Truck	④515S, 570S
1946-48 Cars & Trucks	574S
1946-48 Economy Engine	616S
FRAZER	
1947-48 (See Note)	574S
KAISER	
1947-48 (See Note)	574S
PLYMOUTH	
1947-48 P15 (See Note)	574S

①—For cars with 284S, 319S, 334S.
②—Superseded by 518SA.
③—Superseded by 574S.
④—Superseded by 570S.

CARBURETOR MODEL IDENTIFICATION: Individual carburetor models can be identified by Body Casting Number stamped on face of carburetor flange as follows: 284-S—220, 321-S—267, 319-S & 334-S—265, 335-S—279, 346-S—292, 358-S—305, 391-S—337, 420-S—365, 434-S—373, 483-S & 574-S—421, 515-S & 570-S—421 (570-S may be stamped 492), 518-SA—510, 492-S & 616-S—432, 569-S—521.

►**FRAZER & KAISER NOTE:** This 574S carburetor used for limited production. Carter WA1 Carburetors (622S, SA, SB) and Carter WCD Carburetors (685S, SA) used on other cars.

►**PLYMOUTH NOTE:** This 574S carburetor used for limited production. Carter (B&B) Carburetor (D6G1) and Stromberg Model BXV-3 used on other cars.

►CHEVROLET FIELD & PRODUCTION CHANGES

Chevrolet 319S, 334S Metering Rod Production Change. Rod was changed in production from Part No. 75-144 (319S) 75-171 (334S) to Part No. 75-176. Fuel economy will be improved in intermediate range (319-S) or throughout driving range (334-S) by installing this new metering rod.

Chevrolet Economy Model Carburetors. Have smaller venturi and jet calibration and are fitted with stop pin limiting throttle opening to half-throttle (45 M.P.H.). Pin may be removed to permit top speed where necessary by inserting hacksaw blade behind lever and cutting off pin.

Chevrolet (1939) 420-S, 434-S Jet Changes—Metering rod and low speed jet changed in production for better low speed economy and performance. See Carter Jet Specification Table for complete jet data.

Chevrolet (1940) 420-S Changes—Carburetor used on 1940 cars has same model number as 1939 type but has following jet changes: Economizer Jet .062"-.063" (changed from .059-.060").

Chevrolet (1941-42-43) 483-S, 492-S, 515-S, 574-S Pump Connector Change—Pump connector changed from rigid link to coil spring type. Refer to special service notes below for installation directions for this spring type connector.

Cab-over-Engine Trucks & Dubl-Duti Panel Models—These models equipped with Carter (BB) Updraft type Carburetor. See separate article for data.

►**Engine Running Backward (when key turned off) Correction:** To correct this complaint, check idle speed with the engine warm and set the stopscrew for idle speed not to exceed 7 M.P.H. Check throttle valve and make certain that it is not sticking. Check manifold heat control valve thermostatic spring. Spring must be wound up only enough so that end can be slipped over manifold pin (approximately ½ turn). Excessive tension will cause poor performance.

►**Engine Stalling When Hot (1938 391S Carb.):** If the engine stalls when hot but idles properly when cool, this condition probably caused by pressure in float bowl caused by fuel 'percolation' forcing fuel through nozzle to manifold and stalling engine. Correct by installing new lightweight Bakelite Metering Rod Disc Part No. 129-21 (supersedes No. 129-18). Any pressure in float bowl will raise this disc and relieve bowl pressure. This stalling not caused by carburetor flooding and fuel pump pressure should not be reduced or jets and intake needle valve changed.

►**Excessive Pinging (1938 Engine with 391S Carb.):** If ping excessive during acceleration from constant speed f 20 MPH (after Octane Selector correctly set for slight ping when accelerating with wide open throttle from 10 MPH—see tune up data on car model for instructions), this ping probably caused by 'time lag' of vacuum control in retarding spark. Correct by removing vacuum line brass fitting on carburetor body and, on first models with small round hole in carburetor casting, drill hole out first with a #52 (.0635") drill and then with a #46 (.081") drill. On later models with rectangular hole in carburetor body, do not make this correction. Remove vacuum line fitting at vacuum diaphragm and drill out with #46 (.081") drill. On cars after March 15th, vacuum line and fittings were increased to 3/16" (first cars ⅛") to cut down this 'time lag'.

►**Carburetor "Loading" on Rough Roads (1938 391S):** See that the bowl cover gasket (No. 121-55) installed which has hole provided for vent by-pass. No. 121-46 gasket (used on 1937 models) does not provide for this vent by-pass and must not be used.

►**Excessive Fuel Consumption (poor Mileage Complaints 1938 391S):** See that small gasket between air horn and carburetor body at the air horn and fuel bowl air passage is in good condition and that the sealing washer at metering rod on bowl cover is in place. Air leaks at either point will upset the balanced bowl system (see description below) and cause excessive gasoline consumption at intermediate speeds.

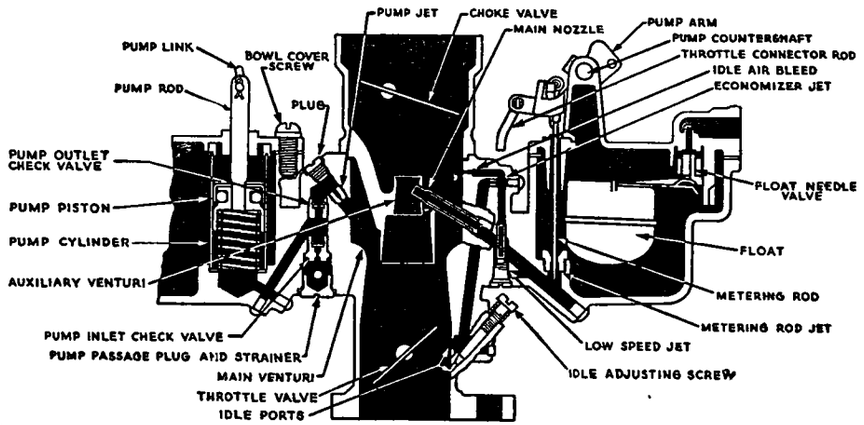

►**Rich & Lean Mixture Complaints (1939-40 420S & 434S):** To correct mixture being too rich at low speed, or too lean at high speed (caused by metering rod disc hanging on metering rod), install special Metering Rod Disc Retainer No. 201-10. This retainer should be installed on these carburetors (420-S, 434-S) whenever these carburetors are serviced. NOTE—This retainer installed at factory on later 1939 and all 1940 carburetors (see following note).

►**Popping Back Through Carburetor (1939-40 420S & 434S):** Caused by bakelite metering rod hole cover sticking to rod or sticking to top of metering rod disc stop (this stop used on later 1939 and all 1940 carburetors and should be installed on early 1939 carburetors—see paragraph above). This results in rich mixture (poor economy) at low speeds, and lean mixture or popping back through carburetor at high speeds. To correct this complaint, remove metering rod disc stop, open throttle wide, disconnect metering rod pin spring, turn metering rod and lift rod and disc out. Clean metering rod and disc thoroughly, clean hole in disc with #47 drill (.078"), reassemble rod, disc, and stop. CAUTION—Disc hole larger than #47 drill will cause rich mixture.

►**Installation of 1941 Bowl Cover Assembly on 1940 Carburetors to reduce Accelerating Pump Arm and Countershaft Wear:** This new bowl cover which has granodized pump shaft pressed in as part of cover may be installed on 1940 carburetors. Install all of following parts to make this change: Carburetor Bowl Cover #605312, Pump Arm #839522, Pump Connecting Link #839525, Plunger Assembly #839528, Throttle Connector Rod (select proper rod), Antirattle Spring #839539, Anti-rattle Spring Retainer #839540. IMPORTANT—Use regular bakelite metering rod hole cover and metering rod hole cover stop from 1940 carburetor when installing above bowl cover (see 1940 Chevrolet Carburetor data) and remove flat spring from inside of dust cover to permit assembly Saturate felt wick in lever yoke with light engine oil and check metering rod

►**Pump Connector Spring Installation on 483S, 492S, 515S, 574S Carburetors:** This new type connector consists of a coiled spring with 'hairpin' type lock ends.

CONTINUED ON NEXT PAGE

CARTER TYPE W1 (CHEVROLET) C ntinued

When installing this spring, insert long end (with 90° bend) through hole in upper end of pump plunger, then insert short (straight) end of spring through hole in pump lever, finally hook the long end of the spring link over the short end so as to lock the spring in place.

►**1942 Accelerator Pedal Rod and Starter Linkage Binding Correction.** Binding of these parts may be caused by misalignment between throttle cracker lug on accelerator rod and starter cross-shaft extension which may allow the extension to slip past the lug and bind the starter pedal linkage and accelerator rod. If this misalignment is not caused by either section of the accelerator rod being loose in the metal-encased rubber coupling, correct the alignment by clamping the lug in a vise and twisting lug with a wrench.

CAUTION—Do not bend accelerator rod and use care not to break lug loose from rod when making this adjustment. NOTE—Accelerator rod must be replaced if either section of rod loosens in metal-encased rubber coupling.

►**Engine "Surge" in 22-35 MPH. Range (1947 574S) Complaints:** Will be noted when driving with practically constant-throttle or on slight down grades with car over-running engine and may be more evident on new, tight, engines. Check and correct surge complaints as follows (do not attempt correction on new engines until run 1000 miles or more):

Spark Plug Gaps—Must not be set at less than .040" (closer gap may affect engine surging).

Ignition Timing—Make certain that timing set exactly as recommended and not advanced beyond 5° BTDC setting. See Tune-Up data on car model page.

Carburetor Fuel Mixture—Check for lean mixture. If surging due to lean carburetion, install one step richer metering rod (Standard Metering Rod—Carter No. 75-485, One-step Rich Metering Rod—Carter No. 75-562).

DESCRIPTION

DESCRIPTION: 1936-37. Downdraft type with throttle operated accelerating pump and metering device (metering rod). The main nozzle is located in the upper or primary venturi with a secondary and a main venturi directly below this point in the mixing chamber. Fuel for main nozzle is metered by metering jet and metering rod. Accelerating pump discharges through a pump jet against the wall of the secondary venturi. Idle adjustment and accelerating pump setting are the only points requiring attention.

1938-40 Carburetors. New 'balanced' type bowl construction. Bowl is vented through system of passages in bowl cover, carburetor body, and air horn casting to air intake below air cleaner (#35 drill hole below choke valve, #27 hole above choke valve through drilled hole in shaft). This construction eliminates surging of fuel into air passages on rough roads (bowl vent located in top of countershaft dome on bowl cover) and holds air-and-fuel proportions constant under all conditions. See Loading and Gasoline consumption complaint remedies above.

1941 & Later Carburetors. Balanced bowl same as 1940 carburetors except for following changes: Carburetor throat increased to 1½" with same size (1¼") main venturi as in 1940. Low speed jet well has been lowered and jet is fed through drilled passage opening through side of jet. One idle air bleed only is used (this air by-pass increased in size and second by-pass discontinued) and an additional idle discharge port is located above the throttle valve. Balance passages in air horn have been increased in size and opening above choke valve consists of brass tube pressed in casting. New type float bowl cover used with new granodized pump shaft pressed in place and lubricated by felt oil wick (not necessary to pack screw hole with graphite grease as on previous models). Accelerating pump has new rectangular plunger stem and is furnished as an assembly with shaft, guide and leather. Pump outlet check valve is a brass disc (was bakelite) and must not be interchanged with the former bakelite type. Throttle connector rod upper end is flattened for new type anti-rattle coil spring and lock (flat anti-rattle spring riveted inside dust cover not used).

CARBURETOR ADJUSTMENT & OVERHAUL

IDLE ADJUSTMENT: Adjust only with engine warmed up so that choke valve is wide open and fast idle inoperative. Idle adjusting screw controls fuel mixture and should be turned in for leaner mixture, out for richer mixture. Idle speed is controlled by throttle lever stopscrew. Approximate settings are given in table below. See car models pages for complete tune-up data.

IDLE SETTING

Car Model	Carburetor	Idle Screw Setting	Idle Speed
Chevrolet ('36-40)	All Models	1-2 turns open	400 RPM.
Chevrolet ('41 On)	All Models	1¼-2¼ turns open	450-500 RPM.
Frazer & Kaiser	574S	1¼-2¼ turns open	500 RPM.
Plymouth	574S	1¼-2¼ turns open	6 MPH.

PERFORMANCE: Should be satisfactory if idling adjustment and accelerating pump adjustment correctly made. See Carter Jet Specification Table for standard jet calibration and recommended changes for special operating conditions

ACCELERATING PUMP: Low pressure type positively actuated by throttle lever. Fuel is drawn into pump cylinder through intake check valve and strainer when throttle is closed and is discharged through outlet check valve and pump jet in wall of mixing chamber when throttle opened for acceleration.

►*PUMP OUTLET VALVE CAUTION*—The 1941 and later outlet valve is a brass disc and must not be interchanged with bakelite type check valve used on former carburetors (use of bakelite check valve on 1941 carburetor, or brass check valve on 1940 and earlier carburetors will upset carburetor calibration).

Adjustment (1936-40). Pump countershaft arm under dust cover on float bowl cover provided with three holes for engagement of pump plunger connecting link. Inner hole provides minimum stroke, outer hole medium stroke, and upper hole maximum stroke. See tune up data on car model page for recommended setting and seasonal changes.

NOTE—Pump countershaft should be lubricated at 5000 mile intervals by removing dust cover screw at top of carburetor and filling screw hole with good grade of graphite grease before replacing screw.

Adjustment (1941 & Later Models). Pump stroke not adjustable and pump countershaft does not require any lubrication. Refer to the Service Notes for description and installation directions for new type pump connector spring.

METERING ROD (ECONOMIZER): Metering rod and jet assembly meters all fuel for main nozzle (stepped and tapered rod is lifted out of jet as throttle is opened to provide greater fuel flow through jet to nozzle). Metering rods can be changed for special operating conditions such as high altitudes. See Carter Jet Specification Table for standard and special lean metering rods for each model. Check and adjust metering rods whenever rods removed and replaced

Metering Rod Adjustment (All Models). Take out dust cover screw, remove dust cover, remove pin spring, turn metering rod ¼ turn to disengage it from pump arm pin, lift rod out being careful not to lose the rod spring and disc. Back off throttle stopscrew so that throttle valve tightly closed, install metering rod gauge (see table below) in place of rod using care that gauge is vertical and tapered end seats in metering rod jet. If metering rod pin does not rest on bottom of notch on gauge with pump arm connector rod centered freely in pump arm hole, remove connector rod and bend until this setting secured. Remove gauge and re-install metering rod, make certain that disc in place on rod and that pin spring properly connected.

METERING ROD SETTING

Car Model	Carburetor	Metering Rod Gauge	Length
Chevrolet	All Models	T109-25	2.795"
Frazer & Kaiser	574S	T109-25	2.795"
Plymouth	574S	T109-25	2.795"

FLOAT LEVEL: To check float level, remove bowl cover and float assembly, invert cover, remove gasket, measure from gasket seat on cover to top of float at free end. Distance should be correct as shown in table below (plus or minus 1/64"). Adjust float level by bending tip of float lever.

FLOAT LEVEL SETTING

Car Model	Carburetor	Float Level
Chevrolet ('36-38)	319S, 34S, 35S, 46S, 58S, 91S	3/8"
Chevrolet ('39-47)	420S, 34S, 83S, 92S; 574S; 616S	1/2"
Chevrolet Govt. Trk.	387S, 515S, 518S, 570S	3/8"
Chevrolet Repl. Carb.	569S	1/2"
Frazer & Kaiser	574S	1/2"
Plymouth	574S	1/2"

Float Travel—Float travel from open to closed position should be ½". To check travel, measure distance from cover to top of float at free end with float hanging freely from cover. Distance should be 1". Adjust by bending two float stops slightly with small pliers.

Needle Valve & Seat—Furnished only in matched Sets as follows: Part No. 25-33S—#48 Intake Hole (All Models).

THROTTLE VALVE SETTING: When installing valves, use new attaching screws and install screws loosely, tap valve lightly to centralize it in bore, then tighten attaching screws securely.

Setting—Check with stopscrew backed off so that throttl valve tightly closed. Distance from valve to top f lower idle port (Ide Port Distance) or idle port opening (below valve) and distance from top of valv to bottom of vacuum spark port is shown in table below. Shims furnished .002" thick (No. 2-93), .005" thick (N . 2-94) to correct throttl valve position.

CONTINUED ON NEXT PA E

CARTER TYPE W1 (CHEVROLET) C ntinued

THROTTLE VALVE SETTING

Car Model	Carburetor	Idle Port Distance	Vacuum Spark Port
Chevrolet ('36)	319S, 334S	.016-.020"	
Chevrolet ('36-38)	335S, 358S	.012-.016"	.015-.030"
Chevrolet ('37)	346S	.034-.038"	
Chevrolet ('38)	391S	.047-.051"	.016-.020"
Chevrolet ('39-40)	420S, 434S	.047-.051"	.000-.004"
Chevrolet ('40-41)	387S; 518S, SA	.034-.038"	
Chevrolet ('41-47)	515S, 570S	.044-.048"	②.000-.004"
Chevrolet ('41-48)	483S, 574S	.044-.048"	.000-.004"
Chevrolet ('41-48)	492S, 616S	.044-.048"	.000-.004"
Frazer & Kaiser	574S	.044-.048"	.000-.004"
Plymouth	574S	.044-.048"	.000-.004"

②—Model 515-S only (No vacuum spark port on Model 570-S).

CHOKE: Choke valves are butterfly type with following special pressure relief devices:

Models 319-S, 334-S, 335-S, 346-S, 358-S. Split type with half of choke valve hinged and controlled by a spring. The hinged portion of the valve is held closed by a trigger lock when the carburetor is fully choke for starting but is released as soon as the choke valve is opened.

391-S, 420-S, 34-S—Offset valve, semi-automatic type. Choke valve shaft and lever linked by coil springs (light inner spring allows choke valve to operate automatically during warming up period regardless of choke button position, heavy outer spring absorbs back pressure and prevents damage to valve.

483-S, 492-S, 515-S, 574-S, 616-S. Butterfly type with offset valve which seats solidly in air horn when closed to prevent possible damage caused by backfire. Choke is semi-automatic type with choke valve lever linked to operating lever by a coil spring which allows valve to be automatically positioned for correct choke action during the warm-up period.

DISASSEMBLY OF CARBURETOR: Take out screw and remove dust cover, remove lock on upper end of connector rod by pushing lock in and turning it 90°, remove lock and anti-rattle spring. Disconnect metering rod spring, remove metering rod, using care not to lose metering rod disc. Remove accelerating pump link. Take out bowl cover screws, remove bowl cover assembly, disassemble float, remove float needle valve and seat. Remove pump plunger, plunger spring, and metering rod jet. Loosen three air horn screws, remove main nozzle passage plug and nozzle screw plug. Reach down through air horn with screwdriver and press on 'D' section of nozzle to force nozzle out of 'D' section of main venturi (CAUTION—do not press on end of main nozzle). Take out air horn screws and remove air horn. Remove low speed jet, accelerating pump passage plug and pump check valves, pump jet passage plug and pump jet, idle adjusting screw and idle passage plug.

Servicing—Wash all parts in clean gasoline, blow out all passages with compressed air, check idle ports and idle air bleed for carbon deposits. Inspect metering rod, metering rod jet, low speed jet, pump jet and check valves, and pump plunger for wear or damage. See that choke valve operates freely. Inspect main nozzle for burrs on end (CAUTION—Do not dismantle nozzle assembly (inner nozzle pressed in outer nozzle). Replace all worn or damaged parts.

REASSEMBLY OF CARBURETOR: Use all new gaskets, soak the needle seat gasket and metering rod jet gasket in denatured alcohol for 15 minutes, install gaskets on parts and allow to dry before installing in carburetor. Install all parts in reverse order to disassembly directions above and note following special instructions and cautions:

Throttle & Choke Valves—Install choke valve with trademark 'C' upward, throttle valve with trademark toward idle port side, use new attaching screws and install screws loosely, tap valve lightly to centralize it in bore, then tighten attaching screws securely.

Nozzle Assembly—Install air horn screws loosely, make certain that copper gasket in place on nozzle, invert carburetor and drop nozzle into place with flat portion of 'D' section of nozzle in line with 'D' section of primary venturi, install nozzle screw plug securely, tighten air horn screws. Check nozzle position by measuring from inner diameter of primary venturi to end of nozzle. Distance should be .210-.230" and is adjusted by the copper gaskets on the nozzle.

Low Speed Jet—Jet must seat securely in casting. To check seating, install jet, then remove jet and inspect for complete bearing around top end of jet.

Air Horn—Make certain that small fibre gasket in place at balance passage when installing air horn. This gasket is very important to insure correct 'balanced' performance of carburetor.

Adjustment—Check metering rod setting, float level, and float travel (see directions above). Adjust carburetor when re-installed on engine.

SERVICE PARTS: Gasket Set. Package No. 110 (319-S, 334-S, 335-S, 346-S, 358-S), No. 129 (391-S), No. 138A (420-S, 434-S, 483-S, 492-S, 574-S Civilian Use only, 616-S), No. 174A (483-S, 515-S, 556-S, 570-S, 574-S Military Use only).

Repair Packages (With Std. Metering Rod)—No. 1004C (319-S, 334-S), No. 1005C (346-S), No. 1006C (391-S), No. 1013D (420-S), No. 1089B (483-S, 574-S), No. 1091 (492S, 616S), No. 1336 (515S, 570S, 574S Military use only—See Note), No. 1074B (387S, 518S, 518SA).

NOTE—Repair Package No. 1336 contains Metering Rod No. 75-562 (original equipment on 570-S) but this part may be used also on Carburetor Models 483-S, 515-S, 574-S (originally equipped with No. 74-485) for military use only.

CARTER TYPE W1 (EXCEPT CHEVROLET TYPES)

Carter No. — Used On:

329-S—HUDSON SIX, MODEL 63 (1936).
330-S—HUDSON EIGHT, MODELS 64, 65, 66, 67 (1936).
①333-S—HUPMOBILE SIX, MODEL 618-G (1936)
327-S—OLDSMOBILE SIX, MODEL F-36 (1936)—FIRST 17,745 CARS.
339-S—OLDSMOBILE F-36 SERIAL NOS. 217746 TO 274031 AND 275111 UP.
342-S—OLDSMOBILE F-36 SERIAL NOS. 274032 TO 275110.
351-S—OLDSMOBILE SIX, MODEL F-37 (1937)
385-S—OLDSMOBILE SIX, MODEL F-37 (LATE 1937), F-38 (1938)
OLDSMOBILE 6, F-39 '60', G-39 '70' (1939) FIRST CARS.
324-S—PONTIAC SIX, DELUXE 36-26-A, MASTER 36-26-B (1936).
322-S—PONTIAC EIGHT, MODEL 36-28 (1936).
340-S—PONTIAC, ALL TAXICAB MODELS (1936).
352-S—PONTIAC SIX, MODEL 37-26CA (1937)
350-S—PONTIAC EIGHT, MODEL 37-28CA (1937)
371-S—STUDEBAKER DICTATOR, MODS. 5A, 6A (1937), ENG. No. D-143675 UP
329-S—TERRAPLANE, CUSTOM MODEL 62 (1936).
①331-S—TERRAPLANE DELUXE MODEL 61 (1936)
①348-S—TERRAPLANE DELUXE 71, COMMERCIAL 70 (1937)

①—Climatic Control & Fast Idle not used (Anti-percolators on some models).

NOTE:—All models fitted with Carter Climatic Control (automatic choke), Fast Idle, Unloader and Choke Valve Lock, and Anti-Percolator. See complete article in Carburetion Equipment Section for data on Climatic Control & Fast Idle.

Nozzle Assembly on 327S, 38S, 39S, 42S, 51S, 85S. Consists of outer 'Slip Nozzle' in primary venturi and inner nozzle seated within this outer nozzle. Do not dismantle nozzle assemblies.

Oldsmobile F-38 Model. Model 385-S carburetor used on cars without automatic Self-shifting Transmission only. See Carter Vacumeter Carburetor article for data on type used with Self-shifting transmission.

Oldsmobile 1939 Models—Later cars use Carter WA1 Models 425-S, 426-S carburetors. See following article for complete data.

TYPE:—Same design as other Carter W1 carburetors except for Climatic Control, Fast Idle and Unloader mounted on carburetor air horn.

IDLE ADJUSTMENT:—Needle valve type controlling fuel mixture. Adjusting screws should be turned in for leaner mixture or out for richer mixture. Do not adjust until engine warmed up so that choke valve wide open and idling at hot or slow idling speed with fast idle bar raised to clear throttle stopscrew. Adjust throttle stopscrew so that idling speed is approximately 350 R.P.M., turn idling screw in until engine begins to miss, then turn screw out slowly until engine fires evenly. Readjust throttle stopscrew if necessary. See tune up instructions on car model pages. Approximate idle screw settings shown in table below.

	IDLE SETTING	
Car Model	Idle Screw Setting	Idle Speed
Hudson	½-1 turn open	350 RPM., 7 MPH.
Hupmobile (all models)	⅜-1 turn open	300 R.P.M.,
Oldsmobile (1936-37)	¾-1¼ turn open	350 RPM., 6 MPH.
Oldsmobile (385-S)	1-1½ turns open	350 R.P.M., 6 M.P.H.
Pontiac 6 & 8 ('36)	½-1¼ turn open	360 RPM., 6 MPH.
Pontiac 6 (1937)	¾-1¼ turn open	360 RPM., 6 MPH.
Pontiac 8 (1937)	½-1 turn open	350 RPM., 6 MPH.
Studebaker	½-1¼ turn open	360 RPM., 6 MPH.
Terraplane	½-1 turn open	350 RPM., 7 MPH.

ACCELERATING PUMP:—Low pressure type positively actuated by throttle lever. Fuel drawn into pump cylinder through intake check valve and strainer on upstroke of plunger and discharged through outlet disc check valve to pump jet in carburetor wall on downstroke of plunger when throttle opened.

Adjustment—Pump arm on countershaft under dust cover at top of cylinder provided with three holes for engagement of pump plunger connecting link. Inner hole provides minimum stroke, outer hole medium stroke and upper hole maximum stroke. See tune-up data on car model pages for recommended settings and seasonal changes.

NOTE—Pump countershaft should be lubricated at 5000 mile intervals by removing dust cover screw at top of carburetor and filling screw hole with good grade of graphite grease before replacing screw.

PERFORMANCE:—Should be satisfactory if idle setting and accelerating pump setting correct. See Carter Jet Specification Table and tune-up data on car model pages for standard jet calibrations and any recommended changes.

METERING ROD (ECONOMIZER):—All fuel for main nozzle metered by three-step metering rod linked to pump arm so that rod is raised permitting increased fuel flow through metering jet as throttle is opened. No adjustment provided but metering jet may be changed to secure leaner-than-standard fuel mixtures to compensate for special fuel or high altitude operation (see Jet Specification table). Metering rod setting should be checked whenever rods are removed.

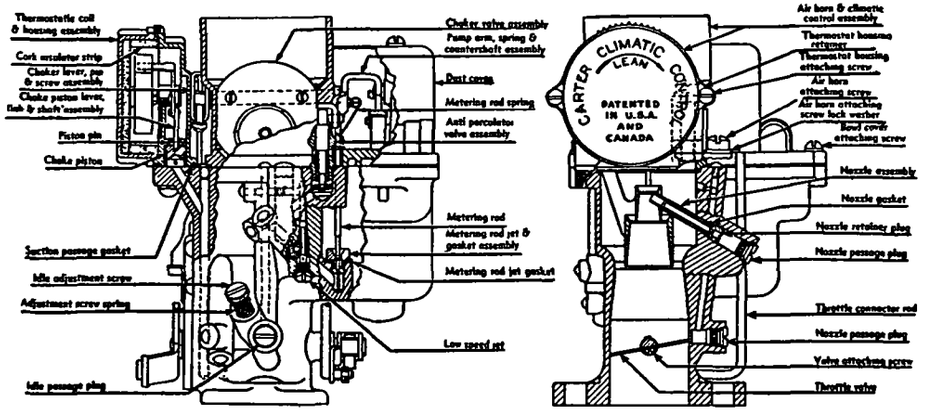

To Remove Metering Rod—Take out dust cover screw, lift off dust cover, take off pin spring, turn metering rod one-quarter turn to left to disengage it from arm, lift rod out being careful not to lose disc on rod.

To Check Metering Rod—See that choke valve opened and fast-idle block raised to clear throttle stopscrew, back off stopscrew so that throttle closes tightly. Disconnect throttle connector at pump arm. Use special gauge (see table below for type for each model), insert gauge in place of metering rod so that beveled end seats in metering jet and gauge is held vertically. Rotate pump arm so that metering rod pin rests lightly in lower end of notch in gauge, bend lower end of throttle connector so that upper end centers freely in hole in pump arm. Remove gauge and re-connect throttle connector.

METERING ROD SETTING

Car Model	Carburetor	Gauge Part No.	Length
Hudson 63, 64, 65, 66, 67	329-S, 330-S	T-109-25	2.795"
Hupmobile 618-G	333-S	T-109-25	2.795"
Oldsmobile	327-S, 339-S, 342-S, 351-S	T-109-25	2.795"
Oldsmobile	385-S	T109-25	2.795"
Pontiac 1936-37	322-S, 24-S, 40-S, 50-S, 52-S	T-109-26	2.718"
Studebaker	371-S	T-109-25	2.795"
Terraplane '36-37	329-S, 331-S, 348-S	T-109-25	2.795"

To Install Metering Rod—Insert rod (with disc in place) vertically so that lower end enters metering rod jet, turn rod one-quarter turn to engage pin on pump arm, replace pin spring. See that rod hangs freely, replace dust cover.

CONTINUED ON NEXT PAGE

CARTER TYPE W1 (EXCEPT CHEVROLET) C nt.

ANTI-PERCOLATOR:—Saxophone Key Type—This device consists of vent above the main jet well controlled by a cap linked to the accelerating pump rod so that the vent is opened when the throttle valve is closed to prevent any 'percolating' discharge of fuel through the main jet when the carburetor is hot. The cap must be closed when the throttle is opened.

Adjustment. Anti-percolating cap must be off seat when throttle closed to idling position. Adjust by bending anti-percolating cap up slightly to permit pump arm to depress bracket. Cap must be seated when throttle opened slightly beyond idling position. To adjust, open the throttle valve exactly .030" using a drill rod of the correct size inserted between the throttle edge and carburetor wall on side opposite idle ports to maintain opening, adjust rocker arm so that clearance between rocker arm lip and pump arm is .005-.015".

ANTI-PERCOLATOR:—Plunger Type. Consists of a spring-loaded plunger type valve which is opened by a lip on the pump arm when the throttle is closed to vent the main jet well and prevent any 'percolating' discharge from the main jet when carburetor is hot. Valve must be closed when throttle is opened

Adjustment. Take out dust cover screw and remove dust cover. Back off throttle stopscrew, hold throttle valve tightly closed, adjust lip on pump arm so that anti-percolator valve is depressed so that indicator line on valve stem is flush with top of anti-percolator plug. This adjustment should be made after metering rod setting checked and care taken not to disturb metering rod.

Adjustment (Early Types without Indicator Line). On these models, use tool J-109-29 or drill rod of correct size inserted between throttle valve edge and carburetor wall on side opposite idle ports so that throttle valve opening is exactly .020", adjust lip on pump arm so that clearance between pump arm lip and anti-percolator valve stem is .005-.015".

FLOAT LEVEL:—To check float level, take off float bowl cover, remove gasket, invert cover, measure distance from gasket seat to nearest point on float (top when not inverted and at free end). Float level can be corrected by bending lip of float lever. Setting should be ⅜" for all models except the following:

FLOAT LEVEL SETTING

Car Model	Carburetor	Float Setting
Oldsmobile F-36	327-S	½"
All Other Models		⅜"

FAST IDLE:—1936 & Studebaker 371-S. Consists of fast idle block linked to the choke valve which drops down behind the throttle stopscrew so that the throttle is held open in the fast idle position when the choke valve is in use (throttle must be opened momentarily to allow fast idle to operate). No adjustment required.

FAST IDLE:—1937-38 Models except Studebaker 371-S. Consists of fast idle cam pivoted directly above the throttle lever so as to serve as a stop for the throttle stopscrew. Fast idle cam is linked to Climatic Control and is rotated to the fast idle position when the carburetor is cold (choke valve closed).

Adjustment. Back off throttle stopscrew, rotate fast idle cam to normal (hot) idling position, turn stopscrew in so that it just contacts first step on fast idle cam with throttle valve seated, use tool T109-41 to bend offset portion of fast idle link so that clearance between inside wall of air horn and lower edge of choke valve is ⅝". Make certain that fast idle linkage does not bind.

CHOKE:—All choke valves are offset type. See article in Carburetion Equipment Section for complete data on automatic choke (Climatic Control).

Throttle Connector—Used on some models only. Consists of a link connecting the choke and throttle valves so that the throttle valve is opened slightly when the carburetor is choked for cold starting. This provides a 'fast idle' for as long as the choke valve is in use.

FAST IDLE SETTING

Car Model	Carburetor	Throttle Opening
Terraplane 61 (1936)	331-S	.036-.040"
Terraplane 70, 71 (1937)	348-S	.036-.040"

Unloader (1936 & Studebaker 371-S):—Consists of a curved lip on the fast idle block which opens the choke valve when the throttle valve is opened wide. To adjust, bend the curved lip so that the choke valve opening (distance from lower edge to air horn wall) is 7/16" (329-S, 330-S), ¼" (322-S, 371-S), ½" (324-S, 327-S, 338-S, 339-S, 340-S, 342-S) with throttle valve wide open.

Choke Valve Lock. Consists of a lip on the choke valve lever and lug on fast idle link which prevents choke valve closing when throttle valve is wide pen. See that clearance between lip and fast idle lug is 1/16" with both choke valve and throttle valve wide open. Can be adjusted by filing off top edge of fast idle link slightly using care to maintain original contour. See that choke valve is released when throttle valve is closed.

Unloader (1937-38 Models except Studebaker 371-S):—Consists of a cam on the throttle lever which opens the choke valve when the throttle valve is opened wide. To adjust, bend the cam so that the choke valve opening (distance from lower edge of valve to air horn wall) is ⅜" (351-S, 385-S), ¼" (350-S, 352-S) with throttle valve wide open.

Choke Valve Lock. Consists of a lip on the fast idle link which prevents choke valve closing with throttle valve wide open. To adjust, hold choke valve and throttle valve wide open, bend lip so that clearance between it and throttle lever lock is 1/32". See that choke valve is released when throttle valve closed.

TROUBLE SHOOTING:—Poor Idling Performance—If correct adjustment cannot be secured, engine stalls, or low speed performance is unsatisfactory, remove low speed idle tube, clean with compressed air, see that tube is tight in casting at top and bottom. Remove idle adjusting screw and clean idle passage with air.

Acceleration Unsatisfactory—Check pump setting, examine pump for damaged or worn plunger leather, bent pump arm or loose plunger, corrosion or sediment in pump cylinder. Use loading tool when replacing plunger in pump cylinder to avoid damage to plunger leather. If increased resistance felt on throttle lever, remove pump jet and clean with compressed air. Examine ball check valves and see that they are free and seat gasoline tight.

Carburetor 'Loads Up'—If carburetor has been in use for some time, check float level and adjust if necessary.

THROTTLE VALVE SETTING:—'Idle Port' opening is distance from lower edge of throttle valve to lower edge of port with valve closed. 'Vacuum Port' figure is distance from lower edge of port to top edge of valve.

THROTTLE VALVE SETTING

Car Model	Carburetor	Idle Port	Vacuum Port
Hudson	329-S, 330-S	.016-.020"	
Hupmobile	316-S, 333-S	.008-.012"	
Oldsmobile	327-S	.010-.014"	.041-.047"
Oldsmobile	339-S,42-S,51-S,85-S	.010-.014"	.021-.029"
Pontiac	322-S,24-S,40-S,50-S,52-S	.014-.018"	.022-.027"
Studebaker	371-S	.014-.018"	.022-.027"
Terraplane	329-S	.016-.020"	
Terraplane	331-S, 348-S	.016-.020"	

NOTE—Throttle valve shims furnished .002" thick (2-93), .005" thick (2-94) to correct throttle valve location.

SERVICING:—Disassembly. Remove dust cover, remove fast idle cam attaching screw and fast idle cam or take out two screws and remove fast idle drop-bar, remove nozzle plug, retainer plug, nozzle and gasket (do not take nozzle assemblies apart). Remove air horn attaching screws and lockwashers (two above, one below), lift off air horn and Climatic Control assembly. Remove pin spring and connector link at top of accelerating pump stem, remove pin spring, unhook metering rod spring, take out metering rod and disc (do not lose disc which is free on metering rod). Remove spring retainers and connector rod springs, remove throttle connector. Remove bowl cover retaining screws and lockwashers, lift off bowl cover, lift off cover gasket. Remove pump arm and countershaft on cover by revolving one-half turn. Remove float and lever assembly, pin and pump cylinder bushing gasket, needle and seat from bowl cover. Remove pump plunger and rod assembly and pump spring (remove nut on stem to disassemble pump plunger). Remove metering rod jet and gasket assembly. Use special 13/32" socket wrench No. 15451 to remove Anti-Percolator valve plug assembly. Remove pump jet passage plug, gasket, and pump jet, loosen screw and remove throttle shaft arm, remove low speed jet, ball check passage plug, strainer, and intake and outlet ball check plug assemblies, throttle valve screws, valves, throttle shaft assembly, idle port plug, and idle adjustment screw. Do not lose copper washers used on low speed jet, ball check assemblies.

Servicing. Wash all parts in gasoline (do not immerse cork gaskets). Replace worn parts (replace metering rod and metering jet as an assembly). Blow out all passages in castings. Use all new gaskets when re-assembling.

Assembly. Reverse disassembly directions above. See that all jets and plugs tightened securely. When replacing throttle valves, install valve with trademark up, insert screws loosely, back off stopscrew so that valve closes tightly, tap valve lightly to centralize it in bore before tightening screws. Use loading tool to install pump plunger and lubricate plunger leather with caster oil. Check float level and metering rod setting as directed above and adjust carburetor when re-installed on engine.

CARTER W1 VACUMETER TYPE

Carter No. — Used On:

*411-S—HUDSON '112', 89 (1938) BEFORE ENG. NO. 89-36571.
*417-S—HUDSON '112', 89 (1938) AFTER ENG. NO. 89-36572
*437-S—HUDSON, MODELS 90, 91, 92, 98 (1939)—SEE NOTE
*438-S—HUDSON, MODELS 90, 91, 92, 98 (1939)—SEE NOTE
398-S—HUPMOBILE, MODELS 822E (1938), 922E (1939)
HUPMOBILE SKYLARK, MODEL R (1939-40)
388-S—OLDSMOBILE 6, F-38 WITH SELF-SHIFTING TRANS. (1938)
364-S—PONTIAC TAXICAB, MODEL 37-26CA (1937)
401-S—PONTIAC SIX, MODEL 38-26DA (1938)
400-S—PONTIAC EIGHT, MODEL 38-28DA (1938)
*397-S—TERRAPLANE, MODELS 80, 81, 88 (1938)
* These models not fitted with Climatic Control and Fast Idle.

NOTE:—Hudson 1939. Model 437-S carburetor used on cars with Automatic Clutch, 438-S on other cars. Model 437-S has "slow-closing throttle."

CARBURETOR MODEL IDENTIFICATION:—Individual carburetor models may be identified by Body Casting Number stamped on face of carburetor flange as follows: 364-S—306, 388-S—333, 397-S—339, 398-S—347, 400-S—343, 401-S—344, 411-S—359, 417-S—362, 437-S—339, 438-S—383.

SPECIAL SERVICE NOTES: Hudson 112. To correct Lean Idle complaints on this model, enlarge vent hole in bowl cover by drilling out hole with #38 (.1015") or #39 (.0995") drill.

Pontiac 1938 Surge & Flat Spot Correction—Caused by improper seal between anti-percolator cap and seat which admits air at speeds above idle. Correct by installing new anti-percolator cap and arm assembly 184-14S, rocker arm spring 61-179, and anti-percolator bracket pin 150-89. New cap and rocker arm assembly has same number as earlier type but may be identified by brown leather seal (first type had black leather seal). Adjust anti-percolator after installing new parts. CAUTION—All above parts must be installed as a unit.

Pontiac Taxicab—Model 364-S carburetor has vacuum controlled Metering Rod (not adjustable). This carburetor used only in conjunction with Monarch Governor and special gasket No. 1A-42 must be used between Governor and carburetor (standard gasket must not be used).

Whistling Complaints (all models)—To correct whistle at vacuum spark port, remove vacuum passage plug (on side of body casting near idle adjusting screw), install special bushing No. 38A-35 and new rivet plug.

Anti-percolator Plug Change (388-S, 398-S, 364-S, 400-S, 401-S)—Original type plug, No. 11B-109, superseded by new type No. 11B-65.

TYPE:—Design is similar to other Carter W-1 Carburetors (see preceding article) except for new "Vacumeter" type metering rod control as follows:

Vacumeter Metering Rod Control. Metering rod is linked to stem of spring-loaded vacuum piston and is normally held against stop-pin on pump shaft by manifold vacuum (stop-pin insures correct metering rod position for any throttle opening and will lift metering rod out of metering jet mechanically in same manner as on other Carter Carburetors when throttle is opened). Whenever vacuum decreases due to throttle being opened for acceleration, or added load placed on engine, vacuum piston spring forces piston and metering rod up so that richer mixture is supplied for acceleration and power. As soon as vacuum builds up again, piston pulls metering rod against stop-pin so that correct maximum-economy mixture is supplied.

IDLE ADJUSTMENT:—Idle adjusting screw controls idle fuel mixture and should be turned in for leaner mixture, out for richer mixture. Approximate settings shown in table below. Idle speed controlled by throttle lever stopscrew. Adjustments should be made only with engine warmed up and idling at hot or slow speed (choke valve wide open, fast idle inoperative). See tune up data on car model pages for complete tune-up data on each car model.

IDLE SETTING

Car Model	Idle Screw Setting	Idling Speed
Hudson 112	¾-1½ turns open	350 R.P.M., 7 M.P.H.
Hudson 90, 91, 92, 98	½-1¼ turns open	7 MPH.
Hupmobile	¾-1¼ turns open	300 R.P.M.
Oldsmobile F-38	½-1 turn open	350 R.P.M., 6 M.P.H.
Pontiac Taxi (1937)	¼-¾ turn open	360 RPM., 6 MPH.
Pontiac 6 38-26DA	¾-1¼ turns open	360 R.P.M., 6 M.P.H.
Pontiac 8 38-28DA	½-1 turn open	350 R.P.M., 6 M.P.H.
Terraplane 80, 81, 88	½-1 turn open	350 R.P.M., 7 M.P.H.

METERING ROD (ECONOMIZER):—All fuel for main nozzle metered by metering rod and jet. Metering rod operated by vacuum piston with throttle control (see Vacumeter Metering Rod Control description above). No adjustment provided but metering rods may be changed to secure leaner-than-standard fuel mixture to compensate for special fuel or high-altitude conditions. Metering rod setting must be checked whenever metering rods removed or changed.

To Remove Metering Rod—Take out dust cover screw, remove dust cover, free metering rod spring, disengage metering rod from piston link and lift rod out being careful not to lose metering rod disc.

To Check Metering Rod—Install gauge (see table below for correct type for each model) in place of metering rod making certain that beveled end is seated in metering jet and that gauge is vertical. Back off throttle stopscrew so that throttle valve is completely closed. Press down lightly on vacuum piston arm so that metering rod pin rests on shoulder of gauge. Bend lip of piston link so that it rests on pump arm pin.

METERING ROD SETTING

Car Model	Carburetor	Gauge Part No.	Length
Hudson	411-S, 17-S, 37-S, 38-S	T109-25	2.795"
Hupmobile	398-S	T109-25	2.795"
Oldsmobile F-38	388-S	T109-25	2.795"
Pontiac 6 & 8	401-S, 400-S	T109-26	2.718"
Terraplane 80, 81, 88	397-S	T109-25	2.795"

NOTE—Metering rod on 364-S (Pontiac Taxicab) not adjustable. See that vacuum piston operates freely (piston must be clean and dry—do not oil). Use new spring under piston whenever carburetor overhauled.

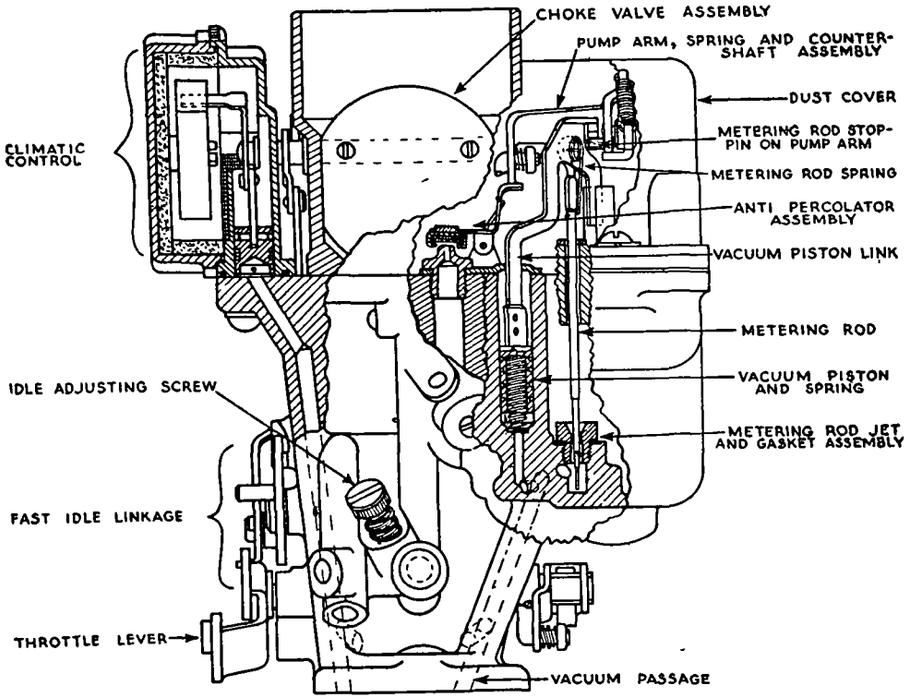

To Install Metering Rod—Make certain that piston moves freely, install metering rod being careful that lower end enters metering jet and that disc is in place on rod, engage rod on piston pin link, install rod spring.

NOTE—Whenever vacuum piston removed, check piston spring and replace if weak or length incorrect. Piston must be clean, dry, and not worn.

PERFORMANCE:—Should be satisfactory if idle adjustment and accelerating pump setting correct. See Carter Jet Specification Table and tune up data on car model page and Trouble Shooting data (following).

ACCELERATING PUMP:—Low pressure type. Positively operated by throttle lever through countershaft and linkage under dust cover on float bowl cover. Fuel is drawn into pump cylinder through inlet strainer and ball check valve when throttle is closed and is discharged through outlet ball check valve and pump jet into mixing chamber when throttle is opened for acceleration.

CONTINUED ON NEXT PAGE

CARTER W1 VACUMETER TYPE (C ntinu d)

Pump Adjustment—Three holes provided in pump arm on countershaft (under dust cover on float bowl cover) for pump link engagement. Inner hole provides minimum stroke, lower hole medium stroke, upper hole maximum stroke (adjustment accessible by removing dust cover). See tune-up data on car model pages for recommended settings.
NOTE—Model 388-S not adjustable (one hole only).

Pump Stroke Setting—To check pump stroke, remove dust cover, install gauge T109-117S on bowl cover with projection on gauge resting on connector link at pump shaft. Back off throttle stopscrew so that throttle valve tightly closed, note gauge reading, open throttle wide and again note gauge reading. Difference between two readings is pump stroke (in sixty-fourths of an inch) and should agree with figure in table below. Adjust by bending throttle connector rod at lower angle near throttle lever. CAUTION—Check metering rod adjustment (disturbed by this adjustment).

ACCELERATING PUMP SETTING

Car Model	Carburetor	Gauge No.	Pump Stroke
Hudson	411-S, 17-S, 37-S, 38-S	T-109-112	7/32"
Hupmobile	398-S	T-109-108	9/32"
Oldsmobile	388-S	T-109-108	19/64"
Pontiac	364-S, 400-S, 401-S	T-109-45	19/64"
Terraplane	397-S	T-109-112	7/32"

Pump Countershaft Lubrication—Every 5000 miles, remove dust cover screw, fill screw hole with good grade of graphite grease, replace screw.

ANTI-PERCOLATOR:—'Saxophone' Type. Consists of vent above main jet well controlled by a cap linked to the accelerator pump rod so that the vent is opened with the throttle closed to prevent any 'percolating' discharge of fuel through the main jet when the carburetor is hot. The cap must close when the throttle is opened.

Adjustment—Remove dust cover, crack throttle valve open by inserting correct size tool or drill rod (see table below) between edge of valve and carburetor wall on side opposite idle port, bend anti-percolator arm so that clearance between it and pump arm is .005-.015" with anti-percolator cap seated.

ANTI-PERCOLATOR SETTING

Car Model	Carburetor	Gauge Part No.	Throttle Opening
Terraplane 80, 81, 88	397-S		.025"
All Others			.030"

FLOAT LEVEL:—To check float level, remove float bowl cover, invert cover, measure from gasket seat (machined surface) of bowl cover to nearest point of float (top at free end). Should be 3/8" (all models). Adjust by bending lip of float lever.

Float Needle Valve & Seat—Furnished only in matched sets as follows:

Car Model	Carburetor	Part No.	Intake Hole
Hudson	411-S, 17-S, 37-S, 38-S	25-33S	#48
Hupmobile	398-S	25-33S	#48
Oldsmobile F-38	388-S	25-75S	#46
Pontiac 6 & 8	364-S, 400-S, 401-S	25-42S	#38
Terraplane 80, 81, 88	397-S	25-33S	#48

THROTTLE VALVE SETTING:—When installing throttle valves, tap valve lightly to centralize it in bore before tightening screws. Check throttle valve setting as shown in table below (idle ports are slotted type), opening for models marked by * is height of idle port above throttle valve. Vacuum port height is distance from lower edge of port to top of throttle valve. Shims furnished .002" thick (2-93), .005" thick (2-94) to correct valve.

THROTTLE VALVE SETTING

Car Model	Carburetor	Idle Port Opening	Vacuum Port Height
Hudson 112	411-S, 417-S	.115-.119"*	
Hudson 90, 91, 92, 98	437-S, 438-S	.016-.020"	
Hupmobile	398-S	.010-.014"	
Oldsmobile F-38	388-S	.132-.136"*	.021-.029"
Pontiac 6 & 8	401-S, 400-S	.014-.018"	.022-.027"
Terraplane 80, 81, 88	397-S	.016-.020"	

FAST IDLE:—Not used on Hudson and Terraplane Models. Consists of a fast idle cam pivoted directly above the throttle lever so as to serve as a stop for the throttle stopscrew and linked to choke mechanism. To adjust, back off throttle stopscrew, rotate fast idle cam to normal (hot) idling position, turn stopscrew in so that it just contacts first (upper) step of fast idle cam with throttle valve seated, use Tool T109-41 to bend offset portion of fast idle link so that clearance between inside wall of air horn and lower end of choke valve is 5/8" (all models). Make certain that fast idle linkage does not bind.

THROTTLE CRACKER:—Hudson and Terraplane Models. Choke valve and throttle valve interconnected by lever which opens throttle valve .036-.040" when choke valve fully closed. Should not require adjustment.

CHOKE:—Except Hudson and Terraplane Models. Carter Climatic Control (automatic choke). See article in Carburetion Equipment Section for complete adjusting and servicing directions. These models fitted with Unloader and Choke Valve Lock which are adjusted as follows:

Unloader:—Consists of a cam on the throttle lever which opens the choke valve (through fast idle linkage) when throttle valve is wide open. To adjust, with throttle valve wide open, adjust cam on throttle lever so that clearance between lower edge of choke valve and wall of air horn is 3/8" (all models except Pontiac), 1/2" (Pontiac 364-S), 5/16" (Pontiac 400-S, 401-S).

Choke Valve Lock:—Prevents choke valve from closing when throttle valve is wide open. To adjust, hold throttle valve and choke valve wide open, bend lip on fast idle link so that clearance between lip and throttle lever lock is 1/32" (all models except Pontiac 400-S, 401-S), 1/16" (Pontiac 400-S, 401-S). See that lock prevents choke valve closing as long as throttle valve is held open and that choke vlave released when throttle valve closed.

TROUBLE SHOOTING:—Poor Idling Performance. If correct adjustment cannot be secured, engine stalls or low speed performance is unsatisfactory, remove low speed idle tube and clean with compressed air. See that idle tube seats air-tight in carburetor casting at top and bottom (always use new tube, do not use tube from any other carburetor). Remove idle adjusting screw and blow out idle channels with air. If idle is rich, see that vacuum piston is clean and moves freely in cylinder and that metering rod linkage is not binding.

Poor Acceleration—Check pump setting, examine pump for damaged or worn plunger leather, bent pump arm or loose plunger, corrosion or sediment in pump cylinder, sticking or leaking ball check valves, dirty intake strainer. If plunger removed from cylinder, use loading tool when installing to avoid damage to plunger leather. If increased resistance felt on throttle lever, remove pump jet and clean with compressed air or replace jet. Make certain that vacuum piston is clean and not worn, that it is free in vacuum cylinder and that spring under piston is in good condition.

Carburetor 'Loads Up'—If carburetor has been in use for sometime, check for wear on float lever lip, reset float level. See that vacuum piston channel is open and that linkage is not binding.

SERVICING:—Note. Hudson and Terraplane models not fitted with Climatic Control and Fast Idle and all servicing directions below for these items should be disregarded.

Disassembly. Take out dust cover screw, remove dust cover, remove fast idle cam screw and cam, remove nozzle plug, nozzle retainer plug, nozzle assembly (use tool J109-55), do not dismantle nozzle assemblies (where inner and outer nozzle used). Take out air horn attaching screws (top and bottom), remove air horn and Climatic Control (see article in Carburetion Equipment Section for Climatic Control servicing). Remove Anti-percolator plug (use wrench T-109-77). Remove anti-percolator and vacuum piston assembly, pin spring connecting plunger shaft and pump arm, link, spring retainers and connector rod springs, throttle connector rod. Take out bowl cover attaching screws, lift off bowl cover and gasket. Revolve pump operating lever and countershaft assembly one-half turn on bowl cover and remove. Remove pump arm and collar assembly and spring, float and lever assembly, pump cylinder bushing gasket, needle seat (needle clipped to float lever by spring clip). Take out vacuum piston spring, metering rod jet and gasket assembly, pump jet passage plug, pump jet. Loosen screw and remove throttle arm shaft assembly. Remove low speed jet and copper washer, ball check passage plug, ball check plug assemblies, strainer and copper washer. Remove throttle valve screws, valve, shaft and lever assembly. Take out idle port rivet plug, idle adjustment screw and spring.

Servicing—Clean casting and all parts with gasoline (do not immerse cork parts in gasoline), blow out all channels and passages with compressed air, dry all parts with air before reassembling. Check all parts for wear, see that they agree with specifications, replace all worn parts.

Assembling—Use all new gaskets (soak needle seat gasket and metering rod jet gasket in 90 proof alcohol for 15 minutes, install on part and allow to dry before using). When assembling Idle tube see that new copper washer is seated in casting and that tube is tight at top and bottom. Replace bowl cover if warped. Check throttle valve setting (see above), adjust metering rod, Anti-Percolator, Fast Idle, Choke Unloader and Lock, Float level as directed above.

SERVICE PARTS:—Gasket Sets—No. 131 (397-S, 411-S, 417-S, 437-S, 438-S), No. 132 (388-S, 398-S, 400-S, 401-S).
Repair Packages (With Std. Metering Rod)—No. 1035A (388-S), No. 1052A (397-S), No. 1029A (400-S), No. 1030A (401-S), No. 1054A (417-S), No. 1067A (437-S, 438-S).

CARTER TYPE W1 (CAST IRON)

Carter No. Used On:

523-S—OLDSMOBILE 6, 66, 76 (1942)—WITH SYNCHRO-MESH TRANS.
545-S—PONTIAC 6, MODELS 42-25, 26 (1942)—LATER CARS
521-S—PONTIAC 6, CANADIAN MODELS 42-25, 26 (1942)

NOTE:—Oldsmobile Models with Hydra-matic Drive Transmission—These cars are equipped with Carter WA1 Carburetor. See separate article (following) for data

Pontiac Six (Early 1942)—Carter Type WA1 Carburetor used on first 1942 cars. See separate article (following) for data on this WA1 model.

CARBURETOR MODEL IDENTIFICATION:—Individual carburetor models may be identified by Body Casting Number stamped on face of carburetor flange as follows: 521-S—461, 523-S—462, 545-S—476.

SPECIAL SERVICE NOTES:—Pontiac Model 545-S—This carburetor has special type Low Speed Jet which is pressed in carburetor main body casting. This jet can be cleaned with compressed air by removing plug located at bottom of jet well but **Jet cannot be removed** and main casting must be replaced if jet damaged by attempted removal.

Pontiac Accelerator Pedal Sticking or Binding on First 1942 Cars—Some early 1942 cars were not equipped with spacer washer on left end of accelerator cross-shaft. If accelerator pedal linkage binds, make certain that this spacer washer, No. 502306, is installed on shaft.

Pontiac 1946 Type Intake Manifold Installation—The 1946 type Intake Manifold, Part No. 508527, is available for installation on 1941 and 1942 Pontiac Six Cylinder models. When this manifold is installed, **float level must be changed** from 11/16" to ½". See Float Level data.

CAUTION—Caution tag noting this float level change is furnished with new manifold and should be attached to carburetor when manifold installed. All cars with new manifold (and Tag) must have this special float setting.

Pontiac Piston Housing Strainer (Automatic Choke) Omission—The car manufacturer recommends that the Piston Housing Strainer be discarded whenever the automatic choke is disassembled for servicing. Do not re-install the strainer when reassembling the carburetor. NOTE—Strainer will be omitted on production carburetors beginning with late 1946 cars.

Anti-percolator Plug Change—On Model 523-S, original type plugs, Part No. 11B-109, has been superseded by new plug, Part No. 11B-65. This new plug should be used for service on all models (also used on 521-S, 545-S).

TYPE:—New design 'cast iron' type with main body and flange (throttle body) cast integrally. Carburetors are plain tube (triple venturi), single barrel, downdraft types with Carter Climatic Control (automatic choke), Fast Idle, Anti-Percolator, Unloader and Choke Valve Lock. Accelerating pump is positively operated by throttle lever. All models are vacumeter type with vacuum piston control of metering rod which operates as follows:

Vacumeter Metering Rod Control. Metering rod is linked to stem of spring-loaded vacuum piston and is normally held against stop-pin on pump shaft by manifold vacuum (stop-pin insures correct metering rod position for any throttle opening and will lift metering rod out of metering jet mechanically in same manner as on other Carter Carburetors when throttle is opened). Whenever vacuum decreases due to throttle being opened for acceleration, or added load placed on engine, vacuum piston spring forces piston and metering rod up so that richer mixture is supplied for acceleration and power. As soon as vacuum builds up again, piston pulls metering rod against stop-pin so that correct maximum-economy mixture is supplied.

IDLE ADJUSTMENT.—Idle adjusting screw controls idle fuel mixture and should be turned in for leaner mixture, out for richer mixture. Approximate settings shown in table below. Idle speed controlled by throttle lever stopscrew. Adjustments should be made only with engine warmed up and idling at hot or slow speed (choke valve wide open, fast idle inoperative). See tune up data on car model page for complete tune up adjustment data for each model.

IDLE SETTING

Car Model	Idle Screw Setting	Idle Speed
Oldsmobile 6	½-1½ turns open	425 RPM., 6 MPH.
Pontiac 6 (all)	½-1½ turns open	450-475 RPM., 7-8 MPH.

METERING ROD (ECONOMIZER):—All fuel for main nozzle metered by metering rod and jet. Metering rod operated by vacuum piston with throttle control (see Vacumeter Metering Rod Control description above). No adjustment provided but metering rods may be changed to secure leaner-than-standard fuel mixture to compensate for special fuel or high-altitude conditions. Metering rod setting must be checked whenever metering rods removed or changed.

To Remove Metering Rod—Take out dust cover screw, remove dust cover, free metering rod spring, disengage metering rod from piston link and lift rod out being careful not to lose metering rod disc.

To Check Metering Rod—Install gauge (see table below for correct type for each model) in place of metering rod making certain that beveled end is seated in metering jet and that gauge is vertical. Back off throttle stopscrew so that throttle valve is completely closed. Press down lightly on vacuum piston arm so that metering rod pin rests on shoulder of gauge. Bend lip of piston link so that it rests on pump arm pin.

METERING ROD SETTING

Car Model	Carburetor	Gauge Part No.	Length
Oldsmobile 6	523-S	T109-25	2.795"
Pontiac 6	521-S, 545-S	T109-25	2.795"

To Install Metering Rod—Make certain that piston moves freely, install metering rod being careful that lower end enters metering jet and that disc is in place on rod. Engage upper end of rod on piston link pin and install metering rod spring.

NOTE—Whenever vacuum piston removed, check piston spring and replace if weak or length not correct. Piston must be clean and dry with no wear.

PERFORMANCE:—Should be satisfactory if idle adjustment and accelerating pump setting correct. See Carter Jet Specification Table and tune up data on car model page for standard jet calibrations and any recommended changes. See Trouble Shooting below.

ACCELERATING PUMP:—Low pressure type. Positively operated by throttle lever through countershaft and linkage under dust cover on float bowl cover. Fuel is

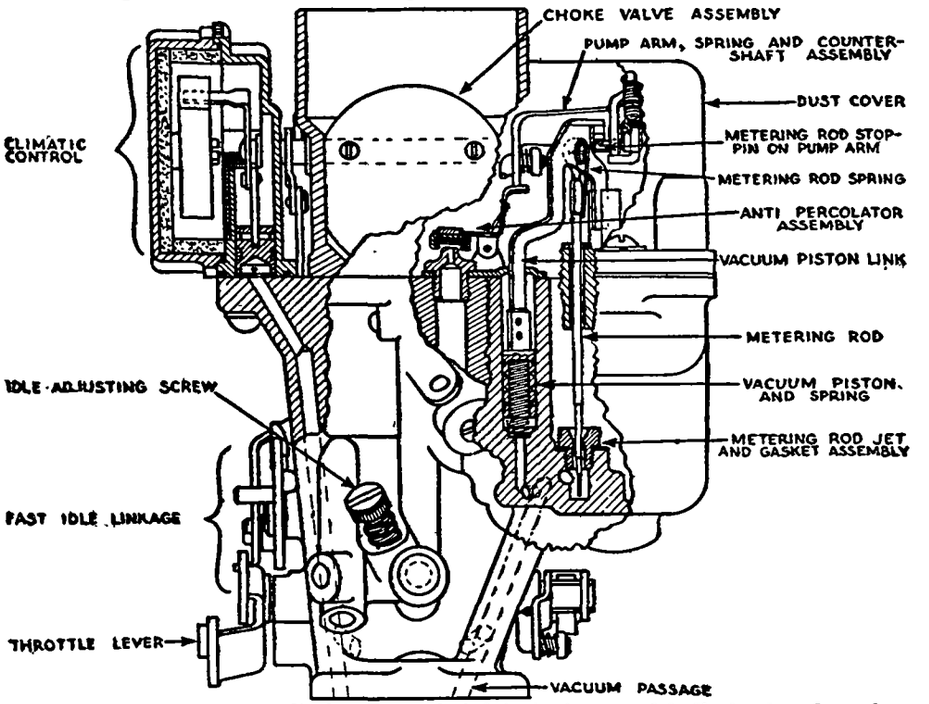

drawn into pump cylinder through inlet strainer and ball check valve when throttle is closed and is discharged through outlet ball check valve and pump jet into mixing chamber when throttle is opened for acceleration.

Pump Seasonal Adjustment (Oldsmobile)—No seasonal adjustment provided. Pump arm and operating lever are connected by a spring.

Pump Seasonal Adjustment (Pontiac)—Three holes provided in pump arm on countershaft (under dust cover on bowl cover) for pump link engagement. For normal service, pump link should be connected in lower hole on arm for medium stroke. Inner hole (short stroke and minimum discharge) should be used only in very hot climates, upper hole (long stroke and maximum discharge) only in very cold climates or when normal setting supplies insufficient accelerating charge.

Pump Stroke Adjustment—To check pump stroke, mount Universal Gauge

CONTINUED ON NEXT PAGE

CARTER TYPE W1 (CAST IRON) C ntinued

No. T109-117S on bowl cover so that projection on gauge rests on top of connector link at pump shaft. Back off throttle stopscrew so that throttle valve tightly closed, note gauge reading, open throttle wide and again note gauge reading. Difference between two readings is pump stroke (in sixty-fourths of an inch) and should agree with figure in table below. Adjust by bending throttle connector rod at lower angle near throttle lever. CAUTION—Check metering rod adjustment (disturbed by this adjustment).

ACCELERATING PUMP SETTING

Car Model	Carburetor	Pump Stroke	Pump Setting
Oldsmobile 6	523-S	15/64"	Non. Adj.
Pontiac 6	521-S, 545-S	19/64"	Medium Stroke

Pump Countershaft Lubrication—Every 5000 miles, remove dust cover screw, fill screw hole with good grade of graphite grease, replace screw.

ANTI-PERCOLATOR:—'Saxophone' Type. Consists of vent above main jet well controlled by a cap linked to the accelerator pump rod so that the vent is opened with the throttle closed to prevent any 'percolating' discharge of fuel through main jet when carburetor hot. Cap closes when throttle opened.

Adjustment—Remove dust cover, crack throttle valve open by inserting special tool T109-29 (.030") between edge of valve and carburetor wall on side opposite idle port, adjust by bending anti-percolator arm so that clearance between arm and pump is .015" (Oldsmobile), .010" (Pontiac) with anti-percolator cap seated. NOTE—T109-20 used for .020" & .030" settings.

Pontiac Note—Anti-percolator can also be adjusted after throttle stopscrew has been set for correct 7-8 MPH. hot or slow idle speed by positioning fast idle cam so that stopscrew rests on highest lobe of cam (fast idle position) and bending anti-percolator arm so that clearance between arm and pump arm is exactly .052" (#55 drill rod) with anti-percolator cap seated.

FLOAT LEVEL:—To check level, remove bowl cover and float assembly, invert cover, measure from nearest point of float (top at free end) to machined surface (gasket seat) on underside of bowl cover. Should be 9/16" (Oldsmobile), 11/16" (Pontiac—with original Intake Manifold), ½" (Pontiac—with replacement No. 508527 Intake Manifold—see Special Service Note). Adjust by bending lip of float lever at point where it contacts valve needle.

NOTE—The needle valve is 'push-pull' type. Make certain that the needle is clipped to the float lever when float and valve needle installed.

Float Travel—Should be ½" (all models). To check travel, hold bowl cover assembly in normal position, note drop at free end of float. Adjust by bending two small float stop lips at hinge end of float arm.

Intake Needle Valve & Seat—Furnished only in matched sets as follows:

Car Model	Carburetor	Part No.	Intake Hole Size
Oldsmobile 6	523-S	25-75S	#46
Pontiac 6	521-S, 545-S	25-83S	#38

THROTTLE VALVE SETTING:—Install throttle valve with trademark (small 'C' in circle) toward idle port and facing upward with carburetor inverted, use new attaching screws and install screws loosely, then tap throttle valve to centralize it in bore (throttle stopscrew must be backed off so that valve closed tightly), tighten attaching screws securely. Check throttle valve position from table below. Idle port is slotted type and Idle Port Opening specification in table is opening with throttle valve tightly closed. Vacuum Spark Port Height is distance from upper edge of throttle valve to top or bottom of port (as noted) with valve closed.

THROTTLE VALVE SETTING

Car Model	Carburetor	Idle Port Opening	Vacuum Spark Port
Oldsmobile 6	523-S	.132-.136"	.035-.040"①
Pontiac 6	521-S, 545-S	.163-.167"	.022-.027"②

①—Top of port above valve. ②—Bottom of port above valve.

FAST IDLE:—Consists of a fast idle cam linked to the choke mechanism. Design similar to other carburetors but must be adjusted as follows:

Adjustment—Hold choke valve wide open and allow fast idle cam to drop free. Back off throttle lever stopscrew until throttle valve is tightly closed and stopscrew just clears low or slow idle speed step of fast idle cam. Hold throttle valve closed and release choke valve. Choke will lift fast idle cam until stopscrew rests against second position of cam. Without disturbing position of fast idle cam, adjust fast idle link by bending offset portion (use tool T109-41) so that clearance between lower side of choke and air horn wall is exactly 5/8". Check to make certain that fast idle link does not bind.

CHOKE:—Carter Climatic Control. Refer to Carburetion Equipment Index for Carter Climatic Control for complete servicing and adjustment directions.

Setting—Thermostatic coil housing mark should be centered (At Index) on mark on piston plate housing (Oldsmobile), 3 Notches Rich (Pontiac).

Unloader:—Consists of a cam on the throttle lever which operates through the fast idle linkage to open the choke valve when the throttle valve is wide open. To adjust Unloader, hold throttle valve wide open, bend cam on throttle lever so that clearance between lower edge of choke valve and air horn wall is 7/16" (Oldsmobile 523-S), 3/8" (Pontiac 521-S), 7/32" (Pontiac 545-S) with throttle valve wide open.

Choke Valve Lock:—Consists of a lug on the throttle lever which engages a lip on the fast idle link to prevent the choke valve from closing when the throttle valve is held wide open. To adjust, hold throttle valve and choke valve wide open, bend lip on fast idle link so that clearance between lip and lock on throttle lever is 1/32". See that lock prevents choke valve from closing in this position and that choke valve is released when the throttle valve is closed. Make certain that choke and fast idle linkage does not bind after all adjustments completed.

TROUBLE SHOOTING:—Poor Idling Performance. If correct adjustment cannot be secured, engine stalls or low speed performance is unsatisfactory, remove low speed idle tube and clean with compressed air. See that idle tube seats air-tight in carburetor casting at top and bottom (always use new tube, do not use tube from any other carburetor). Remove idle adjusting screw and blow out idle channels with air. If idle is rich, see that vacuum piston is clean and moves freely in cylinder and that metering rod linkage is not binding.

Poor Acceleration—Check pump setting, examine pump for damaged or worn plunger leather, bent pump arm or loose plunger, corrosion or sediment in pump cylinder, sticking or leaking ball check valves, dirty intake strainer. If plunger removed from cylinder, use loading tool when installing to avoid damage to plunger leather. If increased resistance felt on throttle lever, remove pump jet and clean with compressed air or replace jet. Make certain that vacuum piston is clean and not worn, that it is free in vacuum cylinder and that spring under piston is in good condition.

Carburetor 'Loads Up'—If carburetor has been in use for sometime, check for wear on float lever lip, reset float level. See that vacuum piston channel is open and that linkage is not binding.

SERVICING:—Pontiac 545-S Caution—Idle jet tube on this model is pressed in main body casting and **must not be removed.** Entire casting must be replaced if tube is damaged by attempted removal or improper cleaning. Tube can be cleaned with compressed air by removing plug in casting at bottom of well directly below lower end of tube. Low Speed Jet Tube removal directions given below do not apply to Model 545-S Carburetor and should be disregarded when servicing this model.

Disassembly. Take out dust cover screw, remove dust cover, remove fast idle cam screw and cam, remove nozzle plug, nozzle retainer plug, nozzle assembly (use tool J109-55), do not dismantle nozzle assemblies (where inner and outer nozzle used). Take out air horn attaching screws (top and bottom), remove air horn and Climatic Control (see article in Carburetion Equipment Section for Climatic Control servicing). Remove Anti-percolator plug (use wrench T-109-77). Remove anti-percolator and vacuum piston assembly, pin spring connecting plunger shaft and pump arm, link, spring retainers and connector rod springs, throttle connector rod. Take out bowl cover attaching screws, lift off bowl cover and gasket. Revolve pump operating lever and countershaft assembly one-half turn on bowl cover and remove. Remove pump arm and collar assembly and spring, float and lever assembly, pump cylinder bushing gasket, needle seat (needle clipped to float lever by spring clip). Take out vacuum piston spring, metering rod jet and gasket assembly, pump jet passage plug, pump jet. Loosen screw and remove throttle arm shaft assembly. Remove low speed jet and copper washer, ball check passage plug, ball check plug assemblies, strainer and copper washer. Remove throttle valve screws, valve, shaft and lever assembly.

Servicing—Clean casting and all parts with gasoline (do not immerse cork parts in gasoline), blow out all channels and passages with compressed air, dry all parts with air before reassembling. Check all parts for wear, see that they agree with specifications, replace all worn parts.

Assembling—Use all new gaskets (soak needle seat gasket and metering rod jet gasket in 90 proof alcohol for 15 minutes, install on part and allow to dry before using). When assembling Idle tube see that new copper washer is seated in casting and that tube is tight at top and bottom. Replace bowl cover if warped. Check throttle valve setting (see above), adjust metering rod, Anti-Percolator, Fast Idle, Choke Unloader and Lock, Float level as directed above.

SERVICE PARTS:—Gasket Sets—No. 167 (521-S, 523-S, 545-S).
Repair Package (With Std. Metering Rod)—No. 1353A (523-S).

CARTER TYPE WA-1

	Carter No.
FRAZER	
1947-48 All	610S, 622S, SA, SB
GRAHAM	
1940-41 108 & 113	472S
1940 Schgr. 107	473S
HUDSON	
1940 Six 40T, 40P, 48	454S
1941 Six 10, 18	454S
1942 Six 20T, 20P, 20C, 28C	454S
KAISER	
1947-48 All	610S, 622S, SA, SB
NASH	
1946-47 "600"	611S
1948 "600"	662S, SA
1939-41 Amb. Six	435S
1942-48 Amb. Six	464S
OLDSMOBILE	
1939 Six S-M Trans.	426S
1939 Six H-D Trans.	425S
1940 Six S-M Trans.	466S
1940 Six H-D Trans.	467S
1941-48 Six S-M Trans.	①504S
1941-47 Six H-D Trans.	481S
1948 Six H-D Trans.	651S
PACKARD	
1941-48 Six	②530S
PONTIAC	
1939 Six	433S
1940 Six	463S
1941-42 Six	③494S
1946-48 Six S-M Trans.	537S
1948 Six H-D Trans.	652S
1939 Eight	432S
1940 Eight	462S
STUDEBAKER	
1941-42 Champ.	496S
1940-41 Comm.	410S
WILLYS	
1946-48 Sta. Wgn. 4-63	613S
1946-48 Sedan Del. 4-63	613S
1948 Jeepster VJ-2	613S
1948 Sta. Sedan 6-63	645S

S-M—Synchro-mesh Transmission H-D—Hydra-Matic Drive Trans.

①—**Oldsmobile Six (1942)**—Cars with standard Synchro-mesh Transmission are equipped with Carter W-1 (new cast iron type) carburetor. Refer to separate article for data on this type carburetor.

②—**Packard Six 530S**—This carburetor is equipped with Carter Car Starter vacuum switch for starter control. Refer to Electrical Equipment Index "Carter Car Starter" for complete adjustment and servicing data on this unit.

③—**Pontiac Six (1942)**—Later 1942 cars and Canadian production cars are equipped with Carter Model W-1 (New Cast iron type) carburetor. Refer to separate article for data on this type carburetor.

CARBURETOR MODEL IDENTIFICATION: Individual carburetor models can be identified by Body Casting Number stamped on face of carburetor flange as follows: 410-S—191, 425-S, 466-S & 467-S—194, 426-S—243, 432-S & 463-S—245, 464-S—290, 466-S & 467-S—194, 472-S & 473-S—309, 481-S & 504-S—340, 494-S—348, 496-S—356, 530-S—317, 537-S—388, 611-S—298, 613-S—485, 622-S & 622-SA—309.

►FIELD & PRODUCTION CHANGES

►**Nash (1940) Loading or Warming Up Slowly Complaints**—Check automatic choke hot air tube for kinks, bends, or pinched at point where it enters coil housing. See that tube is tight at both ends.

►**Frazer & Kaiser 622S Carburetor Conversion to 622SA**—Install the new type Float & Lever Assembly, No. 21-86S; and new type Needle & Seat Assembly, No. 25-155S **and change float level from ⅜" to ½".** NOTE—These new parts are furnished in special Unitized Package No. 21-101U.

►**Frazer & Kaiser 622SA Carburetor Changes**—Following parts supersede first type parts and **only these later type parts should be used** on these carburetors:
Metering Rod—New Part No. 75-642 (75-55) supersedes No. 75-593.
Low Speed Jet Tube—New Part No. 11-160S (.031" or #68 drill size) supersedes No. 11-163S.
Accelerating Pump Plunger Spring—New Part No. 61-200 supersedes No. 61-23.
Repair Package—New Part No. 1362B supersedes No. 1362A.

►**Frazer & Kaiser 622SB Replacement Carburetor**—Supersedes 622S and 622SA and has all new parts listed under "622S Conversion" and "622SA Carburetor Changes" as listed above.

►**Hudson Carburetor Installation (All Models)**—Use **eight** gaskets between carburetor and mounting pad on manifold. **When installing carburetor, place four gaskets between manifold and heat deflector, four additional gaskets between deflector and carburetor.**

►**Hudson 454S Carburetor Trip Lever**—Special Trip Lever mounted on fast idle link which must be checked after fast idle and other adjustments are made. See Trip Lever Adjustment below.

►**Nash 600 (1948) 662S & 662SA Production Change**—662S carburetor used on first cars and superseded by 662SA on later cars. See specifications below and Carter Jet Specification Table for differences and data on each model.

►**Oldsmobile (1941) 481S & 504S Pump Arm & Countershaft Assy. Change**—changed from No. 53A-161S to No. 53A-247S during 1941 production. Each of these pump arms requires a special pump stroke setting. When making pump stroke adjustment, set pump stroke at 5/16" (first carburetors with No. 53A-161S arm), ¼" (later carburetors with No. 53A-247S arm).

►**Pontiac (All Models) Omission of Automatic Choke Piston Housing Strainer**—manufacturer recommends that the Piston Housing Strainer be discarded whenever the automatic choke is disassembled for service. Do not re-install the strainer when reassembling the carburetor. NOTE—Strainer will be omitted on production carburetors beginning with late 1946 cars.

►**Pontiac (1940) 462S & 463S Hesitating when starting in Second Gear**—To correct this, change pump link to lower hole in arm and pump shaft. **463-SP, 462-SP**—Later carburetors have new type 64-70S accelerating pump rod and plunger (superseding first type 64-67S). These carburetors marked with 'SP' suffix at factory. ***Important Note—Change Pump Stroke Adjustment to new setting given for 463SP and 462SP as given below when this 64-70S assembly installed.***

►**Pontiac (1941 First Cars) Throttle Sticking Correction**—With first accelerator pedal rod which does not have stop at bend, rod may be forced into hole in bracket and cause throttle to stick if cross-shaft bracket and pedal rod alignment not correct. Correct this by installing thin washer on end of rod against bend and soldering washer in place. Pedal rods on later cars have stop formed on rod at this point. Check accelerator pedal alignment and shim with washers under anchor stud so that pedal rod aligned with exact center of hole

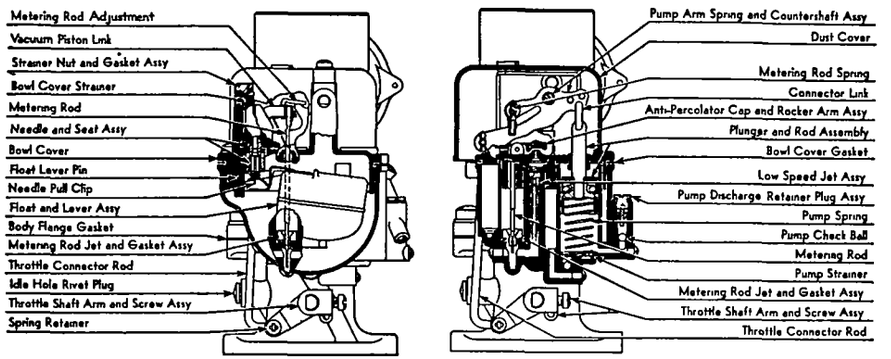

►**Pontiac (1941-42) Installation of 1946 Type Intake Manifold and Carburetor Float Level Change**—The 1946 type Intake Manifold, Part No. 508527, is available for installation on 1941 and 1942 Pontiac Six Cylinder models. When this manifold is installed, **carburetor float level must be lowered 3/16"** (from ½" to 5/16"). See Float Level data.
CAUTION—Caution Tag noting this float level change is furnished with new manifold and should be attached to carburetor when manifold installed. All cars with new manifold (and Tag) must have this special float setting.

►**Pontiac (1942 First Cars) Accelerator pedal Sticking or Binding**—Some early 1942 cars were not equipped with spacer washer on left end of accelerator cross-shaft. If accelerator pedal linkage has tendency to bind, make certain that this spacer washer, No. 502306, is installed on the shaft.

►**Studebaker Champ. (1941) Sluggish Choke Operation**—Slow opening of choke valve as engine warms up caused by insufficient heat due to heat tube bottoming in pocket in exhaust manifold. Check heat tube position.

►**Studebaker (1941) Choke Setting Change**—To correct slightly rich mixture during warming up period, standard choke setting was changed from Centered (original setting) to 1 Notch Lean.

►**Willys (1946-48) Carburetor Mounting Gasket Caution**—Vacuum passage for metering rod vacuum piston extends down to face of carburetor mounting flange and special slotted type flange gasket, No. 1A-30, must be used when mounting carburetor on manifold (slot must register with vacuum passage hole). If Governor used on this engine, special gasket with four small holes

CONTINUED ON NEXT PAGE

CARTER TYPE WA-1 (C ntinu d)

must be used between carburetor and governor and slotted type gasket (above) between governor and manifold.

CAUTION—Use of plain type gasket will blank off this vacuum passage and interfere with correct operation of the carburetor. **Never use a plain (solid) type gasket with this carburetor.**

►**Whistling Complaints (All Carburetors)**—To correct whistle at vacuum spark port, remove vacuum passage plug (on side of main casting near idle adjusting screw, install special bushing No. 38A-35 in passage, install new plug.

DESCRIPTION

DESCRIPTION: Single barrel, downdraft type. Primary and secondary venturis are mounted in main body casting (not air horn) by two streamlined struts with nozzle directly above one strut on center-line of venturis and float bowl. Float bowl has been designed to eliminate clearance between sides of bowl and float. Bowl cover extends down in bowl to eliminate air space above fuel and float is larger than W1 type. Low speed jet is installed through top of float bowl (no external plug). Anti-percolator seat is cast in bowl cover and complete anti-percolator, pump arm, vacumeter arm (vacumeter types) is mounted on top of bowl cover. Air horn contains only choke valve assembly (choke valve sides not exactly parallel and ridge in air horn serves as stop for valve in wide open position). Lower Throttle casting has main venturi and throttle valve.

Fuel System—Same as for W1 models. Metering rod is controlled by pump arm (non-vacumeter type), separate vacuum piston with stop pin on pump arm to limit travel (vacumeter type). Adjustment data for each type below.

Vacuum Passage (Willys 613S, 645S)—On these models, vacuum passage for metering rod vacuum piston (Vacumeter type Carburetor) extends down to the face of the carburetor mounting flange and special slotted type flange gasket must be used when installing carburetor (See Special Service Notes).

CARBURETOR ADJUSTMENT & OVERHAUL

IDLING ADJUSTMENT: Adjust carburetor only when engine warmed up and idling at hot or slow idling speed with choke valve wide open and fast idle inoperative. Idle adjusting screw controls fuel mixture and should be turned in for leaner mixture, out for richer mixture. Approximate settings are shown in table below. See car model pages for tune-up data on each car model.

IDLE SETTING

Car Model	Idle Screw Setting	Idle Speed
Frazer	¾-1¾ turns open	550 RPM.
Graham ('40-41)	½-1½ turns open	7-8 MPH.
Hudson ('40)	¾-1½ turns open	7 MPH.
Hudson ('41-42)	½-1½ turns open	580-600 RPM.①
Kaiser	¾-1¾ turns open	550 RPM.
Nash ('39-40-41)	¾-1½ turns open	7-8 MPH.
Nash Amb. 6 ('42-48)	½-1½ turns open	350 RPM, 7 MPH.
Nash 600 ('46-47)	1¼-2¼ turns open	350 RPM, 7 MPH.
Nash 600 ('48)	¾-1¾ turns open	350 RPM, 7 MPH.
Oldsmobile ('39)	½-1½ turns open	6 MPH.②
Oldsmobile ('40-41)	½-1½ turns open	6 MPH.③
Oldsmobile ('42-48) Std.	½-1½ turns open	425 RPM, 6 MPH.
Oldsmobile ('42-48) H. D.	½-1½ turns open	375 RPM.④
Packard Six	½-1½ turns open	6 MPH.⑤
Pontiac 6 & 8 ('39)	½-1½ turns open	7 MPH.
Pontiac 6 & 8 ('40)	¾-1½ turns open	7 MPH.
Pontiac 6 ('41-48) Std.	¾-1¾ turns open	7-8 MPH.⑥
Pontiac 6 ('48) H. D.	1-1¾ turns open	365-385 RPM.④
Studebaker Comm. ('40-41)	½-1¼ turns open	8 MPH.
Studebaker Champ, ('41)	½-1½ turns open	8 MPH.
Studebaker Champ. ('42)	½-1½ turns open	8 MPH.
Willys 4	½-1½ turns open	600 RPM, 8 MPH.
Willys 6	1-2 turns open	600 RPM, 6 MPH.

①—7½-8 MPH (4 1/9-1 Axle), 6½-7 MPH (4 5/9-1), 6-6½ MPH (4⅞-1 Axle).
②—Third Speed (not High) on Self-shifting Transmission Cars.
③—425 RPM. (Cars with Std. Trans.), 375 RPM. (With Hydra-matic Drive).
④—Special setting for Hydra-matic Drive Cars—use tachometer.
⑤—8-10 MPH. on cars with Electromatic Clutch.
⑥—450-475 Engine RPM.

ACCELERATING PUMP: Several different types of pumps used as follows:

(1) Frazer & Kaiser 610S, 622S, SA, SB; Nash 662S, SA; Studebaker 496S, and Willys 613-S—Pumps are high-pressure type and are actuated by the throttle valve lever through a spring-loaded arm (pump arm and pump operating lever linked by coil spring). Frazer and Kaiser types have seasonal adjustment.

(2) Nash 611S, Packard 530S, Pontiac 494S)—These accelerating pumps are low-pressure type and are actuated by the throttle valve lever through a spring-loaded arm (pump arm and pump operating lever linked by a coil spring). Pontiac type has seasonal adjustment (see Adjustment data below).

(3) Other Models—Accelerating pumps are low pressure type and are positively operated by throttle lever through arm and countershaft assembly on bowl cover. Countershaft arm has three holes for pump link engagement to provide varied pump stroke for seasonal requirements.

Pump Stroke Adjustment: To check the pump plunger travel, back off throttle lever stopscrew so that throttle valve closes tightly, adjust pump connector link for correct pump stroke as shown in 'Pump Setting' column of table below (see Pump Adjustment above for this connector link adjustment). Install Universal Pump Stroke Gauge T109-117S on ridged portion of bowl cover so that projecting portion of gauge rests on top surface on connector link at pump shaft. Hold gauge vertical and note reading, then open throttle wide and again note reading. Difference between these two readings is pump stroke (in sixty-fourths of an inch) and should agree with 'Pump Stroke' figure in table below. To adjust, bend throttle connector rod at lower angle near throttle lever. CAUTION—Check metering rod ajustment (disturbed by this adjustment).

ACCELERATING PUMP SETTING

Car Model	Carburetor	Pump Stroke	Pump Setting
Frazer	610S, 22S, 22SA, 22SB	18/64"	Medium Stroke
Graham	472-S, 473-S	19/64"	Medium Stroke
Hudson	454-S	12/64"	Short Stroge
Kaiser	610S, 22S, 22SA, 22SB	18/64"	Medium Stroke
Nash ('39-41)	435-S	27/64"	Long Stroke
Nash Amb. 6 ('42-48)	464-S	27/64"	Long Stroke
Nash 600 ('46-47)	611-S	25/64"④	Non-Adj.
Nash 600 ('48)	662-S, SA	25/64"	Medium Stroke
Oldsmobile ('39-40)	425-S, 26S, 66-S, 67-S	13/64"	Short Stroke
Oldsmobile ('41-48)	481-S, 504-S, 651-S	16/64"①	Medium Stroke⑤
Packard	530-S	16/64"	Non-Adj.
Pontiac 6 ('39)	433-S	17/64"	Short Stroke
Pontiac 8 ('39)	432-S	19/64"	Medium Stroke
Pontiac 6 ('40)	463-S②	11/64"	Short Stroke
Pontiac 6 ('40)	463-SP③	18/64"	Long Stroke
Pontiac 8 ('40)	462-S②	14/64"	Short Stroke
Pontiac 8 ('40)	462-SP③	23/64"	Long Stroke
Pontiac 6 ('41-42)	494-S	18/64"	Short Stroke
Pontiac 6 ('46-47)	537-S	16/64"	Medium Stroke
Pontiac 6 ('48)	652-S	17/64"	Medium Stroke
Studebaker Comm. ('40-41)	410-S	18/64"	Medium Stroke
Studebaker Champ. ('41-42)	496-S	11/64"	Non-Adj.
Willys 4 & 6	613-S, 645-S	11/64"	Non-Adj.

①—Carburetors with new 53A-247S Pump Arm and Countershaft assembly. Setting for carburetors with 53A-161S assembly is 20/64".
②—Carburetors with No. 64-67S Accelerating Pump Rod and Plunger.
③—Carburetors with new No. 64-70S Accelerating Pump Rod and Plunger.
④—Supersedes 24/64" originally specified for this model.
⑤—Pump Stroke Non-adjustable on later models with new 53A-247S Pump Arm.

Pump Seasonal Adjustment: Three holes are provided in pump arm on countershaft for pump link connection (except Pontiac 462-S, 463-S, 494-S—See below) Inner hole provides minimum pump stroke, lower hole medium stroke, outer hole maximum stroke (adjustment accessible by removing dust cover). See tune-up data on car model pages for settings and seasonal changes.

Adjustment (Pontiac 462-S, 463-S, 494-S). Standard setting (minimum stroke) of pump is secured with connector link connected in inner hole of pump arm and upper hole of pump plunger stem. For extremely cold climates, or if pump discharge is insufficient, connect link in outer hole of arm and lower hole of plunger stem (maximum stroke).

METERING ROD (ECONOMIZER): Metering rod and jet assembly meters all fuel for main nozzle (stepped and tapered rod is lifted out of jet as throttle is opened and provides greater fuel flow through jet to nozzle). Metering rods can be changed for special conditions. See Carter Jet Specification Table.

CONTINUED ON NEXT PAGE

CARTER TYPE WA-1 (C ntinu d)

Vacumeter Type Note—On these types, metering rod is linked to vacuum piston stem so that rod is controlled by vacuum piston within limits determined by throttle valve opening (lug on pump arm serves as stop for lip on piston link to prevent vacuum piston pulling metering rod down in jet beyond correct point for the particular throttle opening). These models adjusted in special manner

METERING ROD SETTING

All Carburetors ..... Gauge T109-102 (2.468")

Metering Rod Adjustment (except Vacumeter Types)—Take out screw and remove dust cover on float bowl cover. Unhook metering rod spring, disengage metering rod from arm on pump shaft, lift out rod being careful not to lose metering rod disc. Install gauge No. T109-102 (2.468") in place of metering rod making certain that gauge seats in metering rod jet and is held vertical. Back off throttle lever stopscrew so that throttle valve tightly closed. Clearance between pin in arm on pump shaft and shoulder of notch in gauge should be less than .005" and gauge should not drag on pin. Adjust by bending arm (use extreme care not to bend lower portion of arm to which throttle connector link is attached—this will disturb pump stroke setting). Remove gauge, install metering rod and disk, connect metering rod spring.

Metering Rod Adjustment (Vacumeter Type)—Remove metering rod (hung on pin on upper end of vacuum piston link) being careful not to lose metering rod disk. Install gauge No. T109-102 (2.468") in place of metering rod making certain that gauge seats in metering rod jet and is held vertical. Back off throttle stopscrew so that throttle valve tightly closed. Press down lightly on vacuum piston link at point directly over piston. Clearance between pin on piston link and shoulder of notch in gauge should be less than .005" and gauge should not drag on pin. Adjust by bending lip on piston link so that it contacts lug on pump arm (use special tool T109-105). Remove gauge, install metering rod and disc, connect metering rod spring.

ANTI-PERCOLATOR: Saxophone Key Type. Consists of a main nozzle vent in bowl cover controlled by a leather-faced, felt-backed metal cap which opens the vent when the throttle is closed to prevent any percolating discharge from the nozzle. The cap must be seated to close the vent when the throttle is opened.

Adjustment—Crack throttle open by inserting special gauge (see table below for gauge for each model) between edge of valve and carburetor wall on side opposite idle port. Bend anti-percolator rocker arm (use special tool T109-105) so clearance between rocker arm lip and pump arm .005-.015" (use feeler gauge)

ANTI-PERCOLATOR SETTING

Car Model	Carburetor	Gauge No.	Throttle Opening
Frazer	610S, 22S, 22SA, 22SB	T109-29	.030"
Graham	472-S, 473-S	T109-29	.030"
Hudson	454-S	T109-29	.030"
Kaiser	610S, 22S, 22SA, 22SB	T109-29	.030"
Nash Amb. 6	435-S, 464-S	T109-29	.020"
Nash 600	611-S, 662-S, SA	T109-29	.030"
Oldsmobile ('39-40)	425-S, 26-S, 66-S, 67-S	T109-29	.030"
Oldsmobile ('41-48)	481-S, 504-S, 651-S	T109-29	.020"
Packard	530-S	T109-29	.030"
Pontiac 6 & 8 ('39)	432-S, 433-S	T109-29	.030"
Pontiac 6 & 8 ('40)	462-S,SP; 463-S,SP	T109-29	.030"
Pontiac 6 ('41-48)	494-S, 537-S, 652-S	T109-29	.030"
Studebaker	410-S, 496-S	T109-29	.030"
Willys 4 & 6	613-S, 645-S	T109-29	.030"

NOTE—The N . T109-29 Gauge is used for both .020" and .030" settings.

Pontiac Note—Anti-percolator can be adjusted after throttle stopscrew has been set for correct 7 MPH. idle speed (turn screw in until it just contacts lowest step of fast idle cam, then turn screw in additional ½ turn) by rotating fast idle cam until stopscrew rests on highest step of cam and then bending the anti-percolator arm for clearance of .078" (#47 drill) between arm and pump arm.

FLOAT LEVEL: To check float level, remove float bowl cover, invert cover, measure from top edge of machined projection on cover at free end of float to top of soldered seam (see table below). Adjust by bending lip of float lever.
CAUTION—On Willys carburetor, use care not to compress spring in needle valve stem (allow float to hang freely on inverted cover when checking float level—compressing spring will cause false reading and wrong setting).

FLOAT LEVEL SETTING

Car Model	Carburetor	Float Level
Frazer	610-S	5/16"
Frazer	622-S②	3/8"
Frazer	622-S③, 622-SA, 622-SB	½"
Graham	472-S, 473-S	3/8"
Hudson	454-S	3/8"
Kaiser	610-S	5/16"
Kaiser	622-S②	3/8"
Kaiser	622-S③, 622-SA, 622-SB	½"
Nash Amb. 6	435-S, 464-S	3/8"
Nash 600	611-S, 662-S, SA	½"
Oldsmobile ('39-40)	425-S,26-S,66-S,67S	3/8"
Oldsmobile ('41-48)	481-S, 504-S, 651-S	½"
Packard	530-S	3/8"
Pontiac 6 & 8 ('39)	432-S, 433-S	½"
Pontiac 6 & 8 ('40)	462-S,SP; 463-S,SP	7/16"
Pontiac 6 ('41-42)	494-S	½"①
Pontiac 6 ('46-48)	537-S, 652-S	7/16"
Studebaker Comm. ('40-41)	410-S	¼"
Studebaker Champ. ('41-42)	496-S	5/16"
Willys 4 & 6	613-S, 645-S	5/16"

①—Cars with original Intake Manifold only. Float level on cars with 1946 type No. 508527 Intake Manifold must be set at 5/16" (Caution Tag on carburetor).

②—With 1st type Float & Lever Assy. 21-70S and Needle & Seat Assy. 25-42S.

③—With 2nd type Float & Lever Assy. 21-86S and Needle & Seat Assy. 25-155S.

Float Travel—Should be ½" (all models). To check travel, hold float bowl cover in normal position, note drop or free travel of float at free end. To adjust travel, bend the two small float stop lips at the hinge end of the float.

Float Needle Valve & Seat—Furnished only in matched sets as follows:

FLOAT INLET VALVE

Car Model	Carburetor	Part No.	Intake Hole Size
Frazer	610S, 22S, 22SA, 22SB	25-155S①	#38
Graham	472-S, 473-S	25-42S	#38
Hudson	454-S	25-33S	#48
Kaiser	610S, 22S, 22SA, 22SB	25-155S①	#38
Nash Amb. 6	435-S, 464-S	25-34S	#46
Nash 600	611-S, 662-S, 662-SA	25-33S	#48
Oldsmobile ('39-40)	425-S,26-S,66-S,67-S	25-75S	#46
Oldsmobile (41-48)	481-S, 504-S, 651-S	25-75S	#46
Packard	530-S	25-42S	#38
Pontiac ('39-40)	432-S,33-S,62-S,63-S	25-42S	#38
Pontiac ('41-42)	494-S	25-42S	#38
Pontiac 6 ('46-48)	537-S, 652-S	25-83S	#38
Studebaker Comm.	410-S	25-34S	#46
Studebaker Champ.	496-S	25-42S	#38
Willys 4 & 6	613-S, 645-S	25-94S	#48

①—Supersedes No. 25-42S used on 610-S and first 622-S carburetors.

THROTTLE VALVE SETTING: When installing valves, see that trademark is up and on idle port side, install screws loosely, tap valve lightly to centralize it in bore, tighten screws securely. See that throttle valve stopscrew is backed off so that valve closes tightly, check throttle valve setting as shown in table below Shims furnished .002" (2-93), .005" thick (2-94) to correct valve position.

CONTINUED ON NEXT PA E

CARTER TYPE WA-1 (C ntinued)

THROTTLE VALVE SETTING

Car Model	Carburetor	Idle Port Opening	Vacuum Port Hgt.
Frazer	610-S, 622-S	② .133-.137"	①.035-.040"
Frazer	622SA, 622SB	② .133-.137"	①.033-.043"
Graham	472-S, 473-S	.133-.137"	① .029-.034"
Hudson	454-S	.120-.124"	.021-.029"
Kaiser	610-S, 622-S	② .133-.137"	①.035-.040"
Kaiser	622SA, 622SB	② .133-.137"	①.033-.043"
Nash ('39-41)	435-S	.137-.141"	None
Nash Amb. 6 ('42-48)	435-S, 464-S	.137-.141"	.022-.027"
Nash 600 ('46-47)	611-S	.011-.015"	.021-.029"
Nash 600 ('48)	662-S, 662-SA	.153-.157"	.021-.029"
Oldsmobile ('39)	425-S, 426-S	.158-.162"	.021-.029"
Oldsmobile ('40)	466-S, 467-S	.158-.162"	.000-.004"
Oldsmobile ('41-48)	481-S, 504-S	.136-.140"	④.030-.035"
Oldsmobile ('48)	651-S	.136-.140"	.025-.035"
Packard	530-S	.158-.162"	.022-.027"
Pontiac 6 ('39-40)	433-S; 63-S, 63-SP	.107-.111"	.022-.027"
Pontiac 6 ('41-42)	494-S	.107-.111"	.022-.027"
Pontiac 6 ('46-48)	537-S, 652-S	.166-.170"	.022-.027"
Pontiac 8 ('39)	432-S	.120-.124"	.022-.027"
Pontiac 8 ('40)	462-S, SP	.107-.111"	.022-.027"
Studebaker Comm.	410-S	② .010-.014"	① .055-.060"
Studebaker Champ.	496-S	② .010-.014"	①③ .055-.060"
Willys 4 & 6	613-S, 645-S	.198-.202"	①.020-.028"

①—Top of port above throttle valve (bottom of port on all others).
②—Port opening below valve (above valve on all other models).
③—Late production carburetors. .045-.055" on early production models.
④—For late type carburetors with slotted type (round end) port. First carburetors with .061-.064" round type port should be .022-.027".

FAST IDLE: Consists of fast idle cam pivoted directly above the throttle lever so as to serve as stop for throttle stopscrew and is linked to the choke valve. Refer to Climatic Control article in Carburetion Equipment Section for data. **Willys 613-S Note**—Fast idle mechanism on this model consists of a fast idle cam linked to the choke valve lever (no Automatic Choke). Cam serves as stop for throttle lever idle speed screw and throttle is opened to fast idle position when carburetor choked for starting. Should not require adjustment.

Adjustment—To check, turn fast idle cam to normal or slow idle speed position, tighten throttle lever stopscrew until it just seats against cam, rotate cam until stopscrew is against first step of cam (screw must not be on step) check clearance between lower edge of choke valve and air horn wall (use tool T109-85 and set to 5/8". Adjust by bending link offset with tool T109-41.

TRIP LEVER (Hudson Model 454S): Should be adjusted after all other choke linkage adjustments have been made. Trip lever not used on other models.

Adjustment—Hold choke valve tightly closed with pin on fast idle cam resting at bottom of slot in fast idle link. Bend trip lever stop on fast idle link so that clearance between fast idle cam and lip on trip lever is .010".

CHOKE (All Models except Willys): Valve is offset, butterfly type linked directly to automatic choke (Climatic Control) mechanism. *See Carter Climatic Control article in Carburetion Equipment Section for complete Automatic Choke data.*

Setting—Thermostatic coil housing should be set so that reference mark centered on scale on piston housing for all models except those listed in table below, and should be rotated counter-clockwise (Rich) or clockwise (Lean) for these special models as shown. To adjust, loosen two thermostatic coil housing attaching screws, rotate housing.

CLIMATIC CONTROL (CHOKE) SETTING

Car Model	Carburetor	Choke Setting
Graham 107 ('40)	473-S	1 point Rich
Nash ('39-40-41)	435-S	①1 point Rich
Nash 600	611-S, 662-S	2 points Lean
Oldsmobile ('39-40)	425-S, 26-S, 66-S	2 points Rich
Pontiac 6 & 8 ('39)	432-S, 433-S②	2 points Rich
Pontiac 6 & 8 ('39)	432-S, 433-S③	1 point Rich
Pontiac 6 & 8 ('40)	462-S, 463-S	1 point Rich
Pontiac 6 ('41-48)	494-S, 537-S, 652-S	3 points Rich
Studebaker Comm. ('40-41)	410-S	1 point Rich
Studebaker Champ. ('41-42)	496-S	④1 point Lean
All Others		Centered (At Index)

NOTE—No automatic choke used on Willys 613S & 645S.
①—Supersedes setting f 2 Notches Rich originally specified for this model.
②—First Carburetors with #42 Choke Heat Suction Hole.
③—Later Carburetors with #36 Choke Heat Suction Hole.
④—Supersedes Centered (at index) setting originally specified for this model.

Unloader: Consists of a cam on the throttle lever which opens the choke valve (through fast idle linkage) when throttle is held wide open to correct flooding. To check, hold throttle wide open, check clearance between lower edge of choke valve and air horn wall. See table below for correct clearance and checking gauge on each model. To adjust, bend cam on throttle lever (use Tool T109-41).

UNLOADER SETTING

Car Model	Carburetor	Gauge No.	Chok Valve Clear.
Frazer	610-S, 22S, 22SA, 22SB	T109-81	7/16"
Graham	472-S, 473-S	T109-83	1/2"
Hudson	454-S	T109-81	7/16"
Kaiser	610S, 22S, 22SA, 22SB	T109-81	7/16"
Nash Amb. 6	435-S, 464-S	T109-82	31/64"
Nash 600	611S, 662S, SA	T109-81	7/16"
Oldsmobile ('39)	425-S, 426-S	T109-85	5/8"
Oldsmobile ('40)	466-S, 467-S	T109-81	7/16"
Oldsmobile ('41-48)	504-S	T109-81	7/16"
Oldsmobile ('41-48)	481-S, 651-S	T109-80	3/8"
Packard	530-S	T109-81	7/16"
Pontiac 6 ('39)	433-S	T109-106	7/32"
Pontiac 6 ('40)	463-S, SP	T109-80	3/8"
Pontiac 6 ('41-42)	494-S	T109-106	7/32"
Pontiac 6 ('46-48)	537-S, 652-S	T109-107	5/16"
Pontiac 8 ('39-40)	432-S; 462-S, SP	T109-31	1/4"
Studebaker	410-S, 496-S	T109-31	1/4"

NOTE—No unloader used on Willys 613S & 645S.
Choke Valve Lock—Prevents choke valve closing when throttle valve held wide open. To adjust, hold choke and throttle valves wide open, bend lip at lower end of fast idle link for 1/32" clearance between lip and throttle lever lock.

CHOKE (Willys 613S & 645S): Semi-automatic butterfly type with manual control. Choke valve lever linked to operating lever by spiral spring. Choke valve fully closed when choke button on instrument panel pulled out.

TROUBLE SHOOTING: Poor Idling Performance. If engine stalls while idling, low speed performance is unsatisfactory, or correct adjustment cannot be secured, remove idle tube (low speed jet) and clean with compressed air or install new tube. See that tube seats tightly at shoulder. Remove idle adjusting screw and clean low speed channels with air. If idle is rich, check metering rod linkage for binding and see that rod is not rubbing on dust cover. On Vacumeter types, see that vacuum piston is clean and operates freely.

Poor Acceleration—Check pump seasonal adjustment and pump stroke. Remove and clean or replace pump jet. Examine pump for damaged or worn plunger leather, loose plunger, corrosion or dirt in pump cylinder, ball check valves sticking or leaking. If plunger removed from cylinder, use loading tool when re-installing to avoid damaging plunger leather. On vacumeter types, see that vacuum piston clean and operates freely, check piston spring.

Carburetor Loads Up or Performance is Poor—Check and adjust float level. See that correct type metering rod installed (replace metering rod and jet as an assembly—check metering rod setting when installed). On vacumeter types, see that vacuum piston operates freely and vacuum channel open and clean.

CARBURETOR OVERHAUL: *CAUTION—When disassembling carburetor for overhaul, note the following points:*

►**Carter Car Starter Note**—When disassembling carburetors which are equipped with this unit, Car Starter switch parts must be removed before throttle valve shaft can be removed from body flange casting. To disassemble switch, hold switch firmly against casting, remove terminal cap, clip, and screw. Withdraw switch using great care not to lose small square adjusting washers, remove switch ball, invert casting and remove switch strainer and retainer ring. *Refer to "Carter Car Starter" in Electrical Equipment Section for complete data.*

►**Willys 613S & 645S Note**—No automatic choke or fast idle are used on this model. Disregard all data on these units when servicing these carburetors.

CONTINUED N NEXT PAGE

CARTER TYPE WA-1 (C ntinu d)

Disassembly: Remove dust cover attaching screw and lockwasher, remove the dust cover. Remove fast idle cam screw and fast idle cam. Take out air horn attaching screws (two screws on top, one beneath Climatic Control housing), remove air horn and gasket. Take out retainer screws, remove thermostatic coil and housing assembly, piston housing strainer. Take out choke valve screws and remove choke valve. Loosen screw on choke lever and link assembly 4 full turns, pry lip on lever away from shaft with screwdriver. Revolve choke shaft counter-clockwise to free piston from cylinder and remove assembly (CAUTION Do not remove pin holding piston housing and air horn casting together—these parts line-reamed at factory and must be kept in alignment). Remove pin spring, spring retainer, and spring from throttle connector rod and remove rod. Remove pin spring and connector link from pump arm. Remove low speed passage plug and gasket assembly (located next to anti-percolator cap). Take out bowl cover screws and remove bowl cover assembly intact. On Vacumeter types, remove vacuum piston spring from cylinder in casting, disconnect piston from link by turning piston 1/4 turn, remove piston link and metering rod from bowl cover and disassemble rod and link, using care not to lose metering rod disc. On non-Vacumeter types, remove metering rod and disc, using care not to lose disc or damage spring, remove pump arm and collar assembly and pump operating lever and countershaft assembly by revolving ½ turn. On all models, remove float, needle and seat assembly, strainer nut and gasket, and strainer. Take out pin and remove anti-percolator cap and rocker arm assembly and spring. Remove pump plunger and rod assembly, take out strainer and check ball in lower end of pump cylinder. Remove low speed jet assembly, nozzle passage plug, nozzle retainer plug, and nozzle (use tool T109-55). CAUTION—Make certain that small nozzle gasket removed from nozzle passage. Remove metering rod jet and gasket assembly. Remove pump jet passage plug and pump jet. Remove pump discharge ball retainer and check ball. Remove body flange (lower casting) gaskets and insulator, idle adjusting screw and spring, and idle port rivet plug. Remove throttle shaft arm and shaft assembly, take out throttle valve screws, remove throttle valve and shaft and lever assembly.

Servicing—Wash all parts in clean gasoline (except thermostatic coil and housing assembly and cork parts), blow out all passages with compressed air, examine metering rods and jets, replace all worn parts.

Reassembly: Use all new gaskets (see Parts List below), group all the low speed circuit, high speed circuit, float, pump, and choke circuit parts together to insure correct re-installation. Install parts in reverse order of disassembly directions given above and note following special instructions and cautions: When installing throttle valve, use new attaching screws, install valve with trademark up and on idle port side of bore, install screws loosely, tap valve lightly to centralize it in bore and then tighten attaching screws. Centralize choke valve in same manner and check operation by making certain that choke valve falls open freely of own weight. When installing nozzle, make certain that new gasket used, install nozzle with flat side up. See that low speed jet seats firmly in casting at shoulder. Check and adjust metering rod, anti-percolator setting, pump stroke, float level, fast idle and choke setting, throttle valve setting as directed above. Pack dust cover attaching screw hole in bowl cover with graphite grease before installing dust cover and attaching screw (oil or grease must not be used at any other point). Adjust carburetor when re-installed.

SERVICE PARTS: Gasket Sets. No. 139A (425-S, 426-S, 432-S, 433-S, 435-S, 454-S, 463-S, 464-S, 466-S, 530-S, 610-S, 622-S, 622-SA, 622-SB, 662-S, 662-SA), No. 146 (462-S, 494-S, 537-S, 652-S), No. 157 (481-S, 504-S, 651-S), No. 159 (496-S), No. 159A (613-S), No. 160 (410-S).

Repair Packages (with Std. Metering Jets)—No. 1036 (426-S), No. 1037 (425-S), No. 1063 (433-S), No. 1064 (432-S), No. 1065 (435-S, 464-S), No. 1078 (454-S), No. 1083 (466-S, 467-S), No. 1084 (462-S), No. 1085 (463-S), No. 1097 (481-S, 504-S), No. 1300 (494-S), No. 1301 (496-S), No. 1320 (530-S), No. 1360A (613-S), No. 1361 (611-S), No. 1095 (610-S), No. 1362B (622-S, 622-SA, 622-SB), No. 1366A (537-S), No. 1379 (662-S, 662-SA), No. 1383 (651-S), No. 1385 (645-S), No. 1388 (652-S).

CARTER TYPE WE

532-S—Studebaker Champion, 5G (1946), 6G (1947), 7G (Early 1948)
661-S—Studebaker Champion, 7G (Late 1948)

CARBURETOR MODEL IDENTIFICATION: Carburetor models may be identified by Body Casting Number on face of carburetor flange as follows: **375 (532S).**

►FIELD & PRODUCTION CHANGES

►**Carburetor Mounting Flange Gasket Caution**—Vacuum (operating suction) passage for metering rod vacuum piston extends down to face of carburetor mounting flange and special slotted type flange gasket, No. 1A-30, must be used when mounting carburetor on manifold (vacuum passage and slot lined up).
CAUTION—Use of plain type gasket will blank off this vacuum passage and interfere with correct operation of the carburetor.

DESCRIPTION

DESCRIPTION: Single barrel, vacumeter, downdraft, with Carter Climatic Control (automatic choke), Fast Idle, Anti-percolator, and throttle lever operated accelerating pump. Design is similar to WA-1 type except for new design Fast Idle mechanism (fast idle cam mounted within choke housing) and new idle fuel system (idle by-pass air bleed located in air horn above choke valve (provides quicker starting with choke valve closed).

ADJUSTMENT & OVERHAUL

IDLING ADJUSTMENT: Adjust carburetor only when engine warmed up and idling at hot or slow idle speed with choke valve wide open and fast idle inoperative. Idle adjusting screw controls fuel mixture and should be turned in for leaner mixture, out for richer mixture. Approximate setting of the screw is ½-1½ turns open. Idle speed is controlled by throttle lever stopscrew and should be set for idle speed of 8-10 MPH. See car page for complete tune-up instructions.

ACCELERATING PUMP: High pressure type with spring-loaded arm (pump arm and pump operating lever linked by coiled spring—no seasonal adjustment).

Pump Stroke Adjustment—Remove dust cover over pump countershaft and arm assembly, back off throttle stopscrew so that throttle valve closes tightly. Install Universal Pump Stroke Gauge T109-117S on bowl cover with lip of gaug extending over top of pump plunger shaft, turn knurled nut on gauge until gauge lip rests on top of shaft with throttle valve fully closed. Note gauge reading (numbers on gauge at notch in knurled nut). Open throttle wide and again note gauge reading. Difference between two readings is pump stroke in sixty-fourths of an inch and should be "17" (pump stroke 17/64"). Adjust by bending throttle connector rod at lower angle near throttle lever (use Tool T109-41).
CAUTION—Check metering rod adjustment (disturbed by this adjustment).

METERING ROD (ECONOMIZER): Metering rod and jet assembly meters all fuel for main nozzle (stepped and tapered rod is lifted out of jet as throttle is opened permitting greater fuel flow to nozzle). Metering rod is linked directly to a vacuum piston and is controlled by manifold vacuum within limits determined by the throttle valve opening (lug on pump arm serves as stop for lip on vacuum piston link which prevents metering rod from being pulled down into metering jet beyond correct point for the particular throttle opening but permits rod to be withdrawn for greater fuel flow and richer mixture when vacuum drops.

METERING ROD SETTING

All Carburetors ..... Gauge No. T109-102 (2.468")

Metering Rod Adjustment—Remove dust cover on float bowl cover, remove metering rod being careful not to lose metering rod spring and disc. Install Gauge No. T109-102 (2.468") in place of metering rod making certain that gauge seats in metering rod jet and is held vertical. Back off throttle lever stopscrew and make certain that throttle valve is tightly closed (see that fast idle does not hold valve open). Press down lightly on top of metering rod arm until upper lip of arm contacts pin in pump arm. Clearance between metering rod pin and shoulder in notch of gauge must be less than .005" and gauge should not drag on pin. Adjust by bending upper lip on metering rod arm (use Tool T109-105). Then check lower (economy) lip of metering rod arm as follows:
Press down lightly on top of metering rod arm with throttle valve tightly closed, check clearance between **bottom** of pump arm pin and upper surface of lower lip on metering rod arm (use Tool T109-28). Clearance must be exactly 3/16". Adjust by bending lower lip (use Tool T109-105). Install metering rod and disc,

CONTINUED ON NEXT PAGE

CARTER TYPE WE (C ntinued)

ANTI-PERCOLATOR: Saxaphone Key Type. Consists of a main nozzle vent in the bowl cover controlled by a metal cap which opens the vent when the throttle is closed to prevent any percolating discharge from the nozzle. The cap must be seated to close the vent when the throttle is opened.

Adjustment—Crack throttle open .030" by inserting special gauge T109-29 (see Note below) between edge of throttle valve and carburetor wall on side opposite idle port. Bend anti-percolator rocker arm (use Tool T109-105) until clearance between rocker arm lip and pump arm .005-.015" (use feeler gauge). NOTE—Gauge T109-29 is used for both .020" and .030" settings.

FLOAT LEVEL: To check float level, remove float bowl cover assembly, invert cover and allow float to hang freely. Measure from top edge of machined projection on cover to top of soldered seam on free end of float is correct (see table below), adjust by bending lip of float lever.

FLOAT LEVEL SETTING

Car Model	Carburetor	Checking Gauge	Float Level
Studebaker Champ. ('46-48)	532S	T109-31	¼"
Studebaker Champ. ('48)	661S	T109-80	3/8"

Float Travel—After adjusting float level, adjust stops on float bracket so that free end of float has ½" movement (plus or minus 1/32").

THROTTLE VALVE SETTING: When installing throttle valve, see that trademark is up and on idle port side, install screws loosely, tap valve lightly to centralize it in bore, tighten screws securely. With throttle stopscrew backed off so that valve closes tightly, check throttle valve setting as follows:

Idle Port Opening—Port opening (below lower edge of valve should be .010-.014" with valve tightly closed.

Vacuum Spark Port—Top of port should be .055-.060" above top edge of valve.

FAST IDLE: Consists of a fast idle cam and lever assembly mounted on the choke valve shaft within the Climatic Control housing and linked to the throttle valve lever. ***See Climatic Control article in Carburetion Equipment Section.***

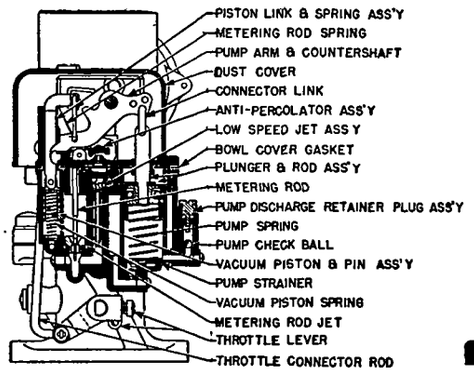

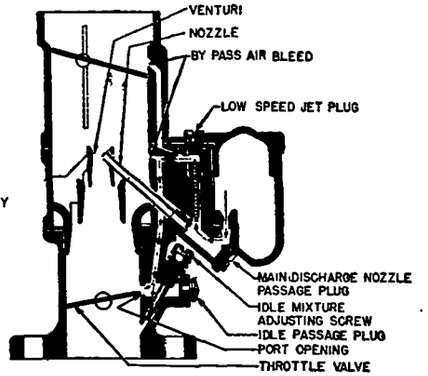

Adjustment—To check setting, remove thermostatic coil housing, gasket and baffle plate (for access to fast idle mechanism). Crack throttle valve by hand, hold choke valve closed, then close throttle valve. This will allow fast idle cam to rotate to fast idle position. Check clearance between edge of throttle valve and carburetor wall on side opposite idle port while holding choke valve closed and with slight tension on throttle lever (Gauge T109-193). Clearance should be .054". To adjust, loosen locknut on choke connector rod assembly, turn adjusting sleeve until throttle valve clearance is exactly .054", hold sleeve and tighten locknut. Reset stopscrew for correct idle speed.

UNLOADER: Consists of a choke trip lever within the Climatic Control housing which is actuated by the fast idle link and engages a lip on the choke valve shaft lever so that the choke valve is opened when the throttle valve is held wide open to correct flooding. Unloader action should be checked and adjusted after Fast Idle adjusted (thermostatic coil, gasket, and baffle plate off).

Adjustment—To check, hold throttle valve wide open, move choke valve as far as possible toward closed position without forcing. Check clearance between lower edge of choke valve and carburetor wall (use Gauge T109-28). Clearance should be 3/16". To adjust, bend upper arm on choke trip lever (T109-187).

CHOKE: Butterfly type offset valve linked directly to automatic choke (Climatic Control). ***See Climatic Control article in Carburetion Equipment Section.***

Setting—Thermostatic coil housing should be set so that reference mark on housing is centered on scale on piston housing or rotated clockwise (for Lean settings) as listed in table below. This setting may be varied for extreme weather conditions or continuous operation with fuels other than standard octane rating, by loosening three cover screws and rotating housing counter-clockwise (for Richer setting), clockwise (for Leaner setting). Do not vary adjustment more than 1 point at a time.

CLIMATIC CONTROL (CHOKE) SETTING

Car Model	Carburetor	Choke Setting
Studebaker Champ.	532S	Centered
Studebaker Champ.	661S	1 Point Lean

DISASSEMBLY OF CARBURETOR: Remove dust cover and air horn (tilt the air horn to disengage connector link from throttle lever). Disconnect accelerating pump connector rod. Take out idle passage plug and float bowl cover screws, lift off float cover and float assembly. Disassemble float bowl cover assembly as follows: Unhook vacuum piston assembly, remove vacuum piston link and metering rod carrier assembly, remove hairpin lock, disconnect pump link, remove accelerating pump plunger and rod, remove float pin, lift out float and float needle valve, remove float needle seat, gasoline inlet plug and screen (beneath plug). Disassemble carburetor body casting assembly as follows: Remove idle tube, lift out accelerating pump and vacuum piston springs, remove pump discharge jet plug and discharge jet, remove pump discharge ball check plug and invert assembly to remove ball and accelerating pump screen (in lower end of pump cylinder), remove inlet ball check retainer ring in bottom of pump cylinder (use Tool T109-56), then invert assembly and remove inlet ball check, remove metering rod jet and gasket, take out screws and separate flange (throttle body assembly) from main body casting, remove main discharge nozzle retaining plug, and main discharge nozzle (use Tool T109-55) being careful not to lose the small copper gasket on the nozzle seat, remove idle adjusting screw and idle port rivet plug.

Servicing—Clean all parts in gasoline (or cleaner) except thermostatic coil and housing assembly and cork parts. Blow out all passages with compressed air, scrape carbon from casting bore, examine all jets, metering rod, vacuum piston, and accelerating pump for wear or damage. Replace all worn parts.

REASSEMBLY OF CARBURETOR: Use all new gaskets (see Parts). Group all Low Speed, High Speed, Pump, Float, and Choke assembly parts together to facilitate assembly. Install parts in reverse order of disassembly directions and note the following special instructions.

Main Nozzle—Use new copper gasket, install nozzle with flat side up.

Throttle Valve—If valve removed, use new attaching screws when replacing valve, install valve with trademark up and on idle port side, install screws loosely, then close throttle and tap valve lightly to centralize it in bore, tighten attaching screws securely. Check valve location (see Throttle Valve Setting).

Choke Valve—Install valve in same manner as Throttle Valve (above).

Idle Tube—Make certain that idle tube seats firmly against shoulder in casting. When installing air horn gasket, see that idle air bleed hole in gasket is aligned with passage in body casting and air horn (air bleed extends up in air horn to point above choke valve).

Accelerating Pump—Make certain that pump inlet screen is clean and that inlet ball check, retainer, and screen are correctly installed in pump cylinder (use Tool T109-122U to install retainer ring). See that pump plunger leather is not worn or damaged, use loading tool when installing plunger in cylinder (to avoid damaging plunger leather).

Pump Countershaft Lubrication—Pack dust cover retaining screw hole with No. 3 graphite grease before installing dust cover. This lubricates pump countershaft. Do not use oil or grease at any other point in carburetor.

Carburetor Adjustment—Check and adjust Metering Rod, Anti-Percolator, Pump Stroke, Float Level, Fast Idle and Choke Setting, and throttle valve setting. Adjust Idle mixture and speed when carburetor installed on engine.

Carburetor Installation—Make certain that special slotted type flange gasket, No. 1A-30, is used when mounting carburetor on manifold.
CAUTION—Metering rod vacuum piston passage terminates in hole on face of mounting flange and this passage must not be covered by the gasket.

SERVICE PARTS: Gasket Set—Part No. 186.

Repair Package (with Std. Metering Jet)—Part No. 1356A.

CARTER TYPE WO

JEEP	Carter No.	WILLYS	Carter No.
1942-45 Ford & Willys	①539S	1940 All Models	①450S, SA
STUDEBAKER		1941-42 All Models	①507S, SA
1939 Early Champion G	①444S	1946 Early Jeep CJ-2A	①596S
1939 Later Champion G	①453S	1946-48 Jeep CJ-2A	①636S, SA
1940 Champion 2G	468S	1947-48 Jeep Trk. 2T, 4T	①636S, SA

①—See Field & Production Change Notes below.

CARBURETOR MODEL IDENTIFICATION: Individual carburetor models may be identified by Casting Number on face of flange as follows: 229 (444S, 453S, 468S, 507S, 507SA), 200 (450S, 450SA), 458 (596S), 505 (636S, 636SA).

►FIELD & PRODUCTION CHANGES

►**Studebaker Champ. 444S (Early 1939) Changes:** This carburetor (used on first cars) can be brought up to later (453-S) standards by making the following changes: Remove float bowl cover, remove and discard original Float & Lever Assembly (21-45S), Needle & Seat Assembly (25-92S), Bowl Gasket (121-73). Install new type Float & Lever Assembly No. 21-74S, Needle & Seat Assembly No. 25-94S, Bowl Gasket No. 121-25 and set Float Level at ¼" (was ⅜"). These parts furnished in package as Part No. 25-95U. See Service Instructions below.

►**Studebaker Champ. 453S (Late 1939) Recommended Changes:** To improve cold starting and warming up performance on cars equipped with this 453-S carburetor, install the following parts (furnished in Unit Package No. 14-236U); Choke Control Lever & Shaft Assembly No. 14-255S, Choke Valve Screws (2) No. 39-10, Pin Spring 150A-10, Tube Clamp Assembly No. 62-114S, Choke Link No. 117-74, Choke Lever Spring No. 61-213, Inspection Tag No. 107-14. CAUTION New tag marked 453-SA should replace old tag to denote new parts installed.

►**Jeep 539S Carburetor Production Changes**—Early & late carburetors have different (non-interchangeable) parts as listed below, and first carburetors can be brought up to later standards as follows:

Early (first 4000) 539S Carburetors—May be identified by the mark 'K1' on brass inspection tag and can be brought up to latest specifications by installing the following parts (unit packages): No. 1-413U Body Flange Assembly, Metering Rod, & Tube Clamp Unit; or No. 3-466U Throttle Shaft Assembly, Metering Rod, & Tube Clamp Unit.

Later (after first 4000) 539S Carburetors—These carburetors have the following new parts (not interchangeable with parts on first 4000 carburetors): No. 1-412S Body Flange Assembly, No. 3-465S Throttle Shaft Assembly, No. 62-135S Choke Tube Bracket Assembly, No. 62-134 Tube Clamp Assembly, No. 105-13 Tube Clamp Screw. CAUTION—Make certain that correct parts used when servicing first 4000 carburetors (marked K1 on inspection tag), and later carburetors (with new parts as listed above). These parts not interchangeable

►**Willys 596S & 636S Carburetor Changes for Improved Performance at Transfer (Flat Spot) Point**—New Low Speed Jet, Part No. 11-186S, can be installed to supersede original No. 11-180S. NOTE—New jet furnished in Repair Package No. 1355A.

►**Willys 450SA, 507SA, 636SA Replacement Carburetor Caution**—Have new parts (non-interchangeable with like parts on previous carburetors) as follows: **Nozzle**—No. 12-323 (supersedes 12-255), **Nozzle Gasket**—No. 20-45 (supersedes 20-72), **Nozzle Retainer Plug**—No. 11B-164 (supersedes 11B-105).
CAUTION—These parts not interchangeable and correct parts must be used on each carburetor model.

►**Willys (1946-48) Governor Installation Cautions**—King-Seeley, Monarch, or Novi Governor is Optional equipment on these models. See Willys Shop Notes (in Car Model Section) for complete Governor Adjustment Instructions. When installing governor, carburetor must be converted from manual operation by removing screw in throttle valve lever directly below end of fast idle link on 596-S carburetors. On 636-S carburetors, remove this screw from the center hole and re-install screw in top hole with inner end above the throttle lever (for King-Seeley & Monarch governors), or in lower hole with inner end below throttle lever (for Novi governor). The two levers should be locked together by this screw only when no governor is used. Governor control rod should be connected to ball stud on lever on opposite end of throttle valve shaft.

DESCRIPTION

DESCRIPTION: Single barrel, downdraft. Design same as WA-1 except as follows: **Idle System**—Idle Orifice Tube (low speed jet) is located in idle well which is fed directly from float bowl (not main nozzle well as on other models) through a drilled passage in the body casting in which the Idle Well Jet is located. Idle well is vented to float bowl by drilled channel in carburetor body. Cross-channel at top of idle tube has two air bleed openings into mixing chamber above main venturi (upper air bleed hole is located ahead of economizer restriction in cross-channel (lower air bleed is beyond this point).

Venturi—Double venturi system used with small (primary) venturi located in main body casting above large (main) venturi which is integral with casting.

ADJUSTMENT & OVERHAUL

IDLE ADJUSTMENT: Adjust only with engine warmed up (choke valve open, fast idle inoperative). Idle adjusting screw controls fuel mixture and should be turned in for leaner mixture, out for richer mixture. Approximate settings below. See tune-up data on car model pages for complete tune-up data.

IDLE SETTING

Car Model	Carburetor	Idle Setting	Idle Speed
Jeep (Ford & Willys)	539-S	1-2 turns open	600 RPM., 8 MPH.
Studebaker Champ.	444-S, 53-S, 68-S	¾-1¼ turns open	600 RPM., 8 MPH.
Willys ('40)	450-S, SA	½-2½ turns open	8 MPH.
Willys ('41-42)	507-S, SA	½-1½ turns open	8 MPH.
Willys ('46-48)	636-S, SA	1-2 turns open	600 RPM, 8 MPH.

PERFORMANCE:—Should be satisfactory if Idling Adjustment and pump stroke setting correct. See Trouble Shooting.

ACCELERATING PUMP:—High pressure type (spring operated). Operated by throttle lever through spring connection between pump operating lever and pump arm (under dust cover on bowl cover). Fuel is drawn into pump cylinder through strainer and inlet ball check valve when throttle is closed and is discharged through outlet ball check valve and pump jet location in side of mixing chamber above main venturi when throttle is opened for acceleration. Pump is not adjustable for seasonal changes.

Pump Stroke Adjustment—To check pump plunger travel, remove dust cover on float bowl cover, install Universal Pump Stroke Gauge T109-117S on raised portion of bowl cover so that gauge is vertical and projecting ear rests on top surface of pump shaft. Back off throttle lever stopscrew so that throttle valve tightly closed, note gauge reading. Open throttle wide and again note gauge reading. Difference between two readings is pump stroke (in sixty-fourths of an inch) and should agree with table below. To adjust, use special bending tool T109-41 to bend throttle connector link at lower angle near throttle lever. CAUTION—Check metering rod setting (disturbed by this adjustment).

ACCELERATING PUMP SETTING

Car Model	Carburetor	Pump Stroke
Jeep (Ford & Willys)	539S	17/64"
Studebaker Champ.	444S, 53S, 68S	12/64"
Willys ('40)	450S, SA	17/64"
Willys ('41-42)	507S, SA	14/64"
Willys ('46-48)	596S, 636S, 636SA	17/64"

METERING ROD (ECONOMIZER):—Metering rod and jet assembly meters fuel for main nozzle and rod is operated by throttle lever in same manner as on other Carter models. Metering rod mounting on pump operating lever is new and consists of a pin locked in place in a slotted hole in the pump arm by a nut.

METERING ROD SETTING

All Carburetors	Gauge T109-26 (2.718")

Metering Rod Adjustment—Disconnect choke linkage, take out air horn attaching screws, remove air horn and dust cover. Unhook metering rod spring, remove metering rod being careful not to lose disk on rod at bowl cover. Insert special gauge, T109-26 (2.718") in place of metering rod so that tapered end is seated in metering rod jet and gauge is vertical. Back off throttle lever stopscrew so that throttle valve closes tightly. Metering rod pin on pump operating rod should be even with shoulder of notch in gauge. To adjust, loosen pin nut, shift pin on arm, tighten nut securely (use special wrench T109-76).

►*CAUTION*—On 539S, 596S, 636S, 636SA, metering rod spring must be engaged in hole in metering rod and spring must exert slight downward pressure on rod so that rod seats in jet when throttle valve stopscrew set for normal idle speed. Bend lower end of spring, if necessary, to secure this setting.

FLOAT LEVEL:—To check, remove bowl cover and float assembly, invert cover, turn gasket so that machined surface of bowl cover is exposed, measure distance from this machined surface to top of float at free end (see Caution below). Adjust by bending lip of float lever at point where it contacts valve needle (do not bend float arm).

NOTE—When checking float level, use Gauge No. T109-80 (⅜"), T109-31 (¼").

►*CAUTION*—Use great care not to compress spring in needle valve stem when checking float level (allow float to hang freely on inverted cover).

CONTINUED ON NEXT PAGE

CARTER TYPE WO (C ntinued)

FLOAT LEVEL SETTING

Car Model	Carburetor	Float Level
Jeep (Ford & Willys)	539-S	3/8"
Studebaker ('39)	444-S (First—See Note)	3/8"
Studebaker ('39)	444-S (Later—See Note)	1/4"
Studebaker ('39-40)	453-S, 468-S	1/4"
Willys	450S, SA; 507S, SA; 596S, 636S, SA	3/8"

Studebaker 444-S Note—Setting of 3/8" is for first type float and needle valve assembly, 1/2" for later type. Refer to Production Change Note for this model.

Float Travel—To check, hold bowl cover and float assembly in normal position. Free end of float should drop 1/2". Adjust by bending two small float stop lips at hinge end of float.

Needle Valve & Seat—Furnished in matched sets only as follows: Part No. 25-94S—Intake Hole #48 (444-S, 453-S, 468-S), Part No. 25-93S—Intake Hole #53 (450-S, 507-S, 539-S, 596-S, 636-S).

THROTTLE VALVE SETTING:—When installing valves, back off throttle lever stopscrew, see that trademark on valve is on idle port side, use new attaching screws and install screws loosely, tap valve lightly to centralize it in carburetor bore, tighten screws securely, check valve setting.

Setting—With stopscrew backed off and throttle valve tightly closed, idle port opening (above or below valve as noted) and height of vacuum spark port (above valve) should be correct as shown in table below. Shims furnished .002" thick (2-93), .005" thick (2-94) to correct throttle valve location.

THROTTLE VALVE SETTING

Car Model	Carburetor	Idle Port Opening	Vacuum Port Hgt.
Jeep (Ford & Willys)	539-S	.086-.090" (above valve)	
Studebaker ('39)	444-S, 453-S	.028-.032" (below valve)	.042-.048"
Studebaker ('40)	468-S	.028-.032" (below valve)	.072-.078"
Willys ('40)	450S, SA	.086-.090" (above valve)	.056-.062"
Willys ('41-42)	507S, SA	.010-.014" (below valve)	.042-.048"
Willys Jeep	596S	.086-090" (above valve)	
Willys Jeep & Trk	636S, SA	.086-.090" (above valve)	.056-.062"

CHOKE:—Offset type valve with poppet type relief valve. Check choke linkage to see that choke valve closed when control button on instrument panel pulled out and fully open with control button pushed in (valve spring-loaded).

TROUBLE SHOOTING:—**Poor Idling Performance**—If motor stalls while idling, low speed performance is unsatisfactory, or if correct idling adjustment cannot be secured, remove idle well plug and gasket assembly and allow fuel to drain from bowl which will flush out idle well jet. Remove idle well jet and clean with compressed air, remove low speed jet and clean with air, see that jet seats gasoline tight at shoulder in casting when replaced. Check carburetor wall at throttle valve for carbon. Blow out idle passages with air.

Poor Acceleration—Check pump stroke. Remove and clean or replace pump jet. Examine pump for damaged or worn plunger leather, loose plunger or bent pump arm, sediment or corrosion in pump cylinder, sticking or leaking ball check valves. If pump plunger removed from cylinder, use loading tool to install plunger to avoid damage to plunger leather.

Carburetor Loads up or Performance is Poor—Check float level, see that correct type metering rod installed and check metering rod setting.

DISASSEMBLY OF CARBURETOR: Remove the choke connector link, take out attaching screws and remove air horn assembly. Remove idle well plug and gasket assembly, remove idle well jet. Remove throttle shaft arm and connector rod. Take out screws and remove bowl cover assembly, disassemble parts on bowl cover. Remove low speed jet plug and gasket, low speed jet, idle adjusting screw and spring, metering rod jet and gasket assembly, nozzle passage plug and gasket, nozzle retainer plug, nozzle (use tool T109-55). Take out body casting flange attaching screws, remove flange casting and throttle valve assembly. Remove pump strainer plug and gasket, strainer, inlet ball check valve assembly, outlet ball check valve assembly. Remove pump jet passage plug and gasket, and pump jet. Remove idle port rivet plug. Take out throttle valve attaching screws, remove valve, withdraw shaft and lever assembly. Remove choke control bracket assembly from air horn, take out choke valve attaching screws, remove valve, withdraw choke valve shaft and lever assembly.

Servicing:—Clean body castings and all parts in gasoline, blow out all passages in castings and all jets with compressed air, dry all parts with air before reassembling. Check all parts for wear, see that they agree with specifications

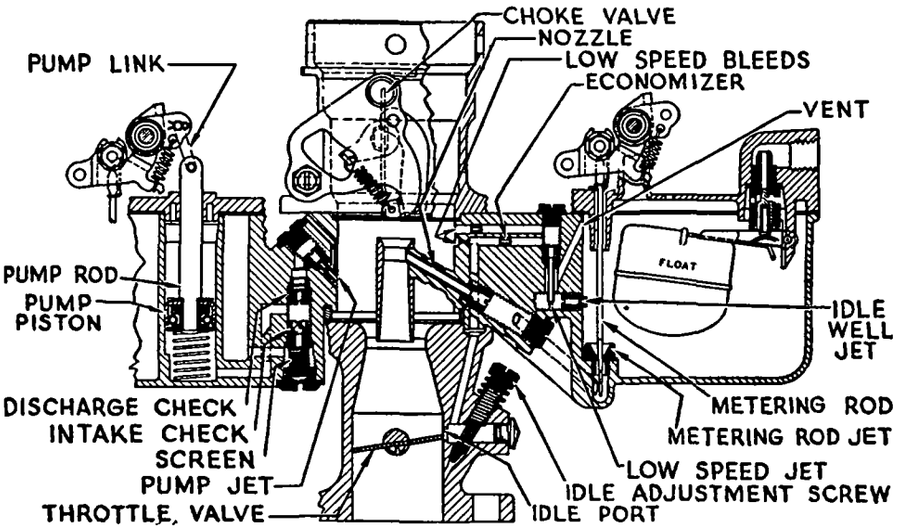

REASSEMBLY OF CARBURETOR: Use new gaskets, soak metering jet and inlet gasket in 90 proof alcohol for 15 minutes, install on part and allow to dry before using). Reassemble by reversing disassembly directions above and note:

Nozzle Installation—Use new gasket. Use special tool T109-55 to install nozzle and make certain that flat side of nozzle is upward.

Low Speed Jet—Make certain that hole at lower end is open, work jet into seat by moving it back and forth, make certain that jet seats tightly in casting

SERVICE PARTS: Gasket Sets—No. 143A (444-S, 453-S, 468-S), No. 147 (450-S, SA; 507S, SA), No. 175A (539S, 596S, 636S, SA).

Repair Packages (with Std. Metering Jet)—No. 1066 (444-S, 453-S, 468-S), No. 1087 (450S, SA), No. 1304 (507S, SA), No. 1319A (539S), No. 1355A (596S, 636S, 636SA).

CARTER DUAL TYPE WDO

Carter No. — Used On:

407-S—CADILLAC V16, SERIES 90 (1938-39-40)—L.H. CARBURETOR
408-S—CADILLAC V16, SERIES 90 (1938-39-40)—R.H. CARBURETOR
373-S—CHRYSLER IMPERIAL, MODEL C14 (1937)
488-S—GRAHAM HOLLYWOOD SUPERCHARGER, 109 (1940-41)
344-S, 377-S—HUDSON 6 & 8, MODELS 73, 4, 5, 6, 7 (1937)
TERRAPLANE SUPER SIX, MODEL 72 (1937)
402-S—HUDSON 6 & 8, MODELS 83, 4, 5, 7 (1938)
TERRAPLANE, SUPER MODEL 82 (1938)
317-S—HUPMOBILE EIGHT, MODEL 521-O (1935), 621-N (1936).
399-S—HUPMOBILE EIGHT, MODELS 825-H ('38), 925-H ('39)
374-S—LA SALLE, V8, SERIES 37-50 (1937)
392-S—LA SALLE V8, SERIES 38-50 (1938)
423-S—LA SALLE V8, SERIES 39-50 (1939)
436-S—NASH AMBASSADOR EIGHT, MODEL 3980 (1939)
465-S—NASH AMBASSADOR EIGHT, MODEL 4080 (1940)
511-S—NASH AMBASSADOR EIGHT, MODEL 4180 (1941)
538-S—NASH, AMBASSADOR EIGHT, MODEL 4280 (1942)
458-S—NASH-LAFAYETTE, MODEL 4010 (1940)
328-S—OLDSMOBILE EIGHT, MODEL L-36 (1936). FIRST 27,334 CARS.
341-S—OLDSMOBILE EIGHT, MODEL L-36 (1936). SERIAL NO. L-127334 UP.
345-S—OLDSMOBILE EIGHT, MODEL L-37 (1937)
367-S—OLDSMOBILE EIGHT, MODEL L-37 (1937) LATER CARS.
386-S—OLDSMOBILE EIGHT, MODEL L-38 (1938)—FIRST CARS
366-S—PACKARD EIGHT, MODEL 120C (1937)—ENG. NO. 112-822 UP
469-S—PONTIAC TORPEDO 8, MODEL 40-29 (1940)—SEE NOTE
469-SM—PONTIAC EIGHT, MODELS 41-27, 28, 29 (1941)
540-S—PONTIAC EIGHT, MODELS 42-27, 28 (1942)—FIRST CARS
548-S—PONTIAC EIGHT, MODELS 42-27, 28 (1942)—LATER CARS
PONTIAC EIGHT, MODELS 46-27, 28 (1946)
409-S—STUDEBAKER PRESIDENT, MODELS 6C (1940), 7C (1941)

NOTE:—These models fitted with Carter Climatic Control (automatic choke), Fast Idle, Unloader, Choke Valve Lock, and Anti-Percolator. See Carburetion Equipment Section for complete data.

Chrysler C14—Carter Climatic Control not used on this model (see separate article for Sisson Automatic Choke which is standard equipment).

Oldsmobile L-38. This carburetor used on first cars only. Model 389-S Vacumeter type carburetor used on later cars. See separate article for data.

Pontiac 1947 Models—Carter Type WCD Dual Carburetor is used on all Pontiac Eight 1947 models. See separate article on Carter "WCD" Carburetors for data

►FIELD & PRODUCTION CHANGES

Cadillac V16 Carburetor Equalizing—Two carburetors used. Must be equalized when adjusted. See Equalizing data under "Idle Adjustment".

La Salle Idling Adjustment Correction—On first cars equipped with 392-S and 423-S carburetors, if idle adjustment range is insufficient and correct performance cannot be secured, a #54 size drill hole should be drilled in each throttle valve in the 'C' stamped on the idle port side of the valve. Recommended idle screw setting changed from ¼-1 to ½-1¼ turns open.

Nash-Lafayette 458-S—To correct warming up complaints, new Air Horn & Climatic Control Assembly No. 6-334S (replacing 6-357S) and Thermostatic Coil & Housing Assembly No. 170K64S (replacing 170B64S) should be installed. When this change made by dealers, new Hot air stove and tube assembly is also installed. NOTE—New thermostatic coil housing must be set on center index

Nash 465-S Loading or Warming up slowly—Check hot air tubing. See that tubing not kinked at bends or pinched at point where it enters coil housing. See that tube tight in coil housing and hot air stove connections.

Pontiac (All Models)—The car manufacturer recommends that the Piston Plate Strainer (located in Piston Plate in automatic choke housing) be discarded whenever the automatic choke is disassembled for service. Do not reinstall the strainer when reassembling the carburetor. NOTE—This strainer will be omitted on production carburetors beginning with late 1946 cars.

Pontiac (1940) Accelerator Pedal Sticking Correction—To correct complaints of engine idling or running faster than normal, check for binding of accelerator pedal cross-shaft and correct by enlarging bolt holes in cross-shaft mounting brackets so that brackets will align with shaft when re-installed. Make certain that shaft is oiled at regular lubrication periods. Check to see that pedal rod has clearance at hole in toeboard and that rubber bellows on rod is not jammed in toeboard hole. On Torpedo Eight Model, make certain that correct accelerator pedal, No. 504294 (9⅜" long) is installed. CAUTION—If Deluxe model pedal (10 3/16" long) is installed on Torpedo model cars, pedal will jump off studs.

Pontiac 469-S Poor Starting or Leanness during warm-up—To correct complaints of hard starting when cold or lean mixture during warming up period climatic control setting on carburetors with first type thermostatic coil (marked 170G16S on coil housing) should be changed to 4 Notches Rich. Later carburetors with new type thermostatic coil (marked 170F16S) must be set 1½ Notches Rich—see Pontiac Changes following.

Pontiac 469-S Metering Rod & other changes—Metering rod changed to new type No. 75-443 (replaces 75-424) and new rods released for 1 Size Lean and 2 Sizes Lean also—See Carter Jet Specification Table for complete metering rod data. Special metering rod gauge T109-27 must be used to check these new rods (gauge T109-104 used for first type rods). Relief passage to outside changed to #38 drill size (was #42) and new choke valve No. 7-113 used (replaces No. 7-90), new Trip Lever No. 14-219 (replaces 14-220—requires special Unloader Setting as given below), and new type Thermostatic Coil No. 170F16S (replaces 170G16S but has same standard setting as first type of 1½ Notches Rich). See note above for special setting of first type thermostatic coil only to correct hard starting and excessive leanness when cold.

NOTE—All carburetors equipped with the new type metering rod (75-443) and trip lever are marked '469-SM' for identification.

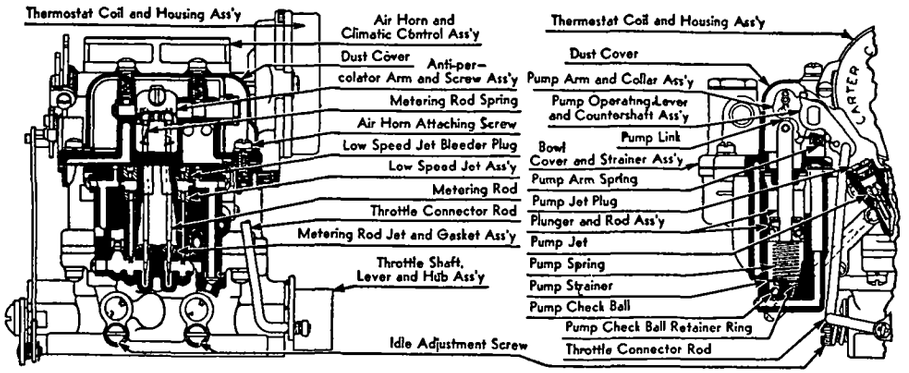

Pontiac Eight (1940-41) Hesitation or Stumble on Low Speed Acceleration. May be caused by insufficient accelerator pump delivery charge with original non-adjustable type No. 53A-146S Pump Arm & Collar. This complaint may be corrected by removing air horn and dust cover assembly, removing and discarding old No. 53A-146S Pump Arm and Collar, installing new adjustable type No. 53A-249S Pump Arm & Collar and connecting pump link in upper hole of arm which will provide greater pump discharge. NOTE—Metering Rod setting and Anti-Percolator adjustment must be checked after this change has been made (disturbed by pump arm removal). See adjustment instructions below.

Pontiac (1941) Throttle Sticking Correction (First Cars)—Accelerator pedal rod used on first cars did not have stop at bend and rod may be forced into hole in bracket causing throttle to stick if cross-shaft bracket and pedal rod alignment not correct. Correct this condition by installing thin washer on end of rod against the bend and soldering the washer in place. Later cars have a stop formed on the rod at this point. Check accelerator pedal alignment and shim with washers under anchor stud to secure exact alignment of pedal rod in center of hole in toeboard.

Pontiac Eight (1941) Throttle Sticking Correction—On cars before Engine No. 8-353151, this may be caused by binding of fast idle arm on connector link so that throttle is prevented from closing (throttle is locked open causing engine to race). This condition can be corrected by installing new type Fast Idle Arm No. 53A-127 and Connector Link No. 107-102 (furnished as Unit Package No. 53A-250U). Check Fast Idle setting and Throttle Cracker adjustment after these parts installed. NOTE—This new Fast Idle Arm and Connector Link used on 1941 cars after Engine No. 8-353151 and on all 1942 cars.

Pontiac Eight (1941) Hesitation on Fixed Throttle—If slight hesitation noted when driving with throttle held in fixed position and this cannot be corrected by tune up and other adjustments, change anti-percolator setting as follows: Open throttle so that anti-percolator stems fully extended, note stem positions, then close throttle and adjust anti-percolator arms so that stems depressed 1/32" maximum (disregard reference grooves on stem when adjusting).

CONTINUED ON NEXT PAGE

CARTER DUAL TYPE WDO (C ntinued)

Pontiac (1942) Accelerator Pedal Sticking or Binding (First Cars)—Some early 1942 cars were not equipped with spacer washer on left end of accelerator cross-shaft. This spacer washer, No. 502306, should be installed to correct any tendency of the accelerator pedal linkage to stick or bind.

Pontiac Model 548-S—Low Speed (Idle) Jet Tube is pressed in place in carburetor permanently and should not be removed for service.

DESCRIPTION: Dual barrel, downdraft type. Similar in design to other Carter models except that carburetor has two barrels or mixing chambers and that main nozzles, accelerating pump discharge jets, throttle valves, and idling systems duplicated for each barrel. Anti-Percolator is used.

IDLE ADJUSTMENT:—Engine must be thoroughly warmed up so that choke valve is wide open and Fast Idle is inoperative. Idle adjusting screw provided for each carburetor barrel. Screws control fuel mixture and should be turned in for leaner mixture or out for richer mixture. See tune up data on car model page.

IDLE SETTING

Car Model	Carburetor	Idle Screw Setting	Idle Speed
Cadillac V16	407-S, 408-S	¼-1 turn open	7-8 M.P.H.
Chrysler C14	373-S	¾-1¼ turn open	7 M.P.H.
Graham 109	488-S	½-1½ turns open	7-8 M.P.H.
Hudson 6 & 8	344-S, 377-S, 402-S	¼- ¾ turn open	7 M.P.H.
Hupmobile	317-S	¾-1¼ turn open	6 M.P.H.
Hupmobile	399-S	¼-1 turn open	6 M.P.H.
La Salle 37-50	374-S	¾-1¼ turn open	6 M.P.H.
La Salle 38-50	392-S	¼-1 turn open	8 M.P.H.
LaSalle 39-50	423-S	½-1¼ turns open	6 MPH.
Nash 3980	436-S	¼-1 turn open	7-8 MPH.
Nash 4080, 4180	465-S, 511-S	½-1½ turns open	7-8 M.P.H.
Nash 8	538-S	¼-1¼ turns open	7-8 MPH.
Nash-Lafayette	458-S	¼-1¼ turns open	7-8 M.P.H.
Oldsmobile 8	328-S, 41-S, 45-S, 67-S, 86-S	¾-1¼ turn open	6 M.P.H.
Packard 120C	366-S	½-1¼ turn open	6 M.P.H.
Pontiac 8	469-S, SM	¼-1¼ turns open	7 M.P.H.
Pontiac 8	540-S, 548-S	¼-1¼ turns open	①7-8 M.P.H.
Studebaker 6C	409-S	¼-1¼ turns open	8 M.P.H.
Terraplane 72, 82	344-S, 377-S, 402-S	¼- ¾ turn open	7 M.P.H.

①—450-475 Engine RPM.

Cadillac V16 Carburetor Equalization—Use mercury column "U" tube connected to ⅛" pipe plug openings in long leg of each intake manifold (do not connect gauge to vacuum balancing tube between carburetors). Disconnect throttle rods, idle engine, note mercury levels in tube. Adjust throttle stopcsrew at each carburetor so that engine idles at 7-8 M.P.H. and mercury column is equal in both tubes. Adjust right hand throttle rod (trunnion with fine threads on rod near carburetor) so that rod can be connected without disturbing throttles or unbalancing mercury levels. Open throttle so that engine runs at 1000 R.P.M. (use foot throttle, not hand throttle), make any necessary re-adjustment to secure equal mercury column levels. If adjustment made, recheck idle setting (idle speed equalization more important and should be favored).

PERFORMANCE:—Should be satisfactory if Idling Adjustment and Accelerating Pump Setting correct. See Carter Jet Specification Table for standard jet calibrations and special lean metering rods (for special operating conditions).

ACCELERATING PUMP:—Low pressure type (Hudson, Hupmobile, LaSalle, Oldsmobile, Packard), Delayed action type (Chrysler 373-S), High pressure type with spring loaded pump arm (Cadillac, Graham, Hupmobile 399-S, Nash, Nash-Lafayette, Oldsmobile 386-S, Pontiac).

Adjustment—Some models provided with two holes in pump countershaft arm for pump stem link connection to provide seasonal adjustment. Lower hole (inner) provides short stroke and minimum pump discharge, upper hole (outer) provides long stroke and maximum pump discharge. Refer to tune up data on car model pages for recommended settings and seasonal changes.

Pump Stroke Setting—Whenever carburetor disassembled, check and adjust pump linkage for correct pump stroke. With pump connector link in place, and set for correct stroke (see table below), install Universal Pump Gauge T109-117S on the rim of the float bowl cover at the pump plunger so that projection on gauge rests on top surface of connector link at pump shaft. Note gauge reading with throttle closed, then open throttle wide and again note gauge reading. Difference between two readings is pump stroke in 64ths f an inch. Adjust by bending throttle connector rod at lower angle near throttle lever with tool T-109-75. CAUTION—Check Metering Rod Setting and Anti-percolator Adjustment after adjusting pump stroke.

ACCELERATING PUMP SETTING

Car Model	Carburetor	Pump Stroke	Pump Setting
Cadillac V16	407-S, 408-S	19/64"	Long Stroke
Chrysler	373-S	16/24"	Long Stroke
Graham 109	488-S	22/64"	Short Stroke
Hudson 6 & 8	344-S, 77-S; 402-S	15/64"	Short Stroke
Hupmobile	399-S	31/64"	Short Stroke
LaSalle (37-38)	374-S, 392-S	16/64"	Long Stroke
LaSalle ('39)	423-S	26/64"	Non-Adj.
Nash	436-S, 65-S; 511-S, 38-S	32/64"	Long Stroke
Nash-Lafayette	458-S	32/64"①	Long Stroke
Oldsmobile ('37)	345-S, 367-S	16/64"	Long Stroke
Oldsmobile ('38)	386-S	19/64"	Long Stroke
Packard	366-S	31/64"	Non-Adj.
Pontiac ('40-41)	469-S, 469-SM	19/64"	②Short Stroke
Pontiac 8	540-S, 548-S	19/64"	Short Stroke
Studebaker ('40-41)	409-S	16/64"	Long Stroke
Terraplane	344-S, 77-S, 402-S	15/64"	Short Stroke

①—21/64" with link in inner hole (short stroke).

②—With new type adjustable No. 53A-249S Pump Arm and Collar.

METERING ROD (ECONOMIZER):—Fuel is metered by a stepped metering rod which is raised in the metering jet as the throttle is opened, allowing greater fuel flow to the nozzle. One metering rod used for each carburetor barrel (rods must be same size and must be changed as a unit). No adjustment provided but rods can be changed to secure leaner-than-standard fuel mixture to compensate for special fuel or operating conditions. Check metering rod setting whenever metering rods removed or changed.

Metering Rod Removal—On models with integral air horn and dust cover, remove this assembly to expose pump countershaft and metering rods (on models with separate dustcover, take out two retaining screws and remove dust cover only). Remove pin spring from metering rod pin, slide pin out being careful not to lose metering rod springs, lift out metering rods and springs. Remove metering rod discs (on some models, discs held in place by retainer which must first be removed by taking out brass retainer screw). On models where retainer not used, use care not to lose discs.

Metering Rod Setting—Back off throttle lever stopscrew so that throttle valves tightly closed, loosen anti-percolator arm screw. Install metering rod gauge (see table below for each model) in place of each metering rod, making certain that gauges seat in metering rod jets and are vertical. Install metering rod pin and pin spring in metering rod arm. Press down lightly on pump arm Pin must rest on shoulders of gauge notches (bend arm slightly to equalize if necessary) with clearance of less than .005" between pin and each gauge. Tighten anti-percolator arm screw. Remove gauges and metering rod pin, install metering rods and disks, springs, pin, and pin spring.

CAUTION—Anti-percolator must be checked after this adjustment completed.

METERING ROD SETTING

Car Model	Carburetor	Metering Rod Gauge	Length
Cadillac V16	407-S, 408-S	T109-27	2.359"
Chrysler C14	373-S	T109-27	2.359"
Graham 109	488-S	T109-113	2.280"
Hudson 6 & 8	344-S, 77-S; 402-S	T109-27	2.359"
Hupmobile	317-S, 399-S	T109-27	2.359"
LaSalle ('37-38)	374-S, 392-S	T109-27	2.359"
LaSalle ('39)	423-S	T109-113	2.280"
Nash	436-S, 65-S; 511-S, 38-S	T109-113	2.280"
Nash-Lafayette	458-S	T109-113	2.280"
Oldsmobile	328-S,41-S,45-S,67-S,86S	T109-27	2.359"
Packard	366-S	T109-27	2.359"
Pontiac ('40)	469-S	See Note	
Pontiac	469-SM, 540-S, 548-S	T109-27	2.359"
Studebaker	409-S	T109-27	2.359"
Terraplane	344-S, 77-S, 402-S	T109-27	2.359"

Pontiac 469-S Note—Use Gauge No. T109-104 on carburetors with first type metering rods (75-424, 75-439, 75-440), Gauge No. T109-27 for later carburetors (marked 469-SM) with second type metering rods (75-443, 75-444, 75-445).

ANTI-PERCOLATOR:—**Plunger Type.** Consists of two spring-loaded plunger type valves (one for each main jet well) which are opened by anti-percolator arm (linked to metering rod arm) when throttle is closed to vent main nozzles and prevent any 'percolating' discharge when carburetor is hot. Valve must be closed when throttle is open (will cause 'flat spots' if not properly adjusted).

CONTINUED ON NEXT PAGE

CARTER DUAL TYPE WDO (C ntinu d)

Adjustment—Make this adjustment after metering rod setting and pump stroke setting have been adjusted (use extreme care not to disturb these settings). On models with integral air horn and dust cover, remove this assembly to expose anti-percolators (on models with separate dust cover, take out two retaining screws and remove dust cover only). Back off throttle lever stopscrew so that throttle valves tightly closed. On models listed in table below, insert special gauge (or feeler gauge of thickness listed) between anti-percolator stems and lips on anti-percolator arms—**do not use any gauge on other models.** Bend lips so that center of indicator line on each anti-percolator stem is flush with top of anti-percolator plug. Adjust both units alike.

ANTI-PERCOLATOR SETTING

Car Model	Carburetor	Checking Gauge	Thickness
Cadillac V16	407-S, 408-S	T109-72	.015"
LaSalle	374-S, 92-S, 423-S	T109-72	.015"
Hudson 6 & 8	344-S, 77-S, 402-S	T109-72	.015"
Pontiac 8	548-S only	T109-72	.015"①
Studebaker	409-S		.010"
Terraplane	344-S, 77-S, 402-S	T109-72	.015"
All Others		None	None

①—Supersedes .030" setting originally specified for this model.

Hupmobile (317-S)—Set throttle valve so that clearance between edge of valve and carburetor wall on side opposite idling ports is .030" (turn up throttle stopscrew or close throttle on .030" feeler). Bend lips on metering rod arm so clearance between lips and anti-percolator stems .005-.015".

Oldsmobile (First models without Indicator Line)—Throttle valve opening should be .020" (back off throttle stopscrew, insert Carter gauge No. T-109-29, Oldsmobile No. J-512, between throttle valve edge and wall on side opposite idle ports). Adjustment and setting same as for Hupmobile. Reset throttle stopscrew.

FLOAT LEVEL:—To check float level, remove bowl cover and air horn (see Dismantling instructions in Servicing section), invert cover, measure distance from top of float to gasket surface on cover at each side of soldered seam on float.

FLOAT LEVEL SETTING

Car Model	Carburetor	Float Level	Checking Tool
Cadillac V16	407-S, 408-S	13/64"	T109-39
Chrysler	373-S	13/64"	T109-39
Graham 109	488-S	3/16"	T109-28
Hudson 6 & 8	344-S, 77-S, 402-S	15/64"	T109-32
Hupmobile ('35-36)	317-S	5/32"	
Hupmobile ('38-39)	399-S	3/16"	T109-28
LaSalle ('37)	374-S	13/64"	T109-39
LaSalle ('38)	392-S	3/16"	T109-28
LaSalle ('39)	423-S	1/8"	T109-36
Nash	436-S, 65-S; 511-S, 38-S	3/16"	T109-28
Nash-Lafayette	458-S	3/16"	T109-28
Oldsmobile ('36)	328-S, 341-S	3/16"	T109-28
Oldsmobile ('37-38)	345-S, 67-S, 86-S	9/64"	T109-34
Packard	366-S	1/8"	T109-36
Pontiac ('40-41)	469-S, 469-SM	5/16"	T109-107
Pontiac 8	540-S, 548-S	5/16"	T109-107
Studebaker	409-S	3/16"	T109-28
Terraplane	344-S, 77-S, 402-S	15/64"	T109-32

FLOAT INLET VALVE

Car Model	Carburetor	Part No.	Intake Hole Size
Cadillac V16	407-S, 408-S	25-80S	#42
Chrysler	373-S	25-59S	#38
Graham 109	488-S	25-59S	#38
Hudson 6 & 8	344-S, 77-S, 402-S	25-59S	#38
Hupmobile ('35-36)	317-S	25-59S	#38
Hupmobile ('38-39)	399-S	25-66S	#34
LaSalle	374-S, 92-S, 423-S	25-59S	#38
Nash	436-S, 65-S; 511-S, 38-S	25-59S	#38
Nash-Lafayette	458-S	25-80S	#42
Oldsmobile ('36-37)	328-S, 41-S, 45-S, 67-S	25-59S	#38
Oldsmobile ('38)	386-S	25-74S	#38
Packard	366-S	25-66S	#34
Pontiac ('40-41)	469-S, 469-SM	25-74S	#38
Pontiac 8	540-S, 548-S	25-74S	#38
Studebaker ('40-41)	409-S	25-59S	#38
Terraplane	344-S, 77-S, 402-S	25-59S	#38

FAST IDLE:—Consists of a fast idle lever linked to the throttle valve lever and mounted directly below the fast idle cam on the choke valve shaft. Dashpot assembly (Hudson, Terraplane only) mounted on side of float bowl and linked to outer end of fast idle lever. To adjust, hold choke valve tightly closed, adjust fast idle arm screw so that distance from edge of throttle valve to carburetor wall on side opposite idle port is correct as shown in table below (use special checking gauge to gauge throttle valve opening).

FAST IDLE SETTING

Car Model	Carburetor	Throttle Opening	Checking Gauge
Cadillac V16	407-S, 408-S	.026"	T109-114
Chrysler	373-S	.018"	T109-44
Graham 109	488-S	.026"	T109-114
Hudson 6 & 8	344-S, 77-S, 402S	.018"	T109-44
Hupmobile ('35-36)	317-S	.018"	T109-44
Hupmobile ('38-39)	399-S	.030"	T109-29
LaSalle	374-S, 92-S, 423-S	.030"	T109-29
Nash	436-S, 65-S, 511-S	.015"	T109-44
Nash 8	538-S	.015"	T109-44
Nash-Lafayette	458-S	.026"	T109-114
Oldsmobile	328-S,41-S,45-S,67-S,86-S	.018"	T109-44
Packard	366-S	.018"	T109-44
Pontiac	469-S, 469SM	.010"	See Note
Pontiac 8	540-S, 548-S	.026"	T109-189
Studebaker	409-S	.018"	T109-44
Terraplane	344-S, 77-S, 402-S	.018"	T109-44

NOTE—Gauge No. T109-44 used for both .015" and .018" settings.

Gauge No. T109-189 is used for both .026" and .023" settings and supersedes Gauges No. T109-114 (.026"), and No. T109-149 (.023").

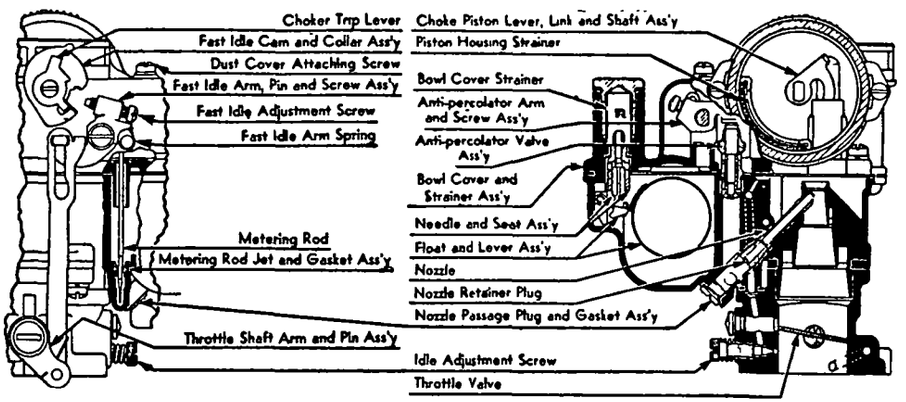

Pontiac (1940-41)—Can also be adjusted as follows: Back off throttle stopscrew so that throttle valves tightly closed, hold choke valve closed, back off fast idle adjusting screw so that it clears high lobe of fast idle cam, then turn screw in until it barely drags on cam, and finally turn screw in 5/8 additional turn to provide correct .010" throttle opening. With this fast idle setting, clearance between throttle lever stopscrew and stop on carburetor casting will be .032" with stopscrew set for correct hot or slow idle speed of 7-8 MPH.

Pontiac (1942-46)—Can also be adjusted as follows: With throttle stopscrew set for normal hot or slow idle speed of 7-8 MPH., hold choke valve tightly closed, adjust fast idle arm screw until throttle valves are opened so that clearance between end of throttle stopscrew and stop on carburetor .073" (#49 drill).

CHOKE:—All choke valves are offset type. See article in Carburetion Equipment Section for complete data on automatic choke (Climatic Control).

CONTINUED ON NEXT PAGE

CARTER DUAL TYPE WDO (C ntinu d)

Setting—Thermostatic coil housing reference mark should be centered on mark on piston housing (for all models except those shown in table below) or should be rotated counter-clockwise (Rich), clockwise (Lean), the correct number of points from the center mark as follows:

CLIMATIC CONTROL (CHOKE) SETTING

Car Model	Carburetor	Choke Setting
Hudson 6 & 8 ('37)	377-S only	2 points Rich
LaSalle ('38)	392-S only	1 point Rich
Nash ('39-40)	436S, 465-S	1 point Rich
Nash ('41)	511-S	①Centered
Nash-Lafayette	458-S	See Note
Pontiac ('40-41)	469-S, 469-SM	See Note
Pontiac 8	540-S, 548-S	2 Notches Rich
Studebaker	409-S	1 point Rich
Terraplane ('37)	377-S only	2 points Rich
All Others		Centered

①—Supersedes 1 Point Rich setting originally specified for this model.

Nash-Lafayette Note—Carburetors with first type thermostatic coil (170B64S) should be set 1 Notch Rich. Carburetors with second type thermostatic coil (170K64S—used to improve warming up performance) should be centered.

Pontiac Note—Carburetors with first type thermostatic coil (marked 170G16S on housing) were set 1½ Notches Rich but setting should be changed to 4 Notches Rich to correct complaints of hard starting when cold and leanness while warming up. Carburetors with second type thermostatic coil (marked 170F16S on housing) should be set 2 Notches Rich.

Unloader:—Consists of a lip on the throttle connector which engages the choke trip lever on the choke valve shaft so that the choke valve is opened when the throttle is opened wide. Check by opening throttle valve wide open, and checking distance between upper edge of choke valve and air horn wall (see table below for distance and checking tool for each model). Adjust by bending lip on fast idle connector link. With correct adjustment, choke valve will be locked open when moved to the wide open position (with throttle valve wide open) and will be released when throttle closed.

UNLOADER SETTING

Car Model	Carburetor	Unloader Gauge No.	Distance
Cadillac V16	407-S, 408-S	T109-38	3/16"
Chrysler	373-S	T109-31	¼"
Graham 109	488-S	T109-31	¼"
Hudson 6 & 8	344-S, 77-S, 402-S	T109-31	¼"
Hupmobile ('35-36)	317-S	T109-31	¼"
Hupmobile ('38-39)	399-S	T109-34	9/64"
LaSalle ('37)	374-S	T109-28	3/16"
LaSalle ('38)	392-S		⅛"
LaSalle ('39)	423-S	T109-36	9/64"
Nash	436-S, 65-S, 511-S	T109-34	9/64"
Nash 8	538-S	T109-34	9/64"
Nash-Lafayette	458-S	T109-28	3/16"
Oldsmobile	328-S,41-S,45-S,67-S,86-S	T109-31	¼"
Packard	366-S	T109-31	¼"
Pontiac ('40)	469-S	T109-31	¼"
Pontiac ('40-41)	469-SM	T109-28	3/16"
Pontiac 8	540-S, 548-S	T109-28	3/16"
Studebaker	409-S	T109-28	3/16"
Terraplane	344-S, 77-S, 402-S	T109-31	¼"

Pontiac Note—469-S carburetors with new metering rods (See Production Change Note) are marked '469-SM' and have new 3/16" Unloader Setting.

Choke Valve Lock:—With Unloader properly adjusted (above) choke valve will be locked in wide open position with throttle valves wide open. Choke valve will be released when the throttle valves are closed.

THROTTLE VALVE SETTING:—Install valves with trademark 'C' on idle port side, back off throttle stopscrew so that valves close tightly and tap valves lightly to centralize them in carburetor bore before tightening valve screws. Check idle port and vacuum port openings. Shims furnished .002" thick (2-93), .005" thick (2-94) to correct throttle valve locations. With throttle valves tightly closed, Idle Port Distance from top edge of valve to top of port (or idle port opening as indicated) and Vacuum Port height (to top or bottom of port as indicated) should be correct for each model as follows:

THROTTLE VALVE SETTING

Car Model	Carburetor	Idle Port	Vacuum Spark Port
Cadillac V16	407-S, 408-S	.127-.133"	None
Chrysler	373-S	① .009-.015"	② .029-.033"
Graham 109	488-S	.162-.168"	② .038-.042"
Hudson 6 & 8	344-S, 77-S, 402-S	① .013-.019"	None
Hupmobile ('35-36)	317-S	① .015-.023"	None
Hupmobile ('38-39)	399-S	① .016-.022"	None
LaSalle ('37-38)	374-S, 392-S	① .009-.015"	None
LaSalle ('39)	423-S	.119-.125"	None
Nash ('39-40)	436-S, 465-S	.162-.168"	None
Nash ('41)	511-S	.140-.146"	None
Nash 8	538-S	.137-.141"	③.022-.027"
Nash-Lafayette	458-S	.060-.066"	② .033-.037"
Oldsmobile	328-S,41-S,45-S,67-S,86-S	① .009-.015"	③ .029-.033"
Packard	366-S	.124-.130"	③ .009-.013"
Pontiac	469-S, 469-SM	.140-.146"	② .052-.056"
Pontiac 8	540-S, 548-S	①.140-.146"	②.052-.056"
Studebaker	409-S	① .009-.015"	② .029-.033"
Terraplane	344-S, 77-S, 402-S	① .013-.019"	None

①—Idle Port Opening. ②—Top of Port above top of Valve.
③—Bottom of Port above top of Valve.

NOTE—Packard throttle valves have a #49 bleed hole.

TROUBLE SHOOTING:—Poor Idling Performance—If correct idling adjustment cannot be secured, or if engine stalls while idling, remove low speed jet tubes and clean with compressed air, clean out idling passages and ports, see that tube seats airtight at top and bottom.

Acceleration Unsatisfactory—Check pump setting, remove pump jets and check valves and clean with compressed air, examine pump for bent pump arm, loose plunger, damaged or worn plunger leather, corroded cylinder or sediment in cylinder. Use special loading tool to install pump plunger in cylinder to avoid damage to plunger leather.

Carburetor Loading—Check and adjust float level.

DISASSEMBLY OF CARBURETOR: Remove the fast idle arm pin and screw assembly, cam and collar assembly, spring and connecting link. Take out tw air horn attaching screws (outside), blank disc check (inside under choker valve), remove air horn and automatic choke assembly. Take out pin spring, slide out pin, remove metering rods. Remove throttle connector rod and accelerator pump connecting link. Take out float bowl cover screws, remove cover. Take out float lever pin, remove float and lever assembly, remove float needle valve and seat. Take out pin spring on pump arm spring, loosen clamp screw on metering rod arm, remove pump arm and shaft. Remove body gasket, pump plunger assembly and plunger spring. Use tool J-511 and remove anti-percolator assemblies. Remove metering rod jet and gasket assemblies. Remove pump jet plugs, pump jets and gaskets. Remove body flange assembly, flange gasket, idle passage gaskets, idle adjustment screws and springs, idle passage plug. Take off throttle shaft arm, remove throttle centering screw in face of body flange and throttle valve screws, take out throttle valves and pull shaft out. Take out nozzle retaining plugs being careful not to lose washers, remove nozzles. Remove low speed jets, check valve passage plug and strainer, pump intake check valve plug and housing, pump discharge check valve plug.

NOTE—On Hudson and Terraplane models, disconnect the dashpot connector link before removing air horn. If dashpot plunger removed from cylinder, use special loading tool Part No. T52-19 to install to avoid damage to plunger leather.

Servicing:—Wash all parts in gasoline, blow out all passages in carburetor body and dry with air, replace all worn and damaged parts.

REASSEMBLY OF CARBURETOR: Reverse disassembly directions above. Use new gaskets, soaking needle seat gasket, blank check gasket, metering rod jet gasket in warm water for 15 minutes before installing. When assembling throttle valves, hold body flange assembly with intake manifold side down, assemble throttle valves loosely (trademark 'C' on valves down and on idle port side), back off throttle stopscrew so that valves close tightly, tap valves lightly to centralize them in carburetor barrel, tighten valve screws securely, install throttle shaft centering screw and throttle arm. Use special loading tool (J-507) to install pump piston assembly in cylinder to avoid damaging plunger leather. Check float needle valve for tightness after installing. Set float level and adjust carburetor on engine (see above and tune-up data on car model pages).

CARTER DUAL VACUMETER TYPE WDO

BUICK	Carter No.
1939 40 Before No. 13388548	419S
1939 40 No. 13388548 Up	440S
1940 40, 50 (To 2/1/40)	440S
1940 40, 50 (After 2/1/40)	474S
1940 60, 70, 80, 90	448S
CADILLAC	
1941 V8 All Series	506S
HUDSON	
1939 Six 93 & Later 92	430S
1939 Eight	430S
1940 Six 41, 43 To No. 3136	430SV
1940 Six 41, 43 No. 3136 Up	461S
1940 Eight	455S
1941 Six 11, 12 First Cars	461S
1941 Six 11, 12 Later Cars	501S
1941 Eight First Cars	455S
1941 Eight Later Cars	502S
1942 Six 21, 22	461S
1946-47 Six All Models	501S
1942-47 Eight	502S
1948 Six	647S
1948 Eight	648S

LA SALLE	Carter No.
1940 V8	460S
OLDSMOBILE	
1938-39 Eight	389S
1940 Eight S-M Trans.	389S
1940 Eight H-D Trans.	471S
1941-48 Eight S-M Trans.	503S, SA
1941-47 Eight H-D Trans.	480S
1948 Eight H-D Trans.	650S, SA
PACKARD	
1941 Eight "120"	478S
1941-47 Eight "Clipper"	512S
1948 Eight	644S, SA
1942-47 Super 8	531S, SA
1942-47 Cust. Super 8	531S, SA
1948 Super 8	643S, SA
1948 Custom 8	531S, SA

H-D—Hydra-Matic Drive Trans.
S-M—Synchro-mesh Transmission

NOTE: Oldsmobile 1938—The 389S carburetor is used with the Self-shifting Transmission (Serial Nos. L-180969 to L-217504) and all cars beginning with Serial No. L-217505. Model 386-S (without Vacumeter control) used on earlier cars. See separate article for 386-S data.

Buick Models—These carburetors equipped with Carter Car Starter (vacuum switch) mounted on carburetor and operated by throttle valve switch. See separate article on 'Starter Controls' in Electrical Equipment Section

Buick 1941 Models—These models have new Carter 'WCD' type carburetors. ***Refer to Carburetor Index for separate 'Buick (Carter) Carburetor' article for complete data on Compound Carburetion and these new carburetors.***

Hudson Six Model 430-SV—This carburetor same type as used on 1939 cars (430-S) with Vacuum Spark Port added. Used on first cars only.

Packard Models—These models equipped with Carter Car Starter (Vacuum Switch) mounted on throttle body casting for starter motor control. ***Refer to Electrical Equipment Index for 'Carter Car Starter' for complete data on this unit.***

►FIELD & PRODUCTION CHANGES

►**Buick 1939 Hard Starting Correction**—To correct this complaint (where starter control switch on carburetor), adjust carburetor linkage so that throttle is wide open when pedal pressed down to floor (mat must be in place when adjustment made or pedal travel will be cut down when mat installed). Full throttle opening is necessary for correct 'unloader' action. Check Unloader Setting (see Choke below). Check starter Vacuum Switch Timing (see separate article on Carter Car Starter.

►**Buick 1939 Gasoline Mileage & Cold Performance Complaints**—Hole in metal plate covering hot air stove (lower right hand corner of plate facing carburetor side of engine) must be kept open as this hole supplies air to stove and automatic choke. If hole is allowed to become clogged, choke will not open fully causing unsatisfactory warming up performance, crankcase dilution, and poor gasoline mileage.

►**Buick 1939 Choke Valve Rattle (accelerating at 45-65 MPH)**—To correct, remove choke valve and file both sides of valve for additional .010" side clearance (.013-.017" valve closed). More clearance will affect cold starting.

►**Hudson 1940 Throttle Sticking Correction**—To correct complaints of sticking throttle caused by binding between throttle connector rod and throttle lever or pump arm, remove and discard original throttle connector rod (No. 115-52), install new Throttle Connector Rod No. 115-65 and Throttle Connector Rod Washer No. 136-37. NOTE—This washer must be used with the new rod.

►**Hudson Carburetor Installation Caution**—Eight gaskets must be used between carburetor and mounting pad on manifold. When installing carburetor, place four gaskets between manifold and heat deflector, four additional gaskets between deflector and carburetor. NOTE—Governor plate is installed between two top gaskets on new cars during breaking in period—when governor plate removed, gasket between plate and carburetor must be replaced so that total of four gaskets used between heat deflector and carburetor.

►**Hudson Eight 502S Metering Rod Change**—All metering rods were changed in production as follows: **Standard**—No. 75-529 supersedes original No. 75-466. **1 Size Lean**—No. 75-480 supersedes original No. 75-478 (see note). **2 Sizes Lean**—No. 75-531 supersedes original No. 75-479. **3 Sizes Lean**—No. 75-532 supersedes original No. 75-480. NOTE—This new type No. 75-480 (1 Size Lean) Metering Rod is not the same as the old type No. 75-480 (3 Sizes Lean) Rod and can be identified by a raised boss next to trademark on flat portion of rod.

►**Oldsmobile 389S & 471S Float Level Change**—Float level should be set 3/8" (was 9/32"). This new setting supersedes both the original 9/32" figure and the previously recommended setting of 13/32" (to correct hard starting).

►**Oldsmobile 480S, 503S, 505S, 650S Change to Improve Warm Engine Starting.** Use Repair Parts Package No. 1096A and install following new parts (contained in pkg.): Needle & Seat Assembly No. 25-164S, Vacuum Piston Spring No. 61-175, Metering Rod No. 75-641, and **change float level to 15/64" (was 3/16").**

Oldsmobile Model 503SA & 650SA Note—Have new type parts and new float level setting as recommended for 503S & 650S (above).

►**Packard 478S & 512S Metering Rod Note**—Power step of Metering Rod No. 75-451 changed in production from .047" to .050" for improved high speed economy.

►**Packard Eight 512S Production Changes**—Various changes in specifications and settings made as follows:

Fast Idle Cam & Fast Idle Setting—Cam Assembly changed to No. 181-110S (was 181-81S) and setting changed to .030" (was .020") for improved Car Starter action. See Fast Idle adjustment instructions following. Throttle Shaft & Lever Assembly also changed to No. 3-454S (was 3-433S).

Unloader Setting Change—Setting changed to 11/64" (was 3/16"). This requires use of new gauge No. T109-166. See Unloader adjustment data.

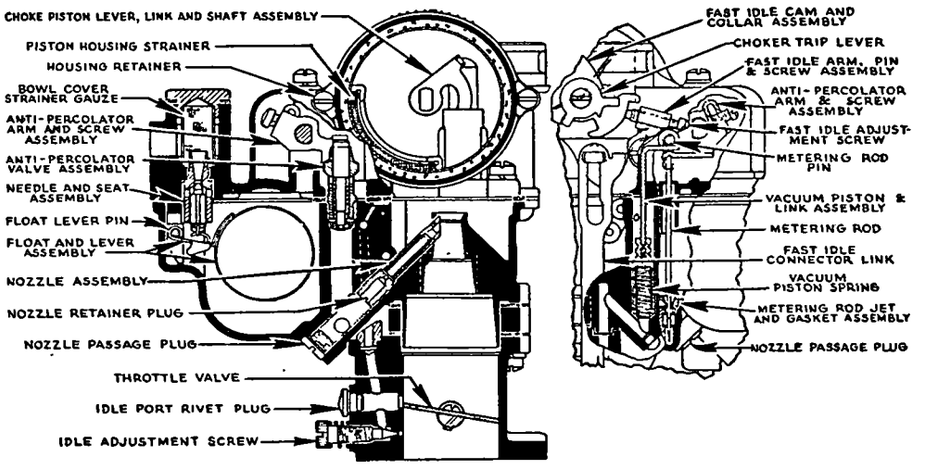

►**Packard Eight 644S Carburetor Recommended Changes**—Following parts have been changed and only new type parts should be installed: **Low Speed Jet Assembly** Part No. 11-162S (was 11-163S), **Metering Rod** Part No. 75-638 (was 75-451).

Packard 644SA Note—Has new parts as listed above for 644S.

►**Packard Super 8 531S Choke Trip Lever & Unloader Setting Change**—New No. 14-249 Choke Trip Lever should be installed on Model 531-S carburetors used on this model and Unloader should then be set at 11/64" (supersedes setting of 3/16" originally specified for this model). This 11/64" setting requires use of new gauge T109-166 (same as used on Packard 8).

►**Packard Super & Custom 8 531S Carburetor Change for Smoother Warm-up & Low Speed Performance and Increased Gasoline Mileage.** Install new Metering Rods Part No. 75-616 (superseding No. 75-538). Inspect and replace Bypass Bleeder Plugs Part No. 11B-168 if plugs have been latered or replaced previously. Check automatic choke thermostatic coil and make certain that it is standard "M" type (if "G" coil found, replace with "M" type). Mark carburetor by punching round hole in brass identification tag to indicate new type metering rods

►***NOTE—Carburetors on which above changes made at factory are marked by punched hole in brass identification tag (531SA carburetors also have these changes).***

CONTINUED ON NEXT PAGE

CARTER VACUMETER TYPE WDO (C ntinued)

►**Packard Custom 8 531SA Carburetor Note**—Has new Metering Rods 75-616 (see 531S change above) and new Body Flange Casting & Starter Switch Assembly No. 1-563S (casting identification number 564), new Bypass Bleeder Screw Plug No. 11B-168 (supersedes No. 11B-159), and new Spring Retainer No. 63-93 (supersedes No. 63-35). NOTE—When overhauling carburetors with new No. 1-563S Body Flange Casting, use No. 3-607S Throttle Shaft & Lever Assembly and No. 63-118 Throttle Shaft Retaining Ring (install with prongs extending outward). On carburetors with first type No. 1-378S Body Flange Casting, use No. 3-445S Throttle Shaft & Lever Assembly and No. 101-69 Throttle Centering Screw.

►**Packard Super 8 643S Production Change**—Body Flange Casting & Switch Assembly No. 1-537S (identification marking 377) changed to Part No. 1-562S (identification marking 561).

Packard Super 8 643SA Carburetor Note—Has later type Body Flange Casting & Switch Assembly No. 1-562S (see 643S change above).

DESCRIPTION: Dual barrel carburetors. Same design as Single Barrel Vacumeter type except for dual feature. Carburetor has two independent mixing chambers, main nozzles, metering rods and jets, throttle valves, and idling systems. One accelerating pump (with double discharge jets) and one economizer vacuum piston assembly used for both barrels.

IDLING ADJUSTMENT: Adjust carburetor only with engine warmed up & idling at hot or slow idling speed (choke valve wide open, fast idle inoperative). Idle adjusting screw provided for each carburetor barrel. Screws control fuel mixture and should be turned in for leaner mixture, out for richer mixture and both screws just be adjusted exactly alike. See table below for approximate settings on each car model. Idle speed controlled by throttle lever stopscrew and should be set for speed shown in table. See tune-up data on car model pages for complete tune-up instructions on each car model.

IDLE SETTING

Car Model	Carburetor	Idle Screw Setting	Idle Speed
Buick (all)	419-S,40-S,48-S,74-S	½-1¼ turns open	7-8 MPH.
Cadillac	506-S	½-1½ turns open	7-8 MPH.①
Hudson ('39)	430-S	¼-1 turns open	7-8 MPH.
Hudson 6 ('40)	430-SV, 461-S	¼-1¼ turns open	7 MPH.
Hudson 6 ('41-42)	461-S	¼-1¼ turns open	600 RPM.②
Hudson 6 ('41-47)	501-S	½-1½ turns open	600 RPM.②
Hudson 6 ('48)	647S	1¼-1¾ turns open	③
Hudson 8 ('40)	455-S	½-1½ turns open	7 MPH.
Hudson 8 ('41-47)	455-S, 502-S	½-1½ turns open	600 RPM.②
Hudson 8 ('48)	648S	1-1½ turns open	③
LaSalle	460-S	½-1½ turns open	7-8 MPH.
Oldsmobile 8 ('38-40)⑤	389S	½-2¼ turns open	425 RPM, 6 MPH.
Oldsmobile 8 ('41-48)⑤	503S, SA	½-1¼ turns open	6 MPH.
Oldsmobile 8 ('40-47)⑥	480S, SA	½-2¼ turns open	375 RPM.
Oldsmobile 8 ('48)⑥	650S, SA	½-1½ turns open	375 RPM.
Packard 8	478-S, 512-S	½-1½ turns open	6 MPH.④
Packard 8	644S, SA	⅝-1⅛ turns open	6 MPH.
Packard Super 8	531S, SA	1½-2 turns open	6 MPH.
Packard Super 8	643S, SA	¾-1¼ turns open	6 MPH.
Packard Cust. 8	531S, SA	1½-2 turns open	6 MPH.

①—Std. Trans. cars only. Set at 375 RPM. on cars with Hydra-Matic Drive.
②—7½-8MPH. (4 1/9-1 Axle), 6½-7 MPH. (4 5/9-1), 6-6½ MPH. (4 ⅞-1).
③—550-575 RPM (Std.), 575-600 RPM (With Vacumotive Drive or Drivemaster).
④—8-10 MPH. on cars with Electromatic Clutch.
⑤—Cars with Synchro-mesh Trans. ⑥—Cars with Hydra-Matic Drive.

PERFORMANCE: Should be satisfactory if idling adjustment and Accelerating Pump Setting correct. See Carter Jet Specification Table for standard jet calibrations and special lean metering rods (for special operating conditions). Both metering rods must be same size and adjusted alike. See Trouble Shooting below.

ACCELERATING PUMP: High pressure type (spring operated—pump operating lever and pump arm linked by small coil spring). Inlet ball check valve located in bottom of pump cylinder, outlet ball check valve under retainer plug in main body casting.

Pump Seasonal Adjustment—On some models, pump arm (under dust cover) has two or three holes for pump rod link connection to provide varied pump stroke for seasonal pump requirements. See tune-up data on car model pages for recommended settings and seasonal changes.

Pump Stroke Adjustment—On models with integral air horn and dust cover, remove this assembly to expose pump countershaft and connector link (on models with separate dust cover, take out two retaining screws and remove dust cover only). Back off throttle lever stopscrew so that throttle valves tightly closed, check pump seasonal adjustment (connector link must be engaged in hole for correct stroke as shown in table below). Install Universal Pump Stroke Gauge T109-117S on rim of bowl cover at plunger shaft so that projection on gauge rests on top surface of connector link at pump shaft (see gauge note below). Note gauge reading with throttle closed, then open throttle wide and again note gauge reading. Difference between two readings is pump stroke (in sixty-fourths of an inch) and should agree with figure shown in table below. Adjust by bending throttle connector rod at lower angle near throttle lever (use bending tool T109-75). CAUTION—Check metering rod setting and anti-percolator adjustment after adjusting pump stroke.

NOTE—**Pump Gauge Design Change.** On first type pump stroke gauge T109-117S design of indicator arm may make it difficult to check pump stroke on 1939 carburetors (later gauges have different design indicator arm). This new indicator arm No. T109-119 can be installed on old type gauges (or gauge can be returned to factory for arm installation). If arm installed in field, set notch in indicator nut at '8', check arm for projection beyond base of gauge (if arm projects, file flush with base).

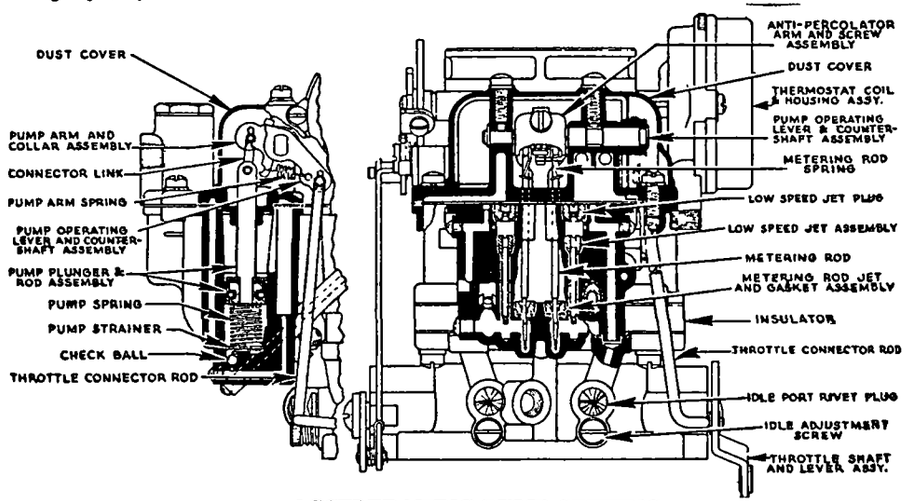

ACCELERATING PUMP SETTING

Car Model	Carburetor	Pump Stroke	Pump Setting
Buick (all)	419-S,40-S,48-S,74-S	21/64"	Medium Stroke
Cadillac	506-S	26/64"	Non-Adj.
Hudson 6	430-S,SV; 461-S, 501-S	18/64"	Long Stroke
Hudson 6	647S	18/64"	Long Stroke
Hudson 8	430-S, 455-S, 502-S	18/64"	Long Stroke
Hudson 8	648S	14/64"	Long Stroke
LaSalle	460-S	26/64"	Non-Adj.
Oldsmobile	389S, 503S, SA	19/64"	Non-Adj.
Oldsmobile	471S, 480S, SA; 650S, SA	19/64"	Non-Adj.
Packard	478-S, 512-S	14/64"	Short Stroke
Packard 8	644S, SA	14/64"	Short Stroke
Packard Super 8	531S, SA	26/64"	Short Stroke
Packard Super 8	643S, SA	28/64"	Non-Adj.
Packard Cust. 8	531S, SA	26/64"	Short Stroke

METERING ROD (ECONOMIZER): Fuel for main nozzles metered by metering rod and jet (independent rod and jet for each nozzle). Metering rods operated by single vacuum piston with throttle control (stop pin on pump arm limits piston travel so that metering rod lifted in accordance with throttle opening). No adjustment provided but metering rods can be changed to secure leaner-than-standard fuel mixture to compensate for special fuel or high altitude conditions (both rods must be same size and should be changed as a unit). Check metering rod setting whenever rods removed or pump stroke adjusted.

CONTINUED ON NEXT PAGE

CARTER VACUMETER TYPE WDO (C ntinu d)

To Remove Metering Rods—Take out screws and remove dust cover or remove air horn and dust cover assembly (where these parts integral—see Service data for removal instructions). Remove pin spring from metering rod pin and slide pin from vacuum piston link being careful not to bend metering rod spring. Lift out metering rods, remove metering rod discs (on some models, discs held by retainer (must be removed first by taking out retainer screw).

To Check Metering Rods—Back off throttle lever stopscrew so that throttle valves are tightly closed. Install metering rod gauge (see table below) in place of each metering rod making certain that tapered ends are seated in metering rod jets. Install metering rod pin in piston link. Push piston link down until metering rod pin rests lightly on shoulder of notch in each gauge. With throttle valves seated, and vacuum piston held down, bend lip on anti-percolator arm (which extends under metering rod pin) so that lip just touches pin (use adjusting tool T109-105).

METERING ROD SETTING

Car Model	Carburetor	Metering Rod Gauge	Length
Oldsmobile ('38-39-40)	389-S, 471-S	T109-104	2.312"
All Other Models		T109-103	2.280"

ANTI-PERCOLATOR: Plunger Type. Consists of vent above each main jet well controlled by spring-loaded plunger type valves. Valves are opened by anti-percolator arm connected to throttle when throttle valves are closed to vent nozzle and prevent any "percolating" discharge when carburetor is hot.

Buick Models (except 419-S)—These carburetors have suction type anti-percolators which are pressed in carburetor and require no adjustment. Do not remove these anti-percolators (correct tube location extremely important).

Adjustment—Make this adjustment after metering rod setting and pump stroke setting have been adjusted (use extreme care not to disturb these settings). On models with integral air horn and dust cover, remove this assembly to expose anti-percolators (on models with separate dust cover, take out two retaining screws and remove dust cover only). Back off throttle lever stopscrew so that throttle valves tightly closed. On models listed in table below, insert special gauge (or feeler gauge of thickness listed) between anti-percolator stems and lips on anti-percolator arms—do not use any gauge on other models. Adjust by bending lips on anti-percolator arms so that center of indicator line on each anti-percolator stem is flush with top of anti-percolator plug. Use extreme care to secure same adjustment on both anti-percolator units.

ANTI-PERCOLATOR SETTING

Car Model	Carburetor	Checking Gauge	Thickness
Cadillac	506-S	T109-72	.015"
LaSalle	460-S	T109-72	.015"
Oldsmobile ('40)	471-S only		.010"
Packard 8	478S, 512S, 644S, SA	T109-72	.015"
Packard Super 8	531S, SA; 643S, SA	T109-72	.015"
Packard Cust. 8	531S, SA	T109-72	.015"
All Others		None	None

FLOAT LEVEL: To check float level, with bowl cover assembly removed, remove cover gasket, invert cover, measure from machined gasket seat on cover to top of float (check at both ends of float—settings must be alike). See table below for float level and special checking gauge for each model. To adjust, bend lip on float lever at point where it contacts valve needle (do not bend float or arm).

FLOAT LEVEL SETTING

Car Model	Carburetor	Float Level	Checking Gauge
Buick (all)	419-S,40-S,48-S,74-S	3/16"	T109-28
Cadillac	506-S	1/8"	T109-36
Hudson ('39-40-41)	430-S,SV;455-S,461-S	3/32"	T109-125
Hudson ('41-47)	501-S, 502-S	1/8"	T109-36
Hudson 6 ('48)	647S	3/16"	T109-28
Hudson 8 ('48)	648S	13/64"	T109-39
LaSalle	460-S	1/8"	T109-36
Oldsmobile ('38-40)	389-S, 471-S	3/8"①	T109-126
Oldsmobile	480S, 503S, 650S	②3/16"	T109-28
Oldsmobile	480S, 503S, 650S	③15/64"	T109-32
Oldsmobile	480SA, 503SA, 650SA	15/64"	T109-32
Packard	478-S, 512-S	5/32"	T109-154
Packard 8	644S, SA	5/32"	T109-154
Packard Super 8	531S, SA; 643S, SA	5/32"	T109-154
Packard Cust. 8	531S, SA	5/32"	T109-154

①—Supersedes setting of 9/32" (and also 13/32" setting recommended to correct hard starting complaints.
②—With 1st. type Needle & Seat Assy. No. 25-100S.
③—With 2nd. type Needle & Seat Assy. No. 25-164S (see Recommended Changes).

Needle Valve & Seat—Furnished only in matched sets as shown in table below. When installing assembly on Oldsmobile 389-S, see that clip on needle valve engages float lever.

FLOAT INLET VALVE

Car Model	Carburetor	Part Number	Intake Hol Size
Buick 40,50	419-S,40-S,74-S	25-80S	#42
Buick, 60,70,80,90	448-S	25-59S	#38
Cadillac	506-S	25-98S	#38
Hudson 6	430-S,SV;461-S,501S	25-59S	#38
Hudson 8	430-S,455-S,502-S	25-59S	#38
Hudson 6 & 8	647S, 648S	25-59S	#38
LaSalle	460-S	25-98S	#38
Oldsmobile ('38-39-40)	389-S	25-74S	#38
Oldsmobile ('40)	471S	25-100S	#38
Oldsmobile	480S, 503S, 650S	①25-100S	#38
Oldsmobile	480SA, 503SA, 650SA	25-164S	#46
Packard	478-S, 512-S	25-98S	#38
Packard 8	644S, SA	25-98S	#38
Packard Super 8	531S, SA; 643S, SA	25-98S	#38
Packard Cust. 8	531S, SA	25-98S	#38

①—Superseded by No. 25-164S. See Recommended Changes & Float Level Change.

THROTTLE VALVE SETTING: Install valves with trademark "C" toward idle port side, use new attaching screws, install screws loosely, tap valves lightly to centralize them in bore, then tighten screws securely. Check valve setting with throttle lever stopscrew backed out so that valves tightly closed. Idle port figure is distance from top edge of valve to top of idle port. Vacuum spark port figure is distance from top edge of valve to top (or bottom as noted) of vacuum spark port. Shims furnished .002" thick (2-93), .005" thick (2-94) for throttle valve setting adjustment.

THROTTLE VALVE SETTING

Car Model	Carburetor	Idle Port	Vacuum Spark Port
Buick 40 ('39)	419-S	.060-.066"	①.040-.044"
Buick 40 ('39-40)	440-S, 474-S	.060-.066"	①.052-.056"
Buick 60,70,80,90 ('40)	448-S	.117-.123"	①.056-.060"
Cadillac	506-S	.135-.141"	③.033-.037"
Hudson 6 & 8 ('39)	430-S	.108-.112"	None
Hudson 6 ('40-47)	430-SV, 61-S, 501-S	.108-.112"	②.029-.033"
Hudson 8 ('40-47)	455-S, 502-S	.133-.137"	None
Hudson 6 & 8	647S, 648S	.157-.163"	②.030-.040"
LaSalle	460-S	.135-.141"	③.033-.037"
Oldsmobile ('38-40)	389-S, 471-S	.140-.146"	③.029-.033"
Oldsmobile ('41-48)	480S, SA; 503S, SA	.144-.150"	②.029-.033"
Oldsmobile ('48)	650S, SA	.144-.150"	②.029-.033"
Packard	478-S, 512-S	.135-.141"	①.009-.013"
Packard 8	644S, SA	.127-.133"	②.060"
Packard Super 8	531S, SA	.152-.158"	②.050-.054"
Packard Super 8	643S, SA	.127-.133"	③
Packard Cust. 8	531S, SA	.152-.158"	②.050-.054"

①—Bottom of port above top of valve. ③—Top of port above top of valve.
③—Top of port above valve: (643S) .050-.054", (643SA) .060".

FAST IDLE: Consists of a fast idle lever linked to the throttle valve lever and mounted directly below the fast idle cam on the choke valve shaft. To adjust, hold choke valve tightly closed, adjust fast idle arm screw so that clearance between throttle valve and carburetor wall n side pposite idle port is correct as shown in table below (use special checking gauge inserted between throttle valve and wall to check opening).

CONTINUED ON NEXT PAGE

CARTER VACUMETER TYPE WDO (C ntinued)

FAST IDLE SETTING

Car Model	Carburetor	Throttle Opening	Checking Gauge
Buick 40 ('39-40)	419-S, 440-S	.018"	T109-44
Buick 40 ('40)	474-S	.030"	T109-29
Buick 60,70,80,90 ('40)	448-S	.030"	T109-29
Cadillac	506-S	.023"	T109-149
Hudson 6 & 8 ('39-40)	430-S,SV; 455-S,61-S	.018"	T109-44
Hudson 6 ('41-47)	502-S	.045"	T109-58②
Hudson 8 ('41-47)	501S	.053"	T109-58②
Hudson 6 & 8	647S, 648S	.054"	T109-193④
LaSalle	460-S	.023"	T109-49
Oldsmobile ('38-40)	389-S	.018"	T109-44
Oldsmobile ('40)	471S	.015"	T109-44
Oldsmobile ('41-48)	480S, SA; 503S, SA	.015"	T109-44
Oldsmobile ('48)	650S, SA	.015"	T109-44
Packard	478-S	.030"	T109-29
Packard 8	512S, 644S, SA	.020"①	T109-29
Packard Super 8	531S, SA	.023-.028"	T109-189③
Packard Super 8	643S, SA	.026"	T109-189③
Packard Cust. 8	531S, SA	.023-.028"	T109-189③

①—Supersedes original setting of .030" on 512S.
②—Gauge T109-58 used for both .045" and .053" settings.
③—Gauge T109-189 used for .023" and .028" settings (supersedes T109-114)
④—Gauge T109-193 used for both .040" and .054" settings.

UNLOADER: *CAUTION—On Buick 474S, adjust Throttle Stop Dog first as follows:*

Throttle Stop Dog Adjustment (Buick 474-S):—Should be adjusted before making Unloader adjustment. Use Gauge T109-121S to check throttle opening (refer to Carter Car Starter article in Electrical Equipment Section for gauge data). With choke valve open, close throttle valve, then close choke valve and adjust lip on throttle stop dog (on throttle shaft) so that it contacts throttle stop with throttle opening of 44° Minimum, 55° Maximum (from tightly closed position).

Unloader:—Consists of a lip on the throttle connector which engages the choke trip lever on the choke valve shaft so that the choke valve is opened when the throttle is wide open. To adjust, hold throttle valve wide open, bend lip on fast idle connector link so that clearance between upper edge of choke valve and air horn wall correct as shown in table below (use gauge to check opening).

UNLOADER SETTING

Car Model	Carburetor	Unloader Gauge	Clearance
Buick 40 ('39)	419-S	T109-125	3/32"
Buick 40 ('39-40)	440-S, 474-S	T109-28	3/16"
Buick 60,70,80,90 ('40)	448-S	T109-28	3/16"
Cadillac	506-S	T109-39	13/64"
Hudson 6	430-S,SV; 61-S,501-S	T109-31	1/4"
Hudson 8	430-S,55-S; 502-S	T109-31	1/4"
Hudson 6 & 8	647S, 648S	T109-31	1/4"
LaSalle	460-S	T109-39	13/64"
Oldsmobile ('38-40)	389-S	T109-31	1/4"
Oldsmobile ('40-47)	471S, 480S, SA	T109-28	3/16"
Oldsmobile ('41-48)	503S, SA; 650S, SA	T109-31	1/4"
Packard	478-S,	T109-28	3/16"
Packard 8	512S	T109-166	①11/64"
Packard 8	644S, SA	T109-166	11/64"
Packard Super 8	531S, SA	T109-166	②11/64"
Packard Super 8	643S, SA	T109-166	11/64"
Packard Cust. 8	531S, SA	T109-166	11/64"

①—Supersedes 3/16" setting (T109-28) originally specified for this model.
②—Supersedes 3/16" setting (T109-28) with No. 14-219 Choke Trip Lever which should be replaced by new No. 14-249 Choke Trip Lever for which 11/64" setting given above is correct.

Ch ke Valve Lock:—With unloader properly adjusted, choke valve will be locked in wide open position with throttle valves wide open. Choke valve will be released when throttle valves closed.

CHOKE: Carter Climatic Control (automatic choke) is standard. See article in Carburetion Equipment Section for complete servicing and adjusting directions.

Setting—Thermostatic coil housing reference mark should be centered on mark on piston housing (for all models except those shown in table bel w) or sh uld be rotated counter-clockwise (Rich), clockwise (Lean), the correct number of notches from the center mark as follows:

CLIMATIC CONTROL (CHOKE) SETTING

Car Model	Carburetor	Choke Setting
Buick 40 ('39)	419-S	1 point Rich
Buick 40 ('39-40)	440-S, 474-S	1 point Lean
Buick 60,70,80,90 ('40)	448-S	2 points Rich
Hudson ('41-47)	501-S, 502-S	①1 point Lean
Hudson 6 ('48)	647S	1 point Lean
Oldsmobile ('41-48)	480S, 650S, 650SA	2 points Rich
Packard '120' ('41)	478-S only	1 point Rich
Packard Super & Cust. 8	531S, 531SA	1 point Rich
All Others		Centered

①—Supersedes 'Centered' setting originally specified for these models.

CARBURETOR OVERHAUL: *CAUTION—When disassembling carburetor, note the following important points:*

►**Carter Car Starter Note**—When disassembling carburetors which are equipped with this unit, the Car Starter which is located in the Throttle Body Casting must be disassembled as follows: Hold switch firmly against casting, remove terminal cap clip and screw, withdraw switch using care not to lose small square adjusting shims, remove switch ball. Invert casting and remove retainer ring and switch strainer. ***Refer to Carter Car Starter article in Electrical Equipment Section for complete switch servicing and adjusting directions.***

Disassembly: Remove dust cover attaching screw and lockwasher, remove the dust cover (when dust cover is separate), remove fast idle arm and spring assemblies. Take out air horn attaching screws (two screws outside, one screw inside under choke valve) and remove air horn and Climatic Control assembly. Remove pin spring and pump connector link, spring retainers and springs to remove throttle connector rod, take out four flange attaching screws and lift off flange, gasket and two idle passage gaskets taking care not to lose vacuum piston spring. Disconnect piston from piston link, lift out metering rod and piston link assembly, disconnect metering rods from link. Remove four bowl cover attaching screws, remove bowl cover and body gasket. Remove metering rod disc retainer and discs, pump plunger and rod assembly, pump spring, pump inlet ball check, metering rod jets and gaskets, anti-percolators (use 13/32" socket wrench T109-66), pump jet passage plugs, pump jets, nozzle plug and gasket assemblies, nozzle retainer plugs and nozzles (nozzles pressed in, use tool No. T109-55), nozzle gaskets, low speed jet and gasket assemblies, pump outlet ball retainer plug and ball (in center of casting next to air horn retaining screw hole), throttle valve attaching screws and throttle valves, throttle centering screw, arm attaching screw, washer, and arm. Remove fast idle spring retainer, spring, connector link, connector link spring, withdraw throttle shaft assembly. Take out idle adjusting screws, remove idle port plugs.

Servicing—Clean castings and all parts with gasoline (no not immerse cork parts in gasoline), blow out all passages with compressed air, check all parts for correct specifications and replace all worn parts. Use all new gaskets when reassembling. Soak needle seat gasket, low speed jet gasket and metering rod jet gasket in alcohol for 15 minutes, install and let dry on part.

Reassembly: Reassemble in reverse order. Check throttle valves (see Throttle Valves above), make certain that low speed jets seat at both ends and are tight, install nozzles with flat side facing up. Vacuum piston is offset from link and should be installed with large side of piston toward bores. When installing flange assembly on body casting, hold body casting upside down with vacuum piston vertical, place piston spring in piston, then place flange assembly on body casting, guiding piston and spring into cylinder in flange casting. Check metering rods, anti-percolator, pump, and fast idle as directed above.

SERVICE PARTS: Gasket Sets—No. 134 (389S, 471S), No. 135A (419S, 440S, 474S), No. 140B (460S), No. 142A (430S, 430SV, 461S, 455S), No. 144B (506S), No. 149 (448S, 501S, 502S, 647S, 648S), No. 156 (478S, 512S, 531S, 531SA, 643S, 643SA, 644S, 644SA), No. 158 (480S, 480SA, 503S, 503SA, 650S, 650SA).

Repair Packages (with Std. Metering Rods)—No. 1042 (389S, 471S), No. 1061 (419S, 474S), No. 1062A (440S), No. 1068A (430S, 430SV), No. 1079A (455S), No. 1080A (461S), No. 1081 (460S), No. 1093 (506S), No. 1092A (478S, 512S), No. 1096A (480S, 480SA, 503S, 503SA, 650S, 650SA), No. 1302 (501S), No. 1303 (502S), No. 1321A (531S, 531SA), No. 1375 (643S, 643SA), No. 1376A (644S, 644SA), No. 1381 (647S), No. 1382 (648S).

►**Oldsmobile No. 1096A Pkg. Note**—When No. 25-164S Needle & Seat Assembly and other parts from this package installed in No. 480S, 503S, 505S, 650S carburetors, float level should be changed to 15/64" from 3/16". This 15/64" float level specification is correct for No. 503SA and 650SA carburetors.

►**PACKARD No. 1321A Pkg. Note**—This Repair Package contains Metering Rods No. 75-538. ***See Production Change data above for recommendation that these metering rods be changed to No. 75-616 (std. on 531SA).***

CARTER DUAL TYPE WCD

BUICK	Carter No.
1941-42 Series 40①	487S
1942 Late 40, 50②	551S
1942 Late 60, 70, 90②	549S
1946-47 Series 40, 50	608S, SA, SC
1946-47 Series 70	609S, SA. SC
1948 Series 40, 50	663S
1948 Series 70	664S
CADILLAC	
1942 All Series	486S
1946-48 All Series	595S, SA
FRAZER	
1948 Manhattan Optl	685S, SA
KAISER	
1948 Custom Optl	685S, SA
OLDSMOBILE	
1947 Late Eight (H-D)	665S
PONTIAC	
1940-47 Eight Repl. Carb	630SB
1947-48 Eight (S-M)	630S, SA, SB
1948 Eight (H-D)	653S

S-M—Synchro-mesh Transmission.
H-D—Hydra-Matic Drive Cars.
①—Before Engine No. 4540297.
②—After Engine No. 4540297.

CARBURETOR MODEL IDENTIFICATION: Individual carburetor models can be identified by Casting Number on flange as follows: No. 324 (487S, 608S), 373 (630S, 630SA), 402 (609S), 456 (595S, 595SA), 546 (608SA, 608SC, 663S), 548 (609SA), 550 (630SB, 685S, 685SA), 558 (653S), 573 (609SC, 664S).

Buick Compound Carburetion Note—On all 1941-42 cars (before Eng. No. 4540297), Compound Carburetion using two WCD carburetors was standard or optional equipment. Refer to "Buick Compound Carburetion" and "Carter (Buick) Carburetor" in this section for Compound Carburetion data.

Buick, Cadillac Stromberg Equipment—Stromberg Model AAV-16 or AAV-26 carburetors also used. Refer to "Stromberg AAV-16, AAV-26 Carburetors."

Buick 1942 Models—Carburetors used on these models have been superseded by 1946 types: 551S superseded by 608S, 549S superseded by 609S.

Carter Car Starter (Buick Carburetors)—Switch for starter control is built-in on all Buick models. Refer to Electrical Equipment Index for "Carter Car Starter" for complete adjustment and servicing data.

►FIELD & PRODUCTION CHANGES

►**Buick 487S Float Level Change**—Two floats used (special setting for each). With first type float (which has cross-rib reinforcement) before approximately Nov. 1, 1940, float level should be set at 9/64". Carburetors after Nov. 1, 1940, (beginning with carburetors marked 'LO' in second square of brass inspection tag on carburetor) have new float with 11 vertical-rib reinforcements and float level should be set at 3/16". See Float Level section below for data.

►**Buick (1946-48) Pump Jet Adjustment**—On these models, pump jet position must be adjusted so that pump discharge fuel stream strikes the carburetor venturi wall within a 3/16" target circle. Target circles are marked beginning with late 1946 carburetors must be established by measurement when adjusting early 1946 carburetors. See Accelerating Pump adjustment instructions (below).

►**Buick (1946-48) Throttle Connector Rod Installation**—Connector rod linking throttle valve lever and countershaft on bowl cover must be installed with grooved end (for pin spring) at **top**, and flattened end (for spring and spring retainer) at **bottom**. Spring and spring retainer retain rod in throttle valve lever.

►**Buick (1947) 608SA & 609SA Carburetor Production Change**—These carburetors used on late 1947 cars have new type **Body Flange Casting & Switch Assembly** No. 1-547S (608SA), 1-549S (609SA) and new type **Throttle Shaft & Lever Assembly** No. 3-594S (608SA), 3-596S (609SA). No throttle centering screw is used with these assemblies and these new parts are installed as follows:

Throttle Shaft & Lever Assy. Installation (608SA, 609SA)—Install throttle shaft in body casting, turn shaft to closed throttle position, push special retaining ring No. 63-118 on shaft with **prongs outward** until it is against casting and shaft has no endplay. Install throttle valves (mark c in circle on valves toward idle port viewing carburetor from manifold side), turn screws in loosely, make certain throttle stopscrew backed off, center valves by tapping lightly and hold in this position while tightening screws.

►**Buick 608SC & 609SC Replacement Carburetors**—These carburetors have same type Body Flange Casting and Throttle Shaft & Lever Assembly as 608SA & 609SA described above. See specification tables following for other differences.

►**Cadillac (1947-48) 595SA Carburetor Production Change**—This carburetor has new type **Body Flange Casting Assembly** Carter No. 1-553S and a new type **Throttle Shaft & Lever Assembly** No. 3-601S without throttle centering screw. See Throttle Shaft & Lever Assy. data for Buick 608SA & 609SA (above).

►**Frazer & Kaiser 685S Carburetor Conversion to 685SA**—First type 685S carburetor can be converted to later type 685SA by installing following parts: Needle & Seat Assembly No. 25-162S and **changing float level to 1/16"** (was 9/64").

►**Frazer & Kaiser 685SA Later Carburetor**—Has new type Needle & Seat Assembly No. 25-162S and new float level specification (1/16"). Also has new Pump Jet and Housing Assembly No. 48-158S (superseding No. 48-143S).

►**Oldsmobile 665S Carburetor Replacement by Model 503SA**—The 665S carburetor used on approximately 6000 1947 cars and superseded by 503SA which is furnished for replacement. When installing 503SA carburetor on these cars, note the following settings:

Idle Speed—375 RPM. (for all cars with Hydra-Matic Drive).
Climatic Control Setting—2 Points Rich (Centered on cars with Synchro-mesh transmission).

►**Pontiac 630S, 630SA, 630SB Carburetor Production Changes**—These carburetors used successively in 1947-48 production. 630SA & 630SB have new type parts as follows:

Body Flange Casting & Switch Assembly No. 1-551S and Throttle Shaft & Lever Assembly No. 3-598S. No throttle centering screw used with these parts. See Throttle Shaft & Lever Assembly installation data as given above for Buick 608SA & 609SA.
Air Horn & Climatic Control Assembly No. 6-576S. Climatic Control should be set 1 Point Lean on all carburetors with this new assembly (Carburetors with first type No. 6-547S assembly should be set at index "centered").
Pump Plunger, Rod, Spring & Retainer Assembly No. 64-113S. This assembly supersedes first type plunger and rod assembly No. 64-112S.

►**Pontiac 630S Carburetor Flooding Correction**—Caused by back of float pivot arm striking on inside wall of float bowl and preventing free movement of the floats. If flooding noted on early 1947 cars, check back of float arm and float bowl wall for evidences of contact and rubbing. Correct by filing the curved edge of the float arm to provide clearance between arm and wall.

►**Pontiac 630S, 630SA, 630SB Correction for Engine Stalling on sharp right turn.** Use Unitized Package No. 75-648U and install new carburetor parts as directed.

►**Pontiac 1947-48 Correction for Rich Choke Action**—To correct complaints of too-rich mixture during warming up period (too much choke action), check thermostatic coil housing for mark "RPD" (molded on outer face). Test coil action as follows: With carburetor at room temperature (75°F), remove air cleaner, disconnect fast idle connector rod, loosen three thermostat housing screws so housing can be rotated freely. Rotate housing clockwise by hand until choke valve is open, then rotate housing until choke valve is just closed, note adjustment mark on housing which should coincide with center mark of scale on air horn. If choke valve closes before this point reached (may be 2-4 points rich), replace Thermostatic Coil and Housing Assembly (Carter No. 170N-77S).

►**Pontiac 8 (1940-46) Installation of 630SB Replacement Carburetor**—When this "WCD" carburetor installed to replace original equipment "WDO" type, fuel system must be modified as listed below (new carburetor approximately 5/8" higher than old type).

Carburetor Mounting—Remove 3/16" of material from old laminated heat insulator between manifold and carburetor. Install carburetor with fuel inlet toward rear of engine.

Climatic Control Stove Connection—Make up new tube using 12" of ¼" copper tubing (use Weatherhead fitting).

Fuel Lines—Make up new fuel line from pump to carburetor using 36" length of 5/16" copper tubing and Weatherhead fittings.

Air Cleaner Bracket—Install special Carter Air Cleaner Steady Rest Bracket Adapter No. 180-48 (furnished in pkg. with carburetor) to compensate for difference in height of air cleaner mounting on old and new carburetors.

Throttle Rod Linkage—Disconnect throttle rod bell crank on manifold, unscrew rod to longest length possible, bend upper end of throttle rod slightly to prevent rod striking throttle stopscrew at wide open throttle position, connect linkage and check operation.

DESCRIPTION

DESCRIPTION: Plain tube, dual, downdraft. "WCD" models differ from other Carter Vacumeter types ("WDO" models) mainly in that they have a new design concentric float bowl and double float, new type permanently assembled main nozzles, high pressure type spring operated accelerating pump, and built-in Carter Car Starter (Buick models only). Conventional plunger type anti-percolators not used. Carburetors have Fast Idle and Climatic Control.

C NTINUED ON NEXT PAGE

CARTER TYPE WCD (C nt.)

Accelerating Pump (1946 & Later)—Accelerating pump is new type with spring loaded plunger (piston free to slide on plunger stem and positioned by coil spring) and is positively connected to the throttle valve lever (spring-loaded type pump arm used on 1941-42 carburetors has been discontinued). CAUTION—Care must be taken not to compress this plunger spring when checking pump stroke. See Accelerating Pump Stroke Adjustment instructions

ADJUSTMENT & OVERHAUL

IDLE ADJUSTMENT: When adjusting the 1941-42 Buick models, refer to the Buick Compound Carburetion article for engine tune up instructions and perform these operations before carburetor is adjusted. Adjust carburetor on all models as follows: With engine thoroughly warmed up so that choke valve wide open and engine idling at hot or slow idle speed (Automatic Choke and Fast Idle Inoperative), set throttle lever stopscrew for correct Idle Speed as shown in table below. Adjust both idle adjusting screws (one for each barrel) so that engine idles smoothly. Screws control fuel mixture and should be turned in for leaner mixture, out for richer mixture. Recheck idle speed after adjustment completed. See car model page for complete Tune-up data.

IDLE SETTING

Car Model	Carburetor	Idle Screw Setting	Idle Speed
Buick ('41-42)	487S, 551S, 549S	½-1½ turns open	8-10 MPH.
Buick 40, 50 ('46-47)	608S, SA	½-1 turns open	450 RPM.
Buick 70 ('46-47)	609S, SA	¾-1¾ turns open	450 RPM.
Buick All ('46-47)	608SC, 609SC	¾-1¼ turns open	450 RPM.
Buick All ('48)	663S, 664S	¾-1¼ turns open	450 RPM.
Cadillac ('42)	486S	¾-1¾ turns open	①
Cadillac ('46-48)	595S, 595SA	½-1½ turns open	②
Frazer & Kaiser	685S, 685SA	1-1½ turns open	550 RPM.
Oldsmobile	665S	¾-1¾ turns open	375 RPM.
Pontiac	630S, SA, SB; 653S	¾-1¾ turns open	③

①—7-8 MPH. (Synchro-mesh Trans. Cars), 375 RPM (Hydra-Matic Drive Cars).
②—375-380 RPM. (Synchro-mesh Trans. Cars), 375 RPM. (Hydra-Matic Drive
③—7-8 MPH. or 450-475 RPM. (Synchro-mesh Trans. Cars), 365-385 RPM (Hydra-Matic Drive Cars).

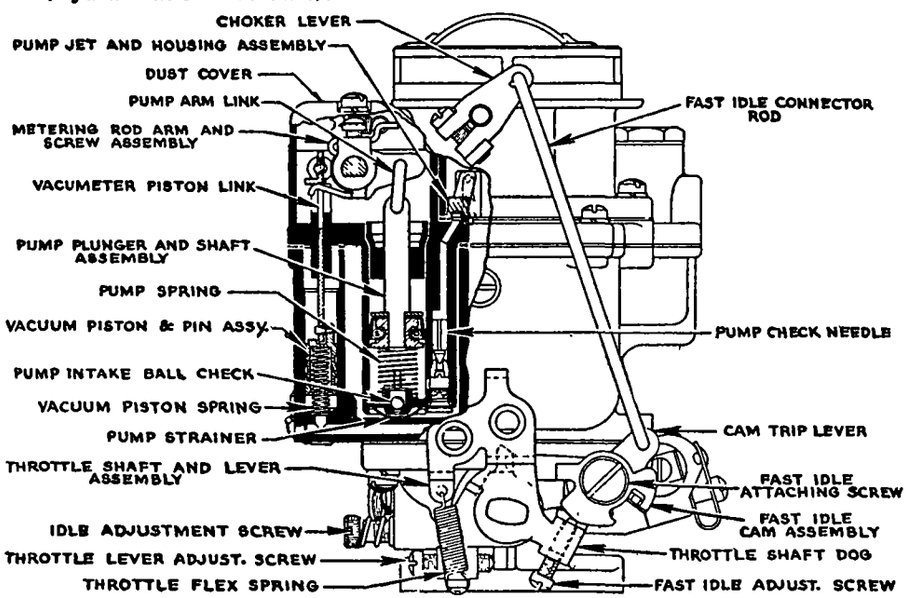

PERFORMANCE: Should be satisfactory if idling adjustment correctly made Special lean metering rods furnished for special operating conditions (see Carter Jet Specification table for complete data). IMPORTANT—Special metering rods for High Altitudes provided. Refer to Carter Jet Specification Table

METERING ROD ADJUSTMENT (Vacumeter Type Carburetor): Metering rods are controlled by a single spring-loaded vacuum piston (rods held down in metering jets for maximum economy by manifold vacuum, and lifted out of jets by spring for acceleration and full power operation when vacuum decreases as throttle is opened). Lip on metering rod arm (on pump operating lever shaft which is linked to throttle lever) acts as stop for vacuum piston link and insures correct metering rod position for the particular throttle opening.

Metering Rod Setting—To check metering rods, take out retaining screws and remove dust cover, disconnect metering rod springs and remove both rods, install one metering rod gauge in place of rods (see table below for correct type for each carburetor model). With throttle stopscrew backed off so that throttle valves tightly closed, press down lightly on vacuum piston link. Clearance between shoulder of notch on gauge and vacuum piston link pin on which the metering rods hang should be less than .005" and lip of vacuum piston link should rest on lip of metering rod arm on pump operating lever shaft. To adjust, bend lip of metering rod arm until it contacts lip on vacuum piston link. Remove gauge, re-install metering rods and dustcover, reset throttle stopscrew.

METERING ROD SETTING

Car Model	Carburetor	Metering Rod Gauge	Length
Buick 40, 50	487S, 551S, 608S, 608SA	T109-152	2.440"
Buick 60, 70, 90	549S, 609S, 609SA	T109-163	2.940"
Buick All ('48)	608SC, 609SC, 663S, 664S	See Note (no gauge req'd).	
Cadillac	595S, SA	T109-163	2.940"
Frazer & Kaiser	685S, SA	T109-163	2.940"
Oldsmobile	665S	T109-163	2.940"
Pontiac	630S, SA, SB; 653S	T109-163	2.940"

Buick 1948 (608SC, 609SC, 663S, 664S) Metering Rod Checking Note—No gauge is required and metering rods should be checked and adjusted exactly as follows: Back off throttle lever stopscrew so that throttle valves tightly closed, loosen metering rod arm clampscrew (on countershaft under dust cover on bowl cover), press down on vacumeter link until both metering rods bottom in carburetor casting, rotate metering rod arm until finger on arm contacts lip on vacumeter link, tighten metering rod arm clampscrew (do not disturb arm position).

ACCELERATING PUMP: ***CAUTION—All "WCD" pumps not checked and adjusted in same manner. See separate data for each type as follows.***

1941-42 Buick (487S, 549S, 551S) & 1942 Cadillac (486S): Pumps are high-pressure type with spring-loaded pump arm and seasonal adjustment.

Seasonal Adjustment—Pump arm on countershaft on bowl cover has two holes for pump connector link engagement. Outer hole (long stroke and maximum discharge) is standard setting for ordinary fuels. When highly volatile fuels used, or if engine staggers on acceleration, connector link should be shifted to inner hole for min. discharge. See tune-up data on car model page.

Pump Stroke Adjustment—See table below for correct plunger travel (from closed throttle to wide open position). To check stroke, back off throttle stopscrew so that throttle valves tightly closed, take out screws and remove dust cover, place the Universal Pump Gauge T109-117S in an inverted position on upper edge of dust cover boss on carburetor so that lip on lower end of indicator arm rests on top surface of connector link in upper end of pump plunger stem. Note gauge reading. Open throttle wide and again note gauge reading. Difference between two readings is pump stroke (in 64th of an inch) and should agree with table below. To change stroke, bend connector link at lower angle.

ACCELERATING PUMP SETTING
(1941-42 Buick & 1942 Cadillac)

Car Model	Carburetor	Pump Stroke	Pump Link Connector
Buick 40A, 40B, 50	487-S, 551-S	21/64"	Long Stroke
Buick 60, 70, 90	549-S	21/64"	Long Stroke
Cadillac	486-S	23/64"	Long Stroke

1946-48 Buick (608S, SA, SC; 609S, SA, SC; 663S, 664S) & 1946-48 Cadillac (595S, SA): Pumps are high-pressure delayed action type with positive throttle lever connection. Pump plunger is loose on plunger stem and is positioned by spring above plunger to provide uniform pump action (compression and expansion of spring provides uniform plunger movement and pump discharge). Seasonal adjustment provided only on 1948 Buick models (see table).

►*CAUTION*—When measuring pump stroke, care must be taken not to compress spring on plunger stem. Pump stroke measurement must be plunger stroke (not plunger stem movement).

C NTINUED ON NEXT PAGE

CARTER TYPE WCD (C ntinu d)

Pump Stroke Adjustment—See table below for correct plunger travel (from closed throttle to wide open throttle position). To check stroke, take out cover screws and remove dust cover, back off throttle stopscrew so that throttle valves tightly closed. Place Universal Pump Gauge T109-117S in inverted position on upper edge of dust cover boss on carburetor and adjust knurled nut on gauge so that lip on lower end of gauge indicator arm rests on top of pump plunger stem. Note gauge reading. Open throttle slowly until plunger bottoms in pump cylinder (at approximately half-throttle—can be determined by added resistance felt when plunger spring begins to compress—CAUTION do not open throttle further than necessary to bottom plunger in cylinder). Turn knurled nut on gauge until indicator lip again rests on top of pump plunger stem. Note gauge reading. The difference between the two readings is pump stroke (in 64ths. of an inch) and should agree with figure in table below. Adjust by bending throttle connector rod at lower angle near throttle lever.

ACCELERATING PUMP SETTING
(1946-48 Buick & 1946-48 Cadillac)

Car Model	Carburetor	Pump Stroke	Pump Setting
Buick ('46-47)	608S, 608SA, 609S, 609SA	21/64"	Non-Adjustable
Buick ('48)	608SC, 609SC, 663S, 664S	21/64"	Long Stroke
Cadillac	595S, SA	27/64"	Non-Adjustable

Pump Jet Aim Adjustment (Buick Models)—Fuel discharged from pump jets must strike within 3/16" diameter target circles on carburetor wall. Pump jet aim should be checked and pump jets adjusted, if necessary, as follows: Note location of pump jet target circles on carburetor wall (target circles not marked on first carburetors and targets must be established as directed in Note below). Operate pump by opening throttle with short quick stroke and note whether pump jet discharge stream strikes within target circle. Adjust by bending pump jets slightly.

►*CAUTION—Use extreme care not to distort jets when making adjustments.*

Pump Jet Target Note—On first carburetors where pump jet targets are not marked on the carburetor wall, it will be necessary to establish these by measurement (as shown in illustration). Mark target circles with a pencil.

Pump Seasonal Adjustment (Buick 608SC, 609SC, 663S, 664S)—Pump arm on countershaft on bowl cover has two holes for pump connector link engagement. See recommended settings under "Tune-Up" on car model page.

PUMP JET TARGETS

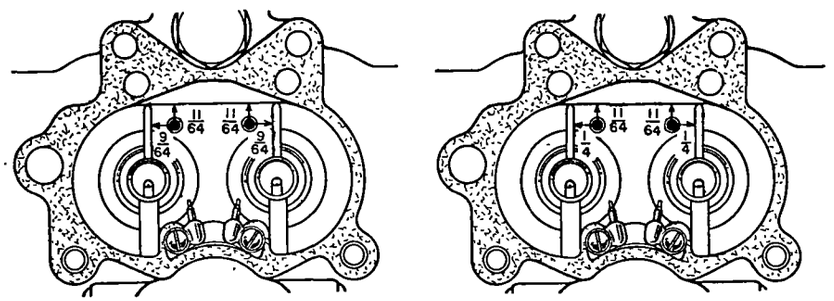

SERIES 40, 50 SERIES 70

BUICK PUMP JET TARGET CIRCLES

Frazer & Kaiser (685S, SA), Oldsmobile (665S), Pontiac (630S, SA, SB; 653S): Pumps are high-pressure delayed action type (same as other 1946-48 pumps) but are checked differently as follows:

►*CAUTION*—When measuring pump stroke, proceed exactly as follows (gauge reading indicates pump plunger shaft position rather than actual shaft or plunger movement):

Pump Stroke Adjustment—Must be checked and adjusted exactly as detailed below (plunger stem is spring-loaded and movement is not necessarily the same as the movement of the pump plunger). To check pump stroke, remove dust cover, see that pump connector link engages proper hole of pump arm (see table) with open ends of link extending out toward countershaft arm, back out throttle lever stopscrew so that throttle valves tightly closed and make certain that fast idle mechanism does not hold throttle open. Place Universal Pump Gauge No. T109-117S in inverted position on dust cover boss of bowl cover, turn knurled nut on gauge until lower finger just touches upper end of plunger shaft, note gauge reading. Number indicated on gauge should agree with table below. Adjust by bending throttle connector rod at lower angle near throttle lever.

ACCELERATING PUMP SETTING
(Frazer, Kaiser, Oldsmobile, & Pontiac)

Car Model	Carburetor	Pump Gauge Reading	Pump Setting
Frazer & Kaiser	685S, SA	29	Short Stroke
Oldsmobile	665S	24	Long Stroke
Pontiac	630S, SA, SB; 653S	30	Short Stroke

Pump Jet Aim—Pump jets must be properly aimed so that pump discharge stream strikes venturi at correct angle. To check (with air horn removed), operate pump by opening throttle with short quick stroke and note direction of pump jet stream. Stream should miss outer wall of primary venturi and strike lower part of inner wall of secondary venturi. To adjust, bend pump jet slightly. Check both pump jets similarly.

►*CAUTION—Use extreme care not to distort jets when making adjustments.*

Pump Seasonal Adjustment—Pump arm on countershaft on bowl cover has two holes for pump connector link engagement. See recommended setting under "Tune-Up" on car model page.

FLOAT LEVEL: Two separate settings (Vertical & Lateral) are required. To check and adjust float level, with bowl cover and float assembly removed from carburetor and inverted, remove gasket, install correct gauge (see table below) directly under floats with notched portions of gauge fitted over machined surface of bowl cover casting. Adjust floats as follows:

Vertical Adjustment—Floats should just clear horizontal portion of gauge ("Float Setting" in table below). Adjust by bending float arms.

►*CAUTION—Both floats must be set exactly alike.*

Lateral Adjustment—Sides of floats should barely touch vertical uprights on gauge. Adjust by bending float arms.

Fuel Level—Should be even with lower edge of inspection plug hole on side of float bowl with engine idling.

FLOAT LEVEL SETTING

Car Model	Carburetor	Float Level	Checking Gauge
Buick 40 ('41-42)	487S①	9/64"	T109-160
Buick 40 ('41-42)	487S②	3/16"	T109-162
Buick ('42)	551S, 549S	3/16"	T109-162
Buick ('46-47)	608S, SA; 609S, SA	3/16"	T109-162
Buick ('47-48)	608SC, 609SC, 663S,664S	3/16"	T109-162
Cadillac	486S, 595S, 595SA	9/64"	T109-160
Frazer & Kaiser	685S③	9/64"	T109-160
Frazer & Kaiser	685S④, 685SA	1/16"	T109-197
Oldsmobile	665S	3/16"	T109-162
Pontiac	630S, SA, SB; 653S	3/16"	T109-162

①—First type float with cross-rib reinforcement (see Production Change Note).
②—Second type float with vertical-rib reinforcement.
③—With first type Needle & Seat Assembly No. 25-161S.
④—With later type Needle & Seat Assembly No. 25-162S.

FLOAT INLET VALVE

Needle Valve & Seat—Furnished only in matched sets as follows:

Car Model	Carburetor	Part Number	Intake Hole Size
Buick 40 ('41-42)	487S	25-105S①	#42
Buick 40, 50 ('42-48)	551S, 608S, SA, SC; 663S	25-105S	#42
Buick 60, 70, 90	549S, 609S, SA, SC; 664S	25-115S	#38
Cadillac	486S, 595S, 595SA	25-98S	#38
Frazer & Kaiser	685S, 685SA	25-162S②	#42
Oldsmobile	665S	25-105S	#42
Pontiac	630S, SA, SB; 653S	25-105S	#42

①—Supersedes Part No. 25-80S used on first carburetors.
②—Supersedes Part No. 25-161S used on first 685S carburetors.

THROTTLE VALVE SETTING: Install valves with trademark (small 'c' in circle) toward manifold and on idle port side of bore, use new attaching screws, install screws loosely, tap valve lightly to centralize it in bore (throttle stopscrew must be backed off so throttle tightly closed), tighten attaching screws.

Idle Port Opening & Vacuum Spark Port Height—Should be checked with throttle valves tightly closed (stopscrew backed off). Idle port opening is opening above upper edge of valve, vacuum spark port height is distance from upper edge of valve to top or bottom of port as indicated.

CONTINUED ON NEXT PAGE

CARTER TYPE WCD (C ntinued)

THROTTLE VALVE SETTING

Car Model	Carburetor	Idle Port Opening	Vacuum Port Height
Buick 40, 50 ('41-42)	487S, 551S	.067-.073"	.046-.050"①
Buick 40, 50 ('46-48)	608S, SA, SC; 663S	.067-.073"	.046-.050"①
Buick 60, 70, 90 ('42)	549S	.082-.088"	.060-.064"②
Buick 70 ('46-48)	609S, SA, SC; 664S	.082-.088"	.060-.064"②
Cadillac	486S, 595S	.100-.106"	.033-.037"②
Cadillac	595SA	.100-.106"	.030-.040"②
Frazer & Kaiser	685S, 685SA	.122-.128"	.033-.038"②
Oldsmobile	665S	.100-.106"	.016-.020"②
Pontiac	630S, SA, SB; 653S	.122-.128"③	.052-.056"②

①—Bottom of port above valve. ②—Top of port above valve.
③—.117-.123" on first production 630S carburetors.

FAST IDLE: ***CAUTION—Buick models adjusted differently than other cars (note separate instructions following):***

Cadillac, Frazer, Kaiser, Oldsmobile, Pontiac Fast Idle: Cam linked to choke valve lever and serving as a stop for the fast idle screw on the throttle lever (on opposite end of throttle shaft from regular throttle stopscrew). To adjust, hold choke valve tightly closed, adjust fast idle screw until throttle opening or clearance between edge of valve and carburetor bore on side opposite idle port is correct as shown in table below (use indicated gauge to check this throttle opening) with the fast idle screw resting on the high step of the fast idle cam.

FAST IDLE SETTING
(Cadillac, Frazer, Kaiser, Oldsmobile, Pontiac)

Car Model	Carburetor	Throttle Opening	Checking Gauge
Cadillac ('42)	486S	.015"	T109-44①
Cadillac ('46-48)	595S, 595SA	.018"	T109-44①
Frazer & Kaiser	685S, 685SA	.016"	
Oldsmobile	665S	.018"	T109-44①
Pontiac	630S, SA, SB; 653S	.026"	T109-189②

①—Gauge T109-44 used for both .015" and .018" settings.
②—Gauge T109-189 used for both .023" and .026" settings.

Buick Fast Idle: This is special type consisting of a fast idle cam and trip lever assembly. The cam engages the fast idle screw on the throttle shaft dog and collar assembly. Cam trip lever is linked to the choke valve shaft by a connector rod so that the cam is rotated to the fast idle position when the choke valve closes for cold starting. As the choke valve opens, trip lever is revolved and spring returns fast idle cam to off position and throttle valves return to hot or slow idle speed position (controlled by stopscrew).

Adjustment—With choke valve tightly closed, adjust fast idle screw so that clearance between throttle valve and carburetor bore on side opposite port is correct for each model as shown in table below. To make this adjustment, see that choke valve tightly closed and that fast idle adjusting screw rests on high step of fast idle cam, turn fast idle screw in until clearance between edge of throttle valve and carburetor wall on side opposite idle port is correct (above).

FAST IDLE SETTING
(Buick Models)

Car Model	Carburetor	Throttle Opening	Checking Gauge
Buick 40, 50 ('41-47)	487S, 551S, 608S, SA	.012"	
Buick 40, 50 ('47-48)	608SC, 663S	.015"	T109-44①
Buick 60, 70, 90 ('42-47)	549S, 609S, SA	.018"	T109-44①
Buick 70 ('47-48)	609SC, 664S	.018"	T109-44①

①—Gauge T109-44 used for both .015" and .018" settings.

CHOKE: Carter Climatic Control (automatic choke) used on all models.
See "Carter Climatic Control (Dual Carburetors)" in Carburetion Equipment Section.

CLIMATIC CONTROL (CHOKE) SETTING

Car Model	Carburetor	Choke Setting
Oldsmobile	665S	1 Point Rich
Pontiac	630S, SA, SB	①
All Others		Centered

①—Centered (With first No. 6-547S Air Horn & Climatic Control Assy.).
1 Point Lean (With later No. 6-576S Air Horn & Climatic Control Assy.).

UNLOADER: Consists of a lip on the throttle shaft lever which engages the fast idle cam and opens choke valve to correct flooding when throttle opened wide.

►***CAUTION—Two separate adjustments required as follows:***

(1) Fast Idle Cam Clearance—Loosen choke valve lever clampscrew, insert gauge of correct thickness (see Checking Gauge (1) in table below) between lip of fast idle cam and boss on flange casting, hold choke valve tightly closed, remove all slack from linkage by pressing choke valve lever toward closed position, tighten choke valve lever clampscrew.

(2) Choke Valve Clearance—Adjust unloader lip on throttle valve lever by bending lip until clearance between upper edge of choke valve and air horn wall correct (see Checking Gauge (2) in table) with throttle valve wide open.

UNLOADER SETTING

Car Model	Carburetor	(1)—Setting & Gauge No.—	(2)
Buick ('41-42)	487S, 549S, 551S	.010" T109-71	3/16" T109-28
Buick 40, 50 ('46-48)	608S, SA, SC; 663S	.020" T109-29	3/16" T109-28
Buick 70 ('46-48)	609S, SA, SC; 664S	.020" T109-29	3/16" T109-28
Cadillac	486S, 595S, 595SA	.010" T109-71	3/16" T109-28
Frazer & Kaiser	685S, SA	.010" T109-71	1/8" T109-36
Oldsmobile	665S	.010" T109-71	1/8" T109-36
Pontiac	630S, SA, SB; 653S	.040" T109-193	1/8" T109-36

CARTER CAR STARTER NOTE: Car starter is mounted on carburetor (Buick cars). When disassembling other carburetors, disregard Car Starter data.
See "Carter Car Starter" in Electrical Equipment Section.

Buick (All Models 608S, SA, SC; 609S, SA, SC; 663S, 664S Carburetors)—Switch must make contact within 30° to 45° throttle opening range (check with Protractor Gauge T109-155S). Adjust by varying shim thickness on guide block under contact spring.

►***CAUTION—Do not use less than one No. 153-11 (.018") Shim or more than three No. 153-11 (.018") Shims plus two No. 153-12 (.006") shims.***

DISASSEMBLY OF CARBURETOR: Loosen the clampscrew and remove the choke shaft lever and fast idle connector rod. Take out attaching screws and remove air horn and Climatic Control as an assembly. Remove thermostat coil and housing assembly (do not remove coil from housing), gasket, baffle plate, choke valve, choke piston lever, link and shaft assembly, and vacuum piston (use care not to lose piston pin). Take out attaching screws and remove pump jet and housing assembly, lift off air horn gasket, remove dust cover, gasket, throttle connector rod, pump connector link, strainer nut and gasket, and strainer. Take out attaching screws and remove bowl cover assembly, lift out vacuum piston spring. CAUTION—Do not make any attempt to remove nozzles from body casting. Remove float pin, take out float assembly and needle valve and seat assembly. Turn vacuum piston ¼ turn to free it from piston link. Raise piston link and, at same time, turn pump arm and countershaft so that link is free, remove link. Remove low speed jets and bowl cover gasket. Remove pin spring on end of pump countershaft and loosen metering rod arm screw, slide countershaft and lever assembly out, dismantle pump and metering rod arm parts. Hold plunger guide down, remove plunger guide screw, plunger guide and pump plunger assembly, plunger spring and strainer (invert carburetor). Remove pump intake ball and retainer cap by inserting soft brass pin through hole in bottom of cylinder and tapping retainer out. Remove pump discharge passage plug, pump discharge check plug, and discharge needle, metering rod jets and gaskets. Invert carburetor, take out retaining screws and remove body flange and switch as an assembly. Hold switch firmly against casting, remove terminal cap clip and screw, disassemble switch and remove switch ball, use care not to lose small square adjusting washers, remove switch strainer and retainer ring. Remove idle adjusting screws, springs, and idle port plugs. To remove throttle valves, remove throttle shaft arm, throttle valves, throttle centering screw (when used—this screw engages groove in shaft and retains shaft in throttle body) or throttle shaft retaining ring (pronged washer on end of shaft—used on later carburetors in place of centering screw), slide throttle valve shaft out,

Servicing—Wash all parts in gasoline except thermostatic coil and housing assembly and switch parts. Blow out all jets and passages in carburetor castings with air, scrape carbon from throttle body bore and flange. Replace all worn or damaged parts. Soak new Intake Needle Seat Gasket, Pump Relief Plug Gasket, and Metering Rod Jet Gasket in 90 proof denatured alcohol for 20 minutes, install on part and allow to dry before installing in carburetor.

REASSEMBLY OF CARBURETOR: Use new gaskets (see Service Parts), note following cautions when assembling carburetor: Install throttle valves as directed under 'Throttle Valve Setting' above, make certain that throttle centering screw installed and check throttle valve position. Use new idle port rivet plugs. Adjust carburetor when re-installed on engine.

SERVICE PARTS: Gasket Sets—No. 154A, (595S, SA; 608S, SA, SC; 609S, SA, SC; 663S, 664S, 685S, SA), No. 190 (630S, SA, SB; 653S, 665S).
Repair Packages (With Std. Metering Rods)—No. 1098A (487-S), No. 1331 (486S), No. 1363B (595S, SA), No. 1364B (608S, SA), No. 1365B (609S, SA), No. 1369 (630S, SA, SB; 653S), No. 1390 (685S, SA), No. 1391 (608SC, 663S), No. 1392 (609SC, 664S).

CARTER DOWNDRAFT CARBURETOR JET SPECIFICATIONS

Car Model	Yr.	Carb. No.	Metering Rod Marking	Metering Rod Standard Part No.	Metering Rod 1 Size Lean Marking	Metering Rod 1 Size Lean Part No.	Metering Rod 2 Sizes Lean Marking	Metering Rod 2 Sizes Lean Part No.	Met. Rod Jet Size	Met. Rod Jet Part No.	Main Nozzle Size	Main Nozzle Part No.	Low Spd. Jet Tube Size	Low Spd. Jet Tube Part No.	Pump Jet Size	Pump Jet Part No.
BUICK 40	Early 1939	419-S	62-54	75-340	63-56	75-362	—	—	.082"	120-65S	②	12-250③	#71	11-161S	#74	48-74
BUICK 40	Late 1939	440-S	——	75-398①	64-56	75-468㊸	—	—	.082"	120-65S	②	12-250	#70	11-163S	#74	48-74
BUICK 40, 50	1940	440S, 74S	635-56	75-398	64-56	75-468㊸	—	—	.082"	120-65S	②	12-250	#70	11-163S	#74	48-74
BUICK 60, 70, 80, 90	1940	448-S	67-49	75-380	675-49	75-462	—	—	.082"	120-65S	②	12-250	#68	11-160S	#74	48-92
BUICK 40	1941	487-S	655-57	75-459	665-59	75-488	675-59	75-489⑪	.082"	120-65S	—	⑩	#68	11-171S	#73	48-98S
BUICK 40,40A,50㉜	Early '41	509-S	72-60	75-492	73-62	75-503	70-56	75-491⑭	.086"	120-121S	—	⑩	#70	11-176S	#73	48-105S㊺
BUICK 40,40A,50㉝	Early '41	510-S	——	——	——	—	—	—	.0492"	120-143S	—	⑩	#70	11-176S	—	——
BUICK 60,70,90㉜	Early '41	490-S	675-54	75-473	69-56	75-490	70-56	75-491⑭	.086"	120-121S	—	⑩	#70	11-176S	#73	48-98S
BUICK 60,70,90㉝	Early '41	491-S	——	——	——	—	—	—	.0531"	120-141S	—	⑩	#70	11-176S	—	——
BUICK 40,40A,50㉜	Late '41	528-S	72-60	75-492	73-62	75-503	70-56	75-491⑭	.0875"	120-149S	—	⑩	#65	11-177S	#74	48-110S㉙
BUICK 40,40A,50㉝	Late '41	529-S	——	——	——	—	—	—	.0492"	120-143S	—	⑩	#65	11-177S	—	——
BUICK 60,70,90㉜	Late '41	533-S	675-54	75-473	69-56	75-490	70-56	75-491⑭	.086"	120-121S	—	⑩	#65	11-177S	#74	48-113S㉚
BUICK 60,70,90㉝	Late '41	534-S	——	——	——	—	—	—	.0531"	120-141S	—	⑩	#65	11-177S	—	——
BUICK 40A, 40B	1942	487-S	655-57	75-459	665-59	75-488	675-59	75-489⑪	.082"	120-65S	—	⑩	#68	11-171S	#73	48-98S
BUICK 40A, 40B, 50㉜	1942	528-S	72-60	75-492	73-62	75-503	70-56	75-491⑭	.08575"	120-149S	—	⑩	#65	11-177S	#74	48-110S㉙
BUICK 40A, 40B, 50㉝	1942	529-S, 43-S	——	——	——	—	—	—	.0492"	120-143S	—	⑩	#65	11-177S	—	——
BUICK 60, 70, 90㉜	1942	533-S	675-54	75-473	69-56	75-490	70-56	75-491⑭	.086"	120-121S	—	⑩	#65	11-177S	#74	48-113S㉚
BUICK 60, 70, 90㉝	1942	534-S, 44-S	——	——	——	——	——	——	.0531"	120-141S	—	⑩	#65	11-177S	—	——
BUICK 40A, B; 50	Late '42	551-S	——	75-459	——	75-489⑪	—	—	#45	——	—	—	#68	——	#73	——
BUICK 60, 70, 90	Late '42	549-S	——	75-553	——	75-558⑪	—	—	#45	——	—	—	#71	——	㊹#73	——
BUICK 40, 50	1946-48	608S, SA	655-57	75-459	665-59	75-488	675-59	75-489	.082"	120-65S	—	⑩	#65	11-177S	#71	48-132S
BUICK 70	1946-48	609S, SA	625-54	75-592	63-54	75-557	64-54	75-558	.082"	120-65S	—	⑩	#65	11-185S	#72	48-140S
BUICK 40, 50	1948	608-SC	645-57	75-614	——	75-633	—	75-634⑪	.082"	120-158	—	⑩	#65	11-177S	#71	48-132S
BUICK 40, 50	1948	663-S	645-57	75-614	——	75-633	—	75-634⑪	.082"	120-158	—	⑩	#65	11-177S	#71	48-132S
BUICK 70	1948	609-SC	63-50	75-615	——	75-635	—	75-636⑪	.082"	120-158	—	⑩	#65	11-185S	#72	48-140S
BUICK 70	1948	664-S	63-50	75-615	——	75-635	—	75-636⑪	.082"	120-158	—	⑩	#65	11-185S	#72	48-140S
CADILLAC V16	1938-39-40	407-S, 8-S	62-45	75-307	63-46	75-328	64-47	75-329	.0846"	120-125S	④	12-238	#71	——	#72	48-52
CADILLAC V8	1941	506-S	67-54	75-422⑨	68-55	75-423	—	—	.086"	120-121S	㊳	12-259	#71	11-161S	#72	——
CADILLAC V8	1942	486-S	70-54	75-526	71-56	75-550	73-59	75-551	.089"	120-103S	—	⑩	#70	11-181S㉑	#70	48-116S
CADILLAC V8	1946-48	595S, SA	695-54	75-576	705-56	75-597	715-58	75-598	.089"	120-103S	—	⑩	#70	11-181S	#70	48-138S
CHEVROLET Repl.	1936	569-S	67-46	75-485	68-49	75-517	—	—	.093"	120-115S	⑮	⑥12-274S	.035"	11-173S	#72	48-43
CHEVROLET Std. Mstr.	1936	319-S	69-42	**75-176	70-46	75-181	71-50	75-182	.095"	120-101S	#31	㊷12-303U	#72	11-138	#72	48-43
CHEVROLET Std. Mstr.	1936	334-S	69-42***	75-176	70-46	75-181	71-50	75-182	.095"	120-101S	#31	㊷12-303U	#72	11-138	#72	48-43
CHEVROLET Fleet (V)	1936	335-S	67-47	75-183	—	—	—	—	.0835"	120-49S	#53	††12-211	#72	11-138	#72	48-43
CHEVROLET All	1937	346-S	69-44	75-193	70-47	75-209	—	—	.094"	120-119S	#31	㊵12-303U	#72	11-138	#72	48-43
CHEVROLET Fleet (V)	1937	358-S	67-47	75-183	68-49	75-187	—	—	.0835"	120-49S	#53	12-213 (B)	#72	11-138	#72	48-43
CHEVROLET All	1938	391-S	69-42	75-290	70-47	75-209	(M)	—	.095"	120-49S	⑥	⑥12-236U	#72	11-138	#72	48-43
CHEVROLET Fleet (V)	1938	358-S	67-47	75-183	—	—	—	—	.0835"	120- 49S	#53	12-213	#72	11-138	#72	48-43

NOTE:—Metering Rod markings indicate size of Rod. On three steprods only the first and last steps are indicated by the marking.

(B) Nozzle Assembly (12-211 Screw Nozzle, 12-210 Slip Nozzle).
(M) 1 Size Rich—Marked 68-41. Part No. 75-210.
** Supersedes 75-144 used on first cars.
*** Supersedes 75-171 used on first cars.
†† Screw nozzle—Slip nozzle 12-210—#40 also used.

① —Supersedes No. 75-371 (63-55).
② —Closed Tip. Top hole #75 (45° angle), Lower hole #52 (60° angle).
③ —Supersedes No. 12-242.
④ —Closed Tip. Top hole #70 (45° Angle), Lower hole #54 (60° Angle).
⑥ —Inner (Screw) Nozzle #31, Outer (Slip) Nozzle .125".
⑧ —Nozzle Assembly (Inner & Outer Nozzle).
⑨ —Supersedes No. 75-471.
⑩ —Nozzle installed permanently in carburetor. Do not remove.
⑪ —High altitude only.
⑬ —Was 48-98S.
⑭ —Altitude only. When installed, special Altitude Metering Jet must be installed in Rear Carburetor. These jets furnished in package with Altitude Metering Rod (for Front Carburetor) as follows: 75-516U (Series 40A, 40B, 50 carburetors), 75-515U (Series 60, 70, 90 carburetors).
⑮ —Inner Nozzle .120", Outer Nozzle .125".
⑳ —Stamped 'No. 38½'.
㉑ —Supersedes No. 11-178S.
㉙ —Supersedes No. 48-108S.
㉚ —Supersedes No. 48-112S.
㉜ —Front Carburetor (Compound Carburetion).
㉝ —Rear Carburetor (Compound Carburetion).
㉞ —Stamped 'No. 36'.
㊳ —Closed Tip. Top hole .037" (45° angle). Lower hole .071" (60° angle).
㊵ —Supersedes 12-206.
㊷ —Supersedes 12-186.
㊸ —Supersedes 75-397.
㊹ —4° angle.

CARTER DOWNDRAFT CARBURETOR JET SPECIFICATIONS

Car Model	Yr.	Carb. No.	Metering Rod Standard Marking	Metering Rod Standard Part No.	1 Size Lean Marking	1 Size Lean Part No.	2 Sizes Lean Marking	2 Sizes Lean Part No.	Met. Rod Jet Size	Met. Rod Jet Part No.	Main Nozzle Size	Main Nozzle Part No.	Low Spd. Size	Jet Tube Part No.	Pump Jet Size	Pump Jet Part No.
CHEVROLET All	1939	420-S	675-40	75-377⑰	67-42	75-342	—	—	.095″	120-129S	⑥	⑧12-236U	#70	11-144⑤	#72	48-43
CHEVROLET Econ (V)	1939	434-S	65-41	75-381⑱	69-43	75-361	—	—	.0835″	120-49S	⑦	⑧12-213	#70	11-144⑤	#72	48-43
CHEVROLET All	1940	420-S	675-40	75-377	69-43	75-342	—	—	.095″	120-129S	⑥	⑧12-236U	#70	11-144 ㉞	#72	48-43
CHEVROLET Econ (V)	1940	434-S	65-41	75-381	67-42	75-361	—	—	.0835″	120-49S	⑦	⑧12-213	#70	11-144 ㉞	#72	48-43
CHEVROLET Govt.	'40-41	518-SA㊶	69-44	75-571㊴	—	—	—	—	.094″	120-119S	⑮	㊵12-303U	#72	11-147	#72	48-83
CHEVROLET All	1941	483-S	67-46	75-485	68-49	75-517	—	—	.093″	120-115S	⑮	⑧12-274S	.035″	11-173S	#72	48-43
CHEVROLET Econ (V)	1941	492-S	645-46	75-508	—	75-518	—	—	.0845″	120-49S	⑯	⑧12-282S	#72	11-147	#72	48-43
CHEVROLET Govt.	'41-43	515-S	67-46	75-485	68-49	75-517	—	—	.093″	—	⑮	—	.035″	11-173S	#72	48-43
CHEVROLET Govt.	'41-43	570-S	66-42	75-562	—	—	—	—	.093″	—	⑮	—	.035″	11-173S	#72	48-43
CHEVROLET All	1942	483S, 574S	67-46	75-485	68-49	75-517	—	—	.093″	120-115S	⑮	⑧12-274S	.035″	11-173S	#72	48-43
CHEVROLET Econ (V)	1942	492-S	645-46	75-508	—	75-518	—	—	.0835″	120-49S	⑯	⑧12-282S	#72	11-147	#72	48-43
CHEVROLET Std.	1946-48	574-S	67-46	75-485	68-49	75-517	—	—	.093″	120-115S	⑮	⑧12-274S	.035″	11-173S	#72	48-43
CHEVROLET Econ.	1946-48	616-S	645-46	75-508	655-49	75-518	—	—	.0835″	120-49S	⑮	⑧12-274S	.025″	11-147	#72	48-43
CHRYSLER C14	Late 1937	373-S	73-47	75-213	—	—	—	—	#41	120-113S	#30	12-212	#71	11-149S	#70	48-59
FRAZER	1947-48	622S, SA	75-55	75-642③	745-54	75-599	76-57	75-600	.099″	120-95S	㊳	12-268	.031″	11-160S②	#67	48-89
FRAZER	1948	622-SB	75-55	75-642	745-54	75-599	76-57	75-600	.099″	120-95S	㊳	12-268	.031″	11-160S	#67	48-89
FRAZER	1947-48	574-S	67-46	75-485	68-49	75-517	—	—	.093″	120-115S	⑮	⑧12-274S	.035″	11-173S	#72	48-43
FRAZER Manhat.	1948	685S, SA	645-42	75-622	—	—	—	—	.0846″	120-125S	—	⑩	.033″	11-191S	#74 ⑳	48-158S
GRAHAM 108, 113	'40-41	472-S	72-40	75-452	—	—	—	—	.099″	120-95S	㊳	12-268	#68	11-160S	#67	48-89
GRAHAM 107	1940	473-S	76-32	75-453	—	—	—	—	.1015″	120-15S	㊲	12-271	#68	11-160S	#67	48-89
GRAHAM 109	'40-41	488-S	755-54	75-470	76-56	75-482	77-58	75-483	.0935″	120-137S	⑫	12-248	#68	11-160S	#71	48-90
HUDSON 6, 63	1936	329-S	65-40	75-106	68-43	75-100	—	—	.09275″	120-51S	#40	12-190	#70	11-135	#72	48-35
HUDSON 8, 64, 5, 6, 7	1936	330-S	66-42	75-159	68-44	75-164	—	—	#40	120-67S	#30	12-191	#70	11-135	#70	48-36
HUDSON 73,4,5,6,7	1937	344-S, 77-S	62-49	75-192	63-50	75-198	—	—	#45	120-65S	⑫	12-199	#71	11-149S	#72	48-52
HUDSON '112' 89 Early	1938	411-S	72-50	75-336	74-53	75-323	75-56	75-324	.094″	120-119S	#51	12-241	#72	11-141	#70	48-65
HUDSON '112' 89 Late	1938	417-S	72-50	75-336	74-53	75-323	75-56	75-324	.094″	120-119S	#51	12-241	#66	11-158	#70	48-65
HUDSON 83,4,5,7	1938	402-S	62-49	75-192	63-50	75-198	64-51	75-298	.082″	120-65S	⑫	12-199	#71	11-149S	#72	48-52
HUDSON 90, 92, 98	1939	437-S	71-45	75-353	73-49	75-354	75-52	75-355	.0952″	120-53S	㊶	12-252	#70	11-135	#72	48-61
HUDSON 90, 92, 98	1939	438-S	71-45	75-353	73-49	75-354	75-52	75-355	.0952″	120-53S	㊶	12-252	#70	11-135	#72	48-61
HUDSON 92, 3, 5, 7	1939	430-S	62-47	75-348	63-48	75-357	64-49	75-358	.082″	120-65S	⑫	12-248	#69	11-162S	#72	48-72
HUDSON 40T, 40P, 48	1940	454-S	72-44	75-407	74-46	75-410	76-48	75-411㉘	.096″	120-17S	㉙	12-261	#70	11-163S	#70	48-87
HUDSON 41, 43	Early 1940	430-SV	62-47	75-348	63-48	75-414	64-49	75-358	.082″	120-65S	⑫	12-248	#69	11-162S	#72	48-72
HUDSON 41, 43	Late 1940	461-S	63-52	75-404	64-53	75-414	65-54	75-415㉗	.082″	120-65S	⑫	12-248	#69	11-162S	#74	—
HUDSON 44, 45, 47	1940	455-S	625-46	75-405	635-47	75-418	645-48	75-419㉘	.086″	120-121S	⑫	12-248	#66	11-167S	#74	—
HUDSON 10, 18	1941	454-S	72-44	75-407	74-46	75-410	76-48	75-411㉘	.096″	120-17S	㉙	12-261	#70	11-163S	#70	48-87
HUDSON 11, 12	Early 1941	461-S	63-52	75-404	64-53	75-414	65-54	75-415㉗	.082″	120-65S	⑫	12-248	#69	11-162S	#74	—
HUDSON 11, 12	Late 1941	501-S	615-47	75-467	625-48	75-474	635-49	75-475⑲	.082″	120-65S	⑫	12-277	#71	11-161S	#74	—
HUDSON 14, 15, 17	Early 1941	455-S	625-46	75-405	635-47	75-418	645-48	75-419㉘	.086″	120-121S	⑫	12-248	#66	11-167S	#74	—
HUDSON 14, 15, 17	Late 1941	502-S	61-44	75-466	62-45	75-478	63-46	75-479㉙	.086″	120-121S	⑫	12-248	#69	11-162S	#74	—
HUDSON 20, 28	1942	454-S	72-44	75-407	74-46	75-410	76-48	75-411㉘	.096″	120-17S	㉙	12-261	#70	11-163S	#70	48-87
HUDSON 21, 22	1942	501-S	615-47	75-467	625-48	75-474	635-49	75-475⑲	.082″	120-65S	⑫	12-277	#71	11-161S	#74	—
HUDSON 24, 25, 27	1942	502-S	—	75-529	—	75-480	65-48	75-531 ㊾	.086″	120-121S	⑫	12-248	#69	11-162S	#74	—
HUDSON Six	1946-47	501-S	615-47	75-467	625-48	75-474	635-49	75-475 ⑲	.082″	120-65S	⑫	12-277	#71	11-161S	#74	—
HUDSON Eight	1946-47	502-S	63-44	75-529	64-47	75-480	65-48	75-531 ㊾	.086″	120-121S	⑫	12-248	#69	11-162S	#74	—
HUDSON Six	1948	647-S	63-48	75-610	645-50	75-623	65-52	75-624⑨	.086″	120-121S	⑫	12-248	#67	11-168S	#74	—
HUDSON Eight	1948	648-S	68-55	75-607	69-575	75-627	705-59	75-628⑯	.086″	120-121S	.061″④	12-312	#68	11-160S	#74	—

②—Supersedes Part No. 11-163S.
③—Supersedes Part No. 75-593.
④—.0635″ on early '48 production.
⑤—Supersedes No. 11-238 (#72).
⑥—Inner (Screw) Nozzle #31, Outer (Slip) Nozzle .125″.
⑦—Inner (Screw) Nozzle #53, Outer (Slip) Nozzle #40.
⑧—Nozzle Assembly (Inner & Outer Nozzle).
⑨—Three Sizes Lean—65-54, Part No. 75-625.
⑩—Nozzle installed permanently in carburetor. Do not remove.
⑫—Closed Tip. Top hole # 70 (45° Angle), Lower hole # 52 (60° Angle).
⑮—Inner Nozzle .120″. Outer Nozzle .125″.
⑯—Three Sizes Lean—705-61, Part No. 75-629.
⑰—Supersedes No. 75-342 (67-42) which becomes 1 Size Lean.
⑱—Supersedes No. 75-361 (69-43) which becomes 1 Size Lean.
⑲—Three Sizes Lean—645-50. Part No. 75-476.
⑳—Supersedes Part No. 48-143S.
㉘—Closed Tip. Top hole #75 (45° angle), Lower hole #48 (70° angle).
㉙—Three Sizes Lean—78-50. Part No. 75-412.
㉗—Three Sizes Lean—66-55. Part No. 75-416.
㉘—Three Sizes Lean—655-49. Part No. 75-420.
㉙—Three Sizes Lean—64-47. Part No. 75-480.
㊶—Upper hole #75. Lower hole #51.
㉞—Was 11-138.
㊳—Closed Tip. Top hole .021″ (45° angle), Lower hole .0945″ (70° angle).
㊲—Closed Tip. Top hole .035″ (45° angle), Lower hole .0945″ (60° angle).
㊴—Supersedes 75-193.
㊵—Supersedes No. 12-206.
㊶—Supersedes Models 387-S, 518-S.
㊷—Three Sizes Lean—Part No. 75-532 (66-49).

CARTER DOWNDRAFT CARBURETOR JET SPECIFICATIONS

Car Model	Yr.	Carb. N.	Metering Rod Standard Marking	Met. Rod Jet Standard Part No.	Metering Rod 1 Size Lean Marking	Met. Rod Jet 1 Size Lean Part No.	Metering Rod 2 Sizes Lean Marking	Met. Rod Jet 2 Sizes Lean Part No.	Met. Rod Jet Size	Met. Rod Jet Part N.	Main Nozzle Size	Main Nozzle Part No.	Low Spd. Jet Tube Size	Low Spd. Jet Tube Part N.	Pump Jet Size	Pump Jet Part No.
HUPMOBILE 6	1936	333-S	66-46	75-140	67-47	75-145	68-48	75-146	#46	120-99S	#40	12-188	#68	11-145	#72	48-35
HUPMOBILE 8	1936	317-S	58-50	75-139	59-51	75-150	60-52	75-151	#46	120-69S	#30	12-197	#71	11-140	#72	48-38
HUPMOBILE 8	'38-39	399-S	735-61	75-276	74-625	75-334	745-635	75-335	.089"	120-103S	#52	12-229	#70	11-157S	#70	48-63
HUPMOBILE 6	1938-40	398-S	75-45	75-273	76-49	75-332	78-54	75-333	.098"	120-67S	#40	12-188	#68	11-145	#72	48-61
JEEP (Army)	1942-45	539-S	595-47	75-547	6075-485	75-548	—	—	.070"	120-151S	.096"	12-255	#71㉔	11-180S	#73	48-84
KAISER	1947-48	622S, SA	75-55	75-642③	745-54	75-599	76-57	75-600	.099"	120-95S	㊱	12-268	.031"	11-160S②	#67	48-89
KAISER	1948	622-SB	75-55	75-642	745-54	75-599	76-57	75-600	.099"	120-95S	㊱	12-268	.031"	11-160S	#67	48-89
KAISER	1947-48	574-S	67-46	75-485	68-49	75-517	—	—	.093"	120-115S	㊿	⑧12-274S	.035"	11-173S	#72	48-43
KAISER Custom	1948	685S, SA	645-42	75-622	——	—	—	—	.0846"	120-125S	—	⑩	.033"	11-191S	#74	㊾48-158S
LA SALLE 37-50	1937	374-S	72-42	75-221	—	75-245	—	75-246	.093"	120-113S	#30	12-212	#71	11-149S	#70	48-59
LA SALLE 38-50	1938	392-S	74-62	75-271	75-63	75-326	76-64	75-327	.093"	120-113S	(P)	12-228	#71	11-149S	#70	48-63
LA SALLE 39-50	1939	423-S	65-52	75-347	66-53	75-388	67-54	75-389	.086"	120-121S	⑫	12-247⑬	#71	11-161S	#72	48-72
LA SALLE 40-50, 52	1940	460-S	66-53	75-403	67-54	75-422	68-55	75-423	.086"	120-121S	㉕	12-259	#71	11-161S	#72	——
NASH 6 3920,4020	1939-40	435-S	76-40	75-372⑭	77-48	75-384	78-53	75-385	.0995"	120-133S	⑯	12-249	#65	11-165S	#70	48-58
NASH 8 3980	1939	436-S	73-565	75-379⑮	74-60	75-386	75-63	75-387	.0885"	120-107S	㉑	12-251	#70	11-163S	#72	48-61
NASH 8 4080	1940	465-S	765-58	75-406	775-61	75-433	785-63	75-434	.0935"	120-137S	⑫	12-248	#70	11-163S	#72	48-61
NASH Amb. 6 4160	1941	435-S	76-40	75-372	77-48	75-384	78-53	75-385	.0995"	120-133S	⑯	12-249	#65	11-165S	#70	48-58
NASH Amb. 8 4180	1941	511-S	74-61	75-500	755-64	75-501	76-66	75-502	.09055"	120-139S	⑫	12-248	#68	11-160S	#72	48-61
NASH Amb. 6 4260	1942	464-S	76-40	75-534	77-48	75-384	78-53	75-385	.0995"	120-133S	①	12-288	#65	11-165S	#70	48-58
NASH Amb. 8 4280	1942	538-S	74-61	75-500	755-64	75-501	76-66	75-502	.09055"	120-139S	⑫	12-248	#68	11-160S	#72	48-61
NASH "600"	1946-47	611-S	775-49	75-584	785-545	75-585	795-60	75-586	.096"	120-17S	㊻	12-261	#71	11-161S	#70	48-136S
NASH "600"	1948	662S, SA	77-40	75-619⑦	79-47	75-631	80-52	75-632	.103"	120-117S	.086"	12-307	#67	11-168S㉟	#72	48-151S
NASH Amb. 6	1946-48	464-S	76-40	75-372㊼	77-48	75-384	78-53	75-385	.0995"	120-133S	①	12-288	#65	11-165S	#70	48-58
NASH-LAFAYETTE	1940	458-S	70-575	75-408	72-60	75-431	725-615	75-432	.086"	120-121S	⑫	12-262	#71	11-161S	#75	——
OLDSMOBILE 6, early	1936	327-S	72-40	*75-175	73-43	75-177	74-47	75-178	#40	120-67S	#31	§§12-205S	#72	11-141	#72	48-43
OLDSMOBILE 6 late	1936	339-S, 42-S	72-40	75-175	73-43	75-177	74-47	75-178	#40	120-67S	#31	§§12-205S	#72	11-141	#72	48-43
OLDSMOBILE 8 early	1936	328-S	70-52	75-158	71-54	75-179	—	75-180	#43	**120-103S	#30	§12-209	#72	11-141	#73	48-50
OLDSMOBILE 8 late	1936	341-S	68-43	75-184	—	—	—	—	.0885"	120-107S	#30	12-212	#71	11-140	#73	48-50
OLDSMOBILE F-37	1937	351-S	77-41	75-194	—	—	—	—	.103"	120-117S	#31	12-208S	#70	11-135	#70	48-58
OLDSMOBILE L-37	1937	345-S	74-35	75-224 (D)	—	—	—	—	#41	120-113S	#30	12-212	#71	11-149S	#70	48-59
OLDSMOBILE " Late	1937	367-S	74-35	75-224	—	—	—	—	#41	120-113S	#30	12-212	#71	11-149S	#70	48-63
OLDSMOBILE 6	1937-38	385-S	77-41	75-194	78-45	75-249	79-50	75-250	.103"	120-117S	#31	§§12-208S	#70	11-135	#70	48-58
OLDSMOBILE 6	1938	388-S⑱	75-41	75-262	76-43	75-316	77-45	75-317	.103"	120-117S	#31	§§12-231S	#70	11-135	#68	48-53
OLDSMOBILE 8	1937-38	386-S	74-35	75-253	75-44	75-251	76-49	75-252	#41	120-113S	#30	12-212	#71	11-149S	#70	48-63
OLDSMOBILE 8	1937-38	389-S	72-52	75-268	73-51	75-318	74-53	75-319	#43	120-103S	⑳	⑧12-227S	#70	11-157S	#70	48-63
OLDSMOBILE 60, 70	1939	385-S	77-41	75-194	78-45	75-249	79-50	75-250	.103"	120-117S	#31	⑧12-208S	#70	11-135	#70	48-58
OLDSMOBILE 60, 70	1939	426-S	78-48	75-341	79-50	75-375	80-53	75-376	.1015"	120-15S	⑲	12-244	#68	11-160S	#70	48-58
OLDSMOBILE 60, 70	1939	425-S⑱	79-49	75-350	79-51	75-373	80-54	75-374	.1015"	120-15S	⑲	12-244	#68	11-160S	#70	48-58
OLDSMOBILE 8 80	1939	389-S	72-49	75-268	73-51	75-318	74-53	75-319	.089"	120-103S	⑳	⑧12-227S	#70	11-157S	#70	48-63
OLDSMOBILE 60, 70	1940	466-S	79-54	75-430	80-59	75-435	075-63	75-436	.1015"	120-15S	㉚	12-264	#68	11-169S㉟	#72	48-72
OLDSMOBILE 60, 70	1940	467-S⑱	79-54	75-430	80-59	75-435	075-63	75-436	.1015"	120-15S	㉚	12-264	#68	11-169S㉟	#72	48-72
OLDSMOBILE 8 90	1940	389-S	72-49	75-268	73-51	75-318	74-53	75-319	.089"	120-103S	⑳	⑧12-227S	#70	11-157S	#70	48-63
OLDSMOBILE 8 90	1940	471-S⑱	72-49	75-268	73-51	75-318	74-53	75-319	.089"	120-103S	⑳	⑧12-227S	#70	11-157S	#70	48-63
OLDSMOBILE 66, 76, 96	1941	504-S	7625-53	75-487	——	75-512	—	75-513⑰	.1015"	120-15S	⑥	⑧12-280S	#70	11-170S	#72	48-72
OLDSMOBILE 66, 76, 96	1941	481-S⑱	7625-53	75-487	——	75-512	—	75-513⑰	.1015"	120-15S	⑥	⑧12-280S	#70	11-170S	#72	48-72
OLDSMOBILE 68, 78, 98	1941	503-S	72-51	75-486	725-51	75-509	73-53	75-510⑤	.089"	120-103S	⑥	⑧12-227S	#71	11-161S	#72	——
OLDSMOBILE 68, 78, 98	1941	480-S⑱	72-51	75-486	725-51	75-509	73-53	75-510⑤	.089"	120-103S	⑥	⑧12-227S	#71	11-161S	#72	——

(D) 75-195 on first cars.
(P) Closed Tip. Top Hole #64 (45° angle), Lower Hole #50 (60° angle).
* Supersedes 75-157 used on first cars. ** Superseded by 120-107S (.0885").
①—Closed Tip. Top hole #75 (45° angle). Lower hole #47 (70° angle).
②—Supersedes Part No. 11-163S.
③—Supersedes Part No. 75-593.
⑤—Three Sizes Lean—735-55. Part No. 75-511.
⑥—Inner Nozzle #31, Outer Nozzle .110".
⑦—Supersedes Part No. 75-612.
⑧—Nozzle Assembly (Inner & Outer Nozzle).
⑩—Nozzle installed permanently in carburetor. Do not remove.
⑫—Closed Tip. Top hole #70 (45° angle), Lower hole #52 (60° angle).
⑬—Superseded by No. 12-228.
§§ Nozzle Assembly (Inner & Outer Nozzles).
§ Supersedes 12-203 used on first cars.
⑭—Supersedes No. 75-351 (76-48).
⑮—Supersedes No. 75-352.
⑯—Closed Tip. Top hole #75 (45° Angle), Lower hole #49 (70° Angle).
⑰—Three Sizes Lean—Part No. 75-514.
⑱—Used only on cars with Hydra-Matic Drive or Self-Shifting Transmission.
⑲—Upper Hole #72, Lower Hole #46.
⑳—Outer (Slip) Nozzle #35, Inner Nozzle #31.
㉑—Closed Tip. Top hole—None. Lower hole #54 (60° Angle).
㉔—Idle Well Jet #61, Part No. 43-67.
㉕—Closed Tip. Top hole #63 (45° angle), Lower hole #50 (60° angle).
㉚—Closed Tip. Top hole #75 (45° angle), Lower hole #46 (70° angle).
㉟—Was 11-160S.
㊱—Closed Tip. Top hole .021" (45°angle), Lower hole .0945" (70° angle).
㊻—Closed Tip. Top Hole .021" (45° angle), Lower Hole .076" (70° angle).
㊼—Supersedes Part No. 75-534 (76-40).
㊾—Supersedes Part No. 48-143S.
㊿—Inner Nozzle .120", Outer Nozzle .125".

CARTER DOWNDRAFT CARBURETOR JET SPECIFICATIONS

Car Model	Yr.	Carb. No.	Metering Rod Standard Marking	Metering Rod Standard Part No.	Metering Rod 1 Size Lean Marking	Metering Rod 1 Size Lean Part No.	Metering Rod 2 Sizes Lean Marking	Metering Rod 2 Sizes Lean Part No.	Met. Rod Jet Size	Met. Rod Jet Part No.	Main Nozzle Size	Main Nozzle Part No.	Low Spd. Jet Tube Size	Low Spd. Jet Tube Part No.	Pump Jet Size	Pump Jet Part N .
OLDSMOBILE 66, 76	1942	523-S	79-44	75-523	—	—	—	—	.103″	120-117S	⑨	⑤12-231S	#72	11-135	#70	48-58
OLDSMOBILE 66, 76	1942	481-S⑱	7625-53	75-487	—	75-512	—	75-513⑰	.1015″	120-15S	⑥	⑧12-280S	#70	11-170S	#72	48-72
OLDSMOBILE 68, 78, 98	1942	503-S	72-51	75-486	725-51	75-509	73-53	75-510⑤	.089″	120-103S	⑥	⑧12-227S	#71	11-161S	#72	—
OLDSMOBILE 68, 78, 98	1942	480-S⑱	72-51	75-486	725-51	75-509	73-53	75-510⑤	.089″	120-103S	⑥	⑧12-227S	#71	11-161S	#72	—
OLDSMOBILE 6 Std.	1946-48	504-S	7625-53	75-487	7725-57	75-512	78-63	75-513⑰	.1015″	120-15S	⑥	⑧12-280S	#70	11-170S	#72	48-72
OLDMOBILE 6⑱	1946-47	481-S	7625-53	75-487	7725-57	75-512	78-63	75-513⑰	.1015″	120-15S	⑥	⑧12-280S	#70	11-170S	#72	48-72
OLDSMOBILE 6⑱	1948	651-S	7625-53	75-487	7725-57	75-512	78-63	75-513⑰	.1015″	120-15S	⑥	⑧12-280S	#70	11-170S	#72	48-72
OLDSMOBILE 8 Std.	1946-48	503S, SA	71-50	75-641⑬	725-51	75-509	73-53	75-510⑤	.089″	120-103S	⑥	⑧12-227S	#71	11-161S	#72	—
OLDSMOBILE 8⑱	1946-47	480-S	72-51	75-486	725-51	75-509	73-53	75-510⑤	.089″	120-103S	⑥	⑧12-227S	#71	11-161S	#72	—
OLDSMOBILE 8⑱	Late '47	665-S	60-40	75-613	—	—	—	—	.082″	120-65S	—	⑩	#68	11-183S	#74	48-143S
OLDSMOBILE 8⑱	1948	650S, SA	71-50	75-641⑬	725-51	75-509	73-53	75-510⑤	.089″	120-103S	⑥	⑧12-227S	#71	11-161S	#72	—
PACKARD 8 120C	Late '37	366-S	62-47	75-228	—	—	—	—	.0846″	120-125S	#30	12-212	#66	11-151S	#72	48-52
PACKARD Eight	1941	478-S	64-50	75-451	65-52	75-519	66-54	75-520	.0846″	120-125S	⑦	12-262	#70	11-163S	#70	—
PACKARD 8 Clipper	'41-42	512-S	64-50	75-451	65-52	75-519	66-54	75-520	.0846″	120-125S	⑦	12-262	#70	11-163S	#70	—
PACKARD Six	1942	530-S	76-40	75-535	7725-46	75-536	785-51	75-537	.1015″	120-15S	㉞	12-270	#65	11-165S	#72	48-61
PACKARD Super 8	1942	531-S	64-54	75-538	655-5625	75-539	665-585	75-540	.09055″	120-139S	㊳	12-259	#70	11-163S	#72	—
PACKARD Six	1946-47	530-S	76-40	75-535	7725-46	75-536	785-51	75-537	.1015″	120-15S	㉞	12-270	#65	11-165S	#72	48-61
PACKARD Eight	1946-47	512-S	64-50	75-451	65-52	75-519	66-54	75-520	.0846″	120-125S	⑦	12-262	#70	11-163S	#70	—
PACKARD Super 8	1946-47	531-S	64-54	75-538	655-5625	75-539	665-585	75-540	.09055″	120-139S	㊳	12-259	#70	11-163S	#72	—
PACKARD Eight	1948	644S, SA	64-45	75-638⑭	65-52	75-519	66-535	75-520	.0846″	120-125S	⑫	12-262	#69	11-162S③	#70	—
PACKARD Super 8	1948	643S, SA	655-51	75-606	67-535	75-620	685-56	75-621	.09055″	120-139S	⑲	12-311	#70	11-163S	#72	—
PACKARD Cust. 8	Early '48	531-S	64-54	75-538	655-5625	75-539	665-585	75-540	.09055″	120-139S	㊳	12-259	#70	11-163S	#72	—
PACKARD Cust. 8	Late '48	531-SA	665-56	75-616	675-575	75-639	69-60	75-640	.09055″	120-139S	㊳	12-259	#70	11-163S	#72	—
PLYMOUTH P15	1947-48	574-S	67-46	75-485	68-49	75-517	—	—	.093″	120-115S	⑮	⑨12-274S	.039″	11-190S	#72	48-43
PONTIAC (6) 36-26A, B	1936	324-S	74-40	75-125	75-41	75-134	76-42	75-135	#44	120-61S	#40	12-190	#70	11-135	#72	48-49
PONTIAC (6 & 8) Taxi	1936	340-S	76-42	75-135	—	—	—	—	#44	120-61S	#40	12-190	#70	11-135	#72	48-49
PONTIAC (8) 36-28	1936	322-S	74-42	75-160	75-43	75-166	76-44	75-167	.085″	120-105S	#40	12-190	#70	11-135	#72	48-49
PONTIAC 6 37-26	1937	352-S	72-42	75-191	76-44	75-206	77-46	75-207	.08525″	120-123S (H)	#38	12-216	#69	11-142	#68	48-53
PONTIAC 6 Taxicab	1937	364-S	75-70	75-219	—	—	—	—	.086″	120-61S	#38	12-216	#69	11-142	#68	48-53
PONTIAC 8 37-28	1937	350-S	76-42	75-196	77-44	75-204	78-46	75-205	.0905″	120-111S	#35	12-194	#69	11-142	#68	48-53
PONTIAC 38-26DA 6	1938	401-S	75-42	75-277	77-49	75-310	78-51	75-311	.0855″	120-123S	#38	12-216	#69	11-142	#68	48-53
PONTIAC 38-28DA 8	1938	400-S	76-42	75-196	77-44	75-204	78-46	75-205	.0905″	120-111S	#35	12-194	#69	11-142	#68	48-53
PONTIAC 6 39-25, 26	1939	433-S	71-42	75-346	72-44	75-368	73-46	75-369	.096″	120-17S	㉛	12-246	#71	11-161S	#72	48-61
PONTIAC 8 39-28	1939	432-S	78-41	75-349	79-43	75-366	80-45	75-367	.104″	120-131S	⑯	12-249	#69	11-162S	#72	48-61
PONTIAC 6 40-25, 26	1940	463-S	72-42	75-401	73-44	75-427	74-46	75-428	.0995″	120-133S	㉛	12-260	#69	11-162S	#72	48-61
PONTIAC 8 40-28	1940	462-S	71-39	75-409	72-41	75-425	73-43	75-426	.0995″	120-133S	㉜	12-263	#68	11-160S	#72	48-61
PONTIAC 8 40-29	1940	469-S	㉝	75-443	—	75-444	—	75-445	.089″	120-103S	②	12-265	#71	11-149S	#70	48-63
PONTIAC 6 41-24, 25, 26	1941	494-S	715-38	75-472	—	75-521㉔	—	75-522㉒	.0995″	120-133S	㉛	12-260	#69	11-162S	#75	48-99
PONTIAC 8 41-27, 28, 29	1941	469-SM	705-52	75-443	715-537	75-444	727-56	75-445	.089″	120-103S	②	12-265	#71	11-149S	#70	48-63
PONTIAC 6 42-25, 26	Early '42	494-S	715-38	75-472	—	75-521	—	75-522	.0995″	120-133S	㉛	12-260	#69	11-162S	#75	48-99
PONTIAC 6 42-25, 26	Late '42	545-S	735-48	75-552	745-51	75-555	75-55	75-556	.097″	120-93S	㉗	12-290	#66	—	#72	48-72
PONTIAC 6 Canadian	1942	521-S	735-46	75-530	—	—	—	—	.097″	120-93S	㉘	12-289	#71	11-135	#72	48-72
PONTIAC 8 42-27, 28	1942	540S, 48S	705-52	75-443	715-537	75-444	727-56	75-445	.089″	120-103S	②	12-265	#71㊺	11-149S	#70	48-63

(H) 120-61S on first cars.
②—Closed Tip. Top hole #75 (45° angle), Lower hole #52 (60° angle).
③—Supersedes Part No. 11-163S.
⑤—Three Sizes Lean—735-55. Part No. 75-511.
⑥—Inner Nozzle #31, Outer Nozzle .110″.
⑦—Closed Tip. Top Hole .028″ (45° angle), Lower Hole .0635″ (70° angle).
⑧—Nozzle Assembly (Inner & Outer Nozzle).
⑨—Outer (Slip) Nozzle .120″. Inner Nozzle #31.
⑩—Nozzle assembled permanently in carburetor. **Do not remove.**
⑫—Closed Tip. Top Hole #70 (45° angle), Lower Hole #52 (60° angle).
⑬—Supersedes Part No. 75-486. ⑭—Supersedes Part No. 75-541.
⑮—Inner Nozzle .120″, Outer Nozzle .125″.
⑯—Closed Tip. Top hole #75 (45° Angle), Lower Hole #49 (70° Angle).
⑰—Three Sizes Lean—Part No. 75-514.
⑱—Used only on cars with Hydra-Matic Drive.
⑲—Closed Tip. Top hole .0292″ (45° angle), Lower hole .0635″ (60° angle).
㉔—Supersedes No. 75-506 (71-44).
㉛—Closed Tip. Top hole #65 (45° Angle), Lower Hole #40 (60° Angle).
㉜—Supersedes No. 75-507 (72-48).
㉗—Closed Tip. Top hole #63 (45° angle), Lower hole .084″.
㉘—Closed Tip. Top hole #63 (45° angle), Lower hole #46 (60° angle).
㉙—Closed Tip. Top hole #65 (45° angle), Lower hole #46 (60° angle).
㉝—Closed Tip. Top hole #65 (45° angle), Lower hole #43 (60° angle).
㉝—Was 70-47 Part No. 75-424 (Std.), 71-49 No. 75-439 (1 Size Lean), 72-51 N . 75-440 (2 Sizes Lean).
㉞—Closed Tip. Top Hole #68 (45° angle), Lower Hole #45 (60° angle).
㊳—Closed Tip. Top Hole .037″ (45° angle), Lower Hole .071″ (60° angle).
㊺—540-S only. On 548-S, jet size #72 (jet installed permanently, do not remove).

CARTER DOWNDRAFT CARBURETOR JET SPECIFICATIONS

Car Model	Yr.	Carb. No.	Metering Rod 1 Size Lean Standard Marking	Metering Rod 1 Size Lean Standard Part No.	Metering Rod 2 Sizes Lean Marking	Metering Rod 2 Sizes Lean Part N.	Met. Rod Jet Size	Met. Rod Jet Part No.	Main Nozzle Size	Main Nozzle Part N.	Low Spd. Jet Tube Size	Low Spd. Jet Tube Part No.	Pump Jet Size	Pump Jet Part N.
PONTIAC 6	1946-48	537-S	75-42	75-528	76-48	75-582	77-53	75-583	.0995"	120-133S	⑱	12-286	#67	11-168S	#72	48-72
PONTIAC 6⑱	1948	652-S	75-42	75-528	76-48	75-582	77-53	75-583	.0995"	120-133S	⑱	12-286	#67	11-168S	#72	48-72
PONTIAC 8	1946	548-S	705-52	75-443	715-537	75-444	727-56	75-445	.089"	120-103S	②	12-265	#72	㊺	#70	48-63
PONTIAC 8	1947-48	630S, SA, SB	60-45	75-594	615-48	75-604	635-51	75-605	.082"	120-65S	—	⑩	#68	11-183S	#74	48-143S
PONTIAC 8⑱	1948	653-S	60-45	75-594	615-48	75-604	635-51	75-605	.082"	120-65S	—	⑩	#68	11-183S	#74	48-143S
STUDEBAKER 5A, 6A	1937	371-S (E)	71-42	75-222 (G)	72-46	75-225	73-50	75-226	#41	120-47S (J)	#35	12-194	#68	11-145 (K)	#68	48-53
STUDEBAKER 5A, 6A	1937	371-S (F)	72-46	75-225	73-50	75-226	—	75-227	#41	120-47S (J)	#35	12-194	#68	11-145 (K)	#68	48-53
STUDEBAKER Ch. G	1939	444S, 53S	78-48	75-393	79-51	75-394	795-54	75-395	.081"	120-85S	.0935"	12-254	#69	11-162S	#72	48-61
STUDEBAKER Ch. 2G	1940	468-S	78-48	75-393	79-51	75-394	795-54	75-395	.081"	120-85S	.0935"	12-254	#69㉖	11-162S	#72	48-61
STUDEBAKER 6 10A	1940	410-S	705-425	75-337	72-46	75-330	73-50	75-331	.098"	120-67S	#45	12-239	#67	11-168S	#70	48-58
STUDEBAKER 8 6C	1940	409-S	70-47	75-312	71-49	75-321	72-51	75-322	.0885"	120-107S	#30㉙	12-212	#70	11-157S	#73	48-60
STUDEBAKER Ch. 3G	1941	496-S	685-43	75-484	70-46	75-493	715-50	75-494⑱	.098"	120-67S	#44	12-278	#64	11-174S	#72	48-61
STUDEBAKER 6 11A	1941	410-S	705-425	75-337	72-46	75-330	73-50	75-331	.098"	120-67S	#45	12-239	#67	11-168S	#70	48-58
STUDEBAKER 8 7C	1941	409-S	70-47	75-312	71-49	75-321	72-51	75-322	.0885"	120-107S	#30㉙	12-212	#70	11-157S	#73	48-60
STUDEBAKER Ch. 4G	1942	496-S	685-43	75-484	70-46	75-493	715-50	75-494⑱	.098"	120-67S	#44	12-278	#64	11-174S	#72	48-61
STUDEBAKER Ch.	1946-48	532-S	68-43	75-484	70-46	75-493	715-50	75-494 ㊿	.098"	120-67S	#44	12-278	#64	11-174S	#71	㉑48-154
STUDEBAKER Ch.	1948	661-S	68-43	75-484	70-46	75-493	715-50	75-494 ㊿	.098"	120-67S	#44	12-278	#64	11-174S	#71	㉑48-154
TERRAPLANE Del 61	1936	331-S	65-40	75-119	68-43	75-100	—	—	.09275"	120-51S	#40	12-190	#70	11-135	#72	48-45
TERRAPLANE Cst 62	1936	329-S	65-40	75-106	68-43	75-100	—	—	.09275"	120-51S	#40	12-190	#70	11-135	#72	48-35
TERRAPLANE 70, 71	1937	348-S	66-52	75-189	68-54	75-201	—	—	.0952"	120-53S	#40	12-190	#70	11-135	#72	48-35
TERRAPLANE 72	1937	344-S, 77-S	62-49	75-192	63-50	75-198	—	—	#45	120-65S	(N)	12-199	#71	11-149S	#72	48-52
TERRAPLANE 80,81,88	1938	397-S	69-52	75-285	71-54	75-286	73-56	75-287	.09525"	120- 53S	#40	12-190	#69	11-142	#72	48-61
TERRAPLANE 82 Super	1938	402-S	62-49	75-192	63-50	75-198	64-51	75-298	.082"	120- 65S	(N)	12-199	#71	11-149S	#72	48-52
WILLYS 440	1940	450-S	695-56	75-390	705-585	75-399	—	—	.078"	120-79S	.096"	12-255	#70㉔	11-163S	#73	48-84
WILLYS 441,442	1941-42	507-S	695-55	75-497	㉕	—	—	—	.078"	120-79S	.096"	12-255	#70㉔	11-163S	#73	48-84
WILLYS JEEP	Early '46	596-S	60-47	75-547	6075-485	75-548	—	—	.070"	120-151S	.096"	12-255	.026"㉔	11-180S	#73	48-84
WILLYS JEEP	1946-48	636-S	60-47	75-547	6075-485	75-548	—	—	.070"	120-151S	.096"	12-255	#69㉔	11-186S㉒	#73	48-84
WILLYS JEEP	1948	636-SA	60-47	75-547	6075-485	75-548	—	—	.070"	120-151S	—	12-323	#69㉔	11-186S㉒	#73	48-84
WILLYS 4-63, VJ-2	1946-48	613-S	78-59	75-589	78-62	75-601	—	—	.098"	120-67S	.086"	12-307	#68	11-160S	#72	48-61
WILLYS Trk. 3T, 4T	1947-48	636-S	60-47	75-547	——	75-548	——	——	.070"	120-151S	.096"	12-255	#69㉔	11-186S㉒	#73	48-84
WILLYS Trk. 2T, 4T	1948	636-SA	60-47	75-547	6075-485	75-548	—	—	.070"	120-151S	—	12-323	#69㉔	11-186S㉒	#73	48-84
WILLYS 6 6-63	1948	645-S	75-50	75-609	——	—	—	—	.098"	120-67S	.086"	12-307	#68	11-160S	#72	48-61

(E) Standard Air Cleaner.
(F) Heavy Duty oil-bath Air Cleaner.
(G) 75-212 (.069"-.065"-.044") on first cars.
(J) Superseded by No. 120-17S.
(K) 11-135 on first cars.
(N) Closed Tip, Top Hole #70 (45° angle), Lower Hole #52 (60° angle).
② —Closed Tip, Top Hole #75 (45° angle), Lower Hole #52 (60° angle).
⑩ —Nozzle installed permanently in carburetor. Do not remove.
⑱ —Used only on cars with Hydra-Matic Drive.
⑲ —For 12,000 foot altitude only—73-54. Part No. 75-495.
㉑ —Supersedes Part No. 48-122.
㉒ —Supersedes Part No. 11-180S.
㉔ —Idle Well Jet #61 drill. Part No. 43-67.
㉕ —No. 75-498 for Altitude only.
㉖ —Idle Well Jet #56 drill. Part No. 43-68.
㉙ —Nozzle retainer plug size #52 drill.
㊺ —Jet installed permanently in carburetor. Do not remove.
㊽ —Closed Tip, Top Hole .020" (45° angle), Lower Hole .070" (60° angle).
㊿ —For 12,000 ft. Altitude only use Part No. 75-495 (73-54).
For Economy use Part No. 75-554 (715-66).

CARTER (B&B) 1936 DOWNDRAFT

Carter No. **Used On:**

E6G1—CHRYSLER AIRSTREAM SIX, MODEL C7 (1936).
DE SOTO AIRSTREAM SIX, MODEL S1 (1936).
DE SOTO AIRFLOW SIX, MODEL S2 (1936).
C6E1—PLYMOUTH, STD. & DELUXE P1, P2 (1936) BEFORE ENG. NO. 269323.
C6E2—PLYMOUTH, STD. & DELUXE P1, P2 (1936) AFTER ENG. NO. 269323.
B6F1—PLYMOUTH, 'ECONOMY' MODELS P1, P2 (1936).
B6G1—PLYMOUTH, ECONOMY MODELS P1, P2 (1936)

NOTE:—On Plymouth models with standard carburetors (C6E1, C6E2), main metering screw was changed in production from Part No. 159-56S to No. 159-58S. Fuel economy on first cars equipped with this 159-56S (262-266cc.) jet will be improved by installing the new type 159-58S (248-252cc.) jet.

Chrysler, De Soto, Plymouth Altitude Economy. Standard vacuum step-up springs (61-118, 61-146, 61-135) when used at altitudes over 3000′ will actuate step-up valve at speeds of 45-55 MPH. To correct poor gasoline mileage or economy complaints for altitude operation, install new Vacuum Step-up Spring No. 61-134 (this spring will operate vacuum step-up valve at car speeds of 66-68 MPH).

Chrysler, DeSoto Replacement Carburetor—See Carter (B&B) 1940-48 data for data on Model E6P5 Replacement Carburetor furnished for 1935-41 Chrysler and DeSoto models.

TYPE: Plain tube, downdraft type with throttle operated accelerating pump and vacuum controlled "step-up" device (economizer). Carburetors used on 1936 car models have the following new features.

Main Metering Jet—New type tapered jet located in float bowl and controlling fuel flow through passage between bowl and nozzle channel. Jet can be removed through bowl after it has been unscrewed (fitted with hexagonal head). Jet is tapered and should not be gauged for size with wire drills. Lower end of nozzle channel (where metering screw formerly located) now closed by blank rivet.

Vacuum Step-Up Device. Vacuum cylinder now located in main body casting. Vacuum piston stem and power orifice needle valve stem connected by piston plate (see illustration). Idle orifice tube has an extension on its head which acts as a guide for the piston plate. Step-up needle valve should be seated with approximately 1/64-1/32″ clearance between stem and piston plate when vacuum piston down at end of stroke (see adjustment below).

IDLING ADJUSTMENT:—Idle adjustment screw controls fuel discharge through lower idle port and should be turned in for leaner mixture or out for richer mixture. To adjust with engine warm and idling, set throttle stopscrew so that idling speed is approximately 300 R.P.M. or 6 M.P.H. Turn idling adjusting screw in or clockwise until engine begins to miss, then turn screw out slowly until engine fires smoothly. Readjust throttle stopscrew to correct idling speed if necessary. See tune up instructions on car model pages. Approximate idling screw settings are as follows:

IDLE SETTING

Car Model	Carburetor	Idle Screw Setting
Chrysler & DeSoto	E6G1	¼-1 turn open.
Plymouth	C6E1, E2; B6F1, G1	¼-¾ turn open.

ACCELERATING PUMP:—Delayed action type positively operated by throttle valve shaft. Fuel drawn into pump chamber past piston needle on upstroke of piston and discharged through pump jet in side of venturi on downstroke (when throttle opened for acceleration). Pump piston constructed in two sections, inner or lower piston carrying inlet valve needle, and outer or upper piston being linked to pump rod through spring. Outer piston lags behind (compressing spring) when throttle opened suddenly and subsequent piston movement (as spring expands) continues the pump discharge.

Adjustment—Pump lever on throttle shaft provided with three holes for pump rod link engagement. Inner hole (short radius) provides minimum pump stroke and outer hole (long radius) maximum stroke. See tune-up on car model pages for recommended settings and changes for seasonal requirements.

VACUUM STEP-UP (ECONOMIZER):—New design (see description above). See that needle valve is seated and that clearance between needle valve stem and piston plate is 1/64-1/32″ with piston down at the end of its stroke (piston spring compressed). Adjust by bending piston plate slightly. This clearance must be maintained to insure needle valve seating and prevent fuel discharge through power orifice at low speeds r when throttle is not wide open. See that needle works freely in the guide and does not stick on its seat. Acceleration and high speed performance will be unsatisfactory if needle does not open when throttle is wide open.

PERFORMANCE & ECONOMY:—All jets are fixed (non-adjustable). Main metering screw flow-tested and rated in accordance with capacity. Do not check size with wire drills. Main metering screw can be changed to secure leaner-than-standard fuel mixture (high altitude calibration) for special fuels and operating conditions. See Carter (B & B) Jet Specification Table.

FLOAT LEVEL:—To check float level, take off float bowl cover (upper body casting), hold lip of float lever firmly against needle valve, use special gauge (see table below) to check float height (not soldered seam). To adjust, bend lip of float lever toward needle valve to lower float level, or away from needle valve to raise float level.

FLOAT LEVEL SETTING

Car Model	Carburetor	Float Level	Checking Gauge
Chrysler & DeSoto	E6G1	5/64″	1522-B
Plymouth	C6E1, E2; B6F1, G1	5/64″	1522-B

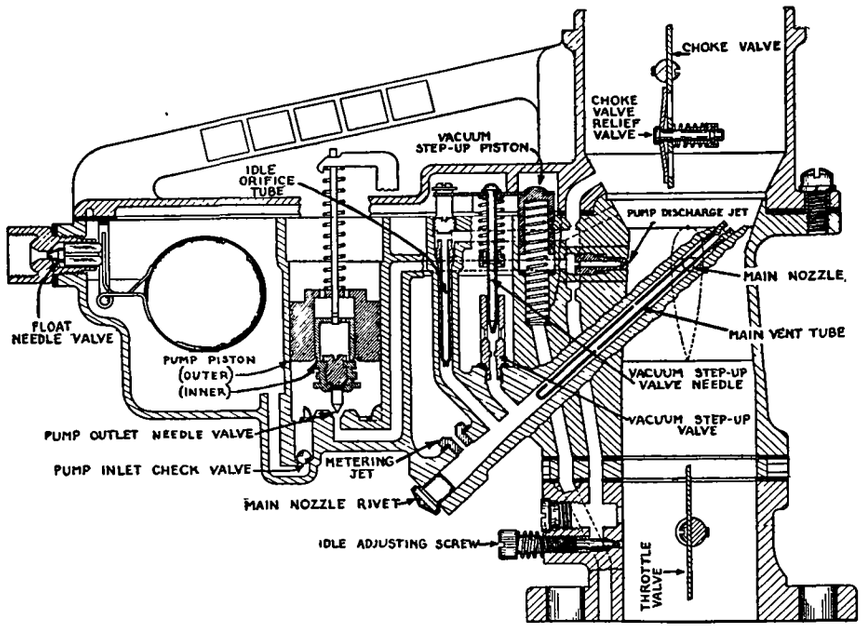

THROTTLE VALVE SETTING:—When installing throttle valves, see that distance from top edge of valve to top of upper idle port "Idle Port Height" is correct as shown in following table.

THROTTLE VALVE SETTING

Car Model	Carburetor	Idle Port Height
Chrysler & DeSoto	E6G1	.081-.085″
Plymouth	C6E1, E2; B6F1, G1	.085-.089″

CHOKE:—Choke valve mounted off-center and choke control connected through spring providing semi-automatic action. Poppet type relief valve mounted on choke valve to prevent over-choking.

FAST IDLE:—Throttle valve stopscrew stop-cam pivoted below throttle shaft and linked to choke lever so that throttle opened to fast idle position when choke valve in use. Linkage should not require adjustment.
NOTE—This Fast Idle not used on B6F1, B6G1 Plymouth Economy models.

SERVICING: Serviced in same manner as later models (see 1937-39 article following) except that Main Vent Tube can be removed for cleaning and inspection without disturbing Main Nozzle Rivet at lower end of nozzle well. To remove main vent tube, take out main vent tube plug and withdraw tube through upper end of main nozzle (air horn must be removed for access to nozzle).

CARTER (B&B) 1937-39 DOWNDRAFT

CHRYSLER R YAL C16 (1937)

Carter No.	Used On:	Carter No.	Used On:
E611	ENG. NOS. C16-1001 to 4073	E6K3	ENG. NOS. C16-11153 to 23802
E6K1	ENG. NOS. C16-4074 to 4318	E6K4	ENG. NOS. C16-23803 & UP
E6K2	ENG. NOS. C16-4319 to 11151		

DE SOTO MODEL S3 (1937)

Carter No.	Used On:	Carter No.	Used On:
E611	ENG. NOS. S3-1001 to 3967	E6K3	ENG. NOS. S3-11157 to 22087
E6K1	ENG. NOS. S3-3968 to 4289	E6K4	ENG. NOS. S3-22088 & UP
E6K2	ENG. NOS. S3-4290 to 11156		

PLYMOUTH STD. P3, DELUXE P4 (1937)

Carter No.	Used On:	Carter No.	Used On:
C6F1	ENG. NOS. P4-1001 to 10497	C6F5	ENG. NOS. P4-136612 & UP
C6F2	ENG. NOS. P4-10498 to 88610	C6H1	ALL MODELS—SEE NOTE
C6F3	ENG. NOS. P4-88611 to 96179	B6F1	ECON. MODELS—SEE NOTE
C6F4	ENG. NOS. P4-96180 to 136611	B6G1	ALL ECONOMY MODELS

ALL 1938 CAR MODELS

Carter No. — Used On:

E6M1—CHRYSLER ROYAL, MODEL C18 (1938)
DE SOTO SIX, MODEL S5 (1938)
E6L1—DE SOTO TAXICAB (1938)
C6J1—PLYMOUTH, DELUXE MODEL P6 (1938)
C6K1—PLYMOUTH, P6 (1938)—WITH CRANKCASE VENTILATOR
B6H1—PLYMOUTH, ECONOMY MODELS P5, P6 (1938)
B6J1—PLYMOUTH, ECONOMY MODELS WITH GOVERNOR (1938)

ALL 1939 CAR MODELS

E6N1—CHRYSLER ROYAL, MODEL C22 (1939)—FIRST CARS.
DE SOTO, MODEL S6 (1939)—FIRST CARS.
E6N2—CHRYSLER ROYAL, MODEL C22 (1939)—LATER CARS.
DE SOTO, MODEL S6 (1939)—LATER CARS.
D6A1—PLYMOUTH, MODELS P7, P8 (1939)—FIRST CARS.
D6C1—PLYMOUTH, P7, 8 (1939)—WITH AUTOMATIC CHOKE (FIRST)
D6A2—PLYMOUTH, MODELS P7, P8 (1939)—LATER CARS.
D6C2—PLYMOUTH, P7, 8 (1939)—WITH AUTOMATIC CHOKE (LATER)
B6K1, B6M1—PLYMOUTH, P7, 8 ECON. MODELS (1939)
439S, 590S—PLYMOUTH REPLACEMENT CARBURETOR—SEE NOTE

SPECIAL NOTES (1937):—Models B6G1, C6H1. These models used only on engines where crankcase is ventilated through carburetor.

Chrysler, De Soto, Plymouth Altitude Economy. Standard vacuum step-up springs (61-118, 61-146, 61-135) when used at altitudes over 3000' will actuate step-up valve at speeds of 45-55 MPH. To correct poor gasoline mileage or economy complaints for altitude operation, install new Vacuum Step-up Spring No. 61-134 (operates vacuum step-up valve at 66-68 MPH. car speed).

1937 Carburetor Changes:—Similar design. To bring earlier models up to performance standard of later models and to correct complaints of poor acceleration on part throttle at speeds of 10-15 M.P.H. make changes as follows:

E6K1, E6K2—Replace original Pump Check Needle 17-34 with new type 17-35 (this type has relief on stem). Replace Pump Plunger Assembly 64-40S with new type 64-41S (see installation instructions below).

C6F1, C6F2, C6F3—Replace original Pump Spring No. 61-144 with new type 61-145. Replace Pump Check Needle No. 17-34 with new type 17-35 (relieved stem). Replace Pump Plunger Assy. No. 64-40S with new 64-41S as follows:

To Remove Pump Plunger Assembly—Remove pump operating link (throttle lever connector), pull pump plunger assembly and connector link from carburetor. Move connector link to point where plunger assembly will rotate 90° on pump plunger stem, remove plunger assembly from link. Replace pump spring with new type (Plymouth only) before connecting new plunger assembly.

Metering Jets on All Models—Main metering jets on these models have been changed to secure better performance and fuel economy. See Carter B & B Jet Specification table following for latest jet calibrations.

SPECIAL NOTES (1938):—**Plymouth Econ. Models.** Approximately first 25 cars shipped with wrong type gasket under carburetor flange (1A-32 gasket with four small holes used instead of 1A-33 with four slots). This gasket will cause mileage complaints. Check gasket and install correct type.

Plymouth Models—If ragged performance noted at 20-30 M.P.H. or lack of power at 10 M.P.H. with ¾ throttle opening, make certain that engine is warming up properly and that water temperature is at least 160°F. Carburetor jet calibration set for maximum mileage and engine temperature is important.

SPECIAL NOTES (1939):—Models E6N2, D6A2. Same as types used on first 1939 cars except for the following parts which are used on the later models only: Body Flange Assembly 1-264S (E6N2), 1-262S (D6A2); Throttle Shaft & Arm Assembly 3-363S (E6N2), 3-362S (D6A2); Throttle Lever Assembly 4-343S (all), Throttle Shaft Dog 4A-79 (E6N2), 4A-78 (D6A2); and new Throttle Centering Spring Washer 136-55 (all).

Model 439S & 590S Replacement Carburetors—These carburetors replace original equipment carburetors as listed below. Adjustment directions and specifications for these models are given below and jet specifications will be found in Carter (B&B) Jet Specification Table.

439S—Replaces C6E1, C6E2, C6F1, C6F2, C6F3, C6F4, C6F5, C6H1, C6J1.

590S—Replaces B6F1, B6G1, B6H1, B6K1, B6N1, B6T1.

SPECIAL SERVICE NOTES (ALL MODELS): Chrysler & DeSoto Replacement Carburetor—See Carter (B&B) 1940-48 Downdraft Carburetor (following) for data on Model E6P5 Replacement Carburetor for Chrysler and DeSoto.

Carburetor Mounting Flange Gasket (All Models)—Step-up (economizer) vacuum piston vacuum passage terminates at carburetor mounting flange and special slotted type gasket must be used when mounting carburetor on manifold (vacuum passage must not be blanked off by gasket).

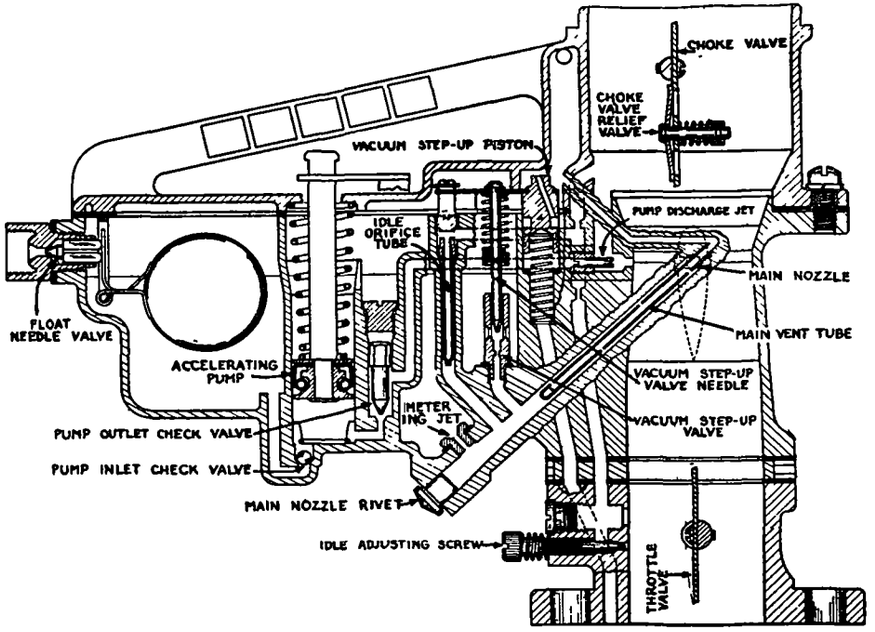

CAUTION—Use of plain or solid type gasket will shut off vacuum passage and cause excessive fuel consumption complaints.

All Models. Whenever body gasket No. 121-69 (between the main body casting and air horn and bowl cover casting) is removed for carburetor servicing, use new gasket when reassemblying. This is important to prevent air leaks at this point which affect economy (carburetors are 'balanced' type).

TYPE:—Plain tube, downdraft type with throttle operated accelerating pump and vacuum operated step-up device (economizer). Similar to previous design except Accelerating Pump, Main Vent, and Vacuum Step-up as follows:

Accelerating Pump (Except E6I1, B6F1, G1). Delayed action type. Pump has a single piston with leather seal (similar to design used on other Carter models). Pump stem is loose on pump connector and plunger is forced down by conical spring in body above plunger. Outlet check needle is now located in pump discharge channel (not incorporated in pump piston).

NOTE—See preceding article (1936) type) for data on accelerating pump used on B6F1, B6G1, E6I1 carburetors.

Main Vent—Main nozzle now air bled from bowl vent. Main vent tube is new design and is installed from bottom (rivet plug at lower end f nozzle under float bowl must be removed for access. See Servicing data.

Vacuum Step-up (Economizer)—Vacuum piston chamber l cated in main body casting with upper end opening in bowl vent and lower end connected

CONTINUED ON NEXT PAGE

CARTER (B&B) 1937-39 DOWNDRAFT (C nt.)

through channel to manifold at carburetor flange. Step-up jet or power orifice valve now needle type connected to vacuum piston plate so that needle is raised to open valve and permit fuel flow through power orifice.

1939 Models:—Float bowl is vented through balance tube cast in air horn to provide uniform fuel-air ratio regardless of air cleaner condition. The bowl cover seal is important with this type construction (see special service note above).

Fuel System (Idling):—Fuel taken from main nozzle well up through Idle Orifice tube (metered by restriction in tube) to cross-channel in which it is mixed with air admitted through idle air bleed opening in carburetor wall above venturi. From this point fuel mixture is taken down through channel to discharge ports at throttle edge.

Driving Range—Fuel for main nozzle metered by main metering jet in float bowl. Main nozzle air bled by main vent tube in upper end of nozzle which connects with air vent leading to bowl vent. Lower end of nozzle closed by rivet.

High Speed & Wide Open Throttle Operation—Vacuum piston, which is normally at lower end of stroke with piston spring compressed, will be forced up by spring when manifold vacuum falls off, raising the step-up rod or needle and opening the valve, permitting additional fuel to flow through the power orifice (step-up jet) to the main nozzle.

IDLING ADJUSTMENT:—Idle adjusting screw controls fuel discharge through lower idle port and should be turned in for leaner mixture, out for richer mixture. Approximate idle screw settings given in table below. Adjust only with engine warmed up so that choke valve is wide open and fast idle inoperative. Idle speed controlled by throttle lever stopscrew. See tune-up data on car model pages for complete tune-up data on each car model.

IDLE SETTING

Car Model	Carburetor	Idle Setting	Idle Speed
Chrysler, DeSoto	E6I1	¼-1 turn open	6 M.P.H.
DeSoto Taxicab	E6L1	½-1¼ turn open	6 M.P.H.
Chrysler, DeSoto	All Others	½-1¼ turn open	6 M.P.H.
Plymouth Econ	B6F1, H1, J1	¼-¾ turn open	6 M.P.H.
Plymouth	All Others	½-1¼ turn open	6 M.P.H.

ACCELERATING PUMP: New type. Pump discharge jet located in antechamber behind venturi but discharges directly through hole in venturi wall.

Adjustment—Three holes provided in throttle lever for pump connector link engagement. Inner hole provides minimum stroke, center hole medium stroke, outer hole max. stroke. See car model pages for recommended settings.

Pump Stroke Adjustment—To check, remove air horn and float bowl cover assembly, back off throttle stopscrew so that throttle valve closes tightly, connect pump connector link in correct hole of throttle lever (see table below), install Universal Pump Stroke Gauge T109-117S on bowl so that indicator lip n gauge rests on top of pump plunger shaft. Note gauge reading, then open throttle wide and again note gauge reading. Difference between two readings is pump stroke (in sixty-fourths of an inch) and should agree with table below. To adjust, bend horizontal portion of connector link.

ACCELERATING PUMP SETTING

Car Model	Carburetor	Pump Stroke	Pump Setting
Chrysler, DeSoto	E6M1, E6L1	④ 27/64"	Medium
Chrysler, DeSoto	E6N1, E6N2	26/64"	Medium
Plymouth	C6J1, C6K1	④ 25/64"	Medium
Plymouth	D6A1, A2; D6C1, C2	24/64"	Medium
Plymouth Econ	B6H1, J1, K1	④ 20/64"	Medium
Plymouth Rplmt	BBR1-439-S	24/64"	Medium

④—Use Gauge No. T-109-115.

PERFORMANCE:—Performance should be satisfactory if idling adjustment and accelerating pump setting correct. Main metering jet is non-adjustable type (jets are flow-tested and should not be gauged with wire drills). Leaner main metering jets available for special fuel or operating conditions such as high altitude but are not recommended for use at lower altitudes.

VACUUM STEP-UP ECONOMIZER:—Consists of vacuum piston operated step-up or by-pass valve controlling fuel flow through power orifice to main nozzle. No adjustment required but setting should be checked when carburetor dismantled to insure complete closing of valve when vacuum piston held down at lower end of stroke by manifold vacuum.

Step-up Valve Setting—With vacuum piston down at bottom of stroke, clearance between piston plate and head of step-up valve needle sh uld be 1/64-1/32" (needle is loose in plate and is spring-loaded by spring on stem under plate). Adjust by bending piston plate slightly.

Vacuum Step-Up Spring—When servicing carburetor, make certain that correct step-up spring installed as follows: N . 61-135 (E6N1, E6N2, B6K1, BBR1-439S), No. 61-146 (D6A1, D6A2), No. 61-134 (B6M1).

NOTE—No. 61-146 step-up spring used on first B6K1 & BBR1-439S carburetors.

FLOAT LEVEL:—To check float level, remove air horn (integral with float bowl cover), use special gauge No. 1522-B, placing gauge on top edge of bowl with lugs extending down toward float on either side of soldered seam. Press lip of float lever against needle valve, float should contact both lugs on gauge. Adjust by bending float lever lip slightly at point where it contacts valve needle (d not bend float arm). If gauge not used, top of float (not soldered seam) should be 5/64" plus or minus 1/64" (all models except B6M1), 5/32" plus or minus 1/64" (B6M1—do not use gauge) below top edge of bowl with needle valve seated.

Float Needle Valve & Seat. Furnished only in matched sets. Part No. 25-61S #42 drill size Intake Hole—all 1937 & first 1938 cars, Part No. 25-82S #44 drill size Intake Hole—Later 1938 & 1939 cars (except B6M1—25-77S).

CHOKE:—Choke valve offset type. Fitted with poppet type relief valve. See article in Carburetion Equipment Section for data on Sisson Automatic Choke control.

FAST IDLE:—Consists of a throttle shaft dog (throttle stopscrew stop) pivoted below throttle shaft and linked to choke valve lever so that throttle is opened to fast idle position when choke valve closed for starting. No adjustment

THROTTLE VALVE SETTING:—Throttle valve setting when fully closed is shown in table below. Idle Port Height is distance from top of upper idle port (ports are keyhole type) to top of throttle valve. Vacuum Port Height is distance from top of port (ports are slotted type) to top of throttle valve. Shims furnished .002" thick (No. 2-93), .005" (No. 2-94) for throttle valve adjustment.

THROTTLE VALVE SETTING

Car Model	Carburetor	Idle Port Height	Vacuum Port Height
Chrysler, DeSoto	E6I1; E6K1,2,3,4	.081-.085"	④ .010"
Chrysler, DeSoto	E6L1, E6M1	.088-.092"	.035-.041"
Chrysler, DeSoto	E6N1, E6N2	.088-.092"	.035-.041"
Plymouth	C6F1,2,3,4,5; C6H1	.118-.122"	④ .015"
Plymouth	C6J1, C6K1, 439S	.118-.122"	.035-.041"
Plymouth	B6F1, B6G1	.085-.089"	
Plymouth	D6A1, A2; D6C1, C2	.118-.122"	④.003-.009"
Plymouth	B6H1, J1, K1, M1	.096-.100"	.035-.041"

④—From lower edge of port to top edge of throttle valve

SERVICING:—Disassembly. Disconnect fast idle rod, take out air horn attaching screws, lift off air horn and float bowl cover (upper casting). Take out float pin spring and pin, lift out float, remove float needle valve. Disconnect pump connector link at throttle lever, push out pump plunger assembly. Take out vacuum step-up piston assembly (piston, plate, and step-up valve needle). Remove step-up jet being extremely careful not to distort jet which may change power orifice jet size. Remove idle orifice tube. Remove main metering jet. Main vent tube cannot be removed until blank rivet at lower end of main nozzle is removed.

Servicing. Wash all parts except cork gaskets in gasoline. Blow out all jets and channels with compressed air. Replace all worn or damaged parts.

Assembly. Use new gaskets. Reverse disassembly directions above. Use extreme care when tightening step-up jet not to use excessive pressure which may distort power orifice jet size. Check vacuum step-up setting (see Economizer section above), check float level, adjust carburetor when installed on engine.

Main Nozzle Servicing:—Use tool No. T-109-42 to remove rivet at lower end of main nozzle, No. T-109-70 to remove & install Vent Tube (vent tube must be removed and installed from lower end of nozzle). Use new rivet.

Balance Tube—When servicing carburetor make certain that balance tube in air horn is open and clean. Always use new gasket between body casting and air horn to insure air tight joint at bowl cover. Any air leak at bowl cover will upset 'balance' feature and affect fuel economy.

Vacuum Step-up Passage—Passage opens on carburetor mounting flange and special gasket (with slots which register with this vacuum passage hole) must be used when installing carburetor on manifold. Shutting off f this vacuum passage hole will cause excessive fuel consumption.

TROUBLE SHOOTING:—Poor Idling Performance. Remove idle adjusting screw and idle hole plug, remove Idle Orifice Tube, blow out tube and channels in body with compressed air. If carburetor loads up, check float level.

Acceleration Unsatisfactory. Remove pump jet and clean with compressed air, or replace jet. Disassemble pump and check for damaged or worn plunger leather, sediment or corrosion in cylinder, clogged inlet ball check valve. Use care in installing pump plunger not to damage plunger leather. Check step-up jet needle to see that it is clean and straight and moves freely in guide. Bent needle or one with eccentric point will stick and not open properly.

Excessive Richness or Poor Gas Mileage. Check Vacuum step-up setting and see that needle seats in valve to prevent fuel flow through power orifice at part-throttle. Richness above 50 MPH. may be caused by clogged main vent tube.

CARTER (B&B) 1940-48 DOWNDRAFT

	Carter No.
CHRYSLER SIX	
1936-41 Replacement Carburetor	E6P5
1940 C25	(First) ①E6S1, S1*, (Later) ①E6S2
1941 C28 (Synchro-mesh Trans.)	①E6S2, S3, E6W1
1941 C28 (Synchro-mesh & Fluid Drive)	③EA1
1941 First C28 (Vacamatic & Fluid Drive)	②E6T1, E6T2
1941 Later C28 (Vacamatic & Fluid Drive)	②E6U1, E6U2
1942 C34 (Synchro-mesh Trans.)	EE1
1942 C34 (Synchro-mesh & Fluid Drive)	EF1
1942 C34 (Vacamatic & Fluid Drive)	⑤EG1
1946-48 C38 (Synchro-mesh Trans.)	EU1, EX1
1946-48 C38 (Hydr. Trans. & Fluid Drive)	EV1
CHRYSLER EIGHT	
1946-48 C39 & C40 (Hydr. Trans. & Fluid Drive) Some Cars	E7A1
DE S TO	
1936-41 Replacement Carburetor	E6P5
1940 S7	(First) ④E6N2, (Later) ④E6N3
1941 S8 Eng. No. 1001 to 3959 (Synchro-mesh)	④E6N3
1941 S8 Eng. No. 3960 Up (Synchro-mesh)	①E6S2, E6S3
1941 S8 (Synchro-mesh & Fluid Drive)	EB1
1941 S8 Eng. No. 1001 to 4199 (Simpl. & Fluid Drive)	②E6V1
1941 S8 Eng. No. 4200 Up (Simpl. & Fluid Drive)	②E6U1, E6U2
1942 S10 (Synchro-mesh Trans.)	EE1
1942 S10 (Synchro-mesh & Fluid Drive)	EF1
1942 S10 (Simplimatic & Fluid Drive)	⑤EG1
1946-48 S11 (Synchro-mesh Trans.)	EU1, EX1
1946-48 S11 (Tip-Toe Trans. & Fluid Drive)	EV1
1946-48 S11 Taxicab	EL1
DODGE	
1946-48 D24 Some Cars	D6J1
NASH	
1941-42 "600"	513S
PLYMOUTH	
1940-41	(Std.) D6A2, (Auto. Choke) D6C2
1940-42 Economy Models	B6P1, B6R1, B6V1, B6W1
1942-48	D6G1
1942-48 Economy Models	B6V1, B6W1

①—Superseded by Replacement Carburetor Model E6W1R.
②—Superseded by Replacement Carburetor Model E6U2R.
③—Superseded by Replacement Carburetor Model EB1R.
④—Superseded by Replacement Carburetor Model E6P5.
⑤—Superseded by Carburetor Model EG2.

NOTE: Chrysler Eight C39 & C40 (1946-48)—Stromberg Model AAVS-2 carburetor also used. See Stromberg Model AAV-2 & AAVS-2 article for complete data.

Dodge Model D24 (1946-48)—Stromberg Models BXV-3 and BXVD-3 carburetors also used on these cars. See Stromberg Model BXV-3, BXVD-3 article for complete data on these models.

Plymouth Model P15 (1946-48)—Stromberg Model BXV-3 carburetor also used on these cars. See Stromberg Model BXV-3, BXVD-3 article for data.

►NOTES, CAUTIONS, & CHANGES

►**Chrysler (1940) E6S1 & E6S1* Carburetor Production Changes:** E6S1 used on first cars may be brought up to later E6S2 standards by installing new Metering Jet No. 159-89S (replaces 159-87S), and Idle Orifice Tube No. 123-39S (replaces 123-31S). Both of these parts must be installed together and this special Idle Orifice Tube 123-39S should not be used on E6S2 carburetors (use 123-31S). **E6S1* Note**—Carburetors on which the above changes have been made at the factory are marked E6S1* on bowl cover for identification.

Chrysler Jet Changes—Main metering jet calibration has been changed (different parts used on E6S1, E6S1* and E6S2). See Carter (B&B) Jet Specification Table for complete data.

De Soto Jet Changes—Main metering jet calibration has been changed. See Carter (B&B) Jet Specification Table for complete data.

►**Chrysler & DeSoto Carburetor Throttle Sticking Open Complaint:** On Chrysler Models E6T1, E6T2, E6U1, E6U2, E6Y1, E6Y2, E6Z1, E6Z2, EA1, EC1, and DeSoto Carburetors Models E6U1, E6U2, E6V1, E6Y1, E6Y2, E6Z1, E6Z2, EB1, ED1 with Slow Closing Throttle device, cocking of dashpot lifter link in guide in carburetor body may cause throttle to stick open and prevent engine from returning to slow idle speed. Correct this complaint by drilling a #52 hole 3/32" below top edge of throttle shaft arm and 1⅛" back from outer end of arm which engages link, drill a second #52 hole in lower end of lifter link directly below notch which engages throttle arm and hook ends of special spring, No. 61-119, in these holes so that lifter link is positively held against throttle shaft arm. This will prevent side thrust of throttle arm causing lifter link to bind in guide.

►**Chrysler (1941) E6T2, E6U2 & DeSoto (1941) E6U2 Carburetor Change to Improve Dash Pot Action**—On these models, first type No. 49-134S Dashpot Valve Plunger Rod and Plate Assembly and No. 149-68S Dashpot Valve Assembly was superseded by No. 149-98U Dashpot Valve Cage Assembly (consisting of parts Nos. 49-158S and 149-73S). NOTE—This No. 149-98U assembly supersedes No. 149-74U Dashpot Check Valve and Plunger Rod unit.

►**Chrysler (1941) E6T1, E6T2, E6U1, E6U2 Carburetors & DeSoto (1941) E6U1, E6U2, E6V1 Change to Improve Kick-down Switch Action**—On these carburetors, first type No. 52-24 Switch Pushrod Sleeve & Contact, No. 61-247 Switch Pushrod Sleeve Spring, No. 61-248 Switch Pushrod Spring, and No. 115-74 Switch Pushrod should be removed and discarded. New design parts furnished as unit package, No. 115-82U, should be installed in their place to improve kick-down switch action. Refer to Servicing section below for directions.

►**Chrysler 6 & 8 and DeSoto EG1, EV1, E7A1 Carburetor Change to Improve Dashpot Action:** Original Dashpot Valve Cage Assembly, Part No. 149-73S, changed to new type, Part No. 149-102S.

►**Carburetor Body Gasket Installation Caution (All Models):** Whenever this gasket (between main body and air horn) is removed for carburetor servicing, use new gasket when reassembling. This is important to prevent air leaks at this point which will affect carburetor economy (carburetors are 'balanced' type with bowl vented through air horn. NOTE—This body gasket is Part No. 121-69—513S, B6P1, B6R1, B6T1, B6U1, B6V1, B6W1, D6A2, D6C2, D6G1, E6N3, E6P5, E6S2, E6S3, E6W1, EE1, EL1, EX1.

No. 121-88—E6T1, E6U1, E6V1.

No. 121-90—D6J1, E6T2, E6U2, E7A1, EA1. EB1, EF1, EG1, EV1.

►**Carburetor Mounting Flange Gasket Cushion (All Models):** Step-up jet vacuum piston vacuum passage terminates at carburetor mounting flange and special slotted type gasket must be used when mounting carburetor on manifold (vacuum passage must not be blanked off by gasket).

CAUTION—Use of plain or solid type gasket will shut off vacuum passage and cause excessive fuel consumption complaints.

►**Vacuum Step-up Spring Change for High Altitudes (1940 & Previous):** For operation at altitudes greater than 5000 feet, vacuum step-up spring should be changed to Part No. 61-134 at same time leaner metering jets are installed. This spring used as standard equipment on 1941 models and no change is required

►**Engine Stalling while Idling Correction**—Check idle setting (see below). Check slow-closing throttle adjustment (first type only) as directed in article on Chrysler Slow-closing Throttle in Carburetion Equipment Section. Remove Idle Orifice Tube and Plug Assembly and clean tube and passages with compressed air. Remove idle adjusting screw and blow out idle ports with air.

►**Carburetor Loading Up Complaints**—Check and adjust float level.

►**Engine Stalling or Stumbling when Throttle Opened**—May be caused by accelerating pump leakage (worn or wrinkled pump leather, inlet or outlet ball check valves not seating). To check pump for leakage, remove bowl cover, float, pump outlet ball check valve plug, and pump assembly. Fill pump cylinder with gasoline and re-install pump plunger, taking care not to wrinkle or damage pump leather. Hold outlet ball check valve firmly on seat (use brass rod inserted through valve plug hole), press down on pump plunger. Leakage will be evidenced by gasoline at inlet or outlet ball check valves or above pump plunger. If pump plunger can be pushed all the way down and all gasoline discharged from the cylinder, replace pump plunger or reseat ball check valves by tapping on ball with a brass rod. Install new ball (original ball will be flattened by reseating operation) and repeat check. Repeat reseating operation if necessary. remove pump jet and clean with compressed air or install new jet.

CAUTION—Ball check valves are relatively soft (inlet ball Monel, outlet ball Stainless Steel) and any ball used in reseating operation should be replaced for service.

►**Poor Gasoline Mileage (Economy) Complaints**—Check float level. See that the main metering jet is correct type and not worn (special lean metering jets available for special service such as high altitudes or high test fuel). See that step-up jet tight on seat and not leaking, make certain that step-up valve rod and piston clean and not binding or sticking, check step-up piston spring (replace spring if weak or damaged). Check for clogged main vent tube (will cause excessive richness and poor gasoline mileage at speeds above 50 MPH.). See Main Vent Tube servicing data above.

CONTINUED ON NEXT PAGE

CARTER (B&B) 1940-48 DOWNDRAFT (C nt.)

DESCRIPTION

DESCRIPTION: Same design as previous models except for addition of Kick-down Switch and Slow-closing Throttle Dashpot (models used on cars with Fluid Drive, or Fluid Drive and automatic transmission.

SLOW-CLOSING THROTTLE (DASHPOT): On carburetors used on cars with Fluid Drive or automatic transmissions (Vacamatic, Simplimatic, Tip-toe Shift, or Hydraulically controlled type). Two types of dashpot used as follows:

Models E6T1, E6U1, E6V1, EA1, EB1, D6J1—Dashpot is mechanical type and is adjustable with adjusting screw located on bowl cover directly above dashpot plunger. See Chrysler, DeSoto, Dodge Slow-Closing Throttle in Carburetion Equipment Section for complete data on this unit.

Models E6T2, E6U2, EV1, E7A1—Dashpot is not adjustable (no adjusting screw) and has solenoid control so that it is operative when throttle closed at car speeds below 8 MPH (First & Second Gear), 15 MPH (Third & Fourth Gear) *See "Chrysler, DeSoto, Dodge Slow-closing Throttle" in Carburetion Equipment Section.*

THROTTLE KICK-DOWN SWITCH: On carburetors used on cars with automatic transmissions (Vacamatic, Simplimatic, Tip-Toe Shift, or Hydraulically controlled types).
See "Chrysler & DeSoto Kick-down Switch" in Carburetion Equipment Section.

ADJUSTMENT & OVERHAUL

IDLING ADJUSTMENT: Idle adjusting screw controls fuel discharge through lower idle port and should be turned in for leaner mixture, out for richer mixture. Approximate idle screw settings given in table below. Adjust only with engine warmed up so that choke valve is wide open and fast idle inoperative. Idle speed controlled by throttle lever stopscrew. See tune-up data on car model pages for complete tune-up data on each car model.

IDLE SETTING

Car Model	Carburetor	Idle Setting	Idle Speed
Chrysler 6①	E6S1, S2, S3; E6W1	½-1½ turns open	6 MPH. Min.
Chrysler 6①	EA1, EE1, EF1	½-1½ turns open	6 MPH. Min.
Chrysler 6②	E6T1, T2; E6U1, U2	½-1½ turns open	4 MPH. ③
Chrysler 6②	EG1	½-1½ turns open	5 MPH. Max.
Chrysler 6①	EX1	¾-1¼ turns open	6 MPH. Min.
Chrysler 6④	EV1	¾-1¼ turns open	450-475 RPM.
Chrysler 6 Repl. Carb.	E6P5	½-1½ turns open	6 MPH. Min.
Chrysler 8④	E7A1	¾-1¼ turns open	450-475 RPM.
Desoto①	E6N2, N3; E6S2, S3	½-1½ turns open	6 MPH. Min.
DeSoto①	EB1, EE1, EF1	½-1½ turns open	6 MPH. Min.
DeSoto②	E6V1, E6U1, U2	½-1½ turns open	4 MPH. ③
DeSoto②	EG1	½-1½ turns open	5 MPH. Max.
DeSoto①	EX1, EL1	¾-1¼ turns open	6 MPH. Min.
DeSoto④	EV1	¾-1¼ turns open	450-475 RPM.
DeSoto Repl. Carb.	E6P5	½-1½ turns open	6 MPH. Min.
Dodge	D6J1	½-1½ turns open	6 MPH.
Nash "600"	513S	½-1¼ turns open	6 MPH.
Plymouth	D6A2, D6C2, D6G1	½-1¼ turns open	6 MPH.
Plymouth Econ.	B6P1, R1, T1, U1, W1	½-1½ turns open	6 MPH.

①—Cars with Standard Transmission. ③—Or 450 RPM. maximum.
②—Cars with Fluid Drive and Vacamatic or Simplimatic Transmission.
④—Cars with Hydraulically Controlled Transmission & Fluid Drive.

ACCELERATING PUMP: Delayed action type (spring operated pump plunger). Same design as used on previous Carter (B&B) models.
Seasonal Adjustment—Three holes provided in throttle lever for connector link engagement. Inner hole provides minimum stroke, center hole medium stroke, outer hole max. stroke. See car model pages for recommended settings.

Pump Stroke Adjustment—To check, remove air horn and float bowl cover assembly, back off throttle stopscrew so that throttle valve closes tightly, connect pump connector link in correct hole of throttle lever (see table below), install Universal Pump Stroke Gauge T109-117S on bowl so that indicator lip on gauge rests on top of pump plunger shaft. Note gauge reading, then open throttle wide and again note gauge reading. Difference between two readings is pump stroke (in sixty-fourths of an inch) and should agree with table below. To adjust, bend horizontal portion of pump connector link.

ACCELERATING PUMP SETTING

Car Model	Carburetor	Pump Stroke	Pump Setting
Chrysler 6	All Models	26/64"	Medium Stroke
Chrysler 8	E7A1	26/64"	Medium Stroke
DeSoto	All Models	26/64"	Medium Stroke
Dodge	D6J1	24/64"	Medium Stroke
Nash "600"	513S	30/64"	Long Stroke
Plymouth	D6A2, D6C2, D6G1	24/64"	Medium Stroke
Plymouth Econ.	B6P1, B6R1, B6U1	19/64"	Medium Stroke
Plymouth Econ.	B6T1, B6V1, B6W1	25/64"	Medium Stroke

VACUUM STEP-UP (ECONOMIZER): No adjustment required but setting should be checked when carburetor reassembled after servicing to insure step-up valve closing. To check, push vacuum piston down in cylinder to end of stroke, check clearance between piston plate and head of step-up valve needle stem. Clearance should be 1/64-1/32". To adjust, bend piston plate slightly.

Vacuum Step-Up Spring—When servicing carburetor, make certain correct type Step-Up Spring installed as follows:

Part No. — **Used On:**

61-135—513-S,D6A2,D6C2,D6G1,E6N2,E6N3,E6S1,E6S1*,E6S2,E6S3,E6W1,EE-1. E6P5, EL1, EX1, EG1 & EV1 (superseding 61-134).
61-134—B6P1, B6R1, B6T1, B6U1, B6V1, B6W1, D6J1, E6T1, E6T2, E6U1, E6U2, E6V1, EA1, EB1, EF1. NOTE—EG1, EV1, E7A1 changed as noted.
61-146—E7A1 (Supersedes No. 61-134 used on first carburetors).

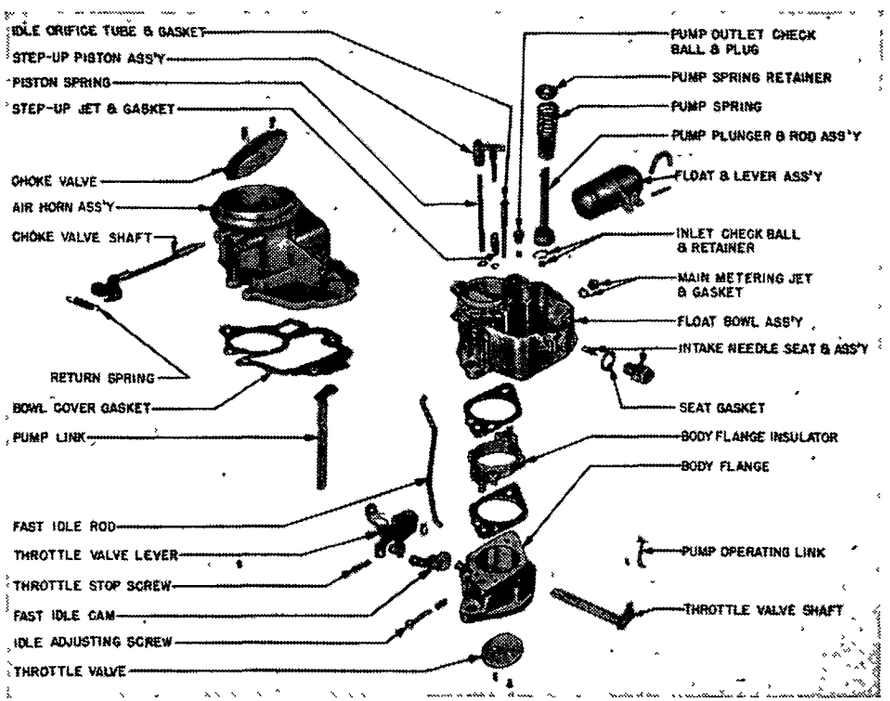

FLOAT LEVEL: To check float level, remove air horn (integral with float bowl cover), use special gauge (see Note), placing gauge on top edge of bowl with lugs extending down toward float on either side of soldered seam. Press lip of float lever against needle valve, float should contact both lugs on gauge. Adjust by bending float lever lip slightly at point where it contacts valve needle (do not bend float arm. If gauge not used, measure from top edge of bowl to top of float (not soldered seam). This measurement should be 5/64" for all models except those listed in table below. Float level figures are plus or minus 1/64".

CONTINUED ON NEXT PAGE

CARTER (B&B) 1940-48 DOWNDRAFT (C nt.)

FLOAT LEVEL SETTING

Car Model	Carburetor	Float Level	Checking Gauge
Chrysler 6 ('41-42)	EA1, EF1, EG1	1/16"	T109-49
Chrysler 6	EV1	1/16"	T109-49
Chrysler 8	E7A1	1/16"	T109-49
DeSoto ('41-42)	EB1, EF1, EG1	1/16"	T109-49
DeSoto	EV1	1/16"	T109-49
Plymouth Econ.	B6T1	5/32"	T109-154
All Others		5/64"	T109-50

Checking Gauge Note—Each gauge used for several different setting as follows: No. T109-49 (1/16" and 1/32"), No. T109-50 (5/64" and 7/64"). Make certain that correct side of gauge is used when checking float level.

Float Needle Valve and Seat—Triangular type. Furnished only in matched sets as follows:

FLOAT INLET VALVE

Car Model	Carburetor	Part No.	Intake Hole Size
Chrysler 6 ('40-41)	E6S1, S1*, S2, S3, U1, U2	25-82S	#44
Chrysler 6 ('41-42)	E6T1, T2, W1; EA1, EE1, EF1, EG1	25-102S	#44
Chrysler 6	EX1, EV1	25-82S	#44
Chrysler 6 Repl. Carb.	E6P5	25-82S	#44
Chrysler 8	E7A1	25-63S①	#38
DeSoto ('40-41)	E6N2, N3, S2, S3, U1, U2, V1; EB1	25-82S	#44
DeSoto (1942)	EE1, EF1, EG1	25-102S	#44
DeSoto	EX1, EV1	25-82S	#44
DeSoto Taxicab ('46-47)	EL1	25-102S	#44
DeSoto Repl. Carb.	E6P5	25-82S	#44
Dodge	D6J1	25-82S	#44
Nash "600"	513S	25-82S	#44
Plymouth	D6A2, D6C2, D6G1	25-82S	#44
Plymouth Econ.	B6P1, B6R1, B6U1, B6W1	25-77S	#48
Plymouth Econ.	B6T1, B6V1	25-104S	#48

①—Supersedes No. 25-82S (#44) used on first carburetors.

THROTTLE VALVE SETTING: When installing valves, insert attaching screws loosely, back throttle stopscrew off, tap valves lightly to centralize in bore, then fasten screws securely.

Setting—With throttle stopscrew backed off so that valve tightly closed, distance from top edge of valve to top of upper idle port should agree with 'Idle Port' figure in table below, and distance from top of valve to top of vacuum spark port should agree with 'Vacuum Spark Port' figure (except as noted).

THROTTLE VALVE SETTING

Car Model	Carburetor	Idle Port Height	Vacuum Spark Port
Chrysler 6 ('40-42)	All Models	.088-.092"	①.035-.041"
Chrysler 6	EX1, EV1	.088-.092"	①.052-.058"
Chrysler 6 Repl. Carb.	E6P5	.088-.092"	①.052-.058"
Chrysler 8	E7A1	.088-.092"	①.052-.058"
DeSoto ('40-42)	All Models	.088-.092"	①.035-.041"
De Soto	EX1, EV1	.088-.092"	①.052-.058"
DeSoto Repl. Carb.	E6P5	.088-.092"	①.052-.058"
Dodge	D6J1	.118-.122"	②.003-.009"
Nash "600"	513S	.118-.122"	②.022-.028"
Plymouth	D6A2, D6C2, D6G1	.118-.122"	②.003-.009"
Plymouth Econ.	B6P1, B6R1, B6T1	.130-.134"	①.035-.041"
Plymouth Econ.	B6U1, B6V1, B6W1	.096-.100"	①.035-.041"

①—Top of port above top of valve. ②—Bottom of port above top of valve.

CHOKE: Offset type with poppet relief valve. Choke control on Plymouth models (without Automatic Choke) is semi-automatic (spring-loaded). Sisson Automatic choke Std. on Chrysler & De Soto, optional on Plymouth.

Refer to Carburetion Equipment Index for 'Sisson Automatic Choke' for data.

FAST IDLE: Consists of throttle shaft dog (throttle lever stop) pivoted below throttle shaft and linked to choke valve lever so that throttle opened to fast idle position when choke valve closed for starting. No adjustments required.

CARBURETOR OVERHAUL: *CAUTION—When disassembling carburetor, note the following important points:*

►**Throttle Kick-down Switch & Slow-Closing Throttle (Dashpot) Note**—On carburetors fitted with these units, they are disassembled as part of carburetor disassembly (following). Disregard all data pertaining to these units on other models on which they are not used. CAUTION—If kick-down switch spring (located within piston) is replaced, make certain that any washers located within piston are not disturbed. If piston and spring are replaced, washers should be discarded (do not use washers with new piston and spring).

Disassembly:—Take out throttle lever screw, remove throttle lever. Disconnect fast idle connector rod, take out attaching screws and remove air horn and float bowl cover assembly, remove float and lever assembly, float pin and retainer, remove body gasket. Remove idle orifice tube and plug assembly, step-up piston plate and rod assembly, step-up piston spring and gasket at bottom of cylinder, remove dashpot plunger and link and dashpot solenoid (on models so equipped). Remove pump connector link, remove pump plunger and rod assembly, pump spring, and pump link. Remove step-up jet and gasket assembly. Remove pump check plug and discharge check ball. Remove main metering jet and gasket assembly. Remove pump retainer ring and intake check ball. Take out attaching screws and remove body flange assembly and insulator. Remove pump jet rivet plug and pump jet. Remove main vent tube rivet plug, remove main vent tube (use tool T109-70). Remove float intake needle seat and gasket. Remove idle adjusting screw and spring, and idle port rivet plug. Remove throttle valve, throttle shaft and arm assembly, choke tube bracket assembly, choke valve, choke valve shaft and lever assembly. On models with kick-down switch, take out screws in endplate, withdraw plunger and springs and terminal block, remove switch contact piston and spring (CAUTION—Use care not to lose washers within piston and make certain that these washers replaced when switch reassembled unless new piston and spring installed when washers should be discarded).

Servicing:—Wash all parts except cork gaskets in clean gasoline. Blow out all jets and channels with compressed air (do not use wire drills to clean jets—dissolve gum deposits with denatured alcohol). Examine all parts for damage and wear, replace worn parts, use all new gaskets when reassembling carburetor.

Assembly:—Install all parts in reverse order from disassembly directions given above. Group all parts of intake system (float, intake valve, etc.), low speed system, high speed system, accelerating pump, kick-down switch, slow-closing throttle, choke system, to facilitate assembly and insure all parts being replaced in correct order. Adjust idle setting, float level, accelerating pump strok and seasonal adjustment, slow-closing throttle adjustment (first type only), as directed above and note following special instructions for reassembly:

Balance Tube—When servicing carburetor make certain that balance tube in air horn is open and clean. Always use new gasket between body casting and air horn to insure air tight joint at bowl cover. Any air leak at bowl cover will upset 'balance' feature and affect fuel economy.

Vacuum Step-up Passage—Passage opens on carburetor mounting flange and special gasket (with slots which register with this vacuum passage hole) must be used when installing carburetor on manifold. Shutting off of this vacuum passage hole will cause excessive fuel consumption.

Clogged Main Vent Tube—Will cause excessive richness at speeds above 50 MPH. To replace tube, use tool T109-43 to remove rivet plug beneath float bowl then remove old vent tube with Tool 109-70, use this tool to install new vent tube on all models except Plymouth Economy Carburetors (see Note below), make certain that tube seats tightly and install new rivet plug.

CAUTION—Always install new Vent Tube and Rivet Plug when removed.

Plymouth Economy Carburetor (B6P1, B6R1, B6T1, B6U1, B6V1, B6W1) Note—Use tool T109-151 to install these vent tubes (special longer type).

Throttle Valve—Valves should be installed with trademark 'C' facing down and toward idle port. Install valve screws loosely, close valve completely and tap lightly to centralize valve in bore, then tighten screws securely. Check throttle valve position as directed above.

Choke Valve—Centralize choke valve, in same manner as throttle valve (above) before tightening attaching screws.

SERVICE PARTS: Gasket Sets and Repair Packages furnished as follows:

Gasket Sets—No. 136 D6A2, D6C2, D6G1; No. 137 E6N2, E6N3, E6P5, E6S1, E6S2, E6S3, E6W1, E6W1R, EE1, EX1; No. 150A 513S; No. 163 E6T1, E6U1, E6V1; N . 164 E6T2, E6U2, E6U2R, E7A1, EG1, EV1; No. 187 D6J1.

Repair Packages (with Std. Metering Jet)—N . 1014E D6A2, D6C2; No. 1076A E6S1, E6S1*; No. 1077B E6S2, E6S3; No. 1307A 513S; No. 1308A E6N2, E6N3, E6P5; No. 1309A—E6T1, E6T2, EG1, EG2; No. 1310B—E6U1, E6U2, E6U2R; No. 1311C—E6W1, EE1, EL1; No. 1323C—D6G1; No. 1367C—EV1, EV2; No. 1368—D6J1; No. 1384—E7A1.

CARTER (B&B) UPDRAFT TYPES

	Carter No.
CHEVROLET CAB-OVER-ENGINE TRUCK	
1937 Export Truck	376S
1938-39	412S
1939-40	447S
1941	489S
1942-48	517S, 699S
CHEVROLET DUBL-DUTI TRUCK	
1940	447S
1941	489S
1942	517S
1947-48	517S, 699S

►NOTES, CAUTIONS, & CHANGES

►**Carburetor Flange Gasket Installation Caution**—When installing the carburetor on engine, use special slotted flange gasket 1A-41 and make certain that vacuum power cylinder port in carburetor mounting flange opens into this slot. If this port covered, mixture will be rich and gasoline consumption high.

►**1942 Carburetor (517S) Installation on 1941 Truck Models**—This new model 517-S carburetor (Chevrolet No. 839662) used on new Intake Manifold Assembly (Chevrolet No. 839687) on late 1941 Trucks for greater induction capacity (carburetor has 1/16" larger venturi and throat, manifold has larger diameter passages throughout than earlier units). This new carburetor may be installed on early trucks with first type No. 596266 Manifold, but first type carburetor (Carter 489-S—Chevrolet No. 839515) should not be used on trucks with new manifold (will cause marked decrease in power).

►**Engine Stalling or Unsatisfactory Idling Complaints**—Check idle adjusting screw and idle speed setting (below). If engine stalls, remove idle passage tube idle tube, and idle adjusting screw; blow out passages with air.

►**Acceleration Unsatisfactory**—Check pump setting. Remove the main metering jet, pump jet, and check valve assemblies and clean with compressed air. See that check valves are tight in carburetor casting. Examine pump spring.

►**Carburetor Loading Up Correction**—Check and adjust float level.

►**Excessive Fuel Consumption (Poor Gas Mileage) Complaints**—See that vacuum piston operates freely and does not stick in cylinder. Examine vacuum piston spring (replace spring if weak or damaged). Make certain that correct flange gasket used at manifold, that vacuum port opens into gasket slot and that vacuum passage is clean. See that step-up valve is tight in carburetor casting and seats properly (disassemble and clean valve and power jet assembly). Check vacuum piston pushrod for free operation. Check jet calibration.

►**ACCESS TO CARBURETOR ON DUBL-DUTI MODELS (For Adjustment or Removal)**. Remove attaching screws in toepan, disconnect stoplight switch wiring, disconnect accelerator pedal rod from throttle control rod, then remove toepan.

DESCRIPTION

DESCRIPTION: Plain tube type with throttle operated accelerating pump and vacuum operated 'step-up' or economizer. Fuel for main nozzle is metered by main metering jet in carburetor body casting (see illustration), and by power orifice or step-up jet (wide open throttle or high speed). Idling adjustment and accelerating pump seasonal adjustments are provided.

ADJUSTMENT & OVERHAUL

IDLE ADJUSTMENT: Idle adjusting screw controls fuel discharge from upper (closed throttle) idle discharge port and should be turned in for leaner mixture, out for richer mixture. Approximate setting is ½-1½ turns of the screw out from inner seated position and should be adjusted only with engine warmed up and idling at hot or slow idle speed with choke valve wide open. Idle speed controlled by throttle lever stopscrew and should be set for 450-500 RPM. Idle speed. See tune-up data on car model pages for complete instructions.

IDLE SETTING

Idle Screw Setting—½-1½ turns open (turn out for richer mixture).
Idle Speed—450-500 RPM. with engine at operating temperature.

PERFORMANCE: Should be satisfactory if idling adjustment and accelerating pump setting correct. Main metering jet is fixed type and special Lean or Rich jets furnished for special conditions. See Carter BB Jet Specifications.

ACCELERATING PUMP: Low pressure, delayed action type. Operated by throttle lever. Pump piston is positioned on pump plunger stem by a spring which is compressed when throttle is closed and pump piston is drawn upward in cylinder, the cylinder then being filled by fuel from the bowl flowing through the pump intake check valve. When throttle is opened for acceleration, spring forces piston down on stem, discharging fuel through main nozzle.

ACCELERATING PUMP SETTING

Pump Stroke—Short stroke (9/16") secured with connecting screw in holes in pump link and throttle lever nearest throttle shaft, long stroke (1") with screw in holes farthest from shaft.

Adjustment—Two holes provided in throttle lever and pump link to provide seasonal adjustment. Inner Hole (Summer) provides minimum discharge and Outer Hole (Winter) maximum. See car model page for settings.

VACUUM STEP-UP (ECONOMIZER): Consists of a step-up valve assembly controlled by a vacuum piston. Vacuum piston is normally held at top of stroke by manifold vacuum so that valve is closed. At high speed or when engine operated with wide open throttle with reduced manifold vacuum, spring above piston forces piston and push rod down so that step-up valve is opened and additional fuel is allowed through the valve directly to the main nozzle. This fuel is metered by power orifice (step-up jet) and not by main metering jet.
Vacuum Step-up Spring—Part No. 61-60 (489-S), No. 61-61 (all others).

FLOAT LEVEL: To check float level, remove bowl cover and gasket, use checking gauge or measure from straightedge across top of bowl vertically down to top of float with needle valve seated. To adjust float level, bend float lever lip slightly (do not bend float lever).

FLOAT LEVEL SETTING

Car Model	Carburetor	Float Level	Checking Gauge
Chevrolet ('37)	376S	Flush to 1/32"	
Chevrolet ('38 On)	447S, 489S, 517S, 669S	1/32" to 1/16"	T109-49

Needle Valve & Seat—Part No. 25-44S. Triangular type. Furnished as matched set only. Intake hole size #38.

THROTTLE VALVE SETTING: When installing valves, insert attaching screws loosely, back throttle stopscrew off so that valve closes tightly, tap valve lightly to centralize it in bore, then tighten screws securely.

Setting—With throttle valve tightly closed, distance from lower edge of throttle valve to top of idle port and to top of vacuum spark port should be as shown in table below. NOTE—Throttle valve is notched at idle port.

THROTTLE VALVE SETTING

Model	Carburetor	①Idle Port	②Vacuum Spark Port
Chevrolet ('38-39)	376S, 412S	.005-.009"	.011-.015"
Chevrolet ('39 On)	447S, 489S, 517S, 699S	.005-.009"	.000-.004"

①—Top of lower port below valve. ②—Top of port below valve.

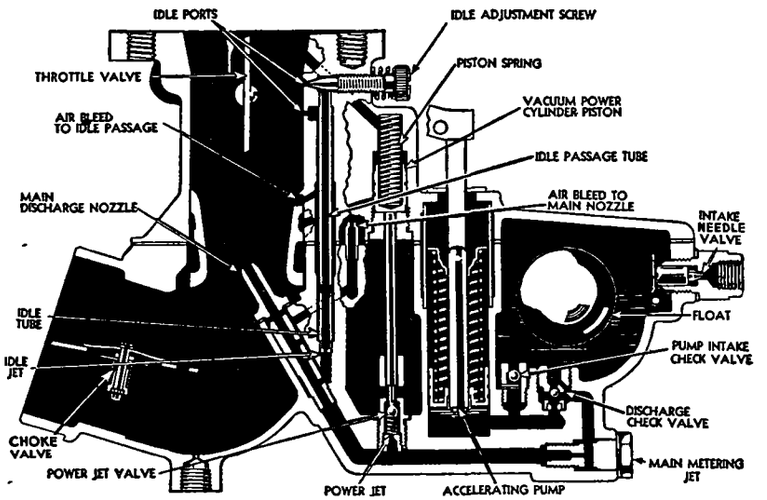

CHOKE: Choke valve is butterfly type with poppet type relief valve. Check choke linkage and see that choke valve is closed with choke button on instrument panel pulled out and fully open when button pushed in.

DISASSEMBLY OF CARBURETOR: Take out screws and remove bowl cover and accelerating pump assembly. Compress pump spring, take out connector pin, disassemble and remove pump spring, retaining spring, and piston from pump rod and plate assembly. Take out vacuum piston plug, remove vacuum piston and spring. Remove idle adjusting screw and idle passage tube, pump sleeve, power jet pushrod, float lever pivot pin, float, and needle valve. Remove pump intake check valve, pump discharge check valve, and power jet from bowl. Remove main nozzle air bleed jet, idle jet, main nozzle, and main metering jet (on side of carburetor).

CONTINUED ON NEXT PAGE

CARTER (B&B) UPDRAFT TYPES (C nt.)

Servicing—Wash all parts in clean gasoline, blow out all passages in carburetor and all jets with compressed air. See that idle ports, air bleed passages, vacuum spark port, and throttle bore are free from carbon. See that vacuum piston cylinder is clean and that piston moves freely, clean vacuum passages thoroughly. (CAUTION:—Sticking of piston may cause power jet to be open at low speeds which will cause excessive fuel consumption and poor economy). Disassemble power jet valve and clean valve and power jet thoroughly. Clean and inspect pump check valves, idle jet, main nozzle, metering jet and air bleeds. Replace all worn or damaged parts.

REASSEMBLY OF CARBURETOR: Use all new gaskets. Soak needle seat gasket in denatured alcohol for 15 minutes, install on needle seat and allow to dry in place before needle and seat assembly is installed. Assemble carburetor in reverse order to disassembly directions above and note following special instructions and cautions: If throttle valve removed, make certain that notch on edge of valve is placed on vacuum port side and set throttle valve as directed above. Install accelerating pump sleeve with holes in end of sleeve downward. When installing carburetor upper body, see that accelerating pump enters pump cylinder properly and that vacuum piston pushrod is in place. Check float level and adjust carburetor when re-installed on engine.

CAUTION—When installing carburetor, make certain that correct flange gasket is used and that slot in gasket uncovers vacuum spark port on carburetor flange. If this port covered, gasoline consumption will be excessive.

SERVICE PARTS: Gasket Sets—No. 153 (489S), No. 170A (376S, 412S, 447S, 517S, 699S).

Repair Package (with Std. Metering Jet)—No. 1075A (447S), No. 1090 (489S), No. 1327B (517S).

CARTER (B&B) UPDRAFT CARBURETOR JET SPECIFICATIONS

Car Model	Yr.	Carb. No.	Main Metering Screw: Standard Flow	Main Metering Screw: Standard Part No.	Main Metering Screw: 1 Size Lean Part No.	Main Metering Screw: 2 Sizes Lean Part No.	Main Nozzle Size	Main Nozzle Part No.	Stepup Jet Power Orifice Size	Stepup Jet Power Orifice Part No.	Idle Orifice Tube Size	Idle Orifice Tube Part No.	Idle Passage Tube	Pump Valve Size	Pump Valve Part No.
CHEVROLET COE. Tr'k	1937	367-S	258-62cc.	159-53	5%	159-32	10%	159-15	#33	12-166	.0275"	162-16	.0236"	123-16	123-12	.0925"	149-19S
CHEVROLET "	1938-39	412-S	236-40cc.	159-50	5%	159-20	10%	159-21	#33	12-166	.0275"	162-16	.022"	123-32	123-12	.0925"	149-19S
CHEVROLET "	1939-40	447-S	236-40cc.	159-50	5%	159-20	10%	159-21	#33	12-166	.0275"	162-16	.022"	123-32	123-12	.0925"	149-19S
CHEVROLET COE.Tr'k	1941	489-S	268-72cc.	159-46	5%	159-53	10%	159-54	#33	12-166	.038"	162-22	.0236"	123-16	123-12	.0635"	149-65S
CHEVROLET Trk.①	'42-48	517-S	366-70cc.	159-98	5%	159-99	10%	159-100	#33	12-283	.055"	162-24	.0236"	123-16	123-45	.0635"	149-65S
CHEVROLET Trk.①	1948	699-S	352-56cc.	159-99	5%	159-100	10%	159-129	.125"	12-330	.043"	162-26	.025"	123-55	123-45	.0635"	149-65S

Main Metering Screw column 'Flow' indicates capacity in cubic centimeters per minute. Do not gauge these jets with wire drills.

①—Dubl-Duti and Cab-Over-Engine Trucks.

CARTER (B&B) DOWNDRAFT CARBURETOR JET SPECIFICATIONS

Car Model	Yr.	Carb. No.	Main Metering Jet: Standard Flow	Main Metering Jet: Standard Part No.	Main Metering Jet: 1 Size Lean Less	Main Metering Jet: 1 Size Lean Part No.	Main Metering Jet: 2 Sizes Lean Less	Main Metering Jet: 2 Sizes Lean Part No.	Main Vent Air Bleed Size	Tube Assem. Part No.	Stepup Jet Power Orifice Size	Stepup Jet Power Orifice Part No.	Idle Orifice Tube Size	Idle Orifice Tube Part No.	Pump Jet Assembly. Jet Size	Pump Jet Assembly. Part No.
CHRYSLER 6 Repl.	'35-41	E6P5	282-286cc	159-63S	5%	159-59S	10%	159-61S	.0315"	145-13	.063"	149-43S	.0295"	123-39S	.0374"	48-75
CHRYSLER C-7	1936	E6G1	282-286cc.	159-63S	5%	159-59S	10%	159-61S	.0315"	145-14S	#63	149-43S	.0276"	123-21S	.0354"	48-44
CHRYSLER C16 Early	1937	E6I1	282-286cc.	159-63S	5%	159-59S	10%	159-61S	.0315"	145-14S	#63	149-43S	.0276"	123-21S	.0354"	48-44
CHRYSLER C16	1937	E6K1,2,3,4		159-59S†	5%	159-61S	10%	159-66S	.0315"	145-13	#63	149-43S	.0276"	123-21S	.0374"	48-57S
CHRYSLER C18	1938	E6M1	268-272cc.	159-59S	5%	159-61S	10%	159-66S	.0315"	145-13	#63	149-43S	.0276"	123-31S	.0374"	48-57S
CHRYSLER C22	1939	E6N1, N2	268-272cc.	159-59S	5%	159-61S	10%	159-66S	.0315"	145-13	#63	149-43S	.0276"	123-31S	.0374"	48-75
CHRYSLER C25	1940	E6S1	296-300cc	159-87S①	5%	159-63S	10%	159-59S	.0315"	145-13	.0413"	149-56S	.0276"	123-31S①	.0374"	48-75
CHRYSLER C25	1940	E6S1★	312-316cc	159-89S	5%	159-87S	10%	159-63S	.0315"	145-13	.0413"	149-56S	.0295"	123-39S	.0374"	48-75
CHRYSLER C25	1940	E6S2	312-316cc	159-89S	5%	159-87S	10%	159-63S	.0315"	145-13	.0413"	149-56S	.0276"	123-31S	.0374"	48-75
CHRYSLER C28	1941	E6S2, S3	312-316cc	159-89S	5%	159-87S	10%	159-63S	.0315"	145-13	.0413"	149-56S	.0276"	123-31S	.0374"	48-75
CHRYSLER C28 ⑪	1941	E6T1, T2	312-316cc	159-93S⑱	5%	159-87S	10%	159-63S	.0315"	145-13	.0413"	149-56S	.0276"	123-31S	.0374"	48-75
CHRYSLER C28 ⑪	1941	E6U1, U2	312-316cc	159-89S	5%	159-87S	10%	159-63S	.0315"	145-13	.0413"	149-56S	.0276"	123-31S	.0374"	48-75
CHRYSLER C28	1941	E6W1	312-316cc	159-89S	5%	159-87S	10%	159-63S	.0315"	145-13	.0413"	149-56S	.0276"	123-31S	.0374"	48-75
CHRYSLER C28 ⑭	1941	EA1	312-316cc	159-89S	5%	159-87S	10%	159-63S	.0315"	145-13	.0413"	149-56S	.0276"	123-31S	.0374"	48-75
CHRYSLER C34	1942	EE1	312-316cc	159-89S	5%	159-87S	10%	159-63S	.0315"	145-13	.0413"	149-56S	.0276"	123-31S	.0374"	48-75
CHRYSLER C34⑬	1942	EF1	312-316cc	159-89S	5%	159-87S	10%	159-63S	.0315"	145-13	.0413"	149-56S	.0276"	123-31S	.0374"	48-75
CHRYSLER C34⑪	1942	EG1	312-316cc	159-89S	5%	159-87S	10%	159-63S	.0315"	145-13	.0413"	149-56S	.0276"	123-31S	.0374"	48-75
CHRYSLER C38⑭	1946-48	EX1	312-316cc	159-89S	5%	159-87S	10%	159-63S	.0315"	145-13	.0413"	149-56S	.0276"	123-31S	.0374"	48-75
CHRYSLER C38⑮	1946-48	EV1	312-316cc	159-89S	5%	159-87S	10%	159-63S	.0315"	145-13	.0413"	149-56S	.0276"	123-31S	.0374"	48-75

† 268-272cc. No. 159-76S (262-268cc) and 159-63S (282-286cc) used on first cars.

①—Install No. 159-89S and 123-39S to bring this E6S1 up to E6S2 Standards.

⑪—Cars with Vacamatic Underdrive Trans. & Fluid Drive.

⑬—Cars with Standard Trans. & Fluid Drive.

⑭—Cars with Synchro-mesh Transmission.

⑮—Cars with Fluid Drive & Hydraulically controlled Transmission.

⑱—Supersedes 159-89S.

CARTER (B&B) DOWNDRAFT CARBURETOR JET SPECIFICATIONS

Car Model	Yr.	Carb. No.	Flow	Main Metering Jet Standard Part No.	1 Size Lean Less	1 Size Lean Part No.	2 Sizes Lean Less	2 Sizes Lean Part No.	Main Vent Air Bleed Size	Tube Assem. Part No.	Stepup Jet Power Orifice Size	Stepup Jet Power Orifice Part No.	Idle Orifice Tube Size	Idle Orifice Tube Part No.	Pump Jet Assembly. Jet Size	Pump Jet Assembly. Part No.
CHRYSLER C39, 40⑮	'46-48	E7A1	312-316cc	159-89S	5%	159-87S	10%	159-63S	.0315"	145-13	.0413"	149-56S	.0276"	123-31S	.0374"	48-75
DE SOTO Repl.	'35-41	E6P5	282-286cc	159-63S	5%	159-59S	10%	159-61S	.0315"	145-13	.063"	149-43S	.0295"	123-39S	.0374"	48-75
DE SOTO S1, S2	1936	E6G1	282-286cc.	159-63S	5%	159-59S	10%	159-61S	.0315"	145-14S	#63	149-43S	.0276"	123-21S	.0354"	48-44
DE SOTO S3	Early 1937	E6I1	282-286cc.	159-63S	5%	159-59S	10%	159-61S	.0315"	145-14S	#63	149-43S	.0276"	123-21S	.0354"	48-44
DE SOTO S3	1937	E6K1,2,3,4		159-59S†	5%	159-61S	10%	159-66S	.0315"	145-13	#63	149-43S	.0276"	123-21S	.0374"	48-57S
DE SOTO S5	1938	E6M1	268-272cc.	159-59S	5%	159-61S	10%	159-66S	.0315"	145-13	#63	149-43S	.0276"	123-31S	.0374"	48-57S
DE SOTO S5 Taxi	1938	E6L1	268-272cc.	159-59S	5%	159-61S	10%	159-66S	.0315"	145-13	#63	149-43S	.0276"	123-31S	.0374"	48-57S
DE SOTO S6	1939	E6N1, N2	268-272cc.	159-59S	5%	159-61S	10%	159-66S	.0315"	145-13	#63	149-43S	.0276"	123-31S	.0374"	48-75
DE SOTO S7	1940	E6N2,N3	282-284cc	159-63S③	5%	159-59S④	10%	159-61S⑤	.0315"	145-13	#63	149-43S	.0276"	123-39S②	.0374"	48-75
DE SOTO S8	1941	E6N3	282-286cc	159-63S	5%	159-59S	10%	159-61S⑩	.0315"	145-13	.0374"	149-43S	.0295"	123-39S	.0374"	48-75
DE SOTO S8	1941	E6S2, S3	312-316cc	159-89S	5%	159-87S	10%	159-63S	.0315"	145-13	.0413"	149-56S	.0276"	123-31S	.0374"	48-75
DE SOTO S8 ⑫	1941	E6U1, U2	312-316cc	159-89S	5%	159-87S	10%	159-63S	.0315"	145-13	.0413"	149-56S	.0276"	123-31S	.0374"	48-75
DE SOTO S8 ⑫	1941	E6V1	282-286cc	159-63S	5%	159-59S	10%	159-61S⑩	.0315"	145-13	.0374"	149-43S	.0295"	123-39S	.0374"	48-75
DE SOTO S8 ⑬	1941	EB1	312-316cc	159-89S	5%	159-87S	10%	159-63S	.0315"	145-13	.0413"	149-56S	.0276"	123-31S	.0374"	48-75
DE SOTO S10	1942	EE1	312-316cc	159-89S	5%	159-87S	10%	159-63S	.0315"	145-13	.0413"	149-56S	.0276"	123-31S	.0374"	48-75
DE SOTO S10⑬	1942	EF1	312-316cc	159-89S	5%	159-87S	10%	159-63S	.0315"	145-13	.0413"	149-56S	.0276"	123-31S	.0374"	48-75
DE SOTO S10⑫	1942	EG1	312-316cc	159-89S	5%	159-87S	10%	159-63S	.0315"	145-13	.0413"	149-56S	.0276"	123-31S	.0374"	48-75
DE SOTO S11⑭	1946-48	EX1	312-316cc	159-89S	5%	159-87S	10%	159-63S	.0315"	145-13	.0413"	149-56S	.0276"	123-31S	.0374"	48-75
DE SOTO S11⑮	1946-48	EV1	312-316cc	159-89S	5%	159-87S	10%	159-63S	.0315"	145-13	.0413"	149-56S	.0276"	123-31S	.0374"	48-75
DODGE D24	1946-48	D6J1	254-258cc	159-61S	5%	159-66S	10%	159-82S	.0315"	145-17	#63	149-43S	.0295"	123-39S	.0276"	48-103
NASH '600' 4140	1941	513-S	258-262cc	159-95S⑥	5%	159-58S⑦	10%	159-66S⑧	.0315"	145-17	.0374"	149-70S⑨	.0276"	123-31S	.0275"	48-103
NASH '600' 4240	1942	513S	258-262cc	159-95S	5%	159-58S	10%	159-66S	.0315"	145-17	.0374"	149-70S	.0276"	123-31S	.0275"	48-103
PLYMOUTH Replmt.	'33-38	BBR1-439S	248-252cc.	159-58S	5%	159-60S	10%	159-64S	.0315"	145-17	#63	149-43S	.0276"	123-31S	.0315"	48-73
PLYMOUTH P1, P2	1936	C6E1,2	248-252cc.	159-58S††	5%	159-60S	10%	159-64S	.0315"	145-25S	#65	149-41S	.0276"	123-21S	.0315"	48-39
PLYMOUTH Econ. Eng.	1936	B6F1	160-164cc.	159-68S	—	159-69S	—	—	.0315"	145-25S	#71	149-50S	.0276"	123-21S	.0276"	48-39
PLYMOUTH P3, P4	1937	C6F1,2,3,4,5,C6H1		159-58S‡	5%	159-60S	10%	159-64S	.0315"	145-28⑯	#63	149-43S⑰	.0276"	123-21S	.0335"	48-55S
PLYMOUTH P3 Econ.	1937	B6F1, G1	160-164cc.	159-68S	5%	159-69S	—	—	.0315"	145-25S	#71	149-50S	.0276"	123-21S	.0276"	48-39
PLYMOUTH P6 (A)	1938	C6J1	248-252cc.	159-58S	5%	159-60S	10%	159-64S	.0315"	145-29	#63	149-43S	.0276"	123-31S	.0315"	48-67S
PLYMOUTH P6 (B)	1938	C6K1	248-252cc.	159-58S	5%	159-60S	10%	159-64S	.0315"	145-29	#63	149-43S	.0276"	123-31S	.0315"	48-67S
PLYM'TH P5,6 Econ (C)	1938	B6H1	152-156cc.	159-69S	—	—	—	—	.0295"	145-24	#71	149-50S	.0276"	123-31S	.0236"	48-69S
PLYM'TH P5,6 Econ (D)	1938	B6J1	160-164cc.	159-68S	—	—	—	—	.0295"	145-24	#71	149-50S	.0276"	123-31S	.0236"	48-69S
PLYMOUTH P7, P8	1939	D6A1, A2	254-258cc.	159-61S	5%	159-66S	10%	159-82S	.0315"	145-17	#63	149-43S	.0276"	123-31S	.0315"	48-73
PLYMOUTH Econ.	1939	B6K1	160-164cc.	159-68S	—	—	—	—	.0295"	145-24	.0236"	149-60S	.0276"	123-37S	.0236"	48-77S
PLYMOUTH Econ.	1939	B6M1	168-172cc.	159-70S	—	—	—	—	.0315"	145-33	.0236"	149-60S	.0276"	123-38S	.0236"	48-81
PLYMOUTH P9, P10	1940	D6A2,C2	254-258cc	159-61S	5%	159-66S	10%	159-82S	.0315"	145-17	#63	149-43S	.0276"	123-31S	.0315"	48-73
PLYMOUTH Econ.	'40-41	B6P1	168-172cc.	159-70S	—	—	—	—	.0315"	145-39	.0236"	149-60S	.0276"	123-41S	.0236"	48-81
PLYMOUTH P11, P12	1941	D6A2,C2	254--258cc	159-61S	5%	159-66S	10%	159-82S	.0315"	145-17	#63	149-43S	.0276"	123-31S	.0315"	48-73
PLYMOUTH P14	1942	D6G1	254-258cc	159-61S	5%	159-66S	10%	159-82S	.0315"	145-17	#63	149-43S	.0295"	123-39S	.0276"	48-103
PLYMOUTH Econ.	1942	B6V1,W1	168-172cc	159-70S	—	—	—	—	.0315"	145-39	.0236"	149-60S	.0276"	123-40S	.0236"	48-81
PLYMOUTH Econ.	1941-42	B6T1⑱	168-172cc	159-70S	—	—	—	—	.0315"	145-39	.0236"	149-60S	.0276"	123-40S	.0236"	48-81
PLYMOUTH Econ.	1941-42	B6U1	152-156cc	159-69S	—	—	—	—	.0315"	145-39	.0236"	149-60S	.0276"	123-41S	.0236"	48-81
PLYMOUTH P15	1946-48	D6G1	254-258cc	159-61S	5%	159-66S	10%	159-82S	.0315"	145-17	#63	149-43S	.0295"	123-39S	.0276"	48-103
PLYMOUTH Econ.	1946-48	B6V1,W1	168-172cc	159-70S	—	—	—	—	.0315"	145-39	.0236"	149-60S	.0276"	123-40S	.0236"	48-81

NOTE:—C6H1 and B6G1 used only on Plymouth cars where crankcase ventilated through carburetor.

(A) Cars without Crankcase Ventilator. (B) Cars with Crankcase Ventilator. (C) Cars without Governor. (D) Cars with Governor.

†† No. 159-56S (262-266cc) used on first cars.

‡ 248-252cc. No. 159-75S (244-248cc) and 159-56S (262-266cc) used on first cars.

②—Supersedes 123-31S used on first cars.
③—Supersedes 159-59S (now 1 Size Lean).
④—Supersedes 159-61S (now 2 Sizes Lean).
⑤—Supersedes 159-66S (now 3 Sizes Lean).
⑥—Supersedes 159-58S (248-252cc.), now 1 Size Lean.
⑦—Supersedes 159-60S.
⑧—Supersedes 159-64S.
⑨—Supersedes 149-56S (.0413").
⑩—3 Sizes Lean—159-66S.
⑫—Cars with Simplimatic Underdrive Trans. & Fluid Drive.
⑬—Cars with Std. Trans. & Fluid Drive.
⑭—Cars with Synchro-mesh Transmission.
⑮—Cars with Fluid Drive and hydraulically controlled Transmission.
⑯—145-17 on first cars.
⑰—149-56S on first cars.
⑱—Superseded by 590S.

HOLLEY (FORD) SIX CYL. TYPE

F RD 6 CYLINDER	Ford No.
1941-42 Pass. Cars, Comm'l & Truck	1GA-9510-A
1946-47 Pass. Cars, Comm'l & Truck	5GA-9510-A
1947-48 Pass. Cars (With "H" Engine)	7HA-9510-A
1947 Comm'l & Truck (With "H" Engine)	7HT-9510
1948 Comm'l & Truck	7HT-9510-A
1949 8HA Passenger Cars	8HA-9510-A

DESCRIPTION: Single, plain tube, downdraft, with throttle operated accelerating pump and vacuum controlled economizer (power jet). Carburetor is similar to dual types used on Ford V8 models except for single barrel and new type economizer as described below.

►**1947-49 Type 7HT-9510, 7HT-9510-A, 8HA-9510-A Carburetor Vacuum Control for Distributor Advance**—Two ports in carburetor (one in venturi, one in carburetor throat above throttle edge) used to provide vacuum for operation of advance on new "Loadomatic Distributor."

See "Ford & Mercury Distributor" in Electrical Equipment Section for checking of these vacuum ports and passages.

Fuel System (Idling):—Fuel for idling taken from main jet well up through Idle Tube (which meters the fuel) to cross-passage in main nozzle bar where it is mixed with air admitted through Idle Air Bleed drilled passage in top of nozzle bar. Fuel mixture flows from this cross-passage down through channel to idle ports at throttle edge. For closed throttle idling, all fuel discharged through lower idle port (below throttle) and controlled by Idle Adjusting Needle. As soon as throttle is opened, additional fuel is discharged through upper idle port also.

Driving Range—At intermediate speeds, fuel metered by metering jet at lower end of main jet well flows through cross-passage in main nozzle bar to antechamber at center where it is mixed with air admitted through air bleed opening in side of cross-channel and through Nozzle Air Bleed Plug which is screwed in top of nozzle bar. Fuel mixture is then discharged through main nozzle opening below nozzle bar into throat of venturi.

High Speed & Wide Open Throttle Operation—At high speed or whenever throttle opened sufficiently so that vacuum decreases, economizer valve spring opens economizer valve allowing additional fuel to flow directly from float bowl to main jet well (by-passes metering jet). This fuel metered by economizer restriction which is small drilled passage at well end of economizer fuel channel.

IDLING ADJUSTMENT:—Idle adjusting needle or screw controls fuel discharge from lower (closed throttle) idle discharge port. Screw should be turned in for leaner mixture, out for richer mixture, and should be adjusted only with engine warmed up and choke valve wide open. Settings shown in table below. See car model page for complete tune-up instructions.

IDLE SETTING

Car Model	Idle Screw Setting	Idle Speed
Ford 6 Cyl. (All)	½-1¼ turns open	500 RPM

NOTE—Engine speed can be gauged when setting idle speed by marking a spot on the fan belt and noting the fan belt speed. The belt should make 25 revolutions in 10 seconds with engine speed of 500 RPM.

METERING JET:—Main metering jet is non-adjustable type located in float bowl and accessible by removing float bowl cover. Jet should be changed only to compensate for special operating conditions such as high altitudes. See Holley (Ford) Jet Specification Table.

ECONOMIZER:—Consists of a spring-loaded vacuum piston located in the air horn and float bowl cover casting with the piston stem extending down so as to contact the power jet valve located in the main body casting. Vacuum piston is normally held up at the top of its stroke by manifold vacuum (vacuum passage drilled in carburetor castings and opens into carburetor throat below throttle valve) so that power jet valve is held closed by the spring on the valve stem. When the manifold vacuum decreases to 8½-9" of HG., the spring on the vacuum piston stem forces the vacuum piston down and the piston stem opens the power jet valve. Fuel then flows from float bowl through valve to main jet well directly without passing through main metering jet.

Setting—Vacuum economizer opens power jet valve with manifold vacuum of 8½-9" of HG. No adjustment provided.

ACCELERATING PUMP:—Pump cylinder and piston located in float bowl, perated by inverted 'L' shaped pump rod linked to throttle lever. Fuel is drawn into pump cylinder through inlet ball check valve at lower end when throttle is closed and is discharged through outlet check valve and pump discharge nozzle when throttle opened for accelerating (nozzle is located at upper edge of venturi). Pump piston connection to pump rod is through a driving spring on the piston stem which prevents loading up engine when throttle opened suddenly and also prolongs pump discharge (spring compressed at beginning of piston travel, expands at end of travel).

Adjustment—Three holes provided in throttle lever for pump link connection (these holes numbered 1-2-3 from throttle valve shaft outward). Inner (#1) hole provides minimum stroke, Center (#2) hole medium stroke, Outer (#3) hole maximum stroke. Recommended setting is No. 2 hole (medium temperatures), No. 1 hole (extremely hot weather), No. 3 hole (extremely cold weather). See car model page for recommended seasonal adjustment and other tune-up data.

NOTE—Pump link is locked in lower end of pump rod by a spring-loaded snap lock. To disengage lock, pull link shaft out of pump rod.

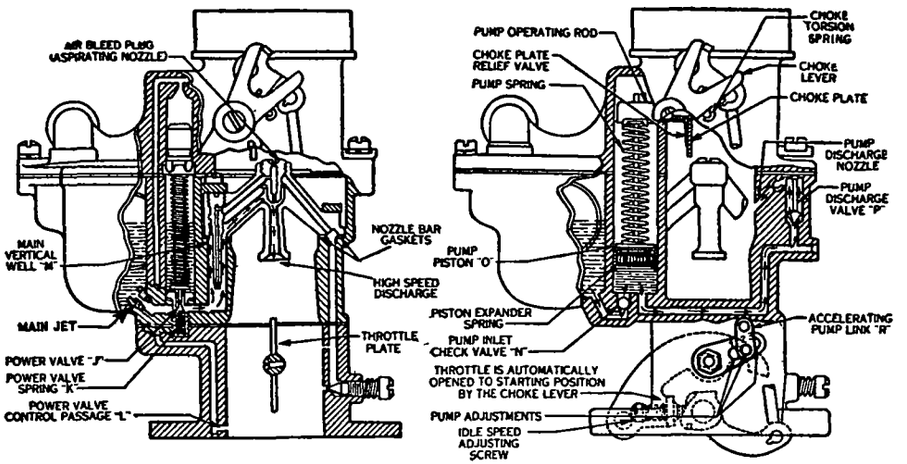

FLOAT LEVEL:—Use Ford No. 9550-A Float Position Gauge to check float level. With bowl cover and float assembly removed, remove gasket, invert cover so that float weight holds needle valve closed, place gauge on bowl cover with gauging arm extending over float (CAUTION—check both ends of float). "Go" end of gauge should clear float and "No Go" end should not clear (with "No Go" end of gauge resting on float, base of gauge should clear bowl cover at gauging arm end).

FLOAT LEVEL SETTING

Car Model	Checking Gauge	"Go"—Height—"No Go"
Ford 6 Cyl. (All)	9550-A	1.353"—1.322"

Adjustment—Use 9550-C bending tool to bend float arm using extreme care to keep float level (recheck float at both ends). Make certain that float has sufficient travel to drop to bottom of float chamber (travel controlled by stop on float arm.)

Fuel Level—With correct float adjustment, fuel level in bowl should be 11/16" plus or minus 1/32" below top edge of bowl with needle valve seated.

Float Needle Valve & Seat: Furnished only in matched sets as follows:
Part No. 78-9564—(1GA-9510-A & 5GA-9510-A Carburetors).
Part No. 7HA-9564—(7HA-9510-A, 7HT-9510, 7HT-9510-A, 8HA-9510-A Carbs.).

CHOKE:—Choke valve is offset type with poppet valve type relief valve to prevent over-choking.

THROTTLE-KICKER (STARTING):—Consists of a spring loaded lever pivoted on side of carburetor casting so as to contact cam on choke lever at upper end and throttle lever at lower end (through throttle stopscrew which is mounted on this starting lever). Lever is rotated by choke lever cam when choke valve closed for starting and opens throttle to starting position. No adjustment required.

DISASSEMBLY OF CARBURETOR: Remove choke lever screw, choke lever, plunger, and spring (disconnect lever from connector link). Take out throttle kicker screw and remove throttle kicker. Take out air horn screws and lift off air horn

CONTINUED ON NEXT PAGE

HOLLEY (FORD) 6 CYL. TYPE (C ntinu d)

assembly being careful not to damage float or power jet (economizer) vacuum piston assembly. Disconnect accelerating pump link, lift out pump plunger and rod assembly. Remove main metering jet (use screwdriver with blade that fits jet snugly) and power jet from float bowl. Remove nozzle bar screws and clamps, remove Idle Tube and air bleed from nozzle bar, lift out nozzle bar gaskets. Remove check valve retainer from bottom of pump cylinder (use small rod with hooked end), invert main body casting and remove pump discharge needle and check ball (these parts will drop out). Remove throttle body attaching screws and washers, lift throttle body off. Remove idle adjusting screw and spring, take out float hinge pin and remove float assembly from air horn, remove fuel inlet needle valve and seat assembly and gasket.

Servicing—Clean all carburetor parts and make certain that all corrosion removed from float bowl. Examine all parts for wear and replace all worn or damaged parts. Use new gaskets when reassembling carburetor.

Accelerating Pump—When installing check ball in bottom of pump cylinder, seat the ball by tapping lightly with a brass drift rod, then install retainer using a wooden or fibre dowel to press retainer down in place. When installing pump discharge needle, tap needle lightly with a brass drift to insure that it seats properly. Check pump action when completely assembled, a good stream should be apparent at the pump discharge nozzle when throttle valve is opened (bowl must be filled with gasoline when making this test).

Float Inlet Valve & Seat—Keep needle valve and seat together as a set, rinse in cleaning solution and wipe off with clean cloth; if re-installed in carburetor, polish float lever end of needle valve with #320 'wet or dry' paper.

Choke Valve—Check valve tightness by holding air horn assembly against light and noting light around edge of valve. Check poppet relief valve and replace choke valve assembly if relief valve spring weak or broken. Check choke lever boss on air horn for wear using new choke lever, replace air horn if boss worn. Check choke lever for wear at ball end and in 'V' opening which engages choke shaft lever. Clean out choke lever pawl hole.

Float Assembly—See that float lever firmly soldered to float, examine float for leaks (immerse float in water heated just below boiling point, bubbles indicate that float leaks). Polish needle valve contact point on float arm with #320 'wet or dry' paper. Check float level and travel (use 9550-A gauge) as directed under Float Level (above) when float re-installed.

Throttle Valve Assembly—Check valves for tightness in same manner as choke valve (above). Replace complete assembly if valves worn, shaft worn or loose, throttle valve lever loose on shaft, or if pump link hole in throttle lever worn. If throttle valves replaced, stake attaching screws securely (use 9518-C anvil and 9518-D punch). Check throttle valve position using gauge (which gauges distance from valve to idle ports with valve closed).

Vacuum Economizer:—Vacuum piston is located in air horn and float bowl casting and will be removed when air horn is taken off. Power valve is screwed in place in main body casting and can be removed with air horn off and vacuum piston removed. When removing and installing jets, use screwdriver which just fits jet slots and take care not to damage jets and fuel orifices, see that gaskets are in good condition and in place when jets installed.

Pump Discharge Nozzle—Nozzle is a drilled passage in the main body casting and is not removable. A metering restriction is installed in the nozzle passage.

REASSEMBLY OF CARBURETOR: After cleaning and inspecting all parts for wear (see Servicing above), reassemble carburetor by reversing disassembling directions. Adjust carburetor after re-installation on engine.

TROUBLE SHOOTING:—Poor Idling Performance. Make certain that entire engine tuned up, check idle setting. If idle is lean, check for air leaks at manifold, check gaskets between carburetor throttle valve body and bowl casting. Remove idle adjusting needle and Idle Tubes, blow out channels with air, clean idle tube with air. If idle is rich, check Vacuum Economizer valve, see that valve is seating properly and not leaking. Check gasket between throttle valve body and bowl casting (vacuum chamber must be airtight).

Poor Running Performance. Check carburetor body gaskets, see that all carburetor body bolts are tight. Check metering jet for size. Blow out metering jet channel and main nozzle channel with compressed air. Check fuel level.

Poor Acceleration Performance. Check pump cylinder and channels for dirt which will prevent check-valves seating. See that piston leather is in good condition, check piston driving spring. To dismantle pump for cleaning (with air horn casting off carburetor), disconnect pump link, remove pump rod and piston assembly, inlet ball retaining spring and ball, and outlet check needle. Blow out all channels with compressed air. If pump is working properly, a fine, solid, steady stream should be discharged from each nozzle port at instant throttle is snapped open.

Poor High Speed Performance. Check engine compression, breaker contacts and gap, spark plug gaps first. Check vacuum economizer valve, remove economizer and blow out economizer channels and restrictions with compressed air. Check fuel level and float travel. Check fuel pump pressure.

Poor Economy or Gasoline Mileage. Check all parts of car which may cause this complaint (engine, valves, dragging brakes, etc.). Check fuel level and fuel pump pressure. Check metering jet for size. Manufacturer does not recommend use of leaner metering jets to secure fuel economy.

HOLLEY (FORD) V-8, LINCOLN, MERCURY

	Ford No.
FORD V-8	
1939-40 "60" Cars & Trucks	922A-9510-A
1938-41 "85" & "90" Passenger Cars	①91A-9510-A
1938-41 "85", "90", "95", "100" Comm'l & Trucks	①91A-9510-A
1942 "90" Passenger Cars	21A-9510-A
1942-44 "90" & "100" Comm'l & Trucks	21A-9510-A
1945-47 "100" Comm'l & Trucks	59A-9510-A
1946-48 "100" Passenger Cars	59A-9510-A
1948 "100" Comm'l & Trucks	7RT-9510-A
1949 8BA Passenger Cars	8BA-9510-A
LINCOLN	
1938-39 Zephyr	②96H-9510-A2
1940 Continental	06H-9510
1940-41 Zephyr (Std.)	(First) 06H-9510, (Later) 16H-9510-B
1941 Cont'l & Custom (Std.) Zephyr (Optl.)	③16H-9505-A, C
1942 Zephyr (Std.)	26H-9505-C
1942 Cont'l & Custom (Std.), Zephyr (Optl.)	③26H-9505-D
1946-48 Lincoln & Cont'l	26H-9510-C
MERCURY	
1939-41	①91A-9510-A
1942	21A-9510-A
1946-48	59A-9510-A

①—Marked "94". ②—Marked "LZ".

③—Lincoln 16H-9505-A, 16H-9505-C, 26H-9505-D Carburetor Automatic Choke. Sisson Automatic choke used with these models. Choke is separate type, Ford Part No. 16H-9850. See article on Sisson Automatic Choke in Carburetion Equipment Section for data on this unit.

►**FORD V8 & MERCURY CARBURETOR—POWER VALVE CHANGE (No. 78-9904 Carburetor Economizer or Poer Valve).** Diaphragm material changed from Neoprene to Fairprene to prolong life of this part. Parts may be identified by color of power valve cover as follows:

First Type (Neoprene Diaphragm)—Silver (cadmium plated).

Later Type (Fairprene Diaphragm)—Black (oxidized).

►**FORD V8 (1949)—ACCELERATOR ASSY. INTERFERENCE CORRECTION.** To correct complaints of interference between acelerator assembly (levers and crossshaft on dash) and accelerator rod assembly (linking accelerator and carburetor) and which may cause linkage to come apart, grind or file off the end of the accelerator assembly at the accelerator rod connection to provide clearance and prevent accelerator assembly contacting the clip locking the two assemblies together (interference at this point forces tines on clip off and allows the rod to disengage from the accelerator).

DESCRIPTION: Dual (double barrel), plain tube, downdraft types with throttle operated accelerating pump and vacuum controlled economizer (power jet). All models are similar except for following special features:

►**Ford & Mercury 1942 Carburetor**—No. 21A-9510 has new type bowl vent located at rear of carburetor to prevent surging of fuel in float bowl caused by air blast from 1942 type higher mounted cooling fan.

CAUTION—Previous type carburetors must not be used on 1942 engines with this new type higher mounted fan.

►**Lincoln 1942 Carburetors**—Carburetors on Liquamatic Drive Cars has special Anti-stall device (vacuum operated) and does not have Throttle Kicker. Carburetor used with Automatic Choke has special choke valve lever and linkage for automatic operation. All 1942 carburetors are new larger types with new jet calibration. See Holley (Ford) Jet Specification Table.

►**Ford 1948-49 7RT-9510-A & 8BA-9510-A Carburetor Vacuum Control for Distributor Advance**—Two ports in carburetor (one in venturi, one in carburetor throat above throttle edge) used to provide vacuum for operation of advance on new "Loadomatic Distributor."

See "Ford & Mercury Distributor" in Electrical Equipment Section for checking of these vacuum ports and passages.

Fuel System (Idling):—Fuel for idling taken from main jet well up through Idle Tube (which meters the fuel) to cross-passage in main nozzle bar where it is mixed with air admitted through Idle Air Bleed drilled passage in top of nozzle bar. Fuel mixture flows from this cross-passage down through channel to idle ports at throttle edge. For closed throttle idling, all fuel discharged through lower idle port (below throttle) and controlled by Idle Adjusting Needle. As soon as throttle is opened, additional fuel is discharged through upper idle port also. Independent idle system used for each carburetor barrel.

Driving Range—At intermediate speeds, fuel metered by metering jet at lower end of main jet well flows through cross-passage in main nozzle bar to antechamber at center where it is mixed with air admitted through air bleed opening in side of cross-channel and through Nozzle Air Bleed Plug which is screwed in top of nozzle bar. Fuel mixture is then discharged through main nozzle opening below nozzle bar into throat of venturi.

High Speed & Wide Open Throttle Operation—At high speed or whenever throttle opened sufficiently so that vacuum decreases, economizer valve spring opens economizer valve allowing additional fuel to flow directly from float bowl to main jet well (by-passes metering jet). This fuel metered by economizer restriction which is small drilled passage at well end of economizer fuel channel.

IDLE ADJUSTMENT:—Idle adjusting needle or screw for each carburetor barrel controls fuel discharge from lower idling port. Screws should be turned in for leaner mixture or out for richer mixture and should be adjusted equally. Setting is shown in table below. See car model page for complete instructions on each car model.

IDLE SETTING

Car Model	Idle Screw Setting	Idle Speed
Ford V8 (All)	½-1¼ turns open	500 RPM
Lincoln & Mercury (Synchro-mesh)	½-1¼ turns open	500 RPM
Lincoln & Mercury (Liquamatic)	½-1¼ turns open	350 RPM

NOTE—Engine speed can be gauged when setting idle speed by marking a spot on the fan belt and noting the fan belt speed. The belt should make 25 revolutions in 10 seconds with engine speed of 500 RPM.

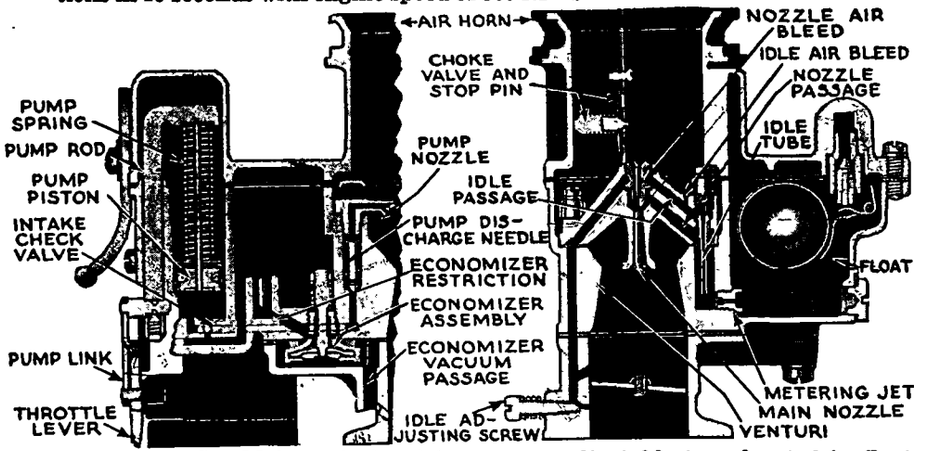

METERING JETS:—Main metering jets are non-adjustable type located in float bowl and accessible by removing plug on side of float bowl opposite each jet. Jets should be changed only to compensate for special operating conditions such as high altitude. See Holley (Ford) Jet Specification Table.

ECONOMIZER:—Consists of a spring-loaded, vacuum diaphragm controlled, bypass valve assembly screwed in lower face of main body casting so that valve extends into float bowl (diaphragm assembly fits in recess in throttle valve body casting and vacuum passage in casting connects diaphragm chamber with carburetor barrel below throttle valve). Vacuum economizer set at factory to open when vacuum decreases to 8½-9" of HG. (corresponding to engine speed of 3800 R.P.M.). No adjustment provided.

ACCELERATING PUMP:—Pump cylinder and piston located in float bowl, operated by inverted 'L' shaped pump rod linked to throttle lever. Fuel is drawn into pump cylinder through inlet ball check valve at lower end when throttle is closed and is discharged through outlet check valve and pump discharge nozzle when throttle opened for acceleration (nozzle is located at upper edge of venturis and has two discharge holes so that fuel is discharged equally into each carburetor barrel). Pump piston connection to pump rod is through a driving spring on the piston stem which prevents loading up engine when throttle opened suddenly and also prolongs pump discharge (spring compressed at beginning of piston travel, expands at end of travel).

Capacity—As shown in table below in cc. per 10 strokes. Throttle lever stop-screw must be backed ff to allow throttle to close completely and pump link must be connected in center hole.

CONTINUED ON NEXT PAGE

HOLLEY (FORD) V-8, LINCOLN, MERCURY (C nt.)

Car Model	Pump Capacity
Ford & Mercury	9-13 cc.
Lincoln	14-18 cc.

Adjustment—Three holes provided in throttle lever for pump link connection. Upper hole (short radius) provides minimum stroke, lower hole (long radius) maximum stroke. Center hole is normal setting. See tune up data on car model page for recommended settings.

NOTE—Pump link locked in lower end of pump rod by spring-loaded snap lock. Pull link shaft out of pump rod to disengage lock.

FLOAT LEVEL: Fuel Level—Fuel level in bowl should be 11/16″±1/32″ (All Ford V8 and Mercury), 11/16″±1/32″ (Lincoln Zephyr '38-39), 19/32″±1/32″ (Lincoln 1940 & later) below top edge of bowl with engine idling (3 lbs. pressure).

NOTE—If glass tube or sight level indicator used to check fuel level, use extreme care to eliminate error caused by capillary action of fuel in sight tube.

Float Level—With bowl cover and float assembly removed, remove gasket, invert cover so that float weight holds needle valve closed, check float with special "Go" and "No Go" gauge (see table below). Place gauge on bowl cover with gauging arm extending over float (CAUTION—check both ends of float). "Go" end of gauge should clear float and "No Go" end should not clear (with "No Go" end of gauge resting on float, base of gauge should clear bowl cover at gauging arm end).

FLOAT LEVEL SETTING

Car Model	Checking Gauge	"Go"—Height—"No Go"
Ford & Mercury	9550-A	1.353″—1.322″
Lincoln	9550-H	1.290″—1.260″

Adjustment—Use 9550-C bending tool to bend float arm. Use extreme care to keep float even (check both ends of float). Make certain that float has sufficient travel to drop to bottom of float bowl (controlled by stop on float arm.

Float Needle Valve & Seat—Furnished only in matched sets as follows: Part No. 78-9564 (922A-, 91A-, 21A-, 59A-, 96H-, 06H-, 16H-, 26H- Carbs.). Part No. 7HA-9564 (7RT- and 8BA-9510-A Carburetors).

CHOKE:—Offset type with poppet type relief valve to prevent over-choking.

Lincoln Automatic Choke—Refer to Sisson Automatic Choke article in Carburetion Equipment Section for adjustment instructions.

THROTTLE-KICKER (STARTING):—Consists of a spring loaded lever pivoted on side of carburetor casting so as to contact cam on choke lever at upper end and throttle lever at lower end (through throttle stopscrew which is mounted on this starting lever). Lever is rotated by choke lever cam when choke valve closed for starting and opens throttle to starting position. No adjustment required.

DISASSEMBLY OF CARBURETOR: Remove choke lever screw, choke lever, pawl, and spring. Take out throttle kicker screw, remove throttle kicker and spring. Take out five air horn screws, remove air horn assembly, use care not to bend float. Remove accelerator pump link (pry upper end of link out), remove pump plunger and rod assembly. Remove drain plugs and gaskets, remove main metering jets (use tool 9510-A, remove front nozzle bar screws and clamp, remove idle tubes and brass air bleeds from nozzle bar, then remove rear nozzle bar screws and clamp, remove nozzle bars, pump discharge nozzle and gasket, and nozzle bar gasket. Remove check valve retainer from bottom of pump cylinder (use small rod with hooked end), invert main body casting and catch pump discharge brass needle and check ball which will drop out. Remove throttle body attaching screws and lockwashers, lift throttle body off. Use wrench 9904-A to remove economizer valve assembly and gasket. Remove throttle valve loose lever collar, loose lever and spring, idle adjusting screws and springs. Take out float hinge pin and remove float assembly from air horn, remove fuel inlet needle valve and seat assembly and gasket (use wrench 9510-A).

Servicing—Clean all carburetor parts and make certain that all corrosion removed from float bowl. Examine all parts for wear as directed below and replace all worn or damaged parts (renew all following parts when carburetor overhauled: Accelerator pump rod felt and brass rod retainer, pump check valve retainer, accelerator pump piston, economizer (power) valve assembly), and all gaskets.

Float Inlet Valve & Seat—Keep needle valve and seat together as a set, rinse in cleaning solution and wipe off with clean cloth; if re-installed in carburetor, polish float lever end of needle valve with #320 'wet or dry' paper.

Choke Valve—Check valve tightness by holding air horn assembly against light and noting light around edg of valve. Check poppet relief valve and replace choke valve assembly if relief valve spring weak or broken. Check choke lever boss on air horn for wear using new choke lever, replace air horn if boss worn. Check choke lever for wear at ball end and in 'V' opening which engages choke shaft lever. Clean out choke lever pawl hole (use reamer 9537-A).

Float Assembly—See that float lever firmly soldered to float, examine float for leaks (immerse float in water heated just below boiling point, bubbles indicate that float leaks). Polish needle valve contact point on float arm with #320 'wet or dry' paper. Check float level and travel (use 9550-A gauge) as directed under Float Level (above) when float re-installed.

Throttle Valve Assembly—Check valves for tightness in same manner as choke valve (above). Replace complete assembly if valves worn, shaft worn or loose, throttle valve lever loose on shaft, or if pump link hole in throttle lever worn. If throttle valves replaced, stake attaching screws securely (use 9518-C anvil and 9518-D punch). Check throttle valve position using gauge 9518-A (which gauges distance from valve to idle ports with valve closed), replace throttle body and valve assembly if distances not within gauging limits.

Accelerating Pump—Remove brass retainer and pump rod felt from main body before cleaning casting in cleaning solution (solution will damage felt). If main body has shoulder around accelerating pump rod hole, remove this shoulder with a file (shoulder limits pump stroke) and if no vent provided between float bowl and pump head clearance chamber (larger section at top of pump cylinder), provide a vent by cutting a slot with a hacksaw or small file. Use driver 9513-C to install felt and brass retainer in pump rod hole. Seat check ball in bottom of pump cylinder by tapping lightly with a brass drift rod, then use 5/8″ wood or fibre dowel to press retainer down in place. When installing brass pump discharge needle, tap needle lightly with brass drift to insure that it seats properly. When installing pump plunger and rod assembly, make certain that correct link used (Ford '85' & Mercury marked 'C', Ford '60' and Lincoln marked '6'—use marked links). Check pump action when completely assembled, a good stream should be apparent at each pump jet when throttle opened several times (fill bowl with fuel to make this test).

Economizer Power Jet Assembly—When installing valve assembly, use new gasket and tighten securely to 15 lb. ft. torque.

Carburetor Body Castings—Clean castings thoroughly in cleaning solution, clean ports and channels with correct drill in hand chuck 9518-E as follows: Lower Idle Port (nearest throttle valve)—9518-H (.037″) drill, Upper Idle Port—9518-E (.0395″) drill, Idle Adjustment Screw Holes—9518-F (.046″) drill, Idle Adjustment Screw Threads—9541-A Tap (use care not to remove any metal or enlarge holes), Idle Adjusting Needle Seat—9541-C refacer and 9541-D guide bushing, Accelerating Pump Rod Hole—9513-B reamer, also clean out felt retainer groove.

REASSEMBLY OF CARBURETOR: After cleaning and inspecting all parts for wear (see Servicing above), reassemble carburetor by reversing disassembling directions. Adjust carburetor after re-installation on engine.

TROUBLE SHOOTING:—**Poor Idling Performance.** Make certain that entire engine tuned up, check idle setting. If idle is lean, check for air leaks at manifold, check gaskets between carburetor throttle valve body and bowl casting. Remove idle adjusting needle and Idle Tubes, blow out channels with air, clean idle tubes with air. If idle is rich, check Vacuum Economizer valve, see that valve is seating properly, and that diaphragm is not leaking. Check gasket between throttle valve body and bowl casting (vacuum chamber must be airtight).

Poor Running Performance. Check carburetor body gaskets, see that all carburetor body bolts are tight. Check metering jets for size. Blow out metering jet channel and main nozzle channels with compressed air. Check fuel level.

Poor Acceleration Performance. Check pump cylinder and channels for dirt which will prevent check-valves seating. See that piston leather is in good condition, check piston driving spring. To dismantle pump for cleaning (with air horn casting off carburetor), disconnect pump link, remove pump rod and piston assembly, inlet ball retaining spring and ball, discharge nozzle, and outlet check needle. Blow out all channels with compressed air. If pump is working properly, a fine, solid, steady stream should be discharged from each nozzle port at instant throttle is snapped open.

Poor High Speed Performance. Check engine compression, breaker contacts and gap, spark plug gaps first. Check vacuum economizer valve, remove economizer and blow out economizer channels and restrictions with compressed air. Check fuel level and float travel. Check fuel pump pressure.

Poor Economy or Gasoline Mileage. Check all parts of car which may cause this complaint (engine, valves, dragging brakes, etc.). Check fuel level and fuel pump pressure. Check metering jets for size. Manufacturer does not recommend use of leaner metering jets to secure fuel economy.

1949 LINCOLN & MERCURY DUAL CONCENTRIC CARB.

Part No.① Used On:
8EL-9510-A—Lincoln, Model 9EL (1949)
Lincoln Cosmopolitan, Model 9EH (1949)
8CM-9510-A—Mercury, Model 9CM (1949)
①—Std. Assy.—for 0 to 5000 ft. Altitudes.

►FIELD & PRODUCTION CHANGES

►**Lincoln & Mercury Carburetor Float & Spring Change to improve float level stability**—On carburetors prior to date 1-49 (stamped on top of air horn directly above accelerating pump), install new Float and Float Spring, as furnished in Carburetor Float Kit Part No. 8CM-99525, as follows:

Float & Float Spring Installation—Completely disassemble and clean carburetor (see Disassembly data) and when reassembling carburetor, install new float and spring as follows: Insert float needle valve and see that needle move freely, tilt carburetor to prevent needle dropping out. Place straight end of float spring in hole in arm of float and lever assembly, position float in carburetor main body so that free end of spring drops over rounded boss in bottom of bowl, insert hinge pin through bowl and float lever hinge, screw pin securely in place. Check to see that float and needle move freely and that spring is properly positioned.

►**Lincoln & Mercury Carburetor Flooding Correction** See Float & Spring installation (above). Flooding and unsatisfactory performance may be caused by dirt and metal particles in carburetor channels. Correct this trouble by disassembling carburetor and thoroughly cleaning all channels and passages in carburetor and all fuel system lines. Check fuel pump for excessive pressure (must not exceed 4 lbs.).

►**Mercury Carburetor Jet Changes to Correct Flat Spot or Stumble on Acceleration**—On carburetors prior to date 10-48 (stamped on top of air horn directly above accelerating pump), install new Main Well Tubes and Main Jets, furnished in Carburetor Kit, Part No. 8CM-99524 **for Mercury carburetors only.** To install these jets, disassemble and clean carburetor (see Disassembly data), discard old parts and install new parts when reassembling.

IDENTIFICATION NOTE—New parts can be distinguished by following markings:

Main Well Tubes—Marked by letter "S" stamped on top. Side holes are 66 (upper), 70 (lower) and both holes are 3/32" lower than corresponding (68 upper and lower) holes on old type main well tube.

Main Jet—Marked "49" on side (previous type marked "48").

►**Lincoln & Mercury Carburetor Acceleration Stumble Correction**—See Mercury jet changes (above). May also be caused by dirt restricting carburetor channels or improper seating of accelerating pump intake ball check or discharge needle valve. Correct by disassembling carburetor and thoroughly cleaning all channels and passages (remove both pump intake ball check and discharge needle valve). When reassembling carburetor, seat the intake ball check and discharge needle by tapping lightly with a small brass drift.

►**Lincoln & Mercury Fuel Filter Change**—First type (copper screen) filter in combination fuel-and-vacuum pump should be replaced by later "Edge Type Filter" when servicing carburetor (type of filter can be determined by inspection).

FILTER PARTS KIT—New "Edge Type Filter" furnished in kits containing strainer and cork gasket as follows: Lincoln— No. 8EL-99360, Mercury—No. 8CM-99360.

DESCRIPTION

DESCRIPTION: These "Dual Concentric" carburetors are plain tube, dual (double barrel), downdraft types with automatic choke and fast idle control. Air intake is on side of air horn and circular float bowl (main body) is mounted on throttle body casting within air horn so that air flow is directed around the bowl to cool the fuel. All metering jets are located in this main body casting and air bleeds and vents consist of openings in the main body cover plate which open into the air horn.

Fuel System: Consists of an Idle Fuel System, Main Fuel System, Power Fuel System, and Accelerating Fuel System which operate as follows (idle fuel system and main fuel system are duplicated for each carburetor barrel):

CONTINUED ON NEXT PAGE

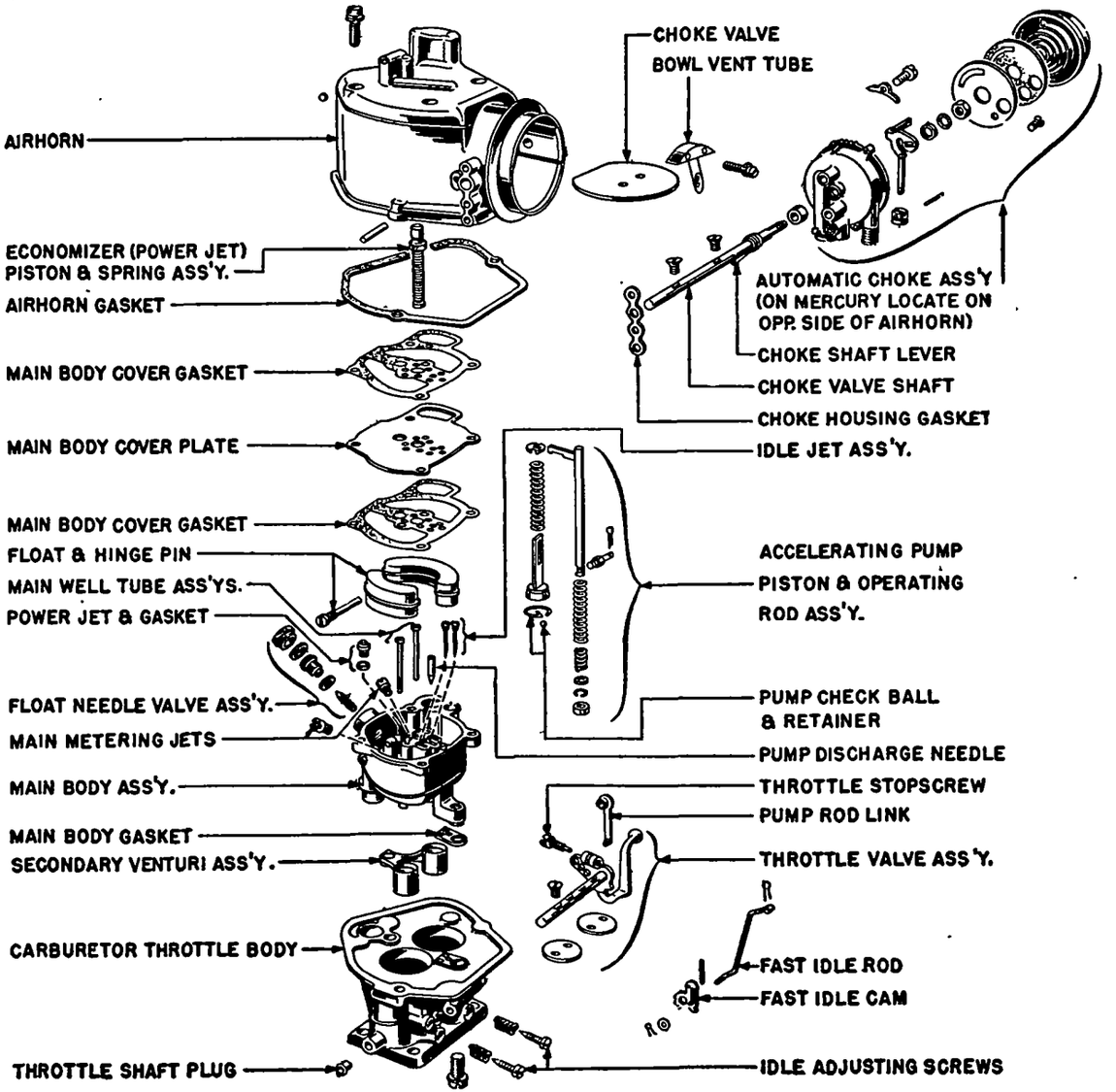

1949 LINC LN & MERCURY DUAL CONCENTRIC CARBURETOR

1949 LINCOLN & MERCURY DUAL CONCENTRIC CARB (C nt.)

Idle Fuel System—Fuel for idling is taken from main jet well up through the Idle Tube which meters the fuel and is mixed with air admitted through Idle Air Bleed (hole in cover plate above channel). Fuel mixture is then taken down through a channel in the throttle body casting to idle discharge ports at the throttle edge. For closed throttle idling (400 RPM), all fuel is discharged through lower idle port (below throttle valve) and is controlled by the Idle Adjusting Screw. As throttle is opened, additional fuel is discharged through upper port also (begins at 700 RPM) and fuel flow through both ports is at maximum at approximately 850 RPM. Above this speed, idle port discharge gradually drops off as main nozzle begins to function.

Main Fuel System—Fuel for main nozzle is metered by Main Metering Jet in bowl (at lower end of main jet well) and is taken up through (and around) Main Well Tubes where it is mixed with air admitted through Main Air Bleed (hole in cover plate above Well Tube and above nozzle passage). Fuel mixture is then taken down through nozzle passage and discharged into secondary venturi throat. Main nozzle begins to operate at approximately 850 RPM., blending with the idle system discharge. At 950-1050 RPM. idle system drops out and all fuel is discharged through the main nozzles.

Power Fuel System—Consists of a power valve controlled by a vacuum piston assembly which bypasses fuel directly from the bowl to the main jet well when the valve is open. This fuel is metered by a High Speed Restriction in the fuel channel. Valve is normally closed (piston held up against spring tension by manifold vacuum). At high speed or for wide open throttle operation, when vacuum drops to 7-5", spring forces piston down, opens valve, and permits additional fuel flow to main nozzles for full power operation.

Accelerating Fuel System—Pump arm and plunger stem are positively operated by throttle lever (pump piston is spring-loaded on plunger to prolong discharge on sudden throttle openings). Fuel is drawn into pump cylinder through intake ball check in bottom of cylinder when throttle is closed and is discharged past discharge valve needle and through twin discharge jets on bottom of main body when throttle is opened. Pump stroke is adjustable.

ADJUSTMENT & OVERHAUL

IDLING ADJUSTMENT: Idle adjusting screws control fuel mixture discharge from lower idle ports and should be turned out for richer mixture. Adjust only when engine warm (automatic choke and fast idle inoperative) and set for highest steady vacuum reading (use vacuum gauge).

Idle Speed—500 RPM. hot or slow idle speed.

METERING JETS: All jets are fixed non-adjustable type. See Holley (Ford) Jet Specification Table.

►*CAUTION—See Mercury Carburetor Jet Change data under "Field & Production Changes" above.*

POWER VALVE (ECONOMIZER): Valve remains closed in the normal speed range and is opened by the vacuum piston spring (when manifold vacuum falls off) to permit additional fuel flow to the main nozzles for high speed or wide open throttle operation. No adjustment is required.

Setting—Valve opens when manifold vacuum decreases to 7-5" of HG.

ACCELERATING PUMP: Positively operated by throttle lever with spring-loaded piston for prolonged discharge. Stroke is adjustable by engaging pump rod link in correct hole of throttle shaft lever as follows:

Center Hole—Normal operation (medium stroke).

Inner Hole—Extreme hot weather (min. stroke).

Outer Hole—Extreme cold weather (max. stroke).

FLOAT LEVEL: Fuel Level—½" ± 1/32" (0.500" ± 0.032") below top edge of bowl with intake valve seated. To check level, remove air horn and main body cover plate (see Disassembly directions), use Gauge 9550-B to check fuel level.
Adjustment—Bend tab at rear of float which contacts intake needle **down** to raise float level, or **up** to lower float level.

CAUTION—Double floats are used and must be set alike.

AUTOMATIC CHOKE: Consists of a thermostatic coil and vacuum piston assembly in a housing mounted on the air horn at the choke valve shaft. Thermostatic coil end is hooked over lever on choke shaft so that choke valve is closed with engine cold (for cold engine starting). As soon as engine begins to fire, manifold vacuum draws vacuum piston down and opens choke valve slightly (piston is linked to choke valve lever) and as engine warms up, thermostatic coil unwinds allowing choke valve to open wide. Heated air to operate coil is piped from heat tube in manifold to thermostatic coil housing (controlled by vacuum piston—enters through slots in cylinder uncovered by vacuum piston movement).

Adjustment—No adjustment required (factory setting should not be disturbed). Thermostatic coil can be adjusted to compensate for fuel and operating conditions by rotating housing clockwise (for more choke and richer warming up mixture) or counter-clockwise (for less choke action and leaner warming up mixture).

FAST IDLE: Consists of a fast idle cam linked to the choke valve and serving as a stop for the throttle stopscrew (idle speed adjusting screw). With choke valve closed, cam is rotated to position with throttle stopscrew resting on highest step for fast or cold idle. As choke valve opens, fast idle cam is rotated so that at normal operating temperature stopscrew rests on lowest step for normal hot or slow idling speed.
Adjustment—No adjustment is required.

CARBURETOR OVERHAUL: With carburetor removed from engine, disassemble, clean, and inspect all parts as follows:

Disassembly: Disconnect fast idle connector rod at fast idle cam. Take out five screws and lockwashers on top of air horn, carefully lift air horn off carburetor bowl. Remove main body cover plate and both gaskets from top of bowl. Invert carburetor (place hand over bowl to prevent parts falling out), take out both Main Well Tubes and Pump Discharge Needle. Unscrew float hinge pin, lift out float assembly and intake needle. Remove Main Jets, Idling Jets, and Power Jet Valve assembly. Remove accelerating pump pistton assembly, take out spring retainer and remove pump check valve ball from bottom of pump cylinder.

Cleaning & Inspection: Clean out all passages and blow out with air (CAUTION—Do not use wire to clean jets and passages or wire brush to clean parts). Inspect all parts for wear or damage, note following points particularly:

Bowl & Cover Plate Mating Surfaces—These surfaces must not be burred or scratched (will permit leaks between drilled passages). **Do not file these surfaces** (if surfaces not smooth and flat, replace bowl). Check cover plate for correct type. Each plate stamped with number indicating size of air bleed holes directly over main wells (.073"—Lincoln, .067"—Mercury).

Main Jet & Well Jet Tubes—Check for correct size. *See Mercury Carburetor Jet Change data under "Field & Production Changes" above.*

Accelerating Pump Check—Should be checked for leakage. Install pump discharge needle, pump check ball and spring retainer, and pump piston assembly. Fill bowl with fuel to normal level (½" below top). Hold discharge needle on seat with a blunt tool, operate pump and check for leakage at the following points:

(1) At Pump Discharge Needle. Fuel leakage at this point can be corrected by reseating needle (tap lightly using a brass drift and light hammer).

(2) At Pump Piston. Leakage past the piston indicates worn or damaged piston leather or loose pump rod. Inspect piston and replace if required.

(3) At Pump Intake Ball Check. Leakage at this point permitting fuel to flow back into bowl can be corrected by reseating ball. Tap ball lightly using a brass drift and light hammer.

CAUTION—Do not use steel drift which will flatten ball and permit leakage.

Float & Float Spring—*See Lincoln & Mercury Carburetor Float & Spring Change under "Field & Production Changes" above for new parts and installation instructions.*

Reassembly: Install Main Jets, Idling Jets, accelerating pump check ball and spring retainer, pump piston (CAUTION—use care not to damage piston leather), float needle, float and spring assembly, main well tubes. Then install carburetor on engine and crank engine to fill bowl with fuel. Check float level (see Float Level data). Install bowl cover plate using **new gaskets** below and above plate. Place new air horn gasket on throttle body flange, use two Aligning Pins, No. 9524, to install air horn. Tighten air horn screws securely.

HOLLEY (FORD) CARBURETOR JET SPECIFICATIONS

Car Model	Year	Carburetor Model	Venturi Size	Main Metering Jet Size	Main Metering Jet Part No.	Main Discharge Nozzle Part Number Left Hand	Main Discharge Nozzle Part Number Right Hand	Nozzle Air Bleed Plug Part No.	Econ mizer Assembly Part No.	Idle Tube Size	Idle Tube Part No.	Pump Nozzle Size	Pump Nozzle Part N .
FORD V8 '60'	1939-40	22A-9510-A	.81"	.043"①	22A-9533-A	22A-9921,23	22A-9920,22	78-9924	78-9904	54cc.	78-9542	#72	22A-9577
FORD V8 '90'	1938-41	91A-9510-A	.94"	.050"③	78-9533-A	91A-9921,23B	91A-9920,22B	78-9924	78-9904	54cc.	78-9542	#69	78-9577
FORD V8 '90'	1942	21A-9510-A		.050"②	78-9533-A	91A-9921,23B	91A-9920,22B	78-9924	78-9904	54cc.	78-9542	#69	78-9577
FORD V8 '100'	1946-48	59A-9510-A		.051"⑧	59A-9533A	91A-9923B	91A-9922B	78-9924	78-9904	54cc	78-9542	#69	78-9577
FORD V8 '100' Truck	1948	7RT-9510A		.051"⑧	59A-9533A	91A-9923B	91A-9922B	78-9924	78-9904	54cc.	78-9542	#69	78-9577
FORD V8 '100' Car	1949	8BA-9510A		.051"⑧	59A-9533A	91A-9923B	91A-9922B	78-9924	78-9904	54cc.	78-9542	#69	78-9577
FORD 6 "G"	1941-42	1GA-9510-A		.064"③	1GA-9533-A	1GA-9920		1GA-9924	1GA-9904④		1GA-9542		
FORD 6 "G"	1946-47	5GA-9510-A		.065"⑦	5GA-9533A	1GA-9920		1GA-9924	1GA-9904④		1GA-9542B		
FORD 6 "H" Car	1947-48	7HA-9510A		.065"⑦	5GA-9533A	7HA-9920		1GA-9924	1GA-9904⑫		1GA-9542B		
FORD 6 "H" Truck	Late 1947	7HT-9510		.065"⑦	5GA-9533A	1GA-9920		1GA-9924	1GA-9904⑫		1GA-9542B		
FORD 6 "H" Truck	1948	7HT-9510A		.065"⑦	5GA-9533A	1GA-9920		1GA-9924	1GA-9904⑫		1GA-9542B		
FORD 6 "H" Car	1949	8HA-9510A		.065"⑦	5GA-9533A	7HA-9920		1GA-9924	1GA-9904⑫		1GA-9542B		
LINCOLN (ZEPHYR)	'38-40	86H-9510-A2	.94"	.052"	86H-9533	91A-9923	91A-9922	78-9924	96H-9904	64cc.	86H-9542	#69	78-9577
LINCOLN 06H, 16H⑤	1940-41	06H-9510	1.00"	.054"	06H-9533	06H-9923	06H-9922	78-9924	96H-9904	64cc.	86H-9942	#69	78-9577
LINCOLN 16H⑤	1941	16H-9510-B		.054"	06H-9533	06H-9923	06H-9922	78-9924	96H-9904	64cc.	86H-9942	#69	78-9577
LINCOLN 16H, 168H⑥	1941	16H-9505-A, C		.054"	06H-9533	06H-9923	06H-9922	78-9924	96H-9904	64cc.	86H-9942	#69	78-9577
LINCOLN 26H⑤	1942	26H-9510-C		.055"	26H-9533	26H-9923	26H-9922	78-9924	96H-9904	64cc.	86H-9542	#69	78-9577
LINCOLN 26H,268H⑥	1942	26H-9505-D		.055"	26H-9533	06H-9923	06H-9922	78-9924	96H-9904	64cc.	86H-9542	#69	78-9577
LINCOLN 66H	1946-48	26H-9510-C		.055"	26H-9533	06H-9923	06H-9922	78-9924	96H-9904	64cc.	86H-9542	#69	78-9577
LINCOLN 9EH, 9EL	1949	8EL-9510A		.055"⑨	8EL-9533A			⑪	8CM-9904⑬	54cc.	8CM-9542	#70	
MERCURY	1939-41	91A-9510-A	.94"	.050"②	78-9533-A	91A-9921,23B	91A-9920,22B	78-9924	78-9904	54cc.	78-9542	#69	78-9577
MERCURY	1942	21A-9510-A		.050"③	78-9533-A	91A-9921,23B	91A-9920,22B	78-9924	78-9904	54cc.	78-9542	#69	78-9577
MERCURY	1946-48	59A-9510-A		.051"⑧	59A-9533A	91A-9923B	91A-9922B	78-9924	78-9904	54cc	78-9542	#69	78-9577
MERCURY 9CM	1949	8CM-9510A		.049"⑩	———			⑮	8CM-9904⑭	54cc.	8CM-9542	#70	

►*NOTE—FORD PART NUMBERS listed in table above.*

①—Under 5000 ft. .041" (5000-10000 ft.) Part No. 922A-9533-B.

②—Under 5000 ft. .048" (5000-10000 ft.) Part No. 78-9533-B.

③—Under 5000 ft. .062" (5000-10000 ft.) Part No. 1GA-9533-B.

④—Power Jet—Part No. 1GA-9594.

⑤—No Automatic Choke (Std. on Zephyr Models).

⑥—With Automatic Choke (Std. on Continental & Custom Models).

⑦—Use 5GA-9533B (.063") for 5,000-10,000 ft. altitude.

⑧—Use 59A-9533B (.049") for 5,000-10,000 ft. altitude.
Use 59A-9533C (.047") for 10,000-15,000 ft. altitude.

⑨—Use 8EL-9533B (.053") for 5,000-10,000 ft. altitude.
Use 8EL-9533C (.051") for 10,000-15,000 ft. altitude.

⑩—Replaces original .048" jets used in carburetors prior to carburetor stamping date 10-48. Furnished in Mercury Service Kit No. 8CM-99524.

⑪—Main Well Tubes—Part No. 8CM-9991.

⑫—Power Jet—Part No. 7HA-9594.

⑬—Power Jet—Part No. 8EL-9594.

⑭—Power Jet—Part No. 8CM-9594.

⑮—Main Well Tubes. On carburetors prior to carburetor stamping date 10-48, new re-worked Main Well Tubes stamped "S" available in Mercury Service Kit No. 8CM-99524.

HOLLEY (CHANDLER-GROVES) A-25,AOC-25

Code Mark M DEL A C-25

119-1, 119-3, 119-4—PACKARD SIX, MODEL 1600 (LATE 1938) SEE NOTE.

119-4A, 119-5—PACKARD SIX, MODEL 1700 (1939)

MODEL A-25

A-25—PLYMOUTH, STANDARD MODEL P-5, COMMERC'L MODEL PT-57 ('38)

Code mark identification is stamped on carburetor directly above idle adjusting screw (AOC-25), on venturi (A-25).

PACKARD CHANGES:—These carburetors used after approximately April 1, 1938. First type (119-1) should be brought up to later (119-3) standards as directed below to correct complaints of running out of fuel at high speed after engine has warmed up. Later type (119-4) has new design main body casting (Part No. 24R-51) and separate Economizer Jet (No. 24R-51, Size .045"). This new main body casting need not be installed on earlier 119-1 and 119-3 carburetors.

119-1 Carburetor Changes to correct Running out of Fuel at High Speed Complaints:—Remove original No. 18R-266A Float Needle & Seat Assembly and replace with new type No. 18R-5A which has a .104" orifice. Remove and discard original No. 33R-13A pump link and install new longer type No. 33R-282A link which is marked with figure '1' on face. Connect this pump link in center hole on throttle lever.

TYPE:—Plain tube, downdraft type similar in design to the 'AOC-2' carburetors used on previous Packard models except for new metering jet location and nozzle design as follows:

Metering Jet location—Jet installed in wall between float bowl and fuel channel to nozzle. Accessible by removing plug on side of float bowl (see illustration).

Nozzle Design—Vertical fuel channel (from main metering jet and economizer jet) closed by plug at upper end. Idle tube is pressed in cross-channel above nozzle (antechamber) and end of channel is closed by plug. Economizer jet is screwed in bottom of economizer recess under economizer assembly (119-4 and later types).

Accelerating Pump—New type with single driving spring (inner spring not used). Outlet check valve design is new with return vent to bowl above valve controlled by a separate ball check valve.

IDLING ADJUSTMENT:—Adjust only with engine warm so that Automatic Choke and Fast Idle inoperative (choke valve wide open, throttle stopscrew resting on lowest step of fast idle cam). Set throttle lever stopscrew for correct 5 MPH. idling speed. Turn idle adjusting screw in for leaner mixture, out for richer mixture (this screw controls fuel discharge through lower idle discharge port). Recheck idle speed. See tune-up data on car model page for complete tune-up instructions.

METERING JET:—Main metering jet is non-adjustable type located in float bowl and accessible from outside by removing plug on side of bowl. Jets should be changed only for special operating conditions such as high altitudes (5% and 10% lean jets available). See Chandler-Groves Jet Specification Table for data.

ECONOMIZER:—Consists of a spring-loaded vacuum diaphragm controlled by-pass valve assembly located under a small round cap on the side of the carburetor casting. Set at factory to open with 4-6" (Packard), 8¼" (Plymouth) of vacuum in manifold. No adjustment provided. See that cover over vacuum unit is tight.

ACCELERATING PUMP:—Fuel is drawn into pump cylinder through inlet check valve on upstroke of piston and is discharged through outlet check valve and discharge port located in carburetor wall at top of edge of venturi on the down-stroke of the piston when the throttle is opened for acceleration. Pump piston is spring loaded by spring on piston rod below pump rod connection. A return vent to the float bowl is located at the upper end of the pump discharge channel (above the outlet check valve) and is controlled by a separate ball check valve. **Capacity**—As shown in table below in cc. per 10 strokes (throttle lever stopscrew must be backed off to allow throttle to close completely when pump is checked) with pump rod link connected as indicated.

Car Model	Carburetor	Pump Capacity	Pump Setting
Packard 1600	119-1, 3	9-11 cc	Outer Hole
Packard 1600	119-4	12-16 cc	Center Hole
Packard 1700	119-4A, 5	14-18 cc	Center Hole
Plymouth P5, PT57	A-25	12-15 cc	Center Hole

Adjustment—Three holes provided in throttle lever for pump rod link connection. Center hole (medium stroke) is normal connection. Outer hole (long radius —maximum stroke) provides maximum pump discharge, inner hole (short radius—min. stroke) minimum discharge. See tune-up data on car model page for recommended settings and seasonal changes.

FAST IDLE:—**Packard.** Stepped fast idle cam mounted on the automatic choke lever shaft and serving as a stop for the throttle lever stopscrew. No adjustment required. See article on Chandler-Groves Automatic Choke and Fast Idle in Carburetion Equipment Section for complete servicing directions.

Plymouth. Consists of a fast idle lever linked to the choke valve lever and serving as a stop for the throttle lever stopscrew. This lever is rotated when choke valve closed for cold starting so that throttle valve is opened to fast idle position. No adjustment required.

FLOAT LEVEL:—**Fuel Level**—Should be 17/32" below top edge of float bowl (gasket seat) with engine idling and fuel pump pressure of 2 lbs.
Float Level—Tops of floats at free ends should be 3/16" below gasket surface of float bowl with float needle valve closed. Adjust by bending float arms. Make certain that both floats are uniform (bend both arms equally).

Needle Valve & Seat—No. 18R-5A (Packard—see note below for 119-1 type), No. 18R-4A (Plymouth). Furnished only in matched sets. Do not use excessive pressure when installing assembly.

Packard Note—This 18R-5A should be installed on 119-1 carburetors to replace original 18R-266A to correct complaints of running out of fuel at high speed.

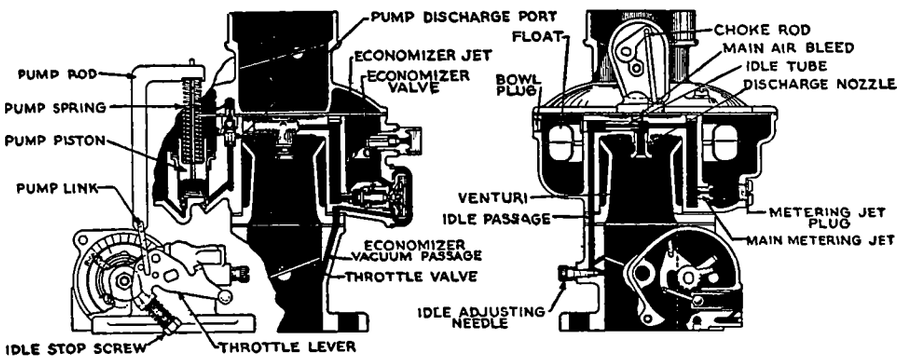

CHOKE:—**Packard Models.** Chandler-Groves automatic type mounted integrally on carburetor. See article in Carburetion Equipment Section for servicing data. **Service Note**—On cars with Overdrive, long side of choke valve must clear carburetor air horn by .005" with valve fully closed.

Choke Setting—Reference mark on thermostat plate should be lined up with punchmark on housing. To adjust, loosen screw and shift thermostat plate. Setting may be varied 5 graduations for better warming up performance.

CHOKE:—**Plymouth.** Offset butterfly type with poppet type relief valve to prevent over-choking. See article in Carburetion Equipment Section on Sisson Automatic choke (when used).

THROTTLE VALVE SETTING:—**Model AOC-25.** Throttle valve should be flush with the tw #60 idle discharge ports when completely closed and should cover 1/3 of the #50 vacuum spark control port.

Model A-25. Throttle valve should be flush with the #60 idle discharge port and should be .005" below the #60 vacuum spark control port when fully closed.

HOLLEY (CHANDLER GROVES) A-2, AOC-2

M DEL A C-2

1-AA, 1-AB, 1-AC, 1-AD—PACKARD SIX, MODEL 115C (1937)
1-MA, 1-MB—PACKARD SIX, EXPORT MODELS 115C (1937)
1-BA—PACKARD SIX, MODEL 1600 (1938)—BEFORE APRIL 1, 1938

MODEL A-2

A-2-3—PLYMOUTH, COMMERCIAL MODEL PT-50 (1937)
PLYMOUTH, STANDARD MODEL P3 (1937)—AFTER MARCH 10, 1937

Code mark identification is stamped on spacer above idle adjusting screw (AOC-2), n venturi (A-2).

NOTE:—Model AOC-2 (Packard) fitted with built-in Automatic Choke. See article on Chandler-Groves Automatic Choke in Carburetion Equipment Section for complete adjustment instructions. Both models fitted with Fast Idles.

Plymouth. Economy models fitted with Carter (B&B) Carburetors. See Carter (B&B) Carburetor article for data on these types.

PACKARD CHANGES:—On cars before Eng. No. 5735, insufficient float travel caused by float stop being too high may lower top speed or cause running out of gasoline at high speeds. To correct this complaint, file a slot ¼" wide and 3/64" deep, 3/32" from the end of the left hand float support arm as viewed from needle valve end of float assembly. Service floats designed to correct this trouble available on even-exchange basis under Part No. 16R-72A. This trouble should not be experienced on cars after Engine No. 5735.

Models marked 1AA or 1AB (On Venturi). These models can be brought up to 1-AC standards (see below for later 1-AD) by removing and discarding the Part No. 23R-19 Pump Discharge Needle valve and installing new Upper Pump Discharge Needle (23R-1), Lower Pump Discharge Needle (23R-2), and Pump Discharge Needle Spring (23R-7) in its place; and also removing and discarding the Part No. 37R-235 Pump Discharge Retainer Stud and installing the new Pump Discharge Needle Stud (37R-2). A new Pump Piston and Plunger Assembly (30R-5A) is available which replaces all of the following parts: Pump Piston (30R-172), Pump Piston Plunger (32R-158, 7R-155), Pump Piston Plunger Spring (38R-173). The new main body and plug assembly (6R-17A) as used on the later 1-AC type carburetor may be installed on 1-AA and 1-AB carburetors, if desired, providing the new type Idling Tube (14R-38-3) is installed in place of the original type (14R-38). To bring these 1-AA and 1-AB carburetors up to later 1-AD standards after all changes listed above have been made, follow same procedure as given below for modernizing 1-AC types.

Model 1-AC. To bring this type up to later 1-AD standards, remove original metering jet and install new .058" jet (22R-1). Remove and discard original air horn gasket and install new vented type gasket (8R-16). Drill a ¼" extra air vent in air horn 1 15/16" to left of center air horn attaching screw and 15/16" up from lower flange (carburetor viewed from side with throttle lever to left and automatic choke assembly to right). Remove original throttle body to float chamber gaskets and install 3 new No. 8R-15 gaskets without spacer.

Models 1-AD, 1-BA. These models identical except for float chamber vent in air horn. Air horns are interchangeable and later (1-BA) type only stocked for service.

TYPE:—Plain tube, downdraft type with throttle operated accelerating pump and vacuum controlled economizer. Float bowl is concentric, entirely surrounding carburetor body. Float consists of two curved sections on opposite side of float bowl and linked together by float lever with float needle valve midway between them.

Fuel System (Idling):—Fuel for idling taken from main antechamber above main discharge nozzle through idling tube in end of antechamber and then down through channel to idling ports opposite throttle. The idling tube meters this fuel. For closed throttle idling, fuel is discharged through the lower idle port below the throttle valve and is controlled by the idle adjusting screw. Upper idle port (above the throttle valve) serves as an air bleed. As soon as the throttle is cracked open for low speed running, additional fuel is discharged through this upper port also.

Driving Range:—At intermediate speeds, the fuel in the antechamber is discharged through the main discharge nozzle located directly below the antechamber. This fuel is metered by the main metering jet located in the antechamber fuel channel from the float bowl. Jet is accessible by removing the large plug under the float bowl. Air bleed holes are drilled in top of antechamber wall.

High Speed & Wide Open Throttl Operati n:—When the throttle is wide open, the drop in vacuum allows the economizer valve spring to open the valve allowing additional fuel to flow into the antechamber fuel channel above the main metering jet. This fuel is metered by the economizer jet located in the vertical channel leading to the main fuel channel. Jet is accessible by taking out plug in main body casting at lower end of economizer channel.

IDLE ADJUSTMENT:—Idle adjusting screw controls fuel discharge from lower idling port. Screw should be turned in for leaner mixture and out for richer mixture. Idle speed controlled by throttle lever stopscrew. Adjustments should be made only when engine warmed up so that choke valve is wide open and fast idle inoperative. See tune up data on car model page for complete adjustment directions on car.

METERING JET:—Main metering jet is non-adjustable fixed type. Jets sh uld be changed only to compensate for special operating conditions such as high altitudes (5% and 10% leaner metering jets are available). See Jet Specification Table below for standard jet calibrations.

ECONOMIZER:—Consists of a spring loaded, vacuum diaphragm controlled bypass valve assembly located under a small round cap on the side of the carburetor body casting. No adjustment required. Set at factory to open with 4-6" vacuum in manifold. Cover forms vacuum chamber and must be kept tight.

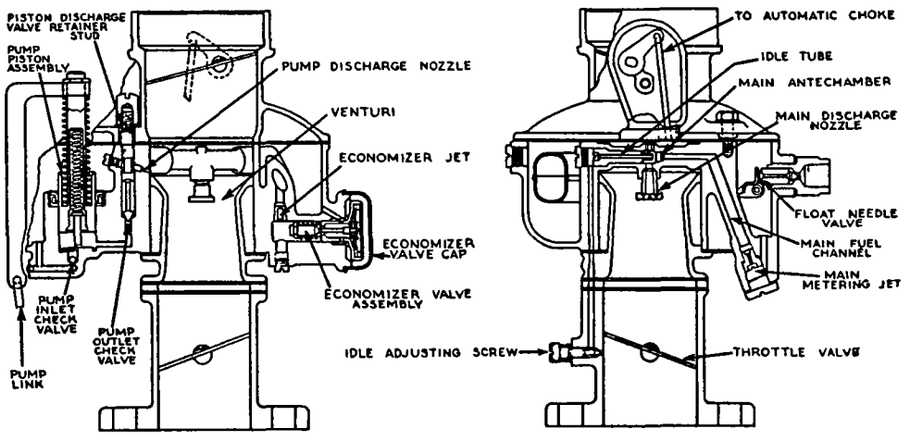

ACCELERATING PUMP:—Fuel is drawn into pump chamber through inlet ball check valve on the upstroke of the piston and is discharged through the outlet check valve and the pump discharge nozzle at the upper end of the venturi n the downstroke of the piston when the throttle is opened. Pump rod connection to pump piston is through a driving spring on the piston stem. This permits prompt delivery of the accelerating charge but the spring is opposed by the plunger spring within the piston stem, which is compressed when the pump plunger contacts the bottom of the pump well, so that the accelerating charge is prolonged.

Capacity—As shown in table below in cc. per 10 strokes. Throttle lever stopscrew must be backed off to allow throttle to close completely when pump capacity is being checked.

Car Model	Carburetor	Pump Capacity
Packard Six 115C	1-AA, 1-AB, 1-AC, 1-AD	9-11 cc.
Packard Six Export	1-MA, 1-MB	8-10 cc.
Packard Six 1600	1-BA	9-11 cc.
Plymouth P3, PT-50	A-2-3	11-14 cc.

Adjustment—Three holes provided in throttle lever for pump rod link connection. Center hole is normal setting. Inner hole (short radius) provides minimum stroke and outer hole (long radius) maximum pump stroke. See tune up data on car model page for recommended settings.

CONTINUED ON NEXT PA E

HOLLEY (CHANDLER-GROVES) AOC-2, A-2 (C nt.)

FLOAT LEVEL:—Fuel level in float bowl set at 17/32" below top edge (gasket seat) of bowl with gasket removed. With this setting, top of float at free end should be 5/32" below top edge of bowl with float needle valve closed. Float level can be corrected by bending float lever at needle valve slightly.

NOTE—See instructions above (Packard Changes) to correct insufficient float travel on first cars.

CHOKE:—Choke valve is offset on shaft. Model A-2 fitted with poppet-type relief valve. No relief valve used on Model AOC-2.

FAST IDLE:—Model A-2. Consists of a throttle lever stopscrew stop cam which is linked to the choke valve so that the rotation of the cam when the choke valve is closed for cold starting opens the throttle to the fast idle position. No adjustment required.

Model AOC-2. Consists of a throttle lever stopscrew stop cam mounted on the automatic choke thermostatic coil floating shaft so that the cam tends to rotate, opening the throttle to the fast idle position, when the engine is cold (throttle must be opened momentarily to permit thermostatic coil to close choke valve and rotate fast idle cam). See article on Automatic Choke in Carburetion Equipment Section.

THROTTLE VALVE SETTING:—Model AOC-2. Throttle valve should be flush with the #60 drill size idle discharge holes when completely closed and should cover one-third of the #50 drill size vacuum spark control hole.

Model A-2. Throttle valve should be flush with the #60 drill size idle discharge ports and should be .005" below the #60 vacuum spark control hole when completely closed.

TROUBLE SHOOTING:—Over-choking or Flooding. Throttle should be opened once only to place fast idle and automatic choke in operation. Repeated operation of the throttle will cause accelerating pump to flood carburetor. To correct flooded carburetor, open throttle wide (throttle lever will open choke valve halfway). If flooding continues, check choke valve and linkage for binding, check automatic choke setting and thermostatic spring coil action, check vacuum piston.

Engine continues to fast-idle when warm. See that vacuum piston is free and vacuum passage to carburetor barrel is open, check small spring on floating shaft and lever assembly which causes fast idle cam to follow as choke valve opens, check thermostatic spring coil setting, see that heat passage to thermostat is open and that correct gasket used between thermostat assembly and carburetor body. Check action of manifold heat control thermostat.

Poor Idling Performance. Take out idle discharge plug and idling tube, blow out tube and idling passages with compressed air. If idle setting is rich and cannot be cut down, check vacuum economizer valve, see that valve is seated properly, diaphragm is not leaking, and that cover is tight. Do not disassemble valve as this will destroy factory setting.

Poor Running Performance. Remove metering jet plug and metering jet, check metering jet size, blow out main metering channel and main discharge channel with compressed air. Check fuel level (see note above to correct faulty high speed performance due to insufficient float travel on first cars). Check vacuum economizer valve. Take out economizer jet plug, blow out jet and fuel channel with compressed air.

Poor Acceleration Performance. Check pump setting (see recommended settings in tune up data on car model page). Examine pump inlet ball check valve and outlet check valve, blow out pump passages with compressed air, run wire drill or wire not to exceed #70 size through pump discharge jet passage in body. Be careful not to damage pump piston seal assembly when working on pump (this must be installed at the factory or a new carburetor body installed).

HOLLEY (CHANDLER-GROVES) CARBURETOR JET SPECIFICATIONS

Car Model	Year	Carburetor Model	Venturi Assembly Size	Venturi Assembly Part No.	Main Metering Jet Size	Main Metering Jet Part No.	Main Disch. Nozzle Size	Main Disch. Nozzle Part No.	Economizer Jet Size	Economizer Jet Part No.	Idle Tube Size	Idle Tube Part No.	Pump Nozzle
PACKARD Six 115C	1937	AOC-2-1AA	1 3/16"	45R-238	.060"	22R-40-60	.147"⑧	21R-22	.047"	24R-51	#52	14R-38	#70
PACKARD Six 115C	1937	AOC-2-1AB	1 3/16"	45R-238	.060"	22R-40-60	.147"⑧	Intgrl.	.047"	24R-51	#52	14R-38	#70
PACKARD Six 115C	1937	AOC-2-1AC	1 3/16"	45R-238	.059"	22R-40-59	.147"⑧	Intgrl.	.045"	24R-51	#52	14R-38-3	#70
PACKARD 115C Exp.	1937	AOC-2-1MA	1 5/32"	45R-277	.059"	22R-40-59	.147"⑧	21R-22	.044"	24R-51	#52	14R-38-1	#71
PACKARD 115C Exp.	1937	AOC-2-1MB	1 5/32"	45R-277	.059"	22R-40-59	.147"⑧	Intgrl.	.044"	24R-51	#52	14R-38-1	#71
PACKARD Six 115C	Late 1937	AOC-2-1AD	1 3/16"	45R-238	.058"⑨	22R-40-58	—	Intgrl.	.047"	24R-51	#52	14R-38-3	#70
PACKARD Six 1600	Early 1938	AOC-2-1BA	1 3/16"	45R-238A	.058"⑨	22R-40-58	—	Intgrl.	.047"	24R-51	#52	14R-38-3	#70
PACKARD Six 1600	1938	AOC-25-119-1, 3	1 7/32"	45R-4A	.062"⑩	22R-40-62	—	Intgrl.	—	—	—	—	#69
PACKARD Six 1600	Late 1938	AOC-25-119-4	1 7/32"	45R-4A	.062"⑩	22R-40-62	—	Intgrl.	.045"	24R-51	—	—	#69
PACKARD Six 1700	1939	AOC-25-119-4A, 5	1 7/32"	45R-4A	.061"⑪	22R-40-61	—	Intgrl.	.046"	24R-51	—	—	#69
PLYMOUTH Std. P3	1937	A-2-3	1⅛"	45R-70A	.055"⑫	22R-40-55	.147"⑧	Intgrl.	.041"	24R-5147	#52	14R-38-2	#69
PLYMOUTH Comm. PT50	1937	A-2-3	1⅛"	45R-70A	.055"⑫	22R-40-55	.147"⑧	Intgrl.	.041"	24R-5147	#52	14R-38-2	#69
PLYMOUTH P5, PT57	1938	A-25-117-1	1 5/32"	45R-3	.057"⑬	22R-40-57	.147"⑧	Intgrl.	—	—	—	—	#70

⑧—Center feed hole. Four #56 side holes also used.
⑨—5% Lean—.057"—22R-40-57. 10% Lean—.056"—22R-40-56.
⑩—5% Lean—.061"—22R-40-61. 10% Lean—.060"—22R-40-60.
⑪—5% Lean—.060"—22R-40-60. 10% Lean—.059"—22R-40-59.
⑫—5% Lean—.054"—22R-40-55. 10% Lean—.052"—22R-40-52.
⑬—5% Lean—.056"—22R-40-56. 10% Lean—.054"—22R-40-54.

CADILLAC MODEL 51

	Detroit Model
Cadillac V12, Series 80, 85 (1936), 85 (1937)	51
Cadillac V16, Series 90 (1936-37)	51

NOTE:—The V-12 and V-16 cars are equipped with two carburetors each. One carburetor is used for each cylinder bank. Carburetors must be equalized as well as adjusted in order to assure smooth running. Complete adjustment procedure given below should be followed exactly.

TYPE:—Expanding air valve updraft type with auxiliary unit consisting of starting device or priming jet, accelerating pump and power jet. Main metering unit consists of two hinged air valves or vanes which engage an aspirating tube so that aspirating tube is raised as vanes open. Aspirating tube is attached to a spring-loaded metering orifice tube so that orifice is withdrawn from metering pin and fuel supply automatically increased as vanes open to admit more air. Fuel is automatically and correctly proportioned to air for all positions of the throttle valve.

When carburetor is choked for starting, choke lever on carburetor rotates starting sleeve (pump housing) holding the main air vanes closed through a spring-operated lever and lining up passages in the upper end of the pump housing and carburetor body so that fuel is drawn up through the hollow stem of the accelerating pump and discharges through a priming port above the throttle valve directly into the mixing chamber. Throttle valve must be kept closed when engine is started (kicker rod on throttle lever will open throttle correct amount for starting—see adjustment below). Metering pin adjustment and kicker rod clearance (for starting) are the only points requiring attention.

NOTE—Automatic choke must be made inoperative by blocking choke arm in 'off' or down position while making adjustments as lifting the hood may lower temperature sufficiently to cause slight choke action and prevent correct setting being secured.

PRELIMINARY ADJUSTMENT:—See that starting sleeve on carburetor is rotated so that choke lever is against stop on float chamber cover when choke control button on instrument panel is pulled out. This is important in order to line up priming port passages in pump housing and carburetor body for starting. If carburetors are completely out of adjustment, turn metering pin up until it just seats in aspirating tube orifice and then back metering pin off (counter-clockwise) exactly 4 turns. Run the engine until it is thoroughly warmed up, then close throttle and check idling speed. If speed is not 320 RPM., make idling adjustment as follows:

IDLING ADJUSTMENT:—Idling speed is controlled by throttle lever stop screw. With carburetor off the engine, adjustment can be checked by using a feeler gauge to check distance between edge of throttle valve and carburetor wall. Turn stopscrew until this clearance is .004" (feeler not more than ⅛" wide). with throttle closed. To adjust on the engine, turn stop screw until engine speed is 320 R.P.M. This can be checked on the V-12 and V-16 models by removing oil filler cap on valve cover on one cylinder bank and noting rocker arm movement. Rocker arm should move 40 times in 15 seconds with engine running at 320 R.P.M.

METERING PIN (IDLING) ADJUSTMENT:—Metering pin of each carburetor should be adjusted by turning pin up or clockwise until engine begins to miss or speed decreases and then turning pin down or counter-clockwise until engine fires smoothly. This adjustment should be made slowly so that point of smoothest running is accurately determined. Final setting should be not more than ¼ turn past this point (slightly rich setting which will avoid any possibility of 'popping' back). Release automatic choke arm. Standard metering pins are listed in table below (optional metering pins not supplied).

Car Model	Metering Pin Size
V12 (all models)	#12
V16 (all models)	#14

EQUALIZING CARBURETORS:—Using Gauge—Using equalizing gauge consisting of a 'U' tube partly filled with mercury which should be hung vertically on one of the radiator brace rods and connected to ach intake manifold. A piece f rubber tubing is connected to each leg f the 'U' tube and special fittings can be secured so that the other end f the tubing can be connected to the vacuum fittings on the manifold after the brake booster and windshield wiper lines have been disconnected. Disconnect right hand carburetor throttle rod. With equalizing gauge in place, idle engine and note mercury level in tube. If mercury level is at same height in both legs of the tube, and engine idles at 320 R.P.M. (check rocker arm to see that it operates 40 times in 15 seconds), carburetors are correctly equalized. If mercury level is even and engine idles too fast, back off throttle stop screw in each carburetor an equal amount until correct speed is secured. If mercury levels are not equal and engine idles too fast, back off the throttle stop screw on the carburetor feeding the bank on which the mercury level is lower. If mercury levels are not equal and engine speed is too slow, turn up the throttle stop screw on the carburetor feeding the bank on which the mercury level is higher. With correct adjustment engine should idle at exactly 320 RPM and mercury level should be equal in both tubes. Adjust right hand carburetor throttle rod so that it can be connected without disturbing position of throttle valve, connect rod, open throttle so that engine speed is 1000 R.P.M., check mercury levels, adjust by changing right hand carburetor throttle rod slightly. Recheck mercury level at idling speed.

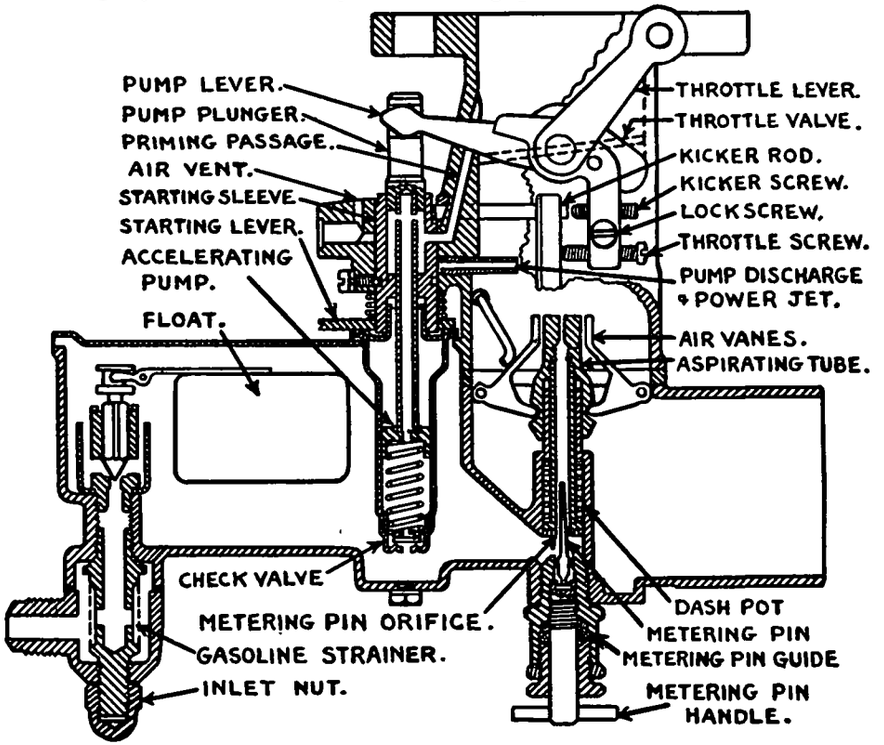

Equalizing—Without Gauge:—If gauge not available, disconnect coil wir for right hand block, idle engine on left hand block cylinders, adjust metering pin for left hand carburetor (see above), set throttle stopscrew so that engine just turns over without stalling. Connect coil wire, disconnect wire for left hand block, repeat adjustment for right hand carburetor. Idle engine on all cylinders, check idling speed.

KICKER ROD (STARTING) ADJUSTMENT:—With carburetor off engine and choke in open position, check clearance between edge of throttle valve and carburetor wall (throttle must be closed). Adjust by turning kicker screw in in or out until clearance is .013" (measure with a feeler gauge).

FLOAT LEVEL:—Fuel level in float chamber should be 13/16-15/16" below top edge of float chamber. Carburetor is not sensitive to fuel level and should not require adjustment. Replace parts to correct float level.

AUTOMATIC CHOKE:—All models are fitted with a semi-automatic choke which is designed to control choke during the warming up peri d. Manual choke control should be used in the usual manner to start a cold engine but should be pushed in immediately when the engine starts. See complete article on operation and checking f Automatic Choke.

MARVEL-SCHEBLER (FORD) MODEL TSX

F RD NO. NY-9510

FORD 4 CYLINDER, ALL COMMERCIAL & TRUCK MODELS (1941-42)

TYPE:—Plain tube updraft type with low speed (idle) and high speed (power) adjustments. Float bowl is concentric type with double 'saddle' type float and is vented through air horn. Fuel for idling is taken from main nozzle well up through passage in carburetor body and air horn castings to idle discharge ports at the throttle edge and is metered by Idle jet installed in lower end of passage in air horn and bowl cover casting. Idle adjusting screw controls air bleed in idle passage. Fuel for main nozzle is metered by power adjusting needle which controls fuel flow from bowl to main nozzle well and a Maximum Fuel Limiting Jet is located at the bottom of the main nozzle well for additional control. There is also an Economizer Jet located in a channel in the carburetor casting. Main nozzle is air bled through passage opening into top of float bowl chamber in bowl cover casting behind venturi. This passage has an Air Vent Cup pressed in the upper end at the bowl cover casting gasket opening.

CAUTION—If Air Vent Cup removed, new cup must be installed and reamed after assembly to specified size of .035" as directed in Servicing section below.

ADJUSTMENT:—Adjust carburetor only after engine warmed up and with choke valve wide open. Then adjust low speed (idling) and high speed (power) adjustments as follows:

Low Speed Idling Adjustment—Set throttle stopscrew for correct 5-7 MPH. idle speed. Turn idle adjusting screw in until engine begins to roll (mixture too rich), then turn screw out slowly until engine idles smoothly. Recheck idle speed. NOTE—This method of adjustment will give a setting which is slightly on the rich side which is preferable to a too lean setting.

High Speed Power Adjustment—Open throttle approximately ⅓. Turn power adjusting needle (on bowl cover beside fuel inlet connection) in or clockwise slowly until engine begins to lose power and speed drops off, then turn needle out or counter-clockwise until speed picks up and engine runs smoothly. Check performance and if engine tends to backfire or falter in picking up load, turn power adjusting needle out or counter-clockwise one notch at a time until acceleration is satisfactory. NOTE—This setting will give most economical performance and Economizer Jet will provide proper fuel mixture for full throttle operation. Power adjusting needle should be approximately 1 turn out from inner seated position.

FLOAT LEVEL:—Float is double type and both floats should be set exactly alike. To check float level, remove bowl cover and float assembly, invert cover, measure from gasket surface on cover to nearest edge of floats. Distance should be 9/32". To adjust float level, use bending tool M-8 and bend float lever at narrow section midway between valve and floats. Adjust both floats exactly alike.

Needle Valve & Seat—Furnished as matched sets only. Ford No. 9N-9564.

CHOKE:—Choke valve is butterfly type with spring-loaded flapper type relief valve. Check choke linkage and adjust so that choke valve fully closed when choke control button pulled out, and wide open when control button pushed in.

SERVICING:—**Disassembly**—Back out and remove power adjusting needle, spring, and gasket (CAUTION—Power adjusting needle must be removed before any attempt made to remove bowl cover and air horn casting). Remove four bowl cover attaching screws, remove bowl cover and air horn assembly. Take out float lever shaft, remove float and lever assembly, float valve, float valve seat and gasket, bowl cover gasket, venturi, Economizer Jet (use long, slender screwdriver), Idle Jet, idle adjusting screw and spring, fuel intake elbow and strainer screen, throttle valve screws and lockwashers, and throttle valve. Examine throttle valve shaft for wear (use new shaft when reassembling if wear evident), remove throttle shaft and lever, and packing at lever end of shaft. Remove idle port inspection plug. Remove main nozzle and nozzle gasket (use tool M-78), remove Maximum Fuel Limiting Jet from bottom of nozzle well. If necessary to remove Air Vent Cup from top of main nozzle air bleed passage, insert sharp pointed tool in cup and pry cup out (CAUTION—New cup must be installed when carburetor reassembled and then reamed to specified size—see Reassembly data below). Remove float bowl drain plug, remove dust strainer at bottom of carburetor (if strainer cannot be cleaned without removal). Remove choke valve screws, choke valve, shaft and lever assembly, and shaft packing.

Servicing—Clean out all passages and channels in carburetor castings, blow out jets with air, examine all parts for wear. NOTE—When overhauling carburetor after normal service, following parts only should require replacement: Throttle shaft and lever assembly, Float valve and seat (furnished as matched set), float lever shaft, power adjusting needle, felt packing on throttle valve and choke shafts.

Reassembly—Use new gaskets, install all parts in reverse order to disassembly directions above. Note following special directions and cautions: When installing choke valve and throttle valve, hold valves in closed position (throttle valve stopscrew must be backed off to allow valve to close completely) while tightening attaching screws, then check valves to make certain that they operate freely

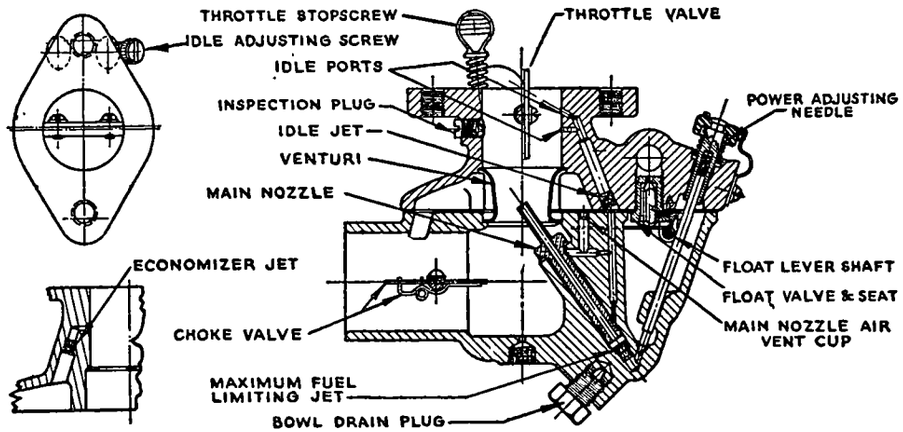

without binding. When installing idle adjusting screw and power adjusting needle use care not to tighten these screws excessively which will groove needle point and prevent satisfactory adjustment (turn screws in until lightly seated, then back idle adjusting screw off 2 turns, power adjusting needle 1 turn which is approximate setting and will allow engine to be warmed up so that accurate adjustment can be made). Adjust float level.

Air Vent Cap Servicing Note—If cap removed, press new cap in place in main body casting, then ream hole in cap to finished size of .035".

Part	Jet Specifications	Ford Part N .
Idle Jet		9N-9596
Maximum Fuel Limiting Jet		9N-9533
Main Nozzle		9N-9530
Power Adjusting Needle		9N-9565A
Venturi		9N-9586A
Float Valve & Seat (Matched Set)		9N-9564

MARVEL MODELS B, B2, B2SU, B3

B—10-1603—NASH-LAFAYETTE, MODEL 3610 (1936)
B2SU—10-1673—GRAHAM CRUSADER, MODELS 80, 80A (1936).
B2SU—10-1690—GRAHAM, 80, 80A ('36) ENG. NO. 309995 UP.
B2SU—10-1690—GRAHAM CRUSADER, MODEL 85 (1937)
B2—10-1678—GRAHAM CAVALIER, MODELS 90, 90A (1936).
B2—10-1691—GRAHAM, 90, 90A ('36) ENG. NO. 207235 (90), 215764 (90A) UP.
B2—10-1691—GRAHAM CAVALIER, MODEL 95 (1937)
B3—10-1680—GRAHAM SUPERCHARGER, MODEL 110 (1936).
B3—10-1692—GRAHAM, 110 (1936) ENGINE NO. 108175 UP.
B3—10-1744—GRAHAM SUPERCHARGER, MODELS 116, 120 (1937)

NOTE:—1936 Graham. Production changes made in jet calibrations for all models. These new jets should be installed on earlier carburetors (before Serial No. given) to correct performance complaints as follows:

Crusader Model B2SU-10-1673—Changes made beginning with Serial No. 5093894 (stamped on flange of die casting above idle adjustment). To correct lean part-throttle performance on earlier models, change Idle Air Vent No. 49-79H (.079") to new smaller size No. 49-63H, (.063").

Cavalier Model B2-10-1678—Changes made beginning with Serial No. 5092447. To correct lean part-throttle performance on earlier models, change Idle Air Vent No. 49-79H to new smaller size No. 49-71H and change matched Metering-Pin and Jet No. 280-1108F to new size No. 280-1109F. For better acceleration performance, change standard pump setting from No. 3 hole in pump lever to No. 2 hole.

Supercharger Model B3-10-1680—Beginning with Serial No. 5090942, Power Jet changed from 49-890T to 49-660T and Main Nozzle from 47-100J to 47-125J. Beginning with Serial No. 6002388, Complete Pump Assembly changed from 149-539 to 149-540. To correct lean action at high speeds, change Power Jet and Main Nozzle as above and change pump setting to No. 2 hole in lever (No. 1 standard setting as specified for first cars was incorrect and should have been No. 2). Not necessary to change pump assembly to correct performance. (On cars with new pump assembly, pump standard setting is No. 3 hole). Vacuum Spring No. 24-275 was changed to No. 24-225 after first 300 cars.

Choke Valve on all Models—Choke valve control modified to include double end finger which kicks choke valve off the open position when dash control lever pulled out, and returns choke valve to off position when control pushed in. Not intended to be installed on earlier models but obviates service check to see that spring-controlled choke valves operate freely on first carburetors to insure complete opening and closing.

1937 Graham:—Production changes made for increased gasoline economy. These same changes (new vacuum step-up spring and new power jet) should be installed on cars prior to Serial No. 217175 (Cavalier 95), 132010 (Schgd. 116), 120069 and 110988 (Schgd. 120). Part numbers for each model given below (new spring is light brass color). See Marvel Jet Specification Table for complete jet calibration. Check metering rod when making these changes.

	Vacuum Step-up Spring.		Power Jet.	
Model.	Old Part No.	New Part No.	Old Part No.	New Part No.
95	24-361	24-225	49-700-T	49-600-T
116, 120	24-361	24-225	49-760-T	49-730-T

To install these parts, loosen clampscrew and move air cleaner adapter to one side, disconnect gasoline line at float bowl, take out float bowl screws and remove cover, lift out economizer plunger and spring assembly. Remove metering pin housing from carburetor body, install new power jet in metering pin housing, re-install metering pin housing in carburetor making certain that gasket is in place, use new spring when installing economizer. See that economizer is clean and works freely.

TYPE:—Plain tube, downdraft type with throttle operated accelerating pump and vacuum economizer or 'step-up device'. All fuel is metered by metering pin and jet and power jet (in lower end of metering jet assembly). Metering pin is controlled by vacuum economizer piston (see Economizer Section below). Fuel for idling is taken from the main nozzle channel up through the idle tube to a cross passage in which the idle air vent jet is located. The fuel mixture is then taken down through a passage and discharged through two ports opposite the throttle edge. The lower idle port (controlled by the idle adjusting needle) supplies all fuel for closed throttle idling, the upper port (above the throttle edg when the throttle is closed) acting as an additional air bleed. When the throttle is opened slightly the upper port comes into action and all fuel for car speeds up to approximately 18 M.P.H. is supplied by the idle system. The main nozzle comes into action at about 18 M.P.H. and acts in conjunction with the idle system at speeds up to 35 M.P.H. At speeds greater than 35 M.P.H. all fuel is supplied by the main nozzle. Idling adjusting needle and accelerating pump (seasonal setting) are the only points requiring attention.

ACCELERATING PUMP:—Positively actuated by throttle valve lever. Fuel drawn into pump chamber through ball-check valve on upstroke of piston (when throttle closed) and discharged through ball-check outlet valve and pump discharge jet (in upper mixing chamber) on downstroke of piston (when throttle opened for acceleration). Outlet valve normally held closed by cylindrical plunger in channel above ball. On Graham models, pump piston is spring-loaded and free on shaft so that some lag occurs when throttle opened suddenly and spring action to return piston to seat lengthens pump discharge period. This feature not used on LaFayette carburetor.

Adjustment—Pump lever on throttle valve shaft provided with four holes for pump rod link engagement. Holes numbered 1 to 4 out from shaft (#1 minimum stroke, #4 maximum stroke). See Note above and tune-up data on car model page for standard setting and adjustments for seasonal requirements on each car model.

IDLING ADJUSTMENT:—Idle adjusting screw controls fuel discharge from lower idle port (closed throttle idling fuel feed). Screw should be turned in for leaner mixture and out for richer mixture. See tune-up instructions for each car model for adjustment on engine.

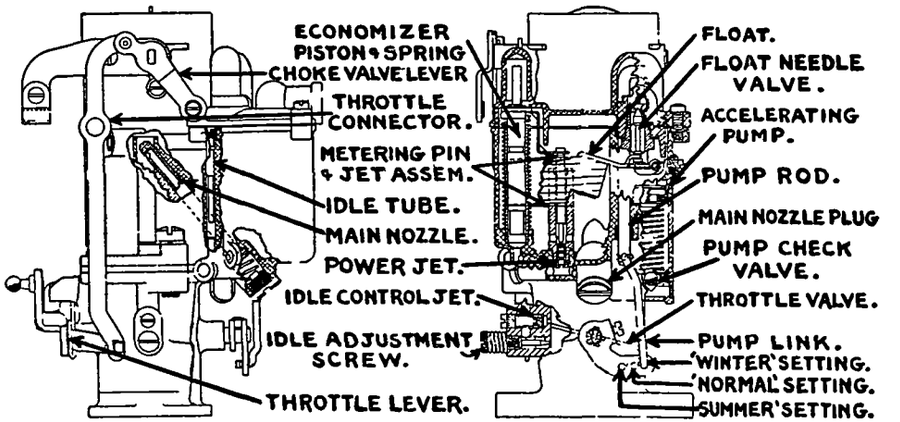

PERFORMANCE & JET SPECIFICATIONS:—Performance should be satisfactory throughout entire operating range if idling adjustment and accelerating pump settings are correct. See Note above and Marvel Jet Specification Table for jet calibrations and changes to improve performance. 'High Altitude Jet' calibrations intended for permanent operation at elevations greater than 3000 feet nly.

ECONOMIZER:—Economizer consists of a metering pin and jet controlled by a vacuum piston. The lower end of the vacuum piston chamber is connected to the carburetor barrel below the throttle valve. For all part-throttle positions, manifold vacuum will hold the piston at the lower end of the stroke (against the tension of the piston spring) so that the metering pin is held in position in the metering pin jet, limiting the fuel flow. When the throttle is opened, the fall in vacuum will allow the spring to force the piston upward, lifting the metering pin in the jet and permitting a greater fuel flow to the nozzle for acceleration and full power operation. The spring is calibrated to allow maximum economy (metering pin in jet) for all car speeds up to 65 M.P.H. on level road.

Metering Pin Timing Height. To check metering pin timing height (which controls economizer action), remove float bowl cover, hold vacuum piston down on seat (lower end of stroke with metering pin in metering jet), measure distance from top of metering pin to top of metering pin housing. This should be 13/64". Adjust by bending metering pin fork or lifter.

FLOAT LEVEL:—To check float level, remove float bowl cover, remove cover gasket, invert cover, measure distance from gasket seat on cover to bottom of float at free end. Distance should be 1⅜" (all models).

Float Valve & Seat Assembly:—Part No. 233-524 (B, B2, B2SU), 233-527 (B3-10-1680), 233-530 (B3-10-1744). Furnished only as matched sets.

CONTINUED ON NEXT PAGE

MARVEL MODELS B, B2, B2SU, B3 (C nt.)

THROTTLE VALVE SETTING:—Manufacturer recommends replacement of Throttle Valve Body Assembly No. 227-529 (B-10-1603), No. 227-551 (B2SU-10-1673), No. 227-557 (B2SU-10-1690), No. 227-552 (B2-10-1678 & 1691), No. 227-553 (B3-10-1680), No. 227-558 (B3-10-1744) whenever throttle valves or shafts require replacement.

CHOKE:—Choke valve offset on shaft. Choke lever linked to shaft by coiled spring so that choke valve action is spring-controlled and automatic during warming up period. See that choke valve operates freely throughout range to insure choke valve following lever when dash control is manipulated.
NOTE—On Graham models two fingers are incorporated in choke lever, one of which 'kicks' choke valve off the open position when dash control lever pulled out, and the second returns choke valve to open position when dash control pushed all the way in.

FAST IDLE LINKAGE:—Throttle lever stopscrew stop-plate pivoted on throttle shaft and linked to choke valve lever so that throttle is opened to fast idle position when choke valve is in use. Linkage should not require adjustment.

MARVEL MODELS BD-1, BD-1S

BD-1—10-1749—BUICK, MODEL 40 (1937)—STANDARD AIR CLEANER.
10-1750—BUICK, MODEL 40 (1937)—HEAVY DUTY AIR CLEANER.
BD-1S—10-1751—BUICK, MOD. 60, 80, 90 (1937)—STANDARD AIR CLEANER.
10-1752—BUICK, MOD. 60, 80, 90 (1937)—HEAVY DUTY AIR CLEANER.

NOTE:—These carburetors not interchangeable as different jet calibrations used when equipped with Heavy Duty (oil-bath) Air Cleaner. Whenever air cleaners are changed in the field, matched Metering Pin-and-Jet and Power Jet must be changed. See Marvel Jet Specification Table for standard and high altitude jet calibrations for each model.

TYPE:—Plain tube, downdraft, dual type with 'Cold Idle' (fast idle) control, throttle operated accelerating pump, and vacuum economizer or 'step-up' device. Carburetors have two independent mixing chambers, main nozzle systems, idle systems, and throttle valves (valves mounted on same shaft and will not require synchronization). A single accelerating pump and vacuum economizer (metering pin and metering jet) serve both carburetor barrels.

Fuel System:—The main nozzles are fed directly from the float bowl through the 'bowl feed jet' and also through the metering pin-and-jet (economy device). Main nozzle is air-bled through a separate nozzle air vent within the mixing chamber. Fuel for idling is taken from the main nozzle channel below the metering pin and jet through the idle fuel channel and is metered by the idle jet. This fuel is mixed with air admitted through the primary air vent in the cross passage and the fuel mixture is then taken down through a passage to the idle ports opposite the throttle valve. The lower idle port below the throttle (when throttle is closed) is controlled by the idle adjusting needle and supplies all fuel for closed-throttle idling, the secondary idle air vent and upper idle port (in which the idle control jet is located) acting as additional air-bleeds. As soon as the throttle is opened slightly, the upper idle port discharges additional fuel. All fuel for car speeds up to 18 M.P.H. is supplied by the idle system. At this point the main nozzle comes into action and supplies more fuel progressively up to 40 M.P.H. when fuel delivery from the idle ports ceases, the main nozzle then supplying all fuel. At speeds above 75 M.P.H. or whenever the throttle is wide open, fuel supply for main nozzles is automatically increased by the economizer action (see economizer below).

IDLE ADJUSTMENT:—Needle valve type controlling fuel mixture. Engine must be warm when adjustments are made (cold idle not operative). With engine thoroughly warm and running, close throttle, adjust throttle stop screw so that engine speed is equivalent to 7-8 M.P.H. Adjust idle adjusting needle for each carburetor barrel in turn. Turn idle adjusting needle in or clockwise until engine hesitates or misses (mixture too lean), then turn needle out or counter-clockwise until engine rolls (mixture too rich), finally turn needle in just enough to eliminate rolling. This will give the richest setting possible without rolling and will give smoother road performance than a leaner setting. Correct setting should be ½-¾ turn open. After adjusting both idle adjustment needles, check idling speed and readjust throttle stop screw to correct idling speed (7-8 M.P.H.). See tune up data on car model pages.

PERFORMANCE:—Performance should be satisfactory throughout entire driving range if idling adjustment has been correctly made and accelerating pump setting and vacuum economizer operation are correct. All metering jets are 'fixed' type and non-adjustable. Jets should be changed only for permanent operation at elevations greater than 3000 feet.

ACCELERATING PUMP:—Accelerating pump is operated by the throttle valve lever and discharges fuel through a pump discharge jet into the mixing chamber when the throttle is opened. The pump follow-up spring above the pump plunger prolongs the pump discharge.
Adjustment:—Pump outer lever on countershaft above accelerating pump has four holes (numbered 1-2-3-4) for pump link connection. #1 (outer) provides maximum stroke, #4 (inner) minimum stroke. See tune up data on car model page for recommended setting and seasonal changes.

ECONOMIZER:—Economizer consists of a metering pin and jet controlled by a vacuum piston. The lower end of the vacuum piston chamber is connected to the carburetor barrel below the throttle valve. For all part-throttle positions, manifold vacuum will hold the piston down at the lower end of its stroke (against the tension of the piston spring) so that the metering pin is held in position in the metering jet, limiting the fuel flow for maximum economy. When the throttle is opened, the fall in vacuum allows the spring to force the piston upward, lifting the metering pin in the jet and permitting a greater fuel flow for acceleration and full power operation. This fuel metered by Power Jet located in the bottom of the metering pin and jet assembly. Spring is calibrated to provide maximum economy (metering pin in the jet) for car speeds up to 75 M.P.H.

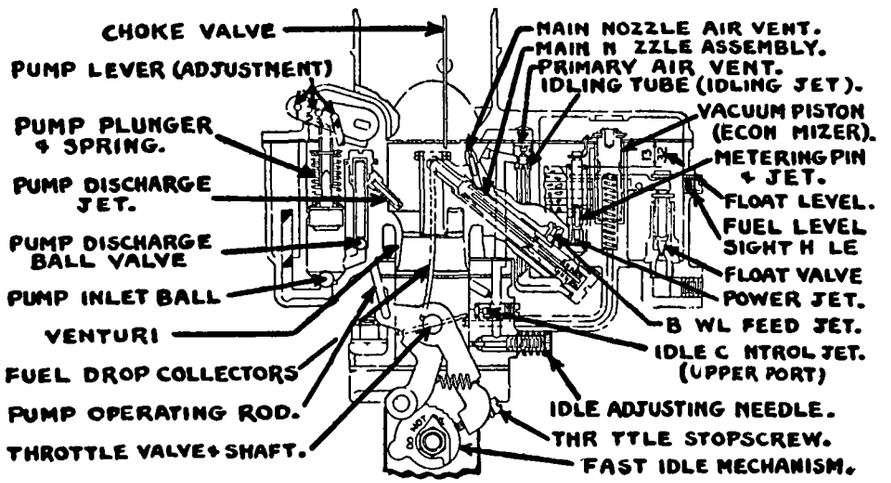

Metering Pin Timing Height. To check metering pin timing height (which controls economizer action), remove float bowl cover, hold vacuum piston down on seat (lower end of stroke with metering pin in metering jet), measure distance from top of metering pin to top of metering pin guide and jet assembly. This distance should be 13/64". Adjust by bending metering pin fork or lifter.

FLOAT LEVEL:—With engine idling, fuel level in float bowl should be ¾" below top face of bowl, or 1/16" below the center of the sight hole in the side of the bowl (sight hole closed normally by a plug). To check float level, remove float bowl cover, hold float up by hand with needle valve seated, measure distance from top face of float bowl to top of float cork. Distance should be 13/32".
Float Valve and Seat Assembly—Furnished only in matched sets as follows: Part No. 233-525 (BD-1), 233-531 (BD-1S).

THROTTLE VALVE SETTING:—Manufacturer recommends replacement of Throttle Valve Body Assembly, Part No. 227-543 (BD-1), 227-564 (BD-1S), whenever throttle valves or shaft require servicing due to wear or damage.

CHOKE:—Choke valves offset type. Stop pin in air horn limits travel in wide open position. All models fitted with Delco-Remy Carburetor control (automatic choke) and Buick Cold Idle Control. See articles in Carburetion Equipment Section for complete adjustment instructions.

MARVEL MODELS C2, C3

C-2—10-1802 NASH AMBASSADOR SIX, MODEL 3820 (1938)
10-1808—GRAHAM, STD. & SPEC. MODEL 96 (1938-39)
C-3—10-1809—GRAHAM, SUPERCHARGER MODEL 97 (1938-39)

TYPE:—Plain tube, Downdraft, single barrel type with throttle operated accelerating pump and vacuum economizer or 'step-up' device. These models have improved mixing chamber design and triple venturi with main nozzle discharging into throat of top (smallest) venturi. Clearance between nozzle tip and opposite wall should be .083" (Graham), .060" (Nash) plus or minus .010".

Fuel System (Idling & Low Speed):—Fuel for idling taken from lower end of main nozzle through Idle Fuel Passage and up through Idle Tube to Idle Emulsion Passage in which it is mixed with air admitted through Primary Idle Air Inlet (above tube) and Idle Air Vent Jet (at end of passage and opening into air horn above venturi). Fuel mixture then taken down through Idle Emulsion Channel and discharged through Primary Idle Delivery Port below throttle valve. This port is controlled by Idle Adjusting Needle. As soon as the throttle valve is opened slightly additional fuel is discharged through Secondary Idle Delivery Port above the throttle edge. Idle system supplies all fuel for closed throttle idling and car speeds below 18 MPH (normal throttle positions).

18-65 M.P.H.—At 18 M.P.H. (or at lower speed if throttle opened sufficiently to reduce manifold vacuum), the greater suction at the main nozzle brings this nozzle into operation and the idle discharge decreases so that at car speeds of approximately 35 M.P.H. and above all fuel is discharged by the main nozzle. Fuel for main nozzle is metered by metering pin-and-jet (vacuum economizer) and in addition a definite amount of fuel is by-passed directly to the nozzle by the Range Adjustment Needle Valve (Graham models only—not used on Nash).

High Speed, Full Throttle, or Heavy Load Operation:—Whenever manifold vacuum decreases due to these conditions, vacuum piston step-up spring forces piston up, lifting metering pin from jet and permitting greater fuel flow to nozzle. Fuel is then metered by Power Jet at lower end of nozzle. Springs are calibrated to allow metering pin to remain in jet for car speeds up to 65 M.P.H. under normal conditions to insure maximum economy.

IDLE ADJUSTMENT:—Idle adjusting needle controls fuel mixture and should be turned in for leaner mixture, out for richer mixture. Idle speed controlled by throttle stopscrew and should be set for 6-7 M.P.H. idling speed. Adjust carburetor only when engine warmed up so that choke valve is wide open (On Graham models, throttle cracking or fast idle mechanism linked to choke valve so that throttle valve is opened slightly when choke valve in use). See Tune up data on car model page for complete adjustment data.

PERFORMANCE:—Should be satisfactory throughout entire operating range if idle adjustment and accelerating pump setting are correct (See Range Adjustment for Graham). Jets are non-adjustable and should be changed only for permanent operation at elevations greater than 3000 feet. See Marvel Jet Specification Table for standard jet calibrations and recommended altitude changes on all models.

ACCELERATING PUMP:—Operated by rod and link connected to pump lever on throttle shaft. Fuel drawn into pump cylinder through inlet screen and inlet ball check valve at bottom of cylinder and discharged through outlet ball check valve and pump discharge jet in carburetor mixing chamber wall when throttle opened for acceleration. Pump plunger is spring loaded on rod so that it lags when throttle opened very suddenly and spring provides follow up to prolong pump delivery. On Nash model, a return spring is located in the pump cylinder

Adjustment (Graham)—Pump lever on throttle shaft has four holes for pump link engagement. #2 hole is standard for normal temperatures. Connect link in inner (#1) hole for minimum stroke in extremely hot weather or with high-test fuel, #3 hole for cold weather, #4 (outer) hole for maximum accelerating charge in extremely cold weather.

Adjustment (Nash)—Pump lever on throttle shaft has three holes for pump link engagement. Center (#2) connection is standard for normal temperatures. Connect link in inner (#1) hole for minimum stroke for extremely hot weather or high test fuel, or in outer (#3) hole for maximum stroke for extremely cold weather or low test fuel.

ECONOMIZER:—Consists of metering pin-and-jet assembly operated by vacuum piston in float bowl. Vacuum piston normally held down in cylinder against tension of vacuum step-up spring (in cylinder below piston) so that metering pin restricts fuel flow through jet. When manifold vacuum decreases, spring forces piston up and lifts metering pin out of jet.

Adjustment—To check metering pin timing height, remove bowl cover, hold vacuum piston down on seat against spring tension, measure distance from top of metering pin to top of guide housing. Should be 13/64". Adjust by bending metering pin lifter.

RANGE ADJUSTMENT (Graham Models Only):—Consists of an adjustable needle valve in the float bowl. Accessible by removing air cleaner and taking out small plug on top of bowl cover. Use special adjusting tool M-70 or small screwdriver inserted through plug hole to turn range needle.

Adjustment:—Wide open position approximately 1 turn off seat. Set at factory at two turns open. To secure leaner-than-standard setting, turn range needle down until it is seated (do not use excessive force or needle and seat will be damaged), turn needle back to one turn open position, then turn down slightly to secure desired setting as directed below.

Normal Altitude Setting (Up to 3000 ft.)—One-half turn open.

High Altitude (Over 3000 ft.)—Setting should be less than one-half turn open and needle may be closed entirely if necessary. Above 6000 ft. and on Pacific Coast, one size leaner metering pin may be used (See Jet Specifications).

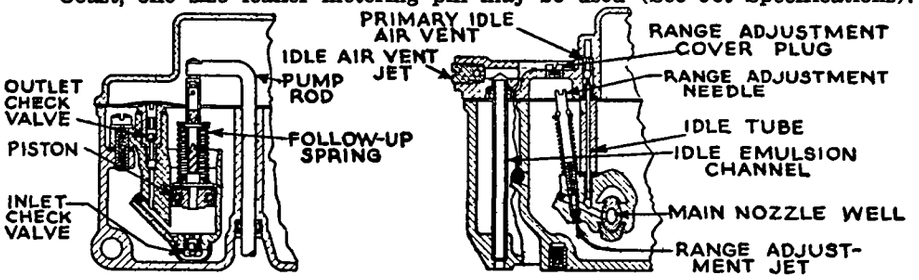

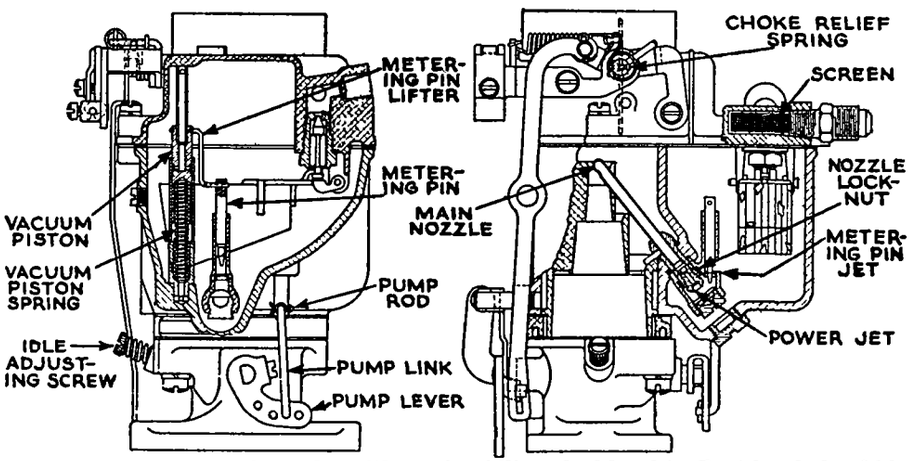

FLOAT LEVEL:—**Fuel Level**—With engine idling, fuel level in float bowl should be even with the lower edge of the fuel level inspection hole in the side of the float bowl (remove screw in inspection hole to check fuel level).

Float Height—To check, remove bowl cover and float assembly with gasket, invert and measure from gasket surface to nearest point on float. Should be 19/32" (all models). Float should be level (equal height across entire float). NOTE—For high temperatures or high-test fuel, float height may be set at 5/8".

Float Valve & Seat—Furnished only as matched sets as follows: No. 233-540 (Graham, all models), 233-539 (Nash).

CHOKE VALVE:—Offset type. Fitted with spring loaded flapper type relief valve to prevent overchoking. On Graham models choke valve operates throttle cracking or fast idle mechanism.

Fast Idle (Graham)—Throttle lever stopscrew stop plate pivoted on throttle shaft and linked to choke valve so that throttle is opened slightly when choke valve is in use. Should not require adjustment.

TROUBLE SHOOTING:—**Hard Starting when Hot**—May be caused by fuel collecting on throttle valves due to leak at nozzle seat. Make certain that float bowl vents are clear and that nozzle is tight (see nozzle servicing below).

Poor Acceleration Performance—If acceleration unsatisfactory at 10-15 MPH. with wide open throttle, dismantle accelerating pump and check for free plun-

CONTINUED ON NEXT PAGE

MARVEL MODELS C2, C3 (C ntinued)

ger travel. If plunger does not move freely examine pump bore for roughness particularly at lower end and refinish with finest grade of emery cloth (wrap emery cloth on ½" round wooden stick). Clean out dirt before reassembling.

Rich Mixture—May be caused by loose metering pin housing, loose nozzle, or cracked nozzle retaining nut which will allow fuel to leak past metering jet.

SERVICING:—Throttle Valves. Throttle valve should not be replaced separately (except as emergency) as upper idle discharge port originally located after throttle valve installed and distance above valve is important. Throttle valve and shaft assembly is furnished for service.

Main Nozzle—When installing nozzle see that retainer gasket is in place between nozzle flange and seat in body. Use tool H-63 to tighten retaining nut at lower end of nozzle being careful that excessive force is not used which will crack nut and permit leaks at this point. Clearance between nozzle tip and opposite wall of small venturi should be .083" (Graham models), .060" (Nash) plus or minus .010". Greater clearance indicates that nozzle gasket left out, less clearance that nozzle not tight on seat.

Metering Pin Housing & Jet—Jet is part of assembly and is not ordinarily changed (metering pin only changed for altitude correction). To tighten or replace housing, use special tool M-68 to press assembly in place. See that nozzle retainer gasket is in place around nozzle in body recess when installing housing. Check metering pin timing height.

MARVEL MODELS CD-1B, CD-2B

CD-1B—10-1796 BUICK, MODEL 40 (1937-38) STD. AIR CLEANER
10-1797 BUICK, MODEL 40 (1937-38) HEAVY DUTY AIR CLEANER
CD-2B—10-1798 BUICK, MODELS 60, 80, 90 (1938) STD. AIR CLEANER
10-1799 BUICK, 60, 80, 90 (1938) HEAVY DUTY AIR CLEANER

NOTE:—These models not interchangeable (special jet calibration used with heavy duty air cleaners). See Marvel Jet Specification Table for complete jet data.

TYPE:—Plain tube, Downdraft, Duplex or dual type with throttle operated accelerating pump, vacuum economizer or 'step-up' device, and special double float design. These carburetors have double mixing chambers with independent main nozzle and metering systems, throttle valves, and idling systems. A single vacuum piston operates both metering rods (economizer), and a single accelerating pump is used with a double discharge jet assembly. Carburetors are fitted with Buick Cold Idle Control (fast idle) and Delco-Remy Carburetor Control (automatic choke).

Fuel System (Idling & Low Speed):—Fuel for idling taken from lower end of main nozzle through Idle Fuel Orifice and flows up Idle Tube (inverted 'U' design) where it is mixed with air admitted through Primary Idle Air Vent (at top of idle tube 'U'). Fuel mixture then flows down through idle tube to Idle Emulsion Channel where additional air is admitted through Secondary Idle Air Vent (in carburetor wall at lower edge of venturi). For closed throttle idling, this fuel mixture is discharged through Primary Idle Delivery Port below the throttle and is controlled by the Idle Adjusting Needle. As soon as the throttle valve is opened slightly, additional fuel is discharged through the Secondary Idle Delivery Port at the throttle edge (a third discharge port is located directly above the Secondary Port on the Model CD-1B only). Idle system supplies all fuel for closed throttle idling and car speeds up to 18 M.P.H.

18-75 M.P.H.—At 18 M.P.H. (or at lower speeds if throttle opened sufficiently to reduce manifold vacuum), the greater suction at the main nozzle brings this nozzle into operation and the idle discharge decreases so that at speeds of 40 M.P.H. and above all fuel is discharged by the main nozzle. Fuel for main nozzle is metered by metering pin-and-jet (vacuum economizer) and is mixed with air admitted to the nozzle bore through the Main Nozzle Air Vent which projects up into the air stream. Main nozzle tip is closed and the outlet is located on the underside of the tip in the small auxiliary venturi. Clearance between nozzle tip and wall of small venturi should be .100-.120".

High Speed, Full Throttle, or Heavy Load Operation:—Whenever manifold vacuum decreases due to these conditions, vacuum piston spring forces piston up, raising metering pins from jets and permitting greater fuel flow to nozzles. Fuel is then metered by Power Jet at lower end of nozzle. Springs are calibrated to allow metering pin to remain in jet up to 75 MPH for normal conditions.

IDLE ADJUSTMENT:—Idle adjusting needles control fuel mixture and should be turned in for leaner mixture, out for richer mixture. Setting should be approximately ¾-1 turn open (if screws turned in to determine 'closed' position, use light pressue only to avoid ringing seats which will prevent correct operation). Idle speed controlled by throttle stopscrew and should be set for 7-8 M.P.H. hot or slow idling speed (cold idle control and automatic choke inoperative). See tune-up data on car model pag for complete instructions. See "Buick Cold Idle Control" in Carburetion Equipment Section for Fast Idle data.

Buick 40 With Self-Shifting Transmission—Idle speed should be set at 5-6 MPH. in third gear. Transmission throttle control lever linkage must be checked whenever carburetor linkage is disconnected or changed. *See "Buick Self-shifting Transmission" in Transmission Section for data.*

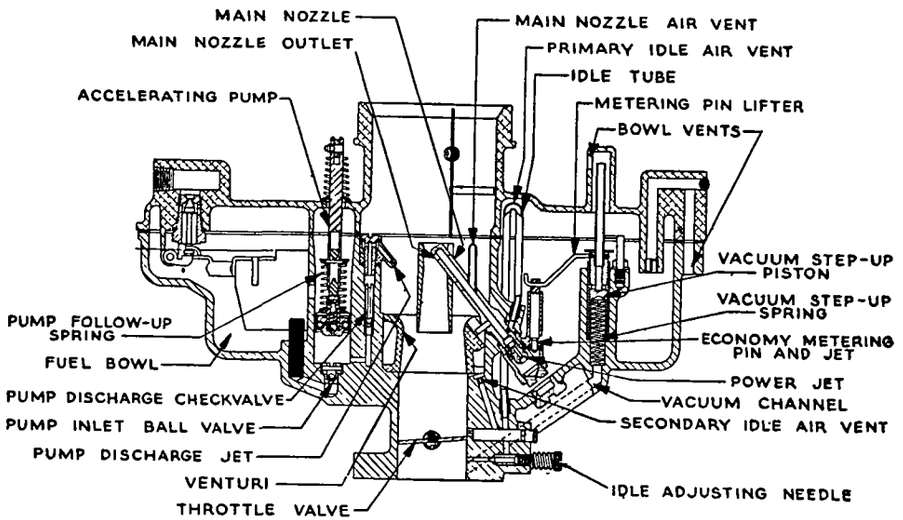

PERFORMANCE:—Should be satisfactory throughout entire operating range if Idling Adjustment, Accelerating Pump Setting, and Metering Pin Timing Height are correct. Jets are non-adjustable and should be changed only for permanent operation at elevations greater than 3000 feet. See Marvel Jet Specification Table for complete standard and altitude jet calibrations.

ACCELERATING PUMP:—Operated by walking beam and lever connected to throttle lever. Fuel drawn into pump chamber through inlet screen and ball check valve at bottom of cylinder when throttle valve closed and discharged through outlet check valve and pump discharge jet assembly into each mixing chamber when throttle opened for acceleration. Pump plunger is spring loaded on rod so that it lags when throttle opened suddenly and spring provides follow up to prolong pump delivery. A spring loaded ball check valve in the pump plunger opens and by-passes some fuel back into float bowl when pump is operated rapidly preventing excessive delivery which would load up engine (by-pass valve normally remains seated so that all fuel is discharged through pump jets).

Adjustment—Walking beam provided with three holes for throttle lever rod connection. Center (#2) hole is normal setting for all year operation. Connect rod to outer (#3) hole for minimum stroke when using high test fuel or for extremely hot weather, inner (#1) hole for maximum stroke when using low test fuel or for extremely cold weather when performance is unsatisfactory

ECONOMIZER:—Consists of twin metering pin-and-jet assemblies operated by vacuum piston in float bowl. Vacuum piston normally held down in cylinder against tension of vacuum step-up spring (below piston in cylinder) so that metering pins restrict fuel flow through jets. When manifold vacuum decreases, spring forces piston up lifting metering pins out of jets.

Adjustment—To check Metering Pin Timing Height, remove bowl cover, hold vacuum piston down on seat against step-up spring tension, measure distance from top of each metering pin to top of metering pin guide. Should be 13/64" and groove on pin should line up with top of guide housing. Adjust by bending metering pin lifter. Both pins must be adjusted alike.

FLOAT LEVEL:—Fuel Level—With engine idling, fuel level should be 11/16" (CD-1B), ¾" (CD-2B) below top edge f bowl or even with lower edge of fuel level inspection hole in left front face of bowl (remove screw from inspection hole to check fuel level).

CONTINUED ON NEXT PAGE

MARVEL MODELS CD-1B, CD-2B (C ntinu d)

Float Height—To check, remove bowl cover and float assembly, invert cover, measure from bowl cover gasket to closest surface of float. Should be ¼" (Buick 40 '37), 3/16" (Buick 40 '38), ¼" (Buick 60, 80, 90). See that floats are centered in bowl and that all burrs and rough edges which might interfere with free float travel are removed. Both floats must be set alike.

Float Valve & Seat—Furnished only as matched sets, Part No. 233-537 (CD-1B), 233-538 (CD-2B).

Float Bowl Vent:—Bowl vented to outside through port on side of vacuum piston stem housing on bowl cover and also through two inverted 'U' channels in cover which are open to atmosphere through holes in gasket and main body casting flange (baffle located at inner end of channels in bowl). These bowl vents must be kept clear and open.

TROUBLE SHOOTING:—Lean Idle—May be caused by dirt in idle fuel channels. Can be cleaned by opening throttle so that engine runs at about 35 MPH., removing one idle adjusting needle and quickly closing needle hole with a finger. This will increase suction so that dirt on needle seat will be removed. Wipe off adjusting needle, replace and adjust, repeat for second needle.

Hard Starting when hot—May be caused by percolation or fuel collecting on throttle valves due to leak at nozzle seat. Make certain that float bowl vents are clear (see Float section above) and that nozzle is tight (see nozzle servicing below).

Poor Acceleration—If acceleration is unsatisfactory at 10-15 MPH. with wide open throttle, dismantle accelerating pump by removing bowl cover, pump discharge jets, pump discharge check valve, metering pins and vacuum piston assembly and check pump for free travel. If pump plunger does not move freely, examine pump bore for rough finish particularly at lower end. If wall is not perfectly smooth, refinish with finest grade of emery cloth (use stick ½" in diameter with emery cloth wrapped around one end). Wash out all dirt before reassembling. Check metering pin setting (see Economizer above) and pump discharge jet position (see servicing directions below).

Throttle Sticking—May be caused by insufficient clearance between automatic choke and throttle shaft. Can be corrected by installing extra gasket between carburetor body and choke housing.

No Fuel in Float Bowl—Check idle tubes to see that they are down tight on seats (leak at seat will allow fuel to drain from bowl to throttle chamber). See Idle Tube servicing below.

Rich Mixture—May be caused by loose metering pin housing, loose nozzle or cracked nozzle retaining nut which will allow fuel to leak past metering jet.

SERVICING:—Main Nozzles. Nozzles stamped 'R' or 'L' and must be installed in correct barrel. See that nozzle retainer gasket is installed between nozzle flange and seat in body. Use tool H-63 to tighten retaining nut at lower end of nozzle being careful that excessive force is not used which will crack nut and permit leaks at this point. Clearance between nozzle tip and opposite wall of auxiliary venturi should be 7/64" or .100-.120" (all Buick models). If this distance too great, gasket under nozzle has been left out. If distance too small, nozzle is not down tight on seat.

Metering Pin Housing & Jet—Jet is part of assembly and is not ordinarily changed (metering pin change only for altitudes). To tighten or replace housings, use special tool M-68 to press assembly in place. Make certain that nozzle retainer gasket is in place around nozzle in body recess when installing housing assembly. Check metering pin timing height.

Idle Tubes—Inverted 'U' type. Tube ends which seat in recesses in body casting must be firmly seated (for correct tube height) and tight (to prevent leaks which will drain bowl). When renewing idle tubes see that all traces of original lead washer used to seal tubes are removed, use special Idle Tube Peening Tool M-62 and Idle Tube Seating Tool M-69 to insure tight seat. Check tube height which should be 37/64" over-all above gasket seat on top of body casting.

Pump Discharge Jets—Consists of a single die-casting with double discharge holes and is held in place by screw at top. When installing, make certain that gasket is in place under screw head, see that discharge holes are open and clean, check delivery hole position with special gauge tool M-64.

MARVEL DOWNDRAFT CARBURETOR JET SPECIFICATIONS

Car Model	Yr.	Carb. No.	Standard Parts Nos. Metering Pin & Jet	Power Jet	Vac. Step-up Spring	High Alt. Parts Nos. Metering Pin & Jet	Power Jet	Vac. Step-up Spring	Main Nozzle	Idle Air Vent	Idle Tube Assembly	Float Valve & Seat	Pump Disch. Jet
BUICK 40 (A)	1937	BD1-10-1749	280-1107E	49-500-J	24-286	280-1105E	49-450-J	24-286	47-1115-F	—	49-578-K	233-525	49-24-N
BUICK 40 (B)	1937	BD1-10-1750	280-1103E	49-330-J	24-286	280-1101E	49-270-J	24-286	47-1115-F	—	49-578-K	233-525	49-24-N
BUICK 60, 80, 90 (A)	1937	BD1S-10-1751	280-1105E	49-460-J	24-286	280-1103E	49-400-J	24-286	47-1115-F	—	49-578-K	233-531	49-24-N
BUICK 60, 80, 90 (B)	1937	BD1S-10-1752	280-1104E	49-360-J	24-286	280-1101E	49-300-J	24-286	47-1115-F	—	49-578-K	233-531	49-24-N
BUICK 40 (C)	1938	CD1B-10-1796	173-105P‡	49-270-Z	24-286	173-106P‡	49-230-Z	24-448	47-534&5	—	229-525&6	233-537	49-116
BUICK 40 (D)	1938	CD1B-10-1797	173-106P‡	49-240-Z	24-286	173-107P‡	49-210-Z	24-448	47-534&5	—	229-525&6	233-537	49-116
BUICK 60, 80, 90 (C)	1938	CD2B-10-1798	173-101P‡	49-340-Z	24-461	173-103P‡	49-300-Z	24-286	47-563&4	—	229-525&6	233-538	49-134
BUICK 60, 80, 90 (D)	1938	CD2B-10-1799	173-102P‡	49-310-Z	24-461	173-104P‡	49-270-Z	24-286	47-563&4	—	229-525&6	233-538	49-134
GRAHAM 80, 80A	1936	B2-SU-10-1673	280-1104F	49-460-T	24-275	280-1103F	49-390-T	24-275	47-85-C	49-63-H	49-578-S	233-524	49-28-R
GRAHAM 80, 80A (E)	1936	B2SU-10-1690	280-1104F	49-540-T	24-275	280-1103F	49-390-T	24-275	47-85-K	49-86-H	49-578-V	233-524	49-28-R
GRAHAM 90, 90A	1936	B2-10-1678	280-1109F	49-610-T	24-361	280-1107F	49-470-T	24-225	47-110-H	49-71-H	49-578-S	233-524	49-31-R
GRAHAM 90, 90A (F)	1936	B-2-10-1691	280-1110F	49-700-T	24-361	280-1108F	49-460-T	24-275	47-110-M	49-71-H	49-578-V	233-524	49-31-R
GRAHAM SC. 110	1936	B3-10-1680	280-1116F	49-660-T	24-225	280-1112F	49-500-T	24-225	47-125-J	49-71-H	49-578-S	233-527	49-31-R
GRAHAM SC. 110 (G)	1936	B3-10-1692	280-1112F	49-760-T	24-225				47-140-L	49-71-H	49-578-V	233-527	49-31-R
GRAHAM 85	1937	B2SU-10-1690	280-1104F	49-540-T	24-275	280-1103F	49-390-T	24-275	47-85-K	49-86-H	49-578-V	233-524	49-28-R
GRAHAM 95	1937	B2-10-1691	280-1110F	49-600-T§	24-275††	280-1108F	49-460-T	24-275	47-110-M	49-71-H	49-578-V	233-524	49-31-R
GRAHAM 116, 120	1937	B3-10-1744	280-1109F	49-730-T§§	24-275††	280-1107F	49-560-T	24-275	47-140-L	49-71-H	49-578-V	233-530	49-31-R
GRAHAM 96	1938-39	C2-10-1808	173-107T‡	49-360-Z	24-286	173-108T‡	49-340-Z	24-448	47-515	49-49-H	229-144	233-540	49-024-Z
GRAHAM 97	1938-39	C3-10-1809	173-103T	49-540-Z	24-261	173-104T‡	49-520-Z	24-286	47-562	49-75-H	229-144	233-540	49-024-Z
NASH La Fay 3610	1936	10-1603	280-1107	49-490-J	24-275	280-1106	49-450-J	24-371	47-1100-C	49-63-H**	49-578-I	233-524	49-31-P
NASH Amb. 6 3820	1938	C2-10-1802	173-097S‡	49-560-Z	24-286	173-100S‡	49-500-Z		47-560	49-63-H	229-533‡‡	233-539	49-024-Z

(A) Std. Air Cleaner. Idle Control Jet 49-35-G, Bowl Feed Jet 49-110-M, and Nozzle Air Vent Jet 49-145-C-16 also used on these models.
(B) Heavy duty Air Cleaner. Same Idle Control Jet, Bowl Feed Jet, Nozzle Air Vent Jet as above.
(C) Standard Air Cleaner.
(D) Heavy Duty Air Cleaner
(E) After Engine N . 309995.
(F) After Engine No. 207235 (90), 215764 (90A).
(G) After Engine No. 108175.
‡ Metering Pin nly. Jet No. 84-502-G also used.
‡‡ Idle Emulsion Tube & Collar No. 229-534 also used.
** Idle Air Vent No. 49-47-H for high altitude operation.
†† 24-361 on first cars (should be changed to above type).
§ 49-700-T on first cars (should be changed to above type).
§§ 49-760-T n first cars (should be changed to ab ve type).

STROMBERG MODEL UU-3

DUESENBERG, SUPERCHARGED MODEL SJ (1936-37)

TYPE:—Twin updraft plain tube type with positively operated accelerating pump and economizer (connected to throttle lever) and auxiliary control needle valve connected to choke lever for starting. There are two carburetor barrels with independent main discharge jets, main metering jets, throttle valves, and idling adjustments. Throttle valves operate on the same shaft and will not require synchronization. All fuel for main discharge jets is metered by main metering jets under float bowl (except for high speed or wide open throttle operation). Metering jets are 'fixed' type. Idling adjstments and accelerating pump adjustment (needle valve type) are the only points requiring attention.

IDLING ADJUSTMENT:—Needle valve type operating on fuel mixture. There are two idling ports in each barrel. The upper idling port (controlled by idling adjusting screw) is above the throttle and supplies the fuel for idling with closed throttle. The lower idling port (non-adjustable) operates in conjunction with upper port at car speeds of approximately 10-18 M.P.H.

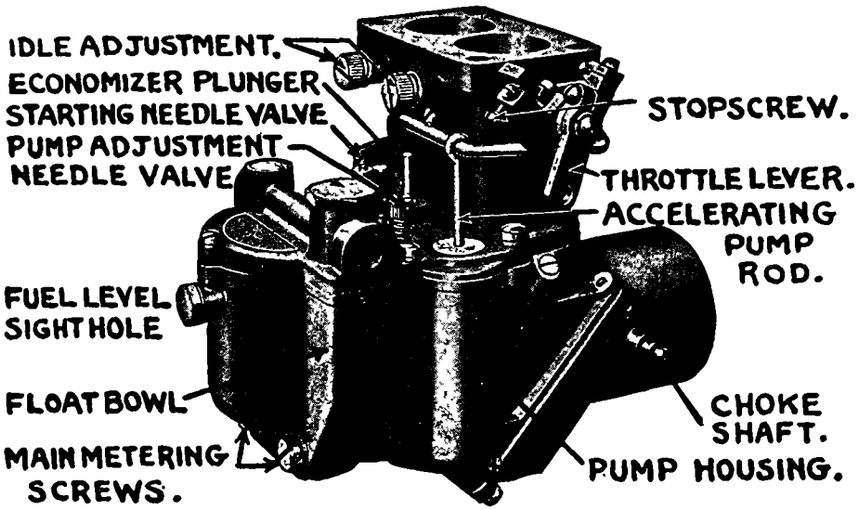

Adjustment:—Engine must be thoroughly warmed up before idling adjustment is made. With engine warm and running, close throttle and allow engine to idle (adjust throttle lever stop screw if necessary to keep engine running). Turn inner idling screw (toward engine) down until it seats, cutting off fuel supply for four cylinders and allowing engine to idle on remaining four cylinders. Adjust idling screw of the other carburetor barrel until engine fires smoothly. Then turn inner adjusting screw out until engine fires smoothly on all eight cylinders.

Idling adjustment can be made without cutting out four cylinders by adjusting each idling screw individually by turning idling screw in until engine begins to miss or is rough and then turning the screw out until engine fires smoothly. This point can also be determined by turning screw in until engine begins to miss and out until engine begins to roll and finally setting the screw midway between these points. Idling screws operate on fuel mixture and should be turned in to secure leaner mixture and out for richer mixture. Throttle lever stop screw should be readjusted after idling adjustment has been completed to secure correct idling speed if necessary.

HIGH SPEED ADJUSTMENT AND ECONOMIZER:—Main metering jets are of the 'fixed' type and not adjustable. Metering jet size is stamped on the outer face of the jet in decimal fractions of an inch. Jets should be changed only to compensate for special fuels or operating conditions.

Economizer is operated by accelerating pump lever. At all positions of partial throttle economizer needle valve will be closed so that all fuel for main discharge jets will be supplied by main metering jets. When the throttle is opened the pump lever depresses the economizer needle plunger, opening the economizer valve and allowing additional fuel to flow through the economizer by-pass jet to the main discharge jets. Economizer should not require adjustment but setting may be checked by noting throttle opening when economizer needle valve begins to open. To check, close throttle valve on drill rod (use a rod of 5/32" diameter), inserting drill between edge of throttle valve and carburetor wall, so that throttle is held open. Note whether economizer needle valve begins to open at this point.

ACCELERATING PUMP (UU-3):—Accelerating pump operated by throttle lever supplies an extra charge of fuel to the main discharge jet when the throttle is opened. Accelerating pump discharge is regulated by a needle valve in the pump discharge channel. Needle valve adjusting screw is located on float bowl cover adjacent to pump.

Adjustment:—Average setting for accelerating pump adjusting screw is ½ turn open (summer) to 3 turns open (winter). To check pump setting, run engine until well warmed up, close throttle and retard spark. Accelerate engine by opening throttle quickly and note engine performance. If engine hesitates, pump setting is too small and adjusting screw should be turned out slightly. If engine stumbles in picking up speed, pump setting is too large and adjusting screw should be turned down (or in) slightly. Check setting by operating car in high gear on a level road at approximately 5 M.P.H. and open throttle suddenly. Ir car hesitates, setting is too small. If car stumbles, setting is too large. This will be particularly noticeable as engine warms up.

FLOAT LEVEL (UU-3):—Fuel level in float bowl must be even with bottom f the sight hole in the float chamber casting with the engine not running. To check fuel level, remove plug in sight hole directly above metering jets and see that fuel level is ¾" below top edge of float bowl or distance from top edge of float to gasket seat on cover is 15/64". Float level can be changed if necessary to correct fuel level by bending the float lever at the corner between the float and the needle valve.

CHOKE:—Choke valve linkage should be adjusted so that choke valve is closed tight when choke control button on instrument panel is pulled all the way out and wide open with choke control button pushed in. The choke valve is connected to an auxiliary control valve for starting. This linkage should be checked to see that clearance between choke lever cam and operating lever is sufficient so that needle valve is seated when choke valve is open. Auxiliary needle valve should start to open when choke valve is 10-15° from the wide open position.

STROMBERG UPDRAFT CARBURETOR JET SPECIFICATIONS

Car Model	Year	Carb. No.	Main Metering Jet Size	Main Metering Jet Part No.	By-Pass Jet Size	By-Pass Jet Part No.	Main Disc. Jet Size	Main Disc. Jet Part No.	H. S. Bleeder Size	H. S. Bleeder Part N .	Idle Tube Size	Idle Tube Part No.	Pump Reducer or Discharge Tube Size	Pump Reducer or Discharge Tube Part No.
Duesenberg SJ	1936-37	UU-3	.060"	P-13395L	.045"	P-12768	A26-B18	P-15764	#54	P-12359	#68	P-15775	#65	P-15491

STROMBERG MODELS EX-22, EX-32

MODEL EX-22

AUBURN, MODEL 654 (1936-37)
NASH "400" SERIES, MODEL 3640 (1936)

MODEL EX-32

AUBURN SUPERCHARGED EIGHT, MODEL 852 (1936-37)
NASH AMBASSADOR SIX, MODELS 3620 (1936), 3720 (1937)

NOTE:—Where Automatic Chokes or any type fast-idle mechanism is used, see separate articles for complete data. In all cases where fast-idle mechanisms are used, carburetor adjustments should not be made until engine is thoroughly warmed up and idling speed has returned to hot or 'slow' idle with choke valve wide open. All models are adjusted in the same manner.

TYPE:—Plain tube downdraft type with positively operated accelerating pump and economizer (connected to throttle valve). Main discharge jet is located at an angle in the venturi and is air bled by means of an air bleed hole drilled in the auxiliary venturi support. Main metering jet is located directly under main discharge jet and meters all fuel for discharge jet. Accelerating pump and economizer discharge fuel into mixing chamber through pump discharge nozzle located within primary venturi. Idling adjustment and accelerating pump adjustment (summer and winter setting) are the only points requiring attention.

IDLING ADJUSTMENT:—Needle valve type controlling fuel mixture (screw turned in for leaner mixture and out for richer mixture). Engine must be thoroughly warm and idling at slow or hot idle speed with choke valve wide open when adjustments are made. With engine warm, close throttle, adjust throttle lever stopscrew until engine speed is approximately 6-7 M.P.H. Turn idling adjustment screw in or clockwise until engine lags or fires irregularly, turn screw out until engine begins to roll, then turn screw in slowly until engine fires smoothly and speed is at maximum. Check idling speed, and, if necessary, readjust throttle stopscrew. See tune-up data on each car model page for complete instructions.

NOTE:—There are two idling ports, an upper idling port (for low speed) above the throttle valve, and a lower port (for idling with closed throttle) below the throttle valve. The idling adjusting screw controls the fuel mixture supply for the lower port. If correct idling adjustment cannot be secured or if low speed operation is unsatisfactory, take out idling adjustment screw and upper idling port plug and blow out ports with compressed air. The idle tube located in the carburetor body can also be taken out and cleaned with compressed air.

HIGH SPEED ADJUSTMENT AND ECONOMIZER:—Main metering jet which meters all fuel for main discharge jet is of the 'fixed' type and is not adjustable. Jets should not be changed except for special fuels or to compensate for special operating conditions such as high altitude (permanent operation at elevations greater than 3000 feet). See table at end of Stromberg section for standard jet calibration.

Econ mizer is built in lower end of accelerating pump and is operated by pump piston. At speeds above 60 M.P.H. or with wide open throttle, economizer needle valve pin will be forced down, opening the economizer valve and allowing additional fuel to flow through the valve and be discharged into the mixing chamber through the pump discharge nozzle. Economizer is correctly set at the factory and the adjustment should not be changed. If carburetor is disassembled, the position of the adjustment nut (at upper end of pump piston rod) should be noted so that adjustment will not be changed when pump is reassembled. Economizer setting can be checked by noting throttle valve opening when pump piston rests on by-pass valve seat (less over-travel) with pump set for maximum stroke. Check throttle opening by placing a 3/8" drill (EX-22), 27/64" drill (EX-32) between throttle valve edge and carburetor wall. Exceptions to these standard settings are given in table below:

ECONOMIZER SETTING

Car Model	Carburetor	Economizer Setting	Pump Setting
Nash 3640	EX-22	23/64"	Max.

Adjustment—Take out cotter pin in adjusting nut at top of pump piston stem, turn nut, see that cotter pin replaced to lock adjustment.

ACCELERATING PUMP:—Accelerating pump piston rod is connected to a pump operating rod under float cover (pump in float bowl). On the upstroke of the pump piston gasoline is drawn from the float chamber through the pump check valve into the pump chamber. On the downstroke of the piston when the throttle is opened, this fuel is forced out through the economizer needle valve and discharged through the pump discharge nozzle into the mixing chamber. The closing of the check valve prevents fuel flowing back into the float chamber. When the throttle is held open the economizer needle valve is opened by the pump piston and additional fuel is discharged through the pump nozzle. This fuel is metered by the pump discharge nozzle. Standard pump capacity is 19-21 cubic centimeters per 10 strokes with pump set for maximum stroke. Exceptions to this standard capacity are shown in table below. Letter 'S' indicates that pump should be operated slowly.

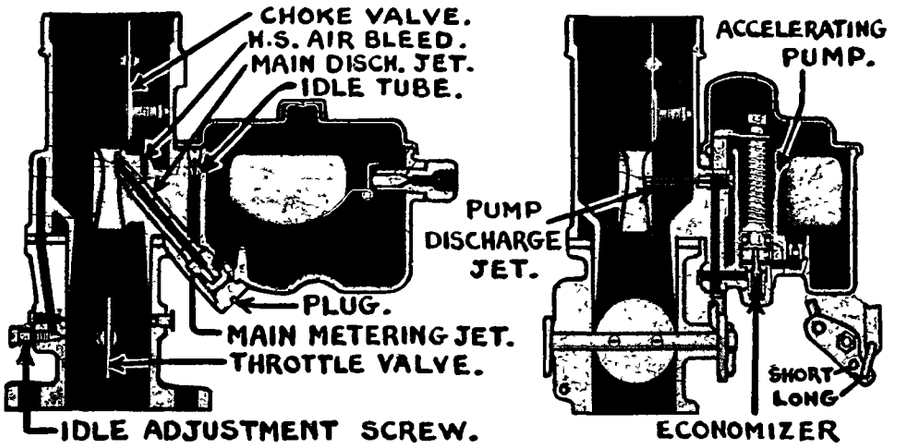

ACCELERATING PUMP SETTING

Car Model	Carburetor	Pump Capacity	Pump Setting
Auburn Six	EX-22	17-19 cc.	Max.
Auburn Eight	EX-32	19-21 cc.	Max
Nash 3640	EX-22	18-22 cc.	Max.
Nash 3620	EX-32	17-19 cc.	Max.
Nash 3720	EX-32	13-17 cc. (S)	Min.

Adjustment—Throttle lever has two or three holes for engagement of pump rod link to provide minimum (inner hole), medium (center hole), maximum (outer hole) stroke. See tune-up data on car model page for recommended settings and changes for seasonal requirements.

FLOAT LEVEL:—Fuel level in float bowl (distance from surface of fuel to top edge or gasket seat on bowl) is set at 5/8" (EX-22), 9/16" (EX-32). Exceptions to these standard settings are given in table below. Float height can be changed to correct fuel level by bending float lever at the point where it is attached to the float.

FLOAT LEVEL SETTING

Car Model	Carburetor	Fuel Level
Auburn Eight	EX-32	5/8"
Nash 3720	EX-32	3/4"

THROTTLE VALVE SETTING:—When installing throttle valves, see that "setting" shown in table below (distance from upper lip of throttle valve to lower edge of upper idle port) is correct with throttle valve tightly closed.

THROTTLE VALVE SETTING

Car Model	Carburetor	Throttle Valve	Setting
Auburn Six	EX-22	P-6454—18½°	.012"
Auburn Eight	EX-32	P-5436—20°	.012"
Nash	EX-22	P-6454—18½°	.012"
Nash	EX-32	P-5436—20°	.012"

NOTE—All Settings are plus or minus .004".

CONTINUED ON NEXT PA E

STROMBERG MODELS EX-22, EX-32 (C ntinued)

THROTTLE CRACKING DEVICE:—On some models a linkage between the throttle valve and choke valve is provided so that the throttle valve is opened slightly when the choke valve is completely closed. Adjust linkage to provide the throttle valve opening listed below with the carburetor fully choked (wire drills should be inserted between throttle valve and carburetor wall, throttle valve closed against drill, linkage adjusted so that choke valve is completely closed).

Auburn 654—Throttle stopscrew stop-cam pivoted above valve shaft. Should not require adjustment. See that stopscrew rests on high point of cam with choke valve fully closed.

Auburn Schgd. 852—Adjust linkage so that when choke valve fully closed, #52 drill may be passed between throttle valve edge and carburetor wall but #48 drill will be 'no go'.

CHOKE:—Valve is provided with a relief poppet valve which will open when engine begins to fire and will prevent over-choking. On cars with conventional choke control, see that choke linkage is adjusted so that choke valve is fully closed with choke button pulled all the way out and wide open with choke control button pushed all the way in.

SERVICE PARTS: Gasket Sets—Part No. J-4362-G (EX-22), J-4364-G (EX-32).

STROMBERG EX-32 PIERCE ARROW "TWIN INSTALLATION"

PIERCE ARROW TWELVE, ALL MODELS (1936 to 1938)
This is a double installation with one carburetor being used for each cylinder bank (Twelve cylinder, Vee type engine). Carburetors are fitted with Fast Idles and Automatic Choke.

TYPE:—Single barrel, plain tube, downdraft type. Design and operation entirely similar to other 'E' type carburetors. Special adjustment instructions are necessary in order to equalize idle setting and idle speed on each carburetor and to synchronize throttle valves and choke valves. Complete directions are given below. Engine must be warmed up so that choke valve is wide open and engine idling at hot or slow idling speed when adjusting.

IDLING ADJUSTMENT:—Adjust one carburetor at a time. Cut out the six cylinders of the other bank by grounding the high tension lead of the coil firing that bank. Idle adjustment screw controls fuel mixture (turn screw in or clockwise for leaner mixture, out or counter-clockwise for richer mixture). Turn adjusting screw on carburetor feeding cylinders which are firing in or out until engine fires smoothly. Then check idling speed by taking out plug in exhaust manifold and counting explosions or form small gap by disconnecting one high tension lead at spark plug and count sparks. Adjust throttle lever stopscrew so that there are 37-39 explosions in 15 seconds. Recheck idling adjusting screw setting (this must be reset if idling speed has been changed). After adjusting each carburetor for smoothest firing position of idling screw and correct idling speed of 37-39 explosions in 15 seconds, connect both coils, idle engine on all twelve cylinders and check throttle valve synchronization.

Throttle Valve Synchronization—Use mercury tube equalizing gauge, Pierce Arrow Part #HMJ-477, or pull throttle open slightly and note whether both throttle valves leave the idle stop at the same instant. If they do not, turn the adjusting screw located on the upper right hand side of the cross shaft connecting the two carburetor throttle valves in or out until throttles open simultaneously (if throttles do not open together the increased tension on the rod as the second throttle begins to open can be felt.

HIGH SPEED ADJUSTMENT AND ECONOMIZER:—Metering jets are of the fixed type and are not adjustable. See Stromberg Jet Specification Table.
Economizer is built in lower end of accelerating pump and is operated by pump piston as in other 'E' type carburetors. Economizer should not require adjustment but setting can be checked by noting throttle opening at point where pump piston rests on seat of economizer by-pass jet (less overtravel). Check by inserting drill rod of size noted in table below between throttle valve edge and carburetor wall. Pump must be set for maximum stroke.

ECONOMIZER SETTING

Carburetor Model	Economizer Setting
EX-32	27/64"

Adjustment—Take out cotter pin and turn adjusting nut at top of pump piston stem. See that cotter pin replaced to lock adjustment.

ACCELERATING PUMP:—Adjustable in usual manner by shifting pump rod to inner or outer hole in throttle valve lever. Use inner hole for normal summer temperatures and outer hole, providing maximum pump stroke, for winter temperatures. See tune up instructions on car model page for recommended settings. Pump capacity in cc. per 10 strokes with pump set for maximum or minimum stroke is noted below.

ACCELERATING PUMP SETTING

Carburetor	Pump Capacity	Pump Setting
EX-32	12-14 cc	Minimum

FLOAT LEVEL:—Fuel level in float bowl is set at 9/16" below top edge of bowl. Adjustable by bending lever at point where it is attached to the float.

FLOAT INLET VALVE

Needle Valve & Seat Assembly:—Furnished only as matched sets.

Carburetor	Part Number	Size
EX-32	P-18913-K	.113"

CHOKE:—Type 'C' automatic choke control is used (see separate article). Choke valve fitted with relief poppet valve to prevent over-choking. Check choke valves to see that both valves are fully closed for cold starting (if one valve is not closed, loosen clampscrew, close valve, tighten clampscrew).

THROTTLE VALVE SETTING:—Throttle valve type and setting shown in table below. Upper lip of throttle valve should be this distance below lower edge of upper idle port with valve fully closed.

THROTTLE VALVE SETTING

Carburetor	Throttle Valve	Setting
EX-32	P-5436—20°	.012"

SERVICE PARTS:—Gasket Set—J-4364G.

STROMBERG MODELS EXV-2, EXV-3

MODEL EXV-2

DODGE, MODELS D2 (1936), D5 (1937), D8 (1938)

MODEL EXV-3

CHRYSLER AIRSTREAM EIGHT, MODEL C8 (1936)
CHRYSLER AIRFLOW EIGHT, MODEL C9 (1936)

NOTE:—Dodge 1937-38. Leaner metering jets for altitudes greater than 3000 ft. as follows: 5%—.057", 10%—.055", 15%—.054", 20%—.052". These leaner jets may be used at lower altitudes for greater fuel economy with material reduction in speed and power although this is not recommended by factory.

TYPE:—Plain tube downdraft type with positively actuated accelerating pump (connected to throttle lever) and vacuum controlled by-pass or economizer.

Fuel System (Idling & Low Speed):—Fuel for idling taken from main jet well up through idling tube which meters the fuel into cross channel in which it is mixed with air admitted through the Idle Air bleeder. From this cross channel fuel mixture is taken down through channel to discharge ports at throttle edge.

Driving Range:—As the throttle is opened, the idling system drops out and all fuel is discharged by the main discharge jet located directly above the main metering jet and discharging into the small auxiliary venturi. Main jet is air bled by the high speed air bleed passage drilled in the auxiliary venturi support directly above the discharge jet.

High Speed and Wide Open Throttle Running:—At speeds above 65 M.P.H. or whenever the throttle is held open, the drop in vacuum above the spring loaded vacuum piston allows the spring to force the piston down, opening the economizer by-pass valve, so that additional fuel metered by the by-pass jet flows to the main discharge jet.

IDLE ADJUSTMENT:—Adjusting screw controls fuel discharge from lower port and should be turned in for leaner mixture and out for richer mixture. Adjustment should not be made until engine is warmed up so that choke valve is wide open (automatic choke used). See tune-up data on car model page for complete adjustment instructions.

METERING JETS:—Main metering jet is non-adjustable fixed type and should be changed only for special operating conditions such as high altitudes (see Note above and Stromberg Jet Specification Table for standard jet calibrations).

ECONOMIZER:—Consists of by-pass valve and jet controlled by special vacuum piston with vacuum chamber connected through channel in carburetor body to manifold below throttle. By-passes fuel around main metering jet to main discharge jet for wide open throttle or high speed operation. No adjustment provided.

ACCELERATING PUMP:—Pump piston rod linked positively to throttle lever. Fuel is drawn into pump cylinder through check valve in intake channel from float bowl on upstroke of piston and is discharged through outlet (by-pass) valve to pump jet located in side of auxiliary venturi on downstroke of piston when throttle valve opened for acceleration. Pump capacity in cc. per 10 strokes when set for medium stroke (middle hole) and operated slowly is shown in table below.

ACCELERATING PUMP SETTING

Car Model	Carburetor	Pump Capacity
Dodge (all models)	EXV-2	15-19 cc.
Chrysler (All Models) ... ('36)	EXV-3	15-19 cc.

Adjustment—Throttle lever provided with three holes for engagement of pump rod link to provide varied pump stroke as follows: inner hole—minimum stroke; center hole—medium stroke; outer hole—maximum stroke. See tune-up data on car model page for recommended setting on each car model.

FLOAT LEVEL:—Fuel level in float bowl set at 5/8" below top edge or gasket seat f bowl. Float level can be changed to correct fuel level by bending lever at the point where it is attached to the float.

Needle Valve & Seat Assembly—Furnished only as matched sets. Type and size for each model as follows:

FLOAT INLET VALVE

Model	Part No.	Size
EXV-2	P-20774	.093"
EXV-3	P-20887	.101"

CHOKE:—Choke valve provided with relief poppet valve to prevent over-choking. When Sisson Automatic Choke used with this carburetor, see article in Carburetion Equipment Section for Automatic Choke adjustment.

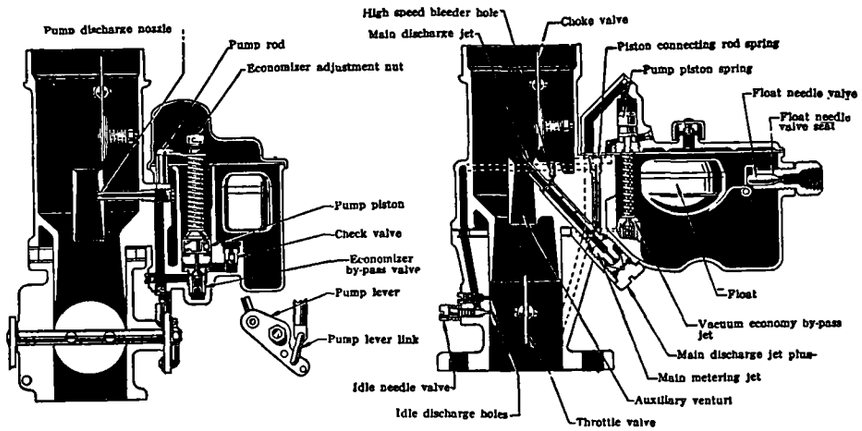

THROTTLE VALVE SETTING:—Throttle valve type and setting (distance from top lip of valve to lower edge of upper idle port with valve closed) is shown in table below. Vacuum spark control hole should be flush with the upper lip of throttle valve or the distance shown in the table above the valve.

THROTTLE VALVE SETTING

Carburetor	Throttle Valve Part No.	Throttle Valve Setting	Vacuum Spark Hole Size	Vacuum Spark Hole Location
EXV-2	P-6454—20°	.018"	#50	Flush
EXV-3	P-5436—20°	.012"	#50	Flush

SERVICE PARTS:—Gasket Sets—Part No. J-4608-G (Dodge—all models), J-4544-G (Chrysler—all models).

Repair Kits (incl. Gaskets)—No. RK-13 (Dodge '36), RK-14 (Dodge '37), RK-15 (Dodge '38), RK-25 (Chrysler C8 '36), RK-26 (Chrysler C9 '36).

STROMBERG MODEL EX-23

STUDEBAKER DICTATOR, MODELS 3A, 4A (1936)

STUDEBAKER DICTATOR, MODELS 5A, 6A (1937)

NOTE:—On Studebaker models, for increased fuel economy with slight performance loss, main metering jet may be replaced with one-size-smaller metering jet. The two-size-smaller jet should be used only for high altitude operation. See table below. Metering jet must be changed to smaller size as indicated whenever standard Copper-mesh type Air Cleaner is replaced by Heavy Duty Oil-bath type.

Model	Carburetor	Main Metering Jet Standard	1st Lean	2nd Lean
Dict. 3A, 4A ('36)	EX-23	.058"	.056"	.054"
Dict. 5A, 6A ('37)†	EX-23	.057"	.056"	.054"
Dict. 5A, 6A ('37)‡	EX-23	.055"	.054"	.052"

†—Standard Air Cleaner. ‡—Heavy Duty Oil-Bath Air Cleaner.

This model is fitted with a built-in Automatic Choke (vacuum piston in throttle valve body, thermostatic spring coil mounted separately on manifold) and a Fast Idle. See separate article in 'Stromberg Automatic Choke and Integral Fast Idle' for complete data on these units.

TYPE:—Single barrel, plain tube, downdraft type. Design and operation entirely similar to other 'E' type carburetors except for Automatic Choke and Fast Idle mechanism. Engine must be warmed up so that choke valve is wide open and engine idling at slow or hot idling speed when adjustments are made. Fast Idle design requires that throttle be opened to 20 M.P.H. position before starting a cold engine in order to allow choke valve to close and Fast Idle mechanism to become operative.

IDLING ADJUSTMENT:—With engine warm and idling at slow or hot idling speed, set throttle lever stopscrew for 7-8 M.P.H. idling speed. Idle adjustment controls fuel mixture and should be turned in for leaner mixture or out for richer mixture. Turn screw in until engine begins to miss or run irregularly, turn screw out until engine begins to roll, then turn screw in slowly until engine fires smoothly and speed is at maximum. Check idling speed and, if necessary, readjust throttle stopscrew for 8 M.P.H. idling speed. See tune-up data on car model page for complete instructions.

HIGH SPEED ADJUSTMENT AND ECONOMIZER:—Metering jets are of the 'fixed' type and are not adjustable. See Stromberg Jet Specification table for standard jet sizes. Jets should be changed only to compensate for special operating conditions such as high altitudes or special fuel.

Economizer is built in lower end of accelerating pump and is operated by pump piston. Economizer should not require adjustment but setting can be checked by noting throttle opening (insert a drill rod of proper size between edge of throttle valve and carburetor wall) when pump piston rests on economizer by-pass jet seat (less over-travel) with pump set for minimum or maximum stroke as noted.

ECONOMIZER SETTING

Car Model	Carburetor	Economizer Setting	Pump Setting
Studebaker Dict. ('36)	EX-23	7/16" drill	Maximum
Studebaker Dict. ('37)	EX-23	7/16" drill	Maximum

Adjustment. Remove cotter pin in adjustment nut at upper end of pump piston stem, turn nut. Be sure that cotter pin replaced to lock adjustment. When dismantling pump for servicing, do not disturb this nut to avoid necessity of resetting Economizer.

ACCELERATING PUMP:—Similar in design to that used on other 'E' type carburetors. Fuel is drawn into pump chamber through intake ball check valve on upstroke of piston and is discharged through outlet (by-pass) valve and pump discharge nozzle opening into side of small auxiliary venturi when the throttle is opened for acceleration. Pump capacity in cc. per 10 strokes when pump is operated slowly is shown in table below. Pump should be set for maximum or minimum stroke, as noted, when making this test.

ACCELERATING PUMP SETTING

Car Model	Carburetor	Pump Capacity	Pump Setting
Studebaker Dict. '36-37	EX-23	17-19 cc.	Medium

Adjustment. Three holes provided in throttle valve lever for pump rod link engagement. Center hole providing medium stroke is normal setting. Inner hole provides minimum stroke and outer hole maximum stroke. See tune-up data on car model page for recommended settings.

FLOAT LEVEL:—Fuel level in float bowl with engine idling (3 lbs. pressure) is shown in table below. Float level can be changed to correct fuel level by bending float lever at the corner where it is attached to the float.

FLOAT LEVEL SETTING

Car Model	Carburetor	Fuel Level
Studebaker Dict.	EX-23	5/8"

Needle Valve & Seat Assembly—Furnished only as matched sets. Assembly part number and size for each model as follows:

FLOAT INLET VALVE

Model	Part No.	Intake Hole Size
Studebaker	P-21518	.093"

CHOKE:—Choke valve fitted with poppet type relief valve. See article in Carburetion Equipment Section for complete data on the built-in Automatic Choke and integral Fast idle.

THROTTLE VALVE SETTING:—Throttle valve type and setting (distance from upper lip of valve to lower edge of upper idle discharge port with throttle valve fully closed shown in table below.

THROTTLE VALVE SETTING

Car Model	Carburetor	Throttle Valve	Setting
Studebaker Dict. ('36)	EX-23	P-6454-18½°	.012"
Studebaker Dict. ('37)	EX-23	P-22673-18½°	.012"

SERVICE PARTS: Gasket Set—Stromberg Part No. J-4610-G.

Repair Kit (incl. Gaskets)—Stromberg Part No. RK-58.

STROMBERG MODELS EE-7/8, EE-1

MODEL EE-7/8

FORD "60", ALL MODELS (1937-38-39)—SEE NOTE

MODEL EE-1

AUBURN EIGHT, MODEL 852 (1936-37)
BUICK, SPECIAL MODEL 40 (1936)
FORD V8 "85", ALL MODELS (1936-37-38)—SEE NOTE
LINCOLN-ZEPHYR, MODELS H (1936), HB (1937)
LINCOLN ZEPHYR, MODEL 86H (1938)—SEE NOTE
NASH AMB. EIGHT, MODELS 3680 (1936), 3780 (1937), 3880 (1938)
NASH-LAFAYETTE, MODEL 3910 (1939)
STUDEBAKER PRESIDENT, MODELS 2C (1936), 3C (1937)

NOTE:—1936 Ford—Carburetor changed in production from Ford Part No. 48-9510-D to Part No. 67-9510-A. This new carburetor has smaller main metering jet and venturi and gives better fuel economy. An additional model (Ford Part No. SE-67-9510) is available as optional equipment and has smaller main metering jet and venturi than regular 67-9510-A. This model intended for light work

1937-38 Ford—Part numbers for '60' and '85' carburetors and service for which intended listed below. Carburetors with same prefix (52 or 67) are similar except for main metering jet size. See Stromberg Jet Specification Table

Service	'60' Models	'85' Models
Normal Altitudes	52-9510-B	67-9510-A
5000-10000 ft.	52-9510-C	67-9510-B
10000-15000 ft.	52-9510-D	67-9510-C
Over 15000 ft.	52-9510-E	67-9510-D

1938-39 Ford—Holley (Chandler-Groves) carburetors also used. See Holley Chandler-Groves (Ford) Carburetor article for data on these models.

1938 Lincoln-Zephyr—Holley (Chandler-Groves) carburetors also used. See Holley Chandler-Groves (Ford) Carburetor article for data.

Buick Model 40—Std. main metering jets (.048" No. P-19442) must be changed to smaller (.044") size when heavy duty Triplex Air Cleaner used.

Nash 3780—Smaller main metering jets used with heavy duty oil-bath air cleaner used (change jets when installing this cleaner).

Studebaker 2C, 3C. For increased fuel economy with slight performance loss, standard main metering jet (.047"—Part No. P-19442) may be replaced by ne-size-smaller (.045") metering jet. The two-size-smaller jet (.043") should be used only for high altitude (both jets must be same size).

TYPE:—Duplex or dual barrel, plain tube, downdraft type. Similar in design to other 'E' type carburetors except that each carburetor barrel has independent main discharge jets, main metering jets, throttle valves and idling adjustments. Throttle valves are mounted on the same shaft and do not require synchronization. Accelerating pump is positively operated by the throttle lever through a 'walking beam' linkage on the carburetor body casting. Idling adjustment and accelerating pump adjustment (some models only) are the only points requiring attention.

IDLING ADJUSTMENT:—Needle valve type controlling fuel mixture. Adjusting screws control discharge through lower or closed throttle discharge ports below throttle valves (upper ports also discharge fuel when throttle is opened slightly) and should be turned in for leaner mixture or out for richer mixture. Engine must be warmed up when adjustments are made. With engine warm and idling with closed throttle (adjust throttle stopscrew, if necessary so that idle speed is approximately 5-7 MPH), adjust each idle adjusting screw in turn by turning screw in until engine begins to hesitate or miss, and out until engine begins to roll, and then turning screw in slowly until engine fires smoothly. Final setting should be approximately midway between the missing (lean) and rolling (rich) positions. After adjusting both screws, recheck idling speed. See car model pages for complete tune-up data. Nash Note—On these models, set idle speed not lower than 7 MPH, and if engine tends to stall when coasting (when cruising gear used continuously), speed can be advanced up to 9 MPH.

If correct idling adjustment cannot be secured, take out idling adjusting screws and upper idling port plugs and clean out idling ports with compressed air. The idling tubes located in the upper carburetor body can also be taken out and cleaned with compressed air.

METERING JETS:—Main metering jets (2 used) are non-adjustable fixed type and should be changed only for special operating conditions such as high altitudes. See Notes above for special recommendations and Stromberg Jet Specification Table for standard jets. Both main metering jets must be same size.

ECONOMIZER:—Built in lower end f the accelerating pump and is operated by the pump piston. At speeds above 65 M.P.H. or with wide open throttle, economizer needle valve is forced down, opening the economizer valve so that additional fuel flows through this valve and is discharged through the pump discharge nozzle. Economizer should not require attention but setting can be checked by noting throttle opening when pump piston contacts by-pass valve seat (economizer). Throttle valve opening at this point as checked by drill passed between throttle valve edge and carburetor wall is shown in table below.

ECONOMIZER SETTING

Car Model	Economizer Setting
Auburn (all models)	21/64"
Buick	21/64"
Ford (all models) EE-7/8 Carb.	9/32"
Ford (all models) EE-1 Carb.	5/16"
Lincoln Zephyr	15/32"
Nash (all models)	7/32"
Studebaker (all models)	21/64"

Adjustment—No adjustment provided but pump arm (walking beam) may be bent slightly to correct economizer action.

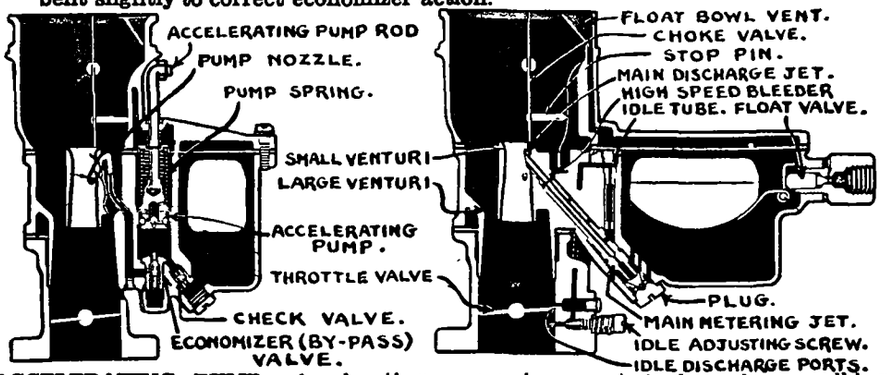

ACCELERATING PUMP:—Accelerating pump is operated through a walking beam linkage by the throttle valve lever. Pump chamber is filled with fuel (flowing through check-valve) when throttle is closed. When the throttle is opened, this fuel is discharged through the pump discharge nozzle in each carburetor barrel. The check-valve prevents the fuel flowing back into the float bowl. When the throttle is held open, the pump piston opens the economizer by-pass valve so that fuel flows straight through the pump chamber to discharge nozzles. Pump capacity in cc. per 10 strokes (operated slowly) is shown in table below. Pump setting must be as indicated.

ACCELERATING PUMP SETTING

Car Model	Pump Capacity	Pump Setting
Auburn (all models)	17-21 cc	Maximum
Buick (all models)	18-22 cc	Not Adj.
Ford 1935-36	13-17 cc	Not Adj.
Ford '60' EE-7/8	9-13 c.c.	Max.
Ford '85' EE-1	17-21 c.c.	Max.
Lincoln Zephyr (1936-37)	18-22 cc	Not Adj.
Lincoln Zephyr (1938)	15-19 cc	Maximum
Nash (1936-37)	21-25 cc	Maximum
Nash (1938)	10.5-21.5 c.c.	Max.
Nash-Lafayette 3910	23-27 cc	Minimum
Studebaker (all models)	14-18 cc	Not Adj.

Adjustment:—Two holes (ball studs on Ford and Lincoln Zephyr) provided on throttle lever for pump rod connection. Inner hole (short radius) provides minimum stroke, outer hole (long radius) maximum stroke. See tune up data on car model page for recommended setting and seasonal changes.

FLOAT LEVEL:—Fuel level in float bowl set at 15/32" below top edge or gasket surface of bowl with 3 lbs. pressure (engine idling) for all models except as noted below. Float height can be changed to correct fuel level by bending float lever at the point where it is attached to the float.

FLOAT LEVEL SETTING

Car Model	Carburetor	Fuel Level
Nash (All Models)	EE-1	1/2"
All Others	EE-7/8, EE-1	15/32"

CONTINUED ON NEXT PAGE

STROMBERG MODELS EE-7/8, EE-1 (C ntinu d)

FLOAT INLET VALVE

Needle Valve & Seat Assembly—Furnished only in matched sets as follows:

Car Model	Part No.	Size
Auburn (all)	19867	.113"
Buick (all)	P-21659	.093"
Ford (all Carb.)	P-20287	.098"
Lincoln Zephyr	P-20287	.098"
Nash (all)	P-19867	.113"
Nash-Lafayette 3910	P-20256	.093"
Studebaker	P-21519	.101"

CHOKE:—Choke valves offset type. Check hand choke controls to see that choke valve is fully closed when dash control button pulled and is wide open when control button pushed all the way in.

THROTTLE VALVE SETTING:—Throttle valves for all models are 5° type and should be set so that upper lip of valve is .030" plus or minus .004" below lower edge of upper idle port with throttle valve closed (all models except Oldsmobile 1935), .010" (Oldsmobile 1935). Vacuum port height above throttle valve should be .041" plus or minus .004" on Buick models. On Studebaker models, the two #50 vacuum ports should be flush with the throttle valve.

SERVICE PARTS:—Gasket Sets—Part No. J-4383-G (Auburn '35-36), Ford & Lincoln "EE-1" Carburetor, Nash 1936), No. J-4539-G (Nash 1937-38), No. J-4599-G (Buick 1936), No. J-4780-G (Studebaker 1936-37), No. J-4790-G (Ford "EE-7/8"" Carburetors), No. J-5412-G (Nash-Lafayette 1939).

Repair Kits (including Gaskets)—Part No. RK-2 (Buick '36 with Std. Air Cleaner), No. RK-89 (Buick '36 A-18191 Carb. with H.D. Air Cleaner), No. RK-90 (Buick '36 A-18171 Carb. with H.D. Air Cleaner), No. RK-66 (Ford 'EE-7/8' Carb.), No. RK-126 (Ford & Lincoln 'EE-1' Carb.), No. RK-37 (Nash '35-36), No. RK-41 (Nash '37), No. RK-42 (Nash '38), No. RK-64 (Nash-Lafayette '39 Code 8-30B & later Carbs.), No. RK-65 (Nash-Lafayette '39 Code 8-30 & 8-30A Carbs.), No. RK-59 (Studebaker '36), No. RK-61 (Studebaker '37).

STROMBERG MODELS EE-14, EE-15, EE-25

MODEL EE-14

PACKARD "120", ALL MODELS (1936-37)
PACKARD EIGHT, MODELS 1601, 1A, 2 (1938)

MODEL EE-15

CORD, MODELS 810 (1936), 812 (1937)
LA SALLE, MODEL 36-50 (1936)

MODEL EE-25

CADILLAC V8, MODELS 36-60, 70, 75 (1936)

NOTE—These models fitted with an Automatic Choke (thermostatic coil mounted on manifold, vacuum piston built in carburetor body), and a new type Fast Idle incorporating a by-pass passage around the throttle valve

SPECIAL SERVICE NOTES: Packard (1938) Production Changes—Carburetors used on early 1938 cars should be brought up to later standards by incorporating changes made on later models as follows:

Code 10-30 Carburetors—Install new style Main Discharge Jets, No. P-23346 (4 #58 hole at top), new Pump Lever, P-22943 (#20 drill hole for pump rod), new Pump Piston Assy., No. P-20775 (#60 relief hole), and new Economizer (by-pass) Jet, No. P-20854 (#57 orifice).

Code 10-30A Carburetors—Install all parts listed above for 10-30 carburetors except the P-20854 Economizer Jet.

Code 10-30A Carburetors—Install new Pump Lever, No. P-22943 (with #20 hole for pump rod) only.

NOTE—After making above changes, stamp letter "A" ahead of code number figure "10" on air horn.

TYPE:—Duplex or dual barrel, plain tube, downdraft type. Similar in design to other EE type carburetors except for fast idle and choke control vacuum piston and by-pass passage (see note under Fast Idle paragraph for special directions necessary for disassembling carburetor to avoid damage to vacuum piston linkage). All specifications and adjustments for these models same as given for Model EE-1 (preceding article) except as noted below.

IDLE ADJUSTMENT:—Idle adjusting screw provided for each carburetor barrel. Operation and adjustment same as for EE-1 (previous article). See tune-up data on car model page for adjustment instructions on each car model.

FAST IDLE MECHANISM:—The vacuum piston in the cylinder in the carburetor body casting is linked to the choke valve. When the engine is cold, the vacuum piston is raised to the upper end of its stroke by the closing of the choke valve, so that the by-pass passage around the throttle valve is open and the cross channel from the idle fuel channel which terminates in the by-pass passage is uncovered. In this position an extra quantity of fuel mixture will be drawn from the idle fuel channel and discharged into the manifold below the throttle valve, providing a fast idle when the engine begins to fire. When vacuum builds up in the manifold, the vacuum piston will be drawn down until the side port in the piston is uncovered, admitting air into the cylinder below the piston and stopping the further movement. This partial stroke of the piston opens the choke valve slightly when the engine begins to fire but does not cut off the fuel mixture flow through the by-pass passage. As the engine warms up and the choke valve opens, the vacuum piston completes its stroke, cutting off the cross-channel and closing the by-pass passage so that fuel is supplied in the usual manner by the lower idling port (throttle closed) and upper idling port (throttle open).

NOTE—In disassembling carburetor, when the air horn and float bowl cover is to be removed, take out cover screws, raise upper assembly straight up until the pin in the upper end of the vacuum piston is exposed, take out this pin. Upper assembly can then be removed. Do not disturb the nut at the upper end of the vacuum piston link (on choke valve bracket).

METERING JETS:—Main metering jets (2 used) are non-adjustable type and should be changed only for special operating conditions such as high altitudes. See Stromberg Jet Specification Table for standard jet calibration.

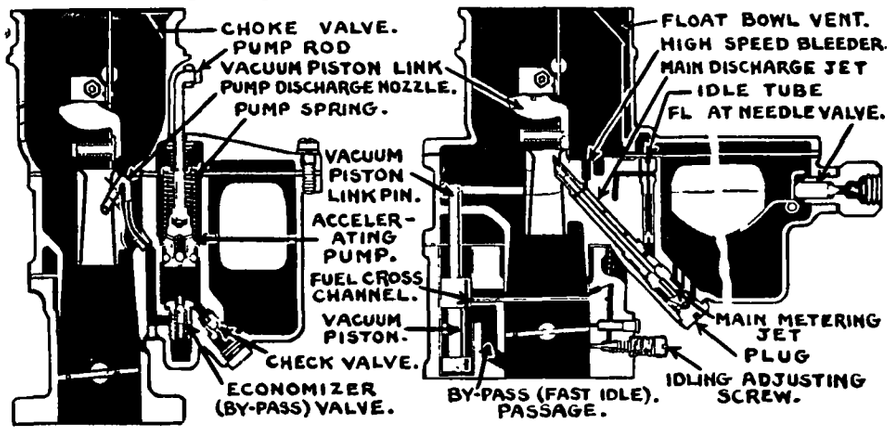

ECONOMIZER:—To check Economizer setting, check throttle valve opening with wire drill passed between edge of throttle valve and carburetor wall with throttle at point where pump piston contacts economizer by-pass valve seat less over-travel). Settings shown in table below (On Cadillac Model EE-25, pump rod must be engaged in end hole in pump lever). No adjustment provided but pump lever may be bent slightly to correct operation.

ECONOMIZER SETTING

Car Model	Carburetor Model	Economizer Setting
Cadillac V8	EE-25	21/64"
Cord	EE-15	21/64"
La Salle 36-50	EE-15	21/64"
Packard	EE-14	21/64"

ACCELERATOR PUMP:—Similar in design to type used on other EE carburetors. Fuel is drawn into pump chamber through intake ball check valve on upstroke of piston and discharged through outlet (by-pass) valve and pump discharge nozzle in auxiliary venturi on the downstroke of the piston when throttle valve opened for acceleration. Pump capacity in cc. per 10 strokes when operated slowly is shown in table below. No adjustment provided.

ACCELERATING PUMP SETTING

Car Model	Carburetor Model	Pump Capacity
Cadillac V8	EE-25	18-22 cc.
Cord	EE-15	17-21 cc.
LaSalle	EE-15	15-19 cc.
Packard	EE-14	17-21 cc.

CONTINUED ON NEXT PAGE

STROMBERG MODELS EE-14, EE-15, EE-25 (Cont.)

FLOAT LEVEL:—Fuel level in float bowl is 15/32" with 3 lbs. pressure (EE-14, EE-15), 5/8" with 5 lbs. pressure (EE-25) below top edge of bowl. Float height is adjusted by bending float lever (at float) to correct fuel level.
NOTE—See special instructions in note under Fast Idle section to avoid damaging vacuum piston linkage when removing float bowl cover.
Needle Valve & Seat Assembly—Furnished only as matched sets. Part number and size for each type as follows·

FLOAT INLET VALVE

Model	Part Number	Size
EE-14 (Packard 1936-37)	P-22089	.101"
EE-14 (Packard 1938)	P-23509	.101"
EE-15 (Cord)	P-19867	.113"
EE-15 (LaSalle 36-50)	P-22487	.113"
EE-25 (Cadillac)	P-19867	.113"

CHOKE:—**(EE-14)**—Thermostatic spring coil mounted separately on manifold and linked to choke valve shaft lever by rod. See separate article for adjustments.
(EE-15, EE-25)—Thermostatic spring coil mounted on carburetor at end of choke valve shaft and liked directly to shaft. Spring coil controlled by electric heating coil in case which is connected to ignition switch. The 'Triple-Range' hand choke control is not used on Cord. See separate article for adjustments.

THROTTLE SETTING:—Throttle valve type and setting (distance from upper lip of throttle valve to lower edge of upper idle port with valve closed) shown in table below. Vacuum Spark Control Port location indicates height of lower edge of hole above throttle valve lip when closed.

THROTTLE VALVE SETTING

Model	Throttle Valve Part No.	Setting	Vacuum Spark Control Port Size	Location
EE-14 (Packard 1936)	P-20874-5°	.020"		
EE-14 (Packard '37)	§P-20874-5°	.030"	#50	Flush
EE-14 (Packard '38)	‡P-23357-5°	.030"	#50	Flush
EE-15 (Cord)	P-19435-5°	.030"		
EE-15 (LaSalle)	(†) P-20720-5°	.010"	#58	.041"
EE-25 (Cadillac)	P-19850-5°	.030"	#56	.031"

(†)—Throttle valve has #53 hole. Vacuum spark control used only in 1936.
(§)—Right hand only. Left hand throttle valve P-22735-5°.
(‡)—Right hand only. Left hand throttle valve P-23347-5°.

SERVICE PARTS: Gasket Sets—Part No. J-4540-G (Packard, Cord), No. 382392 (LaSalle), No. J-4609-G (Cadillac).
Repair Kits—No. RK-17 (Cadillac), No. RK-23 (LaSalle), No. RK-50 (Packard 1936), No. RK-51 (Packard '37 Code 10-29 & 10-29A Carbs.), No. RK-54 (Packard '38).

STROMBERG MODEL EE-16

A-18341—PACKARD '120' 8, MODELS 1701,1A,2 (1939), 1801,1A (1940)

THROTTLE GUARD NOTE:—All cars with Overdrive Transmission fitted with vacuum diaphragm type throttle guard designed to prevent engine stalling when free-wheeling in the 0-20 MPH. range. See separate article for complete Throttle Guard adjusting and servicing data.

TYPE:—Duplex or dual barrel, plain tube, downdraft type similar in design to 'EE' carburetor on previous Packards except for new features as follows:
Automatic Choke—Thermostatic coil and vacuum piston type with assembly mounted directly on carburetor air horn and linked to choke valve lever within choke housing (no external linkage used as on previous model). Thermostat actuated by exhaust manifold heat through external heat tube connected between thermostat cover and hot air stove on manifold.
Fast Idle—Consists of a special stepped fast idle cam linked to the choke valve and serving as a stop for the fast idle lever adjusting screw (on opposite end of throttle shaft than throttle lever stopscrew for hot or slow idle speed.

IDLING ADJUSTMENT:—Adjust only with engine warm so that Automatic Choke and Fast Idle inoperative (choke valve wide open, fast idle screw on lowest step of fast idle cam) and engine idling at hot or slow idling speed. Make certain that some clearance exists between fast idle adjusting screw and fast idle cam (on opposite end of throttle shaft from idling speed adjusting screw). Set throttle lever stopscrew for correct 6 MPH. idling speed. Turn idling adjusting screw for each carburetor barrel (both screws must be adjusted alike) in for leaner mixture or out for richer mixture. These screws control fuel discharge from lower (closed throttle) idle discharge ports and standard setting is approximately 2-2½ turns open. See car model page for complete tune-up instructions. Check Fast Idle setting (below).

METERING JETS:—Main metering jets are non-adjustable type located under plug at lower end of each discharge jet. Jets should be changed only for special conditions (high altitudes, etc.). See Stromberg Jet Specification Table.

ECONOMIZER:—By-pass valve and jet located at bottom of pump cylinder which is operated by pump piston so as to permit continuous discharge from pump nozzle when throttle valve is wide open. Should not require attention but setting can be checked by noting throttle opening when pump piston rests on by-pass valve seat (less overtravel). Throttle opening should be 5/16" plus or minus 1/64". Check by inserting drill rod between throttle valve edge and wall.
Adjustment—Bend ball end of pump fulcrum lever (intermediate lever) slightly

ACCELERATING PUMP:—Similar to design used on previous 'EE' carburetors with spring-loaded relief valve in piston head and duration spring on rod above piston (light spring above duration spring is dust washer retainer). A strainer screen has been added below the intake check valve (see Note below).
Capacity—17-21 cc. (slow), 11-15 cc. (Fast) per 10 strokes of the pump.
Adjustment—No adjustment provided.
Pump Servicing Note—Strainer screen in plug should be cleaned frequently.

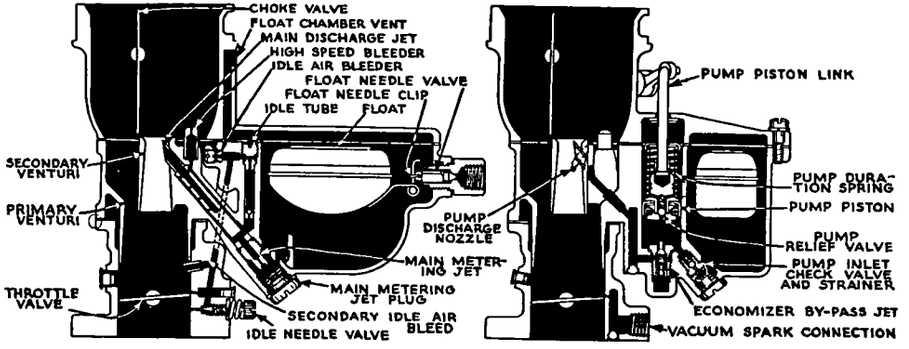

FAST IDLE & CHOKE RELEASE:—Check and adjust as directed below. See article in Carburetion Equipment Section for complete servicing directions.
Fast Idle Speed—With throttle lever stopscrew set for correct hot or slow idle speed of 6 MPH., turn fast idle adjusting screw (on fast idle lever—do not confuse this screw with throttle lever stopscrew on opposite end of throttle valve shaft) in until it just contacts lowest step of fast idle cam, being careful not to exert pressure on screw or fast idle lever, then back screw out exactly ½ turn.
Fast Idle Setting—After setting both slow idle speed (throttle lever stopscrew adjustment) and fast idle speed (fast idle adjusting screw adjustment above), see that choke valve is wide open and close throttle valve completely so that throttle stopscrew is against stop on body. Hold throttle valve in this position and close valve by hand until fast idle screw strikes step on fast idle cam (do not force choke valve beyond this position which will bind fast idle rod or distort fast idle cam spring). Measure choke valve opening at this point by inserting drill rod between upper edge of valve and air horn wall. Opening should be 35/64". Adjust by bending fast idle rod at elbow near upper end.
Choke Release—Open throttle to wide open position so that choke valve is opened by ear on fast idle lever which contacts lug on fast idle cam. Measure choke valve opening by inserting drill rod between valve edge and air horn wall. Distance should be .156-.187" (11/64" drill). Adjust by bending ear on fast idle lever using extreme care not to damage fast idle rod and fast idle cam spring.
CAUTION—When opening throttle valve for Choke Release check, press on throttle lever **not fast idle lever.**

FLOAT LEVEL:—**Fuel Level**—Should be 15/32" below top edge of float bowl with engine idling. Adjust by bending float lever arm at point where it is attached to the float. Use bending tool T-24733.
Float Needle Valve & Seat—Part No. P-23509. Furnished only in matched sets. When installing assembly make certain that needle valve has ne corner down and is clipped to float lever.
Float Bowl Vent—Bowl vented to atmosphere through opening on side of air horn wall directly below air cleaner collar.

CONTINUED ON NEXT PAGE

STROMBERG MODEL EE-16 (C ntinued)

THROTTLE VALVE SETTING:—Throttle valves are No. P-23347 (Left), P-23357 (Right) 5° type. To check throttle valve setting, back off throttle stopscrew so that valves are tightly closed, measure distance from upper edge of throttle valve to lower edge of upper idle port. Should be .030" plus or minus .004".

CHOKE:—Stromberg automatic integral type. See article in Carburetion Equipment Section for complete servicing directions.

Choke Setting—Inverted 'V' mark on thermostat cover scale should coincide with reference mark on top of choke housing. To adjust, loosen three cover screws and rotate thermostat cover assembly.

CAUTION—When connecting heat tube to thermostat cover, do not use excessive pressure which may rotate cover and change setting.

SERVICE PARTS:—Gasket Sets—Part No. J-5410-G (Packard '39-40).

Repair Kits (incl. Gaskets)—No. RK-79 (Packard '39-40).

STROMBERG MODELS EE-22, EE-3

MODEL EE-22

BUICK, CENTURY 60, ROADMASTER 80, LIMITED 90 (1936)
CHRYSLER EIGHT, IMPERIAL C10, CUST, IMPERIAL C11 (1936)
CHRYSLER EIGHT, AIRFLOW MODEL C17 (1937)
LINCOLN V12, ALL MODELS (1936 to 1940)

MODEL EE-3

DUESENBERG, MODEL J (1936-37)
PACKARD 12, ALL MODELS (1936 to 1939)
PIERCE ARROW 8, ALL MODELS (1936 to 1938)

NOTE:—On Buick models, standard main metering jets (.052"—Part No. P-17004) must be replaced by smaller (.051") jets when optional Triplex Air Cleaner is installed.

SPECIAL SERVICE NOTES:—**Packard Twelve.** On early 1938 and all previous 12 cylinder models, idling performance can be improved by installing tapered 3° shim Part No. 242311 between carburetor and manifold so that carburetor float bowl is level. Install shim with thin end toward radiator with gasket No. 242312 on top and bottom of shim. All cars after Engine No. A-600166 have carburetor flange on manifold machined at an angle to secure this effect.

TYPE:—**Dual barrel plain tube downdraft type. These models are similar in design to other 'E' type carburetors except that each carburetor barrel has independent main discharge jets, main metering jets, throttle valves and idling adjustments. Throttle valves are mounted on a single shaft and will not require synchronization. Accelerating pump is positively operated by the throttle through a 'walking beam' connection mounted on the carburetor upper body. Idling adjustment and accelerating pump adjustment (summer and winter setting) are the only points requiring attention.**

NOTE—Some models are fitted with Automatic Chokes and Fast Idles. See separate articles for complete data on Stromberg Fast Idles and Type 'C' Automatic Choke, and Sisson Automatic Choke. On these models engines must be thoroughly warmed up so that choke valve is wide open and engine idling at slow or hot idling speed when adjustments are made.

IDLING ADJUSTMENT:—Two needle valves controlling fuel mixture. Engine must be thoroughly warmed up before idling adjustment is made. With engine warm and running, close throttle and allow engine to idle. Adjust inner (left hand) idling adjustment screw for smoothest and fastest running position by turning idling screw in until engine begins to miss and speed decreases, then turn screw out until engine begins to roll, finally turn screw in until engine fires smoothly (final setting should be approximately half way between missing and rolling points). Adjust outer (right hand) idling adjustment screw in the same manner. Idling screw operates on fuel mixture and should be turned in for leaner mixture and out for richer mixture. See tune-up data on car model page for complete adjustment instructions on each car model.

On 'V' type engines with two ignition coils where one coil furnishes ignition for one bank, ignition can be cut off for one bank by disconnecting the coil primary or grounding the coil high tension lead to the engine block so that the engine will idle on the remaining cylinders. The idle adjustment for the carburetor barrel feeding the cylinders which are firing can then be adjusted. The coil should then be reconnected and the ther coil disconnected so that the engine will fire on the cylinders f the other bank. The idle adjustment for th carburetor barrel feeding this bank can then be adjusted. After both idling adjustments have been completed in this manner, engine sh uld be idled on all cylinders and any necessary readjustment made to secure smooth running. The throttle stop screw can then be adjusted to secure correct idling speed.

Pierce Arrow—Manufacturer recommends that idling speed be set at 37-39 explosions in 15 seconds (check by removing inspection plug in exhaust manifold) and idling adjustment then made by disconnecting and grounding spark plug cables on end cylinders (1, 2, 7, 8) while inner barrel adjustment is made. Then ground cables on cylinders 3, 4, 5, 6 while adjusting outer barrel. Finally idle engine on all eight cylinders and recheck idling speed. This same method of adjustment may be used on other car models.

Chrysler—Manufacturer recommends that an initial setting be made by turning both screws in until they seat and then backing screws off exactly one turn. Adjustment should then be made by turning both screws in or out simultaneously and exactly the same amount. This method may be used on other car models.

If correct idling adjustment cannot be secured, take out idle adjusting screw and upper idling port plug and clean out idling ports with compressed air. The idling tubes located in the carburetor body can also be taken out and cleaned with compressed air.

HIGH SPEED ADJUSTMENT AND ECONOMIZER:—Main metering jets which meter all fuel for main discharge jets are of the 'fixed' type and not adjustable. Jet size is stamped on the jet in decimal fractions of an inch. Jets should be changed only to compensate for special fuels or perating conditions such as high altitudes.

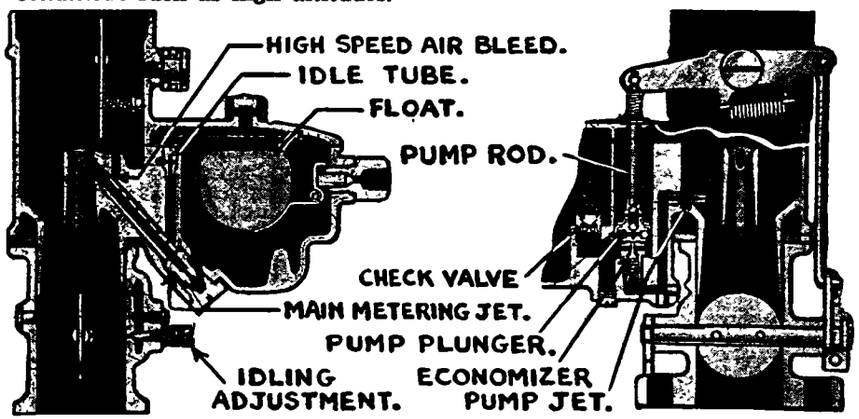

Economizer is built in lower end of accelerating pump and is operated by pump piston. At speeds above 70 M.P.H. or with wide open throttle, economizer needle valve is forced down, opening the economizer valve, so that additional fuel flows through the valve and is discharged into the mixing chamber through the pump discharge nozzle. Economizer should not require attention but setting can be checked by noting throttle opening (pass wire drill of correct size between edge of throttle valve and carburetor wall) at point where pump piston contacts economizer by-pass valve seat with pump set for maximum stroke. Settings are as follows:

ECONOMIZER SETTING

Car Model	Carburetor	Economizer Setting
Buick (first cars)	EE-22	3/16"
Buick (after No. 2873362)	EE-22	15/64"
Chrysler C10, C11, C17	EE-22	21/64"
Duesenberg J	EE-3	7/32"
Lincoln, all Twelves	EE-22	21/64"
Packard, all Eights	EE-22	21/64"
Packard, all Twelves	EE-3	7/32"
Pierce Arrow, all Eights	EE-3	7/32"

NOTE—On Buick carburetors, economizer is adjusted by loosening locknut and turning pump operating rod in or out of connector at throttle lever.

CONTINUED ON NEXT PAGE

STROMBERG MODELS EE-22, EE-3 (C ntinu d)

ACCELERATING PUMP:—Accelerating pump is operated through a walking beam arrangement by the throttle lever. Pump chamber is filled with fuel from the float chamber (flowing through the pump check valve) when the throttle is closed. When the throttle is opened, this fuel is discharged through the economizer valve and the pump discharge nozzle into the mixing chamber. Check valve prevents fuel being discharged back into the float chamber. When the throttle is held open, the piston opens the economizer needle valve so that fuel flows straight through the pump and is discharged through the pump nozzle. The pump discharge nozzle meters this fuel. Pump capacity in cc. per 10 strokes when pump is operated slowly is given in table below. Pump should be set for maximum (Max.) or minimum (Min.) stroke as indicated.

ACCELERATING PUMP SETTING

Car Model	Carburetor	Pump Capacity	Pump Setting
Buick 60, 80, 90	EE-22	23-27 cc.	Max.
Chrysler C10, C11, C17	EE-22	20-24 cc.	Max.
Duesenberg J	EE-3	20-22 cc.	Min.
Lincoln, all Twelves	EE-22	20-24 cc.	Max.
Packard, all Eights	EE-22	20-24 cc.	Max.
Packard, all Twelves	EE-3	22-24 cc.	Min.
Pierce Arrow, all Eights	EE-3	14-18 cc.	Max.

Adjustment:—Throttle lever has two holes for engagement of pump rod to provide varied pump stroke. Inner hole (shorter radius) providing short pump stroke should be used for average temperatures or summer operation. Outer hole providing maximum pump stroke should be used for winter operation. See tune-up data on car model page for specific settings and recommended seasonal changes.

FLOAT LEVEL: Fuel level in float bowl is set at 9/16" below top edge of float bowl with 3 lbs. pressure (engine idling). See table below for exceptions to this standard setting. Float level can be changed to correct fuel level by bending float lever at the point where it is attached to the float.

FLOAT LEVEL SETTING

Car Model	Carburetor Model	Fuel Level
Buick 60, 80, 90	EE-22	5/8"
Chrysler C10, C11, C17	EE-22	5/8"
All others	EE-22, EE-3	9/16"

CHOKE:—See special article on Stromberg Automatic Choke. Choke valve is provided with a relief poppet valve to prevent over-choking. On cars with conventional choke control, see that choke valve is fully closed with choke control button on instrument panel pulled all the way out and wide open with choke button pushed in.

THROTTLE VALVE SETTING:—Throttle valve type number (2 used) and setting (distance from upper lip of throttle valve to lower edge of upper idle port with valve closed) as follows. On Chrysler model, lower edge of #56 Vacuum Spark Control Port should be .031" plus or minus .004" above throttle valve when closed.

THROTTLE VALVE SETTING

Carburetor.	Throttle Valve No.	Setting.
EE-22 (all except below)	P-17018—5°	.030"
Chrysler (all)	P-17018—5°	.040"
EE-3 (all except below)	P-17371—5°	.030"
Packard ('37-38-39)	P-17371—5°	.053"

SERVICE PARTS: Gasket Sets—Part No. J-4600-G (Buick), No. J-4469-G (Chrysler), No. J-4363-G (All other "EE-22" Carburetors), No. J-4365-G (All "EE-3" Carburetors).

Repair Kits (incl. Gaskets)—No. RK-3 (Buick with Std. Air Cleaner), No. RK-91 (Buick with H.D. Air Cleaner), No. RK-27 (Chrysler C10, C17), No. RK-28 No. RK-98 (Packard 1936), No. RK-53 (Packard 1937-38-39).

STROMBERG MODEL EE-23

PACKARD EIGHT, MODELS 1400, 1, 2 (1936)
PACKARD SUPER 8, ALL MODELS (1936 to 1939)

NOTE—These models are fitted with a built-in Automatic Choke (vacuum piston in throttle valve body, thermostatic spring coil mounted separately on manifold) and an integral Fast Idle. See separate article for complete data on these units. Engines must be thoroughly warmed up so that choke valve is wide open and engine idling at slow or hot idling speed when adjustments are made.

TYPE:—Duplex or dual barrel, plain tube, downdraft type. Similar in design to other 'EE' type carburetors except for Fast Idle and vacuum piston in carburetor body (see separate articles). All specifications and adjustments for these models same as given for Models EE-22 carburetors (following article) except as noted below. Fast Idle design requires that throttle be opened to 20 M.P.H. position before starting a cold engine in order to allow choke valve to close and fast idle mechanism to operate.

IDLING ADJUSTMENT:—Idle adjusting screw provided for each barrel. Operation and adjustment same as for Model EE-22 (preceding article). See tune-up data on car model page for complete instructions.

METERING JETS:—Main metering jets (2 used) are non-adjustable type and should be changed only for special operating conditions such as high altitude. See Stromberg Jet Specification Table for standard jet calibration.

ECONOMIZER:—To check economizer setting, check throttle valve opening by passing wire drill between edge of throttle valve and carburetor wall with throttle at point where pump piston just contacts economizer by-pass valve seat. Throttle openings are shown in table below.

ECONOMIZER SETTING

Car Model	Economizer Setting	Pump Setting
Packard all models	9/32"	Max.

ACCELERATING PUMP:—Adjustable in usual manner by changing position f pump link rod in throttle valve lever. Engage rod in inner hole (minimum pump stroke) for normal summer temperatures, or in outer hole (maximum pump stroke) for winter temperatures. Pump capacity in cc. per 10 strokes when operated slowly is shown in table below. Pump should be set for minimum (Min.) or maximum (Max.) stroke as noted.

ACCELERATING PUMP SETTING

Car Model	Pump Capacity	Pump Setting
Packard all models	14-18 cc.	Min.

FLOAT LEVEL:—Fuel level in float bowl is set at 5/8" below top edge of bowl with 3 lbs. pressure (engine idling). Float height can be changed to correct fuel level by bending float lever at point where it is attached to the float. NOTE—When installing float needle valve, one corner of the triangular needle valve should be placed down.

Needle Valve & Seat Assembly—Furnished only as matched sets. Assembly part number and size for each model as follows:

FLOAT INLET VALVE

Car Model	Part Number	Size
Packard (all models)	P-22091	.130"

CHOKE:—Choke valves are fitted with a relief poppet valve. See separate article for data on Automatic Choke mechanism.

THROTTLE VALVE SETTING:—Throttle valves (2 used) are Part No. P-17018—5° and should be set so that upper lip of valve is .030" plus or minus .004" below lower edge of upper idle port when closed. Vacuum Spark Control Port (#56 hole) lower edge should be .015" plus or minus .004" above throttle lip when closed. NOTE—Throttle valve setting for Packard Super Eight (1937-38-39) models should be .020" plus or minus .004".

SERVICE PARTS:—Gasket Sets—Part No. J-4385-G (All models).

Repair Kits (including Gaskets)—Part No. RK-48 (Packard Eight), No. RK-49 (Packard Super Eight 1935-36), No. RK-52 (Packard Super Eight 1937-38), No. RK-97 (Packard Super Eight 1939).

STROMBERG MODEL AX-2

NASH "400", MODEL 3640A (1936)
NASH-LAFAYETTE, MODELS 3610 (1936), 3710 (1937), 3810 (1938)

TYPE:—Single barrel, plain tube, downdraft type with throttle operated accelerating pump and economizer. AX type similar in design to previous EX type with minor differences in construction (see illustration).

Fuel System (Idling and Low Speed):—Fuel for idling taken from main jet well up through idling tube which meters the fuel and into a cross-channel in which it is mixed with air admitted through idle air bleeder opening. Fuel mixture then taken down through channel to the discharge ports. For closed throttle idling, fuel is discharged through lower port below throttle valve and is controlled by the idle adjusting screw. In this position, upper port above throttle valve serves as an additional air bleed. When the throttle is cracked open for low speed running, fuel is discharged through the upper port also.

Driving Range (15-65 M.P.H.):—At approximately 15-20 M.P.H., the idling system drops out and all fuel is supplied by the main discharge jet located directly above the main metering jet and discharging into the small auxiliary venturi. Main discharge jet is air bled by the high speed air bleeder located in the air passage in the auxiliary venturi support above the discharge jet.

High Speed and Wide Open Throttle:—At speeds above 65 M.P.H. or whenever the throttle is held open, the economizer by-pass valve located at the bottom of the accelerating pump well is opened by the pump piston and additional fuel, metered by the by-pass jet, is discharged through the pump discharge nozzle in the side of the auxiliary venturi.

IDLING ADJUSTMENT:—Idle adjusting screw controls fuel discharge from lower idle port and should be turned in for leaner mixture, or out for richer mixture. Idle speed controlled by throttle lever stopscrew. See tune up instructions on car model page for adjustment instructions on car.

METERING JETS:—Main metering jet is non-adjustable fixed type and should be changed only for special operating conditions such as high altitudes. See Jet Specification Table for standard jet calibration.

ECONOMIZER:—Consists of by-pass valve and jet at lower end of accelerating pump well. Should not require adjustment but setting can be checked by noting throttle valve opening when pump piston rests on seat of by-pass jet (less overtravel) with pump set for maximum (Max) or minimum (Min) stroke as noted. Check by passing wire drill of size noted between edge of throttle valve and carburetor wall.

ECONOMIZER SETTING

Car Model	Economizer Setting	Pump Setting
Nash-Lafayette 1936	5/16"	Max.
Nash 3640-A	21/64"	Max.
Nash-Lafayette 1937-38	27/64"	Max.

Adjustment—Take out cotter pin in adjusting nut at top of pump piston stem, turn nut. Be sure that cotter pin replaced to lock adjustment. Do not disturb this nut when disassembling carburetor to avoid necessity of resetting economizer.

ACCELERATING PUMP:—Similar in design to type used on previous carburetor models. Fuel is drawn into pump chamber through inlet ball check valve on up-stroke of piston and is discharged through outlet (by-pass) valve and pump discharge nozzle on the downstroke of the pump piston when the throttle is opened for acceleration.

Capacity—Capacity in cc. per 10 strokes with pump set for maximum (Max) or minimum (Min) stroke is noted in table below. Letter (S) indicates pump should be operated slowly.

ACCELERATING PUMP SETTING

Car Model	Pump Capacity	Pump Setting
Nash-Lafayette 1936	22-26 cc. (S)	Max.
Nash 3640-A	18-22 cc. (S)	Max.
Nash-Lafayette 1937-38	18-22 cc. (S)	Max.

Adjustment—Three holes provided in throttle valve lever for pump rod link engagement. Inner hole (short radius) provides minimum stroke, center hole normal stroke, outer hole (long radius) maximum stroke. See tune up instructions on car model page for recommended settings and seasonal changes.

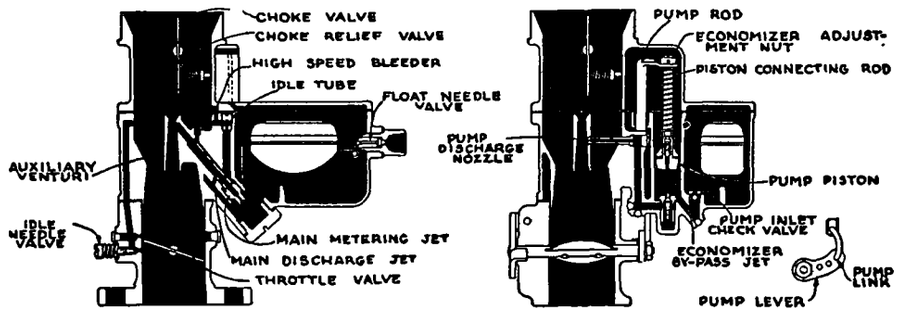

FLOAT LEVEL:—Fuel level in float bowl set at 5/8" below top edge f bowl with 3 lbs. pressure (engine idling). Float height can be changed to correct fuel level by bending lever at the point where it is attached to the float.

Needle Valve & Seat Assembly—Furnished only as matched sets, Part No. P-21918. Intake hole size—.093".

CHOKE:—Choke valve fitted with poppet type relief valve. Adjust linkage so that choke valve is fully closed with choke button pulled ut and wide open with button pushed all the way in.

THROTTLE VALVE SETTING:—Throttle valves should be set so that upper lip of valve is .012" plus or minus .004" below lower edge of upper idle discharge port with valve fully closed.

THROTTLE VALVE SETTING

Carburetor Type	Throttle Valve Part N .
AX-2	P-6454—18½°

TROUBLE SHOOTING:—Poor Idling Performance. Take out idle adjusting screw, blow out discharge ports and fuel channel. If carburetor disassembled, blow out cross-channel, clean idling tube.

Poor Acceleration. Check pump setting (see recommended setting on car model page), examine pump inlet check valve and outlet by-pass valve. Clean pump discharge nozzle and blow out channel.

Poor Running Performance. Remove plug below metering jet, clean metering jet and main discharge nozzle. See that high speed air bleeder is open. Check metering jet size (see Jet Specifications).

SERVICE PARTS:—Gasket Set—J-4611-G (all AX-2 models).
Repair Kits (incl. Gaskets—No. RK-36 (Lafayette '36), No. RK-39 (Nash '36 and Nash-Lafayette '37-38).

STROMBERG MODEL AAO-161

STUDEBAKER PRESIDENT, MODEL 4C (1938), 5C (1939), 6C (1940)

NOTE:—This carburetor has a built-in Fast Idle and Automatic Choke (thermostatic coil mounted on air horn and connected directly to choke valve shaft). See Fast Idle section below and article in Carburetion Equipment section for complete data on Automatic Choke.

Jet Changes for Increased Fuel Economy:—If greater fuel economy is desired, standard main metering jets may be changed to first smaller size (.045") with slight loss in performance. Second smaller size jets (.043") should only be used for operation at high altitudes. Both main metering jets should be changed at the same time and must be same size. See Stromberg Jet Specification Table for complete jet data.

1940 Production Changes—Carburetor used on 1940 cars may be identified by code number 6-85 stamped on float bowl cover and has automatic choke improvements as follows: New thermostatic coil used (may be identified by figure '8' stamped n coil housing), hot air pipe is ⅛" in diameter and has .076" reducer, vacuum piston hole in throttle body changed to #56 drill size (was #52 drill size).

TYPE:—Aircraft, duplex, downdraft type with throttle operated accelerating pump and economizer. Carburetor has single air intake, accelerating pump, economizer, and float bowl but has two independent mixing chambers or barrels. Venturi, main discharge jet, main metering jet, throttle valve, accelerating pump discharge nozzle, and idling system duplicated for each barrel. Float bowl is aircraft type (encircling carburetor barrels) with baffles to prevent surging and twin floats mounted at opposite ends of bowl. Float valve is clipped to lever midway between floats.

Fuel System (Idling & Low Speed):—Fuel for idling taken from main jet well up through Idle Tube (which meters this fuel) to cross-passage in which it is mixed with air admitted through Idle Air Bleeder opening into mixing chamber above venturi. Fuel mixture then taken down through channel to Fast Idle cross-channel (see Fast Idle) and idle discharge ports (Secondary Idle Air Bleeder opening into mixing chamber below venturi admits additional air into fuel mixture channel). For closed throttle idling all fuel is discharged through lower port below throttle edge and is controlled by the idle adjusting screw (upper port serves as additional air bleed). As soon as the throttle valve is opened, fuel is discharged through upper port also.

Driving Range (Below 75 MPH). At about 20 MPH. idling system drops out and all fuel then metered by main metering jets and discharged through main discharge jets opening into small auxiliary venturis. Main discharge jets are air-bled by High Speed Bleeder located directly above discharge jets in auxiliary venturi supports.

High Speed & Wide Open Throttle Operation. At speeds above 75 MPH. or whenever throttle held wide open, economizer by-pass jet located at bottom of accelerating pump well is held open by the pump piston and additional fuel, metered by the by-pass jet, is supplied by the pump discharge nozzles.

IDLING ADJUSTMENT:—Must be made only with engine warmed up so that Fast Idle and Automatic Choke inoperative. Idle adjusting screws (one for each barrel) control fuel discharge and should be turned in for leaner mixture, out for richer mixture. Idle speed controlled by throttle stopscrew and should be set for 8 MPH hot or slow idle. See tune-up data on car model page for complete instructions.

FAST IDLE MECHANISM:—Similar to design used on other models (air passage around throttle valve controlled by vacuum piston linked to choke valve) but does not operate in same manner. Air passage opens into side of vacuum piston cylinder so that air is by-passed around throttle valve whenever port on side of piston registers with air passage opening (piston is hollow with open end at top, upper end f cylinder opens into mixing chamber above venturi). The cross-passage from the idle fuel channel through which fuel is drawn for fast idling opens into the side of the vacuum piston cylinder at the upper end (piston slotted at this point) and is never closed off (serves as idle air bleeder when fast idle not operating). Vacuum chamber is located at lower end of cylinder below piston and is connected to the carburetor barrel below the throttle by a special drilled passage. When the choke is closed for cold starting, the vacuum piston is drawn up to the top of its stroke, opening the fast idle passage, so that air and fuel mixture (drawn through cross-passage from idle channel) are delivered below the throttle valve. When the engine begins to fire, manifold vacuum draws the piston down partially, opening the choke valve slightly against the tension of the automatic choke thermostatic spring, but without closing off the fast idle passage around the throttle. Air flow through fast idle passage restricts air bleed action of the idle fuel cross-passage so that idle discharge is richer than normal to compensate for this additional air flow. When the engine warms up and the thermostatic spring unwinds, opening f the choke valve allows vacuum piston to complete its stroke, cutting off fast idle passage so that all air flows past throttle valve, and air bleed action of cross-passage reduces idle fuel discharge to normal richness. Engine then idles at hot or slow idle speed. No adjustment required.

IMPORTANT NOTE—Whenever air horn and float bowl cover assembly is removed, remove throttle valve body first and unhook vacuum piston so that valve link and piston assembly is not disturbed. If this is not done, vacuum piston link assembly may be damaged. When vacuum piston removed, see that it is installed with slot on side toward idle fuel cross-passage port.

METERING JETS:—Main metering jets are non-adjustable type. See Note above for recommended changes for increased fuel economy and Stromberg Jet Specification Table for complete jet calibrations.

ECONOMIZER:—By-pass valve and jet located at bottom of accelerating pump cylinder and operated by pump piston. Should not require adjustment but setting can be checked by noting throttle valve opening when pump piston rests on seat of by-pass valve (less over-travel) with pump set for minimum stroke. Should be 5/16" (plus or minus 1/64"). No adjustment provided but pump 'walking-beam' lever can be bent slightly to correct opening. NOTE—When re-installing lever make certain that ball end is toward carburetor.

ACCELERATING PUMP:—Operated by throttle lever through 'walking beam' linkage. Fuel is drawn into pump chamber through inlet ball check valve when throttle is closed and is discharged through outlet check valve (economizer by-pass valve) and pump discharge nozzle in each carburetor barrel when throttle opened for acceleration. Piston is spring-loaded on pump rod to prolong pump discharge (sudden throttle opening will compress spring allowing

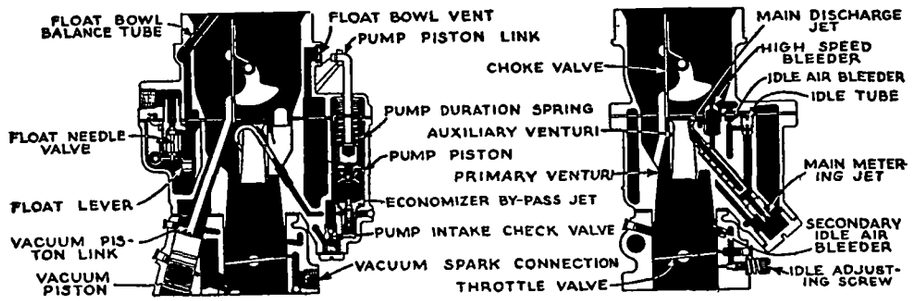

piston to lag, subsequent expansion of spring prolongs piston movement and pump discharge). A spring loaded relief valve located in the piston head will by-pass some fuel and prevent engine loading up when throttle opened suddenly (this valve normally closed).

Capacity—16-20 cc. per 10 strokes when operated slowly with pump set for minimum stroke.

Adjustment—Two holes provided in throttle lever for pump link engagement. Inner hole (short radius) provides minimum stroke, outer hole (long radius) maximum stroke. See tune up instructions on car model page for recommended settings.

FLOAT LEVEL:—**Fuel Level.** Should be ⅝" below top surface of float bowl with 3 lbs. pressure (engine idling) or even with the lower edge of the inspection hole on the side of the bowl (take out plug to check level).

Float Height—Use special service tool, T-24971, to set floats. Remove air horn and float cover assembly (see Note in Fast Idle section for instructions to avoid damage to fast idle mechanism), invert cover, install tool on gasket. Tool guides will also check float travel (floats must be free and not rub on bowl). Adjust floats by bending float lever. If tools not used, top of floats should be 1 11/32" above gasket on cover.

Float Valve & Seat—Part No. P-22499. Furnished only as matched set.

Float Bowl Vents—Bowl vented to outside through screened opening on side f air horn and through balance tube in air horn directly below air cleaner.

THROTTLE VALVE SETTING:—When installing valves see that distance from top edge of valve to l wer edge of upper idle port is .020" plus or minus .004".

CHOKE:—Valve is offset type, perated by thermostatic spring coil coupled directly to choke valve shaft. See article in Carburetion Equipment Section for complete data.

SERVICE PARTS:—**Gasket Set**—No. J-5318-G.
Repair Kit (incl. Gaskets)—No. RK-63.

STROMBERG MODELS AA-1, AA-2

M DEL AA-1

BUICK, SPECIAL MODEL 37-40 (1937)

MODEL AA-2

BUICK, CENTURY 37-60, ROADMASTER 37-80, LIMITED 37-90 (1937)

BUICK COMPOUND CARBURETION NOTE:—Model AA-1 Rear Carburetor. The AA-1 carburetor used as the rear unit of Compound Carburetion installations on 1941-42 Buick models is not the same as models listed above. ***For all data on Model AA-1 Compound Carburetion Carburetors, refer to separate article on Buick (Stromberg) Carburetors. Refer to Carburetor Index for page listing.***

NOTE:—Smaller main metering jets must be used on all models when equipped with optional Heavy Duty oil-bath type Air Cleaners. See Metering Jet section below.

Cold Idle Control:—Buick type similar to design used on previous models. See article in Carburetion Equipment Section for adjustment instructions.

Automatic Choke:—New type Delco-Remy Model 490-A Carburetor Control. Not similar to type used on previous models. See article in Carburetion Equipment Section for adjustment instructions.

TYPE:—Aircraft type, duplex downdraft carburetor with throttle actuated accelerating pump and economizer. Carburetor has single air intake, float chamber and accelerating pump but has two independent mixing chambers or barrels. Venturi, main discharge jet, main metering jet, throttle valve, accelerating pump discharge nozzle and idling system duplicated for each barrel. Float bowl is new design fitted with baffles to prevent surging and has twin floats mounted at opposite ends of bowl chamber. Float valve is clipped to lever midway between floats.

Fuel System (Idling and Low Speed):—Fuel for idling is taken from the main jet well up through the idling tube which meters the fuel and is mixed with air admitted through the upper (small) hole in the idling tube. From this point the fuel mixture is taken down through a channel to the discharge ports. Additional air is admitted through the idle air bleeder in the passage leading from the lower end of the primary venturi. For closed throttle idling, fuel mixture is discharged through lower discharge port below the throttle and is controlled by the idle adjusting screw. In this position, the upper port above the throttle edge serves as an additional air bleed. When the throttle is opened for low speed running, additional fuel discharged through upper port also.

Driving Range (22-75 M.P.H.):—At approximately 22 M.P.H. the idling system drops out and all fuel is supplied by the main discharge jet located directly above the main metering jet and discharging into the small auxiliary venturi. Main nozzle is air bled by the high speed air bleeder located directly above the nozzle in the auxiliary venturi support.

High Speed & Wide Open Throttle Running:—At speeds above 75 M.P.H. or whenever the throttle is held open, the economizer by-pass valve located at the bottom of the accelerating pump well is held open by the pump piston and additional fuel, metered by the economizer by-pass jet, is discharged through the pump discharge nozzle.

IDLING ADJUSTMENT:—Idle adjusting screw for each barrel controls fuel discharge from lower idling port. Screws should be turned in for leaner mixture and out for richer mixture. Approximate settings are 1⅜ turns open (Series 40), 1¼ turns open (Series 60, 80, 90) from inner or closed position. Both screws must be set alike. Idle speed controlled by throttle lever stopscrew and should be set for 7-8 M.P.H. idling speed with engine warmed up (choke valve open and Cold Idle Control inoperative). See tune up instructions on car model page for complete adjustment instructions on car.

METERING JETS:—Main metering jets are non-adjustable fixed type. Jets should be changed only for special operating conditions such as high altitude. Smaller main metering jets must be used on all models when equipped with optional Heavy Duty oil-bath type Air Cleaner. Standard and altitude calibrations for each model and each type air cleaner are as follows (see Jet Specification Table for other parts):

Model	Air Cleaner	Under 3500 ft.	3500 to 9000 ft.	9000 ft. and over
37-40	Std.	.049"	.046"	.044"
37-40	Heavy Duty	.045"	.042"	.040"
37-60, 80, 90	Std.	.052"	.049"	.047"
37-60, 80, 90	Heavy Duty	.051"	.048"	.046"

These jets are new type (Part No. P-22660) and must not be interchanged with other types. May be identified by groove on jet shank. Use special wrench T-24924 to assemble jets.

NOTE—Whenever main discharge jet located above main metering jet is removed, new lead gasket must be used in carburetor body to insure a good seal when the jet is replaced.

ECONOMIZER:—Consists of by-pass valve and jet at lower end of accelerating pump well. Should not require adjustment but setting can be checked by noting throttle valve opening when pump piston rests on seat of by-pass jet (less over-travel) with pump set for maximum stroke. Throttle opening should be 9/64" (Series 40), 13/64" (Series 60, 80, 90) plus or minus 1/64". Check opening by passing wire drill between edge of throttle valve and carburetor wall.

ACCELERATING PUMP:—Similar in design to type used on previous models. Fuel is drawn into pump chamber through ball check valve on upstroke of piston and is discharged through by-pass valve and pump discharge nozzle on downstroke of piston when throttle is opened for acceleration.

Capacity:—Capacity in cc. per ten strokes with pump set for maximum stroke should be 22-28 cc. (Series 40), 28-32 cc. (Series 60, 80, 90) when pump is operated slowly.

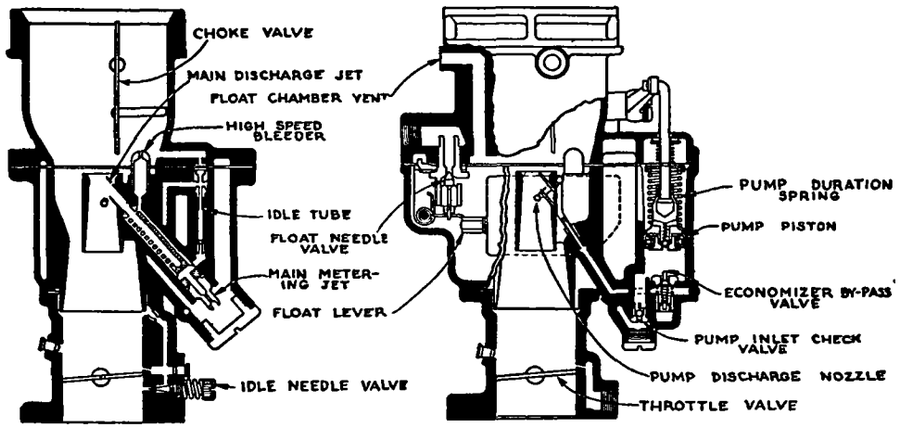

Adjustment:—Pump should be set for maximum stroke (rod connected in long radius or left hand hole in throttle lever) for normal operation. When highly volatile fuels are used and acceleration charge is too rich causing 'staggering', pump rod may be shifted to right hand or short radius hole pr viding shorter pump stroke. This setting does not affect economizer action.

FLOAT LEVEL:—Fuel level in float bowl is set at ⅝" below top surface of bowl with 3 lbs. pressure (engine idling). A sight hole closed by a plug is provided on the side of the bowl to check fuel level which should be even with the bottom of the threads in the sight hole with the engine idling. To check float level with carburetor disassembled, use special service tool SER-292, inverting cover and installing tool on cover gasket. Top of floats when inverted should be even with tops of guides. Guides also locate floats so that they will not rub on sides of bowl when reassembled. Float level can be corrected by bending float lever arm. If special tool not used, top of float should be 1 11/32" above gasket surface.

NOTE—Float height on first carburetors set at 1 13/32". Specifications changed to 1 11/32" due to variation in float weights.

CHOKE VALVE:—Offset type with stop pin to limit travel in full pen position. No relief valve used. Choke valve shaft linked directly to Automatic Choke by flexible shaft protected by housing.

THROTTLE VALVE SETTING:—Throttle valves are 5° type Part N . P-20874 (Series 40), P-22447 (Series 60, 80, 90). Must be set so that upper lip of valve is .022" plus or minus .004" below lower edge of upper idle discharge port. Lower edge of vacuum spark control port should be .041" (Series 40), .085" (Series 60, 80, 90) plus or minus .004" above upper edge of throttle valve with valve fully closed.

SERVICE PARTS:—**Gasket Set**—No. J-5317-G (AA-1), No. J-5321-G (AA-2).

Repair Kits (incl. Gaskets)—No. RK-4 (AA-1 with Std. Air Cleaner), No. RK-92 (AA-1 with H.D. Air Cleaner), No. RK-5 (AA-2 with Std. Air Cleaner), No. RK-93 (AA-2 with H.D. Air Cleaner).

STROMBERG MODEL AA-25

CADILLAC V8, SERIES 37-60, 65, 70, 75 (1937)
CORD, SUPERCHARGED MODEL 812 (1937)
LA SALLE V8, SERIES 37-50 (1937)

NOTE:—This type carburetor fitted with built-in Fast Idle and Automatic Choke. See Fast Idle section below and separate article in Carburetion Equipment Section on Stromberg Automatic Choke for adjustment instructions.

TYPE:—Aircraft type, duplex downcraft carburetor. Similar in design to other AA types (see previous article) except for Fast Idle and Automatic Choke. Separate Idle Air Bleeder and air bleed hole in idle tube not used, idle system is air bled by bleed hole drilled in air horn casting above idle fuel channel.

IDLING ADJUSTMENT:—Idle adjusting screw for each barrel controls fuel discharge from lower idle port. Screws should be turned in for leaner mixture and out for richer mixture and should be set alike. Idle speed controlled by throttle lever stopscrew and should be set for 7-8 M.P.H. idling speed with engine warmed up so that choke valve wide open and Fast Idle inoperative. See tune up instructions on car model page for complete adjustment with carburetor in car.

METERING JETS:—Main metering jets are non-adjustable fixed type and should be changed only for special operating conditions such as high altitudes. See Jet Specification Table for standard jet calibration. These jets are new type, Part No. P-22660, and must not be interchanged with other types. May be identified by groove on jet shank. Use special wrench T-24924 when assembling jets.
NOTE—Whenever main discharge jet located directly above main metering jet is removed. New lead gasket must be used in carburetor body to insure a good seal when jet is replaced.

ECONOMIZER:—Similar to design used on other AA carburetor types. Check setting by noting throttle opening when pump piston rests on by-pass jet seat (less over-travel) with pump set for maximum stroke. Thottle opening should be 21/64" plus or minus 1/64". Check by passing wire drill between edge of throttle valve and carburetor wall.

ACCELERATING PUMP:—Similar to design used on other AA carburetor types.
Capacity—18-22 cc. per 10 strokes with pump set for minimum stroke.
Adjustment—Two holes provided in throttle lever for pump rod connection. Inner hole (short radius) provides minimum stroke, outer hole (long radius) maximum. See tune-up data on car model page for recommended settings.

FAST IDLE MECHANISM:—Consists of an air passage around the throttle valve and a cross-channel from the idle fuel channel opening into this passage so that additional fuel for idling is discharged at this point (providing a fast idle without opening the throttle valve) whenever the vacuum piston is up far enough to open the passage. Vacuum piston is linked to choke valve and will be raised to the top of its stroke when the choke valve is closed for cold starting. When the engine begins to fire, the manifold vacuum pulls the piston down partially (vacuum chamber below piston connected to lower end of passage below throttle by hole in piston wall), opening the choke valve slightly but not cutting off the fast idle passage and fuel port. As the engine warms up and the automatic choke thermostatic spring unwinds, the opening of the choke valve allows the vacuum piston to complete its stroke, cutting off the fast idle passage. All fuel is then supplied by the regular idling ports and the engine idles at the warm or slow idling speed. No adjustment is required.
NOTE—Whenever carburetor is to be disassembled, take out choke valve screws freeing valve from shaft before removing air horn. This is necessary to prevent damage to vacuum piston link assembly.

FLOAT LEVEL:—Fuel level in float bowl set at 5/8" below top surface of bowl with 3 lbs. pressure (engine idling) or even with the bottom of the threads in the bowl sight hole (on side of bowl, closed normally by a plug). To check level with carburetor disassembled, use special service tool SER-292 inverting cover and installing tool on cover gasket. Top of floats when inverted should be even with top of guides. Guides also locate floats so that they will not rub on sides of bowl when reassembled. Correct float level by bending float lever arm. If special tool not used, top of float should be 1 11/32" above gasket surface (first carburetors set at 1 13/32"—changed to allow for float weight variations).
NOTE—See note under Fast Idle above for special directions when removing float bowl cover to avoid damage to choke valve and fast idle vacuum piston

THROTTLE VALVE SETTING:—Throttle valves are 5° type, Part No. P-22752. Must be set so that upper lip of valve is .022" (Cadillac, LaSalle), .040" (Cord) plus or minus .004" below lower edges of upper idle discharge port. N vacuum spark control port is used n this model.

CHOKE:—Automatic Choke is special built-in type with electrical heating coil. See article in Carburetion Equipment Section for complete data.

SERVICE PARTS: Gasket Set. N . J-4783G (Cord), J-5320G (Cadillac, La Salle).
Repair Kits (incl. Gaskets)—No. RK-18 (Cadillac, LaSalle).

STROMBERG MODEL AAV-25

A-18672—CADILLAC V8, SERIES 37-60, 65, 75 (1938)

NOTE:—This carburetor has a built-in Fast-idle and Automatic Choke (thermostatic coil mounted on air horn and connected directly to choke valve shaft). See Fast Idle section below and article in Carburetion Equipment section for complete data.

TYPE:—Aircraft type, duplex downdraft carburetor. Same design as other AAV types (see following article) except for Fast Idle and Automatic Choke as described below.

IDLING ADJUSTMENT:—Idle adjusting screw for each barrel controls fuel discharge from lower idle port. Screws should be turned in for leaner mixture, out for richer mixture, and should be set alike. Idle speed controlled by throttle lever stopscrew and should be set for 6 MPH. idling speed with engine warmed up so that fast idle and automatic choke are inoperative. See tune up instructions on car model page for complete data.

METERING JETS:—Main metering jets are non-adjustable type and should be changed only for special operating conditions such as high altitudes. See Jet Specification table for complete jet data.
NOTE—Whenever main discharge jet (located directly above main metering jet) is removed, new lead gasket must be used in carburetor body on discharge jet seat to insure a good seal when jet is re-installed.

ECONOMIZER:—Vacuum controlled by-pass jet type. Same design as on other AAV carburetor types. No adjustment required.

ACCELERATING PUMP:—Same design as on other AAV carburetor types (see previous article).
Capacity—18-22 cc. per 10 strokes with pump set for minimum stroke.
Adjustment—Two holes provided in throttle lever for pump link engagement. Inner hole (short radius) provides minimum stroke, outer hole (long radius) maximum stroke. See tune-up data on car model page for settings.

FAST IDLE MECHANISM:—Consists of an air passage around the throttle valve (controlled by vacuum piston in passage) and a cross-channel from the idle fuel channel opening into this passage so that additional fuel is discharged below the throttle valve providing a fast idle without opening the throttle whenever the passage is open. Vacuum piston is linked to choke valve and will be raised to the top of its stroke when choke valve is closed for cold starting. This opens fast idle passage. When engine begins to fire, manifold vacuum pulls piston down slightly (vacuum chamber below piston open to manifold through hollow piston and port at lower end of relieved portion of piston, piston will stop when large port at upper end of piston is uncovered). This action opens the choke valve slightly but does not cut off the fast idle action. As the engine warms up and the thermostatic spring coil unwinds (coil operated by electric heating element), the opening of the choke valve allows the vacuum piston to complete its stroke closing off the fuel channel and fast idle passage. All fuel is then supplied by the regular idle discharge ports and the engine idles at warm or slow idle speed. No adjustment is required.
IMPORTANT NOTE—Whenever air horn and float bowl assembly is removed, take out choke valve screws freeing valve from shaft first so that valve, link, and vacuum piston assembly is not disturbed. If this is not done, vacuum piston link assembly may be damaged.

FLOAT LEVEL:—**Fuel Level.** Should be 5/8" below top surface of float bowl with 3 lbs. pressure (engine idling) or even with the bottom of the sight hole on the side of the float bowl (take out inspection hole plug to check level).
Float Height—Use special service tool, T-24971, when setting float heights. Remove air horn and bowl cover assembly, invert, install tool on cover gasket. Tops of tool vertical guides should be flush with tops of floats. Guides will also check float travel (float must not rub on sides of bowl and must have free travel throughout range). Adjust float height by bending float lever. If tool not used, top of float should be 1 11/32" above gasket on cover.
Float Valve & Seat—Part No. P-22499. Furnished only as matched sets.
Float Bowl Vent—Bowl vented to outside through hooded opening at upper end of overflow pipe on bowl cover beside air horn. Also vented through channel and port opening into air horn above choke valve.

THROTTLE VALVE SETTING:—Part No. P-23537. Set valves so that distance from upper lip of valve to lower edge of upper idle discharge port is .030" (plus or minus .004").

CHOKE:—Choke valve offset type. Automatic choke control is special Stromberg built-in type with new spring linkage to hold choke valve closed for starting. See article in Carburetion Equipment section for complete data.

SERVICE PARTS:—**Gasket Set**—No. J-5320-G.
Repair Kit (incl. Gaskets)—No. RK-19.

STROMBERG MODEL AAOV-1

Stromberg N . Used On:

A-18431—CHRYSLER IMPERIAL, MODEL C-14 (1937)

A-18441—CHRYSLER CUST. IMPERIAL, C-15 (1937)

NOTE:—Main Metering Jets—These jets are new type, Part No. P-22660, and must not be interchanged with other types. May be identified by groove on shank. Use special wrench T-24924 to install these jets.

TYPE:—Aircraft type, duplex downdraft carburetor with throttle actuated accelerating pump and vacuum controlled economizer. Carburetor has single air intake, float chamber and accelerating pump but has two independent mixing chambers or barrels. Venturi, main discharge jet, main metering jet, throttle valve, accelerating pump discharge nozzle, and idling system duplicated for each barrel. Float bowl is new design fitted with baffles to prevent surging and has twin floats mounted at opposite ends of bowl chamber which encircles carburetor body. Float valve is clipped to lever midway between floats.

Fuel System (Idling and Low Speed):—Fuel for idling is taken from the main jet well up through the idling tube which meters the fuel and is mixed with air admitted through the idle air bleed hole in the cross channel. From this point the fuel mixture is taken down through a channel to the discharge ports. For closed throttle idling, the fuel mixture is discharged through the lower port below the throttle and is controlled by the idle adjusting screw. In this position the upper port above the throttle valve serves as an additional air bleed. When the throttle is opened for low speed running, additional fuel is discharged through this upper port also.

Driving Range (22-75 M.P.H.):—At approximately 22 M.P.H. the idling system drops out and all fuel is supplied by the main discharge jet located directly above the main metering jet and discharging into the small auxiliary venturi. Main nozzle is air bled by the high speed air bleeder located directly above the nozzle in the auxiliary venturi support.

High Speed and Wide Open Throttle Running:—At speeds above 75 M.P.H. or whenever the throttle is held open, the drop in vacuum above the spring loaded vacuum piston allows the spring to force the piston down so that the piston stem opens the by-pass valve located directly below the piston assembly. This allows additional fuel, metered by the by-pass jet, to flow to the main discharge nozzle.

IDLING ADJUSTMENT:—Idle adjusting screw for each barrel controls fuel discharge from lower idling port. Screws should be turned in for leaner mixture and out for richer mixture and must be set alike. Idle speed controlled by throttle lever stopscrew and should be set for 7 M.P.H. idling speed with engine warmed up (choke valve wide open and fast idle inoperative). See tune up instructions on car model page for complete adjustment instructions on car.

METERING JETS:—Main metering jets are non-adjustable fixed type. Jets should be changed only for special operating conditions such as high altitude. See Jet Specification Table for standard jet calibrations for all models.

NOTE—Whenever main discharge jet located directly above main metering jet is removed, new lead gasket must be used in carburetor body to insure a good seal when jet is replaced.

ECONOMIZER:—Consists of by-pass valve and jet controlled by special vacuum piston and by-passes fuel to main discharge jet around main metering jet when vacuum drops sufficiently to allow spring to force piston down. Economizer is set to open by-pass valve when vacuum drops to 5-7" of HG. corresponding to car speed of 70-75 M.P.H. No adjustment provided (replace vacuum piston and spring assembly).

ACCELERATING PUMP:—Operated by throttle lever through 'walking beam' linkage. Fuel is drawn into pump chamber through inlet ball check valve when throttle is closed and is discharged through outlet check valve and pump discharge nozzle in each carburetor barrel when throttle is opened for acceleration. Piston is spring loaded on pump rod to increase duration of pump discharge (sudden throttle opening will cause piston to lag, compressing pump spring, expansion of spring prolongs piston movement and pump discharge). A spring loaded relief valve located in head of pump piston will by-pass some fuel if accelerating pump operated rapidly to prevent loading up engine (this valve normally closed so that all fuel is discharged to nozzles).

Capacity—With pump link connected in outer hole for maximum stroke, capacity in cc. per 10 strokes should be 21-25 cc. (fast operation), 27-31 cc. (slow operation).

Adjustment—Two holes provided in throttle lever for pump link engagement. Inner hole (short radius) provides minimum stroke, outer hole (long radius) maximum. See tune-up data on car model page for recommended settings.

FAST IDLE:—Consists of a stepped rotary cam linked to the choke valve lever and serving as a stop for the throttle lever stopscrew. Cam is rotated to fast idle position when choke valve closed for cold starting so that throttl valve held open slightly.

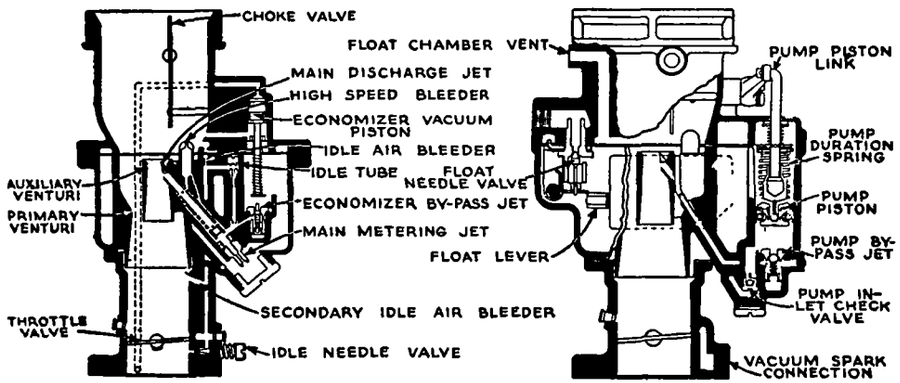

Adjustment—To check setting, hold stopscrew against first step of fast idle cam and check choke valve opening with 1/8" drill rod inserted between edge of choke valve and air horn wall. If opening not correct, adjust rod length (turn ball joint end on rod). Open throttle wide and again check choke valve opening with 7/32" rod. If opening not correct, bend extended arm of fast idle cam slightly.

FLOAT LEVEL:—**Fuel Level**—Should be 5/8" below top surface of float bowl with 4 lbs. pressure (engine idling) or approximately even with the bottom of the inspection hole on side of float bowl (take out plug to check level).

Float Height—Use special service tool, T-24971 when setting floats. Remove air horn and float cover assembly, invert, mount tool on cover gasket. Tool guides will also check float travel (floats must be free and not rub on bowl). Adjust floats by bending float lever. If tool not used, top of floats should be 1 11/32" above gasket on cover.

Float Valve & Seat—Part No. P-22499 (all models). Furnished only as matched sets.

Float Bowl Vent:—Bowl vented to outside through opening in side of air horn directly below air cleaner collar.

THROTTLE VALVE SETTING:—Throttle valves are Part No. P-22086—5° type. When installing valves, distance from upper edge of valve to lower edge of upper idle port should be .040" (Chrysler C14), .030" (Chrysler C15) plus r minus .004" with valves tightly closed.

CHOKE:—Offset type. Sisson Automatic Choke is standard equipment. *Refer to Carburetion Equipment Index for Sisson Automatic Choke for complete data.*

SERVICE PARTS:—**Gasket Set**—Part No. J-4784-G (all models).
Repair Kits (incl. Gaskets)—No. RK-31 (Model C14), No. RK-32 (Model C15).

STROMBERG MODELS AAV-1, AAV-2, AAVS-2

BUICK	Stromberg Model & No.
1938 Series 40	AAV-1 No. A-18681①, A-18691②
1938 Series 60, 80, 90	AAV-2 No. A-18682①, A-18692②
CHRYSLER	
1938 C19 Imperial	AAV-2 No. A-18782
1938 C20 Custom Imperial	AAV-2 No. A-18792
1939 C23 & C24 Eights	AAV-2 No. A-18792
1940 C26 & C27 Eights	AAV-2 No. A-18792
1941 C30 & C33 Eights	AAV-2 No. 380041
1942 C36 & C37 Eights	AAV-2 No. 380086
1946-48 C39 & C40 Eights	AAVS-2 No. 380165 or 380169

①—With Std. Air Cleaner. ②—With Heavy Duty Air Cleaner.

►NOTES, CAUTIONS, & CHANGES

►**Buick 1938 Note**—Carburetors not interchangeable (special jet sizes used when heavy duty air cleaners are installed. See Stromberg Jet Specification Table for complete jet specifications for each type.

►**Buick 40 Self-Shifting Tranmission Car Caution**—Idle speed should be set at 5-6 MPH. in third gear. Transmission throttle control lever linkage setting must be checked whenever carburetor throttle linkage is disconnected or changed. *See "Buick Self-shifting Transmission" article in Transmission Section for adjustment data.*

►**Chrysler 1938-42 Replacement Carburetor**—Stromberg Model AAV-2, No. 380853, Carburetor replaces following original equipment carburetor Nos: A-18792, 380041, 380059, 380060, 380061, 380086, 380090.

►**Chrysler 1946-48 Carburetor Note**—Two types of carburetors—Stromberg Part No. 380165, Code No. 4-111, with Square Air Horn; and Part No. 380169, Code No. 4-112, with Round Air Horn. Carter (B&B) Model E7A1 Carburetor also used on these models. *See Carter (B&B) carburetor article in this section for all data on this model.*

►**Chrysler Throttle Guard (1940-48 Cars with Fluid Drive and Vacamatic or Hydraulically Controlled Transmissions)**—This device mounted on carburetor and designed to prevent engine stalling when accelerator pedal released suddenly (prevents throttle valve closing too suddenly). *See "Chrysler Throttle Guard article in Carburetion Equipment Section for complete data on this unit.*

►**Chrysler 1946-48 Transmission Kick-down Switch (AAVS-2 Carburetor)**—This transmission control kick-down switch, Stromberg Part No. 384476, is mounted on the carburetor and operated by the throttle valve shaft. *See servicing data (below) and Chrysler Transmission Control Kick-down Switch article in Carburetion Equipment Section for complete data on this unit.*

DESCRIPTION

DESCRIPTION (AAV-1, 2): Duplex, downdraft, with throttle actuated accelerating pump and vacuum controlled economizer. Carburetor has single air intake, float chamber and accelerating pump but has two independent mixing chambers or barrels. Venturi, main discharge jet, main metering jet, throttle valve, accelerating pump discharge nozzle, and idling system duplicated for each barrel. Float bowl is new design fitted with baffles to prevent surging and has twin floats mounted at opposite ends of bowl chamber which encircles carburetor body. Float valve is clipped to lever midway between floats.

Fuel System (Idling and Low Speed):—Fuel for idling is taken from the main jet well up through the idling tube which meters the fuel and is mixed with air admitted through the idle air bleed hole in the cross channel. From this point the fuel mixture is taken down through a channel to the discharge ports. For closed throttle idling, the fuel mixture is discharged through the lower port below the throttle and is controlled by the idle adjusting screw. In this position the upper port above the throttle valve serves as an additional air bleed. When the throttle is opened for low speed running, additional fuel is discharged through this upper port also.

Driving Range (22-75 M.P.H.):—At approximately 22 M.P.H. the idling system drops out and all fuel is supplied by the main discharge jet located directly above the main metering jet and discharging into the small auxiliary venturi. Main nozzle is air bled by the high speed air bleeder located directly above the nozzle in the auxiliary venturi support.

High Speed and Wide Open Throttle Running:—At speeds above 75 M.P.H. or whenever the throttle is held open, the drop in vacuum above the spring loaded vacuum piston allows the spring to force the piston down so that the piston stem opens the by-pass valve located directly below the piston assembly. This allows additional fuel, metered by the by-pass jet, to flow to the main discharge nozzle.

DESCRIPTION (AAVS-2): Carburetor is of same design as AAV-1 and AAV-2 models (above) except for new idle discharge ports and single idle mixture adjusting screw as follows:

Fuel System (Idling & Low Speed)—Fuel for idling is taken from the main jet well up through the idling tube which meters the fuel and is mixed with air admitted through the idle air bleed hole in the cross-channel. From this point, the fuel mixture is taken down through a channel to the discharge ports. **A single idle adjusting screw** is located in this channel below the upper (secondary) discharge ports so that this screw controls the fuel mixture discharge through **both** lower (primary) discharge ports for closed throttle idling. In this position, the upper idle discharge ports serve as additional air bleeds. As soon as the throttle is opened for low speed running, additional fuel is discharged through the upper ports also.

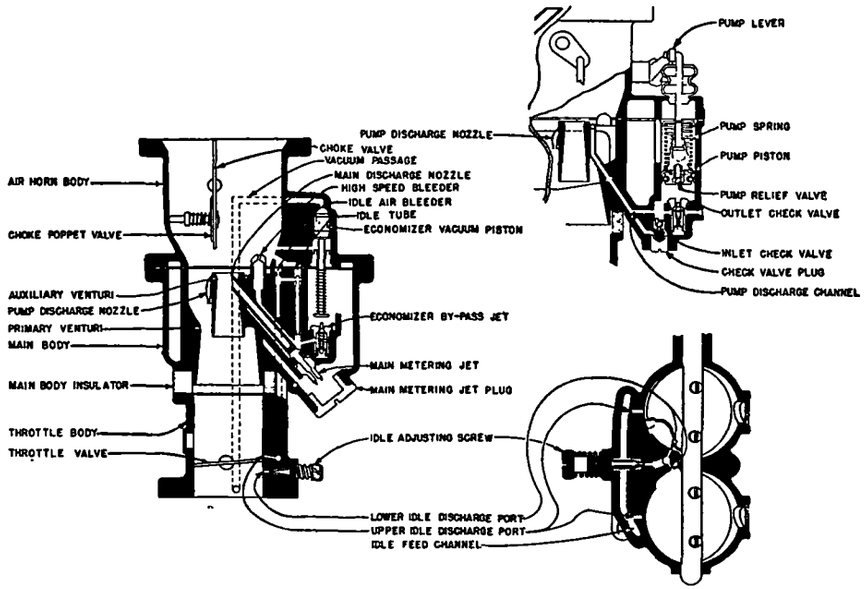

ADJUSTMENT & OVERHAUL

IDLING ADJUSTMENT (AAV-1, 2): Idling adjusting screw for each barrel controls fuel discharge from lower port. Turn each screw in for leaner mixture and out for richer mixture (set both screws alike). Idle speed controlled by throttle lever stopscrew and should be set for 6 MPH idling speed with engine warmed up (choke valve wide open and fast idle inoperative). See tune up instructions on car model page for complete adjustment data.

Buick Self-Shifting Transmission Car Note—On cars with self-shifting transmission, idle speed should be set at 5-6 MPH. in Third Gear and transmission linkage should be adjusted whenever carburetor linkage is disconnected or changed. *See "Buick Self-shifting Transmission" article in Transmission Section for complete instructions.*

Chrysler Vacamatic Transmission Car Note—On 1942 cars with Vacamatic Transmission, idle speed should be set at 4½ MPH. maximum. Idle speed of 6 MPH is correct for cars with Synchro-mesh Transmission only.

IDLING ADJUSTMENT (AAVS-2): A single idling adjusting screw controls fuel discharge from lower discharge ports in both carburetor barrels. This screw should be turned in for leaner mixture and out for richer mixture. Idle speed is controlled by throttle lever stopscrew and should be set for 6 MPH. idling speed (Cars with Synchro-mesh Transmission) with engine warmed up (choke valve wide open and fast idle inoperative). See Tune-up data on car model page for complete adjustment data.

NOTE—The single idling adjusting screw controls both carburetor barrels and

CONTINUED ON NEXT PAGE

STROMBERG MODELS AAV-1, AAV-2, AAVS-2 (C nt.)

they will be equalized automatically without special attention when the screw is turned to adjust the mixture for closed throttle idling.

METERING JETS:—Main metering jets are non-adjustable fixed type. Jets should be changed only for special operating conditions such as high altitude. See Jet Specification Table for standard jet calibrations for all models.
NOTE—Whenever main discharge jet located directly above main metering jet is removed, new lead gasket must be used in carburetor body to insure a good seal when jet is replaced. Use tool T-19099 to remove plug, tool T-24924 to remove and install main metering jet, tool T-24967 for main discharge jet.

ECONOMIZER:—Consists of a by-pass valve and jet in the carburetor main body controlled by a vacuum piston in a cylinder in the air horn casting. Economizer by-passes fuel around main metering jets to main nozzles when vacuum in manifold decreases sufficiently so that piston is forced down by spring. No adjustment required.
NOTE—Use special tool T-24733 to remove vacuum power piston No. P-22803.

Setting—Vacuum piston opens valve with manifold vacuum of 5-7" of HG. (AAV-1, 2), 4-6" of HG. (AAVS-2) corresponding to a car speed of approximately 70-75 MPH.

ACCELERATING PUMP:—Operated by throttle lever through 'walking beam' linkage. Fuel is drawn into pump chamber through inlet ball check valve when throttle is closed and is discharged through outlet check valve and pump discharge nozzle in each carburetor barrel when throttle is opened for acceleration. Piston is spring loaded on pump rod to increase duration of pump discharge (sudden throttle opening will cause piston to lag, compressing pump spring, expansion of spring prolongs piston movement and pump discharge). A spring loaded relief valve located in head of pump piston will by-pass some fuel if accelerating pump operated rapidly to prevent loading up engine (this valve normally closed so that all fuel is discharged to nozzles).
NOTE—Pump outlet check valve (By-pass jet) consists of a spring-loaded plunger type valve located in the bottom of the pump cylinder.

Capacity—With pump link connected as indicated, and pump operated slowly (S), fast (F), capacity in cc. per 10 strokes should be as follows:

ACCELERATING PUMP SETTING

Car Model	Carburetor	Pump Capacity	Setting
Buick	AAV-1	9-12 (F), 17-20 (S)	Medium
Buick	AAV-2	15-18 (F), 21-24 (S)	Medium
Chrysler C19	AAV-2	7-11 (F), 23-27 (S)	Maximum
Chrysler (all others)	AAV-2	21-25 (F), 27-31 (S)	Maximum
Chrysler ('46-48)	AAVS-2	21-25 (F), 27-31 (S)	Minimum

Adjustment (Buick)—Three holes provided in throttle lever for pump link engagement. Center hole (medium stroke) is standard for normal fuels and temperatures. No. 1 (upper hole) provides minimum stroke, No. 3 (lower hole) maximum stroke. See tune-up data on car model page for settings.

Adjustment (Chrysler)—Two holes provided in throttle lever for pump link engagement. Inner hole (short radius) provides minimum stroke, outer hole (long radius) max. stroke. See car model page for settings.

FAST IDLE:—Buick Models—Buick Cold Idle Control. See article in Carburetion Equipment Section for complete data.

Chrysler Models—Consists of a rotary cam linked to the choke valve which serves as throttle lever stopscrew stop. Cam is rotated to fast idle position when choke valve closed for cold starting so that throttle valve is held open slightly.

Adjustment—To check setting, hold stopscrew against first step of fast idle cam and check choke valve opening with ⅛" drill rod inserted between edge of choke valve and air horn wall. If opening not correct, adjust rod length (turn ball joint end on rod). Open throttle wide and again check choke valve opening with 7/32" rod. If opening not correct, bend extended arm of fast idle cam slightly.

FLOAT LEVEL:—Fuel Level. Should be 19/32" (Buick), 5/8" (Chrysler) below top edge of float bowl with 4 lbs. pressure (engine idling) or approximately even with bottom of inspection hole on side of bowl (take out plug).

Float Height—Use special service tool, T-24971 when setting floats. Remove air horn and float bowl cover assembly, invert assembly, mount gauge tool on gasket. Tops of floats should be even with tops of vertical guides on tool and sides of floats should be parallel to tool guides without any drag (this is important to prevent floats dragging on sides of bowl when installed). Adjust floats by bending float lever. CAUTION—Use extreme care to set both floats alike.
Float Valve & Seat—Part No. P-22499. Furnished only as matched sets.
NOTE—Valve needle is clipped to float lever by wire clip.

Float Bowl Vent—Bowl is vented to outside through opening inside of air horn directly below air cleaner collar or into air horn by vent tube pressed in side of air horn above choke valve.

THROTTLE VALVE SETTING: To check throttle valve setting, back throttle stopscrew off so that throttle valves tightly closed, insert drill rod of correct size in idle port and vacuum spark port (when used), measure distance from throttle valve edge to drill rod. See table below for settings. All distances are plus or minus .004".

THROTTLE VALVE SETTING

Car Model	Throttle Valve	Idle Port① Setting	Idle Port① Drill	Vacuum Port① Setting	Vacuum Port① Drill
Buick 40 (AAV-1)	P-20874	5° .022"			
Buick 60,80,90 (AAV-2)	P-22447	5° .022"			
Chrysler (1938-41)	P-22752	5° .040"	#56	.015"	#56
Chrysler (1942)	P-22752	5° .030"	#56	.015"	#56
Chrysler ('46-48)	P-22752	5° .018"	#55	.018"	#56

①—"Drill" figure is correct size drill rod to be used in checking valve.

CHOKE—Buick Models. Choke valve is offset type with stop pin to limit travel in wide open position. Automatic choke is Delco-Remy type linked directly to choke valve shaft. *Refer to Carburetion Equipment Index for data.*

Chrysler Models—Sisson Automatic Choke is standard equipment. *Refer to Carburetion Equipment Index for Sisson Automatic Choke article.*

SERVICING: AAVS-2 Kick-down Switch Note—This unit is a separate sub-assembly mounted on the air horn by means of two attaching screws. When overhauling carburetor, remove switch assembly by taking out these attaching screws. CAUTION—Use new gasket, Part No. 384468, when re-installing switch (vacuum passages in mounting flange must be tight).
See Chrysler Transmission Control Kick-down Switch article in Carburetion Equipment Section for complete data on the kick-down switch unit.

Disassembly: Disconnect both the pump connector and the fast idle connector rods, take out retaining screws and lift off bowl cover and air horn assembly. Take out float hinge pin, remove float and needle valve assembly, remove fuel inlet elbow. Remove idle tubes from main body casting, take out pump discharge nozzle attaching screw, remove nozzles, remove pump discharge ball check valve from screw hole (ball will drop out when carburetor inverted, use extreme care not to lose this ball and make certain that it is re-installed when carburetor reassembled). Remove main discharge jet plugs (use special screwdriver T-19099), take out metering jets (use special tool T-24924). If main discharge jets are removed, use special tool T-24967 and see that all traces of old lead gasket removed from jets and seat in carburetor (use new gasket when jets re-installed). Take out four retaining screws and remove throttle body. Remove pump inlet valve plug, strainer screen and inlet valve. Remove economizer by-pass valve. Remove vacuum piston assembly (use special wrench T-24733).

Servicing: Examine the economizer vacuum piston and remove any carbon or gum with crocus cloth (do not use emery or clean piston with gasoline or other cleaning fluid). Check by-pass valve and pump check valves for tightness by using special T-24970 tester (screw valve in proper opening of tester, immerse valve in gasoline and blow through tester—any leakage of valve will be indicated by bubbles). Clean all jets with gasoline or use denatured alcohol to dissolve gum deposits (CAUTION—do not attempt to clean jets with wire or drill rod). Blow out all channels and passages in carburetor with air, remove any carbon deposits in ports and throttle body. Replace worn and damaged parts.

Reassembly: Use all new gaskets (see Service Parts lists below). Reassemble the carburetor by reversing disassembly directions given above. Use new lead gasket when installing main discharge jets and make certain that all traces of old gasket removed from jets and seat in carburetor casting. Check and adjust float level, accelerating pump setting, throttle valve setting, fast idle, and idle setting when carburetor reassembled.

SERVICE PARTS:—Gasket Sets—No. J-5317-G (Buick AAV-1), J-5321-G (Buick AAV-2). No. J-4784-G (Chrysler 1938-39-40). No. 382395 (Chrysler 1941-48).

Repair Kits (incl. Gaskets)—No. RK-6 (Buick AAV-1 with Std. Air Cleaner), N . RK-94 (Buick AAV-1 with H.D. Air Cleaner), No. RK-7 (Buick AAV-2 with Std. Air Cleaner), No. RK-95 (Buick AAV-2 with H.D. Air Cleaner), No. RK-33 (Chrysler C19), No. RK-32 (Chrysler C20, C23, C24, C26, C27), No. RK-113 (Chrysler C30, 33, 36, 37), No. RK-132 (Chrysler C39, 40).

STROMBERG MODELS AAV-16, 26, 167, 267

	Stromberg Model & Part No.
BUICK	
1939 60, 80, 90	AAV-26 No. A-18972① A-18982②
1940 40, 50	AAV-16 No. A-19181
1940 60, 80, 90	AAV-26 No. A-19182① A-19192②
1941-42 40 (Single Carburetor)	AAV-16 No. 380029
1942-47 40, 50③	AAV-16 No. 380106
1942-47 60, 70, 90③	AAV-26 No. 380097
1948 40, 50	AAV-167 No. 380225
1948 70	AAV-267 No. 380226
CADILLAC	
1939-40 V8	AAV-26 No. ('39) A-18962, ('40) A-19212
1941-42 V8	AAV-26 No. ('41) 380015, ('42) 380063
1946-48 V8	AAV-26 No. 380154
PACKARD	
1940-41 Super & Custom Super 8	AAV-26 No. ('40) A-19172, ('41) 380037
STUDEBAKER	
1941-42 President 7C, 8C	AAV-26 No. 380038

①—With Std. Air Cleaner. ②—With Heavy Duty (Oil Bath) Air Cleaner.
③—Late 1942 beginning with Engine No. 4540297.

CARBURETOR MODEL IDENTIFICATION: Individual carburetors may be identified by Code Number on bowl cover above fuel level inspection plug as follows:

Buick Code Numbers—7-22A (A-18972), 7-23A (A-18982), 7-32 (A-19181), 7-33 (A-19192), 7-34 (A-19182), 7-37 (380029), 7-57 (380097), 7-66 (380106), 7-69 (380225), 7-70 (380226).

Cadillac Code Numbers—205-3 (A-18962), 205-5A (A-19212), 205-8 (380015), 205-10 or 205-10A (380063), 205-14A or 205-14B (380154).

Packard Code Numbers—10-40, 10-40A, B, C, D, or E (A-19172), 10-44 (380037).

Studebaker Code Numbers—6-97, 6-97A or 6-97C (380038).

►NOTES, CAUTIONS, & CHANGES

►**Buick 1941-42 Compound Carburetion Note**—This carburetor system with one AAV-16 (Front) and one AA-1 (Rear) carburetor was optional on Series 40 1941-42) and standard on other 1941-42 Buick models (before Engine No. 4540297 in 1942). *Refer to Carburetor Index for special 'Stromberg (Buick) Carburetors' and 'Buick Compound Carburetion' articles for all data on these models.*

►**Buick Starting Switch Note**—Separate assemblies mounted on carburetor and operated by throttle valve shaft as follows: (1939) Delco-Remy No. 1990126, (1940-47) Delco-Remy No. 1990127, (1948) Stromberg No. 385000. *See "Starter Controls" in Electrical Equipment Section.*

►**Cadillac 1946-48 Carburetor Production Change**—Carburetor changed from first type (Code No. 205-14A) to later type (Code No. 205-14B). These carburetors have different jet calibrations. *See Stromberg Jet Specification Table for complete data on each model.*

►**Buick, Cadillac Studebaker Other Carburetors**—Carter Dual "WCD" or "WDO" dual carburetors are also used on these models. *See Carburetor Index for Carter carburetor articles for data on these models.*

►**Packard Throttle Guard Note**—Used on Econo-Drive (Overdrive) cars to prevent engine stalling when free-wheeling. *See article in Carburetion Equipment Section for complete adjustment instructions.*

►**Buick 1940 Excessive Accelerator Pedal Pressure Correction**—Spring, Part No. P-24681 (Start aid loose lever spring linked between throttle shaft lever and loose lever) has been lightened to decrease accelerator pedal pressure required to open choke valve. To correct complaints of excessive accelerator pedal pressure, make certain that new spring installed (has same part number but can be identified by lighter gauge wire and length of 12¾ coils as against 13¾ coils for first type spring).

►**Packard 1941 Air Bleed Change to correct Poor Idling Performance Complaints.** Idle air bleed in carburetor main body (see illustration) was #70 drill size on first 10-44 and 10-44A carburetors and has been changed to #60 drill size on later Code 10-44B carburetors. To correct complaints of poor idling performance on Packard cars, check carburetor and on first types with #70 idle air bleed, increase this hole size by drilling idle air bleed out with #60 drill.

Studebaker 1941 Change to correct Acceleration Flat Spot—Later Code 6-97A carburetors (used on cars after Serial No. 7139912), have idle passage inserts installed in idle passages and counterbore in main metering jet orifice. To correct complaints f flat spot at approximately 20 MPH n acceleration n cars with first type 6-97 carburetor (before above Serial No.), install following parts: Two No. 382269 Idle Passage Inserts, Two new type No. P-24773 Main Metering Jets. To make this installation, remove carburetor and remove throttle body which will expose drilled idle passages in main body casting. Install insert in each idle passage, driving insert down flush with bottom of counterbore in carburetor body with big end of insert toward opening in passage. Remove and discard both old metering jets, install new type metering jets.

Buick 1942-48 Carburetor Idle Channel Wire Caution—Consists of a restricting wire installed in the idle fuel channel in the carburetor throttle body and main body castings on these carburetors. This wire must not be removed and must be re-installed when carburetors are re-assembled.

DESCRIPTION

DESCRIPTION: Aircraft type (double float), duplex or dual, downdraft types. Similar to "AAV" carburetors used on previous Buick models except for new design and automatic choke.

AAV-167 & AAV-267 Carburetors—Similar to corresponding AAV-16 & AAV-26 carburetors except that assemblies include Stromberg No. 385000 Starting Switch. *See "Stromberg Starting Switch" in Electrical Equipment Section.*

CARBURETOR ADJUSTMENT & OVERHAUL

IDLE ADJUSTMENT: Adjust only with engine warmed up so that Automatic Choke and Fast Idle inoperative (choke valve wide open and stopscrew on lowest step of fast idle cam). Check idle speed, then turn both idle screws (one screw for each barrel, adjust both screws alike) in until the engine begins to miss, then turn screws out until engine begins to roll, finally turn screws in slowly until engine fires smoothly. These screws control idle fuel discharge from lower idle port and should be turned in for leaner mixture. Recheck idle speed. See car model page for complete tune-up instructions.

IDLE SETTING

Car Model	Carburetor	Idle Setting	Idle Speed
Buick ('39-40)	AAV-16, 26	1¼ turns open	7-8 MPH.
Buick ('41-47)	AAV-16, 26	1¼ turns open	450 RPM, 8 MPH.
Buick ('48)	AAV-167, 267	1¾ turns open	450 RPM, 8 MPH.
Cadillac ('39-47)①	AAV-26		7-8 MPH.
Cadillac ('48)①	AAV-26		375-380 RPM.
Cadillac ('41-48)②	AAV-26		375 RPM.
Packard ('40)	AAV-26	1½-1¾ turns open	6 MPH.
Packard ('41)	AAV-26	1-1⅛ turns open	6 MPH③
Studebaker ('41-42)	AAV-26		450 RPM, 8 MPH.

①—Cars with Synchro-mesh Trans. ②—Cars with Hydra-Matic Drive.
③—8-10 MPH. on cars with Electromatic Clutch.

Buick Note—If vacuum gauge used for idle adjustment, turn both idle adjusting screws out evenly in 'rich' direction until vacuum gauge reading is 1" lower than maximum.

METERING JETS: Main metering jets are non-adjustable type located under plug at lower end of each nozzle. Jets should be changed only for special operating conditions such as high altitude. See Stromberg Jet Specification Table.

IMPORTANT—See Notes (above) for production changes in jet sizes.

ECONOMIZER: Consists of by-pass valve and jet in the carburetor main body controlled by a vacuum piston in a cylinder in the air horn casting. Economizer by-passes fuel around main metering jets to main nozzles when vacuum in manifold decrease sufficiently to allow piston to be forced down by spring. Vacuum piston is set to open valve with manifold vacuum as listed in table below which corresponds to a car speed of approximately 65-70 MPH.

ECONOMIZER SETTING

Car Model	In. of HG.	Car Model	In. of HG.
Buick, All (1939)	4-6"	Cadillac (1939, 41-42)	5-6"
Buick, All (1940)	5-6"	Cadillac (1940)	4-6"
Buick, 40, 50 (1941-47)	4-6"	Cadillac (1946-48)	6½-7½"
Buick 40, 50 (1948)	5-6"	Packard	4-6"
Buick, 60, 70, 90 (1942)	5-6"	Studebaker	5-6"
Buick 70 (1946-48)	5-6"		

ACCELERATOR PUMP: Similar to design used on other 'AAV' carburetors with spring-loaded relief valve in piston head and duration spring on rod abov piston (light spring above duration spring in dust washer retainer).

Capacity—Pump capacity per 10 strokes fast (F), slow (S) is shown in table below. Pump must be set for correct stroke (see Adjustment) as shown in table.

CONTINUED ON NEXT PAGE

STROMBERG MODELS AAV-16, 26, 167, 267 (Cont.)

ACCELERATING PUMP SETTING

Car Model	Carburetor	Pump Capacity	Pump Setting
Buick 40,50 (All)	AAV-16	11-15 cc. (F), 15-19 cc. (S)	Center
Buick 40, 50	AAV-167	11-15 cc. (F), 15-19 cc. (S)	Medium
Buick 60,80,90 ('39)	AAV-26	15-18 cc. (F), 21-24 cc. (S)	Center
Buick 60, 70, 90 ('40-47)	AAV-26	10-14 cc. (F), 15-19 cc. (S)	Center
Buick 70	AAV-267	10-14 cc. (F), 15-19 cc. (S)	Medium
Cadillac ('39-42)	AAV-26	13-17 cc. (F), 18-22 cc. (S)	Minimum
Cadillac ('46-48)	AAV-26	23-27 cc. (F), 29-33 cc. (S)	Maximum
Packard	AAV-26	14-18 cc. (F), 27-31 cc. (S)	Maximum
Studebaker	AAV-26	12-16 cc. (F), 16-20 cc. (S)	Minimum

Adjustment (Buick)—Three holes provided in throttle lever for pump rod engagement. Center hole is recommended setting for normal operating conditions. See car model page for recommended settings and changes on each model.

Adjustment (Others)—Two holes provided in throttle lever for pump rod engagement. Inner hole (short radius) provides minimum stroke and pump discharge, outer hole (long radius) maximum stroke. See tune-up data on car model page for recommended settings and seasonal changes.

Pump Servicing Note—Strainer screen located in plug below pump intake check valve should be cleaned frequently to insure satisfactory pump operation.

FAST IDLE: *CAUTION—All cars not adjusted alike and each model must be adjusted exactly as follows:*

Buick (1939): To check the fast idle setting on these cars, close throttle valve with choke valve wide open so that stopscrew is against low step on fast idle cam, move choke valve toward closed position as far as possible (do not force valve beyond point where stopscrew strikes against step on fast idle cam). Measure choke valve opening by inserting 5/16" drill rod between edge of valve and air horn wall. If choke valve opening not correct, adjust by bending fast idle connector rod slightly using extreme care not to distort fast idle cam return spring or to cause a bind between the rod and the slot in the cam.

Buick (1940-48): To check setting, close choke valve on #53 drill (insert drill between upper side of valve and air horn wall), check clearance between ear on locking lever on throttle valve shaft and lug on loose lever on fast idle cam stud (this lever linked to fast idle cam by torsion spring). These levers should just clear as throttle valve is opened and closed. To adjust, bend connecting rod between choke valve lever and fast idle cam using care not to bind the rod in the cam slot or to distort the fast idle cam return spring.

FAST IDLE SETTING
(Buick Models)

Car Model	Carburetor	Choke Valve Opening
Buick ('40-48)	AAV-16, 167; AAV-26, 267	#53 drill

Cadillac, Packard, Studebaker: Open the throttle and rotate fast idle cam so that stopscrew is on high lobe of cam. Move choke valve toward closed position as far as possible, check choke valve opening by inserting drill rod of correct size between edge of valve and air horn wall. If choke valve opening not correct as shown in table below, adjust by bending connector rod slightly at point near choke valve lever using extreme care not to bind fast idle mechanism.

FAST IDLE SETTING
(Cadillac, Packard, Studebaker)

Car Model	Carburetor	Choke Valve Opening
Cadillac ('39-40)	AAV-26	#38 drill (.102")
Cadillac (41-42)	AAV-26	#32 drill (.116")
Cadillac ('46-48)	AAV-26	#40 drill
Packard ('40)	AAV-26	3/32" drill
Packard ('41)	AAV-26	7/64" drill
Studebaker ('41-42)	AAV-26	7/64" drill

CHOKE RELEASE SETTING: When the throttle valve is wide open, an ear on throttle lever contacts a lug on the fast idle cam or fast idle cam loose lever opens the choke valve to correct flooding. To check operation, open throttle wide, check choke valve opening by inserting 11/64" drill rod between edge of valve and air horn wall. If choke valve opening not correct (.156-.187"), adjust by bending ear on throttle lever slightly using care not to bind fast idle rod or distort fast idle cam spring. Use special tool T-25057 (Buick, Cadillac '42), T-25056 (others) to make this adjustment.

FLOAT LEVEL: *CAUTION—Floats must be adjusted vertically (Float Height) and laterally (to prevent floats dragging on sides of bowl) as follows:*

Fuel Level—Fuel level should be 19/32" (Buick), 5/8" (all others) below top edge or gasket seat on bowl or even with bottom of inspection hole on side of float bowl (remove plug) with pressure of 5 lbs. (Buick, Cadillac, Packard '41), 3 lbs. (Packard '40, Studebaker). NOTE—Fuel level should be 1/32" above the bottom of inspection hole on 1939 Buick models).

Float Height—Use special service tool T-24971 to check floats. Remove air horn and bowl cover assembly, invert cover, install tool on gasket. Tops of floats should be even with, or above or below (see table) tops of vertical guides on gauge and sides of floats must be parallel to sides of gauge guides (to prevent floats dragging on sides of float bowl). CAUTION—Use extreme care to adjust both floats exactly alike.

FLOAT LEVEL SETTING

Car Model	Carburetor	Float Height (On Gauge)
Buick 40, 50 ('40)	AAV-16	3/64" above
Buick 40, 50 ('41-48)①	AAV-16, 167	3/64" above
Buick 40, 50 ('41-48)②	AAV-16, 167	1/32" below
Buick 60, 80, 90 ('39)	AAV-26	1/32" below
Buick 60, 70, 80, 90 ('40)	AAV-26	3/64" above
Buick 60, 70, 90 ('42)	AAV-26	3/64" above
Buick 70 ('46-47)	AAV-26	3/64" above
Buick 70 ('48)	AAV-267	1/32" below
Cadillac ('39)	AAV-26	Even
Cadillac ('40)	AAV-26	3/64" above
Cadillac ('41)	AAV-26	5/64" above
Cadillac ('42-48)	AAV-26	1/64" above
Packard ('40)	AAV-26	Even
Packard ('41)	AAV-26	5/64" above
Studebaker	AAV-26	Even

①—Carburetors with brass float. ②—Carburetors without brass float.

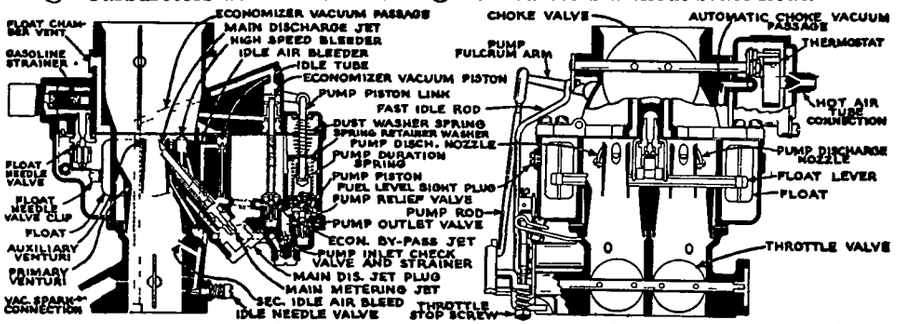

Float Valve & Seat—Part No. P-22499. Furnished only as matched sets. When installing, make certain that needle valve is clipped to float lever.

Float Bowl Vent—Bowl vented through opening on side of air horn directly below air cleaner (and through balance tube in air horn on Cadillac only).

THROTTLE VALVE SETTING: To check the throttle setting, back throttle stopscrew off so that valves are tightly closed, insert drill rod of correct size in idle port and vacuum spark port (when used), measure distance from throttle valve edge to drill. See table below for settings. All figures are plus or minus .004".

THROTTLE VALVE SETTING

Car Model	Throttle Valve	Idle Port① Setting — Drill	Vacuum Port① Setting — Drill
Buick ('39)	P-24169—5°	.020" — #58	.055" — #58
Buick ('40—AAV-16)	P-24684—5°	.022" — #60	.041" — #58
Buick ('40—AAV-26)	P-24740—5°	.022" — #60	.055" — #58
Buick ('41-47—AAV-16)	P-24684—5°	.022" — #60	.041" — #58
Buick ('42-47—AAV-26)	P-24740—5°	.022" — #60	.055" — #58
Buick ('48—AAV-167)	P-24684—5°	022" — #60	.080" — #58
Buick ('48—AAV-267)	P-24740—5°	.022" — #60	.055" — #58
Cadillac ('39)	P-24172—5°	.040" — #56	None
Cadillac ('40-42)	P-24172—5°	.040" — #56	.012" — #58
Cadillac ('46-47)②	P-24172—5°	.037" — #55	.012" — #58
Cadillac ('46-48)	④	Flush ⑤ — #60	.012" — #58
Packard ('40)	P-24740—5°	.040" — #56	.012" — #58
Packard ('41)	P-24740—5°	.022" — #58	.012" — #58
Studebaker	P-24740—5°	.015" — #60	Flush

①—"Drill" figure is correct size drill rod to be used in checking valve.
②—First Code 205-10A Carburetors. ③—Later Code 205-14B Carburetors.
④Part No 384912 (Right), 384913 (Left). ⑤—Plus .006", Minus .000".

CONTINUED ON NEXT PAGE

STROMBERG MODELS AAV-16, 26, 167, 267 (C nt.)

CHOKE: Offset type butterfly valve with Stromberg Automatic Choke control. *See Stromberg Automatic Choke in Carburetion Equipment Section.*

Choke Setting—Inverted 'V' mark on thermostat cover scale should coincide with reference mark on top of choke housing (all models except as noted below). Standard setting may be varied not more than two graduations in either direction to provide best performance under exceptional operating conditions. To adjust, loosen three housing retainer screws, rotate housing and coil assembly.

CAUTION—When connecting heat tube to thermostat cover connection, do not use excessiv pressure which may rotate cover and change choke setting.

Buick Series 40, 50 (1940-48)—Set inverted "V" mark on thermostat cover scale 1 graduation Lean (clockwise) from reference mark on choke housing.

Cadillac (1941-42)—First Code 205-10 carburetors should be set 2 Notches Rich (Inverted 'V' mark on thermostat cover scale two graduations Rich (counter-clockwise) from reference mark on housing), later Code 205-10A carburetors should be set with inverted 'V' mark coinciding with reference mark on housing.

Cadillac (1946-48)—On both the Code No. 205-14A and No. 205-14B carburetors, the inverted 'V' mark on the thermostat cover scale should be set to coincide with the reference mark on the housing. Thermostat, Cover, and Screen Assembly is Part No. 384648 and is marked '20' for identification.

Studebaker—Thermostat cover marked for three settings as follows: 'H', 'M', 'R'. Standard setting is with 'R' mark coinciding with reference mark on housing flange and is correct for regular fuel and operating conditions. If engine loads up or over-chokes with this 'R' setting, change to 'M' setting. Use 'H' setting only when highly volatile fuel is used continuously.

Thermostatic Coil Identification:—All thermostatic coil and cover assemblies are marked by small figure stamped on cover for identification as follows: 6 (Buick, All 1940-48), 19 (Cadillac '42—First Code 205-10 Carbs.), 13 (Cadillac '42—Later Code 205-10A Carbs.), 20 (Cadillac '46-48—Code 205-14A and 205-14B Carbs.), 10 (Packard '40—Std. on Code 10-40D and later carburetors and used to replace '11' and '3' units on Code 10-40C and earlier carburetors), 14 (Packard '41).

DISASSEMBLY & REASSEMBLY OF CARBURETOR: Same as for "AAV" carburetors (see preceding data) except for Automatic Choke & Fast Idle mechanism. *See Stromberg Automatic Choke in Carburetion Equipment Section for disassembly, reassembly, and adjustment of these units.*

SERVICE PARTS: Gasket Sets—Stromberg No. J-5656-G (Buick AAV-16), No. 382373 (Buick AAV-167), No. J-5655-G (Buick AAV-26), No. 382372 (Buick AAV-267), No. J-5421-G (Cadillac '39-40, Packard '40), No. 382393 (Cadillac '41-48, Studebaker '41-42), No. 382394 (Packard '41).

Repair Parts Kit: Furnished for each model as follows:
Buick—Stromberg No. RK-8 (1939 A-18972), No. RK-96 (1939 A-18982), No. RK-73 (1940 A-19182), No. RK-74 (1940 A-19192), No. RK-72 (Series 40, 50 1940-47), No. RK-73 (Series 60, 70, 90 1942-47), No. RK-140 (Series 40, 50 1948 AAV-167), No. RK-141 (Series 70 1948 AAV-267).
Cadillac—Stromberg No. RK-20 (A-18962), RK-76 (A-19212), No. RK-108 (380015), No. RK-125 (380063), No. RK-134 (380154).
Packard—Stromberg No. RK-106 (1940 Code 10-40, 1040A, 10-40B Carbs.), No. RK-78 (1940 Code 10-40C, 10-40D Carbs.), No. RK-107 (1940 Code 10-40E and later Carbs.), No. RK-110 (1941 380037 Carbs.).
Studebaker—Stromberg No. RK-111 (1941-42).

STROMBERG MODEL BXO-26

Stromberg No. **Used On:**
A-18652—STUDEBAKER SIX, MODEL 7A (1938)
STUDEBAKER COMMANDER, MODELS 8A (1938), 9A (1939)
A-19222—STUDEBAKER COMMANDER, MODEL 10A (1940)

NOTE:—This model fitted with integral Fast Idle and Automatic Choke (thermostatic coil mounted on air horn and linked directly to choke valve shaft). See article in Carburetion Equipment Section for complete data.

Jet Changes for Increased Fuel Economy—Where greater fuel economy is desired, standard main metering jet may be changed to first smaller size (.058") with slight loss in performance. Second smaller size (.056") should only be used for high altitudes. See Stromberg Jet Specification Table for complete jet data.

SPECIAL 1940 PRODUCTION CHANGES:—Carburetor used on 1940 cars has improvements in Fast Idle and Automatic Choke mechanism as listed below. This model may be identified by Code No. 6-84 stamped on float bowl.

Fast Idle—Fast idle cam now operated by gravity (pull-back spring not used) and choke release (wide open throttle kicker) made more positive in action.

Automatic Choke—Thermostatic coil housing thickness has been doubled and vacuum piston linkage has been simplified (not adjustable). *See article in Carburetion Equipment Section for complete Automatic Choke and Fast Idle servicing data.*

TYPE:—Plain tube, downdraft type with throttle operated accelerating pump and economizer.

Fuel System (Idling & Low Speed):—Fuel for idling taken from main jet well up through Idle Tube (which meters the fuel) to cross-passage in which it is mixed with air admitted through Idle Air Bleeder (located at opposite end of cross-passage). Fuel mixture is then taken down through channel to discharge ports at throttle edge. For closed throttle idling, all fuel is discharged through lower port below throttle and is controlled by Idle Needle Valve or adjusting screw (upper port serves as an air bleeder). When the throttle is opened for low speed running, additional fuel is discharged through this port also.

Driving Range (Below 65 MPH.)—As throttle is opened and suction on main discharge jet increases, this jet begins to supply fuel and the idle system drops out. Fuel for main discharge jet is metered by main metering jet located at lower end of discharge jet. Discharge jet is air bled by High Speed Bleeder located directly above jet in auxiliary venturi support.

High Speed & Wide Open Throttle Operation—At speeds above 65 MPH. or whenever throttle held wide open, economizer by-pass valve located at bottom of accelerating pump cylinder is held open by the pump piston so that additional fuel (metered by the by-pass jet) is discharged through the pump discharge nozzle opening in the throat of the small auxiliary venturi.

IDLING ADJUSTMENT:—Must be made only when engine warmed up so that Fast Idle and Automatic Choke inoperative. Idle adjusting screw controls fuel mixture and should be turned in for leaner mixture, out for richer mixture. Idle speed controlled by throttle stopscrew and should be set for 7-8 MPH. idling speed. See tune up data on car model page for complete instructions.

METERING JETS:—Main metering jet is non-adjustable type. See Note above for recommended changes for increased fuel economy and Stromberg Jet Specification Table for complete jet calibrations.

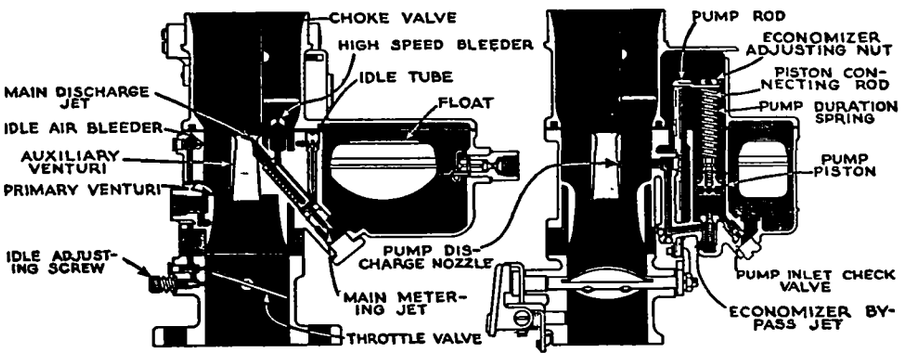

ECONOMIZER:—By-pass valve and jet located at bottom of accelerating pump cylinder and operated by pump piston. Should not require attention but setting can be checked by noting throttle opening when pump piston rests on seat of by-pass valve (less over-travel) with pump set for medium stroke (link engaged in middle hole on lever). Should be 13/32" (plus or minus 1/64").

Adjustment—To adjust, remove cotter pin and turn adjusting nut at upper end of pump piston stem. Make certain that cotterpin replaced to lock setting. NOTE—When dismantling carburetor, do not disturb this nut to avoid necessity of resetting economizer when carburetor is assembled.

CONTINUED ON NEXT PAGE

STROMBERG MODEL BXO-26 (C nt.)

ACCELERATING PUMP:—Operated by throttle lever through vertical pump rod concealed under float bowl cover. Fuel is drawn into pump chamber through inlet screen and ball check valve when throttle is closed and is discharged through outlet check valve (economizer by-pass valve) and pump discharge nozzle in throat of auxiliary venturi when throttle is opened for acceleration. Pump rod is spring loaded on pump stem so that with sudden throttle openings piston will lag slightly, compressing the spring, and the subsequent expansion of the spring will prolong pump delivery. A spring-loaded relief valve in the piston head will by-pass some fuel to prevent loading up engine when throttle is opened suddenly (this valve normally closed).

Capacity—17-22 cc. per 10 strokes when operated slowly with pump set for medium stroke (pump link in center hole).

Adjustment—Three holes provided in throttle lever for pump link engagement. Inner hole (short radius) provides minimum stroke, center hole medium stroke, outer hole (long radius) maximum stroke. See tune up data on car model page for recommended settings.

FLOAT LEVEL:—**Fuel Level.** Set at 5/8" below top edge of float bowl with 3 lbs. pressure (engine idling). Can be adjusted by bending float arm at point where it is attached to float (use tool T-24733). NOTE—Float fulcrum pin is retained by clip seated in float seat recess. When installing pin, see that clip is seated and engages notches at each end of fulcrum pin.

Float Valve & Seat—No. P-21918. Furnished only in matched sets.

Float Bowl Vent—Bowl is vented to outside atmosphere through slot at upper end of pump rod housing on bowl cover.

THROTTLE VALVE SETTING:—Valve is No. P-23282. Should b set so that distance from upper edge of valve to lower edge of upper idle port is .010" plus r minus .004".

FAST IDLE SETTING:—Close throttle so that stopscrew is on lowest step of fast idle cam, move choke valve toward closed position until it is stopped by the stopscrew striking against the side of the next step on the fast idle cam (do not force valve beyond this position). Check choke valve opening by inserting 11/32" drill rod between upper edge of valve and air horn wall. If valve opening not correct, adjust by bending connector rod linking choke valve and fast idle cam. Make certain that linkage does not bind and that fast idle cam falls freely to slow idle position with throttle valve open.

CHOKE:—Choke valve is plain type offset valve. Operated by automatic choke mechanism (thermostatic coil linked directly to choke valve shaft. See Automatic Choke article in Carburetion Equipment Section for servicing data.

SERVICE PARTS:—**Gasket Set**—Part No. J-5319-G.
Repair Kits (incl. Gaskets)—No. RK-62 (all models).

STROMBERG MODEL BXOV-26

Stromberg No. — Used On:
A-19162—PACKARD SIX, '110' MODEL 1800 (1940)
380039—PACKARD '110' SIX, MODEL 1900 (1941)
380049—PACKARD '110' SIX, 1900 (1941)—ELECTROMATIC CLUTCH CARS.
380036—STUDEBAKER COMMANDER, 11A (1941), 12A (1942)—SEE NOTE
380178—STUDEBAKER COMM. & LAND CRUISER, 14A (1947), 15A (1948)

NOTE:—**Code No. Identification Marking**—Carburetors may be identified by Code Number stamped on float bowl cover as follows: 10-39 (Packard '40), 10-45 (Packard '41), 6-98 (Studebaker '41—Original Equip.), 6-98A (Studebaker '42—Original Equip.), 6-104 (Studebaker 1947-48 and replacement for 6-98 & 6-98A 1941-42 original equipment carburetors).

Studebaker 1941-42 Replacement Carburetor—Original carburetor (Code No. 6-98 and 6-98A) replaced by 1947 carburetor No. 380178 (Code No. 6-104). NOTE—Carter WA-1 Model 410-S carburetor also used on these models. See Carter WA-1 Carburetor article for complete data on this model.

Packard Throttle Guard Note—Used on all Econo-drive (overdrive) cars to prevent engine stalling when free-wheeling. See Packard Throttle Guard article in Carburetion Equipment Section for complete adjustment instructions.

Packard 1940 Carburetor Production Change—Carburetor used on late cars (Code 10-39E) has new choke assembly parts as listed below. These parts may be installed on earlier (Code 10-39D) carburetors provided that all of the new parts listed are installed together.

Part	Code 10-39D—Carburetor	Code 10-39E
Choke Valve	P-24647	382024
Auto Choke Housing (Complete)	P-24619	382022
Vacuum Piston with Link & Lever	P-24623	P-24133
Thermostat and Cover	P-24624	382026

DESCRIPTION: Plain tube, downdraft type with throttle operated accelerating pump. Similar in design to BXO-26 models except for vacuum controlled economizer.

Note—This model fitted with integral Fast Idle & Automatic Choke (thermostatic coil mounted on air horn and linked directly to choke valve shaft). See article in Carburetion Equipment Section for complete Fast Idle and Automatic Choke Servicing data.

Fuel System (Idling & Low Speed):—Fuel for idling taken from main jet well up through Idling Tube which meters the fuel to a cross-channel in which it is mixed with air admitted through Idle Air Bleed (air bleed passage opens into carburetor barrel below choke valve). Fuel mixture then taken down through channel to discharge ports at the throttle edge. For closed throttle idling, fuel discharged through lower port below throttle valve and controlled by idle adjusting screw (upper port above throttle valve serves as additional air bleed). As soon as throttle is cracked open for low speed running, additional fuel is discharged from this upper port also.

Driving Range (Below 65-70 MPH.)—As throttle is opened, suction increases on main discharge jet and this jet supplies fuel, the idling system dropping out. Fuel for main discharge jet is metered by main metering jet located at lower end of discharge jet. Discharge jet is air bled by High Speed Bleeder located directly above jet on auxiliary venturi support.

High Speed and Wide Open Throttle Operation—At speeds above 65-70 MPH. or whenever throttle held wide open so that manifold vacuum falls off, spring on vacuum piston forces piston down and opens by-pass valve. Fuel metered by the by-pass jet then flows directly to the main discharge jet.

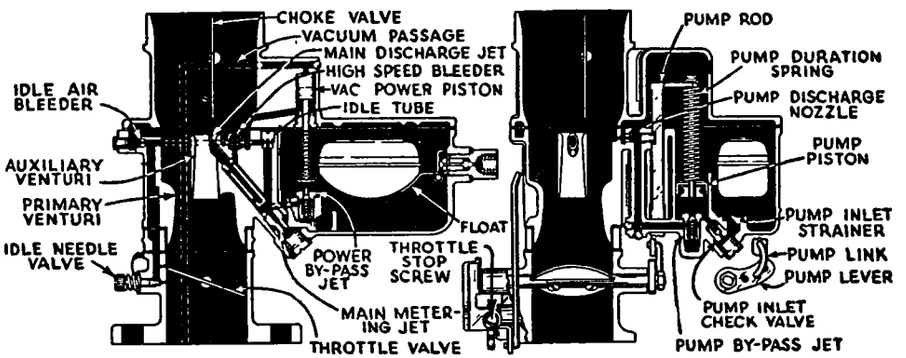

IDLING ADJUSTMENT:—Adjust only when engine warm so that Automatic Choke and Fast Idle inoperative (choke valve wide open, throttle stopscrew on lowest step of fast idle cam) and engine idling at hot or slow idle speed. Idle adjusting screw controls fuel mixture discharge from lower idle port and should be turned in for leaner mixture, out for richer mixture (standard setting approximately 1¼ turns open from inner seated position). Idle speed controlled by throttle lever stopscrew and should be reset after idling adjustment completed for correct hot or slow idling speed. See car model page for complete tune-up instructions.

IDLE SETTING

Car Model	Carburetor	Idle Setting	Idle Speed
Packard	BXOV-26	1-1⅛ turns open	6 MPH.
Studebaker	BXOV-26	1-1¼ turns open	500-525 RPM, 8 MPH.

CONTINUED ON NEXT PAGE

STROMBERG MODEL BXOV-26 (C ntinu d)

METERING JETS:—Main metering jet is non-adjustable type located under plug at lower end of discharge jet. Jets should be changed only for special operating conditions such as high altitudes. See Stromberg Jet Specification table for complete jet data.

ECONOMIZER:—Consists of a by-pass valve and jet in the carburetor main body, controlled by a vacuum piston in a cylinder in the air horn casting. Economizer by-passes fuel around main metering jets to main nozzles when vacuum in manifold decreases sufficiently so that piston is forced down by spring. No adjustment required.

NOTE—Use special tool T-24733 to remove vacuum power piston No. P-24043.

Setting—Vacuum piston opens valve with manifold vacuum of 4-6" of HG. corresponding to car speed of 65-70 MPH.

ACCELERATING PUMP:—Operated by throttle lever through vertical pump rod under float bowl cover. Fuel is drawn into pump chamber through strainer screen and inlet ball check valve and is discharged through outlet valve and pump discharge nozzle located in side of mixing chamber above main venturi when throttle opened for acceleration. Pump piston has duration spring on piston rod (spring compressed on sudden throttle openings, subsequent spring expansion prolongs pump discharge).

Capacity—Pump capacity in cc. per 10 strokes with pump set for medium stroke (link in center hole of throttle lever) is shown in table below. Use T-24972 Pump Capacity Burrette Gauge to check pump capacity.

ACCELERATING PUMP SETTING

Car Model	Pump Capacity	Pump Setting
Packard	11-14 cc. (S)	Medium Stroke
Studebaker	11-14 cc. (S), 5-8 cc. (F)	Medium Stroke

(F)—Fast Stroke, (S)—Slow Stroke.

Adjustment—Three holes provided in throttle lever for pump link connection. Link engaged in center hole provides normal setting, outer hole (long radius) provides maximum pump discharge, inner hole (short radius) minimum discharge. See car model page for settings and seasonal changes.

Pump Servicing Note—Strainer screen located in pump inlet in bottom of float bowl should be cleaned at frequent intervals to insure satisfactory pump performance.

FAST IDLE & CHOKE RELEASE:—Fast idle mechanism consists of a fast idle lever and cam mounted below the throttle valve shaft so that the cam serves as a stop for the throttle stopscrew. Fast idle lever is linked to choke valve lever by connecting rod so that cam is rotated to the fast idle position when the choke valve closes for cold starting. Choke release mechanism consists of an ear on the throttle lever which engages a lug on the fast idle cam so that the cam is rotated and choke valve opened when the throttle valve is opened wide. Fast idle and choke release setting are both adjusted by bending connector rod as follows:

Adjustment—Hold throttle stopscrew on lowest step of fast idle cam and against edge of second step, move choke valve toward closed position as far as possible (do not force valve beyond point where fast idle cam and lever are stopped against throttle stopscrew). Check choke valve opening by inserting 11/32" drill rod between upper edge of valve and air horn wall. If choke opening not correct, adjust by bending connector rod at bend near choke valve lever.

FLOAT LEVEL:—**Fuel Level**—Set at 5/8" below top edge (gasket seat) of bowl with 3 lbs. pressure (engine idling). Adjust by bending float arm at point where it is attached to float (use tool T-24733).

NOTE—Float fulcrum pin is retained by spring clip seated in float seat recess. When installing fulcrum pin, see that spring clip is seated and that it engages notches at ends of pin.

Float Bowl Vent—Bowl is vented to outside atmosphere through slot in upper end of pump rod housing on bowl cover.

Float Needle Valve & Seat: Furnished in matched sets only as follows:

Packard—(1940) No. P-24063—.086" Intake Hole, (1941 No. P-21918—.093" Intake Hole.

Studebaker—Part No. P-24063—.086" Intake Hole.

THROTTLE VALVE SETTING:—To check throttle valve setting, back throttle stopscrew off so that valve is tightly closed, insert drill rod of correct size (see table below) in idle port and vacuum spark port, measure distance from throttle valve edge to drill rod. See table below for settings. All specificationes are plus or minus .004" except as noted.

Car Model	Idle Port ① Setting	Idle Port ① Drill	Vacuum Spark Port ① Setting	Vacuum Spark Port ① Drill
Packard ('40)	Flush②	#56	Flush	#60
Packard ('41)	.010"	#60	Flush	#60
Studebaker	.010"	#60	Flush	#56

①—"Drill" figure is correct size drill rod to be used in checking valve.

②—Plus .006" or minus .000".

Vacuum Spark Port Note—Carburetors have two #60 (Packard), #56 (Studebaker) vacuum spark control holes drilled above the throttle valve and a third #60 (Packard '40), #65 with Reducer (Packard '41), #56 (Studebaker '41-42 Code 6-98 & 6-98A Carbs.), #60 (Studebaker '47—Code 6-104 Carb.) hole drilled at random below the throttle valve.

CHOKE:—Valve is offset plain type. Operated by automatic choke thermostatic spring coil which is linked directly to shaft. See article in Carburetion Equipment Section for Automatic Choke data.

Choke Setting (Packard)—Inverted 'V' mark on thermostatic coil cover scale should be in line with reference mark on top of choke housing. To adjust, loosen three housing retainer screws, rotate housing and coil assembly.

NOTE—Thermostatic coil cover marked for identification by small figure on face of cover as follows: 5 (Packard '40), 15 (Packard '41).

Choke Setting (Studebaker)—Three settings marked on coil housing cover as follows: 'H', 'M', 'R' (additional mark '7' provided for coil identification). Standard setting is with 'R' mark coinciding with projection on thermostat housing and is correct for regular fuel and operating conditions. If engine loads up or overchokes with this 'R' setting, change setting to 'M'. Use 'H' setting only when highly volatile fuel is used continuously.

CAUTION—When connecting heat tube at thermostatic coil housing cover connection, do not use excessive pressure which may rotate cover and change choke setting.

DISASSEMBLY OF CARBURETOR: Disconnect choke link, take out six retaining screws, remove bowl cover and air horn assembly. Remove float pin lock wire (this will spring out when released), remove float hinge pin, remove float, needle valve, and needle valve seat. Remove idle tube from carburetor body casting, disconnect pump link and withdraw pump rod and piston assembly. Remove pump outlet check valve (in bottom of pump cylinder), remove inlet check valve plug and valve assembly. Remove main jet plug (use tool T-19099), main metering jet (use tool T-24924), and main discharge jet (use tool T-24967). Remove vacuum economizer by-pass valve assembly. To remove vacuum piston, use tool T-24733 inserting tool prongs in slots in piston retaining plug. To dismantle choke assembly, take out retaining screws and remove thermostat cover and coil assembly (do not remove thermostat coil from cover), remove small nut and lockwasher on end of choke valve shaft, turn lever to withdraw vacuum piston from cylinder and remove piston and link assembly.

Servicing—Examine vacuum economizer piston and automatic choke vacuum piston for carbon or gum deposits. Check economizer by-pass and pump check valves for tightness by using special T-24970 tester (screw valve in proper opening of tester, immerse valve in gasoline and blow through tester—any valve leakage will be indicated by bubbles). Clean all jets with gasoline or use denatured alcohol to dissolve gum deposits (CAUTION—do not attempt to clean jets with wire or drill rods). Blow out all channels and passages in carburetor with air, remove all carbon deposits in ports and throttle body. Replace all worn or damaged parts.

REASSEMBLY OF CARBURETOR: Use all new gaskets (see below), reassemble carburetor by reversing disassembly directions given below. Check and adjust float level, accelerating pump setting, throttle valv setting, fast idle and choke setting, and idle setting when carburetor reassembled.

SERVICE PARTS:—**Gasket Sets**—Part No. J-5652-G (all models).

Repair Kits (incl. Gaskets)—No. RK-77 (Packard '40), RK-109 (Packard '41), No. RK-112 (Studebaker 1941-48).

STROMBERG MODELS BXV-3, BXVD-3

	Stromberg Model & Part No.		Stromberg Model & Part No.
DODGE		**DODGE (Continued)**	
1939	BXV-3 No. A-18073	1947-48 (Std.)	BXV-3 No. 380219
1940-41	BXV-3 No. A-18123	1947-48 (F-D)	BXVD-3 No. 380218
1940 Exp.	BXV-3 No. A-18133	**DE SOTO**	
1941 (F-D)	BXVD-3 No. 380044	1947-48 (F-D)	BXVD-3 No. 380218
1942 (Std.)	BXV-3 No. 380079	**PLYMOUTH**	
1942 (F-D)	BXVD-3 No. 380080	1947-48	BXV-3 No. 380220
1946-47 (Std.)	BXV-3 No. 380158	(Std.)—No Fluid Drive.	
1946-47 (F-D)	BXVD-3 No. 380159	(F-D)—With Fluid Drive.	

CARBURETOR MODEL IDENTIFICATION:—Carburetors may be identified by Code Number stamped on float bowl as follows: 3-54A (A-18123), 3-55 (A-18133), 3-59 & 3-59B (380044), 3-60 & 3-60B (380045), 3-65 (380079), 3-66 (380080), 3-76 (380158), 3-77 (380159), 3-84 (380220), 3-82 (380218), 3-83 (380219), 3-84 (380220).

►**Dodge 1941 BXVD-3 Carburetor Production Change**—On later cars with Code 3-59B (U.S.), 3-60B (Exp.) carburetors, these carburetors differ in specifications from first Code 3-59 and 3-60 carburetors as follows: Main Metering Jet—.057" Part No. P-19442 (was .058"), Power By-pass Jet—#58 Part No. 382675 (was #54 No. P-21197), Vacuum Piston Assembly—No. P-24201 (was No. P-24043).

►**Dodge 1941 BXVD-3 Economy Complaints on First Cars**—On these cars with first BXVD-3 carburetors Code 3-59 (Domestic), 3-60 (Export); new Main Metering Jet, Power By-pass Jet, and Vacuum Piston Assembly (same as listed above for later 3-59B and 3-60B carburetors) may be installed for increased economy. Refer to Servicing data below. Change does not apply to BXV-3.

►**Dodge & Plymouth 1947-48 BXV-3 Carburetor Production Change**—New type Pump Link 384390, & Pump Link Clip 384391, used on late carburetors, furnished in Repair Kits for use in servicing earlier carburetors (supersedes Pump Link No. P-24836 & Cotter Pin No. P-19374). Install these parts as follows: Install pump link with open end in toward carburetor casting engage center loop of clip on center of pump link, with loop on upper end of clip encircling upper leg of link in back of pump rod, and lower end of clip in back of pump lever on throttle shaft.

►**Dodge & De Soto 1947-48 BXVD-3 Carburetor Production Change**—Parts listed below were used on late production carburetors and are furnished in regular Repair Kits for installation on earlier carburetors:

Pump Link & Retainer—Same as production change on BXV-3 (see above for part numbers and installation data).

Dash Pot Lever Torsion Spring—A Torsion Spring, No. 384614, and special Throttle Shaft Nut, No. 384613, have been added and should be installed on earlier carburetors. Spring is held in position by the nut and spring ends should be looped under dash pot lever and pump lever.

Dash Pot Rod Clevis Clip—New type clip, No. 384618 used to retain dash pot rod in dash pot lever. This clip supersedes No. 382745 Torsion Spring used for this purpose on earlier carburetors.

DESCRIPTION: Single barrel, plain tube, downdraft type with throttle operated accelerating pump and vacuum controlled economizer. BXVD-3 carburetors have special "Slow Closing Throttle" device to prevent engine stalling on deceleration (used on cars with Fluid Drive).

Fuel System (Idling and Low Speed):—Fuel for idling taken from main jet well up through Idling Tube which meters the fuel to a cross-channel in which it is mixed with air admitted through Idle Air Bleed (air bleed passage opens into carburetor barrel below choke valve). Fuel mixture then taken down through channel to discharge ports at the throttle edge. For closed throttle idling, fuel discharged through lower port below throttle valve and controlled by idle adjusting screw. When throttle cracked open for low speed running, additional fuel is discharged through upper idle port also.

Driving Range (Below 65 MPH.)—As throttle is opened, suction increases on main discharge jet and this jet supplies fuel, the idling system dropping out. Fuel for main discharge jet is metered by main metering jet located at lower end of discharge jet. Discharge jet is air bled by High Speed Bleeder.

High Speed and Wide Open Throttle Operation—At speeds above 65 MPH. or whenever throttle held wide open so that manifold vacuum falls off, spring on vacuum piston forces piston down and opens by-pass valve. Fuel metered by the by-pass jet then flows directly to the main discharge jet.

IDLING ADJUSTMENT:—Idle adjusting screw controls fuel discharge from lower idle port and should be turned in for leaner mixtur , out for richer mixture. Adjust nly with engine warmed up so that choke valve wide open and fast idle inoperative. Recheck idle speed after adjustment completed. See car model page for complete tune-up instructions.

IDLE SETTING

Car Model	Idle Screw Setting	Idle Speed
Dodge, DeSoto, Plymouth	①	6 MPH.

①—Midway between "rich" and "lean" points.

METERING JET:—Main metering jet is non-adjustable type and should be changed only for special operating conditions such as high altitude. See Stromberg Jet Specification table for complete jet data.

ECONOMIZER:—Vacuum piston type. Consists of a vacuum piston in a cylinder in the air horn casting which controls the by-pass valve and jet assembly in the main body casting. No adjustment required.

ECONOMIZER SETTING

Car Model	Carburetor	Valve Opening (" of HG)
Dodge ('39-41)	BXV-3, BXVD-3	4-6" (65-70 MPH)
Dodge ('42-48)	BXV-3	4-6" (65-70 MPH)
Dodge ('42-48)	BXVD-3	3-4" (65-70 MPH)
De Soto ('47-48)	BXVD-3	3-5" (65-70 MPH)
Plymouth ('47-48)	BXV-3	4-6" (65-70 MPH)

ACCELERATING PUMP:—Operated by throttle lever through vertical pump rod under float bowl cover. Fuel is drawn into pump chamber through strainer screen and inlet ball check valve and is discharged through outlet valve and pump discharge nozzle located in side of mixing chamber above main venturi when throttle opened for acceleration.

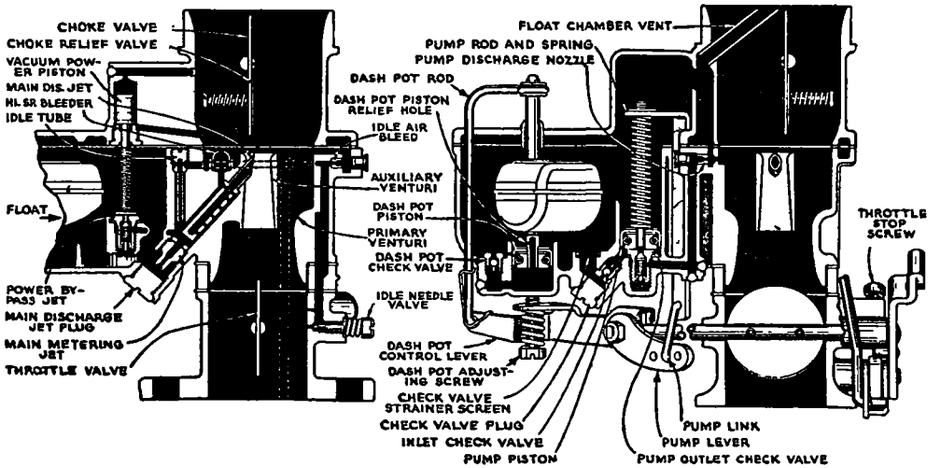

ACCELERATING PUMP SETTING

Car Model	Pump Capacity	Pump Setting
Dodge, De Soto, Plymouth	11-14 cc. (10 slow strokes)	Medium

NOTE—Pump travel will be 1/4-9/32".

Adjustment—Three holes provided in throttle lever for pump link connection. Link engaged in center hole provides normal setting, outer hole (long radius) provides maximum pump discharge, inner hole (short radius) minimum discharge. See car model page for settings and seasonal changes.

Pump Servicing Note—Strainer screen located in pump inlet in bottom of float bowl should be cleaned frequently to insure satisfactory pump performance.

FAST IDLE:—Consists of a cam pivoted directly below the throttle lever shaft and linked to the choke valve. Cam serves as stop for throttle lever stopscrew and opens throttle to fast idle position when choke valve is closed for starting. No adjustment (stopscrew should be at high point of cam with choke valve closed).

SLOW CLOSING THROTTLE (BXVD-3):—Consists of a dashpot and piston assembly in the float bowl with the piston linked by a rod to a control lever which engages the throttle valve lever. When the throttle is opened, dashpot cylinder is filled with fuel which flows freely in through dashpot check valve. When the accelerator pedal is released (to close throttle), this fuel is trapped in the cylinder and escapes through relief hole in piston stem, retarding piston movement, and preventing throttle closing too rapidly.

CONTINUED ON NEXT PAGE

STROMBERG MODELS BXV-3, BXVD-3 (Cont.)

Setting—Full travel of dashpot piston should be 5/16-11/32" with all slack removed from linkage. To check, place rule on float bowl cover at dashpot piston stem, measure distance from bowl cover to edge of retainer on stem, open throttle and recheck distance. Difference in readings should be 5/16-11/32".

Adjustment—Turn adjusting screw on dashpot control lever under float out to lengthen stroke, in to shorten stroke.

FLOAT LEVEL:—**Fuel Level**—Should be 5/8" below top edge of float bowl with engine idling (3 lbs. pressure). Adjust by bending float lever arm at float.

Needle Valve & Seat Assembly—Furnished only in matched sets as follows: **Dodge**—(1939) No. 24063, (1940-41) No. P-24827—.086" Intake Hole, (1942 380079 & 380080) No. 382901—.093" Intake Hole), (1942-47 380158 & 380159) No. P-21918—.093" Intake Hole, (1947-48 380218 & 380219) No. 384956—.093" Intake Hole.

De Soto & Plymouth—(1947-48) No. 384956—.093" Intake Hole.

CAUTION—Valve spring clip must be engaged in notches on float fulcrum pin.

CHOKE:—Valve is offset type with poppet type relief valve.

Automatic Choke—Sisson. See article in Carburetion Equipment Section.

THROTTLE VALVE SETTING:—Part No. P-24059 (20° type). To check throttle valve, insert #58 drill in idle port, two #60 drills in vacuum spark ports. With stopscrew backed off and throttle valve tightly closed, throttle valve edge should be flush with drills (.006" max. clearance between valve and idle port drill). NOTE—Additional #60 vacuum spark port drilled below throttle valve.

DISASSEMBLY OF CARBURETOR: Disconnect fast idle rod. On Model BXVD-3, only, disconnect dashpot piston connector rod. Take out retaining screws, remove bowl cover and air horn assembly. Free clip on float hinge pin (clip will spring out when released), take out hinge pin, remove float and needle. Disconnect accelerating pump link, withdraw pump rod and piston assembly, remove pump outlet check valve (in bottom of pump cylinder). Remove economizer valve assembly. Remove main discharge jet plug (use T-19099 screwdriver). If main metering jet and main discharge jet to be removed (can be cleaned with air without being removed) use special tool T-24924 (to remove metering jet), T-24967 (to remove discharge jet). To remove vacuum economizer piston, use tool T-24733 and engage tool prongs in slot in piston retainer.

Servicing—Clean all jets with gasoline or use denatured alcohol to dissolve gum deposits (do not attempt to clean jets with wire or drill rods). Blow out all jets and passages in carburetor with air.

REASSEMBLY OF CARBURETOR: Use new gaskets (see Parts List), assemble carburetor by reversing disassembly directions. Check and adjust float level, accelerating pump setting, throttle valve setting, dashpot or slow closing throttle setting (BXVD-3), and idle setting as directed above.

SERVICE PARTS:—**Gasket Sets**—Part No. J-5968-G (all models).

Repair Kits (incl. Gaskets)—No. RK-16 (Carb. A-18073), RK-75 (A-18123, 18133), RK-118 (380044), RK-119 (380045), RK-120 (380089), RK-121 (380079), RK-130 (380158), RK-131 (380159), RK-139 (380219 & 380220), RK-112 (380218).

STROMBERG DOWNDRAFT CARBURETOR JET SPECIFICATIONS

Car Model	Year	Carb. No.	Venturi Size	Main Metering Jet Size	Main Metering Jet Part No.	By-Pass Jet Size	By-Pass Jet Part No.	Main Discharge Jet Size	Main Discharge Jet Part No.	H.S. Bldr.	Idle Tube Size	Idle Tube Part No.	Idle Air Bld. Jet Size	Idle Air Bld. Jet Part No.	Pump Discharge Nozzle Size	Pump Discharge Nozzle Part N .
AUBURN 654	1936-37	EX-22	1 3/32"	.057"	P-17004	4#56	P-18149	#32	P-20638	#70	#68	P-22042	#54	P-15477	#70	P-18126
AUBURN 852	1936-37	EE-1	1 1/32"	.050"	P-19442	1#61	P-19724	#36	P-19440	#65	#70	P-19424	#42	——	#60	——
AUBURN Superch. 852	1936-37	EX-32	1⅜"	.082"	P-17004	4#56	P-18149	#28	P-17167	#70	#68	P-17228	#56	P-15477	#66	P-18126
BUICK 40	1936	EE-1	1 1/32"	*.048"	P-19442	1#64	P-19523	#32-36	P-21530	#70	#55-60	P-21528	#54	——	#65	——
BUICK 60, 80, 90	1936	EE-22	1 3/16"	†.052"	P-17004	1#65	P-20467	#28	P-21682	#70	#55-60	P-21557	#58	——	#65	——
BUICK 40	1937	AA-1	1 1/32"	⊙	P-22660	1#66/	P-20623	#28-36	P-22661	#70	#55-70	P-22431	#58	——	#65	——
BUICK 60, 80, 90	1937	AA-2	1 3/16"	⊙⊙	P-22660	1#63	P-19447	#28-32	P-22428	#64	#55-68	P-22807	#54	——	#65	——
BUICK 40①	1938	AAV-1	1 1/32"	.047"	P-19442	1#62	P-23361	#28	P-23315	#65	#60	P-23325	#70⑤	——	#65	P-23245, 6
BUICK 40②	1938	AAV-1	1 1/32"	.045"	P-19442	1#66	P-23606	#28	P-23315	#65	#60	P-23325	#70⑤	——	#65	P-23245, 6
BUICK 60, 80, 90①	1938	AAV-2	1 1/8"	.051"	P-19442	1#57	P-23348	#28	P-23315	#65	#60	P-23325	#70⑤	——	#65	P-23245, 6
BUICK 60, 80, 90②	1938	AAV-2	1 1/8"	.049"	P-19442	1#57	P-23348	#28	P-23315	#65	#60	P-23325	#70⑤	——	#65	P-23245, 6
BUICK, 60, 80, 90①	1939	AAV-26	1 1/8"	.052"③	P-19442	1#57	P-23348	#28	P-23315	#65	#60	P-23325	#60⑤	——	#65	P-23245, 6
BUICK 60, 80, 90②	1939	AAV-26	1 1/8"	.050"④	P-19442	1#57	P-23348	#28	P-23315	#65	#60	P-23325	#60⑤	——	#65	P-23245, 6
BUICK 40, 50	1940	AAV-16	1 1/32"	.045"	P-24773	1#60	P-24674	#32-28	P-24670	#70⑭	#70	P-19424	#42㉙	P-24683	#68	P-24594
BUICK 60, 70, 80, 90①	1940	AAV-26	1⅛"	.052"	P-24673	1#54	P-21197	#32-28	P-24670	#70⑭	#70	P-19424	#42㉙	P-24683	#68㉘	P-24594
BUICK 60, 70, 80, 90②	1940	AAV-26	1⅛"	.051"	P-24673	1#54	P-21197	#32-28	P-24670	#70⑭	#70	P-19424	#42㉙	P-24683	#68㉘	P-24594
BUICK 40A, B	1941	AAV-16	1 1/32"	.045"㉘	P-24773	#60	P-24674	#32-28	P-24670	#70⑭	#70	P-19424	#42㉙	P-24683	#68	P-24594
BUICK 40A, B; 50 Front	1941	AAV-16	15/16"	.041"㉚	P-24773	#60	P-24674	#32-28	P-24670	#70	#65	㉟382806	#42㉘	P-24683	#68	P-24594
BUICK 40A, B; 50 Rear	1941	AA-1	15/16"	.048"㉛	P-24773	—	—	#32-28	P-24670	#70	#65	㉟382806	#42㉘	P-24683	—	—
BUICK 60, 70, 90 Front	1941	AAV-16	1 1/32"	.047"㉜	P-24773	#56	P-21657	#32-28	P-24670	#70	#65	㉟382806	#42㉘	P-24683	#68	P-24594
BUICK 60, 70, 90 Rear	1941	AA-1	1 1/32"	.053"㉝	P-24773	—	—	#32-28	P-24670	#70	#65	㉟382806	#42㉘	P-24683	—	—
BUICK 40A, B; Late 50	1942	AAV-16	1 1/32"	.045"㉘	P-24773	#60	P-24674	#32-28	P-24670	#70⑭	#70	P-19424	#42㉙	P-24683	#68	P-24594
BUICK 40A, B; 50 Front	1942	AAV-16	15/16"	.041"㉚	P-24773	#60	P-24674	#32-28	P-24670	#70⑭	#65	382806	#42⑨	P-24683	#68	P-24594
BUICK 40A, B; 50 Rear	1942	AA-1	15/16"	.048"㉛	P-24773	—	—	#32-28	P-24670	#70⑭	#65	382806	#42⑨	P-24683	—	—
BUICK 60, 70, 90 Front	1942	AAV-16	1 1/32"	.047"㉜	P-24773	#56	P-21657	#32-28	P-24670	#70⑭	#65	382806	#42㉙	P-24683	#68	P-24594
BUICK 60, 70, 90 Rear	1942	AA-1	1 1/32"	.053"㉝	P-24773	—	—	#32-28	P-24670	#70⑭	#65	382806	#42㉙	P-24683	—	—
BUICK 60, 70, 90 Late	1942	AAV-26	1⅛"	.051"	P-24673	#54	P-21197	#32-28	P-24670	#70⑭	#70	P-19424	#42㉙	P-24683	#68㉘	P-24594
BUICK 40, 50	1946-47	AAV-16	1 1/32"	.045"	P-24773	#60	P-24674	#38-28	P-24670	#70⑭	#70	P-19424	#42㉙	P-24683	#68	P-24594
BUICK 70	1946-47	AAV-26	1⅛"	.051"	P-24673	#54	P-21197	#38-28	P-24670	#70⑭	#70	P-19424	#42㉙	P-24683	#68	P-24594

⊙ Under 3500 feet—(Std. air cleaner .049", Heavy Duty oil-bath air cleaner .045"), 3500-9000 feet (Std. air cl. .046", Heavy Duty air cl. .042"), Over 9000 feet (Std. air cl. .044", Heavy Duty air cl. .040").

⊙⊙ Under 3500 feet—(Std. air cleaner .052", Heavy Duty oil-bath air cleaner .051"). 3500-9000 feet—(Std. air cl. .049", Heavy Duty air cl. .048"). Over 9000 feet—(Std. air cl. .047", Heavy Duty air cl. .046").

* .045" r .044" with Triplex Air Cleaner. † .051" with Triplex Air Cleaner. / #70...P-21020 with heavy duty air cleaner.

①—Standard Air Cleaner. ②—Heavy Duty (oil-bath) Air Cleaner.

③—Alt. under 3000 ft., .050" (3000-9000 ft.), .048" (Over 9000 ft.).

④—Alt. under 3000 ft., .048" (3000-9000 ft.), .046" (Over 9000 ft.).

⑤—Main Body Bleeder. #32 Throttle Body Bleeder.

⑨—#65 in Main Body also. ⑭—Part No. P-23985.

㉘—#65 (was #70) in Main Body also. ㉙—#60 in Main Body also.

㉘—#70 in Main Body also.

㉘—Pump Reducer #58—Part No. P-24689.

㉙—Under 3500 feet—.045". 3500-9000 feet—.042". Over 9000 feet—.040".

㉚—Under 3500 feet—.041". 3500-9000 feet—.039". Over 9000 feet—.037".

㉛—Under 3500 feet—.048". 3500-9000 feet—.046". Over 9000 feet—.044".

㉜—Under 3500 feet—.047". 3500-9000 feet—.045". Over 9000 feet—.043".

㉝—Under 3500 feet—.053". 3500-9000 feet—.051". Over 9000 feet—.049".

㉟—Supersedes #70 Part No. P-19424.

STROMBERG DOWNDRAFT CARBURETOR JET SPECIFICATIONS

Car Model	Year	Carb. No.	Venturi Size	Main Metering Jet Size	Main Metering Jet Part N .	By-Pass Jet Size	By-Pass Jet Part No.	Main Discharge Jet Size	Main Discharge Jet Part No.	H. S. Bldr.	Idle Tube Size	Idle Tube Part N .	Idle Air Bld. Jet Size	Idle Air Bld. Jet Part No.	Pump Discharge Nozzle Size	Pump Discharge Nozzle Part No.
BUICK 40, 50	1948	AAV-167	1 1/32"	.045"	P-24773	#60	P-24674	#32-28	P-24670	#70⑭	#70	P-19424	#42㉘	P-24683	#68	P-24594
BUICK 70	1948	AAV-267	1 1/8"	.051"	P-24673	#54	P-21197	#32-28	P-24670	#70⑭	#70	P-19424	#42㉘	P-24683	#68	P-24594
CADILLAC V-8, 60, 70, 75	1936	EE-25	1 3/16"	.058"	P-17004	4#56	P-18149	#36	P-18338	#67	#70	P-17007	#42	P-15477	#56	—
CADILLAC 60, 65, 70, 75	1937	AA-25	1⅛"	.051"	P-22660	1#63	P-19447	#28-36	P-22603	#65	#70	P-23110	#40	—	#65	—
CADILLAC 60, 60S, 65, 75	1938	AAV-25	1 1/8"	.050"	P-19442	1#52	P-23667	#32	P-23567	#63	#66	P-23527	#60⑥	—	#70	P-23516, 7
CADILLAC 60S, 61, 75	1939	AAV-26	1 1/8"	.050"	P-19442	1#63	P-21197	#32	P-23567	#70	#64	P-24009	#52⑥	—	#65	P-23245, 6
CADILLAC 60S, 62, 72, 75	1940	AAV-26	1⅛"	.049"	P-19442	1#53	P-24064	#32	P-23567	#70㉑	#64	P-24009	#36㉔	P-23536㉚	#65	P-23245, 6
CADILLAC All V8	1941	AAV-26	1⅛"	.050"㉗	P-19442	#53	P-24064	#32	P-23567	#70	#66	P-23527	#36㊳	P-23658	#68	P-24594
CADILLAC All V8	1942	AAV-26	1⅛"	.048"	P-19442	#53	P-24064	#32	P-23567	#70⑭	#66	382933	#36㉔	P-23658	#68	P-24594
CADILLAC V8	1946-47	AAV-26㊶	1⅛"	.049"	P-19442	#53	P-24064	#32	P-23567	#70⑭	#66	382933	#36㉔	P-23658	#68	P-24594
CADILLAC V8	1947-48	AAV-26㊷	1 1/8"	.048"	P-24773	#53	P-24064	#32	P-23567	#70⑭	#66	382933	#48㉔	383203	#68	P-24594
CHRYSLER C-8	1936	EXV-3	1 3/16"	.060"	P-17004	1#54	P-21197⑦	#28	P-21326	#65	#70	P-19424	#54	P-15477	#64	P-17020
CHRYSLER C-9	1936	EXV-3	1 5/16"	.065"	P-17004	1#54	P-21197⑦	#28	P-20877	#70	#70	P-19424	#56	P-15477	#64	P-17020
CHRYSLER C-10, 11	1936	EE-22	1 3/32"	.053"	P-17004	1#53	P-19481	#28-36	P-19840	#65	#72	P-18264	#46	P-15477	#71	P-18852
CHRYSLER C-14	1937	AAOV-1	1 1/32"	.047"	P-22660	1#56	P-21657⑦	#36	P-22795	#70	#70	P-19424	#40	—	#60	—
CHRYSLER C-15	1937	AAOV-1	1⅛"	.049"	P-22660	1#54	P-21197⑦	#36	P-22795	#70	#70	P-19424	#44	—	#60	—
CHRYSLER C-17	1937	EE-22	1 3/32"	.053"	P-17004	1#53	P-19481	#28-36	P-19840	#65	#72	P-18264	#46	P-15477	#71	P-18852
CHRYSLER C-19	1938	AAV-2	1 1/32"	.047"	P-22660	1#56	P-21657	#36	P-22795	#70	#70	P-19424	#40	—	#60	P-23245, 6
CHRYSLER C-20	1938	AAV-2	1 1/8"	.049"	P-22660	1#54	P-21197	#36	P-22795	#70	#70	P-19424	#42	—	#60	P-23245, 6
CHRYSLER C23, C24	1939	AAV-2	1 1/8"	.049"	P-22660	1#54	P-21197	#36	P-22795	#70	#70	P-19424	#42	—	#65	P-23245, 6
CHRYSLER C26, C27	1940	AAV-2	1⅛"	.049"	P-22660	1#54	P-21197	#36	P-22795	#70	#70	P-19424	#42	—	㉒#65	P-23245, 6
CHRYSLER C30, C33	1941	AAV-2	1⅛"	.053"	P-22660	2#56	382454	#36	P-22795	#70	#70	P-19424	#42	—	㉒#65	P-23245, 6
CHRYSLER C36, C37	1942	AAV-2	1⅛"	.051"	P-22660	2#56	382454	#36	P-22795	#70㉑	#70	P-19424	#40	—	㉒#65	P-23245,6
CHRYSLER C39, C40	1946-48	AAVS-2	1 1/8"	.051"	P-22660	2#56	382454	#36	P-22795	#70㉑	#70	P-19424	#40	—	㉒#65	P-23245,6
CORD 810, 812	1936-37	EE-15	1 1/32"	.050"	P-19442	1#57	P-20854	#32-36	P-20853	#65	#70	P-21778	#42	—	#65	—
CORD Superch. 812	1937	AA-25	1⅛"	.057"	P-22660	2#55	P-22898	#28-36	P-22603	#70	#70	P-19874	#40	—	#60	P-22900, 1
De SOTO S11 Fluid Dr.	1947	BXVD-3	1 7/32"	.061"	P-19442	#55	P-23676	#28-36	382897	#68㉓	#70	P-21778	#54	P-20470	#70⑱	—
DODGE D2, D5	1936-37	EXV-2	1 5/32"	.058"⑩	P-17004	1#54	P-21197⑦	#28-36	P-18226	#70	#70	P-17007	#50	P-15477	#70	P-17020
DODGE D-8	1938	EXV-2	1 5/32"	.058"	P-17004	1#55	P-23676	#28-36	P-23638	#70	#70	P-19424	#50	P-15477	#50	P-17020
DODGE D11	1939	BXV-2	1 5/32"	.058"	P-19442	1#54	P-21197	#28-36	P-24036	#68	#70	P-21778	#54	—	#70	P-24067
DODGE D14, D17	1940	BXV-3	1 5/32"	.058"	P-19442	1#54	P-21197	#28-36	P-24036	#68㉓	#70	P-21778	#54	P-20470	#70⑱	P-24067
DODGE D19	1941	BXV-3	1 5/32"	.058"	P-19442	#54	P-21197	#28-36	P-24036	#68	#70	P-21778	#54	P-20470	#70⑱	P-24067
DODGE D19 Fluid Dr.	1941	BXVD-3	1 5/32"	.057"㊱	P-19442	#58	382675㊲	#28-36	P-24036	#68	#70	P-21778	#54	P-20470	#70⑱	—
DODGE D22	1942	BXV-3	1 7/32"	.061"	P-19442	#55	P-23676	#28-36	382897	#68㉓	#70	P-21778	#54	P-20470	#70⑱	P-24067
DODGE D22 Fluid Dr.	1942	BXVD-3	1 7/32"	.061"	P-19442	#55	P-23676	#28-36	382897	#68㉓	#70	P-21778	#54	P-20470	#70⑱	—
DODGE D24 Std.	1946-48	BXV-3	1 7/32"	.061"	P-19442	#55	P-23676	#28-36	382897	#68㉓	#70	P-21778	#54	P-20470	⑱#70	P-24067
DODGE D24 Fluid Dr.	1946-48	BXVD-3	1 7/32"	.061"	P-19442	#55	P-23676	#28-36	382897	#68㉓	#70	P-21778	#54	P-20470	⑱#70	—
DUESENBERG J	1936-37	EE-3	1 3/8"	.076"	P-17004	.080"	P-16965	#36	P-17015	#65	#70	P-17007	#46	P-15477L	#63	P-17454
FORD V-8, 68	1936	EE-1①	1 1/32"	.048"	P-19442	1#63	P-19447	#36	P-19440	#65	#70	P-19424	#40	—	#60	—
FORD V-8, 68, 67	1936	EE-1②	31/32"	.045"⑨	P-19442	1#65	P-20467	#36	P-19440	#65	#70	P-19424	#40	—	#60	—
FORD V-8, 51, 67	1936	EE-1③	13/16"	.035"	P-19442	1#71	P-21642	#36	P-19440	#65	#70	P-19424	#38	—	#60	—
FORD 73, 74, 75	1937	EE-⅞⑤	⅞"	.037"	P-19442	1#68	P-21018	#36	P-19440	#65	#70	P-19424	#40	—	#60	—
FORD 77, 78, 79	1937	EE-1②	31/32"	.045"⑨	P-19442	1#65	P-20467	#36	P-19440	#65	#70	P-19424	#40	—	#60	—
FORD 73, 74, 75	1937	EE-⅞④	13/16"	.035"⑧	P-19442	1#71	P-21642	#36	P-19440	#65	#70	P-19424	#38	—	#60	—
FORD '60' Models	1938	EE-⅞④	13/16"	.035"⑧	P-19442	1#71	P-21642	#36	P-19440	#65	#70	P-19424	#38	—	#60	—
FORD '85' Mdls. Early	1938	EE-1②	31/32"	.045"⑨	P-19442	1#65	P-20467	#36	P-19440	#65	#70	P-19424	#40	—	#60	—
FORD '60' Models	1939	EE-⅞	13/16"	.035"⑧	P-19442	1#71	P-21642	#36	P-19440	#65	#70	P-19424	#38	—	#60	P-19429
LA SALLE 36-50	1936	EE-15	1 1/32"	.046"	P-19442	1#65	P-20467	#32-36	P-20753	#67	#55	P-21161	#50	—	#65	—
LA SALLE 37-50	1937	AA-25	1⅛"	.051"	P-22660	1#63	P-19447	#28-36	P-22603	#65	#70	P-23110	#40	—	#65	—
LINCOLN V12	1936-39	EE-22	1 3/16"	.057"	P-17004	4#56	P-18149	#28-32	P-21799	#70	#70	P-17007	#44	P-15477K	#65	P-18852
LINCOLN V12	1940	EE-22	1 3/16"	.057"	P-17004	4#56	P-18149	#28-32	P-21799	#70	#70	P-17007	#42	P-15447K	#60	P-20232
LINCOLN ZEPHYR	1936-38	EE-1	31/32"	.046"	P-19442	1#60	P-20752	#32-36	P-21317	#65	#70	P-19424	#40	—	#60	—

①—Ford No. 48-9510D.
②—Ford No. 67-9510A. Marked '97'.
③—Ford No. SE-67-9510.
④—Ford No. 52-9510B. Marked '81'.
⑤—Spec. Serv. 52-9510. Marked '82'.
⑦—Bypass Jet in Vacuum Economizer.
⑥—Main Body Bleeder. #36 Throttle Body Bleeder.
⑧—.035" (Under 5000'). .033" (5000-10000'). .032" (10000-15000'). .031" (Over 15000').
⑨—.045" (Under 5000'). .043" (5000-10000'). .041" (10000-15000'). .039" (Over 15000').
⑩—5% lean—.057", 10% lean—.055", 15% lean—.054", 20% lean—.052".
⑭—Part No. P-23985.
⑱—Discharge Reducer. Also uses Pump By-pass Jet 2#56, Part No. P-24062.
⑳—Pump discharge nozzles in Main Body. Pump By-pass Jet #58, Part N . P-24744.
㉑—Part No. P-22369.
㉓—Part No. P-24315.
㉒—Pump discharge nozzles in Main Body. Pump By-pass Jet #63, Part N . P-23742.
㉔—#52 in Main Body also.
㉖—#70 in Main Body also.
㉗—Was .049".
㉘—Was .058".
㉙—Was #54, Part No. P-21197.
㉚—#52 in Main Body also. Supersedes No. 24536.
㊶—Code N . 205-14A Carburetors.
㊷—Code No. 205-14B Carburetors.

STROMBERG DOWNDRAFT CARBURETOR JET SPECIFICATIONS

Car Model	Year	Carb. No.	Venturi Size	Main Metering Jet Size	Main Metering Jet Part No.	By-Pass Jet Size	By-Pass Jet Part No.	Main Discharge Jet Size	Main Discharge Jet Part N .	H.S. Bldr.	Idle Tube Size	Idle Tube Part N .	Idle Air Bld. Jet Size	Idle Air Bld. Jet Part No.	Pump Discharge Nozzle Size	Pump Discharge Nozzle Part N .
NASH 3620	1936	EX-32	1 3/16"	.064"	P-17004	4#56	P-18149	#32	P-20885	#70	#70	P-17007	#50	P-15477	#67	P-18126
NASH 3640-A	1936	AX-2	1⅛"	.056"	P-19442	2#56	P-21776	#32	P-21766	#70	#68	P-21962	#53	—	#59	P-21944
NASH 3680	1936	EE-1	1 1/32"	.048"	P-19442	1#63	P-19447	#32-36	P-20853	#70	#55	P-20419	#54	—	#65	—
NASH 3720	1937	EX-32	1 3/16"	.062"	P-17004	4#56	P-18149	#32	P-19546	#70	#70	P-17007	#44	P-15477	#61	P-22926
NASH 3780	1937	EE-1	1 1/32"	.048"⑮	P-19442	1#63	P-19447	#32-36	P-20853	#70	#55	P-20419	#54	—	#65	P-20435, 6
NASH 3880	1938	EE-1	1 1/32"	.048"	P-19442	1#63	P-19447	#32-36	P-20853	#70	#70	P-20149	#54	—	#65	—
NASH-LAFAYETTE 3610	1936	AX-2	1⅛"	.057"	P-19442	2#56	P-21776	#32	P-21766	#70	#70	P-21778	#53	—	#64	P-21944
NASH-LA FAYETTE 3710	1937	AX-2	1⅛"	.056"	P-19442	2#56	P-21776	#32	P-21766	#70	#68	P-21962	#53	—	#59	P-21944
NASH-LAFAYETTE 3810	1938	AX-2	1 1/8"	.056"	P-19442	2#56	P-21776	#32	P-21766	#70	#68	P-21962	#53	—	#59	P-21944
NASH-LAFAYETTE 3910	1939	EE-1	31/32"	.044"	P-19442	1#60	P-20752	#32	P-24155	#65	#70	P-24157	#52㊳	—	#70	P-24156
PACKARD 120-B	1936	EE-14	1 1/32"	.048"	P-19442	1#60	P-20752	#32-36	P-20853	#65	#55	P-21794	#50	—	#65	—
PACKARD 1400, 1, 2	1936	EE-23	1 3/32"	.052"	P-17004	1#64	P-20823	#28-36	P-19364	#65	#70	P-17007	#42	P-15477K	#60	—
PACKARD 1403, 4, 5	1936	EE-23	1 3/16"	.056"	P-17004	1#54	P-20895	#28-36	P-19364	#65	#70	P-17007	#44	P-15477K	#60	—
PACKARD 1407, 8	1936	EE-3	1 5/16"	.060"	P-17004	.060"	P-16965	#28	P-20647	#65	#70	P-17007	#44	P-15477	#60	—
PACKARD 120C	1937	EE-14	1 1/32"	.047"	P-19442	1#63	P-19447	#32-36	P-20853	#65	#55	P-22941	#44	—	#65	—
PACKARD 1500, 1, 2	1937	EE-23	1 3/32"	.050"	P-17004	1#64	P-20823	#28-36	P-19364	#65	#70	P-17007	#42	P-15477K	#60	—
PACKARD 1506, 7, 8	1937	EE-3	1 5/16"	.068"	P-17004	.070"	P-16965	#32	P-22755	#70	#70	P-22737	#54	P-15477L	#60	—
PACKARD 1601, 1A, 2	1938	EE-14	1 1/32"	.047"	P-19442	1#57	P-20854	#32	P-23346	#65	—	P-23646	#60	P-23649	#65	—
PACKARD 1603, 4, 5	1938	EE-23	1 3/32"	.050"	P-17004	1#64	P-20823	#28-36	P-19364	#65	#70	P-17007	#42	P-15477K	#60	—
PACKARD 1607, 8	1938	EE-3	1 5/16"	.068"	P-17004	1#70	P-16965	#32	P-22755	#70	#70	P-22737	#54	P-15477L	#60	—
PACKARD 1701, 1A, 2	1939	EE-16	1 1/32"	.047"	P-19442	1#57	P-20854	#32	P-23346	#65	#55	P-23646	#60⑨	—	#65	P-23808, 9
PACKARD 1703, 3A, 5	1939	EE-23	1 3/32"	.051"	P-17004	1#64	P-20823	#28-36	P-19364	#65	#70	P-17007	#42	P-15477K	#60	P-20232
PACKARD 1707, 8	1939	EE-3	1 5/16"	.068"	P-17004	.070"	P-16965	#32	P-22755	#70	#70	P-22737	#54⑩	P-15477L	#60	P-20232
PACKARD 1800	1940	BXOV-26	1 7/32"	.060"	P-19442	1#54	P-21197	#28-34	P-24610	#70⑭	#65	P-24776	#65	P-20750⑱	#68	—
PACKARD 1801, 1A	1940	EE-16	1 1/32"	.047"	P-19442	1#60	P-20752	#32	P-23346	#65⑰	#55	P-23633	#60⑲	P-23649	#65	P-23808, 9
PACKARD 1803 to 8	1940	AAV-26	1⅛"	.050"	P-19442	1#54	P-21197	#32	P-23567	#70⑭	#64	P-23527	#36㉔	P-23536㉘	#65	P-23245, 6
PACKARD 1900	1941	BXOV-26	1 7/32"	.060"	P-19442	#53	P-24064	#28-34	382407	#68	#68	P-21962	#60	P-24749	#68⑱	—
PACKARD 1903 to 8	1941	AAV-26	1⅛"	.050"	P-24773	#54	P-21197	#32	P-23567	#70	#65	382572	#36㉕	P-23536	#68	P-24594
PIERCE ARROW 8	1936-38	EE-3	1 3/16"	.058"	P-17004	1#60	P-16965	#28	P-18969	#70	#70	P-17007	#41	P-15477	#68	P-17454
PIERCE ARROW 12	1936-38	EX-32(2)	1 3/16"	.057"	P-17004	4#56	P-18149	#28	P-17005	#70	#70	P-17007	#48	P-15477K	#68	P-18126
PLYMOUTH P15	1946-47	BXV-3	1 7/32"	.061"	P-19442	#55	P-23676	#28-36	382897	#68㉓	#70	P-21778	#54	P-20470	#70⑯	P-24067
PLYMOUTH P15	1947	BXV-3	1 7/32"	.061"	P-19442	#55	P-23676	#28-36	382897	#68㉓	#70	P-21778	#54	P-20470	#70⑯	P-24067
STUDEBAKER 3A, 4A	1936	EX-23	1 5/32"	.058"	P-17004	4#56	P-18149	#28-32	P-21687	#70	#52	P-21688	#55	—	#66	P-18126
STUDEBAKER 2C	1936	EE-1	1 1/32"	.047"	P-19442	1#63	P-19447	#32-36	P-20646	#70	#70	P-20614	#44	—	#65	—
STUDEBAKER 5A, 6A	1937	EX-23	1 5/32"	⑧	P-17004	4#56	P-18149	#28-32	P-21687	#70	#52	P-21688	#55	—	#66	P-18126
STUDEBAKER 3-C	1937	EE-1	1 1/32"	.047"⑫	P-19442	1#63	P-19447	#32-36	P-20646	#70	#70	P-20614	#44	—	#65	P-20435, 6
STUDEBAKER 7A, 8A	1938	BXO-26	1 3/16"	.059"⑪	P-19442	2#56	P-21776	#28-36	P-23264	#70	#70	P-21778	#54	—	#64	—
STUDEBAKER 4C Pres.	1938	AAO-161	1 1/32"	.047"⑫	P-22660	1#65	P-20467	#36	P-23485	#60	—	P-21962	#66⑬	—	#65	—
STUDEBAKER Comm. 9A	1939	BXO-26	1 3/16"	.059"⑪	P-19442	2#56	P-21776	#28-36	P-23264	#70	#70	P-21778	#54	P-20470	#64	P-23262
STUDEBAKER Pres. 5C	1939	AAO-161	1 1/32"	.047"⑫	P-22660	1#65	P-20467	#36	P-23485	#60	#68	P-21962	#66⑬	—	#65	P-21561
STUDEBAKER 10A	1940	BXO-26	1 3/16"	.059"⑪	P-19442	2#56	P-21776	#28-36	P-23264	#70	#70	P-21778	#54	P-20470	#64	P-23262
STUDEBAKER Pres. 6C	1940	AAO-161	1 1/32"	.047"⑫	P-22660	1#65	P-20467	#36	P-23485	#60	#68	P-21962	#66⑬	—	#65	P-21561
STUDEBAKER Com. 11A	1941	BXOV-26	1 3/16"	.057"	P-19442	#54	P-21197	#28-36	382492	#70	#70	P-21778	#54	P-20470	#70㉒	P-24067
STUDEBAKER Pres. 7C	1941	AAV-26	1 1/32"	.044"	⑯	#56	P-21657	#36	382408	#70	#65	382572	#38㉖	P-24683	#68	P-24594
STUDEBAKER Com. 12A	1942	BXOV-26	1 3/16"	.057"	P-19442	#54	P-21197	#28-36	382492	#70⑭	#70	P-21778	#54	P-20470	#70㉒	P-24067
STUDEBAKER Pres. 8C	1942	AAV-26	1 1/32"	.044"	P-24773	#56	P-21657	#36	382408	#70⑭	#65	382572	#42㉗	P-24683	#68	P-24594
STUDEBAKER 14A	1947	BXOV-26	1 3/16"	.057"	P-19442	#54	P-21197	#28-36	382492	#70⑭	#70	P-21778	#54	P-20470	#70㉒	P-24067
STUDEBAKER 15A	1948	BXOV-26	1 3/16"	.057"	P-19442	#54	P-21197	#28-36	382492	#70⑭	#70	P-21778	#54	P-20470	#70㉒	P-24067

⑧—Std. air cleaner—.058" Prod., .056" 1st Smaller, .054" 2nd Smaller.
Oil bath air cleaner—.055" Prod., .054" 1st Smaller, .052" 2nd Smaller.
⑨—Main Body Bleeder. #38 Throttle Body Bleeder.
⑩—#56 Throttle Body Bleeder also used.
⑪—.059" Std., .058" First Smaller (Econ.), .056" Second Smaller (Alt.).
⑫—.047" Std., .045" First Smaller (Econ.), .043" Second Smaller (Alt.).
⑬—Main Body Bleeder. #38-50 Throttle Body Bleeders.
⑭—Part No. P-23985.
⑮—.047" with oil-bath type air cleaner.
⑯—P-19442 (first cars). Should be replaced by new type P-24773 when idle passage tubes installed (to correct off-idle leanness).
⑰—Part No. P-22764.
⑱—Pump By-pass Jet 2#56, Part No. P-24062.
⑲—Secondary Bleeder #38. Part No. P-23658 in Throttle Body.
㉓—Pump discharge nozzles in Main Body. Pump By-pass Jet #63, Part No. P-23742.
㉕—Part No. P-24315.
㉔—#52 in Main Body also.
㉖—#60 in Main Body also.
㉘—Throttle Body Bleeder. #60 Idle Tube Bleeder.

TILLOTSON MODELS M-10B, M-10BX

M-10B—BANTAM, MODEL 60 (1937-38)

M-10BX—BANTAM, MODEL 60 (1939)

TYPE:—Plain tube updraft type. Carburetor has two adjustments. The main or high speed needle valve controls the fuel for the main nozzle. The idle or low speed adjustment screw controls the fuel mixture for the idle discharge ports in the wall of the mixing chamber opposite the throttle edge. Adjustments should be made in the order given below.

PRELIMINARY ADJUSTMENT:—Turn main or high speed adjustment needle valve in or clockwise until it is seated, then open or back off needle valve exactly 1½ turns. Turn idling or low speed adjusting screw in or clockwise until it is seated, then back off adjusting screw ½ turn. Start engine and run until it is thoroughly warmed up.

MAIN (HIGH SPEED) ADJUSTMENT:—With engine warm and running, open throttle until engine speed is approximately 30 M.P.H. Turn main adjusting needle valve in or clockwise until engine begins to slow down for want of fuel. Then slowly turn adjusting handle out or counter-clockwise until engine runs smoothly. The correct setting should be approximately ⅛-¼ turn from the first position. This adjustment should be made slowly and needle valve should not be opened beyond the point where smooth running and power is secured in order to assure maximum economy.

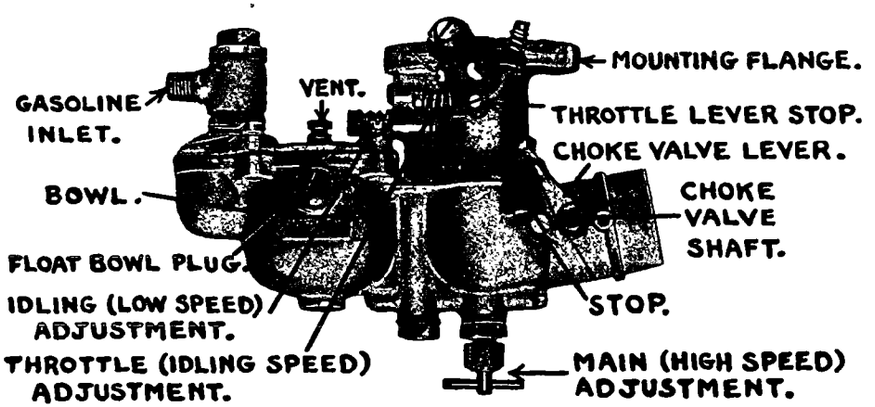

IDLING (LOW SPEED) ADJUSTMENT:—With engine running, close throttle and adjust throttle lever stop screw so that idling speed is somewhat faster than normal. Turn idling adjustment screw in or clockwise until engine begins to miss, then turn screw slowly out or counter-clockwise until engine fires smoothly. Adjusting screw controls fuel mixture and should be turned in for leaner mixture and out for richer mixture. After completing adjustment, adjust throttle lever stop screw to secure correct idling speed.

CHOKE CONTROL:—Choke valve is held in place on choke valve shaft by a spring which allows choke valve to open slightly when engine begins to fire, preventing over-choking. Adjust choke linkage so that choke valve is closed (engine not running) when choke control button on instrument panel is pulled all the way ut and wide pen with control button pushed in.

TILLOTSON MODEL D-1E

D-1E—WILLYS, MODEL 77 (1936).

TYPE:—Plain tube downdraft type with positively actuated accelerating pump connected to throttle lever and vacuum controlled power jet. Similar in design to type used previously on this model except that metering pin adjustment and power jet have been added. Fuel for main nozzle metered by adjustable metering pin and jet (high speed adjustment handle below carburetor). Additional fuel by-passed to nozzle when vacuum controlled power jet ball check valve open. Fuel for idling taken from main nozzle up through channel in which idle metering restrictions located to cross passage connected to idle air vent and then down through channel to discharge ports at throttle edge. Idle adjusting screw controls idle air vent opening. Adjustments should be made in order

PRELIMINARY ADJUSTMENT:—If carburetor out of adjustment, make a preliminary setting by turning main high speed adjustment handle out or counter-clockwise two full turns. Turn idle adjusting screw in or clockwise until it is seated, then back screw off one turn. This will allow engine to be started and warmed up so that adjustments can be made correctly.

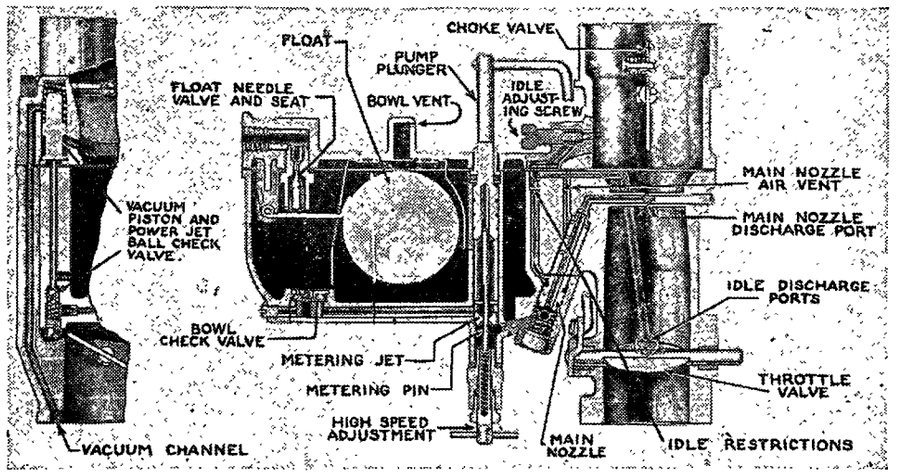

HIGH SPEED ADJUSTMENT:—Open throttle so that engine speed is 25-30 M.P.H., turn main adjustment handle up or clockwise until engine slows down, then back adjustment off until engine speed is at maximum, finally turn adjustment up approximately three quarters of a turn to insure maximum economy. See tune-up instructions on car model page.

IDLING ADJUSTMENT: After completing high speed adjustment, close throttle and allow engine to idle, turn idle adjusting screw out or counter-clockwise until engine misses, then turn screw in until engine fires evenly. Check by opening throttle momentarily to clear manifold and then noting performance. Adjust throttle stopscrew for 7 M.P.H. idling speed. See tune-up instructions on car model page.

POWER JET:—Power jet vacuum piston normally held at upper end of stroke by manifold vacuum so that spring-loaded ball check valve is closed. Drop in vacuum when throttle opened wide allows spring to force piston down, opening check valve, and allowing fuel to flow through power jet to main nozzle. Power jet should not require attention.

ACCELERATING PUMP:—Pump plunger located in metering jet well and connected to throttle lever so that plunger is forced down discharging fuel in well through main nozzle and main nozzle discharge port. When throttle is held open plunger contacts metering pin extension depressing metering pin (metering pin spring mounted in high speed adjustment handle to permit this action) allowing greater fuel flow through metering jet to main nozzle for full power operation. Accelerating pump should not require adjustment.

FLOAT LEVEL:—To check float level, remove float bowl (integral with air horn), invert cover, measure from gasket seat on cover to bottom of float. This distance should be 1 25/32". Float level can be corrected by bending float lever at point where it is attached to float.

CHOKE:—Choke valve provided with relief poppet valve to prevent over-choking. Check linkage to see that valve opens and closes fully.

TILLOTSON MODEL DY-1A

DY-1A—CROSLEY, MODEL A (1939-40), CB41 (1941), CB42 (1942)

TYPE:—Single barrel, plain tube, downdraft type with high speed (Main) and low speed (Idl) adjustments.

Fuel System (Idling & Low Speed):—Fuel is metered by restriction at lower end f Idle Tube and flows up through tube (located in main nozzle—see illustration) where it is mixed with air admitted through Idle Air Bleed hole in side of idle tube. Fuel mixture is controlled by Idle Adjusting Screw (at upper end of tube) and flows through Idle Fuel Supply Channel in carburetor casting to Idle Discharge Ports at the throttle edge. For closed throttle idling, all fuel is discharged through lower port. As soon as the throttle is opened for low speed running (below 18 MPH), additional fuel is discharged through upper port.

Speeds above 18 M.P.H.—At approximately 18 M.P.H., throttle valve opening causes reduced suction on idle ports and increased suction on main nozzle so that fuel is discharged at main nozzle and idle system drops out. Fuel for main nozzle is metered by Main Adjustment Screw and is mixed with air admitted through holes in nozzle from main nozzle air bleed channel opening into air horn above venturi. This air is metered by Main Nozzle Air Bleed Restriction located in air bleed channel at top of carburetor main casting.

ADJUSTMENT:—Make adjustments in order as listed below. Preliminary adjustment will allow engine to be started and warmed up (other adjustments should not be made until engine thoroughly warm).

Preliminary Adjustment:—Close Main Adjustment Screw by turning to right (clockwise) until it is lightly seated, then back screw out exactly two complete turns. Close Idle Adjustment Screw by turning to right (clockwise) until it is seated, back screw out one turn, start engine and run until warmed up.

Main (High Speed) Adjustment:—With engine warm and running, open throttle so that engine speed is 30-35 M.P.H. Turn Main Adjustment Screw in or clockwise slowly (¼ turn at a time) until engine slows down due to lack of fuel, then back screw ut very slowly (⅛ turn at a time) until maximum speed is secured. Correct setting will be approximately 1½ turns open (first 1000 cars), 1¾-2 turns open (later cars) of screw from inner seated position.

Idle (Low Speed) Adjustment:—Set throttle lever stopscrew so that engine runs at faster than normal idling speed. Close throttle. Turn Idle Adjustment Screw in or clockwise to lean mixture until engine begins to miss, then back screw out slowly until engine fires smoothly. Clear manifold by opening throttle momentarily, then recheck idle setting. Correct setting will be approximately ¾-1¼ turns of the screw from the inner seated position. Set throttle lever stopscrew for idling speed of 7 M.P.H. when pulling car in high gear.

PERFORMANCE:—Should be satisfactory for operation at altitudes less than 5000 feet if adjustments correctly made as directed above. If performance not satisfactory, check adjustments and tune up engine (see car model T&E page for tune up data). See Trouble Shooting Section below.

FLOAT LEVEL:—**Fuel Level**—Should be 23/32" below top edge of float bowl or just below lower edge of inspection hole on side of float bowl (remove inspection hole plug to check level).

Fl at Level—To check, invert upper body assembly (air horn and float bowl cover with complete float mechanism), measure from face of body gasket to top of raised seam n each float. Distance should be 1 27/64". To adjust, bend each float lever arm using extreme care to secure equal setting for both floats. DISASSEMBLY CAUTION—Before taking off Upper Body Assembly (to check or adjust float level), remove Idle Adjustment Screw, Spring and Idle Tube to avoid damage to tube and main nozzle when upper body assembly lifted off.

Inlet Needle Valve & Seat—Part No. 06287 (matched set).

CHOKE:—Plain butterfly type. Adjust choke linkage so that choke valve is wide pen when dash control button is pushed all the way in.

TROUBLE SHOOTING:—**Engine Stalls**—Check idle speed setting, tighten throttle stop retaining screw, check idling or low speed adjustment, see that idle adjustment screw not ringed, clean idle tube and idle fuel channels with air, check float level (see Fuel Level Note below).

Flatness on Acceleration—Check Idle (Low Speed) and Main (High Speed) Adjustments, check float level (if engine loads up, see Fuel Level Note below), clean idle tube and idle fuel channels with air.

Performance Unsatisfactory—Tune up engine (see car model T&E page for tune up data), check all carburetor adjustments.

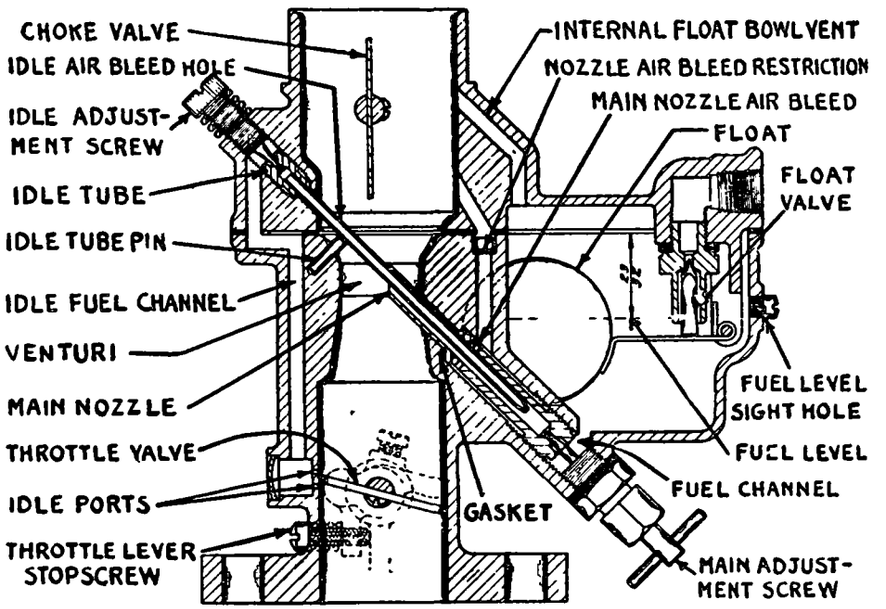

Fuel Level Note—If fuel level in float bowl rises above setting, dismantle needle valve, clean needle valve and seat with a soft clean cloth, reseat needle valve by tapping with finger several times while turning needle around. Reset float level. If level not maintained, install new needle valve and seat.

SERVICING:—Before removing Upper Body Assembly (air horn and float bowl cover), remove Idle Adjustment Screw and spring, unscrew and remove Idle Tube through adjusting screw hole—this is important to avoid damage to tube and nozzle when upper assembly lifted off. Idle tube positioning pin in main body casting is not removable. Main nozzle outlet and gasket are staked in main body casting and cannot be removed (nozzle base can be removed through main adjustment screw plug hole after adjustment screw assembly removed). Blow out all jets and channels with compressed air—do not use wires or drills to clean passages. See that float bowl vent to air horn is open and clean.

Reassembly—Replace all worn or damaged parts with genuine Tillotson service parts. Use all new gaskets and replace parts in same order as rem ved. See that nozzles and plugs are tight. Set float level and adjust carburetor.

TILLOTSON MODELS DY-9A, DY-9B

CROSLEY, MODEL CC (1947-48)

NOTE: Model DY-9A used on first cars, DY-9B on later cars. Both carburetors are of same design and are serviced in the same manner.

TYPE: Single barrel, plain tube, downdraft type with high speed (Main) and low speed (Idle) adjustments. Carburetor is of special design with concentric float bowl and double floats which allow carburetor to be operated in tilted positions up to 35°.

Fuel System (Idling & Low Speed):—Fuel is metered by restriction at lower end of Idle Tube and flows up through tube (located in main nozzle—see illustration) where it is mixed with air admitted through Idle Air Bleed hole in side of idle tube. Fuel mixture is controlled by Idle Adjusting Screw (at upper end of tube) and flows through Idle Fuel Supply Channel in carburetor casting to Idle Discharge Ports at the throttle edge. For closed throttle idling, all fuel is discharged through lower port. As soon as the throttle is opened for low speed running, additional fuel is discharged through upper port.

Cruising & High Speeds (& Wide Open Throttle operation)—When throttle valve is opened, this causes reduced suction on idle ports and increased suction on main nozzle so that fuel is discharged at main nozzle and idle system drops out. Fuel for main nozzle is metered by Main Adjustment Screw and is mixed with air admitted through holes in nozzle from main nozzle air bleed channel opening into air horn above venturi. This air is metered by Main Nozzle Air Bleed Restriction located in air bleed channel at top of carburetor main casting.

ADJUSTMENT:—Make adjustments in order as listed below. Preliminary adjustment will allow engine to be started and warmed up (other adjustments should not be made until engine thoroughly warm).

Preliminary Adjustment:—Close Main Adjustment Screw by turning to right (clockwise) until it is lightly seated, then back screw out exactly two complete turns. Close Idle Adjustment Screw by turning to right (clockwise) until it is seated, back screw out one turn, start engine and run until warmed up.

Main (High Speed) Adjustment:—With engine warm and running, open throttle approximately ⅓ of full travel. Turn Main Adjustment Screw in or clockwise slowly (¼ turn at a time) until engine slows down due to lack of fuel, then back screw out very slowly (⅛ turn at a time) until maximum speed is secured. Correct setting will be approximately 1½-1¾ turns open of screw from inner seated position.

Idle (Low Speed) Adjustment:—Set throttle lever stopscrew so that engine runs at faster than normal idling speed. Close throttle. Turn Idle Adjustment Screw in or clockwise to lean mixture until engine begins to miss, then back screw out slowly until engine fires smoothly. Clear manifold by opening throttle momentarily, then recheck idle setting. Correct setting will be approximately ¾-1¼ turns of the screw from the inner seated position. Set throttle lever stopscrew for idling speed of 7 M.P.H. when pulling car in high gear.

PERFORMANCE:—Should be satisfactory for operation at altitudes less than 5000 feet if adjustments correctly made as directed above. If performance not satisfactory, check adjustments and tune up engine (see car model page for tune up data). See Trouble Shooting Section below.

FLOAT LEVEL:—Fuel Level—Should be 23/32" below top edge of float bowl or just below lower edge of inspection hole on side of float bowl (remove inspection hole plug to check level).

Float Level—To check, invert upper body assembly (air horn and float bowl cover with complete float mechanism), measure from face of body gasket to top of raised seam on each float. Distance should be 1 27/64". To adjust, bend each float lever arm **using extreme care to secure equal setting for both floats.**

DISASSEMBLY CAUTION—Before taking off Upper Body Assembly (to check or adjust float level), remove Idle Adjustment Screw, Spring and Idle Tube to avoid damage to tube and main nozzle when upper body assembly lifted off.

Inlet Needle Valve & Seat—Part No. 07440 (matched set).

CHOKE:—Plain butterfly type. Adjust choke linkage so that choke valve is wide open when dash control button is pushed all the way in.

TROUBLE SHOOTING:—Engine Stalls—Check idle speed setting, tighten throttle stop retaining screw, check idling or low speed adjustment, see that idle adjustment screw not ringed, clean idle tube and idle fuel channels with air, check float level (see Fuel Level Note below).

Flatness on Acceleration—Check Idle (Low Speed) and Main (High Speed) Adjustments, check float level (if engine loads up, see Fuel Level Note below), clean idle tube and idle fuel channels with air.

Performance Unsatisfactory—Tune up engine (see car model page for tune up data), check all carburetor adjustments.

Fuel Level Note—If fuel level in float bowl rises above setting, dismantle needle valve, clean needle valve and seat with a soft clean cloth, reseat needle valve by tapping with finger several times while turning needle around. Reset float level. If level not maintained, install new needle valve and seat.

SERVICING:—Before removing Upper Body Assembly (air horn and float bowl cover), remove Idle Adjustment Screw and spring, unscrew and remove Idle Tube through adjusting screw hole—this is important to avoid damage to tube and nozzle when upper assembly lifted off. Idle tube positioning pin in main

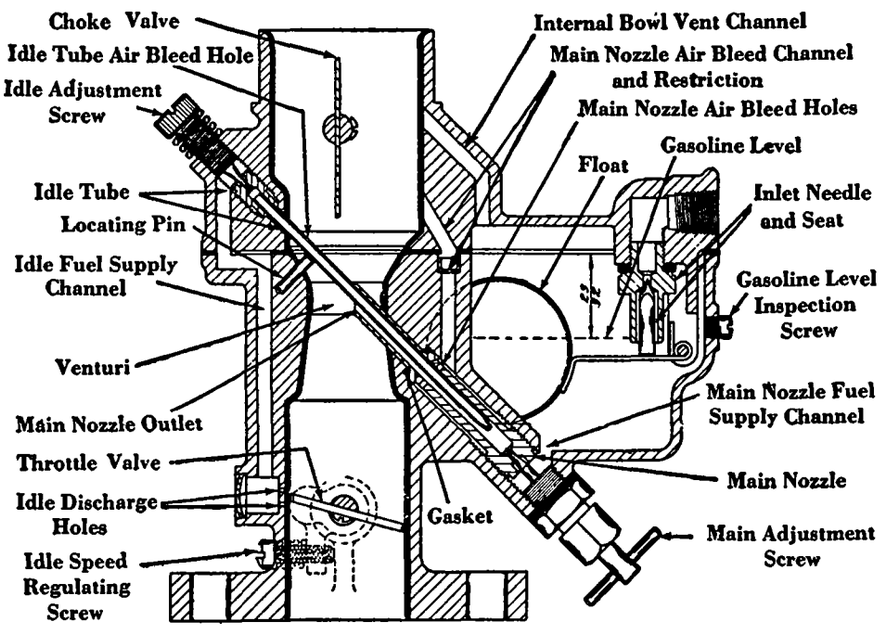

body casting is not removable. Main nozzle outlet and gasket are staked in main body casting and cannot be removed (nozzle base can be removed through main adjustment screw plug hole after adjustment screw assembly removed). Blow out all jets and channels with compressed air—do not use wires or drills to clean passages. See that float bowl vent to air horn is open and clean.

Reassembly—Replace all worn or damaged parts with genuine Tillotson service parts. Use all new gaskets and replace parts in same order as removed. See that nozzles and plugs are tight. Set float level and adjust carburetor.

SERVICE PARTS: Gasket Set—Tillotson Part No. 07144.

Repair Parts Kit (incl. Gasket Set)—Tillotson Part No. 08196.

Tillotson Jet Calibration

Part	Tillotson Part No.
Idle Tube	07009
Idle Adjusting Screw	06336
Main Nozzle	07973
Main Adjusting Screw	03076
Throttle Valve	06232
Inlet Needle & Seat (Matched Set—incl. spring & gasket)	07440

TILLOTSON MODEL U-1A

U-1A—WILLYS, MODEL 37 (1937), 38 (1938), 48 (1939).

TYPE:—New design, Triple Flexible or Expanding Automatic Venturi, downdraft type. Venturi system consists of a three stage or triple venturi system which insures high velocity at nozzles for all speeds. Air flow through main venturi is cut off at speeds below 35 M.P.H. by the flexible reeds which close against the outer wall of the intermediate venturi so that all air flows through small venturi and intermediate venturi and velocity at tip of primary nozzle (in throat f small venturi) is at maximum. With reeds closed, no suction is applied to secondary nozzle. When reeds open, secondary nozzle comes into action and fuel is discharged through both nozzles.

Fuel System (Closed Throttle Idling & Low Speed):—Fuel is taken from primary nozzle well up through fuel channel to cross-passage at air horn flange and mixed with air admitted through air intake port located in carburetor wall at top edge of main venturi. Idle adjusting screw controls this air port. Fuel metered by restriction at top of fuel channel, and fuel mixture metered by restriction at top of channel leading to discharge ports at throttle edge. For closed throttle idling, fuel mixture is discharged through lower port below the throttle. When throttle is opened for low speed running, additional fuel is discharged through top (low speed) port also.

Driving Range (20 M.P.H. & Above):—At approximately 20 M.P.H. when air velocity through small venturi is at maximum, fuel metered by the main adjustment needle valve in the nozzle base is drawn up through nozzle passage and discharged through primary (lower) nozzle. At approximately 35 M.P.H. air velocity flexes the four Velocity Control Reeds to the open position so that air flows through main venturi and suction at tip of secondary (upper) nozzle in main air stream is sufficient to bring this nozzle into action supplementing the discharge of the primary nozzle. Fuel for secondary nozzle is metered by restriction in fuel channel in nozzle base.

High Speed & Full Power Operation:—When throttle opened beyond ¾ open position, power jet valve pin is depressed by extension on accelerating pump stem yoke, opening power jet ball check valve, and permitting additional fuel to flow through power jet channel to secondary nozzle.

ADJUSTMENT:—For complete carburetor adjustment, Main adjustment needle valve and Idle adjusting screw must be adjusted in order as given below. If carburetor completely out of adjustment so that engine can not be warmed up, make preliminary adjustment as follows.

Preliminary Adjustment:—Close main adjustment needle valve by turning clockwise or in, lightly, until seated, then back out exactly 3 full turns. Close idle adjusting screw by turning clockwise or in until seated, then back out exactly ¾ turn. Start engine and run until warm.

Main Adjustment:—Open throttle valve so that engine speed is 30-35 M.P.H., turn main adjustment in or clockwise slowly until engine speed falls off due to lack of fuel, then turn main adjustment slowly out until engine picks up and maximum speed is obtained, finally turn main adjustment in ⅜ turn (this setting will give best performance and economy). Final setting is approximately 2⅜ turn open.

Idle Adjustment:—Close throttle, adjust throttle stopscrew so that idling speed is slightly faster than normal. Turn idle adjusting screw counter-clockwise or out until engine begins to miss, then turn screw in until engine fires smoothly. Open throttle momentarily to clear manifold and recheck idle setting. Final setting should be approximately 1 turn open. Set throttle stopscrew so that idling speed is 7 M.P.H.

PERFORMANCE:—Should be satisfactory if carburetor correctly adjusted as directed above. No changes required for operation at altitudes up to 5000 feet.

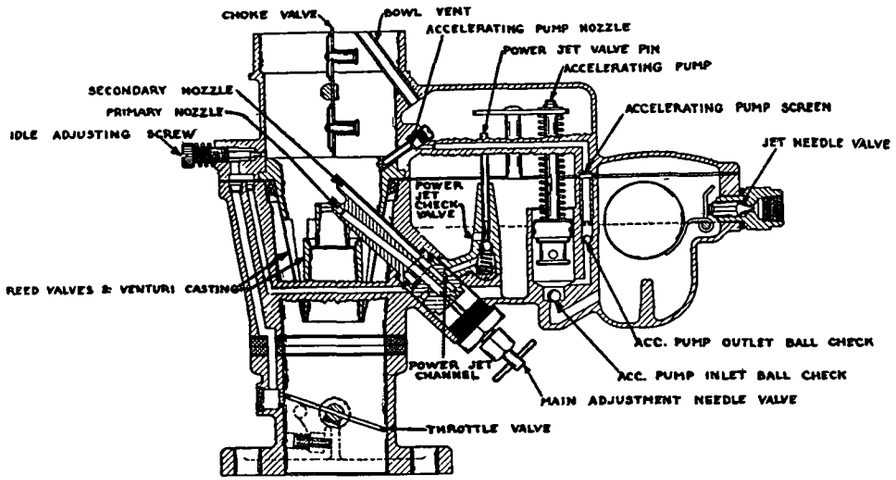

POWER JET:—Consists of ball type check valve operated by accelerating pump and supplying additional fuel to secondary nozzle (see Fuel System above). N adjustment required.

ACCELERATING PUMP:—Fuel drawn into pump chamber through intake ball check valve (at lower end of pump cylinder) on upstroke of piston and discharged through outlet ball check valve and pump channel screen to pump nozzle on downstroke of piston when throttle opened for acceleration. Pump nozzle located in carburetor wall at upper edge of main venturi. Accelerating pump is not adjustable and should not require attention.

FLOAT LEVEL:—Fuel level in float bowl set at ¾" below top edge of bowl or approximately even with the top of the float lever pivot pin with the engine idling. To check float level, remove air horn casting and gasket. Correct float level by bending float lever.
NOTE—Bowl is vented in air horn and float bowl cover must be tight.

CHOKE VALVE:—Manual control type. Fitted with two spring-controlled poppet-type relief valves to prevent overchoking. See that choke valve is fully closed with dash control button pulled out and wide open when dash control button pushed all the way in.

TILLOTSON MODEL U-1B

WILLYS-OVERLAND, MODEL 39 (1939)
WILLYS, PICK UP MODEL 440, PANEL DELIVERY MODEL 440P (1940)

TYPE:—High velocity, triple flexible expanding or automatic venturi type with venturi and reed design similar to that used on Model U-1A (Willys). Main nozzle and metering jet design (fixed type—no high speed adjustment) is new and perates as follows:

Fuel System (Closed Throttle Idling & Low Speed):—Fuel for idling is taken through side holes in main metering jet and channel to mixing chamber at idle adjusting screw (fuel metered by restriction at top of channel) where is mixed with air admitted through two bleeder openings (upper hole has restriction and leads to air horn above venturi assembly, lower hole leads to mixing chamber below venturi—see illustration) and controlled by the idle adjusting screw. Fuel mixture is then taken down through vertical channel (with restriction at upper end) to idle discharge ports at the throttle edge. For closed throttle idling, fuel mixture is discharged through lower port only. As soon as throttle is cracked open, additional fuel is discharged through top port. Idle system supplies fuel for car speeds up to 18 M.P.H.

Driving Range (18-60 M.P.H.):—At speeds above approximately 18 M.P.H., air velocity at nozzle tip in small venturi is sufficient to bring this nozzle into action, the fuel discharged through this nozzle being metered by the fixed metering jet at the nozzle base. The flexible reed valves are calibrated to maintain maximum velocity at nozzle tip (closed at low speed, open automatically at higher speeds) and correct air-fuel ratio throughout the entire driving range. Whenever throttle is opened for acceleration, additional fuel is discharged through accelerating pump nozzle above venturi (see Accelerating Pump below).

High Speed or Wide Open Throttle Operation:—At speeds above 60 M.P.H. or when throttle more than ¾ open, power jet valve plunger depressed by pump arm and opens power jet valve so that additional fuel is discharged through power jet in carburetor wall at top of venturi assembly. There is an air bleed at the top of the power jet fuel channel.

Main Nozzle Note—All fuel discharged by main nozzle through lower opening in nozzle tip. Upper opening in nozzle tip is not used. Use great care not to damage either opening in nozzle tip when servicing main nozzle as change in shape will alter air flow past nozzle and change discharge characteristics.

IDLE ADJUSTMENT:—With engine warmed up and choke valve wide open, set throttle lever stopscrew for slightly faster than normal idle speed, turn idle adjusting screw counter-clockwise (out) until engine begins to miss, then turn screw clockwise slowly until engine fires smoothly. Final setting should be approximately 1 turn open from inner seated position. Adjust throttle lever stopscrew for idle speed of 7 MPH in high gear. See tune-up data on car model page for complete tune-up instructions.

NOTE—If carburetor out of adjustment, turn idle screw in until it is seated, then back screw out exactly ¾ turn. Warm up engine and adjust as directed above.

PERFORMANCE:—Should be satisfactory if idle adjustment correctly made. Main metering jet is fixed type and no high speed adjustment provided. Standard metering jet should be satisfactory for operation at altitudes up to 3000 feet. For permanent operation at altitudes greater than 3000 ft., install high altitude metering jet (nozzle base) marked 'ALT".

ACCELERATING PUMP:—Fuel is drawn into pump cylinder through intake ball check valve (in bottom of cylinder) when throttle is closed, and is discharged through outlet ball check valve, strainer (in plug at bowl cover flange) and pump jet in air horn when throttle is opened for acceleration. Upper section of pump piston is spring-loaded on stem to provide a prolonged pump discharge. Adjustment—On models where two holes provided in pump lever, engage link in hole nearest throttle shaft if flatness encountered on acceleration.

POWER JET:—Consists of a ball check valve controlling fuel discharge through power jet in carburetor wall above venturi and operated by accelerating pump arm (see Fuel System 'High Speed' above). No adjustment required.

FLOAT LEVEL:—Should be 13/16" below top edge (gasket seat) of bowl with engine running. To check float level, remove air h rn and bowl cover assembly, remove gasket, use height gauge to measure actual fuel level below top edge of bowl. Do not press on float lever when checking (valve needle is spring-loaded which will permit some float movement with valve closed). To adjust, bend float lever slightly.

NOTE—When installing needle valve or float make certain that small spring is in place in hollow stem of valve needle. This spring is intended to minimize float movement and float level changes on rough roads.

CHOKE:—Manual control type, fitted with two poppet type relief valves. See that choke linkage properly adjusted to open and close choke valve fully.

SERVICING:—When servicing carburetor, blow out all channels and jets with compressed air (do not use wires or drills in jets or restrictions). Use extreme care not to bend valve reeds (if necessary to remove reeds, install short thick reed first and longer thin reed on outside). See that power jet valve ball seats tightly to prevent fuel discharge through power jet at intermediate speeds (check by

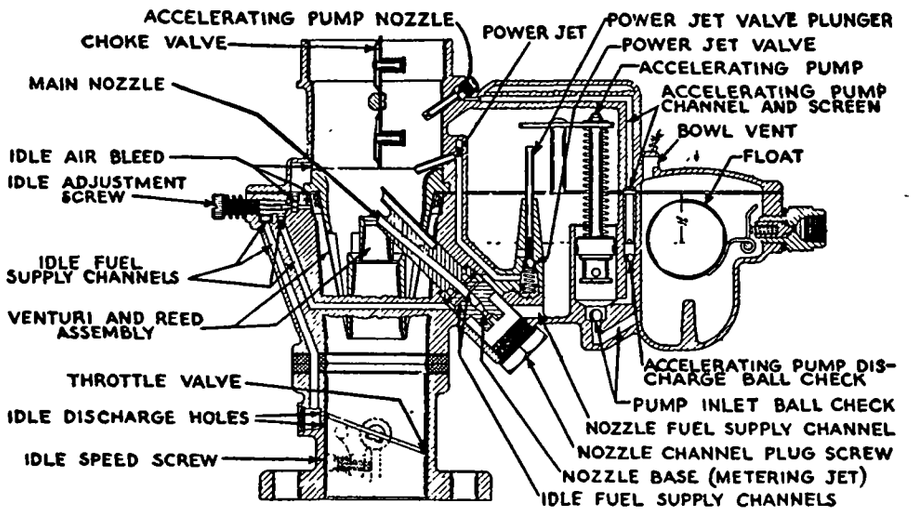

noting jet with engine running) and that plunger installed with small end down against valve ball. Make certain that pump plunger leather is good condition and contacts pump cylinder wall at all points (replace complete plunger assembly if leather worn or damaged). To remove nozzle, take out plug below metering jet, clean threads in casting thoroughly with compressed air, use socket wrench to remove metering jet, then remove nozzle from below taking great car not to damage threads in casting (if necessary, tap nozzle lightly on solid portion between upper and lower nozzle openings on upper end).

Reassembly—Replace all worn or damaged parts with genuine Tillotson service parts, use all new gaskets and re-install parts in same order as removed. Check gasoline level and idle adjustment as directed above.

TROUBLE SHOOTING:—**Motor stalls when idling**—Tighten throttle lever retaining screw and locknut, check idle adjustment. Remove idle adjusting screw, bl w out all idling system channels and restrictions, clean metering jet with compressed air. Check fuel level. Tighten air horn and bowl cover retaining screws and carburetor mounting bolts, see that gaskets at these points are in good condition.

Flat Spots—Remove pump jet plug, clean pump jet and channels with compressed air. Remove air horn and bowl cover assembly, clean pump strainer (in pump outlet channel at air horn flange).

ZENITH MODEL 28BV10

Part No.① **Used On:**

10569-A—Willys Jeep Station Wagon, Model 4-63 (Late 1948)—Serial No. 54134 Up.

①—Outline No. stamped on round metal tag riveted on top of float bowl cover. Use in ordering parts.

►**REPLACEMENT CARBURETOR—No. 10569B.** This field replacement carburetor omits some parts used in original equipment carburetor No. 10569A and has the following new parts: Air Intake Body No. A4-15, Choke Plate No. C101-1, Choke Plate Screw No. T11S6-5, Choke Bracket No. C109-1, and Choke Shaft & Lever No. C108-7.

DESCRIPTION: Single barrel, plain tube, downdraft type with double venturi. Carburetor has vacuum controlled power jet valve system and positively operated accelerating pump linked to throttle lever.

Fuel System: Consists of an Idle Fuel System, Main Jet System, Power Jet System, Compensating System, and Accelerating Pump System which operate as follows:

Idle Fuel System—Fuel for idling is taken from main jet well and is metered by calibrated hole in side of the Idling Jet. At this point it is mixed with air admitted through two Air Bleeds opening in the carburetor throat. Lower air bleed is fixed type, upper air bleed is controlled by Idle Adjusting Screw (idle mixture adjustment). From this point, fuel mixture is taken down through a passage and discharged through the idle ports at the throttle edge. Idle ports consist of drilled openings in the priming plug. (CAUTION—Priming plug must never be removed—holes are drilled after throttle valve installed as described under Throttle Valve below). Idle system functions at car speeds up to approximately 20 MPH. when main jet system takes over.

Main Jet System—Fuel is metered by Main Jet in bottom of float bowl and is discharged through the Main Discharge Jet in the throat of the secondary (small) venturi. This fuel discharge is controlled by the Compensating System.

Power Jet System—Consists of a power valve controlled by a spring-loaded vacuum piston assembly which by-passes fuel directly to the main discharge jet. Valve is normally closed (piston held up against spring tension by manifold vacuum) but is opened by the piston stem whenever manifold vacuum drops off (sustained high speed, wide open throttle full-load operation, or sudden acceleration) permitting fuel to flow directly to the main discharge jet. This fuel is metered by calibrated hole in lower end of power jet valve and is controlled by the Compensating System.

Compensating System—Consists of a Well Vent (air bleed) and the Main Discharge Jet. Fuel discharge is controlled by the size of the air bleed opening in the Well Jet and the size of the fuel passages in the Main Discharge Jet. These are calibrated parts.

Accelerating Pump System—Pump arm and plunger stem are positively operated by throttle lever (pump piston is spring-loaded on plunger stem to prolong discharge on sudden throttle openings). Fuel is drawn into pump cylinder through intake check valve in bottom of cylinder when throttle is closed, and is discharged through outlet ball check valv and Accelerating Jet into the throat of the primary (large) venturi when the throttle is opened. This fuel flow through the pump passages closes the Air Vent Check Valve (disc valve directly above outlet ball check) which vents the pump system when it is not in operation.

IDLING ADJUSTMENT: Adjust only when engine is warm (choke valve wide open, fast idle inoperative). Set throttle lever stopscrew for idling speed of 600 RPM. or 8 MPH. Adjust Idle Adjusting Screw for smooth idling (screw controls air and should be turned in for richer mixture, out for leaner mixture). Recheck idle speed.

PERFORMANCE: Should be satisfactory if idling adjustment correctly made. Main metering jet is fixed type and should not be changed for normal operating conditions. See Jet Calibration Table below.

ACCELERATING PUMP: Pump stroke is adjustable for seasonal requirements by engaging hairpin cotter in correct groove of pump plunger stem (directly above pump rod arm—accessible by removing air horn and bowl cover assembly) as follows:
Upper Groove—Minimum Stroke (hot weather).
Center Groove—Medium Stroke (normal operation).
Lower Groove—Maximum Stroke (cold weather).

FLOAT LEVEL: 29/64" from upper edge of seam at free end of float to gasket seat on bowl cover with needle valve seated (bowl cover and float inverted, float hanging freely).

►***CAUTION—Do not compress spring in valve stem which will cause incorrect float setting. Allow float to hang freely on inverted cover when checking float level.***

FAST IDLE: Consists of a fast idle cam linked to the choke valve lever. Cam serves as the stop for the throttle lever stopscrew and opens the throttle valve to a fast idle position when choke valve is closed for starting. No adjustment is required—see choke valve data below.

►***CAUTION—Fast idle cam must be in hot or slow idle position (stopscrew resting on flat of cam) when idle speed is adjusted.***

CHOKE: Choke valve is manually controlled and has poppet type relief valve. Adjust control cable so that choke valve is fully closed when choke button is pulled out, and fully open when button pushed in. Check fast idle rod and make certain that fast idle lever on choke valve shaft is positioned so that it allows choke valve to close fully with fast idle cam in fast idle position.

FUEL FILTER: Consists of a stack of filter discs assembled on the filter head which provide edge filtering of fuel (fuel flows in through discs to channel in filter head and out through side hole to channel in carburetor casting).

Cleaning Filter—Remove filter head and element. Clean sump with soft cloth (use care not to wipe dirt or water into fuel channel in carburetor casting). Remove disc element from head (discs can then be separated slightly), wash element in gasoline, blow out with compressed air (CAUTION—use only moderate pressure). When reinstalling filter head, make certain gasket is in good condition.

CARBURETOR DISASSEMBLY: Disconnect fast idle rod, remove fuel filter head (see above), remove bowl cover and air horn attaching screws. Raise bowl cover slightly, loosen gasket (to avoid damage to float), lift off bowl cover and float assembly. Remove float by pushing axle pin out of slotted end of hinge bracket. Remove fuel valve seat (use Tool C161-85). Remove vacuum cylinder assembly (use Tool C161-10 or 7/16" thin-wall box wrench). Remove idle adjusting screw and spring, main jet plug, pump lever nut and lockwasher (loosen lever on shaft), and bowl casting-to-throttle body casting screws. Lift bowl casting off and at the same time disengage pump lever from throttle valve shaft. Push pump arm down and disengage link from lower end. Remove large venturi and gasket. Pull pump rod and pump assembly out (CAUTION—file off any burrs on lower end of rod at link hole first). Remove main discharge jet (use Tool C-161-1), power jet and valve assembly (use Tool C-161-9), main jet and gasket (use screwdriver), idling jet, well vent (use Tool C-161-80 or 3/16" wrench), pump channel plug and accelerator plug (use Tool C-161-21 Extractor), pump air vent check valve assembly (use Tool C-161-5). Invert bowl and allow retainer washer, weight, and discharge check ball to drop out. Remove pump inlet check valve (bend retainer lugs up,

CONTINUED ON NEXT PAGE

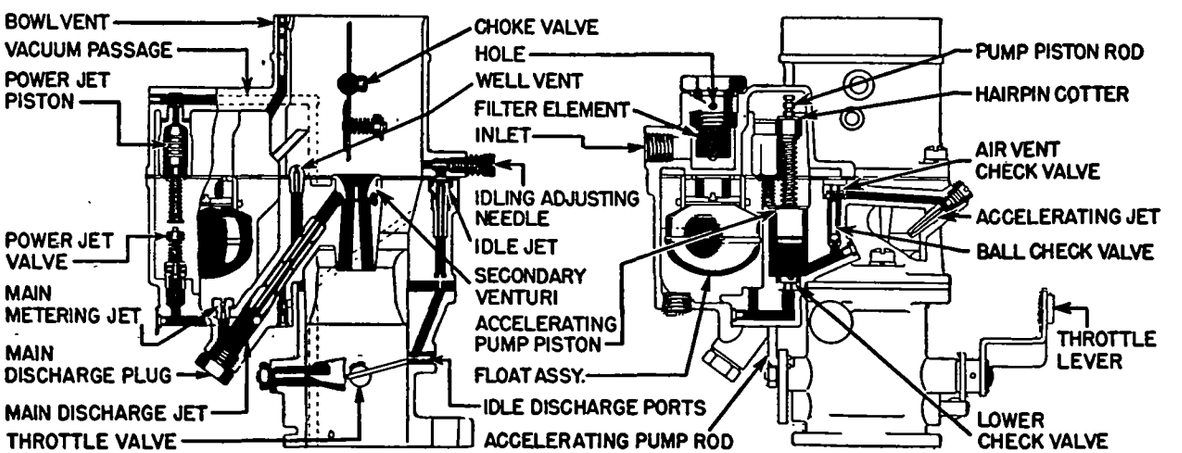

ZENITH MODEL 28BV10 CARBURET R

ZENITH MODEL 28BV10 (C nt.)

remove valve disc, remove valve assembly with Tool C-161-5—Do not remove valve seat). Remove pump channel lead plugs (use #46 drill and C-161-21 Extractor). If Choke Valve & Throttle Valve to be removed, see data under Carburetor Assembly below. *CAUTION—Do not remove the following parts: Pump Intake Check Valve Seat, Secondary Venturi, Idle Channel Bushing, Priming Plug (see Throttle Valve Data).*

CARBURETOR REASSEMBLY: After cleaning all parts, reassemble carburetor using new jets, plugs, and gaskets and note the following important precautions:

Throttle Valve & Shaft—Idle ports in priming plug are drilled in assembly after throttle valve installed and correct relationship between valve and ports must be maintained in service. If necessary to replace valve, **before removing old valve,** back off stopscrew so that valve completely closed, mark inside wall of throttle body at throttle valve edge. File off riveted ends of throttle valve screws, remove screws and valve, withdraw shaft. When installing new valve, check valve position with relation to mark on carburetor wall and select a valve which fits close to mark when installed. Rivet ends of throttle valve attaching screws.

►*CAUTION—Use extreme care not to spring shaft (use small mandrel in vise and light hammer (tinners riveting hammer).*

Choke Valve & Shaft—If old valve to be removed, file off riveted end of valve attaching screws before removing screws. New screws must be riveted after valve installed.

►*CAUTION—Use extreme care not to spring shaft (use small mandrel in vise and light hammer (tinners riveting hammer).*

Main Jet—Use new gasket with this jet.

►*CAUTION—Main Jet is marked by Star on head to prevent confusion with Compensator Jets used in other carburetors. Use only star-marked jets (compensator jets have shorter calibration length and will change metering characteristics of carburetor if installed by mistake).*

Power Jet Valve—Do not use a gasket under this valve. Do not attempt to change spring tension of valve or vacuum piston assembly.

Main Discharge Jet—Do not use a gasket with this jet. Use tool C-161-1 to tighten jet securely.

Well Vent—Do not use a gasket under this vent. Use tool C-161-80 or 3/16" wrench to install vent.

Idling Jet—Do not use a gasket under this jet. Make certain that air bleed opening at side of idling jet seat in body is open and clean.

SERVICE PARTS: Gasket Set—Zenith No. C181-94. **Repair Kit**—Zenith No. K-741.

ZENITH JET SPECIFICATIONS
Carb. Model 28BV-10—Outline No. 10569-A

Part	Size	Part No.
Venturi	#28	C38-7--28
Main Jet①	#27	C52-7--27
Main Discharge Jet	#80	C66-70-2--80
Well Vent Jet	#28	C77-14--28
Accelerating Jet	#13	C55-8--13
Power Jet Valve	#16	C97-12--16
Idle Jet	#14	②C56-3--14
Fuel Valve Seat③	#35	④C81-53--35

①—Use only jets marked by STAR on head.
②—Replaces #12—Part No. C56-3--12.
③—Matched Valve & Seat Assembly.
④—Spring-loaded type. Replaces No. C81-1--35.

ZENITH MODEL 61A5

BANTAM, SUPER FOUR SERIES 65 (1940-41)

TYPE:—Plain tube, updraft, 'balanced' type with float bowl vented through drilled hole in carburetor casting which opens into air horn. Fuel jets consist of a Low Speed or Idling System and a High Speed or Main Jet System in conjunction with a Compensating System which operate as follows:

Idling System—Fuel for closed throttle idling and low speed operation is taken from the main discharge jet well through a cross-drilled passage in the lower end of the main discharge jet and up through the idle fuel channel to the Idle Jet which meters this fuel. As the fuel leaves the idle jet it is mixed with air admitted through the Idle Air Channel and controlled by the Idle Adjusting Screw. The fuel mixture is then discharged through the Priming Plug port into the air stream at the throttle edge.

Main Jet System—At higher engine speeds, fuel is discharged directly from the main discharge jet into the throat of the venturi and the idling system drops out. This fuel is metered by the Main Jet located in the fuel channel below the main discharge jet and the discharge jet is air bled by admitting air from the idle air channel through the Well Vent and drilled cross-channels in the lower end of the main discharge jet. This well vent and air bleed channel form the Compensating System. The main jet and compensating system are not adjustable but the main discharge jet delivery can be made richer or leaner by changing the main discharge jet or the well jet (see Performance data below).

IDLE ADJUSTMENT:—Idle adjusting screw controls air for the idle fuel mixture. Adjust only when engine thoroughly warmed up and choke valve wide open. Set throttle stopscrew so that engine idles at 6 MPH., turn idle adjusting screw in or clockwise for richer mixture, out or counter-clockwise for leaner mixture until engine fires smoothly. Final position of adjusting screw should be 1-1½ turns out from inner seated position. Check idle speed and readjust throttle stopscrew.

CAUTION—If idle adjusting screw must be turned in less than ¾ turn from inner seated position for good idling performance, check carburetor for clogged idle channels and jet or for air leaks at gasket between main body and throttle body gaskets (see Servicing below).

PERFORMANCE:—Performance should be satisfactory if Idle Adjustment correctly made as directed above. If necessary to change main discharge jet fuel delivery calibration for special operating conditions, this fuel mixture can be made richer by either increasing the size of the Main Discharge Jet or decreasing the size of the Well Vent. The fuel mixture can be made leaner by either decreasing the size of the Main Discharge Jet or increasing the size of the Well Vent. See Jet Calibration Table below.

FLOAT LEVEL:—Fuel Level—Fuel level in bowl should be 13/32-15/32" below top edge (gasket seat) f float bowl.

Float Level—Bottom f float at free end should be 1 5/32" (plus or minus 3/64") from the gasket seat of the throttle body (bowl cover) with the needle valve closed. Check by inverting throttle body.

Adjustment—Manufacturer recommends that no attempt be made to correct float level by bending float arm. Install new parts to correct level.

CHOKE:—Butterfly type with poppet type relief valve. When checking choke linkage, see that choke valve is wide open when choke control button on instrument panel is pushed in, and that valve is fully closed when button is pulled out.

SERVICING NOTES:—Always use new Body Gasket #C142-16 between main body casting and throttle body casting whenever carburetor is dismantled for cleaning. Carburetor is 'balanced' type and air leaks at this point will upset carburetor performance.

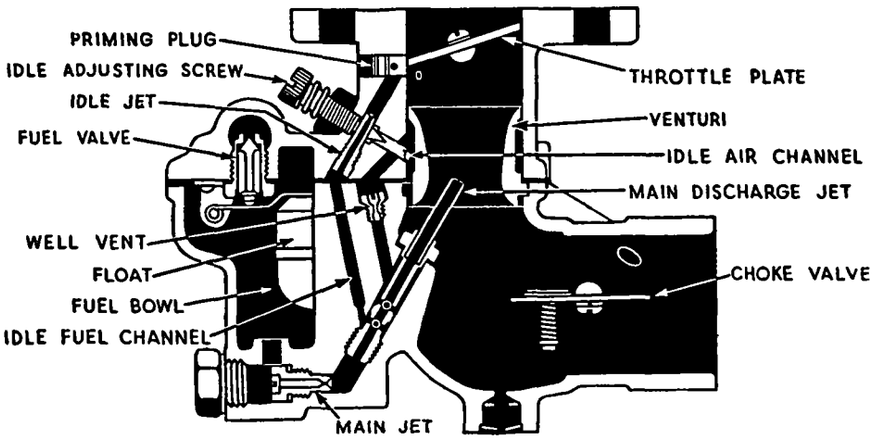

ZENITH JET SPECIFICATIONS
Bantam—Model 61A5—Outline 9321

Part	Size	Part Number
Venturi	#16	C38-35
Main Jet	#18	C52-6-1
Idling Jet	#15	C55-6
Main Discharge Jet	#60-1	C66-26-1
Well Vent	#20	C77-18
Fuel Valve & Seat	#25	C81-17

NOTE—Fuel valve and Fuel Valve Seat (Float Valve) are furnished in matched sets. Always replace both parts as a unit.

CARBURETION EQUIPMENT INDEX

NOTE: For CARBURETORS and CARBURETOR JET SPECIFICATIONS see The CARBURETOR INDEX in CARBURETOR SECTION.

AUT MATIC CH KES — Page.

- Cadillac Semi-automatic ... 1736
- Carter Climatic Control (Single Barrel Carbs.) ... 1721
- Carter Climatic Control (Dual Carbs.) ... 1724
- Delco-Remy Control (2 & 3 Cyl.), 498 ... 1728
- Delco-Remy Control, 490A; 1990001, 101, 2 ... 1729
- Holley (Chandler-Groves) ... 1730
- Lincoln-Mercury ... 1734
- Sisson "AC-600, 700, 750, 758" ... 1735
- Stromberg
  - Type C ... 1737
  - AA-25, AAV-25 Carburetors ... 1740
  - AAO-161 Carburetor ... 1740
  - AAV-16, 167; AAV-26, 267 Carbs ... 1741
  - BXO-26 Carburetor ... 1739
  - BXOV-26 Carburetor ... 1743
  - EE-23, EX-23 Carburetors ... 1738
  - EE-14 Carburetor ... 1739
  - EE-15, EE-25 Carburetors ... 1740
  - EE-16 Carburetor ... 1743

CADILLAC SEMI-AUTOMATIC CHOKE CONTROL

- With Detroit Carburetors ... 1736
- Triple Range (Stromberg Carbs.) ... 1740

CARTER CAR STARTER ... See Electrical Equipment Section

FAST IDLES

- Buick Cold Idle Control ... 1727
- Carter
  - Drop Bar ... 1723
  - Single Barrel Carburetor ... 1723
  - Dual (WDO) Carburetors ... 1726
  - Dual (WCD) Carburetors ... 1727
- Chrysler Eight (Stromberg) ... 1731

FAST IDLES (Continued) — Page.

- Holley (Chandler-Groves) ... 1730
- Lincoln Mercury ... 1734
- Stromberg
  - With Type C Automatic Choke ... 1736
  - Packard 12 ... 1742
  - AA-25, AAV-25 Carburetors ... 1740
  - AAO-161 Carburetor ... 1740
  - AAV-16, 167; AAV-26, 267 Carbs ... 1741
  - BXO-26 Carburetor ... 1739
  - BXOV-26 Carburetor ... 1743
  - EE-23, EX-23 Carburetors ... 1738
  - EE-14 Carburetor ... 1739
  - EE-15, EE-25 Carburetors ... 1740
  - EE-16 Carburetor ... 1743

FUEL PUMPS

- A. C.
  - Type AA (Fuel & Vacuum) ... 1708
  - Type AB ... 1709
  - Types AC, AD, AF, AG, AK ... 1712
  - Types AL, AM (Fuel & Vacuum) ... 1713
  - Type AH ... 1710
  - Type AJ (Fuel & Vacuum) ... 1711
  - Type AN (Vacuum Pump only) ... 1712
  - Types AR, AS ... 1713
  - Type AT ... 1710
  - Types AU, AW, AX ... 1713
  - Type B ... 1703
  - Type D ... 1703
  - Type E ... 1704
  - Types F, I, J (Fuel & Vacuum) ... 1705
  - Type P ... 1712
  - Type R ... 1706

FUEL PUMPS (Continued) — Page

- Type T ... 1707
- Type W ... 1712
- Type X (Fuel & Vacuum) ... 1709
- Autopulse Electric ... 1714
- Carter Mechanical ... 1716
- King-Seeley Electric ... 1715
- Stewart-Warner Electric ... 1715

FUEL PUMP TESTING & TROUBLE SH OTING ... 1702

GASOLINE GAUGES

- A. C. Electric ... 1717
- Auto-Lite Electric ... 1718
- Auto-Lite (Motometer) ... 1719
- King-Seeley (K-S) Electric ... 1720
- Stewart (Stewart-Warner) Electric ... 1719

SLOW CLOSING THROTTLES

- Chrysler Six Fluid Drive ... 1732
- Chrysler 8 Fluid Drive (Carter B&B) ... 1732
- Chrysler 8 Fluid Drive (Stromberg) ... 1731
- De Soto Fluid Drive ... 1732
- Dodge Fluid Drive (Carter B&B) ... 1732
- Dodge Fluid Drive (Stromberg) ... 1733
- Packard Throttle Guard ... 1742

STROMBERG STARTING SWITCH ... See Elec. Equip. Sec.

SUPERCHARGERS ... See Miscellaneous Section

THROTTLE GUARDS

- Chrysler 8 Fluid Drive ... 1731
- Packard ... 1742

THROTTLE KICK-DOWN SWITCHES

- Chrysler & De Soto 1941-48 ... 1733
- Others ... See Transmission Section

FUEL PUMP TESTING

NOTE:—Manufacturer recommends that Fuel Pump Analyzer No. 1521551 be used in making these tests. All tests should be made with the fuel pump in place on the engine and the engine running to drive the pump. Engine speed should be 30-35 MPH (for capacity test), lowest possible idling speed (pressure test).

TESTING:—Test equipment should be connected at pump outlet. Disconnect fuel line from pump to carburetor at pump, use special fitting and connect 'T' connection, use rubber tubing to join gasoline line to end of 'T', connect test equipment (bleeder line, pressure gauge and shut-off valve to open and close bleeder line) to side opening of 'T' connection. Operate engine and make Capacity Test and Pressure Test as described below. Capacity and Pressure Specifications on each type pump listed in tables below. If pumps do not test to these specifications, manufacturer recommends that pump be replaced with a replacement exchange pump. Refer to individual article for each pump type on following pages for description and operation.

PUMP SPECIFICATIONS (ALL TYPES)

Type	Minimum Capacity	Maximum Pressure
A, B	1 Pint in 1 Minute	3½ lbs.
C, D	1 Pint in 45 Seconds	4¼ lbs.
E	1 Pint in 1 Minute	3½ lbs.
F	1 Pint in 45 Seconds	4½ lbs.
G	1 Pint in 45 Seconds	3½ lbs.
I	1 Pint in 45 Seconds	4½ lbs.
J,L,N,O,P,R,S,T,V,W,X,Y	1 Pint in 1 Minute	3½ lbs.
AA, AB	1 Pint in 45 Seconds	4½ lbs.
AC	1 Pint in 1 Minute	3 lbs.
AD, AE	1 Pint in 1 Minute	3½ lbs.
AF	1 Pint in 1 Minute	3 lbs.
AG	1 Pint in 45 Seconds	3½ lbs.
AH	1 Pint in 45 Seconds	3¾ lbs.
AJ	1 Pint in 45 Seconds	4 lbs.
AK	1 Pint in 45 Seconds	4½ lbs.
AL, AM	1 Pint in 1 Minute	3½ lbs.
AR	1 Pint in 1 Minute	3 lbs.
AS, AT	1 Pint in 1 Minute	4¼ lbs.
AU	1 Pint in 45 Seconds	4½ lbs.
AW	1 Pint in 45 Seconds	3¾ lbs.
AX	1 Pint in 45 Seconds	4¾ lbs.

REPLACEMENT PUMPS

Pump No.	Static Pressure (Lbs.) Min.	Max.
401, 402, 405	1½	4
403, 404	3	4¼
406, 409	1½	3
407	2	4
408, 410	1½	4
411, 419	2½	4
412, 413	1½	3½
414, 415, 416, 417	2½	3½
418, 420	3	4½
421, 423, 424, 436	2½	3½
422, 426, 427	3	4½
425	1½	4
428	2½	4½
429, 430	3	3¾
431	3	4
432, 433	1½	2¾
434	3	4½
435, 438	1½	4
436, 441	2½	3½
437	1½	2
439, 440, 452	3	4½
442, 445	3	4½
443, 444, 446	1½	3½
449	2	4
447, 448, 450	1½	3½
451, 453, 454	1½	3½
455, 457, 458, 459	2½	3½
456	2	3
460, 470	1½	3
461	1½	2½
462, 466, 469	3	4½
463	2¾	3½
464, 468, 473	3	4½
465, 467	2½	3½
471	1½	3½
472, 475, 476	2½	3½
474	2¾	4
477, 480	3	4½
478, 479	2½	3½

Pump No.	Static Pressure (Lbs.) Min.	Max.
481	3	3¾
482, 483, 484, 485	2½	3½
486, 490	1½	3½
487	2½	3½
488, 489	3	4½
491, 497, 498	2½	3½
492, 494, 499	3	4½
493, 495, 496	3	3¾
500, 507, 510	2½	3½
501, 503	1½	4
502	1½	3½
504, 509	2	3½
505, 506	3	4
508, 521, 523, 525	4	4¾
511, 512	2½	4
514, 517, 524	3	4
515	3	3¾
516, 519, 520	4	4¾
518	3	4½
527	2½	3½
528, 540, 544	1½	3½
529, 530	4	4¾
531	3	3¾
532, 533, 534	2½	3½
535, 536, 537, 539	4	4¾
538	1½	2½
541, 543	1½	2¾
542, 562	3	4
545	4	4¾
546, 548	1½	2¾
547	1	1¼
549	3	4¼
550, 554	1½	3
551	4	4¾
552, 553, 556, 559	1½	4
555	2	4
557	1½	3½
558, 560, 561	3	4¼
563	2½	3½

FUEL PUMP TROUBLE SHOOTING

FUEL PUMP UNIT

TROUBLE SHOOTING:—If the pump action is not satisfactory, check in accordance with the following table:

N Fuel r Insufficient Fuel at Carburetor:

(1) Gasoline tank mpty.
(2) Bent, kinked, leaky tubing or connections. Tighten all connections. Check condition of tubing. Replace if necessary.
(3) Dirty filter screen or loose sediment bowl. Take off glass sediment bowl, clean filter screen. Examine cork gasket and replace if necessary. Tighten bowl thumbnut securely.
(4) Loose valve plugs or caps. Examine gasket under head of plug, replace if necessary. Tighten plugs securely.
(5) Dirty or warped valves. Loose valve seat. Remove valve plugs and take out valves. Wash valves in gasoline. If warped or gummed, replace. Examine valve seat for smooth surface and see that seat is tight in pump body. Replace valves and assemble valve springs and plugs.
(6) Worn linkage, weak driving spring. Check for excessive play in linkage or worn rocker arm pin which will shorten pump stroke. Check driving spring (under diaphragm).
(7) Insufficient pump capacity. Check capacity (above).

Fuel Leakage through Vent in Pump Body:

(1) Worn or punctured diaphragm. Replace diaphragm.
(2) Loose diaphragm nut or defective gasket. See that nut on upper end of pull rod is tight and that gasket under nut is in good condition.

Fuel Leakage at edge of Diaphragm:

(1) Loose cover screws. Tighten cover screws securely (alternately around pump body).

Carburetor Flooding:

(1) Carburetor needle valve not seating. Check for worn valve or seat, sediment or other obstruction preventing seating of valve. Check float level.
(2) Excessive pump pressure. Check pressure (above).

VACUUM PUMP UNIT

TROUBLE SHOOTING:—If vacuum pump performance is not satisfactory as evidenced by faulty windshield wiper action, check as directed in following table:

Windshield Wiper operations slow at high speeds or when accelerating. Indicates that vacuum pump is not operating. Check windshield wiper lines and fittings. If no leaks are found, disassemble and inspect vacuum pump.

Oil Smoke in Engine Exhaust. Indicates punctured diaphragm. To check before disassembling pump, disconnect line between pump and manifold, operate pump, hold a piece of paper over pump outlet. Oil spray in exhaust from pump indicates a punctured diaphragm (if no oil spray noted at this point, oil smoke may indicate defective piston rings, etc.

AC TYPE B & D

TYPE B

AUBURN 6, MODEL 654 (1936-37)
AUBURN 8 & SCHGD. 8, MODEL 852 (1936-37)
CHRYSLER 6, MODELS C7 (1936), C16 (1937), C18 (1939), C22 RHD. (1939)
CHRYSLER 6, ROYAL & WINDSOR MODEL C28 (1941)
DE SOTO, MODELS S1,S2 (1936), S3 (1937), S5 (1938), S6 RHD. (1939)
DODGE, ALL MODELS (1936 to 1939)
DE SOTO, DELUXE & CUSTOM MODEL S8 (1941)
PLYMOUTH, ALL MODELS (1936 to 1939)

TYPE D

CADILLAC V12 & V16, ALL SERIES (1936-37)
CHRYSLER EIGHT MODELS C8, C9 (1936)
CHRYSLER IMPERIAL, C14 ('37), C19 ('38), C23 RHD ('39)
CHRYSLER CUSTOM IMP., C15 ('37), C20 ('38), C24 RHD ('39)
CORD, MODEL 810 ('36), 812 ('37)
HUPMOBILE EIGHT, 621-N ('36), 825-H ('38), 925-H ('39)
PIERCE ARROW, 8 & 12 CYLINDER MODELS (1936-37-38)

DESCRIPTION:—The AC Fuel Pump is a mechanically operated gasoline pump.

OPERATION: See AC Type "E" pump (following page) for complete description.

SERVICING:—Manufacturer recommends that pump not be disassembled further than required to make tests and repairs outlined below. Special fixtures should be used when reassembling these pumps.

TO REPLACE DIAPHRAGM:—Special fixtures and gauges are necessary in replacing diaphragms on A.C. pumps. To replace diaphragm, mount pump body rigidly in vise or on a test stand, take off pump cover (first mark pump cover and pump body to insure correct reassembly), take off nut on end of pull-rod, remove lock washer, alignment washer, upper diaphragm protector cup and old diaphragm. To install new diaphragm, assemble pull-rod gasket and lower diaphragm protector cup (with cup portion pointing down) on pull-rod, taking care that gasket is seated against shoulder on pull-rod. Then place four layers of diaphragm material on pull-rod and carefully line up holes, using a special locating ring or several cover plate screws. Place upper diaphragm protector cup on pull-rod (with cup portion pointing up), place hexagonal alignment washer on diaphragm protector, and assemble lock washer and pull-rod nut. Use special wrench to hold the alignment washer from turning while the nut is being tightened and keep diaphragm holes lined up with the locating ring or several of the cover screws until the nut is tight. This is very important. Place pump cover in position and insert cover screws. Before cover screws are tightened, insert end of alignment wrench in hole in pump body and force pull-rod and diaphragm assembly to extreme upper position and hold in this position while cover screws are evenly tightened (tighten screws alternately to secure correct alignment of pump cover).

TYPE B PUMPS
Fuel Pump Static Pressure

Pump No.	Min. (Lbs.)	Max.	Pump No.	Min. (Lbs.)	Max.
855235	1½	4	1521814, 1521817	1½	4
855406, 855409	1½	4	1521820	2½	4
855471	1½	4	1521851, 1521852	1½	4
855479, 855643	1½	4	1522130, 1522192	1½	4
855671, 855744	1½	4	1522226, 1522237	1½	4
855760, 855812	1½	4	1522995	2½	4½
855896, 855972	1½	4	1523049	1½	4
855985	1½	4	1523163	2½	4
856066, 856140	1½	4	1523164	2½	4½
856198, 856254	1½	4	1523184, 1523226	1½	4
1521014	2	4	1523320, 1523343	1½	4
1521117, 1521127	1½	4	1523713, 1523754	1½	4
1521211, 1521394	2½	4	1523774, 1523785	1½	4
1521382, 1521530	1½	4	1523932	1½	4
1521676	1½	4	1537227, 1537257	1½	4
1521687, 1521789	2½	4	1537439, 1537472	1½	4
1521799, 1521800	1½	4	1537518, 1537535	1½	4
1521806	2	4			

TESTING:—Test pump as directed in Fuel Pump Testing on preceding page before disassembling pump for inspection or repairs.

TROUBLE SHOOTING:—See article on Fuel Pump Trouble Shooting. Use Fuel Pump Analyser to check performance before removing pump from car.

PERFORMANCE:—See article on Fuel Pump Testing.

TYPE D PUMPS
Fuel Pump Static Pressure

Pump No.	Min. (Lbs.)	Max.	Pump No.	Min. (Lbs.)	Max.
855743, 855813	3	4¼	1523611	1½	3½
855880	3	4¼	1523636, 1523682	3	4¼
855975	3	3¾	1523683, 1523772	3	4¼
856062	3	4¼	1523686	5	6
856105	3	3¾	1523777	1½	3
856107, 856195	3	4¼	1523786, 1523787	3	4¼
856196, 856259	3	4¼	1523791, 1523833	3	4¼
856266	1½	3½	1523835, 1523889	3	4¼
1521013, 1521015	3	4¼	1523891, 1523931	3	4¼
1521129	1½	3½	1523968, 1523978	3	4¼
1521380, 1521440	3	4¼	1523984	3	4¼
1521445, 1521531	3	4¼	1537035	1½	3
1521677	1½	3½	1537037, 1537055	3	4¼
1521678	1½	3	1537041	1½	3½
1521685, 1521768	3	4¼	1537057, 1537074	3	4¼
1521779, 1521790	3	4¼	1537150	1½	3½
1521803, 1521815	3	4¼	1537171, 1537178	3	4¼
1521816, 1521827	3	4¼	1537203, 1537218	3	4¼
1521842	3	3¾	1537230	4	5
1522147, 1522208	3	4¼	1537234	1½	3
1522213	3	4½	1537252, 1537267	3	4¼
1522215, 1522231	3	4¼	1537283, 1537284	4	5
1522265, 1523065	3	4¼	1537301, 1537349	3	4¼
1523073, 1523074	3	4¼	1537355, 1537396	3	4¼
1523075, 1523198	3	4¼	1537372	4	5
1523192	3	3¾	1537417, 1537471	3	4¼
1523253, 1523255	3	4¼	1537478, 1537507	3	4¼
1523293, 1523308	3	4¼	1537520, 1537550	3	4¼
1523311	1½	3½	1537600	3	4½
1523328, 1523346	3	4¼	1537713, 1537719	3	4¼
1523366, 1523372	3	4¼	1537722, 1537761	3	4¼
1523387, 1523618	3	4¼	1537814, 1538228	3	4¼

NOTE—For pressure specifications on all replacement pumps (for these pumps), see "Fuel Pump Testing" article and specifications.

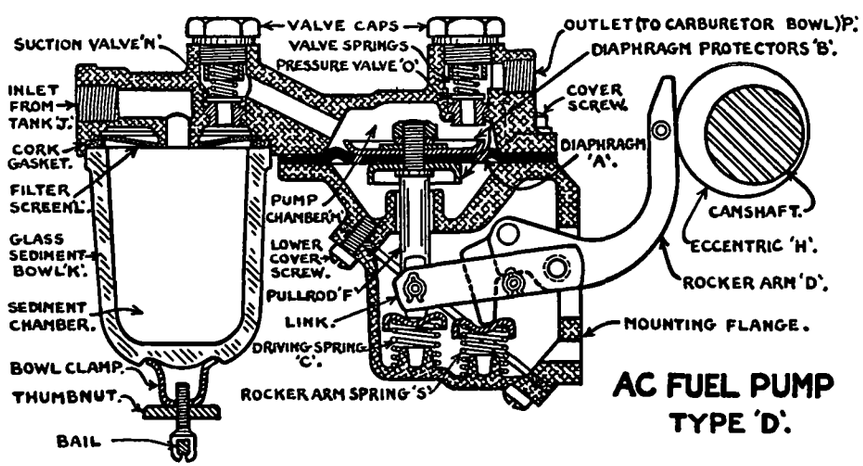

AC PUMP TYPE D (TYPE B SIMILAR)

AC TYPE E

STUDEBAKER PRESIDENT, MODEL 6C (1940)
STUDEBAKER PRESIDENT, MODEL 8C (1942)

DESCRIPTION:—This fuel pump is of the mechanical, diaphragm type. It differs from previous designs in that the linkage has been simplified and the rocker arm spring relocated (see illustration). An air dome over the outlet valve is used. In servicing (replacing diaphragm), a preliminary assembly must be made with the pullrod out of the pump and the complete assembly then installed (see complete directions below).

OPERATION:—The down stroke of the diaphragm is positively actuated by the rocker arm 'D', which is connected to the pullrod 'F' through the link 'R'. The down stroke of the diaphragm causes a vacuum in the pump chamber and gasoline is drawn through inlet into the sediment chamber, through the filter screen 'L', and the inlet valve 'N' into the pump chamber 'M'. The rocker arm is forced to follow the eccentric driving cam by the rocker arm spring 'S', releasing the pullrod linkage, and the diaphragm is then forced up by the driving spring 'C', forcing the gasoline in the pump chamber through the outlet valve 'O' and the pump outlet to the carburetor. Fuel delivery is controlled by the back pressure of the gasoline in the carburetor float bowl so that when the carburetor float valve closes the back pressure will hold the diaphragm at the bottom of its stroke with the driving spring compressed. The rocker arm continues to move with the rotation of the eccentric cam but this action is absorbed by the pump linkage. Whenever the carburetor float valve reopens, the pumping action is resumed.

PERFORMANCE:—See article on Fuel Pump Testing.

Fuel Pump Static Pressure

Pump No.	Min. (Lbs.)	Max.	Pump No.	Min. (Lbs.)	Max.
855886	1	1¼	1521776, 1521821	1½	3½
855979, 856069	1½	3	1521859	2½	3½
856190, 856192	1½	3½	1522124, 1522190	1½	3½
856269	1½	3½	1523108	1½	3½
1521019, 1521021	1½	3½	1523210, 1523211	1½	3½
1521022	1½	3	1523381	2½	3½
1521030, 1521116	1½	3½	1523627, 1523884	1½	3½
1521384, 1521532	2½	3½	1523926, 1527348	1½	3½

NOTE—For pressure specifications on all replacement pumps (for these pumps), see "Fuel Pump Testing" article and specifications.

TROUBLE SHOOTING:—See article on Fuel Pump Trouble Shooting. Use Fuel Pump Analyser to check pump performance before removing pump from car.

TESTING:—Test pump as directed in separate article on Fuel Pump Testing before disassembling pump for inspection or repairs.

SERVICING:—Complete directions for diaphragm replacement are given below. Manufacturer recommends that pump not be disassembled further than is necessary to make tests and repairs indicated in Trouble Shooting table as special fixtures are necessary for reassembly.

Diaphragm Replacement:—With pump disassembled (pullrod out of pump body) and old diaphragm removed, clamp pullrod in vise, engaging flatted end of pullrod between vise jaws. Assembled pullrod gasket, lower diaphragm protector (cupped side down), four layers of diaphragm cloth, upper diaphragm protector (cupped side up), alignment washer, lock washer, pullrod nut, on pullrod in order given. Line up tabs on diaphragm and turn diaphragm layers so that tabs are in line with flatted end of pullrod (see illustration). Use special alignment washer wrench (#846291) and keep diaphragm from twisting r turning while pullrod nut is being tightened. Remove complete assembly from vise, clamp pump body in vise, place driving spring in position, insert diaphragm assembly, push down on diaphragm assembly (compressing driving spring), engage flatted end of pullrod in rocker arm link, turn diaphragm assembly 90° to right or left until holes in diaphragm line up with holes in pump body. Place pump cover in position, engage cover screws, flex diaphragm to extreme high position while tightening cover screws. Diaphragm gauge (#846295) used in testing assembly on previous pump designs should not be used on Type E pumps.

Rocker Arm Linkage. Whenever rocker arm or rocker link is removed from pump, make certain that link is replaced with loop upward (see illustration). Rocker arm pin must be secured with retaining rings.

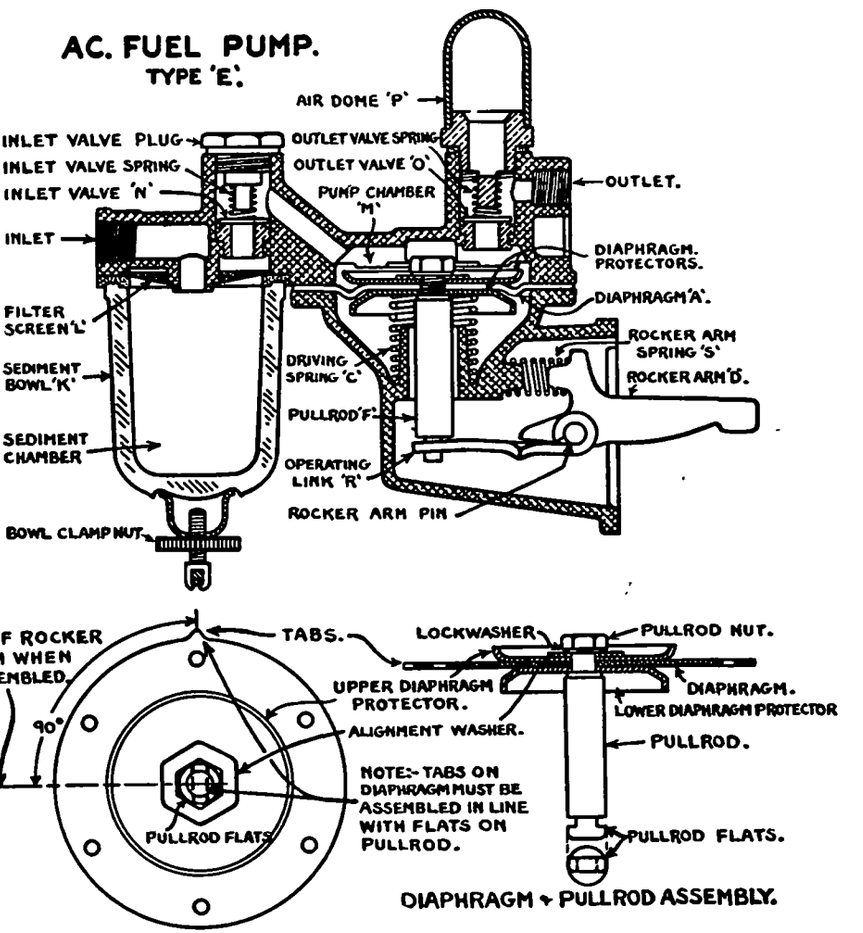

AC TYPES F, I, J

TYPE F

Packard Eight & Super Eight, All Models (1936-37)

TYPE I

Chrysler 8, Models C8,10,11 (1936), C14 (1937), C19 (1938)
LaSalle, All Models (1936-37)
Lincoln V12, All Models (1936 to 1939)
Packard Twelve, All Models (1936 to 1939)

TYPE J

Studebaker President, All Models (1936 to 1939)

DESCRIPTION:—These types fuel pumps consist of two distinctly separate units, a fuel pump (upper section of the unit) and a vacuum pump (lower section of the unit) which are entirely separate except that the same operating linkage is used for both units. The Fuel Pump is similar in design to Type E (see Type E article for complete data on fuel pump section).

The Vacuum Pump unit is designed for windshield wiper operation and acts as a booster pump to ensure continuous windshield wiper operation even when car operated with wide open throttle and low manifold vacuum.

PERFORMANCE:—See article on Fuel Pump Testing.

Fuel Pump Static Pressure

TYPE F			TYPE I		
Pump No.	Min. (Lbs.)	Max.	Pump No.	Min. (Lbs.)	Max.
856138	3	4½	856265	3	4½
1521220, 1521262	3	4½	1521218	3	4¼
1521805, 1523196	3	4½	1521538	2¾	4
TYPE J			1521549, 1521673	3	4½
856268	1½	3½	1521804	2¾	4
1521017, 1521018	1½	3½	1521813, 1522248	3	4½
1521203, 1521797	1½	3½	1523000, 1523023	3	4½

NOTE—For pressure specifications on all replacement pumps (for these pumps), see "Fuel Pump Testing" article and specifications.

OPERATION OF VACUUM PUMP:—The vacuum pump consists of a vacuum chamber containing the inlet and outlet valves and closed at the upper end by the pump diaphragm. A spring is assembled in the center of the pump under the diaphragm. The operating shaft on the upper surface of the diaphragm assembly is connected to the pump rocker arm through the linkage. In operation when the rocker arm is actuated by the eccentric on the camshaft the vacuum pump diaphragm is forced down, expelling any air in the pump chamber through the outlet valve into the manifold. When the rocker arm moves back (freeing the pump linkage), the driving spring under the diaphragm forces the diaphragm upward, creating a vacuum in the chamber, opening the inlet valve, and operating the windshield wiper.

Whenever the engine is operated with the windshield wiper turned off the vacuum in the vacuum chamber will hold the diaphragm at its lowest position (with the driving spring compressed) and the vacuum pump will not operate. Whenever the manifold vacuum is higher than the pump vacuum the pump will likewise be inoperative and the windshield wiper will be operated by the manifold vacuum straight through the pump with both valves open. At other times pump acts as a booster to operate windshield wiper.

SERVICING (FUEL PUMP SECTION):—See article on Type 'E' for data.

SERVICING (VACUUM PUMP SECTION):—To replace vacuum pump diaphragm, assemble in order, pull rod gasket, protector washer, five layers of diaphragm cloth, protector washer, alignment washer, lock washer, pull rod nut. Line up holes in diaphragm layers and see that center line of flats on pull rod is exactly midway between adjacent holes on diaphragm. Hold diaphragm alignment washer from turning while pull rod nut is being tightened. Follow directions below for assembly of pump.

Assembly of Vacuum Pump Section. Place fibre inlet valve in position on brass valve seat in body. Place inlet valve spring in position on valve. Place valve stop plate (spider-shaped die-cast piece) on top of valve spring with top coil of spring seated in stop plate. Check assembly of inlet valve by pressing down on inlet valve stop, see that valve spring is properly centered in stop and that legs of stop plate fit in recess in body. Place outlet valve spring in position, see that spring is centered in recess. Place outlet valve on spring. Hold down on inlet valve spring stop plate, slide valve retainer gasket in place, place valve retainer on top of gasket (without releasing inlet valve spring). Mount valve retainer in place, using flat-head screws (tighten center screws first), make certain that valve retainer is correctly installed with countersunk holes facing upward. Invert vacuum pump body, place screen in position, see that screen is flat and fits around shoulders of body screw holes. Assemble bottom cover.

Installing Vacuum Pump Section. Invert fuel pump and mount in a vise on the bench. Install vacuum pump diaphragm assembly, making certain that flatted end of pull rod is engaged in operating link and turned 90° to position for correct engagement. Place diaphragm spring in position on diaphragm. Place assembled vacuum pump unit in position on fuel pump, make certain that diaphragm spring is centered on boss in vacuum pump body. Push in on the pump rocker arm until the diaphragm is flat, wedge a small piece of metal between body and shoulder on rocker arm to hold rocker arm in this position while assembly is being completed. Line up marks on body flanges (these marks should be made before pump is disassembled), press down on pump, install screws and lock washers loosely, threading screws through holes in diaphragm layers. Then remove metal wedge, allowing diaphragm to assume highest position, tighten screws alternately and securely.

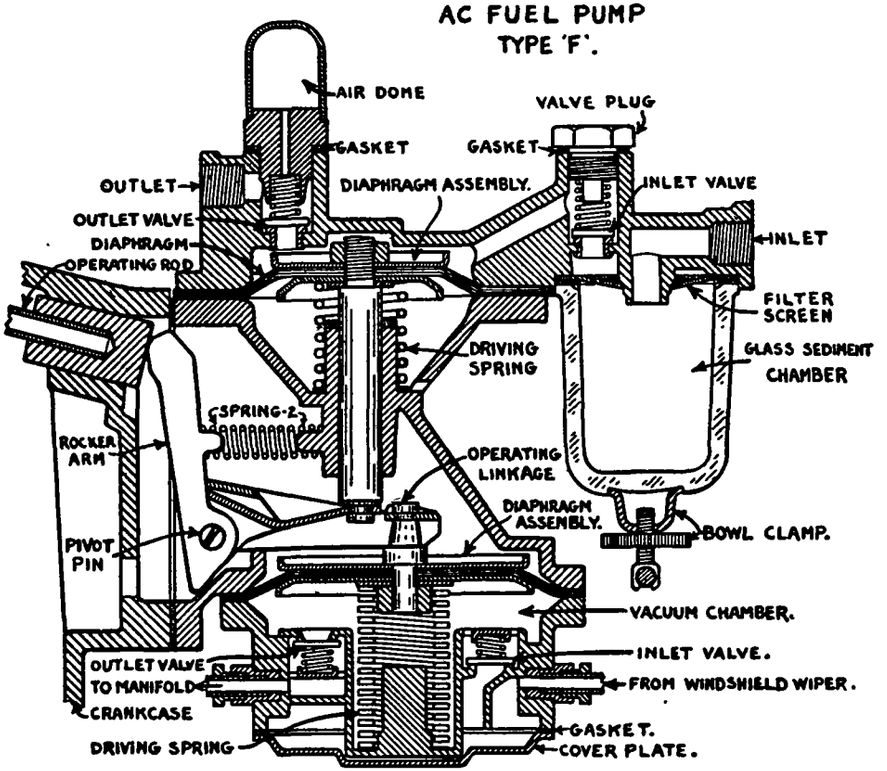

TESTING:—The strength of the vacuum pump spring will make it impractical to bench-test the pump before it is installed on the car. In installing the pump, see that the rocker arm is in the innermost position to avoid possibility of distorting pump flange while mounting nuts being tightened.

To check vacuum pump operation, note windshield wiper performance while engine is alternately idling and accelerating. Windshield wiper action should be constant. Do not operate the pump with the outlet closed or blocked as the downward stroke is positively driven by the linkage.

TROUBLE SHOOTING:—See separate article for complete trouble shooting directions for both Fuel Pump and Vacuum Pump sections.

AC TYPE R

Crosley, All Models (1941 to 1948)
Ford V8 "60", All Models (1937 to 1940)—See Note
Ford V8, "85", "90", "100" Models (1936 to 1949) See Note
Ford 6 Cyl., All Models (1941 to 1949) See Note
Ford 4 Cyl. Comm'l & Truck Models (1941-42)—See Note
Graham Six, 96 (1938-39), 108 (1940), 113 (1941)
Graham Supercharger, All Models (1936 to 1941)
Hudson 6 & 8, All Models (1936)
Lincoln, Zephyr, Custom, Cont'l Models (1941 to 1948) See Note
Lincoln & Cosmopolitan Models (1949)
Mercury, All Models (1939 to 1949) See Note
Pontiac 6 & 8, All Models (1936)
Terraplane, All Models (1936)

FORD, LINCOLN, MERCURY FUEL PUMP NOTE: AC and Ford Part Numbers for pumps used on these models are listed below. NOTE—Pump Nos. 433 and 541 are interchangeable but No. 433 has smaller sediment chamber and will require servicing at more frequent intervals.

FORD, LINCOLN, MERCURY FUEL PUMPS

Ford No.	AC No.	Pump Type	Exch. Pump No.
B-9350	856253	G	406
18-9350	1521134	N	409
52-9350 HA	1521459	R	433
52-9350-B	1523257	R	432
40-9350	1533138	R	433
40-9350-B	1531764	R	433
68-9350	1523307	R	433
11A-9350	1537383	R	541
1GA-9350	1538529	R	543
26H-9350-A	1537709	R	

NOTE:—Type R is similar in design to Type T. See following article on Type T for complete description and servicing data for Type R pumps without oil seal. Data on pumps with oil seals are given below.

OIL SEAL NOTE:—Pump differs from other Type R pumps only in that an Oil Seal is assembled on the lower end of the pull rod below the diaphragm. The Oil Seal assembly consists of an upper retainer (with a flange at its lower end serving as lower seat for the driving spring), two leather oil seal washers, and a lower retainer. The entire assembly is locked in place on the pull rod stem by the shoulder on the lower end of the pull rod and rests on the pump boss in the pump body (see illustration). The operation of the pump is entirely similar to other Type R pumps.

PERFORMANCE:—See article on Fuel Pump Testing.

Fuel Pump Static Pressure

Pump No.	Min. (Lbs.)	Max.	Pump No.	Min. (Lbs.)	Max.
1521450, 1521454	2½	3½	1521841, 1522221	2½	3½
1521457, 1521536	2½	3½	1523138, 1523257	1½	2¾
1521459	1½	2¾	1523731, 1523737	2½	3½
1521539, 1521540	2½	3½	1523929	1	1¼
1521674	2¾	3½	1537229, 1537402	1½	2¾
1521689, 1521765	2½	3½	1537383	1½	3
1521764	1½	2¾	1537421, 1537465	1½	2¾
1521783, 1521794	2½	3½	1537510, 1537720	1½	3
1521795, 1521807	2½	3½	1537744, 1538529	1½	2¾

NOTE—For pressure specifications on all replacement pumps (for these pumps), see "Fuel Pump Testing" article and specifications.

SERVICING:—Trouble Shooting and servicing for this pump are the same as for other Type R pumps except for the special directions given below for the removal of the diaphragm assembly, assembling of oil seal on the pull rod, and replacing of diaphragm assembly in the pump.

To Remove Diaphragm Assembly from Pump:—Use special tool #1521556, which is designed to free lower retainer from boss on pump body (if this tool is not used, it will be necessary to remove rocker arm pin in order to free pull rod from rocker arm linkage). To remove diaphragm assembly (with pump cover or upper body removed), invert pump body, force edge of special tool under edge or flange of upper oil seal retainer, pry on tool to move flange on retainer up onto top edge of pump boss. Hold pump link against upper stop by wedging a screwdriver between the link and the bottom of the pump body, push down on diaphragm and away from end of link. This will unhook the pull rod from the link and diaphragm assembly can then be removed. Diaphragm assembly should be replaced as a unit (see directions below for assembly f oil seal on pull rod).

To Assemble Oil Seal on Diaphragm Assembly:—Place driving spring (E) in position on pull rod against lower diaphragm protector, place upper oil seal retainer in position on lower end of driving spring with cupped portion within spring, compress spring by pressing on oil seal retainer until retainer is below shoulder on pull rod, then rotate retainer ¼ turn so that it is locked in place. Force two leather oil seal washers down on pull rod stem

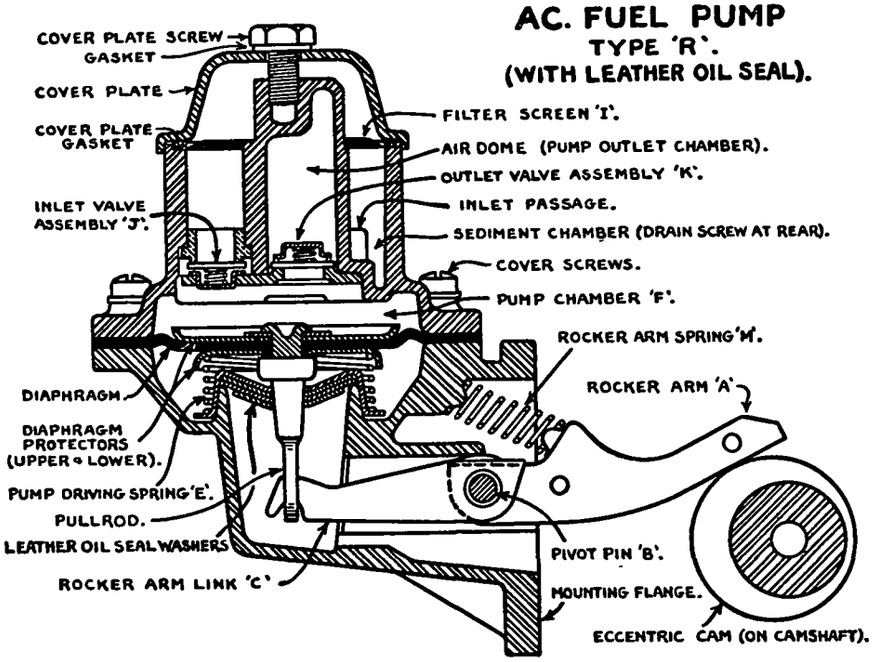

REMOVING DIAPHRAGM ASSEMBLY. INSTALLING DIAPHRAGM ASSEMBLY.

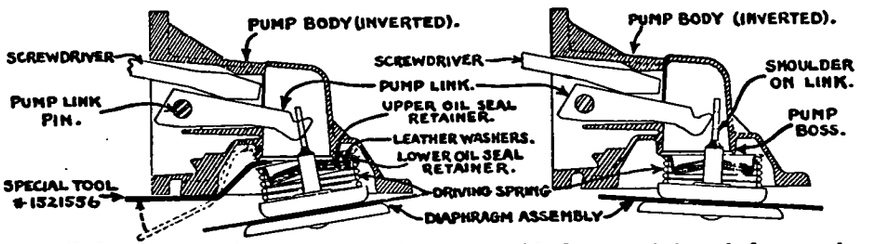

until they rest against upper retainer, assemble lower retainer below washers and lock in place by rotating ¼ turn. The complete assembly is then ready to be installed in the pump.

To Install Diaphragm Assembly in Pump:—Invert the pump body, hold link against upper stop by wedging screwdriver between link and bottom of pump body, insert diaphragm assembly in pump body, tilting assembly so that flange on upper oil seal retainer rests on top edge of pump boss and pull rod clears end of link (see illustration). Press down on diaphragm assembly and hook pull rod over end of link, then push diaphragm back into vertical position and center in pump body so that oil seal retainer snaps into place around pump boss. The upper pump body can then be put in place and the screws installed.

TROUBLE SHOOTING:—See article on Fuel Pump Trouble Shooting. Use Fuel Pump Analyser to check pump performance before removing pump from car.

AC TYPE T

Hupmobile Six, All Models (1936 to 1940)
Oldsmobile Six, Model F36 (1936)
Oldsmobile Eight, Model L36 (1936)

DESCRIPTION: These pumps are mechanically operated, diaphragm type pumps and are similar in operation to previous pump types. The pump design is not similar to previous designs (see illustration). The sediment chamber (H) is located in the pump body and the external glass sediment bowl is not used. The sediment chamber can be drained by removing the screw (N). The pull rod is assembled as a unit with the diaphragm and diaphragm protectors (upper end of pull rod is riveted) and it is necessary to replace this entire assembly as a unit whenever the diaphragm is found defective.

OPERATION:—As in previous pump designs, the down stroke of the diaphragm is positive, the diaphragm being pulled down by the action of the rocker arm (A), which is connected to the pull rod by the linkage (C). This creates a vacuum in the pump chamber and gasoline is drawn in through inlet (G), sediment chamber (H), filter screen (I), and inlet valve (J) into pump chamber (F). The rocker arm is forced to follow the face of the eccentric cam by the rocker arm spring (M), releasing the pull rod linkage and the diaphragm is then pushed upward by the driving spring (E). This forces the gasoline out through the outlet valve (K) and the pump outlet (L) to the carburetor. Fuel delivery is controlled by the back pressure of the gasoline in the carburetor float bowl so that when the carburetor float valve closes, this back pressure holds the diaphragm at the bottom of its stroke with the driving spring compressed. The rocker arm continues to move with the rotation of the eccentric cam but this motion is absorbed by the linkage. Whenever the carburetor float valve opens, the pumping action is resumed.

PERFORMANCE:—See article on Fuel Pump Testing.

Fuel Pump Static Pressure

Pump No.	Min. (Lbs.)	Max.	Pump No.	Min. (Lbs.)	Max.
1521456, 1521458	2½	3½	1522246, 1522247	2½	3½
1521688, 1521796	2½	3½	1523087, 1523767	1½	2
1522189	2½	3½	1523223	1½	3

NOTE—For pressure specifications on all replacement pumps (for these pumps), see "Fuel Pump Testing" article and specifications.

TROUBLE SHOOTING:—See article on Fuel Pump Trouble Shooting. Use Fuel Pump Analyser to check pump performance before removing pump from car.

SERVICING:—Diaphragm and pullrod are riveted together and must be replaced as a unit. To assemble pump, follow directions as given below.

Diaphragm and Pullrod Assembly. Place diaphragm (driving) spring in place in pump body, position diaphragm assembly on driving spring so that spring is centered in lower diaphragm protector, press downward on diaphragm and turn to left at same time so that pullrod engages end of rocker link, turn diaphragm assembly one-quarter turn to left so that holes in diaphragm and pump body line up. Push in on rocker arm until diaphragm is flush with pump body flange, place top assembly in position (as designated by marks on pump and cover made before disassembly), install cover screws and lock washers, turn screws down loosely. Release rocker arm, which will flex diaphragm in extreme upper position, tighten cover screws alternately and securely.

Valve and Cover Assembly. To assemble valves and cover before installing on pump, place outlet valve spring retainer in cover, being careful not to distort legs of retainer, place valve plate gasket in position, install outlet valve spring in retainer, place outlet valve on spring. Place inlet valve on its seat, position valve spring on center of inlet valve, install inlet valve retainer in valve plate and see that shoulder of retainer fits flush in depression in plate. Install valve plate in position in cover and insert three mounting screws. See that inlet valve is centered in spring seat and outlet valve centered on valve seat in valve plate. Install strainer screen on top of cover, see that screen fits properly around inlet and at edges of cover. Place cork gasket in cover, install cover plate. Install fibre gasket on cover plate capscrew, tighten capscrew so that cover plate is secure and tight. See that gasket seats properly and that filter screen is not distorted. Cover assembly is then ready to install on pump body.

Rocker Arm and Linkage. If rocker arm has been removed, assemble link, rocker arm, and rocker arm spring in pump body in proper position (see illustration), insert rocker arm pin through hole in body so that it engages rocker arm and link. Stake pin in place by using punch to turn body metal over pin at each end. See that rocker arm operates freely after assembly (if arm binds, drive pin back slightly). Rocker arm linkage will ordinarily not require disassembly when servicing pump.

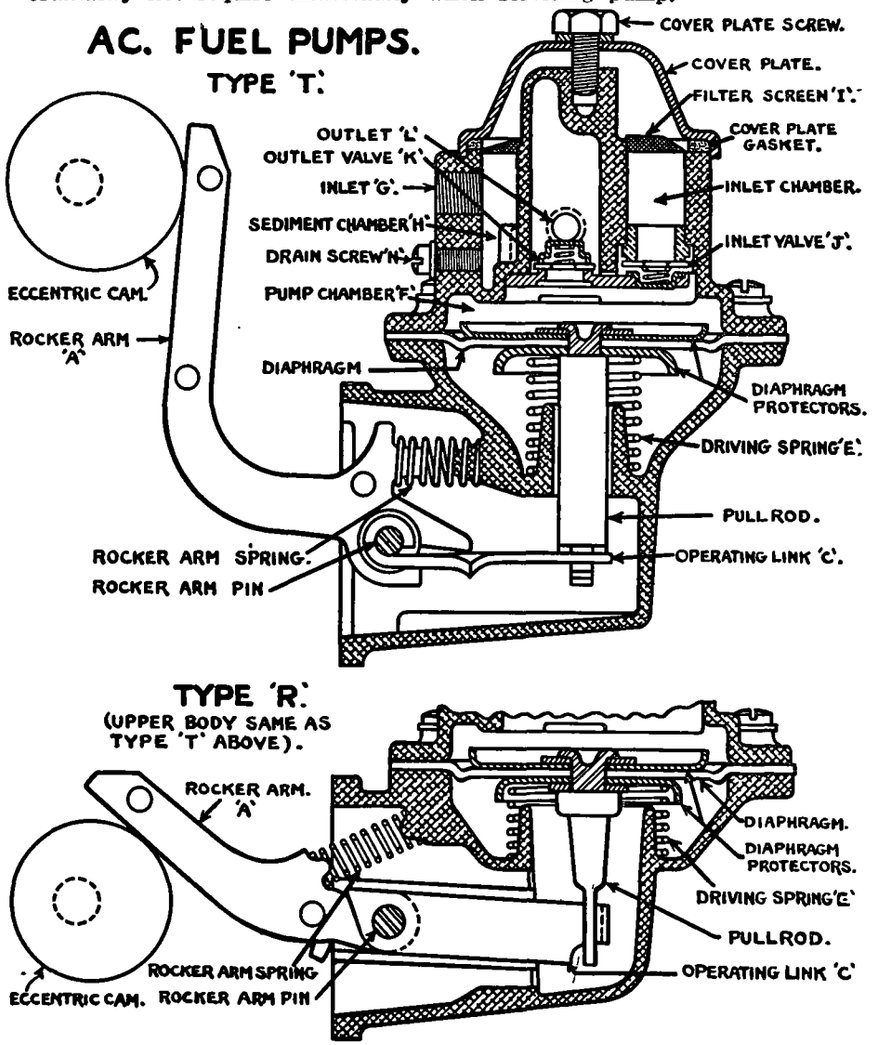

AC TYPE AA

OLDSMOBILE SIX, MODEL F-36 (1936)
OLDSMOBILE EIGHT, MODEL L-36 (1936)

DESCRIPTION:—This type fuel pump is similar in design and operation to previous combination fuel and vacuum pumps except that the sediment chamber is located at the top of the fuel pump section within an inverted glass sediment bowl and the location of fuel pump inlet valve assembly (J) and outlet valve assembly (K) is somewhat changed. As in previous designs, the fuel pump and vacuum pump are two distinct units although the same linkage is used for the operation of both units.

OPERATION:—Fuel Pump. Fuel pump operation is similar to previous types and down stroke or suction stroke of diaphragm is positively actuated. The diaphragm is forced upward on the delivery stroke by the driving spring below the diaphragm. Fuel flow through the pump after entry through the inlet is through the inlet passage or riser into the glass sediment bowl. From near the top of the sediment bowl, fuel passes through filter screen (I) and inlet passage to inlet valve (J) and into the pump chamber. From the pump chamber the fuel is forced through outlet valve (K) to the pump outlet. An air chamber is formed in the upper body casting above the outlet valve. The lower portion of the glass bowl below the top of the inlet passage to the pump chamber forms the sediment chamber (H).

Vacuum Pump. The down stroke of the vacuum pump diaphragm by which air is displaced from the pump chamber is positively actuated by the pump linkage. The diaphragm is forced upward by the heavy driving spring below the diaphragm, creating a vacuum within the pump chamber. This opens the inlet valve and operates the windshield wiper. The pump acts as a booster to insure continuous wiper operation and will be inoperative whenever pump vacuum is exceeded by manifold vacuum (both valves will be open), or whenever the wiper is not being used (diaphragm held at lower end of stroke by vacuum in pump chamber).

PERFORMANCE:—See article on fuel pump testing.

Fuel Pump Static Pressure

Pump No.	Min. (Lbs.)	Max.	Pump No.	Min. (Lbs.)	Max.
1521784	3	4½	1522158	3	4½
1521785	3	4½	1522249	3	4½
1522157	3	4½	1522250	3	4½

NOTE—For pressure specifications on all replacement pumps (for these pumps), see "Fuel Pump Testing" article and specifications.

TROUBLE SHOOTING:—If fuel pump or vacuum pump operation is not sat-isfactory, check in accordance with the following tables:

Fuel Pump Unit

No fuel or insufficient fuel at carburetor—Check fuel line for bent, kinked, leaky tubing or connections. Tighten all connections. Clean filter screen, examine sediment bowl gasket, tighten bowl thumbnut securely (loose bowl on this type will cause leaks around lower edge of bowl if any gasoline is in sediment chamber). Check valves and valve seats for dirty or warped valves, loose valve assemblies. Check diaphragm driving spring.

Fuel Leakage through vent in pump body—Diaphragm is worn or punc-tured and should be replaced.

Fuel Leakage at edge of diaphragm—Loose cover screws. Tighten cover screws evenly around pump body.

Carburetor flooding—Check carburetor float level. See that float valve seats properly. Replace float valve assembly if seat or valve is worn.

Vacuum Pump Unit

Not operating (n vacuum except as supplied by manifold). This will be evidenced by slow windshield wiper action at high speeds or with wide open throttle. Check vacuum lines and tighten connections. Examine vacuum pump valves and diaphragm.

Oil smoke in engine exhaust—Punctured vacuum pump diaphragm. Check before disassembling pump by disconnecting pump outlet line to manifold, operate vacuum pump and note il spray in pump exhaust. Oil spray at this point indicates punctured diaphragm which should be replaced. If no oil spray is noted, oil smoke may be caused by worn rings, etc.

SERVICING:—Fuel Pump. Diaphragm assembly should be replaced as a unit (pullrod upper end is riveted). To install new diaphragm assembly, place oil seal gasket and oil seal gasket retainer over pullrod boss in pump body, place driving spring (E) on oil seal gasket retainer, place spring retainer on spring with cupped side downward, insert diaphragm and pullrod assembly in body, invert pump body so that fuel pump link falls toward pullrod, push diaphragm down in body to compress driving spring, engage flatted end of pullrod in slot in end of link, turn diaphragm assembly 90° to lock pullrod in link. If cover assembly has not been disassembled (see directions below for installation of valves in cover assembly), push upward on pump rocker arm until diaphragm is even with top edge of body, place cover assembly in position on body, lining up marks made before disassembly, install cover screws and lockwashers, turn screws down loosely. Release rocker arm, which will flex diaphragm in extreme upper position, and tighten cover screws alternately around pump body evenly and securely.

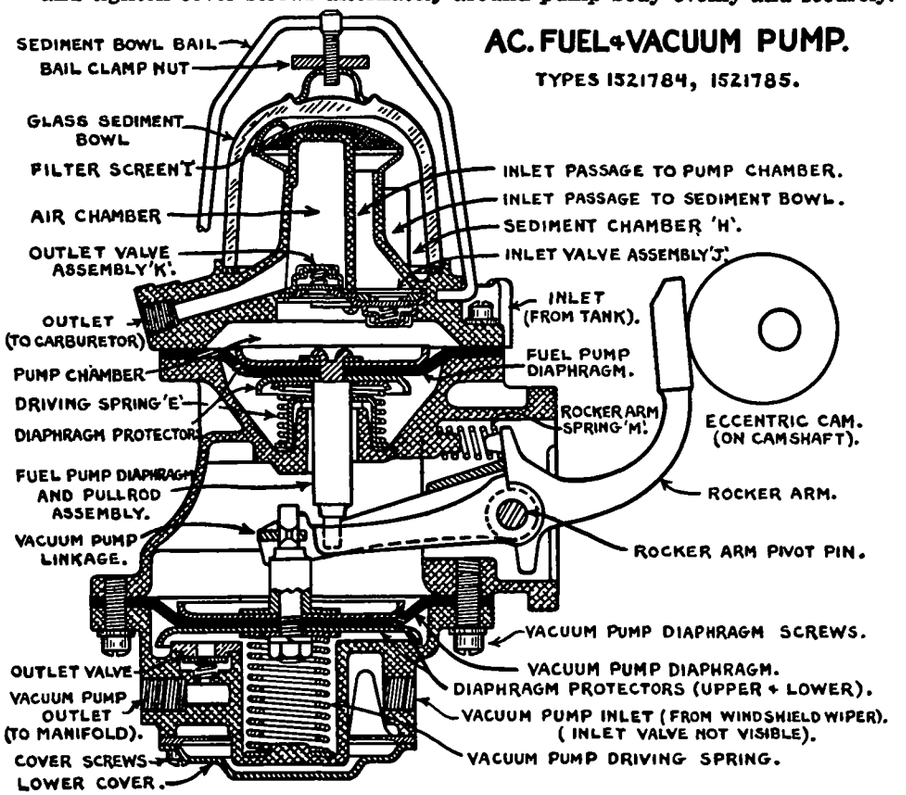

To assemble valves in cover assembly, place valve cage gaskets in position in cover, place inlet and outlet valve cage assemblies on cage seats in cover, making certain that the large diameter is placed downward against the gasket on the inlet side and that the small diameter is assembled in outlet hole in the cover so that the shoulder of the cage fits properly against the gasket. This is very important. Place valve cage retainer in position, making certain that the curved end of two legs fits snugly against each valve cage, insert two mounting screws, tighten screws securely. Place cork bowl gasket in position on cover, assemble glass sediment bowl, bowl seat, thumbnut and bail above bowl, tighten thumbnut securely. This completes the top cover assembly.

Vacuum Pump. Vacuum pump servicing and assembly is exactly the same as for other types except that tabs are provided on the diaphragm and these tabs should be lined up with the center line of the flatted end of the pullrod when new diaphragms are being installed. See complete article n Types F, I, J pumps.

AC TYPE AB, X

TYPE AB

BUICK, MODELS 60, 80, 90 (1936 to 39)
CADILLAC V8, ALL SERIES (1936 to 39)
HUDSON & TERRAPLANE, ALL MODELS (1937-38)
LA SALLE V8, SERIES 50 (1937-38-39)

TYPE X

PACKARD, MODEL 120-B (1936)

NOTE: The Type X pump is equipped with a Type R top cover assembly (fuel pump section). See article on Type R pumps with oil seal for illustration and fuel pump servicing instructions on this model.

DESCRIPTION:—These types similar in design to previous types (combination fuel and vacuum pumps) in that fuel pump and vacuum pump units are entirely separate although both units mounted on the same body casting and operated by the same linkage. New features include fuel pump oil seal, mounting flange baffle, silencer unit in body vent, and assembled diaphragm units (pull rod riveted forming assembly of pullrod, diaphragm, and protector washers).

OPERATION:—Fuel Pump—Same as for previous types. Downstroke or suction stroke of diaphragm positively actuated by linkage. Upstroke or delivery stroke actuated by driving spring under diaphragm. Rocker arm motion absorbed by linkage when delivery line closed by seating of carburetor float needle valve (pressure in line balances driving spring tension so that diaphragm held in lower position with spring compressed).

Vacuum Pump:—Same as for Type F. Downstroke of diaphragm in which air displaced from pump chamber positively actuated by linkage. Upstroke in which vacuum created in pump chamber actuated by heavy driving spring under diaphragm. Rocker arm motion absorbed by linkage when pump not in use (windshield wiper off) with diaphragm at lower end of stroke.

PERFORMANCE:—See article on Fuel Pump Testing.

Fuel Pump Static Pressure

TYPE AB			TYPE X		
Pump No.	Min. (Lbs.)	Max.	Pump No.	Min. (Lbs.)	Max.
1522119	3	4½	1521808	2½	3½
1523694	3	4½			

NOTE—For pressure specifications on all replacement pumps (for these pumps), see "Fuel Pump Testing" article and specifications.

SERVICING:—Both fuel pump diaphragm and vacuum pump diaphragm replacements furnished as assemblies with pull rod and diaphragm protectors (pull rod riveted on upper protector washer). See installation directions below.

Rocker Arm & Link Assembly in Body:—Assemble rocker arm, fuel pump link, link spacer and vacuum pump links on rocker arm pin bushing in same position as when removed from pump. Place hooked end of one vacuum link on top of other vacuum link while assembling. Insert assembly in pump body making certain that rocker arm spring is seated on ear of link spacer. Insert rocker arm pin, place washer on end of pin, peen counter-bored end of pin over washer.

Fuel Pump Diaphragm Assembly (Type AB):—Invert pump body allowing link to fall against stop, insert small tool or screwdriver to hold link in this position. Place diaphragm driving spring in position on lower diaphragm protector, place oil seal (when used) on spring so that spring seats on lower flange with cupped portion of seal within spring, insert diaphragm assembly in pump body, compress diaphragm spring and hook pull rod over end of link. See that spring is seated in lower protector and on oil seal.

Fuel Pump Valve and Cover Assembly (Type AB):—See that valve chamber thoroughly cleaned, valve seat inserts tight in cover, and that seats are smooth and flat. Place a drop if Finol on each fibre valve (do not substitute other types of valves), place valves flat on valve seat, insert valve spring on top of valves, see that fibre gaskets on valve plugs in place and in good condition, install plugs making certain that valve spring enters spring cup in plug, tighten plugs securely. Examine sediment bowl gasket and filter screen, replace if necessary, install sediment bowl and tighten bail nut securely.

Fuel Pump Cover Assembly:—To install cover assembly on pump, clamp pump body in vise, place cover in position on body lining up marks made before disassembly, insert cover screws through holes in cover and diaphragm, turn screws down until heads within ⅛" of cover flange. Flex diaphragm in extreme upward position by pushing up on pull rod, hold in this position, tighten cover screws evenly and securely.

VACUUM PUMP SECTION

Vacuum Pump Unit Assembly:—Inlet Valve seat is part of vacuum pump body assembly. To assemble pump, place fibre inlet valve on valve seat, position valve spring on valve, place spider-shaped inlet valve stop plate on top of spring with top coil of spring seated in recess in bottom of spider. Insert outlet valve spring, centering spring coils in recess, place outlet valve in position on top of spring. Press inlet valve stop plate down until legs fit into recess in body making certain that valve spring is properly centered on stop, hold in this position and slide valve retainer gasket in position, place valve retainer in position on top of gasket making certain that retainer installed with countersunk holes upward. Insert valve retainer screws tightening center screws first and end screw last. Turn pump body over, install screen, see that screen lies flat and fits closely around screw holes in body. Install cover gasket on screen lining up screw holes, place cover on gasket, insert cover screws and tighten securely.

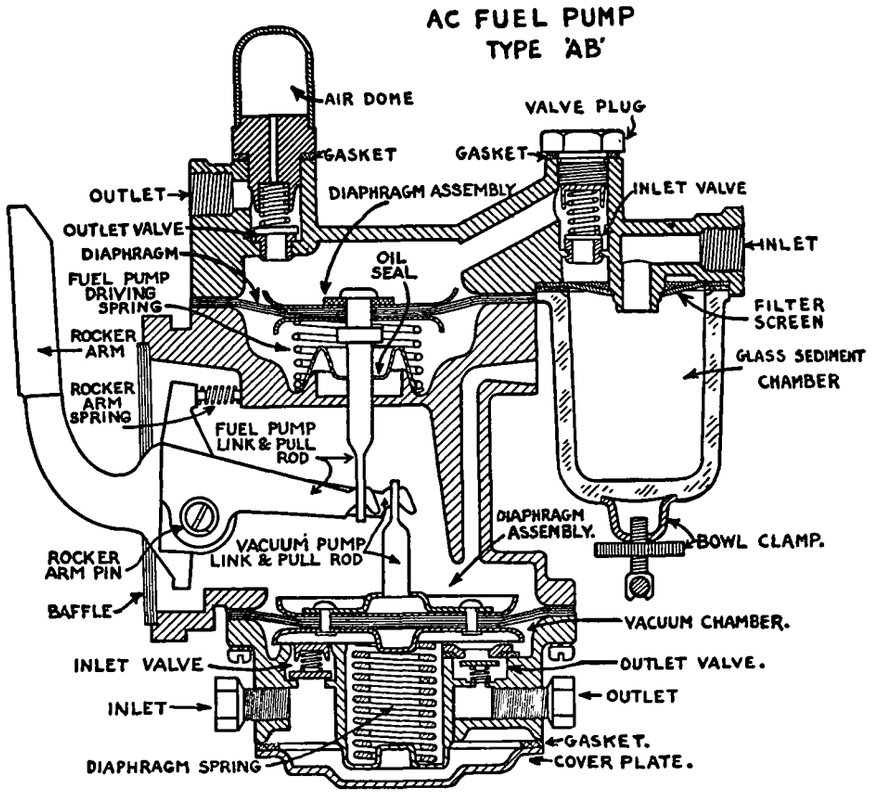

Vacuum Pump Installation:—Clamp completed fuel pump and body assembly in vise in inverted position. Install vacuum pump diaphragm assembly, see that pull rod hooked on both links properly and that diaphragm holes line up with holes in body. Place diaphragm spring in position on diaphragm, centering spring in lower protector washer, place assembled vacuum pump unit in position on diaphragm lining up marks made before disassembly and seeing that spring is centered on boss in vacuum pump body. Press in on rocker arm until diaphragm is flat and even with body flange, insert screws through holes in vacuum pump body and diaphragm, turn screws in until ⅛" from flange. Release rocker arm so that diaphragm spring flexes diaphragm to extreme upper position, tighten screws evenly and securely.

TESTING:—Vacuum pump spring strength makes it impractical to test combination units on the bench. Pump should be installed on engine and tested with No. 1521551 analyzer (fuel pump section). To test vacuum pump operation, open windshield wiper valve and note performance when engine is alternately idled and accelerated. Wiper action should be practically constant and independent of engine speed variations.

NOTE—Never operate pump with outlet passage blocked (will damage pump).

TROUBLE SHOOTING:—See article on Fuel Pump Trouble Shooting.

AC TYPE AH

Hudson Six, All Models (1948)
Oldsmobile Six, All Models (1937 to 1939)
Oldsmobile Eight, All Models (1937 to 1939)
Packard Eight, All Models (1940 to 1947)
Packard, Super & Custom Super Eight, All Models (1942 to 1947)
Packard, Custom Eight, All Models (1948)
Pontiac Six, All Models (1937 to 1948)
Pontiac Eight, All Models (1937-38-39)

TYPE:—New design, inverted, mechanically operated, diaphragm type pump with improve oil seal on pull rod which necessitates removal of rocker arm pin to engage or disengage pull rod when servicing diaphragm assembly. Operation similar to previous types.

OPERATION:—As in previous designs, suction stroke of diaphragm positively actuated by pump linkage, delivery stroke actuated by driving spring 'E'. On suction stroke when diaphragm 'D' is pulled up by rocker arm 'A' and link which engages pull rod at 'C', fuel is drawn through inlet into sediment bowl 'H' and then through filter screen 'I' and inlet valve 'N' into pump chamber 'F'. Rocker arm is forced to follow face of eccentric driving cam by spring 'L', allowing driving spring 'E' to force diaphragm down on delivery stroke, and forcing the fuel out through the outlet valve 'J' to the carburetor. Fuel delivery is controlled by back pressure in line so that whenever carburetor float valve is closed, diaphragm remains at top of stroke with spring 'E' compressed, and rocker arm motion is absorbed by the linkage. When pressure is relieved by opening of carburetor float valve, pumping is resumed.

PERFORMANCE:—See article on Fuel Pump Testing and use of Analyzer.

Fuel Pump Static Pressure

Pump No.	Min. (Lbs.)	Max.	Pump No.	Min. (Lbs.)	Max.
1523109	3	3¾	1523985	4	4¾
1523228, 1523229	3	3¾	1537007, 1537067	4	4¾
1523602	4	4¾	1537281	3	4
1523730, 1523844	3	3¾			

NOTE—For pressure specifications on all replacement pumps (for these pumps), see "Fuel Pump Testing" article and specifications.

TROUBLE SHOOTING:—See article on Fuel Pump Trouble Shooting. Use Fuel Pump Analyzer No. 1521551 and check performance before removing fuel pump from car.

SERVICING:—**Disassembly.** Drill out counterbored (small end) of rocker arm pin with ⅜" drill. Use special tool No. 1521581 and drive pin out of arm and pump body. Invert pump and clamp in vise. Mark cover and body flange to insure replacing in same position. Take out ten capscrews in flange and lift off cover assembly. Lift out diaphragm and link assembly.

Valve & Cover Sub-assembly. Place gasket in position in cover casting, install valve and cage assemblies making certain that large diameter of inlet valve cage is against gasket and that small diameter of outlet valve cage is installed in hole in cover so that shoulder of cage fits against gasket. Pump will not operate satisfactorily if valves installed in any other manner. Place valve cage retainer in position on valves making certain that curved ends of two lugs fit snugly against each valve cage, insert two retainer screws and tighten securely. See that retainer has not shifted after screws are tightened. Install cork bowl gasket in cover, place metal sediment bowl cover on gasket, assemble cover screw gasket on cover, insert cover screw and tighten securely. Cover gasket and cover screw gasket must be in good condition and must contact seat at all points to insure tightness and prevent gasoline leaks at these points.

Pump Assembly. Assemble link, rocker arm bushing, link spacer washers and rocker arm spring in position in pump body, insert small end of special assembling tool No. 1521581 through rocker pin hole in body to hold these parts in position loosely. Install oil seal and diaphragm driving spring in position, install diaphragm assembly inserting pull rod through spring and oil seal and engaging pull rod end with hook on link. Then press assembling tool on through pump body until linkage is held in position by larger section of tool. Use regular rocker arm pin to drive assembling tool out. This will leave linkage correctly assembled on pin. Install steel washer on counterbored small end of pin and swedge end f pin out against washer. Push upward on rocker arm until diaphragm is level with top surface of body flange, install cover assembly, lining up marks on flanges made before disassembling pump, insert cover screws (see that lockwasher in place on each screw) and turn down screws until flanges are ⅛" apart. Release rocker arm which will allow diaphragm to move to highest position, tighten cover screws alternately and securely. Cover must be tightened only with diaphragm flexed in extreme upward position to insure pump having full stroke in service.

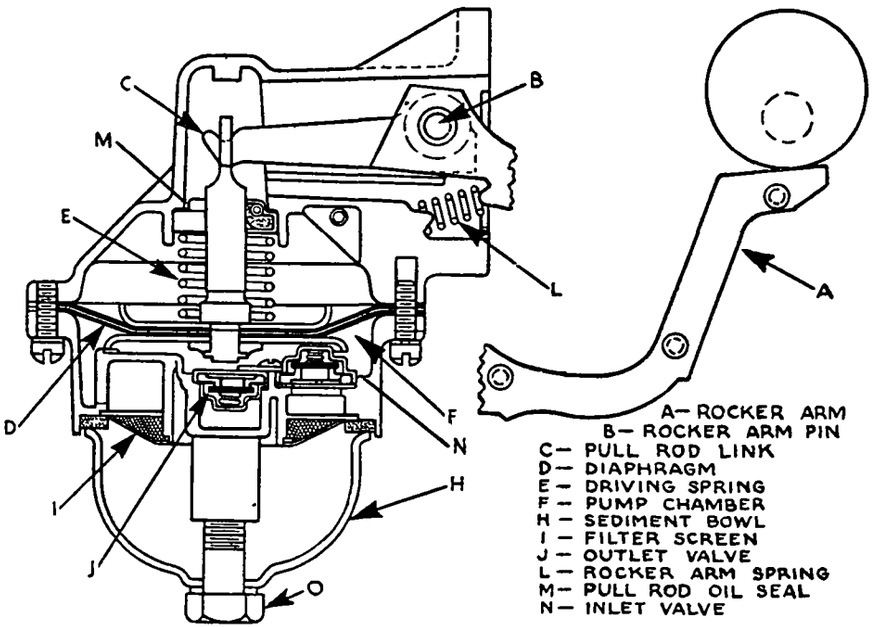

AC TYPE AT

Chrysler 6, All Models (1938-39-40 & 1942), Early Cars (1946-47)
DeSoto, All Models (1938-39-40 & 1942), Early Cars (1946-47)
Dodge, All Models (1938 to 1942), Early Cars (1946-47)
Packard Six, All Models (1940 to 1947)
Plymouth, All Models (1939 to 1942), Early Cars (1946-47)

DESCRIPTION:—This pump same design as Type 'AH' except that mounting flange is same as that used on Type 'B' pumps and a glass bowl type sediment chamber retained by a bail and thumbscrew is used.

PERFORMANCE:—See article on 'Fuel Pump Testing' for complete testing data.

Fuel Pump Static Pressure

Pump No.	Min. (Lbs.)	Max.	Pump No.	Min. (Lbs.)	Max.
1523647	3	4	1537313	3	4
1523912	3	4	1537365	3	4
1537060	3	4	1537403	3	4

NOTE—For pressure specifications on all replacement pumps (for these pumps), see "Fuel Pump Testing" article and specifications.

SERVICING:—See article n Type AH Fuel pump for complete directions (all servicing operations except sediment bowl removal same as for Type AH).

AC TYPE AJ

Buick, Series 40 (1938-39), All Series (1940 to 1948)

Hudson 6 & 8, All Models (1939 to 1948) Optl.

Frazer & Kaiser, All Models (1947-48) Optl.

Nash "600" & Amb. Six, All Models (1942 to 1948) Optl.

Oldsmobile 6 & 8, All Models (1937 to 1948)

Packard Six, All Models (1937 to 1947) Optl.

Packard Eight, All Models (1937 to 1948) Optl.

Packard Super & Cust. Super Eight, All Models (1939-40-41)

Packard Super Eight, All Models (1948)

Pontiac Six, All Models (1937 to 1948) Optl.

Pontiac Eight, All Models (1937 to 1948)

TYPE:—Combination fuel-and-vacuum pump. New design, inverted, mechanically perated, diaphragm type pump. Vacuum section mounted on top of pump body with fuel pump section below which is reversed from previous designs. Improved type oil seal used on fuel pump pull rod which necessitates removal of rocker arm pin to engage or disengage pull rod when servicing diaphragm assembly. Operation is similar to previous types.

FUEL PUMP SECTION

NOTE:—Design of fuel pump section identical with Type AH fuel pumps. See preceding article on Type AH for description of operation and complete servicing directions. Fuel pump section should be removed first and installed first when servicing these pumps.

PERFORMANCE:—See article on Fuel Pump Testing and use of Analyzer.

Fuel Pump Static Pressure

Pump No.	Min. (Lbs.)	Max.	Pump No.	Min. (Lbs.)	Max.
1523110, 1523202	3	3¾	1537087, 1537094	4	4¾
1523227	3	4	1537100, 1537317	4	4¾
1523629, 1523825	3	3¾	1537330, 1537337	4	4¾
1523867, 1523895	4	4¾	1537338, 1537358	4	4¾
1523896	3	4	1537524	3	4
1523986, 1523992	4	4¾			

NOTE—For pressure specifications on all replacement pumps (for these pumps), see "Fuel Pump Testing" article and specifications.

TROUBLE SHOOTING:—See article on Fuel Pump Trouble Shooting. Use Fuel Pump Analyzer No. 1521551 and check performance before removing pump from car.

VACUUM PUMP SECTION

OPERATION:—Exhaust stroke positively actuated by pump linkage and suction stroke actuated by large driving spring 'R'. When the diaphragm 'N' is forced up by the long rocker arm link 'M', air in the pump chamber 'O' is forced out through outlet valve 'P' and outlet 'Q' to the intake manifold. Driving spring 'R' then forces diaphragm down, creating a vacuum in the pump chamber and placing a suction on the windshield wiper line which is connected at inlet 'S' (inlet valve not shown).

Whenever the windshield wiper is not in use (inlet line shut off), manifold vacuum holds the diaphragm at the upper end of its stroke with the driving spring compressed and the rocker arm motion is absorbed by the linkage. Likewise whenever the manifold vacuum is higher than that of the pump with the windshield wiper in operation, both the inlet and outlet valves will remain open and air flow from the wiper will be straight through the pump.

TROUBLE SHOOTING:—See article on Vacuum Pump Trouble Shooting.

SERVICING:—**Disassembly.** With pump clamped in vise, take out two opposite flange screws and install special guide pins as pilots when cover removed (guides may be made up of 3/16" cold-rolled stock, 2" long, with ¼" of 10-32 thread on ne end). Mark cover and body flanges to insure correct reassembly, take out remaining flange screws, lift off cover assembly. Press down n rocker arm, unhook diaphragm assembly from inner pump link, lift diaphragm assembly out.

Vacuum Pump Body Assembly. Place fibre inlet valve n brass valve seat (body furnished with valve seat installed), and position inlet valve spring on valve. Install spider-shaped valve stop plate on valve spring making certain that top coil of spring is seated in recess in stop plate. Install outlet valve spring and see that spring is centered in recess in body. Press down on inlet valve stop plate, install fibre outlet valve on valve spring, see that legs on stop plate fit into recess in body. Without releasing stop plate, slide retainer gasket into position, place retainer on top of gasket (countersunk holes must face up), insert flat-headed retainer screws and tighten securely (tighten center screws first, end screw last). Turn pump body over and install screen making certain that screen is flat and fits snugly around screw holes in body, install gasket on screen, place bottom cover on gasket and install four cover screws. See that gasket fits properly and cover screws tightened evenly to prevent leaks at this point.

Diaphragm & Pull Rod Assembly. Diaphragm and pull rod furnished as an assembly (riveted together). Place small lower oil seal retainer, leather oil seal washer, large upper oil seal retainer, and oil seal retainer spring in position in pump body in that order. See that the asssembly fits snugly in the recess around the pull rod hole. Install diaphragm on top of retainer spring, threading pull rod through oil seal and engaging hooked end of longer pump link in pull rod slot.

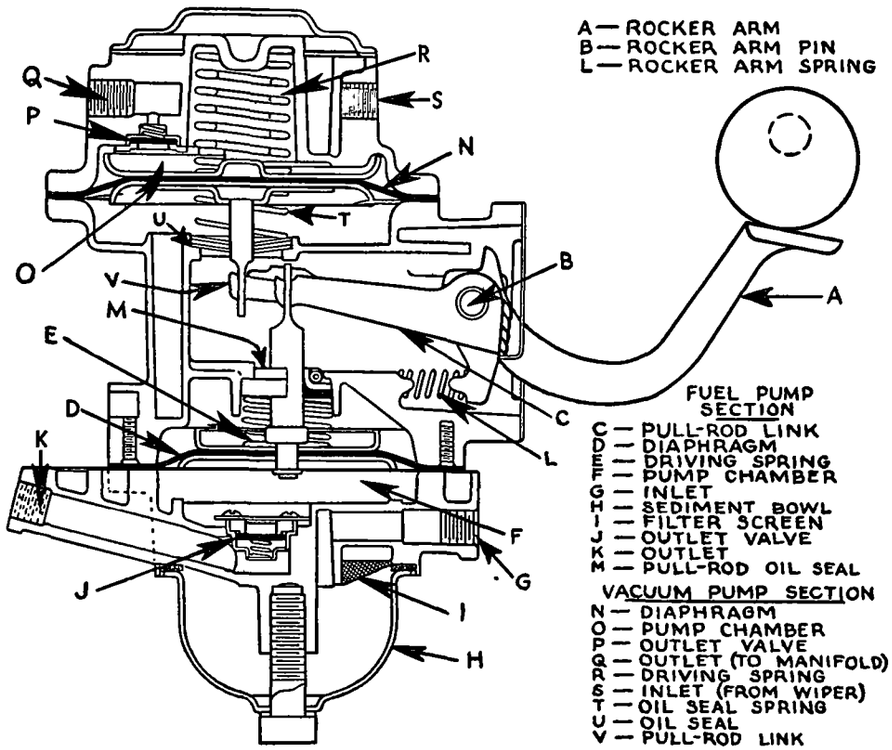

Vacuum Pump Assembly. Clamp pump body (with fuel pump installed) in vise with vacuum diaphragm up. Press down on rocker arm until diaphragm is flat on flange, install small metal wedge between body and shoulder on arm to hold it in this position while completing assembly. Place heavy driving spring on diaphragm, place vacuum pump body assembly in position on spring making certain flange marks line up and that spring is centered on diaphragm and around boss in pump body. Press down on vacuum pump body, insert flange screws (lockwasher on each screw), turn screws down loosely. Remove rocker arm wedge, tighten screws evenly. Check vacuum pump operation after pump re-installed on engine.

AC TYPE P

GRAHAM SIX, MODELS 80, 90 (1936), 85, 95 (1937)
STUDEBAKER PRESIDENT, MODELS 2C (1936), 3C (1937)
WILLYS, MODEL 77 (1936)

NOTE:—This Type P pump is assembled from parts used on other pump types as follows:

Series P:—Pump body—Series E. Pump cover—Series B.

PERFORMANCE:—See article on Fuel Pump Testing.

Fuel Pump Static Pressure

Pump No.	Min. (Lbs.)	Max.	Pump No.	Min. (Lbs.)	Max.
1521010	1½	3	1521829	2½	3½
1521011, 1521200	1½	3½	1521850, 1522122	1½	3½
1521201, 1521208	1½	3½	1522214	1½	3
1521214, 1521222	1½	3½	1523008	1½	3½
1521227	1	1¼	1523035, 1523086	1½	2
1521381, 1521383	1½	3½	1523339	1½	3
1521390	1½	3	1523386	1½	3½
1521392	2	3	1523601	1½	3
1521679, 1521683	1½	3½	1523770, 1523811	1½	3½
1521788, 1521824	1½	3½	1523827	1½	3
1521825	1½	3	1537168	1½	3½

NOTE—For pressure specifications on all replacement pumps (for these pumps), see "Fuel Pump Testing" article and specifications.

SERVICING:—See articles on Types "B" and "E" for complete data.

TROUBLE SHOOTING:—See article on Fuel Pump Trouble Shooting. Use Fuel Pump Analyser to check performance before removing pump from car.

AC TYPE W

Buick, Series 40 (1936-37-38)
Chevrolet, All Models (1936)
Nash "600" & Amb. Six, All Models (1936 to 1948)
Nash Eight, All Models (1936 to 1942)
Nash-Lafayette, All Models (1936 to 1940)
Studebaker Dictator, All Models (1936 to 1937)
Studebaker Champion, All Models (1939 to 1948)
Studebaker Commander, All Models (1938 to 1947)

NOTE:—The Type W pumps are assembled from parts as listed below:
Body (including linkage) ..... **Type R.** Top Cover Assembly..... **Type B.**

PERFORMANCE:—See article on Fuel Pump Testing.

Fuel Pump Static Pressure

Pump No.	Min. (Lbs.)	Max.	Pump No.	Min. (Lbs.)	Max.
1521798, 1521854	2½	3½	1523812	2	3½
1521812	2	3½	1523957	2½	3½
1522152, 1522153	2½	3½	1537378	1½	3½
1522154, 1522227	2½	3½	1537389, 1537398	2½	3½
1523233, 1523237	2½	3½	1537413	2½	3½
1523640, 1523642	2½	3½			

NOTE—For pressure specifications on all replacement pumps (for these pumps), see "Fuel Pump Testing" article and specifications.

OIL SEALS:—Both leather and rubber oil seal washers have been used on these pumps. On pumps with leather oil seal washers, the upper oil seal washer retainer is held in place by a separate spring. Assemble oil seal as follows:

With the diaphragm assembly inverted, place the retainer spring over the pullrod so that it rests on the lower diaphragm protector, then assemble following parts in order: (1) upper oil seal washer retainer with concave side toward spring (cupped portion away from spring), (2) two leather oil seal washers, (3) lower retainer with concave side toward leather seals.

SERVICING:—For all other servicing data than oil seals (above), see article on Type R (for lower body and linkage), Type B (top cover).

AC TYPES AC, AF, AG, AK

Buick, Series 40 (1938-39)
Chevrolet, All Models (1937 to 1948)
Hudson '112' Six, All Models (1938 to 1942)
Willys, All Pass. Car & Comm'l Models (1937 to 1942)
Willys Jeep, Universal CJ-2A (1946-47-48)
Willys Jeep Sta. Wgn. & Sedan Del. 4-63 (1946-47-48)

TYPE AK

Buick, Series 60,80,90 (1937)—Later Cars
Hudson 6, All Models exc. '112' (1937 to 1947)
Hudson 8, All Models (1937 to 1942)
Terraplane, All Models (1937-38)

TYPE:—These pumps are assembled of Body and Top Cover assemblies used on other fuel pump types as follows:

Pump Type	Body Assembly	Top Cover Assembly
AC	Type B	Type R
AF	Type R	Type AA
AG	Type D (Riveted Diaphragm)	Type AA
AK	Type R (Larger)	Type D

PERFORMANCE:—See article on Fuel Pump Testing for testing procedure.

Fuel Pump Static Pressure

TYPE AF

Pump No.	Min. (Lbs.)	Max.
1523089	3	3¾
1523306	1½	2½
1523703, 1523753	2	3½
1523815	4	5
1537101	3	3¾
1537270, 1537272	2	3½
1537320	1½	2½
1537416	4	4¾

TYPE AC

Pump No.	Min. (Lbs.)	Max.
1523983	1½	3
1537542	1½	3

TYPE AK

Pump No.	Min. (Lbs.)	Max.
1523289	3	4½

NOTE—For pressure specifications on all replacement pumps (for these pumps), see "Fuel Pump Testing" article and specifications.

SERVICING:—See previous articles on the Fuel Pump Types from which these pumps are assembled for complete servicing instructions.

AC TYPE AD

Nash-Lafayette, All Models (1937 to 1940) Optl.
Nash Amb. Six, All Models (1937 to 1941)
Nash Amb. Six, Model 4860 (1948) Optl.
Nash Amb. Eight, All Models (1937 to 1942)
Studebaker Dictator, Models 7A, 8A (1938) Optl.

TYPE:—This pump similar to Type X fuel and vacuum pump except that Top Cover for fuel pump section is Type B.

PERFORMANCE:—See article on Fuel Pump Testing for test procedure.

Fuel Pump Static Pressure

Pump No.	Min. (Lbs.)	Max.	Pump No.	Min. (Lbs.)	Max.
1522228, 1523234	2½	3½	1523641	2½	3½
1523238, 1523327	2½	3½	1523643, 1523644	2½	3½

NOTE—For pressure specifications on all replacement pumps (for these pumps), see "Fuel Pump Testing" article and specifications.

SERVICING:—Follow instructions given for Type X except for top cover assembly (see Type B for valve and cover section of fuel pump).

AC TYPE AN (VACUUM PUMP)

1523188—CHRYSLER CUSTOM IMPERIAL, C15 (1937), C20 (1938)
CHRYSLER IMPERIAL C23, CUST. IMP. C24 (1939)

NOTE:—This pump consists of the vacuum pump section of a Type 'I' pump. The fuel pump section is omitted and a special cover plate installed on the fuel pump mounting flange. See article on Type I for servicing instructions.

AC TYPE AL

CHRYSLER 6, C16 ('37), C18 ('38), C22 ('39) WITH SWINGING WINDSHIELD
DE SOTO, S3 ('37), S5 ('38), S6 ('39) WITH SWINGING WINDSHIELD
DODGE, D5 ('37), D8 ('38), D11 ('39) OPTIONAL
PLYMOUTH, P3,P4 ('37); P5,P6 ('38); P7,P8 ('39) OPTIONAL

DESCRIPTION:—This combination Fuel-and-Vacuum Pump is same design as Type I except that fuel pump top cover assembly is same as Type B.

PERFORMANCE:—See article on 'Fuel Pump Testing' for complete testing data.

Fuel Pump Static Pressure

Pump No.	Min. (Lbs.)	Max.
1523137	2½	3½

NOTE—For pressure specifications on all replacement pumps (for these pumps), see "Fuel Pump Testing" article and specifications.

SERVICING:—See article on Type I combination Fuel-and-Vacuum Pump for all servicing data (except fuel pump top cover and valve assembly for which refer to article on Type B pump).

AC TYPE AM

Chevrolet, All Models (1938-39) Optl.
Willys Jeep, Universal CJ-2A (1946-47-48) Optl.
Willys Jeep Sta. Wgn. & Sedan Del. 4-63 (1946-47-48) Optl.
Willys Jeep, Station Sedan 6-63 (1948)
Willys Jeep Truck, Models 2T, 4T (1947-48)

DESCRIPTION:—This combination fuel-and-vacuum pump is same design as Type 'X' except that mounting flange and fuel pump section Top Cover is same as used on Type 'AF' fuel pumps.

PERFORMANCE:—See article on 'Fuel Pump Testing' for complete testing data.

Fuel Pump Static Pressure

Pump No.	Min. (Lbs.)	Max.
1537321, 1537409	2½	3½

NOTE—For pressure specifications on all replacement pumps (for these pumps), see "Fuel Pump Testing" article and specifications.

SERVICING:—**Fuel Pump Section.** See article on Type AF Fuel Pump for data. **Vacuum Pump Section**—See article on Type X fuel-and-vacuum pump for data.

AC TYPE AR

DESCRIPTION:—This pump is assembled from parts which are also used on other pump models as follows:

Top Cover Assembly—Type 'AF'. Body and Linkage Assembly—Type 'B'. Pump has inverted glass bowl type sediment chamber. Diaphragm is riveted to pull rod and should be serviced as an assembly.

PERFORMANCE:—See article on 'Fuel Pump Testing' for complete testing data.

SERVICING:—See articles on Type B Fuel Pump (for body and linkage servicing including Diaphragm replacement) and Type AF Fuel Pump (for top cover and Valve Assembly servicing).

AC TYPE AS

CHRYSLER SIX, C18 (1938), C25 (1939) WITH SWINGING WINDSHIELD
DE SOTO, S5 (1938), S7 (1940) WITH SWINGING WINDSHIELD
DODGE, D8 (1938), D14, D17 (1940) WITH SWINGING WINDSHIELD
PLYMOUTH, P5,P6 (1938); P7,P8 (1939); P9,P10 (1940)

DESCRIPTION:—This combination Fuel-and-Vacuum pump is an 'inverted' type (vacuum pump section on top) with same design body and mounting flange as Type AT pumps. Vacuum pump section is same design as other AC Vacuum pumps. Fuel pump section is same design as Type AH except that glass bowl type sediment chamber retained by bail and thumbscrew is used.

PERFORMANCE:—See article on 'Fuel Pump Testing' for complete testing data.

Fuel Pump Static Pressure

Pump No.	Min. (Lbs.)	Max.
1523648, 1523913	3	4

NOTE—For pressure specifications on all replacement pumps (for these pumps), see "Fuel Pump Testing" article and specifications.

SERVICING:—**Fuel Pump Section**—See article on Type AH Fuel Pump for data. **Vacuum Pump Section**—See article n Type AJ combination fuel-and-vacuum pump for data.

AC TYPE AU

CADILLAC V16, SERIES 90 (1938-39-40)—RIGHT & LEFT HAND PUMPS

NOTE:—On this model, one pump mounted at forward end of each cylinder bank and supplies fuel to carburetor for that bank. Fuel lines to carburetors are inter-connected so that either pump can supply fuel for both carburetors, and one pump only will normally operate when engine is idling. When engine operated under load, both pumps operate.

DESCRIPTION:—These pumps assembled from parts which are also used on other pump models as follows:

Top Cover Assembly—Type 'AA'. Body and Linkage Assembly—Type 'AK'.

NOTE—Type AK Body and Linkage Assembly is similar to Type R except that is larger size.

PERFORMANCE:—See article on 'Fuel Pump Testing' for complete testing data.

Fuel Pump Static Pressure

Pump No.	Min. (Lbs.)	Max.
1523816	4	5
1537220, 1537437	3	4½
1537774	2½	3½

NOTE—For pressure specifications on all replacement pumps (for these pumps), see "Fuel Pump Testing" article and specifications.

SERVICING:—See articles on Type R Fuel Pump (for body and linkage servicing including Diaphragm replacement) and on Type AA Fuel-and-Vacuum Pump (for top cover and Valve Assembly servicing).

AC TYPE AW

CHRYSLER 8, MODELS C23, C24 (1939); C26, C27 (1940)
CHRYSLER 8, MODELS C36, C37 (1942)

DESCRIPTION:—This fuel pump same design as Type AH except for different mounting studs, air dome, and curled hair air cleaner.

PERFORMANCE:—See article on Fuel Pump Testing for complete testing data.

Fuel Pump Static Pressure

Pump No.	Min. (Lbs.)	Max.
1523869, 1537445	3	4
1537556	4	4¾

NOTE—For pressure specifications on all replacement pumps (for these pumps), see "Fuel Pump Testing" article and specifications.

SERVICING:—See article on Type AH fuel pump for data.

AC TYPE AX

CADILLAC V8, SERIES 40-60S,62,72,75 (1940)
CADILLAC V8, SERIES 42-60S, 61, 62, 63, 67, 75 (1942)
CADILLAC V8, ALL SERIES (1946-47-48)
LA SALLE V8, SERIES 40-50, 52 (1940)

DESCRIPTION:—These pumps assembled from parts which are also used on other pump models as follows:

Top Cover Assembly—Type 'AA'. Body and Linkage Assembly—Type 'AB'. Pump has inverted glass bowl type sediment chamber.

PERFORMANCE:—See article on 'Fuel Pump Testing' for complete testing data.

Fuel Pump Static Pressure

Pump No.	Min. (Lbs.)	Max.
1537083, 1537088	4	4¾

NOTE—For pressure specifications on all replacement pumps (for these pumps), see "Fuel Pump Testing" article and specifications.

SERVICING:—See article on Type 'AB' Fuel-and-Vacuum Pump (for body and linkage servicing) and Type 'AA' Fuel-and-Vacuum Pump (for top cover and Valve Assembly servicing).

AUTOPULSE

DESCRIPTION:—The new type Autopulse has been considerably modified in construction and can be completely disassembled for inspection and service although the principle of operation remains the same as in the earlier types. The two valves are assembled in the pump base casting and are accessible after removing the filter and filter base casting and taking out the two brass screws under the filter screen. The driving motor is accessible by taking out the two screws on the side of the base cover.

OPERATION:—The operation of the pump is entirely automatic and is controlled by the back-pressure of the gasoline in the float chamber of the carburetor. The Autopulse feed wire should be connected to the coil side of the ignition switch or to the switch side of the ignition coil. In special cases where neither of these terminals is available the Autopulse can be connected to the ammeter through a special switch. This switch must be turned on when the engine is started.

INSTALLATION:—The Autopulse should be mounted near the carburetor and preferably at a slightly lower level than the carburetor bowl. If possible it should be mounted on the chassis frame under the front floor boards so that the filter may be easily reached for cleaning. The suction line should be shielded from the engine exhaust pipe if it is necessary to run them together, to prevent vaporizing of the gasoline in the line. Likewise the pump should not be mounted above the carburetor as this will allow air to be trapped in the delivery line which will cause the pump to flutter. The Autopulse should not be mounted on the dash.

CAPACITY:—The Autopulse will pump approximately 12 gallons per hour. The standard unit is fitted with ⅛ inch openings which will take either ¼ or 5/16 inch tubing. The ¼ inch tubing will be sufficient for engines requiring up to ten gallons per hour. The pump is also furnished with ¼ inch pipe thread couplings which will accommodate ⅜ inch tubing. On multiple units inlet and suction manifolds are used. One end of the manifold can be closed with a pipe plug or if greater capacity is desired, two suction and delivery lines can be used connected to each end of the manifold. Additional pressure can be secured by reversing the small brass stamping on the lower end of the driving spring in the coil core which provides two pounds pressure instead of the standard one pound pressure. To make this change, first remove the motor cover. Then insert a small screwdriver in the slot in the spring support on the base of the motor, compress the spring and slip the support to one side. This will allow the spring and stamping to be removed. Reverse the stamping so that the small knob is against the spring and replace. Make certain that the support is snapped in place (see illustration).

SERVICING:—**Check for Correct Installation:**—After installing pump, turn on ignition but do not start engine. The pump should start at once and pump rapidly until the carburetor bowl is fulll. The pump should then stop. If the pump strokes rapidly and air bubbles are noticeable in the filter chamber, there is a leak in the suction line. If the pump does not stop and continues to pump slowly, there is a leak in the delivery line or the carburetor float valve is not properly seated.

Cleaning Filter:—The filter is designed to trap all foreign matter and water in the filter chamber. To clean filter, take out the cap screw at the top, lift off the filter bowl and remove screen. In replacing the filter, carefully check the gaskets and replace if they are worn or damaged.

Valves:—To check valves, remove the filter and screen and take out the two screws in the filter base casting. Remove the filter base. The valves can then be taken out. Carefully examine the gaskets and replace if necessary. The valve on the 'Tank' side of the base should be inserted with the flange at the top and the valve n the 'Carb' side should be inserted with the flange at the bottom.

Pump Bellows:—To replace bellows, remove motor cover, take out driving spring by slipping spring clip at lower end to one side. Then loosen the nut on the driving screw directly below the bellows stud and loosen the driving screw by inserting a thin screwdriver in the spring hole. Then take out two screws in bellows ring casting and remove coil and armature. Take out the four screws in the bellows ring. The bellows ring and bellows can then be removed. After replacing the bellows, be careful to leave a clearance of .040 inch between the armature and the top of the magnet. The lock nut on the driving screw should be tightened to hold this adjustment.

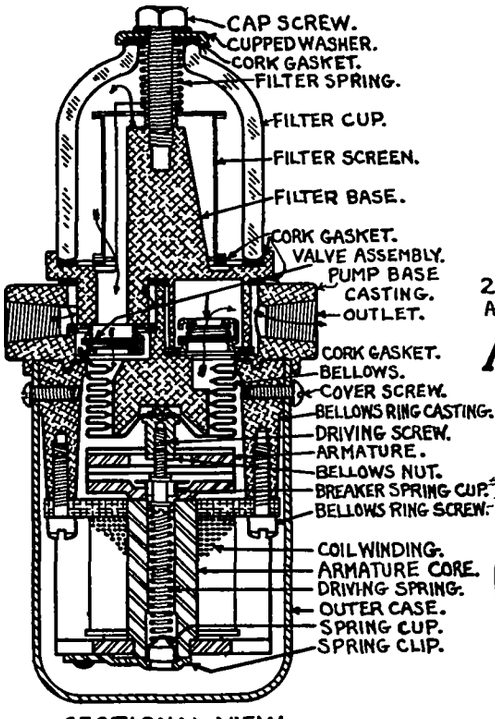

SECTIONAL VIEW.

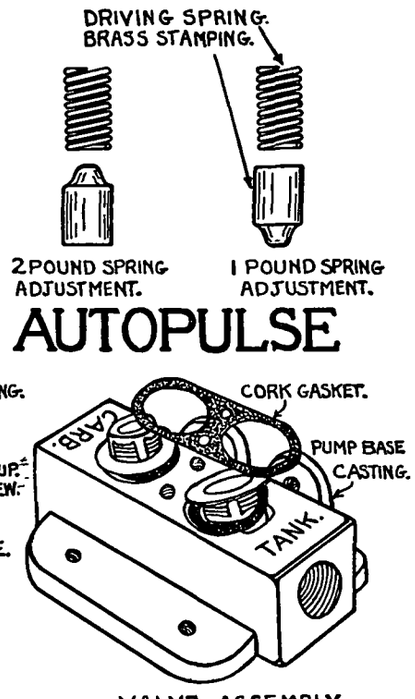

VALVE ASSEMBLY.

Armature and Magnet:—When the lower contacts become worn it will be necessary to replace the armature. This operation requires the use of a special tool, a plain sleeve .341 inch outside diameter and .316 inch inside diameter, to align the breaker spring cup on which the lower contacts are mounted to insure proper clearance. To replace armature, disassemble as directed in above paragraph. Then remove armature by taking out two bolts. In reassembling, insert the special tool in the hole in the magnet to hold cup in alignment while the bolts are being tightened. Be careful to leave .040 inch clearance between the armature and the magnet. The magnet is installed in the same manner. If the upper contacts are worn they may be replaced by riveting a new upper contact bridge in place.

STEWART-WARNER MODEL 110-A

DESCRIPTION:—Electrically driven, diaphragm type pump with new design magnetic motor consisting of an oscillating armature mounted in front of the power coil and linked to the pump diaphragm assembly. Contacts with control power coil circuit are sealed in a hydrogen filled tube and operated remotely by two relay coils (small contacts for relay coil operation are mounted on armature). Entire motor mechanism (power coil, armature, contact points, and contact operating relay coils) are located in upper pump housing and entirely removed from pumping chamber and fuel. Pumping mechanism (sediment bowl, filter screen, inlet and outlet valves, diaphragm assembly and delivery spring) are located in lower die-cast pump housing so that all fuel is below the diaphragm which is clamped between the two pump housing parts. Pump is pusher type and is designed to be mounted near the fuel tank (not more than 3' of suction line) and it is claimed that with this type of mounting vapor lock cannot occur.

Capacity & Performance—Pump will maintain delivery rate of 15 gallons of fuel per hour to the carburetor bowl (two pumps can be mounted in parallel for greater capacity) and operates at rate of 250 strokes per minute for maximum delivery. Current consumption is 1 ampere (maximum) or ½ ampere (average).

OPERATION:—Pump switch contacts (in hydrogen filled tube) are normally held closed by spring tension so that power coil is energized immediately when the ignition switch is turned on. This causes armature to be drawn up toward coil core, compressing delivery spring, and raising pump diaphragm so that fuel is drawn into pump chamber from tank. When the armature reaches the upper position at the end of its stroke, the upper relay contacts close and upper relay coil is energized which attracts the movable contact of the main switch contact assembly, opening the contacts and breaking the power coil circuit. Delivery spring then pushes armature and pump diaphragm down and forces the fuel in the pump chamber out through the outlet valve and line to the carburetor bowl. When the armature reaches the lower end of its stroke, the lower relay contacts close and the lower relay coil is energized. This coil opposes the upper coil and counteracts the magnetic attraction holding the switch contacts open so that these contacts close. The pump cycle is then repeated.

INSTALLATION:—Install pump upright (mark 'TOP' up) on frame side rail, crossmember, or bracket at tank level near tank so that suction line is not more than 3 feet in length. Tubing used to connect pump and tank should not be smaller than 5/16" outside diameter, tubing between pump and carburetor should be ¼" (small engines), 5/16" or ⅜" (large engines). Pump inlet and outlet are ⅛" P.T. Wire connecting terminal on fuel pump to ignition switch should be #16 or heavier. Connect pump to 'Gauge' terminal on switch so that pump controlled by switch. Make certain that pump well grounded through mounting bolts (use separate ground wire if necessary).

Dual Pump Installations—Use 'Tee' fitting in suction line and delivery line and connect each pump to this Tee. Wire pumps in parallel or install separate switches so that each pump can be cut in or out independently.

SERVICING:—**Sediment Bowl & Filter Screen**—To drain sediment bowl and clean filter screen, remove attaching screw on cover at bottom of pump casting, remove cover. Screen located within bowl and can be removed after cover has been taken off.

Switch Contacts—No servicing required. Contacts are sealed in hydrogen filled tube and are designed to outlast the life of the engine. Serviced by replacement only.

Diaphragm & Motor Servicing—Motor and diaphragm attaching screws are accessible by removing two screws in top cover. Diaphragm and diaphragm protectors are a unit with the pullrod (riveted assembly).

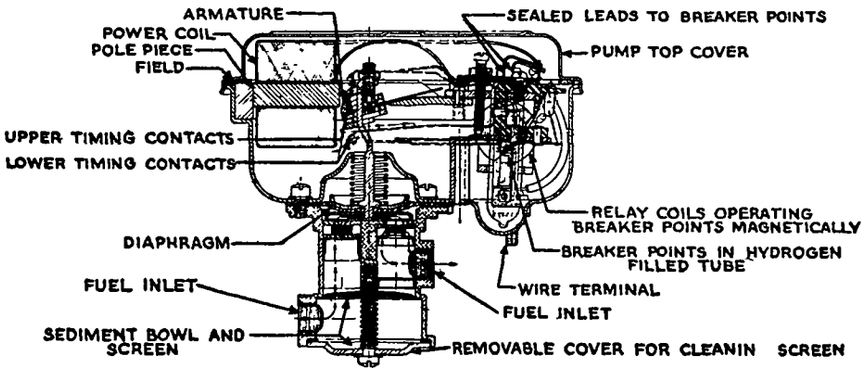

KING-SEELEY ELECTRIC FUEL PUMP

DESCRIPTION:—This pump is an electric, double-acting, piston type and is assembled as follows:

Piston & Valves—Valves are located in piston and are inertia type (valve mounted directly on each end of valve stem and operated by fuel flow without springs (light spring on outlet valve stem facilitates priming).

Coil & Power Spring—Coil is wound on form around stationary core and consists of a primary (connected in series between terminal on side of case and contacts) and a short-circuited secondary (which minimizes arcing at the contacts). Downstroke of piston is actuated magnetically by the coil, upstroke is positive and is actuated by the power spring on the piston stem.

Contact Mechanism—Contacts are stainless steel and are submerged in fuel which prevents arcing. Upper (stationary) contact is mounted on lower face of coil stationary core. Lower (movable) contact is mounted on the lower end of the contact core on the piston rod and is insulated from the rod by a bakelite bushing. Bakelite bushing is free on an adjustable brass bushing on the piston rod and is positioned by a bumper spring below and a contact spring above.

OPERATION:—When coil is energized, movable core and piston are drawn down opening inlet valve and closing outlet valve of upper pump chamber so that fuel is drawn from tank through filter bowl and screen and channel in piston into this pump chamber. At the same time, inlet valve closes and outlet valve pens for lower pump chamber and fuel is forced out of this chamber through pump outlet to carburetor.

Delivery Pressure Regulation—A spring-loaded, piston type, by-pass valve located in the outlet channel of the pump opens when the pressure exceeds the valve spring calibration and by-passes fuel through a channel in the pump housing. By-pass valve springs are calibrated. Standard spring limits pressure to 2¼-2½ lbs. (special springs furnished up to 4½ lbs.).

SERVICING:—Units which do not operate satisfactorily should be replaced. Manufacturers service policy provides for replacement exchange.

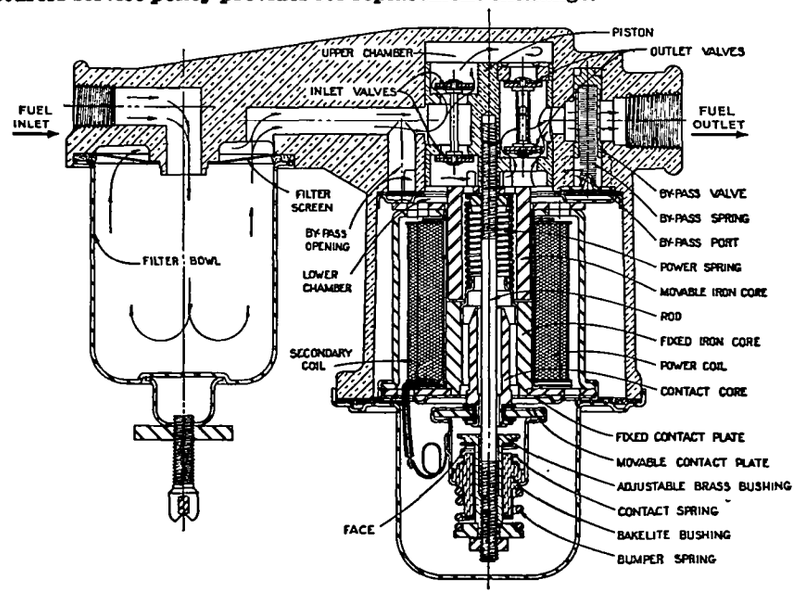

CARTER MECHANICAL FUEL PUMP

Carter No.

M594S—Chrysler Six C38 & De Soto S11 (1946-47)
Dodge, Model D24 (1946-48)
Plymouth, Model P15 (1946-48)

M639S—Chrysler Six C38 & De Soto S11 (1948)

M587S—Willys Universal Jeep CJ-2A (1948)

DESCRIPTION: Mechanically operated, diaphragm type pump mounted on side of engine block and driven by eccentric on camshaft. Pump has one-piece cam lever, intake and discharge air domes (discharge air dome is diaphragm sealed type to prevent loss of air cushion). Valves are "cage assemblies" (unit valve disc, spring, and seat) and diaphragms are likewise furnished as an assembly consisting of diaphragm, shaft, spring and oil seal.

OPERATION: Suction stroke of pump is positive (eccentric on camshaft causes cam lever to pull up on diaphragm assembly), delivery stroke is powered by spring on diaphragm shaft which is compressed during suction stroke. Fuel delivery is controlled by back pressure in the line and, whenever carburetor float needle valve is closed, the diaphragm assembly remains at the end of its stroke with the spring compressed. Under these conditions the cam lever slides up and down on the diaphragm shaft (lever return spring keeps cam lever in contact with eccentric on camshaft).

OVERHAUL: *NOTE—See "Repair Package" data below for sub-assemblies furnished for these pumps.*

Disassembly: Make certain that pump body and pump valve housing marked to insure correct reassembly, remove rivet plug (or setscrew used on some models) which retains cam lever pin, remove pin, withdraw cam lever, spring retainer, and return spring. Remove bowl cover retaining capscrew, lift off bowl cover, gasket, cover screw packing, and strainer. Remove bowl retainer screw, lift off bowl assembly and outlet air valve diaphragm. Remove capscrews and lockwashers around pump body flange, separate body and valve housing, lift out diaphragm assembly. Remove valve cage assemblies. Remove vent packing retainer ring and take out packing in recess in side of pump body.

Cleaning & Replacement of Parts: See "Repair Package" data below for new parts which should be installed when rebuilding pump. Clean all other pump parts with gasoline, blow out all passages, and dry parts with air. Replace all worn or damaged parts.

Reassembly: Install packing and retainer in vent recess in body. Use Valve Cage Assembly Tool, T109-191, to install new intake and outlet valve cage assemblies in valve body. Place new diaphragm assembly in position in pump body with diaphragm flats at fuel line connections, install valve body (line up marks made before disassembly), turn capscrews in loosely around flange. Install cam lever, return spring retainer, and spring making certain that end of lever engages diaphragm shaft, install lever pin and pin rivets (or one rivet and one retaining screw on models where setscrew used). Use Diaphragm Flexing tool, T109-192, to hold diaphragm flexed at end of stroke while tightening capscrews around flange evenly and securely (CAUTION—This is necessary to insure full stroke of the pump in service). Install bowl assembly with new outlet air dome diaphragm between bowl and valve body, tighten bowl retainer screw. Install strainer and bowl cover using new cover screw packing, cover gasket, and cover screw gasket.

REPAIR PACKAGE: Carter No. M20000 (594S).

►*NOTE*—This package contains following parts which should be renewed when rebuilding pump: Cam Lever Rivet Plug, Bowl Cover Capscrew Gasket and Felt Packing, Bowl Cover Gasket, Pump Body Gasket, Valve Cage Assembly (2), Diaphragm Assembly (diaphragm, shaft, spring, and oil seal), Outlet Air Dome Diaphragm, and Vent Packing Retainer Ring.

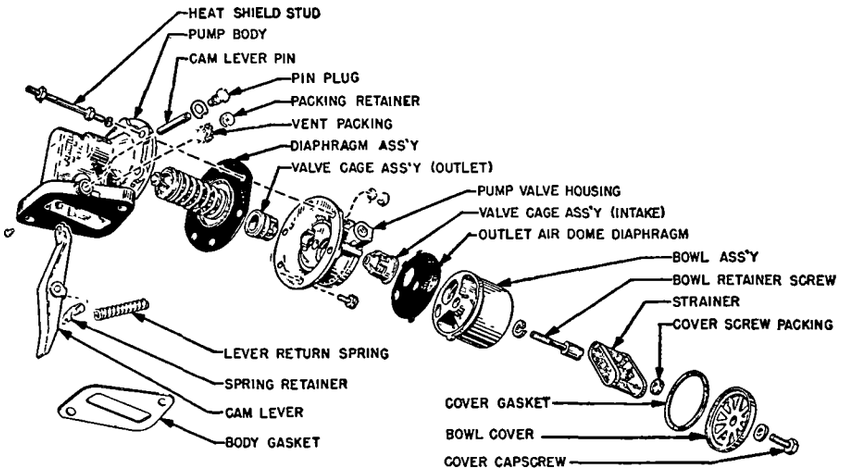

CARTER MECHANICAL FUEL PUMP

AC TYPES

DESCRIPTION:—The A.C. Electric Gasoline Gauge is of the balanced coil type and consists of two units, a dash unit or recording gauge and a tank unit or measuring device mounted on top of the gasoline tank. The dash unit mounted on the instrument panel consists of two coils mounted at an angle of 90 degrees. The gauge pointer is attached to an armature which is pivoted at the intersection of the coil axes. The dash unit is connected to the coil side of the ignition switch and to the tank unit through insulated wires. The dash unit is grounded through the mounting screws to the instrument board and car frame.

Tank Unit:—Gearless type with integral float arm and contactor arm (rheostat ground brush). Float arm is pivoted in lower end of tank unit case so that movement of the arm (with the rise and fall of the float in the tank) causes the upper end of the arm to sweep across the tank unit resistance coil. Except for this float arm construction and separately mounted fuel outlet pipe (some models), all types are similar. NOTE—On first type gauges, float mechanism in tank unit is 'geared' type with float arm clamped to gear pivoted on tank unit bracket so as to mesh with gear on contactor operating shaft. Both types of gauges operate in the same manner.

OPERATION:—The upper terminal of the dash unit marked 'Ignition' is connected to the coil side of the ignition switch (or to the 'auxiliary' terminal of lock switch coils) so that the gauge is operative whenever the ignition switch is turned on. Current flows through coil 'A' of the dash unit to the center terminal marked 'Tank'. The second coil 'B' is connected to this terminal. The other end of this coil winding is grounded to the gauge case. The 'Tank' terminal of the gauge is connected to the terminal on the tank unit and circuit is completed to ground through the tank unit resistance winding. This resistance winding in the tank unit is grounded through the movable contactor so that the resistance is cut in or out of the dash unit coil circuits as the float rises and falls with the gasoline level in the tank.

INSTALLATION:—Both the tank unit and dash unit are grounded and care must be taken whenever the units are installed or replaced that a ground is provided. On the tank unit it will be sufficient to remove paint and carefully clean the tank under the tank unit flange.

TROUBLE SHOOTING:—Defective units should be replaced and servicing operations will be confined to locating trouble in dash unit or tank unit. Check gauge operation from following table:

1. **Pointer does not move when ignition is turned 'on'.**
   The line from the ignition switch to the dash unit is open. Check connections and supply new lead from switch to 'IGN' terminal on gauge.
2. **Gauge indicates 'Full' at all times.**
   The line between dash unit and tank unit is open. Check connections and replace line with insulated wire.
   Tank unit burned out. Replace tank unit.
   Tank unit not grounded. Check by supplying new ground from tank unit to car frame.
3. **Gauge indicates 'Empty' at all times.**
   Wires reversed on dash unit. See that connections are made as indicated above on diagram.
   Dash unit is not grounded. See that dash unit is properly grounded. Check by supplying special test ground to car frame. If dash unit does not register correctly, it must be replaced.

SERVICING:—No service operations required other than to see that wires are properly connected and terminals are tight. Defective units (as determined by tests given below) should be replaced.

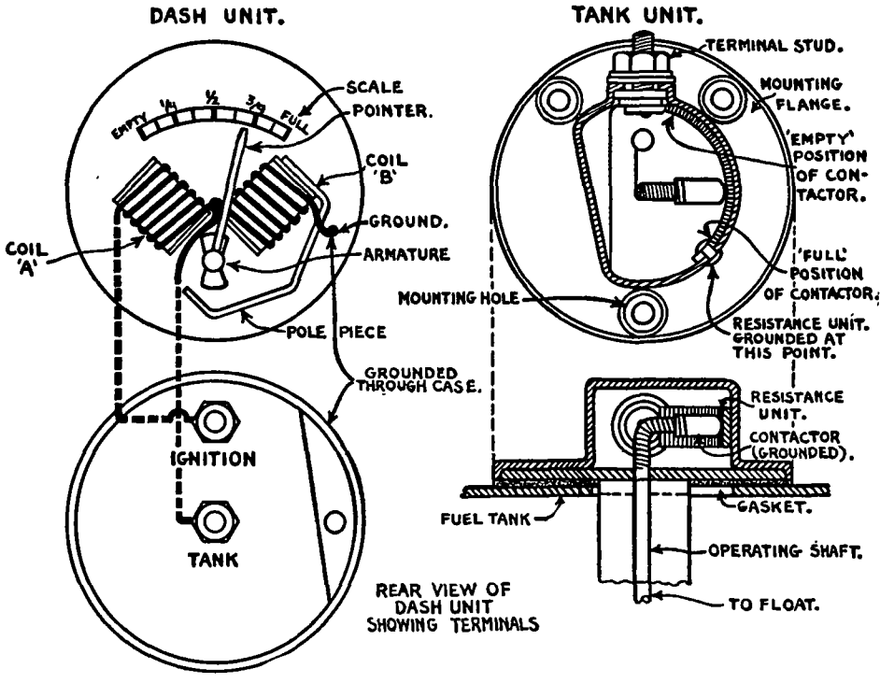

AC GASOLINE GAUGE TESTING

NOTE:—Manufacturer recommends that AC Gas Gauge Tester, Part No. 1516000, or HMO-204 be used to make tests. Tester similar to gas gauge Tank Unit equipped with test leads and an operating handle by which the resistance can be cut in and out of the gauge circuit in a similar manner to the operation of the tank unit on the car.

TESTING:—Make the following tests in the order given which will completely check all gas gauge units and wiring.

DASH UNIT

With ignition switch 'off', disconnect tank wire at terminal on back of dash unit, connect RED tester lead to this terminal, ground BLACK tester lead to frame. Turn ignition switch 'on', move Tester arm up and down. Gas gauge dash unit should register 'Full' and 'Empty'. If operation is O.K., disconnect tester and reconnect tank wire. If dash unit pointer does not register correctly, check feed wire by connecting 6 volt test lamp between dash unit Ignition Terminal (second terminal on back of dash unit) and ground. If test lamp does not light, circuit from ignition switch is defective and ignition switch and connecting wire should be checked or replaced. If lamp lights (gauge circuit O.K.) and dash unit does not operate, replace dash unit and reconnect wires.

GAUGE WIRING

Disconnect tank unit wire at nearest point to tank unit (bayonet type snap connector or junction block). Attach Red tester lead to wire running back to dash unit, ground BLACK tester lead to the car frame. Turn ignition 'on'. Move tester arm up and down and watch dash unit pointer which should move from 'Empty' to 'Full'. If dash unit reads 'Empty' at all times, or if reading is lower than when dash unit tested alone (dash unit test above), check wire for shorts or leaks (broken insulation, short junction block terminals, un-insulated connectors touching body or frame, etc.). If dash unit reads above 'Full' at all times, or if reading is higher than when dash unit tested alone, check wire for open-circuits (break in wire, loose connections, corroded terminals, etc.). If dash unit and wire tests O.K., check tank unit.

TANK UNIT

Remove tank unit, clean tank unit terminal and mounting flange thoroughly, connect tank unit to wire running to dash unit, ground tank unit by connecting jumper wire from tank unit mounting flange to car frame. Turn ignition 'on'. Move tank unit float arm up and down. Dash unit pointer should move from 'Empty' to 'Full'. If dash unit reading indicates tank unit defective, replace tank unit. Always check tank units before installing in tank and make certain that float arm is free (check for freedom of movement by noting that float arm falls back to empty position when released in various positions). See that gasoline tank and tank unit mounting flange are clean (tank unit grounded to frame through tank) and that a good ground contact exists between tank and frame.

AUTO-LITE TYPES

IMPORTANT SERVICE NOTE:—Three types of dash units have been used as described below and special precautions must be observed when tightening connections at dash unit terminals on each model. Excessive tightening will loosen terminal stud and destroy the accuracy of the gauge requiring replacement of the dash unit (see also Calibration Adjustment below).

First Type Dash Unit—No identification marks. No terminals staked to prevent turning. Use great care when tightening connections, particularly at 'IGN.SW.' terminal.

Second Type—May be identified by radio resistor terminal at top of gauge between '1' and '2' terminals and use of round insulating washers on each of these terminals. The 'IGN.SW.' terminal is staked to prevent turning. Other terminals are not staked.

Latest Type—May be identified by radio resistor terminal and insulating strip extending across between '1' and '2' terminals (replaces individual insulating washers used on other types). All three terminals staked to prevent turning.

DESCRIPTION:—Gauge consists of a bimetal or thermostatic arm type dash unit and a rheostat type tank unit connected together by two wires.

Dash Unit—Pointer actuated by the two bimetal arms on which heating coils are wound (these arms hinged at upper end with lugs to engage pointer at lower end). The two outer bimetal arms (without heating coils) compensate the dash unit for temperature changes (left hand arm controls dash unit contacts, right hand arm has insulated stop at each side to limit motion in each direction) and the contacts compensate for battery voltage variations (remain closed at 5 volts or less, open and close at voltages above 5 volts to maintain constant gauge input). The circuit through the dash unit is from the 'IGN.SW' terminal through the contacts and then through each heating coil to terminals '1' and '2'.

Tank Unit—Consists of a resistance coil wound on a flat form and connected between the two tank unit terminals. Contact arm is grounded and circuit from each terminal is through the resistance to ground at the contact arm. Contact arm is mounted on the float lever and moves across the resistance as the float rises and falls so that resistance is cut out of one dash unit heating coil circuit and in on the other heating coil circuit with this movement.

OPERATION:—When the ignition switch is turned on, current flow through heating coil on each bimetal arm in the dash unit depends on contact arm position in tank unit (contact arm controls amount of resistance in each heater coil circuit) and the unequal current flow through each coil causes an unequal deflection of the bimetal arms so that the pointer is moved on the scale. Any change in the position of the tank unit contact arm (caused by float movement) causes a like change in the bimetal arm deflection and pointer reading of the dash unit. When voltage at gauge exceeds 5 volts, or if bimetal arms become overheated, contacts open and close to maintain constant input so that readings are accurate regardless of voltage fluctuations (pointer position entirely dependent on division of current between heating coils on bimetal arms as controlled by tank unit. Contact opening and closing is sufficiently rapid so that pointer does not change). External temperature changes (affecting outer unwound bimetal arms) cause a slight rotation of the hinge so that position of inner bimetal arms and pointer remains unchanged. Gauge design results in a lag or damping action so that pointer fluctuations due to fuel tank surges are minimized. When ignition switch is turned off, bimetal arms flex away from pointer which is then returned to the empty position by the counterweight at the lower end.

TESTING:—Use spare tank unit, which is known to be in good order, to test gauge units. Disconnect wires on terminals '1' and '2' of dash unit, connect these terminals to same numbered terminals of test tank unit, ground test unit to car. Turn ignition switch on and operate test unit by hand, moving float from empty to full position, and noting dash unit pointer reading. NOTE—Allow one minute for dash unit to indicate true reading. If dash unit reads correctly when operated with test tank unit, trouble is in wiring or tank unit (see Trouble Shooting Table and test directions below). If dash unit does not read correctly, replace unit (see Calibration Adjustment below).

Checking Wiring—Connect 6 v lt test lamp in series with wire to tank unit at connector accessible through hole in trunk floor. With ignition turned on, lamp should g n and off at regular intervals. If lamp does not light, wire is grounded or open-circuited (See Trouble Shooting Table). Test both No. 1 and No. 2 wires in this manner. NOTE—Open-circuits are usually found at wire connectors in rear compartment. Clean contact surfaces thoroughly to remove all grease, dirt, insulating varnish. Grounds may occur at left windshield post where wires enter post or at left rear quarter window (make certain that moulding screws do not pinch or pierce wiring insulation).

TROUBLE SHOOTING:—If wires open-circuited, grounded or reversed, gauge will read inaccurately as follows:

Wire (See Note)	Gauge Reading With: Tank Empty	Tank ½ Full	Tank Full
#1 Wire Grounded	Empty	¼ Full	½ Full
#1 Wire Open	½ Full	¾ Full	Full
#2 Wire Grounded	½ Full	¾ Full	Full
#2 Wire Open	Empty	Empty	Empty
#1 & #2 Wires Reversed	Full	½ Full	Empty

NOTE—Dash unit and tank unit terminals are marked as indicated above (tank unit terminals may be painted over). See Car wiring diagram (on car model pages) for wire colors.

Gauge Reading Inaccurate—See table above. May also be caused by excessive tightening which has loosened terminal studs requiring replacement of dash unit (see Service Note and Calibration Adjustment).

Pointer Sticks or Binds—See that pointer does not bind on panel at lower end (if necessary, shim gauge out from panel by installing gasket cut to size of dash unit mounting face. Check pointer bearing alignment and endplay (adjust by bending bearing supports).

Fluctuating Pointer—Examine contact points and clean by drawing piece of bond paper between them.

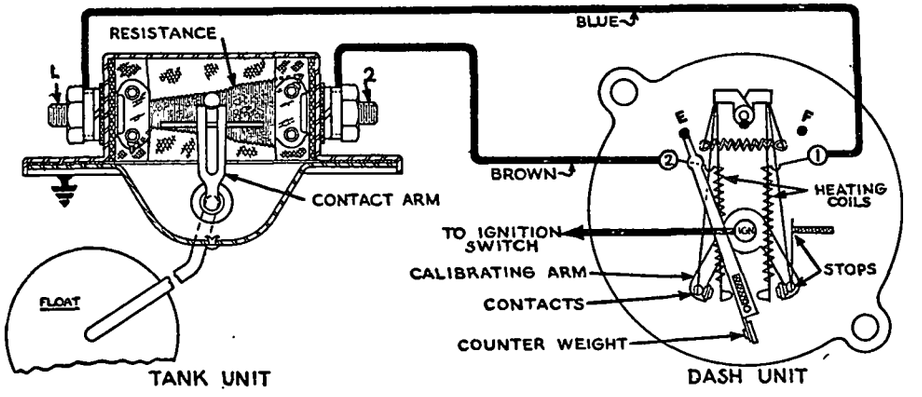

CALIBRATION ADJUSTMENT:—If pointer position not correct at Empty or Full, or if gauge reads inaccurately, dash unit should be calibrated as follows: Remove dash unit from car, connect to tank unit known to be in good condition and to a battery (see illustration for connections). Loosen both nuts on 'IGN.SW' terminal (inner nut is staked on later type units) to release calibrating arms. Set tank unit float in Empty position, move left hand calibrating arm (on which stationary contact is mounted) to right to raise pointer reading, or to left to lower pointer reading. Move tank unit float arm to Full position, move right hand calibrating arm to right to raise pointer reading, or to left to lower pointer reading. Recheck gauge at Empty position (setting may be changed by the Full adjustment). Tighten nuts on 'IGN.SW' terminal to lock calibrating arms in position using extreme care not to shift arms while tightening inner nut.
NOTE—When making this adjustment, or when testing dash unit on the bench, unit must be shielded from air currents which might cause unequal cooling f the bimetal arms and affect the gauge reading. Allow 1 minute for bimetal arm heating coils to heat up, after moving tank unit float, before checking dash unit pointer position.

AUTO-LITE (MOTOMETER) ELECTRIC TYPE

FUEL-AND-OIL LEVEL GAUGE NOTE:—These installations consist of a regular gasoline gauge dash unit and tank unit and an additional tank unit placed in the crankcase oil pan to indicate the oil level. A two-way selector switch is used so that the dash unit may be connected to the fuel tank unit (for gasoline reading), or to the oil pan unit (for oil level reading). Dash unit and tank units used for this type installation are the same as used for regular gasoline gauges and these units are tested in the same manner as fuel gauges listed below.

DESCRIPTION:—The electric gasoline gauge is of the balanced coil type and consists of a dash recording unit and a tank resistance or variable resistance connected to a float in the gasoline tank. The gauge operates only when the ignition switch is on and indicates 'Empty' with the switch off. With engine stopped it will be necessary to turn the switch on to secure a correct reading. The gauge is not affected by changes in battery voltage and will give a correct reading with a discharged battery.

MOUNTING:—Both the dash unit and the tank unit should be grounded. If the gauge is mounted on a wooden dash it will be necessary to run a wire from the gauge case to the engine block or car frame. The tank unit is grounded through the mounting screws. One wire from the 'Ga' terminal on the dash unit runs to the terminal on the tank unit. A second wire from the dash unit terminal 'IGN SW' should be connected to the coil terminal of the ignition switch. Make certain that all connections are tight.

TROUBLE SHOOTING:—If gauge does not register correctly in service, first check for loose connections at switch, dash unit, or tank unit and check lines for broken wires. Make certain that both dash unit and tank unit are properly grounded. Then make the following tests:

Defective Dash Unit. Turn on ignition switch. Remove wire at tank unit. Gauge should register 'Empty'. Ground wire to car frame. Gauge should register 'Full'. If it does not, the dash unit is defective.

Defective Tank Unit. If the above tests indicate that the dash unit is operating correctly and the gauge will not operate in service, the tank unit is probably defective.

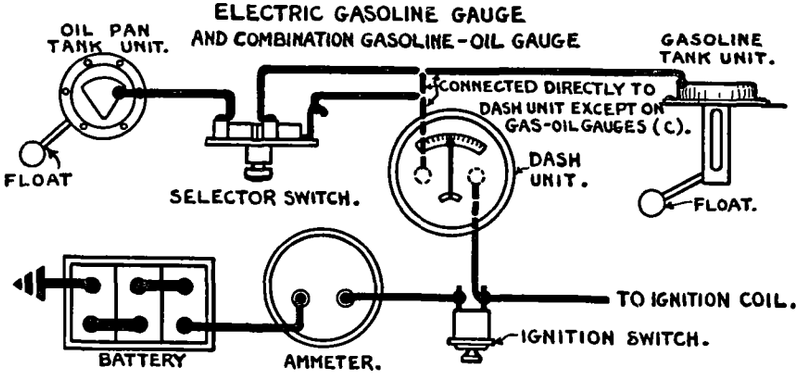

SERVICING:—No servicing operations required and defective Dash Units and Tank Units should be replaced.

STEWART GASOLINE GAUGE

DESCRIPTION:—This is an electric gauge of the 'balanced' coil type and consists of a dash unit or recording device and a tank unit or measuring device. The two units are connected by an insulated wire and each unit is grounded. The feed wire on the dash unit is connected to the accessory terminal of the ignition switch (or coil side of switch) so that the gauge is operative only with the ignition turned 'on'.

OPERATION:—The two coils in the dash unit are connected in parallel to the switch terminal (1) on the gauge case. Coil (A) is grounded to the gauge case so that the current flow through this coil is constant. The other end of coil (B) is connected to the tank terminal on the gauge case so that the coil is in series with the resistance unit in the tank unit. The resistance unit is grounded through the contactor on the upper end of the gasoline tank float rod so that the resistance is cut in or out of the coil (B) circuit as the float rises and falls.

MOUNTING:—Both the dash unit and tank unit are grounded through the case and a good ground must be provided when they are mounted on the car. Remove all paint and grease from under the mounting flange.

TANK UNIT NOTE:—Tank units are furnished in both Gear Type (for tanks greater than 12" in depth or where baffles prevent installation of lever type) and Lever Type (for tanks of 12" depth or less). Tank units furnished with floats not attached to arm and should be installed as follows:

Gear Type—Travel limited to 52½° above and below horizontal position of arm. When installing, cut off float arm to correct length required for depth of tank and solder float on arm in horizontal position.

Lever Type—Furnished with float arm 12" long. Cut off float arm to correct length and solder float on arm at right angles to arm and with long diameter of float horizontal.

TROUBLE SHOOTING:—If gauge operation not satisfactory check as follows:

Gauge Reads 'Full' at all times

1. Lead between dash unit and tank unit is grounded. Check by disconnecting lead at each end and substituting a test jumper wire. If gauge operates correctly, replace lead.
2. Connections on dash unit reversed. Reverse wires and note performance.
3. Coil (A) in dash unit open-circuited. To check, disconnect tank unit lead on dash unit momentarily. Pointer should move to 'Empty' end of scale. This coil should draw .13 ampere at 6.0 volts (between switch terminal on dash unit and ground on case with tank unit lead disconnected).
4. Resistance unit in tank unit short-circuited. Check with voltmeter and battery between tank unit terminal and ground on case with dash unit lead disconnected. Resistance of unit should be 110 ohms.

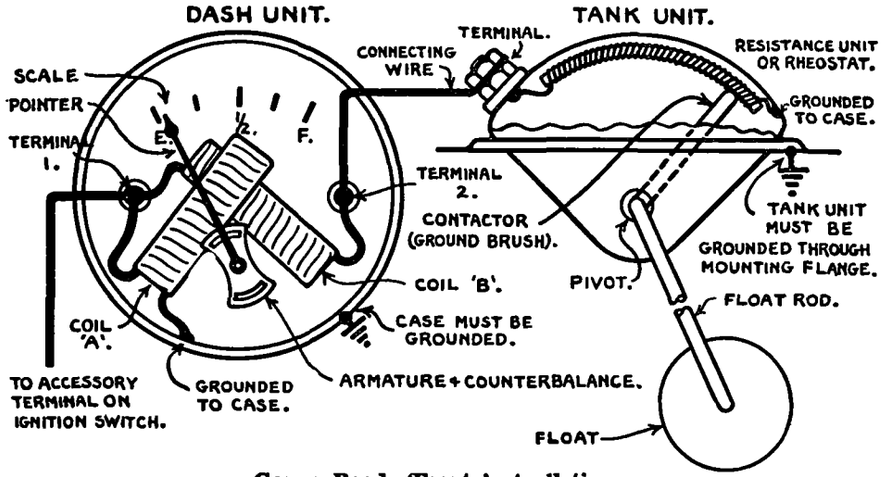

Gauge Reads 'Empty' at all times

1. Dash unit not grounded. Examine ground contact or run extra ground lead from case to car frame.
2. Open-circuit between dash unit and tank unit. Check by connecting jumper wire between terminals on units and noting gauge performance.

Gauge Reading Inaccurate

Mechanical defect in dash unit or tank such as tight pivot bearings, armature counterbalance binding or incorrectly positioned, bent dial pointer, or bent float rod.

SERVICING:—Replace all defective dash units and tank units.

KING-SEELEY ELECTIC

DESCRIPTION:—This is an electric type gauge of a new type using bi-metal arms on which heating coils are wound in both the tank or engine unit 'Sender' and the dash unit 'Receiver'. The two heating coils are connected in series and the gauge circuit is completed to ground through a set of contacts in the Sender unit (one of which is mounted on the bi-metal arm). The feed wire on the Receiver unit is connected to the accessory terminal of the ignition switch so that the gauge registers only with the ignition on.

Gasoline, Oil, Water Level—For this purpose the ground contact in the Sender is mounted on a movable arm (arm mounted through diaphragm forming lower cover of Sender unit and flexes diaphragm as it is moved). The lower end of the ground contact arm is actuated by a cam on the upper end of the float rod pivot. When the float moves up to follow the gasoline, oil, or water level, the cam moves the arm so that contact pressure and length of time contacts remain closed is increased.

OPERATION:—When the Sender contacts are closed a current flows through the heating coils of both the Sender and Receiver units. This causes the bi-metal arm in the Receiver to bend, moving the pointer, and indicating a reading on the gauge dial. At the same time the heating coil in the Sender unit causes its bi-metal arm to bend, opening the contacts and interrupting the current flow. When this occurs the heating action stops and the cooling of the bi-metal arm causes it to flex in the opposite direction and again close the contacts. In operation, this cycle takes place very rapidly (approximately once each second for the gasoline gauge with tank empty), and a steady reading is obtained on the Receiver dial.

TROUBLE SHOOTING:—**Gasoline, Oil, Water Level Gauges**—Manufacturer recommends use of extra or test Sender and Receiver to check operation of units which do not perform satisfactorily. Make tests as directed below:

Testing Sender:—Disconnect lead of Sender unit on car, connect this lead to test Sender and ground this Sender to the car frame. Turn on ignition, move Sender float up to 'full' position and note reading on Receiver. Receiver should read full or 'F' after 10-15 seconds time. If Receiver reading is correct, check following points before replacing Sender unit.

1. Ground. Sender is grounded through case. See that all paint and grease are removed under flange and both surfaces make good contact.

2. Radio By-pass Condenser Shorted. If by-pass condenser is connected at Sender on cars with radio, test for short-circuit by disconnecting condenser and noting gauge operation. If gauge is satisfactory, replace condenser. Use only condenser of .05 microfarad capacity (manufacturer recommends Cornell Dubilier Corp. Condenser No. 22-259).

If reading is secured with test Sender is same as that with Sender on car, check wire connecting Sender and Receiver and replace if found to be open-circuited or grounded.

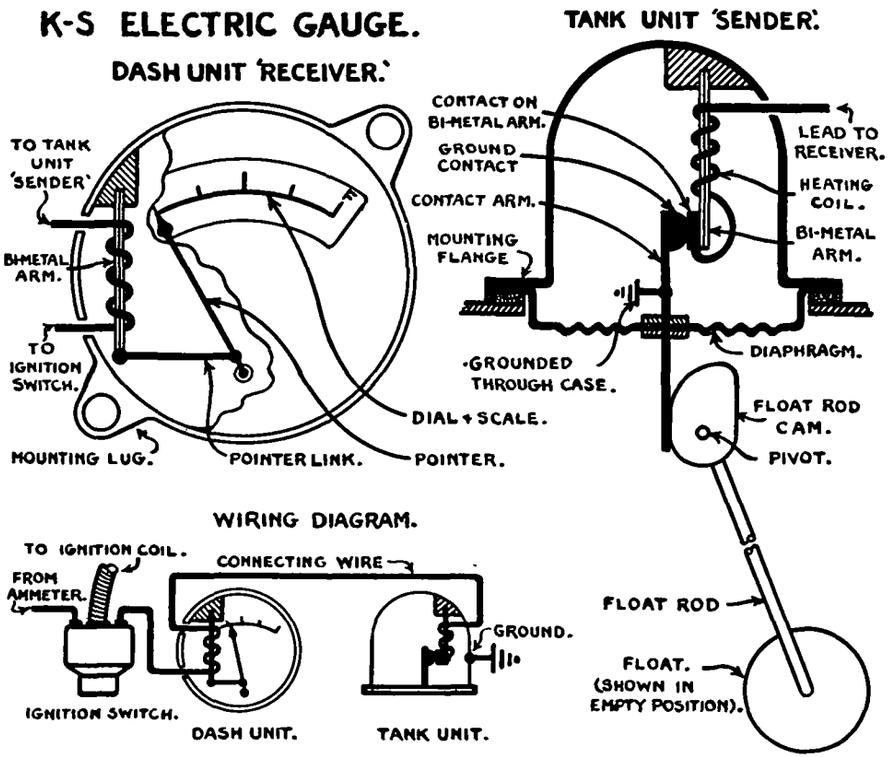

Testing Receiver—Disconnect wires on Receiver on car and connect to same terminals on test Receiver. Turn on ignition switch and note reading on gauge. If test Receiver reading is correct, replace Receiver on car. If test Receiver reading is same as car Receiver, repeat tests on Sender and wiring.

SERVICING:—No service operations are required other than to see that wires are properly connected and terminals are tight. No repair operations are possible and defective Senders and Receivers should be replaced.

CLIMATIC CONTROL (AUTOMATIC CHOKE) (SINGLE BARREL CARBURETORS)

Car Model	Carburetor Model
Frazer, All Models (1947-48)	610S, 622S, 622SA, 622SB
Graham 108 (1940), Hollywood 113 (1941)	472-S
Graham Supercharger 107 (1940)	473-S
Hudson Six, Model 63 (1936)	329-S
Hudson Eight, Models 64, 65, 66, 67 (1936)	330-S
Hudson Six, 40T, 40P, 48 ('40), 10, 18 ('41), 20, 28 ('42)	454-S
Hupmobile Six, 822E (1938), 922E (1939)	398-S
Hupmobile Skylark, Model R (1939-40)	398-S
Kaiser, All Models (1947-48)	610S, 622S, 622SA, 622SB
Nash '600', Model 4640 (1946), 4740 (1947)	611-S
Nash "600", Model 4840 (1948)	662S, 662SA
Nash Ambass. 6, All Models (1939-41)	435-S
Nash Ambass. 6, All Models (1942-48)	464-S
Oldsmobile Six, Model F-36 (1936)	327-S, 39-S, 42-S
Oldsmobile Six, Model F-37 (1937)	351-S
Oldsmobile Six, Model F-37 (Late '37), F-38 (1938)	385-S, 388-S
Oldsmobile Six, F & G-39 ('39) First Cars	385-S
Oldsmobile Six, F & G-39 ('39) Later Cars	425-S, 426-S
Oldsmobile 6, 60 F-40, 70 G-40 (1940)	466-S, 467-S
Oldsmobile 6, 66, 76, 96 (1941)	481-S, 504-S
Oldsmobile Six, 66, 76, (1942)—Std. Trans.	W1 523-S
Oldsmobile Six, All Models (1942-48)—Synchro-mesh Trans.	501-S
Oldsmobile Six, All Models (1942-47)—Hydra-Matic Drive	481-S
Oldsmobile Six, All Models (1948)—Hydra-Matic Drive	651-S
Packard '110' Six, All Models (1942-46-47)	530-S
Pontiac Six, Models 36-26A, B (1936)	324-S, 340-S
Pontiac Eight, Model 36-28 (1936)	322-S
Pontiac Six, Model 37-26CA (1937)	352-S, 364-S
Pontiac Eight, Model 37-28 (1937)	350-S
Pontiac Six, Model 38-26DA (1938)	401-S
Pontiac Eight, Model 38-28DA (1938)	400-S
Pontiac Six, 39-25, 39-26 (1939)	433-S
Pontiac Eight, 39-28 (1939)	432-S
Pontiac 6, 40-25, 40-26 (1940)	463-S
Pontiac 8, 40-28 (1940)	462-S
Pontiac Six, 41-24, 25, 26 ('41), 42-25, 26 ('42)	494-S
Pontiac Six, 42-25, 26 (1942)—Later Cars & Canada	W1 521-S, 545-S
Pontiac Six, All Models (1946-47-48)—Synchro-mesh Trans.	537-S
Pontiac Six, All Models (1948)—Hydra-Matic Drive	652-S
Studebaker Dict., Model 5A, 6A (1937)	371-S
Studebaker Commander, 10A (1940), 11A (1941)	410-S
Studebaker Champion, 3G (1941), 4G (1942)	496-S
Studebaker Champion, All Models (1946-47-48)	552-S, 661-S
Terraplane, Model 62 (1936)	329-S

SPECIAL SERVICE NOTES:—Studebaker Champion—To correct complaints of insufficient heat at Climatic Control, which will cause choke valve to be slow in opening as engine warms up, make certain that heat tube is not bottoming in pocket in exhaust manifold. It is recommended that end of heat tube be cut off at an angle so that tube cannot bottom and close off passage in tube.

Studebaker Champion (1941-42) Climatic Control Setting Change—Setting has been changed from Centered (At Index) to 1 Notch Lean to correct slightly rich performance experienced with original setting.

Studebaker Champion (1946-48) "WE" Adjustments—These carburetors adjusted differently than other models. See special instructions below.

DESCRIPTION: The Carter "Climatic Control" is an automatic choke designed to choke the carburetor for cold starting and to control the choking action during the warming up period. It employs a combination of engine temperature (hot air from hot air stove on manifold is delivered to control unit case by a flexible connecting tube) and manifold vacuum (vacuum passage in carburetor casting connects port below throttle valve and port in control case) to actuate a thermostatic spring linked to the choke valve shaft lever and a vacuum piston assembly built around the shaft lever (bakalite piston is mounted directly on end of lever). The control is adjusted to close the choke valve completely at 70°F. and the choke valve is opened progressively by the thermostatic spring as the engine warms up. The piston assembly, actuated by manifold vacuum, tends to open the choke when the engine begins to fire and prevents over-choking. A 'fast-idle' control is linked on the choke valve shaft (see below).

SERVICING: Disassembly—Take out the three attaching screws, remove retainers on rim of piston housing plate which holds thermostatic coil housing in place. Turn thermostatic coil to right or clockwise to disengage coil hook from prong, lift coil and housing assembly off. Remove strainer screen. Take out choke valve screws, lift choke valve out. Loosen clamp screw on fast idle link and lever assembly, bend lip under screw with screwdriver (see Unloader adjustment when reassembling) so that it will clear portion of choke valve shaft which is not flat, revolve the choke shaft so that piston clears cylinder edge, remove choke shaft, piston, piston lever and link as an assembly. Remove suction passage gasket from air horn. Do not remove piston housing plate from air horn.

IMPORTANT NOTE—If piston housing plate removed, line up three holes when re-installing plate so that valve shaft and piston work freely. These parts are line-reamed at the factory.

Servicing—Wash all parts in gasoline except thermostatic coil and housing assembly and cork gaskets. Clean thermostatic coil assembly with air. Blow out

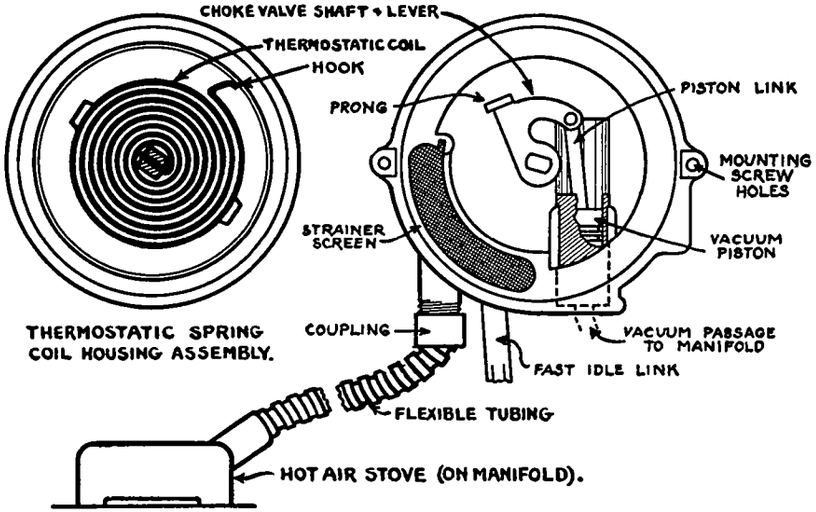

all passages with air. Replace all worn or damaged parts. Use all new gaskets when reassembling. CAUTION—Make certain that end of thermostatic coil does not drag on housing. Replace assembly if coil is distorted or drags.

Reassembly. Install the choke piston lever, piston and link, and shaft assembly in air horn and see that choke lever pin and screw assembly correctly located on shaft. Tighten screw on choke lever and see that these parts work freely. Install choke valve using new valve screws. Turn screws down loosely, then close choke valve and tap lightly to centralize valve in air horn, tighten screws securely, see that choke valve operates freely without binding in air horn. Install strainer in piston plate housing. Install new suction passage gasket in air horn (do not use old gasket). Install air horn assembly on carburetor, tightening screws securely. Install attaching screw and lockwasher under piston housing plate. See that the cork insulating strip on thermostatic coil housing is in good condition and has not shrunk, turn housing so that word 'Climatic' is at bottom, install in this position, turn counter-clockwise until center mark on piston plate housing is in line with reference mark on housing, install retainers and tighten attaching screws which hold housing in place.

Installing Carburetor on Engine—See that flexible tubing connection at housing is tight. This is important as any air leak at this point will interfere with correct performance. See that choke valve operates freely throughout range without any binding at any point in the mechanism.

Choke Valve Installation—When installing choke valve, make certain that it is correctly aligned in air horn so that it does not drag or stick in closed position which will interfere with correct Climatic Control operation. Centralize valve by tapping lightly in closed position (attaching screws loose), tighten screws.

CONTINUED ON NEXT PAGE

CLIMATIC CONTROL (AUTOMATIC CHOKE) (SINGLE BARREL CARBURETOR) C nt.

SETTING & ADJUSTMENT:—Setting indicated above (thermostatic coil case revolved so that reference mark lined up with center line of calibrations on piston housing plate) is standard for all models except those noted in the table below. For these special car models, rotate coil housing counter-clockwise (for Richer setting), clockwise (for Leaner setting) the correct number of graduations or 'points' before tightening the housing mounting screws. Check car performance as directed below and make any necessary readjustments for special fuel and operating conditions.

To Check Setting—Note engine performance during warming up period after engine has been started cold. Engine must be cold so that choke is operating (if engine is warm when started choke valve will not close). If engine has a tendency to run lean, thermostatic coil housing should be turned counter-clockwise one graduation. If engine runs rich or has a tendency to load up, coil housing should be turned one graduation clockwise.

To Adjust—Loosen retainer screws on rim of thermostatic coil case, rotate one graduation, tighten screws. Adjustments should always be made with engine cold (allow four hours for engine to cool off after it has been running) and setting should again be checked as directed above.

CLIMATIC CONTROL (CHOKE) SETTING

Car Model	Carburetor	Thermostat Coil Setting
Graham 107	473-S	1 point Rich
Nash	435-S	1 point Rich③
Nash "600"	611-S, 662-S	2 points Lean
Oldsmobile F-36	327-S, 339-S, 342-S	1 point Rich
Oldsmobile F & G-39	425-S, 426-S	2 points Rich
Oldsmobile F & G-40	467-S only	2 points Rich
Pontiac 6 ('37-38)	352-S, 401-S	1 point Rich
Pontiac Taxicab ('37)	364-S	1 point Rich
Pontiac 8 ('37)	350-S	2 points Rich
Pontiac Eight ('38)	400-S	1 point Rich
Pontiac Six & Eight ('39)	432-S, 433-S①	2 points Rich
Pontiac Six & Eight ('39)	432-S, 433-S②	1 point Rich
Pontiac Six & Eight ('40)	462-S, 463-S	1 point Rich
Pontiac 6	494-S, 521-S, 545-S	3 points Rich
Pontiac 6	537-S, 652-S	3 points Rich
Studebaker Dict. 5A,6A ('37)	371-S	1 point Lean
Studebaker 10A ('40), 11A ('41)	410-S	1 point Rich
Studebaker Champ.	496-S	②1 point Lean
All Others		Centered

①—First carburetors with #42 choke heat suction hole.
②—Later carburetors with #36 choke heat suction hole.
③—Supersedes 2 points Rich originally specified for this model.

UNLOADER (SINGLE BARREL CARBURETOR TYPE)

1936 TYPE

DESCRIPTION:—Consists of an ear on the fast idle block which strikes the throttle lever when throttle is opened (fast idle block down in fast idle position). When this contact is made, further movement of the throttle lever pushes the fast idle block up opening the choke valve so that a flooded condition can be corrected.

Adjustment—With throttle valve held wide open, adjust curved lip on fast idle block so that lower edge of choke valve is held away from inner wall of air horn by amount shown in table below. Then hold choke valve and throttle valve wide open, adjust lip on choke lever so that choke valve locked open. See that choke valve released when throttle valve closed.

NOTE—Clearance between lip on choke lever and top end of fast idle link should be 1/16" with choke valve and throttle valve held wide open. Adjust by removing fast idle block and link assembly from carburetor and filing not more than 1/32" from top of link. Do not change original shape of link. See that all burrs removed. See that entire choke mechanism operates freely without binding.

UNLOADER SETTING

Car Model	Carburetor Model	Unloader Setting
Hudson (all models)	329-S, 330-S	7/16"
Oldsmobile	327-S, 339-S, 342-S	½"
Pontiac Six	324-S, 340-S	½"
Pontiac Eight	322-S	¼"
Terraplane	329-S	7/16"

1937 & LATER

DESCRIPTION:—Consists of a cam on the throttle lever which opens choke valve (through fast idle linkage) when throttle is held wide open to correct flooding. To check, hold throttle wide open, check clearance between lower edge of choke valve and air horn wall (see table below for checking gauge and clearance for each model). To adjust, bend cam on throttle lever using tool T109-41.

Studebaker (532S, 661S)—Consists of a choke trip lever within the Climatic control housing actuated by the fast idle link and which engages a lip on the choke valve shaft. Unloader action should be checked after Fast Idle adjustment completed (thermostatic coil housing, gasket, and baffle plate must be removed). To check, hold throttle valve wide open, move choke valve toward closed position as far as possible without forcing. Check clearance between lower edge of choke valve and carburetor wall (gauge T109-28). Clearance should be 3/16". Adjust by bending upper arm on choke trip lever using tool T109-187.

UNLOADER SETTING

NOTE—Unloader on Studebaker 371-S (drop bar type fast idle) adjusted in same manner as '1936 Type' above. Setting should be ¼".

Car Model	Carburetor	Unloader Gauge No.	Clearance
Frazer	610S, 22S, 22SA, 22SB	T109-81	7/16"
Graham	472-S, 473-S	T109-83	1/2"
Hudson	454-S	T109-81	7/16"
Hupmobile	398-S	T109-85	3/8"
Kaiser	610S, 22S, 22SA, 22SB	T109-81	7/16"
Nash "600"	611S, 662S, 662SA	T109-81	7/16"
Nash Amb. 6	435-S, 464-S	T109-82	31/64"
Oldsmobile ('37-38)	351-S, 385-S, 388-S	T109-85	3/8"
Oldsmobile ('39)	425-S, 426-S	T109-81	7/16"
Oldsmobile ('40)	466-S, 467-S	T109-81	7/16"
Oldsmobile '41 On	504-S, 523-S	T109-81	7/16"
Oldsmobile '41 On	481-S, 651-S	T109-80	3/8"
Packard	530-S	T109-81	7/16"
Pontiac ('37)	350-S, 352-S	T109-31	1/4"
Pontiac Taxicab ('37)	364-S	T109-83	1/2"
Pontiac ('38)	400-S, 401-S		5/16"
Pontiac 6 ('39)	433-S	T109-106	7/32"
Pontiac 6 ('40)	463-S	T109-80	3/8"
Pontiac 8 ('39-40)	432-S, 462-S	T109-31	1/4"
Pontiac 6 ('41-42)	494-S, 545-S	T109-106	7/32"
Pontiac 6 '46 On	537-S, 652-S	T109-107	5/16"
Studebaker ('37)	371-S	See Note	1/4"
Studebaker Champ	496-S	T109-31	1/4"
Studebaker Champ.	532-S, 661-S	T109-28	3/16"
Studebaker Comm	410-S	T109-31	1/4"

CHOKE VALVE LOCK:—Prevents choke valve closing when throttle valve held wide open. To adjust, hold throttle and choke valves wide open, bend lip at lower end of fast idle link so that clearance between lip and lock on throttle lever is 1/32" (use Tool T-109-105) except Studebaker 371-S (1/16").

TRIP LEVER:—**Hudson Model 454-S**—Should be adjusted after all other choke linkage adjustments have been made. This trip lever not used on other carburetor models.

Adjustment—Hold choke valve tightly closed with pin on fast idle cam resting at bottom of slot in fast idle link. Bend trip lever stop on fast idle link so that clearance between fast idle cam and lip n trip lever is .010".

FAST IDLE - DROP BAR TYPE SINGLE BARREL CARBURETORS)

This type Fast Idle used with Carter Climatic Control on Carter Carburetors as standard equipment on the following car models:

Car Model	Carburetor
Hudson Six, Model 63 (1936)	309-S, 329-S
Hudson Eight, 64, 65, 66, 67 (1936)	310-S, 330-S
Oldsmobile Six, Model F-36 (1936)	327-S, 39-S, 42-S
Pontiac Six, Model 36-26A, B (1936)	324-S, 340-S
Pontiac Eight, Model 36-28 (1936)	322-S
Studebaker Dictator, Models 5A, 6A (1937)	371-S
Terraplane, Model 62 (1936)	309-S, 329-S

NOTE—All 1936 and later models are fitted with an 'Unloader' and Choke valve lock. See Climatic Control for settings and adjustment directions for these devices.

FAST IDLE MECHANISM:—The fast idle consists of a bar or arm linked to the choke valve shaft which drops down behind the throttle valve stop screw when the choke valve is closed. This prevents the throttle valve closing to its normal or 'hot idle' position. The fast idle bar will drop in place only when the throttle is opened and the accelerator pedal must be depressed to place the fast idle in operation. Carburetor adjustments should be made only with the fast idle inoperative (engine warmed up with the bar raised sufficiently so that it does not engage the stop screw).

SERVICING:—Fast idle linkage should not require attention. See that fast idle bar drops down behind throttle stopscrew when throttle valve is opened with engine cold (70°F). Automatic choke does not close choke valve when engine is hot. All adjustments on automatic choke and fast idle should be made with engine cold.

1936 and Later Models. On these models (With Unloader), fast idle connector rod or link cannot be disconnected from the fast idle block, and the two screws mounting the fast idle block on the carburetor body casting must be removed to allow the fast idle block to be removed with the Climatic Control whenever it is taken off the carburetor. When replacing fast idle block see that it slides freely with the mounting screws tight (replace screws if block binds).

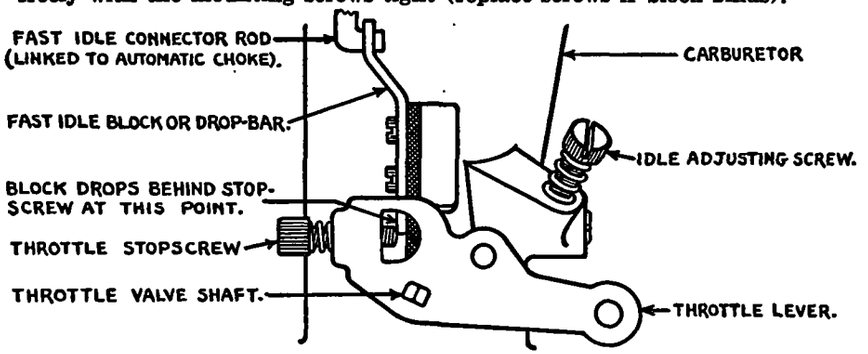

FAST IDLE - CAM TYPE (SINGLE BARREL CARBURETORS)

NOTE: This type Fast Idle used with Climatic Control on all 1937 and later car models listed below (see 'Drop Bar' type Fast Idle article above which is used on 1936 car models and 1937 Studebaker 371-S carburetor).

Car Models	Carburetor Model
Frazer, All Models (1947-48)	610S, 622S, 622SA, 622SB
Graham 108, Schgr. 107 ('40); Hollywood 113 ('41)	472-S, 73-S
Hudson Six, 40T, 40P, 48 (1940), 10, 18 (1941)	454-S
Hudson Six, 20, 28 (1942	454-S
Hupmobile 6, 822E ('38), 922E ('39), Skylark R ('39-40)	398-S
Kaiser, All Models (1947-48)	610S, 622S, 622SA, 622SB
Nash "600", All Models (1946-47-48)	611S, 662S, 662SA
Nash Ambass. 6, 3920 (1939), 4020 (1940), 4160 (1941)	435-S
Nash Ambass. 6, All Models (1942-48)	464-S
Oldsmobile 6, F-37 (1937), F-38 (1938)	351-S, 85-S, 88-S
Oldsmobile 6, F & G-39 (1939)	385-S, 425-S, 26-S
Oldsmobile 6, F & G-40 ('40), 66, 76,96 ('41)	466-S, 67-S, 81-S, 504-S
Oldsmobile 6, 66, 76 (1942)	481-S, 523-S
Oldsmobile 6, All Models (1946-48)	481S, 504S, 651S
Packard Six, All Models (1942-46-47)	530-S
Pontiac Six, 37-26CA ('37), 38-26DA ('38)	352-S, 64-S, 401-S
Pontiac Eight, 37-28 ('37), 38-28DA ('38)	350-S, 400-S
Pontiac Six, 39-25, 26 ('39), 40-25, 26 ('40)	433-S, 63-S
Pontiac Eight, 39-28 (1939), 40-28 (1940)	432-S, 62-S
Pontiac Six, 41-24, 41-25, 41-26 (1941)	494-S
Pontiac Six, 42-25, 42-26 (1942)	494-S, 521-S, 45-S
Pontiac 6, All Models (1946-48)	537S, 652S
Studebaker Commander 10A (1940), 11A (1941)	410-S
Studebaker Champion 3G (1941)	496-S
Studebaker Champion, 4G (1942)	496-S
Studebaker Champion, All Models (1946-48)	532S, 661S

DESCRIPTION & OPERATION:—Consists of a fast idle cam serving as a stop for the throttle lever stopscrew which is linked to the choke valve lever. Cam is rotated to the fast idle position when the choke valve is closed for cold starting and opens the throttle valve. As choke valve opens, cam is rotated back to the hot or slow idle position.

Type W1 (Cast Iron) Note—Fast idle on this model must be checked differently (see special adjustment instructions below).

Type WE (Studebaker) Note—Fast idle on these models is of different design and must be checked and adjusted differently (see special instructions).

Adjustment (W1, WA1)—To check, see that the fast idle cam is in the normal slow idle speed position, tighten throttle lever stopscrew until it just seats against cam, rotate cam until stopscrew is against (not on) first step of cam. Hold cam in this position and check choke valve opening by using tool T109-85 (all models) to check clearance between edge of valve and air horn wall. Clearance should be 5/8". If clearance not correct, adjust by bending offset portion of fast idle link, using tool T109-41.

Adjustment (W1 Cast Iron Type)—To check, hold the choke valve wide open and allow the fast idle cam to drop free. Back off throttle lever stopscrew until throttle valve closed and screw just clears first or normal slow idle speed position on fast idle cam. Hold throttle valve closed and release choke valve which will tend to close and will lift cam so that throttle stopscrew is against second position of cam. With cam in this position, check clearance between lower side of choke valve and air horn wall. Clearance should be 5/8". Adjust by bending offset portion of fast idle link, using tool T109-41.

Adjustment (WE Studebaker Type)—To check, remove thermostatic coil housing, gasket, and baffle plate (for access to fast idle mechanism). Crack throttle valve by hand, hold choke valve closed, then close throttle valve. This will allow fast idle cam to rotate to fast idle position. Check clearance between edge of throttle valve and carburetor wall on side opposite idle ports while holding choke valve closed and with slight tension on throttle lever (use gauge T109-193. Clearance should be .054". To adjust, loosen locknut on choke connector rod assembly, turn adjusting sleeve until throttle valve clearance exactly .054" hold sleeve and tighten locknut. Reset stopscrew for correct idle speed.

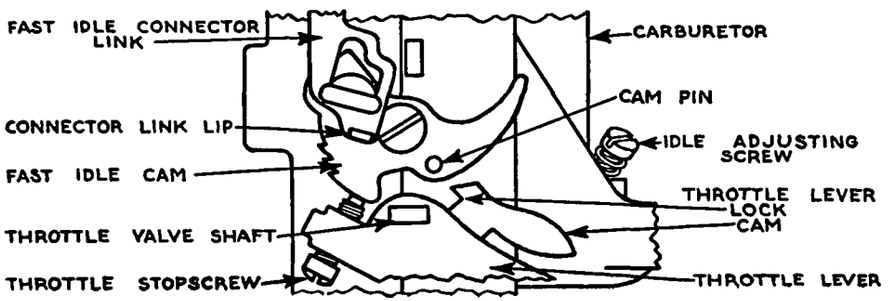

CLIMATIC CONTROL (AUTOMATIC CHOKE) (DUAL CARBURETORS)

Car Model	Carburetor Model
Buick, Series 40, 50 (1939-40)	419-S, 440-S, 474-S
Buick, Series 60,70,80,90 (1940)	448-S
Buick, Series 40 (1941) Single Carburetor	487-S
Buick, Series 40, 50 (1941) Compound Carburetion	509-S, 528-S
Buick, Series 60,70,90 (1941) Compound Carburetion	490-S, 533-S
Buick, 42-40A, 40B (1942) Single Carburetor	WCD 487-S
Buick 42-40A, 40B, 50 (1942) Compound Carburetion	WCD 528-S
Buick, 42-60, 70, 90 (1942) Compound Carburetion	WCD 533-S
Buick, Series 40A,40B,50 (1942) Single Carburetor①	551-S
Buick, Series 60,70,90 (1942) Single Carburetor①	549-S
Buick, Series 40, 50 (1946-47)	WCD 608-S, SA, SC
Buick, Series 70 (1946-47)	WCD 609-S, SA, SC
Buick, Series 40, 50 (1948)	WCD 663-S
Buick, Series 70 (1948)	WCD 664-S
Cadillac V16, Series 90 (1938-39-40)	407-S, 408-S
Cadillac V8, Series 60S,61,62,63,67,75 (1941)	506-S
Cadillac V8, 42-60S, 61, 62, 63, 67, 75 (1942)	WCD 486-S
Cadillac V8, All Series (1946-47-48)	WCD 595-S, SA
Chrysler, Imp. C14 (1937)	373-S
Frazer, All Models (1947-48)	WCD 685-S, SA
Graham, Hollywood Schgr. 109 (1940-41)	488-S
Hudson Six 73, Eight 74,5,6,7 (1937)	344-S, 377-S
Hudson Six 83, Eight 84,5,7 (1938)	402-S
Hudson Six 92,3; Eight 95,7 (1939)	430-S
Hudson Six 41,3 (1940)	430-SV, 461-S
Hudson 6, 11, 12 (1941); 21, 22 (1942)	WDO 461-S, 501-S
Hudson 6, All Models (1946-47)	WDO 501-S
Hudson 8, All Models (1940-47)	WDO 455-S, 502-S
Hudson 6, All Models (1948)	647-S
Hudson 8, All Models (1948)	648-S
Hupmobile 8, All Models (1936-39)	317-S, 399-S
Kaiser, All Models (1947-48)	WCD 685-S, SA
La Salle V8, All Series (1937-40)	374-S, 392-S, 423-S, 460-S
Nash Ambass. 8, All Models (1939-42)	436-S, 465-S, 411-S, 538-S
Nash-Lafayette 4010 (1940)	458-S
Oldsmobile Eight L-36 (1936)	328-S, 341-S
Oldsmobile Eight L-37 (1937)	345-S, 367-S
Oldsmobile Eight L-37 ('37), L-38 ('38)	386-S, 389-S
Oldsmobile Eight L-39 (1939), L-40 (1940)	389-S, 471-S
Oldsmobile 8, All Models (1941-48)—Synchro-mesh Trans.	WDO 503-S, SA
Oldsmobile 8, All Models (1941-47)—Hydra-Matic Drive	WDO 480-S
Oldsmobile 8, All Models (1947)—Hydra-Matic Drive	WCD 665-S
Oldsmobile 8, All Models (1948)—Hydra-Matic Drive	WDO 650-S, SA
Packard '120' 8, Model 120C (1937)	366-S
Packard '120' 8, 1901, 1A (1941)	478-S
Packard Eight, Clipper Models (1941-47)	WDO 512-S
Packard Super 8 & Cust. Super 8, All Models (1942-47)	WDO 531-S
Packard Eight, All Models (1948)	WDO 644-S, SA
Packard Super 8, All Models (1948)	WDO 643-S, SA
Packard Custom 8, All Models (1948)	WDO 531-S, SA
Pontiac Eight, 40-29 ('40), 41-27,28,29 ('41)	469-S, 469-SM
Pontiac Eight, 42-27, 28 (1942)	WDO 540-S
Pontiac Eight, All Models (1946)	WDO 548-S
Pontiac Eight, (1946-48)—Synchro-mesh Trans.	WCD 630-S, SA, SB②
Pontiac Eight, (1948)—Hydra-Matic Drive	WCD 653-S
Studebaker President, 6C (1940), 7C (1941)	409-S
Terraplane, Super 72 (1937)	344-S, 377-S
Terraplane, Super 82 (1938)	402-S

①—Late 1942 cars beginning with Engine No. 2540297.

②—Type 630SB used for replacement on 1940-47 Pontiac also.

NOTE:—Buick Compound Carburetion Cars—Front carburetor only is fitted with automatic choke (Climatic Control) and fast idle. Rear carburetor does not have choke valve or fast idle mechanism.

Buick & Cadillac Models—These cars also use Stromberg Carburetors (AAV-16—Buick, AAV-26—Cadillac). See separate article on Stromberg Automatic Choke & Fast Idle for data on cars with these Stromberg carburetors.

Buick & Packard Models—Carburetors used on these models have Carter Car Starter (vacuum switch) for starter motor control. This device is operated by the throttle valve shaft and does not have any effect on other parts of the carburetor. Refer to Carter Car Starter article in Electrical Equipment Section for data on this unit.

►FIELD & PRODUCTION CHANGES

Nash-Lafayette 458S Climatic Control Change—New Climatic Control Assembly No. 6-334-S (supersedes 6-357-S) used on later cars for improved warming up performance. The new assembly has a new Thermostatic Coil & Housing Assembly No. 170K64S (supersedes 170B64S) which requires a different setting (see setting table below). This new assembly can be installed on early cars. When this change made, new Hot Air Stove & Tube Assembly also installed.

Packard Eight (1937) 366-S—Original type Thermostatic Coil and Housing Assembly, No. 170J-16S has been superseded by new type, No. 170B-16S. When this new type assembly is used, automatic choke setting should be 1 Point Rich (setting with original assembly—Centered).

Packard Clipper (1941) Fast Idle Change—For improved Car Starter action, setting was changed from .030" to .020", this new setting superseding original specification both in production and for service. See Fast Idle data below for adjustment directions on this model (same T109-29 gauge used for both .030" and .020" settings). NOTE—Fast Idle Cam Assembly changed in production, new type No. 181-110S superseding original No. 181-81S.

Packard Clipper (1941) & Eight (1942) Unloader Setting Change—Unloader setting on 512-S carburetors changed from 3/16" to 11/64" (requires use of new gauge No. T109-166). See Unloader adjustment directions below.

Packard Super Eight (1942) Choke Trip Lever & Unloader Setting Change—When servicing these 531-S carburetors, new type No. 14-249 Choke Trip Lever should be installed (superseding original No. 14-219 lever) and Unloader should then be set at 11/64" (supersedes 3/16" setting originally specified for these models). See Unloader adjustment directions below.

Packard Custom Eight 531S & 531SA Climatic Control Change—Thermostatic coil must be "M" type. Examine coil marking and replace "G" coils with later "M" type for smoother warming up performance.

►*See "Carter Vacumeter Type WDO" Carburetor for other recommended carburetor changes for smoother warm-up and low-speed performance and better fuel mileage.*

Pontiac Eight (All Models)—Car manufacturer recommends that Piston Plate Strainer (in piston plate in automatic choke housing) be discarded whenever automatic choke is dismantled for servicing. Do not re-install this strainer. NOTE—Strainer omitted from production carburetors beginning with late 1946 cars.

Pontiac Torpedo 8 469-S—New type Thermostatic Coil Assembly No. 170F16S (supersedes 170G16S) used on later cars for improved starting and warming up performance. These types may be identified by thermostatic coil number which is stamped on housing (Metering Rods also changed and carburetors with new rods marked '469-SM' for identification). NOTE—See setting table below for recommended change in setting on carburetors with first type thermostatic coil to correct complaints of hard starting and poor warming up performance.

►**Pontiac 630S, 630SA, 630SB Climatic Control Changes**—These carburetors have different Climatic Control assemblies and special settings as follows:
630S—Air Horn & Climatic Control No. 6-547S. Setting—Centered.
630SA, SB—Air Horn & Climatic Control No. 6-576S. Setting—1 Point Lean.

►**Pontiac 1948 Correction for Rich Choke Action**—To correct complaints of too-rich mixture during warming up period (too much choke action), check thermostatic coil housing for mark "RPD" (molded on outer face). Test coil action as follows: With carburetor at room temperature (75°F), remove air cleaner, disconnect fast idle connector rod, loosen three thermostat housing screws so housing can be rotated freely. Rotate housing clockwise by hand until choke valve is open, then rotate housing until choke valve is just closed, note adjustment mark on housing which should coincide with center mark of scale on air horn. If choke valve closes before this point reached (may be 2-4 points rich), replace Thermostatic Coil and Housing Assembly (Carter No. 170N-77S).

CONTINUED ON NEXT PAGE

CLIMATIC CONTROL (AUTOMATIC CHOKE) (DUAL CARBURETORS) C ntinu d

DESCRIPTION:—Design similar to types used on single barrel carburetor (with flat or round pistons) except that Fast Idle and Choke Unloader are different design and mounted on opposite end of choke valve shaft from thermostatic coil housing and must be removed when choke control is disassembled.

Hudson & Terraplane (1937-40) Note—These models have dashpot or slow-closing throttle device linked to fast idle lever arm. This dashpot not used on later type 1941 carburetor models.

OPERATION:—Same as for other models. Thermostatic spring coil closes choke valve when engine is cold and controls choke during warming up period. Choke valve is offset and tends to open as thermostatic coil tension decreases when engine warms up. Vacuum piston opens choke valve slightly when engine begins to fire to prevent over-choking.

SETTING:—Thermostatic coil setting given in Assembly Directions above (center index mark or notch on thermostatic coil housing lined up with mark on piston plate housing) is correct for all car models except those listed in following table. For these special car models, rotate coil housing counter-clockwise (for Richer setting), clockwise (for Leaner setting) the correct number of graduations or 'points' before tightening the housing mounting screws. See Adjustment directions if performance not satisfactory with standard settings.

CLIMATIC CONTROL (CHOKE) SETTING

Car Model	Carburetor	Thermostatic Coil Setting
Buick 40 ('39)	419-S	1 Point Rich
Buick 40 ('39), 40,50 ('40)	440-S, 474-S	1 Point Lean
Buick 60,70,80,90 ('40)	448-S	3 Points Rich
Hudson 6 & 8 ('37)	377-S	2 Points Rich
Hudson 6 & 8 ('41-47)	501-S, 502-S	1 Point Lean①
Hudson 6 ('48)	647-S	1 Point Lean
LaSalle	392-S	1 Point Rich
Nash 8 ('39-40)	436-S, 465-S	1 Point Rich
Nash 8 ('41)	511-S	Centered②
Nash-Lafayette	458-S	⑥
Oldsmobile 8	480-S, 650-S, SA	2 Points Rich
Oldsmobile 8	665-S	1 Point Rich④
Packard 8	366-S	1 Point Rich③
Packard 8	478-S	1 Point Rich
Packard Super & Cust 8	531-S, 531-SA	1 Point Rich
Pontiac 8	469-S, 469-SM	⑦
Pontiac 8	540-S, 548-S	2 Points Rich
Pontiac 8	630-S, SA, SB	⑤
Studebaker Pres.	409-S	1 Point Rich
Studebaker Champ.	496-S	1 Point Lean①
Terraplane	377-S	2 Points Rich
All Others		Centered (at Index)

①—Supersedes Centered setting originally specified for this model.

②—Supersedes 1 Point Rich originally specified for this model.

③—With new 170B-16S Thermostatic Coil Assembly. Supersedes Centered setting specified for original 170J-16S Thermostatic Coil Assembly.

④—When WDO 503SA carburetor used to replace this 665S on Hydra-Matic Drive cars, Climatic Control on 503SA should be set 2 Points Rich (503SA set Centered on Synchro-mesh cars).

⑤—Centered (630-S Carburetors with No. 6-547S Air Horn & Climatic Control. 1 Point Lean (630-SA & 630-SB Carburetors with No. 6-576S Air Horn & Climatic Control.

⑥—1 Point Rich (first carburetors with 170B64S Thermostatic Coil Assy.), Centered (later carburetors with 170K64S Thermostatic Coil Assy.).

⑦—1½ Points Rich (first 469S carburetors with original 170G16S Thermostatic Coil Assy.)—**change to 4 Points Rich to correct hard starting and poor warming-up performance complaints.**
2 Points Rich (later 469S carburetors with later type 170F16S Thermostatic Coil Assy. and **all 469SM carburetors**).

Adjustment:—Check engine performance when cold (70°) to determine whether standard setting satisfactory. If engine runs lean during warming up period attaching screws should be loosened and housing turned counter-clockwise one graduation at a time until performance is satisfactory. If engine loads up or runs rich, housing should be turned clockwise. Adjustments should be made only when engine is cold (allow four hours for engine to cool off after running),

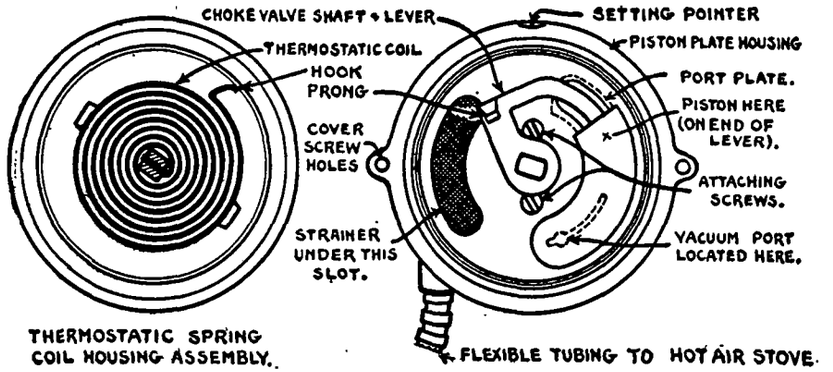

SERVICING:—Disassembly. Take out attaching screws and remove retainers on rim of piston plate housing, rotate thermostatic coil housing clockwise to disengage coil hook from prong, remove thermostatic coil assembly. Remove screw holding choke trip lever (fast idle end of choke valve shaft), remove washer, trip lever, and fast idle cam and collar assembly from shaft. Take out choke valve attaching screws, remove valve. Turn shaft counter-clockwise until piston clears cylinder, remove piston (flat type), pull shaft and lever assembly out of air horn (round type piston removed as part of shaft assembly—use care not to lose piston pin). Remove strainer screen.

Servicing. Wash all parts in gasoline except cork pieces and thermostatic coil and housing assembly (do not remove coil from housing). Blow out all passages with compressed air, replace all worn or damaged parts. Use all new gaskets when reassembling.

Choke Valve Installation—When installing choke valve, make certain that it is correctly aligned in air horn so that it does not drag or stick in closed position which will interfere with correct Climatic Control operation. Centralize valve before tightening screws (tap valve lightly with screws loose).

Assembly. Reverse Disassembly directions given above. See that the choke valve operates freely without binding or rubbing on carburetor after screws have been tightened securely. Replace cork insulator strip inside control housing, if old insulator not in good condition, to insure tight seal. Install thermostatic coil and housing assembly with label down, insert attaching screws and lockwashers loosely, then rotate housing counter-clockwise one-half turn until pointer on piston plate housing and notch in coil housing line up and tension can be felt on choke valve, tighten attaching screws. Check Setting (below).

Installing Carburetor on Engine. Make certain that hot air flexible tubing is properly connected at both ends (air leaks will interfere with choke operation). Thermostatic coil setting as given above is standard. If operation is unsatisfactory, see Adjustment directions below.

CONTINUED ON NEXT PAGE

"WDO" FAST IDLE & UNLOADER DUAL CARBURETOR TYPE (C ntinued)

DESCRIPTION & OPERATION:—Consists of a fast idle cam mounted on the choke valve shaft which rotates the fast idle arm to which the throttle connector link is attached so that the throttle is opened to the fast idle position while the choke valve is in use during the warming up period. An adjusting screw is provided on the fast idle arm.

Adjustment—Hold the choke valve tightly closed, turn adjusting screw on fast idle arm until throttle valve opening or clearance between edge of valve and carburetor wall on side opposite idle port is correct as shown in table below using special checking gauge for each model as listed in table.

FAST IDLE SETTING

Car Model	Carburetor	Checking Gauge	Throttle Opening
Buick 40 ('39-40)	419-S, 440-S	T109-44	.018"
Buick 40,50 ('40)	474-S	T109-29	.030"
Buick 60,70,90 ('40)	448-S	T109-29	.030"
Cadillac V16	407-S, 408-S	T109-114	.026"
Cadillac V8 ('41)	506-S	T109-149	.023"
Chrysler C14	373-S	T109-44	.018"
Graham 109	488-S	T109-114	.026"
Hudson 6 & 8	344-S, 77-S; 402-S 30-S	T109-44	.018"
Hudson 6 & 8 ('40-41)	430-SV, 61-S, 55-S	T109-44	.018"
Hudson 6	501-S	T109-158	.045"
Hudson 8	502-S	T109-158	.053"
Hudson 6 & 8 ('48)	647-S, 648-S	T109-193	.054"
Hupmobile ('36)	317-S	T109-44	.018"
Hupmobile ('38-39)	399-S	T109-29	.030"
LaSalle ('37)	374-S	T109-44	.015"
LaSalle ('38-39)	392-S, 423-S	T109-29	.030"
LaSalle ('40)	460-S	T109-149	.023"
Nash 8 ('39-40-41)	436-S, 65-S; 511-S	T109-44	.015"
Nash 8 ('42)	538-S	T109-44	.015"
Nash-Lafayette ('40)	458-S	T109-114	.026"
Oldsmobile 8 ('36-37)	328-S, 41-S, 45-S, 67-S	T109-44	.018"
Oldsmobile 8 ('40-41)	471-S, 480-S	T109-44	.015"
Oldsmobile 8 ('41 On)	503-S, SA; 650-S, SA	T109-44	.015"
Packard 8 ('37)	366-S	T109-44	.018"
Packard 8 ('41)	478-S	T109-29	.030"
Packard 8 ('41 On)	512-S, 644-S, SA	T109-29	.020"
Packard Super & Cust. 8	531-S, 531-SA	T109-189	.023-.028"
Pontiac 8 ('40-41)	469-S, 469-SM	See Note	.010"
Pontiac 8	540-S, 548-S	T109-189	.026"
Studebaker Pres.	409-S	T109-44	.018"
Terraplane ('37-38)	344-S, 77-S, 402-S	T109-44	.018"

①—Supersedes .030" setting originally specified for this model.

►**Checking Gauge Caution**—Following gauges used for several different settings No. T109-44 (.015" & .018"), T109-29 (.020" & .030"), T109-158 (.045" & .053"). No. T109-189 (.023" & .026")—supersedes No. T109-114 & T109-149. No. T109-193 (.040" & .054").

►**Hudson 461S, 455S Fast Idle Adjusting Note**—The fast idle can be adjusted as follows: With throttle stopscrew set for correct slow idle speed of 600 RPM., open throttle so that clearance between stopscrew and stop on carburetor casting is .030", hold in this position, close choke valve, turn fast idle adjusting screw in until it just contacts fast idle cam.

►**Oldsmobile 480S, 503S Fast Idle Adjusting Note**—Clearance between throttle valve stopscrew and stop on carburetor casting should be .030" (503-S), .025" (480-S) with choke valve closed and fast idle screw on high lobe of fast idle cam. Throttle stopscrew must be set for correct hot or slow idle speed of 6 MPH. (503-S), 375 Engine RPM. (480-S), before making the fast idle adjustment.

►**Pontiac 469-S, 469-SM Fast Idle Adjusting Note**—Back off the throttle stopscrew so that throttle valves tightly closed, hold choke valve closed, back off fast idle screw so that it clears high lobe of fast idle cam, turn screw in until it barely drags on cam, then turn screw in additional ⅝ turn to provide correct .010" throttle opening. With this fast idle setting, clearance between throttle lever stopscrew and stop on carburetor casting will be .032" with stopscrew set for correct hot or slow idle speed of 7-8 MPH.

►**Pontiac 540-S Fast Idle Adjusting Note**—To adjust with throttle stopscrew set for correct hot or slow idle speed of 7-8 MPH. (450-475 Engine RPM.), hold choke valve closed, adjust fast idle screw until clearance between throttle stopscrew and stop on carburetor casting is .073" (#49 drill).

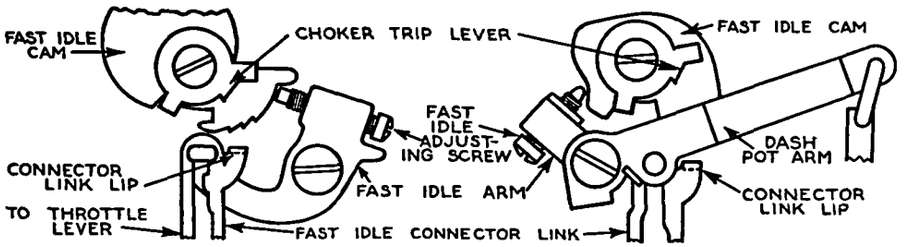

UNLOADER:—Consists of a lip on the throttle connector which engages the choke trip lever on the choke valve shaft so that the choke valve is opened to correct flooding when the throttle valve is held wide open.

Adjustment—Hold throttle valve wide open, check clearance between upper edge of choke valve and inner wall of air horn using checking gauge listed in table below. If clearance is not correct, bend lip on fast idle connector link.

UNLOADER SETTING

Car Model	Carburetor	Checking Gauge	Clearance
Buick 40 (1939)	419-S	T109-125	3/32"
Buick All ('39-40)	440-S, 474-S, 448-S	T109-28	3/16"
Cadillac V16	407-S, 408-S	T109-28	3/16"
Cadillac V8 ('41)	506-S	T109-39	13/64"
Chrysler C14	373-S	T109-31	¼"
Graham 109	488-S	T109-31	¼"
Hudson 6 & 8	344-S, 77-S; 402-S, 30-S	T109-31	¼"
Hudson 6 & 8	430-SV, 461-S, 455-S	T109-31	¼"
Hudson 6 & 8	501-S, 502-S	T109-31	¼"
Hudson 6 & 8	647-S, 648-S	T109-31	1/4"
Hupmobile ('36)	317-S	T109-31	¼"
Hupmobile ('38-39)	399-S	T109-34	9/64"
LaSalle ('37)	374-S	T109-28	3/16"
LaSalle ('38-39)	392-S, 423-S	T109-36	⅛"
LaSalle ('40)	460-S	T109-39	13/64"
Nash Eight ('39-40)	436-S, 465-S	T109-34	9/64"
Nash 8 ('41-42)	511-S, 538-S	T109-34	9/64"
Nash-Lafayette	458-S	T109-28	3/16"
Oldsmobile 8 ('36-37)	328-S, 41-S, 45-S, 67-S	T109-31	¼"
Oldsmobile 8 ('37-39)	386-S, 389-S	T109-31	¼"
Oldsmobile 8	471-S, 480-S	T109-28	3/16"
Oldsmobile 8	389-S, 503-S, SA	T109-31	1/4"
Oldsmobile 8	650-S, 650-SA	T109-31	1/4"
Packard 8 ('37)	366-S	T109-31	¼"
Packard 8 ('41)	478-S	T109-28	3/16"
Packard 8	644-S, 644-SA	T109-166	11/64"
Packard Super 8	643-S, 643-SA	T109-166	11/64"
Packard Super & Cust 8	531-S, 531-SA	T109-166	②11/64"
Pontiac 8 ('40)	469-S	T109-31	¼"
Pontiac 8 ('40-41)	469-SM	T109-28	3/16"
Pontiac 8	540-S, 548-S	T109-28	3/16"
Studebaker Pres. ('40-41)	409-S	T109-28	3/16"
Terraplane ('37-38)	344-S, 77-S, 402-S	T109-31	¼"

①—Supersedes 3/16" setting originally specified for this model.

②—With new Choke Trip Lever No. 14-249. Supersedes setting of 3/16" originally specified for this model with No. 14-219 Choke Trip Lever.

CHOKE VALVE LOCK:—With Unloader properly adjusted, choke valve will be locked open with throttle valve wide open, and released when valve closed.

"WCD" FAST IDLE & UNLOADER DUAL CARBURETOR TYPE

FAST IDLE (BUICK): Consists of a fast idle cam and cam trip lever mounted on the carburetor so that the cam engages the fast idle screw on the throttle shaft dog and collar assembly. Cam trip lever is linked to the choke valve shaft by a connector rod so that the cam is rotated to the fast idle position when the choke valve is closed for cold starting. As the choke valve opens, trip lever is revolved and spring returns fast idle cam to off position and throttle valves return to hot or slow idle speed position (controlled by throttle stopscrew).

Adjustment—With choke valve tightly closed, adjust fast idle screw so that clearance between throttle valve and carburetor bore on side opposite idle port is correct as shown in table below. To make this adjustment, back off the throttle stopscrew, back off fast idle adjusting screw until it just contacts high point of fast idle cam (choke valve closed and fast idle cam in fast idle position), then turn fast idle screw in until throttle valve clearance is correct. Reset throttle stopscrew for correct hot or slow idle speed.

FAST IDLE SETTING

Car Model	Carburetor	Checking Gauge	Throttle Opening
Buick 40, 50	509S, 528S		.012"
Buick 40, 50	487S, 551S		.012"
Buick 40, 50	608S, 608SA		.012"
Buick 40, 50	608SC, 663S	T109-44	.015"
Buick 60, 70, 90	490S, 553S	T109-44	.015"
Buick 60, 70, 90	549S	T109-44	.018"
Buick 70	609S, SA, SC; 664S	T109-44	.018"

►**Checking Gauge Note**—T109-44 used for both .015" & .018" settings.

FAST IDLE SETTING (EXCEPT BUICK): Consists of a fast idle cam linked to choke valve lever and serving as a stop for the fast idle screw on the throttle lever (on opposite end of shaft from regular throttle stopscrew).

Adjustment—Hold choke valve tightly closed, adjust fast idle screw until throttle opening or clearance between edge of throttle valve and carburetor bore on side opposite idle ports is correct as shown in table below (use gauge to check this clearance) with fast idle screw resting on high step of fast idle cam.

FAST IDLE SETTING

Car Model	Carburetor	Checking Gauge	Throttle Opening
Cadillac ('42)	486S	T109-44	.015"
Cadillac ('46 On)	595S, 595SA	T109-44	.018"
Frazer & Kaiser	685S, 685SA		.016"
Oldsmobile 8	665S	T109-44	.018"
Pontiac 8	630S, SA, SB	T109-189	.026"
Pontiac 8	653S	T109-189	.026"

Checking Gauge Note—Gauges are used for several different settings: T109-44 (.015" and .018"). T109-189 (.023" and .026").

UNLOADER: Consists of a lip on the throttle shaft lever which engages the fast idle cam and opens choke valve when throttle valve opened wide to correct flooding.

►***CAUTION—Two separate adjustments required as follows:***

Fast Idle Cam Clearance: Loosen choke valve lever and screw assembly on choke valve shaft, insert gauge of correct thickness (see table below) between lip on fast idle cam and boss on carburetor flange casting, hold choke valve tightly closed, tighten screw to lock the choke valve lever and screw assembly on the choke valve shaft in this position.

FAST IDLE CAM CLEARANCE

Car Model	Carburetor	Checking Gauge	Clearance
Buick 40, 50	487S, 509S, 528S, 551S	T109-71	.010"
Buick 40, 50	608S, SA, SC; 663S	T109-29	.020"
Buick 60, 70, 90	490S, 533S, 549S	T109-71	.010"
Buick 70	609S, SA, SC; 664S	T109-29	.020"
Cadillac	486S, 595S, 595SA	T109-71	.010"
Frazer & Kaiser	685S, 685SA	T109-71	.010"
Oldsmobile 8	665S	T109-71	.010"
Pontiac 8	630S, SA, SB; 653S	T109-193	.040"

Choke Valve Clearance: Hold throttle lever in wide open position, measure clearance between upper edge of choke valve and air horn wall, using gauge of correct thickness (see table below). Adjust by bending lip on throttle shaft lever which engages fast idle cam.

CHOKE VALVE CLEARANCE

Car Model	Carburetor	Checking Gauge	Clearance
Buick 40, 50	487S, 509S, 528S, 551S	T109-28	3/16"
Buick 40, 50	608S, SA, SC; 663S	T109-28	3/16"
Buick 60, 70, 90	490S, 533S, 549S	T109-28	3/16"
Buick 70	609S, SA, SC; 664S	T109-28	3/16"
Cadillac	486S, 595S, 595SA	T109-28	3/16"
Frazer & Kaiser	685S, 685SA	T109-36	1/8"
Oldsmobile 8	665S	T109-36	1/8"
Pontiac 8	630S, SA, SB; 653S	T109-36	1/8"

BUICK COLD IDLE (FAST IDLE) CONTROL

Car Model	Carburetor
40 (1936)	Stromberg EE-1
60, 80, 90 (1936)	Stromberg EE-22
40 (1937)	Stromberg AA-1 or Marvel BD-1 10-1749
60, 80, 90 (1937)	Stromberg AA-2 or Marvel BD-1S 10-1751
40 (1938)	Stromberg AAV-1 or Marvel CD-1B 10-1796, 7
60, 80, 90 (1938)	Stromberg AAV-2 or Marvel CD-2B 10-1798, 9

DESCRIPTION:—The Cold Idle Control consists of a thermostatically operated cam mounted on manifold heat jacket which serves as a stop for throttle-stop screw. Thermostat is located within cam and rotates cam in accordance with engine temperature changes. For starting with a cold engine, the cam will be turned so that the stopscrew rests on the highest step of the cam providing a "fast idle" for warming up. As the engine warms up, the thermostat rotates the cam counter-clockwise (1936 models), clockwise (1937-38 models) allowing the throttle to close and engine speed to decrease. When the engine reaches normal operating temperature, the stopscrew will rest on the lowest step of the fast idle cam allowing the throttle to close to the correct hot or slow idle speed position of 8 MPH.

ADJUSTMENT:—The Cold Idle Control should not require adjustment r attention in service. The setting can be checked as follows: Loosen nut in center f cam, rotate cam hub until pointer is vertical, tighten nut, open throttle momentarily to allow cam to assume correct position (thermostatic spring will not rotate cam while idle screw is resting on cam surface) . Warm up engine, note position of idle screw on cam. Idle screw should contact cam on its thinnest portion within ¼" limit adjoining the first cam step. If idle screw contact point is not within these limits, loosen cam nut and rotate cam hub slightly (opening throttle to allow cam to assume correct position). If hub must be rotated more than 5° to secure correct idle screw position on cam, replace entire cold idle cam assembly. Do not oil any part of the mechanism.

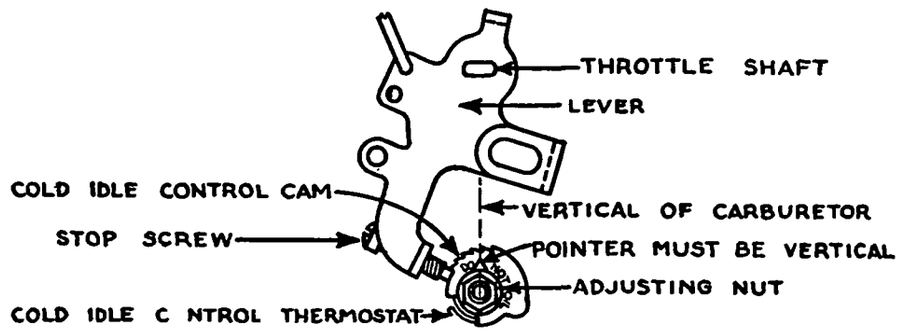

NOTE—The Fast Idle illusttrated is typical of the 1937-38 installations. On 1936 models with fast idle cam mounted differently, cam rotation is reversed.

DELCO-REMY 2 & 3 CYLINDER TYPE

These Carburetor Controls are used on the following car models:

Car Model	Model — Carburetor Control — Type
Buick 40 (1936)	498-H — Two Cylinder
Buick 60, 80, 90 (1936)	498-J — Three Cylinder
Buick 40, 60, 80, 90 (1937)	498-H — Two Cylinder

NOTE—Type 498-H used on 1937 Buick models when Marvel Carburetors are installed. Cars with Stromberg carburetors fitted with Type 490-A Carburetor Control (see following article).

DESCRIPTION:—The Automatic Carburetor Control is an automatic choke designed to choke the carburetor for cold starting and to control the choking action under all operating conditions during the warming up period. It employs a combination of engine temperature (thermostatic spring), manifold vacuum (bellows mechanism), and carburetor inlet air velocity (accelerating piston) to control the choke action, The choke valve operating lever is linked to one end of a spiral thermostatic spring so that the lever is rotated and the choke valve opened when the spring unwinds as the engine warms up. The collapsible bellows is linked to the other end of the thermostatic spring and the collapse of the bellows, when the engine begins to fire and manifold vacuum is built up, releases the thermostatic spring tension slightly and opens the choke valve to prevent over-choking. The floating piston of the three-cylinder type accelerating piston assembly is likewise held down by manifold vacuum and is forced up by the spring when the vacuum collapses as the engine is accelerated. This transfers air to the top of the accelerator piston, forcing the piston down, and increasing the choke action momentarily since the piston is linked to the operating lever shaft. The accelerating piston action after the engine warms up, with choke valve open, is negligible.

TROUBLE SHOOTING:—If Automatic Choke action is unsatisfactory, check the following points in order:

Binding of Parts. Disconnect link connecting carburetor choke valve and operating lever of automatic choke, see that choke valve lever moves freely. Operate automatic choke by hand. Lever should move freely and should return to initial position when released. All moving parts should be clean and free from oil. Do not oil any part of the choke mechanism.

Initial Choke Position. With operating linkage disconnected, hold both choke valve lever and choke operating lever down as far as they will go, check length of control rod or connecting link. The end of the link should rest in the notch in the upper face of the choke operating lever. Adjust by loosening lock nut and turning turnbuckle to increase or decrease length of link. Reassemble linkage. Starting mixture will be too rich if connecting link is too long, or too lean if connecting link is too short.

Initial Running Position (Take-off). See that control lever moves upward ⅞" (3-cylinder), 5/16" (2-cylinder) in 12-15 seconds time immediately after engine begins to fire. Measurements should be made at rod hole in lever. This movement is not total bellows travel except on 3-cylinder models. The timing is controlled by the metering pin at the top of the unit. To adjust, loosen locknut on metering pin, turn pin in or clockwise to increase 'take-off' time, and out or counter-clockwise to decrease 'take-off' time. Lever movement is controlled by bellows travel (see section below).

Manifold Leaks. Examine gasket between unit and manifold, see that mounting screws are tight. Use new gasket whenever units are removed from the engine. Do not use shellac or any other compound on these gaskets.

Improper Choking or Flooding. If engine cannot be started and carburetor floods, open choke valve by hand and crank engine to correct this condition. Check initial take-off and if correct setting cannot be secured, check unit as directed below.

SERVICING AND ADJUSTMENT:—To disassemble control unit, disconnect control rod, take off bottom cover, take out link pin in thermostatic spring, being careful not to distort spring or change spring tension, take out piston link pin, disconnect vacuum line, remove top screws. The head and bellows can then be removed (3-cyl.). On 2-cyl. models cylinders and bellows are removed by rotating the top cover until the bracket at the bottom end of the bellows can be withdrawn through the hole in the support plate. Examine cylinders and pistons. Cylinders should be dry and free from oil or dirt. Do not stretch or compress bellows (see instructions below). Use a new head gasket when reassembling and retime vacuum 'take-off' (bellows stroke timing) as directed above.

Obstructions in Vacuum Passage. Take out metering pin, clean out any dirt in metering pin passage, dry out unit if moisture is found in the bellows. Metering pin can be cleaned in alcohol. Clean metering pin orifice with a #000 taper pin reamer (use reamer lightly, remove only dirt or gum, do not enlarge hole or remove any metal). Spare metering pin can be used instead of the reamer by grinding off threads on end of pin so that wiping action can be secured. Pin should be dipped in alcohol and then turned in orifice. Bellows travel must be retimed (see Initial Take-off in Trouble Shooting section above) whenever metering pin is removed or setting disturbed.

Bellows or Vacuum Passage Leaking. With metering pin removed, collapse bellows by hand (do not compress bellows solid—bellows stroke is ⅜" or ¼"), hold a finger tightly over metering pin hole and vacuum passage hole in head, note whether bellows remains collapsed. If bellows extends to original length, bellows or vacuum passage leaks.

Bellows Travel. See that bellows end cup rests against support plate with bellows fully extended. If it does not, bellows should be replaced. Bellows travel should be ⅜" (3-cylinder models with adjusting plate set at midpoint between 'rich' and 'lean'), or ¼" (2-cylinder models—this is adjusting setscrew clearance with bellows extended). Bellows travel on 3-cylinder models is controlled by the adjusting plate. On the 2-cylinder models travel is controlled by the two setscrews in the bellows connecting linkage below the bellows.

Three Cylinder Type

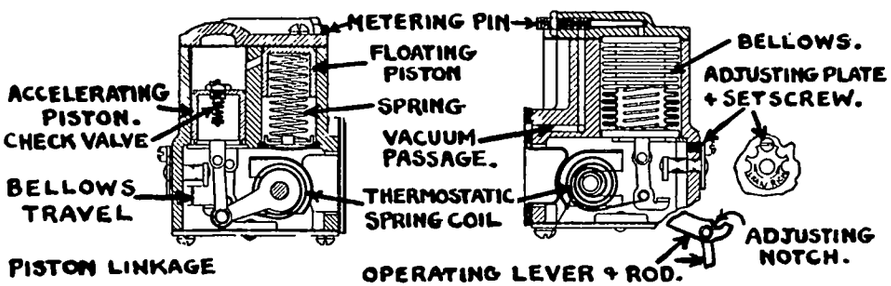

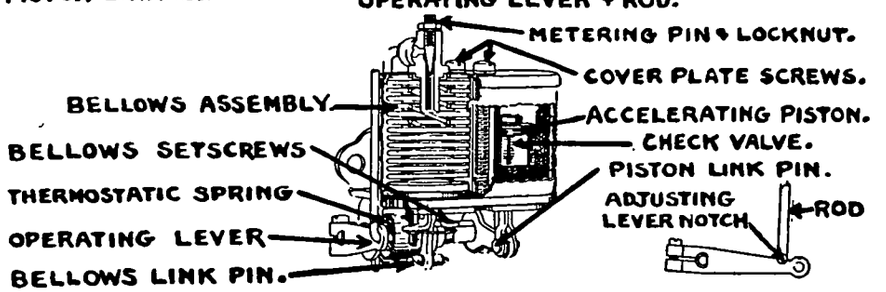

Two Cylinder Type

Accelerating Piston Check Valve. Inspect check valve in top of accelerating piston. See that valve opens freely and that face of valve and valve seat are free from dirt or oil. Check valve spring tension by inverting piston. Spring tension should be sufficient to hold valve closed in this position. If valve is removed, be careful not to distort valve seat when replacing in piston (do not tighten excessively). A leaking check valve will cause a lean mixture on acceleration or the 'hop-off' or momentary opening of the choke valve when engine begins to fire will not occur. If check valve sticks or remains closed the choke valve will not close again after this momentary opening.

DELCO-REMY BUICK (1937-38) TYPE

490-A—BUICK, MODELS 40, 60, 80, 90 (1937)—STROMBERG CARBURETORS
1990001—ABOVE MODELS WITH NEW TYPE (CD) MARVEL CARBURETORS
1990101—BUICK, MODELS 40, 60, 80, 90 (1938)—ALL CARBURETORS
1990102—REPLACEMENT UNIT FOR 1990101 (LESS VACUUM SWITCH)

TYPE:—This control is an automatic choke of entirely new design utilizing engine temperature, manifold vacuum, air intake velocity, and throttle valve opening to control the choke valve for cold starting and all possible warming up conditions. It is mounted on the engine side of the carburetor with a tongue-and-slot coupling for throttle valve shaft engagement and vacuum connection to vacuum passage in carburetor body on the face of the mounting pad. The upper end of the vertical control shaft is linked to the choke valve shaft by a flexible cable with a tubular rubber cover, and the lower end is clamped to one end of the thermostatic spring coil by the thermostat calibrating screw. The thermostat is wound spirally up the shaft with the upper end clamped to a gear which engages the rack of the vacuum 'take-off' piston so that thermostat tension can be varied by the vacuum piston and throttle shaft cam in accordance with operating conditions. The lower end of the thermostat extends down into the manifold heat tube on the top surface of the exhaust manifold so that it is affected by engine temperature changes. All types are similar in design (except for minor differences described below) and are serviced in same manner (exceptions due to differences in design noted in servicing sections).

Second Type (1990001)—Port hole and bleeder passage for dashpot piston not used and relief groove cut in side of cylinder wall instead. Connecting rod made integral with dashpot piston and small spring in take-off piston at end of rod discontinued, a second reload spring being wound on the pull-out lever shaft and hooked to the lever to secure the same performance. This type serviced in same manner as first type (490-A).

New Type With Starter Vacuum Switch (1990101, 1990102):—Vacuum switch (for starter solenoid control) mounted on take-off piston end of choke housing and operated by pushrod in choke which contacts ear on throttle cam. When switch not installed, special cover plate and gasket installed to close end of choke housing (takes place of screw plug used on first type). Design similar to second type (above) in all other particulars.

OPERATION:—The thermostat winds up as the engine cools off rotating the control shaft and closing the choke valve so that it is in position for starting (fully closed for temperatures below 85°). In this position, the vacuum 'take-off' piston and rack will be pushed in by the piston spring and the dashpot piston will be seated with no pressure being exerted on the piston connecting rod by the pull-out lever which is controlled by the throttle shaft cam. When the accelerator pedal is depressed to start the engine, the resultant throttle opening winds up the pull-out lever spring so that the lever presses on the dashpot piston connecting rod. If the engine does not begin to fire within a few seconds, the movement of the dashpot piston due to the pull-out lever pressure moves the rack forward, rotating the thermostat and control shaft assembly, and opening the choke valve slightly to prevent overchoking. This stroke of the dashpot piston requires 7-10 seconds (moves slowly to point where port hole is uncovered which admits air to cylinder and then rapidly to complete the stroke). The return stroke of the dashpot piston requires approximately 1 minute so that for repeated short cranking attempts the choke will not completely close. When the engine begins to fire, manifold vacuum pulls the vacuum take-off piston forward against the spring tension, opening the choke valve to provide the initial 'take-off' necessary for continued running (dashpot piston will retard this motion also). With the engine running, air velocity past the offset choke valve tends to open the valve and, as the thermostat unwinds as the engine warms up, the choke valve will be wide open at regular operating temperature.

ADJUSTMENT:—No adjustment required except when regular fuel used by car owner is more or less volatile than standard and necessitates special setting of Volatility Selector for correct choke action.

Volatility Selector. Consists of adjusting nut and pointer on control unit cover. Standard setting as shown with pointer in second notch on 'Low' side of scale. Three additional notches provided toward 'high' end. If mixture too rich, move pointer toward 'High' end of scale (this will correct for more volatile fuels). If mixture too lean, move pointer toward 'Low' end.

CHECKING (ON CAR):—If choking action not satisfactory, check control unit before removing from car. Remove air cleaner so that choke valve can be seen. See that choke valve is free and that it returns to original position when opened or closed manually. With engine cold and not running, open throttle wide. Choke valve should open slowly after 7-10 second delay. Close throttle. Choke valve should close immediately. If this action faulty, check for sticking control unit pistons or linkage binding. Start the engine cold. Choke valve should move toward open position when engine begins to fire. If it does not, check for clogged vacuum passage in carburetor and control unit, leaks at gasket (mounting screws loose) or at vacuum take-off cylinder plug (plug loose or gasket defective), or for binding vacuum piston. Accelerate engine before it has warmed up. Choke valve should move toward closed position momentarily and then return. If it does not, check for sluggish dashpot piston, weak or broken dashpot piston lever spring, binding in linkage generally. If choke valve action is not correct in above tests, remove control unit for disassembly and inspection on the bench.

SERVICING:—Removal—Take off carburetor and control unit as an assembly (lift straight up so that thermostat unit clears manifold heat tube). Pull back control shaft rubber cover at either end slipping shaft out of engagement with cover. Take out two mounting screws on face of control unit.

NOTE—On types with vacuum switch, disconnect and tape two leads on vacuum switch terminals before removing unit.

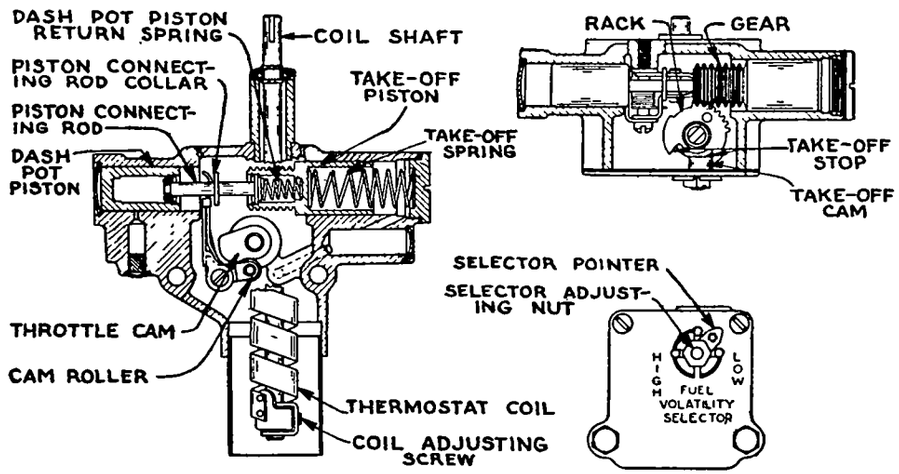

Disassembly—Take out two screws in cover plate, remove cover. Take out dashpot pull-out lever pivot screw and remove lever. Remove take-off cylinder plug and gasket, take out piston spring. Pull piston assembly out until rack and gear disengage, then turn thermostat shaft and gear assembly approximately 180° so that dashpot piston will clear gear when piston assembly is pulled out (sight through bottom of casting and use extreme care that dashpot piston is not scratched in removal). Do not loosen thermostat calibrating screw which clamps lower end of thermostat to control shaft so that thermostat setting will not be disturbed (special calibrating tool required to reset thermostat).

NOTE—On types with vacuum switch (or end plate installed instead of switch), snap ring and spring retainer must be removed before take-off piston spring can be taken out.

Servicing—Wipe off pistons with clean cloth, wipe out cylinders with alcohol, dry all parts. See that all passages are open and clean (if air line used to blow out passages, air must be free of all water, oil and rust). Check flexible linkage between pistons, see that thermostat and gear assembly rotates freely in bearings. Do not oil any part of the choke mechanism.

CONTINUED ON NEXT PAGE

DELCO-REMY BUICK (1937-38) TYPE C nt.

Reassembly—Reverse directions given above. With pistons in place mesh gear and rack so that first gear tooth overlaps the first tooth on the rack (this is important, wrong engagement will throw off thermostat calibration). See that take-off spring is installed in take-off piston and that plug gasket is in good condition, tighten plug securely. Install dashpot piston pull-out lever and make certain that curved end of pull-out spring is behind cross head on flexible linkage. Check to see that thermostat clip is meshed with the take-off gear through the pin and that the throttle shaft cam is engaged with the pull-out lever roller in the closed throttle position before replacing cover.

NOTE—On types with vacuum switch, after take-off piston spring, spring retainer and snap ring are installed, use screwdriver or coin inserted in throttle shaft slot to turn shaft to wide open position, then push switch operating rod into choke as far as possible and assemble switch. This will prevent rod distorting contact point spring in switch case which may cause a ground. On type with end plate, make certain that gasket is assembled so that small square in center of gasket hollow square covers the ⅛" hole adjacent to take-off cylinder.

Mounting & Checking—Assemble control unit on carburetor, see that mounting screws tightened securely and gasket pulled down to prevent leaks at this point. Open and close throttle several times to see that linkage does not bind. Engage tip of flexible shaft in control unit shaft, slip rubber cover down over shaft and over pilot on control unit (shoulder in cover must bottom on pilot). Engage upper end of flexible shaft and slip rubber cover over choke valve shaft pilot as single operation (at temperatures below 85° open throttle valve wide to align tongue and slot to avoid necessity of twisting shaft). See that rubber cover does not touch flexible shaft at any point. Check choke valve clearance in air horn (flexible shaft exerts thrust and valve must clear at opposite side of air horn when all end thrust in shaft is taken up). To adjust valve, loosen two mounting screws, tap valve lightly, tighten screws securely. Open and close choke valve several times to see that flexible shaft firmly engaged, choke valve operates freely and returns to original position. Recheck vacuum switch types (or end plate when installed) to make certain that no leakage can occur at cover gasket.

NOTE—Cut-away cover available which can be installed in place of regular cover so that operation of choke mechanism can be watched. To check dashpot piston timing with this cover in place, see that piston fully back in cylinder, rotate throttle shaft cam to wide open position. Piston linkage cross head (where pull-out lever contacts piston rod) should move up to the end of the take-off piston in 4-8 seconds. Rotate throttle shaft cam to closed throttle position. Dashpot piston should move to the bottom of the cylinder in one minute maximum. All movement should be smooth.

THERMOSTAT CALIBRATION:—With Test Fixture. Consists of pointer clamped on control unit shaft and graduated dial mounted on control unit. With Volatility Selector pointer set in second notch on 'Low' end of scale, test fixture pointer should line up with 'O' mark on scale when control unit is at room temperature of 72° F. (control unit should be allowed to stand until it reaches room temperature and temperature should be read on thermometer placed near unit when test is made). Pointer will register minus 1° on dial for each 2° in temperature below 72° or plus 1° for each 2° temperature rise above 72°. To adjust thermostat, use special Allen wrench to loosen thermostat calibrating screw (clampscrew at lower end of thermostat), rotate pointer to correct position, tighten screw. Be careful not to bend or distort thermostat in making this adjustment.

Without Test Fixture. Thermostat cannot be set without fixture but may be compared with a new unit by allowing both units to reach same temperature and then noting control shaft angularity (place units side by side, insert thin blade or match stick in shaft slot, note whether these blades are parallel).

HOLLEY (CHANDLER-GROVES) AUTOMATIC CHOKE

AOC-2, AOC-25 CARBURETOR TYPE

This type Automatic Choke and Fast Idle used on the following car models:

Car Model	Carburetor
Packard Six, 115C ('37)	AOC-2
Packard Six, 1600 ('38), 1700 ('39)	AOC-25

DESCRIPTION:—Designed to control choke valve and throttle for cold starting and warming up. Entire mechanism is built in carburetor body and consists of a thermostatic spring coil in a case on the lower end of the throttle valve body and a vacuum piston in a cylinder directly under thermostat case. Thermostat coil and piston are linked to a floating lever from which a rod extends up to the choke valve lever. The floating lever is mounted on the fast idle cam shaft and actuates the fast idle cam through a spring link.

OPERATION:—As the engine cools off, the thermostatic spring coil winds up which tends to raise the connecting rod and close the choke valve. This action is prevented by the interference of the throttle lever stopscrew and the fast idle cam. However, when the throttle is opened before starting a cold engine, the stopscrew is raised from the cam and the thermostat snaps the choke valve closed. As soon as the engine begins to fire, the vacuum built up in the manifold causes the vacuum piston to move out in the cylinder (vacuum chamber in cylinder connected with carburetor barrel below throttle valve) rotating the floating lever and opening the choke valve slightly to prevent overchoking. As the engine warms up, the thermostatic spring coil tension lessens, allowing the offset choke valve to open, so that at operating temperature the choke valve is wide open and the fast idle cam has been rotated to the hot or slow idle position.

TROUBLE SHOOTING:—Engine Fails to Start. See that throttle opened to place automatic choke in operation. Check choke valve and linkage for binding, see that choke valve falls open from any position with thermostat case removed (thermostat coil unhooked) and closes without binding when floating lever is rotated clockwise (stopscrew must clear fast idle cam). Check thermostat setting (see adjustment section below), see that thermostat coil hooked on prong on floating lever, examine case for rust caused by condensation which will result in linkage binding or sticking (see note below to correct this condition).

Carburetor floods or Fast Idle continues after Engine warm. Check thermostat setting, see that vacuum piston moves freely in cylinder and that vacuum passages from chamber to carburetor barrel is clean and not obstructed, check spring linking floating lever and fast idle cam shaft, see that shaft perates freely and that levers do not strike carburetor casting. See that heat channel (hole in carburetor flange leading to thermostat case) is open and that correct gasket used between thermostat case and carburetor body.

NOTE—To correct condensation in thermostat case which will cause rust resulting in binding of the linkage, manufacturer recommends drilling #60 hole in throttle valve body, ⅜" to left of heat hole and 7/32" up from bottom of carburetor flange, through into the vacuum channel. This will ventilate thermostat case.

ADJUSTMENT:—To remove thermostatic coil and case assembly, take out two mounting screws on edge of case and lift off assembly taking care that thermostat coil is unhooked from prong on floating lever without distorting coil. Do not remove the thermostatic coil from the holder plate.

Thermostatic Coil Calibration. With thermostatic coil at 100°F., the free end of the thermostat should be directly over the mark on the holder plate. No adjustment is provided.

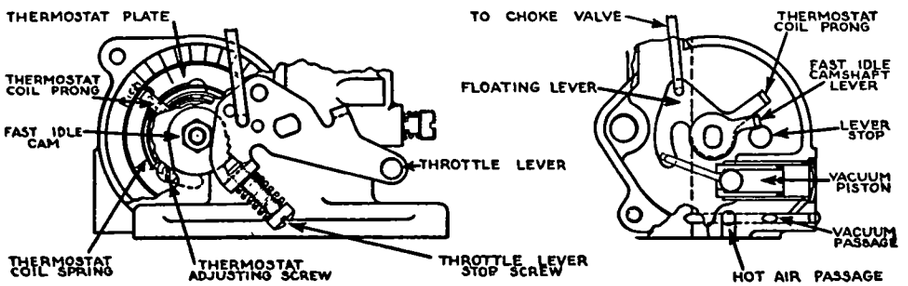

Thermostat Setting—Standard setting is with mark on thermostat holder plate lined up with mark on thermostat case. This setting may be varied not more than 3 graduations, if necessary, to secure satisfactory warming up performance. When making this adjustment, change setting ½ graduation at a time and note performance. If satisfactory performance cannot be secured with this variation, install new thermostatic coil.

Choke Valve Position—On cars with Overdrive, long side of choke valve must clear carburetor air horn by .005" with valv fully closed (do not centralize valve in air h rn).

CHRYSLER EIGHT FAST IDLE

(STR MBERG CARBURETORS)

Car Model	Carburetor	Automatic Choke
Chrysler 8, C14, C15 ('37)	Stromberg AAOV-1	Sisson AC-600
Chrysler 8, C19, C20 ('38)	Stromberg AAV-2	Sisson AC-600
Chrysler 8, C23,24 ('39), C26,27 ('40)	Stromberg AAV-2	Sisson AC-600
Chrysler 8, C30,33 ('41), C36,37 ('42)	Stromberg AAV-2	Sisson AC-600
Chrysler 8, C39, C40 (1946-48)	Stromberg AAVS-2	Sisson AC-600

NOTE:—This Carburetor and Fast Idle is used in conjunction with a separately mounted automatic choke, Sisson Model AC-600. See Sisson Automatic Choke

DESCRIPTION & OPERATION:—**Fast Idle**—Consists of a stepped fast idle cam and a fast idle lever pivoted directly above the throttle valve shaft and linked to the choke valve lever. Fast idle cam serves as the stop for the throttle stopscrew. When the choke valve is closed for cold starting, fast idle cam is rotated so that the stopscrew rests on the highest step of the cam and the throttle valve is opened to the fast idle position. As the engine warms up and the choke valve opens, fast idle cam is allowed to drop down and throttle valve to close progressively until, when the choke valve is wide open, the throttle is closed to the hot or slow idle position with the stopscrew resting on the lowest step of the cam.

Unloader or Choke Release—Consists of an ear on the throttle lever which strikes an extended arm on the fast idle lever when the throttle is opened wide so that choke valve is opened somewhat to correct flooding.

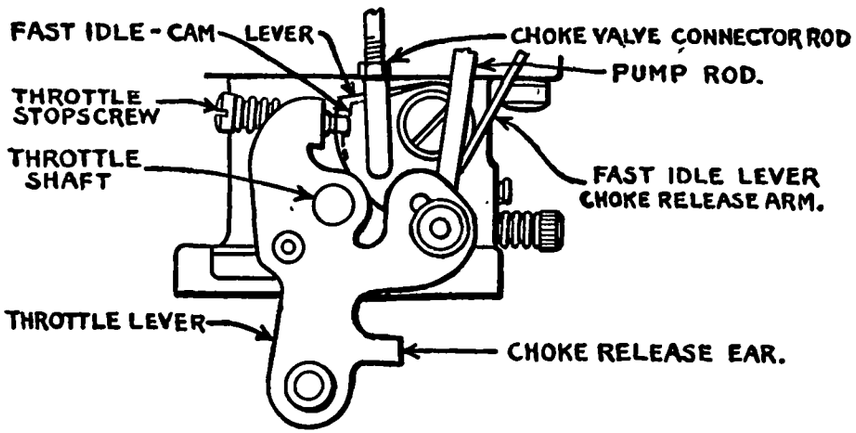

SETTING & ADJUSTMENT:—**Fast Idle**—To check setting, close throttle valve so that stopscrew is against first step of fast idle cam. Move choke valve toward closed position as far as possible (do not force valve beyond point where stopscrew strikes edge of next step on fast idle cam). Choke valve opening in this position should be ⅛" (check by inserting ⅛" drill rod between edge of valve and air horn wall). Adjust by loosening locknut and changing position of ball joint on lower end of connector rod.

Chok Release—To check setting, open throttle valve wide, note choke valve opening by inserting drill rod between edge of valve and air horn wall. Opening should be 7/32". Adjust by bending arm on fast idle cam lever slightly.

AUTOMATIC CHOKE: Setting & Adjustment—See Sisson Automatic Choke.

CHRYSLER EIGHT THROTTLE GUARD

(STR MBER CARBURET RS)

Used on following Models with Fluid Drive:
Chrysler 8, Traveler, Saratoga & New Yorker C26 ('40), C30 ('41)
Chrysler 8, Crown Imperial Model C27 ('40), C33 ('41)
Chrysler 8, Saratoga C36K, New Yorker C36N (1942)
Chrysler 8, Crown Imperial Model C37 (1942)
Chrysler 8, Saratoga C39K, New Yorker C39N, Town & Country (1946-47-48)
Chrysler 8, Crown Imperial Model C40 (1946-47-48)

DESCRIPTION & OPERATION:—Throttle Guard is designed to prevent engine stalling when the accelerator pedal is released quickly. It consists of a plunger operating on a swivel block which is part of the accelerator linkage. Plunger is actuated by a spring-loaded vacuum diaphragm unit (similar to those used for vacuum spark control) connected to the engine manifold and having a relief valve at the point where it is connected to the Throttle Guard body. In normal operation, the throttle guard plunger follows the swivel in the linkage as the accelerator pedal is depressed (due to the vacuum unit spring pressure). When the accelerator pedal is released quickly, the increase in manifold vacuum acting with the throttle return spring pull offsets the vacuum unit spring pressure and the accelerator pedal return is retarded, the speed of the pedal return being controlled by the metered relief valve in the vacuum line.

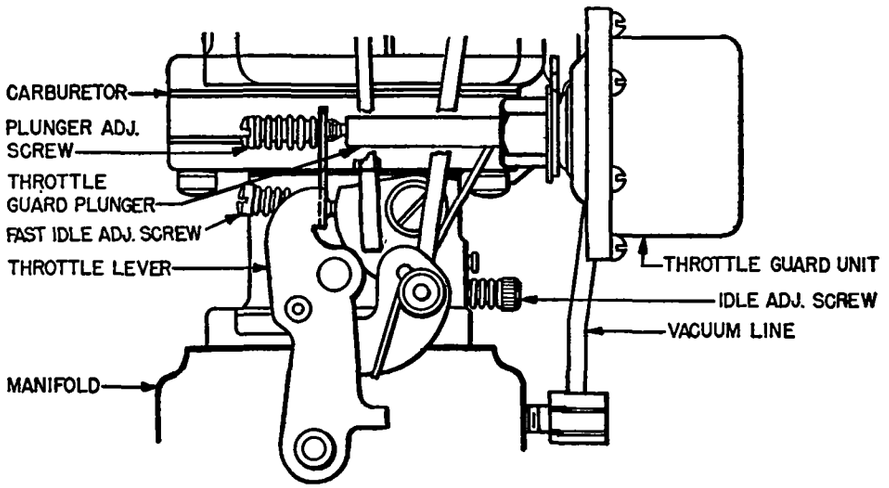

ADJUSTMENT:—With the push pin removed, hold choke valve wide open and close throttle valve so that adjusting screw is against lowest step of fast idle cam. Insert the stub pin setting tool, then adjust each model as follows:

Models C26 27 ('40), C30, 33 ('41)—Adjust nut on rear end of bell crank-to-carburetor rod until a slight drag is secured on a .010" feeler placed between the swivel block and the stub pin setting tool. Tighten locknut and lock against adjusting nut using care not to disturb setting. Remove stub pin setting tool and install throttle guard push pin.

Models C36, C37 ('42), C39, C40 ('46-48)—Turn adjusting screw on carburetor throttle lever (directly above idle speed adjusting screw) until clearance between screw and end of throttle guard plunger is .010" (slight drag on .010" feeler) with engine running.

SERVICING:—No special servicing operations required. If Throttle Guard does not operate satisfactorily after adjustments have been correctly made, check connecting tube, fittings, and vacuum unit for leaks.

Installation (All Models)—Attach the throttle guard and bracket so that the bracket is in a horizontal position when the assembly is mounted on the engine. On the C26, 27 ('40) models, the bracket should be 1⅛" from the end of the tube.

CHRYSLER, DE SOTO, DODGE SLOW-CLOSING THROTTLE

(CARTER B&B CARBURETORS)

Used on following Models with Fluid Drive:

Car Model	Carburetor
Chrysler Six, C28 (1941)—Std. Transmission	Carter (B&B) EA1
Chrysler Six, C28 (1941)—Vacamatic Trans.	Carter (B&B) E6T1, T2, U1, U2
Chrysler Six, C34S, 34W (1942)—Std. Transmission	Carter (B&B) EF1
Chrysler Six, C34S, 34W (1942)—Vacamatic Trans.	Carter (B&B) EG1
Chrysler Six, C38S, C38W (1946-48)—Hydr. Trans.	Carter (B&B) EV1
Chrysler Eight, C39, C40 (1946-48)—Hydr. Trans.	Carter (B&B) E7A1
De Soto, Model S8 (1941)—Std. Transmission	Carter (B&B) EB1
De Soto, Model S8 (1941)—Simplimatic Trans.	Carter (B&B) E6V1, U1, U2
De Soto, Model S10S, 10C (1942)—Std. Transmission	Carter (B&B) EF1
De Soto, Model S10S, 10C (1942)—Simplimatic Trans.	Carter (B&B) EG1
De Soto, Model S11S, S11C (1946-48)—Hydr. Trans.	Carter (B&B) EV1
Dodge, Model D24 (1946-48)	Carter (B&B) D6J1

SPECIAL SERVICE NOTES & PRODUCTION CHANGES:—1941 Changes to correct Throttle Sticking Open and to improve Dashpot Action—*Refer to Carburetor Index for Carter (B&B) Carburetor article for complete data on recommended carburetor changes.*

NOTE:—Two different types of Slow Closing Throttle were used on these cars as listed below ("First" type used only on car models with Fluid Drive and Synchro-mesh Transmission, both types used on cars with Vacamatic or hydraulically controlled transmission.

First Type—Adjustable type. Used on Carburetor Models E6T1, E6U1, E6V1, EA1, EB1, EF1, D6J1.

Second Type—Non-adjustable (solenoid operated) type. Used on Carburetor Models E6T2, E6U2, E7A1, EG1, EV1.

Kick-down Switch (Models E6T1, E6T2, E6U1, E6U2, E6V1, E7A1, EG1, EV1): This device controls transmission downshift (from Fourth to Third) and operates independently of the Slow Closing Throttle unit. It is used on all cars with Vacamatic, Simplimatic, or hydraulically controlled transmission. See separate article for data on this unit.

DESCRIPTION AND OPERATION:—First Type—Slow Closing Throttle is a dashpot built in the carburetor float bowl with the dashpot piston linked to the throttle lever. When the throttle valve is opened, dashpot piston is lifted up in cylinder and cylinder fills with fuel which flows in through the fuel passage and past the check ball. When the accelerator pedal is released to close the throttle, the check ball moves up to close the large fuel passage and the fuel trapped in the cylinder prevents the dashpot piston moving down so that the throttle is prevented from closing. The fuel in the cylinder is allowed to escape through the restricted fuel passage and this allows the piston to descend slowly and the throttle valve to close slowly. The first type slow-closing throttle has an adjustment screw located in the carburetor casting directly above the upper end of the dashpot piston stem. This screw should be adjusted as directed below. Second type slow-closing throttle does not have this adjustment screw

Second Type—On this model, dashpot fuel control valve is a separate unit (valve built in dashpot plunger stem on first type) with a spring-loaded solenoid operated valve plunger directly above the fuel passage check ball. At car speeds below 8 MPH (First or Second Gear), 15 MPH. (Third or Fourth Gear), solenoid is energized and the valve plunger is drawn up so that the check ball is free to seat and shut off the large fuel passage so that fuel forced out of cylinder is required to flow through restricted fuel passage which retards closing of throttle valve and provides correct slow-closing throttle action. At car speeds above 8 MPH. (First or Second Gear), 15 MPH. (Third or Fourth Gear), solenoid is not energized and spring forces valve plunger down which prevents check ball seating. Fuel is then free to escape from cylinder through upper large fuel passage and throttle closes promptly without slow-closing throttle action.

Solenoid Wiring—Solenoid has two terminals. Either terminal should be connected to the terminal on the 'Kick-down Switch' on the carburetor and the other terminal should be connected to the 'SF' terminal on the Transmission Control Relay (see wiring diagram on car model pages for the complete transmission wiring diagram). With these connections, solenoid is energized with the Governor Switch contacts closed, and inoperative with the Governor Switch contacts open (at speeds above 8 or 15 MPH. as detailed above).

ADJUSTMENT:—First Type. Adjusting screw should be turned out approximately 5 full turns. To adjust, turn screw in as far as possible, then back screw out exactly 5 full turns to provide correct stroke of 7/32" and check operation. If engine tends to stall when throttle is closed, retarding action is insufficient and

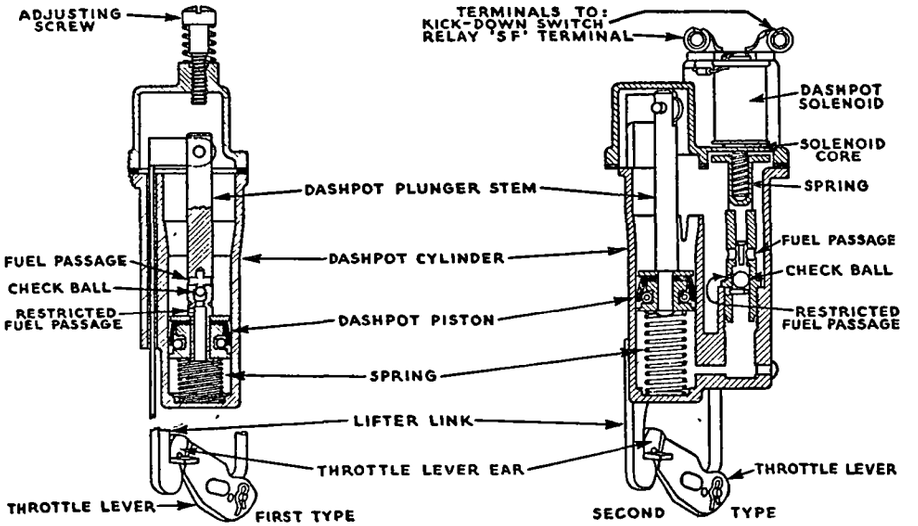

screw should be turned out slightly. If automatic upshift is retarded, screw should be turned in slightly (too much retarding of throttle closing will delay synchronizing of gears and delay shifting).

Second Type—No adjustment provided or required.

SERVICING:—No special servicing operations required. See Carburetor article in Carburetor Section for complete carburetor servicing data including Slow-closing Throttle mechanism.

NOTE—Leather seal on dashpot piston must be in good condition for proper operation. Worn, cracked, dry, or damaged piston seal will permit fuel escape past piston and interfere with slow-closing throttle action.

CHRYSLER & DE SOTO KICK-DOWN SWITCH

F R AUTOMATIC TRANSMISSI N C NTR L

1941-48 CHRYSLER 6 & DE SOTO, 1942-48 CHRYSLER 8

Car Model	Carburetor
Chrysler Six, C28 (1941)	Carter (B&B) E6T1, T2, U1, U2
Chrysler Six, C34S, C34W (1942)	Carter (B&B) EG1
Chrysler Six, C38S, C38W (1946-48)	Carter (B&B) EV1
Chrysler Eight, C39, C40 (1946-48)	Carter (B&B) E7A1
Chrysler Eight, C39, C40 (1946-48)	①Stromberg AAVS-2
De Soto, Model S8 (1941)	Carter (B&B) E6V1, U1, U2
De Soto, Model S10S, S10C (1942)	Carter (B&B) EG1
De Soto, Model S11S, S11C (1946-48)	Carter (B&B) EV1

①—Stromberg No. 384476 Kick-down Switch unit (separate unit).

DESCRIPTION & OPERATION: This unit is built-in the carburetor (Carter B&B models) or mounted on the carburetor (Stromberg) for transmission control. It consists of a stationary contact connected to the transmission control solenoid, a movable contact mounted on a vacuum piston, and a switch plunger operated by the carburetor throttle valve lever which completes the circuit to ground (energizing the transmission solenoid) when the throttle valve is

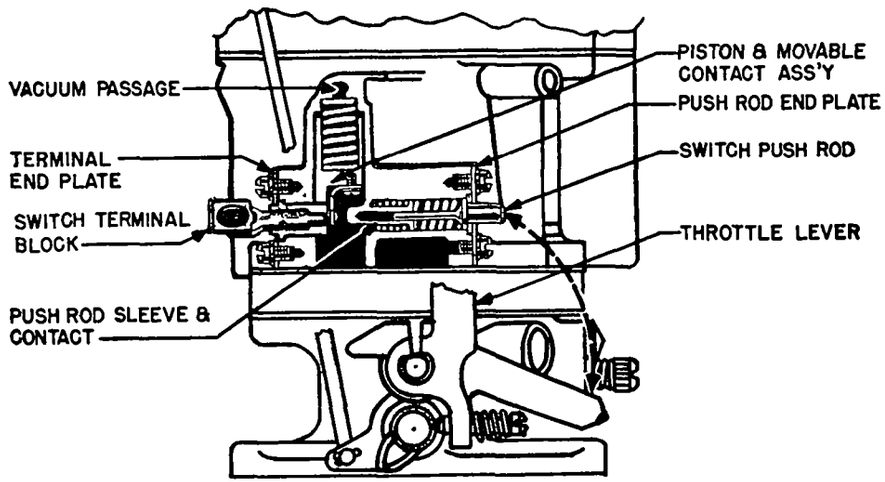

opened to slightly less than wide-open position. This action occurs at car speeds under approximately 27 MPH. (Low Range—for kick-down to First Gear), 53 MPH. (High Range—for kick-down to Third Gear). At higher car speeds, manifold vacuum pulls piston and movable contact up out of engagement so that plunger does not complete circuit to ground and kick-down does not occur.

NOTE—Speeds listed above apply to Vacamatic and Simplimatic Transmissions. On hydraulically controlled transmissions, kick-down limit speeds are 40-45 MPH. (Chrysler), 38-40 MPH (De Soto) in High Range. Low Range limits are correspondingly lower.

SERVICING: To disassemble unit, remove two screws in switch plunger end plate and withdraw plunger. Insert small soft drift into vacuum chamber to hold vacuum piston in position against spring tension, then remove two screws in stationary contact end plate, remove end plate and contact assembly. Release pressure on vacuum piston, remove piston and spring. Movable contact can be removed by taking out mounting screw in end of piston. Clean all metal parts thoroughly, examine entire assembly for damage or wear. Reassemble switch.

Stromberg Kick-down Switch Mounting Note—Vacuum passage and air passage for switch operation terminate at holes in switch mounting flange. Make certain that these passages are clean and that air-tight joint secured when switch assembly mounted on carburetor (use special mounting gasket Stromberg No. 384468).

DODGE SLOW-CLOSING THROTTLE

(STROMBERG CARBURETORS)

Used on following Models with Fluid Drive

Car Model	Carburetor
De Soto, Model S11S, S11C (1947-48)	Stromberg BXVD-3
Dodge, Custom & Deluxe Model D19 (1941)	Stromberg BXVD-3
Dodge, Deluxe Model D22S, Custom Model D22C (1942)	Stromberg BXVD-3
Dodge, Deluxe & Custom Model D24 (1946-48)	Stromberg BXVD-3

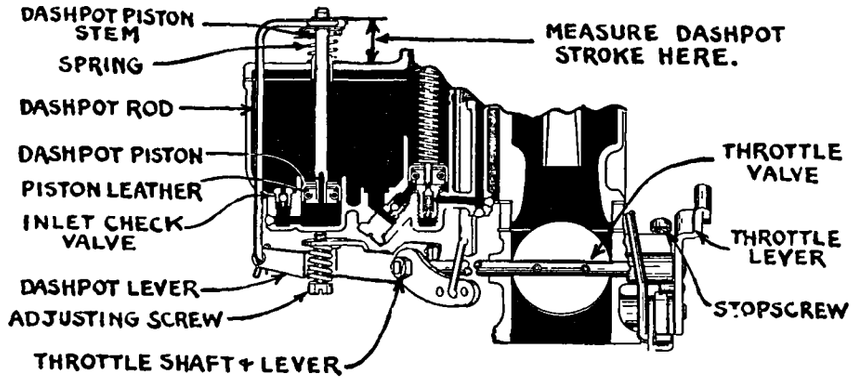

NOTE:—This carburetor and Slow-closing Throttle device used on cars with Fluid Drive only in conjunction with a separate automatic choke unit. Sisson Model AC-758B. See Sisson Automatic Choke article for data on this unit.

DESCRIPTION & OPERATION:—The Slow-closing Throttle device consists of a dashpot and piston assembly in the float bowl with the piston linked by a rod to a control lever which engages the throttle valve lever. When the throttle is opened, dashpot cylinder is filled with fuel which flows freely in through dashpot check valve. When the accelerator pedal is released (to close throttle), this fuel is trapped in the cylinder and is allowed to escape slowly through the relief hole in the dashpot piston stem above the piston. This action retards the movement of the piston and linkage toward the closed throttle position and the linkage prevents the throttle valve closing too rapidly.

ADJUSTMENT:—Adjusting screw on dashpot control lever under float bowl should be adjusted for proper stroke (turn screw in to shorten stroke, out to lengthen stroke). Full travel of dashpot piston should be 5/16-11/32" with all slack removed from linkage. To check, place rule on float bowl cover at dashpot piston stem, measure distance from bowl cover to edge of retainer on stem, open throttle and recheck distance. Difference in readings should be 5/16-11/32".

SERVICING:—No special servicing operations required. See Carburetor article in Carburetor Section for complete carburetor servicing data including Slow-closing throttle mechanism.

1949 LINCOLN & MERCURY AUTOMATIC CHOKE

Car Model	①Carburetor
Lincoln & Cosmopolitan (1949)	8EL-9510-A
Mercury, Model 9CM (1949)	8CM-9510-A

①—Std. for Altitudes up to 5000 ft.

►**Erratic Engine Performance Correction (Erratic idle speed, poor gasoline mileage, and mis-firing due to automatic choke opening late or not opening fully):** May be caused by air leak in hot air tube between manifold and choke housing due to use of 5/16" fitting instead of ¼" type. See that correct type fittings used and that all connections are tight.

DESCRIPTION: Automatic choke assembly is mounted on carburetor and linked directly to the choke valve shaft. It consists of a thermostatic coil and vacuum piston assembly to control the choke valve, a fast idle linkage which opens the throttle valve to provide a faster engine idle speed when cold, and an unloading device to correct engine flooding.

OPERATION: Automatic Choke—Thermostatic coil is bi-metal type and tends to "wind-up" and close the choke valve when the engine is cold so that the choke valve is fully closed for cold starting. In this position, the vacuum piston is at the top of the cylinder. As soon as the engine begins to fire, manifold vacuum tends to pull the piston down in the cylinder which opens the choke valve partially (valve is offset and air flow through the air horn also tends to open the valve). As the engine warms up, the thermostatic coil "unwinds" lessening the tension on the choke valve and allowing it to open so that at normal operating temperatures the choke valve will be wide open. Warm air is introduced into the choke housing to effect this unwinding of the thermostatic coil (filtered air from air horn passes through stove in manifold and then flows to the housing). This air flow is controlled by the vacuum piston (slots in the cylinder are uncovered when piston moves down in cylinder and manifold suction draws warm air into the housing).

Fast Idle—Consists of a stepped fast idle cam linked to the choke valve shaft and serving as the stop for the throttle valve idle speed adjusting screw. Cam is rotated to the "fast idle" position (with the stopscrew resting on the highest step of the cam) when the choke valve is closed for cold starting. As the engine warms up and the choke valve opens, fast idle cam is rotated and stopscrew rests on progressively lower steps until at normal operating temperatures, throttle valve is closed to the normal hot or slow idle speed position.

Unloading Device—When the throttle valve is opened wide, the throttle lever opens the choke valve slightly through the fast idle linkage. This can be used to correct flooding caused by over-choking.

ADJUSTMENT: Automatic choke and fast idle are set in production and do not require attention in the field. If choke unit has been disassembled, it should be adjusted for correct performance after re-installation.

Automatic Choke Adjustment—Loosen 3 cover retaining screws, rotate cover and coil assembly in direction of arrow (clockwise on Lincoln, counter-clockwise on Mercury) for Leaner setting or less choke action, and in opposite direction for Richer setting or more choke action.

DISASSEMBLY: Disconnect rod at fast idle cam. Take out three cover screws and locking plates, rotate bakelite cover and coil assembly toward "lean" to disengage thermostatic coil hook from choke lever prong, lift cover off. Remove cover gasket and metal plate from choke housing.

INSPECTION: See that all parts of choke mechanism are clean and that choke shaft and piston assembly operate freely. Replace all parts which are worn or distorted.

REASSEMBLY: Reverse disassembly directions (above). When installing cover and thermostatic coil assembly, see that coil hook is down, then rotate cover toward "rich" (opposite to direction of arrow) until hook is felt to engage choke shaft prong, install cover locking plates and screws. Readjust automatic choke after carburetor installed on engine.

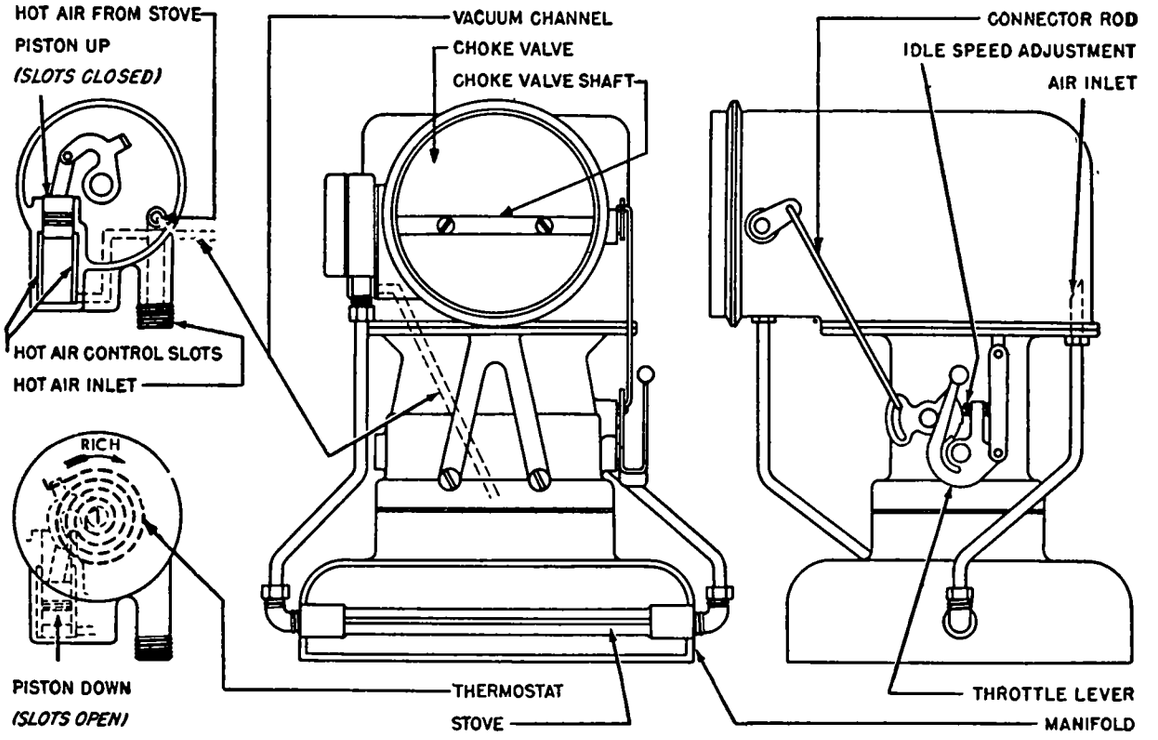

1949 LINCOLN & MERCURY AUTOMATIC CHOKE

SISSON "AC-600" & "AC-700" SERIES

Car Model	Choke Type No.
Chrysler, Six C7, Eight C8,C9 (1936)	AC-751
Chrysler, Six C16 (1937)	AC-751B
Chrysler Six, All Models (1938 to 1948)	AC-758B
Chrysler Eight, Models C10, C11 (1936)	AC-600
Chrysler Eight, All Models (1937 to 1948)	AC-600
DeSoto, Models S1, S2 (1936)	AC-751
De Soto, All Models (1937 to 1948)	AC-758B
Dodge, Models D2, D3, D4 (1936)	AC-751B
Dodge, All Models (1937 to 1948)	AC-758B
Lincoln, Models 16H, 168H ('41), 26H, 268H ('42)	
Plymouth, Models P1, P2 (1936), P3, P4 (1937)	AC-751B
Plymouth, All Models (1938 to 1948) Optl.	AC-758B

LINCOLN NOTE:—This Automatic Choke also used on 1941 models with 'Selectomatic' control which consists of a button on the instrument panel marked 'AM' (letters opposed so that one letter is upside-down in each position of the control button). Automatic Choke is operative with control button turned so that letter 'A' is uppermost. Automatic choke is inoperative (choke is then controlled manually in usual manner) with button turned so that letter 'M' is uppermost.

DESCRIPTION:—The Sisson Automatic Choke is a separate unit mounted on the exhaust manifold and connected to the carburetor choke valve lever by a connector rod. A solenoid within the choke case is connected to the starter side of the starting switch so that the solenoid is energized while the starter is operating. A thermostat is also mounted within the choke case and the solenoid and thermostat operate together to close the choke valve for cold starting and to control the choke valve during the warming up period. The AC-700 Series (AC-751, AC-751B, AC-758B) and AC-600 Series operate in the same manner.

OPERATION:—When the starter is operated to crank the engine, the automatic choke solenoid is energized, attracting the armature, and rotating the choke lever, which is attached to the choke valve lever through a control rod so that the choke valve is closed if the engine is cold. When the engine is warm this armature movement does not take place and no choking action results. When the engine begins to fire and the starting switch is opened, the solenoid circuit is broken. The choke lever is then controlled entirely by the thermostatic spring within the choke case which tends to rotate lever and open choke valve as engine warms up. At normal operating temperature, choke valve is wide open.

ADJUSTMENT:—**Model AC758B**—Remove air cleaner, open throttle approximately ¼. Move choke lever until hole in automatic choke shaft (opposite end from lever) lines up with slot in bearings, insert special tool, Sisson No. C-723, through hole in shaft and push tool down so that lower end engages slot in choke base mounting flange. Loosen clampscrew on choke lever, press up on lever until choke valve is closed tight (sight down air horn), hold lever in this position and tighten clampscrew. Remove tool.

Model AC-600—Remove air cleaner, open throttle approximately ¼, take off automatic choke cover. Clamp special adjusting tool, Sisson No. AC-620, in place on choke so that end of tool enters and lines up hole in armature and hole in magnet core, move flat bar on tool so that armature is locked tightly against magnet core. Loosen clampscrew on choke lever, move lever until choke valve is closed tight (sight down air horn), hold lever in this position and tighten clampscrew. Remove tool and replace automatic choke cover.

Lincoln Model—Remove air cleaner. Rotate choke lever until hole in brass shaft lines up with slot in bearing, insert 5/64" rod through hole in shaft and engage rod in notch in base of choke unit. Loosen choke lever clampscrew, press upward on lever until choke valve is closed tight against .010" feeler inserted between edge of valve and air horn wall, hold lever in this position and tighten lever clampscrew, remove adjusting rod, replace air cleaner.

CAUTION—When replacing air cleaner, make certain that clamp not tightened excessively which may cause choke valve to bind. See that choke valve does not bind or stick and that entire choke mechanism and fast idle linkage operate freely with throttle partly open. See car model page for Throttle Cracker.

SERVICING:—If Trouble Shooting directions below do not correct faulty operation, remove Automatic Choke Unit and test operation on test fixture such as Sisson Model AC-753. Replace units which are defective. Do not oil any part of choke mechanism. When installing choke, make certain that heat insulating gasket is in place between exhaust manifold and choke case. Do not use a terminal screw on AC-758B models which is longer than original screw (Caution—a longer terminal screw will interefere with correct operation).

TROUBLE SHOOTING:—If engine does not start or warm up properly, and for all hard starting complants due to faulty choke operation, check following points

Hard Starting with Cold Engine:

1. Check fast idle mechanism to see that it is free and not binding at any point (fast idle connector rod usually connected to choke valve lever).
2. See that choke rod connecting Automatic Choke lever and choke valve lever does not bind in levers.
3. Examine carburetor choke lever, Automatic Choke lever, and fast idle mechanism and remove all paint, grease, or dirt which might cause binding.
4. Check carburetor choke valve, see that edges are smooth and that valve does not rub against air horn walls or bind in any position. See that air cleaner does not interfere with choke valve and that mounting screw is not tightened excessively which will distort air horn and bind choke valve (check choke valve operation with air cleaner in place).
5. Check electrical connections at Automatic Choke and starter switch. Examine wire for short-circuits and breaks.
6. Check Automatic Choke ground (unit grounded through case). See that mounting screws are tight and that manifold under mounting flange is clean.
7. Check throttle cracking linkage (see Tune up instructions on car model page). This is important to insure correct throttle opening for starting and to place automatic choke in operation (on some cars with fast idles, fast idle will prevent choke closing until throttle valve opened to free fast idle cam.
8. Check Automatic Choke adjustment (see instructions above). If Automatic Choke does not function after above points checked, replace the unit.

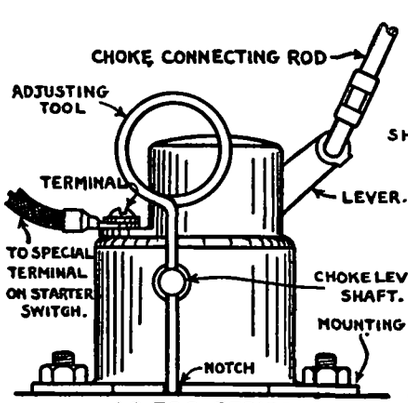

AC-700 SERIES

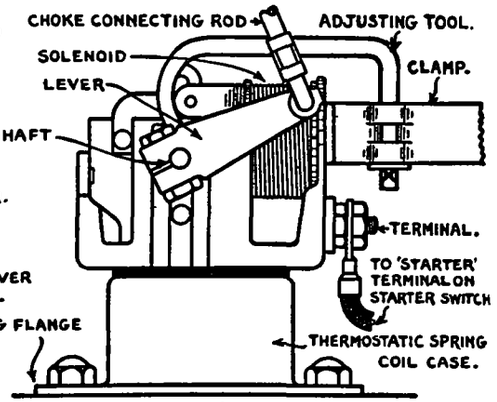

AC-600 SERIES (COVER REMOVED)

Hard Starting with Hot Engine:

1. Check for rich mixture or flooding caused by percolating discharge of carburetor when engine stopped. To check, remove air cleaner immediately after stopping engine, note whether gasoline dripping into manifold from carburetor nozzle (this overflow should show up within 3-5 minutes after engine is stopped). Correct by installing special size Float Valve Needle and Seat Assembly and checking float level. See Carburetor article in Carburetor Section.
2. Check carburetor for High Float Level. See Carburetor article in Carburetor Section for Float Level specifications and adjusting directions.

Engine Stalls while Cold:

1. Check Manifold Heat Control Valve. See Manifold Heat Control data on car model page for directions.
2. Check carburetor Fast Idle setting. See Carburetor article in Carburetor Section for directions.

INSTALLATION (PLYMOUTH):—A mounting pad is provided on the exhaust manifold for the automatic choke. Position choke on mounting pad with operating lever pointing toward carburetor, drill two 3/16" holes in line with mounting holes in base flange, tap with ¼x20 USS. tap, use studs furnished to mount choke on manifold. Take off all hand choke linkage, replace with control rod linking choke valve lever and choke operating lever. Connect terminal on choke case to special terminal on side of switch case n starter (do not connect to battery side of starting switch). On cars where this terminal is not provided, remove starter switch, mount pad on end f cable under switch with copper strip against starter terminal post and solder in place.

STROMBERG TYPE (WITH TYPE C AUTOMATIC CHOKE)

Car Model	Carburetor
Pierce Arrow Eight, All Models (1936-38)	EE-3
Pierce Arrow Twelve, All Models (1936-38)	EX-32

FAST IDLING DEVICE:—The 'Fast Idling' Device used in conjunction with the Automatic Choke consists of a series of levers connected to the throttle valve, choke valve, and the Automatic Choke Control so that the carburetor choke valve does not close with either a hot or cold motor until the throttle is opened to a position equivalent to 20 M.P.H. As a result, when a hot motor is stopped and the throttle is closed, the contraction of the thermostat spring will close the choke valve from a wide open position to a partially closed position when the movement of the pin '50' against the ear 'C' causes the ear 'A' to contact with the adjustment screw '42'.

Operation. When the car is started the throttle must be opened to a position corresponding to a car speed of 20 M.P.H. The movement of the throttle valve raises the adjusting screw '42', releasing the ear 'A' and allowing the choke valve to snap closed. As soon as the engine begins to fire, the Automatic Choke Control partially opens the choke valve, causing the fast idle stop weight to rotate slightly counter-clockwise. As a result, when the throttle is closed after car has started, the adjustment screw rides on the ear 'A' of the fast idle stop weight, holding the throttle open in a position corresponding to a car speed of 20 M.P.H. When the carburetor is installed this adjustment is set for a car speed of 15-20 M.P.H. with a hot motor, or approximately 12 M.P.H. with a cold motor. As the motor warms up, the fast idle stop weight is rotated slightly clockwise so that the adjustment screw slides off of ear 'A', allowing throttle to close.

Adjustment. Whenever adjustment is being made with a hot motor it will be necessary to hold the fast idle stop weight in position so that the adjustment screw '42' rides on ear 'A' of fast idle stopweight with choke valve held closed. To adjust fast idle, back off throttle stopscrew (hot or slow idle speed adjusting screw) until throttle valve is completely closed. Close choke valve by hand, see that ear 'A' is directly under adjusting screw '42', loosen locknut on adjusting screw, turn screw down or clockwise until it just contacts ear 'A', then turn screw the correct number of additional turns as given in table below for each car model, tighten lockscrew. In some cases this adjustment is made in a slightly different manner by opening the throttle valve the correct amount (using a feeler gauge or wire drill of correct size inserted between edge of throttle valve and carburetor wall to hold throttle valve open) and then turning the adjusting screw '42' in until it just contacts ear 'A'.

Car Model	Carburetor	Fast Idle Setting
Pierce Arrow Eights	EE-3	1⅛ Complete Turns
Pierce Arrow Twelves	EX-32	¾ of One Turn

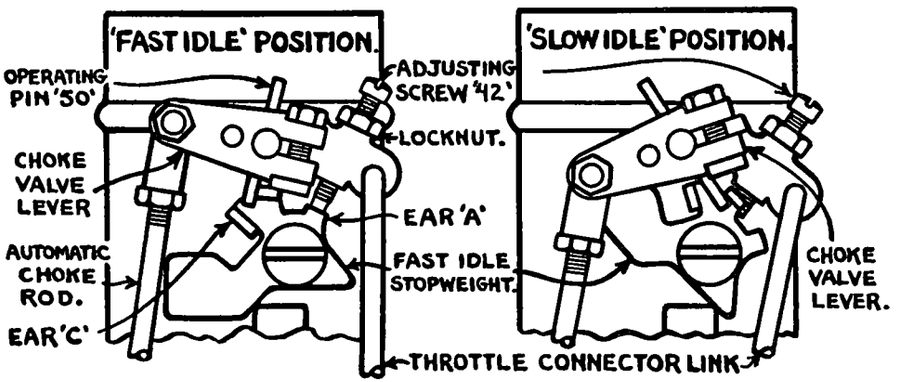

Loading. If the engine becomes loaded when cranking, this condition can be corrected by holding the throttle in wide open position, which will open the choke valve approximately 40%.

Linkage. See article on Type C Automatic Choke for adjustment of choke connecting rod. Backlash in linkage should be .006". Endplay in choke valve shaft should be held to .003" with valve closed (measure with feeler gauge between air horn and shaft washers.

CADILLAC SEMI-AUTOMATIC CHOKE

This type control used as standard equipment on the following Cadillac models:

Car Model	Carburetor
Cadillac V12 & V16, All Series (1936-37)	Detroit Model 51

NOTE—It is necessary to block automatic choke in 'off' position when adjusting carburetor as raising the engine hood will lower temperature under hood sufficiently to cause slight choke action. This will lead to incorrect carburetor setting to offset this condition.

DESCRIPTION:—The Detroit carburetor used on Cadillac models is provided with two distinct choke operations (1), the starting sleeve which is rotated by the choke button on the instrument panel to open the priming port in the auxiliary unit for starting, and (2), the vane control lever operated by the automatic thermostatic spring coil to provide a richer mixture during the warming up period. See complete article on Detroit Carburetors.

OPERATION:—Choke Button—The choke button is operated in the usual manner when the car is started. However, as soon as the engine begins to fire, the choke button should be returned to the 'off' position as the carburetor is controlled entirely by the automatic control during the warming up period. See Carburetor article for adjustment.

Automatic Choke Coil—The thermostatic spring coil is mounted on the carburetor riser and is linked to the vane control lever on the carburetor. The coil tends to wind and unwind in accordance with change in engine temperature, rotating the shaft and lever and increasing or decreasing the control lever pressure on the carburetor air vanes. This pressure is at a maximum when the engine is cold and is decreased as the engine warms up so that at regular operating temperatures the vanes are free and are controlled entirely by the air velocity within the carburetor.

ADJUSTMENT:—The operation of the choke control is entirely automatic. The choke setting is adjustable and should be checked if performance is not satisfactory during the warming up period. To check setting, disconnect connecting link at choke case lever, attach sensitive spring balance at this point and pull straight down until lever is horizontal. Note scale reading with lever horizontal and spring scale vertical.

Car Model	Scale Reading
Cadillac V12, V16 (all models)	5.2 ounces

To adjust, loosen adjusting nut on top of choke case, slide nut to right or left along slot until pull required to hold arm horizontal is correct, tighten adjusting nut.

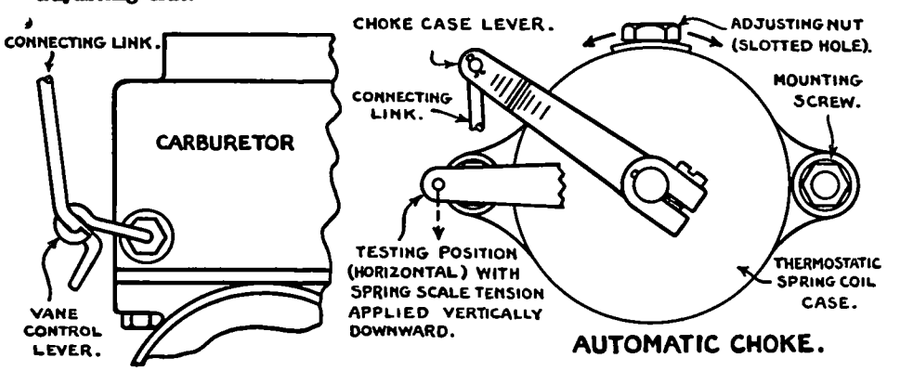

STROMBERG TYPE C

Car Model	Carburetor	Choke Type No.
Packard Twelve, All Models (1936-39)	EE-3	(See Note) A-17290
Pierce Arrow 8, All Models	EE-3	A-17630
Pierce Arrow 12, All Models	EX-32	A-16090
Studebaker, Pres. 2C (Early '36)	EE-1	A-17590
Studebaker, Pres. 2C (Late '36)①	EE-1	A-17940
Studebaker, Pres. 3C (1937)	EE-1	A-17950

①—Engine No. B-11876 Up.

NOTE:—Packard Twelve. New 10-9A choke used on late '37 and all '38-39 cars. This model may be installed on early '37 cars to improve choke action by removing asbestos between choke hot plate and manifold and installing 3/32" plain washer No. 239304 on each screw as spacer. Choke valve lever to fast idle cam lever rod must be replaced by new 5 9/32" rod (old rod 5 9/16" long).

NOTE—New 10-9A choke setting 16 Notches Rich, old 10-9 setting 28 notches.

DESCRIPTION:—The Stromberg Automatic Choke Control is a device designed to automatically choke the carburetor when the engine is started cold and to automatically control the choke valve during the warming up period of the engine. It is designed to be mounted on the manifold and is operated by the engine heat and manifold vacuum.

OPERATION:—The coiled thermostat spring in the thermostat case on the side of the unit will close the carburetor choke valve at an engine temperature of 70°. The choke will thus be in position for starting and is held closed during the cranking operation by the locking of the roller 'M' against the cam 'L'. When the engine begins to fire, the vacuum in the manifold will act to pull down the piston 'G' (since the lower end of the piston cylinder is connected to the manifold), unlocking the roller 'M' and cam 'L'. As soon as the engine begins to fire regularly the piston will be drawn down to the end of the stroke so that cam 'L' bears against lever 'H', opening the choke valve slightly against the tension of the thermostatic spring.

ADJUSTMENT:—When the Type C Automatic Choke requires adjustment, it should be removed from the engine by disconnecting the carburetor connecting rod and taking out the two mounting screws. The choke should then be allowed to cool off to 70° before any attempt is made at adjusting (this is particularly important if engine has been running and the Choke is heated). However, if temperature is under 70° choke should be taken into a room heated to 70° (this is normal room temperature) and allowed to come up to room temperature before adjustment is made. To adjust, first take off Choke case cover and see that all working parts operate freely. With roller 'M' in locked position against first notch of cam 'L' the distance between the center of the hole in the choke lever 'B' and the lower surface of the choke base plate should be measured (see Table No. 1). If not correct, loosen cam clamp lever 'D' and shift position of control lever until correct setting is secured. Measure the distance 'E' between the face of the cam 'L' and the surface of the kick lever 'H' (use a wire drill) with the cam in locked position (see Table No. 2). Adjust by loosening kick lever adjusting screw 'K'. Then unhook thermostat spring end 'A' from prong 'N' in thermostat case, loosen clamp screw 'O' and rotate thermostat case 'Q' until the zero mark of the scale on the rim of the case is directly under the pointer. In this position the hook of the thermostat should be flush with the prong in the case. Place the hook on the prong, revolve the thermostat case the correct number of divisions toward the 'rich' or 'lean' side of the scale (see Table #3 below for each car model), securely tighten clamp screw 'O'. See that piston operates freely and does not stick in any position, assemble Choke case cover, mount choke on manifold, making certain that gasket is in good condition and that mounting screws are pulled down evenly and securely. Then connect control rod to carburetor choke lever and see that there is only .006 inch backlash between levers. If it is necessary to adjust control rod to secure correct backlash, loosen the clamp screw on the carburetor choke lever and shift the carburetor choke lever on its shaft. See that the carburetor air cleaner does not interfere with the free movement of the control rod.

CALIBRATING THERMOSTATIC COIL:—If the hook on the thermostatic coil is not flush with the prong on the case at 70°F. with the pointer at '0' (see adjustment paragraph above), a new '0' location should be located as follows: loosen thermostat case clampscrew, revolve case until hook on thermostatic coil is flush with prong, tighten clampscrew and make a new '0' mark opposite the pointer. Obliterate the old '0' mark and use the new mark in setting the thermostatic coil (Table #3 above). This procedure may be necessary when installing a new thermostatic coil or when the old coil has taken on a permanent 'set'. Replace coils which have been deformed by rough handling.

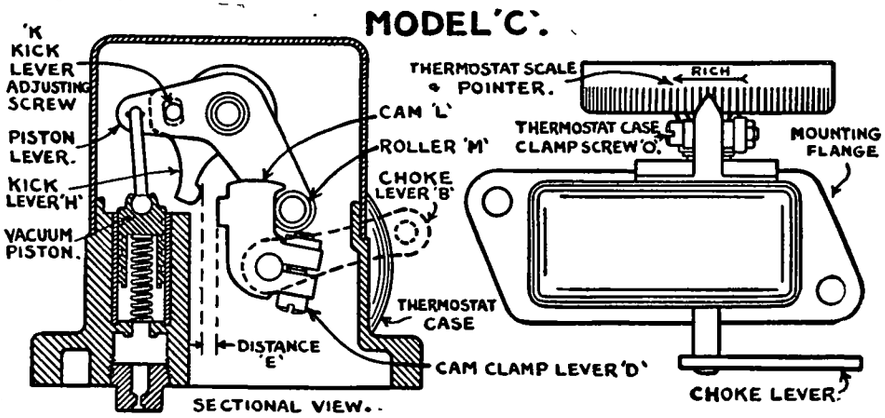

AUTOMATIC CHOKE SETTING

Car Model	Table No. 1 Lever Height	Table No. 2 Distance 'E'	Table No. 3 Setting Notches
Packard Twelve ('36-37)	1 15/16"	#12 Drill	28 Rich
Packard Twelve ('37-39)①	1 15/64"	#12 Drill	②16 Rich
Pierce Arrow Eight	1 1/32"	#17 Drill	10 Rich
Pierce Arrow Twelve	41/64"	#17 Drill	12 Rich
Studebaker ('36)	1 1/32"	#20 Drill	16 Rich
Studebaker ('37)	See Note	#20 Drill	8 Rich

①—New Code 10-9A Automatic Choke (See Production Change Note above).

②—Setting may be varied not more than 5 Notches Rich or Lean if engine tends to run Lean or Rich during warming up period.

NOTE—On Studebaker models, adjust kick lever cam setscrew so that roller is in contact with first notch of cam with .005-.009" clearance between setscrew and stop. Thermostat case housing is stamped 'R', 'M' and 'H'. Setting for standard grades of gasoline is at 'R' (8 notches rich). If engine loads up when cold with this setting, 'M' (4 notches rich) should be used. Setting 'H' (at zero) should only be used with highly volatile gasoline.

STROMBERG EX-23, EE-23 CARBURETOR TYPE

DESCRIPTION:—This type Automatic Choke and Fast Idle is similar in design to the type used previously on these carburetor models. Used as standard equipment on the following car models.

Car Model	Year	Carburetor Type
Packard 1400, 1, 2, 3, 4, 5	1936	EE-23
Packard Super 8, All Models	1937-38-39	EE-23
Studebaker Dictator 3A, 4A	1936	EX-23
Studebaker Dictator 5A, 6A	1937	EX-23

OPERATION:—The thermostatic spring coil lever is linked directly to the choke valve lever by a rod. A second rod links the choke valve lever with the fast idle cam so that the cam is rotated as the choke valve opens and closes. The thermostatic spring is designed to completely close the choke valve at 70°F. This action does not take place until the throttle valve is opened to the 20 M.P.H. position, lifting the fast idle screw off the low or hot idle portion of the cam and allowing the cam to be rotated to the fast idle position as the choke valve closes. Choke valve is offset and is not locked in position while the engine is being cranked. As soon as the engine begins to fire and vacuum is built up in the manifold, the vacuum piston is drawn down, opening the choke valve slightly and rotating the fast idle cam to the second or intermediate idle position. As the engine warms up, the tension of the thermostatic spring decreases, allowing the offset choke valve to open fully and rotate the fast idle cam to the low or hot idling position.

Choke Opening to Correct Flooding—The choke valve can be opened manually to correct a flooded carburetor by opening the throttle valve wide open. In this position the cam on the end of the throttle lever contacts the ear on the fast idle lever, rotating the lever and opening the choke valve.

ADJUSTMENT:—**Slow Idle Screw.** The hot or slow idling speed is controlled by the throttle stopscrew (see Carburetor Adjustment). This adjustment should be made only when the engine is warm with the fast idle screw resting on the low or slow idle portion of the fast idle cam. Standard settings for these models are given below. Setting indicates number of turns of the screw past the closed throttle position.

IDLE (SLOW SPEED) SETTING

Car Model	Carburetor	Slow Idle Screw Setting
Packard (all models)	EE-23	½ turn
Studebaker (all models)	EX-23	¾ turn

Fast Idle Screw (Packard Models). Back off throttle stopscrew (hot or slow idle speed adjustment) so that throttle closes tightly, hold choke valve closed so that fast idle cam is rotated to fast idle position (open throttle momentarily to permit this rotation), turn fast idle screw in until it just contacts the fast idle cam, then turn screw in additional 2½-3 turns. This will provide throttle opening of .016-.020".

Choke Rod Linkage. The rod connecting the thermostatic spring coil lever and the choke valve lever should be adjusted so the choke valve is fully closed with approximately 1/32" clearance between thermostat lever and stop lug (T).

Fast Idle Linkage. The rod connecting the choke valve lever and the fast idle lever should be adjusted so that the choke valve is open 29/64" (EX-23), 5/16" (EE-23) with the vacuum piston down at the end of its stroke so that the fast idle screw rests on the middle step or intermediate idle position of the fast idle cam (see Vacuum Piston Servicing below). Choke valve opening should be checked on the long side of the valve (offset mounting) and can be measured by passing a drill rod of the correct size between the edge of the valve and the carburetor wall.

THERMOSTATIC SPRING:—To check the thermostatic spring, remove unit from manifold, allow unit to stand until it has cooled off or warmed up to room temperature (70°F). Temperature can be checked with an accurate thermometer held near the thermostat. Tests should be made at 70° as thermostat spring changes one notch for each 5° above or below 70°. Unhook end of thermostat coil from prong on pointer plate, loosen pointer plate lockscrew (T), revolve pointer until it is opposite '0' on scale, see that lever is against stop lug (T), note position of thermostat spring hook. If hook is flush with prong, thermostatic spring tension is correct and can be reset as directed below. If hook is not flush with prong, indicating that thermostat has a permanent 'set', thermostatic coil should be recalibrated (see Servicing paragraph below). Thermostatic coils which have been deformed by rough handling should be replaced.

AUTOMATIC CHOKE SETTING

Car Model	CarburetorModel	Thermostat Setting
Packard (All Models)	EE-23	10 Notches Rich
Studebaker ('36)	EX-23	10 Notches Rich
Studebaker ('37)	EX-23	See Note

NOTE—**Packard Models.** Setting may be varied 3 notches in either direction from the '0' mark which indicates the standard setting if the engine runs rich or lean during the warming up period. Replace thermostatic coil if this variation does not give satisfactory performance.

Studebaker Models. The thermostat case is stamped 'R', 'M' and 'H'. Setting for standard gasolines is at 'R' (7 notches rich). If engine loads up when cold with this setting, 'M' (4 notches rich) should be used. Setting 'H' (at zero) should be used only for highly volatile gasoline.

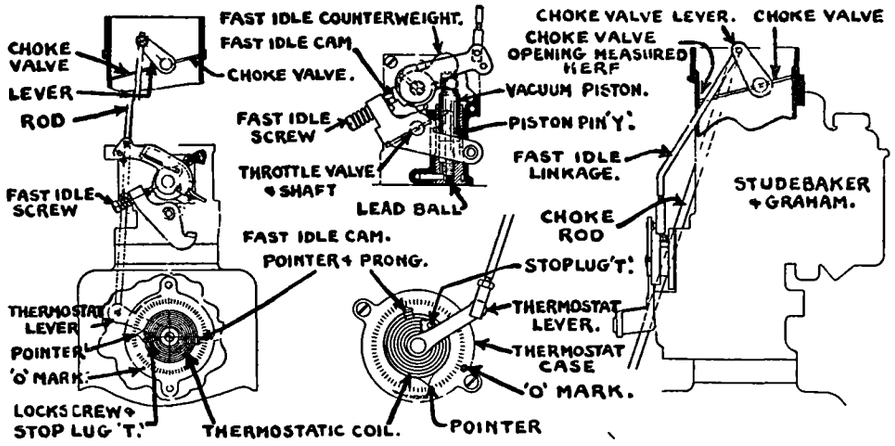

SERVICING:—**Recalibrating Thermostatic Coil.** If thermostatic coil hook is not flush with prong at 70°F with pointer set at '0' on scale and lever against stop, loosen pointer plate lockscrew (T), revolve pointer plate and prong until prong and hook are flush, tighten lockscrew, stamp a new '0' mark on the case opposite the pointer. Obliterate the old '0' mark and proceed with the setting, using the new '0' mark as the reference point.

Vacuum Piston. Vacuum piston stroke is regulated by pin (Y) mounted on vacuum piston sleeve within the piston. If pin or sleeve are replaced, piston stroke should be regulated by turning pin up or down until choke valve opening (measured on the long side of the valve is 29/64" (EX-23), 5/16" (EE-23) with the piston down against the pin. The pin setting should be sealed by a lead ball inserted in the pin hole below the pin. See Fast Idle Linkage adjustment above.

STROMBERG EE-14 CARBURETOR TYPE

Car Model	Carburetor
Packard "120" Eight, All Models (1936-37)	EE-14
Packard Eight, Models 1601, 1A, 2 (1938)	EE-14

DESCRIPTION:—This type Automatic Choke and Fast Idle employs a thermostatic spring coil mounted on the manifold and a vacuum piston built in the throttle valve body. The Fast Idle consists of a fuel channel and by-pass passage around the throttle valve controlled by the vacuum piston.

NOTE—Whenever the carburetor is disassembled or the air horn and float bowl cover is removed, first take out the cover screws, then lift top assembly straight up until pin (O) in upper end of vacuum piston stem is flush with top of casting, take out pin and lift off the top assembly. Do not remove nut on screw connecting vacuum piston link and choke valve.

OPERATION:—Thermostatic spring coil lever is linked directly to choke valve lever and is designed to completely close the choke valve at 70°F. Choke valve is offset and is not locked while the engine is being cranked. The vacuum piston is linked to the choke valve through the arm (C) so that the piston will be lifted to the top of its stroke when the choke valve is closed, uncovering the fuel cross-channel and opening the by-pass passage. The increased fuel discharge through this by-pass passage provides the fast idle with closed throttle. When the engine begins to fire, the vacuum built up in the manifold pulls the vacuum piston down (part stroke only) until the air vent in the piston is uncovered, relieving the vacuum and stopping the piston. In this position the choke valve is opened slightly but the by-pass and fuel channel remain open so that the fast idle remains operative during the warming up period. As the engine warms up, the thermostatic spring tension decreases, allowing the choke valve to open and the vacuum piston to complete its stroke, closing off the fuel channel and by-pass passage. The engine then idles at the hot or slow idling speed

ADJUSTMENT:—**Thermostatic Coil.** To check thermostatic coil, remove unit from manifold, allow unit to stand until it has cooled off or come up to room temperature (70°F). All tests should be made at 70° as thermostat changes 1 notch for each 5° above or below 70°. Unhook end of thermostat coil from prong, loosen pointer plate lockscrew (M—this is also the lever stop lug), rotate pointer until it is opposite '0' mark on scale, see that lever is against stop lug (M), note position of thermostat coil hook. If hook is flush with prong, thermostatic coil tension is correct and unit can be reset as directed below. If hook is not flush with prong (indicating that coil has a permanent 'set'), thermosatic coil should be recalibrated as follows:

Recalibrating Thermostatic Coil—If the thermostatic coil hook is not flush with the prong in the above test, loosen pointer plate lockscrew (M) and revolve pointer plate until prong is flush with hook, tighten lockscrew, stamp a new 'O' mark on case opposite pointer, obliterate old 'O' mark.

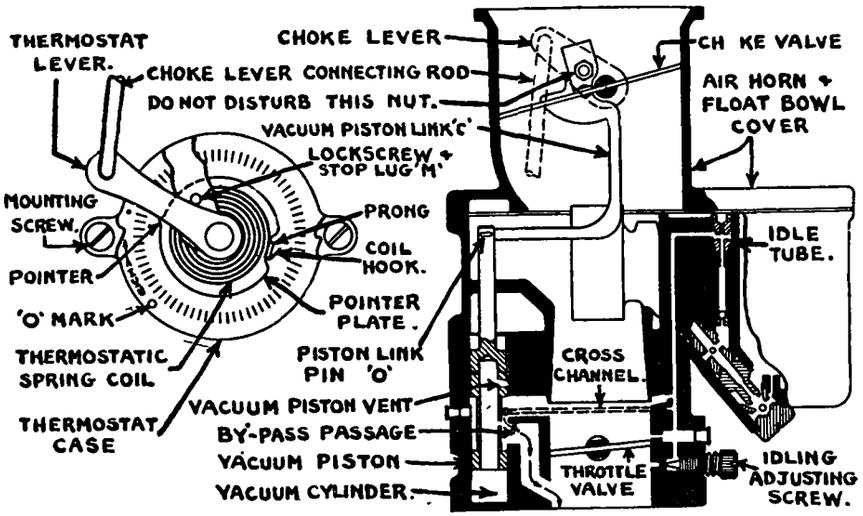

Setting:—After completing test above, engage coil hook on prong, revolve pointer to rich or lean side of scale the correct number of notches for each car model as indicated in table below, tighten lockscrew (M), replace unit on manifold, connect choke valve rod, adjust rod so that choke valve is fully closed with thermostatic spring coil lever against stop (M).

AUTOMATIC CHOKE SETTING

Car Model	Carburetor Model	Thermostat Setting
Packard (all models)	EE-14	11 notches rich

NOTE—On Packard models, setting may be varied 5 notches in either direction from 'O' mark if engine runs rich or lean during warming-up period.

STROMBERG BXO-26 CARBURETOR TYPE

Car Model	Carburetor
Studebaker Commander, 7A,8A ('38), 9A ('39), 10A ('40)	BXO-26

DESCRIPTION & OPERATION:—Thermostatic coil type. Thermostatic coil and vacuum piston mounted in housing on carburetor air horn and linked directly to choke valve shaft without external linkage. Vacuum passage (for vacuum piston operation) drilled in carburetor casting and opens into manifold below throttle valve. Hot air tube (for thermosatic coil operation) is connected between choke housing and hot air stove on exhaust manifold. When engine is cold, thermosatic coil winds up and tends to close choke valve (on Model BXO-26, throttle must be opened momentarily to free fast idle cam before this choke valve closing can occur). As soon as engine begins to fire, vacuum piston is pulled into cylinder and choke valve is opened slightly to prevent overchoking (with choke valve fully closed, both primary and secondary vacuum ports are open, as soon as piston moves slightly, primary port is cut off and vacuum is regulated by restriction in secondary port passage). As the engine warms up, thermostatic coil unwinds allowing the offset choke valve to open so that at normal running temperature the valve is wide open.

Fast Idle (Model BXO-26):—Consists of a spring-loaded fast idle cam and lever linked to the choke valve shaft and serving as the stop for the throttle stopscrew. With choke valve fully closed, fast idle cam is rotated so that the highest step of the cam is under the stopscrew and the throttle is held open in the fast idle position. As the choke valve opens, the cam is rotated so that successively smaller steps on the cam pass under the stopscrew, providing less throttle opening. At normal running temperatures (with choke valve wide open) throttle stopscrew rests on lowest step of fast idle cam providing the normal hot or slow idle speed. No adjustment required.

ADJUSTMENT:—Thermostat case marked with three settings 'H', 'M', 'R' on uter rim. To adjust, loosen mounting screws on edge of case, rotate case until mark 'R' lines up with highest projection on housing flange; tighten screws (standard setting). If engine tends to load up or over-choke while warming up with this setting, use 'M' setting. Use 'H' setting only for highly volatile fuels.

Thermostat Checking (Model BXO-26):—With cover and thermostatic coil assembly removed, make certain that assembly is at exactly 70°F. (immerse assembly in pan of water at 70°F. for at least ten minutes), mark the cover flange in line with the center of the thermostatic coil hook. 'H' mark on cover should be two graduations, 'M' mark four graduations, 'R' mark six graduations from this reference mark.

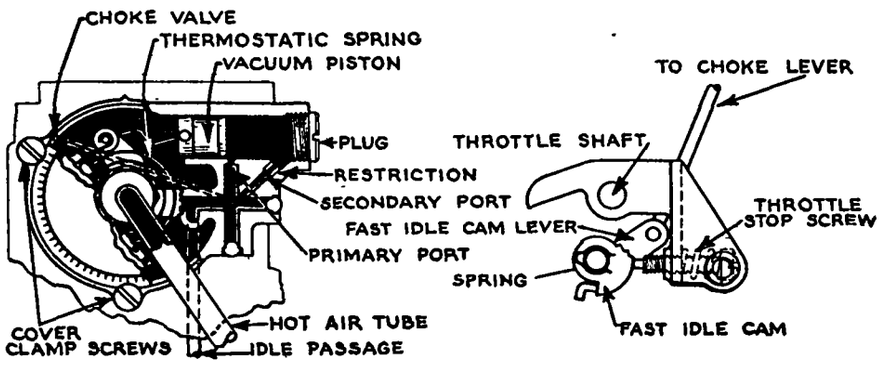

STROMBERG EE-15, EE-25, AA-25, AAV-25 CARB. TYPE

Car Model	Year	Carburetor
Cadillac V8, 36-60, 70, 75	1936	EE-25
Cadillac V8, 37-60, 65, 70, 75	1937	AA-25
Cadillac V8, 38-60, 60S, 65, 75	1938	AAV-25
Cord 810, 812	1936-37	EE-15
Cord Supercharged 812	1937	AA-25
La Salle 36-50	1936	EE-15
La Salle 37-50 (first cars)	1937	AA-25

DESCRIPTION:—This type Automatic Choke consists of a thermostatic spring coil mounted on the carburetor and engaged directly with the choke valve shaft. An electric heating coil within the choke case and controlled by the ignition switch (turned on when ignition turned on to start engine) is used to warm up the thermosatic coil at a pre-determined rate.

Fast Idle:—Vacuum piston mechanism (fuel channel and the by-pass passage controlled by vacuum piston) design and operation is entirely similar to that used on Model EE-14 carburetors (see previous article).

THERMOSTATIC COIL ADJUSTMENT:—Thermostatic coil is designed to completely close choke valve at 70°F. and all tests should be made at this temperature (thermostat changes 1 notch for each 5° above or below 70°). To check thermostatic coil, remove thermostat case from carburetor, allow it to stand until it cools off or comes up to 70°, check position of thermostatic coil hook. The inside of the hook should be in line with the '0' mark on the case. If the hook is not in line with the '0' mark (this may be caused by coil taking on permanent set, installation of new coil or other new parts, etc.), stamp a new '0' mark on the case opposite the hook, obliterate the old '0' mark. In replacing thermostat case on carburetor, engage thermostatic coil hook with pin on choke valve lever, line up '0' marks on thermostat case and carburetor, then revolve thermostat toward rich side of scale the correct number of notches as shown below.

AUTOMATIC CHOKE SETTING

Car Model	Carburetor	Thermostat Setting
Cadillac (all models)	EE-25	16 Notches Rich.
Cadillac (all models)	AA-25	17 Notches Rich.
Cadillac (all models)	AAV-25	15 Notches Rich.
Cord	EE-15	17 Notches Rich.
Cord (Supercharged)	AA-25	17 Notches Rich.
La Salle (all models)	EE-15, AA-25	17 Notches Rich.

CADILLAC TRIPLE RANGE CHOKE CONTROL

NOTE:—This manual choke control used only on Model EE-25 Carburetor on Cadillac Models 60, 70, 75 (1936) and EE-15 Carburetor on LaSalle Models 35-50, 36-50 (1935-36). Not used on other Cadillac Models or Cord Models.

MANUAL CONTROL:—The choke control button on the instrument panel has three operating positions, as follows:

1. Normal or Automatic Choke Position. Choke control button in middle position or flush with throttle button. Automatic choke is free to operate.

2. Manual Choke Position. Choke control button pulled out. Carburetor is choked by hand independently of any Automatic Choke action.

3. Partial Choke Position. Choke control button pushed in beyond the normal or flush position. Choke valve is held partially open.

Manual choke control linkage and choke valve lever stopscrew should be adjusted to secure choke operation as outlined above. Adjust as follows:

Stopscrew Adjustment—Open choke valve .147" or close choke valve on #26 drill placed between edge of choke valve on short side and carburetor wall. With choke valve in this position, loosen locknut on choke control operating lever adjusting screw and turn screw in or out until lever rests against screw with the cam or short leg of the 'V' shaped lever against the pin on the choke valve lever. Tighten the locknut.

Linkage Adjustment—Place choke control button in normal position flush with throttle valve. With choke valve fully closed, adjust linkage to provide clearance of approximately 1/16" between the cam or short leg of the 'V' shaped choke control operating lever and the pin on the choke valve lever.

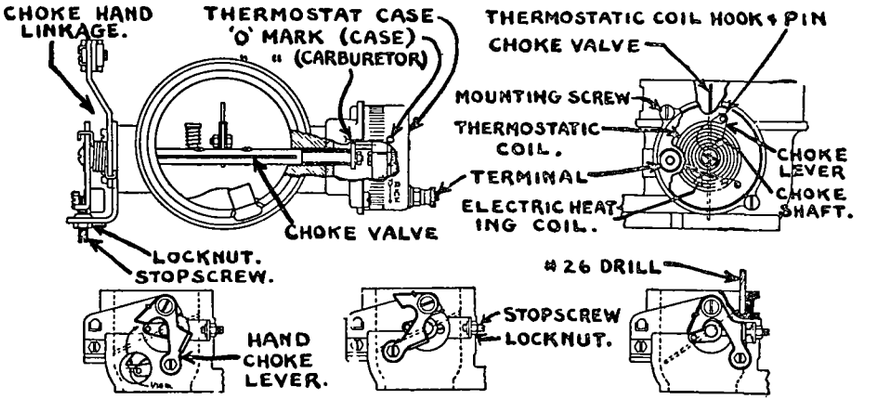

STROMBERG AAO-161 CARBURETOR TYPE

Car Model	Carburetor
Studebaker President, 4C ('38), 5C ('39), 6C ('40)	AAO-161

1940 PRODUCTION CHANGES:—1940 cars have new type choke with .076" reducer in thermostat heat suction pipe, new thinner thermostat spring, and #52 vacuum piston hole in throttle body (was #56 drill size). This new thermostat spring and cover assembly stamped '8' for identification.

DESCRIPTION & OPERATION:—**Automatic Choke**—Thermostatic coil type. Thermostatic coil mounted in housing on air horn and linked directly to choke valve shaft without external linkage. Hot air tube for thermostatic coil operation is connected between choke housing and hot air stove on exhaust manifold. The vacuum piston is located in the main carburetor casting and is linked directly to the choke valve (see Fast Idle below). When the engine is cold, thermostatic coil winds up and tends to close the choke valve. As soon as the engine begins to fire, the vacuum piston is drawn down to the fast idle position which opens the choke valve slightly to prevent overchoking. As the engine warms up, the tension of the thermostatic coil decreases which allows the offset choke valve to open so that at normal operating temperatures the choke valve is wide open.

Fast Idle—Consists of a by-pass passage around the throttle valve controlled by a vacuum piston linked directly to the choke valve. The vacuum piston is slotted so that air (and fuel mixture from idle channel) is drawn down through piston and discharged below the throttle valve whenever the piston is far enough up in its cylinder to uncover the passage at the lower end of the cylinder which opens into the manifold below the throttle valve. With the choke valve closed for cold starting, the vacuum piston will be at the upper end of its stroke so that the piston slot registers with the cross-channel from the idle fuel mixture channel and fuel will be drawn through this channel and discharged below the throttle valve. When the engine begins to fire, manifold vacuum draws vacuum piston down slightly so that air is drawn through vacuum piston and discharged below the throttle. This air flow restricts the amount of air entering the idle cross-channel so that the idle mixture is enriched to compensate for the additional air entering below the throttle. With the engine warm and the vacuum piston at the bottom of its stroke (choke valve wide open), the passage around the throttle valve is cut off entirely and the idle cross-channel acts as an air bleed so that the idle discharge is of normal richness and engine idles at regular hot or slow idle speed.

ADJUSTMENT:—Thermostat case marked with three settings 'H', 'M', 'R' on outer rim. To adjust, loosen mounting screws on edge of case, rotate case until mark 'R' lines up with highest projection on housing flange, tighten screws. This is standard setting for regular fuel. If engine tends to load up or over-choke, rotate case to 'M' position. Use 'H' setting only when highly volatile fuels used continuously.

Thermostat Checking—Must be checked on the carburetor. Immerse cover and thermostatic coil in water of 70°F. temperature for at least 10 minutes, see that air horn on carburetor is at 70°F., install thermostat on housing and see that hook engages choke valve lever, rotate cover until choke valve just closes. In this position, mark 'R' on cover should be approximately in line with projection on housing flange.

SERVICING:—**Disassembly**—When removing air horn and float bowl cover, take off throttle valve body first and unhook vacuum piston so as to prevent damage to vacuum piston. When installing piston, make certain that slot on side of piston registers with idle cross-channel in carburetor (slot must be toward throttle valve).

STROMBERG AAV-16, 167, 26, 267 TYPE

Car Model	Carburetor
Buick, 60,80,90 ('39); 60,70,80,90 ('40)	AAV-26
Buick, Series 40, 50 ('40); Series 40 ('41-42)—Single Carb.	AAV-16
Buick, Series 40, 50, 60, 70, 90 ('41-42)—Compound Carb.	AAV-16
Buick, Series 40, 50 (Late '42)—Single Carb.	AAV-16
Buick, Series 60, 70, 90 (Late '42)—Single Carb.	AAV-26
Buick, Series 40, 50 (1946-47)	AAV-16
Buick, Series 70 (1946-47)	AAV-26
Buick, Series 40, 50 (1948)	AAV-167
Buick, Series 70 (1948)	AAV-267
Cadillac V8, All Series (1939 to 1948)	AAV-26
Packard Super 8 '160', 1803,4,5 ('40), 1903,4,5 ('41)	AAV-26
Packard Cust. Super 8, 1806,7,8 ('40), 1906,7,8 ('41)	AAV-26
Studebaker President, 7C ('41), 8C ('42)	AAV-26

NOTE:—Buick Compound Carburetion Cars—Front carburetor only (AAV-16) is fitted with Automatic Choke and Fast Idle. Rear Carburetor (AA-1) does not have choke valve or fast idle mechanism.

Buick, Cadillac, Studebaker Models—These cars also use Carter WCD (Buick), WDO (Cadillac, Studebaker) carburetors. See Carter Climatic Control article for data on automatic choke and fast idle on cars with Carter Carburetors.

SPECIAL SERVICE NOTES & PRODUCTION CHANGES:—Cadillac '42 Choke Setting—On cars with first Code 205-10 carburetors (thermostatic coil assembly marked by figure '19' stamped on cover), automatic choke setting is 2 Notches Rich. Later Code 205-10A (thermostatic coil assembly marked by figure '13' on cover) are set at center index mark.

Packard Super Eight ('40) Thermostatic Coil Change—On first cars with carburetors of Code No. 10-40C and earlier, original thermostatic coil and cover assembly (may be identified by figure '3' stamped on cover) should be replaced by new assembly, Part No. 382001, identified by figure '10' stamped on cover.

DESCRIPTION & OPERATION:—Thermostatic coil and vacuum piston type. Thermostatic coil and vacuum piston are mounted on carburetor and linked directly to choke valve lever (no external linkage). Vacuum passage (for piston operation) is drilled in carburetor casting and opens into manifold below throttle valve. Hot air tube (for thermostatic coil operation) is connected between choke housing and hot air stove on exhaust manifold. When engine is cold, thermostatic coil winds up and tends to close choke valve (valve cannot close until throttle opened momentarily to release fast idle screw from cam, but is snapped closed as soon as throttle opened). When engine begins to fire, manifold vacuum causes vacuum piston to be drawn into cylinder which opens choke valve slightly against the thermostatic coil tension to provide proper air mixture for continued running. As engine warms up, thermostatic coil tends to unwind, releasing choke valve and allowing it to open (valves are offset).

Fast Idle:—Consists of a stepped cam linked to the choke valve. When choke valve closed by thermostatic coil for cold starting, cam is revolved so that the throttle stopscrew rests on highest step of the cam and throttle is held open in fast idle position. As engine warms up and choke valve opens, cam is revolved and throttle allowed to close, until with the engine warm and choke valve wide open, throttle is closed to hot or slow idle position.

ADJUSTMENT: Three separate adjustments (Automatic Choke, Fast Idle, and Choke Release) required as follows:

Automatic Choke (Thermostatic Coil) Setting: Inverted 'V' or '0' mark on thermostatic coil housing should line up with reference mark on choke housing on all models ("Centered" setting) except as noted in table and Notes below. These specified settings may be varied not more than 2 graduations for use of high test fuel or with exceptional operating conditions. If warming up performance is not satisfactory with this setting, check choke valve and linkage for binding or replace thermostatic coil assembly. When installing thermostatic coil, place coil housing in position with coil hook down, then rotate housing in 'Rich' direction until correct setting secured (this will insure coil hook engaging prong properly).

AUTOMATIC CHOKE SETTING

Car Model	Carburetor	Automatic Choke Setting
Buick 40 ('41-42) Single Carb.	AAV-16	1 Notch Lean
Buick 50 (Late '42) Single Carb.	AAV-16	1 Notch Lean
Buick 40, 50 ('46-47)	AAV-16	1 Notch Lean
Buick 40, 50 ('48)	AAV-167	1 Notch Lean
Cadillac (Early '42)	AAV-26①	2 Notches Rich
All Others	AAV-16, AAV-26	Centered

①—First (Code 205-10 Carbs.). Later (Code 205-10A Carbs.) centered.

Studebaker Models—Choke housing on these models marked by three letters 'H', 'M', 'R'. To adjust, loosen mounting screws, rotate housing until 'R' mark lines up with reference projection on housing flange. This is standard setting. If engine tends to load up or over-choke, change setting to 'M' position. Use 'H' setting only when highly volatile fuels used.

CAUTION—When connecting heat tube, use extreme care not to use excessive pressure in tightening connection which may rotate thermosatic coil housing and change setting.

Fast Idle Setting: Check and adjust each model as follows:

►***CAUTION—Buick carburetors have special fast idle mechanism and must be adjusted differently than other models.***

Buick 1940 & Later Models—To check fast idle setting, close choke valve against #53 drill (between valve and wall), open and close throttle and note clearance between locking lever on throttle valve lever and lug on loose lever mounted on fast idle cam shaft. Lever should just clear lug. Adjust by bending fast idle connector rod slightly.

Other Models—To check fast idle setting, rotate fast idle cam to fast idle position (do not close choke valve), close throttle valve so that throttle lever stopscrew is on highest step of fast idle cam, move choke valve toward closed position as far as possible (do not force valve beyond point where fast idle cam lever contacts stopscrew); measure remaining choke valve opening by inserting special gauge or drill rod of correct size (see table below) between edge of valve

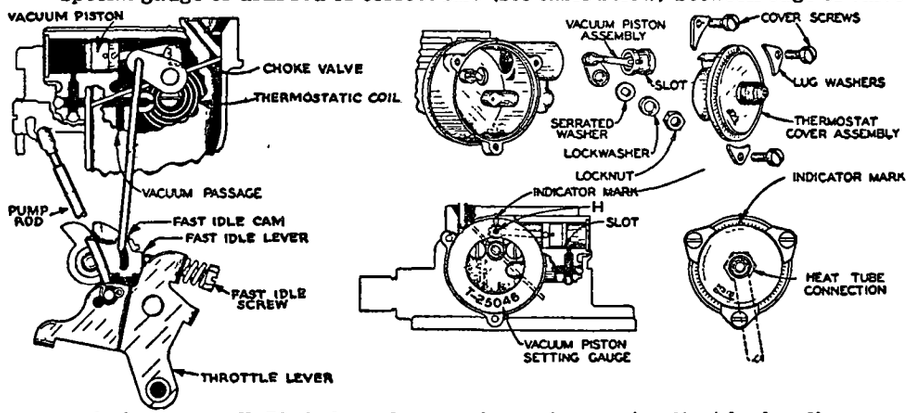

and air horn wall. If choke valve opening not correct, adjust by bending connector rod slightly at point below choke valve lever.

FAST IDLE SETTING

Car Model	Carburetor	Choke Valve Opening
Buick ('39)	AAV-26	5/16" Drill
Buick ('40-47)	AAV-16, AAV-26	#53 (.595") Drill
Buick ('48)	AAV-167, AAV-267	#53 (.595") Drill
Cadillac ('39-40)	AAV-26	#38 (.102") Drill
Cadillac ('41-42)	AAV-26	#32 (.116") Drill
Cadillac ('46-48)	AAV-26	#40 (.098") Drill
Packard ('40)	AAV-26	3/32" Drill
Packard ('41)	AAV-26	7/64" Drill
Studebaker	AAV-26	7/64" Drill

Choke Release (Wide Open Throttle) Setting: Open throttle valve to wide open position so that choke valve is opened by ear on fast idle lever contacting lug on fast idle cam. Check choke valve opening with gauge T-25057 (Buick, Cadillac), T-25056 (Studebaker), or by inserting drill rod between choke valve edge and air horn wall. Opening should be .156-.187" (11/64" drill). Adjust by bending ear on throttle lever slightly.

SERVICING (STUDEBAKER AAV-26):—Serviced in same manner as BXOV-26 models (vacuum piston lever slotted for choke valve shaft engagement and no adjustment required). *See Stromberg BXOV-26 Automatic Choke article for servicing data on this model.*

SERVICING (EXCEPT STUDEBAKER AAV-26):—Disassembly—Disconnect heat tube, remove carburetor from manifold, remove thermostatic coil housing attaching screws and lug washers, remove coil assembly by rotating cover clockwise to disengage coil hook from lever prong and lifting cover off. Remove lock-

CONTINUED ON NEXT PAGE

STROMBERG AAV-16, 167, 26, 267 TYPE (C ntinu d)

nut on end of choke valve shaft (use wrench T-25047), remove nut, lockwasher, serrated washer from shaft. Take out vacuum piston assembly.

Servicing—Clean cylinder with cloth saturated with Acetone or alcohol, blow out all channels with air, clean screen on inside of cover by blowing through heat tube connection (use care not to distort screen. Do not attempt to remove thermostat coil (coil and cover serviced as an assembly).

Assembly & Adjustment—When installing vacuum piston, make certain that slot is down toward vacuum port (do not lubricate cylinder). Assemble the serrated washer, lockwasher, and locknut in order on the end of the choke shaft and tighten nut only loosely (do not tighten fully until vacuum piston adjusted). Install gauge ring, tool T-25046, with small hole in tool fitting over pin on choke lever and indicator line on rim of tool in line with reference mark on choke housing. Hold choke valve closed against drill or gauge (see table), tighten locknut lightly with wrench T-25047, remove gauge ring T-25046 and tighten the locknut securely. Recheck the choke valve to make certain that setting not changed by tightening of locknut. See that choke valve operates freely. This adjustment is extremely important to properly position vacuum piston and thermostatic coil prong. When assembling fast idle connector rod, install bushing (washer—Buick), on lower end f rod after rod has been assembled to lever. See that fast idle cam torsional spring is assembled with end of spring hook against ear of lever. See that cam operates freely and make certain that rod does not bind in slot in cam. This is very important.

CHOKE ASSEMBLY SETTING

Car Model	Carburetor	Drill — Valve Opening	Gauge
Buick ('39)	AAV-26	1/4"	T-25057
Buick 40, 50 ('40)	AAV-16	15/64"	T-25085
Buick 60, 70, 80, 90 ('40)	AAV-26	#3 (.213")	
Buick 40 ('41-42)	AAV-16	15/64"	T-25085
Buick All Compd. Carb. ('41-42)	AAV-16	#5	
Buick 40, 50 (Late '42-47)	AAV-16	15/64"	T-25085
Buick 40, 50 ('48)	AAV-167	15/64"	T-25085
Buick 60, 70, 90 (Late '42)	AAV-26	#3 (.213")	T-25086
Buick 70 ('46-47)	AAV-26	#3 (.213")	T-25086
Buick 70 ('48)	AAV-267	#3 (.213")	T-25086
Cadillac ('39-40)	AAV-26	#70 (.028")	
Cadillac ('41)	AAV-26	#3 (.213")	
Cadillac ('42)	AAV-26	#1	
Cadillac ('46-48)	AAV-26	#2 (.221")	
Packard ('40)	AAV-26	#70 (.028")	
Packard ('41)	AAV-26	#4 (15/64")	

PACKARD THROTTLE GUARD

Used on following Models with Econo-Drive:

Packard Clipper, Model 1951 (1941)
Packard '110' Six, 1700 (1939), 1800 (1940), 1900 (1941)
Packard '120' Eight, 1701,2 ('39), 1801,1A ('40), 1901,1A ('41)
Packard '160' Super 8, 1703,5 ('39), 1803,4,5 ('40), 1903,4,5 ('41)
Packard '180' Custom Super 8, 1806,7,8 (1940), 1906,7,8 (1941)

DESCRIPTION:—Throttle Guard is designed to prevent engine stalling in the range from 0 to 20 M.P.H. It consists of a vacuum diaphragm unit, similar to those used on distributors for vacuum spark control, mounted on the carburetor so that the diaphragm plunger actuates the throttle valve fast idle lever.

OPERATION:—Throttle Guard cuts in at 4 MPH. when manifold vacuum decreases sufficiently so that spring within unit forces plunger out against throttle lever opening throttle and accelerating engine to prevent stalling. Throttle Guard kicks out at 9 MPH. when manifold vacuum increases sufficiently to retract plunger and allow throttle to close to regular 6 MPH hot or slow idle speed position.

ADJUSTMENT & TESTING:—**Note**—Make certain that carburetor correctly adjusted and set for 6 MPH. hot or slow idling speed before adjusting Throttle Guard.

Adjustment—Check clearance between outer end of throttle guard plunger and lug on throttle lever. This should be .060" (Six), .020" (Eight, Super Eight). Loosen locknut and turn tension spring and adjusting screw on outer face of throttle guard until distance from top of locknut to end of screw is 3/16" (Six, Eight), 7/32" (Super 8), tighten locknut. Check setting by road-testing car.

Road Testing—See that Overdrive Control knob pushed in (Overdrive operative), allow car to coast in high gear (accelerator pedal released) and decrease car speed slowly by applying brakes. Throttle guard should cut in at 4 MPH. (slight movement of accelerator pedal will be noted) and bring car speed up to 9 MPH. (with brakes released) at which speed it should kick out. If cut in speed is above 4 MPH., decrease spring tension by turning adjusting screw out slightly; if cut in speed below 4 MPH., increase spring tension by turning screw in. If kick out speed is higher than 9 MPH., increase gap between diaphragm plunger and throttle lever (loosen locknut and turn plunger on rod); if kick out speed below 9 MPH., decrease gap.

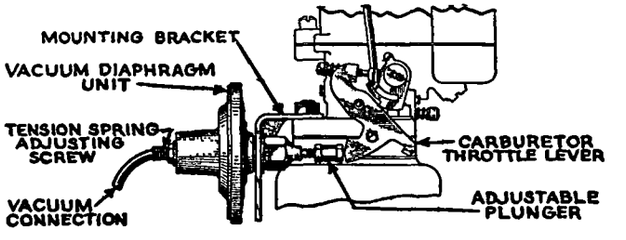

STROMBERG FAST IDLE

PACKARD TWELVE TYPE

Packard Twelve, All Models (1936 to 1939)

DESCRIPTION & OPERATION:—Consists of a fast idle cam on the carburetor casting below the throttle shaft which serves as a stop for the special fast idle adjusting screw on the throttle lever. Fast idle cam is controlled by fast idle lever linked to choke valve and is rotated to fast idle position when the choke is closed for cold starting (throttle must be opened momentarily to allow choke to close and fast idle to operate). In the fast idle position (see illustration), the fast idle screw rests on the ear of the fast idle cam. When the choke valve opens with the engine warm, the fast idle cam is released by the fast idle lever and falls of its own weight so that the ear is rotated past the fast idle screw. The throttle valve then closes to the hot or slow idle position (controlled by the throttle stopscrew on the opposite end of the throttle shaft).

ADJUSTMENT:—If adjustment is made with engine hot, throttle should be opened momentarily and fast idle cam rotated so that fast idle screw is directly over ear on cam. Hold fast idle cam in this position while adjusting. Back off throttle stopscrew (slow idle speed adjusting screw) until throttle valve is completely closed, loosen locknut on fast idle adjusting screw, turn this screw in until it just contacts ear on fast idle cam, then turn screw in an additional 6¾ turns, tighten locknut. Readjust throttle stopscrew for correct hot or slow idle speed.

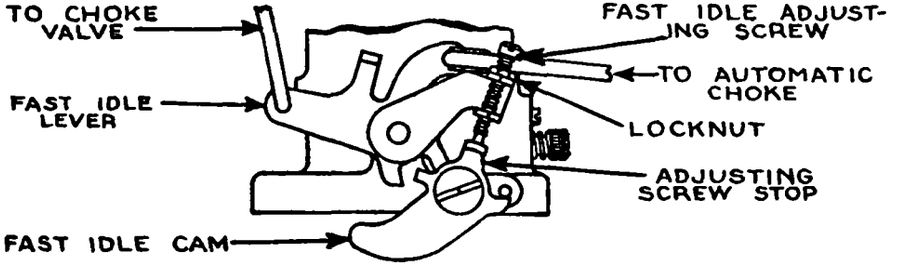

STROMBERG EE-16, BXOV-26 CARBURETOR TYPE

Used On:

Car Model	Carburetor
Packard '110' Six, 1800 (1940), 1900 (1941)	BXOV-26
Packard '120' Eight, 1701,1A,2 ('39), 1801,1A ('40)	EE-16
Studebaker Commander, 11A (1941), 12A (1942)	BXOV-26
Studebaker Commander, All Models (1947-48)	BXOV-26

NOTE:—Studebaker Model—Carter WA1 Carburetor also used on this model. See Carter Climatic Control article for data on Automatic Choke and Fast Idle on cars with Carter Carburetor.

DESCRIPTION & OPERATION:—Thermostatic coil and vacuum piston type. Thermostatic coil and vacuum piston are mounted on carburetor and linked directly to choke valve lever (no external linkage). Vacuum passage (for piston operation) is drilled in carburetor casting and opens into manifold below throttle valve. Hot air tube (for thermostatic coil operation) is connected between choke housing and hot air stove on exhaust manifold. When engine is cold, thermostatic coil winds up and tends to close choke valve (valve cannot close until throttle opened momentarily to release fast idle screw from cam, but is snapped closed as soon as throttle opened). When engine begins to fire, manifold vacuum causes vacuum piston to be drawn into cylinder which opens choke valve slightly against the thermostatic coil tension to provide proper air mixture for continued running. As engine warms up, thermostatic coil tends to unwind, releasing choke valve and allowing it to open (valves are offset).

Fast Idle (BXOV-26 Type):—Stepped valve linked to choke. When choke valve closed for cold starting, cam is revolved so that throttle stopscrew rests on highest step of cam and throttle is held open in fast idle position. As engine warms up and choke valve opens, cam is revolved and throttle allowed to close, until with the engine warm and choke valve wide open, throttle is closed to hot or slow idle position.

Fast Idle (EE-16 Type):—Similar to BXOV-26 type except that special fast idle screw is used. This screw is located on the throttle valve lever and contacts the fast idle cam. Fast Idle screw must be adjusted independently of throttle stopscrew which controls hot or slow idle speed. See adjustment directions below.

ADJUSTMENT:—Thermostatic Coil Setting—Inverted 'V' mark or '0' mark on thermostatic coil housing should line up with reference mark on choke housing. This standard setting may be varied not more than 2 graduations for use of high test fuel or with exceptional operating conditions. If warming up performance is not satisfactory with this setting, check choke valve and linkage for binding or replace thermostatic coil assembly. When installing thermostatic coil, place coil housing in position with coil hook down, then rotate housing in 'Rich' direction until correct setting secured (this will insure coil hook engaging prong properly).

Studebaker Models—Choke housing on these models marked by three letters 'H', 'M', 'R'. To adjust, loosen mounting screws, rotate housing until 'R' mark lines up with reference projection on housing flange. This is standard setting. If engine tends to load up or over-choke, change setting to 'M' position. Use 'H' setting only when highly volatile fuels used.

CAUTION—When connecting heat tube, use extreme care not to use excessive pressure in tightening connection which may rotate thermostatic coil housing and change setting.

Fast Idle Speed (EE-16 Only)—On this model, after throttle stopscrew set for correct slow idle speed of 6 MPH., adjust fast idle screw by turning screw in until it just contacts lowest step of fast idle cam (choke valve open), then turn screw out ½ turn which will provide correct clearance between fast idle screw and cam.

Fast Idle Setting—With choke valve open, close throttle so that stop-screw is on low lobe of fast idle cam and against step on cam. Move choke valve toward closed position as far as possible (do not force valve beyond point where all clearance is taken up). Check remaining choke valve opening by inserting 11/32" drill (BXOV-26), 35/64" drill (EE-16) between edge of choke valve and air horn wall. If choke valve opening not correct, adjust by bending fast idle connector rod slightly at bend near upper end.

CAUTION—Make certain that fast idle mechanism operates freely without binding.

Choke Release (EE-16 Only)—To check choke release or wide open throttle choke opening, open throttle valve wide by pressing on throttle lever (CAUTION—Do not press on fast idle lever). Measure choke valve opening by inserting 11/64" drill between edge of choke valve and air horn wall. If choke valve opening not correct (.156-.187"), adjust by bending ear on fast idle lever (which contacts ear on fast idle cam) slightly.

NOTE—No separate choke release adjustment required on BXOV-26 models.

SERVICING:—Disassembly—Disconnect heat tube from thermostat coil cover, remove carburetor from manifold. Remove thermostat coil cover attaching screws and lug washers, remove thermostat coil and cover assembly (rotate cover clockwise to disengage coil hook from lever prong). Remove cork insulator and baffle plate. Remove locknut on end of choke valve shaft (use wrench T-25047), remove lockwasher. Loosen housing attaching screws slightly (do not take screws out), take out vacuum piston assembly.

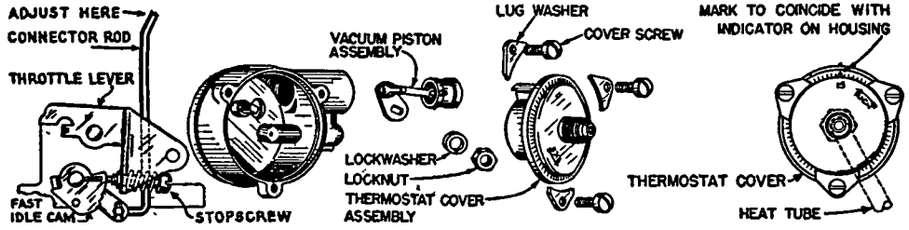

Servicing—Clean vacuum piston cylinder with clean cloth saturated with Acetone or alcohol. Clean vacuum piston (do not use abrasives). Blow out all channels with compressed air. Do not attempt to remove thermostatic coil from housing (service as an assembly).

Assembly—Do not lubricate piston or cylinder when installing vacuum piston assembly. Install piston and engage slot in lever on flatted end of choke valve shaft (can only be installed in correct position), tighten housing attaching screws securely. Install lockwasher and and locknut, use wrench T-25047 to tighten locknut securely. Install baffle plate and cork insulator (CAUTION—if cork insulator buckled or does not fit properly, it will cause vacuum piston lever to bind and new insulator should be used). Install thermostat coil and cover assembly and adjust as directed above.

Thermostat Checking (Studebaker Models)—To calibrate a replacement thermostat, or to check a thermostat which may have been damaged or tampered with, proceed as follows: Submerge coil and cover assembly in water at exactly 70°F. (use thermometer to check water temperature) and allow assembly to remain in the water for several minutes. Remove assembly and mark edge of cover in line with center of thermostatic coil hook. The "H" mark should be two graduations, "M" mark four graduations, and "R" mark six graduations, from this reference mark. Thoroughly dry the thermostatic coil and cover assembly before installing it in the carburetor.

BATTERY CHARGE INDICATORS Page
- Ford, Lincoln, Mercury ... 1802
- Hudson (Teleflash) ... 1802
- Oldsmobile (Shunt) ... 1836

CHEVROLET REVERSING SWITCH ... 1813

COILS
- Servicing & Correction (Delco-Remy) ... 1811

CLUTCH CONTROLS ... See Clutch Section

DIRECTION SIGNALS
- Buick 1940-48 ... 1804
- Cadillac 1940 ... 1804
- Cadillac 1941-48 ... 1805
- Chevrolet 1941-48 ... 1805
- Chrysler 1941-48 ... 1805
- De Soto 1941-48 ... 1805
- Dodge 1941-48 ... 1805
- Ford 1949 ... 1807
- Frazer 1947-48 ... 1806
- Guide (Chevrolet, Oldsmobile, Pontiac) ... 1803
- Hudson 1940-47 ... 1806
- Hudson 1948 ... 1807
- Kaiser 1947-48 ... 1806
- La Salle 1940 ... 1804
- Lincoln 1941-49 ... 1807
- Mercury 1942-49 ... 1807
- Nash 1946-48 ... 1807
- Oldsmobile 1941-48 ... 1807
- Packard 1942-48 ... 1807
- Pontiac 1941-48 ... 1807
- Plymouth 1941-48 ... 1805
- Studebaker 1942-48 ... 1807

DISTRIBUTORS
- Auto-Lite IGH ... 1809
- Delco-Remy 660, 662 ... 1809
- Ford & Mercury ... 1810

FUEL PUMPS ... See Carburetion Equip. Sec.

GAUGES
- Gasoline ... See Carburetion Equip. Sec.
- Oil Pressure ... See Miscellaneous Section
- Temperature ... See Miscellaneous Section

GENERATORS (SPECIAL) Page
- Delco-Remy
  - Lamp-Controlled ... 1831
  - Current Regulated (Lamp Control) ... 1832
  - Split Field ... 1831
  - Truck & Bus ... 1845

HEADLAMPS (SEALED BEAM) ... 1808

HUDSON SIGNAL LIGHTS
- Generator-Oil Pressure (Teleflash) ... 1802

OVERDRIVE CONTROLS ... See Transmission Section

REGULATORS
- Auto-Lite
  - TC-4100, 4200 Two-Charge ... 1814
  - TC-4300 Two-Charge ... 1815
  - VRB, VRD, VRE, VRF, VRJ, VRK, VRO ... 1817
  - VRP, VRR, VRS, VRT, VRU, VRV, VRW, VRX ... 1823
  - VRA, VRC, VRG, VRH (Truck & Bus) ... 1821
  - VRY (1942-45 Army Jeep) ... 1828
- Delco-Remy
  - Apparatus Boxes (Truck & Bus) ... 1844
  - Current (Lamp Control) ... 1832
  - Double Core ... 1837
  - Single Core (1118200 Series) ... 1841
  - Voltage Control Relay ... 1833
- Ford Two-rate Relay ... 1848
- Ford Voltage-Current (2 unit) ... 1847
- Ford Voltage-Current (3 unit) ... 1849
- Owen-Dyneto Battery Charge ... 1851

RELAYS & SOLENOIDS
- Auto-Lite
  - Cutout ... 1829
  - Horn ... 1830
  - Solenoid ... 1855
- Delco-Remy
  - Cutout ... 1835
  - Horn ... 1836
  - Solenoid ... 1859
- Transmission Control ... See Transmission Sec.

SLOW CLOSING THROTTLES ... See Carb. Equip. Sec.

STARTER CONTROLS Page
- Auto-Lite
  - Magnetic Switch ... 1854
  - Positive Pinion Shift ... 1856
  - Solenoid Pinion Shift ... 1855
  - Vacuum (Clutch Pedal) ... 1854
- Carter Car Starter ... 1864
- Chevrolet Starterator ... 1857
- Delco-Remy
  - Magnetic Switch ... 1857
  - Manual Pinion Shift ... 1858
  - Solenoid Pinion Shift ... 1859
  - Vacuum Switches ... 1861
- Startix ... 1865
- Stromberg Starting Switch ... 1863

STARTER CORRECTIONS
- Auto-Lite Field Equalizer (MAX & MAW) ... 1853
- Delco-Remy Burnt Commutator ... 1860

STARTER DRIVES
- Bendix Barrel ... 1852
- Ford "B&S" ... 1853

SWITCHES
- Chevrolet Reversing ... 1813
- Ignition
  - Delco-Remy ... 1811
  - Mitchellock ... 1812
- Kick-Down ... See Transmission Sec.
- Lighting ... See Car Model Pages
- Vacuum Switches
  - Auto-Lite VC-4002, 3 ... 1854
  - Delco-Remy 1587, 8, 92, 3, 4; 1600, 1, 5, 7 ... 1860
  - Delco-Remy 1868512 (1990101 Carb. Contr.) ... 1861
  - Delco-Remy 1990126 ... 1861
  - Delco-Remy 1990127 ... 1862

TOP CONTROLS ... See Miscellaneous Section

TRANSMISSION CONTROLS ... See Transmission Section

WINDOW REGULATORS ... See Miscellaneous Section

WINDSHIELD WIPERS ... See Miscellaneous Section

1939-40 FORD, LINCOLN, MERCURY BATTERY INDICATOR

FORD MODELS	
"85" Deluxe 91A (1939)	91A-10844B
Other Models (1940)	01A-10844A
Cars, 2-Brush Gen. ('39)	91A-10844A
"85" Deluxe 01A (1940)	01A-10844A

LINCOLN MODELS	
Zephyr Model 96H (1939)	96H-10844
Zephyr & Cust. 06H ('40)	06H-10844A
Continental 06H (1940)	06H-10844B
MERCURY MODELS	
Model 99A (1939)	99A-10844
Model 09A (1940)	09A-10844

DESCRIPTION:—This gauge is a 'hot wire' type voltmeter calibrated to show battery voltage ranges rather than actual volts. It consists of a simple bimetal arm linked to the gauge pointer and wound with a heater wire. The heater wire circuit is controlled by the ignition switch.

OPERATION:—When the ignition switch is turned on, a current flows through the heater wire n the bimetal arm (approximately 1/10 ampere—heater wire resistance is 60 hms), heating the arm and causing it to bend so that a reading is indicated on the gauge. Gauge reading indicates line voltage.

READING THE GAUGE:—See illustration for gauge dial markings. This marking should be interpreted as follows: **Left hand Line Marked 'L'—2 volts. Unmarked line to left f 'N' range—6 volts.** If pointer drops below this mark, battery, starter, wiring, and generator should be checked (Performance Test). If pointer is above this 6 volt mark, but below the 'N' range, battery load is greater than generator charging rate and electrical system and generator should be checked. **'N' Range**—This segment indicates the normal line voltage range from 6.75 volts (left hand end) to 8.25 volts (right hand end) and indicates that generator charging rate is in excess of the load. **Right Hand Line Marked 'H'—9 volts. This voltage is too high and unsafe for lamp bulbs and wiring. Check wiring and generator and correct conditions causing this high voltage.**

TESTING & SERVICING:—To check gauge accuracy, connect test voltmeter in parallel with Battery Indicator (connect one test voltmeter lead to battery indicator terminal, ground other voltmeter lead), turn on ignition switch and note if both gauge readings agree (see 'Reading the Gauge' section above for meaning of battery indicator dial markings). Replace defective units.

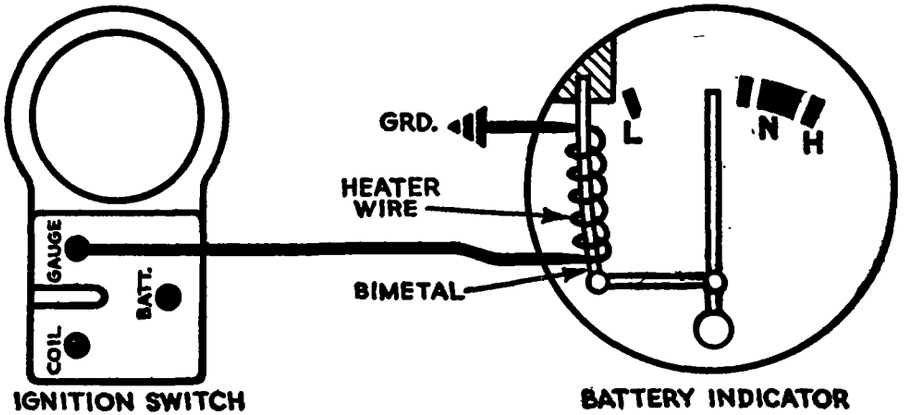

HUDSON SIGNAL LIGHTS

DESCRIPTION:—These signal lights consist of a Battery Charge Tell-tale and Oil Pressure Tell-tale on the instrument panel which are used instead of gauges to indicate when generator is charging battery and if oil pressure is satisfactory. They are regular lamp bulbs connected to the accessory terminal of the ignition switch (operative only with ignition switch turned 'on') and are controlled by the generator cutout relay and oil line check-valve as described below.

GENERATOR CHARGE TELL-TALE:—The cutout relay is provided with an extra set of ground contacts above the armature and the tell-tale lamp lead is connected to this contact 'T' terminal on the regulator case. The lamp circuit is completed to ground through these contacts. See car wiring diagram on car model page for complete wiring circuits.

Operation:—The ground contacts are normally closed with the main contacts open and open when the main contacts close. When the ignition is turned on, the tell-tale lamp lights and remains lighted until the main contacts close and the generator begins to charge the battery. The lamp should not remain lighted after the car speed is brought up beyond the cut-in point (approximately 10 MPH).

Trouble Shooting:—If the tell-tale lamp does not light when ignition is turned on, ground tell-tale lamp lead 'T' terminal on regulator to the engine (not to 'B' terminal). If lamp does not light, check for burned out bulb or loose wiring connections (see car model page wiring diagram). If lamp lights (indicating that ground contacts open), main contacts are fused or armature spring is weak or broken. If tell-tale lamp does not go out at speeds above cut-in point, ground contacts are not opening when main contacts close. Check generator performance by connecting accurate test ammeter in charging line. If trouble in regulator, car manufacturer recommends that a new or replacement regulator be installed (regulator case is sealed, do not break seal).

OIL PRESSURE TELL-TALE (Except 1948 Six Cyl.): Check valve on right side of crankcase is provided with an insulated terminal pin which is grounded by the check-valve plunger when no pressure exists in the oil line. The il pressure tell-tale lamp lead is connected to this terminal. A small hole in the check-valve plunger and a by-pass in the body allow the passage of sufficient oil so that the plunger alternately opens and closes the circuit at idling speeds, causing the tell-tale lamp to flash.

Operation:—The plunger rests normally against the pin when no pressure exists in the oil line so that the tell-tale lamp will light when the ignition is turned on. At idling speeds the plunger alternately opens and closes the circuit so that tell-tale lamp flashes. At speeds above idling (approximately 7 M.P.H.), the oil pressure holds the check-valve plunger off its seat so that the tell-tale lamp does not burn or flash.

Trouble Shooting:—If the tell-tale lamp does not light when the ignition is turned on, ground check-valve terminal to engine. If lamp does not light, replace bulb. If lamp does light, remove terminal pin and see that it is straight and clean. Take off plug on top of check-valve housing, remove plunger and see that it is clean and moves freely up and down. Examine spring above plunger. If tell-tale lamp does not flash at idling speeds, see that small hole in plunger is clean and open.

OIL PRESSURE TELL-TALE (1948 Six Cyl.): Operates in same manner as on other cars (above). A new engine unit (Carter No. A658S Oil Pressure Warning Switch) is used and this unit is mounted on engine separately from the check valve or oil pressure regulator.

Trouble Shooting: Warning switch contacts open (causing oil pressure tell-tale lamp to go out) when oil pressure reaches normal operating pressure of 11-15 lbs.

►*CAUTION—Warning Switch is set and sealed at the factory and no adjustments are necessary.*

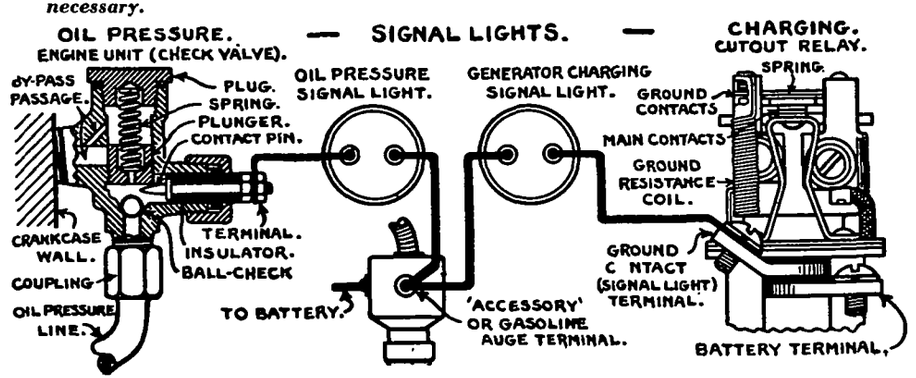

GUIDE TYPE

CHEVROLET, OLDSMOBILE, PONTIAC, AND OTHER CAR MODELS

DESCRIPTION:—Direction Signals consist f right and left hand Front and Rear flashing lamps which light up when steering column control switch is operated to indicate that a turn is to be made. These signals operate in conjunction with a Pilot Light or indicator on the switch which serves to remind the car operator to turn off the Direction Signal after the turn has been completed in addition to indicating that the signal is operating satisfactorily.

Front Direction Signal—Consists of a 21 cp. filament combined with the parking lamp filament (21-3 cp. bulb) in the parking lights at the front of the car. When Direction Signals installed on cars in service, regular parking lights must be modified by installation of new socket designed for this double filament bulb (see Installation data below).

Rear Direction Signal—Special signal lights are not used but the regular car wiring is modified so that the direction signal flashes the right or left Stop Light. Stop lights are wired so that both stop lights operate in the usual manner when brakes are applied with the Direction Signal off, and the one stop light, which is not being flashed for a direction signal, operates as usual when the brakes are applied with the Direction Signal set to indicate a turn.

Control Switch—Direction Signal Switch is mounted in a case which is designed to be clamped on the steering column directly below the steering wheel so that the switch lever extends out toward the left hand rim of the wheel. Switch lever has three positions—Normal or Off with lever horizontal. Right Turn with lever moved up, Left Turn with lever moved down. Switch is operated manually and lever remains in any position in which it is placed.

Flasher Unit—Flasher is a sealed unit and is usually mounted on the lower flange of the instrument panel brace behind the instrument panel. Flashers cannot be serviced and should be replaced if defective.

Direction Signal Fuse—Fuse is mounted in a cartridge type holder or connector in the feed wire between the ignition switch and the flasher unit (Direction Signals connected to 'gauge' terminal of ignition switch so that they are operative only with the ignition turned on).

OPERATION:—Switch must be operated manually to indicate a turn and must be returned to the normal or 'off' position manually after the turn has been completed. Switch handle should be moved in same direction as steering wheel is rotated for a desired turn (up for Right Turn, down for Left Turn). Operating the switch completes the circuit through the flasher to the right or left Front Signal Light, Rear Stop Light, and Pilot Indicator Light. All lights flash until switch lever is moved to normal or off position. If Pilot Indicator does not flash when switch is operated, check for burned out bulbs, defective flasher or fuse.

INSTALLATION:—When installing Direction Signals on cars in service, units should be installed, and car wiring modified as directed below. ***Refer to car wiring diagram on the particular car model page for wire colors and location of junction blocks and connectors.***

Front Direction Signal—Disconnect Parking Light wire at front junction block on hood, dismantle parking light and remove old parking bulb socket and wire, install new socket and wires furnished for each model, install new double filament signal and parking bulb (see bulb data below). Connect parking bulb lead (natural wire) to same terminal on junction block from which old wires removed. On 1941 & 1942 Chevrolet and Oldsmobile, connect new long wire (Natural with Green Cross Tracer) to Right Hand Signal Light wire which is same color, connect new short wire (Black and Green Cross Tracer) to Left Hand Signal Light wire, run these wires back along regular car wiring harness to dash and connect through three-way connector to same color wires in Direction Signal wiring harness (third wire runs to rear of car—see Rear Signals). On 1946-48 Chevrolet and Oldsmobile, and 1941-48 Pontiac, Direction Signal wiring harness is of sufficient length to extend to front signal lights and this harness cable should be run along regular car wiring harness and connected to signal lights as follows: Connect shorter (Natural '41-42 Pontiac, Red All 1946-48) wire to Left Hand Signal Light (Black) wire, run longer (Black) wire across front of car and connect to same color (Black) Right Hand Signal Light wire.

1946-48 Oldsmobile Note—A colored jumper wire is furnished to run across top of radiator to connect right parking light terminal of right junction block to new left parking light wire at left junction block.

Rear Direction Signal—On Chevrolet and Oldsmobil , additional wire must be run along left hand frame rail to rear of car so that Stop Lights can be connected individually to Direction Signal Switch. Connect f rward end of wire to same color wire in Direction Signal wiring harness. Connect rear end of this wire to Left Hand Stop Light, disconnecting and taping lead in regular car wiring harness which ran to this light (on Chevrolet, disconnect connector near the left stop light; on Oldsmobile, wire must be cut and new wire soldered to light lead). Regular car wiring harness lead is used for Right Hand Stop Light and this is connected to switch at instrument panel (see Switch data). On Pontiac models, individual leads are provided for each Stop Light and it is only necessary to rearrange connections at forward end (see Switch data).

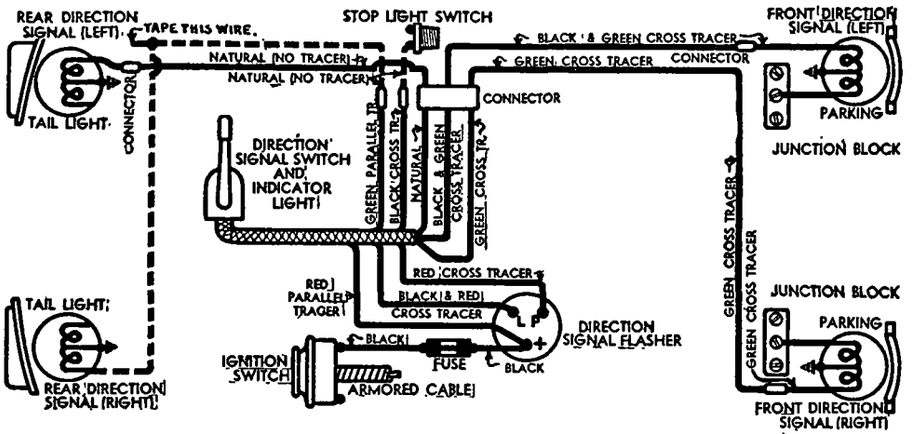

GUIDE DIRECTION SIGNAL (1941-42 CHEVROLET & LDSM BILE)

Signal Switch Installation (1941 Type)—Switch mounted on steering column by clamp band with concealed attaching screw. Form clamp band around steering column with threaded side up, install clamp-screw loosely. Dismantle switch by taking out two lower cover screws, install switch housing on clamp band (engage band in slots in housing so that lugs and screw inside housing), position

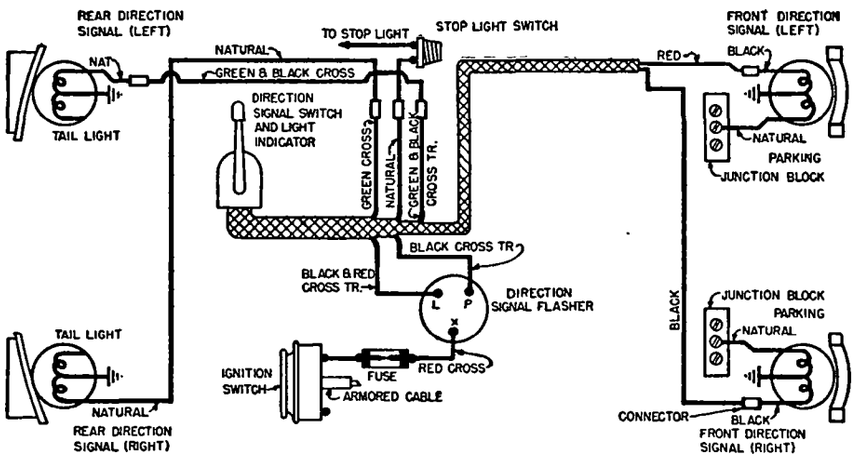

GUIDE DIRECTION SIGNAL (1946-48 CHEVROLET & OLDSM BILE)

housing so that switch lever horizontal in Normal or off position, tighten clamp band screw. See that switch assembly is in off position, reassemble switch and tighten lower cover screws securely. Run switch wiring harness down along steering column to instrument panel. Mount Flasher by loosening one nut n steering column bracket below instrument panel and slipping slotted end of flasher bracket under nut. Connect switch wiring harness as follows:

Signal Switch Installation (1942-48)—Hook clamp ring into switch housing position switch on steering column so that lever extends horizontally toward left side of car in "off" position, with top of lever 2" (on Chevrolet, Pontiac),

CONTINUED ON NEXT PAGE

GUIDE TYPE (C ntinued)

1⅛" (on Oldsmobile) below steering wheel, insert screw through clamp ring hole and into switch, tighten screw securely.

Direction Signal Switch Wiring—On Chevrolet and Oldsmobile, disconnect connector joining two Natural wires under left hand corner of instrument panel (this is stop light lead of regular car wiring harness), connect the Natural wire running into body (Stop Light wire) to Natural with Green Tracer wire of Direction Signal wiring harness, connect other Natural wire (Stop Light Switch wire) to Natural with Black X Tracer ('41-42), Natural with No Tracer ('46-48) wire of Direction Signal wiring harness. On Pontiac, disconnect three wires joined by a connector under left hand corner of instrument panel (Natural from Stop Light Switch, Natural with Green Cross Tracer to Right Hand Stop Light, Natural with Black & Green Cross Tracer to Left Hand Stop Light), connect these wires to same color wires of Direction Signal wiring harness. On all models, connect Flasher unit, and feed wire to ignition switch (remove fuse while making this connection) as shown on wiring diagram.

SERVICING:—No service operations required. Replace defective flasher units and burned out bulbs. To disassemble switch for replacement of Pilot Indicator bulb, take out screws in lower switch cover, withdraw cover and switch assembly.

DIRECTION SIGNAL LAMP BULBS & FUSES:—**Fuse**—9 ampere. In cartridge type holder in wire between flasher and ignition switch behind instrument panel. **Front Direction Signal**—21-3 cp. Mazda No. 1154 (3 cp. filament used for parking light and connected to lighting switch through regular car wiring harness). **Rear Direction Signal**—21-3 cp. Mazda No. 1154 (3 cp. filament used for tail light and connected to lighting switch through regular car wiring harness). NOTE—21 cp. filament used both for Stop Light and Direction Signal. **Pilot Indicator**—1½ cp. Mazda No. 55. Located in switch housing. **Flasher Unit**—Mallory Type 10. Service by replacement.

BUICK 1940-48

BUICK, ALL SERIES (1940 to 1948)

DESCRIPTION:—Direction signals consists of a special 21 cp. filament combined with the parking lamp in the Front Fender Lamps on the front of the car, separate bulbs illuminating red arrows at rear of car. Arrows located on trunk cover (1940), at the stop and tail light on right and left sides of car (1941-48). Control switch is built in steering wheel housing with switch handle directly below steering wheel. Flasher unit is mounted in back of instrument panel.

Control Switch—Consists of a bakelite movable member supported on ball bearings, and a lever plate carrying the trigger release and operating handle

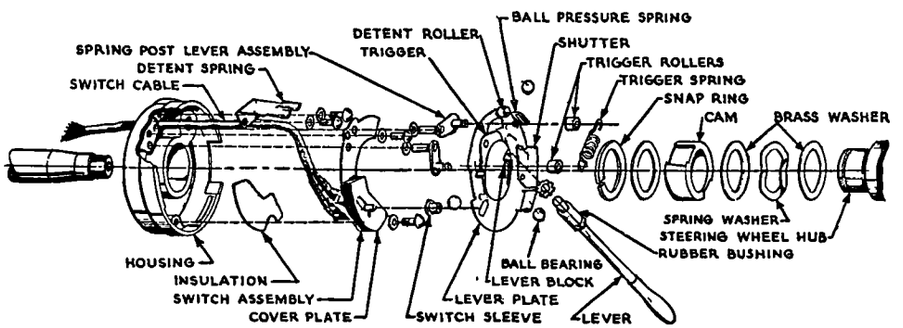

BUICK 1940-48 DIRECTION SIGNAL SWITCH

which is also mounted on ball bearings. This plate is held in one of three positions—'Left', 'Off', 'Right'—by a roller which engages a detent spring in the switch housing. Switch cam is assembled on lower end of steering wheel hub within switch housing (retained by locking ring) with spring washer assembled between brass washers to form a friction clutch for the cam which prevents jamming or locking of the wheel in case of switch failure.

Wiring Diagram—See car wiring diagram on car model page for signal circuit.

OPERATION:—Switch is operated manually to indicate a turn, and is turned off automatically by the steering wheel movement when the turn is completed (switch can also be turned off manually if desired). If turn is made in opposite direction than that for which the switch has been set, switch is turned off automatically as the turn is begun. Switch handle should be moved in same direction as wheel is rotated for the intended turn (move handle up for left turn, down for right turn).

Control Switch—When switch is operated to indicate a turn, circuit is completed through flasher unit to right or left Front Signal Light, Rear Signal Light, and Pilot Light. If pilot light on instrument panel does not flash when switch operated, check all bulbs (pilot light will not flash if front or rear signal bulbs burned out). Operation of the switch also presses the spring-loaded pawl or trigger on the lever plate against the notched cam on the steering wheel hub. When the steering wheel is moved in the same direction to turn the car, the trigger ratchets over the notch in the cam, however when the wheel is turned in the opposite direction after the turn has been completed, the trigger engages the cam notch and the switch is carried around to the off position. The trigger is then released so that the switch is ready for further operation.

ADJUSTMENT:—**Important Note**—Steering wheel must be installed so that lower spoke points straight down with wheels in straight ahead position (see Saginaw Steering Gear article for servicing directions). Whenever steering wheel removed or installed, direction signal switch lever must be placed in 'off' position to prevent damage to switch assembly.

To Adjust Switch—With correct adjustment, automatic release will occur only when wheel returned to center position after being rotated at least one-third revolution. To adjust switch, set switch lever for Right Hand Turn, turn steering wheel to right until first click is heard or slight movement felt in switch lever after right hand spoke on steering wheel has passed lower center position. Hold switch lever down firmly and turn steering wheel back slowly until right hand spoke is approximately 2" past or to right of lower center position, release switch lever and return wheel to straight ahead position which will return switch to off position. This adjustment causes switch cam to shift on steering wheel hub by slipping the friction clutch. No further adjustment is required for left turn switch release (positioning cam for right turn release as above will automatically regulate left return release also).

SERVICING:—**Disassembly**—Make certain that switch lever set in 'off' position, remove steering wheel. Switch will then be accessible for inspection and servicing. To correct complaints of switch getting out of adjustment (adjustment changing in service), check tension of crimped steel spring washer assembled between two brass washers on steering wheel hub above switch cam). Pressure of 85-100 lbs. (1940), 125-150 lbs. (1941-48) must be required to flatten washer. to ⅛" height. Replace spring washer if pressure is less than this amount. See illustration for correct assembly of switch cam washers and other parts.

DIRECTION SIGNAL LAMPS & FUSE: See car model page for complete data.

CADILLAC & LA SALLE 1940

CADILLAC & LA SALLE, ALL SERIES (1940)

►**PRODUCTION BULB CHANGE:** Rear Signal bulbs changed. The Direction Signals will not operate if wrong type bulb installed. See Signal Lamp & Fuse section below for data.

DESCRIPTION:—Direction Signals consist of a special 21 cp. filament combined with the parking lamp in the front Fender Lamps (front of car), separate bulbs in Rear Lamp (at rear of car), and an indicator lamp on the control switch which flashes while the signal is in operation. Control switch is mounted on left hand side of steering column below steering wheel and flasher unit is mounted in back of instrument panel.

Wiring Diagram—See car wiring diagram on car model page for signal circuit.

OPERATION:—Switch is operated manually and control lever should be pressed 'up' for Right Turn, 'down' for Left Turn. When switch operated, circuit is completed through flasher unit to right or left Front & Rear Signal Lights and pilot light on switch also flashes. If pilot light does not flash, check for burned out or incorrect type bulbs (see Rear Signal Lamp Caution below). Switch must be turned off manually after turn is completed and pilot bulb on switch serves as a warning that signals are operating.

DIRECTION SIGNAL LAMPS & FUSE: See car model page for complete data.

►**Important Rear Signal Lamp Caution**—Two types of bulbs have been used in Rear Signal Lamp as follows: **First Cars**—32 cp. single contact type bulb used in single contact type socket. **Later Cars**—21 cp. filament of a No. 1154 21-3 cp. bulb used in a double contact socket (3 cp. filament not used). CAUTION—Flasher will not operate if any other than correct type bulb used on each car (flasher units specially calibrated for each of the above lamp types and will not operate if bulbs interchanged).

CADILLAC 1941-48

CADILLAC, ALL SERIES (1941 to 1948)

DESCRIPTION: 1941 to 1947. New design (not similar to 1940) with control switch built in steering wheel (switch has automatic turn-off feature) and pilot indicator light on instrument panel for Right and Left turn. Direction Signals consist of a special 21 cp. filament combined with the Parking Lamp in the front Radiator Grille (front of car), separate bulbs located above the stop & tail light bulb in the Rear Light assembly (rear of car), and pilot indicator bulb which is located in the upper right corner of the speedometer dial on the instrument panel. Flasher Unit and Direction Signal Fuse are located on the instrument panel brace near the steering column.

1948 Type. Similar to 1947 type except as follows: Rear Signal flashes Stop Light, separate Left and Right Indicator bulbs on instrument panel, Fuse and Flasher mounted on back of instrument cluster.

Control Switch—Mounted within housing below steering column with switch lever extending out to left side. Automatic shut-off mechanism consists of ratchet and cam pinned to steering column. With switch set to operate signal, steering wheel cam passes over ratchet without engaging when steering wheel rotated to turn car in that direction. When wheel is rotated back after turn completed, cam engages ratchet and turns switch off automatically.

Wiring Diagram—See car wiring diagram on car model page for signal circuit.

OPERATION:—Switch must be operated manually to indicate a turn and is turned off automatically when steering wheel straightened out after the turn is completed. Switch handle should be moved in same direction as wheel is rotated for desired turn (up for right turn, down for left turn). Operating switch completes circuit through flasher unit to Right or Left Front Signal Light, Rear Signal Light, and Pilot Indicator Light on instrument panel. All lights flash and flasher clicks audibly while operating.

SERVICING:—If instrument panel indicator light does not flash when switch operated, check all bulbs (pilot light will not flash if either front or rear signal light bulbs burned out). Flasher is sealed and cannot be serviced (replace if defective). To service switch, remove steering wheel (see Saginaw Steering Gear article for data) which will expose switch assembly.

DIRECTION SIGNAL LAMPS & FUSE: See car model page for complete data.

CHEVROLET 1941-48

CHEVROLET, ALL PASS. CAR MODELS (1941 to 1948)

Guide type used. See Guide Direction Signal article on preceding page for data.

CHRYSLER, DE SOTO, DODGE, PLYMOUTH 1941-48

CHRYSLER, SIX & EIGHT, ALL MODELS (1941 to 1948)
DE SOTO, ALL MODELS (1941 to 1948)
DODGE, ALL MODELS (1941 to 1948)
PLYMOUTH, ALL MODELS (1941 to 1948)

►**PRODUCTION CHANGES:** On early 1941, Direction Signal feed wire was connected to lighting switch and protected by circuit breaker or fuse on switch. On later cars, Direction Signal was connected to gauge terminal of Ignition Switch and protected by a separate fuse in cartridge type fuse connector (fuse in line between ignition switch and flasher).

Chrysler C28—On some first cars, Front Direction Signal (fender mounted light) may be a single filament 21 cp. bulb (with separate Parking Light bulb directly above headlamp). On later cars, Front Direction Signal and Parking Light combined in one bulb (21-3 cp. double filament bulb) in fender light.

Chrysler 1946-47—Early cars equipped with 2 pilot indicator lights (one for Left Turn, one for Right Turn). Later cars equipped with 1 pilot indicator light in upper right corner above speedometer face.

DESCRIPTION:—Direction Signals consist of a special 21 cp. filament combined with the parking lamp in the front fender lamps (except Dodge), or separate single filament bulbs in front fender lamps (De Soto, Dodge, Plymouth models with separate parking bulbs combined with headlamp assembly) at the front of the car, special 21 cp. filament combined with tail lamp at rear of car (all models—stop lamp is separate 21 cp. bulb in assembly with rear license lamp at center of body at rear), and pilot indicator lights which illuminate arrows on the instrument panel. Flasher unit is located on bottom flange of instrument panel at left side.

1946-48 Lamp Note—Front Direction Signal and Parking Light is a double filament 21-3 cp. bulb located in Parking Light.

Control Switch—Mounted on steering column beneath steering wheel hub with switch lever extending out on left side f wheel. Switch has automatic turn-off mechanism which consists of a pronged ring pressed in the steering wheel hub which engages two specially shaped pawls on the switch when the switch is set to indicate a turn (with switch off, pawls clear prongs so that switch not operated when steering wheel is turned). When the steering wheel is rotated to turn the car in the direction for which the Direction Signal Control Switch has been set, the prongs ratchet over the switch pawl without disturbing the switch but when the steering wheel is rotated back after the turn has been

CONTINUED ON NEXT PAGE

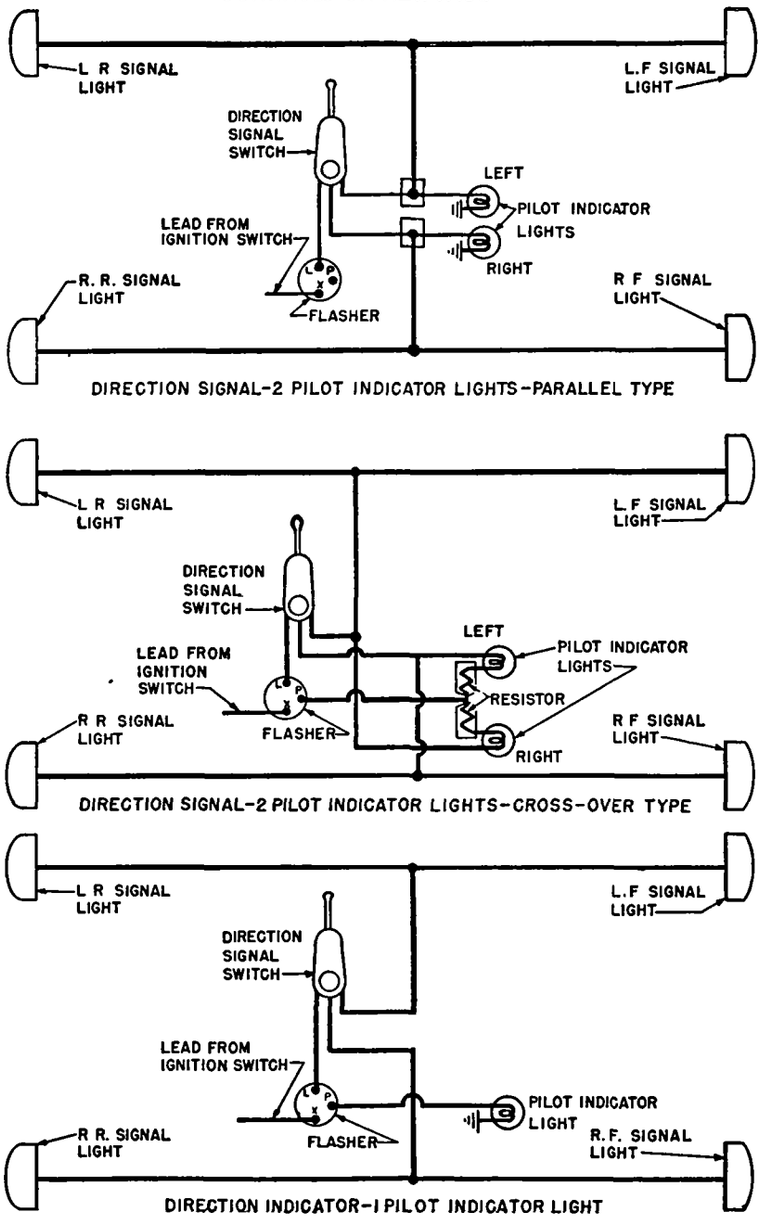

DIRECTION SIGNAL PILOT INDICATOR LIGHT CIRCUITS

CHRYSLER, DE SOTO, DODGE, PLYMOUTH 1941-48 (C ntinu d)

completed, the prongs engage the pawl and return the switch to the off position automatically.

Pilot Indicator Light Circuits—Three different circuits have been used. See illustration. These three circuits can be identified as follows:

1)—Two Pilot Indicator Lights (Parallel Type)—Indicator light has one lead. LEFT pilot indicator light connected in LEFT signal light lead, RIGHT pilot indicator light connected in RIGHT signal light lead. Flasher "P" terminal not used.

2)—Two Pilot Indicator Lights (Cross-Over Type)—Indicator light has two leads. LEFT pilot indicator light connected in RIGHT signal light lead with other lead connected through resistance to "P" terminal on flasher. RIGHT pilot indicator light connected in LEFT signal light lead with other lead connected through resistance to "P" terminal on flasher.

3)—Single Pilot Indicator Light—One pilot light lead used and is connected directly to "P" terminal on flasher.

Wiring Diagram—See Chrysler, De Soto, Dodge, and Plymouth wiring diagram on individual car model pages for Direction Signal wiring circuits and wire colors. Refer to pilot indicator light illustration which shows various circuits which have been used on these cars.

OPERATION:—Switch must be operated manually to indicate a turn but is turned off automatically when steering wheel straightened out after the turn completed. Switch handle should be moved in same direction steering wheel is rotated for the desired turn (up for right turn, down for left turn). Operating the switch completes the circuit through the flasher to the right or left Front Signal Light, Rear Signal Light, and instrument panel Pilot Indicator. All lights flash until the turn has been completed. If Pilot Indicator does not flash when switch is operated, check for burned out bulbs, defective flasher, or blown fuse.

SERVICING:—**Flasher Unit**—Cannot be serviced, replace defective units.

Control Switch—Switch mounted on clamp attached to steering column. Clamp must be properly positioned on column so that switch pawls engage prongs on ring in steering wheel hub. If clamp disturbed, see that rim on clamp is 1/16" higher than steering wheel hub. Pronged ring should be pressed squarely in steering wheel hub with bulge in ring registering with indentation on wheel hub (this ring must be installed in steering wheel hub if Direction Signals installed on car in the field).

DIRECTION SIGNAL LAMPS & FUSE:—See Chrysler, De Soto, Dodge, and Plymouth car model pages for complete data (see 1941 Production Change above for differences on first cars).

FRAZER & KAISER

FRAZER & KAISER, ALL MODELS (1947-48)

IMPORTANT CONTROL SWITCH NOTE: Two different types of Control Switches are used. See Control Switch below for description of each type.

DESCRIPTION: Direction Signals consist of 21 cp. filament of 21-3 cp. parking bulb at each Parking Light at front of car, separate 21 cp. bulb at each Stop & Tail Light at rear of car, and two indicator lamps on instrument panel. Flasher unit and fuse located behind instrument panel.

Control Switch—Two types are used. One type mounted in die cast housing and screwed to left side of steering column (turn-off mechanism operated by two fingers of steel collar mounted on steering shaft which engage roller which swings in through opening in steering column jacket when switch lever set for turn). Second type mounted in cup which forms top of steering column jacket under steering wheel (turn-off mechanism operated by two pins on underside of steering wheel which engage pawls when switch lever set for turn).

Wiring Diagram—See Frazer car wiring diagram on car model page for direction signal circuit. Kaiser similar to Frazer except that separate junction blocks used at front of car at left and right sides.

OPERATION: Switch must be operated manually to indicate a turn but is turned off automatically when steering wheel straightened out after turn. Switch lever must be moved in same direction steering wheel rotated (up for right turn, down for left turn). Operating switch completes circuit through flasher to right or left Front Signal Light, Rear Signal Light, and instrument panel Indicator Light. All lights flash until turn completed. If Indicator Light does not flash when switch operated, check for burned out bulbs, defective flasher, or blown fuse. CAUTION—Two different types of Control Switches have been used. See Control Switch above for data.

DIRECTION SIGNAL LAMPS & FUSE: See Frazer car model page for complete data.

HUDSON 1940-41

HUDSON, SIX & EIGHT, ALL MODELS (1940-41)

DESCRIPTION:—Direction Signals consist of a special 21 cp. filament combined with the parking lamp (double filament bulb) in the Bonnet Panel Lamps (front of car), and the Stop Lights at the rear of car (stop light switch is hooked up to Direction Signal Switch so that both stop lights operate in usual manner when brake applied, one lamp only flashes when direction signal switch operated to indicate a turn). The control switch is mounted on the steering column directly below the steering wheel and has three buttons—'L' left turn, 'off' center, 'R' right turn—and an indicator bulb under a jewel below the center button which flashes while the signals are operating.

Wiring Diagram—See car wiring diagram on car model page for signal circuit.

OPERATION:—Control is operated manually and 'L' (left) or 'R' (right) button is pressed to indicate a turn. This completes circuit through flasher, and Front & Rear Signals and indicator bulb on switch flash until the center ' ff' button of the switch is pressed which releases the operating button and turns the switch off. If indicator bulb does not flash when switch operated, check for burned out bulbs.

SERVICING:—**Indicator Bulb Replacement**—Switch cover retained by screws concealed under button on switch case. To remove cover, pull buttons off, remove screws located on flat terminals under buttons, lift switch cover off. Take out mounting screws in switch and lift switch out. Indicator bulb and switch can then be inspected and serviced.

DIRECTION SIGNAL LAMPS & FUSE: See car model page for complete data.

HUDSON 1942-47

HUDSON, SIX & EIGHT, ALL MODELS (1942 to 1947)

DESCRIPTION:—New design (not same as type used on 1940-41 cars) with control switch built in steering wheel (switch has automatic turn-off feature). Direction signals consist of a special 21 cp. filament combined with the parking light filament in the Fender Lamp bulb (front of car), regular Stop Light filament in combination Stop-and-Tail Lamps (rear of car), and an Indicator Light on left end of instrument panel. A special two-unit relay controlled by the direction signal switch on the steering column is used to select the correct stop light for Right or Left Turn indication. Flasher unit is mounted on relay on hand brake bracket under cowl (behind instrument panel).

Control Switch—Mounted on steering column below steering wheel with switch lever extending out on left side of wheel. Switch has automatic turn-off mechanism consisting of two trip pins extending 7/8" below the lower edge of the steering wheel hub which engage a special trigger in the direction indicator switch. When the steering wheel is rotated to turn the car in the direction for which the direction indicator switch has been set, the trip pin rides over the trigger, but when the steering wheel is turned back after the turn has been completed, the trip pin engages the trigger and returns the switch to the "off" position.

Relay—Relay is two-unit type with two separate solenoids each controlling a triple set of contacts. Each unit operates independently to complete circuits to front and rear indicator lamps for right or left turn as selected by direction signal switch (see Operation data below).

Wiring Diagram—See wiring diagram on car model page for complete Direction Signal circuit wiring and fuse data.

OPERATION:—Switch must be operated manually to indicate a turn but is turned off automatically by steering wheel movement after turn has been completed. Switch handle should be moved in same direction that steering wheel is rotated for the desired turn (up for Right Turn, down for Left Turn). Operating the switch completes the circuit to the relay and energizes one of the two relay solenoid windings (one relay unit for Right Turn, other relay unit for Left Turn). When the relay solenoid winding is energized, movement of the relay armature opens the regular stop light circuit contacts (so that the stop light on the side of the car toward which the turn is to be made is not controlled by the stop light switch) and closes the contacts in the flasher and front direction light circuits. Front and Rear (stop light) Direction Lights and Indicator Light on instrument panel then flash until switch is turned off by movement of steering wheel. When the switch is turned off, relay opens the flasher circuit and restores the regular stop light circuit.

CONTINUED ON NEXT PAGE

HUDSON 1942-47 (C ntinued)

NOTE—If direction signal switch is set to indicate a turn in one direction and the car is then turned in the opposite direction, switch will be turned off automatically as the turn is being made.

SERVICING:—If indicator light on instrument panel does not flash when switch is set to indicate a turn, make certain that ignition switch is turned "on," check for burned out bulbs (front and rear signal lights as well as indicator bulb), defective flasher or relay, or blown fuse.

Flasher Unit—Cannot be serviced. Replace defective units.

Control Switch—Switch is mounted on Handy Shift control lever upper tube bracket and is aligned by two bosses on the switch case (switch trigger extends through notch in steering column jacket tube).

NOTE—When Direction Indicator is installed on cars not originally equipped with this unit, a notch must be cut in the steering column jacket tube for switch trigger clearance and trip pins must be installed in the lower rim of the steering wheel as follows:

Steering Column Jacket Tube Notch—This notch can be cut in tube without removing tube if work is done carefully. Notch must be ½" wide with square ends and should extend around tube for total distance of 130°. Top edge of notch should be ¾" down from top edge of jacket tube (steering column bushing should be pressed down in tube until upper edge is 1½" from end of tube).

Steering Wheel Trip Pins—Holes are provided in lower edge of steering wheel hub for installation of these pins. To install pins, remove steering wheel as directed in Steering Gear article in Steering Gear Section, drive taper pin in each hole until pins project exactly ⅞" from bottom of hub.

DIRECTION SIGNAL LAMPS & FUSE: See car model page for complete data.

1948 HUDSON

HUDSON, SIX & EIGHT, ALL MODELS (1948)

DESCRIPTION: Direction Signals consist of 21 cp. filament of 21-3cp. parking bulb at each Parking Light at front of car, separate 21 cp. bulbs at each Stop & Tail Light at rear of car, and one indicator bulb on instrument panel. Flasher on steering column brace behind instrument panel. Fuse in holder in lead from Fuel Gauge to Flasher.

Control Switch—Switch mounted in case which forms upper control lever tube bracket at upper end of steering column under steering wheel. Turn-off mechanism operated by two pins on underside of steering wheel hub.

Wiring Diagram—See car wiring diagram on car model page for signal circuit.

OPERATION: Switch must be operated manually to indicate a turn (lever up for right turn, down for left turn) but is turned off automatically as steering wheel returned to straight ahead position. Switch completes circuit through flasher to right or left Front and Rear Signal Lights, and instrument panel Indicator Light. All lights flash until turn completed. If Indicator Light does not flash when switch operated, check for burned out bulbs, defective flasher, or blown fuse.

DIRECTION SIGNAL LAMPS & FUSE: See car model page for bulb & fuse data.

FORD, LINCOLN, MERCURY 1941-49

FORD, ALL MODELS (1949)
LINCOLN, ALL MODELS (1941 to 1949)
MERCURY, ALL MODELS (1942 to 1949)

DESCRIPTION: 1941-48. Direction Signals use a special 21 cp. filament combined with the parking lamps in the front Fender Lamp (21-3 cp. bulb) at the front of the car, 21 cp. filament combined with tail lamps in the Rear Lamp Assembly (21-3 cp. bulb) at the rear of the car (Stop lamp is separate 21 cp. bulb in assembly with Rear License lamp at center of body in rear), and pilot indicator lamps on instrument panel. Pilot indicator lamps are mounted in top of instrument cluster (Zephyr and Custom) to right of speedometer dial (Continental). Flasher unit is mounted on Ignition Resistor and Lighting Circuit Breaker unit in back of instrument panel with fuse in connector in line between flasher and feed terminal of ignition resistor unit.

1949 Type. Similar to 1948 type except as follows: Rear Signal flashes Stop Light filament on right or left side. On Lincoln, signal fuse mounted on circuit breaker. On Mercury, signal fuse in feed wire from ignition switch to flasher.

Control Switch—Built in housing on steering column below steering wheel with switch lever extending out toward left side. Switch has automatic turn-off mechanism by which switch is returned to off position when steering wheel rotated back to straight ahead position after a turn has been completed.

Wiring Diagram—See wiring diagram on car model page for complete Direction Signal circuit and fuse data. For 1949 Ford, refer to 1949 Mercury car page wiring diagram.

OPERATION:—Switch must be operated manually to indicate a turn but is turned off automatically when steering wheel straightened out after turn has been completed. Switch handle should be moved in same direction steering wheel is rotated to make a desired turn (up for right turn, down for left turn). Operating the switch completes the circuit through the flasher to the right or left Front Direction Signal, Rear Signal, and Pilot Indicator on instrument panel (arrow at top of instrument cluster on Zephyr & Custom, jewel on instrument panel to right of speedometer on Continental). All lights flash until turn has been completed.

SERVICING:—If pilot indicator does not flash when switch operated to indicate a turn, check for burned out bulbs, defective flasher, or blown fuse. For access to switch, remove steering wheel.

DIRECTION SIGNAL LAMPS & FUSE: See car model page for complete data.

NASH 1946-48

NASH, ALL MODELS (1946-48)

Direction Signal is similar to Chrysler type. See Chrysler Direction Signal article on preceding pages for data.

OLDSMOBILE 1941-48

OLDSMOBILE, SIX & EIGHT, ALL MODELS (1941 to 1948)

Direction Signal is Guide type. See Guide Direction Signal article on preceding pages for complete data.

PACKARD 1942-48

PACKARD, ALL MODELS (1942 to 1948)

DESCRIPTION: Direction Signals consist of 21 cp. filament of 21-3 cp. parking bulb at each Parking Light at front of car, separate 21 cp. bulbs at each Stop & Tail Light at rear of car, and two indicator lights on instrument panel. Flasher and fuse located behind instrument panel.

Control Switch—Switch mounted in cup which forms top of steering column jacket under steering wheel. Turn-off mechanism operated by two pins on underside of steering wheel. When switch lever set for turn, pawl in switch is engaged by pin on wheel to turn switch off as steering wheel is returned to straight ahead position. Switch operating shaft extends through hole in bottom of cup and switch lever is attached to shaft after switch installed.

Wiring Diagram—See car wiring diagram on car model page for signal circuit.

OPERATION: Switch must be operated manually to indicate a turn but is turned off automatically as steering wheel straightened out after turn. Switch lever must be moved in same direction steering wheel rotated (up for right turn, down for left turn). Operating switch completes circuit through flasher to right or left Front Signal Light, Rear Signal Light, and instrument panel Indicator Light. All lights flash until turn completed. If Indicator Light does not flash when switch operated, check for burned out bulbs, defective flasher, or blown fuse.

DIRECTION SIGNAL LAMPS & FUSE: See car model page for bulb & fuse data.

PONTIAC 1941-48

PONTIAC, SIX & EIGHT, ALL MODELS (1941 to 1948)

Direction Signal is Guide type. See Guide Direction Signal article on preceding pages for complete data.

STUDEBAKER 1942-48

STUDEBAKER, ALL MODELS (1942 to 1948)

Direction Signal is similar to Chrysler type. See Chrysler Direction Signal article on preceding pages for data.

Wiring Diagram—See car wiring diagram on car model page for signal circuit.

DIRECTION SIGNAL LAMPS & FUSE: See car model page for bulb and fuse data.

SEALED BEAM HEADLAMPS

REPLACEMENT NOTE:—Two types of Sealed Beam Lamp Units are available for replacement: (1) Composite Type with metal reflector and glass lens (has conventional lamp bulb assembled in unit) and (2) All Glass Type with hard glass reflector and lens (no lamp bulb used, filaments mounted directly on reflector). ***Both types and all makes are fully interchangeable on all car models equipped with Sealed Beam Headlamps.***

DESCRIPTION:—Sealed Beam Headlamps, as used on cars so equipped, consist of a reflector, lens, and lamp filaments assembled as a single sealed unit. This excludes all dirt and moisture so that the original effciency of the lamp is retained throughout the life of the filaments. When replacement is required, the entire sealed beam unit is discarded and a new unit is installed. No attempt should be made to disassemble the sealed beam unit.

OPERATION:—Sealed Beam lamps have double "bar" type filaments (filaments parallel and slightly offset so that lower "Traffic" beam deflected slightly toward right side of road) with an upper "Country Beam" of 40-45 watts intensity and a lower "Traffic Beam" of 30-35 watts (these lamps not rated by candlepower but upper beam is approximately 50% brighter than former 32 cp. headlamps). Beams are controlled by a Beam Selector Switch on the toeboard in the usual manner.

INSTALLATION & REMOVAL:—On all cars, a sub-body or housing is provided in the headlamp for the sealed beam unit mounting. This sub-body is retained in the headlamp by the two adjusting screws and by two sets of two springs which are hooked to the sub-body diametrically across from each screw. The sealed beam unit seats directly in the sub-body and is positioned by three heavy lugs which fit into slots in the sub-body. A retainer ring is fitted over the outer edge of the sealed beam unit. This retainer ring has three lugs which engage three clamp screws on the sub-body rim so that the retainer ring and sealed beam unit are securely clamped in place when the clamp screws are tightened (on some cars a gasket is used between the retainer ring and the sealed beam unit). A lamp rim which fits over the retainer ring in such a manner as to conceal the clamp screws and adjusting screws completes the assembly.

Removing Sealed Beam Units—Remove headlamp rim (retained by one or more screws and clips). Loosen, but do not remove, three clamp screws which engage retainer ring lugs (use care not to turn adjusting screws located at top and one side of lamp). Rotate retainer ring counter-clockwise until lugs disengage from clamp screws, lift retainer ring off. Pull sealed beam unit out to disengage lugs from slots in sub-body, disconnect cable plug from clips on sealed beam unit.

Installing Sealed Beam Units—Terminal clips on sealed beam units and cable plug are designed so that plug can be connected only in correct position. Plug terminals (facing end of plug) are as follows: **Left Side**—Upper Country Beam. **Center (Top)**—Lower Traffic Beam. **Right Side**—Ground wire connected to lamp sub-body or lamp housing. When installing new sealed beam unit, connect plug, see that sealed beam unit lugs properly engage slots in sub-body, install retainer ring and rotate ring clockwise until lugs on ring engage under clamp screw heads on sub-body, tighten clamp screws securely. Then adjust headlamps as directed below.

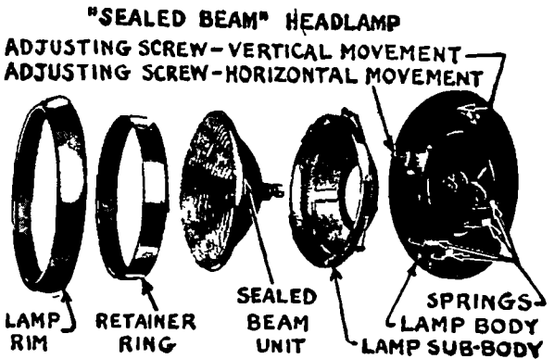

ADJUSTMENT:—All sealed beam lamp units are "prefocused" type so that the only adjustment required is to aim the lamp beam for correct horizontal and vertical position.

Headlamp Adjustment (All Cars)—Use conventional headlamp adjusting screen with vertical lines drawn directly ahead of each lamp center-line and horizontal line drawn **3" below** and parallel to lamp center-line. Place car at 25 feet distance from screen, turn on lights and make certain that Upper Country Beam (lower filament) is lighted. Aim each headlamp as follows:

Horizontal Adjustment—With headlamp rim removed, turn adjusting screw at one side of lamp sub-body (do not confuse with retainer ring clamp-screws) until hot spot is centered on vertical line directly ahead of this lamp. Adjust other headlamp in same manner (both lamps aimed straight ahead).

Vertical Adjustment—With headlamp rim removed, turn adjusting screw at top or bottom of lamp sub-body (do not confuse with retainer ring clamp-screws) until hot spot is centered on horizontal line 3" below lamp center height. IMPORTANT—Beam may be directed downward as required by state laws, but should never be aimed higher than 3" below lamp center height.

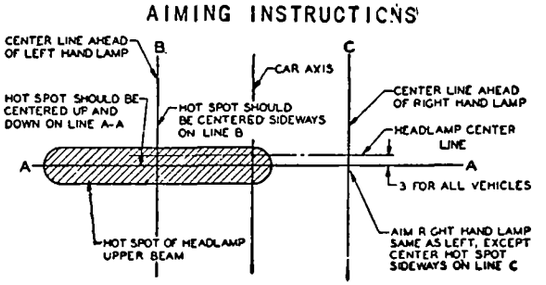

AUTO-LITE "IGH" DISTRIBUTOR SYNCHRONIZATION

DESCRIPTION:—The two sets of contacts on the Type IGH distributors are connected in parallel to the breaker terminal on the distributor housing. The condenser is mounted on the side of the case. Only one ignition coil is used and the primary circuit is broken by the two sets of contacts alternately. For this reason it will be necessary to use a special synchronizing tool to establish the correct relation between the contacts.

CONTACT ADJUSTMENT:—Breaker contacts separate .020-.024 inch. This gap should be maintained at all times. To set contact gap (fixed contacts mounted on base plate), loosen the two lock screws on the stationary contact mounting plate and turn eccentric adjusting screw until correct gap is secured with breaker arm rubbing block on lobe of cam. Then tighten the lock screws. The other set of contacts (mounted on movable breaker plate) are adjusted by loosening lock nut on stationary contact mounting stud and turning up stud. Tighten the lock nut after making the adjustment. It is important that the contact gap of each set of contacts should be the same. Use a feeler gauge to accurately determine the gap.

TIMING DISTRIBUTOR TO ENGINE:—Distributor is timed to the engine in the usual manner by cranking engine over until piston No. 1 reaches firing position and then loosening the advance arm clamp bolt and rotating the distributor housing and breaker assembly until the contacts open. The correct firing position of the piston and full directions for each installation will be found on the car model pages.

SYNCHRONIZATION OF CONTACTS:—Connect a six volt test lamp between the primary terminal inside the breaker housing and ground (snap the other test lamp lead on the distributor case). Block open the second set of

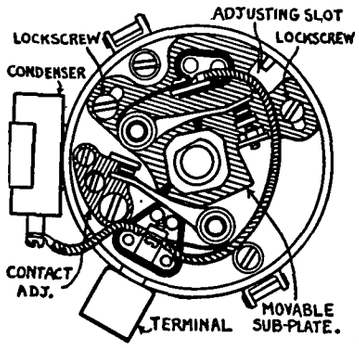

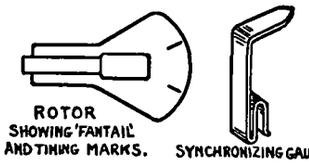

contacts (mounted on movable breaker plate) with a piece of cardboard. Then turn n ignition and slowly crank engine over until the first set of contacts open as indicated by the lighting of the lamp. If this position is accurately determined the backlash in the gears will be sufficient to open and close the contacts and the lamp should go out as the distributor shaft is rocked. Place rotor button on distributor shaft. It will be noted that rotor is built with a 'fantail' marked with two lines. These lines are exactly 45 degrees apart (distributor degrees) and represent the firing interval of the distributor. Clamp the special synchronizing gauge (Auto-Lite Part No. ST-206 on the side of the distributor case so that the pointer of the gauge is directly opposite the leading line (determined by direction of rotation of the distributor) on the fantail. Then carefully crank engine over 90 degrees until the second line on the fantail is directly opposite the synchronizing gauge. Remove the insulation from between the breaker contacts and block open the first set in the same manner. If the lamp lights when the second line on the fantail is opposite the gauge the distributor contacts are correctly synhronized. If it does not, loosen the two lock screws on the movable breaker plate and turn the eccentric adjusting screw until the contacts open and the lamp lights. Tighten the lock screws.

DELCO-REMY "660" AND "662" DISTRIBUTOR SYNCHRONIZATION

DESCRIPTION:—This type distributor is designed for use on eight cylinder engines. It is fitted with two sets of contacts operating on a four sided cam. The contacts open alternately at intervals of 45 degrees corresponding to the 90 degree firing interval of the engines on which it is used. Both sets of contacts are connected in parallel in the primary circuit of the ignition coil. One condenser mounted on the side of the distributor shaft housing is used for both contacts. The breaker arms are designed so that one set of contacts closes immediately after the other set opens which provides a longer period of time for building up the coil primary current. Both sets of contacts must open to secure a spark at the plugs.

CONTACT ADJUSTMENT:—Contacts should be set at .022 inch and must be held within limits of .018-.024 inch. Set contact gap by loosening the lock screw on the stationary contact mounting plate (directly behind the breaker arm) and turning the eccentric adjusting screw. The breaker gap must be measured with the breaker on the lobe of the cam. Tighten the lock screw. Contacts can be resurfaced when necessary with a fine flat contact file or on a medium hard oilstone. The contact gap must be set before the contacts are synchronized and should be checked after the synchronization has been completed. If synchronizing has affected the gap sufficiently to throw it outside the limits of .018-.024 inch, reset the gap at .022 inch and repeat the synchronization.

SYNCHRONIZATION OF CONTACTS:—A special Delco-Remy synchronizing tool, Part No. 1838182, has been developed for use in synchronizing contacts on Type 660 distributors. Place the synchronizing tool in position on the upper end of the distributor shaft with the spring on the left or 'M' side of the tool in the slot in the cam (if the distributor rotates clockwise) or with the right or 'N' side of the spring in the cam slot (if the distributor rotates counter-clockwise) and connect a test lamp or ammeter in the primary circuit and turn on the ignition so that an accurate check of the contact opening can be made. Then turn the distributor shaft in the direction of rotation until the first set of contacts (mounted directly on the breaker plate—the so-called stationary contacts) begin to open. Note the reading on the center scale which is directly in line with the leading edge of the slot in the distributor housing. Continue to turn the distributor until the same reading on the 'N' side of the scale (for clockwise distributors) or the 'M' side of the scale (for counter-clockwise distributors) is in line with the same edge of the distributor housing slot. Then loosen the two lock screws on the movable sub-plate (on which the second set of contacts are mounted) and turn the eccentric adjusting screw until the contacts begin to open. Tighten the lock screws and check synchronization by turning the distributor shaft through a complete revolution and again noting scale readings as contacts open. The variation must not be greater than 2 tool graduations which corresponds to 2 degrees of crankshaft rotation. The contact gap must be checked after synchronizing contacts. If outside limits of .018-.024 inch, reset at .022 inch and repeat synchronization.

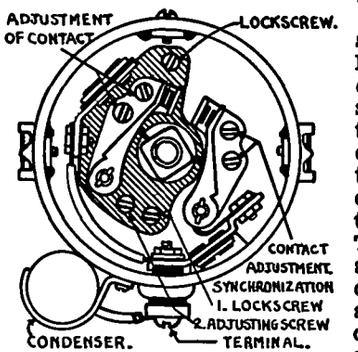

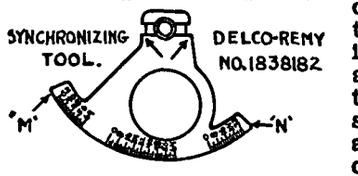

FORD & MERCURY DISTRIBUTOR

Car Model	Distributor①
Ford 6 Cyl., Cars & Trucks (1947-49)②	7HA-12127
Ford V8, 8BA Pass. Cars (1949)	7RA-12127-C
Ford V8, Truck Models (1948)	7RA-12127-C
Mercury, Model 9CM (1949)	7RA-12127-C

①—Distributor less Terminal Housing & Rotor.
②—All models with "H" Engine.

►NOTES, CAUTIONS, & CHANGES

►**Contact Installation Caution**—Paper tape on underside of stationary contact assembly (part no. marking) **must be removed** when contacts are installed. If tape left on, good ground between contact plate and breaker plate cannot be secured, primary resistance will be increased, and ignition will not be satisfactory.

►**Excessive Pinging Correction**—May be caused by obstructions in vacuum passages in carburetor interfering with correct operation of distributor advance mechanism. Correct by disconnecting vacuum line and cleaning out all passages. *See "Checking Distributor Spark Advance" data below.*

►**Mercury Distributor Timing Caution**—Clearance between distributor vacuum diaphragm housing and water pump outlet or fan belt on engine should be ¼" to preclude interference in service. Distributors with less clearances should be replaced.

CAUTION—When timing engine, initial timing should be set as near as possible to specified setting (see car model page for instructions) but at least ⅛" CLEARANCE must be maintained between vacuum diaphragm and outlet or fan belt.

►**Retarded Spark Complaints on First Mercury Cars**—On cars before Engine No. 9CM-826, with first type timing gears, excessive backlash in gears may cause retarding of ignition timing. Check for this complaint as follows:

Checking for Retarded Spark—Disconnect distributor vacuum line (to prevent automatic advance functioning). Idle engine, direct neon timing light on timing mark at front of engine, increase engine speed and note if definite retarding of spark occurs (timing button width is 2.2 engine degrees and can be used to estimate amount of retarding action). Correct by advancing initial timing to compensate for this retarding action.

►***CAUTION—Timing must not be advanced so far as to cause excessive pinging.***

DESCRIPTION: This "Loadomatic" or Pressure Type distributor is a full-automatic advance type in which the entire advance is provided by action of the vacuum diaphragm unit linked to the breaker plate (no centrifugal weights used). This advance action is controlled by the two diaphragm springs on the breaker plate which oppose diaphragm movement. Springs are of unequal weight, but act together to produce the desired advance curve.

NOTE—Distributors used on 6 Cyl. and V8 engines are same design and differ only in minor details (number of cam lobes, location of primary terminal, type of mounting, etc.).

OPERATION: The diaphragm vacuum line is connected to the carburetor and terminates in two separate ports: 1) Upper Port in carburetor venturi tube, 2) Lower Port in carburetor throat just above throttle valve edge. Vacuum at these ports, and consequent suction in line, varies in accordance with engine operating conditions to provide correct advance as follows:

Idling Speed (Closed Throttle)—Vacuum is at minimum at both carburetor ports (lower port above throttle valve) and breaker plate is retarded by springs. Spark occurs at the initial timing point with no automatic advance.

Normal Driving (Part Throttle)—Vacuum is high at both carburetor ports and vacuum diaphragm unit advances timing progressively until maximum advance point is reached at 18-35 MPH.

Acceleration—Vacuum at upper (venturi) port is high but vacuum at lower (carburetor throat) port decreases under these conditions. This results in a lower vacuum at the diaphragm unit and timing is retarded by breaker plate springs from the normal road load point.

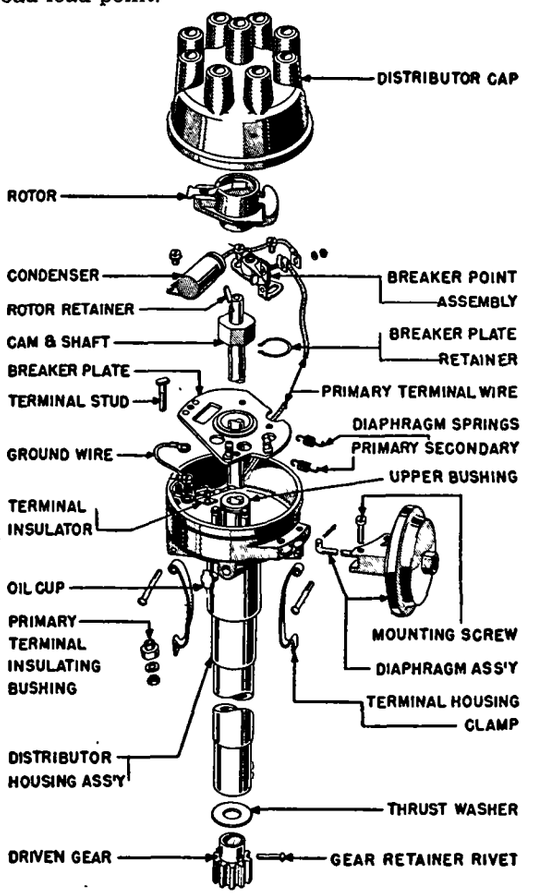

FORD V8 & MERCURY DISTRIBUT R (FORD 6 CYL. SIMILAR)

ADJUSTMENT: Distributor Breaker Gap & Contact Dwell, Spring Tension, Ignition Timing—*See individual car model pages in Car Model Section.*

Automatic Advance: Adjustment of breaker plate spring tension requires use of special Stroboscope to check performance. Spring tension is set at factory for desired advance performance and should not be disturbed unless this special equipment available.

►***CAUTION—Do not disturb spring tension adjustment (slotted eccentric spring posts on breaker plate) unless Stroboscope used to check advance performance.***

CHECKING SPARK ADVANCE (to detect restrictions in Carburetor vacuum passages resulting in incorrect advance & unsatisfactory engine performance): Use a vacuum gauge and tachometer and proceed as follows:

1) Set ignition timing using a Timing Light.

2) Disconnect vacuum line at carburetor. Use ⅜"x24 adapter fitting to connect vacuum gauge at carburetor.

3) Connect Tachometer to engine.

4) Run engine and measure vacuum at indicated engine speeds. Vacuum (in " of HG) should be as follows:

	Vacuum at Carburetor①	
Engine Speed	8HA (6 Cyl.)	8BA (V8)
800 RPM.	0.6"	2.5"
1000 RPM.	1.4"	4.15"

①—These figures are plus or minus 15%.

►*NOTE*—If gauge indicates full manifold vacuum, venturi passage is plugged. If gauge readings are low, throttle body passage is defective.

5) Increase engine speed and measure vacuum at following speeds:

	Vacuum at Carburetor①	
Engine Speed	8HA (6 Cyl.)	8BA (V8)
2200 RPM.	5.7"	5.55"
2400 RPM.	5.8"	5.40"

①—These figures are plus or minus 15%.

►*NOTE*—If vacuum gauge reading drops to less than 2", lower vacuum passage is plugged.

LUBRICATION: ***CAUTION—Oil or grease on contacts usually caused by use of wrong type or excessive amount of lubricant (see Distributor Upper Bushing Note below).***

Ford Distributors—Few drops engine oil in oiler every 1000 miles. Light film of M-4601 distributor grease on face of cam every 5000 miles or when contacts serviced.

Mercury Distributor—Few drops engine oil in oiler and light film of 8L-19575 grease on face of cam every 5000 miles.

►**Ford Distributor Upper Bushing Note**—Upper bushing is sintered (powder metal) type and upper surface is ordinarily finished smooth or becomes burnished in service which prevents excessive oil seepage through bushing (seepage at this point will cause oil to be thrown off in distributor by breaker cam). If this condition not corrected by wearing in (burnishing) of bushing and **if excessive oil seepage continues, replace bushing** (using bushing which has machined upper surface).

DELCO-REMY IGNITION SWITCHES

NOTE: For switch and coil numbers see "Ignition" on car model page.

DESCRIPTION:—These switches are used with lock-extension type coils. The ignition coil lead from the switch is enclosed in an armored cable permitting coil to be mounted at a distance from the switch, usually on the engine block or engine side of the dash. An accessory terminal is provided on the switch for the gasoline gauge, radio, heater, defroster, etc., connection. The armored cable end cap on ignition coil can be disconnected as described below (see Servicing Coil).

OPERATION:—The switch contact assembly is actuated by the lock cylinder so that the circuit is completed from the battery 'B' terminal to the ignition coil (through lead in armored cable extending to coil case) and to the accessory or Gasoline Gauge terminal on the switch case when the ignition key is turned to the 'on' position. NOTE—On some types, switch is grounded to case through special ground contact when in the 'off' position. This feature is not used on all switches.

SERVICING:—If tests outlined in Trouble Shooting section below indicate that switch is defective, it should be serviced by replacement. Lock cylinder and ignition coil can be removed and serviced separately. See Ignition Coil servicing data below.

TROUBLE SHOOTING:—Circuits through the switch can be tested with a test lamp and battery or other current source and test leads as follows: In each case test leads should be connected at points indicated and it should be noted whether test lamp lights or not.

1. Switch Off. Disconnect feed wire on switch. Test from feed terminal on switch to gasoline gauge or accessory terminal. Lamp should not light.
2. Switch On. Disconnect feed wire on switch. Test from feed terminal to gasoline gauge terminal. Lamp should light.
3. Switch On. Disconnect feed wire on switch. Test from feed terminal to breaker terminal on ignition coil. Lamp should light. If lamp does not light and previous test indicated that switch circuits were satisfactory, disconnect coil (as directed below) and test separately.
4. Switch On. Disconnect feed wire from switch and block open breaker contacts or disconnect breaker lead at coil. Test from feed terminal on switch to switch case. Lamp should not light. If lamp lights; switch, coil lead or ignition coil are grounded. Disconnect coil and test separately.

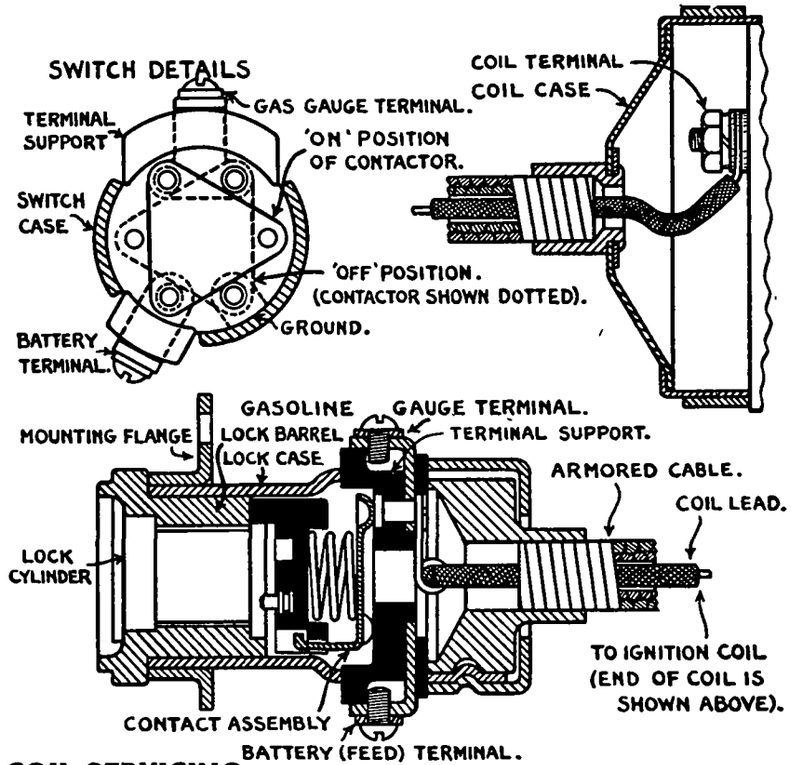

DELCO-REMY IGNITION COIL SERVICING

DISCONNECTING COIL:—**Early Types**—Entire unit should be taken off car disconnecting the switch leads and removing the switch from the instrument board mounting and removing the ignition coil from the dash mounting. Then bend up the ears that hold the cup on the end of the cable in place on the coil. This will expose the primary terminal at the base of the coil. Disconnect primary lead in the cable from this terminal, connect the new coil and bend down the ears so that the new coil is securely held on the cable.

Later Types—The armored cable end cap on ignition coil is locked in place by tang on cap which engages lock recess on coil case. Two locating lugs on cap fit in 'L' slots in coil case. To remove end cap, use special tool J-726 (a thin blade of spring steel .015"x ½"), insert tool between coil cap and case at a point approximately 1" to left of seam on coil case. The tool will press the large tang out of the groove in the coil case. Then turn cap counter-clockwise until it can be withdrawn. Disconnect coil lead wire at terminal on bottom of coil case. When installing, align locating lugs on cap with 'L' slots in coil case so that lock tang will engage lock recess in case when cap rotated in place.

TESTING COIL:—Remove end cap and disconnect switch lead at primary terminal on coil base. Then test coil as directed below. If tests indicate that coil is defective, it should be serviced by replacement.

1—Coil Primary Shorted. Check current draw of coil. If current exceeds 6 amperes at 6 volts, coil is probably shorted.

2—Coil Primary Grounded. Disconnect low tension lead to distributor and remove all leads at ignition switch. With switch turned on, connect 110 volt test lamp between primary coil terminal to ground (unpainted surface of case). Lamp should not light (grounded if lamp lights).

3—Coil Primary Open-Circuited. Connect 6 volt test lamp in series with low tension terminal at lower end of coil and wire to distributor. If lamp does not light with ignition switch turned on, an open-circuit is indicated.

4—Coil Secondary Grounded. Test from secondary terminal of coil to ground on coil case. Use 110 volt test lamp. Lamp should not light with coil disconnected from switch.

CORRECTION FOR WAX LEAKAGE AT HIGH TENSION TERMINAL:—Wax leaking from the high tension terminal of ignition coils does not always mean that coils have been damaged. Check ignition coils with Ignition Coil Tester and replace coils only if tests indicate that they are defective. Before re-installing ignition coil on the car, carefully clean away all wax and install special spring disc to prevent re-occurrence of wax leakage. Install spring disc as follows:

HIGH TENSION TERMINAL SPRING DISC INSTALLATION:—To prevent Wax Leakage at High Tension Terminal—Carefully clean all wax from inside high tension terminal, insert special spring disc, No. 1888391, in terminal with bulged side down, use ⅛" diameter rod and light hammer to seat disc solidly against bottom of high tension terminal insert. Disc seals terminal recess so that wax cannot leak out through terminal.

NOTE—List price of this No. 1888391 Spring disc is 1¢ each. Manufacturer's time allowance for entire operation of cleaning and testing coil and installing spring disc is .3 hour.

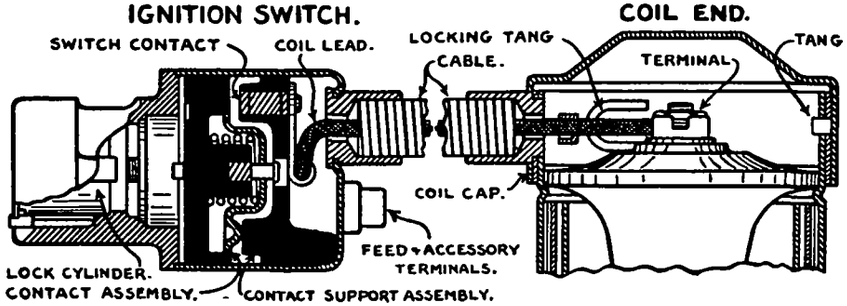

MITCHELLOCK TYPES 24-B, 24-R, 24-S, 42-B, 42-R

DESCRIPTION: Similar in design to earlier type Mitchellocks except that terminals located on lock case cover (see illustration). Switch types without armored cable (starting 1946) are provided with a terminal for the coil connection. Switches are furnished in the following types:

Armored Cable Types—24-B, 24-R, 24-S.

No Armored Cable Types—42-B, 42-R, 24-B (for 1941-47 Hudson).

'B' Type Switch—Has extra terminal for gasoline gauge or other accessory connection. Accessory terminal live only with switch 'on'.

'R' Type Switch—Same as above but switch has two 'on' positions; one for regular running with ignition on, and a second position with accessory terminal live but ignition off. This position may be used for gasoline gauge reading with engine not running or for radio control with car parked.

'S' Type Switch—Has additional terminal for Startix or other automatic starting device connection. Switch has two 'on' positions; one for regular running with Startix operative, and a second position with ignition on but Startix inoperative. This position used when checking timing or whenever automatic cranking not desired.

24-B Type used on 1941-47 Hudson—No armored cable used. This switch equipped with wire 7" long (LHD cars), 40" long (RHD cars) for coil connection.

SERVICING:—Manufacturer recommends that no attempt should be made to service internal switch parts since duplication of original factory assembly in the field is extremely difficult. Switches which prove defective should be replaced. To remove assembly, remove lock head from instrument panel, disconnect switch wires from terminals, remove ignition coil base by bending up 4 lugs on coil case which extend over coil base and lift off cover, disconnect wire lead from coil and remove ignition switch assembly. Lock cylinders can be serviced as directed below. NOTE—Switches without armored cable can be removed without disturbing connection at ignition coil.

Lock Cylinder:—To remove lock cylinder, remove lock head from instrument panel, disconnect ammeter lead, turn key to extreme right hand position, insert a pointed tool as far as possible into small hole in side of lock case to depress lock cylinder retainer fully, pull lightly on key to withdraw lock cylinder.

TROUBLE SHOOTING:—Test circuits through switch with lamp and test points. See description above for terminals which should be 'live' with switch key in each position. If switch circuits are completed correctly and ignition still unsatisfactory, remove ignition coil base (cable connection) by bending up 4 lugs on coil case which extend over coil base. This will expose coil terminal in base. Check circuit through switch and coil lead to this terminal. If circuit tests OK., disconnect coil, test coil and replace if necessary. If tests indicate switch defective, replace switch (see Servicing). NOTE—Ignition coils without armored cable connection have exposed terminals and base need not be disturbed.

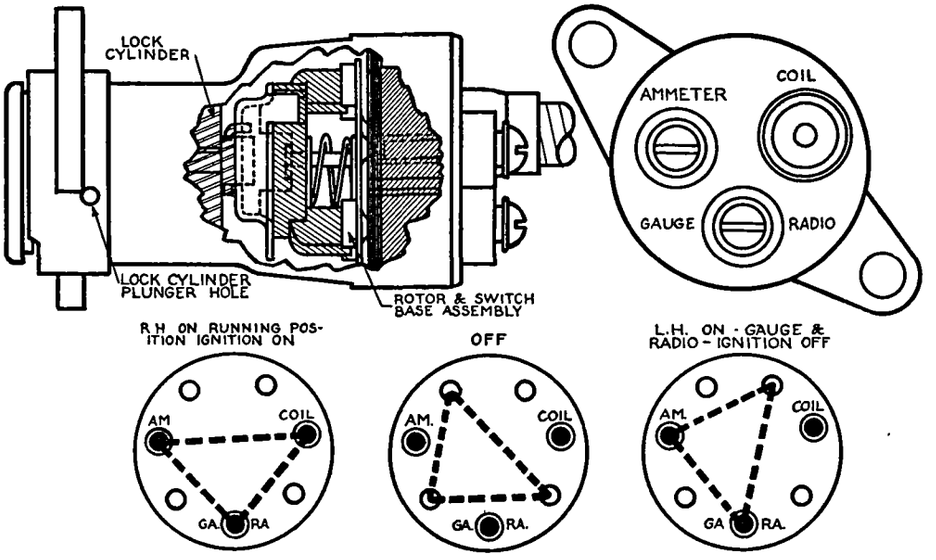

CIRCUITS THROUGH SWITCH SHOWN BY DOTTED LINES

MITCHELL IGNITION SWITCH TYPES 24-B, R; 42-B, R

MITCHELLOCK TYPE 30-R

IMPORTANT NOTE: This switch used on Chrysler and De Soto cars equipped with optional Vacamatic or Simplimatic Transmission **with Diaphragm Control.** This type ignition switch required for Diaphragm Control (Piston type control used on Late 1942 Cars does not require this type ignition switch). The Diaphragm Type Control was used on the following cars:

	Year	Model	Used On:
CHRYSLER SIX:	1941	C28 Royal & Windsor	All Cars
	1942	C34 Royal	Up to Serial No. 70,008,210
	1942	C34 Windsor	" " " " 70,510,806
	1942	C34 8-pass. Sedan	" " " " 70,510,806
	1942	C34 Town & Country	" " " " 70,510,806
CHRYSLER EIGHT:	1942	C36 Saratoga	" " " " 6,763,445
	1942	C36 New Yorker	" " " " 6,679,668
	1942	C37 Crown Imperial	" " " " 7,808,649
DE SOTO:	1941	S10 Custom & Deluxe	All Cars
	1942	S11 Custom & Deluxe	Up to Engine No. 18,084

DESCRIPTION: Similar to other 'R' Type ignition switches with armored cable described in preceding article except that switch has added pigtail lead (6" long black wire) which is grounded with switch "off" (see illustration). This provides ground for Transmission Solenoid Valve Circuit.

SERVICING & TROUBLE SHOOTING: Same as for other 'R' Type ignition switches with armored cable as given in preceding article except that additional test required for pigtail (transmission) lead on switch. This lead should ground within switch with switch in "off" position.

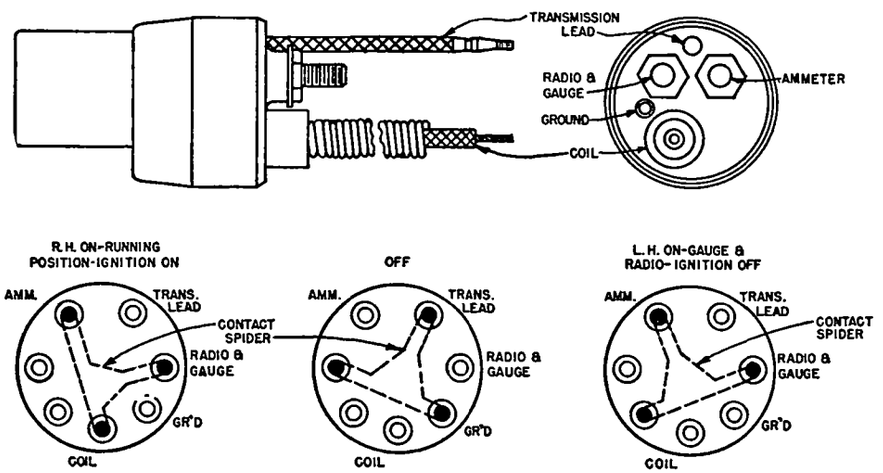

MITCHELL I NITI N SWITCH TYPE 30-R

CHEVROLET REVERSING SWITCH

ALL PASSENGER CAR & TRUCK MODELS (1941-48)—See Production Change

►**1941 PRODUCTION CHANGE:** Two different switch assemblies used as follows:

First Type—Reversing switch lever travel must be checked on first type switches to obtain proper switch action. A solid connecting rod used between switch lever and starter drive shift lever. See Checking and Adjustment following.

Second Type—Later type assemblies changed over first design as follows: Reversing switch is provided with a stop which limits forward motion of switch lever, providing proper travel of switch lever. A new connector link made of flat stamping with a spring loaded sliding section (preventing bending of lever) is used between switch lever and starter drive shift lever. No adjustment or checking necessary on this second type switch assembly. REPLACEMENT NOTE—Second type Reversing Switch Unit Part No. 1884827 can be installed on cars with first type switch. All parts must be replaced, switch and operating linkage. No parts interchangeable between first and second types.

►**1948 PRODUCTION CHANGE:** Reversing Switch used on first Passenger Cars and Trucks but later cars and trucks (with NEW DISTRIBUTOR and NEW LOWER-CAPACITY CONDENSER) do not have the reversing switch.
See instructions below if necessary to remove Reversing Switch from these early 1948 and previous cars and trucks.

DESCRIPTION: Ignition System with Reversing Switch. Special Ignition Coil & larger capacity Condenser, and a special insulated Distributor (used in conjunction with the new Reversing Switch. The distributor has a new type breaker cam with steeper angle to provide greater cam angle or dwell and more output with the new greater capacity ignition coil.

IMPORTANT—New condenser must not be used with previous type ignition coil or Distributor (capacity too great for this earlier type equipment).

Reversing Switch: Consists of a 4-terminal switch (1 terminal grounded by strap to starter frame through switch mounting bracket) connected between the ignition coil and the distributor (special two terminal, insulated type) and operated by a link connected to the starter pinion shift lever so that the direction of current flow across the breaker contacts is reversed each time the starter is operated to start the engine. This reversal of current causes a periodic reversal of the natural tendency of the contacts to pit (one contact) and build up a cone (opposite contact) so that smoother contact surface and longer contact life is assured. This switch is used in conjunction with a special insulated distributor of the following type:

Replacement Reversing Switch—All replacement switches are second type, non-adjustable (see 1941 Production Change Note above).

Distributor (Special Delco-Remy No. 1110090): The breaker plate is insulated from the distributor housing by insulated nuts located in the breaker plate lugs so that the stationary contact is not grounded through the distributor housing in the customary manner. A second terminal is provided on the distributor housing and this terminal is connected to the breaker plate (terminal stud is screwed in breaker plate lug). Both distributor terminals are connected to the Reversing Switch and these terminals are alternately connected to the ignition coil or to ground by the successive operations of the reversing switch. See illustration for switch wiring.

IMPORTANT BATTERY CABLE NOTE:—Positive battery cable at starting switch should lead straight up from terminal so that it will not interfere with starter shift lever when it is depressed to start engine.

Ignition Coil & Condenser: Special type greater capacity Ignition Coil (Delco-Remy 1115141, 1115142, or 1115380) and higher capacity condenser (Delco-Remy 1882239) are used on these cars in conjunction with the Reversing Switch. This coil and condenser must be used together.

CHECKING & ADJUSTMENT (First Type Switch): Turn the ignition on (ammeter will indicate ignition load), slowly press down on starter pedal while watching ammeter and observe sequence of switch operations as follows: Ammeter pointer will drop back to '0' as switch begins to operate and will then indicate ignition load as switch again completes ignition circuit, switch will then 'click' as ratchet locks in closed circuit position and further movement of the pedal will cause starter to operate. Reversing switch lever must not move more than ⅛" from point where 'click' is heard to point where starter begins to operate (measure movement in horizontal direction at reversing switch). If switch lever moves more than ⅛", adjust by bending switch connecting rod at the center so as to shorten the rod slightly. Recheck operation after adjustment completed to make certain that movement is not more than ⅛".

IMPORTANT NOTE—This adjustment is important as incorrect switch rod movement may cause switch to open ignition circuit so that engine can not be started.

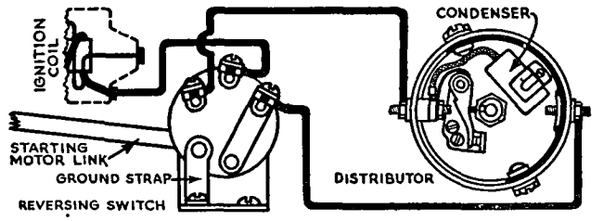

TROUBLE SHOOTING: Car manufacturer recommends that any trouble in ignition system be localized before replacing switch. If difficulty is in reversing switch, remove switch, test switch and if inoperative, replace switch. Following are other ignition troubles which would indicate defective switches where trouble outside switch:

1—Reversing Switch Leads Incorrectly Connected. Long wire in harness to reversing switch is from negative terminal on coil and must be connected to center terminal on switch. Incorrect wire connections will result in switch operating in one position only (distributor will short out on one side).

2—Distributor Breaker Plate Terminal Shorting Against Distributor Body. The breaker plate terminal (on engine side of distributor) insulated from distributor body by shoulder type Bakelite washer which centers terminal screw in opening. Some distributors equipped with flat Bakelite washer which allowed screw to touch body resulting in terminal shorting at this point. This has same effect as a reversing switch making contact on one side only.

3—Reversing Switch Connector Lever Incorrectly Connected. Connector lever should be assembled to switch operating lever with operating lever pointing down. If operating lever in upward position, switch lever will not rest against stop in forward travel. Resulting over-travel of operating lever will cause erratic switch contact.

4—Loose Terminal Connections. Loose connections at ignition coil, distributor, or reversing switch can cause poor contact. Starter pedal may have to be depressed several times in order to secure contact. Resulting poor contact may be incorrectly thought to be inoperative reversing switch.

REMOVAL OF REVERSING SWITCH

REMOVAL OF REVERSING SWITCH FROM CARS & TRUCKS: If necessary to remove the reversing switch on models equipped with this unit, make all changes as noted below (CAUTION—Condenser must be changed to new lower capacity unit when ignition system operated without reversing switch):

1. Remove Reversing Switch from Starter—Disconnect wires at reversing switch, remove switch from starter. Grind off unthreaded portion of switch attaching screws and re-install these screws in starter frame to plug holes.

2. Discard Reversing Switch Harness—Disconnect reversing switch wires at distributor and ignition coil and discard this harness.

3. Install New Coil-to-Distributor Lead—Connect new low tension wire, Part No. 5288968, between ignition coil terminal and outer terminal (away from engine) on distributor.

4. Install new lower-capacity Condenser—Remove and discard original .3 mfd. condenser, No. 1882239, (can be identified by figure .3 stamped on terminal clip). Install new .2 mfd. condenser, No. 1869704, (can be identified by longer lead), using same mounting clamp bracket.

►***CAUTION—This lower-capacity condenser must be used in all ignition systems without reversing switch.***

5. Ground Distributor Breaker Plate—Disassemble inner (toward engine) distributor terminal and remove insulator washer from terminal post. Remove paint and thoroughly clean distributor housing around terminal post so that a good ground secured at this point, re-install flat washer and nut on terminal post (omission of insulator washer will ground terminal to housing when nut tightened).

AUTO-LITE TC-4100, TC-4200 REGULATORS

DESCRIPTION:—The Two-Charge Regulator consists of a relay which cuts in a fixed resistance unit in series with the generator field when the generator voltage reaches the maximum for which the unit is set and cuts out this resistance when the generator voltage falls to the minimum for the which the unit is set. As generator voltage on third-brush control type generators rises as the battery becomes charged, the regulator provides a higher charging rate for a discharged battery and reduces the charging rate as the battery becomes charged. The resistor is a fixed unit and is merely cut in or out of the field circuit as the regulator contacts open and close. This provides two definite charging rates, the high rate being secured with the resistor shorted out of the field circuit (regulator contacts closed), and the lower rate with the resistor in series with the field coils (regulator contacts open).

OPERATION:—When the generator voltage reaches the maximum for which the unit is set, the current flow through the shunt winding of the regulator opens the regulator contacts cutting the resistance in the field circuit (resistor unit is connected across the contacts and is short-circuited when the contacts are closed). The anti-flutter winding (second coil winding) also comes into action when the contacts open. The contacts remain open until the generator voltage falls to the minimum for which the unit is set and then close, shorting out the resistance so that the higher charging rate is resumed. A bi-metal spring support extension on the armature compensates the regulator for temperature variations.

PERFORMANCE AND ADJUSTMENT:—Regulator should perform in accordance with this table:

Models TC-4101-A, TC-4103-A, TC-4201-A, TC-4202-A.

Contact Opening Voltage	Temperature	Contact Closing Voltage
8.38-8.82	50°F.	6.58-6.98
8.32-8.75	60	6.52-6.92
8.26-8.67	70	6.46-6.86
8.20-8.60	80	6.40-6.80
8.13-8.54	90	6.34-6.76
8.07-8.50	100	6.29-6.71
8.02-8.44	110	6.24-6.67

Model TC-4102A

Contact Opening Voltage	Temperature	Contact Closing Voltage
7.98-8.42	50°F.	6.58-6.98
7.92-8.35	60	6.52-6.92
7.86-8.27	70	6.46-6.86
7.80-8.20	80	6.40-6.80
7.73-8.15	90	6.34-6.76
7.67-8.10	100	6.29-6.71
7.61-8.05	110	6.24-6.67

NOTE:—All models are regularly equipped with Part No. TC-51 resistance unit of 1.85-2.10 ohms.

Regulators should be carefully tested (with full allowance being made for air temperature) before adjustments are made. See test procedure below. The manufacturers recommends that units which test defective or out of adjustment be replaced rather than adjusted or repaired in the field. Adjustment instructions are as follows:

(1) **Contact point opening (from high to low charging rate).** Adjust armature spring tension by bending the lower spring bracket (see illustration). Do not unsolder nut, any necessary adjustment can be made by bending the spring bracket. Be careful not to distort the bronze armature hinge. Distortion of hinge will cause unsatisfactory regulator operation. Check performance after adjusting.

(2) **Contact point closing (from low to high charging rate).** Adjust brass cam, which acts as armature stop and controls contact gap (see illustration). After completing adjustment, apply a small amount of air-drying varnish to cam to prevent it slipping in service. Check performance after adjusting.

TESTING:—**On the car.** Connect a variable resistance in charging lin to control generator voltage. Test voltmeter should read and be accurate to within .1 volt. Before test is made, car should stand in room with uniform temperature for at least on hour. Check air temperature when test is made, by thermometer placed about one inch from regulator. Regulator cover must be in place while testing. Regulator should perform in accordance with figures given in Performance Section above.

Bench Testing. Regulator should preferably be tested on bench. Connect voltmeter between terminal 'A' on regulator and ground. Ground one terminal of a 12 volt battery. Connect the other battery terminal to one side of a variable resistance and ground the other resistance terminal. Connect the sliding contact of the resistance to the 'A' regulator terminal. Connect a 32 cp. 6 volt lamp between the 'F" regulator terminal and a center tap on the battery (supplying 6 volts). Regulator action can now be checked by varying battery voltage by means of the variable resistance. Observe all temperature precautions noted in paragraph above. Resistance unit for this test sh uld be 12 volts, 48-50 ohm type.

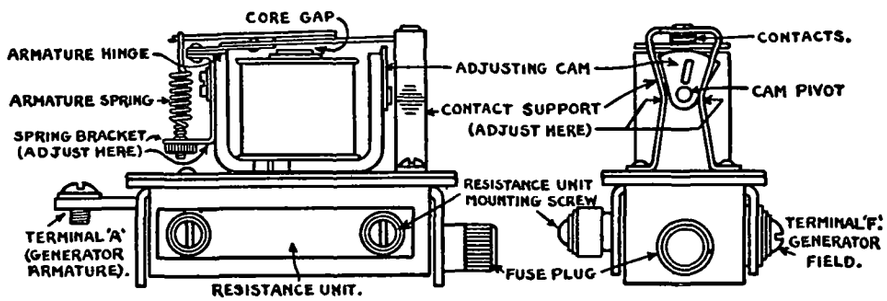

SPECIFICATIONS:—**Contact Gap**—.005" minimum. See contact point closing adjustment above.

Core Gap:—.030" plus or minus .001" with contacts closed. Adjusted by expanding or contracting upper contact support bridge. If core gap is greater than specified, the temperature compensation feature is increased. If core gap is less than specified, the contacts tend to open at lower voltages with extreme temperatures and performance will not be as noted in performance table.

Resistance Unit:—Resistance units are furnished in following standard sizes:

Resistance	Marking	Part No.
1.85-2.10 ohms	1.85	TC-51
.90-1.1 "	1	TC-51A
2.75-2.95 "	2.85	TC-51B

Coils—Shunt winding should test 43-48 ohms (between generator 'A' terminal and ground). Anti-flutter winding should test 36-44 ohms (between 'F' terminal and ground with contacts open and resistance unit disconnected). All tests should be made at 75°F.

NOTE:—When regulator is mounted on car in any other location than on generator field frame, the armature should be vertical (viewed along length). Excessive vibration should be avoided. Regulator is grounded through mounting and a good ground should be provided (remove paint and grease from under mounting lugs).

FUSE:—5 ampere (all models). In knurled cup on one end of regulator base (see illustration).

AUTO-LITE TC-4300 REGULATORS

DESCRIPTION:—This type unit consists of a Cutout Relay and Two-Charge Regulator or Current Regulator combined in a single case. Types used as standard or optional equipment on car models as follows:

Car Model	Regulator	Generator
Chrysler C7, C8, C9, C10, C11 ('36)	TC-4301-A	GAR-4608A-5,B-5
Cord 810 (1936)	TC-4302-A	GAR-4630-5
Cord 810 (1936) 812 (1937)	TC-4306-A	GBR-4603-4
De Soto S1, S2 (1936)	TC-4301-A	GAR-4608A-5
Dodge D2 (1936)	TC-4301-A	GAR-4608-5,A-5
Hudson 63, 64, 65, 66, 67 (1936)	TC-4304-A	GAR-4701-6
Hupmobile 621-N (1936)	TC-4302-A	GAR-4620-5
Hupmobile 825H (1938) Exp.	TC-4302-A	GAR-4620-5
Lincoln V-12 (1935-36-37)	TC-4302-A, 5-A	GBC-4103
Lincoln V12 (1938-39-40)	TC-4305-A	GBC-4103
Nash 3620, 3680 (1936)	TC-4313-A	GBR-4602-4
Packard 120B (1936)	TC-4302-A	GAR-4611A-5
Packard 120B (1936) Later cars	TC-4302-B	GBR-4601-5
Plymouth P2 Deluxe (1936)	TC-4301-A	GAR-4608E-5
Studebaker 3A, 4A ('36) Radio	TC-4302-A	GAR-4609A-4
Studebaker 5A, 6A ('37) Radio	TC-4302-A	GCM-4802A-4
Terraplane 62 (1936)	TC-4304-A	GAR-4701-6
Willys Comm'l. (1938-39-40-41)	TC-4317-A	GCS-4809A-5

OPERATION:—Regulator contacts are normally closed. When the generator voltage reaches the maximum for which the unit is set, the current flow through the regulator winding creates a magnetic field of sufficient strength to open the regulator contacts. This cuts the resistor in the field circuit and reduces the charging rate to the low rate. The resistor unit is connected across the regulator contacts and is short-circuited with the contacts closed. The generator continues to charge at the low rate until the voltage drops to the minimum for which the unit is set, the contacts then close, short-circuiting the resistor and the generator again charges at the high rate. A magnetic shunt of nickel alloy is used to compensate for temperature changes and operating voltages are not uniform for all temperatures (see table below).

PERFORMANCE & ADJUSTMENT:—Regulators should perform as shown below. Regulators should be carefully tested with allowance being made for temperature before any adjustments are made. Check mechanical specifications, connect accurate voltmeter at battery terminal of unit, if necessary insert small resistance in charging circuit (approximately .25 ohms) to bring generator voltage up to regulator operating point. Cycle regulator by increasing generator speed up to point where regulator contacts just open and then decreasing speed to point where contacts just close before taking readings. All tests should be made with regulator cover in place.

Regulator Model	Specifications Cutout Relay	Regulator
TC-4301A, 1B, 2A, 2B, 5A, 5F, 6A, 8A, 9A	Table #1	Table #1
TC-4303A, 3B, 3C, 3E, 3F	Table #4	Table #5
TC-4303D, 3DS, 3D-2; TC-4402AM	Table #5	Table #6
TC-4303D-1	Table #6	Table #10
TC-4304A, 7A	Table #1	Table #2
TC-4305B, 5C, 5D, 5E	Table #2	Table #4
TC-4307B	None	Table #7
TC-4310A, 10B, 15A, 18A, 21A, 22A	Table #4	Table #5
TC-4311A, 12A, 13A, 14A, 16A, 17A, 19A, 20A, 20B	Table #1	Table #1
TC-4323A, 23B, 23C, 25A; TC-4401AM	Table #1	Table #3
TC-4324A	Table #2	Table #4
TC-4326A, 29A	Table #2	Table #8
TC-4326B, 27A, 27B, 27C, 27D, 30A, 30B	Table #3	Tabl #9
TC-4328A	Table #1	Table #1
TCA-4001	None	Table #11

CURRENT REGULATOR (TC-4300 REGULATORS)

Table #1

Contact Opening Temperature	Voltage
50° F.	8.40-8.90
60	8.32-8.82
70	8.25-8.75
80	8.18-8.68
90	8.10-8.60
100	8.03-8.53
110	7.96-8.46

Contact Closing

1.2-1.4 volts below Opening Voltage for the same temperature.

Table #2

Contact Opening Temperature	Voltage
50° F.	8.14-8.64
60	8.07-8.57
70	8.00-8.50
80	7.93-8.43
90	7.86-8.36
100	7.79-8.29
110	7.72-8.22

Contact Closing

1.2-1.4 volts below Opening Voltage for the same temperature.

Table #3

Contact Opening Temperature	Voltage
50° F.	7.19-7.49
60	7.14-7.44
70	7.10-7.40
80	7.06-7.36
90	7.01-7.31
100	6.97-7.27
110	6.93-7.23

Contact Closing

50°F	6.09-6.39
60	6.04-6.34
70	6.00-6.30
80	5.96-6.26
90	5.91-6.21
100	5.87-6.17
110	5.83-6.13

Table #4

Contact Opening Temperature	Voltage
50° F.	7.90-8.40
60	7.82-8.32
70	7.75-8.25
80	7.68-8.18
90	7.60-8.10
100	7.53-8.03
110	7.46-7.96

Contact Closing

1.8-2.0 volts below Opening Voltage for the same temperature.

Table #5

Contact Opening Temperature	Voltage
50° F.	16.90-17.70
60	16.74-17.54
70	16.60-17.40
80	16.46-17.26
90	16.30-17.10
100	16.16-16.96
110	16.02-16.82

Contact Closing

2.4-2.8 volts below Opening Voltage for the same temperature.

Table #6

Contact Opening Temperature	Voltage
50° F.	15.75-16.15
60	15.60-16.00
70	15.45-15.85
80	15.30-15.70
90	15.15-15.55
100	15.00-15.40
110	14.85-15.25

Contact Closing

2.0-2.4 volts below Opening Voltage for the same temperature.

Table #7

Contact Opening Temperature	Voltage
50°F	7.09-7.29
60	7.04-7.24
70	7.00-7.20
80	6.96-7.16
90	6.91-7.11
100	6.87-7.07
110	6.83-7.03

Contact Closing

50°F	5.99-6.19
60	5.94-6.14
70	5.90-6.10
80	5.86-6.06
90	5.81-6.01
100	5.77-5.97
110	5.73-5.93

Table #8

Contact Opening Temperature	Voltage
50°F	7.58-7.98
60	7.51-7.91
70	7.45-7.85
80	7.38-7.78
90	7.32-7.72
100	7.26-7.66
110	7.20-7.60

Contact Closing

50°F	5.93-6.22
60	5.86-6.16
70	5.80-6.10
80	5.73-6.03
90	5.66-5.96
100	5.60-5.90
110	5.54-5.84

Table #9

Contact Opening Temperature	Voltage
50°F	7.38-7.68
60	7.31-7.61
70	7.25-7.55
80	7.18-7.48
90	7.12-7.42
100	7.06-7.36
110	7.00-7.30

Contact Closing

50°F	5.93-6.22
60	5.86-6.16
70	5.80-6.10
80	5.73-6.03
90	5.66-5.96
100	5.60-5.90
110	5.54-5.84

Table #10

Contact Opening Temperature	Voltage
50°F	14.76-15.36
60	14.62-15.22
70	14.50-15.10
80	14.36-14.96
90	14.24-14.84
100	14.12-14.72
110	14.00-14.60

Contact Closing

50°F	11.86-12.44
60	11.72-12.32
70	11.60-12.20
80	11.46-12.06
90	11.32-11.92
100	11.20-11.80
110	11.08-11.68

Table #11

Contact Opening Temperature	Voltage
50°F	14.64-15.14
60	14.57-15.07
70	14.50-15.00
80	14.43-14.93
90	14.36-14.86
100	14.29-14.79
110	14.22-14.72

Contact Closing

50°F	12.64-13.14
60	12.57-13.07
70	12.50-13.00
80	12.43-12.93
90	12.36-12.86
100	12.29-12.79
110	12.22-12.72

CONTINUED ON NEXT PAGE

AUTO-LITE TC-4300 REGULATORS (C ntinued)

Testing:—On the Car. Allow car to stand in room with uniform temperature for one hour before testing. Check air temperature when test is made by placing thermometer about one inch from regulator winding. Regulator cover must be replaced when tests are run. Increase generator speed slowly and note voltmeter reading when regulator contacts open (connect small resistance in charging line if necessary in order to secure regulator action). Decrease speed, note when contacts close. Adjust as follows:

(1). Contact Opening Point (from high to low charging rate)—Adjusted by bending lower spring bracket to increase or decrease armature spring tension. Bracket should be bent down (increase spring tension) to raise operating voltage, or up (decrease spring tension) to lower operating voltage. Be careful not to distort armature hinge (armature must move freely).

(2). Contact Closing Point (from low to high Charging Rate)—Adjusted by changing position of brass cam which controls core gap with contacts open (lower armature stop). Turn cam to increase core gap to increase operating voltage, or decrease core gap to decrease operating voltage. Apply small amount of air-drying varnish after completing adjustment tc prevent cam from moving in service. Check performance after adjusting.

After adjustments have been completed, regulator should be cooled off tc room temperature and performance rechecked.

SPECIFICATIONS:—Contact Gap—.005" minimum. See contact closing adjustment above and core gap adjustment below.

Core Gap—.036" ± .002" (TC-4305B), .048" ± .001" (TC-4323A, 23B, 23C, 25A), .045" ± .001" (all other models). Adjust by expanding or contracting upper contact support bridge to raise or lower the upper contact.
NOTE—On first models with two holes punched in the nickel plate, core gap was set at .041"±.001".

Coil Resistance—To check winding, disconnect coil lead at point where it is soldered to cutout relay yoke. Coil should test 29-33 ohms at 77°F. (6 volt units), 102-112 ohms at 70-80°F. (12 volt units).

Field Resistance Units:—Resistors consist of carbon blocks mounted on side of regulator base plate. Resistor is marked with figure indicating nominal resistance in ohms as follows:

Resistor Unit Specifications

Regulator Model	Resistor Part No.	Marking
TC-4301A, 1B	TC-51G	1.4
TC-4302A, 3C, 4A, 5A, 5B, 5C, 5F, 6A, 7A, 8A, 9A	TC-51	1.85
TC-4302B, 20A	TC-51E	1.1
TC-4303A, 3B, 5E, 10A, 15A	TC-51B	2.85
TC-4303D, 3DS	TC-51R	11.0
TC-4303D-1, 3D-2, 3E, 3F, 5D	TC-51P	5.5
TC-4310B, 11A, 12A, 13A, 14A, 16A, 17A, 18A, 19A	TC-51	1.85
TC-4320B, 22A, 25A, 26A, 27C, 28A	TC-51	1.85
TC-4321A, 23C, 24A, 26B, 27A, 27B, 29A; TC-4401AM	TC-51B	2.85
TC-4323A	TC-51T	20.0
TC-4323B	TC-51U	7.0
TC-4327D, 30A	TC-51G	1.4
TC-4330B, TC-4402AM	TC-51P	5.5

Field Fuse:—In knurled plug on side of regulator base plate (see illustration). When replacing fuse make certain that spring is in place in plug behind fuse to insure good fuse contact with terminal plate.

Fuse Capacity—5 ampere, No. X-842 (all models except TC-4314A, 15A, 20A, 20B), 7½ ampere, No. X-844 (Models TC-4314A, 15A, 20A, 20B only).

CUT UT RELAY (TC-4300 REGULATORS)

The Cutout Relay used with the Type TC-4300 series Regulators is similar in design and operation with previous types. See separate article for complete description and adjustments for Cutout Relays. Specifications are as follows:

Contact Gap—.015-.045". Adjust by bending upper armature stop.

Air Gap—.015" plus .015" or minus .005" with contacts closed. Adjust by bending lower contact support to raise or lower contact.

Contact Closing (Cut-in) Point—See specification table below. Charging current must not exceed 5 amperes when contacts close.

Contact Opening (Cut-out) Point—See specification table below. These specifications apply after charging current of 15 amperes has passed through winding and with open-circuit battery voltage of approximately 6.3-6.8 volts.

Specification Table	Closing Voltage	Opening Current (Neg.)
Table #1	6.5-7.25 volts	.5-2.5 amperes
Table #2	6.4-7.0 volts	1.0-3.5 amperes
Table #3	6.4-6.9 volts	1.0-3.5 amperes
Table #4	13.0-14.5 volts	.5-2.0 amperes
Table #5	13.0-13.5 volts	.5-2.0 amperes
Table #6	12.8-13.8 volts	.5-2.5 amperes

TWO-CHARGE CURRENT REGULATOR.

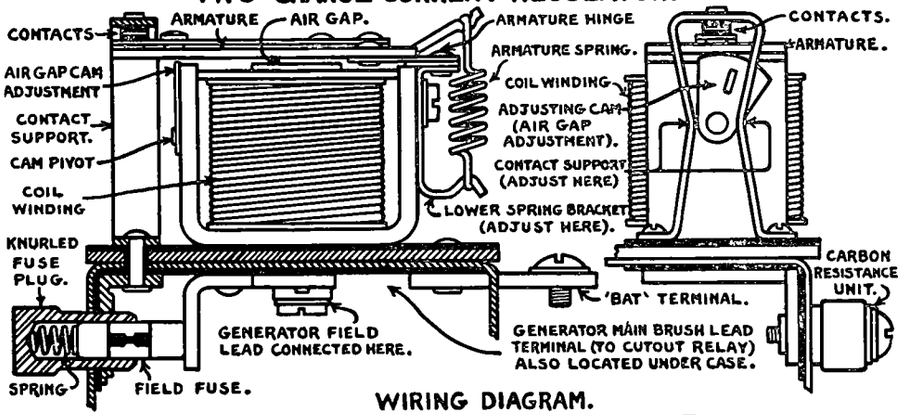

WIRING DIAGRAM.

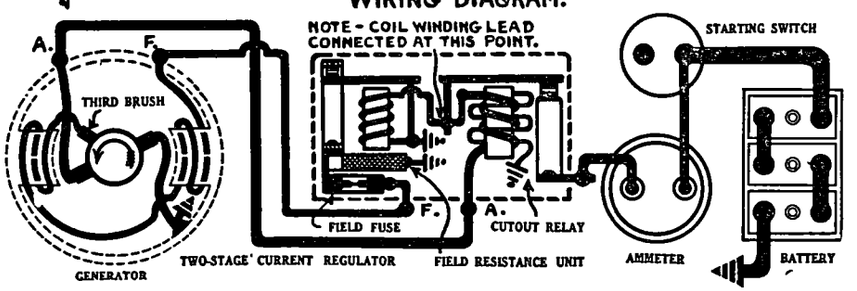

AUTO-LITE VRB, VRD, VRE, VRF, VRJ, VRK, VRO REGULATORS

These Regulators are standard or special equipment on following car models:

VOLTAGE & CURRENT REGULATORS

Car Model	Generator	Regulator	Grounded Ter.
Chrysler C16 (1937)	GBW-4803A,C	VRB-4005A	Pos.
Chrysler C14, C15, C17 ('37)	GCO-4801C,D	VRB-4004B	Pos.
Chrysler C14 ('37) Exp.	GCE-4804-A	VRB-4004A	Pos.
Chrysler All (1937) Police	GCB-4802A,B	VRB-4004C	Pos.
Chrysler C18 (1938)	GDA-4801A, B	VRB-4004B	Pos.
Chrysler C19, C20 (1938)	GCO-4801C,D	VRB-4004B	Pos.
Chrysler All (1938-39) Police	GCB-4802A	VRB-4009A	Pos.
Chrysler C22, C23, C24 ('39)	GDA-4801A	VRB-4004B	Pos.
DeSoto S3 (1937)	GBW-4803A,B,C	VRB-4005A	Pos.
DeSoto S3 (1937) Police	GCB-4802A,B	VRB-4004C	Pos.
DeSoto S5 (1938)	GDA-4801A,B	VRB-4004B	Pos.
DeSoto S5 ('38), S6 ('39) Police	GCB-4802A	VRB-4009A	Pos.
DeSoto S6 (1939)	GDA-4801A	VRB-4004B	Pos.
Dodge D5 (1937)	GBW-4803A,C	VRB-4005A	Pos.
Dodge D5 (1937) Police	GCB-4802A,B	VRB-4004C	Pos.
Dodge D8 (1938)	GDA-4801A,B	VRB-4004B	Pos.
Dodge D8 ('38), D11 ('39) Police	GCB-4802A	VRB-4009A	Pos.
Dodge D11 (1939)	GDA-4801A	VRB-4004B	Pos.
Nash 3720, 3780 (1937)	GCO-4802,A	VRB-4002D	Pos.
Nash 3820, 3880 (1938)	GCO-4802B,C	VRB-4010A	Pos.
Nash 3920 (1939)	GCO-4802C	VRB-4010A	Pos.
Nash-Lafayette 3710 ('37)	GCO-4802,A	VRB-4002D	Pos.
Nash-Lafayette 3810 ('38)	GCO-4802C	VRB-4010A	Pos.
Nash-Lafayette 3910 (1939)	GCO-4802C	VRB-4010A	Pos.
Packard 1500,1,2 (1937)	GCO-4803A	VRB-4002D	Pos.
Packard 1507, 8 (1937)	GCE-4803A	VRB-4008AP	Pos.
Packard 1603,4,5 (1938)	GCO-4803A	VRB-4008C	Pos.
Packard 1607, 8 (1938)	GCE-4803A	VRB-4008AP	Pos.
Packard 1703,3A,5 (1939)	GCO-4803A,6A,7A,8A	VRB-4012A-1	Pos.
Packard 1707,8 (1939)	GCE-4803A	VRB-4008-AP	Pos.
Packard 1800,1,1A (Early '40)	GEA-4801A	VRB-4012B-1	Pos.
Plymouth P3,4 ('37) Police	GCB-4802A,B	VRB-4004C	Pos.
Plymouth P4 (1937) Taxi	GBW-4803E	VRB-4005A	Pos.
Plymouth P5, 6 ('38) Police	GCB-4802A	VRB-4009A	Pos.
Plymouth P5, 6 ('38) Police	GDA-4801A	VRB-4004B	Pos.
Plymouth P8 (1939) Spec.	GCE-4804B	VRB-4004A	Pos.
Studebaker Comm. 9A (1939)	GDA-4804A	VRB-4012A	Pos.

VOLTAGE REGULATORS

Hudson 73,4,5,6,7 (1937)	GCJ-4803A	VRD-4003A, B	Pos.
Hudson 83,4,5,7 (1938)	GDF-4802A	VRD-4008A	Pos.
Hudson 89 (1938) Radio	GDF-4802A	VRD-4008A	Pos.
Hudson 90,91,98 ('39) Radio	GDS-4801A	VRD-4008A	Pos.
Hudson 92,3,5,7 (1939)	GDS-4801A	VRD-4008A	Pos.
Hudson 40,8 (Early '40)	GDS-4801A	VRD-4008B	Pos.
Hudson 41,3,4,5,7 (Early '40)	GEC-4801A	VRD-4008B	Pos.
Hupmobile All Models (1938-40)	GDF-4804A	VRD-4009A	Pos.
Nash 3920, 3980 (1939)	GDS-4802A,B	VRD-4010A	Pos.
Nash-Lafayette 3910 Del. ('39)	GDS-4802A	VRD-4010A	Pos.
Packard 115C, 120C (1937)	GCJ-4801A	VRD-4001A	Pos.
Packard 1601,1A,2 ('38) First	GCJ-4807A-2	VRD-4005A	Pos.
Packard 1601,1A,2 ('38) Later	GCJ-4807A-2	VRD-4001B	Pos.
Packard 1700 (1939)	GCJ-4807A2,10A2	VRD-4001B	Pos.
Packard 1701,1A,2 (1939)	GCJ-4807A2,10A2	VRD-4001B	Pos.
Plymouth P4 (1937)	GCJ-4802A	VRD-4002A	Pos.
Plymouth P6 (1938)	GDF-4801A	VRD-4002B	Pos.
Plymouth P7, P8 (1939)	GDF-4801A	VRD-4002B	Pos.
Studebaker 7A, 8A (1938)	GCJ-4808A	VRD-4006A	Pos.
Studebaker 7A, 8A (Late '38)	GDF-4804B	VRD-4006B	Pos.
Studebaker Champion G ('39)	GDF-4812A	VRD-4006B	Pos.
Terraplane 71 ('37) Radio	GCJ-4804A-1	VRD-4003A, B	Pos.
Terraplane 72 (1937)	GCJ-4803A	VRD-4003A, B	Pos.
Terraplane 80,81,88 ('38) Radio	GDF-4803A-1	VRD-4008A	Pos.
Terraplane 82 (1938)	GDF-4802A	VRD-4008A	Pos.
Willys-Overland 39 Del. ('39)	GCJ-4811A	VRD-4004A	Neg.

IMPORTANT CHANGES:—Voltage Setting (New Regulator Coil). Voltage Regulator coil changed beginning with Regulator Serial No. 8R-000001. This new coil requires different regulator voltage settings (new settings used also on units before 8R-000001 when this new coil installed). See Test Specifications below for settings for all models.

Regulator Resistance Units. Resistor units changed on some Voltage Regulators and second resistance unit added on some Voltage-Current Regulators. See Resistor specifications below for complete data on all types.

GROUNDED TERMINAL NOTE:—Each regulator designed to be operated with particular battery terminal grounded as noted in table above. See that battery is correctly grounded, and polarize generator when it is disconnected or removed from car (see Polarizing directions under Current Regulator Testing and Adjusting below).

TYPE:—Both the vibrating Voltage Regulators and the vibrating Current-Voltage Regulators are made in two general designs 'Small Type' and 'Large Type.' See following article on Truck & Bus Type Regulators for data on Large Type.

Regulator Model	Type	Voltage
All "VRB" Types	Current-Voltage Regulator	6 volts
All "VRD" Types	Voltage Regulator	6 volts
All "VRE" Types	Current-Voltage Regulator	12 volts
All "VRF" Types	Voltage Regulator	12 volts
All "VRJ" Types	Current-Voltage Regulator	6 volts

DESCRIPTION & OPERATION:—Voltage Regulator. Consists of a conventional Cutout Relay and a new type Vibrating Voltage Regulator in a single case. Voltage Regulator has a single winding. When the generator voltage reaches the value for which the regulator is set, the regulator armature vibrates, opening and closing the regulator contacts, and cutting the resistance unit in and out of the field circuit. This action holds the generator voltage constant. These voltage Regulators are used only with third-brush control generators and the maximum output is controlled by the third brush in the usual manner.

CONTINUED ON NEXT PAGE

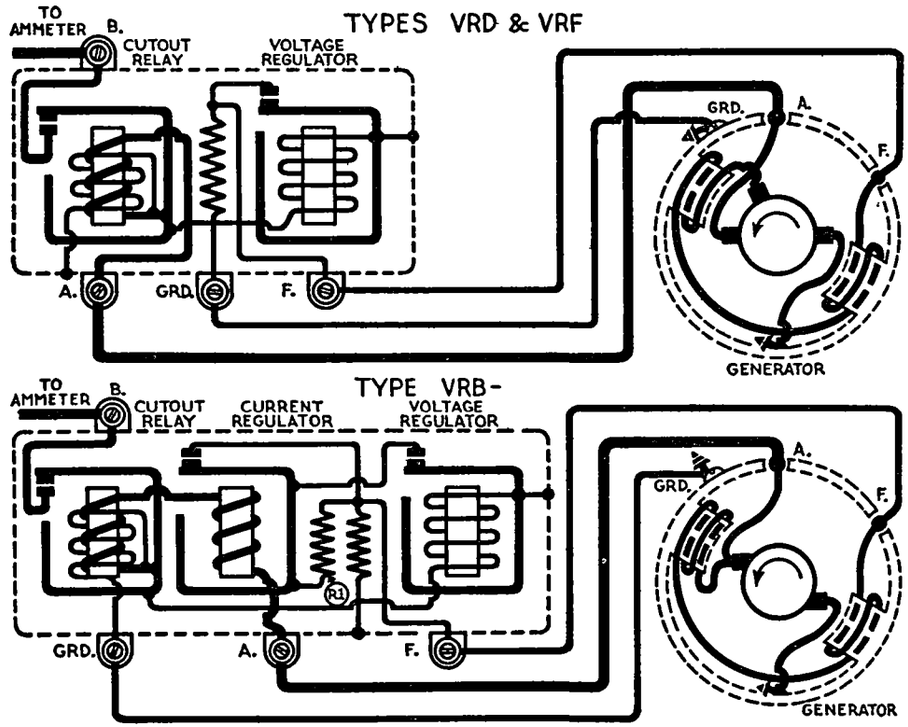

VRB, VRE NOTE

Resistor "R1" not used n units before N . 8R-000001 except on VRB-4008-A.

AUTO-LITE VRB, VRD, VRE, VRF, VRJ, VRK, VRO REGULATORS (C ntinued)

Current-V ltage Regulators. Consist of the same Cutout Relay and Voltage Regulator units described above and an additional Current Regulator unit which controls the maximum generator output. These types used with two-brush shunt wound generators only. Current Regulator has a single winding connected in series so that the entire generator output goes through this winding. In operation on the car, when the generator output (entire current) reaches the value for which the regulator is set, the regulator armature vibrates, opening and closing the regulator contacts, and cutting the resistance unit in and ut f the field circuit so that the output is held constant. The Current and V ltage Regulator contacts are connected in series so that the same resistance is used for both current and voltage control (when one resistance used—see Resistor data below for data on types using two resistors).

►**REGULATOR SEAL CAUTION:** Covers are sealed and units are "exchanged" if seals are not broken. Performance can be checked on the car without breaking seals or rem ving covers as directed below. Complete bench testing and adjusting directions (requiring cover removal) are given in separate section below.

TESTING (ON THE CAR):—If regulator action not satisfactory, check these points first:

1. Generator Circuits. See that generator and regulator properly connected (see car wiring diagram) and that all connections are clean and tight. Examine charging line connections, check for high resistance in charging circuit. Voltage drop between generator and regulator and between regulator and battery must not exceed .1 volt when generator is charging 10 amperes. At this same charging rate, there should be no drop on voltage as measured between regulator base and battery ground post, generator frame and regulator base, and generator frame and battery ground post.

2. Generator Type & Performance. See that generator and regulator are correct types (special types designed to be used together, will not operate satisfactorily if different type generator or regulator used). Check generator performance with regulator out of circuit. Generator should produce rated output (see Performance Table on car model page). Examine commutator and brushes.

3. Battery. See that battery is in good condition and fully charged. High charging rate may be caused by overheated or discharged battery. Low charging rate may be caused by defective or sulphated battery plates. Check battery open-circuit voltage and specific gravity.

VOLTAGE REGULATOR TEST ON CAR

V ltage Regulator (All Series). Connect test ammeter (graduated to read to 1 ampere) in charging line at 'B' terminal of regulator using short heavy leads. Connect test voltmeter (graduated to read to .1 volt) between 'B' and 'GD' terminals (or ground on regulator frame). See that car battery is fully charged (specific gravity reading of 1.275-1.280). Operate generator at speed equivalent to 30 M.P.H. for at least 15 minutes before taking meter readings. Ammeter should show reading less than maximum noted on regulator nameplate. After 15 minutes, note voltmeter reading which should agree with specifications given below. IMPORTANT NOTE—Voltage setting given for regulators "After Serial No. 8R-000001" apply also to units before this number if the new regulator coil winding (10.4-11.2 ohms) installed.

VOLTAGE SETTING

VRD-4003-A (Before 8R-000001) Temperature	Voltage Limits	All 'VRF', 'VRF' Types Temperature	Voltage Limits
50°F.	7.53-7.83	50°F.	14.44-14.74
60	7.51-7.81	60	14.39-14.69
70	7.50-7.80	70	14.35-14.65
80	7.48-7.78	80	14.31-14.61
90	7.47-7.77	90	14.27-14.57
100	7.46-7.76	100	14.22-14.52

Voltage Setting—Before Serial No. 8R-000001.

VRD-4003-B (Hudson) Temperature	Voltage Limits	All other 'VRB', 'VRD' Types. Temperature	Voltage Limits
50°F.	7.83-8.13	50°F.	7.53-7.83
60	7.81-8.11	60	7.51-7.81
70	7.80-8.10	70	7.50-7.80
80	7.78-8.08	80	7.48-7.78
90	7.77-8.07	90	7.47-7.77
100	7.76-8.06	100	7.46-7.76

Voltage Setting—After Serial No. 8R-000001. (or when new Voltage Regulator Coil installed).

VRD-4003-A, 3-B, 8-A, 8-B (Hudson) Temperature	Voltage Limits	All other 'VRB', 'VRD', 'VRJ' Types Temperature	Voltage Limits
50°F.	7.48-7.78	50°F.	7.36-7.66
60	7.41-7.71	60	7.33-7.63
70	7.35-7.65	70	7.30-7.60
80	7.28-7.58	80	7.27-7.57
90	7.22-7.52	90	7.24-7.54
100	7.15-7.45	100	7.21-7.51
110	7.09-7.39	110	7.19-7.49
120	7.02-7.32	120	7.16-7.46
		130	7.13-7.43
		140	7.10-7.40

SPECIAL SETTINGS (VRD Regulators used with GCJ Generators — except Hudson). If battery is continuously overcharged, or charging rate too high, check generator charging rate with regulator out of circuit and adjust third brush (see car model page for directions and settings on each car model), check regulator voltage with engine running at speed equivalent to 30 MPH. car speed. If voltage exceeds 7.5 volts, adjust regulator for voltage between 7.3 and 7.5 volts.

Regulator Resistor Units:—On most regulators, resistors have been changed (second resistor unit added, or resistance of single resistor changed) as follows (see illustration for location and numbering of resistor units):

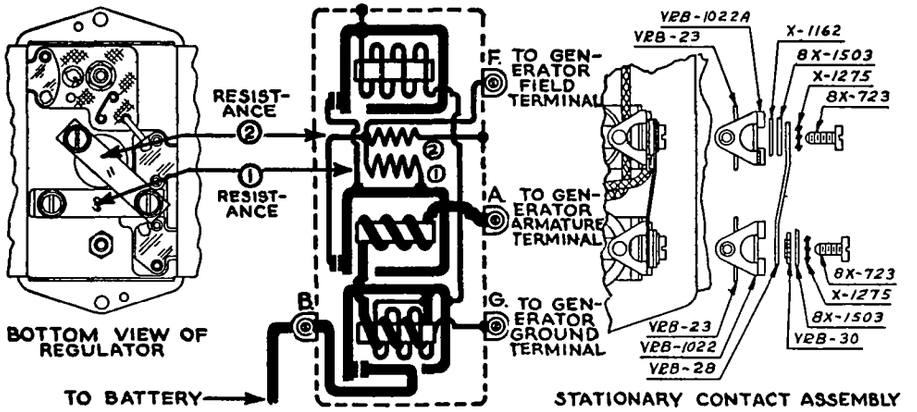

Voltage-Current Regulator Resistors

Regulator Model	Before 8R-000001 "R1"	"R2"	After 8R-000001 "R1"	"R2"
VRB-4002-A, C, D	60	....	60	....
VRB-4003-A	30	....	30	....
VRB-4004A	60	....	60	11
VRB-4004B	30	....	30	7
VRB-4004-C	60	....	60	....
VRB-4005-A, 6-A	30	....	30	....
VRB-4007-A	60	....	60	11
VRB-4007-B	....	....	30	7
VRB-4008-A, AP, B	60	....	60	11
VRB-4008-C	....	....	30	7
VRB-4008-D, E	....	....	60	11
VRB-4009-A	60	....	60	11
VRB-4010-A	....	....	30	7
VRB-4011-A	....	....	60	11
VRB-4011B, 12-A, 12A-1, 12B-1	....	....	30	7
VRE-4001-A, B, C	60	....	60	....
VRE-4002-A, B, C, D	60	....	60	....
VRE-4003-A, 3A-1, 5-A	60	....	60	....
VRE-4004-A	60	20	60	20
VRJ-4001A, 2A			60	11

CONTINUED ON NEXT PAGE

AUTO-LITE VRB, VRD, VRE, VRF, VRJ, VRK, VRO REGULATORS (C ntinu d)

Voltage Regulator Resistors

Regulator Model	Resistor
VRD-4001A, B; 2-A, B; 3-A, B; 4-A; 6-A, B (See Note)	20
VRD-4008-A, 9-A, 10-A	20
VRD-4008-B	30
VRF-4001-A, 3-A, 4-A, 5-A, 6-A, 7-A (See Note)	30

VRD Note—Resistor TC-51L (28-32 ohms—marked 30) used on these models before Serial No. 7R-000001. Use only TC-51T (19-21 ohms—marked 20) for replacement.

VRF Note—Resistor TC-51M (57-63 ohms—marked 60) used on these models before Serial No. 9R-000001. Use only TC-51L (28-32 ohms—marked 30) for replacement.

CURRENT REGULATOR TEST ON CAR

Current Regulator (All Series). Connect test ammeter and voltmeter as directed above. Add load (turn on car lights and accessories or use a bank of headlamp bulbs connected at point between ammeter and battery) in excess of ampere rating stamped on regulator cover. Operate generator, as above, and note ammeter reading which will indicate point at which current regulator controls generator output. Ammeter reading should agree with regulator rating stamped on cover. Allowable variation is 5% (1 ampere above or below rating).

CURRENT SETTING

6 Volt Types		12 Volt Types	
Model	Amperes	Model	Amperes
VRB-4002A, 4A	29-31	VRE-4001A	14-16
VRB-4002C, 4C	24-26	VRE-4001B	11-13
VRB-4002D, 4B	27-29	VRE-4001C	16-18
VRB-4003A, 5A	21-23	VRE-4002A	14-16
VRB-4006A	11-13	VRE-4002B	16-18
VRB-4007A, 8A, 8AP	29-31	VRE-4002C	19-21
VRB-4007B, 8C	27-29	VRE-4002D	11-13
VRB-4008B, 9A	24-26	VRE-4003A	14-16
VRB-4008D	19-21	VRE-4003A-1	14-16
VRB-4008E	31-33	VRE-4004A	14-16
VRB-4010A, 11B	27-29	VRE-4005A	14-16
VRB-4011A	24-26		
VRB-4012A, 12A-1	27-29		
VRB-4012B-1	34-36		
VRJ-4001A, 2A	39-41		

ADJUSTMENT SPECIFICATIONS:—If regulator is being completely tested and adjusted on the bench (with cover removed), check specifications of all units as directed below before checking performance or changing settings.

CUTOUT RELAY SPECIFICATIONS

Specifications			
Model	Voltage Coil Resistance	Air Gap	Contact Gap
All 'VRB' & 'VRD' Types	35- 39 ohms	.034-.038"	.015" Min.
All 'VRE' & 'VRF' Types	111-123 ohms	.034-.038"	.015" Min.
All 'VRJ' Types	35- 39 ohms	.034-.038"	.015" Min.

Voltage Winding Resistance—Use Ohmeter ST-284 to measure coil winding resistance directly. To check, disconnect voltage regulator coil lead at point where it is attached to cutout relay frame, measure between 'A' terminal and ground.

Air Gap. Measure with contacts open at hinge end of armature core using special flat type gauge Part No. ST-281-3. Adjust by bending armature stop. Make certain that stop is in center of armature slot and that gap between armature and yoke does not exceed .002" at hinge end.

Contact Gap. Adjust by expanding or contracting stationary contact support keeping contacts exactly aligned and making certain that armature does not touch magnet yoke which will cause contacts to stick (clearance between armature and yoke with contacts closed should be .020").

VOLTAGE REGULATOR SPECIFICATIONS

Model	Coil Resistance	Air Gap	Contact Gap
All 'VRB' & 'VRD' Types	10.4-11.2 ohms (see Note)	.0595-.0625"	.010-.020"
All 'VRE' & 'VRF' Types	45.8-49.6 ohms	.0595-.0625"	.010-.020"
All 'VRJ' Types	10.4-11.2 ohms	.0595-.0625"	.010-.020"

NOTE—Resistance of coil used on regulators bef re Serial No. 8R-000001 was 12.8-14.3 hms. Use new type coil (10.4-11.2 ohms) for replacement on all regulators. On regulators before Serial No. 8R-000001, change voltage setting to new figures (use table for regulators after No. 8R-000001) when this new coil installed.

Coil Winding Resistance—Use Ohmeter ST-284 to measure coil winding resistance directly. To check, disconnect voltage regulator coil lead at point where it is attached to cutout relay frame, measure between this lead and ground.

Air Gap. Measure with contacts just opening at point side of armature stop pin using special pin gauge Part No. ST-281-2. To adjust, loosen screw on upper (stationary) contact bracket and use tool ST-282 to raise or lower the upper contact. Make certain that contacts are in exact alignment.

NOTE—To test gap setting (all models), connect test lamp in series with six volt battery between 'F' and 'GD' terminals. Insert low limit pin gauge depress armature (apply pressure equally at each side of contact spring, do not touch contact spring). Test lamp should go out. Repeat test using high limit pin gauge. Test lamp should remain lighted.

Armature Hinge Adjustment (Small Type). To check armature for correct 'floating' position, remove armature spiral spring, check armature position by holding regulator to the light and noting that armatur floats midway between stationary contact and core stop (contacts must be open, armature must not touch stop). To adjust, bend both armature hinge support ears equal amount up or down (use square nosed pliers). Check alignment of support ears with straightedge. Re-install spiral spring, make certain that both ends f spring are down in holding grooves and that lower spring bracket is not distorted (spring must be vertical).

Contact Gap. Measure with armature held down against stop pin. If contact gap varies widely, armature stop pin is wrong length and unit should be replaced. CAUTION—Do not touch upper contact spring which must be flat and parallel to armature.

Contact Assembly (All Types). When installing new stationary contacts make certain that all insulating washers, lockwashers and ther parts installed in correct order (see illustration for correct sequence of assembly).

CURRENT REGULATOR SPECIFICATIONS

Model	Air Gap	Contact Gap
All 'VRB' Types	.0595-.0625"	.010-.020"
All 'VRE' Types	.0595-.0625"	.010-.020"
All 'VRJ' Types	.0595-.0625"	.010-.020"

Contact Gap, Spring Pressure, Air Gap. Check and adjust in same manner as directed for Voltage Regulator above. Use pin gauge Part No. ST-281-2 to measure air gap.

TESTING & ADJUSTING (ON THE BENCH):—Mount unit firmly (so there is no vibration) in same position as when mounted on car. Heat regulator before making tests by operating for 15 minutes with generator charging 10 amperes (for all units rated below 30 amperes), 20 amperes (all units rated above 30 amperes). Cover must be in place while heating unit and when making tests.

Resistor Units

Remove resistors (remove, check, and replace separately to avoid possibility of interchanging resistors when two used). Check resistance with hmeter. Resistance value must be within limits shown in table below (figures stamped on resistor unit is nominal resistance in ohms, see table for resistance limits). See Resistor data under Voltage Regulator (above) f r correct type and changes made on each regulator model.

Resistor Marking	Resistance (In Ohms)
7	6.5-7.5
11	10-12
20	19-21
30	28-32
60	57-63

CONTINUED ON NEXT PA E

AUTO-LITE VRB, VRD, VRE, VRF, VRJ, VRK, VRO REGULATORS (C ntinued)

CUTOUT RELAY BENCH TEST

Connect ammeter in series in charging line between battery and regulator 'B' terminal, voltmeter between regulator 'A' terminal and ground. When checking cut-in voltage, connect single earphone (2000 ohms resistance or higher) between regulator 'A' and 'B' terminals, a click will be heard in the earphone when the contacts close.

Model	Closing Voltage	Opening Amperage
All 'VRB' & 'VRD' Types	6.4- 7.0 volts	①.5-3.0 amperes
All 'VRE' & 'VRF' Types	13.0-13.75 volts	.5-3.0 amperes
All 'VRJ' Types	6.4- 7.0 volts	.5-3.0 amperes

①—**VRD-4008A, B Note.** On Model VRD-4008A (After Serial No. 2T-000001) and all VRD-4008B regulators, Cutout Relay opening amperage should be 1.5-4.5 amperes.

Cut-in Voltage. To adjust, change armature spring tension by bending lower spring arm (tool ST-283). Cut-in voltage must always be .5 volt below voltage at which voltage regulator begins to operate (contacts will not close if cut-in voltage set at higher figure).

Cut-Out Amperage. To adjust, change contact gap by raising or lowering lower (stationary) contact. See Cutout Relay Contact Gap specifications above for instructions.

Note for Rechecking Cutout Relay. When rechecking, with Cutout Relay hot (after Voltage and Current Regulators have been adjusted), if cut-in voltage and cut-out amperage are no longer correct, check armature hinge and see that it is installed with brass side up. If hinge has been installed incorrectly, replace Cutout Relay unit.

VOLTAGE REGULATOR BENCH TEST

Connect voltmeter between regulator 'B' terminal and ground, single earphone (2000 ohms resistance or higher) between regulator 'A' and 'B' terminals. Earphone will register 'click' of regulator contact opening and closing and give accurate indication of regulator action. Operate regulator and note voltage. Voltage should be within limits shown in table for 'Testing on Car' above.

To Adjust. Increase armature spring tension (to increase voltage), decrease spring tension (to lower voltage) by bending the lower spring arm using tool ST-283. If setting is changed, reheat regulator by operating generator for 15 minute period with charging rate as above and then recheck performance. Upper contact spring must be flat and parallel to armature.

Final 'Flash' Test. After making adjustments, replace cover, stop generator momentarily, note maximum voltage reading immediately after generator is restarted.

CURRENT REGULATOR BENCH TEST

Connect test ammeter in series in charging line at regulator 'B' terminal. Use earphone to check regulator action (connect as directed for Voltage Regulator adjustment above). Increase generator output by connecting lamp bank or resistance across battery, note ammeter reading when current regulator operates to limit generator output. Output should be within 5% (1 ampere more or less) of rated figure stamped on regulator cover. See table for 'Testing on Car' above for each regulator model.

To Adjust. Increase armature spring tension (to increase output), or decrease armature spring tension (to decrease output) by bending the lower spring arm using tool ST-283.

Final 'Flash' Test. After making adjustments, replace cover, stop generator momentarily, note maximum current reading immediately after generator is restarted.

POLARIZING GENERATOR: Generator should be polarized each time it has been disconnected. Use jumper wire between starting switch and the generator "A" terminal. Do not close cutout relay contacts by hand for this purpose (excessive current will cause burnt contacts). Generator must be polarized when operated on bench and when replaced on car.

TROUBLE SHOOTING:—If regulator action is not satisfactory, check possible causes as listed below.

Cutout Relay contacts do not close. Cutout Relay shunt winding open or shorted, series coil open. 'A' terminal grounded or Cutout Relay grounded. Current Regulator series coil open.

Cutout Relay Cuts in late or at high speed. Voltage Regulator or Current Regulator contacts burnt, dirty or high resistance (if contacts burnt, check for broken or wrong type resistance unit).

Cutout Relay action erratic or intermittent. Same as above. Cutout Relay air gap wrong. Armature hinge reversed. Armature binding (armature should float without touching stop or stationary contact at room temperature with tension spring removed).

Cutout Relay Contacts Flutter. Cut-in voltage set too low. Discharge current for cut-out point too low or contacts opening with generator charging.

Generator does not charge Battery. Cutout Relay contacts dirty or burnt. 'A' terminal or cutout relay grounded. Cutout Relay air gap wrong, cut-in voltage setting too high. Voltage Regulator setting too low. Current Regulator or Cutout Relay series coil open.

No Output Control (Current Regulator Inoperative). 'F' terminal, lead to stationary contact, or stationary contact support grounded. Current Regulator frame grounded to base.

Charging Rate too low. Current Regulator air gap set wrong, current setting too low, contacts burnt, dirty or high resistance.

Charging Rate too high. Voltage Regulator setting too high, winding resistance too great. Current Regulator series coil shorted.

Voltage Regulator inoperative (No voltage control). Voltage Regulator contacts sticking, stationary contact grounded, winding open. Cutout Relay shunt coil open. 'F' terminal or lead grounded.

Voltage too high or too low. Voltage Regulator air gap set wrong, contact spring tension wrong, high resistance in winding (examine connections). Resistance units wrong type or broken. Voltage Regulator winding shorted.

Voltage drops when Voltage Regulator operates. Voltage regulator contacts sticking.

Ammeter fluctuates excessively. Slight fluctuation normal at point where voltage regulator begins to operate. If excessive, check for Voltage Regulator or Current Regulator contacts dirty, sticking, burnt or high resistance. Resistance units broken or wrong type. Voltage or Current Regulator armature hinge loose. Cutout Relay cut-out discharge current too low.

Current Discharge with Generator not running. 'B' terminal or Cutout Relay stationary contact grounded, Cutout Relay contacts sticking or air gap set wrong.

AUTO-LITE VRA, VRC, VRG, VRH REGULATORS

NOTE:—These "Large Type" Regulators are intended for use with generators of larger output and consist of the following types:

Regulator Model	Type	Voltage
"VRA", "VRG", "VRH" Types	Current-Voltage Regulator	12 volts
"VRC" Types	Current-Voltage Regulator	6 volts

GROUND TERMINAL NOTE:—Each regulator designed to be operated with particular battery terminal grounded as noted in following table. See that battery is properly grounded and polarize generator whenever it is disconnected or removed from car (see Polarizing instructions below).

Model	Grounded Terminal
VRA-4101A, 2A, 3A; VRC-4101A, 1B, 2A, 2B	Positive
VRG-4101A, 2A, 2B, 2C, 2D, 4A, 6A	Positive
VRG-4103A, 3B, 3C, 3D, 5A, 5B	Negative
VRH-4101A, 1B, 3A, 3A-1, 4A-1	Positive

DESCRIPTION & OPERATION:—Similar in design to "Small Type" regulators intended for passenger car equipment (see preceding article) except for additional winding on current regulator unit which is connected in series with an additional resistor unit as shown in the illustration. Adjustments and specifications for these Large Type regulators are not the same as for Small Type

►**REGULATOR SEAL CAUTION:** Covers are sealed and units are "exchanged" if seals not broken. Regulators can be checked without breaking seals or removing covers as directed below.

TESTING (ON THE CAR):—If operation not satisfactory, check as follows:

1. **Charging Circuit.** See that generator and regulator are properly connected and that all connections are clean and tight. Check charging circuit for high resistance. Voltage drop between generator and regulator or between regulator and battery should not exceed .1 volt with generator charging at 10 amperes. There should be no voltage drop between regulator base and battery ground post, generator frame and regulator base or battery ground post.
2. **Generator Type & Performance.** See that generator and regulator are correct type (special types designed to be used together, will not operate satisfactorily with other units). Check generator performance with regulator out of circuit. Generator should produce rated output.
3. **Battery.** Check battery open-circuit voltage and specific gravity. See that battery in good condition and fully charged. NOTE—High charging rate may be caused by overheated, discharged, or short-circuited battery. Low charging rate may be caused by defective or sulphated battery plates, high separator resistance or extreme cold.

VOLTAGE REGULATOR TEST ON CAR

Voltage Regulator (All Types):—Connect test ammeter in charging line at regulator "B" terminal (ammeter must read to 1 ampere and have maximum internal resistance of .01 ohm or .1 volt at 10 amperes) using short heavy leads. Connect test voltmeter between regulator "B" terminal and ground screw on regulator frame. Make certain that car battery is fully charged with specific gravity reading of 1.275-1.280. Run engine at speed equivalent to 30 M.P.H. for at least 15 minutes to bring units up to operating temperature, then note meter readings. Ammeter should indicate charging current less than maximum figure noted on regulator nameplate. Note voltmeter reading which should agree with specifications given below.

VOLTAGE SETTING TABLES

Model	Voltage Setting Table	Model	Voltage Setting Table
VRA-4101A, 2A	#1	VRG-4104A, 5A, 5B, 6A	#2
VRA-4103A	#2	VRH-4101A, 1B, 1C, 2A, 2B	#2
VRC-4101A, 1B, 2A, 2B	#6	VRH-4103A, 3A-1, 4A-1	#2
VRG-4101A	#4	VRH-4104B-1, 4E-1, 7A-1M	#3
VRG-4102A, 2D, 3A, 3B, 3C, 3D	#2	VRH-4104C-1, 4D-1, 4F-1	#2
VRG-4102B, 2C	#5	VRH-4105A, 6A, 6B, 7B-1M	#2

Table #1

Temp.	Volts
50°F.	14.51
60	14.48
70	14.45
80	14.42
90	14.39
100	14.36
110	14.33
120	14.30

Table #2

Temp.	Volts
50°F.	14.31
60	14.28
70	14.25
80	14.22
90	14.19
100	14.16
110	14.13
120	14.10

Table #3

Temp.	Volts
50°F	14.56
60	14.53
70	14.50
80	14.47
90	14.44
100	14.41
110	14.38
120	14.35

Table #4

Temp.	Volts
50°F.	14.36
60	14.33
70	14.30
80	14.27
90	14.24
100	14.21
110	14.18
120	14.15

Table #5

Temp.	Volts
50°F.	14.53
60	14.51
70	14.50
80	14.48
90	14.47
100	14.46
110	14.44
120	14.43

Table #6

Temp.	Volts
50°F.	7.51
60	7.48
70	7.45
80	7.42
90	7.39
100	7.36
110	7.33
120	7.30

NOTE—All voltage figures in tables are plus or minus .25 volts.

Regulator Resistor Units:—Three resistor units used on all models (see illustration for mounting of resistors on regulator base plate). To check resistor units, remove from regulator and test singly with ST-284 ohmeter. Use extreme care not to interchange resistor units make certain that resistors are of correct value

Regulator Model	Resistor Markings "R1"	"R2"	"R3"
VRA-4101A, 2A, 3A	135	15	65
VRC-4101A, 1B, 2A, 2B	80	5.5	2
VRG-4100 Series	135	15	65
VRH-4101A, 1B, 2A, 3A, 3A-1, 4A-1	80	15	①30

①—Resistance #4 on these models marked 1 (.9-1.1 ohms).

CURRENT REGULATOR TEST ON CAR

Current Regulator (All Types):—Connect test ammeter and voltmeter as directed for voltage test above. Run engine and add load in excess of ampere rating noted on regulator nameplate (turn on lamps and accessories or connect bank of headlamp bulbs at point between generator and battery). Note ammeter reading which should agree with regulator rating stamped on cover. Allowable variation is 5% (1 ampere above or below rating) and ammeter reading should be within limits shown in table below.

CURRENT SETTING

Model	Amperes	Model	Amperes
VRA-4101A, 3A	19-21	VRG-4103C	34-36
VRA-4102A	39-41	VRG-4103B, 3D, 5B, 6A	25-27
VRC-4101A, 2A	39-41	VRG-4104A	39-41
VRC-4102B	29-31	VRH-4101A, 2A, 2B	54-56
VRC-4101B	49-51	VRH-4101B, 1C, 5A, 6B	49-51
VRG-4101A, 2A	32-34	VRH-4103A, 3A-1, 4A-1	54-56
VRG-4102B, 2C, 2D	25-27	VRH-4104B-1, 4C-1, 4D-1, 4E-1	54-56
VRG-4103A, 5A	19-21	VRH-4104F-1, 6A, 7A-1M, 7B-1M	54-56

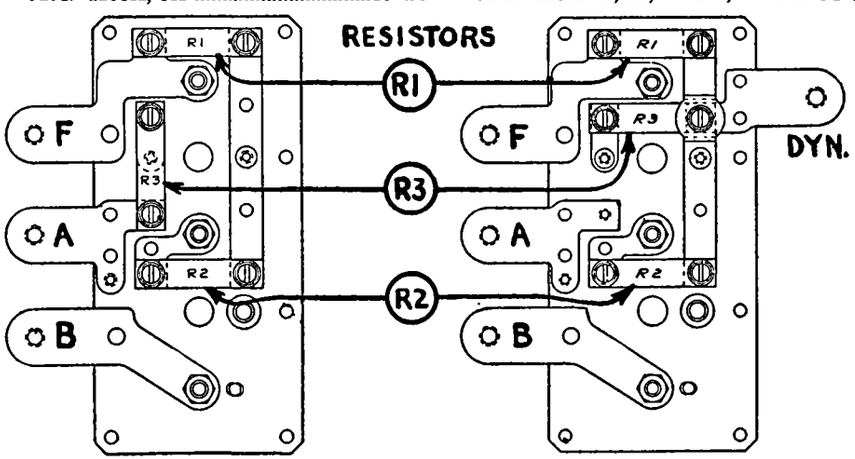

ADJUSTMENT SPECIFICATIONS:—If above tests indicate that regulator is not perating properly, and units are being adjusted on the bench with the cover removed, check specifications f all units as directed below before checking performance or changing settings.

CONTINUED ON NEXT PAGE

AUTO-LITE VRA, VRC, VRG, VRH REGULATORS (C ntinu d)

CUTOUT RELAY ADJUSTMENTS

Model	Voltage Coil Resistance	Air Gap	Contact Gap
All 'VRA' Types		.0595-.0625"	.015" Min.
All 'VRC' Types	15.77-17.43 ohms	.0595-.0625"	.015" Min.
All 'VRG' Types		.060-.065"	.015" Min.
All 'VRH' Types	43.7 -48.3 ohms	.0595-.0625"	.025" Min.

Voltage Winding Resistance. Use ohmeter to measure resistance directly or use accurate ammeter and voltmeter to measure current draw and voltage and then calculate resistance in ohms. To check, disconnect voltage coil ground lead at screw on baseplate and measure between this lead and stationary contact of cutout relay.

Air Gap. Measure with contacts open at point side of brass core pin using flat gauge No. ST-281-2. Adjust by raising or lowering stop at contact end of armature.

Contact Gap. Adjust by bending stationary contact support arms with tool ST-283 using extreme care to keep contact points in alignment and to maintain uniform gap for both sets. Check alignment with straightedge placed across tops of contact brackets.

VOLTAGE REGULATOR ADJUSTMENTS

Model	Coil Resistance	Air Gap	Contact Gap
All 'VRA' Types	15.68-17.32 ohms	.040-.042"	.010-.012"
All 'VRC' Types	4.27- 4.72 ohms	.040-.042"	.010-.012"
All 'VRG' Types	15.68-17.32 ohms	.040-.042"	.010-.012"
All 'VRH' Types	15.68-17.32 ohms	.040-.042"	.010-.012"

Coil Winding Resistance. Disconnect both leads at screws on baseplate and measure between these leads using ST-284 ohmeter.

Air Gap. Measure with contacts just opening at point side of brass armature stop pin with gauge No. ST-281-1. To adjust, loosen screws and raise or lower armature contact stop. Make certain that contacts are in exact alignment and that contact stop screws are securely tightened.

Contact Gap. Measure with armature held down against stop pin, depressing armature with one finger on either side of contact spring so that no pressure applied to spring. If contact gap varies greatly, armature stop pin length is wrong and unit should be replaced. See that contact spring is straight and parallel with armature.

Contact Spring Pressure. To check, disconnect armature spring, remove armature stop, hook spring scale on contact arm at contact, note scale reading at instant contacts separate. Spring pressure should be 7-8 ozs. (all models).

Contact Spring Gap—Should be .010-.016" (all models). To check, use feeler gauge to check gap between top of contact spring and armature stop with contact spring against the bumper block. Make certain that bumper block is in place and that contact spring is straight and parallel to armature.

CURRENT REGULATOR ADJUSTMENTS

Model	Air Gap	Contact Gap	Contact Spring Pressure	Contact Spring Gap
All 'VRA' Types	.047-.049"	.030-.033"	7-8 ozs.	.010-.016"
VRC-4102B Only	.038-.040"	.030-.033"	7-8 ozs.	.010-.016"
Other 'VRC' Types	.047-.049"	.030-.033"	7-8 ozs.	.010-.016"
All 'VRG' Types	.047-.049"	.030-.033"	7-8 ozs.	.010-.016"
All 'VRH' Types	.047-.049"	.030-.033"	7-8 ozs.	.010-.016"

Frequency Winding Resistance (Large Type only). This is the second winding which is used only on Large Type regulators. To check, disconnect lead from screw on base plate at right of current regulator (contact end) and measure between this lead and current regulator frame.

Air Gap, Contact Gap, Contact Spring Pressure & Gap—Check and adjust in same manner as directed for Voltage Regulator above. Use Pin Gauge ST-281-5 to check air gap on all types except VRC-4102B. This gauge not same type used for Voltage Regulators and should not be used on VRC-4102B which has special air gap setting (see table above).

TESTING & ADJUSTING (ON THE BENCH):—Mount unit firmly in same position as when mounted on car so that there is no vibration. Heat regulator before making test by operating for 15 minutes with generator charging 10 amperes (all units rated below 30 amperes), 20 amperes (units rated above 30 amperes). CAUTION—Cover must be in place when heating regulator and making tests.

Resistors:—Remove resistors singly (to avoid replacing in wrong position) and test with ohmeter ST-284. Resistance values must be within values shown in table below (figure stamped on resistor is nominal resistance in ohms, see separate table above for resistors used n each regulator).

Resistor Marking	Resistance in Ohms
.2	.18-.22
.65	.6-.7
1	.9-1.1
5.5	5-6
30	28-32
15	13.5-16.5
80	76-84
135	130-140

CUTOUT RELAY BENCH TEST

Model	Closing Voltage	Opening Amperage
All 'VRA' Types	13.0-13.5 volts	.5-6.0 amperes
All 'VRC' Types	6.5-7.0 volts	.5-4.0 amperes
All 'VRG' & 'VRH' Types	13.0-13.5 volts	.5-6.0 amperes

Cut-in Voltage. To adjust, change armature spring tension by turning screw at lower end of spring. Cut-in voltage must always be set .5 volts below voltage at which voltage regulator begins to operate (contacts will not close if set at higher figure).

Cut-out Amperage. To adjust, change contact gap by raising or lowering lower (stationary) contact. See contact gap adjustment above.

Final Performance Test. After making adjustments, replace regulator cover and recheck performance. Make final 'flash' test after adjustments and checking have been completed.

VOLTAGE REGULATOR BENCH TEST

Connect voltmeter between regulator "B" terminal and ground screw on regulator frame. Connect single earphone (2000 ohms resistance or higher) between regulator "F" terminal and ground. Earphone will register "click" or vibration of regulator contact opening and closing and will give accurate indication of regulator operation. Operate regulator and note voltage. Voltage should be within limits shown in table under "Testing on Car" above.

To Adjust. Increase armature spring tension (to increase voltage) or decrease spring tension (to lower voltage) by turning adjusting screw at lower end of spring.

Final Flash Test. After completing adjustments, replace regulator cover, take a "flash" voltage reading by stopping generator and then noting voltage reading immediately after restarting generator.

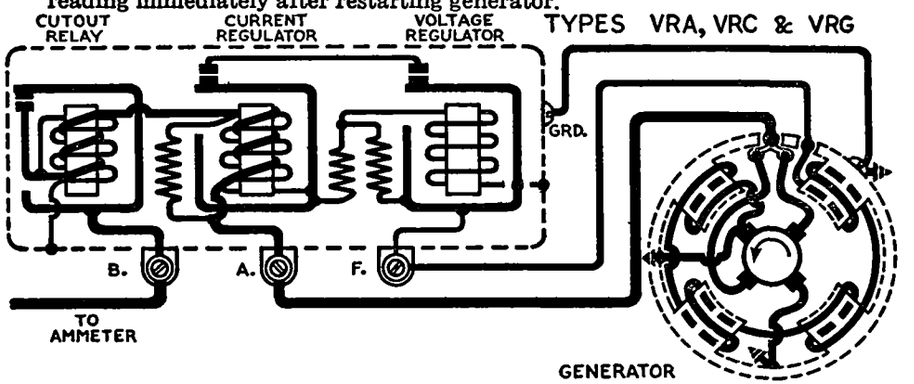

CURRENT REGULATOR BENCH TEST

Connect test ammeter in charging line at regulator "B" terminal. Use earphone to check regulator action (connect as for Voltage Regulator test above). Operate generator and increase load by connecting bank of headlamp bulbs as load, or use resistance connected across battery, so that current regulator operates. Note ammeter reading which should be within 5% (1 ampere more or less) than rated capacity of regulator as shown in table above.

To Adjust. Increase armature spring tension (to increase output), decrease spring tension (to decrease output) as directed for Voltage Regulator above.

Final Flash Test. Make flash test of output after all adjustments completed and regulator cover replaced by stopping generator momentarily and then noting ammeter reading immediately after generator is restarted.

POLARIZING GENERATOR:—Generator should be polarized before being run on bench or car by connecting jumper wire from starting switch battery connection to generator "A" terminal momentarily. Do not close relay contacts by hand to accomplish this result (excessive current will burn contacts).

AUTO-LITE REGULATORS
VRP, VRR, VRS, VRT, VRU, VRV, VRW, VRX TYPES
VOLTAGE & CURRENT REGULATORS

Car Model	Regulator	Generator	Grd. Ter.
Chrysler (1940-42) Standard	VRP-4001A	GDZ-4801A or B	Pos.
	VRP-4005A	GDZ-4801A or B	Neg.
Chrysler Crown Imp. ('41-42) Std.	VRP-4001F	GEG-4818C	Pos.
	VRP-4005E	GEG-4818C	Neg.
Chrysler (1946-47-48) Standard	VRP-4401A	GDZ-4801A	Pos.
	VRP-4501A	GDZ-4801A	Pos.
	VRP-4503A	GDZ-4801A	Pos.
Chrysler Crown Imp. ('46-48) Std.	VRP-4001F	GEG-4823-1	Pos.
City Police & Taxi	VRP-4001F	GEG-4818A	Pos.
	VRP-4005E	GEG-4818A	Neg.
City Police	VRP-4001B	GEB-4801A	Pos.
	VRP-4005B	GEB-4801A	Neg.
	VRP-4001G	GFP-4801B	Pos.
State Police	VRP-4001F	GEG-4818B, 23B	Pos.
	VRP-4005E	GEG-4818B, 23B	Neg.
Special Equipment	VRP-4001F	GEG-4823A or B	Pos.
	VRP-4401B	GEG-4823A or B	Pos.
	VRP-4501C	GEG-4823A or B	Pos.
	VRP-4005E	GEG-4823A or B	Neg.
Crosley CC (1947-48)	VRP-4004F	GDZ-4806A or B	Pos.
De Soto (1940 to 1948)		See Chrysler above	
Dodge (1940 to 1948)		See Chrysler above	
Frazer, All Models (1947-48)	VRP-4004F-2	GDZ-4818A	Pos.
Hudson ('40-42) Police & Spec. Equip.	VRP-4008A	GEG-4801A	Pos.
	VRP-4008B	GEA-4803B	Pos.
	VRP-4008C	GEB-4802A	Pos.
	VRP-4008D	GEB-4802B-2	Pos.
Kaiser, All Models (1947-48)	VRP-4004F-2	GDZ-4818A	Pos.
Nash "600" (1946-47-48)	VRP-4004F-1	GDZ-4806A	Pos.
Nash Amb. Six (1941 to 1948)	VRP-4004F-1	GDZ-4806A	Pos.
Nash 4180 ('41), 4280 ('42)	VRP-4004F,F-1	GDZ-4803B	Pos.
Packard 1800, 1, 1A (1940)	①VRP-4002A	GEA-4801A	Pos.
Packard 1800,1,1A (Late '40)	VRP-4201A-1	GEA-4801A	Pos.
Packard 1803, 4, 5, 6, 7, 8 ('40)	VRP-4003A	GEA-4802A	Pos.
Packard 1803,4,5,6,7,8 (Late '40)	VRP-4202A-1	GEA-4802A	Pos.
Packard Six & Eight (1941 to 1947)	VRP-4002C	GDZ-4801F	Pos.
Police & Taxi	VRP-4002D	GEB-4802C-2	Pos.
Packard Super 8 (1941 to 1947)	VRP-4002C	GEA-4802A	Pos.
Packard Eight & Super 8 (1948)	VRP-4402A	GDZ-4801F	Pos.
Packard Custom 8 (1948)	VRP-4402A	GDZ-4801G	Pos.
Plymouth (1940 to 1948)		See Chrysler above	
Studebaker Champ. 2G (1940)	VRP-4004A	GEA-4804A	Pos.
Studebaker 2G Police ('40)	VRP-4004C	GEB-4803A	Pos.
Studebaker Comm. 10A ('40)	VRP-4004A	GEA-4803A	Pos.
Studebaker Champ. (1941 to 1948)	VRP-4004F	GDZ-4804A	Pos.
Studebaker Comm. (1941 to 1948)	VRP-4004F	GDZ-4805A	Pos.
Special Equipment	VRP-4004C	GEB-4806D	Pos.
Studebaker Pres. 7C ('41), 8C ('42)	VRP-4004F	GDZ-4805A	Pos.
Willys Civ. Jeep CJ-2A (1946-47-48)	VRP-4007C-2	GDZ-4817A	Neg.
Willys All Cars & Trucks ('46-47-48)	VRP-4007C-2	GDZ-4817A	Neg.

VOLTAGE REGULATORS

Hudson 40, 48 (1940)	②VRR-4001A, B	GDS-4801A	Pos.
Hudson 41, 43 (1940)	②VRR-4001A	GEC-4801A	Pos.
Hudson 44, 45, 47 (1940)	②VRR-4001A	GEC-4801A	Pos.
Hudson 10,18 ('41), 20,28 ('42)	VRR-4001A	GDS-4801A	Pos.
Hudson All Other Models (1941-42)	VRR-4001A	GEC-4801A	Pos.
Hudson 6 & 8 All Models ('46-47-48)	VRR-4001A	GEC-4801A	Pos.
Hupmobile R (1940)	③VRR-4005A	GDF-4804A	Pos.
Willys Pass. Cars (1940-41-42)	VRR-4004A	GCJ-4811A	Neg.
Willys Comm'l. ('41-42)	VRR-4004A	GCJ-4811A	Neg.

①—VRB-4012B-1 used on first cars. ③—VRD-4009A used on first cars.
②—VRD-4008B used on first cars.

REGULATOR IDENTIFICATION

Model	Voltage	Type	Grounded Terminal
VRP Series	6	Current-Voltage	See Car List
VRR Series	6	Voltage	See Car List
VRS-4001A to 7C	12	Current-Voltage	Positive
VRS-4008A,9A,10A,B; 14A	12	Current-Voltage	Negative
VRS-4012A, 13A	12	Current-Voltage	Positive
VRS-4102AM,BM,CM,DM	12	Current-Voltage	Positive
VRS-4201A, 5201	12	Current-Voltage	Positive
VRT Series	12	Voltage	Positive
VRU-4001A,2A; 4101AM,2AM	12	Current-Voltage	Positive
VRU-4004A, 5004	12	Current-Voltage	Negative
VRV-4001A,2A,3A,4A	24	Current-Voltage	Positive
VRV-4101A,2A	24	Current-Voltage	Positive
VRV-4103A	24	Current-Voltage	Negative
VRV-4201A,1AM,2AM	24	Current-Voltage	Positive
VRW-4001A,2A,4A,5A,5B	6	Current-Voltage	Positive
VRW-4003A,3BX	6	Current-Voltage	Negative
VRW-4101AM, 5005B	6	Current-Voltage	Positive
VRW-5003BX	6	Current-Voltage	Negative
VRX-4001A,B;3A,B,D;4A	12	Current-Voltage	Positive
VRX-4002A,B; 4401A	12	Current-Voltage	Negative

►**REGULATOR GROUND:** Each type regulator designed for use with particular battery terminal grounded as noted in table above. **When installing regulator, see that correct battery terminal grounded and repolarize generator (after all connections made) as follows:**

►**POLARIZING GENERATOR:** Generator should be polarized each time it has been disconnected before using. Connect jumper wire momentarily from starting switch battery connection to generator 'A' terminal (after all connections have been made). **This momentary surge of current through generator windings will polarize generator for correct operation.**

►FIELD & PRODUCTION CHANGES

►**REGULATOR PRODUCTION CHANGES & NEW SPECIFICATIONS:** Following changes made during production on various units as follows:

"VRP" SERIES

Current Regulator Air Gap—Setting changed to .048-.052" (after regulator serial No. 5U-000001), was .034-.038" before this number.

Cutout Relay Armature Springs—Changed to 10¾ turns (after Serial No. 12X-000001), was 12¾ turns before this number.

Current Regulator Armature Springs—Latest springs are 14½ turns (beginning Serial No. 8B-). Springs with 10¾ turns used from Serial No. 12X- to Serial No. 8B-, springs with 12¾ turns used before No. 12X-.

Voltage Setting—Setting changed and should be set to latest figures as shown in specification tables following.

VRP-4001B, 1F, 4C, 4C-1, 4E, 5B, 6E, 7A, 7B, 8A, 8C, 9C

"R2" Resistor—Marked 11 (10-12 ohms) before serial No. 6U-000001, now marked 15 (13.5-16.5 ohms) after this number.

MODEL VRP-4401C

Resistor Change—Beginning with Serial No. 5C-, Resistor "R1" marked 38 (36-40 ohms), "R2" marked 7 (6.5-7.5 ohms). Before this number, "R1" marked 60, "R2" marked 15.

"VRR" SERIES

Cutout Relay Air Gap—Setting changed to .031-.034" (was .034-.038").

Cutout Relay Contact Opening—Setting changed to 4.2-4.8 volts (was 4.8-5.6).

Cutout Relay Closing Voltage—All units should be set at 6.4-6.6 volts but closing voltage in service varies (see Cutout Relay Setting specifications).

Cutout Relay Armature Spring—Beginning with Serial No. 12X-, spring has 10¾ turns (12¾ turns before this serial number).

Voltage Setting Change—Voltage setting for VRR-4002A, 2B, 3A, 4A, 4B, 5A changed. See Voltage Regulator Setting specifications for latest data.

►**VRR-4006A, 7A Regulator Voltage Setting Caution**—Before testing or adjusting voltage regulator on these models, regular TC-51 resistor (1.85 ohms) should be replaced by TC-51T (20 ohm). CAUTION—Replace the regular TC-51 (1.85 ohm) resistor after adjustments completed.

CONTINUED ON NEXT PAGE

AUTO-LITE REGULATORS VRP, VRR, VRS, VRT, VRU, VRV, VRW, VRX TYPES (C ntinu d)

REGULATOR PRODUCTION CHANGES (Continued)

"VRS" SERIES

Cutout Relay Armature Spring—Changed to 10¾ turns (after serial number 12X-000001), was 12¾ turns before this number.

Current Regulator Armature Spring—Latest springs are 14½ turns (beginning Serial No. 8B-). Springs with 10¾ turns used from Serial No. 12X- to Serial No. 8B-, springs with 12¾ turns used before No. 12X-.

Current Regulator Air Gap—Setting changed to .048-.052" (after serial number 12T-000001), was .034-.038" before this number.

"VRT" SERIES

Cutout Relay Armature Spring—Beginning with Serial No. 12X-, spring has 10¾ turns (12¾ turns before this serial number).

"VRU" SERIES

Same as listed for "VRS" Series above plus the following resistor change:

VRU-4001A Resistor Change—Two resistors now used (see Resistor table). Before Serial No. 12T-000001, one resistor used (57-63 ohms—marked 60).

"VRV" SERIES

"R1" Resistor—Marked 160 (158-162 ohms) before Serial Date 5Y, now marked 200 (195-205 ohms) after this Serial Date.

Voltage Regulator Winding Resistance—Changed to 145-163 ohms after Serial Date 10V, was 179-201 ohms before this Serial Date.

Current Regulator Armature Spring—Beginning with Serial No. 3V-, spring has 14½ turns (12¾ turns before this serial number).

Current Regulator Air Gap—Changed to .048-.052" (after Serial Date 3V), was .034-.038" before this Serial Date.

"VRW" SERIES

Cutout Relay Armature Spring—Changed to 10¾ turns (after serial number 12X-000001), was 12¾ turns before this number.

Current Regulator Armature Spring—Latest springs are 14½ turns (beginning Serial No. 8B-). Springs with 10¾ turns used from Serial No. 12T- to Serial No. 8B-, springs with 12¾ turns used before No. 12T-.

VRW-4004A

Resistors—Before serial number 6U-000001, R1 resistor marked 38 (36-40 ohms), R2 resistor marked 20 (19-21 ohms). After this serial number and for replacement R1 resistor marked 60 (57-63) ohms, R2 marked 30 (28-32 ohms).

"VRX" SERIES

Cutout Relay Air Gap—Changed to .031-.034", was .034-.038".

Cutout Relay Armature Spring—Same as listed for "VRW" Series above.

DESCRIPTION

DESCRIPTION: Vibrating type voltage regulators (two-unit), or voltage-current regulators (three-unit). These units have the following new features:

Cutout Relay—New type armature with contact mounted on spring so that armature seals against yoke after contacts close. Designed to produce wiping action of contacts.

Current Regulator Winding—Single winding used on VRP-4100 Series, VRP-4302A, VRS Series, VRU Series, VRW Series. Two windings used (as shown in illustration) on VRP-4000, 4200, 4300 (except VRP-4302A), and VRX Series.

ARMATURE SPRINGS

Armature Springs (All Units)—Several different types of armature springs are used and correct type spring must be used on each unit as follows:

Model	Cutout Relay	Voltage Reg.	Current Reg.
"VRP" Series	①10¾ turns	14½ turns	②14½ turns
"VRR" Series	①10¾ turns	14½ turns	
"VRS" Series	①10¾ turns	14½ turns	②14½ turns
"VRT" Series	①10¾ turns	14½ turns	
"VRU" Series	①10¾ turns	14½ turns	⑤10¾ turns
"VRV" Series	10¾ turns	14½ turns	④14½ turns
"VRW" Series	①10¾ turns	14½ turns	③14½ turns
"VRX" Series	①10¾ turns	14½ turns	10¾ turns

①—Beginning Serial No. 12X-000001 (12¾ turns before this number).

②—Beginning Serial No. 8B-. 10¾ turns (Serial No. 12X- to 8B-), 12¾ turns (before Serial No. 12X-000001).

③—Beginning Serial No. 8B-. 10¾ turns (Serial No. 12T- to 8B-), 12¾ turns (before Serial No. 12T-000001).

④—Beginning Serial No. 3V- (12¾ turns before this number).

⑤—On VRU-4001A, was 12¾ turns before Serial No. 12T-000001.

CHECKING & ADJUSTMENT

CHECKING & ADJUSTMENT:—Check each unit as directed below. See that correct armature spring installed (see table above), check resistors for correct value and location, and check and adjust all gaps before making adjustments to change regulator performance. After making adjustments, always make final 'flash' test (see instructions below) and polarize generator when generator and regulator replaced on car (see Ground Terminal Note above).

CUTOUT RELAY

CUTOUT RELAY SPECIFICATIONS

Model	Voltage Winding Resistance	Contact Gap	Air Gap
All VRP & VRR Series	29.8-33.0 ohms	.015" Min.	②.031-.034"
All VRS-4000 to 5200 Series	118-132 ohms	.015" Min.	.031-.034"
All VRT Series	118-132 ohms		.031-.034"
All VRU Series	118-132 ohms		.031-.034"
All VRV Series	①265-299 ohms	.015" Min.	.048-.052"
All VRW Series	29.8-33.0 ohms	.015" Min.	.031-.034"
All VRX Series	111-125 ohms	.015" Min.	.031-.034"

①—Remove resistor R2 before checking winding resistance.

②—On VRP-4200 Series original Air Gap Setting was .034-.038".

Winding Resistance—Use Ohmeter (ST-284) to measure resistance directly, measure from regulator 'A' terminal to ground with voltage regulator lead disconnected from cutout relay yoke.

Armature Spring Note—Two different types of springs are used (10¾ turns or 12¾ turns). See Armature Spring Table (preceding) for complete data.

Air Gap—Use flat gauge ST-281-9 (.031-.034"), ST-281-3 (.034-.038"), ST-281-7 (.048-.052") to measure between magnet core and armature at point as close to armature hinge as possible with contacts open. Adjust by bending armature stop and make certain that stop does not rub against edge of armature.

NOTE—Armature 'seals' against yoke after contacts close and air gap must be measured with contacts open.

Contact Gap—Check with feeler gauge. Gap must not be less than .015" but may exceed this figure in service. With correct adjustment, contacts will close and armature will then 'seal' against yoke. CAUTION—If contact gap too large, contacts will not close before armature seals against yoke (armature must have further travel to effect this sealing).

CUTOUT RELAY SETTING

Model	Contacts Close	Contacts Open
All VRP-4000 to 4500 Series	6.4-6.6 volts	①⑦4.1-4.8 volts
All VRR-4000 & 5000 Series	6.4-6.6 volts	①4.1-4.8 volts
All VRS-4000, 4100 Series	13.0-13.75 volts	③8.2-9.3 volts
All VRS-4200, 5200 Series	12.8-13.50 volts	③8.2-9.3 volts
All VRT-4000 Series	13.0-13.75 volts	③8.2-9.3 volts
All VRU-4000, 5000 Series	13.0-13.75 volts	②8.2-9.3 volts
All VRV-4000, 4100, 4200 Series	25.6-27.0 volts	1.9-3.0 amperes
All VRW-4000, 4100, 5000 Series	④6.4-7.0 volts	①4.1-4.8 volts
All VRX-4000, 4400 Series	⑤13.0-13.75 volts	⑥8.2-9.3 volts

①—Discharge current will be approximately 4-6 amperes.

②—Discharge current will be approximately 1-4 amperes.

③—Discharge current will be approximately 1.0-5.0 amperes.

④—Closing voltage in service—6.35-6.75 volts (VRP-4001AX, 4CX, 4FX, 4102AX, 4303AXM, 4401AX, 4501AX, 4503AX; VRW-4001BX, 4003BX, 4005B, 5003BX, 5005B), 6.4-7.0 volts (all other VRP Series).

⑤—Except VRX-4001B, 3A, 3B, 3C, 4A—12.8-13.5 volts.

⑥—Discharge current will be approximately 3-5 amperes.

⑦—On VRP-4200 Series original setting was 4.8-5.6 volts (7-8 amperes discharge).

Closing Voltage—Connect ammeter in charging line at regulator 'B' terminal, connect voltmeter between 'A' terminal and ground. Operate generator and increase speed slowly until contacts just close but without sealing against yoke, note voltmeter reading at this point (NOTE—a 2000 ohm earphone connected between 'B' terminal and ground may be used to check closing, a click will be heard as the contacts close). To adjust, use tool ST-283 and adjust armature spring tension by bending lower spring hanger. Increase spring tension to increase closing voltage, lower spring tension to decrease voltage. CAUTION—Closing voltage must always be set .5 volts less than Voltage Regulator setting Opening Voltage or Amperage—Connect meters as for Closing Voltage Check (above), decrease generator speed slowly and note voltmeter (or ammeter) reading as contacts open. Adjust by changing contact gap (see above).

CONTINUED ON NEXT PAGE

AUTO-LITE REGULATORS VRP, VRR, VRS, VRT, VRU, VRV, VRW, VRX TYPES (C ntinued)

VOLTAGE REGULATOR

VOLTAGE REGULATOR SPECIFICATIONS

Model	Winding Resistance	Contact Gap	Air Gap
All 'VRP', 'VRR' Types	10.8-12.0 ohms	.012" Min.	.048-.052"
All 'VRS', 'VRT' Types	43.7-49.3 ohms		.048-.052"
All 'VRU' Types	43.7-49.3 ohms		.048-.052"
All 'VRV' Types	①145-163 ohms		.048-.052"
All 'VRW' Types	10.8-12.0 ohms		.048-.052"
All 'VRX' Types	43.7-49.3 ohms	.012" Min.	.048-.052"

①—179-201 ohms resistance on regulators before Serial Date 10V.

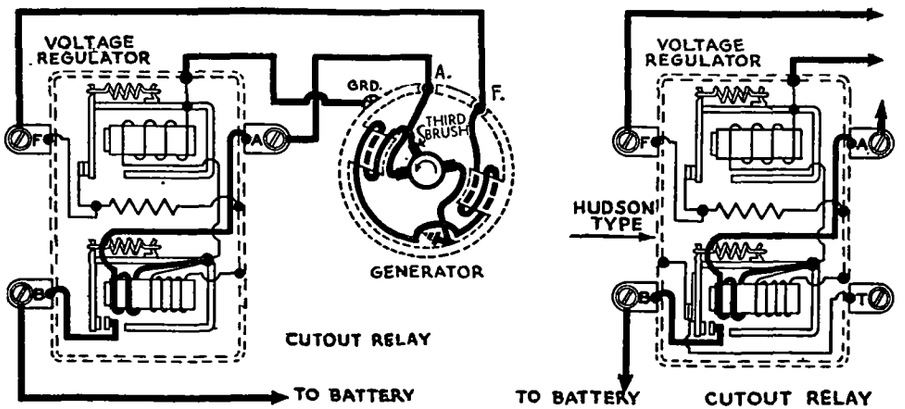

VOLTAGE REGULATOR CIRCUITS

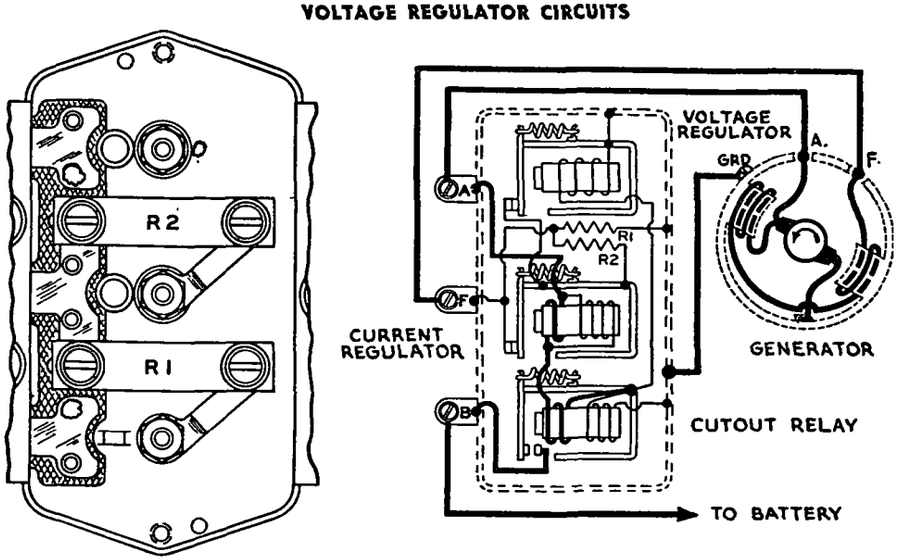

VOLTAGE & CURRENT REGULATOR

Winding Resistance—Use Ohmeter (ST-284) to measure resistance directly. Measure between lead (disconnect lead from cutout relay yoke) and ground.

Armature Spring Note—Springs on all models have 14½ turns.

Air Gap—Use pin gauge ST-281-7 and measure at point next to stop pin on contact side with contacts just opening. Test air gap by connecting test lamp and battery between 'F' terminal and ground. Insert low limit pin gauge, depress armature by hand, lamp should dim or go out. Repeat test with high limit pin gauge. Lamp should remain lighted. To adjust air gap, loosen screw holding upper contact bracket, use tool ST-282 to raise bracket (to increase gap), tap top of bracket to lower contact (to decrease gap), tighten screw. See that contact spring is straight and parallel with armature.

Contact Gap—Check gap with feeler gauge while holding armature down against stop pin (CAUTION—do not press on contact spring, press down on armature evenly on both sides of spring). Gap may vary in service, if gap variation too great stop pin is wrong length and unit should be replaced.

VOLTAGE REGULATOR SETTING

Model	Voltage Setting Table	Model	Voltage Setting Table
VRP-4001A,B,C,D,E,F,G	#3	VRS-4001A,B,C; 2A,3A	#6
VRP-4001AX, 4CX, 4FX	#5	VRS-4004A to 4H, 5A to 5E	#6
VRP-4002A,B,C,D; 3A	#3	VRS-4006A, 6B, 6C	#6
VRP-4004A, B, C, D, E, F, F-1, F-2	#3	VRS-4007A, 7A-1, 7B, 7C, 7D	#6
VRP-4004G, H, J, K	#3	VRS-4008A, 9A, 10A, 10B	#6
VRP-4005A,B,C,D,E	#3	VRS-4012A, 13A, 14A	#6
VRP-4006A,AP,B,C,D,E,F,G,H,J	#3	VRS-4102AM to 2EM	#6
VRP-4007A,B,C,C-1,C-2,D	#3	VRS-4201A	#8
VRP-4008A,B,C,D	#2	VRS-5001, 4C	#6
VRP-4009A,B,C,D	#3	VRS-5201, 1A	#8
VRP-4010A,11	#3	VRT-4001A,2A,2A-1	#6
VRP-4101A,2A,3A,3B,4A,4B,4B-1	#3	VRT-4003A-1, 4A, 5A	#6
VRP-4102AX	#5	VRU-4001A,2A,4A	#6
VRP-4105A, 5AM, 6A, 6B, 7A	#3	VRU-4101AM,2AM, 5004	#6
VRP-4201A-1, 2A-1	#4	VRV-4001A, 2A, 3A, 3B, 4A	#7
VRP-4301AM, 2AM, 2BM, 4AM	#3	VRV-4101A,2A,3A	#7
VRP-4303AXM, 4401AX	#5	VRV-4201A,1AM,2AM	#7
VRP-4401A, 1B, 1C, 1D, 2A, 2B	#3	VRW-4001A, 2A, 3A, 4A, 5A	#3
VRP-4403A, 4A	#3	VRW-4101AM, 2AM	#3
VRP-4501A, 1C, 2A, 3A	#3	VRW-4001BX, 3BX, 5B	#5
VRP-4501AX, 3AX	#5	VRW-5003BX, 5B	#5
VRR-4001A, 1B, 6A, 7A	#2	VRX-4001A,2A,2B,3D, 4401A	#6
VRR-4002A, 2B, 3A, 4A, 4B, 5A	#3	VRX-4001B,3A,3B,3C,4A	#8
VRR-4008A, 5008	#5		

VOLTAGE SETTING TABLES

Table 1. Temp.	Volts	Table 2. Temp.	Volts	Table 3. Temp.	Volts	Table 4. Temp.	Volts
50°	7.51	50°	7.63	50°	7.41	50°	7.44
60°	7.48	60°	7.57	60°	7.38	60°	7.39
70°	7.45	70°	7.50	70°	7.35	70°	7.35
80°	7.42	80°	7.43	80°	7.32	80°	7.31
90°	7.39	90°	7.38	90°	7.29	90°	7.27
100°	7.37	100°	7.31	100°	7.27	100°	7.22
110°	7.34	110°	7.24	110°	7.24	110°	7.18
120°	7.31	120°	7.17	120°	7.21	120°	7.14

NOTE—Allowable voltage variation ± .15 volts (Tables 1. 2, 3, 4).

VOLTAGE SETTING TABLES (Continued)

Table 5 Temp.	Volts	Table 6 Temp.	Volts	Table 7 Temp.	Volts	Table 8 Temp.	Volts
50°	7.16	50°	14.59	50°	28.84	50°	14.09
60°	7.13	60°	14.54	60°	28.67	60°	14.04
70°	7.10	70°	14.50	70°	28.50	70°	14.00
80°	7.07	80°	14.46	80°	28.32	80°	13.96
90°	7.04	90°	14.42	90°	28.15	90°	13.92
100°	7.02	100°	14.37	100°	27.98	100°	13.87
110°	6.99	110°	14.33	110°	27.81	110°	13.83
120°	6.96	120°	14.29	120°	27.64	120°	13.79

NOTE—Allowable voltage variation ± .1 volt (Table 5), ± .30 volt (for Table 6), ± .50 volt (Table 7), ± .20 volt (Table 8).

Voltage Setting Check—Connect ammeter in charging line at regulator 'B' terminal (ammeter must read to 1 ampere and internal resistance must not exceed .01 ohm, use short heavy leads for connections), connect voltmeter between regulator 'B' terminal and ground (meter must read to .1 volt). Make certain that car battery is fully charged with gravity reading of 1.275-1.280 (substitute fully charged battery if car battery run down). Run engine at speed equivalent to 30 MPH for at least 15 minutes with generator charging battery to bring regulator up to operating temperature. Then note voltmeter reading which should agree with table above. NOTE—Single earphone of 2000 ohm or greater resistance connected between 'F' terminal and ground is recommended in checking regulator operation.

CONTINUED ON NEXT PAGE

AUTO-LITE REGULATORS VRP, VRR, VRS, VRT, VRU, VRV, VRW, VRX TYPES (C ntinued)

Adjustment—Use tool ST-283 to vary armature spring tension by bending arm at l wer end of spring. Increase spring tension to increase voltage, decrease tension to decrease voltage. Replace cover and recheck performance.

CURRENT REGULATOR

NOTE—Data below applies to types with separate Current Regulator unit only.

CURRENT REGULATOR SETTING

Model	Max. Amperes
VRP-4001A, 1AX	34-36
VRP-4001B	31-33
VRP-4001C	27-29
VRP-4001D	29-31
VRP-4001E	24-26
VRP-4001F, 1G	39-41
VRP-4002A, 2C, 2D	34-36
VRP-4002B	27-29
VRP-4003A, 4A	34-36
VRP-4004B, 4H	29-31
VRP-4004C, 4C-1, 4CX	31-33
VRP-4004D	27-29
VRP-4004E, 4J	39-41
VRP-4004F, 4F-1,4F-2,4FX	34-36
VRP-4004G, 4K	24-26
VRP-4005A	34-36
VRP-4005B	31-33
VRP-4005C	24-26
VRP-4005D	27-29
VRP-4005E	39-41
VRP-4006A, 6AP, 6D	29-31
VRP-4006B, 6G	24-26
VRP-4006C	27-29
VRP-4006E	31-33
VRP-4006F, 6J	39-41
VRP-4006H	34-36
VRP-4007A	31-33
VRP-4007B	39-41
VRP-4007C, 7C-1, 7C-2	34-36
VRP-4007D	29-31
VRP-4008A	39-41
VRP-4008B, 8D	34-36
VRP-4008C	31-33
VRP-4009A	29-31
VRP-4009B	27-29
VRP-4009C, 11	39-41
VRP-4009D	24-26
VRP-4010A	31-33
VRP-4101A, 2A, 2AX	21-23
VRP-4103A,3B,4A,4B,4B-1	19-21
VRP-4105A, 5AM, 6A, 7A	19-21
VRP-4106B	21-23
VRP-4201A-1, 2A-1; 4301AM	34-36
VRP-4302AM, 2BM, 4AM	16-18
VRP-4303AXM	31-33
VRP-4401A, 1AX	34-36
VRP-4401B, 1C, 2B, 3A, 4A	39-41
VRP-4401D	31-33
VRP-4402A	34-36
VRP-4500 Series	See Note
VRS-4001A,2A,3A,4A	14-16
VRS-4001B, 4D, 4F	17-19
VRS-4001C, 4G	11-13
VRS-4004B,4C	16-18
VRS-4004E	9-11
VRS-4004H	19-21
VRS-4005A	14-16
VRS-4005B	16-18
VRS-4005C	19-21
VRS-4005D,6B	11-13
VRS-4005E	9-11
VRS-4006A,7A,7A-1,7C	14-16
VRS-4006C	16-18
VRS-4007B	9-11
VRS-4007D	19-21
VRS-4008A, 10B, 14A	14-16
VRS-4009A, 10A, 13A	17-19
VRS-4102AM, 2CM	17-19
VRS-4012A, 4102BM, 2EM	11-13
VRS-4102DM	9-11
VRS-4201A	11-13
VRS-5001, 4C	16-18
VRS-5201, 1A	11-13
VRU-4001A, 2A, 4A	7-9
VRU-4101AM, 2AM, 5004	7-9
VRV-4001A, 2A, 3A	9.5-10.5
VRV-4003B	4.8-5.2
VRV-4101A, 2A, 3A	4.8-5.2
VRV-4201A, 1AM, 2AM	4.8-5.2
VRW-4001A	11-13
VRW-4001BX	16-18
VRW-4002A, 3BX, 5B	13-15
VRW-4003A, 4A, 5A	15-17
VRW-4101AM, 2AM	13-15
VRW-5003BX, 5B	13-15
VRX-4001A,1B,2A,3C,4A	29-31
VRX-4002B, 3B, 3D	25-27
VRX-4003A, 4401A	34-36

►**VRP-4500 Series Current Setting Note**—These current regulators are temperature compensated and setting should be checked at two points as follows: **Test #1**—After 15 minutes run with 10 ampere output. **Test #2**—After additional 15 minutes run with current regulator operating (add load to battery so that voltage is 6.8-7.0 volts which will cause current regulator to operate).

VRP-4500 SERIES CURRENT SETTING TABLES

Temp.	VRP-4501A, 1AX, 3A, 3AX Test #1—Amperes—Test #2	Temp.	VRP-4501C, 4502A Test #1—Amperes—Test #2
40°F.	45 Max. 36-39	40°F.	49 Max. 41-45
60	43 Max. 34-38	60	47 Max. 39-43
70	42 Max. 33-37	70	46 Max. 38-42
80	41 Max. 32-36	80	45 Max. 37-41
100	39 Max. 30-34	100	43 Max. 35-39

CURRENT REGULATOR SPECIFICATIONS

Model	Current Setting	Contact Gap	Air Gap
All 'VRP' Types	See Table	.012" Min.	①.048-.052"
All 'VRS' Types	See Table		②.048-.052"
All 'VRU' Types	See Table		②.048-.052"
All 'VRV' Types	See Table		③.048-.052"
All 'VRW' Types	See Table		.048-.052"
All 'VRX' Types	See Table	.012" Min.	.048-.052"

①—After Serial No. 5U-000001. Before this No., Air Gap was .034-.038".

②—After Serial No. 12T-000001. Before this No., Air Gap was .034-.038".

③—After Serial No. 3V-000001. Before this No., Air Gap was .034-.038".

Armature Spring Note—Two different types of springs are used (10¾ turns or 12¾ turns). See Armature Spring Table (preceding) for complete data.

Air Gap—To check air gap, use pin gauge ST-281-7 (.048-.052") or ST-281-6 (.034-.038"). Check and adjust gap in same manner as for Voltage Regulator

Contact Gap—Check in same manner as Voltage Regulator (above).

Current Setting Check—Connect test meters and heat regulator as directed for Voltage Regulator Check (above). Then connect load in excess of rated capacity of regulator at point between regulator and battery (use bank of headlamp bulbs, or turn on all lights and accessories). Note ammeter reading with Current Regulator operating. Generator output must be within 5% of rated capacity stamped on regulator cover as shown in table above.

Adjustment—Same as Voltage Regulator (above). Use ST-283 tool.

FINAL 'FLASH' TEST:—After adjusting Cutout Relay, Voltage Regulator, or Current Regulator, final flash test should be made after regulator cover replaced, by operating generator and noting regulator performance immediately.

REGULATOR RESISTORS:—One resistance unit used on 'VRR' regulators, two used on 'VRP' models (see VRP illustration for resistor locations). Resistors should be checked for correct resistance by testing with ohmeter (ST-284). CAUTION—Remove one resistor at a time to avoid interchanging units. Use extreme care to replace resistors in exact original location.

CONTINUED ON NEXT PAGE

AUTO-LITE REGULATORS VRP, VRR, VRS, VRT, VRU, VRV, VRW, VRX TYPES (C ntinued)

VOLTAGE-CURRENT REGULATOR RESISTORS

Model	Mark — R1 — Ohms		Mark — R2 — Ohms	
VRP-4001A, 1AX	38	36-40	7	6.5-7.5
VRP-4001B, 1F	60	57-63	15①	13.5-16.5
VRP-4001C, 2B	30	28-32	7	6.5-7.5
VRP-4001D, 1E	60	57-63	11	10-12
VRP-4001G	80	76-84	11	10-12
VRP-4002A, 2C	38	36-40	7	6.5-7.5
VRP-4002D	60	57-63	15	13.5-16.5
VRP-4003A, 4A	38	36-40	7	6.5-7.5
VRP-4004B	60	57-63	11	10-12
VRP-4004C,4C-1,4CX,4E	60	57-63	15①	13.5-16.5
VRP-4004D, 5D	30	28-32	7	6.5-7.5
VRP-4004F, 4F-1, 4F-2, 4FX	38	36-40	7	6.5-7.5
VRP-4004G, 4H	38	36-40	7	6.5-7.5
VRP-4004J	80	76-84	11	10-12
VRP-4004K	15	13.5-16.5	7	6.5-7.5
VRP-4005A	38	36-40	7	6.5-7.5
VRP-4005B	60	57-63	15①	13.5-16.5
VRP-4005C	60	57-63	11	10-12
VRP-4005E	60	57-63	15	13.5-16.5
VRP-4006A, 6AP, 6B	60	57-63	11	10-12
VRP-4006D	20	19-21	7	6.5-7.5
VRP-4006C, 6G	30	28-32	7	6.5-7.5
VRP-4006E, 6F, 7A, 7B	60	57-63	15①	13.5-16.5
VRP-4006H, 6J	38	36-40	7	6.5-7.5
VRP-4007C,7C-1,7C-2,7D	38	36-40	7	6.5-7.5
VRP-4008A, 8C, 9C	60	57-63	15①	13.5-16.5
VRP-4008B	38	36-40	7	6.5-7.5
VRP-4008D	60	57-63	15	13.5-16.5
VRP-4009A	60	57-63	11	10-12
VRP-4009B, 9D	30	28-32	7	6.5-7.5
VRP-4010A, 11	60	57-63	15	13.5-16.5
VRP-4101A, 2A, 2AX, 6A, 6B	30	28-32	None	
VRP-4103A, 4A	60	57-63	11	10-12
VRP-4103B, 4B, 4B-1, 5A, 5AM	60	57-63	30	28-32
VRP-4107A	60	57-63	30	28-32
VRP-4201A-1, 2A-1	38	36-40	7	6.5-7.5
VRP-4301AM, 2AM, 2BM, 4AM	38	36-40	7	6.5-7.5
VRP-4303AXM	60	57-63	15	13.5-16.5
VRP-4401A, 1AX	38	36-40	7	6.5-7.5
VRP-4401B, 1D, 2B, 3A, 4A	60	57-63	15	13.5-16.5
VRP-4401C	⑥38	36-40	⑥7	6.5-7.5
VRP-4402A	38	36-40	7	6.5-7.5
VRP-4501A, 1AX, 3A, 3AX	38	36-40	7	6.5-7.5

VOLTAGE-CURRENT REGULATOR RESISTORS (Continued)

Model	Mark — R1 — Ohms		Mark — R2 — Ohms	
VRP-4501C, 2A	60	57-63	15	13.5-16.5
VRS-4001A,B; 2A,3A,4A,B	60	57-63	30	28-32
VRS-4001C	38	36-40	20	19-21
VRS-4004C, 4D, 4E, 4H	80	76-84	30	28-32
VRS-4004F, 4G	60	57-63	30	28-32
VRS-4005A,B,C,D	60	57-63	None	
VRS-4005E	80	76-84	None	
VRS-4006A,B,C; 7A,7A-1	60	57-63	None	
VRS-4007B, 7D, 8A	60	57-63	None	
VRS-4007C	30	28-32	None	
VRS-4009A, 10A, 13A	60	57-63	30	28-32
VRS-4010B	30	28-32	30	28-32
VRS-4012A	60	57-63	None	
VRS-4014A	30	28-32	None	
VRS-4102AM, BM, CM, DM, EM	60	57-63	30	28-32
VRS-4201A, 5201, 1A	60	57-63	30	28-32
VRS-5001, 4C	80	76-84	30	28-32
VRU-4001A, 2A, 4A, 5004	②38	36-40	②20	19-21
VRU-4101AM	60	57-63	38	36-40
VRU-4102AM	60	57-63	30	28-32
VRV-4001A, 2A, 3A, 4A	⑤200	195-205	200	195-205
VRV-4003B	⑤100	95-105	200	195-205
VRV-4101A, 2A, 3A	⑤200	195-205	200	195-205
VRV-4201A, 1AM, 2AM	⑤200	195-205	200	195-205
VRW-4001A, 1BX, 2A	30	28-32	None	
VRW-4003A, 3BX, 5A, 5B	30	28-32	None	
VRW-4004A③	38	36-40	20	19-21
VRW-4004A④	60	57-63	30	28-32
VRW-4101AM, 2AM	30	28-32	None	
VRW-5003BX, 5B	30	28-32	None	
VRX-4001A, 1B, 2A, 2B, 3A, 4A	80	76-84	20	19-21
VRX-4003B, 3C, 3D	80	76-84	30	28-32
VRX-4401A	60	57-63	20	19-21

①—After No. 6U-000001. Before this No., R2 was marked 11 (10-12 ohms).
②—On VRU-4001A before Serial No. 12T-000001 one resistor used only. This resistor marked 60 (57-63 ohms).
③—Before Serial No. 6U-000001. Use later type for replacement.
④—After Serial No. 6U-000001 and for replacement on all units.
⑤—After Serial Date 5Y. Before this date, R1 marked 160 (158-162 ohms).
⑥—After Serial Date 5C. Before this date, R1 marked 160, R2 marked 15.

VOLTAGE REGULATOR RESISTORS

Model	Mark	Ohms	Model	Mark	Ohms
VRR-4001A, 2A, 4B	30	28-32	VRR-4006A, 7A	1.85	1.85-2.10
VRR-4001B, 2B, 3A	20	19-21	VRR-5008	20	19-21
VRR-4004A, 5A, 8A	20	19-21	VRT-4001A, 2A, 2A-1	30	28-32

AUTO-LITE REGULATOR VRY TYPES

Car Model	Regulator	Generator
Jeep, Ford & Willys Army Model (1942-45)	VRY-4203-A,B,E,G	①

①—Auto-Lite Model GEG-5001A, GEG-5002D, or GEG-5101D.

IMPORTANT SERVICE CAUTION: These regulators must always be used with the generators for which they are intended as these units are not wired in the same manner as other Auto-Lite units. Do not operate a regulator or generator of this type with other type units either on the car or on the test bench.

DESCRIPTION: Regulators are of the "three-unit" type (separate Cutout Relay, Voltage Regulator, and Current Regulator units). Units are similar design to other Auto-Lite regulator units **but are wired differently.** See car model pages for internal wiring diagram of regulator and generator. Regulators are designed for use with Positive or Negative battery ground as follows:

Regulator Model	Battery Ground Polarity
VRY-4101A; VRY-4201A, B, C; VRY-4202A	Positive
VRY-4203A, B, C, D, E, F, G; VRY-4204A	Negative

OPERATION: Similar to other three-unit regulator and shunt type generator installations except that the regulator "feeds" the generator field and the other end of the field winding is grounded to the generator frame. This is reversed from other types (where field "feed" is directly from the generator main brush and the field is grounded through the regulator) and is the reason these special type regulators and generators must always be used together. Regulators are vibrating type (current regulator has second winding to accelerate action of the current regulator armature). Voltage regulator is compensated for temperature (nickel-iron magnetic bypass type).

CHECKING & ADJUSTMENT: *Before checking and adjusting the individual regulator units,* make a complete visual inspection of the entire regulator and each unit as follows:

Regulator Inspection—Check for burning or other evidence of high temperature at coils, contacts, insulation, terminals, and other points. Check for loose connections, loose mounting nuts, rivets or screws, corrosion or other water damage, broken or incorrect resistors, loose or incorrect resistors, loose or incorrect wiring connections, defective gaskets.

Regulator Units Inspection—Check each unit for contact misalignment, burnt or dirty contact surfaces, bent armature or field yoke, bent or reversed armature hinges (bimetal hinges on Cutout Relay must be assembled with brass side up), broken leads, incorrect placing of shunt leads on Cutout Relay (these leads must not bind armature or touch tension spring).

CUTOUT RELAY

Model	Voltage Winding Resistance	Contact Gap	Air Gap
VRY-4101A	15.2-18.0 ohms	.015" Min.	.060-.065"
VRY-4200 Series	15.8-17.4 ohms	.025" Min.①	.0595-.0625"

①—Supersedes .015" originally specified for VRY-4201A, B.

Winding Resistance—Use accurate Ohmeter. Disconnect voltage winding ground connection and measure between this lead and stationary contact.

Air Gap—Check with flat feeler gauge inserted between contact side of brass pin in winding core and armature with contacts open. Adjust by raising or lowering the stop at the contact end of the armature.

Contact Gap—Check with flat feeler gauge inserted between both sets of contacts at the same time. Gap may be found to be larger than minimum specification (.015" or .025"—see table above). Adjust by bending supporting arms of stationary contacts. IMPORTANT—Adjust both sets of contacts exactly alike and make certain that they close at the same instant. Alignment can be checked with a straightedge across both contacts.

Cutout Relay Performance Specifications

Regulator Model	Contacts Close	Contacts Open
VRY-4101A	6.5-7.0 volts	0.5-4.0 amperes disch.
VRY-4200 Series	6.5-7.0 volts①	0.5-6.0 amperes disch.

①—Supersedes 6.4-6.6 volts originally specified for VRY-4201A, B.

Closing Voltage—Connect ammeter in charging line at regulator "B" terminal, connect voltmeter between regulator "A" terminal and ground. Operate generator for 15 minutes charging a battery to bring units up to operating temperature (regulator cover must be in place). Then slowly increase generator speed and note voltage reading at instant cutout relay contacts close (*NOTE*—a 2000 ohm earphone can be connected between regulator "A" and "B" terminal for accurate check—a click will be heard when contacts close). Adjust by turning screw at lower end of armature spring. Increase spring tension to raise closing voltage, decrease spring tension to lower closing voltage. IMPORTANT—Cutout relay closing voltage must always be 0.5 volts lower than voltage regulator operating voltage.

Opening Voltage or Amperage—With meters connected as for closing voltage check (above), decrease generator speed slowly and note voltmeter and ammeter readings as contacts open (ammeter reading will be "reverse" or discharge current). Adjust by varying relay contact gap by raising or lowering the stationary contact.

Final Flash Test—After all relay adjustments have been made, recheck relay performance by making a final flash test (operate generator and regulator, use test meters to check performance).

VOLTAGE REGULATOR

Regulator Model	Winding Resistance	Contact Gap	Air Gap
VRY-4101A	4.3-4.7 ohms	.010" Min.	.0395-.0425"
VRY-4200 Series	4.3-4.7 ohms	.010-.012"	.040-.042"

Winding Resistance—Use accurate Ohmeter. Disconnect both voltage regulator winding leads at the regulator base and check between these leads.

Air Gap—Check with pin gauge on contact side of brass armature stop pin in coil core with contacts just separating. Test air gap by connecting test lamp and battery between regulator "A" and "F" terminals. With low limit pin gauge in place between armature and core (use Gauge ST-281-1 for VRY-4200 Series Regulators), depress armature. Lamp should go out. Insert high limit pin gauge, depress armature. Lamp should remain lighted. Adjust by loosening screws holding stationary contact and raising or lowering the contact. CAUTION—Make certain that screws are properly tightened, that movable contact spring is straight and parallel with the armature.

Contact Gap—Check contact gap with a feeler gauge with armature held down against the stop pin (CAUTION—do not press on contact spring—press down on armature evenly on both sides of spring). If gap is too small, make certain that bridge carrying nickel-iron shunt was properly pushed down in assembly (if bridge up too high, armature rivets will strike it and prevent full armature travel). If gap varies widely from specifications, armature stop pin is wrong length and unit should be replaced.

Contact Spring Pressure—To check, disconnect spiral spring from armature, remove adjustable armature stop. Use spring scale hooked under contact spring, hold armature firmly, note scale reading at instant contacts open. Spring tension should be 7-8 ounces. NOTE—Make certain that fibre bumper block is in place when reassembling stop. With contact spring against the bumper block, gap between top of spring and armature stop should be .010-.016".

Voltage Regulator Performance Specifications

Operating Voltage (All VRY-4100 & 4200 Series)—7.41 volts (50°F), 7.38 volts (60°F), 7.35 volts (70°F), 7.32 volts (80°F), 7.29 volts (90°F), 7.26 volts (100°F), 7.23 volts (110°F), 7.20 volts (120°F).

NOTE—Allowable variation in operating voltage is plus or minus .15 volts.

Checking Voltage Setting—Connect test voltmeter between regulator "B" terminal and ground. Operate generator and note regulated voltage. To adjust, vary armature spring tension by turning adjusting screw at lower end of spring. Increase spring tension to increase operating voltage, decrease spring tension to decrease operating voltage.

Final Flash Test—After making adjustments, replace regulator cover, make flash test by stopping generator and then noting regulator operating voltage immediately after generator is restarted.

CURRENT REGULATOR

Regulator Model	Current Setting	Contact Gap	Air Gap
VRY-4101A	See Table	.010" Min.	.0465-.0495"
VRY-4200 Series	See Table	.030-.033"	.047-.049"

Air Gap, Contact Gap, Contact Spring Pressure—Check and adjust in same manner as for Voltage Regulator unit (above).

Current Regulator Performance Specifications

Model	Maximum Amperes	Model	Maximum Amperes
VRY-4101A	25-27	VRY-4202A	25-27
VRY-4201A, 1C	25-27	VRY-4203A,B,C,D,E,F,G	40-42
VRY-4201B	32-34	VRY-4204A	40-42

Checking Current Setting—Connect test ammeter in charging line at regulator "B" terminal. Connect load (lamp bank, or suitable resistance connected across battery) to cause current regulator to operate. Note ammeter reading. Reading should agree with rated capacity of regulator above (minus 0%, plus 10%). Adjust regulator and make final flash test as directed for voltage regulator

REGULATOR RESISTORS: Three resistors used on all models. (R1) and (R3) on all models are 76-84 ohms—marked "80". (R2) on VRY-4101A is 5.5-6.5 ohms—marked "6", (R2) on all VRY-4200 Series is 6.5-7.5 ohms—marked "7".

AUTO-LITE CUTOUT RELAYS

DESCRIPTION:——All Cutout Relays used as automatic switches to disconnect the generator when it is not charging the battery and thus prevent the battery discharging through the generator windings are similar in operation although individual types and makes are somewhat different in construction.

OPERATION:—There are two coil windings, a fine winding called the shunt or voltage coil, which is connected directly from the generator terminal to ground (on 'insulated' type coil is not grounded but is connected across generator main brushes), and a heavy winding called the series or current coil, which is connected in the charging line from the generator so that the entire generator output (charging current to battery) passes through it. The series coil is in series with the cutout relay contacts so that no current flows in this coil with the contacts open. When the generator is operated at speeds below the cut-in point (with relay contacts open), there is a small current flow through the voltage or shunt winding. At the cut-in point, the magnetic field created by the shunt coil is sufficiently strong to attract the relay armature, closing the relay contacts. The generator output then flows through the series coil and the relay contacts to the battery. As long as the generator speed is high enough to produce a charging current (generator voltage greater than battery voltage), the series coil acts in conjunction with the shunt coil to keep the contacts closed.

When the generator voltage falls below that of the battery, the current flow in the series coil is reversed and the battery discharges through the generator. The magnetic field created by the series field due to this reverse current opposes that of the shunt coil, and the relay contacts open, opening the circuit between the battery and generator and preventing a further discharge of the battery.

ADJUSTMENT:—Mechanical specifications (contact gap, air gap, armature spring tension, etc.) should be checked and adjusted before the performance (cut-in and cut-out points) are checked or adjusted. See instructions for individual types below.

AUTO-LITE CB-4000 SERIES STANDARD CUTOUT RELAY

MECHANICAL ADJUSTMENT:—Air Gap. Close relay contacts (hold armature down), measure air gap between armature and top of coil core, using a feeler gauge. Air gap limits are shown in table below. Adjust by loosening the lower contact mounting screw and shifting contact bracket up or down (early types) or by expanding or contracting lower contact support so as to raise or lower contact (later types).

Contacts. Examine contact surfaces. Contacts must be flat and parallel, free from dust or oil, and not burned or pitted. If necessary, resurface contacts with a fine file or #00 sandpaper.

Contact Gap. With armature up against upper stop, check contact gap. Contact gap limits are shown in table below. Adjust by bending the upper stop backward or forward.

ELECTRICAL ADJUSTMENT:—Cut-in (contact closing) Point. Connect an accurate voltmeter between generator terminal of relay and ground. Operate generator and slowly increase speed until contacts close. Note voltmeter reading (there will be a slight 'kick-back' or voltage drop as contacts close). If performance is not satisfactory, adjust as follows:

To raise Cut-in Voltage. Increase air gap (see above) or increase armature spring tension by bending spring arm down (early types), or by bending lower spring bracket down (later types).

To lower Cut-in Voltage. Decrease air gap or decrease armature spring tension by bending spring arm up (early types), or by bending lower spring bracket up (later types).

Cut-out (Contact opening) Point. Connect an ammeter in the charging line at the relay. Operate generator and slowly decrease speed until contacts open. Note ammeter reading (pointer will drop to '0' when contacts open).

Cut- ut Amperage Note—A current of 15 amperes (all models except CBA-4003, 4; CBK-4001), 16 amperes (CBA-4003), 11 amperes (CBA-4004), 10 amperes (CBK-4001) must pass through relay windings before this cut-out test is made.

Model	Air Gap	Contact Gap	Cut-in Volts	Cut-out Amperes
CB-4001	.010-.030"	.025-.035"	7.0- 9.0	.5-2.5
CB-4007, 7S, 8, 9, 9S	.010-.030"	.015-.045"	6.5- 7.25	.5-2.5
CB-4010, 10S, 11, 11A, 11S	.010-.030"	.015-.045"	6.5- 7.25	.5-2.5
CB-4012, 12BS, 12S	.010-.030"	.015-.045"	6.5- 7.25	.5-2.5
CB-4013, 13BS, 13S	.010-.030"	.015-.045"	13.0-14.5	.5-2.0
CB-4014, 14B, 14C, 14L, 14S	.010-.030"	.015-.045"	6.5- 7.25	.5-2.5
CB-4014A, 14AS	.010-.030"	.015-.045"	5.0- 6.0	
CB-4015, 16, 16S	.010-.030"	.015-.045"	6.5- 7.25	.5-2.5
CB- 4017	.010-.030"	.015-.045"	6.5- 7.25	.5-2.5
CB-4020S, 21, 21S	.010-.030"	.015-.045"	6.5- 7.25	.5-2.5
CB-4022, 23, 24, 25	.010-.030"	.015-.045"	6.5- 7.25	.5-2.5
CB-4026, 27	.010-.030"	.015-.025"	13.0-14.5	.5-2.0
RA-4001	.010-.030"	.025-.035"	7.0- 8.0	.5-2.5
RA-4001A, 1AS, 4, 4S, 5	.010-.030"	.015-.045"	6.5- 7.25	.5-2.5
RA-4002, 2S	.010-.030"	.015-.045"	13.0-14.5	.5-2.0
CBA-4001, 2, 2S	.010-.030"	.015-.045"	6.5- 7.25	.5-2.5
CBA-4003	.010-.030"	.015-.045"	6.5- 7.25	1.5-4.5
CBA-4004	.010-.030"	.015-.045"	13.0-14.5	.5-3.5
CBB-4001	.010-.030"	.015-.045"	26.0-29.0	.5-1.5
CBC-4001	.010-.030"	.015-.045"	6.5- 7.0	0-1.0
CBD-4001	.010-.030"	.015-.045"	13.0-14.0	0-1.0
CBK-4001	.034-.038"	.015-.045"	6.9- 7.3	.5-1.5

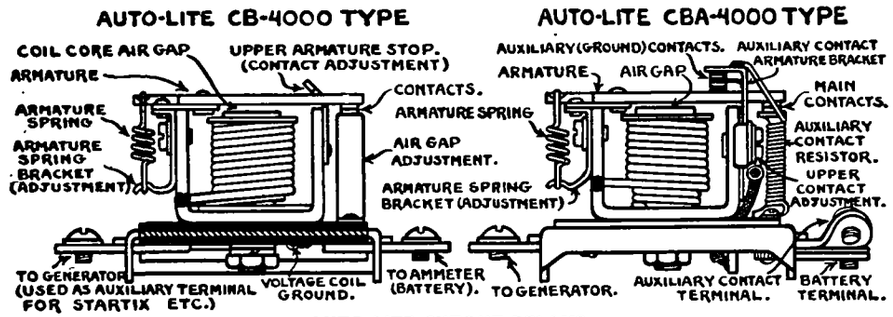

AUTO-LITE CUTOUT RELAYS

AUTO-LITE CBA-4000 SERIES SPECIAL CUTOUT RELAY

This type relay has a special set of auxiliary ground contacts mounted above the armature for signal light control (auxiliary contacts are closed with main contacts open and open when main contacts close). See illustration). The auxiliary contacts were grounded directly on the first Type CBA-4001 relays. On later types (which may be identified by one terminal being copper-plated) these contacts were grounded through a 6 ohm resistor to prevent damage to the contact spring through overloading caused by accidental application of full battery voltage (signal light circuit current regulated normally by 6 volt, 3 cp. signal light in series with contacts).

MECHANICAL ADJUSTMENT:—Air Gap. Close relay contacts (hold armature down, measure air gap between armature and coil core, using a feeler gauge. Air gap must be within limits shown in table. Adjust by expanding or contracting lower contact support so as to raise or lower the contact.

Contacts. Examine contact surfaces. Contacts must be flat and parallel, free from dust or oil, and not burned or pitted. Resurface contacts when necessary with a fine file or #00 sandpaper.

Contact Gap. With upper contacts closed, check lower or main contact gap. Contact gap limits are shown in the table. Adjust by loosening the upper contact support bracket screw (auxiliary contacts) and raising or lowering this upper contact. Check auxiliary contacts after adjusting contact gap. If these contacts do not open when main contacts close, adjust by bending auxiliary contact armature bracket (see illustration).

ELECTRICAL ADJUSTMENT:—All adjustments are the same as for the standard relays (see above).

AUTO-LITE HORN RELAYS

►**OVERDRIVE & STARTER CONTROL RELAYS:** For all data on these relays used with Overdrive Control Solenoids and Starter Control Solenoids, see separate articles as follows:

►**OVERDRIVE SOLENOID RELAYS:** *See "Warner Overdrive Controls" in Transmission Section.*

►**STARTER SOLENOID RELAYS:** *See "Auto-Lite Starter Controls—Solenoid Pinion Shift" in this section.*

TYPE:—Series HR-4000 Horn Relays have been made in two types, without fuse (early type), with fuses in relay base (later type). Terminal locations are not the same on the two types (see illustration).

Series HRC-4000—Terminals and connections are same as for Series HR-4000 later type (without fuse). These relays have new type armature design and in operation the armature "seals" against the core. Specifications and adjustment are not the same as for Series HR-4000 units.

Series HRL-4000 and HRL-4100—Similar in design to the Series HRC-4000 relays except that both ends of the coil winding are connected to independent terminals so that there is no electrical connection between the "horn feed" circuit in the relay and the relay winding circuit. One of these coil winding terminals is connected to the "Gauge" terminal of the ignition switch and the second terminal is connected to ground through the horn button. With these connections, horns are operative only with the ignition switch turned "on".

NOTE—Ignition switch must be turned on when testing or adjusting horns on the car.

OPERATION:—Horn relay winding connected between feed 'B' terminal and horn button 'S' terminal so that winding energized when horn button is pressed. This attracts armature closing contacts and completing circuit to horn 'H' terminal on relay. Horn current does not pass through winding or horn button.

NOTE—On Series HRL-4000 Relays, winding is not connected to the feed 'B' terminal but is brought out to a separate terminal which is connected to the 'gauge' terminal of the ignition switch. Refer to Chrysler 1942 wiring diagrams on individual car model pages for relay connections.

ADJUSTMENT:—**Contact Gap**—See that contacts are clean and not burned or pitted. Clean contacts by drawing strip of linen tape moistened with carbon tetrachloride between them and then rubbing with dry tape. If contacts burned, file lightly with ST-290 or other fine contact file and then clean as above. Use extreme care not to leave lint on contact surfaces. Contact gap should be correct as shown in table. Adjust by bending the armature stop.

Air Gap—See table for air gap specifications. Check air gap with contacts closed (On HRC & HRL, contacts should be closed but armature should not be 'sealed'). Adjust air gap by expanding or contracting stationary contact support bridge so as to raise or lower the contact.

Contact Closing Voltage—See table for specifications. Adjust by bending spring hanger at lower end of armature spring so as to change spring tension. Bend hanger down to increase spring tension to raise closing voltage, bend hanger up to decrease tension to lower closing voltage.

Contact Opening Voltage—See table for specifications. Adjust in same manner as Closing Voltage adjustment above.

Coil Winding Resistance—Use Ohmeter ST-284 to measure coil resistance directly. Measure between 'B' and 'S' terminals (except HRB-4201, 2, 2A), between 'A' and 'B' terminals (HRB-4201,2,2A), between the two coil winding terminals (HRL-4000, HRL-4100).

TESTING:—Connect battery and rheostat between relay 'S' terminal and ground on frame. Connect test voltmeter to same points. Use rheostat to control battery voltage and note relay performance.

HORN RELAY SPECIFICATIONS

Model	Coil Winding Resistance	Contact Gap	Air Gap
HR-4001, 1S, 2, 2S	12.8-13.4 ohms	.026"	.012-.017"
HR-4101, 1S	5.1- 5.5 ohms	.026"	.012-.017"
HRB-4201, 2, 2A	12.9-13.5 ohms	.026"	.012-.017"
HRC-4001; HRL-4000,4100	4.6- 5.0 ohms	.026"	①.016-.020"

①—Contact closed but armature not sealed against core.

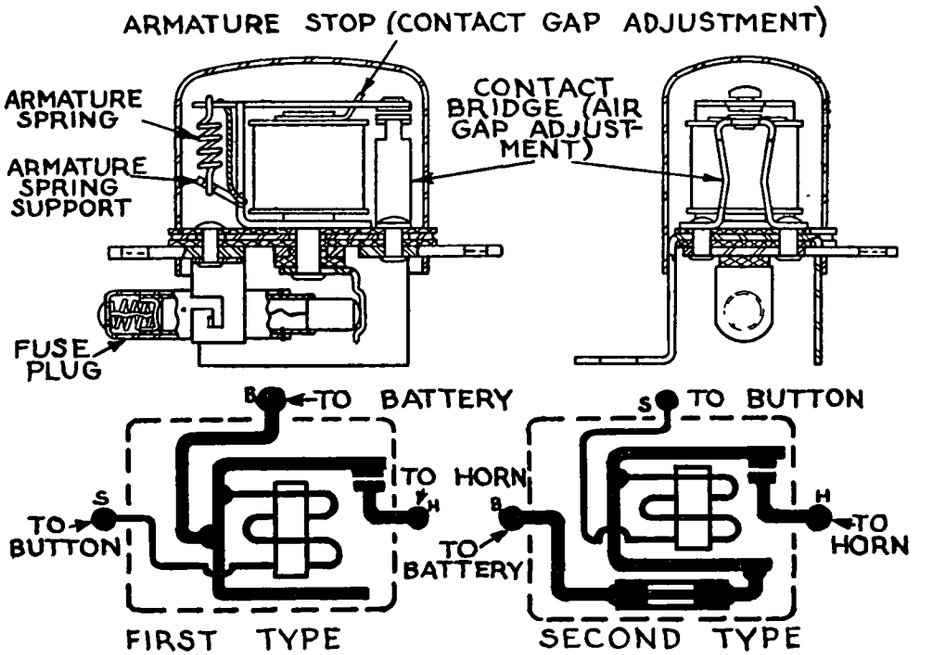

AUTO-LITE "HR" TYPE HORN RELAYS

HORN RELAY PERFORMANCE

Model	Closing Voltage	Opening Voltage
HR-4001, 1S, 2, 2S	3.0 -4.0 volts	1.5-2.5 volts
HR-4101, 1S	2.5 -3.5 volts	
HRB-4201, 2, 2A	3.25-4.0 volts	
HRC-4001, HRL-4001, HRL-4101	1.5 -3.0 volts①	See Note

①—Armature seals against core at 4.0 volts maximum.

HRC-4001 Note—Contacts open from seal at .5 volts minimum. Adjust closing voltage, sealing voltage, and opening voltage by bending armature hinge ears using extreme care to keep both ears in line.

FUSE:—Located in bayonet type plugs in relay base (released in same manner as lamp bulb). When replacing fuse see that spring is in place in plug behind fuse. See car model page for recommended fuse capacity.

NOTE—Fuse not used on HR-4001, HR-4001S, HRC-4001, HRL-4001, HRL-4101.

DELCO-REMY LAMP CONTROLLED GENERATORS

NOTE:—This type Generator used n the following car models:

Car Model	Year	Generator Model
Chevrolet Master FA, FD	1936	935-V
Chevrolet (All)	1937	948-R
Chevrolet Comm'l & Trucks	1938-39	948-R
Graham 90, 90-A, 110	1936	948-B
Graham 95, 116	1937	948-B
Graham, 96 (Without Radio)	1938-39	1100455

DESCRIPTION:—This type generator has a resistance unit in series with the generator field. The resistance unit is mounted on the lighting switch and is in series with the field coils with the switch turned 'off' or in the 'Park' position. When the switch is operated to turn on the headlights (principal lamp load), the resistance is shorted out, decreasing the total field resistance and increasing the generator output. Lighting switch (except on 1934 car models) has special position between 'OFF' and 'PARK' (button pulled out one notch) in which field resistance is shorted out so that the higher charging rate is available with the lamps turned off.

PERFORMANCE:—There are two distinct charging rates, the lower charging rate for day driving (lights turned off—resistance in circuit), and the higher charging rate for night driving (lights turned on—resistance shorted out). The generator used for this type installation is a conventional third brush control type, the lighting switch being used as a convenient method of switching the field resistance in or out of the field circuit. See car data page in car model section for complete generator performance data.

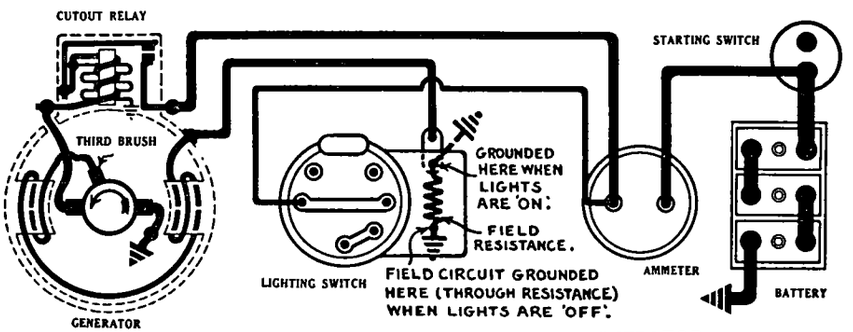

DELCO-REMY LIGHT SWITCH CONTROLLED GENERATOR

ADJUSTMENT:—Charging rate is adjusted in usual manner by shifting the third brush. Field resistance must be shorted out while adjustment is being made (ground field terminal on generator to generator field frame). Shift third brush in direction of armature rotation to increase charging rate and in opposite direction to decrease charging rate. See car data sheets for instructions and performance data on each generator model.

FIELD RESISTANCE:—All generators are regularly equipped with 1 ohm field resistance unit (on lighting switch). This is standard for average driving conditions (day and night, high and low speed). If car is operated in service with other than average driving conditions, make adjustments as noted below:

Excessive Day Use—Battery Overcharged:—Change resistance to 1½ ohm unit or reduce charging rate (third brush setting).

Excessive Night Use—Battery Undercharged:—Change resistance to ½ or ¾ ohm unit, check charging rate (do not set third brush beyond rated capacity of generator—see performance data on car data sheets for maximum setting).

Replacement resistance units are standard Delco-Remy thermostat resistance units. Parts numbers are as follows:

Resistance	Part No.
½ ohm	807180
¾ "	817911
1½ "	808767

DELCO-REMY SPLIT FIELD GENERATORS

Car Model	Generator	Regulator
Buick, 37-40 (1937)	918-B, 918-G	5807
Buick, 37-60, 80, 90 (1937)	918-A, 918-F	5807
Buick, 38-40 ('38), 39-40 ('39)	1101052	5807, 5858
Buick, 38-60 ('38), 39-60 ('39)	1101053	5807, 5858
Buick, 38-80, 90 ('38), 39-80, 90 ('39)	1101055	5807, 5858
Cadillac, 37-60, 65 (1937)	918-C	5817
Cadillac, 38-60, 38-60S (1938)	1101051	5817
Cadillac, 38-65 (1938)	1101054	5817
Cadillac, 39-60, 39-60S (1939)	1101056	5860
La Salle, 37-50 (1937)	918-C	5817
La Salle, 38-50 (1938)	1101051	5817
La Salle, 39-50 (1939)	1101056	5860

TYPE:—New type two-pole generator with fixed third brush and vibrating voltage regulator control. Field coils are connected separately so that left hand coil has third brush control (connected between third brush and field terminal), while right hand coil is straight shunt type (connected between main brush and field terminal). Both field coils are in regulator circuit and are controlled by the voltage regulator.

NOTE—Design of Shunt-Field Coil (right hand) has been changed so that lead location and connection points are different. See illustration and instructions below for old and new type coils. Old coils need not be discarded and will give satisfactory service if care is taken to see that leads located so that no short-circuits can result. New coils only are furnished for service.

OPERATION:—Both coils work together so that output is determined by 'balanced' characteristics of the third-brush and straight-shunt field design. Field strength of third-brush field coil drops off at high speed while that of the straight-shunt coil continues to increase so that better high speed performance is secured. This feature allows generator to be driven at greater engine-speed ratio so that improved low speed performance is secured without affecting the high speed performance. Actual charging rate on the car is determined by the voltage regulator setting.
each car model. Specifications for testing as follows:

PERFORMANCE:—See individual car model page for recommended setting for
Brush Spring Tension—25 ounces (all brushes).
Rotation—Counter-clockwise viewed from commutator end.
Motoring Performance—900-1000 R.P.M., 4.5-7 amperes, 6.0 volts.
Stalled or Lock Current—28-34 amperes, 5.0 volts.
Field Current (Total)—2.33-2.50 amperes, 6.0 volts.
Field Coil Testing—Specifications for each coil as follows:

Coil	Resistance (75° F.)	Field Current (at 6 volts)
Third Brush Coil	6.6-7.1 ohms	.89- .94 amperes
Shunt Coil	4.0-4.25 ohms	1.44-1.56 amperes

NOTE:—Shunt field coil (Part No. 1866409) has been redesigned so that both leads are located on top of coil and connections are made directly to the generator terminals (see illustration). Whenever old type coils are replaced by this new type follow special instructions below.

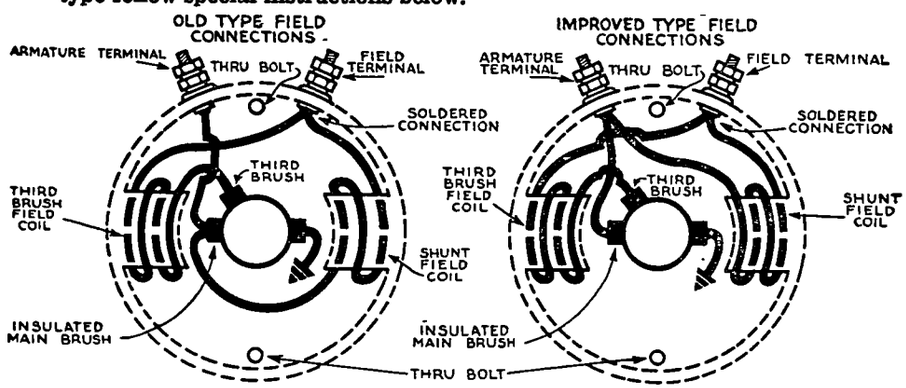

DELCO-REMY SPLIT FIELD GENERATORS

DELCO-REMY 5541, 5543, 5545 CURRENT REGULATORS

Car Model	Generator	Regulator
Cadillac V8, 355D (1935)	933-B	5541
Cadillac V12, 370D (1935)	933-C	5541
Cadillac V16, 452D (1935)	933-C	5541

DESCRIPTION:—The Current Regulator used in these type control units is designed to control the generator output. It is used in connection with a straight shunt wound generator (see separate article on 'Lamp Control Current Regulated Shunt Type Generators') and is designed to provide a higher generator output when the car is operated with the lamps turned on. Some types are compensated for temperature variations and the output increases with abnormally low temperatures and decreases with abnormally high temperatures (see table below). All compensated types should be adjusted with the control unit warmed up to room temperature (70°F.).

OPERATION:—The entire generator output from the cutout relay is fed through the two coil windings of the Current Regulator (with lamps off). When the output reaches the maximum figure for which the unit is set, the Regulator contacts open (or vibrate), cutting the resistance unit which is connected across the contacts in series with the field current and holding the output constant. The car lamps are connected to a lead which is taken off on the battery side of the first regulator coil (see illustration) so that the lamp current does not flow through both coils (one coil instead of two) When the lamps are turned on this has the effect of reducing the magnetic field of the Regulator coils since a portion of the generator output is shunted by the second regulator coil. This increases the generator output by an amount equal to one half the lamp load and results in a more even charging rate to the battery. It is very important with this type generator that the lamp load should not exceed the maximum rating for the particular generator (see tables on car data sheets and article on shunt type lamp control generator).

PERFORMANCE:—Current Regulators used on these car models should perform in accordance with the following table:

CURRENT REGULATOR SETTING

Regulator Type	Maximum Lamp Load	Maximum Cold Generator Ouput Lights Off	Lights On
x-5541	11 amperes	13-16 amperes	19-22 amperes
5543	7 amperes	7.5-8.5 amperes	11-13 amperes
5545	7 amperes	6.5-7.5 amperes	10-12 amperes

(x)—This type Current Regulator over-compensated for temperature and setting given above is correct with unit at room temperature (70°F). With generator hot (200°F), setting should be 9-11 amperes (lights off) and generator output with 11 ampere lamp load should be 14-16 amperes.

ADJUSTMENT:—Check mechanical specifications of Current Regulators before testing or adjusting performance. Follow procedure below:

Mechanical Adjustment:—Air Gap. Press down on armature until fiber bumper touches the stop. Hold in this position and check air gap between center of core and armature with feeler gauge. Air gap should be .057". Adjust by bending contact spring post.

Contact Gap. Hold armature down against lower stop and check contact gap. Gap should be .020". Spring tension should be 2.25 ozs. (at contacts).

Contact Spring Gap. Release armature. With contacts closed, measure gap between the fibre bumper and contact spring stop. Correct air gap is .008". Adjust by bending upper stop.

Electrical Adjustment:—Connect accurate ammeter in charging circuit at generator terminal. Connect voltmeter between generator and battery terminals on control unit. Operate generator and note generator output. If output is not correct (see performance table above), adjust as follows:

To Increase Output. Increase armature spring tension by bending lower spring bracket down.

To Decrease Output. Decrease armature spring tension by bending lower spring bracket up.

CUTOUT RELAY:—Cutout Relay used on above regulator types similar to units used singly on other generator models except for specifications as given below. See separate article on Delco-Remy Cutout Relays for complete adjustment directions.

CUTOUT RELAY SPECIFICATIONS

Cuts In—6.75-7.25 volts.
Cuts Out—0-3.0 ampere discharge current.
Contact Gap—.020". **Air Gap**—.015" (contacts closed).

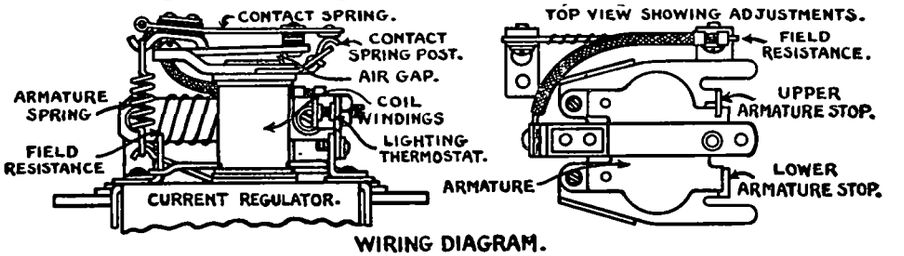

WIRING DIAGRAM.

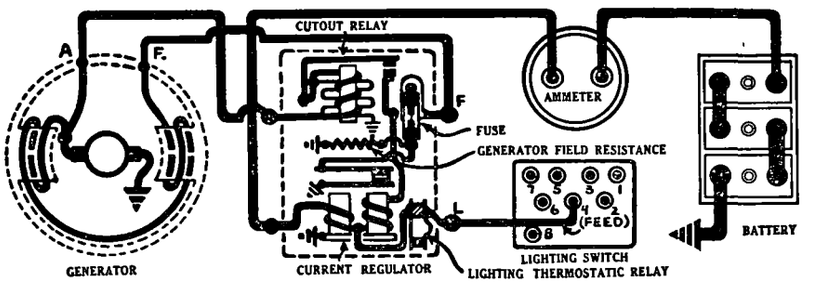

DELCO-REMY 5541, 5543, 5545 CURRENT REGULATORS

LAMP LOAD:—Lamp load should be checked by connecting an ammeter in circuit at the regulator 'L' terminal. Lamp load must not exceed maximum rating for the particular type generator.

THERMOSTAT:—A thermostatic relay (thermostatic arm type circuit breaker) mounted within the control unit case is connected in the lamp circuit to protect the regulator and generator from overloads. Thermostat contacts open with load of 20 amperes with an air temperature of 210°F. (thermostatic arm temperature will be 375-385°F.).

CURRENT REGULATED (LAMP CONTROL) GENERATORS

DESCRIPTION:—This type generator is shunt wound, no third brush being used. An external current regulator is used to regulate the generator output. The feed wire or lead for the lamps is taken from the current regulator so that the lamp current does not flow through the entire current regulator winding (one coil only instead of both coils). This has the effect of increasing the generator output by an amount equal to one-half the lamp load when the lamps are turned on.

PERFORMANCE:—Generators of this type are designed for a definite maximum lamp load and lamp load figure in table below must not be exceeded (check lamp load with all lamps turned on by connecting ammeter in lamp circuit at terminal 'L').

Performance Data

Generator Model	Control Unit	Max. Lamp Load—Amperes
933-B, C	5541	11
933-D	5543	7
961-C	5541	11

ADJUSTMENT:—Charging rate is adjusted by changing current regulator armature spring tension. Increase spring tension to increase generator output, decrease spring tension to decrease output. See article on Types 5541, 5543, 5545 Current Regulators below for complete data on adjustment, and maximum generator output.

LIGHTING THERMOSTAT:—A thermostatic arm type current limit relay (no winding) mounted in the Control Unit is used to protect the lighting circuits from overload. Thermostat contacts open with lamp load of 20 amperes wih temperature of 210°F. (air—thermostatic arm temperature 375-385°F.).

DELCO-REMY VOLTAGE CONTROL RELAYS

DESCRIPTION:—The Voltage Control Relay provides a stepped or two-rate charging control. The relay is non-vibrating and acts as an automatic switch to cut the resistance unit in or out of the field circuit, providing a high charging rate with the contacts closed (resistance short-circuited) and a lower charging rate with the contacts open (resistance in field circuit). Types used as standard or special equipment on car models as follows:

OPERATION:—The voltage control relay has only one winding (there are two coils but windings are connected in parallel). When the generator voltage reaches the maximum point for which the unit is set, the current flow through the coil winding opens the relay contacts, cutting the resistance into the field circuit. The contacts remain open (providing the lower charging rate) until the generator voltage falls to the minimum point and then close so that the higher charging rate is resumed. The resistance is connected across the relay contacts and is short-circuited with the contacts closed.

PERFORMANCE:—Voltage Control Relays are over-compensated for temperature and operating voltage will not be uniform over entire range. Tests should be made with unit cooled down to room temperature (70°F). Settings may be rechecked with generator and control unit hot (180°F). Performance should be as follows:

VOLTAGE CONTROL RELAY PERFORMANCE

Type	Contact Opening Voltage 70°F	Contact Opening Voltage 180°F	Contact Closing Voltage 70°F	Contact Closing Voltage 180°F
5539	8.5-8.9	8.5-8.7	7.0-7.5	7.0-7.2
5540, 2, 4, 6, 8, 9	8.3-8.7	7.75-8.2	7.25-7.75	6.55-7.1
5550, 1, 4, 5, 6, 8	8.3-8.7	7.75-8.2	7.25-7.75	6.55-7.1
5560	15.4-16.35	14.4-15.35	13.9-15.1	12.8-14.1
5581, 2	8.3-8.7	7.75-8.2	7.25-7.75	6.55-7.1
5583, 4, 5	8.3-8.7	7.75-8.2†	7.25-7.75	6.55-7.1†
5586	15.4-16.35	14.4-15.35	13.9-15.1	12.8-14.1
5590, 3	8.3-8.7	7.75-8.2†	7.25-7.75	6.55-7.1†
5589, 94, 5	8.3-8.7	7.75-8.2	7.25-7.75	6.55-7.1
5800	7.65-8.05	7.55-7.95	6.65-7.15	6.35-6.95
5804	8.1-8.55	7.65-8.05†	7.15-7.55	6.35-6.95†
5805,16	8.3-8.7	7.75-8.2	7.25-7.75	6.55-7.1
5821	7.65-8.05	7.55-7.95	6.55-7.15	6.35-6.95
5830, 9	8.3-8.7	7.75-8.2†	7.25-7.75	6.55-7.1†
5833	7.45-7.85	6.95-7.35†	6.0 Max.	6.0 Max†
5834, 8	15.4-16.35	14.4-15.35	13.9-15.1	12.8-14.1
5845, 9	14.1-14.7	14.1-14.7	12.0 Max.	12.0 Max.
5850	8.3-8.7	7.75-8.2	7.25-7.75	6.55-7.1
5851	7.45-7.85	6.95-7.35†	6.0 Max.	6.0 Max. †
5857	14.1-14.7	14.1-14.7	12.0 Max.	12.0 Max.
5859	28.5-31.5	26.5-28.5	15.0 Max.	15.0 Max.
5863	7.65-8.05	7.55-7.95	6.65-7.15	6.35-6.95
5864, 8, 9	7.45-7.85	6.95-7.35†	6.0 Max.	6.0 Max.†
5879, 80, 81	8.3-8.7	7.75-8.2	7.25-7.75	6.55-7.1
5882	14.6-15.55	13.6-14.55	13.3-14.5	12.2-13.5
5883	7.9-8.3	7.35-7.8†	6.95-7.45	6.25-6.8†
5884	15.4-16.35	14.4-15.35	13.9-15.1	12.8-14.1
5886, 88, 91	14.5-15.2	13.5-14.2	12.5-13.2	11.5-12.2
5887, 99	28.5-31.5	26.5-28.5	15.0 Max.	15.0 Max.
5889, 92, 93	7.45-7.85	6.95-7.35†	6.0 Max.	6.0 Max.
5890	7.65-8.05	7.55-7.95	6.65-7.15	6.35-6.95
5897, 98	14.1-14.7	14.1-14.7	12.0 Max.	12.0 Max.

†—At temperature of 150°F.

ADJUSTMENT:—Check mechanical specifications of Voltage Control Relay before testing or adjusting performance. Follow complete procedure below:

Mechanical Adjustment:—Air Gap. Hold armature down against lower stop and use feeler gauge to check gap. Use sensitive spring scale to check spring tension at contacts. See table below for specifications (spring tension given in ounces).

Armature Travel. Gauge armature travel (between lower stop and under side of armature with armature up against upper stop). Adjust by bending upper armature stop. See table below for specifications.

Contact Gap. Hold armature down against lower stop. Use feeler gauge to check gap, being careful not to disturb position of upper contact spring arm. See table below for specifications.

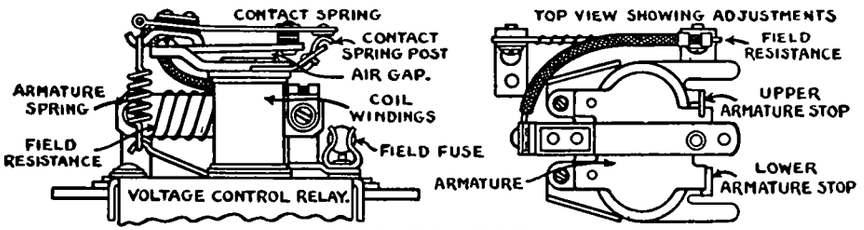

WIRING DIAGRAM

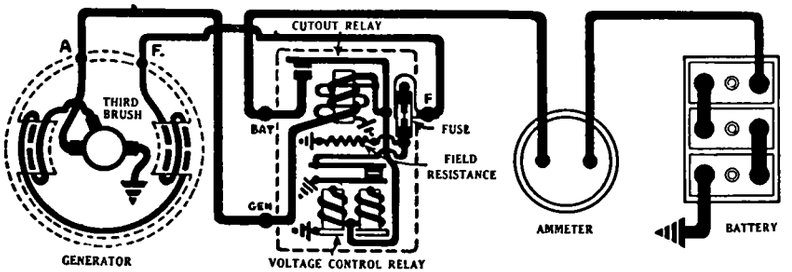

DELCO-REMY VOLTAGE CONTROL RELAY

VOLTAGE CONTROL RELAY SPECIFICATIONS

Type	Air Gap	Contact Gap	Spring Tension	Armature Travel
5539	.057"	.015"	—	—
5540, 2, 4, 6, 8, 9	.035"	.010"	.7-.9	.035"
5550, 1, 4, 5, 6, 8	.035"	.010"	.7-.9	.035"
5560	.035"	.010"	.5-1.1	.030"
5581, 2, 3, 4, 5, 9	.035"	.010"	.7-.9	.035"
5586	.035"	.010"	.5-1.1	.030"
5590, 3, 4, 5	.035"	.010"	.7-.9	.035"
5800	.045"	.015"	.7-1.4	.045"
5804	.035"	.010"	.5-1.1	.035"
5805, 16	.035"	.010"	.7-.9	.035"
5821	.045"	.015"	.5-1.1	.045"
5830, 9	.035"	.010"	.7-.9	.035"
5833	.035"	.010"	.5-1.1	.035"
5834, 8	.035"	.010"	.5-1.1	.030"
5845, 9	.045"	.015"	.7-1.4	.045"
5850	.035"	.010"	.7-.9	.035"
5851	.035"	.010"	.5-1.1	.035"
5857, 63	.045"	.015"	.7-1.4	.045"
5859	.015"	.022"	.7-.9	.060"
5864, 8, 9	.035"	.010"	.5-1.1	.035"
5879, 80, 1	.035"	.010"	.7-.9	.035"
5882	.030"	.010"	.5-1.1	.030"
5883	.035"	.010"	.5-1.1	.035"
5886, 88, 91	.035"	.010"	.5-1.1	.030"
5887, 99	.015"	.022"	.7-.9	.060"
5889, 92, 93	.035"	.010"	.5-1.1	.035"
5890, 97, 98	.045"	.015"	.7-1.4	.045"

CONTINUED ON NEXT PAGE

DELCO-REMY VOLTAGE CONTROL RELAYS (C ntinu d)

Electrical Adjustment:—Connect accurate voltmeter between terminal marked 'Bat' and ground. Operate generator charging a fully charged battery and cycle generator by increasing speed until voltage control relay contacts just open and then decrease speed until contacts just close. Then repeat test and note voltmeter reading at instant contacts open and close. Voltage Control Relay performance should agree with table above. If operating voltages cannot be secured even with generator charging a fully charged battery, connect a variable resistance or fixed resistance of about .25 ohms in charging circuit. Resistance must have sufficient current carrying capacity to take entire generator load (20-25 amperes). Adjustments are as follows:

Cut-in (contact opening) Voltage Adjustment. Increase armature spring tension to increase operating voltage, or decrease armature spring tension to decrease operating voltage. Adjust by bending spring lower bracket. Correct spring tension before making this adjustment is ¾ oz. measured at contacts.

Cut-out (contacts closing) Voltage Adjustment. Increase armature air gap to increase operating voltage or decrease air gap to decrease operating voltage. Adjust by bending lower armature stop. Adjustment to correct closing voltage should be very slight. If it is necessary to change air gap considerably, recheck armature travel and contact gap, then repeat test.

CHARGING RATE ADJUSTMENT:—It should be remembered that the Voltage Control Relay establishes a high and low charging rate. The actual charging rate (maximum for both 'high' and 'low' rates) is determined by the third brush setting of the generator. The third brush is adjusted in the usual manner except that the Voltage Control Relay must be shorted out by connecting a jumper wire from the generator 'F' terminal to ground while the adjustment is being made in order to prevent regulator action. See individual car data sheets for standard settings and allowable maximum settings for each generator. Data given in 'Performance Data' tables is the maximum rating for the particular generator and must not be exceeded. Be sure to remove the jumper wire after the adjustment is completed.

WIRING:—Terminals are as shown except where Cut-out Relay ground contacts are used for starter solenoid control, when an extra 'GRD' terminal is provided. On one model the solenoid circuit is grounded through the generator third brush and the extra terminal is marked '3B'.

CUTOUT RELAY

The Cutout Relay used with these Voltage Control Relays is similar in design and operation with previous types. See separate article for complete description and adjustments. Specifications are as follows:

CUTOUT RELAY SPECIFICATIONS & PERFORMANCE

Type	Contact Gap	Air Gap	Cut-in Volts	Cut-out Amperes
5539	.020"	.015"	6.75-7.5	0-2.5
5540, 2, 4, 6, 8, 9	.020"	.015"	6.3-6.9	0-3.0
5550, 1, 4, 5, 6, 8	.020"	.015"	6.3-6.9	0-3.0
5560	.020"	.015"	13.0-14.2	0-4.0
5581, 2, 5	.020"	.015"	6.3-6.9	0-3.0
5583, 4	.020"	.020"	6.3-6.9	0-3.0
5586	.020"	.015"	13.0-14.2	0-4.0
5589, 94, 5	.020"	.020"	6.4-7.0	0-3.5
5590, 3	.020"	.020"	6.3-6.9	0-3.0
5800	.020"	.015"	6.3-6.9	0-4.0
5804	.020"	.020"	6.3-6.9	0-3.5
5805, 16	.020"	.015"	6.3-6.9	0-3.0
5821	.020"	.020"	6.3-6.9	0-4.0
5830, 9	.020"	.020"	6.3-6.9	0-3.0
5833	.020"	.015"	6.3-6.9	0-4.0
5834, 8	.020"	.015"	13.0-14.2	0-4.0
5845, 9	.020"	.015"	12.9-13.9†	0-4.0
5850	.020"	.015"	6.3-6.9	0-3.0
5851	.020"	.015"	6.3-6.9	0-4.0
5857	.020"	.015"	12.9-13.9	0-4.0
5859	.030"	.020"	24.5-27.5	3.0 Max.
5863	.020"	.015"	6.3-6.9	0-4.0
5864, 8, 9	.020"	.015"	6.3-6.9	0-4.0
5879, 81	.020"	.020"	6.4-7.0	0-3.5
5880	.020"	.020"	6.3-6.9	0-3.0
5882	.020"	.020"	12.4-13.6	4.0 Max.
5883	.020"	.020"	6.0-6.6	3.0 Max.
5884	.020"	.015"	13.0-14.2	0-4.0
5886, 88, 91	.020"	.020"	13.2-14.0	0-4.0
5887	.030"	.020"	24.5-27.5	3.0 Max.
5889, 90	.020"	.015"	6.3-6.9	0-4.0
5892, 93	.020"	.015"	6.3-6.9	0-4.0
5897, 98	.020"	.015"	12.9-13.9	0-4.0

†—Compensated for temperature. This figure correct both Cold and Hot.

DELCO-REMY TWO TERMINAL CUTOUT RELAYS (NO GROUND CONTACTS)

NOTE:—For specifications on Cut-out Relays used in Control Units (Vibrating Voltage Regulators, Vibrating Voltage and Current Regulators, Voltage Control Relays) or Apparatus Boxes (except 480-Z), see separate articles on each type of equipment. Type 480-Z and Types 264-H (Cut-out Relay and Horn Relay), 264-D, F, (Cut-out and Solenoid Relays) listed below.

CUTOUT RELAY SPECIFICATIONS & PERFORMANCE
(Two and Three Terminal Types)

Type	Contact Gap	Air Gap	Cut-in Volts	Cut-out Amperes
263-A, C, D, F, G	.020"①	.015"	7.0-7.5	0-3.0
263-B, E	.020"	.015"	13.5-14.0	0-2.0
264-A to F, H to L	.020"①	.015"	7.0-7.5	0-3.0
264-N (Small Type)	.035"	.015"	15.0-18.0	1.5 amps. at 34 v.
264-N (Large Type)	.020"	.025"	37.0-39.0	1.5 amps. at 34 v.
265-A	.020"①	.015"	6.0-6.5	0-1.5
265-B to V	.020"①	.015"	7.0-7.5	0-3.0
265-W	.020"	.015"	13.5-14.0	0-2.0
266-A to D	.020"①	.015"	6.0-6.5	0-1.5
266-E to K	.020"①	.015"	7.0-7.5	0-3.0
266-L	.020"①	.015"	6.0-6.5	0-1.5
266-N, P	.020"①	.015"	7.0-7.5	0-3.0
267-A to E	.020"	.015"	13.5-14.0	0-2.0
269-C	.015"	.020"	7.3-7.6	0-1.0
269-D, H	.016"	.025"	7.1-7.4	0-1.5
269-K	.020"①	.015"	7.0-7.5	0-3.0
270-A	.020"	.015"	6.75-7.5	0-5.0
270-B, C	.020"②	.020"	6.75-7.5	0-3.5
270-D	.020"	.025"	14.2-14.6	1.5
480-Z	.020"①	.015"	7.0-7.5	0-3.0
5779	.045"	.045"	28.0-29.0	0-2.0
5780	.....	.045"	34-35	0-3.0
5781	.045"	.045"	6.0	4.5
1116751, 55, 88	.020"①	.015"	7.0-7.5	0-3.0
1116752, 71	.020"①	.015"	6.3-6.8	0-3.0
1116753, 61, 87	.020"	.015"	13.5-14.0	0-2.0
1116758	.020"	.020"	14.0-14.75	0-1.5
1116766, 73	.020"②	.020"	6.75-7.5	0-3.5
1116767, 807	.016"	.025"	7.1-7.4	0-1.5
1116768	.030"	.020"	35-37	0-1.5
1116777	.020"	.015"	13.0-13.8	0-3.0
1116784	.025"	.055"	39.0-41.0	1.0 max.
1116791	.020"	.025"	14.8-15.2	0-1.1
1116795	.030"	.020"	28.0-30.0	0-3.0
1116808	.020"	.015"	13.0-13.8	0-3.0
1116810	.020"	.015"	13.5-14.0	0-2.0
1116811	.020"	.057"	13-14	0-3.0
1116814, 842	.020"	.015"	13.5-14.0	0-2.0
1116816	.020"②	.020"	6.75-7.5	0-3.5
SM-1418, 1728, 1849	.020"	.015"	13.5-14.0	0-2.0
SM-1495	.020"①	.015"	7.0-7.5	0-3.0
SM-1622	.020"	.057"	13-14	0-3.0

①—Armature Spring Tension 3.5 ounces.

②—Armature Spring Tension 6.2 ounces.

MECHANICAL ADJUSTMENT:—Air Gap. Close contacts by hand (hold armature down), check air gap between armature and coil core using a feeler gauge. See table below for air gap limits. Adjust by loosening armature hinge bracket support screws and shifting armature up or down (later types with 'L' shaped armature hinged at side of coil frame), or by bending armature mounting, moving armature away from or toward core (first types with armature mounted on top of coil core). On this first type relay, check also the air gap between the brass contact support and the armature at a point directly behind the contacts. This gap must be within limits of .010-.020". Adjust by bending the brass contact support.

Contact Gap. With armature up against upper stop, check contact gap. See table below for contact gap limits. Adjust by bending upper stop.

ELECTRICAL ADJUSTMENT:—Cut-in (contact closing) Point. Connect an accurate voltmeter between generator terminal of relay and ground. Operate generator, slowly increase speed until contacts close. Note voltmeter reading (there will be a slight 'kick-back' or voltage drop when contacts close). See table below for voltage limits at cut-in point. Adjust as follows:

To raise Cut-in Voltage. Increase armature spring tension by bending spring post upward (later types with 'L' shaped armature), or by pulling armature stop back in notch and lifting up armature until contacts are approximately ¼" apart, then resetting armature stop and checking contact gap (first types with armature mounted on top of coil core).

To lower Cut-in Voltage. Decrease armature spring tension by bending spring post down slightly (later types), or by pressing armature down toward core (first types with armature mounted on coil core).

Cut-out (contact opening) Point:—Connect an ammeter in charging circuit at relay. Operate generator and slowly decrease speed until current reverses and contacts open. Note discharge current at instant contacts open (pointer will fall to '0'. See table below for discharge current limits. If discharge current is excessive, increase armature spring tension and decrease air gap slightly.

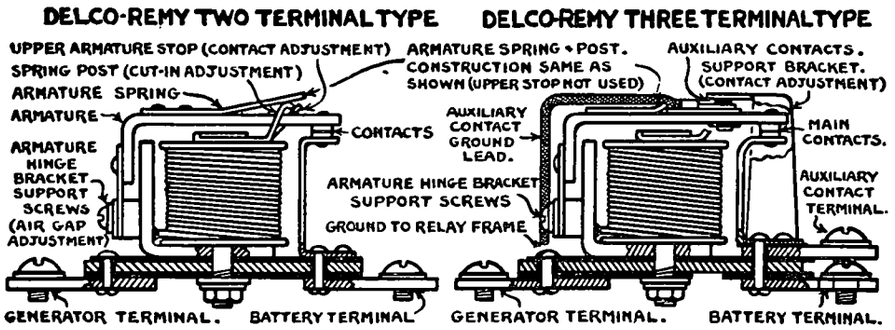

DELCO-REMY CUTOUT RELAYS

DELCO-REMY THREE TERMINAL CUTOUT RELAYS (WITH GROUND CONTACTS)

These types relays have a set of auxiliary contacts mounted above the armature for signal light or starter solenoid relay control. The auxiliary contacts are closed with the main contacts open and open when the main contacts close (see illustration). The upper contact of the auxiliary contacts serves as the relay armature upper stop.

MECHANICAL ADJUSTMENT:—Air Gap. Adjustments same as for standard relay later type with 'L' shaped armature. Settings given in table above.

Contact Gap. With upper contacts closed (armature in extreme upward position) check contact gap. See table above for contact gap limits. Adjust by bending upper auxiliary contact support. See that upper contacts are closed with main contacts open, and open when main contacts close.

ELECTRICAL ADJUSTMENT:—All adjustments are the same as for the standard relay later type with 'L' shaped armature. Settings given in table above.

DELCO-REMY HORN RELAYS

►**OVERDRIVE & STARTER CONTROL RELAYS:** For all data on these relays and Overdrive Control Solenoids and Starter Control, see separate data as follows:

►**OVERDRIVE SOLENOID RELAYS:** *See "Warner Overdrive Controls" in Transmission Section.*

►**STARTER SOLENOID RELAYS:** *See "Delco-Remy Starter Controls—Solenoid Pinion Shift" in this section.*

DESCRIPTION:—These types are similar in design and construction to the Cutout Relays without ground contacts (see preceding page) except that only one coil winding is used and this is connected between the terminals (Solenoid Relays) or one end is brought out to a terminal and the other end connected to the main circuit within the relay case (Horn Relays). See car wiring diagrams where these units are used. In some instances Solenoid Relays or Horn Relays are combined with Cut-out Relays in a single case or the Solenoid Relay is built in the starter solenoid switch case (see special article on Starter Control Solenoid Switches).

ADJUSTMENT:—Adjustments are made in the same manner as for Cut-out Relays. Specifications are given in the table below.

SOLENOID RELAYS

Type	Contact Gap	Air Gap	Closing Volts	Op. Volts
*264-D, E, F, L	.035"	.010"	3.2 Max	1.6-2.0
264-G, M	.035"	.012"	8.5 Max	3.5-4.2
268-M	.035"	.010"	3.2 Max	1.6-2.0
268-V, Z	.....	.008"	8.0 Min	3.0 Max.
1116793	.035"	.012"	8.5 Max	3.5-4.2

*—These types combined with Cutout Relays in a single case.

HORN RELAYS

Type	Contact Gap	Air Gap	Closing Volts
①264-H, I, J	.020"	.015"	3.0-4.0
264-K	.020"	.012"	3.0-4.0
266-T	.020"	.012"	3.0-4.0
268-J, L, P, T, W	.020"	.012"	3.0-4.0
268-R	.020"	.015"	8-10
269-E	.020"	.012"	3.0-4.0
271-A, B, C	.025"	.015"	2.75-4.0
271-D	.025"	.015"	6.0-8.0
①480-Z	.020"	.015"	3.0-4.0
1116756	.025"	.015"	2.75-4.0
1116759	.025"	.015"	6.0-8.0
1116760	.025"	.015"	2.75-4.0
1116762, 63, 64	.020"	.012"	3.0-4.0
1116770	.020"	.012"	3.0-4.0
1116772	.020"	.020"	3.0-4.0
1116774, 75, 78, 79	.025"	.015"	2.75-4.0
1116776	.020"	.010"	6.5-8.0
1116780	.025"	.015"	2.75-4.0
1116781	.025"	.015"	6.0-8.0
1116782, 86	.020"	.012"	3.0-4.0
1116789, 90, 92, 94	.025"	.015"	2.75-4.0
1116799	.025-.030"	.012"	20.0-24.0
1116800	.025"	.015"	6.0-8.0
1116812	.020"	.010"	3-4
1116815	.025"	.015"	2.75-4.0
1116817	.020"	.015"	8-10
1116818	.030"	.020"	6.0-8.0
1116819	.025-.030"	.012"	20.0-24.0

①—These types combined with Cutout Relays in a single case.

OLDSMOBILE SHUNT TYPE AMMETER

OLDSMOBILE 6 & 8, ALL MODELS (1941 to 1948)

IMPORTANT NOTE:—Accessories must not be connected at ammeter terminals as ammeter circuit wires are inadequate to carry more than designed load and any change in ammeter circuit will cause ammeter to read incorrectly.

ACCESSORY CONNECTION CAUTION—When installing accessories, connect as directed in installation instructions in accessory package (should be connected to accessory terminal of lighting switch, gauge terminal of ignition switch, etc.). **Do not connect accessories at ammeter terminals.**

DESCRIPTION:—Ammeter is external shunt type with push-on type terminals. This design lessens number of connections in generator charging circuit and results in better generator performance (less chance for loose or corroded connections and high resistance in circuit).

OPERATION:—Ammeter operates in usual manner except that only a portion of the charging current (approximately 10%) goes through the ammeter, remainder of charging current being 'shunted' around ammeter through regular charging line (see illustration). Ammeter dial is calibrated so that it indicates entire charging current (25-30 amperes) rather than current actually in ammeter circuit. Correct ammeter operation is dependent on proportional amount of current in each branch of the circuit (through ammeter and through the external shunt) and any disturbance of this balance (such as connection of accessories at ammeter terminals) will cause ammeter to read incorrectly.

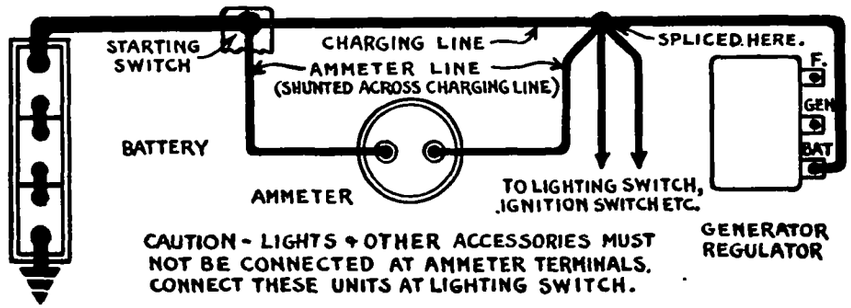

OLDSMOBILE SHUNT TYPE AMMETER

DELCO-REMY DOUBLE CORE CURRENT & VOLTAGE REGULATORS

VOLTAGE REGULATORS

Car Model	Generator	Regulator	Grounded Ter.
All Cars (Spec. Equip.)	936-N	5591	Pos.
All Cars (Spec. Equip.)	936-N	5592	Neg.
Buick 36-40 (Canadian)	936-V	5557	Neg.
Buick 36-60, 80, 90 (Canadian)	936-W	5557	Neg.
Buick 37-40 (1937)	918-B	5807	Neg.
Buick 37-60, 80, 90 (1937)	918-A	5807	Neg.
Buick 38-40, 60, 80, 90 (1938)	1101052, 3, 5	5807	Neg.
Buick 39-40, 60, 80, 90 (1939)	1101052, 3, 5	5858①	Neg.
Cadillac 37-60, 65 (1937)	918-C	5817	Pos.
Cadillac 38-60, 60S, 65 (1938)	1101051, 4	5817	Pos.
Cadillac 39-60S, 61 (1939)	1101056	5860①	Pos.
Chevrolet 1936 (Canadian)	936-U	5588	Neg.
Chevrolet (State Police)	936-J, N	5588	Neg.
Chevrolet 1937 (Canadian)	960-G	5814	Neg.
Chevrolet HA, HB (1938)	1100004	5814	Neg.
Chevrolet Pass. Cars (1939)	1100004	5858①	Neg.
Graham 95, 116 (1937) Radio	948-Z	5812	Pos.
Graham 120 (1937)	948-Z	5812	Pos.
Graham 96 (1938-39) Radio	1100007	5827	Pos.
Graham 97 (1938-39)	1100007	5827	Pos.
La Salle 37-50 (1937)	918-C	5817	Pos.
La Salle 38-50 (1938)	1101051	5817	Pos.
La Salle 39-50 (1939)	1101056	5860①	Pos.
Oldsmobile F-36, L-36	936-T	5588	Neg.
Oldsmobile F-37, L-37 (1937)	936-T	5814	Neg.
Oldsmobile 6 & 8 (1938)	1100002	5814	Neg.
Oldsmobile 6 & 8 (1939)	1100009	5858①	Neg.
Packard 115C (1937)	948-U	5812	Pos.
Packard 6, 1600 ('38), 1700 ('39)	1100005	5827	Pos.
Packard 6 Service Unit		5860①	Pos.
Pontiac Six 701A, B; 36-26A, B	935-W	5588, 5557	Neg.
Pontiac Eight 605, 36-28	935-W	5557	Neg.
Pontiac Taxi 1936	936-R	5557	Neg.
Pontiac 37-26CA, 37-28CA (1937)	948-S	5808	Neg.
Pontiac Six 38-26DA (1938)	1100003	5835	Neg.
Pontiac 8 38-28DA ('38), RHD ('39)	1100003	5808	Neg.
Pontiac Six & Eight (1939)	1100003	5858①	Neg.

①—New type regulator without 'IGN' terminal.

VOLTAGE & CURRENT REGULATORS

Car Model.	Generator.	Regulator.	Grounded Ter.
All Cars (Spec. Equip.)	954-A	5587	Neg.
All Cars (Spec. Equip.)	954-A	5596	Pos.
All Cars (Spec. Equip.)	All 930 or 934	5597	Pos.
All Cars (Spec. Equip.)	All 930 or 934	5599	Neg.
Cadillac V8 60, 70, 75 (1936)	961-E	5559	Pos.
Cadillac V12 80, 85; V16 90 ('36)	933-M	5559	Pos.
Cadillac 37-70, 75 (1937)	961-K	5818	Pos.
Cadillac V12, 85, V16, 90 (1937)	933-M	5559, 5818	Pos.
Cadillac V8 38-75 (1938)	1102652	5818	Pos.
Cadillac V16 38-90 (1938)	1102651	5818	Pos.
Cadillac 39-75 (1939)	1102654	5867	Pos.
Cadillac 39-90 (1939)	1102655	5867	Pos.
Chevrolet (Police, Bus, Truck)	933-H, J, L	5587	Neg.
Chevrolet (Police, Bus) 12 volts	934-G	5801	Neg.
Chevrolet Spec. Equip. ('39)	934-F	5599, 5854	Neg.
Graham 80, 80A, 85 (Police)	933-R	5596	Pos.
Graham 95, 116, 120 ('37) Police	934-F	5597	Pos.
La Salle 35-50, 36-50	961-D	5559	Pos.
Oldsmobile 6 & 8 (Police)	933-L	5587	Neg.
Packard 1500, 1, 2 (1937)	961-J	5813	Pos.
Packard 1506, 7, 8 (1937)	930-F	5811	Pos.
Pontiac 6 & 8 (Police)	933-G, L	5587	Neg.
Studebaker Pres. 3C (1937)	961-H	5818	Pos.
Studebaker Pres. 4C (1938)	1102653	5818	Pos.
Studebaker Pres. 5C (1939)	1102656	5861	Pos.

REGULATOR NOTE "NO IGN. TERMINAL" TYPE:—These regulators do not have separate 'IGN' terminal and voltage regulator fine winding is connected to cut-out relay. When testing and adjusting these models, disregard all mention of 'IGN' terminal in directions below. NOTE—To eliminate voltage regulator action when checking and adjusting Current Regulator, it will be necessary to short out voltage regulator by connecting short jumper from voltage regulator frame to upper contact support (regulator action cannot be eliminated by disconnecting lead on 'IGN' terminal).

DESCRIPTION:—These units are composed of a vibrating type Voltage Regulator of a new design, a vibrating type Current Regulator, and a Cutout Relay in a single case. The Voltage Regulator is not designed to control generator voltage on open circuit and the generator should be operated only when charging a battery. The Control Unit cover is sealed in place and unauthorized breaking of the seal (necessary to service any of the units) voids the warranty on the unit. See Trouble Shooting Section below for tests to determine whether the unit is defective without removing cover.

NOTE—To avoid changing generator polarity, always disconnect lead on 'F' terminal of regulator First and connect this lead Last. To insure correct polarity, connect 'GEN' and 'BAT' terminals on regulator together momentarily after all leads have been connected but before engine is started.

Generators: Correct type must be used with each type regulator as follows:

Voltage Regulators (Two-unit): Generators used with these regulators are third-brush but third brush is "fixed" or non-adjustable. Charging rate is regulated by changing voltage regulator setting.

Voltage & Current Regulators (Three-unit): Generators are shunt-wound two-brush machines (no third brush being used). No regulation of generator charging rate is possible except by changing setting of Current Regulator (maximum output) or Voltage Regulator (maximum voltage).

OPERATION: Voltage Regulator. Regulator has two windings. Shunt or fine winding is connected at point near the battery (battery side of Cutout Relay) and is controlled by the ignition switch to prevent the battery discharging through the winding when the car is not being operated. Regulator is thus actuated by battery voltage (line voltage at a point near the battery) rather than by generator voltage (voltage directly across main brushes). The series or heavy winding is connected in series with the generator field and regulator contacts so that a current flows through this winding only when the regulator contacts are closed. In operation the current flow through both windings creates a magnetic field which attracts the regulator armature and opens the contacts when the battery voltage reaches the maximum for which the unit is set. When the contacts open, the current flow through the series coil is interrupted and the resistance unit is cut in the field circuit (resistance is connected across the contacts and is short-circuited with the contacts closed). This reduces the field strength and the generator voltage so that the regulator contacts again close. The opening and closing of the contacts is extremely rapid (vibrating action) and the generator voltage is held reasonably constant.

The generator will charge a discharged battery at the maximum rate and will be controlled by the fixed third brush (generator voltage depends upon battery voltage—both will come up as battery becomes charged). As the battery voltage comes up on charge, the voltage regulator will tend to hold generator voltage constant; charging rate tapering off to 'finish' rate. The regulator is over-compensated for temperature variations by means of a bi-metal armature hinge. For this reason all tests should be made with regulator at room temperature (70°F) and rechecked when hot (150°F).

Current Regulator. The two coils of the Current Regulator are connected in series in the charging line between the cutout relay and the 'BAT' terminal of the control unit so that the entire generator output flows through these coils when the cutout relay contacts are closed. When the current flow reaches the maximum for which the unit is set, the current regulator contacts vibrate, cutting the resistance units in and ut of the field circuit (both resistance units are in parallel in the field circuit s that total resistance is less than the single resistance which is cut into the field circuit by the opening f

CONTINUED ON NEXT PAGE

DELCO-REMY DOUBLE C RE CURRENT & VOLTAGE REGULATORS (C ntinu d)

the voltage regulator contacts). Generator output is held reasonably constant at maximum point until speed is reduced or load decreased.

TROUBLE SHOOTING:—If generator performance is not satisfactory, check in accordance with the following table to determine whether Voltage Regulator or Current Regulator is defective (not necessary to remove control unit cover to make these tests). Control Unit is separately mounted and must be well grounded. A separate ground lead is run from the 'GRD' terminal on the control unit for this purpose. Examine this lead and ground.

1. **Generator Not Charging.** Operate engine at speed above cut-in point (do not operate engine at high speed as tests eliminate regulating action and damage may result to generator). Ground 'F' terminal on control unit. If generator charges, regulator is defective. If generator does not charge, ground 'F' terminal on generator. If generator charges, the lead connecting the 'F' terminals on the generator and the control unit is broken or open-circuited and should be replaced. If generator does not charge, disconnect lead at 'GEN' terminal of control unit and flash this lead to ground with 'F' terminal still grounded. If a spark is noted, the regulator or cutout relay is defective. If no spark is noted, examine this lead (connecting 'A' terminal on generator and 'GEN' terminal on control unit) before disassembling and examining generator.

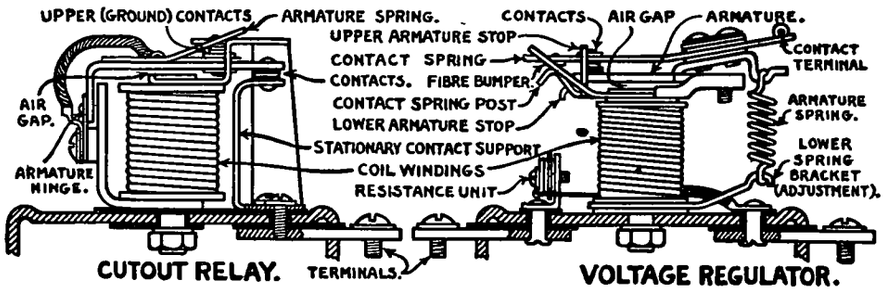

WIRING DIAGRAM.

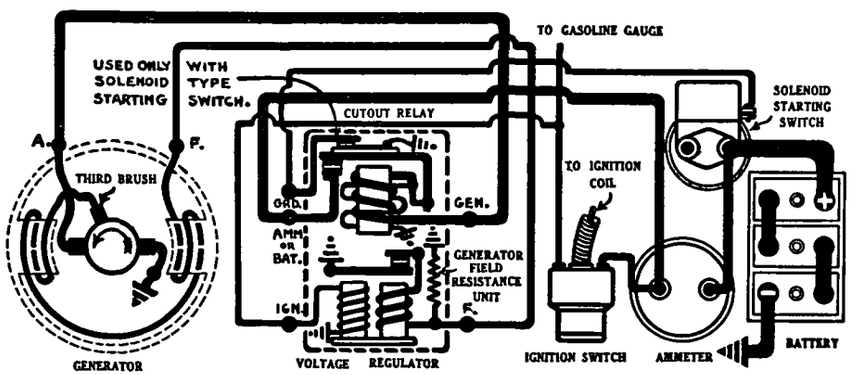

DELC -REMY DOUBLE CORE VOLTAGE REGULATOR (WITH "IGN" TERMINAL)

2. **Generator Charging Rate Too High or Too Low.** This may be caused by incorrect setting or defective operation of either the Voltage Regulator or Current Regulator. To check Voltage Regulator setting, connect a variable resistance in the charging line between the 'BAT' terminal on the control unit and the ammeter and adjust to hold charging current at 8-10 amperes (approximately .25 ohm max.). Disconnect lead to 'IGN' terminal of control unit and connect a jumper wire between this terminal and the 'BAT' terminal. Connect accurate test voltmeter between 'IGN' terminal and ground. Take readings with control unit at room temperature (70°F) and hot (150°F). To test, operate engine at speed above cut-in point, decrease speed until cutout relay contacts open, then increase speed to 2000-3000 R.P.M., holding charging current at 8-10 amperes and note voltmeter reading. See table under Adjustment Section for correct voltages.

To check Current Regulator setting, turn on lights and other accessories so that current load exceeds Current Regulator setting (see table below), disconnect lead on 'IGN' terminal of control unit (this cuts out the Voltage Regulator action), connect accurate test ammeter in charging line at control unit terminal 'BAT'. Operate engine and slowly increase speed until generator output remains constant. This figure will be the point for which the current regulator is set and should normally be the maximum rated output of the generator (see table under Adjustment Section for standard current regulator settings). If the generator output increases beyond the maximum point which represents the rated output for the particular generator, do not continue to increase engine speed as this indicates that current regulator is not operating and damage may result to the generator.

Oxidized Voltage or Current Regulator Contacts—To check with regulator on car, disconnect lead on 'IGN' terminal of regulator, connect ammeter in charging line at 'BAT' terminal. Operate engine at low speed so that charging current indicated on ammeter is 4-5 amperes, ground 'F' terminal on regulator and note ammeter reading (wait until pointer steadies after first momentary surge). If ammeter reading is 2 amperes or more greater than with 'F' terminal not

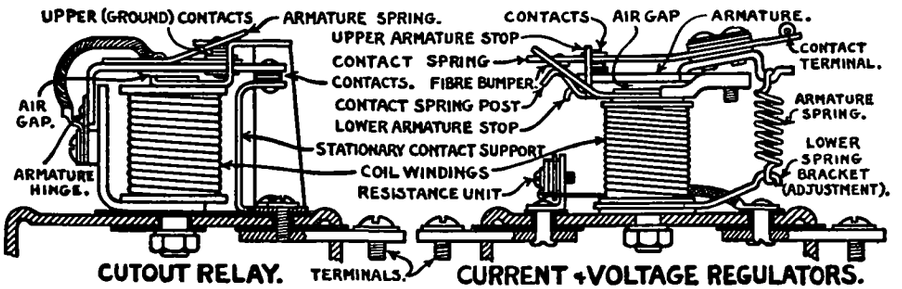

WIRING DIAGRAM.
(WITH DOUBLE RESISTANCE UNIT)

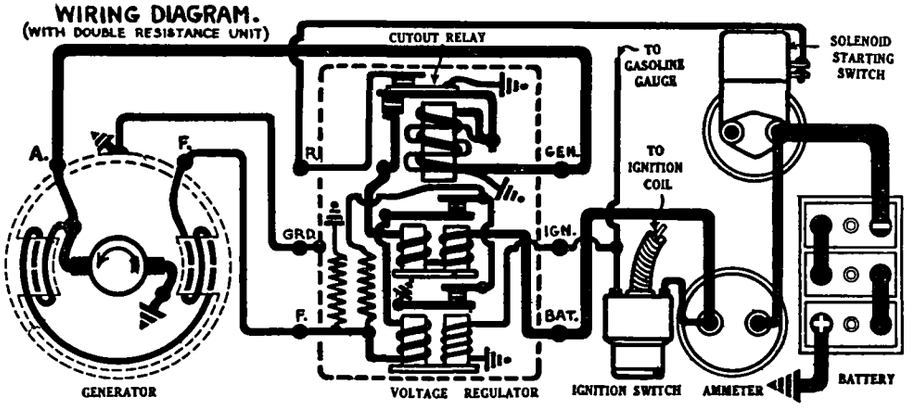

DELCO-REMY DOUBLE CORE CURRENT & VOLTAGE REGULATOR (WITH "IGN" TERMINAL)

grounded, contact point oxidation is excessive. To check with regulator on bench, see that commutator and brushes are in good condition, then check generator speed at which cutout relay contacts close with 'F' terminal grounded and not grounded. Closing point with 'F' terminal grounded is normally slightly lower than with terminal not grounded. If difference is 100 R.P.M. or more, contacts are oxidized and should be corrected.

NOTE—Radio by-pass condensers must not be installed on field or 'F' terminals of generator or regulator as these will cause oxidation of contacts

CONTINUED ON NEXT PAGE

DELCO-REMY DOUBLE CORE CURRENT & VOLTAGE REGULATORS (C ntinued)

SERVICING:—When servicing and adjusting regulators, always check contacts (resurface if necessary as directed below), contact gap, contact spring tension, air gap before making adjustments to change performance.

Contact Point Resurfacing—If flat contact has a pit or cavity, use a special spoon shaped 'riffler' file to clean out the cavity and remove all oxidized material, then finish cleaning contact with a flat fine-cut contact file. Use file lightly on smaller rounded contact (contact metal is very thin). Use extreme care not to bend contact spring (file each contact separately) and keep all grease off contact surfaces. Do not use sandpaper or emery cloth on contacts.

IMPORTANT SERVICE CAUTION—Badly burn or fused contacts, burnt resistor unit and regulator winding are caused by open-circuit operation, high resistance in charging circuit or radio condenser connected to field terminal. Check car wiring and correct trouble before replacing regulator.

CUTOUT RELAY ADJUSTMENT

CUTOUT RELAY ADJUSTMENT:—If cutout relay has a set of auxiliary contacts above the armature (for starter solenoid relay circuit control, etc.), these contacts should be closed with main contacts open and should open when main contacts close. All other adjustments listed below.

CUTOUT RELAY SETTING

Type	Cut-in Volts	Cut-out Amperes
5559, 87, 96, 97, 99	6.9-7.6	0-4.0
5598, 5801	12.8-14.4	0-4.0
5806	12.3-13.7	0-4.0
5809, 10, 11	6.9-7.6	0-4.0
5813, 18	6.7-7.6	0-4.0
5819	6.3-6.9	0-4.0
5823	12.3-13.7	0-4.0
5825, 26	12.8-14.2	0-4.0
5828	6.3-6.9	0-4.0
5829	12.3-13.7	0-4.0
5831, 32	6.9-7.6	0-4.0
5836, 37, 40, 41, 42	12.3-13.7	0-4.0
5846	12.8-14.2	0-4.0
5847, 48	6.9-7.6	0-4.0
5852, 53	6.3-6.9	0-4.0
5854	6.9-7.6	0-4.0
5855	6.4-7.1	0-4.0
5856	12.3-13.7	0-4.0
5861, 67	6.9-7.6	0-4.0
5865②	6.3-6.9	0-4.0
5865③	6.9-7.6	0-4.0
5871, 72	6.3-6.9	0-4.0
5873②	6.3-6.9	0-4.0
5873③	6.9-7.6	0-4.0
5874, 75	6.9-7.6	0-4.0
5877, 78	6.3-6.9	0-4.0
5885	6.3-6.8	0-4.0
5557, 88, 91, 92	6.9-7.6	0-4.0
5600	6.9-7.6	0-4.0
5802	12.8-14.2	0-4.0
5803, 7, 8	6.9-7.6	0-4.0
5812, 14, 15, 17	6.9-7.6	0-4.0
5820, 22, 27, 35	6.9-7.6	0-4.0
5843	12.4-13.6①	0-4.0
5844	6.2-6.9①	0-4.0
5858, 60	6.3-6.9	.0-4.0
5862, 70	6.2-6.8	0-4.0
5866	12.4-13.6	0-4.0

①—Compensated for temperature. This setting correct both Cold and Hot.
②—"No IGN" terminal. ③—With IGN terminal.

Torrid Climate Setting—To correct overcharged battery condition where regular atmospheric temperatures are 95° to 100° F. and above, adjust Cutout Relay to close at 6.2 volts (6 volt units), 12.3 volts (12 volt units).

Air Gap—Hold armature down (contacts closed) and measure air gap between armature and coil core with a feeler gauge. Air gap should be .020". Adjust by loosening two screws on hinge bracket and shifting armature up or down.

Contact Gap—Measure gap with armature up and auxiliary contacts closed. Gap should be .020". Adjust by bending support arm carrying upper auxiliary contact.

Cut-in Voltage. Connect test ammeter in charging line at regulator 'BAT' or 'AMM' terminal, voltmeter between regulator 'GEN' terminal and ground. With regulator connected (lead attached to 'IGN' terminal), operate generator and slowly increase speed. Note voltmeter reading at instant relay contacts close. See table below for correct figure for each model. To adjust, change flat armature spring tension by bending spring post. Increase spring tension to increase closing voltage, decrease tension to lower voltage.

CAUTION—On all regulators without 'IGN' terminal, relay voltage must be set below regulator voltage or relay will not close until high generator speed is reached which will result in discharged battery and burned relay contacts. Set voltage to exact figures given above. Low setting will cause vibrating and burning of relay contacts. Relays used on these regulators are compensated and performance will be same cold and hot (can be checked regardless of temperature). This is not true of regulators with 'IGN' terminal.

Cut-out Amperage. Connect test ammeter in charging line at regulator 'BAT' terminal. Operate generator, increase speed until cutout relay contacts close, then slowly decrease speed and note discharge (reverse) current at point where contacts open.

VOLTAGE & CURRENT REGULATOR ADJUSTMENTS

VOLTAGE & CURRENT REGULATOR ADJUSTMENTS:—Check and adjust mechanical specifications listed below before changing voltage or current settings. Adjustments for both Voltage and Current Regulator are the same except as noted.

Contact Gap—Examine contacts and resurface by dressing lightly with a fine, flat contact file if oxidized to such an extent that generator performance is affected (this may be caused by excessive sparking due to low contact spring tension, misalignment of contacts, etc.). Contact metal on small contact is extremely thin and filing should be held to a minimum. See that contacts are aligned and that surfaces are square. Check tension of upper contact mounting spring. Tension should be 3½ oz. min. when contacts just open (measure by means of a spring scale hooked under contact spring). Adjust by bending contact spring slightly. Check contact gap with armature held down. Gap should be .020". Adjust by bending lower armature stop. Clearance between fibre bumper and stop with armature up should be .010". Adjust by bending upper armature stop.

Air Gap—Check air gap between armature and coil core with contacts closed so that fibre bumper just touches the contact spring stop. Air gap should be .063" (all Voltage Regulators), .075" (all Current Regulators). Adjust by bending contact spring stop.

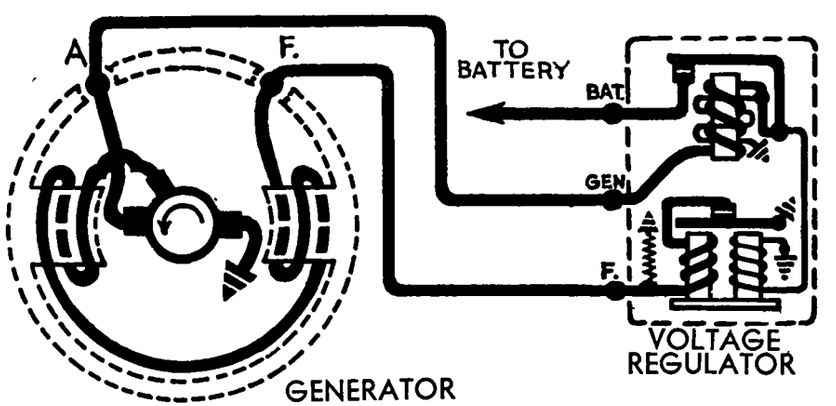

DELCO-REMY DOUBLE CORE V LTAGE REGULAT R ("N IGN" TERMINAL)

CONTINUED ON NEXT PAGE

DELCO-REMY DOUBLE CORE CURRENT & VOLTAGE REGULATORS (C ntinued)

VOLTAGE REGULATOR SETTING

Type	Cold Voltage (70°F)	Hot Voltage (150°F)
5557, 88, 91, 92	7.5-7.9	7.4-7.6
5559	7.5-7.95	7.4-7.6
5587, 96, 97, 99	7.0-7.4	6.95-7.15
5598, 5801, 6	14.2-15.0	14.1-14.5
5600	7.25-7.65	7.2-7.4
5802	14.2-15.0	14.1-14.5
5803	7.25-7.65	7.2-7.4
5807, 8, 12, 14, 17	7.5-7.9	7.4-7.6
5809, 10	7.0-7.4	6.95-7.15
5811	7.5-7.9	7.4-7.6
5813, 18	7.5-7.95	7.4-7.6
5815	6.95-7.45	6.95-7.15
5819, 28	7.0-7.4	6.95-7.15
5820, 22	7.25-7.65	7.2-7.4
5823, 25, 26, 29, 36, 37	14.2-15.0	14.1-14.5
5827, 35	7.5-7.9	7.4-7.6
5831, 32	7.5-7.9	7.4-7.6
5840, 41, 42, 46	14.2-15.0	14.1-14.5
5843	14.2-15.0	14.1-14.5
5844	7.25-7.65	7.2-7.4
5847, 48, 52, 53, 54	7.0-7.4	6.95-7.15
5855	7.5-7.95	7.4-7.6
5856	14.2-15.0	14.1-14.5
5858, 60	7.5-7.9	7.4-7.6
5861, 67	7.5-7.9	7.4-7.6
5862, 70	7.3-7.6	7.25-7.35
5865	7.0-7.4	6.95-7.15
5866	14.2-15.0	14.1-14.5
5871, 72, 73, 74, 75, 77, 78	7.0-7.4	6.95-7.15
5885	7.0-7.4	6.95-7.15

Torrid Climate Setting—To correct overcharged battery condition where regular atmospheric temperatures are 95° to 100° F. and above, set Voltage Regulator to operate at 6.9 volts (6 volt units), 13.7 volts (12 volt units) hot.

Regulator Setting (Types With 'IGN' Terminal)—Using Variable Resistance (AVR Set):—Resistance should be approx. .25 ohms. Connect resistance and ammeter in charging line at 'BAT' terminal on regulator, disconnect lead at 'IGN' terminal, connect jumper between 'IGN' and 'BAT' terminals, connect voltmeter between 'IGN' terminal and ground. Operate generator at rated maximum output RPM., adjust resistance for output of 8-10 amperes. When regulator reaches proper temperature, 'cycle' regulator by decreasing speed until cutout relay contacts just open, then increase speed to original figure and note voltmeter reading with regulator operating. If performance cold (70° F.) and hot (150° F.) is not correct, adjust regulator as directed below.

Fixed Resistance Method. Use ¾ ohm (6 volt), 1½ ohm (12 volt) resistance capable of carrying 10 amperes (Nichrome wire preferred, do not use other wire). Disconnect leads on 'BAT' and 'IGN' regulator terminals, connect fixed resistance between 'BAT' terminal and ground on engine block, connect jumper between 'BAT' and 'IGN' terminals, connect voltmeter between 'IGN' terminal and ground. Operate engine, increase speed to R.P.M. at which maximum rated output is reached (see car model page for performance on each generator model), note voltmeter reading. If regulator action not satisfactory, adjust as directed below, then cycle regulator and recheck performance.

Voltage Setting. Regulator voltage setting is adjusted by bending armature spring lower bracket up or down to decrease or increase the spring tension. Only a slight change in the position of the bracket should be required. Increase spring tension (bend bracket down) to increase regulator voltage, or decrease spring tension (bend bracket up) to decrease regulator voltage. If spring tension must be decreased to a point where the spring is free with the contacts closed, change upper contact spring tension slightly (do not exceed limits as given above or change gap). If correct regulator voltages cannot be secured cold and hot by adjusting the armature spring tension, the regulator air gap may be changed slightly as follows: Increase air gap to increase cold setting, or decrease air gap to decrease cold setting with respect to hot setting.

Regulator Setting ('NO IGN' Types)—Using Variable Resistance (AVR Set):—Connect resistance (approx. .25 ohms) and ammeter in series in charging line at regulator 'BAT' terminal, connect voltmeter between 'BAT' terminal and ground on regulator case. Run engine at speed at which generator maximum output normally secured (2800-3000 R.P.M.), adjust resistance so that charging rate is 8-10 amperes (if charging rate less than 8 amperes, turn on lights while making this check), operate generator until regulator reaches operating temperature of 150°F. (very hot when felt by hand). Note voltmeter reading. Should be 7.4-7.6 volts at this temperature (7.5-7.9 volts at 70°F.—Cold). To adjust, remove regulator cover, change regulator armature spring tension slightly by bending spring hanger (at lower end of spring) down to raise regulator voltage (increase spring tension), or up to lower regulator voltage (decrease spring tension). Replace regulator cover and repeat test. CAUTION—Cover must always be in place when tests are made.

Fixed Resistance Method—Disconnect lead at 'BAT' terminal of regulator (leave this lead off while making test), connect 3/4 ohm fixed resistance between 'BAT' terminal and ground (see Resistance Note below), connect voltmeter between 'BAT' terminal and ground. Operate engine at speed at which generator normally produces maximum output until regulator reaches operating temperature of 150°F (very hot when felt by hand). Note voltmeter reading. Should be 7.4-7.6 volts at this temperature (7.5-7.9 volts at 70°F—Cold). Adjust in same manner as directed for AVR setting method above.

RESISTANCE NOTE—Resistance unit must be capable of carrying 10 amperes and must have same resistance cold and hot. It is extremely important that correct resistance unit value be used when using this method of checking regulator setting. Use 3/4 ohm resistance for all 6 volt regulators, 1½ ohm resistance for 12 volt units.

GENERATOR OUTPUT (THIRD BRUSH CONTROL).

Checking—Connect 1/4 ohm variable resistance and ammeter in series in charging line at regulator 'BAT' terminal, connect voltmeter between 'GEN' terminal and ground. Operate generator at speed for which maximum output figure given in the generator performance tables (see Car Model pages for each model), adjust variable resistance until voltage is correct—this is extremely important. Note ammeter reading.

Adjustment—On generators with adjustable third brush, adjust brush for correct output. On types with fixed third brush, no adjustment is possible and generator must be overhauled if rated output cannot be secured.

CURRENT REGULATOR SETTING:—Connect ammeter in charging line at 'BAT' terminal on regulator, disconnect lead on 'IGN' terminal (to eliminate regulator action), turn on lights. Operate engine and increase speed until output remains constant, note ammeter reading. If current regulator performance not satisfactory, adjust as directed below.

Current Setting—Adjust by bending armature spring lower bracket up or down to decrease or increase the spring tension. Only a slight change in position of the bracket should be required. Increase spring tension (bend bracket down) to increase maximum output, or decrease spring tension (bend bracket up) to decrease maximum output. Settings are given in table below. Current Regulator must never be set at higher figure than the rated capacity of the generator on which it is being used.

CURRENT REGULATOR SETTING

Type	Maximum Amperes	Type	Maximum Amperes
5559	20-23	5846	11.5-13.5
5587, 96	20-22	5847, 48	34-36
5597, 99	26-28	5852, 53	34-36
5598, 5801, 6	16-18	5854	29-31
5809, 10	24-26	5855	13
5811	28-30	5856	14-16
5813, 18	24-26	5861, 67	28-30
5819	26-28	5865①	28-30
5823	16-18	5865②	29-31
5825	11.5-13.5	5871, 72	32-34
5826	19-21	5873①	28-30
5828, 31, 32	26-28	5873②	29-31
5829	7-9	5874	29-31
5836, 37	24-26	5875	32-34
5840	12-14	5877, 78	28-30
5841, 42	24-28	5885	38-40

①—No IGN terminal. ②—With IGN terminal.

NOTE—Type 5559 regulator rated at 20-22 amperes, but when used with 933-M generator on 1937 Cadillac V12 or V16, setting is 26 amperes.

DELCO-REMY SINGLE CORE CURRENT & VOLTAGE REGULATORS

VOLTAGE REGULATORS

Car Model	Regulator	Generator	Grd. Ter.
Graham 107, 8, 9 ('40)	1118204	1100007	Pos.
Graham Hollywood 109, 113 ('41)	1118204	1100007	Pos.

VOLTAGE & CURRENT REGULATORS

1940 CAR MODELS

Buick 40, 50 (1940)	1118201	1102661, 2	Neg.
Buick 60, 70, 80 (1940)	1118201	1102668	Neg.
Buick 90 (1940)	1118201	1102669	Neg.
Buick All—City Police ('40)	1118229	1106404	Neg.
Buick All—State Police ('40)	1118237	1105852	Neg.
Cadillac 60S,62,72,75 (1940)	1118202	1102661	Pos.
Cadillac 90 V16 (1940)	1118202	1102666	Pos.
Chevrolet—all (1940)	1118201	1102667	Neg.
Chevrolet City Police & U.S. ('40)	1118229	1106403	Neg.
	1118232	1106403	Pos.
Chevrolet State Police (1940)	1118237	1105851	Neg.
①Dodge City Police (1940)	1118232	1106403	Pos.
①Dodge State Police (1940)	1118238	1105851	Pos.
①Ford & Mercury City Police ('40)	1118232	1106405	Pos.
①Ford & Mercury State Police ('40)	1118238	1105853	Pos.
LaSalle 50, 52 (1940)	1118202	1102661	Pos.
Oldsmobile—all (1940)	1118201	1102664	Neg.
Oldsmobile City Police (1940)	1118229	1106403	Neg.
Oldsmobile State Police (1940)	1118237	1105851	Neg.
①Plymouth City Police (1940)	1118232	1106403	Pos.
①Plymouth State Police (1940)	1118238	1105851	Pos.
Pontiac—all (1940)	1118201	1102665	Neg.
Pontiac City Police (1940)	1118229	1106403	Neg.
Pontiac State Police (1940)	1118237	1105851	Neg.
Studebaker Pres. 6C (1940)	1118202	1102671	Pos.

1941 CAR MODELS

Buick 40, 50 (1941)	1118201	1102679	Neg.
Buick 60, 70, 90 (1941)	1118201	1102668	Neg.
Buick 40 ('41) City Police②	1118229	1106404	Neg.
Buick All ('41) State Police	1118237	1105852	Neg.
Cadillac All (1941)	1118202	1102661	Pos.
Cadillac All (1941)③	1118202	1102686	Pos.
Chevrolet All (1941)	1118201	1102667	Neg.
Chevrolet City Police ('41)	1118229	1106403	Neg.
	1118232	1106403	Pos.
Chevrolet State Police ('41)	1118237	1105851	Neg.
Chevrolet Boston Police ('41)	1118229	1106406	Neg.
Chevrolet Door-to-Door Divry. ('41)	1118233	1102677	Neg.
①Dodge City Police (1941)	1118232	1106403	Pos.
①Dodge State Police (1941)	1118238	1105851	Pos.
①Ford City Police (1941)	1118232	1106405	Pos.
①Ford State Police (1941)	1118238	1105853	Pos.
①Mercury City Police (1941)	1118232	1106405	Pos.
①Mercury State Police (1941)	1118238	1105853	Pos.
Nash '600' 4140 (1941)	1118202	1102684	Pos.
Oldsmobile All (1941)	1118201	1102664	Neg.
Oldsmobile All (1941)③	1118201	1102680	Neg.
Oldsmobile City Police ('41)	1118229	1106403	Neg.
Oldsmobile State Police ('41)	1118237	1105851	Neg.
Packard Six 1900 (1941)	1118202	1102682	Pos.
①Plymouth City Police (1941)	1118232	1106403	Pos.
①Plymouth State Police (1941)	1118238	1105851	Pos.
Pontiac All (1941)	1118201	1102665	Neg.
Pontiac City Police (1941)	1118229	1106403	Neg.
Pontiac State Police (1941)	1118237	1105851	Neg.

1942-48 CAR MODELS

Car Model	Regulator	Generator	Grd. Ter.
Buick 40, 50 (1942-48)	1118201	1102679	Neg.
Buick 60, 90 (1942)	1118201	1102668	Neg.
Buick 70 (1942-48)	1118201	1102668	Neg.
Buick 40, 50 ('42) City Police④	1118229	1106409	Neg.
Buick 60, 70, 90 ('42) City Police	1118229	1106404	Neg.
Buick All ('42) State Police	1118237	1105857	Neg.
Cadillac All (1942)	1118202	1102693	Pos.
	1118202	1102661	Pos.
Cadillac All (1942)③	1118202	1102694	Pos.
	1118202	1102686	Pos.
Cadillac All (1946-48)	1118242	1102693	Neg.
Cadillac All (1946-47)③	1118242	1102694	Neg.
Chevrolet All (1942-48)	1118201	1102667	Neg.
Chevrolet City Police (1942-47)	1118229	1106403	Neg.
	1118232	1106403	Pos.
Chevrolet State Police ('42)	1118237	1105856	Neg.
Chevrolet Door-to-Door Del. ('42-47)	1118233	1102677	Neg.
①Dodge City Police (1942)	1118232	1106403	Pos.
①Dodge State Police (1942)	1118238	1105856	Pos.
Nash '600' 4240 (1942)	1118202	1102684	Pos.
Nash All (1948)	1118202	1102702	Pos.
Oldsmobile All (1942-48)	1118242	1102664	Neg.
	1118201	1102664	Neg.
Oldsmobile All (1942-48)③	1118242	1102680	Neg.
	1118201	1102680	Neg.
Oldsmobile City Police ('42)	1118229	1106403	Neg.
Oldsmobile State Police ('42)	1118237	1105856	Neg.
Packard Six, 2000 ('42), 2100 ('46)	1118202	1102682	Pos.
Packard Six, 2100 (1947)	1118278	1102682	Pos.
Packard Eight (1947)	1118278	1102699	Pos.
Packard 8 & Super 8 (1948)	1118278	1102705	Pos.
①Plymouth City Police (1942)	1118232	1106403	Pos.
①Plymouth State Police (1942)	1118238	1105856	Pos.
Pontiac All (1942-47)	1118242	1102665	Neg.
	1118201	1102665	Neg.
Pontiac All (1948)	1118242	1102701	Neg.
Pontiac City Police (1942-48)	1118229	1106403	Neg.
Pontiac State Police (1942)	1118237	1105856	Neg.

①—Accessory Equipment. ②—With Single Carburetor only.
③—Cars with Hydra-Matic Drive. ④—With Compound Carburetion.

►NOTES, CAUTIONS, & CHANGES

►**1940 REGULATOR PRODUCTION CHANGE:** Regulator Springs. Two springs of different weights (one light spring, one heavy spring) used on 1940 Voltage Regulators (both springs same weight on Current Regulators). On all regulators with one light and one heavy spring, all adjustments should normally be made on the light spring only. If springs being replaced, or if correct adjustment cannot be secured by light spring adjustment, heavy spring should be adjusted (as directed under Spring Adjustment below). *See Special Note under Voltage Regulator Spring Adjustment instructions when adjusting the heavy spring on this type*

►**REGULATOR CHECKING CAUTIONS:** For unsatisfactory performance complaints. When checking regulators, and before making adjustments to correct complaints, note the following points:

High Charging Rate & High Voltage Complaints—May be caused by shorts or grounds in generator. Check for grounded field coils or grounded leads before changing regulator settings. To check, disconnect lead from regulator 'F' terminal with generator operating. If output drops off, trouble is in regulator. If output does not drop off, check generator for grounded field coils and leads.

Voltage Setting Change to Correct Continuous Battery Overcharge—Where overcharged battery condition encountered and regular voltage settings do not correct this condition (due to unusual operating conditions), voltage setting may be reduced to 6.9 volts min. (6 volt units), 13.7 volts min. (12 volt units). Cutout relay cut-in setting must also be reduced to 6.2 volts (6 volt units), 12.3 volts (12 volt units). Do not reduce voltage setting unless absolutely necessary.

Open Circuit Caution—Generator must never be operated on open circuit which will damage Generator or Regulator and cause burnt generator windings r regulator windings, burnt field resistance, or fused contacts. If these conditions f und in service, check wiring circuits for open circuits or high resistance

CONTINUED ON NEXT PAGE

DELCO-REMY SINGLE CORE CURRENT & VOLTAGE REGULATORS (C ntinued)

Regulator Seals—Regulator covers are sealed to indicate they are adjusted to riginal factory specifications. Warranty is void if unit is damaged by improper servicing (adjustments may be made by competent operators).

►**GROUND TERMINAL CAUTION:** Each regulator designed for use on cars with particular battery terminal grounded as shown in table above. When installing regulator, make certain that correct battery terminal is grounded and always repolarize generator whenever generator or regulator has been disconnected.

►**POLARIZING GENERATOR:** After generator and regulator connected, connect jumper lead between regulator 'BAT' and 'GEN' terminals momentarily. This will allow momentary flow of current through generator windings and cause generator to assume correct polarity for operation on car.

DESCRIPTION: Single Core Regulators differ in design from previous type Double Core Regulators (without "IGN" terminal) as follows:

Windings—All windings for each unit (Cutout Relay, Voltage Regulator, Current Regulator) are wound on a single core.

Cutout Relay—Has double contacts. Both sets of contacts must be set so as to open and close together.

Regulator Armature Springs—Two armature springs used (both springs same weight on Current Regulators & Voltage Regulators (except first 1940 units which had one light and one heavy spring on Voltage Regulators only).

CHECKING REGULATOR & GENERATOR PERFORMANCE:—To quickly locate trouble on the car, make the following tests before removing the generator or regulator for further testing and adjustment on the bench. Check battery condition with hydrometer, note whether battery low (discharged) or high (fully charged), operate engine and note charging rate as follows:

Fully Charged Battery & Low Charging Rate—This indicates that Voltage Regulator is operating normally. To check Current Regulator operation, connect test ammeter in charging line at regulator 'BAT' terminal, use starter motor to crank engine for about 15 seconds (disconnect high tension lead to prevent engine starting) to bring battery down, then run engine at medium speed, turn on all lights and accessories to start Current Regulator operating and note ammeter reading (see Current Regulator Setting Table below). Charging rate will taper off to original low rate after short period of time.

Fully Charged Battery & High Charging Rate—Check battery temperature (charging rate will be higher with hot battery). If charging rate excessive, operate generator at medium speed with ammeter in charging line at regulator 'BAT' terminal and note ammeter reading as follows: Disconnect lead from regulator 'F' terminal. This opens field circuit and generator output should drop off (indicating that trouble is in regulator). If output does not drop off, disconnect this lead at generator 'F' terminal. If this causes output to drop off, this lead is grounded in harness and should be replaced. If output does not drop off, check generator for grounded field leads or windings. If trouble is located in regulator, reconnect field lead at regulator 'F' terminal, remove regulator cover, depress voltage regulator armature so as to open regulator contacts manually. If output drops off, regulator has not been functioning correctly and should be adjusted. If output does not drop off, check field circuit within regulator for shorts and grounds, see that all insulators in place and regulator contact support bushings and insulators are properly installed.

Discharged Battery & Low Charging Rate or No Output—Check entire charging circuit for loose connections, damaged or broken wires, and short-circuits. If entire charging circuit in good condition and no high resistance in circuit, ground regulator 'F' terminal and operate generator, increase speed slowly and note generator output (CAUTION—Do not operate generator at excessive speed —generator is operated with no regulation when 'F' terminal is grounded and output may cause generator to burn out if speed increased excessively). If output increases with speed, regulator is defective and should be checked for incorrect setting or dirty or burnt contacts. If output does not increase beyond a few amperes, check generator for grounded or open field coils, dirty or burnt commutator, defective armature or brushes. If no output is noted, quickly disconnect lead from regulator 'GEN' terminal and flash this lead to ground. If no spark is noted, generator is defective. If spark occurs, check Cutout Relay for burnt contacts, open shunt winding, high voltage setting or grounds.
CAUTION—Do not operate generator more than momentarily with lead disconnected from regulator 'GEN' terminal. This is open-circuit operation.

ADJUSTMENT:—Check all specifications for each unit first and adjust each unit as follows:

CUTOUT RELAY

Contact Gap—.020". Adjust by bending upper armature stop (see Air Gap Adjustment). Both contacts must have same gap to insure opening and closing together.

Air Gap—.020". To check, press armature down so contacts just close. If both contacts do not close simultaneously, bend spring fingers until they do. To adjust air gap, loosen two screws on hinge bracket at back of relay, raise or lower armature and hinge assembly.

Cut-in Voltage & Cut-out Amperage—To check, connect ammeter in charging line at regulator 'BAT' terminal, voltmeter between 'GEN' terminal and ground. Operate generator and gradually increase speed until relay contacts close, note voltmeter reading. Decrease speed slowly and note reverse current reading on ammeter when contacts open. To adjust closing voltage, bend spring post down (to decrease voltage), up (to increase voltage).

Cut-in Setting Note—Check only with unit HOT (at operating temperature).

CUTOUT RELAY SETTING

Model	Cut-In Voltage (Hot)
All 1118200 Six-volt Units (except as noted below)	6.2-6.7 volts
All 1118200 Twelve-volt Units (except as noted below)	12.4-13.4 volts

Other 1118200 6-volt Units

Model	Cut-In Voltage (Hot)
1118203, 4, 13	6.3-6.6 volts
1118224	6.3-6.9 volts
1118243	6.3-6.6 volts
1118244, 51	6.1-6.4 volts

Other 1118200 Units

Model	Cut-In Voltage (Hot)
1118255	17-20 volts
1118262	25.5-26.8 volts
1118281	24.8-26.0 volts
1118285	12.4-13.0 volts
1118286	12.4-13.0 volts

Torrid Climate Setting—To correct overcharged battery condition where regular atmospheric temperatures are 95° to 100° and above, adjust Cutout Relay to close at 6.4-6.6 volts (6 volt units).

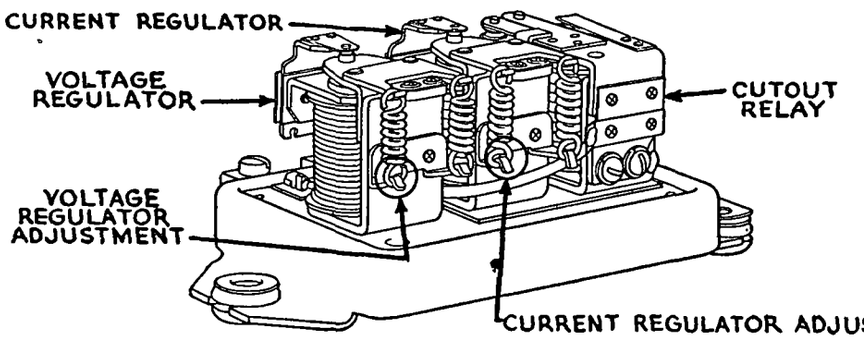

DELCO-REMY SINGLE CORE CURRENT & VOLTAGE REGULATOR

VOLTAGE REGULATOR

VOLTAGE REGULATOR SETTING

Model	Volts (Hot)	Model	Volts (Hot)
1118201, 2, 5, 6	7.2-7.4	1118242	7.2-7.4
1118203, 4	7.0-7.1	1118243	7.0-7.1
1118207, 8	7.0-7.2	1118244	6.8-6.9
1118209, 10	14.0-14.2	1118245, 46, 47, 48, 50	14.0-14.2
1118211, 12	7.0-7.2	1118249, 53	7.0-7.2
1118213	7.0-7.1	1118251	6.8-6.9
1118214	14.0-14.2	1118252, 54	14.0-14.2
1118215, 16	7.0-7.2	1118258 to 261	14.0-14.2
1118217 to 20	14.0-14.2	1118263, 64, 67	14.0-14.2
1118221, 22, 23	7.0-7.2	1118268, 71, 72, 76	7.0-7.2
1118224	7.4-7.6	1118269, 70, 73, 74, 77	14.0-14.2
1118225, 27, 28	14.0-14.2	1118278	7.2-7.4
1118226, 29, 30	7.0-7.2	1118279	14.0-14.2
1118231	7.2-7.4	1118280	14.0-14.2
1118232, 33, 34	7.0-7.2	1118281	27.1-27.7
1118235, 39	14.0-14.2	1118282	14.0-14.2
1118236, 37, 38	7.0-7.2	1118285	13.6-13.8
1118240	7.1-7.3	1118286	13.6-13.8
1118241	14.0-14.2		

CONTINUED ON NEXT PAGE

DELCO-REMY SINGLE CORE CURRENT & VOLTAGE REGULATORS (C ntinued)

Torrid Climate Setting—To correct overcharged battery condition where regular atmospheric temperatures are 95° to 100° and above, set Voltage Regulator to operate at 6.8-6.9 volts hot (see Cutout Relay setting note also).

Important Note—Regulator over-compensated for temperature and must be checked only when hot and with cover in place (setting higher when cold).

Checking Voltage Setting—Connect ammeter and variable resistance of 'AVR' set in charging line at regular 'BAT' terminal, or disconnect charging line and ground the 'BAT' terminal through ¾ ohm fixed resistance (6 volt units), 1½ ohm fixed resistance (12 volt units). Resistance must be capable of carrying 10 amperes and must not change in value during temperature changes. Connect voltmeter between 'BAT' terminal and ground. Operate generator and increase speed to point where rated output normally produced (see car model 'T&E' page for generator data), adjust variable resistance of 'AVR' set so that charging current is 8-10 amperes (not required if fixed resistance method used). When regulator reaches operating temperature (150° or very hot to the touch) with regulator cover in place, cycle generator by decreasing speed to point where relay contacts open, then increase speed to original figure and note voltmeter reading. Adjust regulator if voltage not correct as shown in table above.

CAUTION—Do not change setting to correct High Voltage without first checking generator for grounded fields—see 'Important Service Note' above.

Adjustment—Bend spring hanger at lower end of one spring only down to increase spring tension and raise voltage setting, or up to decrease tension and lower voltage setting. If correct adjustment can not be secured on one spring, or if new springs are being installed, adjust second spring as follows:

IMPORTANT NOTE—On types with one light and one heavy spring (early 1940), above adjustment should be made on the light spring only.

Spring Adjustment—With one spring disconnected, connect voltmeter between regulator 'GEN' terminal and ground. Open regulator contacts by hand (press down on regulator armature), operate generator and slowly increase speed until voltmeter reading is 3 volts (6 volt units), 6 volts (12 volt units), release armature. Adjust spring tension by bending hanger at lower end of spring which is connected until voltage is 4 volts (6 volt units). Then connect second spring and adjust this spring as directed under 'Adjustment' above (do not touch first spring when making this final adjustment).

IMPORTANT NOTE—On types with one light and one heavy spring (early 1940), above adjustment should be made on the heavy spring only (with light spring disconnected). Voltmeter reading should be 4.5-5.0 volts (6 volt units) 8.5-9.0 volts (12 volt units). Then connect light spring and complete adjustment by setting this spring as directed above.

Contact Servicing—Contact points must be clean (dirty or oxidized points will cause reduced generator output and rundown batteries). To clean or surface contacts, remove upper contact support and service each contact separately. Use a thin, fine-cut contact file and file each point separately using great care not to file smaller rounded point excessively. If flat point has a cavity, use a 'spoon' or 'riffler' file to clean cavity out so that good contact secured between contact points (do not file contact excessively to remove cavities). When reinstalling upper contact support, make certain that all insulators correctly installed and adjust air gap. CAUTION—Do not use sandpaper or emery cloth

Air Gap—.070" measured at center of core with contacts just closing.

Air Gap Adjustment—To check, press armature down and allow it to come back until contacts just close, measure air gap at center of core with armature in this position. To adjust, loosen two screws on upper contact support bracket, move bracket up or down being careful to keep contacts lined up.

CURRENT REGULATOR

NOTE—Data below applies only to 3 unit Regulators (with separate Current Regulator Unit). Disregard this current regulator data when adjusting 2 unit Regulators (no Current Regulator) used with third-brush generators.

Checking Current Setting—Remove regulator cover and connect short jumper from voltage regulator frame to upper contact support bracket (this will short out voltage regulator while current regulator being checked). Connect ammeter in charging circuit at regulator 'BAT' terminal. Turn on lights, radio and other accessories (to provide load which will bring current regulator into operation), operate generator and increase speed until output remains stationary. With regulator at operating temperature (150° r very hot to the touch) and cover in place, ammeter reading should agree with setting given above.

CAUTION—Do not change setting to correct High Charging Rate without checking generator first for grounded fields—See "Important Service Note" above.

Adjustment—Bend spring hanger at lower end f one spring nly down to increase tension and increase current setting, up to decrease tension and decrease current setting. If adjustment cannot be secured on one spring, or new springs are installed, proceed as follows:

Spring Adjustment—With one spring disconnected, operate generator at medium speed, adjust hanger at lower end of spring until output is regulated at approximately half rated output (17 amperes on 1118201,2). Then connect second spring and adjust this spring as directed abov (do not touch first spring when making this final adjustment).

Contact Servicing—Same as for Voltage Regulator (above).

Air Gap—.080" measured at center of core with contacts just closing.

Air Gap Adjustment—Same as for Voltage Regulator (above).

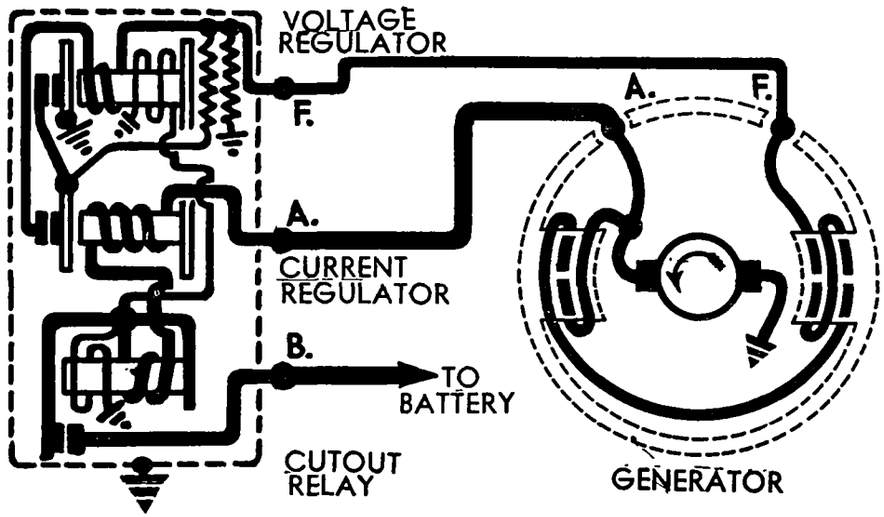

DELCO-REMY SINGLE CORE CURRENT & VOLTAGE REGULATOR CIRCUIT

CURRENT REGULATOR SETTING

Model	Amperes	Model	Amperes
1118201, 2	①34-36	1118248	9-11
1118207, 8	28-30	1118249	14.5-15.5
1118209, 10	16-18	1118251	48-50
1118211, 12	38-40	1118252	24-26
1118214	24-26	1118253	28-30
1118215, 16	22-24	1118254	12-13
1118217	②18-20	1118258	16-18
1118218	7-9	1118259	11-13
1118219	24-26	1118260, 63	24-26
1118220	12-13	1118261	38-40
1118221	26-28	1118264	30-32
1118222, 23	34-36	1118267	34-36
1118224	12.5-13.5	1118268	26-28
1118225	14-16	1118269	16-18
1118226, 29	34-36	1118270, 71, 72	30-32
1118230	26-28	1118273	18-20
1118232	34-36	1118274	18-20
1118233, 34	24-26	1118276, 77	38-40
1118235, 39	9-11	1118278	34-36
1118236	26-28	1118279	50
1118237, 38	38-40	1118280	24-26
1118240	18-20	1118281	19-21
1118241	30-32	1118282	50
1118242	①34-36	1118285	24-26
1118244	48-50	1118286	16-18
1118245	38-40		

①—Supersedes original 32-34 ampere setting.
②—Supersedes original 19-21 ampere setting.

DELCO-REMY REGULATORS (TRUCK & BUS APPARATUS BOXES)

Delco-Remy Regulators or 'Apparatus Boxes' are made in two types: a two-element (Cutout Relay and Voltage Regulator) type used in conjunction with third brush control generators, and a three-element (Cutout Relay, Current Regulator, and Voltage Regulator) type used with shunt wound generators. Both types of units checked and adjusted in same manner (Current Regulator data applies to Three Element Boxes only). Check the following points first:

1. **Connections.** See that all connections are clean and tight and that generator and Apparatus Box are correctly wired up (see diagram).
2. **Commutator and Brushes.** Clean commutator and examine brushes. If commutator is rough or worn down to the mica it should be turned down in a lathe (taking a very fine cut) and the mica then undercut to a depth of 1/32 inch. Brushes must seat over at least 75% of the bearing surface and should be sanded in if necessary.
3. **Generator Voltage.** Check generator voltage by operating generator with a voltmeter connected between the "Armature" terminal of the genrator and ground. Generator voltage should build up properly (see table below for performance data). If generator does not build up, check for shorted or grounded armature or field coils.
4. **Apparatus Box Ground.** Apparatus Box must be well grounded. A ground screw is provided on each end of the Apparatus Box and, if Apparatus Box is not grounded through the frame by being firmly mounted on a clean metal surface on the car, a ground wire should be provided between one of these screws and the car frame or generator frame.

MECHANICAL ADJUSTMENTS

CUTOUT RELAY:—Air Gap. Air gap between armature and coil core should be .057". To check the air gap, hold armature down (contacts closed) and measure gap between underside of armature and coil core with a feeler gauge. Adjust by loosening the 3 screws on the lower contact bracket and shifting the position of the stationary contacts (the lower contact bracket mounting screw holes are slotted to permit this adjustment).

Contact Gap. The Contact gap must be .020 inch. Check gap with a feeler gauge. Adjust by bending armature stop (between upper contact fingers).

CURRENT REGULATOR AND VOLTAGE REGULATOR:—Contact Gap. Contact gap should be .015 inch. To check the contact gap, hold armature down against coil core and measure gap with a feeler gauge. Adjust gap by loosening lock nut on stationary contact stud (upper contact) and turning down stud. Tighten locknut after making adjustment.

ELECTRICAL ADJUSTMENTS

CUTOUT RELAY:—Cut-in Point. Connect negative (—) terminal of test voltmeter to "Armature" terminal on the generator and ground positive (+) terminal of voltmeter to Apparatus Box case. Short out Voltage Regulator by connecting one end of a short jumper to the upper contact support on the regulator and connect the other end of the jumper to the armature on which the lower contact is mounted. Operate generator and slowly increase generator speed until relay contacts close. Note voltmeter reading at instant contacts close (there will be a slight 'kick-back' of the voltmeter pointer when the contacts close and this can be used to check the closing point). Contacts should close with generator voltage of 6.5-6.9 volts (5627, 28, 40; 1118468, 90), 7.0 volts (all other 6 volt units), 13.5 volts (12 volt units), 26.0 volts (24 volt units), 33.0 volts (5611, 17, 22, 42; 1118461), 35.0 volts (all other 32 volt units). To adjust cut-in point, change relay armature spring tension by loosening lockscrew on lower spring bracket and turning eccentric adjusting screw. Increase the spring tension to raise the cut-in voltage and decrease spring tension to lower cut-in voltage. Tighten lockscrew and repeat test.

Cut-out Point. Connect a test ammeter in the battery line (disconnect the lead on the 'Ammeter' terminal of the Apparatus Box and connect this lead to one terminal of the test ammeter and connect the other ammeter terminal to the 'Ammeter' terminal on the Apparatus Box). Operate the generator at a speed above the cut-in point so that generator is charging the battery and slowly decrease the speed until the relay contacts open. Note ammeter reading. Contacts should open with 0-3 ampere discharge.

CURRENT REGULATOR (Three-element Apparatus Boxes only):—Disconnect lead on 'Ammeter' terminal of Apparatus Box and connect to positive (+) terminal of test ammeter. Connect negative (—) terminal of test ammeter to 'Ammeter' terminal on Apparatus Box. The Voltage Regulator must be shorted out (see Cut-out Relay adjustment). Operate the generator and increase the speed to the maximum for the particular generator (see table below, Special Note, and Individual Car Data Sheets). Turn on enough lamp load to cause Current Regulator to begin operation. Note ammeter reading. If generator output as indicated by ammeter reading does not correspond with rated setting for the Apparatus Box, the Current Reulator setting must be changed. To adjust Current Regulator, loosen lock screw on lower spring bracket and turn eccentric adjusting screw to right or clockwise to decrease, or to left or counter-clockwise to increase the output. Tighten lockscrew and repeat test. NOTE—Current regulator setting must not be changed until after regulator contact gap has been checked.

THIRD BRUSH SETTING (Two-element Apparatus Boxes only):—To check third brush setting on generators used with a two-element Apparatus Box, first connect test ammeter in charging line and short out Voltage Regulator as directed in paragraph above on Current Regulator. Then operate generator at speed indicated in table below and change third brush setting until generator output corresponds with maximum rated capacity for the particular machine being tested (see table and individual car data sheets). Shift the third brush in the direction of armature rotation to increase the charging rate and in the opposite direction to decrease the charging rate.

TWO ELEMENT APPARATUS BOX.

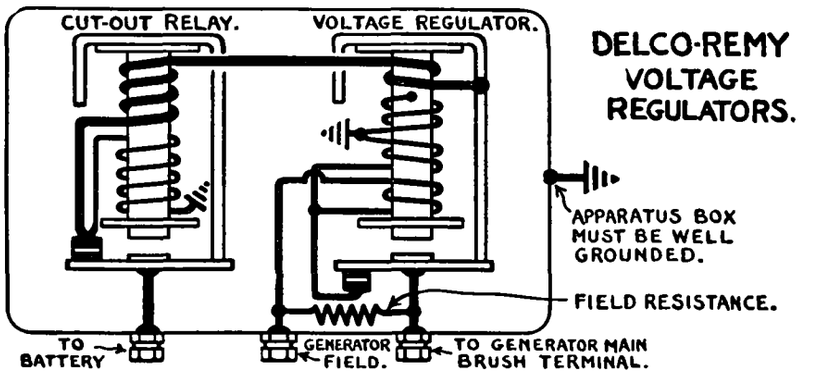

THREE ELEMENT APPARATUS BOX.

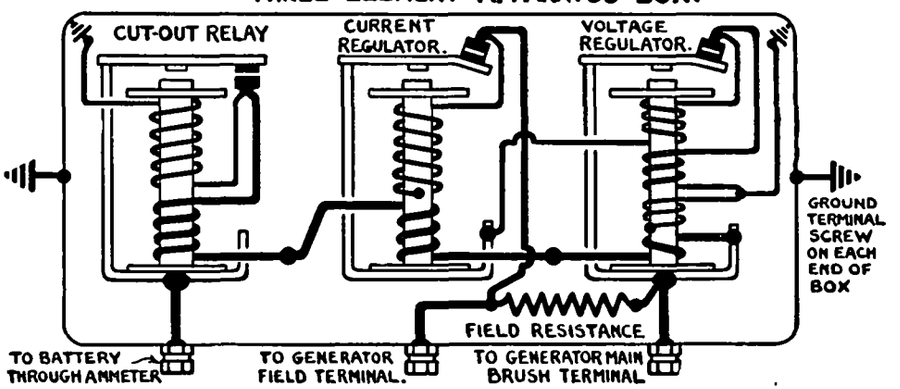

VOLTAGE REGULATOR:—Voltage Regulator should be checked and adjusted on open circuit. Disconnect the battery lead at the 'Ammeter' terminal on the Apparatus Box. Connect the negative (—) terminal of the test voltmeter to the 'Ammeter' terminal on the Apparatus Box and ground the positive (+) lead of the voltmeter to the Apparatus Box case. Operate the generator at the speed shown on the table below and note the voltmeter reading after regulator has reached operating temperature. If not within limits shown in table below, check contact gap before setting changed. Loosen the lock screw on the armature spring lower mounting bracket plate and turn the eccentric adjusting screw to change the spring tension. Increase the spring tension to increase the pen circuit voltage and decrease the spring tension to decrease the voltage. Tighten the lock screw and check adjustment by varying speed throughout operating range.

CONTINUED ON NEXT PAGE

DELCO-REMY REGULATORS (TRUCK & BUS APPARATUS BOXES) C ntinu d

Generator	Apparatus Box	Voltage Regulator Volts	Voltage Regulator R.P.M.	Current Regulator Amperes	Current Regulator Volts	Current Regulator R.P.M.
361	5525	15.0	1500	40	13.0	1100
①392	5524	15.0	1500	26	13.0	1100
401, 3, 5	5526, 5578	15.0	1500	40	13.0	1100
402	5526	15.0	1500	40	13.0	1500
407, 8, 9	5526	15.0	1500	40	13.0	1100
410	5526	15.0	1500	40	13.0	1100
①416	5524	15.0	1500	24-26	13.0	1600
①417, 18, 19	5524, 5535	15.0	1500	24-26	13.0	1600
①430	5524	15.0	1500	24-26	13.0	1600
433, 35	5529	15.0	1500	18	13.0	1100
①440	5524, 5535	15.0	1500	24-26	13.0	1600
461, 66	5530	15.0	1500	50	13.0	1700
464, 5, 7, 9	5526	15.0	1500	40	13.0	1100
469	5649, 1118453	15.0	1500	40	13.0	1100
501, 2	5526, 30, 66, 71	15.0	1500	57	13.0	650
505	5566	15.0	2000	57	13.0	650
507	5566	15.0	2000	50	13.0	650
507	5571, 5636	15.0	1500	57	13.0	650
508	5571	15.0	1500	57	13.0	650
514	5571, 5636	15.0	1500	57	13.0	650
515	5571	15.0	1500	57	13.0	650
517	5571	15.0	1500	57	13.0	650
518	5571, 5636	15.0	1500	57	13.0	650
522, 23	5526	15.0	1500	40	13.0	1100
524	5530	15.0	1500	50	13.0	1100
525, 6, 7, 8	5526	15.0	1500	40	13.0	1100
529, 30	5530	15.0	1500	50	13.0	1700
530	1118456	15.0	1500	50	13.0	1700
531	5526	15.0	1500	40	13.0	1100
532	5526	15.0	1500	40	13.0	700
533, 4, 5, 6	5526	15.0	1500	40	13.0	1100
535, 39	5649	15.0	1500	40	13.0	1100
537, 8, 9	5526	15.0	1500	40	13.0	1100
①550	5524, 5535	15.0	1500	24-26	13.0	1600
①551, 53	5524, 5535	15.0	1500	24-26	13.0	1600
①554, 55, 56	5535	15.0	1500	24-26	13.0	1600
557, 58	5535	15.0	1500	13-15	13.0	1200
559	5529	15.0	1500	18	13.0	1100
560	SM-1527, 5561	30.0	1500	14	26.0	1000
561	5535	15.0	1500	24-26	13.0	1600
563	5567	8.5	2000	40	7.0	950
564	5538	8.5	2000	28-30	7.0	1000
566	5529	15.0	1500	18	13.0	1100
①567	5533	8.5	2200	38-40	7.0	1500
①568	5535, 5573	15.0	1500	24-26	13.0	1600
570	5574	15.0	1500	40	13.0	1400
601	5563	15.0	1500	19-21	13.0	1600
①604	5538	8.5	2000	28-30	7.0	1000
606	5576, 5648	15.0	2000	33	13.0	950
607	5604	15.0	1500	40	13.0	1250
608, 9	5567	8.5	2000	40	7.0	950
610	5530	15.0	1500	50	13.0	1700
613	5526	15.0	1500	40	13.0	1100
614	5577	8.5	2000	50	7.5	800
615	5526	15.0	1500	40	13.0	1100
①616	5538	8.5	2000	28-30	7.0	1000
617	5526	15.0	1500	40	13.0	1100
618	5579, 5634	15.0	2000	55	13.0	950
619	5579	15.0	2000	55	13.0	950
620	5566	15.0	2000	50	13.0	1100
621	5565	30.0	1500	25	24.0	1300
622, 24	5526, 5530	15.0	1500	40	13.0	1100
625	5526	15.0	1500	40	13.0	1100
627	5526, 5530	15.0	1500	50	13.0	1700
630	5526	15.0	1500	40	13.0	1100
631	5579	15.0	2000	55	13.0	950
632	5579	15.0	2000	55	13.0	950
633	5526	15.0	1500	40	13.0	1100
634	5526	15.0	1500	40	13.0	1100
635	5530	15.0	1500	50	13.0	1700
636	5530	15.0	1500	50	13.0	1700
637	5526	15.0	1500	40	13.0	1100
638	5526	15.0	1500	40	13.0	1100
639	5526	15.0	1500	40	13.0	1100
670	5567	8.5	2000	40	7.0	950
671	5567	8.5	2000	40	7.0	950
672	5526	15.0	1500	40	13.0	1400
673	5567	8.5	2000	40	7.0	950
①674	5538	8.5	2000	28-30	7.0	1000
①677	5535	15.0	1500	24-26	13.0	1600
678	5526	15.0	1500	40	13.0	1400
678	5649, 5637	15.0	1500	40	13.0	1400
679	5567	8.5	2000	40	7.0	950
680	5567	8.5	2000	40	7.0	950
682	5576, 5648	15.0	2000	33	13.0	950
683	5575	15.0	1500	33	13.0	950
①687	5535	15.0	1500	24-26	13.0	1600
688	5567	8.5	2000	40	7.0	950
689	5567	8.5	2000	40	7.0	950
690	5576	15.0	2000	33	13.0	950
691	5637	15.0	1500	40	13.0	1400
692	5574, 5604	15.0	1500	40	13.0	1250
692	5637, 1118453	15.0	1500	40	13.0	1250
693	5526	15.0	1500	40	13.0	1250
694	5576	15.0	2000	33	13.0	950
①695	5535	15.0	1500	24-26	13.0	1600
696	5576	15.0	2000	33	13.0	950
697	5604	15.0	1500	40	13.0	1400
698	5526	15.0	1500	40	13.0	1400
699	5604, 5637	15.0	1500	40	13.0	1250
①927-X	5536	15.0	1500	16-18	13.0	2200
950	5530	15.0	1500	50	13.0	1700
952	5579, 5610, 34	15.0	2000	55	13.0	950
953	5579, 5610	15.0	2000	55	13.0	950
954	5579	15.0	2000	55	13.0	950
955	5579, 5634	15.0	2000	55	13.0	950
956	5579, 5634	15.0	2000	55	13.0	950
957	5579, 5634	15.0	2000	55	13.0	950
958	5579, 5634	15.0	2000	55	13.0	950
959	5579, 5634	15.0	2000	55	13.0	950
960	5579, 5634	15.0	2000	55	13.0	950
961	5579, 5634	15.0	2000	55	13.0	950
962	5577	8.5	2000	40	7.5	675
963	5526, 5649	15.0	1500	40	13.0	1100
964	5579, 5634	15.0	2000	55	13.0	950
965	5579, 5634	15.0	2000	55	13.0	950
966	5610	15.0	2000	55	13.0	950
969	5579, 5634	15.0	2000	55	13.0	950
①970-D	5535	15.0	1500	28-30	9.5-9.75	2200
①970-E	5534	8.5	2000	26-28	7.0	1400
①970-F	5534	8.5	2000	17-19	7.0	1200
①970-G	5535, 5536	15.0	1500	20-22	13.0	2000
971	5622	37.5	1500	25	35.0	1550
973	5579	15.0	2000	55	13.0	950
①973-E, F	5538	8.5	2000	24-26	7.0	1600
①973-G	5535	15.0	1500	21-23	13.0	2400
①973-H	5535	15.0	1500	21-23	13.0	2400
①973-K	5535	15.0	1500	21-23	13.0	2400
974	5634	15.0	2000	55	13.0	950
975, 6, 7	5579, 5634	15.0	2000	55	13.0	950
①975-F, G	5534, 5538	8.5	2000	25-27	9.0-9.3	1200
①975-H, J	5535	15.0	1500	20-22	13.0	2000

①—Third brush current control type generator.

CONTINUED N NEXT PAGE

DELCO-REMY REGULATORS (TRUCK & BUS APPARATUS BOXES) Continued

Generator	Apparatus Box	Voltage Regulator Volts	Voltage Regulator R.P.M.	Current Regulator Amperes	Current Regulator Volts	Current Regulator R.P.M.
①975-M	5538	8.5	2000	25-27	9.0-9.3	1200
①975-N	5538	8.5	2000	28-30	9.5-9.75	2200
①975-R	5535	15.0	1500	22-24	13.0	2000
①975-S	5538	8.5	2000	28-30	9.3-9.6	2000
①975-U	5538	8.5	2000	26-28	7.0	1400
①975-Y	5535	15.0	1500	20-22	13.0	2000
①975-Z	5535	15.0	1500	20-22	13.0	2000
977-E	5562, 1118458	30.0	1500	10	26.0	1200
①977-J	5538	8.5	2000	26-28	7.0	1400
①977-M	5538	8.5	2000	30-31	7.0	2000
①977-N	5538	8.5	2000	26-28	7.0	1400
①977-U	5538	8.5	2000	30-31	7.0	2000
①977-V	5535	15.0	1500	25-28	13.0	2600
977-W	1118458	30.0	1500	10	26.0	1200
①977-Y	5535	15.0	1500	17-20	13.0	1500
①977-Z	5535	15.0	1500	20-22	13.0	2000
978	5610	15.0	2000	55	13.0	950
982	5635	15.0	2000	55	13.0	950
986, 88	5634	15.0	2000	55	13.0	950
989, 94	5579, 5634	15.0	2000	55	13.0	950
1105778	5632	15.0	1500	17	14.5-14.75	1250
①1106253	5538	8.5	2000	30-31	7.0	2000
①1106255	5538	8.5	2000	17-19	7.0	1200
1106501	5611	37.5	1500	10	32.5	1080
1106502,3,4,5	5624	30.0	1500	10	26.0	1200
1106506,7	5624, 5626	30.0	1500	10	26.0	1200
1106527	5608	40.0	1500	10	35.0	1175-1225
1106528	5608	40.0	1500	10	35.0	1175-1225
1106529	5608	40.0	1500	10	35.0	1175-1225
1106530	5608	40.0	1500	10	35.0	1175-1225
1106541, 2	1118469	40.0	1500	10	35.0	1175-1225
1106580	5567	8.5	2000	35	8.0	1400
1106648, 55	5629	15.0	1500	25	13.0	1300
1117001	5604	15.0	1500	40	13.0	1250
①1117002	5535	15.0	1500	24-26	13.0	1600
①1117003	5538	8.5	2000	28-30	7.0	1000
1117004	5604, 5637	15.0	1500	40	13.0	1250
1117005	5604, 5637	15.0	1500	40	13.0	1250
1117006	5567	8.5	2000	40	7.0	950
1117007	5529	15.0	1500	18	13.0	800
1117008	5567, 1118451	8.5	2000	40	7.0	950
1117009	5567	8.5	2000	40	7.0	950
1117010	5613	15.0	1500	20	13.0	950
①1117011	5538	8.5	2000	28-30	7.0	1000
1117012	5604, 5637	15.0	1500	40	13.0	1250
1117013	5567, 1118451	8.5	2000	40	7.0	950
①1117014	5535	15.0	1500	13-15	13.0	1200
1117015	5604, 5637	15.0	1500	40	13.0	1250
1117016	5574	15.0	1500	40	13.0	1250
1117017	5561, 1118457	30.0	1500	14	26.0	1000
1117019	5604, 5637	15.0	1500	40	13.0	1250
①1117020	5535	15.0	1500	24-26	13.0	1600
1117021	5604	15.0	1500	40	13.0	1250
1117023	5529	15.0	1500	18	13.0	800
1117024	5604, 5637	15.0	1500	40	13.0	1250
1117025	5529, 5647	15.0	1500	18	13.0	800
1117026, 28	5604, 5637	15.0	1500	40	13.0	1250
1117027	5529, 5647	15.0	1500	18	13.0	800
1117029	5623	15.0	1500	40	13.0	1250
1117033	5637	15.0	1500	40	13.0	1250
①1117036	5535	15.0	1500	13-15	13.0	1200
1117037	1118453	15.0	1500	40	13.0	1250
1117201	5565	30.0	1500	25	24.0	1300
1117202, 3	5565, 5572, 5607	40.0	1500	25	35.0	1550
1117202, 3	5616, 5645	40.0	1500	25	35.0	1550
1117204	5526, 5649	15.0	1500	40	13.0	1100
1117205,6	5616, 5643	40.0	1500	20	35.0	900
1117211	5646	30.0	1500	25	24.0	1300
1117212	5644	40.0	1500	25	35.0	1550
1117214	5646	30.0	1500	25	24.0	1300
1117501	5571, 5636	15.0	1500	57	13.0	650
1117502	5607	40.0	1500	40	35.0	1050
1117503	5607	40.0	1500	40	35.0	1050
1117504	5571	15.0	1500	57	13.0	650
1117506, 7	5571	15.0	1500	57	13.0	650
1117510	5607	40.0	1500	40	35.0	1020
1117513	5571	15.0	1500	57	13.0	650
1117523, 4	5571	15.0	1500	57	13.0	650
1117535	5571, 5636	15.0	1500	57	13.0	650
①SM-1120	5524, 5535	15.0		24-26	13.0	1600
①SM-1278	5533, 5538	8.5		38-40	7.0	1500
SM-1298	5530	15.0		50	13.0	1700
②SM-1298	5526	15.0	1500	40	13.0	1700
①SM-1315, 16	5533, 5538	8.5	2200	38-40	7.0	1500
①SM-1321	5524	15.0	1500	24-26	13.0	1600
SM-1324, 28	5526	15.0	1500	40	13.0	1100
①SM-1326	5535	15.0	1500	22-24	13.0	2000
①SM-1333	5524	15.0	1500	24-26	13.0	1600
①SM-1334	5538	8.5	2000	25-27	9.0-9.3	1200
SM-1337	5536	15.0	1500	16-18	13.0	2200
①SM-1342	5524	15.0	1500	24-26	13.0	1600
①SM-1342	5535	15.0	1500	24-26	13.0	1600
SM-1348	5530	15.0	1500	50	13.0	1700
①SM-1353	5538	8.5	2000	23-26	8.8-9.2	1900
①SM-1354	5538	8.5	2000	38-40	7.0	1500
①SM-1364	5535	15.0	1500	24-26	13.0	1600
①SM-1374	5534	8.5	2000	17-19	7.0	1200
SM-1385	5530	15.0	1500	50	13.0	1700
SM-1405	5526	15.0	1500	40	13.0	1100
①SM-1439	5538	8.5	2000	17-19	7.0	1200
SM-1440	5526	15.0	1500	40	13.0	1100
①SM-1449	5535	15.0	1500	20-22	15-15.2	2000
①SM-1454	5535	15.0	1500	40	8.0	16-1800
SM-1460	SM-1428, 5561	30.0	1500	14	26.0	1000
①SM-1505	5538	8.5	2000	38-40	7.0	1500
①SM-1516	5535	15.0	1500	19-21	13.0	2100
①SM-1535	5538	8.5	2000	25-27	9.0-9.3	1200
①SM-1536	5535	15.0	1500	24-26	13.0	1600
①SM-1544	5538	8.5	2000	18-20	8.3-8.5	1300
SM-1545	5524	15.0	1500	24-26	13.0	1600
①SM-1549	5535	15.0	1500	13-15	13.0	1200
SM-1551, 2	SM-1553, 5565	30.0	1500	25	24.0	1300
SM-1591	5565	30.0	1500	25	24.0	1300
SM-1594	5530	15.0	1500	50	13.0	1700
SM-1595	5530	15.0	1500	40	13.0	1100
SM-1597	5535	15.0	1500	20-22	13.0	2000
SM-1615, 16	5535	15.0	1500	20-22	13.0	2000
SM-1638	5561	30.0	1500	14	26.0	1000
SM-1656	5565	30.0	1500	25	24.0	1300
①SM-1660	5538	8.5	2000	26-28	7.0	1400
SM-1680	5561	30.0	1500	14	26.0	1000
SM-1801	5530	15.0	1500	50	13.0	1700
①SM-1838	5535	15.0	1500	20-22	13.0	1000
①SM-1873	5538	8.5	2000	22	8.0	1200
SM-1874	5607	40.0	1500	40	35.0	1050
①SM-1884	5535	15.0	1500	24-26	13.0	1600
①SM-1921	5535	15.0	1500	13-15	13.0	1200

①—Third brush current control type generator.

②—For 40 ampere output and special armature.

FORD TWO-UNIT VOLTAGE-CURRENT REGULATORS

Car Model	Generator	Regulator Model
Ford '60' 82A, C, Y (1938)	82-A-10000-D, E	81-A-10505 ①
Ford '85' 81A, C, Y (1938)	81-A-10000-D, E	81-A-10505 ①
Ford '85' Trucks (1938)	81-T-10000-A, B	81-A-10505 ①
Ford '60' 922A, C, 92Y, ('39)	82-A-10000-D, E	91-A-10505-A
Ford '85' 91A,C,Y (1939)	81-A-10000-D, E	91-A-10505-A
Ford '85' 91A Deluxe ('39)	91-A-10000	91-A-10505-A
Ford '85' & '95' Trks. ('39)	81-T-10000-A, B	91-A-10505-A
Ford '95' 99C (1939)	81-A-10000-D, E	91-A-10505-A
Ford '60' 022A, 022C ('40)	01-A-10000	01-A-10505-A
Ford '85' 01A, 01C ('40)	01-A-10000	01-A-10505-A
Ford Trucks exc. C-O-E ('40)	01-A-10000	01-A-10505-A
Ford C-O-E Trucks ('40)	81-T-10000-A, B	01-A-10505-A
Lincoln-Zephyr 86H (1938)	81-A-10000-D	81-A-10505-A1 ①
Lincoln-Zephyr 96H (1939)	91-A-10000	91-A-10505-A
Lincoln, Zephyr 06H (1940)	01-A-10000	01-A-10505-A3
Lincoln, Cont'l. 06H (1940)	01-A-10000	01-A-10505-A3
Mercury 99A (1939)	91-A-10000	91-A-10505-A
Mercury 09A (1940)	01-A-10000	01-A-10505-A

①—Superseded by 91-A-10505-A.

REPLACEMENT REGULATOR NOTE:—New type three-unit Voltage-Current Regulator used on late 1940 cars and trucks and furnished for replacement on above models. See following article for service data on this new type.

SERVICE NOTE:—Regulator covers are sealed and should not be removed. No adjustments are possible and units which are defective as determined by tests given below should be replaced.

Bench Test Caution—Ford Generator and Regulator circuits and wiring not same as units used on other cars and these units must always be tested together. Do not operate generator or regulator with regulator or generator of other make on test sets.

TYPE:—Regulator consists of a vibrating type combination voltage-current regulator and a cutout relay in a single case designed to be mounted on the dash and used in conjunction with a two-brush shunt wound generator (see illustration).

OPERATION:—Voltage Regulation. Regulator voltage winding is connected across the generator main brushes. When the generator voltage reaches the value for which the regulator is set, regulator contacts vibrate (cutting the resistance in and out of the field circuit) so that the voltage is held constant (winding actually connected in two sections, one of which is short-circuited by the contacts when they are closed but is energized when the contacts open—see illustration).

Current Regulation. *Current coil on regulator is connected in series in charging circuit so that the entire generator output flows through this winding. When the current reaches the maximum for which the regulator is set, the regulator contacts vibrate and the output is held from exceeding this figure.*

CHECKING & ADJUSTING:—When checking regulator on the car, test Battery, Charging Circuit, and Regulator in order as described below. Regulator should be at normal operating temperature (operate car for approximately 5 minutes).

Battery:—Check battery with 'BRS' attachment and Ford Test Set. If battery tests less than 70%, recharge battery or install fully charged battery.

Charging Circuit:—Check entire circuit for high resistance as follows: Operate engine at 1250 RPM. with generator charging battery (use HI-TAC tachometer and Ford Test Set to set engine speed. Turn on Headlamp Country Beams. Use 3-volt voltmeter test leads, connect one lead to positive post of battery, other lead to generator frame or positive (grounded) main brush. Voltmeter reading must not exceed .1 volt (Ford Test Set 'B' scale reading of 4). Then check resistance between generator and regulator by connecting one voltmeter lead to generator 'A' terminal, other lead to regulator 'A' terminal (armature terminal). Note voltmeter reading (or 'B' scale reading on Ford Test Set), then shift voltmeter lead from regulator 'A' terminal to regulator 'B' terminal (battery terminal) without disturbing lead at generator 'A' terminal. Voltmeter or Ford Test Set 'B' scale reading must not be more than 6 times previous reading (from generator to regulator 'A' terminals). Then shift voltmeter lead to negative post f battery (without disturbing lead on generator 'A' terminal), voltmeter or Ford Test Set 'B' scale reading must not be more than 6½ times first reading (from generator to regulator 'A' terminals). If voltmeter readings too high (indicating high resistance in charging circuit), correct this condition by cleaning and tightening terminals or replacing wiring before checking and adjusting regulator.

Regulator:—Voltage regulator should be tested with a resistance of ¾ ohm (two 32 cp. headlamp bulbs) in generator circuit instead of battery to eliminate differences caused by battery being more or less charged. Regulator temperature should be carefully gauged with thermometer in contact with regulator case (performance varies with temperature).

Relay Cut-in Voltage—Connect 15 volt voltmeter between generator 'A' terminal and ground. Start engine and slowly increase speed until cutout relay contacts close (pointer will drop back slightly). Note voltmeter reading at instant contacts close. Cut-in voltage should be 5.8-6.3 volts. NOTE—This test should not be repeated unless necessary since residual magnetism of cutout relay will cause successive cut-in voltage figures to be slightly lower.

Voltage Setting Test—Disconnect lead at regulator 'B' terminal, connect special ¾ ohm resistor (Heyer No. DABAE) or two 32 cp. headlamp bulbs in series between this terminal and ground (so generator output flows through both bulbs in series), connect voltmeter between 'B' terminal and ground. Operate generator at speed of exactly 2300 RPM. and note voltmeter reading. If voltage is within range given in table below, regulator is OK. If voltage is below minimum or above maximum figure, replace regulator.

NOTE—With this ¾ ohm resistor connected between regulator terminal and ground, generator output will be approximately 10 amperes.

Ford Test Set 'B' Scale Maximum	Minimum	Voltage Setting Temperature	Equivalent Volts Maximum	Minimum
51	48	60°	7.65	7.20
50	47¼	80°	7.50	7.0875
49½	46¾	100°	7.425	7.0125
49	46¼	120°	7.35	6.9375
48¾	45¾	140°	7.3125	6.8625
48¼	45½	160°	7.2375	6.825
48¼	45½	180°	7.2375	6.825

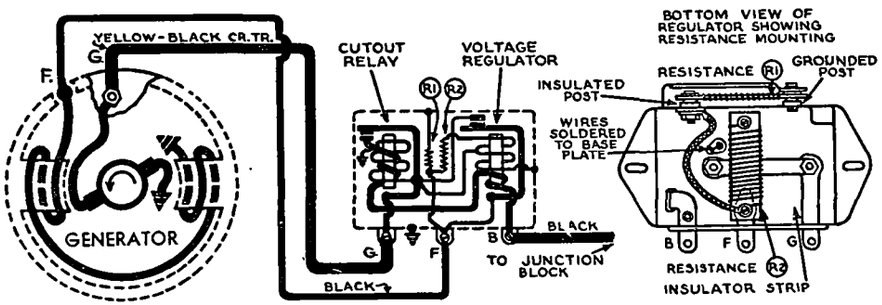

FORD TWO-UNIT VOLTAGE-CURRENT REGULATOR CIRCUIT

Current Setting Test—Use 'BRS' test set attachment to discharge battery until voltage drops to 5¾ volts. Connect ammeter in charging line at regulator 'B' terminal. Operate engine at speed at which maximum output produced (see car model pages for generator data). Note the ammeter reading. Current should be 30-33 amperes and if in excess of this figure the regulator should be replaced.

Cutout Relay Reverse Current—After checking Current Regulator (above) and without disturbing test connections, slowly decrease generator speed until ammeter indicates discharge "reverse" current through cutout relay (on Ford Test Set, meter plug should be reversed in socket when charging current drops to approximately 5 amperes so that discharge current can be read on dial). Note ammeter reading at instant contacts open (ammeter pointer will drop to zero when contacts open). Reverse current varies with temperature but must not exceed 8 amperes.

CONTINUED ON NEXT PAGE

FORD TWO-UNIT VOLTAGE-CURRENT REGULATORS (C ntinued)

INSTALLING NEW GENERATORS & REGULATORS:—Disconnect battery ground strap. Disconnect yellow wire with black tracer (old generator lead) from fuse block, draw this two-wire cable (contains also black wire not used with three-brush generator) back through rubber grommet in dash. Mount regulator securely on dash on bosses provided (near bottom on first cars, on inclined surface to left of center on later cars—avoids interference with oil-bath air cleaner and the oil filter when installed). Connect regulator ground lead to the dash (scrape paint from dash and tighten ground lead screw securely for good ground connection). Insert special black wire through the dash grommet, connect one end to fuse block, opposite end to regulator 'B' terminal. Disconnect wire on old generator, replace with new generator (do not install belt). Connect wires in two-wire cable to regulator as follows: Yellow-with-black tracer wire to regulator 'G' terminal, Black wire to 'F' terminal. Connect black wire (field lead) to other (field) terminal on the generator. Connect battery ground strap, touch yellow-with-black tracer wire to 'G' terminal on generator commutator endplate. No spark should be evident and generator should not motor or show other reaction (see Note below). If O.K., connect wire permanently, install fan belt. NOTE—The generator output may be as low as 6-7 amperes with ignition load only, or as high as 30-35 amperes with low battery and maximum load.

NOTE—If spark noted or if generator tends to rotate when wire touched to generator terminal in test (above), regulator is defective or other wires have been connected incorrectly.

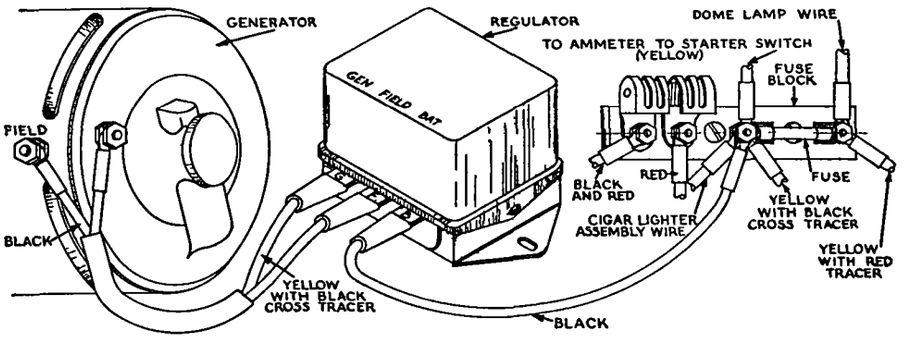

FORD TWO-UNIT VOLTAGE-CURRENT REGULATOR

FORD REGULATOR

TWO RATE RELAYS

Models.	Regulator.	Generator.
Ford V8 (1934-36)	40-10505, A	40-10000-B
Ford V8 All Models (1937)	68-10505	78-10000-HA, HB
Lincoln Zephyr H (1936)	68-10505	68-10000-HA, HB
Lincoln Zephyr HB (1937)	68-10505	78-10000

DESCRIPTION:—The Voltage Regulator or Two Rate Relay is combined with the Cutout Relay in a case on the generator field frame. The regulator consists of a fixed resistance unit which is cut in or out of the generator field circuit by the action of the regulator contacts (resistance is connected across the contacts and is short-circuited with the contacts closed). Resistance is wound on a form over the regulator coil winding. This coil winding (shunt coil) is connected in parallel with the shunt winding of the cutout relay. Regulator is compensated for temperature variations by having one contact mounted on a thermal support.

OPERATION:—The regulator contacts are normally closed (resistance short-circuited) when the generator is not operating. The generator will charge the battery at the high rate until the generator voltage reaches 8.5 volts. At this point the current flow through the regulator coil winding will cause the regulator contacts to open, cutting the resistance in the field circuit, and reducing the charging rate to approximately 20% of the high rate. The contacts remain open, and the generator charges at the low rate until the generator speed decreases sufficiently so that the cutout relay contacts open. The regulator contacts then close so that generator will again charge at the high rate when the generator speed is increased sufficiently to close the cut-out relay contacts. This action provides two charging rates, a high rate with discharged battery or for a short interval after the generator begins to charge (regulator contacts closed), and a lower rate after the battery is charged (regulator contacts open).

The regulator also acts as a safeguard against high voltage due to resistance in charging circuit, high internal resistance in battery, or other causes, since these factors all cause the generator voltage to rise and the regulator will operate when the generator voltage reaches 8.5 volts even when the battery is not fully charged (generator voltage normally rises as battery voltage comes up on charge).

ADJUSTMENTS:—No provision made for adjustments. Replace units which do not operate satisfactorily.

FORD VOLTAGE REGULATOR (TWO RATE RELAY).

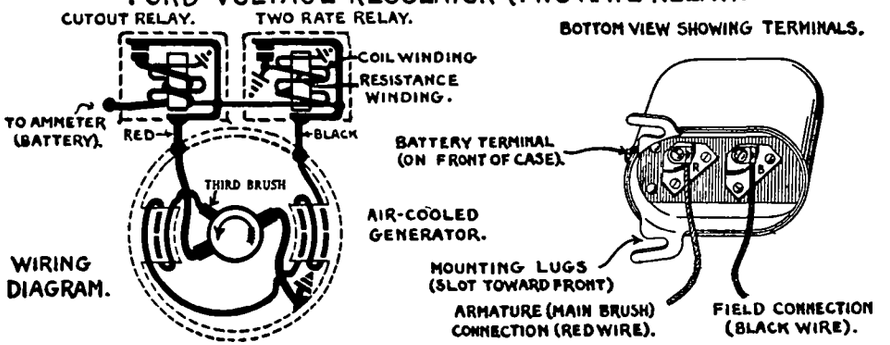

FORD THREE-UNIT VOLTAGE-CURRENT REGULATORS

Model	Generator	Regulator
Ford, 4 Cyl. Trucks ('41-42)	1NC-10000	01A-10505-C
Ford, 6 Cyl. "G" Cars & Trucks ('41)	1GA-10000-B	01A-10505-C
Ford, 6 Cyl. "G" Cars & Trucks ('42-47)	2GA-10000-A	01A-10505-C
Ford, 6 Cyl. "H" Cars ('47-48)	7HA-10001-B	01A-10505-C
Ford, 6 Cyl. "H" Cars ('49)	8BA-10002-A	51A-10505-C or E
Ford, 6 Cyl. "H" Trucks ('47)	7HA-10001-B	01A-10505-C
Ford, 6 Cyl. "H" Trucks ('48)	8BA-10002-A	51A-10505-C or E
Ford, V8 Cars ('41)	01A-10000-B	01A-10505-C
Ford, V8 Cars ('42-48)	21A-10000	01A-10505-C
Ford, V8 Cars ('49)	8BA-10002-A	51A-10505-C or E
Ford, V8 Trucks ('41)	01A-10000-B	01A-10505-C
Ford, V8 Trucks ('42-47)	21A-10000	01A-10505-C
Ford, V8 Trucks ('48)	8BA-10002-A	51A-10505-C or E
Lincoln, All Models ('41)	01A-10000-B	01A-10505-C4
Lincoln, All Models ('46-47-48)	21A-10000	01A-10505-C
Lincoln, All Models ('49)	8EL-10002	5EH-10505-C or E
Mercury, Model 19A ('41)	01A-10000-B	01A-10505-C
Mercury, All Models ('42-48)	21A-10000	01A-10505-C
Mercury, All Models ('49)	8BA-10002-A	51A-10505-C or E

►NOTES, CAUTIONS, & CHANGES

PRODUCTION CHANGE NOTE: Regulators with several minor differences will be found in service as follows:

Regulator Ground Lead—On some regulators, ground lead consists of a braided pigtail connected to a lug on the regulator case by which the regulator is grounded directly to the engine dash. The regulator case ground lug is attached to the regulator case by the cover rivet and this ground connection is disturbed by removal of the regulator cover. On other regulators, the ground connection consists of a separate wire which is connected to the regulator case and grounded to a terminal screw on the generator frame. CAUTION—Ground lead must be in place when regulators are tested. If ground disturbed by removal of regulator cover, re-install ground lead before making regulator tests.

Regulator Wiring Color Code—On some regulators, wire colors are marked on regulator cover adjacent to terminals. See individual car wiring diagrams in car model section for wire colors and regulator connections.

1940 PRODUCTION NOTE:—These new 3-unit Regulators were used on late 1940 Ford, Lincoln, and Mercury (after July) and are also furnished as Service Replacement for the earlier 2-unit type regulator. All data given below applies to 1940 and earlier cars with this new 3-unit regulator.

►**REGULATOR CONTACT DESIGN CHANGES:** Contacts on early regulators can be replaced with later design contacts listed below.

Current Regulator Later Design Contacts: Following parts required:
No. 01A-10551-A—Armature with silver contact.
No. 01A-10653-A—Contact screw with silver contact (screw .41" long).
No. 01A-10568-A—Spacer (additional spacer installed bet. armature & frame).

Voltage Regulator Later Design Contacts: Following parts required:
No. 01A-10551-B—Armature with tungsten contact (brass rivet under arm).
No. 01A-10653-B1 or B2—Contact screw with platinum contact.
No. 01A-10568-B—Spacer (replaces original spacer on box type shunt regulators, or used together with old spacer on old type voltage regulators).

See "CONTACT REPLACEMENT" following for installation of these parts.

►**GROUND CAUTION:** Make certain regulator and generator ground in place when these units operating. See car page wiring diagram for ground locations.

DESCRIPTION

DESCRIPTION: 3 unit (Cutout Relay, Voltage Regulator, Current Regulator) regulator with separate voltage and current regulator units (these units were combined on previous 2-unit regulators). Regulators are vibrating type and charging rate is normally controlled by Voltage Regulator. Current Regulator operates when current reaches value in excess of rated capacity and limits current to this figure. Both regulators operate in the same manner by cutting the resistance in and out of the field circuit and control the generator output by regulating the field current. Cutout Relay is compensated for temperature by means of a bi-metal clip on the armature spring so that the cut-in voltage is held constant throughout the normal temperature range.

►*CAUTION*—Ford Generators and Ford Regulators are not wired in the same manner as units of other makes and cannot be operated in conjunction with units of other makes. Always operate Ford Generators & Regulators together.

CHECKING GENERATING CIRCUIT

CHECKING GENERATING CIRCUIT: Preliminary check of Battery, Charging Circuit Resistance, and Generator Output should be made to locate trouble if generating circuit faulty.

Battery: If specific gravity below 1.250, recharge battery or install fully charged battery.

Charging Circuit: Check entire circuit for high resistance as follows:

1)—**Generator to Battery Resistance**—Connect voltmeter negative lead to generator "A" terminal. Connect ammeter in series at regulator "B" terminal. Set engine speed to charge more than 5 amperes. Connect voltmeter positive lead to "A" terminal of regulator and check this original voltmeter reading. Touch regulator "B" terminal with voltmeter positive lead and check reading. Reading must not be more than 6 times original reading above (if more than 6 times, loose or faulty connections or excessive resistance in cutout points indicated). Then check reading secured by touching voltmeter lead to negative battery post. Reading must not be more than 6½ times original reading above (if reading too high, loose or faulty connections indicated).

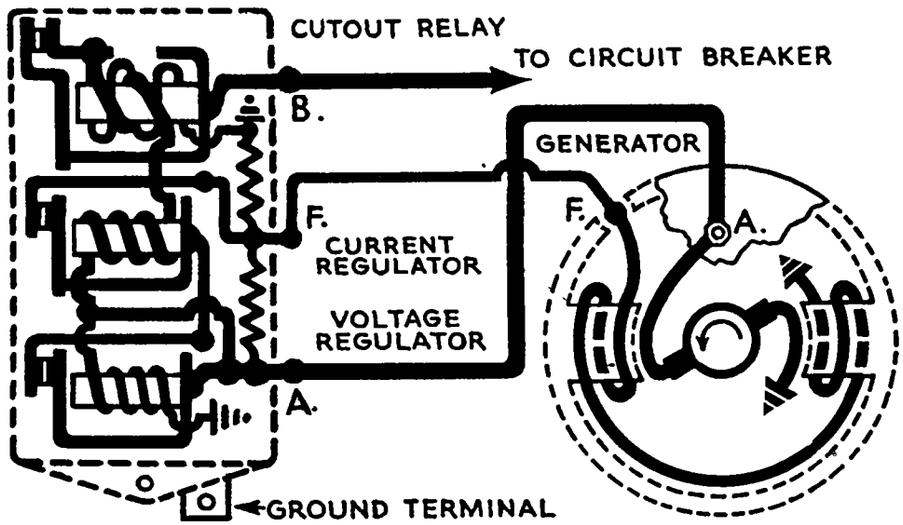

FORD THREE-UNIT VOLTAGE-CURRENT REGULATOR CIRCUIT

2)—**Ground Circuit Resistance**—With 20 ampere or more charging rate, connect voltmeter positive lead to positive battery terminal, negative lead to generator frame. Reading should not be in excess of 0.1 volt (if reading high, faulty ground indicated at ground straps or at generator bracket).

Generator Output: Connect jumper between "A" and "F" generator terminals. Disconnect wire at regulator "A" terminal. With engine running at approx. 1500 RPM., connect ammeter negative lead to generator "A" terminal and positive lead to battery negative terminal. Turn on cars lights and press starter button (or if Ford Test Set used cut in load). Ammeter reading should be at least 30 amperes (40 amperes on '49 Lincoln). If reading too low, repair or replace generator.

►*CAUTION—After Generator Output Test completed, disconnect ammeter before stopping engine. Disconnect jumper on generator after engine stopped. Engine should be stopped as soon as possible to prevent overheating generator.*

CONTINUED ON NEXT PAGE

FORD THREE-UNIT VOLTAGE-CURRENT REGULATORS (C ntinu d)

CHECKING & ADJUSTING REGULATOR

CHECKING & ADJUSTMENT OF REGULATOR: Use "fixed resistance" method, requires a special ¾ ohm fixed resistance capable of carrying 10 amperes and which does not change in value due to temperature changes. A special Heyer 'DABAE' ¾ ohm resistance unit available for this purpose. To install resistor, disconnect charging line at regulator 'B' terminal (leave this lead disconnected while tests being made), connect ¾ ohm resistor to regulator 'B' terminal and ground opposite end of resistor. Then check and adjust regulator as directed below. NOTE—With this ¾ ohm resistor connected between regulator and ground, generator output is approximately 10 amperes.

►*NOTE*—Regulator should be at normal operating temperature when checking regulator settings.

►*CAUTION*—Ground connection must be in place when generator and regulator are operated. If ground wire disturbed by removal of regulator cover, make certain that regulator is grounded whenever generator and regulator are being perated.

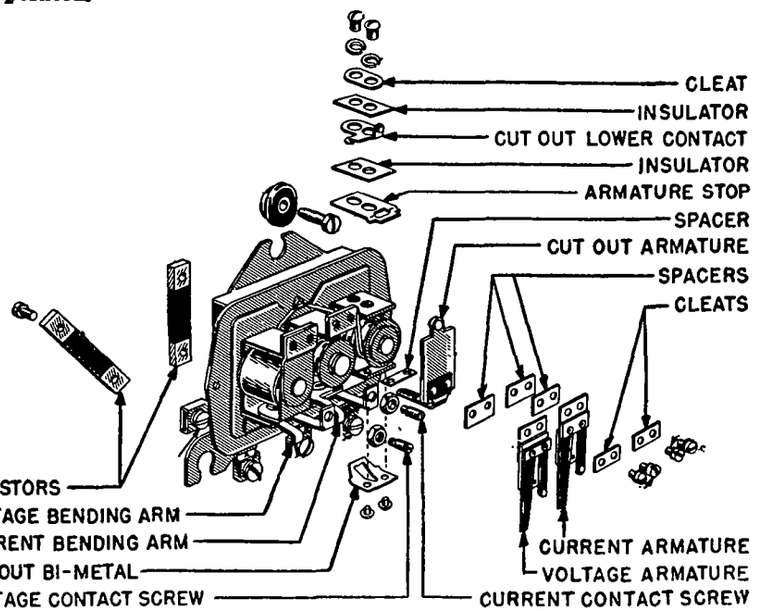

FORD THREE-UNIT VOLTAGE-CURRENT REGULATOR

Relay Cut-in Voltage—6.1-6.3 volts (6.4-6.9 volts starting 1949) at operating temperature. To check, connect 10 volt voltmeter between generator "A" terminal and ground. Start engine and slowly increase speed until cut-out relay contacts close (pointer will drop back slightly). Cut-in voltage should be within limits listed above. To adjust, remove regulator cover, bend bi-metal at lower end of cutout relay armature spring in to increase tension and raise cut-in voltage, bend out to decrease tension and lower cut-in voltage.

CAUTION—Cut-in voltage reading should be noted on first test and test should not be repeated as residual magnetism of the relay will cause subsequent cut-in voltage figures to be slightly lower.

►*IDLE SPEED NOTE*—If higher than cut-in point, it will be necessary to back off throttle stopscrew and lower idling speed below cut-in point before the above test can be made. If idling speed changed in this manner, make certain that speed is reset at 500 Eng. RPM. (5-7 MPH.) after tests completed.

Voltage Regulator Setting—7.0-7.3 volts (7.0-7.5 starting 1949) at operating temperature. After checking Relay Cut-in Voltage (above), re-install regulator cover if removed. Disconnect ¾ ohm resistance used above. Connect ammeter in series at regulator "B" terminal. Obtain 10 ampere reading by turning on headlights and accessories if required. Note voltmeter reading when engine speed increased to approx. 1500 RPM. (should be within limits listed above). To adjust, remove regulator cover, bend spring adjustment (bending arm)—see illustration—upward to increase tension and raise voltage setting, bend down to decrease tension and lower voltage setting. Re-install cover and repeat test, re-adjusting setting if required.

Current Regulator Setting—30 amperes (40 amperes for 1949 Lincoln) at operating temperature. After checking Voltage Regulator Setting (above), re-install regulator cover if removed. Proceed as for Voltage Regulator check with engine speed approx. 1500 RPM., press starter button (to increase load). Note ammeter reading (should agree with setting given above). To adjust, remove regulator cover, bend spring adjustment (bending arm) for current regulator—see illustration—upward to increase tension and raise current setting, bend down to decrease tension and lower current setting.

Cutout Relay Reverse Current—8 amperes maximum reverse current. After checking Current Regulator (above), reduce engine speed to obtain approx. 5 ampere reading, then reduce engine speed until negative reading secured (just before cut-out points open). Negative reading should be within limits listed above.

►*CAUTION*—After testing completed, remove meters, connect charging line to regulator "B" terminal.

CONTACT REPLACEMENT

CONTACT REPLACEMENT: Cutout Relay and Voltage and Current Regulator Contacts can be replaced as follows:

Cutout Relay: *CAUTION*—Lower cutout contacts replaceable only on regulators where contact mounting secured by screws (if contact secured by rivets, regulator must be replaced if contacts damaged).

Removal of Cutout Relay Contacts—Remove cover. Take out cutout armature, bi-metal, and spacer by removing 2 screws directly above "B" terminal. Disconnect two cutout winding wires from lower contact by softening solder. Remove cleat, insulator, lower contact, and armature stop by taking out 2 screws in lower contact.

Installation of Cutout Relay Contacts—Assemble in following: Install armature stop, insulator, lower cutout contact, insulator, and cleat, and hold in place with 2 screws (do not tighten). Solder 2 cutout winding wires to lower contact. Install armature with spacer under hinge and bi-metal outside hinge, and secure with 2 screws. Set Air Gap, and Contact Gap, and align contacts as described below.

Cutout Relay Contact Gap—.010" with armature against stop.

Cutout Relay Air Gap—.017" between armature and core with contacts open.

Setting Contact Gap and Air Gap—Insert .017" feeler between armature and core. Then set contact gap to .010" using a feeler gauge, by lowering armature stop and raising the lower contact, tighten 2 lower contact screws.

Aligning Cutout Relay Contacts—Contacts must make and break squarely. If adjustment necessary, bend lower contact up or down, then check Air Gap and Contact Gap (may be disturbed by movement of lower contact).

Voltage and Current Regulator: Remove and install contacts as follows:

Removal of Regulator Contacts—With cover removed, remove cleat, armature, and spacer by taking out 2 screws in armature. Loosen contact screw locknut and remove contact screw.

Installation of Regulator Contacts—*CAUTION—Where Later Design Contacts being installed, see parts list at beginning for necessary replacements or additions required.* Install parts on regulator frame in following order: Spacer, armature, and cleat, tighten 2 screws, align contacts if necessary by bending upper contact arm.

Regulator Air Gap—.035" between armature & core with contacts just closed.

Setting Air Gap—Bend the spring adjustment (bending arm)—see illustration—to clear armature spring. Insert .035" gauge (round stock) between armature and core (*CAUTION*—On voltage regulator make certain gauge does not contact rivet on underside of armature). Press armature down, turn contact screw down to just touch armature contact, set contact screw with locknut. Realign contacts if required.

Regulator Contact Spring Tension—5 ozs. minimum with contacts just opening.

Checking Contact Spring Tension—Use a spring scale to measure tension just as contacts open. Adjust upper contact screw after loosening locknut if pressure below limits listed above.

►*Check Relay and Regulator Settings after completing above adjustments.*

OWEN-DYNETO BATTERY CHARGE REGULATOR

DESCRIPTION:—The Owen-Dyneto Battery Charge Regulator consists of an electrically operated thermostatic regulator and a relay cut-out mounted in a single case which is designed to be mounted on top of the generator. It is standard equipment on certain models of Owen-Dyneto generators and can be installed on generators of other manufacture by making minor alterations in the relay mounting and wiring hookup. The regulator permits a relatively high charging rate without danger of damaging the battery and automatically varies the charging rate to cover different driving conditions by permitting the high charging rate over short periods of time or for short trips and automatically cutting down the rate after the regulator thermostat heats up which will occur on long trips or after the generator has nearly completed the battery charge.

OPERATION:—The regulator consists of two thermostat arms mounted on a pivot. The upper arm carries the regulator contacts and has a fine resistance unit wound on it. This resistance is connected directly between the generator relay terminal in the base of the unit and ground and is thus connected directly across the main brushes of the generator. The lower thermostat arm is a compensating unit and carries no winding. It is designed to compensate the regulator for temperature changes. The spring which normally keeps the regulator contacts closed engages the lower thermostat arm. The two upper terminals of the regulator should be connected to the field as marked in the illustration. The field resistance is wound on a spool on the regulator frame and is connected between the two regulator terminals and across the contacts. It is thus connected in series with the generator field winding but is short circuited by the regular contacts when the contacts are closed.

In operation with the regulator contacts closed the generator operates as a straight third brush shunt machine charging the battery at the rate determined by the third brush setting. Current likewise flows through the winding on the upper thermostat arm. When the generator voltage reaches 8 volts (cold) or 7.5 volts (hot) this winding heats up causing the arm to flex and open the contacts which inserts the resistance in the field circuit. This reduces the charging rate to the finish rate of the battery.

ADJUSTMENT:—The regulator is set at the factory and should not require adjustment. However, if adjustment is necessary, connect a voltmeter between the battery terminal of the generator and ground and operate the generator for several minutes to allow the thermostat winding to heat. The regulator cover must be in place or the air blast of the fan will prevent the proper functioning of the thermostat. Then turn the adjusting screw under the lower thermostat arm clockwise to increase the operating voltage and counter-clockwise to decrease the voltage. The regulator should operate at 8.0 volts cold or 7.5 volts hot.

NOTE:—A carbon button or disc type resistance was used on the earlier types. The amount of resistance could be varied by increasing or decreasing the pressure of the brass disc on the carbon button. This type resistance has been discontinued and all regulators are fitted with a wire-wound type of resistance unit.

INSTALLATION:—The regulator can be installed on practically any generator after removing the old relay cutout and modifying the old relay mounting to take the regulator mounting screws. Then connect the old relay lead from the generator main brush to the terminal in the base of the regulator unit. Disconnect the generator shunt field ground and bring this lead out of the generator, drilling a hole through the commutator cover band to take the wire. Connect this lead to the regulator field terminal. The other regulator terminal should be grounded through the fuse mounted in the regulator cover. On Owen-Dyneto generators or generators with the field grounded through a fuse mounted on the generator frame, the field should be disconnected from the fuse terminal and brought out to the regulator and a second lead should be brought out from the fuse terminal to the regulator ground terminal.

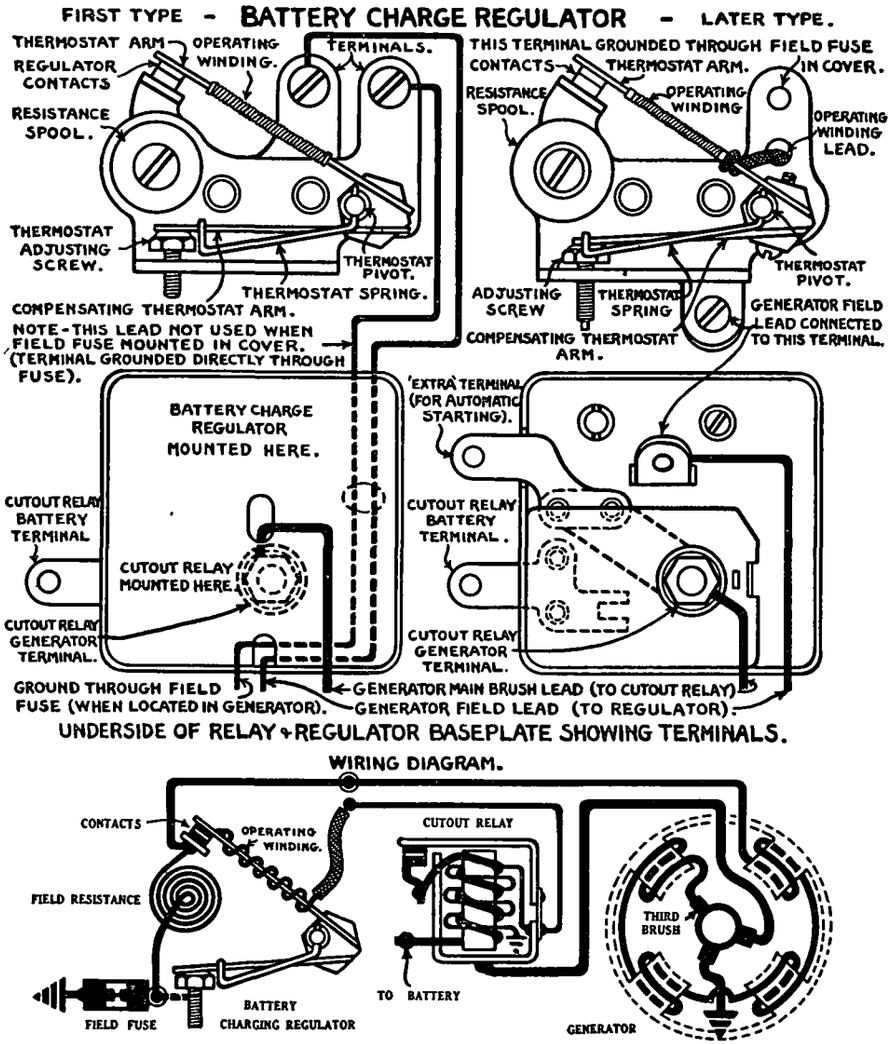

OWEN-DYNETO BATTERY CHARGE REGULATOR

BARREL TYPE BENDIX

See Starter Drive listing on individual car model pages for type used.

DESCRIPTION:—This type drive retains Bendix inertia principle of engagement and free longitudinal movement to insure pinion mesh but has been redesigned so that all parts of drive mechanism except drive spring are located within the pinion barrel. The threaded sleeve is mounted loosely on an extension of the drive head (instead of directly on the starter shaft) and is retained by the stop nut which is screwed and staked in place on the outer end of the head. The pinion is integral with the barrel or drive sleeve and is mounted loosely on the starter shaft (not on threaded sleeve as in former types). Starter drive is through lugs on the control nut or driving ring on the screw shaft which engage slots in the end of the pinion barrel. Pinion barrel is held in place on control nut by a locking ring within the end of the barrel directly behind the driving lugs. A coil type anti-drift spring is mounted on the threaded sleeve ahead of the control nut and a meshing spring is located within the head of the barrel

BENDIX SPRINGS:—Both Type 'F' and 'H' driving springs formed with special smaller diameter end coil designed to fit closely on shaft at ends. No spring clips used with these types. Springs may be identified by larger (⅜") spring eye. Spring eyes located on same side of coil (Type F), or 180° apart (Type H).

OPERATION:—Pinion, barrel and control nut operate as a unit so that pinion is moved out into mesh with the flywheel as the control nut is threaded along the threaded sleeve. If the pinion teeth strike the ends of the flywheel teeth, the free longitudinal movement of the threaded sleeve on the drive head allows the pinion to turn slightly and mesh properly. This free movement important to insure correct meshing and prevent jammed pinion or damage to gear teeth.

SERVICING:—No servicing required other than cleaning and oiling of threaded sleeve and armature shaft under pinion when operation not satisfactory.

Armature Shaft:—Rotate pinion back to demeshed position, clean exposed portion of shaft with kerosene, lubricate lightly (Gredag 31¼ graphite grease).

Threaded Sleeve:—Rotate pinion forward to meshed position as far as possible, wipe threads clean with dry cloth or use kerosene sparingly (not gasoline). Do not wash entire drive in kerosene or grease installed under threaded sleeve at time of assembly will be removed (threaded sleeve cannot be removed to replace this lubricant). Lubricate threaded sleeve lightly with 10-W engine oil.

TROUBLE SHOOTING: If pinion jams or meshes improperly, check as follows:

(1) Armature shaft rough or burred, dirty or rusty under threaded sleeve (first type only). Remove Bendix, clean and smooth shaft, lubricate shaft lightly with graphite grease Gredag 31¼ before replacing drive.

(2) Armature shaft rough, burred or dirty under Bendix pinion (all types). Thread pinion back on threaded sleeve (demeshed position), smooth shaft with emery cloth or clean with kerosene (do not use gasoline), lubricate shaft lightly with Gredag 31¼ graphite grease.

(3) Armature Shaft Bent. Remove Bendix drive. Check shaft and straighten

(4) Drive spring screw at threaded sleeve end too long. See that spring does not project through sleeve and bind on drive head extension (on first type screw will bind on armature shaft).

(5) Cocked or deformed drive spring. This will cause threaded sleeve to drag on armature shaft (first type) or on drive head extension (later types). Remove spring by taking out spring screws, examine spring, replace if necessary. Spring eye centers should be at right angles to spring axis (See Spring Note above). Use new lockwashers under spring screw heads when replacing screws and see that one lip of washer is turned down in spring eye gap and other lip turned up against screw head flat.

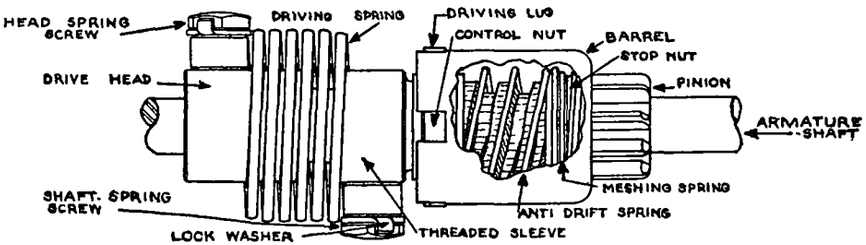

BARREL TYPE (SPRING SCREW TYPE) BENDIX DRIVE

SPECIAL "BARREL TYPE" BENDIX DRIVE USED ON FORD "60", NASH "600", STUDEBAKER CHAMPION

IDENTIFICATION NOTE:—Type A-1806 (Ford '60') stamped with letter "B" on pinion barrel. Type A-2033 (Studebaker Champ. to '46, Nash '600') with letter 'D' on pinion barrel. Units identical except for pinion tooth design. **These two drives should never be interchanged due to difference in form of pinion teeth.**

FORD NOTE:—Three different Drives have been used as follows: TYPE 1—First 1937 cars only. TYPE 2—Before Sept. 15, 1937. TYPE 3—After Sept. 15, 1937.

TYPE 1. Ford No. 52-11350. This type serviced by Type 2. Drive Spring and Anchor Plates were permanently assembled on Screw Shaft Assembly so that spring cannot be serviced in the field (to replace use Type 2 "SA" assembly).

TYPE 2. Ford No. 52-11350B, Bendix No. A-1806 BR. Similar to Type 1 except that Drive Spring Anchor Plates can be removed and spring serviced in the field (see Servicing data below). Drive mounted on armature shaft by short stub pilot pin and woodruff key.

TYPE 3. Ford No. 52-11350C, Bendix No. A-1806. Same design as Type 2 except that Drive mounted on armature shaft by special pilot pin extending through armature shaft. No woodruff key used. Type 2 and Type 3 drives not interchangeable because of this different mounting.

TYPE:—Design same as other 'Barrel' type Bendix Drives except that Drive Spring is anchored by two identical notched plates (instead of screws used on other types). Inner anchor plate retained by locking ring (Types 2 and 3 only) and anchor plates and drive spring can be taken off after locking ring removed.

REMOVAL & INSTALLATION:—To remove drive from armature shaft, screw pinion and barrel assembly all the way back toward the drive spring, push head anchor plate in against drive spring compression to uncover pilot pin, remove pin, slide drive off shaft being careful not to lose woodruff key in shaft (Types 1 and 2). When installing drive, make certain that pilot hole in armature shaft is clean to permit full seating of pilot pin, install woodruff key in shaft, see that pilot pin tongue does not extend above the edge of the hole when installed and that the head anchor plate covers the top of the pin (this is important to prevent pin working out in service).

SERVICING:—**Disassembly.** Remove locking ring within pinion barrel (at drive spring end) by inserting screwdriver in lug recess in barrel nearest lock ring end and working ring out (be careful not to distort ring), remove pinion and barrel assembly from screw shaft. To remove anti-drift spring, pull spring back until end coil slips over stop nut shoulder (hook finger under spring 180° from end coil), remove spring taking care not to distort it.

Drive Spring & Anchor Plates (Types 2 and 3 only). Remove lock ring on screw shaft at outer end of anchor plate (use pliers and take care not to distort ring), slide head anchor plate and spring off. Do not remove shaft anchor plate (nearest barrel) unless necessary. If this anchor plate removed, install by cocking the fibre washer so that the edge projects through hole at point under spring slot in anchor plate, then feed it through hole in anchor plate carefully to avoid damage. When installing drive spring, see that dished faces of anchor plates face spring (see illustration), and that the anchor plate covers the top of the pilot pin. See that lock ring is properly seated in groove and spring opening is over the top of the pilot pin (important).

Drive Assembly. Check anti-drift spring clearance in pinion barrel (spring should fall into barrel freely, if either end binds, install new spring). To install spring hook end over stop nut and thread spring in until it strikes control nut, then push end over stop nut. Check by threading control nut half turn forward on screw sleeve and making certain that spring does not project beyond control nut or stop nut shoulder. See that meshing spring is in place in pinion barrel, install pinion barrel and lock ring. See that pinion and barrel assembly moves freely on screw sleeve. In fully demeshed position, pinion and barrel assembly should rethread itself (slight click will be evident) on all three screw sleeve threads with slight reverse rotation of barrel.

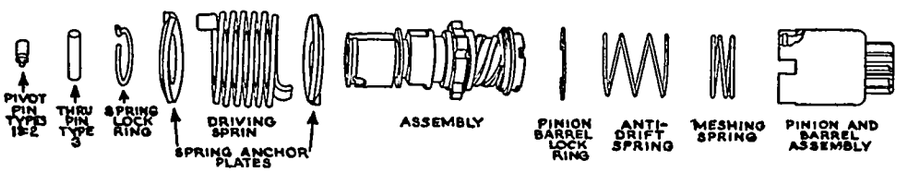

BARREL TYPE (ANCH R PLATE TYPE) BENDIX DRIVE

FORD B&S STARTER DRIVE

FORD 6 CYL., ALL MODELS (1941-42)
FORD & MERCURY V8, ALL MODELS (1940-41-42)
LINCOLN, ZEPHYR MODEL 26H (1942)

SPECIAL SERVICE NOTE:—This Starter Drive serviced as an assembly and should not be disassembled. Servicing is limited to cleaning and lubricating the screw threads as directed below. Service Parts furnished as follows: 91A-11350—complete Drive, 91A-11377—Attaching Bolt, 91A-11379 Tang Washer (for bolt).

DESCRIPTION:—This drive consists of a rubber-cushioned pinion assembly which threads in on spiral thread on mounting sleeve on starter armature shaft to engage flywheel teeth. Pinion drives through this resilient rubber cushion which absorbs shocks and starting noises. A pin and spring ring assembled in the pinion sleeve prevents pinion engaging with flywheel teeth when engine is running. CAUTION—No attempt should be made to remove or adjust this pin and spring ring.

SERVICING:—Limited to cleaning and lubricating screw threads on mounting sleeve. Parts not furnished separately and drive is serviced by replacement. CAUTION—Do not immerse drive in oil, gasoline, or any type of cleaning fluid which will damage the rubber cushion.

Removal—With starter off engine, straighten tang of locking washer on attaching bolt at outer end of armature shaft, remove bolt. Push drive assembly toward starter to expose woodruff key in outer end of armature shaft, remove key, pull drive assembly off shaft.

Cleaning & Lubricating Drive—Hold drive vertical with pinion end down, move pinion forward to expose threads, squirt kerosene on threads and tube at base of threads move pinion back and forth 5-6 times to distribute the kerosene over the threaded surfaces. Run pinion down and blow excess kerosene off threads, run pinion up and wipe excess kerosene off tube. Apply 10W oil on threads and on tube and washer at base of threads, move pinion back and forth to distribute oil over threaded surfaces. Re-install drive.

NOTE—Drive is lubricated in production with special M-4643-B zinc oxide containing thin grease but 10W oil can be used for lubrication in the field.

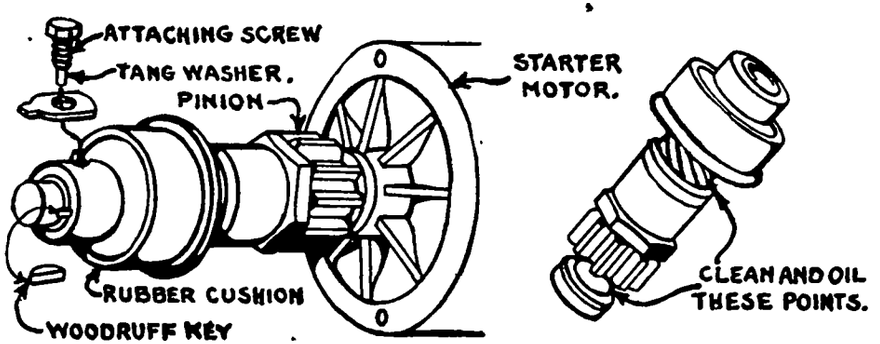

FORD B & S STARTER DRIVE

AUTO-LITE STARTER FIELD EQUALIZER

AS INSTALLED ON AUTO-LITE "MAW" AND "MAX" STARTERS

NOTE:—This Field Equalizer should be installed on all Model MAW and MAX starters (not equipped with jumper) where commutators are found to be burnt or 'smoky'. It consists of a jumper or connector across the brush leads from the field coil assemblies, which equalizes the load on the ungrounded brushes.

INSTALLING EQUALIZER:—Disassemble starter and remove armature. Install Equalizer on commutator end of field coil assembly, looping ends of Equalizer in grooves formed by the looping of the field coil ribbon end around the brush pigtail. Solder Equalizer ends securely in place, using a non-acid flux (alkaline paste or flux made of white rosin and denatured alcohol). Position Equalizer so that it does not touch starter frame or grounded brush pigtails. Turn down commutator and polish to remove all traces of burning before reinstalling. Equalizer type to be used on each starter model is as follows:

Starter Model	Equalizer Part No.
MAW (with switch terminal)	MAW-58
MAW (with terminal post)	MAW-59
MAX (all models)	MAX-58

TESTING INSTALLATION:—With starter reassembled see that Equalizer is not grounded at any point (frame, grounded brush pigtail, through-bolt, etc.). Check brush spring tension. See that brushes bear on commutator over entire face and are correctly installed (long side of brush should be toward direction of armature rotation). Bend grounded brush pigtails up so that they cannot touch Equalizer. Test starter for correct performance.

FIELD POLE ASSEMBLY:—The field poles used on these starters are formed with a long and a short tip. Viewed from the commutator end of the starter, the pole pieces should be installed with the short tip in a clockwise direction from the pole piece center line (see illustration).

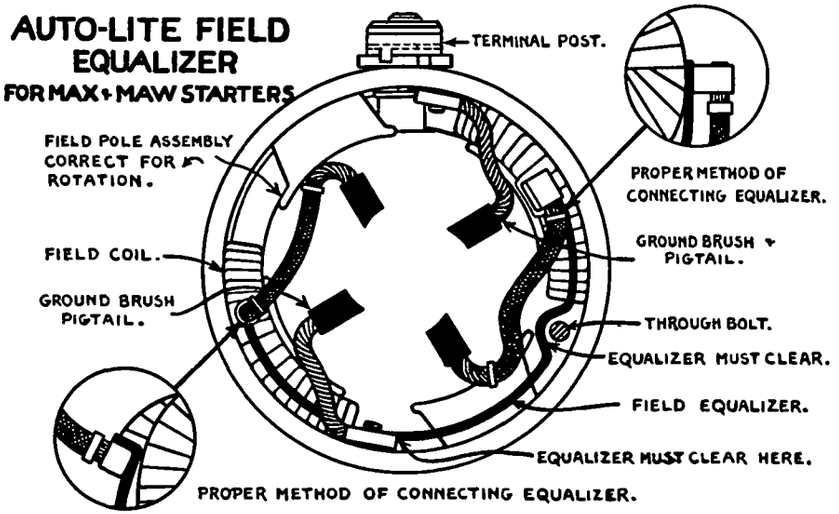

AUTO-LITE MAGNETIC STARTER SWITCHES

Car Model	Std. or Optl. Equipment n:	Switch Type
Crosley, Model CC (1947-48)		SS-4007
Dodge, D24 (1946-47-48)		SST-4001
Frazer, All Models (1947-48)		SS-4001
Hudson 6 & 8, All Models (1936 to 1939)		SS-4001
Hudson 6 & 8, All Models (1941 to 1948)		SS-4001
Kaiser, All Models (1947-48)		SS-4001
①Lincoln V12 Models (1935-40)		SS-4004
①Lincoln V12 Export Models (1935-38)		SS-4005
Packard 6, 115C ('37), 1700 ('39), 1800 ('40)		SS-4001
Packard 6, '110' 1900 (1941)		SS-4017
②Packard 6, 2000, 10, 20, 30 (1942)		SS-4025
②Packard 6, 2100, 2110, 2130 (1946-47)		SS-4017
Packard 8, '120' All Models (1935-1940)		SS-4001
Packard 8, '120' 1901, 1A (1941)		SS-4017
②Packard 8, Clipper Model 1951 (1941)		SS-4017
②Packard 8, 2001, 1A, 11, 21 (1942)		SS-4025
②Packard 8, All Models (1946-47-48)		SS-4017
Packard 8, 1400, 1, 2 (1936)		SS-4001
Packard Super 8, All Models (1936-37-38)		SS-4001
Packard Super 8, 1703, 3A, 5 (1939)		SS-4012
②Packard Super 8, All Models (1948)		SS-4017
Packard Twelve, All Models (1936 to 1939)		SS-4001
Plymouth, P15 (1946-47-48)		SST-4001
Terraplane, All Models (1936-37-38)		SS-4001
Willys, 48 ('39), Trucks 440 ('40), 441P Panel ('41)		SS-4001
Willys, Comm'l. 442P & Special Equip. (1942)		SS-4001

①—On Lincoln V12 type, lead for the winding is taken from the battery terminal within the switch case and the pushbutton switch is grounded. On all ther models, the feed lead is connected to the pushbutton and the coil winding is grounded (see car wiring diagrams).

②—This switch used with Carter Car Starter. See separate article for data on Carter Car Starter.

DESCRIPTION:—These are conventional magnetic solenoid type switches mounted on the starter field frame and controlled by a pushbutton switch on the instrument panel. The feed wire for the switch solenoid is connected to the coil side of the ignition switch so that the starter is operative only with the ignition turned on. See car diagrams for wiring and connections of each installation.

OPERATION:—Two springs are used in connection with the solenoid coil to control the switch action. When the solenoid circuit is completed by pressing the pushbutton switch, the solenoid plunger is drawn into the coil against the tension of a light spring. After the main switch contacts close, the plunger compresses a second spring, insuring a positive connection at the switch contacts. When the pushbutton switch is released, breaking the solenoid circuit, this second spring quickly separates the main switch contacts, preventing arcing or burning of the contacts. The first spring then returns the solenoid plunger to the off position.

PERFORMANCE:—Closing & Opening Voltages—Initial contact of switch should occur with terminal voltage of 3.0-4.0 volts. Switch should bottom with voltage of not more than 5.25 volts. Switch contacts open with .5-1.25 volts.

Coil Winding—Coil winding resistance is 1.82-2.06 ohms at 77°F. and current draw is 2.9-3.3 amperes at 6.0 volts (77°F.).

NOTE—Switch has a capacity of 450 amperes at 10°F. or 250 amperes at 70°F. when held closed for not more than 4 minutes.

CHECKING & ADJUSTMENT:—If switch does not operate satisfactorily, check performance specifications as given above. No adjustment required.

AUTO-LITE VACUUM STARTER SWITCHES VC-4002, VC-4003

Car Model	Std. Equipment On:	Vacuum Control Type
Nash 3620 ('36)		VC-4002
Nash, 3680 ('36), 3780 ('37), 3880 ('38), 3980 ('39)		VC-4003

DESCRIPTION:—This type starting switch is operated by the clutch pedal (clutch is disengaged to start engine), and uses a vacuum release and lock to prevent operation while the engine is running. The operating linkage must be adjusted whenever the clutch pedal is adjusted (see instruction below).

OPERATION:—The switch is mounted directly on the starter field frame and is linked to the clutch throw-out shaft by a cable and pulley mechanism. When the clutch pedal is depressed, the cam 'A' is rotated, operating the switch lever 'C' through the latch 'B'. The latch will be engaged whenever the engine is not running. When the switch lever 'C' is rotated, the roller on the lower end of the lever depresses the switch upper contact arm and closes the starting switch contacts. As soon as the engine begins to fire, the intake manifold vacuum acts on the vacuum unit on top of the switch case, the diaphragm moving up and disengaging the switch latch. As long as the engine is running, the switch latch is held in this upper or disengaged position so that subsequent rotation of the switch cam (whenever the clutch is disengaged) does not operate the switch. When the engine is stopped, the return spring in the vacuum unit engages the switch latch.

ADJUSTMENT:—The starting switch assembly should be adjusted as follows:

(1) Operating lever position. Adjust stop screw below operating lever so that switch lever is 5° plus or minus ½° past the vertical position with the lever against the stop screw. This setting can be checked by measuring distance from center of switch lever to edge of switch case (see illustration). This distance should be 1 19/32" with correct setting. Clearance between switch lever and upper stop lug must be 1/16" min. after initial contact made.

(2) Control rod spring tension should be adjusted so that spring is not compressed more than ⅛" before starting to close switch contacts. This spring is compressed after switch contacts are closed to permit full clutch pedal travel. Check clutch pedal operation and see that spring is not compressed solidly under any conditions.

Adjust switch operating cable linkage so that switch is closed as soon as clutch is disengaged. Test as follows to determine if clutch pedal travel is too great, or if switch operates before clutch is disengaged:

(1) Switch operates before clutch is disengaged. Place car in gear. Do not turn ignition on. Slowly depress clutch pedal until starting switch closes. If car has a tendency to move, clutch is not fully released. Loosen cable clamp on switch lever on clutch throw-out shaft, move clamp toward shaft to decrease cable travel. Tighten clamp and repeat test.

(2) Clutch pedal travel is excessive. Place car in gear. Turn on ignition. Depress clutch pedal until switch contacts are closed and engine starts. Slowly release clutch pedal until clutch begins to engage (engine take hold), note clutch pedal travel. Correct by loosening cable clamp on switch lever on clutch throw-out shaft and moving clamp out or away from shaft to increase cable travel. All tests must be made with the switch operating lever return spring in place.

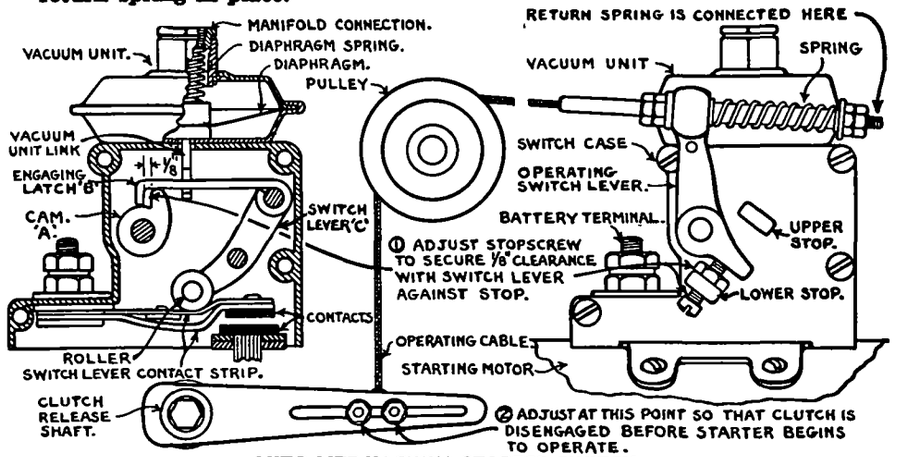

AUTO-LITE VACUUM STARTER SWITCH

TROUBLE SHOOTING:—If switch action unsatisfactory, check as follows:

(1) Engine does not start when clutch pedal is depressed. Check starting motor cable and connections at switch and battery. See that switch operating lever return spring is in place. Check switch and operating linkage adjustment (see Adjustment above).

(2) Switch operates whenever clutch is disengaged. Check vacuum line and connections. Replace vacuum unit.

AUTO-LITE SOLENOID STARTER SWITCHES

Car Model	Solenoid Starting Switch	Starter
Chrysler C-7 ('36)	SS-4104	MAX-4016
Chrysler C9, 10, 11 ('36), C15, 17 ('37)	SS-4101	MAX-4003
Chrysler C-8 ('36)	SS-4106	MAX-4020
Chrysler C14 ('37) Export	SS-4104	MAX-4016
Chrysler C16 ('37) Export	SS-4104	MAW-4011
Chrysler C18 ('38), C22 ('39), C25, 27 ('40)	SS-4206	MAX-4020A
Chrysler C19 (1938)	SS-4203	MAX-4037
Chrysler C20 (1938)	SS-4208	MAX-4038
Chrysler C23, 24 ('39), C26 ('40)	SS-4206	MAX-4037
Chrysler C28, C30, C33 (1941)	SS-4703	MAX-4045
Chrysler 6 & 8, All Models (1942 to 1948)	SS-4705	MAX-4050
De Soto S1 Exp., S2 ('36)	SS-4104	MAX-4016
De Soto S3 ('37) Export	SS-4104	MAW-4011
De Soto S5 ('38) Export	SS-4203	MAW-4011A
De Soto S11 (1946-47-48)	SS-4705	MAW-4025
Dodge D2 ('36), D5 ('37) Export	SS-4104	MAW-4011
Dodge D8 ('38) Export	SS-4203	MAW-4011A
Packard Super 8, 1803-8 ('40), 1903-8 ('41)	SS-4205	MAX-4041
Packard Super 8, All Models (1942 to 1947)	SS-4205	MAX-4052
Packard Custom 8, All Models (1948)	SS-4205	MAX-4052
Plymouth P3, P4 ('37) Export	SS-4104	MAW-4011
Plymouth P5, P6 ('38) Export	SS-4203	MAW-4011A
Studebaker President, 7C (1941)	SS-4702	MAX-4044
Studebaker President, 8C (1942)	SS-4702	MAX-4051

NOTE:—**1941 Chrysler**—New design shift lever and protective boot on outer end of solenoid plunger used. No shift mechanism cover used on this type.

Packard Super 8—Starter used on these models is a reduction gear type unit with solenoid operated pinion on reduction gear shaft which is driven at 14/29 armature speed. Grease plug provided on drive end of starter through which gear compartment can be packed with heat-resisting grease. Solenoid Switch unit is similar to other starters and is serviced in the same manner.

DESCRIPTION:—This is a solenoid type combined starting switch and pinion shift mounted on the starter field frame. The solenoid plunger is connected to the pinion shift lever by an adjusting stud and link so that the pinion is engaged and the switch contacts closed when the solenoid is energized. The solenoid is controlled by a relay in the solenoid case which is operated by a pushbutton on the instrument panel or special controls as follows:

Packard Super 8 ('42-47) & Custom 8 ('48)—Switch is a Carter Car Starter on the carburetor which is actuated by the accelerator pedal linkage. *See "Carter Car Starter" in this section.*

Studebaker 8C (1942)—Pushbutton located on toeboard and operated by the clutch pedal when pedal depressed (clutch pedal starting).

OPERATION:—The feed wire for the starting pushbutton is normally connected to the ignition switch (or switch side of gasoline gauge) so that the starter can be operated only when the ignition is turned 'on'. The closing of the pushbutton contacts completes the solenoid relay circuit, energizing the relay and closing the relay contacts. This completes the solenoid circuit, allowing a current flow of approximately 65 amperes through the two (series and shunt) coils of the solenoid. The solenoid plunger is drawn into the solenoid coil, engaging the starter pinion with the flywheel and closing the main starting switch contacts. The series coil is short-circuited when the switch contacts close (being connected across the contacts), but a current of approximately 15 amperes continues to flow through the shunt coil which holds the plunger in so that the pinion remains in mesh and the switch contacts closed while the starter is cranking the engine. When the pushbutton is released, the solenoid relay circuit is broken, the relay contacts open, breaking the solenoid circuit, and interrupting the current flow through the shunt coil. The return spring on the shift lever then disengages the pinion from the flywheel and the starting switch contacts open.

An overrunning clutch is built into the starter pinion to prevent the starter being driven by the engine after the engine begins to fire and before the pushbutton is released. A spring between the shift lever collar on the armature shaft and the overrunning clutch housing is provided to assist in meshing the pinion.

ADJUSTMENT:—The position of the pinion at rest or with the starter not operating and clearance of pinion fully meshed should be checked as follows:

Pinion Position when Disengaged:—Distance from mounting face of pinion housing (face of starter mounting flange) to outer face of pinion should be 1 11/32" (all models except: Models MAX-4044, MAX-4051—19/32"; Models MAX-4037—1 1/32"; Models MAX-4041, MAX-4052—15/16") with allowable variation of plus 1/64" or minus 5/32". Pinion should mesh with flywheel teeth to a depth of 33/64" when starting switch contact is made (operate shift by hand by pressing on end of plunger—do not press on shift lever) and a further movement of approx. 3/16" required to bottom plunger in core. See adjustment following.

Pinion Clearance when Engaged:—With the plunger bottomed in the core, the clearance between the outer face of pinion and the thrust washer next to the outer pinion bearing should be 5/64" plus or minus 1/64". To check this clearance, press in on the plunger by hand until it bottoms (do not press on shift lever or pinion) or disconnect strap connector to starter terminal so that starter will not spin and connect battery to solenoid relay terminal and ground on starter field frame. Current flow through shunt

CONTINUED ON NEXT PAGE

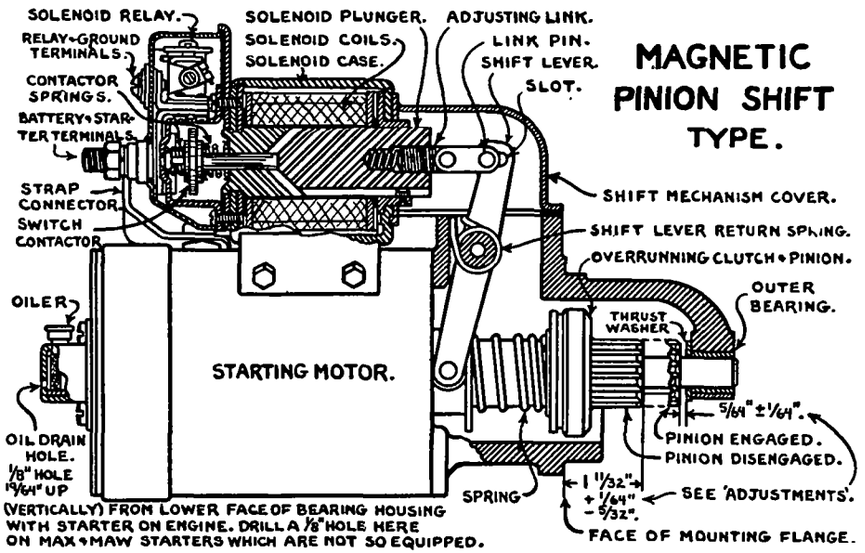

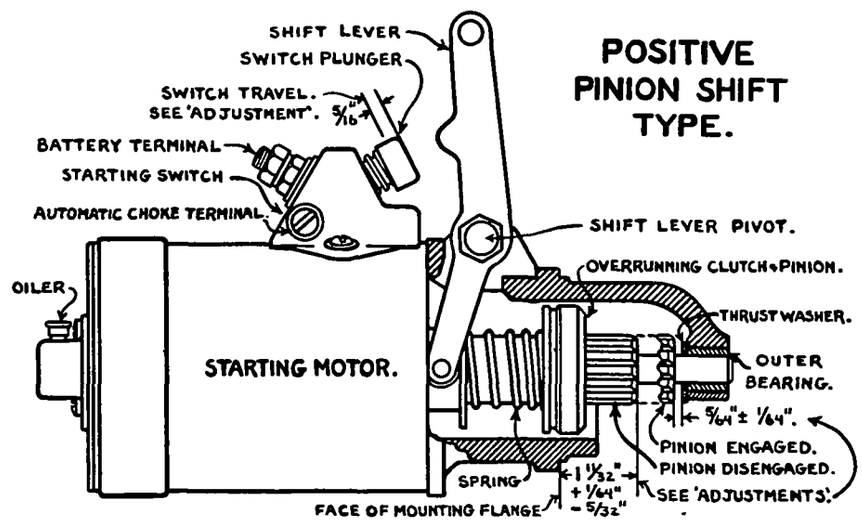

AUTO-LITE SOLENOID STARTER SWITCHES (C nt.)

coil will hold plunger in while adjustment is being made. Take out pin connecting shift lever and plunger link, turn adjusting stud in or out of plunger until pin can just be inserted with pinion in correct position. Pin should be against the solenoid end of the slot in the upper end of the shift lever. The endplay in the linkage provided by the slot is necessary for correct operation and should not be taken up by pressing on the shift lever or the pinion.

Starter Armature Endplay—Armature endplay must be held within limits of .005-.030". Adjust by using thrust washers (Part MU-54) between the MAD-96 thrust washer and the commutator end plate. These thrust washers furnished as follows: MU-54—1/32", MU-54A—1/64", MU-54B—3/64".

SPECIFICATIONS:—Solenoid—The pull of the solenoid plunger with the solenoid coils energized should be 45 lbs. with plunger ¾" from end of stroke bottomed in core), r 105 lbs. with plunger ⅜" from core with a current draw of 65 amperes. The pull with the plunger bottomed should be 80 lbs. with a current draw of 15 amperes at 6 volts (shunt coil only—series coil short-circuited with starting switch contacts closed). Current draw for the coils is shown below. NOTE—On '4200' Series, plunger pull should be 170 lbs. (⅜" gap), 40 lbs. (¾" gap), 75 lbs. (0" gap). All other specifications are same for both '4100' and '4200' series.

SOLENOID COILS PERFORMANCE

	Both Coils	Shunt Coil Only
SS-4100 Series	34.0-38.0 amps. at 3 volts	14.0-16.0 amps. at 6 volts
SS-4200 Series	34.0-38.0 amps. at 3 volts	7.0-8.0 amps. at 3 volts
SS-4700 Series	45.0-50.0 amps. at 3 volts	7.0-8.0 amps. at 3 volts

Solenoid Relay:—Relay is built in solenoid case at starting switch end. Performance should be as follows:

Contacts Close—3.5-4.5 volts. Adjust by changing position of armature upper stop (contact gap adjustment). Increase gap to increase operating voltage or decrease gap to decrease voltage.

Contacts Open—1.5-2.5 volts. Adjust by changing armature spring tension. Increase spring tension to increase operating voltage or decrease spring tension to decrease voltage.

Contact Gap—.025-.035". Adjusted by changing position of armature upper stop (see closing adjustment above).

Air Gap—.005-.007" with contacts closed. Adjusted by changing position of lower armature stop.

Coil Resistance—7.5-8.3 ohms at 77°F.

Checking Switch Action—Switch action can be checked by slipping special steel spacer (square stock 1" wide, ¾" thick, with ⅝" slot in the 1" face) on armature shaft between pinion and thrust washer at pinion housing outer bearing. With spacer in place, switch plunger should bottom and switch contacts should close with normal voltages.

TROUBLE SHOOTING:—**Pinion fails to engage or disengage properly.** Check for interference between shift yoke and collar at open end of yoke where curved section passes over rim on collar. Binding of yoke on collar at this point should be corrected by filing yoke at point where interference occurs. Check for binding of yoke shoes on mounting pins which causes shoes to turn and bind in collar. Correct by cleaning all dirt from between shoes and yoke, lubricate shoe pins and make certain that yoke shoes installed with curved side toward pinion end of starter clutch. Check for binding of yoke assembly on yoke fulcrum pin due to paint or dirt on pin. Clean yoke pin and yoke sleeve thoroughly, examine return spring on pin. If this does not correct trouble, replace yoke assembly.

Flywheel ring gear teeth damaged by pinion. May be caused by too early closing of starting switch contacts which will result in starter operating before pinion has been meshed with flywheel. Check pinion position (see specifications above). Switch contacts should close approximately 3/16" plunger travel before plunger bottoms in solenoid core.

AUTO-LITE MANUAL PINION SHIFT STARTER SWITCHES

Car Model	Starting Switch	Starter
Chrysler C16 ('37)	SW-2813	MAW-4010
Chrysler C14 ('37)	SW-2813	MAX-4015
Crosley Model 42 (1942)	SW-3911	MZ-4101
De Soto S-1 ('36)	SW-2813	MAX-4015
De Soto S3 ('37), S5 ('38)	SW-2813	MAW-4010
De Soto S6 ('39), S7 ('40)	SW-2813	MAW-4016
De Soto S8 ('41)	SW-2813	MAW-4019
De Soto S10 (1942)	SW-2813	MAW-4026
Dodge D2 ('36), D5 ('37), D8 ('38)	SW-2813	MAW-4010
Dodge D11 ('39), D14, 17 Canada ('40)	SW-2813	MAW-4016
Dodge D14, D17 ('40)	SW-2813	MZ-4062
Dodge D19 ('41)	SW-2813	MZ-4089
Dodge D19 Canada ('41)	SW-2813	MAW-4019
Dodge D22 (1942)	SW-2813	MAW-4026
Plymouth P1, 2 ('36); P3, 4 ('37), P6 ('38)	SW-2677-A	MAW-4009
Plymouth P5 ('38)	SW-2677-A	MZ-4056
Plymouth P7, P8 ('39), P9, P10 ('40)	SW-2813	MZ-4062
Plymouth P7, P8 Can. ('39), P9, P10 Can. ('40)	SW-2813	MAW-4016
Plymouth P11, P12 ('41)	SW-2813	MZ-4089
Plymouth P11, P12 Canada ('41)	SW-2813	MAW-4019
Plymouth P14 (1942)	SW-2813	MZ-4105
Plymouth P14 Canada (1942)	SW-2813	MAW-4026
Studebaker Dict. 5A, 6A ('37)	SW-2677-B	MAX-4028**
Willys Jeep Sedan Del. 4-63 (1946-47-48)	SW-2677-A	MZ-4137
Willys Jeep Sta. Wgn. 4-63 (1946-47-48)	SW-2677-A	MZ-4137
Willys Jeepster, Model VJ-2 (1948)	SW-2677-A	MZ-4137
Willys Jeep Sta. Sedan 6-63 (1948)	SW-2677-A	MZ-4137
Willys Jeep Truck, 2T, 4T (1947-48)	SW-2677-A	MZ-4137

(**)—1st 15,000 cars only. MAX-4019 starter with Bendix Drive used later.

DESCRIPTION:—This is a manually operated pinion shift and starting switch. Starting switch is mounted on the starter field frame and the switch plunger is depressed by a knob on the shift lever after the pinion has been meshed with the flywheel.

OPERATION:—The shift lever is connected through a linkage to the starting pedal in the driving compartment and is operated by depressing the pedal. A spring located on the shaft between the shift lever collar and the starter pinion permits movement of the lever in case the starter pinion and flywheel teeth strike. When the switch is closed and the armature begins to turn, the spring then meshes the pinion. Normally this spring will not be compressed and the switch will not be closed until the pinion is meshed in the flywheel to a depth of 33/64" (see adjustments below). An overrunning clutch is built into the starter pinion to prevent the starter being driven by the engine after the engine begins to fire. When the starting pedal is released, the pinion is pulled out of mesh by the shift lever return spring and the starting switch contacts are opened by the spring on the plunger.

ADJUSTMENT: Check the following specifications and adjust as required:

Pinion Position when Disengaged: With starter at rest, the distance from the outer face of the pinion housing (face of starter mounting flange) to outer face of pinion should be 1 11/32" (all models except: MAX-4028—19/32", MZ-4101—See Note Below, MZ-4137—25/32"), +1/64" or — 5/32". Pinion should be meshed with the flywheel to a depth of 33/64" when starting switch makes contact. See paragraph below for adjustment.

MZ-4101 Note—With pinion at rest, distance from center of locating dowel hole to face of pinion should be 3½" with ⅛" clearance between pinion and flywheel. Pinion travel between at rest and fully meshed positions should be ½".

Pinion Clearance when Engaged: With shift lever at end of the travel, clearance between outer face of pinion and thrust washer next to outer pinion bearing should be 5/64" (37/64" on MZ-4137) ± 1/64". Adjust by pressing down on spring on switch plunger and turning button at outer end of plunger in or out. The button is locked by the end of the spring.

Switch Travel: The full stroke or travel of the switch plunger should be approx. 5/32" (All models except MZ-4137—3/16"). See paragraph above.

MAW-4019 Note—Tension required to move yoke lever into contact with starting switch button should be 9-15 lbs. at the hole 3 3/16" from the yoke pin.

Checking Switch Action: Switch action can be checked by slipping a special steel spacer (square stock 1" wide, ¾" thick, with ⅝" slot in the 1" face) on armature shaft between pinion and thrust washer at pinion housing outer bearing. With spacer in place, switch should close when pressure applied to outer end of pinion shift lever.

MZ-4101 Note—When checking switch action on this model, use spacer block ⅜" thick instead of regular ¾" thick block mentioned above.

Armature Endplay: The armature endplay should be .005" minimum, .030" maximum. Adjust by inserting MU-54 thrust washer of correct thickness between the MAD-96 thrust washer and the commutator end plate. These thrust washers furnished as follows: MU-54—1/32", MU-54A—1/64", MU-54B—3/64".

CHEVROLET STARTERATOR

CHEVROLET, ALL MODELS (1936-37)

DESCRIPTION:—The Starterator consists of a mechanism by which the accelerator pedal is connected to the starter switch operating linkage (with the engine stopped) so that pressing down on the accelerator pedal starts the engine. It is entirely automatic in operation and is engaged by a spring whenever the engine stops and the accelerator is released. After the engine has been started, the linkage is disengaged by the vacuum of the intake manifold and is held out of engagement as long as the engine is running.

OPERATION:—The starter control fork, which is pivoted on the end of the cross shaft, is operated by a rod connected to the vacuum unit mounted on the right hand end of the cross shaft support bracket. With the engine stopped, when there is no vacuum in intake manifold, the vacuum unit diaphragm will be pushed to the left by the spring in the vacuum unit. The connecting rod will force the control fork to the left so that it engages the slot in the accelerator pedal linkage. When the accelerator pedal is pressed (after the ignition has been turned on), the rotation of the cross shaft caused by the movement of the control fork will depress the starter switch mounted on the starter field frame (through the switch linkage), closing the switch and allowing the starter to crank the engine. As soon as the engine begins to fire, the vacuum in the intake manifold will draw the vacuum unit diaphragm to the right, disengaging the control fork from the accelerator linkage. This allows the starter switch return spring to open the switch and the starter Bendix pinion is automatically disengaged from the flywheel. As long as the engine is running the control fork will be held out of engagement by the vacuum unit so that the accelerator pedal controls the carburetor throttle in the usual manner. Whenever the engine is stopped or stalls, the control is automatically engaged.

ADJUSTMENT (1936-37):—Check following points and make adjustments in the order shown. Engine must not be running when adjustments are made.

1. Control Fork and Toeboard Clearance—Should be ¾". To adjust, loosen locknut on adjusting screw on bracket at right hand end of control shaft (screw serves as stop for control shaft lever), turn adjusting screw. Tighten locknut after making adjustment.

2. Control Fork Angle—Loosen locknut on end of control fork operating rod (at control fork), turn adjusting screw until fork is ⅛" to the right of a right-angle position on the rod. Tighten locknut.

3. Control Fork and Accelerator Rod Clearance—Clearance between top of notch in accelerator rod and control fork should be ⅛" (necessary for correct throttle opening when starting). To adjust, disassemble accelerator rod from bellcrank on left side of engine, loosen locknut on clevis end of rod, turn clevis in or out on rod, tighten locknut, reconnect rod and check clearance.

4. Starter Link and Switch Clearance—Clearance between shoulder on starter link (pushrod connected to Starterator lever) and switch button should be ⅜-½". To adjust, add or remove snap rings on link shaft between shoulder and button.

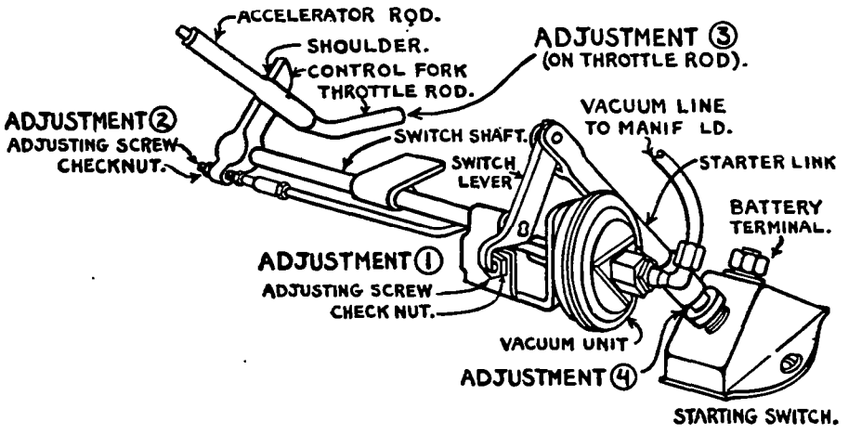

CHEVROLET 1936-37 STARTERATOR

DELCO-REMY MAGNETIC STARTER SWITCHES

Car Model	Control (Dash) Switch	Magnetic Switch
Chevrolet (1936) Export	1378	1503
Chevrolet (1937) Export	1378	1528
Packard Six 115C (1937)	1417	1539
Packard Six, 1600 ('38), 1700 ('39)	—	1539
Packard Six, 1900 ('41)		1452
Packard Six, All Models ('42-47)	See Note	1460
Packard Super 8, 1500, 1, 2 ('37)	—	1540
Packard Eight, All Models (1947)	See Note	1460
Packard Eight & Super 8, All (1948)	See Note	1452
Packard 12, 1506, 7, 8 ('37)	—	1541
Pontiac 36-26A, B ('36), 37-26CA ('37) RHD	1588 (See Note)	1528
Pontiac 38-26DA ('38)	1605 (See Note)	1528

NOTE:—Pontiac Type 1588, 1605 Control Switches—These switches are vacuum type with accelerator pedal control for automatic starting.

Packard 1942-48 Control Switch—Switch is Carter Car Starter mounted on carburetor and operated by throttle valve shaft (accelerator pedal starting). Refer to Carter Car Starter article in this section for data.

DESCRIPTION:—This model is a magnetic switch mounted on the starter field frame. It is used in connection with a Bendix drive and does not include the pinion shifting mechanism of the previous models. It is operated by a 'remote control switch' or push-button starting switch connected to the ignition switch so that starter operative only when ignition turned on.

Model 1460 (Packard Type)—This switch is special type with two terminals for control circuit (coil winding completely insulated with each end connected to an individual terminal) and is used with a Carter Car Starter. Refer to Packard 110 Six 1942 wiring diagram on car model page for switch wiring details.

OPERATION:—Switch has two windings (pull-in coil, and hold-in coil) both connected to the switch terminal. Both coils are energized when the starting button circuit is closed so that a strong 'pull-in' action results. When the main switch contacts close, the pull-in coil is short-cricuited and the contact disc is held in by the hold-in coil only. Contact disc is returned to off position by the spring when the starting button is released.

PERFORMANCE DATA:—Operating Voltage—Switch contacts should remain closed with voltage reduced to .7 volts (.54-.65 ampere current draw).

Current Draw—3.1-3.7 amperes at 4.0 volts.

CHECKING & ADJUSTMENT:—Check switch performance (see specifications above). No adjustment of the switch is normally required.

NOTE—Switch can be operated by hand by pressing in on switch plunger on end of case after the small metal cap on the case has been removed

TYPE 1503 SOLENOID SWITCH

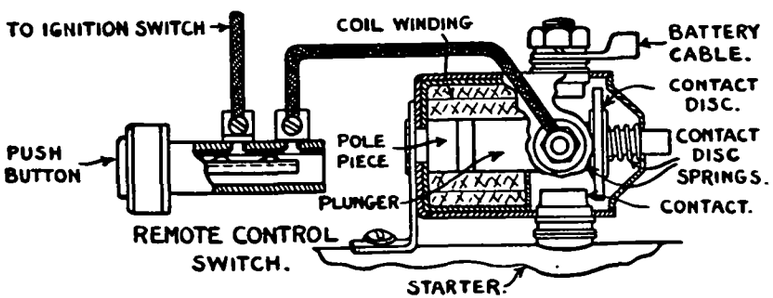

DELC -REMY MA NETIC STARTER SWITCH

DELCO-REMY MANUAL PINION SHIFT STARTER SWITCHES

Car Model	Starting Switch
Chevrolet, All Pass. Cars & Trucks (1938 to 1947)	820052
Chevrolet, All exc. Dubl-Duti Trk. (1948)	820052
Graham, All Models (1936 to 1941)	820052
Oldsmobile 6 & 8, All Models (1938 to 1941)	820052
Oldsmobile 6 & 8, All exc. 98 & Hydra-Matic Cars (1942-48)	820052
Pontiac 6 & 8, All Models (1936 to 1948)	820052

NOTE:—Chevrolet & Pontiac RHD. Models, Oldsmobile RHD. & Optl. Equipment. Starters on these cars are Solenoid Pinion Shift types with pushbutton control. See following article for data on these types.

DESCRIPTION:—These starters have a pinion assembly and shift lever similar to that used on Solenoid Pinion Shifts but the shift lever is connected through linkage to the starting pedal so that the pinion is positively engaged with the flywheel teeth when the starting pedal is depressed. The starting switch is mounted on the starter field frame and switch plunger is depressed by lug on shift lever to close switch contacts and operate starter after pinion has been meshed with the flywheel.

Overrunning Clutch & Pinion (1939 & Later):—Not interchangeable with previous models and may be identified by groove cut in pinion teeth approximately ⅛" from clutch shell. Clutch cam is now mounted on pinion and clutch collar (with plungers and springs) is mounted on sleeve and collar assembly (reversed from previous design). Serviced in same manner as previous types.

SERVICING:—No servicing required and no adjustment provided. Switch contacts should not close until after pinion has been meshed (except when pinion teeth butt against flywheel teeth in which case compression of spring between shift collar and overrunning clutch on pinion sleeve will allow switch contacts to close and revolve pinion to meshing position). Return spring on shift lever should have sufficient tension to disengage pinion promptly when starting pedal is released.

Pinion Assembly & Spring (1939 & Later)—Pinion assembly used on these models may be identified by groove in pinion teeth approximately ⅛" from clutch shell. Compression spring must have tension of at least 34 lbs. when compressed to 1". To remove spring, press shift collar down on pinion ring. Spring and collar can be serviced but no attempt should be made to dismantle overrunning clutch mechanism. Clutch is packed with high melting point grease and pinion assembly should not be cleaned by any method which may remove this lubricant.

Shift Lever Return Spring—Return spring on shift lever should have tension of 9-12 lbs. (start of travel), 28-35 lbs. (end of travel). Weak spring may cause sluggish disengagement particularly in cold weather or if shaft is gummy.

Switch Test—Switch contacts are defective if voltage drop 0.5 volts or higher when checked with voltmeter at switch terminal with starter cranking engine.

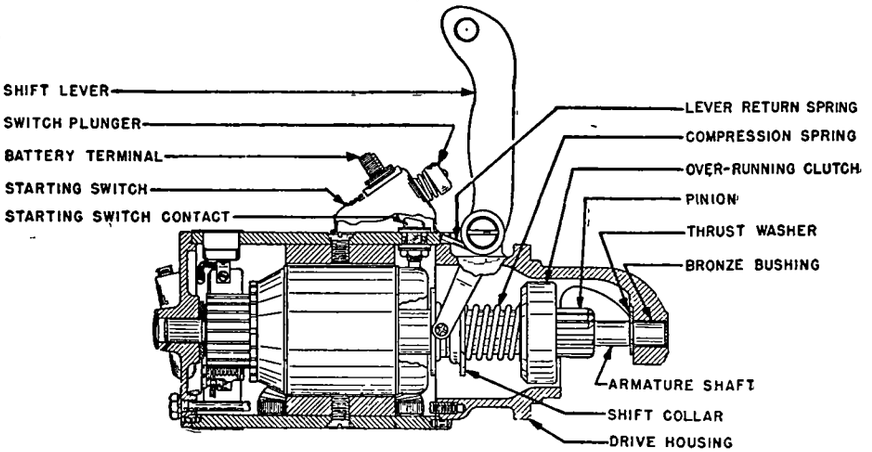

DELCO-REMY SOLENOID STARTER SWITCHES

SOLENOID SWITCHES (WITH PUSHBUTTON CONTROL)

Car Model	Year	Solenoid Switch	Starter	Pushbutton Switch
Cadillac V16	(1935-37)	1515	580	1379
Cadillac V8, Series 60	(1936)	1512	727-V	1405
Cadillac V8, 60 (RHD)	(1936)	1532	729-C	1405
Cadillac V8, 70, 75	(1936)	1512	727-V	1407
Cadillac V12	(1936-37)	1515	580	1407
Cadillac V12 (RHD)	(1936)	1515	SM-1748	1407
Cadillac 37-60	(1937)	1542	727-V	1389
Cadillac 37-60 (RHD)	(1937)	1542	729-F	1389
Cadillac 37-65, 70, 75	(1937)	1542	727-V	1407
Cadillac V8, 60, 60S, 65, 75	(1938)	1542	727-V	1996001
Cadillac V8, 60 RHD	(1938)	1542	1110604	1996001
Cadillac V16, 38-90	(1938)	1555①	714	1996001
Cadillac V8, 60S, 61, 75	(1939)	1542	1107912	1996003
Cadillac V8, 60S RHD	(1939)	1542	1107911	1996003
Cadillac V8, 61 RHD	(1939)	1542	1107913	1996003
Cadillac V16, 39-90	(1939)	1555①	714	1996003
Cadillac V8, 60S, 62, 72, 75	(1940)	1542	1107912	1996005
Cadillac V8, 60S, 62 RHD	(1940)	1542	1107911	1996005
Cadillac V16, 40-90	(1940)	1555①	783	1996005
Cadillac V8, All Models	(1941)	1542	1107923	1996009
Cadillac V8, 75 RHD.	(1941)	1542	1107925	1996009
Cadillac V8, All Models	(1942)	1118102	1107931	1996021
Cadillac V8, All Models	(1948)	1118102	1107931	1996009
Chevrolet RHD.	(1940)	1546	1107023	1996006
Chevrolet RHD. Pass. Cars	(1941)	1546	1107038	1996010
Chevrolet RHD.	(1942)	1118102	1107053	1996018
Chevrolet RHD Pass. Cars	(1946-47)	1118102	1107063	1996031
Chevrolet RHD Pass. Cars	(1948)	1118102	1107055, 76	1996031
Chevrolet Dubl-Duti Trk.	(1948)	1118102	1107055, 76	1385
Graham 90, 90-A, 110	(1936)	1515	738-X	1388
Graham 95, 116, 120 (RHD)	(1937)	1516	738-X	1388
Graham 96, 97 Exp.	(1938-39)	1546	738-X	
Graham 107, 108 Exp.	(1940)	1546	738-X	
Graham 109, 113 Exp.	(1940-41)	1546	738-X	
La Salle 36-50	(1936)	1516	727-N	1405
La Salle V8	(1937-38)	1542	729-F	1389
La Salle V8, 38-50 Exp.	(1938)	1542	1110604	1389
La Salle V8, 39-50	(1939)	1542	1107912, 13	1996003
La Salle V8, 40-50, 52	(1940)	1542	1107912	1996005
La Salle V8, 40-50, 52 RHD.	(1940)	1542	1107913	1996005
Oldsmobile 6 RHD	(1940-41)	1546	1107019	1996008
Oldsmobile 8, 68, 78, 98 RHD	(1941)	1546	1107924	1996008
Oldsmobile 6, 66, 76 Optl.	(1942)	1118021	1107050	1996020, 21
Oldsmobile 8, 68, 78 Optl.	(1942)	1118021	1107930	1996020, 21
Oldsmobile 8, 98 Std.	(1942)	1118021	1107930	1996020, 21
Oldsmobile 6 Optl. & RHD	(1946-47)	1118021	1107050	1996009
Oldsmobile 6 Optl.	(1948)	1118021	1107930	1996009
Oldsmobile 8, 68, 78 Optl.	(1946-48)	1118021	1107930	1996009
Oldsmobile 8, 98 Std.	(1946-48)	1108021	1107930	1996009, 33
Pontiac 6, 39-25, 39-26 Exp.	(1939)	1546	727-S	1996004
Pontiac 6, 40-25, 26 RHD.	(1940)	1546	727-S	1996007
Pontiac 6 & 8, All RHD.	(1941)	1546	727-S	1996012
Pontiac 6 & 8, All RHD	(1942)	1118102	1107934	1996015
Pontiac 6 & 8, All RHD	(1946-48)	1118102	1107934	1996031
Studebaker Pres. 3C	(1937)	1516	729-G	R.B.M.1875
Studebaker President	(1938-40)	1546	1107903	

①—Solenoid Relay 268-M mounted separately on right hand side of engine dash.

NOTE:—On both the pushbutton type and vacuum switch control type, the relay circuit is grounded in one of three ways:

(1) Directly to the starter field frame.

(2) Through the generator main brushes (connected to generator terminal of cutout relay).

(3) Through special auxiliary contacts mounted directly above cutout relay armature (these contacts open when main contacts close).

►*See individual car wiring diagrams in Car Model Section.*

SOLENOID SWITCHES (WITH VACUUM SWITCH CONTROL)

Car Model	Year	Solenoid Switch	Starter	Vacuum Switch
Buick 36-40	(1936)	1512	734-Z	1594
Buick 36-60, 80, 90	(1936)	1512	727-W	1601
Buick 36-60, 80, 90 (RHD)	(1936)	1530	729-B	1601
Buick 37-40	(1937)	1542	734-Z	1607
Buick 37-60, 80, 90	(1937)	1542	727-W	1607
Buick " (Marvel Carb.)	(1937)	1542	727-W	1594
Buick 37-60 (RHD)	(1937)	1545	729-B	1607
Buick 38-40	(1938)	1542	734-Z	①1868512
Buick 38-60, 80, 90	(1938)	1542	727-W	①1868512
Buick 38-60, 80, 90 (RHD)	(1938)	1545	729-B	①1868512
Buick 39-40	(1939)	1542	1107005	Carter
Buick 39-60, 80, 90	(1939)	1542	1107908	①1990126
Buick 39-60, 80, 90 (RHD)	(1939)	1545	1107909	①1990126
Buick, 40-40, 50	(1940)	1542	1107005	②1990127
Buick 40-40, 50 (RHD)	(1940)	1542	1107018	②1990127
Buick 40-60, 70, 80, 90	(1940)	1542	1107908	②1990127
Buick 40-60, 70, 80, 90 (RHD)	(1940)	1545	1107909	②1990127
Buick 41-40, 40A, 50	(1941)	1542	1107005	②1990127
Buick 41-40, 40A, 50 (RHD)	(1941)	1542	1107018	②1990127
Buick 41-60, 70, 90	(1941)	1542	1107908	②1990127
Buick 41-60, 70, 90 (RHD)	(1941)	1545	1107909	②1990127
Buick 40A, 40B, 50	(1942)	1118019	1107049	②1990127
Buick 40A, 40B, 50 RHD	(1942)	1118019	1107057	②1990127
Buick 60, 70, 90	(1942)	1118019	1107929	②1990127
Buick 60, 70, 90 RHD	(1942)	1118019	1107935	②1990127
Buick 40, 50	(1946-48)	1118019	1107049	③
Buick 40, 50 RHD	(1946-48)	1118019	1107057	③
Buick 70	(1946-48)	1118019	1107929	③
Buick 70 RHD	(1946-48)	1118019	1107935	③
Pontiac 36-28	(1936)	1516	727-S	1588
Pontiac 37-28CA	(1937)	1516	727-S	1605
Pontiac 38-28DA	(1938)	1546	727-S	1605

①—This type Vacuum Switch is mounted on carburetor. See separate Delco-Remy Vacuum Switch articles (following) for data on these switches.

②—These Delco-Remy Vacuum Switches (see following articles for data) are used on cars equipped with Stromberg carburetors. Cars equipped with Carter carburetors use Carter Car Starter (see Carter Car Starter article following

③—Cars with Carter Carburetor—Carter Car Starter.

Cars with Stromberg Carburetor—(1946-47) Delco-Remy No. 1990127 Vacuum Switch. (1948) Stomberg No. 385000 Starter Switch.

See data on each type unit in this section.

DESCRIPTION:—Solenoid type combined starting switch and pinion shift (with control relay in solenoid case) mounted on the starter field frame with the solenoid plunger linked to the pinion shift lever.

CONTINUED ON NEXT PAGE

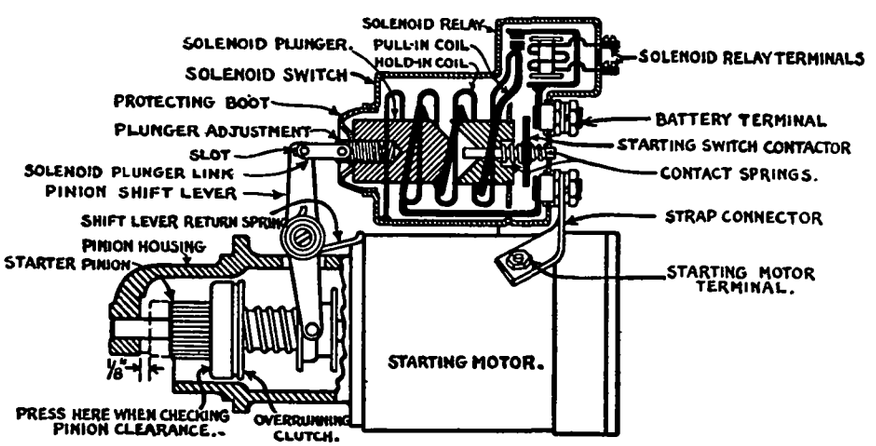

DELC -REMY S LEN ID STARTER SWITCH

DELCO-REMY SOLENOID STARTER SWITCHES (Cont.)

Overrunning Clutch & Pinion (1939 & Later Design)—Not interchangeable with previous models and may be identified by groove cut in pinion teeth approximately ⅛" from clutch shell. Clutch cam is now mounted on pinion and clutch collar (with plungers and springs) is mounted on sleeve and collar assembly (reversed from previous design). Serviced in same manner as previous types.

OPERATION:—When the pushbutton switch is closed, or the accelerator pedal is depressed (vacuum switch type), with the ignition turned on, the solenoid relay circuit is completed, energizing the relay and closing the relay contacts. This completes the solenoid circuit. The solenoid plunger is drawn into the coil, meshing the starter pinion, and closing the starting switch contacts. When the engine begins to fire, the solenoid relay circuit is broken in one or more of the following ways:

(1) Operation of the vacuum switch. Caused by the vacuum built up in the intake manifold.

(2) By the rise in generator voltage. Where solenoid relay is grounded through generator main brushes or auxiliary contacts in cutout relay, the voltage built up by the generator opposes the current flow through the solenoid relay winding.

(3) By releasing pushbutton switch. On Graham and other car model installations where solenoid relay is grounded directly to starter field frame, the circuit will not be broken until the pushbutton is released.

(4) By the opening of the ground contacts. Where solenoid relay is grounded through auxiliary contacts in cutout relay, these contacts open when generator begins to charge and main contacts close.

When the solenoid relay circuit is broken, the relay contacts open, breaking the solenoid circuit. The starting pinion is demeshed by the shift return spring and the starting switch contacts are opened by the contact spring.

PERFORMANCE:—**Solenoid Switch**—Solenoid should close (bottom in core) against 70 lb. pull with ½" gap drawing 65-71 amperes at 5 volts. While closed, current should be 12-14 amperes (hold-in coil only).

SOLENOID RELAY SPECIFICATIONS

Solenoid 1542, 1545, 1546, 1547, 1548

Contacts Close—1.9 volts Max. **Contacts Open—1.0-1.2 volts.**
Contact Gap—.035". **Air Gap—.012" (contacts closed).**

Solenoid 1512 to 1519, 1521, 1523, 1530, 1532
Solenoid 1555 (Relay No. 268-M)

Contacts Close—3.2 volts Max. **Contacts Open—1.6-2.0 volts.**
Contact Gap—.035". **Air Gap—.010" (contacts closed).**

Solenoid 1118019, 1118021, 1118102

Contacts Close—1.3-1.6 volts. **Contacts Open—.7-1.5 volts.**
Contact Gap—.025" **Air Gap—.015" (contacts closed).**

NOTE—When solenoid relay circuit grounded through auxiliary ground contacts in cutout relay, contact gap for these contacts should be .015-.025" (with the main contacts closed).

CHECKING & ADJUSTMENT:—Check Solenoid and Relay Performance (above). Adjust solenoid plunger link for correct pinion clearance as follows:

Solenoid Setting—Clearance between end of pinion and inner face of starter housing should be ⅛" (1940 and before), 3/16" (1941 on) with solenoid plunger bottomed in core. Adjustment will be simplified if lead disconnected at terminal on starter field frame (so starter will not spin) and relay contacts closed so that plunger is drawn into coil core. Press back on pinion to take up backlash in overrunning clutch, remove solenoid plunger link pin, adjust link (by turning link stud in plunger) until pin can just be inserted at forward end of shift lever slot.

Cadillac 1940-48 Note—On these starters, pinion travel (from disengaged or at rest position to fully engaged position with solenoid plunger bottomed in core) should be 23/32" to 25/32".

SERVICING:—**Pinion Assembly & Spring (1939& Later Models)**—Pinion assembly on these models may be identified by groove in pinion teeth approximately ⅛" from clutch shell. Compression spring must have tension of at least 34 lbs. when compressed to 1". To remove spring, press shift collar down on pinion sleeve to compress spring until lock ring on end of sleeve is exposed, remove lock ring. Spring and collar can be serviced but no attempt should be made to dismantle overrunning clutch mechanism. Clutch is packed with high melting point grease and pinion assembly should not be cleaned by any method which may remove this lubricant.

Shift Lever Return Spring—Return spring on shift lever should have tension of 9-12 lbs. (start of travel), 28-35 lbs. (end of travel). Weak spring may cause sluggish disengagement particularly in cold weather or if shaft is gummy.

VACUUM SWITCH

Buick 1936-37 & Pontiac 8 1936-38—Only adjustment of switch is the "off" position (accelerator pedal released—engine not running). The correct position of the vacuum switch lever is indicated by a line on the switch case and linkage should be adjusted so that pointer on lever is opposite this line. In operation, the manifold vacuum disengages the switch clutch drive tangs and clutch plate. The contact plate assembly is then returned to the original 'off' position by the return spring. The switch can not be operated again until the engine stops and the accelerator pedal is returned to the 'off' position.

Vacuum Switch Specifications

Contacts Close (Rotation)—10-14° CCW for all type except 1937 Buick with Stromberg carburetor (Type 1607—10-14° CW).
Unlatch Action (30° from Latch Position)—3.4-4.6" of HG. (all).

Buick 1938-39 Models—Switch mounted on Automatic Carburetor Control (Delco-Remy Carburetor Control) on 1938-39 models except 39-40. On 39-40 switch (Carter Car Starter) is built in carburetor. See following articles for complete servicing and adjustment data on these switches.

Buick 1940-47 Models—Switches used on these models are mounted on carburetor. Two types of switches are used as follows: Delco-Remy Vacuum Switch on cars equipped with Stromberg carburetors, Carter Car Starter on cars equipped with Carter carburetors. See following articles for data on these switches. NOTE—Switch mounted on front carburetor on cars with Compound Carburetion.

Buick 1948 Models—Switches used are mounted on carburetor. Two types used: Carter Car Starter (cars with Carter carburetors), Stromberg Starter Switch (cars with Stromberg carburetors). See following data on these switches.

TROUBLE SHOOTING

►**1946 BUICK STARTER PINION ENGAGEMENT & DISENGAGEMENT CORRECTION: If starter drive clutch pinion does not engage flywheel (on starters built before August 1, 1946)** replace Shift Lever, Part No. 1884808, with redesigned part of same number which may be identified by zinc-plated finish (original lever painted black) which will correct interference between shift lever and collar.

NOTE—Starters on which this correction has been made may be identified by spot of white paint on frame above name plate and by zinc-plated finish of lever. Starters built after Aug. 1, 1946 (Serials No. 6-H-1 up) have this new lever.

If Starter does not engage or cranks continuously (with new type shift lever described above)—Check for binding of solenoid contact disc and pushrod on terminal plate guide pin. Replace contact disc and pushrod assembly if guide hole is eccentric (replaced by manufacturer under warranty), straighten guide pin if bent.

DELCO-REMY STARTERS

BURNT COMMUTATOR CORRECTION

NOTE:—When burnt commutators are found on starters used on 1940-1941 cars, starter should be inspected for improper armature coil connections at commutator bar risers and this condition corrected as follows:

CHECKING STARTER:—Carefully examine all armature leads at point where they are soldered to commutator bar risers (pay particular attention to inner r underneath leads) for evidence of improper soldering and poor bond between leads and commutator bars.

CORRECTING TROUBLE:—Remove armature, carefully resolder all leads to commutator bar risers. Turn down commutator. When reassembling starter, check brushes to make certain that they are free and not binding, see that pigtail leads are correctly attached and free so that they do not hold brush off commutator. Check the brush spring tension (see car model page for specifications). CAUTION—Too little brush spring tension will cause arcing and burnt commutator, excessive tension will cause rapid wear.

Time Allowance—Time required for complete repair (resoldering armature and turning down commutator) is 1½ hours (including removal f starter from car), 1 hour (when starter off engin).

DELCO-REMY VACUUM STARTER SWITCH (1938 BUICK)

Switch No. **Used On:**
1868512—BUICK, SERIES 38-40, 38-60, 38-80, 38-90 (1938)

OPERATION:—Movable switch contact mounted on a spring loaded arm and controlled by a cam linked to the vacuum unit diaphragm and also by a pushrod operated by the throttle cam in the choke control housing. With the throttle closed and the engine not running, contacts will be held open by the pushrod and the vacuum unit diaphragm will be in the 'at rest' position (pushed down by spring) with switch cam rotated out of contact with the switch arm. When the throttle is opened 30-40°, pushrod movement in toward the choke housing allows contacts to close, completing solenoid circuit, and starter cranks engine. As soon as engine begins to fire and vacuum builds up to 5" of HG., vacuum diaphragm is pulled up (against diaphragm spring tension) and switch cam is rotated so that contacts are opened and latched in this open position (lug on cam engages under insulated pin on switch arm). Vacuum diaphragm will remain in the upper or switch-open position until vacuum drops to ½" of HG. (due to spring and ball detent mechanism) and will then return to the 'at rest' position when unlatched by the pushrod action.

Unlatch Action. When manifold vacuum drops to less than ½", vacuum diaphragm will be prevented from returning to the 'at rest' position by the engagement of the cam lug and switch arm pin. When the throttle valve is closed to the 23-26° open position, pushrod will move switch arm sufficiently to release cam lug and diaphragm and cam then return to the 'at rest' position. Additional throttle opening will then allow switch contacts to close and starter will crank engine in the usual manner. NOTE—This 23-26° setting is designed to allow for stiffness of new engines. If starter pinion clashes on acceleration after engine has been broken in, setting can be changed to 20° (see directions below).

TESTING & ADJUSTMENT:—Unlatch action. With carburetor throttle stopscrew set for 8 M.P.H. hot or slow idling speed, engine not running and cold (so that Cold Idle Cam in fast idle position), pull out hand throttle button so that clearance between thr ttle stopscrew and cold idle cam is 1/16" and leave hand throttle in this position while making tests. Turn on ignition and start engine, stop engine, repeat start immediately. Start engine in this manner at least three or four times. If engine starts satisfactorily each time, vacuum switch is properly timed. Pull out hand throttle button so that clearance between stopscrew and cam is ¼", repeat tests. Engine should not start more than once with throttle open this far. Adjustment is made by bending lug on switch cam. Manufacturer recommends that Ac-U-Vac tester be used in making tests on switch.

NOTE—When installing switch on choke housing, make certain that gasket is in good condition and no leaks occur at this point (vacuum chamber in switch is above diaphragm).

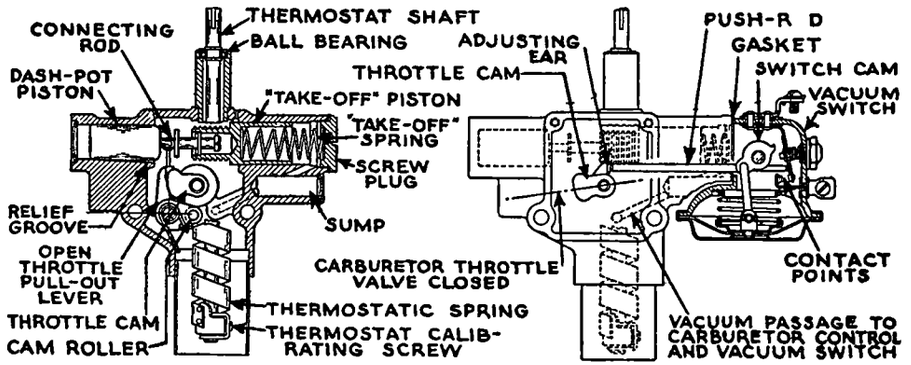

DELCO-REMY VACUUM STARTER SWITCH (1938 BUICK)

DELCO-REMY VACUUM STARTER SWITCH (1939 BUICK SERIES 60, 80, 90)

Delco-Remy No. **Used On:**
1990126—BUICK, SERIES 39-60, 39-80, 39-90 (1939)

DESCRIPTION & OPERATION:—Switch operated through pushrod by carburetor throttle valve shaft and controlled by vacuum in same manner as in 1938 but mounted on adapter which is mounted on carburetor casting at end of throttle shaft. Pushrod located in adapter housing and actuated by lever and shaft linked to carburetor throttle shaft by tongue-and-slot coupling. Vacuum passage to switch diaphragm chamber is drilled through adapter housing.

CHECKING & ADJUSTMENT:—To Check Switch Action. See that throttle lever stopscrew correctly set for 8 M.P.H. hot or slow idle speed, rotate fast idle cam to Cold or Fast Idle position and pull out hand throttle button so that clearance between stopscrew and fast idle cam is 3/64". Leave hand throttle button in this position while making tests. Turn on ignition, start engine, allow engine to run for several seconds (to build up vacum), stop engine. Repeat test three or four times in rapid succession. If engine starts each time, vacuum switch is correctly timed, if not, retime switch as directed below. Pull out hand throttle to 3/32" position, repeat test as given above. Engine should not start more than once with this throttle opening. If engine starts repeatedly vacuum switch should be retimed.

Timing Vacuum Switch. Loosen two cover screws on adapter housing, swing adapter cover to one side to expose operating lever, tighten screws (this is important). Check switch action as directed above bend ear on operating lever which contacts pushrod slightly toward pushrod (if engine does not start with 3/64" throttle opening), away from pushrod (if engine starts repeatedly with 3/32" throttle opening).

Vacuum Switch Calibration. Switch contacts should close when throttle valves rotated not more than 49° from closed position and switch lockout (unlatch action) should occur with throttle valves 25-28° from closed position (throttle valves must be rotated from wide open position toward closed position to check this action). Switch should lock out with 2-5" of HG. measured at vacuum passage.

SERVICING:—Serviced in same manner as 1938 type. Switch mounted on adapter by two screws, adapter mounted on carburetor casting by two screws (adapter cover screws). If switch and adapter disassembled, make certain that gasket between them and between adapter and carburetor is in good condition and that vacuum passage holes in gaskets line up with vacuum channels in carburetor casting and adapter body.

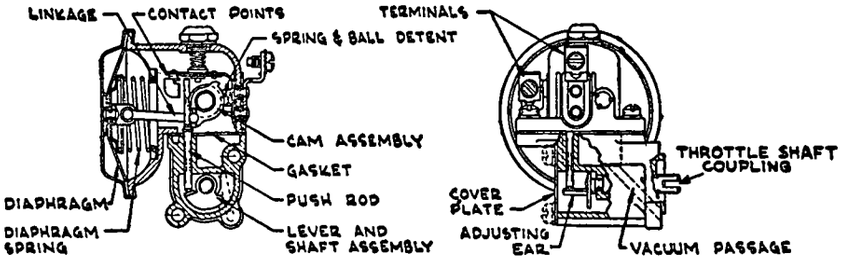

DELCO-REMY VACUUM STARTER SWITCH
(1939 BUICK SERIES 60, 80, 90)

DELCO-REMY VACUUM STARTER SWITCH (1940-47 BUICK)

Delco-Remy No. **Used On:**

1990127—BUICK, ALL SERIES (1940 to 1947)①

①—Front carburetor of Compound Carburetion installation.

NOTE:—This switch used only on cars equipped with Stromberg Carburetors. Switch is mounted on front carburetor of Compound Carburetion equipment.

DESCRIPTION:—This Vacuum Switch is of the 'direct operated type' with contact rotor mounted directly on end of throttle valve shaft within switch body (switch assembly mounted directly on carburetor casting at end of throttle shaft by two screws). Vacuum chamber is formed within top cover plate and is connected to the manifold below the throttle valve by a channel extending through the top cover, switch body, and carburetor casting. Diaphragm is clamped between switch body and top cover and consisted of a riveted assembly including spring cup (spring sits in cup and is positioned by recess in top cover) and combination guide pin and lockout plunger (which moves in guides formed in switch body). The internal circuit through the switch is completed from one contact spring through the contact rotor to the opposite contact spring (mounted on the lockout lever).

OPERATION:—With the engine not running (no vacuum) and the throttle valve closed, lockout will free lockout lever (diaphragm pressed down by return spring) but lockout lever and contact will be held away from contact plate on contact rotor by insulating knob on rotor. When the throttle is opened to start the engine, contact rotor turns with throttle valve shaft and as soon as insulating knob is turned away from the lockout lever, the contact spring on the lever contacts the rotor and completes the circuit through the switch. As soon as vacuum is developed in the manifold, diaphragm attempts to move upward but is prevented from doing so by hook on upper end of lockout lever which engages top of lockout plunger. When throttle is closed (to idle engine after it has started), insulating knob on contact rotor presses out on lockout lever and frees lockout plunger, diaphragm then moves up and lockout engages lockout lever so that the contact spring is held away from the contact rotor while the engine is running. When engine is stopped, the closing of the throttle valve lifts the lockout lever from the lockout (this Unlatch Action occurs 17-23° from closed throttle position) and diaphragm and lockout plunger drop down into position for a new start.

ADJUSTMENT:—No adjustment ordinarily required. Switch is "timed" for correct throttle position when contacts closed by timing washer assembled on face of contact rotor which positions rotor on throttle valve shaft. Timing can be checked, and new washers installed to change timing as follows:

Switch Timing Check:—See that carburetor throttle lever stopscrew set for correct 8 MPH. hot or slow idle speed. Take out screws and remove side cover plate on switch. Start engine, close throttle, then open throttle until clearance between throttle stopscrew and highest step of fast idle cam is ¼" (cam in fast idle position—engine must be cold), stop engine without disturbing throttle position. Place mirror so that switch guide pin and lockout visible from left side f car, close throttle slowly by lightly tapping on hand throttle lever until guide pin and lockout releases, then measure clearance between stopscrew and fast idle cam with cam in fast idle position. Clearance should be 3/64" minimum, 3/32" maximum. If less than 3/64" timing washer should be replaced by one having a higher number. If more than 3/32", timing washer should be replaced by one having lower number. See directions below.

Switch Action Check (On Car):—See that carburetor throttle lever stopscrew set for correct 8 MPH. hot or slow idle speed. Start engine, close throttle then open throttle until clearance between throttle stopscrew and highest step of fast idle cam is ¼" (cam in fast idle position—engine cold), stop engine. Tap throttle closed until clearance between stopscrew and cam is exactly 3/64" (use extreme care not to close throttle further, if clearance less than 3/64", repeat entire procedure). Start engine by opening throttle from this position. Repeat this test several times. Engine should start each time. If engine does not start more than once, timing washer should be replaced with one having a higher number. After making above test for minimum clearance between fast idle cam and stopscrew, check for maximum clearance as follows. Repeat test instructions given above except that clearance between fast idle cam and stopscrew should be set at not less than ⅛". Engine should not start from this position. If engine starts, timing washer should be replaced with one having a lower number and first test (for minimum clearance) should be repeated.

Timing Washers:—Washer has slot which engages flat on throttle shaft and lug which engages hole in contact rotor (rotor is free on shaft and is positioned by timing washer). Washer marked by number on side opposite rotor lug and furnished with lug in different positions for smaller or larger stopscrew-to-fast idle cam clearance (washer with higher number will increase clearance, lower number decrease clearance). Washer number indicates angular degrees f

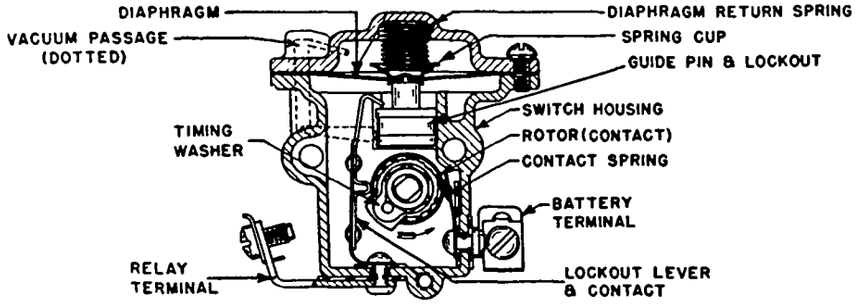

DELCO-REMY VACUUM STARTER SWITCH (1940-47 BUICK)

throttle shaft rotation and washers are furnished in 3° steps. Select correct washer by means of tests given above and install washer as follows:

Timing Washer Installation. Take out screws in side cover on switch, remove cover and gasket. Remove nut on end of throttle valve shaft within switch, remove lockwasher and timing washer (if contact rotor removed, make certain that steel washer installed on shaft behind rotor). Install timing washer being careful to see that lug engages hole in contact rotor, install lockwasher and tighten nut, replace cover and gasket. Recheck switch timing.

CAUTION—Cover gasket is felt and is designed to provide necessary 'breathing' action required by diaphragm movement. This gasket must always be installed under side cover and no other type gasket should be used

SERVICING:—No servicing required. If top cover removed (for diaphragm replacement), make certain that return spring properly seated in cover recess and spring cup on diaphragm and that vacuum channel in top cover and switch body line up. When installing new parts, always check switch timing and install correct timing washer as directed above.

CAUTION:—Always connect wire with red cross tracers (hot lead) to terminal on front of switch to prevent lock-out lever being short-circuited if it should be bent back against housing during timing operation.

STROMBERG STARTER SWITCH

Car Model	Starting Switch①	Carburetor
Buick 40, 50 (1948)	385000	AAV-167
Buick 70 (1948)	385000	AAV-267

①—Part of Carburetor assembly listed.

DESCRIPTION & OPERATION: Switch is mounted on carburetor and is controlled by an operating lever on the throttle valve shaft (for accelerator pedal starting). The switch contact and slide assembly is spring-loaded and is held up in the "off" position by by the operating lever when the throttle valve is closed. A spring-loaded vacuum piston or slide "latch" is provided to hold the slide in this off position when the engine is running and to prevent the starter operating when engine is idling with closed throttle. With the engine not running, this piston moves outward and a slot in the piston registers with the slide to permit slide movement. When the accelerator pedal is depressed for starting, opening of carburetor throttle valve and rotation of operating lever permits the switch slide to move downward, closing the switch contacts and actuating the starter. As soon as the engine begins to run, and accelerator pedal is released, the operating lever moves the slide upward into the "off" position, and vacuum piston then moves inward latching the slide in this position (slide engages shallow groove in piston which prevents vacuum piston movement and switch operation during periods of low vacuum such as wide-open throttle operation).

►***NOTE—Switch must be "timed" to insure correct throttle opening when starter operates. See Adjustment following.***

ADJUSTMENT: ***CAUTION—Switch timing must be checked and adjusted with carburetor on engine (switch can be timed approximately with carburetor off engine, but setting should be checked AFTER CARBURETOR INSTALLED ON ENGINE.***

Switch Timing (with carburetor on engine): Place transmission in neutral and apply parking brake firmly (to prevent car moving during tests). Set engine hot or slow idle speed at exactly 8 MPH, or 450 RPM. With engine not running, insert #65 drill or wire (such as small paper clip through vacuum piston screen to operate vacuum piston (CAUTION —do not remove screen). Then proceed as follows:

1)—Close throttle, press vacuum piston in as far as possible, open throttle and **hold it open** while completing steps 2) and 3). Remove wire (slide will drop down into shallow groove in piston and hold piston in as long as throttle is held open).

2)—Rotate fast idle cam to cold or fast idle position, place 5/64" spacer between throttle stopscrew and fast idle cam, close throttle sufficiently so that spacer is gripped between screw and cam. Turn ignition on, hold spacer in position by hand and open throttle. **Starter should not crank engine.** If starter does operate, see 4) for adjustment but do not make adjustments until after making test 3).

3)—Use a **3/64" spacer** and repeat test procedure given in 2) above. **Starter should crank engine.** If starter does not operate, adjust as follows:

4)—Adjust by bending tang on operating lever on throttle valve shaft which contacts switch slide. Bend tang **downward** if starter cranks during test 2) above (with 5/64" spacer), bend tang **upward** if starter does not crank during test 3) above (with 3/64" spacer).

►CAUTION—Bend tang only slight amount when making adjustments, repeat tests 2) and 3) until correct operation is secured.

Approximate Switch Timing (with carburetor off engine): Close throttle valve on a drill rod of correct size (see table below) placed between throttle valve edge and carburetor wall. Bend tang on operating lever until it just contacts switch slide.

►***CAUTION—This approximate setting must be checked and adjusted after carburetor has been installed on engine.***

Throttle Opening (Approx. Switch Setting)

	Throttle Opening	Drill Rod
Series 40, 50	.075-.085"	#45 to #48
Series 70	.090-.100"	#39 to #42

LUBRICATION: No lubrication is required in service. If switch has been disassembled, lubricate inside surface of terminal cap lightly with Beacon M-285 lubricant (Stromberg No. 385093). Apply sparingly with a clean cloth.

►***CAUTION—Do not use other lubricant than specified above and DO NOT LUBRICATE SLIDE OR PISTON.***

DISASSEMBLY: Remove switch from carburetor by taking out two mounting screws. Remove terminal cap screw and clip, lift off cap and spring. Remove vacuum piston screen clip, remove washer and screen, move switch slide so that it does not interfere with piston, withdraw piston and piston spring.

►***CAUTION—Do not interchange vacuum piston and switch contact guide springs (contact guide spring is HEAVIER).***

REASSEMBLY: Reverse disassembly directions given above and note the following important points:

Vacuum Piston—Install with end having deep groove and tapered counterbore **inward** (toward seal). Piston spring must not be interchanged with contact guide spring (piston spring is LIGHTER).

Contact Spring—Use extreme care not to distort or change dimensions of spring (will affect switch operation). Contact width should be 9/16" over-all (outside to outside of spring at open end). Contact guide spring must not be interchanged with vacuum piston spring (contact guide spring is HEAVIER).

Switch Slide—Narrow projection on top of slide must enter slot in bottom of contact guide.

Switch Lubrication—See lubrication data above.

Mounting Gasket—Always use NEW gasket on mounting flange to insure vacuum-tight seal (vacuum passage terminates in port in mounting flange).

►***CAUTION—Switch will not operate satisfactorily if this vacuum channel is not open or if atmospheric leak exists at mounting flange.***

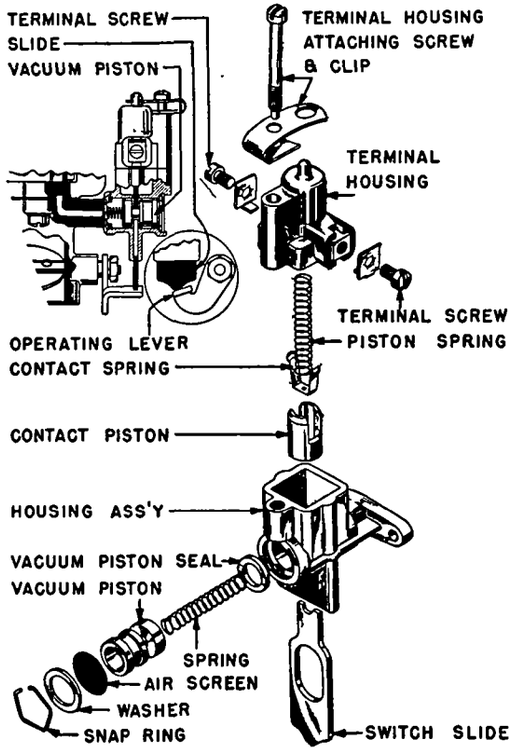

STROMBERG STARTER SWITCH

CARTER CAR STARTER

MODEL 192-10U—SEE NOTE

Car Model	Carburetor
Buick, 40 (1939)	WDO 419-S, 40-S
Buick, 40, 50 (1940)	WDO 440-S, 74-S
Buick, 60, 70, 80, 90 (1940)	WDO 448-S

MODEL 192-11U

Buick, 40 ('41), 40 (Early '42)	WCD 487-S
Buick, 40, 40A, 50 (Early '41)	①WCD 509-S
Buick, 60, 70, 90 (Early '41)	①WCD 490-S
Buick, 40, 40A, 40B, 50 (1941-42)	①WCD 528-S
Buick, 60, 70, 90 (1941-42)	①WCD 533-S
Buick, 40A, 40B, 50 (Late '42)	WCD 551-S
Buick, 60, 70, 90 (Late '42)	WCD 549-S
Buick, 40, 50 (1946-47)	WCD 608-S, SA, SC
Buick, 70 (1946-47)	WCD 609-S, SA, SC
Buick, 40, 50 (1948)	WCD 663-S
Buick, 70 (1948)	WCD 664-S
Packard, Clipper 1951 (1941)	WDO 512-S
Packard 6, All Models (1942 to 1947)	WA1 530-S
Packard 8, All Models (1942 to 1947)	WDO 512-S
Packard Super & Cust. Super 8 (1942 to 1947)	WDO 531-S, SA
Packard Eight, All Models (1948)	WDO 644-S, SA
Packard Super 8, All Models (1948)	WDO 643-S, SA
Packard Custom 8, All Models (1948)	WDO 531-S, SA

①—Front Carburetor of Compound Carburetor installation.

NOTE (MODEL 192-10U):—This model superseded by Model 192-11U which has new parts as listed below. These new parts can be installed as an assembly on Model 192-10U. CAUTION—These new parts must be installed together, one part must not be used without the other.

Part	192-10U — Part Number — 192-11U
Switch Plunger	49-117 — 49-128
Guide Block	181-64 — 181-87

SPECIAL SERVICE NOTES:—Car Starter is built in carburetor throttle body casting and must be removed when carburetor is disassembled for servicing (carburetor throttle valve shaft cannot be taken out until switch dismantled and switch ball taken out). CAUTION—Use care not to lose small square switch adjusting shims when switch disassembled. See disassembly directions in Servicing section below.

DESCRIPTION & OPERATION:—Plunger type switch mounted on carburetor body casting and operated by steel ball which engages switch plunger and flat on carburetor throttle valve shaft when engine is not running. Depressing accelerator pedal to open throttle forces switch plunger up until 'W' shaped contact spring on upper end completes circuit between two brass contact blocks in the switch cap. When the engine begins to fire, switch ball is drawn up out of engagement by manifold vacuum (ball blocks vacuum passage as long as engine is running) so that switch is inoperative. When engine stops, throttle must be closed momentarily to allow switch ball to drop down between throttle shaft and switch plunger.

ADJUSTMENT:—Checking Vacuum Switch Timing. Use special Carter tool T109-155S (see Note) consisting of scale clamped on choke housing and indicator arm fastened on throttle lever. Connect test lamp in switch circuit to check switch closing. Rotate fast idle cam to hot or slow idle position, back off throttle lever stopscrew so that throttle valves are tightly closed. Loosen setscrew and set indicator arm opposite '0' on correct scale of the gauge. Open throttle lever and note gauge reading when switch closes (test lamp will light). Gauge reading should be between 30° and 45°. Adjust by adding (if throttle opening more that 45°), removing (if throttle opening less than 30°) square brass adjusting shims located on bakelite guide block under 'W' shaped contact spring (these shims have square hole which engages tongue on guide block, do not confuse these shims with round spring seat washer which seats on middle leg of contact spring).

►*CAUTION—Do not use less than one No. 153-11 (.018") Shim or more than three No. 153-11 (.018") Shims plus two No. 153-12 (.006") Shims.*

Carter Gauge T109-121S Note—This gauge originally released for use in checking Carter Car Starter on Buick Series 40 (1939) carburetors and fitted with "W", "WA", and "WDO" scales. It can be used to check "WCD" carburetors by installation of the following parts: Swivel Block Screw T109-156, Coil Housing Clamp Assembly T109-159S. NOTE—If this T109-121S gauge used to check "WCD" carburetors, refer to "WDO" scale on gauge (new T109-151S gauge has upper scale marked "WCD & WDO").

Carter Gauge T109-155S Note—Gauge has three separate dials marked "WCD & WDO', 'WA' and 'W1' and correct dial must be used in checking each carburetor model. Refer to Equipment List above for carburetor type used on each car.

Checking Switch Without Gauge. If tool not available, rough check can be made on car by measuring clearance between machined surface of stop boss on carburetor throttle base and nearest edge of throttle stop arm. Distance should be 23/64" minimum, 27/64" maximum when switch closes.

Checking Switch without Gauge (Buick 1942-48)—If gauge not available, check can be made by measuring unloader arm travel as follows: Back off throttle stop-screw, turn fast idle cam to slow idle position, fully close throttle valve. Place scale or rule alongside float bowl with end engaging unloader arm of throttle lever, mark bowl at 1 inch point on rule. Turn ignition switch "on", push rule against unloader arm slowly until starter pinion just engages ring-gear. Reading on rule should be between 1 15/16" and 2 5/16" (or 15/16" to 1 5/16" travel) at mark on bowl for correct timing. Reset engine idle speed.

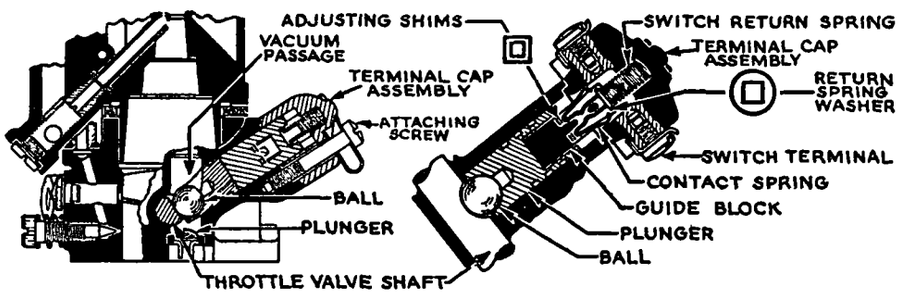

CARTER CAR STARTER

SERVICING:—Removal & Disassembly. Disconnect and tape leads on switch terminals (wire with red tracer on terminal nearest engine is 'hot' with ignition turned on). Remove switch terminal cap attaching screw, hold-down clip, switch cap, withdraw return spring, guide block and contact spring assembly, switch plunger and ball. Be careful not to lose spring seat washer (on contact spring) or adjusting shims (on guide block under contact spring).

Servicing. Clean switch ball, plunger, cylinder, carburetor vacuum chamber and inlet screen, throttle valve shaft flat with gasoline. Check 'W' contact spring and switch return spring. Replace these parts if dimensions incorrect.

NOTE—See Model 192-10U Note above for part changes made on this model.

'W' Contact Spring—Distance across spring at widest part (across outer contact legs) should be 7/16" plus or minus 1/32" with spring seat washer seated on middle leg of spring.

Return Spring—Free length of spring should be 11/16-¾" and pressure of 32 ozs. (1941 and later), 24 ozs. (1939-40) should be required to compress spring to length of ⅜".

Reassembly. When installing switch plunger make certain that lip on inner end of plunger is down toward manifold (lip will prevent ball engaging on flat of shaft if installed incorrectly). See that adjusting shims are in place under contact spring, and spring seat washer seated on middle leg of contact spring. Make certain that return spring enters socket in switch cap and that boss n cap enters counterbore n casting. Do not oil any part of switch mechanism. Connect wire with red tracer (hot wire) to terminal nearest engine (away from throttle stopscrew).

NOTE:—Type F Startix not interchangeable with standard Type D. Types may be readily identified by red background (Type F), black background (Type D) on nameplate on which type number and operating voltage is indicated. Type F must always be used with special cutout relay and any attempt to use this type with conventional cutout relay will result in burnt out generator winding of Startix relay solenoid.

STARTIX TYPE D (FOR ALL CARS)

DESCRIPTION:—Startix is an automatic magnetically operated starter switch. It is used in conjunction with starters equipped with Bendix drives and is designed to crank the engine automatically whenever the ignition switch is turned on. It will also crank the engine whenever the engine stalls with the ignition switch on.

OPERATION:—Startix consists essentially of the main switch contacts, a movable contactor and two solenoids, a main switch solenoid, and a relay solenoid. The starting switch contactor is mounted on a plunger in the main switch solenoid. The main switch solenoid is connected between the 'IGN' terminal on the startix case and ground through a set of contacts controlled by a vibrating arm operated by the relay solenoid plunger. The 'IGN' terminal is connected to the coil side of the ignition switch so that the main switch solenoid is energized whenever the ignition switch is turned on (the contacts are normally closed with the ignition switch off and the engine stopped). This causes the main switch solenoid plunger to move in closing the circuit between the main switch contacts, completing the starter circuit and cranking the engine. There is a large one half turn series coil wound around the relay solenoid plunger which is connected in series with the starting switch contacts so that the entire starting motor current flows through this coil. When the engine begins to fire, disengaging the Bendix drive, the current drawn by the starter will decrease sufficiently so that the effect of this series coil (which tends to hold the relay solenoid plunger out and the vibrating arm contacts closed) will be overcome by the outer starting motor circuit winding on the relay solenoid drawing the plunger into the relay solenoid and causing the operating lever to deflect the vibrating arm and open the contacts. This opens the main switch solenoid circuit and the starting motor circuit is opened by a spring on the solenoid plunger. There is also a second winding on the relay solenoid connected between the 'GEN' terminal and ground. The 'GEN' terminal is connected to the generator side of the relay and a small current will begin to flow through this coil as soon as the generator begins to operate. This assists in holding thte relay solenoid plunger in as long as the engine is operating. Whenever the engine stalls, the relay solenoid moves out, closing the contacts and completing the main switch solenoid circuit.

Manual Operation. An auxiliary starter button is located on the end of the Startix case for use whenever it is desired to operate the starting switch manually. The button should be pressed firmly and released quickly.

Ignition Settings:—A number of the ignition switches used on car models in conjunction with Startix provide two switch positions. The first 'On' position connects the Startix in the circuit, providing automatic cranking. The second 'On' position completes the ignition circuit but does not complete the Startix circuit. This switch position should be used in setting the ignition (with the ignition turned on) when the automatic cranking feature is not desired. On cars not equipped with this type switch it will be necessary to disconnect the wire on the 'IGN' terminal of the Startix case to prevent Startix operation.

INSTALLATION:—Startix is usually mounted on the engine block near the starter, or on the dash. The case is grounded and a separate ground wire must be run from the case to the car frame or engine block whenever the Startix is mounted on a wooden dash or other insulated mounting. Connections should be made as indicated on the diagram. In making connections to the main terminals care should be taken not to twist the main terminal posts as this may interfere with correct operation of the starting switch by affecting the alignment of the switch contacts.

ADJUSTMENT:—A starting adjustment is provided on the end of the Startix case directly in front of the relay solenoid plunger. This adjustment consists of a slotted screw held in position by a locknut. It is designed to correct interrupted cranking (repeated attempts to crank the engine) r spinning of the starter after the engine has begun to fire and the Bendix drive has been disengaged. The extreme outward (counter-clockwise or left) position of the adjustment screw will cause interrupted cranking while the extreme inner (clockwise or right hand) position of the adjustment screw will result in the starter spinning. The correct adjustment will consist in finding a position between these two extremes which will result in satisfactory starter operation. To set Startix adjustment, first disconnect coil high tension lead at center terminal of distributor cap (to prevent engine firing). Loosen locknut on adjustment screw, turn ignition on and while starter is cranking engine determine interrupted cranking position of adjustment screw by turning screw slowly to left or counter-clockwise until interrupted cranking begins. Tighten locknut slightly and make a mark on the case in line with the screw slot. If adjustment is being made because of interrupted cranking, turn screw slowly to the right until starter cranks engine steadily and make the mark at this point. Then connect coil high tension lead so that engine will fire, disconnect wire on 'GEN' terminal of Startix case, turn on ignition and turn adjustment screw to right or clockwise until starter spinning occurs after engine begins to fire. Then turn adjustment screw to left r counter-clockwise until a click is heard indicating the opening of the starting switch contacts. Tighten the locknut and check this point by operating the Startix by turning ignition switch on. The starting motor should begin to slow down as soon as the engine begins

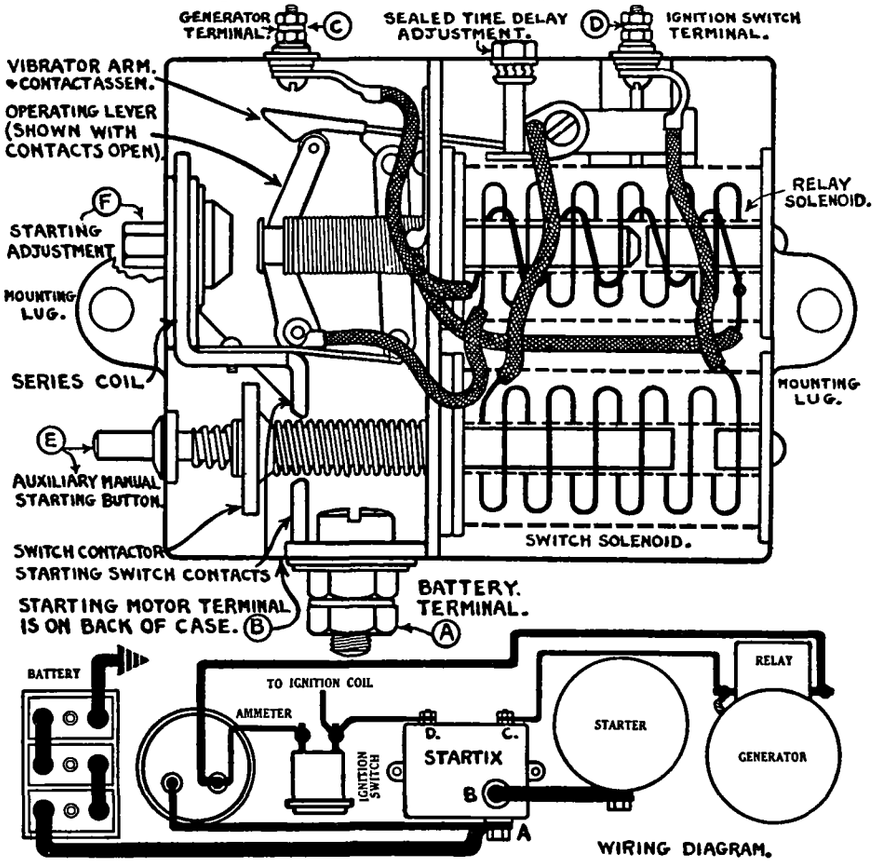

WIRING DIAGRAM.

CONTINUED ON NEXT PAGE

STARTIX TYPE D (C ntinu d)

to fire. Mark position of adjustment screw slot by a line on the case. The final setting of the adjustment screw should be midway between the two lines on the case (where the lines are less than 180° apart), or one quarter turn or 90° from the 'starter spinning' reference line (when the two lines are more than 180° apart). Lock the adjustment screw by securely tightening the locknut.

Time Delay Adjustment. There is a sealed 'Time Delay Adjustment' screw on the top of the Startix case. This adjustment is set and sealed at the factory and should not be disturbed. It is designed to provide a short interval of time between the stalling of the engine and the automatic cranking operation to prevent damage to the Bendix drive through engagement of the Bendix while the engine crankshaft is rocking.

THERMOSTATIC SAFETY DEVICE:—There is a thermostatic control incorporated in the Startix which will open and close the circuit (this will be evidenced by a clicking sound) whenever the Bendix pinion sticks or jams in the flywheel for as long as the ignition is left on. This clicking sound will indicate that the ignition should be turned off and the Bendix pinion freed. No adjustment will be necessary on the Startix.

TROUBLE SHOOTING:—If Startix operation is not satisfactory, turn on ignition switch making certain that 'on' position is one in which Startix is operative, note whether one or more 'clicks' heard in Startix case when switch turned on

No 'click', Starter does not operate.

(1) Startix relay plunger sticking. Check by jarring car or tapping on Startix case with screwdriver. Replace Startix if this condition repeated frequently.
(2) Open-circuit in Startix 'IGN' lead. Disconnect lead at terminal and flash to ground. If no spark noted, check ignition wiring.
(3) Short-circuit in Startix main switch solenoid. Connect ammeter in lead at 'IGN' terminal (flash lead to terminal only to avoid damage to ammeter if current excessive. Current draw should be approximately 1 ampere. Replace Startix if excessive.
(4) Open-circuit in Startix main switch solenoid. No current draw in test (3) above with 'IGN' lead known to be live. Replace Startix.
(5) Current in generator winding of relay solenoid. Check by disconnecting lead at 'GEN' terminal on Startix. If Startix cranks engine, generator cutout relay is defective or lead is shorted at some live point (this lead must be connected on generator side of cutout relay, not to battery terminal).

Single 'click' heard, Starter does not operate.

(1) Main switch contacts defective or out of alignment. Check by connecting heavy jumper (starter cable) across Startix main switch terminals.
(2) Loose or corroded battery terminals, broken cables, or defective ground connection. Examine cables and terminals.
(3) Second winding of relay solenoid defective. See test (3) under Starter spinning below.

Series of 'clicks' heard, Starter does not operate.

(1) Open-circuit in starter. Examine cable and connections at Startix and starter, check internal wiring and connections in starter, check starter brushes and commutator.

Starter Spins but Bendix does not engage before Startix cuts out.

(1) Bendix drive defective. Check for broken spring, broken spring screw dirty or gummy Bendix shaft.

Bendix engages, Starter does not crank engine.

(1) Bendix pinion jammed. Release Bendix. Examine Bendix drive and flywheel teeth. See that engine is free and can be turned over easily.

Starter overruns or Spins after engine fires, Contacts may flutter.

(1) Startix not properly grounded. Startix grounded through case. When mounted on dash, or if good ground connection not secured through mounting screws, connect ground lead between mounting lug and engine.
(2) Startix 'IGN' lead connected to wrong side of ignition coil. If this lead connected at coil instead of ignition switch, see that connection is made to switch side of coil.
(3) Discharged battery or excessive starter draw when running free. Replace battery if voltage when starter running free is less that 4.8 volts. Check starter draw (see '0 ft. lb.' torque test figure on car page).
(4) Startix adjustment incorrect. To adjust with ignition turned on, disconnect lead on 'GEN' terminal, loosen locknut on starting adjustment screw 'J', turn screw counter-clockwise until click is heard indicating that main contacts have opened. Turn screw ⅛ turn further counter-clockwise, tighten locknut.

Starter makes repeated attempts to crank engine. Does not crank continuously.

(1) Discharged battery. Voltage should not drop below 4.8 volts when starter is spinning freely.
(2) Dirty or gummy Bendix Drive. Wash drive in kerosene and apply thin film of light oil.
(3) Startix adjustment incorrect. To adjust with ignition turned on, disconnect lead on 'GEN' terminal, loosen locknut on starting adjustment screw 'J', turn screw slowly clockwise until point is reached where starter begins to spin continuously after engine begins to fire, then turn screw ⅛ turn counter-clockwise, tighten locknut. This adjustment must be made slowly since turning the screw in too far will result in the main switch solenoid contacts being held open so that the Startix will be inoperative.

STARTIX TYPE F (PACKARD)

DESCRIPTION AND OPERATION:—Similar to Type D in construction and operation except that generator winding of relay solenoid is special low resistance type to make this winding effective with low generator voltages (characteristic of Owen-Dyneto high capacity generator armatures). Resistance unit in Relay-Regulator case on generator is cut into this coil circuit when the cutout relay contacts close to protect the winding from overload when the generator is charging. This resistance is short-circuited by the auxiliary contacts above the cutout relay armature when the main contacts open. A cutout relay of this type (Owen-Dyneto No. 40203, used also in 40210 assembly) must always be used with the Type F Startix.

SERVICING:—Same as for Type D. See previous Startix article. Type F is designed to hold out with voltage of .07 volt or greater at 'GEN' terminal on Startix case. If Startix cuts in with engine idling, check voltage with voltmeter connected between 'GEN' terminal and ground on Startix case. If voltmeter reading less than .07 volt, check generator for burnt or worn commutator, high mica, worn or defective brushes, open field coils or connections, defective armature. Check cutout relay. If voltmeter reading more than .07 volt, Startix is defective. See Trouble Shooting.

STARTIX CIRCUIT CONTROLLER

DESCRIPTION:—This device is an automatic circuit breaker designed to open the Startix circuit and prevent automatic cranking momentarily whenever a backfire occurs. It is designed to be screwed in the intake manifold and is operated by the pressure built up in the manifold when the backfire occurs. The two terminals on the side of the Circuit Breaker case should be connected as follows: Terminal marked 'IGN' to Startix terminal on ignition switch (feed terminal), Terminal marked 'STARTIX' to 'IGN' terminal on Startix case. These connections must not be reversed as incorrect connections will interfere with the proper action of the Circuit Breaker.

OPERATION:—The pressure built up in the manifold by the backfire causes the plunger within the Circuit Breaker case to move upward, closing a set of contacts on a thermostatic arm and short-circuiting the current from the ignition switch through the thermostatic arm to ground. The thermostatic arm is heated and is flexed upward, opening the main contacts and breaking the circuit to the Startix switch, thus stopping the automatic cranking of the engine. As soon as the crankshaft stops moving backward and the pressure in the intake manifold drops, the plunger drops down, opening the thermostatic arm contacts, breaking the circuit through the thermostatic arm and permitting the arm to cool. After several seconds the arm flexes downward, closing the main contacts and the Startix switch will then resume the cranking operation. The entire action of the Circuit Breaker is automatic. It must be kept in mind that several seconds will intervene between a backfire and the resumed cranking.

SERVICING:—The Circuit Breaker requires no service operations. Connections should be kept tight and care must be taken that the unit is correctly hooked up ('IGN' terminal on unit should be connected to ignition switch and 'STARTIX' terminal connected to 'IGN' terminal on Startix case). If the Circuit Breaker does not operate satisfactorily it should be replaced.

TYPE OF EQUIPMENT

BRAKES

	Page
Bendix Mechanical, Single Anchor	2008
Bendix Hydraulic, Single Anchor (With Eccentric)	2010
Bendix Hydraulic, Single Anchor (Without Eccentric)	2012
Bendix Hydraulic, Double Anchor	2009
Bendix (Ford) Hydraulic	2026
Bendix (Lockheed) Hydraulic, Self-centering	2017
Bendix Vacuum Power—All Types	2005-6
Cadillac (Own) Mechanical	2021
Chevrolet (Own) Hydraulic	2022
Chrysler (Lockheed) Hydraulic, "Safe-guard"	2020
Ford (Own) Mechanical	2024
Ford (Bendix) Hydraulic	2026
Ford (Lockheed) Hydraulic	2025
Hawley (Crosley) Mechanical	2028
Hill-Holder (All Cars)	2007
Hudson (Own) Mechanical Follow-Up	2013
Hydrovac Power Cylinder	2002
Lincoln (Bendix) Hydraulic	2026
Lockheed Hydraulic, Single Anchor	2014
Lockheed Hydraulic, Double Anchor	2015
Lockheed Hydraulic, Two-Cylinder	2020
Lockheed Hydraulic (Duesenberg)	2014
Lockheed Hydraulic (Ford)	2025
Lockheed (Bendix) Hydraulic, Self-centering	2017
Lockheed (Chrysler) Hydraulic, "Safe-guard"	2020
Lockheed (Wagner) Hydraulic, Self-adjusting	2018
Mechanical Follow-Up (Hudson & Terraplane)	2013
Mercury (Bendix) Hydraulic	2026
Mercury (Lockheed) Hydraulic	2025
Midland Hy-Power Booster	2003
NoRol (All Cars)	2007
Stewart-Warner (Pierce Arrow)	2029
Terraplane (Own) Mechanical Follow-Up	2013
Vacdraulic Power Cylinder	2004
Wagner (Lockheed) Hydraulic, Self-adjusting	2018

POWER BRAKES (BOOSTERS)

	Page
Bendix Vacuum Power—All Types	2005-6
Hydrovac Power Cylinder	2002
Midland Hy-Power	2003
Vacdraulic Power Cylinder	2004

BRAKE SERVICING

	Page
Hydraulic Servicing & Trouble Shooting	2006-7

CAR APPLICATION

POWER BRAKES (BOOSTERS)

	Page
CADILLAC	
1936-37 Power Cylinder	2005
CHEVROLET	
1946-48 Hydrovac	2002
CHRYSLER	
1936-40 Power Cylinder	2005
1941-42 Power Cylinder	2006
1946-48 Vacdraulic	2004
DUESENBERG	
1936-37 Power Cylinder	2005
FORD	
1948 Midland Hy-Power	2003
LINCOLN	
1936-40 Power Cylinder	2005
PACKARD	
1936-39 Power Cylinder	2005
PIERCE ARR W	
1936-38 Power Cylinder	2005

CAR APPLICATION

BRAKES

	Page
AUBURN	
1936-37	2010
BANTAM	
1937-41	See Car Model Page
BUICK	
1936-38	2010
1939-48	2012
CADILLAC	
1936-38 V8	2010
1939-40 V8 (exc. 75)	2012
1939-40 V8 Series 75	2010
1941-48 V8	2012
1936-37 V12	2010
1936 V16	2021
1937-40 V16	2010
CHEVROLET	
1936-48 Pass. Cars	2022
1936-48 Trucks	2022
CHRYSLER	
1936-42 Six	2015
1942 Six 7 Pass.	2020
1946-48 Six	2020
1936-39 Eight	2015
1940-48 Eight	2020
CORD	
1936-37	2014
CROSLEY	
1939-48	2028
DE SOTO	
1936-42	2015
1942 7 Pass.	2020
1946-48	2020
DODGE	
1936-42	2015
1942 7 Pass.	2020
1946-48	2020
DUESENBERG	
1936-37	2014
FORD	
1936-38 Pass. Cars	2024
1936-38 Trucks	2024
1939-48 Pass. Cars	2025
1939-48 Trucks (Lockheed)	2025
1948 F1 Trucks (Bendix)	2026
1949 Pass. Cars	2026
1942-45 Jeep (Army)	2015
FRAZER	
1947-48	2017
GRAHAM	
1936-41	2015
HUDSON	
1936-40 except "112"	2010
1938-40 "112" Six	2009
1941-48	2012
HUPMOBILE	
1936-40	2015
JEEP	
1942-45 Army Models	2015
KAISER	
1947-48	2017
LA SALLE	
1936-38	2010
1939-40	2012
LINCOLN	
1936-40 V12	2008
1936-38 Zephyr	2008
1939-40 Zephyr	2026
1941-49	2026
MERCURY	
1939-48	2025
1949	2026
NASH	
1936-39 (Bendix)	2010
1936-39 (Lockheed)	2015
1940 Eight (Bendix)	2010
1940-48 except "600" (Bendix)	2012
1941-47 "600" Six (Lockheed)	2015
1948 "600" Six (Self-centering)	2017
NASH-LAFAYETTE	
1936-39 (Bendix)	2010
1936-39 (Lockheed)	2015
1940 (Bendix)	2012
OLDSMOBILE	
1936-38 Six	2010
1939-48 Six	2012
1936-39 Eight	2010
1940-48 Eight	2012
PACKARD	
1936 except "120"	2008
1936 "120" Eight	2010
1937-39 Six & Eight	2010
1940-48 Six & Eight	2012
1937-42 Super Eight (Eccentric)	2010
1940-48 Super Eight (No Eccentric)	2012
1940-48 Custom Eight	2012
1937-39 Twelve	2010
PIERCE ARROW	
1936-38	2029
PLYMOUTH	
1936-42	2015
1946-48	2020
PONTIAC	
1936-38	2010
1939-41	2012
1942-48	2010
STUDEBAKER	
1936-38	2015
1939-46 Champion	2014
1939-42 Comm. & Pres.	2015
1947-48	2018
TERRAPLANE	
1936-38	2010
WILLYS	
1936-39 & '40 Comm'l	2008
1939 Overland	2014
1940-42 Pass. Cars	2015
1941-42 Comm'l	2015
1942-45 Jeep (Army)	2015
1946-48 Jeep (Civilian)	2015
1946-48 Sta. Wagon & Sedan Del.	2017
1947-48 Trucks	2017
1948 Jeepster	2017

HYDROVAC POWER UNIT

Chevrolet 1½ Ton Trucks (1946-47-48)—Optl.
Chevrolet 2 Ton Trucks (1946-47-48)—Std.
Chevrolet Cab-Over-Engine Trucks (1946-47-48)

►**CONTROL VALVE PISTON CUP CHANGE (Control Valve Leakage Correction):** To correct or prevent leakage at control valve piston (see illustration), first type single-cup piston has been superseded by new type double-cup piston. These new parts furnished in Repair Kit, No. 3847643, which can be used to replace old type or repair new double-cup piston type units. When converting single-cup type piston unit to double-cup type piston unit, old Relay Valve Piston, Relay Valve Piston Cup, and Diaphragm & Plate Assembly must be discarded and replaced with new type parts. **Install these parts in sets.**

NOTE—This new type double-cup piston is used on late 1947 units which can be identified by metal tag marked "374550-G7" located under one of the hook bolt nuts on the unit.

►***CAUTION—Install this new type piston with lips on both piston cups toward valve piston hydraulic chamber.***

►**VACUUM POWER CYLINDER LUBRICATION:** All Hydrovac vacuum power cylinders (with or without lubricant plug) should be lubricated at regular intervals as directed below. NOTE—Late production units have lubrication plug on end of cylinder.

Units with Lubrication Plug—After unit has been installed on truck, remove lubricant plug and fill cylinder to level of plug hole with Bendix Vacuum Cylinder Oil. **At 10,000 mile intervals** (or every six months), remove plug and add one ounce of Bendix Vacuum Cylinder Oil through hole.

Units Without Lubrication Plug—Install proper amount of oil (see above) in cylinder when assembling unit (before installing piston).

►***CAUTION—Use care to prevent oil entering control tube or flowing through tube to control valve while assembling and installing unit on truck.***

►**VACUUM POWER CYLINDER PUSH ROD CHANGE:** New type heat-treated push rod (see Identification Note) available for replacement of bent or broken rod which may cause complete failure of Hydrovac or dragging brakes and fluid leakage at hydraulic cylinder stationary cup. When replacing push rod, carefully inspect, and replace if damaged, push rod leather seal and rubber cup. Install new push rod plastic type washer (replaces former metal washer), and install new type cotton wicking under vacuum cylinder piston packing (replaces former felt wicking).

Push Rod Identification Note—New type heat-treated piston rods marked by small letter "H" stamped on unthreaded part of push rod adapter or by small groove around circumference near end of this unthreaded part of this push rod fitting.

DESCRIPTION: Hydrovac is a self-contained unit connected in the hydraulic line between the brake master cylinder and the wheel cylinders. It provides combined hydraulic and vacuum power braking (utilizing engine manifold vacuum), boosting the brake pedal pressure exerted by the operator, and providing more positive stopping than possible by use of foot pressure only. The unit is mounted on the truck frame side rail with hydraulic connections (from master cylinder and to wheel cylinders), vacuum line (to engine manifold), and air line (to air cleaner). The Hydrovac unit consists of the following sub-assemblies:

Vacuum Power Cylinder—Consists of a piston and pushrod assembly in a power cylinder and a return spring which holds the piston in the off position when brakes not being applied (vacuum on both sides of piston).

Control Valve Assembly—Consists of diaphragm and poppet type vacuum and atmospheric valves actuated by a hydraulic cylinder and piston (single-cup or double-cup type—See Special Service Notes above for changes), a diaphragm spring which holds the piston and diaphragm assembly in the "off" position when brakes not being applied, and a valve spring. Hydraulic cylinder is connected to main hydraulic brake channel in unit by a drilled passage so that brake line pressure is impressed upon the piston.

Hydraulic Cylinder—Consists of a piston and valve assembly in a cylinder through which all brake fluid flows between brake master cylinder and wheel cylinders. Vacuum power piston rod bears against this hydraulic cylinder piston so that piston is forced out in cylinder to "boost" hydraulic pressure to wheel cylinders when the vacuum power cylinder operates. A spring-loaded seal is provided around the piston stem in the vacuum power cylinder to prevent lubricant mixing with brake fluid.

OPERATION: With brakes off (no pressure in brake lines), vacuum cylinder piston is held in off position by return spring (vacuum on both sides of piston), and control valve piston is likewise held in off position by diaphragm spring (vacuum valve open, atmospheric valve closed). When brakes are applied by depressing brake pedal, brake fluid flows directly through hydrovac hydraulic cylinder (through valve in piston) to the wheel cylinders. At the same time, the pressure in the brake line is impressed upon the control valve piston. As soon as pressure in brake line reaches 40 lbs., this pressure begins to overcome control valve piston spring and causes the piston to move out in the cylinder. This piston movement operates the control valve, closing the vacuum valve and opening the atmospheric valve, so that atmospheric pressure is impressed on rear face of power cylinder piston. Initial movement of the power cylinder piston closes the by-pass valve in the hydraulic cylinder piston and additional movement of the power piston forces the hydraulic cylinder piston out in the cylinder, providing a ram or "boost" action which increases pressure in brake lines between the hydrovac unit and the wheel cylinders. This boost pressure being added to the normal pressure caused by depressing the brake pedal results in a more powerful application of the brakes. This boost action continues only so long as the operator continues to depress the brake pedal. As soon as the pedal movement stops (as in holding brakes "on"), atmospheric pressure in control valve assembly reacts against hydraulic piston pressure and tends to close the atmospheric valve and cut off atmospheric pressure in vacuum power cylinder. With the vacuum power cylinder thus cut off (both vacuum and atmospheric valves to rear end of cylinder closed), the piston remains stationary and as-

CONTINUED ON NEXT PAGE

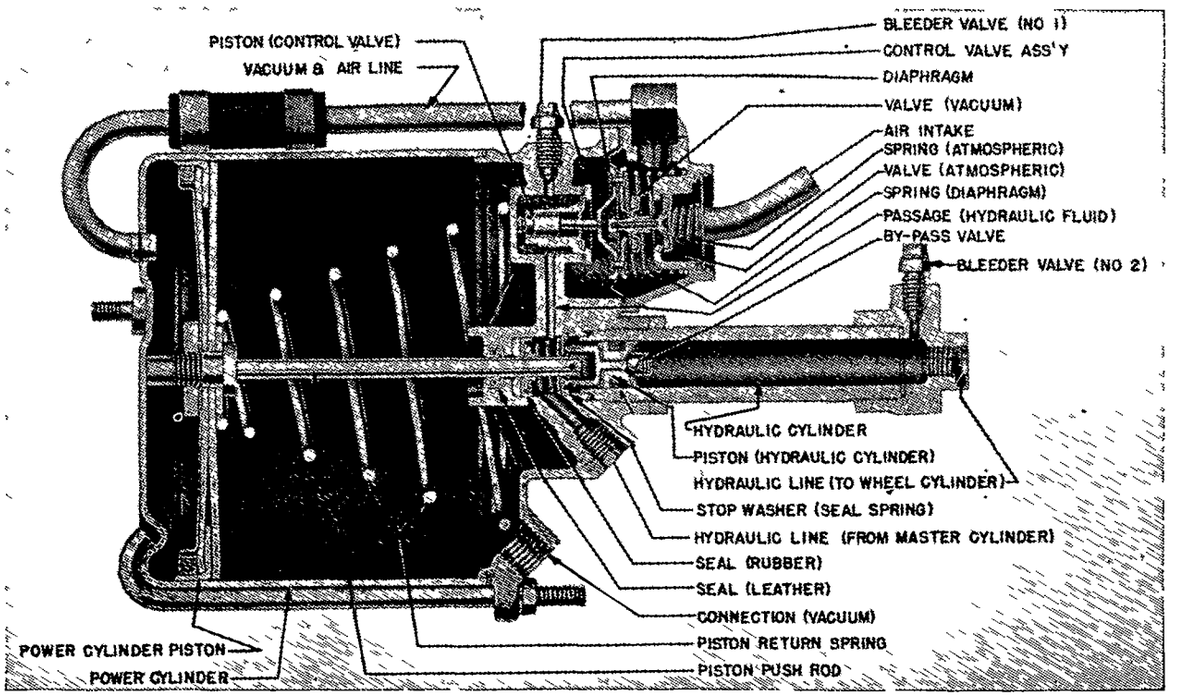

HYDR VAC P WER BRAKE UNIT

HYDROVAC POWER UNIT (C nt.)

sists in holding the brakes on. Whenever pedal pressure is increased for more braking power, the vacuum power cylinder boosting action is resumed. When the brake pedal is released to release the brakes, the control valve opens the vacuum valve so that pressure is equalized on both sides of power cylinder piston (vacuum on both sides). The return spring then returns the piston to its off position, and retracts the hydraulic cylinder piston (this piston yoked to power cylinder piston rod). When the hydraulic piston reaches its off position, the by-pass valve in the piston is opened which allows the fluid from the wheel cylinders to return to the brake master cylinder.

BLEEDING OF BRAKE SYSTEM (With Hydrovac Unit): When bleeding entire brake system, Hydrovac unit must **first** be bled at **two** points before bleeding the lines and wheel cylinders. Bleed the entire system exactly as detailed below. (CAUTION —Engine must not be running and there must not be any vacuum in the Hydrovac system while bleeding these brakes).

Hydrovac Point #1—Remove bleeder valve screw on side of control valve housing on Hydrovac endplate, attach bleeder hose and submerge end of hose in brake fluid in a clean drain jar. Fill brake master cylinder reservoir with fluid, open bleeder valve ½-¾ turn, depress brake pedal slowly by hand, **close bleeder valve before releasing pedal.** Repeat these operations until fluid flows from the hose in a solid stream without bubbles, then close bleeder valve, remove hose, install valve screw.

Hydrovac Point #2—Attach bleeder hose at bleeder valve on side of Hydrovac unit outlet fitting (point at which brake lines to wheels connected). Bleed system at this point in exactly same manner as detailed for Point #1 (above).

Wheel Cylinders—After bleeding Hydrovac unit, proceed to bleed lines and wheel cylinders at each wheel in the usual manner.

DISASSEMBLY OF HYDROVAC: Remove both bleeder screws, hold hexagonal head of hydraulic cylinder in vise, loosen locknut on cylinder, then unscrew cylinder from power cylinder endplate. Loosen hose connection on power cylinder tube, slide hose along tube. Remove power cylinder hook bolts, remove endplate from power cylinder with attached piston assembly. Press endplate down on piston rod until hydraulic cylinder piston protrudes from endplate, remove snap ring retaining pushrod to piston connecting pin, remove pin. Remove hydraulic cylinder piston, power cylinder piston, and return spring from endplate. Unscrew end plug from hydraulic cylinder (hold end plug in vise, use 1⅜" end wrench on cylinder), use long nose pliers to remove snap ring retaining piston stop washer, then remove washer, coil spring, spring retainer, push rod hydraulic seal, and seat washer from endplate. Take out five screws attaching control valve assembly on endplate, remove diaphragm spring, diaphragm, and gasket. Take out snap ring retaining control valve cover, remove cover, valve spring, and gasket. Use 1⅛" socket to remove control valve hydraulic cylinder and piston from power cylinder cover, push piston out of cylinder.

MIDLAND HY-POWER UNIT

Ford 1 Ton Truck, Series F-4 (1948) Opti.
Ford 1½ Ton Truck, Series F-5 (1948) Opti.
Ford 2 Ton Truck, Series F-6 (1948) Std.

DESCRIPTION: Hy-Power is a self-contained unit connected in the hydraulic line between the brake master cylinder and wheel cylinders to provide combined hydraulic and vacuum power braking (utilizing engine manifold vacuum), boosting the brake pedal pressure exerted by the operator, and providing more positive stopping with less effort. Unit is mounted on truck frame (slave cylinder must not be higher than master cylinder and bleeder screw should be upward) with hydraulic connections (from master cylinder, and to wheel cylinders), vacuum line (to engine manifold through vacuum check valve), and air line (to air cleaner). Hy-Power consists of the following sub-assemblies:

Vacuum Power Chamber: Consists of a pressure plate (piston) and diaphragm clamped between the two halves of the power chamber (outer bead on diaphragm seals joint between chamber sections). A return spring in the front half of the power chamber holds the piston in the off position when brakes not applied (vacuum on both sides of diaphragm).

Hydraulic Vacuum Control Valve—This assembly is mounted on, and is an integral part of the slave cylinder. A spring-loaded poppet type valve disc controls air and vacuum connection to rear half of power chamber. Valve disc is controlled by a hydraulic plunger and diaphragm assembly mounted directly below the valve with the plunger extending down into a chamber connected to the slave cylinder for actuation by brake line fluid pressure.

Hydraulic Slave Cylinder—Consists of a piston and check valve assembly in a cylinder through which all brake fluid flows between the master cylinder and wheel cylinders (fluid from master cylinder enters through ports in side of piston, and flows out through orifice in piston head to wheel cylinders when check valve is open). The vacuum power piston rod bears against this slave cylinder piston and forces piston out in cylinder to "boost" hydraulic pressure to wheel cylinders when power unit is operating (check valve in piston traps brake fluid).

OPERATION: With the brakes "off", vacuum power diaphragm and piston rod are held in off position by return spring (vacuum on both sides of diaphragm), and slave cylinder piston is likewise in the off position. Control valve disc is seated (cutting off air supply to vacuum power chamber) and control valve plunger and diaphragm assembly is held down away from valve disc by diaphragm return spring. When brakes applied, the following action occurs:

Initial Brake Application—When the brake pedal is depressed, brake fluid flows directly through Hypower slave cylinder to wheel cylinders to apply brakes (see Slave Cylinder description above). At the same time, brake line pressure is impressed on control valve diaphragm plunger, moving the plunger up against the return spring. As soon as this line pressure reaches 40 lbs., the plunger unseats the valve disc and admits air to the rear end of the vacuum power chamber (vacuum is also cut off from front end of chamber by this plunger and valve action). The atmospheric pressure on rear face of diaphragm piston forces the piston rod out against the slave cylinder piston, closing the check valve within the piston, and forcing the piston out in the cylinder to provide a boost or ram action which increases the brake line pressure and causes a more powerful brake application than that resulting from pedal pressure alone. This boost action continues only so long as the operator continues to depress the brake pedal. As soon as pedal movement stops (to hold brakes on), or pedal is released, the following action occurs:

Vacuum Power Balance (When Brakes held "on")—When pedal movement is stopped and pedal held down to keep brakes on, the hydraulic pressure reacts against the control valve plunger which closes the atmospheric valve so that booster action stops. The diaphragm piston maintains its position to as-

CONTINUED ON NEXT PAGE

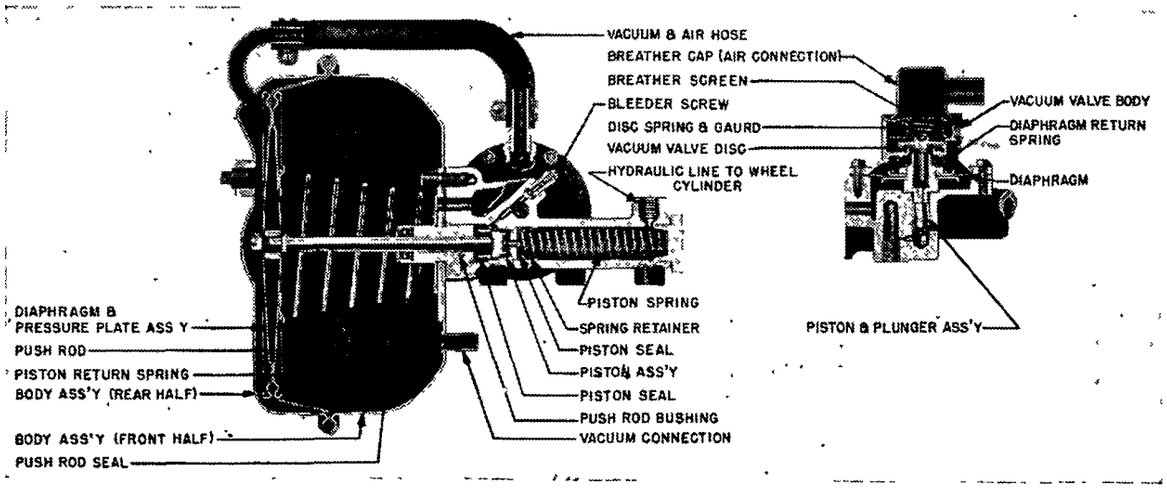

MIDLAND HY-POWER BRAKE UNIT

MIDLAND HY-POWER UNIT (C nt.)

sist in holding brakes on until pedal movement is resumed (to further apply or release brakes).

Brake Release—When brake pedal is released, the hydraulic pressure at the control valve plunger drops which permits the diaphragm return spring to move the plunger and diaphragm downward, seating the valve, cutting off atmospheric pressure, and connecting both ends of the power chamber to the vacuum line. The return spring in the power chamber then returns the diaphragm piston and piston rod to the "off" position. Withdrawal of the piston rod allows the check valve in the slave piston to open which permits fluid in the brake lines to return to the master cylinder and reservoir.

BLEEDING BRAKE SYSTEM: When bleeding brake system equipped with Hy-power unit, **first** bleed line at the Hy-power unit (bleeder screw on top of slave cylinder at control valve assembly), then bleed system in usual manner at each wheel cylinder.

VACUUM CHECK VALVE: Connected in line between manifold and Hy-power unit. Valve is spring-loaded, disc type and opens only when vacuum in manifold exceeds vacuum in booster assembly (prevents gasoline vapor being drawn into booster). Valve can be dismantled by removing cap on end of body.

HY-POWER UNIT INSPECTION & REPAIR: Unit can be disassembled for cleaning, inspection, and replacement of worn and damaged parts as follows:

Disassembly: Place scratch-marks on both sections of power chamber, and punch-mark flanges of control valve cover and slave cylinder, to insure reassembly in same relative positions. Remove large nut on end of slave cylinder, withdraw piston return spring and retainer. Disconnect and remove control valve-to-vacuum chamber tube. Remove clamp ring on power chamber, remove rear section of chamber, withdraw diaphragm and power piston assembly and return spring from front section of chamber. Remove five screws mounting front chamber section on slave cylinder, lift off seal retainer, front chamber section, and piston rod bushing. Remove three screws in control valve cover, remove cover, lift out valve spring and disc. Remove six bolts mounting control valve body on slave cylinder, lift off control valve body, diaphragm return spring, and valve plunger and diaphragm assembly. Remove piston rod seal from rear end of slave cylinder, use piston rod to push piston and rubber piston cup out of front end

Inspection: Wash all parts in cleaning fluid and dry carefully with clean rags. Dry all internal passages with compressed air. Inspect slave cylinder and replace if cylinder bore or control valve plunger bore worn or corroded. Install new rubber cups, seals, springs, and control valve diaphragm. Replace control valve body if valve seat is damaged. If leakage of slave cylinder has been noted (see Trouble Shooting), replace piston assembly, rubber piston cup, seal, control valve plunger, and piston seal.

Reassembly: Reverse disassembly procedure with particular attention to the following points: Use small amount of shellac on threads to prevent leakage when assembling control valve diaphragm, washers, and nut on plunger and piston assembly. Apply hydraulic brake fluid to all slave cylinder parts and bore before assembly. Install piston rod front seal in slave cylinder body before installing rod bushing and front chamber section.

CAUTION—Make certain that scratch and punch-marks lined up when reassembling unit.

TROUBLE SHOOTING: Check booster operation, and locate trouble by the following tests:

1. Depress brake pedal with engine not running, hold pedal in this position and start engine. Pedal should move downward with engine running. If not, connect vacuum gauge at trailer connection on rear face of power chamber (pipe plug), vacuum gauge should read 18-21" (engine running, brakes off).

2. Depress brake pedal with engine running. Vacuum gauge (above) reading should be zero. If not, control valve is not operating.

3. If test (2) indicates control valve O.K., depress brake pedal until vacuum gauge reads zero, hold pedal in this position for one minute. If pedal moves downward, brake fluid is leaking out of system. If pedal moves upward, slave cylinder piston check valve is leaking.

4. With engine running, depress brake pedal until vacuum gauge reads zero. Turn engine off and hold pedal in this position for one minute. Any upward movement of brake pedal indicates vacuum leakage. Check by starting engine with brakes released. Shut off engine and note vacuum gauge reading. Vacuum should drop not more than 1" per minute. This leakage may be in check valve, vacuum line connections, or in booster unit.

VACDRAULIC POWER UNIT

Used On:
Chrysler Crown Imperial, C40 (1946-47-48)

DESCRIPTION: Vacdraulic is a self-contained diaphragm type power unit connected in the hydraulic brake line between the brake master cylinder and the wheel cylinders. The diaphragm type power piston is mounted directly on the control piston sleeve within the vacdraulic housing and includes the control valves (atmospheric air intake valve and vacuum valve), valve operating mechanism, and manifold vacuum connection (flexible line from vacuum connection on housing to vacuum valve). A control piston is located within the power piston control sleeve. This piston is hollow to permit brake fluid to flow freely through the unit when brakes are off (ball check valve in end of piston is held off its seat by a control rod in this position) and has a rubber "piston ring" type seal at each end.

OPERATION: Vacdraulic unit is "vacuum suspended" type with vacuum on both sides of diaphragm when brakes are released (vacuum valve open, atmospheric valve closed) and entire power piston assembly is held in the off position by a large return spring in the housing. When brake pedal is depressed to apply brakes, fluid flows freely through the unit to the wheel cylinders (control piston check valve open). As pressure in brake lines increases, the control piston tends to move within the control sleeve, closing the vacuum valve and opening the atmospheric valve. Atmospheric air pressure acting on one side of the diaphragm causes the power piston sleeve to move with the control piston to force fluid out through the lines to the wheel cylinders at a "boosted" pressure and with no loss of volume (check valve closes when piston starts to move). Whenever brake pedal movement stops (as when brakes held "on"), a balance is set up between the vacdraulic unit control piston and sleeve movement so that the atmospheric valve closes without the vacuum valve opening. This causes the power piston to remain stationary. When pedal released to release brakes, the vacuum valve opens and the return spring moves the power piston assembly to its "off" position. At this point the control piston check valve is positively opened by the rod to permit free fluid flow back to the master cylinder.

ADJUSTMENT: None required.

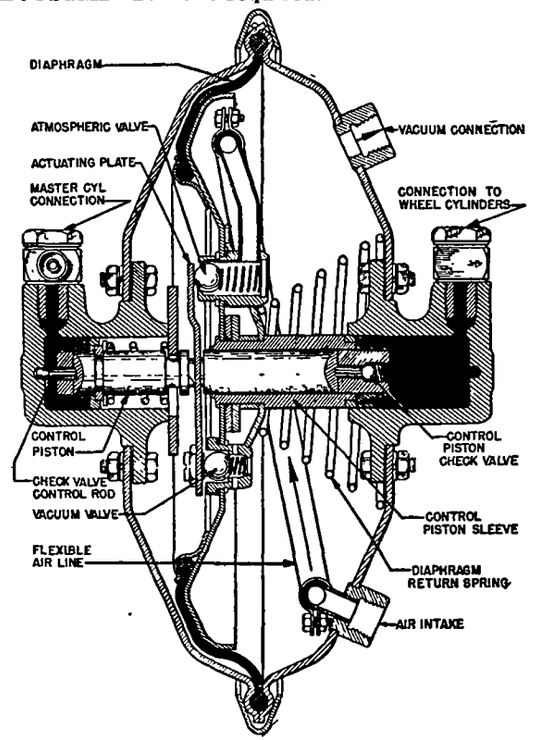

VACDRAULIC POWER BRAKE UNIT

BENDIX VACUUM CYLINDER PLAIN TYPE—EXTERNAL VALVE

Lincoln V12, All Models (1936-40)
Packard 8, Super 8, 12, All Models (1936)
Pierce Arrow 8 & 12, All Models (1936-37-38)

NOTE:—Lincoln. This model has dash-controlled regulating valve which supplements standard control valve so that operator may select amount of power

Pierce Arrow. Reserve vacuum tank used so that brakes may be applied with engine not running.

DESCRIPTION:—Consists of vacuum cylinder mounted on frame with piston rod linked to brake cross-shaft or pedal. Rod or boot end of piston chamber open to atmosphere (through air cleaner in cover) and opposite chamber behind piston connected to engine manifold through control valve. Piston normally held in outer position against boot end by brake linkage return springs with brakes 'off' when both chambers are open to atmosphere.

OPERATION:—Control valve connected in pedal linkage is two-way diaphragm type. With brakes 'off' and no tension on valve rods, atmospheric valve is bottomed in chamber so that air is admitted through cleaner in cover is free to flow to power unit balancing pressure on both sides of piston. Vacuum connection to manifold is cut off by seating of diaphragm. When brakes are applied, atmospheric valve moves forward and contacts diaphragm, cutting off air intake. Further movement unseats diaphragm opening manifold vacuum connection, and makes connection with power unit line so that air in chamber in exhausted. Air pressure on boot face of piston forces piston in, applying brakes. Vacuum, and consequently booster action of power unit, is directly proportional to pedal application. When atmospheric valve stop bottoms in housing (total travel approximately 3/32"), pedal pressure is transmitted directly through control valve housing to brake cross-shaft so that brakes are applied both by pedal and vacuum power unit.

ADJUSTMENT:—Control Valve Setting—Pedal linkage should be adjusted so that there is no load on control valve (atmospheric valve should be bottomed in chamber) with pedal released and against its stop, and cross-shaft levers against stops. Any tension on control valve in this position will cause dragging brakes.

Lincoln Models—Regulating valve with control knob located on instrument panel (so that braking effort controllable by driver) is used to supplement standard type control valve.

Packard—On Eights, control valve linkage is adjustable to provide more or less vacuum power

Power Unit:—With brakes 'off', and cross-shaft levers against stop, disconnect piston cable, pull piston all the way out (against boot end stop) adjust cable length to remove all slack, reconnect cable.

TROUBLE SHOOTING:—Engine misses and stalls when brakes applied:—

1—Loose hose connection between control valve and power unit. Check connections. Replace hose.

2—Dry Piston Seal in Power Unit cylinder. Check by disconnecting piston cable and hose connection at cylinder. Push piston all the way in. Hold finger over hose nipple on end of cylinder, pull on piston rod. If piston can be pulled out, piston seal is leaking. Lubricate as directed in Servicing below, repeat test. If operation still unsatisfactory piston seal should be replaced.

3—Cracked Diaphragm in Control Valve or dirt between valve and diaphragm seat. To check, disconnect all connections and remove valve from car. Apply suction to nipple from which manifold connection removed. If air can be drawn through valve, diaphragm does not seat or is cracked.

Engine misses or stalls when idling:—

1—Loose connections or leaky hose between control valve and manifold. Examine connections, replace hose.

SERVICING:—Piston Seal Lubrication—Remove Power Unit from car, hold unit vertical with piston rod down, inject approximately 2 ounces Bendix Vacuum Oil through hose nipple in upper end of cylinder, work piston up and down and around to spread oil.

BENDIX VACUUM CYLINDER INTERNAL VALVE TYPE

CADILLAC V16, ALL SERIES (1936-37)
CHRYSLER IMPERIAL, MODEL C10 (1936)
CHRYSLER AIRFLOW C-17 (1937)
CHRYSLER, CUSTOM IMPERIAL (1936 to 1939)
CHRYSLER CROWN IMPERIAL, C27 (1940)
DUESENBERG, ALL MODELS (1936-37)
PACKARD TWELVE MODELS (1937-38-39)

NOTE:—Packard Models. Individual vacuum power unit used for both Brake operation and Clutch operation. *See Clutch Section for Clutch Power Cylinder.*

Chrysler 1941 & Later Models. These models have redesigned linkage and are adjusted differently. Refer to separate article (following) for adjustment

DESCRIPTION:—Vacuum cylinder mounted on frame with hollow pull rod connected directly to brake pedal extension lever. Spring loaded piston type control valve located within hollow pull rod and operated by push-rod which extends out through pull rod to pedal lever. Vacuum line from manifold connected directly to rear end of cylinder so that vacuum always present in rear chamber behind piston. Front chamber controlled by control valve.

OPERATION:—Control valve push-rod setting provides slight clearance at brake pedal lever with brakes 'off' so that valve is seated in forward position by spring. This cuts off air passage (air inlet is through air cleaner in cover and boot to hole in piston pull rod and through pull rod to atmospheric valve). Vacuum passage from rear chamber through push-rod stem and front chamber port in side of pull rod uncovered by valve is open so that both piston chambers are evacuated (pressure equal) and piston will be held in 'off' position (forward against boot end) by spring in cylinder. When brake pedal depressed, pull rod clevis pin contacts valve push-rod, moving valve to rear, cutting off vacuum and connecting front chamber port to atmosphere so that air pressure forces piston to rear applying brakes. When pedal travel is stopped, control valve cuts off air so that no further movement of piston takes place, and when pedal is released, further travel of control valve forward opens vacuum connection to front chamber, balancing pressure and piston is returned to 'off' position by spring.

ADJUSTMENT:—On all models, see that brake pedal position is correct (clearance at toeboard) and that cross-shaft is in released position against stops. Disconnect power cylinder piston rod by taking out clevis pin, adjust piston rod length so that clevis pin can just be inserted with piston pulled all the way out at the end of its stroke and power lever

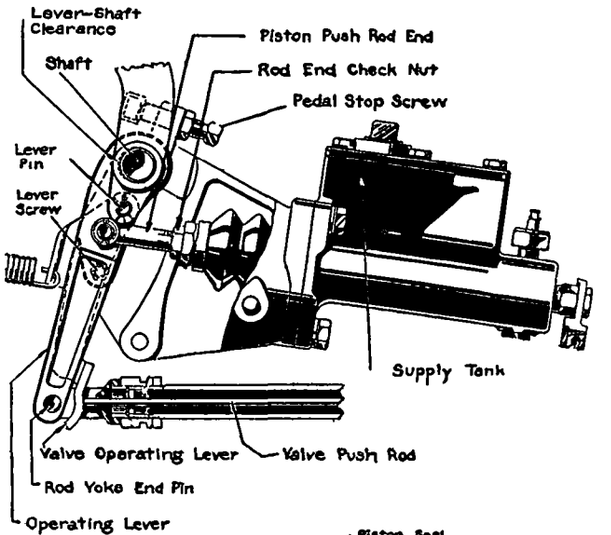

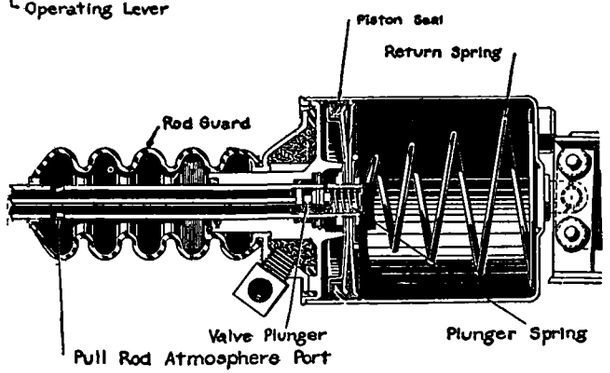

CHRYSLER VACUUM POWER CYLINDER & BRAKE LINKAGE

pressed forward so that clearance in hole is at opposite side of shaft. Then adjust valve rod length so that valve rod yoke just contacts yoke pin in valve lever with valve rod pulled all the way out. Special instructions on individual models given below.

Cadillac: NOTE—1937 V16 is fitted with hydraulic brakes and push rod (to master cylinder) used instead of pull rod (see 1937 Model Note below).

1—Disconnect brake pedal pull rod and vacuum power unit from pedal lever, reinstall clevis pin in upper end of valve lever, loosen locking screw in upper end of pedal lever and turn eccentric bushing clockwise to bring rear edge of hole in lower end of pedal lever in line with rear edge of hole in valve lever bushing, tighten locking screw.

2—Loosen locknut, adjust brake pedal stopscrew so that clearance between pedal and underside of toeboard is ¼-⅜", tighten locknut.

3—See that spring between valve lever and pedal lever has sufficient tension to separate levers as far as clevis pin at top of levers permits. Spring cotter pin should have ⅛" clearance at valve lever.

4—Check length of Power Unit pull rod. Distance from face f boot and flange to center of clevis pin

C NTINUED N NEXT PAGE

BENDIX VACUUM CYLINDER (C nt.)

must be 8 3/16" (1936), 13 7/8" (1937) with the pull rod pulled out to end of stroke.

1937 Model. Adjust master cylinder push rod length (loosen locknut, turn turnbuckle at master cylinder) so that clevis pin end of vacuum cylinder pull rod just fits on lever pin with vacuum cylinder piston in released (forward) position and master cylinder piston against its stop.

5—Adjust length of control valve clevis or fork by loosening locknut and turning fork out until it contacts clevis pin, then turn fork in 1½ turns and tighten locknut.

6—Connect Power Unit, readjusting pedal stopscrew if necessary to allow Power Unit pull rod clevis to enter levers without disturbing piston.

7—Connect brake pedal pull rod and see that clearance between front end of clevis and clevis pin is 1/32" with pedal and cross-shafts against stops.

Chrysler (1936 & Later): See illustration for details of vacuum cylinder mounting and linkage.

1. Adjust brake pedal stopscrew so that pedal just clears underside of floor board when released.

2. Remove clevis pin linking vacuum cylinder pullrod and operating lever. Loosen two studs holding valve operating lever to pedal so that pedal is free. Hold operating lever so that clearance between lever and brake pedal shaft is all on forward side of shaft (shaft is smaller than hole in lever), disconnect master cylinder pushrod and adjust pushrod length so that clevis pin can just be inserted with master cylinder piston against its stop (do not allow operating lever to shift from position while making this adjustment).

3. With operating lever still held so that clearance between lever and pedal shaft is on forward side of shaft, loosen vacuum cylinder frame bracket mounting bolt, shift bracket and vacuum cylinder on frame until clevis pin can just be inserted in pullrod and operating lever with vacuum cylinder piston pulled out against its stop. Make certain that clevis pin goes through ferrule on end of valve operating rod and that forked valve operating lever is hooked over ferrule (do not adjust valve operating rod).

4. With studs holding valve operating lever to pedal loosened so that pedal is free, allow valve operating rod to assume correct position (ferrule against clevis pin), tighten studs.

5. Make certain that entire power unit is in alignment and that links line up so that parts do not require springing to install clevis pins.

Packard Twelve:—Remove front floor boards, depress brake pedal at least 10 times (to exhaust vacuum supply tank), see that pedal is against toeboard with brakes released. Loosen clamp nut at top of brake pedal levers (above pedal shaft), press lower end of rear lever toward rear and front lever toward front until all clearance at pedal shaft (upper end of levers) and clevis pin (lower end of levers) is all on forward side, hold levers in this position and tighten clamp nut. Remove master cylinder push rod clevis pin in rear lever, move brake pedal down until all clearance at pedal shaft and clevis pin at lower end of levers is on rear side, adjust master cylinder pushrod length so that clevis pin can just be inserted with master cylinder piston against stop and pushrod just contacting piston.

SERVICING:—Power Unit—At 6000 mile intervals, remove plug on boot end of cylinder, inject 2 ounces of Bendix Vacuum Cylinder Oil, work piston around and up and down to spread oil in cylinder.

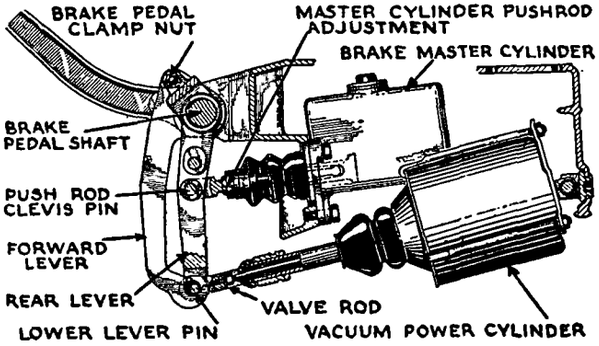

PACKARD BRAKE LINKAGE

BENDIX VACUUM CYLINDER CHRYSLER 1941-42 TYPE

Std. Equipment On:
CHRYSLER CROWN IMP., C33 ('41) C37 ('42)

TYPE:—This vacuum cylinder is internal valve, reactionary (vacuum suspended) type similar to design used on previous Chrysler models. An intake air cleaner has been added and linkage has been redesigned due to new location of brake master cylinder and new type brake pedal mounting.

ADJUSTMENT:—Note—Adjustment required only when master cylinder or vacuum power cylinder removed from car or disassembled (setting not disturbed by minor brake adjustment). CAUTION—Do not readjust vacuum cylinder linkage to compensate for normal brake wear—see Lockheed brake articles

Adjustment:—Make following adjustments in order:

1. Remove clevis pin connecting power cylinder pullrod to operating lever and pin connecting brake master cylinder pushrod to operating lever, loosen screws in valve lever and loosen vacuum cylinder mounting stud locknuts.
2. Adjust brake pedal toeboard clearance by loosening locknut and turning stopscrew on pedal shank to rear of pedal shaft.
3. Adjust master cylinder pushrod for correct free play by loosening locknut and turning pushrod. CAUTION—Make certain that all clearance of pedal shaft is to front of shaft when adjusting.
4. Hold brake pedal back against its stop and adjust vacuum cylinder so that all clearance of pedal shaft is to front of shaft and vacuum cylinder pullrod clevis pin will just slip in clevis, tighten vacuum cylinder mounting stud locknuts and install clevis pin, tighten valve lever screws.
5. Check to see that all clearance between vacuum cylinder valve rod bushing and pin is to front of pin.

SERVICING:—Lubrication—At 6000 mile intervals, lubricate power cylinder by removing plug on front of cylinder and inserting one ounce of shock absorber fluid, transformer oil, or ice machine oil. At the same time, disconnect vacuum line connection at rear end of cylinder and insert an additional ounce of oil at this point.

HYDRAULIC BRAKE TROUBLE SHOOTING

TROUBLE SHOOTING:—Brake Pedal goes down to floor.

1—Excessive shoe clearance due to wear—Adjust brakes. If adjusting screw must be turned up more than 50 clicks or notches, examine lining for replacement.
2—Leaks in system. Minor leaks evident by gradual slacking off of brakes when applied with pedal depressor. Examine lines and wheel cylinders. When caused by contraction of piston cups due to extreme cold, correct by installing special expanders (between cup and spring) and special springs (shorter than standard).
3—Air in Brake System—when present in considerable quantity (smaller amount evidenced as 'springy' pedal). Bleed system.
4—No fluid in supply tank. Lines must be bled if supply tank allowed to become empty.

Brakes drag at all wheels:—

1—Mineral oil in system—causes rubber piston cups to expand. Wash out master cylinder, lines and wheel cylinders with alcohol, replace rubber piston cups, refill with genuine brake fluid.
2—By-Pass port in master cylinder clogged or covered by piston. See that port is uncovered with piston in extreme off or outer position to allow fluid return to supply tank (see brake pedal adjustment directions in each brake article.

Brakes drag at one wheel:—

1—Weak or broken return spring. Replace springs. See that stronger spring is attached to secondary shoe.
2—Improper adjustment (shoe clearance too small).
3—Cylinder cups distorted or incorrectly installed. Lip of cup must point in.
4—Loose front wheel bearings.

Car pulls to one side:—

1—Oily linings. Replace shoes or reline.
2—Improper adjustment (shoe clearance too small).
3—Loose backing plate, loose front spring U bolts.
4—Incorrect lining type or length. See specifications in Car articles.
5—Incorrect or uneven tire inflation pressures.
6—Brake drums out-of-round or scored.
7—Brake lines kinked, hose plugged.

Brake Pedal Springy:—

1—Air in system. Bleed lines.
2—Brakes shoes incorrectly adjusted.

Brake Pedal 'Hard':—

1—Improper adjustment.
2—Incorrect lining type.
3—Oily linings—replace or install new shoes.
4—Partial contact—high spots. Linings should be ground concentrically.

Brake Pedal 'Soft':—

1—Improper adjustment.
2—Dust shield or backing plate loose.
3—Oily linings.

SERVICING NOTE:—See following article for directions for bleeding lines and servicing of master and wheel cylinders. See separate brake articles for brake shoe and brake pedal adjustment directions.

HYDRAULIC BRAKE SERVICING

BLEEDING BRAKE LINES:—Remove master cylinder supply tank filler cap, fill tank with genuine brake fluid, keep tank filled with fluid during entire bleeding operation (air will be drawn into brake lines if tank allowed to become dry). Remove screw in bleeder valve on wheel backing plate, install special fitting and hose connection. Submerge free end of hose in brake fluid in clean glass container. Unscrew bleeder valve ½-¾ turn, press brake pedal down by hand approximately half of travel, allow pedal to return slowly. Repeat operation until fluid flow from tube is completely free from any air bubbles, then close bleeder valve, remove hose connection and replace dustscrew. Bleed lines at each wheel in same manner.

CAUTION—Use extreme care not to allow supply tank to become dry during bleeding operation. If automatic refiller unit not used, supply tank should be filled after every 6-10 strokes of the brake pedal (automatic refiller will maintain level in supply tank without attention during bleeding operation).

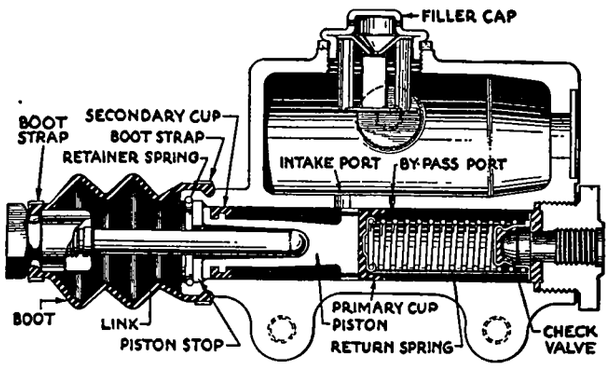

BRAKE MASTER CYLINDER

Two Cylinder (Chrysler Front Wheel Brake Type). When bleeding these brakes, first attach bleeder line to **upper** cylinder bleeder connection, bleed this cylinder and the brake line as directed above. Then connect bleeder line to **lower** cylinder bleeder connection and bleed this cylinder and the line between the cylinders as directed above. Both cylinders must be bled in this manner to remove all air from the brake system.

SERVICING:—Wheel Cylinders—To disassemble wheel cylinders, remove brake shoes, take out wheel cylinder mounting screws, withdraw cylinder through backing plate. Disconnect brake line, remove piston boots, withdraw pistons. Examine cylinder bore. If corroded or scored, cylinders can be lapped or honed and oversize pistons fitted. Piston clearance (metal piston) in cylinder should be .001-.003" and must never exceed .005". In assembling wheel cylinder, wash all parts in alcohol, dip rubber piston cups in Brake Fluid, and insert ahead of piston with lip in. Central return spring in stepped cylinders is tapered and should be installed with small end toward piston in smaller bore. Reconditioned cylinders should be tested for leakage in fixture under alcohol with 8 lbs. and 80 lbs. air pressure. Wheel must be bled when wheel cylinder reinstalled.

Piston Cup Expanders—Can be used with special return spring in wheel cylinders to correct leakage caused by piston cup contraction in extreme cold temperatures. Expander should have .005" clearance in cylinder and should fit into open end of piston cup with slight clearance. Install expanders with cupped face in and use special return spring which is ½ turn shorter than standard spring.

Chrysler Wheel Cylinder Pistons (with Rubber "Piston Ring"). On Chrysler Eight Cylinder Models (1940 on), all Chrysler, De Soto, Dodge, Plymouth (1946 on), separate piston cups are not used and the pistons are sealed by a rubber piston ring in a groove on the pistons. These piston rings are removed by rolling them off the end of the piston. Install piston rings with lip in toward inner end of cylinder. On two cylinder brakes (with single acting pistons), install piston spring with large end toward piston and smaller end in toward end of cylinder.

Master Cylinder:—To disassemble master cylinder, remove rubber boot and push rod or link, take out retainer spring and piston stop, withdraw piston. Examine cylinder. If corroded or scored, cylinder can be lapped or honed and oversize piston fitted. Clearance should be .001-.003". In reassembling, wash all parts in alcohol, dip in Brake Fluid, see that check valve is installed correctly and that thin washer is in place between piston and primary piston cup. Insert piston with lips on both primary and secondary cups in. Test for leaks in same manner as for wheel cylinders and bleed entire system when installed on car.

By-pass Port Note—By-pass or compensating port connecting supply tank and master cylinder must be uncovered with the master cylinder piston against its stop. When installing master cylinder piston assembly, hold piston against stop and make certain that this port is not covered by lip of primary cup.

CAUTION—When master cylinder installed on car, brake pedal must be adjusted for correct pedal clearance or free-travel to insure this by-pass port being uncovered with pedal released and master cylinder piston against its stop. Brakes will drag if this port is not open.

HILL-HOLDER & NOROL

Std. or Optl. Equipment On:
ALL CAR MODELS WITH HYDRAULIC BRAKES

DESCRIPTION:—These units consist of a gravity and clutch pedal controlled check valve in a housing which is ordinarily mounted directly on the end of the hydraulic brake Master Cylinder so that the check valve is in the brake line between the master cylinder and the wheel cylinders. The valve ball is free to roll endwise in the valve cage (when unit tilted by car being on an incline) while the valve cage itself is moved endwise by a cam lever linked to the clutch pedal.

OPERATION:—The valve cage with the rubber seal orifice is normally held away from the valve seat by the clutch pedal controlled camshaft (with the clutch engaged) so that the valve is open and brake operation is conventional. When the clutch is disengaged, the rotation of the camshaft permits the spring behind the valve cage to force the cage back so that the rubber seal seats against the valve seat. If the car is pointed uphill, the ball within the valve cage rolls down against the rubber seal, closing the orifice within the seal so that the brake fluid in the lines is prevented from returning to the master cylinder and brakes are held 'on' even though brake pedal is released. When the clutch is engaged, the valve cage is pulled away from the valve seat uncovering the return passage to the master cylinder and releasing the brakes. If the car is on a level road or pointing downhill, the ball will not close the rubber seal orifice.

ADJUSTMENT:—Operating lever position must be checked (to insure correct timing of brake release when clutch is engaged) whenever clutch pedal is adjusted. See Clutch pedal adjustment instructions on car model page for special instructions. Adjust as follows:

Adjustment:—Check setting by applying brake on slight incline with clutch disengaged, then shift into low gear, engage clutch slowly and note point

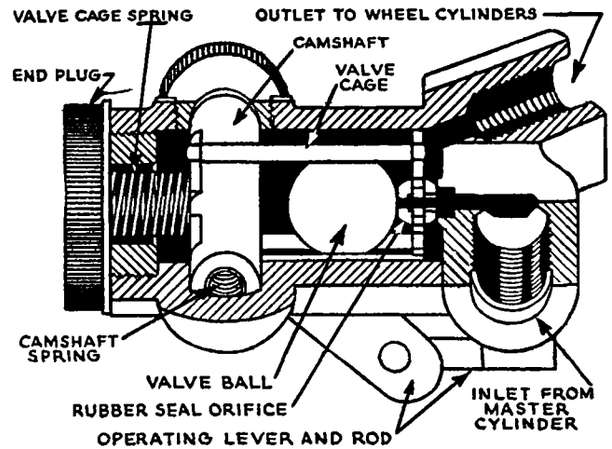

at which brakes release. If brakes release too soon and car has tendency to roll backward, loosen locknut and turn adjusting nut on end of control rod away from pedal to lengthen rod. If brakes release late and engine has tendency to stall, turn nut in to shorten rod. Tighten locknut and check setting.

Mounting:—The unit must be mounted in a level position on car frame. To check, place spirit level on bosses on top of hill-holder body casting with car standing on level floor. Unit must be leveled lengthwise (place spirit level on two bosses on top of unit), and crosswise (place spirit level crosswise on one boss).

Hudson & Terraplane 1937 Model. When leveling the unit on these models, place .052" shim stock between spirit level and boss on forward end of the unit (no shims are used at the rear end), adjust unit until spirit level is horizontal. Level unit crosswise by placing spirit level on forward boss.

NOTE—Do not use this shim when leveling unit on 1938 Hudson and Terraplane models.

SERVICING:—Before dismantling unit mark shaft and lever and replace in same position. Remove ball chamber head plug and spring, withdraw camshaft being careful not to lose camshaft spring, withdraw ball cage assembly. In reassembling unit, see that ball cage is installed with two large ball rail rods underneath camshaft, and that camshaft spring is in place at inner end of camshaft.

BENDIX MECHANICAL SINGLE ANCHOR

Lincoln V12, All Models (1936-40)
Lincoln Zephyr, All Models (1936-37-38)
Packard 8, All Models (1936)
Packard Super 8, All Models (1936)
Packard Twelve, All Models (1936)
Willys, Models 77 ('36), 37 ('37), 38 ('38), 48 ('39)
Willys Commercial, All Models (1938-39-40)

NOTE:—Bendix Vacuum Power Cylinders are used on Lincoln V-12 and all Packard Models. See separate article on this unit and adjustment note below.

Willys Passenger Cars (1939 on). All models beginning with 1939 equipped with Lockheed Hydraulic Brakes. See separate article for data.

DESCRIPTION AND OPERATION:—Wheel Brakes—Two shoes per wheel, connected together by turn buckle type adjusting screw at one end and bearing against single anchor pin at other end. Cable actuated lever concentric with anchor pin forces anchor end of primary shoe against drum when brakes applied. Primary shoe applies secondary. Shoes returned to off position by independent spring hooked to lever and brake shoe. Shoes held in position by coiled springs and clips hooked to backing plate.

Brake Linkage:—Wheel brakes actuated by cables from a single cross-shaft on the car frame. Brake cables protected by flexible conduits between frame and wheel. Brake pedal linked to cross-shaft with Vacuum Power Cylinder Control Valve (when used) incorporated in pedal linkage.

Hand Brake:—Hand Brake lever linked to cross-shaft or equalizer plate applies all four service brakes.

ADJUSTMENT:—Jack up all four wheels, disconnect cables at cross-shaft, remove adjusting screw hole covers on backing plates and inspection hole covers on drums (remove wheels if disc type). Check pedal position with cross-shaft levers against stops. Pedal should clear underside of toeboard by ½". Adjust by disconnecting pedal link and changing length. Then proceed as follows:

Minor Adjustment (For Wear):—1—At each wheel—loosen eccentric locknut, turn eccentric in direction of forward wheel rotation until .010" feeler is snug at both ends of this shoe. Hold eccentric from turning, tighten locknut. Clearance at both ends must be the same within .003" with smaller clearance preferably at anchor end. If variation greater than .003", anchor pin must be relocated (see Major Adjustment below). NOTE—If feeler gauge not used, turn eccentric up until slight drag felt when wheel turned by hand, then back eccentric off until wheel is just free.

2—At each wheel—insert tool or screwdriver in adjusting screw hole, turn notched adjusting screw toward backing plate rim (move outer end of tool up toward center of wheel) until shoes are expanded so that drum can just be turned, pull brake cables toward cross-shaft to remove all slack, adjust clevis position (loosen locknut, turn clevis, tighten locknut) until pins just enter clevises at cross-shaft lever freely, reconnect brake cables.

3—Back off adjusting screws same number of notches at each wheel until wheels are free. Apply brakes with hand lever or use pedal jack until wheel with least drag can just be turned, equalize brakes by backing off adjusting screws on tight wheels not more than two or three notches. Do not tighten loose wheels.

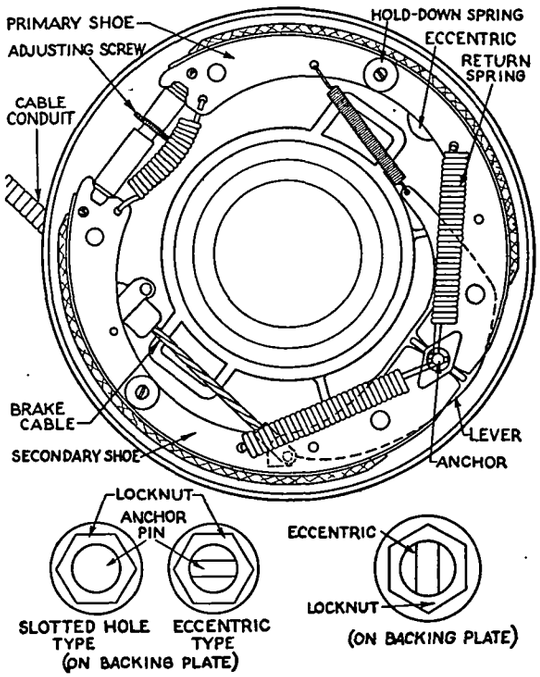

REAR BRAKE ASSY. (FRONT SAME EXCEPT HAND BRAKE LINKAGE OMITTED)

4—Check pedal reserve (distance from pedal to floorboard with brakes applied). This should be one half total travel (minimum). Recheck adjustment if less than this amount. Then check hand lever

NOTE—On Packard Models, brake lining for left front wheel is of narrower width (see Car Specifications) so that if brakes checked on tester, difference in pull should be in ratio of 6.5-6.75 (right front wheel) to 5.0 (all other wheels).

Major Adjustment (New Shoes or Relined Brakes):—1—At each wheel loosen anchor pin nut one turn, tap anchor pin out toward drum (slotted hole type with plain end) or turn anchor pin in direction of forward wheel rotation (eccentric type with slotted end). Loosen locknut, turn eccentric in direction of forward wheel rotation until .010" feeler snug at both ends of this shoe, hold anchor pin, tighten locknut securely with 16" wrench, hold eccentric from turning, tighten eccentric locknut. Then proceed with (2) and (3) under Wear Adjustment

NOTE—On Packard 8 & Super 8 ('35-36), vacuum unit control valve, mounted on brake pedal, adjustable to provide more or less vacuum booster action. Brake pedal vertical lever is connected to vertical arm through link engaged in one of three holes in lever. On new cars or with new lining requiring minimum booster action, engage link in lower hole in lever (factory setting on new cars). Engage link in center hole for softer pedal after linings are run in. Upper hole used only for very soft pedal action.

Hand Lever Adjustment:—With hand lever in released position, and cross-shaft levers against stops adjust length of hand lever cable or rod to eliminate all slack (see note on Lincoln Zephyr).
Lincoln Zephyr—On this model, hand lever adjusted by moving cable conduit forward or backward at support bracket at cross-shaft until free movement or lash at extreme end of hand brake lever is ¼-½". Conduit end is threaded and positioned by adjusting nut on each side of support bracket. Loosen locknuts. back off front adjusting nut (to decrease lash) or rear nut (to increase lash), turn up second adjusting nut until conduit clamped in support, tighten locknuts.

Willys ('37-39). Hand brake lever linked to intermediate lever on left frame side member by cable with adjustable clevis at lower end. Lower end of intermediate lever is connected to lever on cross-shaft by slotted link (slot provides 'overrun' for foot brake operation). Left hand lever on cross-shaft (to which cables for left front and left rear wheels attached) serves as stop for entire brake system and must contact bracket when brakes are released.

RELINING BRAKES:—Manufacturer recommends use of replacement shoes furnished with new linings installed and ground concentrically. If shoes relined, use same type lining as fitted originally.
Lining Specifications—See Brake specifications on car model page for complete data.

SERVICING:—Brake Linkage—Whenever adjustment made, lubricate brake pedal hand lever, cross-shaft, overrunning linkage and all clevis pins. See that linkage operates freely and returns sharply to stops when pedal and hand lever released.

Cable Conduits:—Lubricate cable and conduit assemblies through fittings (when so equipped) or disconnect cable at both ends, clean thoroughly, pull cable out at wheel end to expose portion normally in conduit, clean and coat with Bendix Cable Lubricant, or graphite grease such as Gredag #213½, pull cable back and forth to spread lubricant in conduit. See that conduit is bottomed firmly in abutment brackets and that bracket bolts are tight.

Wheel Brakes:—With shoes removed, coat brake cam, anchor pin, cable ramps, eccentric, backing plate shoe edges and all other contact points with Bendix Lubriplate. Examine shoe return springs and see that heavier spring it attached to shoe which covers cable end of brake lever.

BENDIX HYDRAULIC DOUBLE ANCHOR

HUDSON '112', MODELS 89 (1938), 90 (1939)
HUDSON '112', MODEL 90 UTILITY CARS ('39)
HUDSON SIX, 40T TRAVELER, 40P DELUXE ('40)

NOTE:—Hudson Other Models—Other models equipped with Bendix Hydraulic Single Anchor Brakes (With Eccentric Adjustment—Before 1941), Without Eccentric (1941 & Later Models). *Refer to separate articles on Bendix Hydraulic Brakes for complete data on these other types.*

DESCRIPTION:—Wheel Brakes. Two shoes linked together by strut and star adjusting wheel in same manner as on other Bendix Duo-Servo designs. Hydraulic cylinder is mounted on backing plate and has been moved up between shoes at anchor end so that pistons bear directly on ends of brake shoes. Anchor design is new and consists of a short anchor link (for each shoe) pivoted at lower end on anchor bolt (on backing plate) with short stud at opposite end engaging slot in brake shoe web (shoe held against stud when brakes released by short spring hooked between stud and shoe). Shoes are positioned on backing plate by eccentrics (one for each shoe, adjacent to anchor links) and are held against eccentrics by retracting spring hooked between shoes.

Master Cylinder:—Compensating type. Same design as used on other Bendix hydraulic brake systems.

Hand Brake:—Incorporated in rear wheel brakes. Consists of cable actuated lever pivoted on secondary brake shoe anchor link stud and linked to primary shoe by strut. Applies brake shoes mechanically for parking.

OPERATION:—When brake pedal depressed and fluid in wheel cylinder forces piston and shoe out against drum, anchor link stud slides freely in slot in shoe until shoes contact drum. Primary shoe then applies secondary shoe which moves to bring anchor link stud against end of shoe slot and this link serves as anchor for both shoes. Links are mounted so that this braking thrust is in line with link axis so that shoes and anchors are free to swing within limit of eccentric adjustment (shoes follow drum and high spots due to irregular drums are eliminated). When brakes are applied with car in reverse motion, the application is exactly the same except that the opposite anchor link comes into use (only one anchor acts at a time).

ADJUSTMENT:—Hydraulic system (Bleeding lines, pedal clearance etc.). These operations performed in same manner as on other hydraulic brake systems. See Bendix Single Anchor Brake article (following) for data.

Minor Adjustment (For Wear):—Jack up all four wheels, remove wheels, remove adjusting hole covers on backing plates and inspection hole covers on drums, disconnect parking brake cables by removing clevis pin in lever toggle at forward end of cables.

CAUTION—If hand brake cables not disconnected, shoes may be held away from eccentrics (if cables adjusted too short) so that correct adjustment cannot be secured.

1. Loosen locknut on primary brake shoe (forward shoe) eccentric, turn eccentric in directi n of forward wheel rotation until wheel can just be turned by hand, then turn eccentric slowly in opposite direction until wheel is just free of drag, hold eccentric in this position and tighten locknut. If feeler gauge used, insert .010" feeler between shoe and drum at anchor (upper) end of shoe, adjust eccentric until feeler gauge is snug, hold eccentric from turning and tighten locknut.

2. Adjust secondary shoe eccentric in same manner as primary shoe (above).

3. Remove adjusting hole cover on backing plate, use Tool HM-13985 (or screwdriver) and turn star wheel until brake shoes are expanded tightly against drum (move outer end of tool toward axle to expand shoes, in opposite direction to release shoes). Connect and adjust hand brake cables (see Parking Brake Adjustment below). Back off star wheel until drum is free of any drag (approximately 12 notches, both rear wheels must be adjusted exactly alike to maintain hand brake balance). Install wheels and road test car for equalization.

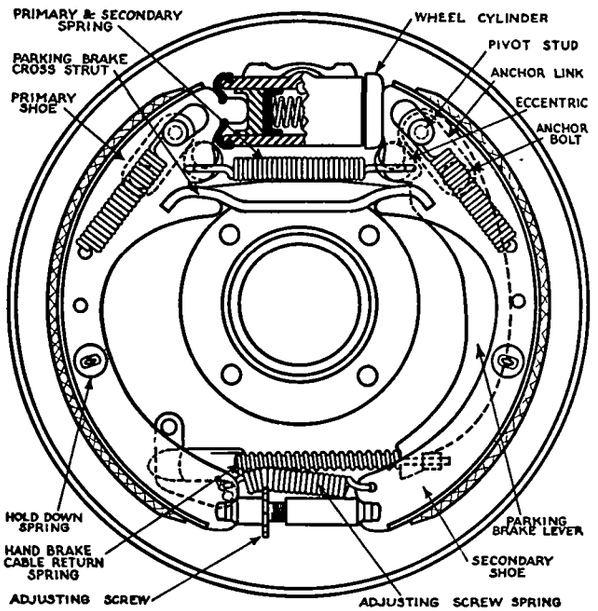

REAR BRAKE ASSY. (FRONT SAME EXCEPT HAND BRAKE LINKAGE OMITTED)

Complete Adjustment (For Wear or when New Shoes or Linings Installed):—Whenever new shoes or linings installed, or if adjustment does not give satisfactory operation, wheel brakes and cables should be cleaned and lubricated (see Servicing directions below). Jack up all four wheels, disconnect parking brake cable to each rear wheel at equalizer bar. Make following adjustments in order, repeating adjustment at each wheel as noted.

CAUTION—If hand brake cables not disconnected, shoes may be held away from eccentrics (if cables adjusted too short) so that correct brake adjustment cannot be secured.

1. At each wheel, remove inspection hole cover on brake drum, insert .010" feeler between drum and primary shoe (front shoe) near anchor end. Loosen eccentric locknut, turn eccentric in direction of forward wheel rotation until feeler is just snug, hold eccentric in this position, tighten locknut.

2. At each wheel, adjust secondary shoe (rear shoe) eccentric in same manner as primary shoe (above) using same .010" feeler.

3. At each wheel, remove adjusting hole cover on backing plate, use tool HM-13985 (or screwdriver), turn star wheel until brake shoes are expanded tightly against drums (move outer end of tool toward axle to expand shoes, in opposite direction to release shoes). Connect and adjust hand brake cables (see Parking Brake Adjustment below).

4. At each wheel, back off star adjusting wheel until wheel is just free of any drag with parking brake lever in released position. Check parking brake equalization by pulling on lever until wheels can just be turned by hand and noting if drag on rear wheels is equal. Check brakes for balance.

Parking Brake Adjustment:—With brake shoes expanded so that drums can just be turned, pull hand brake lever 'on' two notches so that clearance between hand brake cable lever and end of slot in guide plate is ⅛", pull cables tight, adjust clevis at forward end of each cable so that clevis pins just enter holes in toggle on lever, connect cables, back off adjusting screws until wheels are free and check equalization.

Mechanical Follow-up Adjustment:—Turn adjusting nut on pushrod until clearance between face of nut and end of pushrod tube is 1 7/16" (1938-39), 1¼" (1940), tighten locknut. See separate article for complete Follow up data.

SERVICING:—Brake Shoes. To remove shoes, install clamp (HMO-145) on wheel cylinder (this will make it unnecessary to bleed lines when shoes installed if brakes not applied with shoes off). Remove retracting spring and shoe anchor link springs, release hold-down springs and remove shoe retaining washers, pull anchor end of shoes free from wheel cylinder, lift shoe assembly out. Install shoes in same manner making certain that eccentrics are turned so that high side is away from anchor links. NOTE—Beginning with 90906, heavier (25 lbs.) spring used on secondary shoe. Lighter (20 lbs.) spring continued for primary shoes.

Backing Plate and Linkage. Remove anchor links by removing anchor bolt nuts on backing plate. Apply thin film of Bendix Lubri-plate to backing plate side of anchor links, shoe support ledges on backing plate, eccentrics, parking brake cable ramp, and all other moving or sliding parts. When installing anchor links, tighten anchor bolt nuts so that all sideplay removed but make certain that anchor links move freely.

Parking Brake Linkage. Disconnect brake cables at equalizer bar, clean exposed portion of cable, pull cable through conduit at wheel end until portion in conduit is exposed, clean and lubricate this part of cable with Bendix Cable Lubricant, push cable back into conduit. To connect cable (after shoes installed), move cable return spring away from cable end, place cable end in groove in end of brake operating lever, allow return spring to come back against lever to hold cable in place. Lubricate cable ramp with Bendix Lubri-plate. Adjust brakes and connect cables to equalizer bar.

Lining Specifications—See Brake specifications on car model page for complete data.

BENDIX HYDRAULIC–SINGLE ANCHOR (WITH ECCENTRIC ADJUSTMENT)

AUBURN 6 & 8, ALL MODELS (1936-37)
BUICK, ALL MODELS (1936-37-38)
CADILLAC V8, ALL SERIES (1936-37-38)
CADILLAC V8, 39-75 (1939), 40-75 (1940)
CADILLAC V12, SERIES 80, 85 (1936-37)
CADILLAC V16, SERIES 90 (1937 to 1940)
HUDSON SIX, ALL MODELS (1936 to 1940)
HUDSON 8, ALL MODELS (1936 to 1940)
LA SALLE, ALL SERIES (1936-37-38)
NASH 6 & 8, ALL MODELS (1936 to 1939)
NASH 8, MODEL 4080 (1940)
NASH-LAFAYETTE, ALL MODELS (1936 TO 1939)
OLDSMOBILE 6, ALL MODELS (1936-37-38)
OLDSMOBILE 8, ALL MODELS (1936 to 1939)
PACKARD 6, ALL MODELS (1937-38-39)
PACKARD "120" 8, ALL MODELS (1936 TO 1939)
PACKARD SUPER 8, ALL MODELS (1937-38-39)
PACKARD COMM'L., 1801A, 3A ('40), 1901A,3A ('41)
PACKARD COMMERCIAL, MODELS 2001A,3A ('42)
PACKARD SUPER 8, '160' 1804,5 ('40), 1904,5 ('41)
PACKARD SUPER 8, '160' 2004, 5, 55 (1942)
PACKARD SUPER 8, '180' 1807,8 ('40), 1907,8 ('41)
PACKARD SUPER 8, '180' 2007, 8 (1942)
PACKARD TWELVE, ALL MODELS (1937-38-39)
PONTIAC 6, ALL MODELS (1936-37-38)
PONTIAC 6, ALL MODELS (1942 TO 1948)
PONTIAC 8, ALL MODELS (1936-37-38)
PONTIAC 8, ALL MODELS (1942 TO 1948)
TERRAPLANE, ALL MODELS (1936-37-38)

NOTE:—Buick, Cadillac, Nash, Oldsmobile, Packard, Pontiac Other Models. All models not listed above have Bendix Hydraulic Brakes Without Eccentric Adjustment. See separate article for data.

Hudson Other Models. All Hudson 'T12' models, Models 40T & 40P (1940), and Model 90 Utility Coach & Coupe have Bendix Double Anchor type hydraulic brakes. See preceding article for data.

Nash & Nash-Lafayette Models. Lockheed (Wagner) Hydraulic Brakes are used on some cars. See separate article for data on this type.

SPECIAL SERVICE NOTES:—Buick 1938. New type single hand brake cable used for both rear wheels (cable runs through equalizer at hand lever cable connection and all adjustments made on hand brake cable instead of wheel cable).

Cadillac 1937 Models. Special metal brake seals installed on drums of all wheels. Must be removed before drums can be removed. To remove seal, take off nut on clampscrew between seal ends, expand seal, lift off.

Cadillac V16 1937. Bendix Internal Valve type Vacuum Cylinder used. See separate article.

Cadillac 1938. Brake seals (installed on drums to keep out dirt and water) have been discontinued. Vacuum Power Unit not used on Series 38-90.

Hudson & Terraplane Models. Mechanical follow-up used by which rear wheel brakes are applied by pedal, after hydraulic action, as a reserve. Check setting when brakes adjusted—see section at end. Hill Holder is optional equipment. See separate article for adjustment to insure synchronization of release with clutch engagement.

Hudson & Terraplane 1938. Master cylinder operating lever now has two holes for brake pedal link engagement. For standard adjustment, link is connected to outer hole on lever. Link can be shifted to inner hole on lever for harder brake pedal and less sensitive brakes.

Packard Twelve. Bendix internal valve type Vacuum Power Cylinder linked to brake pedal lever. Check setting whenever brakes adjusted. See separate article.

Pontiac Models. New type rubber adjusting hole covers (on 1939 and later cars) can be installed on previous cars to prevent dirt entering through adjusting hole. To install these Part No. 503630 covers, moisten cover with water or brake fluid, start one end in adjusting hole, strike cover with hammer to seat it in backing plate.

Pontiac (1942 & Later) Wheel Cylinder Stops. Located on backing plate and prevent the pistons being forced out of cylinder by brake application with drums or shoes removed. These stops make it unnecessary to use piston clamps to retain pistons when drums and shoes removed but wheel cylinder must be removed from backing plate before it can be dismantled or pistons taken out.

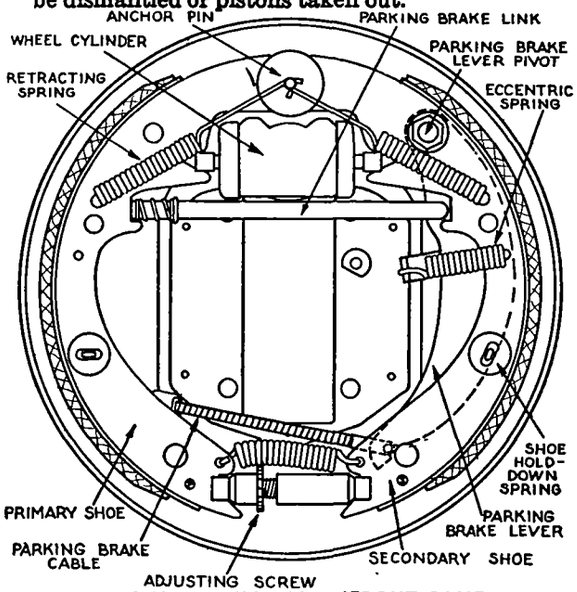

REAR BRAKE ASSY. (FRONT SAME EXCEPT HAND BRAKE LINKAGE OMITTED)

DESCRIPTION AND OPERATION:—Wheel Brakes— Brake shoes used in this type are entirely similar to those used in mechanically operated brakes (see previous article). A rigid type hydraulic cylinder with double opposed pistons is mounted on the backing plate below the anchor bolt. The opposed pistons are connected to the brake shoes through short struts or studs and force the anchor ends of the brake shoes against the drum when the brake fluid, displaced from the master cylinder by depressing the pedal, flows through the lines to the wheel cylinders. The primary shoe applies the secondary shoe in the usual manner. Shoes are returned to the ' ff' position by retracting springs hooked to shoes and anchor pin as on mechanical brakes and are adjusted in the same manner.

Hand Brak :—When incorporated in wheel brakes (rear wheels only), consists of cable actuated lever pivoted on one shoe and linked to other shoe by a strut so that the shoes are expanded against drums at anchor ends when brake is applied. Hand brake is adjusted as part of service brake adjustment.

Master Cylinder:—Compensating type. See separate article on Hydraulic Brake Servicing for complete master cylinder servicing data.

NOTE—Wheel cylinder must be 'bled' whenever brake line to that particular wheel is disconnected, and entire system (all four wheels) must be bled whenever brake lines are disconnected at master cylinder to remove all air in system and correct springy brake action.

ADJUSTMENT:—Before adjusting, jack up all four wheels, disconnect parking brake (hand lever) cables at intermediate lever, remove adjusting screw hole cover on backing plate and feeler gauge hole cover on drum (remove wheels for access to this hole). Adjust as directed below. CAUTION—If hand brake cables not disconnected, shoes may be held 'on' by cables (if adjusted too tight) so that correct brake adjustment cannot be secured.

Bleeding Brake System. See separate article on Hydraulic Brake Servicing for complete bleeding directions (required when lines disconnected, to remove wrong type fluid which has been used in system, or to remove air from lines caused by allowing master cylinder supply tank to become dry).

Brake Pedal Clearance:—Brake pedal must have 3/8" free travel before master cylinder piston begins to move. To adjust, loosen locknut at outer end of master cylinder boot, change length of brake pedal rod, tighten locknut. By-pass port between master cylinder and supply tank must be uncovered when piston 'off' to provide compensating action.

Buick 1938. Clearance between pedal and underside of toe board should be 1 1/8" (40, 60), 7/8" (80, 90) with master cylinder piston against its stop in the released position. To adjust, loosen locknut and turn master cylinder pushrod (hold pushrod from turning while tightening locknut). Check to see that pedal does not bind and that master cylinder piston is against stop when released. Pedal free travel must be 1/4-1/2".

Cadillac 1940. Rubber grommet on pedal under toeboard should be compressed to overall length of 3/4" with brakes released.

Hudson & Terraplane 1938. After adjusting brake pedal link for required 1/4" pedal free travel, make certain that link connected in outer hole on master cylinder operating lever. When connected in inner hole, less sensitive brakes are secured but with harder pedal action.

Hudson 1939-40. Clearance between pedal shank and underside of toeboard should be 1/4" with brakes released. To adjust, remove clevis pin and loosen locknut on link connecting pedal and master cylinder bellcrank, turn link until clevis pin can just be inserted with pedal shank 1/4" from toeboard and bellcrank against its stop.

Oldsmobile 1939. Sponge rubber bumper on underside of toeboard must be compressed not more than 1/16" with pedal released and master cylinder piston against its stop. Adjusted in same manner as other cars (above).

Packard Models. Brake pedal free travel should be 1/4"-1/2" with pedal in released position.

Packard Twelve. Vacuum power cylinder and master cylinder linkage must be adjusted together. See preceding article on Bendix Vacuum Cylinder for complete data.

CONTINUED ON NEXT PAGE

BENDIX HYDRAULIC (Cont.)

Pontiac (1936-38). Clearance between pedal and underside of felt retainer should be ⅜-⅝" with pedal released and master cylinder piston against its stop.

Pontiac 1942 & Later—Adjust pedal height so top of pedal is even with top of clutch pedal and set both pedals so that distance from floor mat to underside of pedal pad is 4¾" (Torpedo Six and Eight), 5 3/16" (Streamliner Six & Eight).

MINOR (WORN LINING) ADJUSTMENT

Minor Adjustment (For Wear):—Adjust at each wheel as follows:

1. (All Models). Loosen eccentric locknut on backing plate and turn eccentric in direction of forward wheel rotation until .010" feeler is snug between lining and drum at each end of this secondary shoe, hold eccentric from turning, tighten locknut. Clearance at both ends of shoe must be alike within .002" (Cadillac), .003" (all others) with smaller clearance preferably at anchor end. If variation greater than this amount, anchor must be re-located (See Major Adjustment below). If feeler gauge not used, turn eccentric up until heavy brake drag secured, then back eccentric off until wheel is just free of drag. NOTE—When using feeler gauge to check clearance, gauge should be inserted at point approximately 1½" from end of shoe lining.

2. (All Models). Insert special tool, or screwdriver, in adjusting screw hole on backing plate, turn adjusting screw by moving outer end of tool up toward center of wheel to expand shoes until wheel can just be turned (if necessary to turn adjusting screw more than 50 notches or clicks, examine linings for wear and replace if necessary). Adjust and connect hand lever cables (see Hand Brake Adjustment below). Then back off adjusting screw until wheel is just free of any drag (approx. 20 notches) or until .010" feeler is snug between lining and drum at center of primary shoe. Check brake equalization by depressing brake pedal (holding pedal with pedal jack) until wheel with least drag can just be turned by hand, equalize by backing off adjusting screws on tight wheels not more than 2-3 notches. Do not tighten loose wheels.

Hudson Note. Check mechanical 'follow-up' setting after adjusting brakes. See separate article.

HAND BRAKE ADJUSTMENT

3. Hand Brake Adjustment (All Models). Adjust hand brake cables for each model as follows:

Buick (1937). Disconnect all cables on equalizer bar, take up each wheel cable until clevis pins can just be inserted in plate with tension spring play taken up, hold in this position, insert hand brake cable in center hole, take up nut at rear end until all slack removed from wheel cables with hand lever against stop in off position. Attach releasing springs. Equalize brakes—see Minor Adjustment (2).

Buick 1938. After brake shoes adjusted, jack up rear wheels, see that brake lever released and against stop, expand shoes in both rear drums until wheels can just be turned by hand, tighten adjusting nut at rear end of hand brake cable (at wheel cable equalizer) until cables are taut. Back off adjusting star screw in each rear brake 17-20 notches so that wheels are free of brake drag. Check equalization by pulling hand brake lever on until wheels can just be turned by hand. If rear wheels not balanced, back off adjusting star screw on tight wheel not more than 2 notches. If wheels still not balanced, center equalizer on rear wheel cables.

Cadillac. With rear brake shoes expanded so that rear wheels can just be turned by hand, make certain that hand lever in 'off' position, pull cables taut and adjust clevises so that clevis pins can just be inserted. Connect cables and back off adjustment at shoes 15-20 notches until wheels are just free. Equalize brakes—see Minor Adjustment (2).

Hudson & Terraplane Models. With brake shoes in rear wheels expanded so that wheels can just be turned, pull hand lever on 2 notches so that equalizer bar is ⅛" from stop, adjust clevises at forward ends of cables so that clevis pins just enter holes in equalizer bar with cables pulled tight, connect cables and make certain that rear face of equalizer plate is parallel with face of stop. Release hand brake, back off adjusting screw at each wheel until brakes just free of drag. Check equalization.

Nash. With rear brake shoes expanded tightly against drum, pull hand lever 'on' 2 notches, loosen two bolts on adjusting clamp (connecting lever and wheel cables), pull cables tight and tighten bolts. Return lever to 'off' position. Back off adjusting screw in each wheel to free brakes and check equalization as directed in (2) above. See that hand brake lever on each wheel backing plate has ⅛" free travel with hand lever in off position. Equalize hand brakes by loosening rear bolt in cable adjusting clamp and applying hand brakes (this will allow cable to shift on adjusting clamp). Check position of hand brake cable guide on rear spring. Guide should be exactly 19¾" (Nash 6, Nash-Lafayette), 18¼" (Nash 8).

Oldsmobile Models. With rear wheel brake shoes expanded until heavy drag secured on wheels, pull parking brake cable toward equalizer to remove all slack, adjust clevis at forward end of each cable so that clevis pin can just be inserted through both clevises and hole in equalizer bar link with link held parallel to drive shaft. Install clevis pin with head to top. Back off adjusting screw in each wheel approximately 20 notches until wheel is free of any drag. Check equalization. See Minor Adjustment (2).

Packard 1936. With lever in off position, remove all slack in cable connecting lever to equalizer bar. Set lever in first notch, position the equalize rbar at right angles to propellor shaft and clamped in this position while adjusting cables). Adjust and reconnect cables with all slack removed.

Packard 1937-41. Adjust clevis at equalizer end hand brake lever cable to remove all slack with lever released and equalizer against stop. With rear wheel brake shoes expanded so that wheels can just be turned by hand, place hand lever in first notch, adjust clevis at forward end of each wheel cable so that clevis pin can just be inserted with all slack removed and equalizer bar held at right angles to frame. Back off adjusting screw in each wheel until wheels are just free of any brake drag, equalize brakes—see Minor Adjustment (2).

Packard (1942). With brake shoes expanded so that drums can just be turned by hand, pull hand lever on to first notch of ratchet sector, back off locknut on connector link at equalizer bar, pull forward on wheel cable with 20 lb. pull to eliminate all slack and lost motion, tighten adjusting nut on connector link against cable sleeve, tighten locknut. Release hand lever, back off adjusting screw in each rear wheel until drums rotate freely without drag. Check equalization. See Minor Adjustment (2).

Pontiac (1936-38). With brake shoes in rear wheels expanded so that wheels can just be turned by hand, place hand lever in first notch, adjust clevis at forward end of each wheel cable until clevis pin can just be inserted with approximately 25 lbs. pull on cable. Back off adjusting screw at each wheel until wheel is just free of any brake drag, equalize brakes—see Minor Adjustment (2).

Pontiac (1942-48): Check brake cable tension by moving clevis pin at cross lever wheel cable spreader, pin should move up and down with thumb and finger pressure (hand lever in released position, rear wheel brake shoes not expanded), and both rear wheels should lock with hand lever in third notch. To adjust, remove cross lever clevis pin and engage pin in another of the several holes in the cable spreader (approximate setting), remove hand lever clevis pin and turn clevis on cable (exact setting) using extreme care not to twist the cable. To equalize wheel cables after adjusting, loosen clampscrews on wheel cable spreader at cross lever (if necessary pry clamp ears apart with a screwdriver so that cable free in spreader), apply brakes hard by pulling back on hand lever, tighten spreader clampscrews before releasing hand lever.

MAJOR (NEW LINING) ADJUSTMENT

Major Adjustment (For New Shoes or Relined Brakes):—If shoes with new linings being installed, adjusting screw and eccentric adjustment must be backed off to allow drums to be installed. Disconnect parking brake cables, remove adjusting screw cover on backing plate and inspection hole cover on drums. Adjust brakes at each wheel as follows:

1. Anchor Pin & Eccentric Adjustment (All Models). Loosen eccentric locknut, turn eccentric in direction of forward wheel rotation until .010" feeler is just snug at adjusting screw end of this secondary shoe, hold eccentric from turning and tighten locknut. Check clearance at anchor pin end (opposite end) of this same shoe. If clearance not .010", adjust anchor pin as follows: Loosen anchor pin locknut one turn, turn anchor pin in direction of forward wheel rotation (eccentric type with slotted end) or tap anchor pin out toward drum (slotted hole type with plain end) until clearance at anchor pin end of shoe is exactly .010", hold anchor pin from moving and tighten locknut securely with 16" wrench. Recheck clearance at adjusting screw end of shoe. Make any necessary readjustments at eccentric and anchor pin until .010" clearance secured at both ends of this shoe. Then proceed with adjustments (2) and (3) as given under Minor (Wear) adjustment above.

RELINING BRAKES:—Manufacturer recommends use of replacement shoes furnished with new linings installed and ground concentrically. If shoes relined, use same type lining as fitted originally (see Car Model article). Lining on primary and secondary shoes may be of different types (woven on primary, moulded on secondary, etc.), or of different lengths. Shoes may be identified by 'P' (primary), 'S' (secondary) stamped on rib.

SERVICING:—**Linkage**—Lubrication of cables same as for mechanical brakes. See preceding article.

Brake Drum Grinding. On all Buick, Cadillac, Oldsmobile models, not more than .030" should be removed from drum. Removing of greater amount will weaken drum and may cause distortion. On Pontiac models, manufacturer recommends that drum be replaced if seriously scored.

Master Cylinders & Wheel Cylinders:—See separate article on Hydraulic Brake Servicing for data.

BENDIX HYDRAULIC–SINGLE ANCHOR (WITHOUT ECCENTRIC ADJUSTMENT)

Buick, All Series (1939 to 1948)
Cadillac V8, 60S, 61 (1939); 60S, 62, 72 (1940)
Cadillac V8, All Series (1941 to 1948)
Hudson 6 & 8, All Models (1941 to 1948)
La Salle V8, All Series (1939-40)
Nash Amb. 6, All Models (1940 to 1948)
Nash Amb. 8, All Models (1941-42)
Nash-Lafayette, Model 4010 (1940)
Oldsmobile 6, All Models (1939 to 1948)
Oldsmobile 8, All Models (1940 to 1948)
Packard Clipper, Model 1951 (1941)
Packard "110" 6, All Models (1940-41)
Packard Clipper 6, All Models (1942 to 1947)
Packard "120" 8, All Models (1940-41)
Packard Clipper 8, All Models (1942 to 1948)
Packard Super 8, "160" 1803 (1940), 1903 (1941)
Packard Super 8, "160" 2003, 2023 (1942)
Packard Super 8, All Models (1946-47-48)
Packard Cust. 8, "180" 1806 (1940), 1906 (1941)
Packard Cust. 8, "180" 2006 (1942)
Packard Cust. 8, All Models (1946-47-48)
Pontiac 6 & 8, All Models (1939-40-41)

SPECIAL SERVICE NOTES

Buick 1939. First cars are provided with eccentric adjustment but eccentric is turned and locked in position so that it is inoperative and short secondary shoe spring (hooked between center of secondary shoe and backing plate—normally used with eccentric adjustment) is not used.
CAUTION—On these models, eccentric must not be disturbed and brakes must be adjusted in special manner as directed below.

Cadillac, Hudson, Nash, Oldsmobile, Packard Super 8, Pontiac (Other Models). Models not listed above have Bendix Hydraulic Brakes with Eccentric adjustment. See preceding article.

Hudson Pedal Connection Change (for less sensitive brakes but with harder pedal action, particularly at low speeds)—The brake pedal link action, particularly at low speeds, brake pedal link may be changed to right hand hole in master cylinder operating lever. On all production cars, link is regularly assembled in left hand hole for soft pedal action.

Oldsmobile Wheel Cylinder Stops—Stops are formed on backing plate which prevent pistons being forced out of wheel cylinder for any reason. These stops make it unnecessary to use piston clamps to retain pistons when brake drums and shoes are removed but wheel cylinder must be removed from backing plate before it can be dismantled or pistons taken out.

Pontiac Wheel Cylinder Piston Stops—Stops are provided on backing plate which prevent pistons being forced out of cylinder when drums or shoes removed. These stops make it unnecessary to use piston clamps to retain pistons when drums and shoes removed but wheel cylinder must be removed from backing plate before it can be dismantled or pistons taken out.

Pontiac Adjusting Hole Covers—Special rubber covers used on Late 1939 and all later models may be installed on previous cars to close adjusting hole slot on backing plate. Covers have lip on inner edge to engage slot in backing plate and may be removed by prying out with screwdriver. To install covers, moisten with water or brake fluid (do not use oil), start one end in adjusting hole slot and strike with hammer to seat cover in hole.

DESCRIPTION

DESCRIPTION:—These brakes similar to other Bendix single anchor designs except that secondary shoe eccentric not used (see Buick Note & Caution above) and short spring between secondary shoe and backing plate (used normally to hold shoe against eccentric) is omitted. This design requires special adjustment instructions as given below.

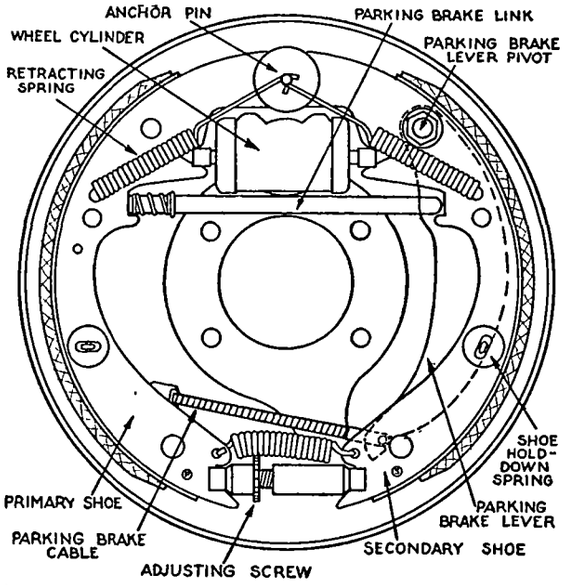

REAR BRAKE ASSY. (FRONT SAME EXCEPT HAND BRAKE LINKAGE OMITTED)

Special Features (1942 & Later Cars)—Brakes on these models differ from earlier cars as follows:

Buick Hand Brake Lever—New StepOn type with inverted pedal suspended from dash for foot operation. Brakes can be locked in applied position for parking by pressing in on release knob under instrument panel flange on left side and can be released by pulling out on this button.

Cadillac Hand Brake Lever—New type 'T' handle which is pulled straight out to apply parking brakes. Lever locks in any position and can be released by turning handle counter-clockwise.
NOTE—Beginning in 1946, ratchet engagement changed to insure more positive action and to prevent incorrect assembly. Tube and ratchet housing fit also changed to prevent binding, and release spring redesigned.

Oldsmobile Eccentric Anchor Pin Adjustment—Anchor pin on 1942 & later cars has square shank for wrench engagement (previous type slotted for screwdriver). End of shank is beveled on one edge and high point or edge which is not beveled indicates high point of eccentric anchor adjustment.

ADJUSTMENT:—Before adjusting, jack up all four wheels, loosen or disconnect parking brake cables at intermediate lever or equalizer, remove adjusting screw hole cover on backing plate. Check brake pedal clearance (see Brake Pedal Adjustment below). Adjust each wheel brake as directed below.
CAUTION—If hand brake cables not disconnected, shoes may be held on by cables (if adjusted too tight) and correct adjustment cannot be secured.

MINOR (WORN LINING) ADJUSTMENT (EXCEPT CADILLAC, LA SALLE, PACKARD)

Minor Adjustment—For Wear (Except Cadillac, LaSalle, and Packard Models):—At each wheel, make certain that anchor pin nuts are tight, insert special tool or screwdriver through adjusting hole on backing plate, turn notched adjusting screw by moving tool handle up toward center of wheel until brake drum can just be turned by hand. Adjust and connect hand brake cables (see Parking brake adjustment below). Back off adjusting screw approximately 17 notches or 'clicks' (Buick models), 14 notches (All Hudson, Nash, Pontiac), 20 notches (All others) until shoes are just free and drum revolves without any brake drag (tapping backing plate may assist in centralizing shoes and eliminating drag). If brakes are not free after making this adjustment, or if shoes drag at anchor pin end, adjust anchor pin as directed in Major Adjustment
Hudson Note—Adjust mechanical 'Follow-up' setting after adjusting brakes. See separate article on 'Hudson Mechanical Follow-up' for instructions.

HAND BRAKE ADJUSTMENT

Parking Brake Adjustment—Before connecting hand brake cables, adjust cable lengths on each model as follows:

Buick. With rear wheel brake shoes expanded so that drums can just be turned, tighten adjuster nut on rear end of hand lever cable (at wheel cable equalizer on torque tube near rear axle) until cables are taut with hand lever in released position, back off adjusting screw in each wheel 15 notches so that wheels free of any brake drag, check equalization by applying brakes with hand lever until drums can just be turned. Equalize wheels by backing off adjusting screw in tight wheel not more than 2 notches (if this does not equalize wheels, check centering of wheel cables in equalizer).
NOTE—On 1940 Buick models, parking brake lever has two holes for brake cable attachment. Standard setting is with cable attached to upper bolt but cable can be shifted to lower hole for less lever movement (results in harder operating brake).

Hudson—With rear brake shoes expanded tightly against drum, pull hand lever 'on' two notches so that clearance between hand brake cable lever and end of slot in guide plate is ⅛", pull cables tight, adjust clevis at forward end of each cable so that clevis pins just enter holes in toggle on lever, connect cables, back off adjusting screw in each wheel until wheels are free, check equalization.

Nash. With rear brake shoes expanded tightly against drum, pull hand lever 'on' 2 notches, loosen two bolts on adjusting clamp (connecting lever and wheel cables), pull cables tight and tighten bolts. Return lever to 'off' position. Back off adjusting screw in each wheel to free brakes and check equalization. See that hand brake lever on each wheel backing plate has ⅛" free travel with hand lever in off position. Equalize hand brakes by loosening rear bolt in cable adjusting clamp and applying hand brakes (this will allow cable to shift on adjusting clamp). Check position of hand brake cable guide on rear spring. Guide should be exactly 19¾" (1940), 17½" (1941 & later models) to rear of spring front eye bolt center line.

CONTINUED N NEXT PAGE

BENDIX HYDRAULIC (C nt.)

Oldsmobile. With rear wheel brake shoes expanded so that drums can just be turned, pull wheel cables forward to eliminate all slack, adjust clevises on forward ends of cables so that clevis pins can just be inserted with equalizer link held parallel to propeller shaft, connect cables (insert clevis pins with head toward top), back off adjusting screw in each wheel approximately 20 notches until wheels are free, check equalization.

Pontiac. Check hand brake cable tension by moving clevis pin at cross lever wheel cable spreader, pin should move up and down with thumb and finger pressure (hand lever in released position, rear wheel brake shoes not expanded), and both rear wheels should lock with hand lever in third notch. To adjust, remove cross lever clevis pin and engage pin in another of the several holes in the cable spreader (approximate setting), remove hand lever clevis pin and turn clevis on cable (exact setting) using extreme care not to twist the cable. To equalize wheel cables after adjusting, loosen clampscrews on wheel cable spreader at cross lever (if necessary pry clamp ears apart with a screwdriver so that cable free in spreader), apply brakes hard by pulling back on hand lever, tighten spreader clampscrews before releasing hand lever.

MINOR (WORN LINING) ADJUSTMENT (CADILLAC, LA SALLE, PACKARD ONLY)

Minor Adjustment—For Wear (Cadillac, LaSalle, Packard Models): — Manufacturer recommends that adjusting screw and anchor pin be adjusted to secure .015" clearance at each end of secondary shoe as directed under 'Major Adjustment' below (wheels must be removed for this adjustment). Then adjust Parking Brake as follows:

Cadillac, LaSalle (1939-40)—With rear brake shoes expanded so that rear wheels can just be turned by hand, make certain that hand lever in 'off' position, pull cables taut and adjust clevises so that clevis pins can just be inserted. Connect cables and back off adjustment at shoes 15-20 notches until wheels are just free. Check equalization.

Cadillac (1941). With brakes released (shoes not expanded in drums), loosen nut on rear end of hand lever cable rod at wheel cable sheave. Expand rear wheel brake shoes by turning adjusting screw at each wheel until drums can just be turned by hand. See that hand lever in fully released position, tighten nut at rear wheel cable sheave (locknut must be backed off to permit this adjustment) until cables are taut, tighten locknut. Back off adjusting screw in each wheel 15-20 notches so that wheels are free.

Cadillac (1942-48). CAUTION—Do not change position of brake shoe adjusting screw when making this adjustment. With service (foot) brake fully released, loosen nut on end of hand lever cable rod end at wheel cable equalizer in "X" member under car, see that hand lever in fully released position, tighten nut at equalizer until cables are taut, tighten locknut. See that rear wheels free of drag.

Packard Models. With rear brake shoes expanded so that drums can just be turned by hand, pull hand lever on to first notch, pull each rear wheel cable forward with 20 lbs. pull to take up all slack and lost motion, adjust clevis on forward end of each cable so that clevis pin can just be inserted in equalizer link with link centered, connect cables. Back off adjusting screw in each rear wheel until drums turn freely without drag, check equalization. Equalize by backing off adjusting screw in tight wheel slightly.

MAJ R (NEW LINING) ADJUSTMENT (ALL MODELS)

Major Adjustment (For New Shoes, Relined Brakes or when Minor Adjustment not satisfactory):—Jack up all four wheels, loosen or disconnect parking brake cables at equalizer or intermediate lever, remove adjusting screw hole cover on backing plate and inspection hole cover on drums (remove wheels for access). Check pedal clearance (see Brake Pedal Adjustment below). Adjust each wheel brake as follows. CAUTION—If hand brake cables not disconnected or loosened, shoes may be held on by cables (if adjusted too tight) so that correct brake adjustment cannot be secured.

Anchor Pin & Adjusting Screw Adjustment—Turn drum so that inspection hole is at center of secondary shoe (rear shoe on each wheel), insert screwdriver and pry secondary shoe away from drum so that primary shoe (other shoe) is seated solidly against drum. Insert screwdriver or special adjusting tool in hole on backing plate and turn notched adjusting screw by moving handle of tool up toward center of wheel until .015" feeler is snug between lining and drum at adjusting screw end of secondary (rear) shoe. Check clearance at anchor pin (opposite) end of this same shoe. If clearance not .015", adjust anchor pin by loosening locknut and tapping anchor out toward drum (slotted hole type with plain end) or turn anchor pin in direction of forward wheel rotation (eccentric type with slotted end) until .015" clearance secured, hold anchor pin from shifting and tighten locknut securely with 16" wrench. Recheck clearance at adjusting srew end of shoe. Make any necessary re-adjustments at adjusting screw and anchor pin to secure clearance of .015" at both ends. It is very important that primary shoe be out in solid contact with drum while this adjustment being made. Adjust hand brake cables as directed in Parking Brake Adjustment under Minor Adjustment above.

CAUTION—When checking clearance with feeler gauges, gauge should be inserted approximately 1½" from end of shoe lining.

BRAKE PEDAL ADJUSTMENT

Brake Pedal Adjustment: On all models, pedal must be adjusted to insure master cylinder piston being back against its stop (within master cylinder) for correct compensating action when brakes released. To adjust, loosen locknut on piston connector rod, turn clevis on rod to secure clearances specified below with master cylinder piston against the stop.

Buick. Clearance between pedal and underside of toeboard should be ⅞" (all 1939 models, 50,70,80,90 (1940), 1 1/16" (40, 60 '40), 1" (1941 & later cars).

Cadillac, LaSalle. Rubber grommet on pedal under toeboard should be compressed to ¾" with brakes released and master cylinder piston against its stop.

Hudson Models—Clearance between pedal shank and underside of toeboard should be ¼" with brakes released. To adjust, remove clevis pin at forward end of connecting link (between pedal and master cylinder bellcrank), loosen locknut, turn link

Nash—Brake pedal should have ¼-½" free movement or play in released position.

Nash Hand Brake Pulley Adjustment—When adjusting hand brake, first check position of hand lever cable pulley on front of dash (in engine compartment) and adjust cable position on pulley so that upper rear edge of pulley (segment type) is exactly 1⅝" from top of pulley bracket upper mounting screw with hand brake lever in fully released position. Then adjust hand brake in usual manner (adjustment located at wheel cable equalizer clamp under car).

NOTE—On 4860 cars, and 4760 after Serial No. R-451662, an aligning pin hole is provided in the pulley bracket. The pulley can be correctly located by using J-1390 Gear Shift Aligning Pin.

Oldsmobile. Sponge rubber pedal bumper on underside of toeboard should be compressed not more than 1/16" (1939-40), 3/16" (1941 & later cars) with brakes released and master cylinder piston against its stop.

Packard — Brake pedal should have ¼-½" free movement or play in the released position.

Pontiac—Pedal height should be adjusted so that brake pedal is even with clutch pedal. Distance from floor mat to pedal pad should be as follows:

Special Six 40-25	5⅛"
Deluxe Six 40-26, Eight 40-28	4¾"
Torpedo Eight 40-29	5"
Del. Torpedo Six 41-25, Eight 41-27	4 3/16"
Cust. Torpedo Six 41-24, Eight 41-29	5 3/16"
Streamliner Torpedo 6 41-26, Eight 41-28	5 3/16"

SERVICING:—All servicing operations including Bleeding of Lines, Brake Shoe Removal & Installation (except eccentric and short secondary shoe spring data which should be disregarded), Master Cylinder & Wheel Cylinder Overhaul are same as on other Bendix brake installations. See preceding article on Bendix Duo-Servo, Single Anchor Type With Eccentric and separate article on Hydraulic Brake Servicing for complete data.

Pontiac Wheel Cylinders—Wheel cylinders of two different lengths are installed at factory and special backing plates (with narrow or wide piston stops to fit each type wheel cylinder) are used with each cylinder. Backing plate with narrow stop dimension only is furnished for service and stops must be filed out 1/16" on each side when service backing plate used with longer wheel cylinder.

Lining Specifications—See Brake specifications on car model page for complete data.

HUDSON MECHANICAL FOLLOW-UP

Hudson 6 & 8, All Models (1936 to 1948)
Terraplane, All Models (1936-37-38)

DESCRIPTION AND OPERATION:—Consists of ver-running mechanical linkage between brake pedal and hand lever equalizer bar plate by which wheel brakes are set mechanically through hand lever or parking linkage after movement of pedal sufficient to operate brakes hydraulically has taken place. Acts as reserve if hydraulic application fails or when pedal travel excessive.

ADJUSTMENT:—See that master cylinder operating lever is against stop (brake pedal stop) and that rear brake cable equalizer bar plate is against stop on bracket, loosen locknut on threaded follow-up rod below brake pedal, turn adjusting nut until clearance between face of nut and front end of pushrod tube is 1 29/32" (all 1936-37 models), 1 7/16" (1938-39), 1¼" (1940 on), tighten locknut. This will provide correct lag between hydraulic application of brakes and mechanical follow-up.

1948 Note—1¼" measurement should be made from clevis pin in idler lever and rear end of slotted link on brake pedal follow-up pull rod.

LOCKHEED HYDRAULIC SINGLE ANCHOR

CORD, MODELS 810 (1936), 812 (1937)
STUDEBAKER CHAMPION, ALL MODELS ('39-42)
STUDEBAKER CHAMPION, MODEL 5G (1946)
WILLYS-OVERLAND, MODEL 39 (1939)

DESCRIPTION:—These brakes similar in design to other Lockheed Hydraulic types except for Anchor

Anchor Pin—Single anchor pin used with both brake shoes pivoting on this same pin. Anchor pin has double eccentric section so that both shoes are moved out toward drum when pin is turned for major brake adjustment.

ADJUSTMENT:—Before making adjustments, jack up all four wheels, check pedal clearance or free travel (see Brake Pedal Adjustment below), release hand brake. Then adjust brakes at each wheel as follows:

Minor Adjustment (For Wear):—Install wrench on eccentric adjusting cam on backing plate with wrench handle up, turn cam by moving wrench handle out toward wheel until shoe contacts drum (brakes drag when wheel revolved), then turn cam in opposite direction until wheel is just free of any brake drag. Adjust all eccentric cams in this manner (one cam for each shoe, two cams on each backing plate). Cams are held in position by spring tension and no locking nuts are used.

Major Adjustment (For new linings, etc.):—With wheels removed, rotate brake drums so that inspection hole in drum is at heel (anchor pin end) of shoe, loosen eccentric anchor pin locknut, turn anchor pin until clearance between lining and drum is exactly .005" (measured with feeler gauge 1½" from end of lining). Check to see that heel clearance of opposite shoe is likewise .005", tighten anchor pin locknut. Turn drum so that slot is 1½" from end of lining at toe end of shoe, adjust eccentric cam (as directed under Minor Adjustment above) so that clearance is exactly .010". Recheck clearance at anchor pin end and make any necessary re-adjustments to secure correct clearance at both ends of shoe. Adjust eccentric cam on opposite shoe, then repeat adjustment at other wheels.

Brake Pedal Adjustment:—Pedal must have ¼" min., ⅜" max. free travel to insure master cylinder piston being back against its stop (in cylinder) for correct compensating action when brakes released. To adadjust, loosen locknut and turn large adjusting nut on master cylinder end of connector rod.

Parking Brake Adjustment:—Check whenever brakes adjusted. Adjust parking brake as follows:

Cord, Willys Models—To adjust hand brake, pull hand lever 'on' three notches. Adjust yoke on forward end of each wheel cable to eliminate all slack, re-connect cables, release hand brake lever, check rear wheels to see that they rotate freely without any drag. Equalize wheels by making slight re-adjustment at wheel cable yoke for tight wheel.

Studebaker—With hand lever in second notch 'on' position, remove pin linking brake cable to parking brake lever on each rear wheel backing plate, pull on cable to eliminate slack and press forward on lever to take up play, install pin through holes in lever and cable end which line up with slight drag noticeable at wheel. Adjust both wheels in same manner, then release hand lever, check to see that both wheels free from any drag.

SERVICING:—Except for shoe removal and installation, all service operations including Bleeding of Lines, Master Cylinder & Wheel Cylinder Overhaul are same as for other Lockheed Brakes. See following article on Lockheed Double Anchor Type and article on Hydraulic Brake Servicing.

Brake Shoe Removal & Installation. To remove brake shoes for relining or servicing, remove anchor pin locknut on backing plate, free 'C' washer and remove plain washer on guide pin at center of each shoe, pull toe end of shoe free of wheel cylinder piston slot and boot. Remove 'C' washer on anch r pin, remove shoe. Reassemble shoes in same manner.

Wheel Cylinder Installation. Wheel cylinder on front wheels has greater diameter than rear wheel cylinder. Use extreme care not to interchange cylinders which would cause badly unbalanced brake

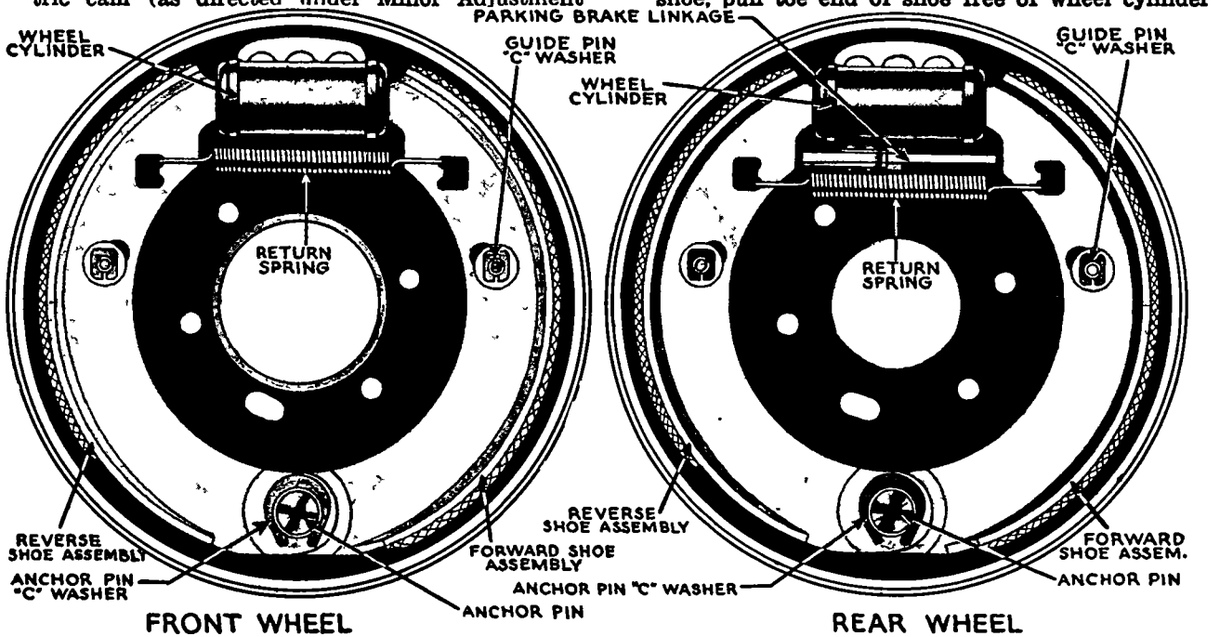

LOCKHEED (DUESENBERG) HYDRAULIC

MODELS J & SUPERCHARGED SJ (1936-37)

DESCRIPTION AND OPERATION:—Wheel Brakes—Two shoes per wheel, mounted on anchor pins on lower support bracket at lower end and operated through reducing lever or toggle (linked by toggles to each shoe) by single piston in wheel cylinder. Adjustment provided on toggle lever at toe of shoe. Shoes returned to 'off' position by single retracting spring hooked between shoes.

Wheel Cylinder:—Cylinder mounted vertically (integral with steering knuckle pivot pin casting in front wheels) with single acting piston which is forced up when brake fluid, displaced from master cylinder by pedal operation, flows through lines. Toggle arm lever contacts piston directly.

Master Cylinder:—Compensating type mounted within supply tank and operated through crank on shaft linked to brake pedal. Similar to other Lockheed designs (see Lockheed article) except that secondary piston cup and bleeder holes in piston not used. Compensating action secured by free flow of fluid between master cylinder and supply tank through by-pass port with piston in 'off' position.

Hand Brake:—Independent type mounted at rear of transmission. See adjustment instructions below.

ADJUSTMENT:—Bleeding Lines—See Lockheed article

Pedal Clearance:—With pedal released and against toeboard, disconnect pedal linkage by taking out clevis pins and see that master cylinder piston is in fully returned position. Adjust by shifting position of master cylinder lever (attached to adjusting plate to which pedal links are connected).

Brake Shoe Clearance:—Jack up all four wheels. Remove plates on inside dust cover on front wheels marked 'Adjust Brakes Here', remove upper section of inside dust cover on rear wheels by taking off 2 nuts and removing 2 capscrews for each section.

1—At each wheel, loosen locknut on long toggle link, turn adjusting screw in opposite direction to expand shoes until brake drags slightly. With all wheels set for slight drag, depress foot pedal firmly. This will centralize shoes and wheels should be free. Repeat this operation until slight drag remains after pedal is released. Then back off adjusting nut exactly ½ turn at each wheel, tighten locknut.

Hand Brake Adjustment:—Loosen screw in equalizer sleeve at center of cross-shaft above brake at rear of transmission. Tighten adjusting nut until hand lever locks brakes when placed in fifth notch, tighten equalizer screw before releasing brake.

SERVICING:—Removing Brake Shoes—Remove brake drums (rear drums removed as unit with axles), remove inside dust covers, removing toggle pins at both ends of each shoe, disconnect retracting spring.

Wheel Cylinders:—Remove brake drums, use lever and lift toggle arm up and to rear shifting brake assembly slightly. Piston may then be withdrawn from cylinder (removal will be easier if bleed screw opened). Bleed lines when cylinders reassembled.

RELINING BRAKES:—If ring gauge or dummy shoe used to check clearance when shoes with new lining installed, shoe clearance should be .005-.008" at toes.

LOCKHEED HYDRAULIC DOUBLE ANCHOR

CHRYSLER 6, ALL MODELS (1936-42)—SEE NOTE
CHRYSLER 8, ALL MODELS (1936-39)—SEE NOTE
DE SOTO, ALL MODELS (1936-42)—SEE NOTE
DODGE, ALL MODELS (1936-42)—SEE NOTE
GRAHAM, ALL MODELS (1936-41)
HUPMOBILE 6 & 8, ALL MODELS (1936-40)
JEEP, FORD & WILLYS (ARMY) MODEL (1942-45)
NASH 6 & 8, ALL MODELS (1936-39)
NASH "600", ALL MODELS (1941 to 1947)
NASH-LAFAYETTE, ALL MODELS (1937-38-39)
PLYMOUTH, ALL MODELS (1936-42)
STUDEBAKER, DICTATOR MODELS (1936-37)
STUDEBAKER, COMM. MODELS (1936 to 1942)
STUDEBAKER, PRES. MODELS (1936 to 1942)
WILLYS AMERICAR, PASS. CARS (1940-41-42)
WILLYS, COMM'L MODELS (1941-42)
WILLYS UNIVERSAL JEEP, CJ-2A (1946-47-48)

NOTE: 1942 Chrysler 6, DeSoto, & Dodge 7-Passenger Models. Brakes on these models are special type (Two-cylinder type on front wheels, single double acting cylinder type on rear wheels) of same design used on all 1946 and later models. See following article for data on these models.

1946-47 Chrysler 6, DeSoto, Dodge, & Plymouth Models. Brakes on these models are special type (Two cylinder type on front wheels, single double acting cylinder type on rear wheels). See following article on Lockheed-Chrysler Special Type Brakes for all data on these models.

1940-47 Chrysler Eights. Brakes on these models are Special type (See Chrysler 6 Note above).

Nash Models. Bendix Hydraulic Brakes, Single Anchor type, used on some cars. See Bendix Hydraulic Brake article for data on these cars.

Studebaker Models. Model 7A was called 'Six' in early 1938, 'Commander' for later cars. Model 8A was called 'Commander' in early 1938, 'State Commander' model for later cars.

Studebaker Champion. Brakes on this model are Lockheed Single Anchor type (see following article for complete data).

Willys Models. Double anchor brakes are used on Passenger Car Models only (1940), All Models (1941-42). Brakes on 1940 Commercial Models (& Passenger Cars before 1939) are Bendix Mechanical Single Anchor type (see separate article for complete data). Brakes on Model 39 (1939) only are Lockheed Single Anchor type (see following article for data on this type).

Willys Jeep Station Wagon & Trucks—Brakes on these models are Lockheed "Self-centralizing" type. See separate article for data on these models.

SPECIAL SERVICE NOTES

Chrysler, De Soto, Dodge, Plymouth Brake Anchor Pin Position Marks (1939-42 Cars). Anchor pins on these models marked by arrow on inner end (visible with drums removed) so that point of minimum adjustment can be readily secured by turning pins so that arrows points toward each other (see special anchor pin adjustment instructions below).

Jeep (Ford & Willys) Models—Eccentric adjusting cams have locknuts which must be loosened before adjustments can be made. Slots are provided in brake drums so that lining clearance can be measured directly by inserting feeler gauge through slot.

Studebaker Models—Anchor pins on front wheel brakes are special type which require Allen wrench for adjustment (end of pin has recess for wrench engagement). Use Allen wrench with dimension of ¼" across flats of hexagonal end section to adjust these pins.

Willys Models—Eccentric adjusting cams are fitted with locknuts which must be loosened before adjustments can be made (eccentrics held by spring tension on other models). Drums are provided with slots which are accessible after wheels removed so that lining clearances can be measured directly by inserting feeler gauge through slot.

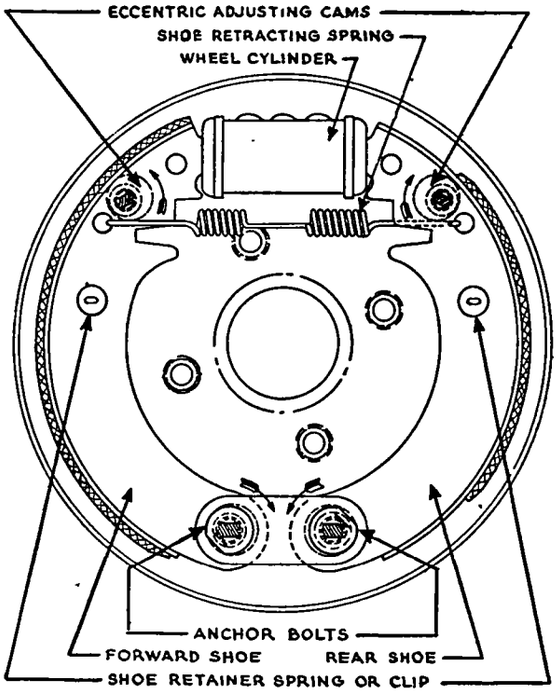

FRONT & REAR BRAKE ASSY. (HAND BRAKE LINKAGE NOT SHOWN)

DESCRIPTION

DESCRIPTION AND OPERATION:—Wheel Brakes—Two shoes per wheel, mounted on independent eccentric anchor pins at the lower or "heel" end and bear directly against the opposed pistons of stationary wheel cylinder at the upper or 'toe' end. Shoes are forced out against drum at toe end by fluid displaced from master cylinder and flowing through brake lines to wheel cylinder when brake pedal is depressed. No self-energizing action is employed and self-energizing effect of forward brake shoe ordinarily offset by using longer length lining on this shoe or by using 'stepped' wheel cylinders with smaller diameter forward shoe piston and larger diameter piston for rear shoe. Brakes are returned to 'off' position against eccentric stops by retracting spring connected between shoes at toe end.

Wheel Cylinder:—Rigid type m unted n backing plate with opposed pistons bearing directly on toe ends of brake shoes. Pistons sealed by rubber caps held against piston head by central spring.

Master Cylinder:—Compensating type with integral supply tank. Supply tank is directly above master cylinder and is connected to it by two ports (1) bypass port uncovered when piston is in 'off' position so that fluid may flow freely in or out of master cylinder to compensate for any loss, and to prevent back-pressure due to expansion of fluid in system and (2) supply port by which additional fluid is drawn down and through holes in the piston and past the lip of the piston packing cup when brake pedal is released so that cylinder is always full of fluid and ready for repeated brake action even before fluid in system is returned to master cylinder by retracting wheel cylinder pistons caused by shoe springs. Master cylinder requires no attention other than keeping supply tank more than one half full of fluid at all times. Brake pedal clearance should be checked (see directions below) but will not change in service.

NOTE—Wheel cylinder must be 'bled' whenever brake line to that particular wheel is disconnected, and entire system (all four wheels) must be 'bled' whenever brake lines are disconnected at master cylinder to remove all air in system and correct springy brake action.

Bleeding Brake System. Remove cap, fill master cylinder supply tank with genuine brake fluid, remove bleeder capscrew on backing plate directly above hose coupling, screw in standard bleeder drain tube (combination valve wrench and tube connection), allow tube to hang in clear jar, unscrew bleeder connection ¾ turn, depress brake pedal slowly ½ of travel, return slowly to off position, repeat operation until flow of fluid from wheel cylinder is free from all air bubbles, usually six strokes. Keep supply tank filled with fluid (entire system must be 'bled' if supply tank drained). Do not use fluid bled from system. Remove bleeder connection and replace capscrew. Repeat at other wheels to bleed entire system.

Hand Brake:—When incorporated in rear wheels consists of cable operated lever pivoted on one brake shoe and connected to other shoe through link or strut so that toes of both shoes are forced out against drum when hand lever is applied. Adjustment should be checked whenever brake adjustments are made.

ADJUSTMENT:—Before making adjustments, jack up all four wheels, check brake pedal clearance or free travel (See Brake Pedal Adjustment below), release hand brake and make certain that rear wheels are free, check pedal travel (Chrysler, DeSoto, Dodge, Plymouth—see Note below), then adjust at each wheel as directed below (Minor or Major adjustm't).

1940-42 Chrysler, DeSoto, Dodge, & Plymouth Note. Total pedal travel on these models should be 1⅞-2¼" (1940 Chrysler 6, DeSoto, Dodge, Plymouth), 1⅝-2" (1940 Chrysler 8), 1¾-2" (All 1941-42 Models —this includes free play of ⅛-¼" and ⅝-¾" additional travel before master cylinder primary cup closes off relief port and begins to apply brakes). If Minor Adjustment (below) does not give correct pedal travel, or if relief port is cut off with less than ¾" pedal travel, brake pedal adjustment (free play) should be checked.

C NTINUED N NEXT PAGE

LOCKHEED HYDRAULIC (C nt.)

MIN R (W RN LININ) ADJUSTMENT

Minor Adjustment (For Wear):—Jack up all four wheels, release hand lever, see that rear wheels are free. At each wheel, turn up eccentric on each shoe (move wrench toward wheel rim when installed on eccentric nut upward) until shoe contacts drum, then back off eccentric slightly until wheel rotates freely in both directions with no drag. Eccentric held in position by spring tension. Check hand brake setting and adjust if necessary.

Jeep (Ford & Willys) Note—Eccentric is locked by a locknut on the backing plate which must be loosened before the eccentrics can be adjusted. After completing adjustment, hold eccentric from turning while tightening locknut.

Willys Note—On this model, eccentric is locked by a locknut on the backing plate. Locknut should be loosened before eccentrics are adjusted. Hold eccentric from turning while tightening locknut after adjustment completed. On all other models, eccentrics are held in position by spring tension and locknuts are not used.

MAJ R (NEW LINING) ADJUSTMENT

Major Adjustment (For New Linings):—Dummy drum with cut-away section, ring gauge or other type adjusting tool must be used. Release hand lever and check hand brake clearance or disconnect hand brake cables, install dummy drum or ring gauge, turn so that gauging point is at heel (anchor pin end of shoe), loosen anchor pin locknut on backing plate and turn anchor pin (see special directions below for Chrysler, DeSoto, Dodge, Plymouth, Jeep, Willys) until clearance between lining and gauge is correct (see table below) at point 1½" back from heel of shoe, tighten anchor pin locknut. Turn gauge to toe (opposite end of shoe), adjust eccentric cam as directed under Minor Adjustment above until clearance between lining and gauge is correct (see table below) at point 1½" back from end of lining. Adjust each shoe in each wheel in this manner, adjust hand brake cables (where parking lever applies rear wheel service brakes) as directed in Parking Brake section below.

Brake Shoe Clearances

Car Model	Heel (Anchor End)	Toe (Cyl. End)
Chrysler 6 & 8	.006"	.012"
DeSoto	.006"	.012"
Dodge	.006"	.012"
Graham	.006"	.010"
Hupmobile	.005"	.010"
Jeep	.005"	.008"
Nash (1936-40)	.005"	.010"
Nash (1941 on)	.004"	.008"
Plymouth	.006"	.012"
Studebaker	.005"	.010"
Willys (1940-41)	.005"	.010"
Willys (1942 on)	.005"	.008"

1939-42 Chrysler, DeSoto, Dodge, Plymouth. Inner ends of anchor pins are marked by an arrow and flattened so that adjusting wrench can be applied at this end of pins. Before making adjustment, loosen anchor pin bolt nuts on backing plates, turn each anchor pin so that arrows line up with arrow heads together. Then adjust anchor pins by turning right hand pin counter-clockwise, left hand pin clockwise (pins turned toward each other at top) to secure correct clearance. CAUTION—Shoes will not be centralized in drum (even though set for correct clearance) unless anchor pin arrows lined up first and adjustment made exactly as specified abov .

Chrysler Brake Gauge Note—When using MT-19-C Brake Gauge to set clearances on these brakes, after setting up gauge to specific "DRUM" Measurement for each wheel, proceed as follows: Place gauge in position on wheel spindle, turn gauge finger so that mark "HEEL" is uppermost, position gauge finger over heel (anchor pin) end of shoe, adjust anchor pins so that lining contacts gauging surface of finget. Rotate gauge to toe (cylinder) end of shoe, turn gauge finger so that mark "TOE" is uppermost, adjust eccentric cam until lining contacts gauging surface of finger. Recheck heel or anchor pin end of shoe and readjust as necessary. NOTE—Pointed edges of gauge finger are the gauging points and mark is on opposite side so that when mark is uppermost, gauging point is down toward lining. This gauge is designed for .006" heel clearance (mark "HEEL" uppermost) and .012" toe clearance (mark "TOE" uppermost).

Jeep (Ford & Willys) Model—Slot provided in brake drum so that feeler gauge can be inserted to check lining clearance. To use feeler gauge, turn drum so that slot is at gauging point (1½" from end of lining on shoe).

Willys Models. Slot provided in brake drum so that feeler can be inserted to check lining clearance. To use feeler gauge, turn drum so that slot is at gauging point (1½" from end of lining on shoe).

HAND BRAKE ADJUSTMENT

Parking Brake:—Adjust when service brakes are adjusted or new shoes installed. For all models except as noted below, pull hand lever up three notches. Shorten each brake cable by turning turnbuckle at forward end until slight drag felt on rear wheels. Release hand lever, check to see that wheels rotate freely without drag. Brakes can be equalized by pulling up lever until wheel with least drag can just be turned, slack off cable to tight wheel.

NOTE—On all models with independent parking brake on propeller shaft at rear of transmission, see individual car model page (or Special Shop Notes) for parking brake adjustment instructions.

All Chrysler, De Soto, Dodge and Plymouth Models—On these models, when hand lever applies rear wheel service brakes, adjust at each wheel as follows: Place hand lever in released position, loosen support cable bracket cover bolt nut, and adjusting clevis locknut, turn up adjusting nut on clevis (under locknut) until slight drag felt when wheel turned, back off adjusting nut until wheel is free, tighten locknut and support cable bracket cover bolt nut, equalize by setting hand brake so that wheel with least drag can just be turned, slack off adjustment on tight wheeel slightly. With correct adjustment wheels should be free with hand lever released and should have slight drag with lever in second notch.

Graham 80, 80A, 85:—Adjust forward lever at each wheel with hand lever released and cables slack. Loosen locknut and turn adjusting screw 'A' up until clearance between inner end of lever and shoe at 'B' is barely perceptible. Tighten locknut. Then adjust rear levers with hand lever placed in first notch. Loosen locknut and turn up turnbuckle at forward end of cable conduit until all slack is taken up and tension in cable is sufficient to move backing plate end of adjusting screw 'A' away from backing plate at point 'D' slightly. Tension must be same on both rear wheel cables to insure equalization. Release hand lever and check rear wheels.

Graham (Other Models)—With hand lever in released position, remove any slack between hand lever and intermediate lever by adjusting turnbuckle at rear end of hand lever cable. Then pull hand lever on to second notch, adjust each wheel cable by turning the adjusting clevis at forward end of cable until slight drag felt at rear wheels, connect cables and release hand lever. Wheels should be free of any drag.

Hupmobile Models. With the hand brake lever in released position, remove all slack in cable between hand lever and intermediate lever by adjusting turnbuckle at rear end of cable. Then pull hand lever 'on' to second notch, adjust each wheel cable by adjusting turnbuckle at forward end of cable to remove all slack. Release hand lever and check to see that rear wheels rotate freely without any brake drag. Equalize wheels by making slight re-adjustment at wheel cable turnbuckle for tight wheel.

Jeep (Ford & Willys) Model. Hand brake is independent type on drive shaft behind transmission. See car model page for adjustment directions.

Nash Models. Pull hand lever 'on' to second notch, loosen two bolts on adjusting clamp (connecting hand lever cable and wheel cables), pull cables tight and tighten clamp bolts. Release hand lever and check rear wheels to see that they rotate freely without brake drag. To equalize hand brakes, loosen rear bolt in cable adjusting clamp and apply brakes by pulling on hand lever (this will allow wheel cable to shift in adjusting clamp), tighten adjusting clamp bolt. Check position of hand brake cable guide on each rear spring. Guide should be exactly 19¾" (Nash 6, Nash-Lafayette), 18¼" (Nash 8).

Nash (1941-47). Set hand lever two notches 'on', loosen locknuts on wheel cable spreader (hand lever cable connection), remove all slack from cables by pulling forward on wheel cables and to rear on hand lever cable, tighten locknuts. Release hand lever and check to see that rear wheels are free of any drag.

Studebaker 1936-40. With hand lever released, take up slack in hand lever cable by turning turnbuckle brake lever end. Pull hand lever 'on' to second notch. Adjust turn-buckle at forward end of each wheel cable so that slight drag felt at each wheel. Release hand lever and make certain that wheels are free of any brake drag. Equalize brakes by slacking off cable to tight wheel slightly (equalizer link used on former six cylinder models has been discontinued).

Studebaker 1941-46. Set hand lever 2 notches 'on'. Loosen locknuts and turn turnbuckle on hand lever cable (below and to left of transmission) until slight drag noticed at both rear wheels when turned by hand. Tighten turnbuckle locknuts, release hand lever, check to see that rear wheels free from any drag. NOTE—On Late 1942 cars, adjustment consists of an adjustable rod located between two turnbuckles. This type is adjusted by turning rod.

Willys 1940—With hand lever released, adjust turnbuckle at rear end of hand lever and crossshaft cable so that levers on shaft (to which wheel cables are attached) are 23½° to rear of vertical line. Then pull hand lever 'on' to third notch,

C NTINUED N NEXT PAGE

LOCKHEED HYDRAULIC (C nt.)

adjust each wheel cable by turning turnbuckle or adjusting clevis at forward end of cable until slight drag felt at rear wheels when cables connected, release hand lever. Wheels should be free of any drag. Equalize by making slight adjustment on wheel cable for tight wheel.

Willys 1941-42. Set hand lever 2 notches 'on'. Loosen locknuts on hand lever cable connection at wheel cable spreader (equalizer), take up all slack in cables by turning up rear nut until slight drag noticed at rear wheels, tighten locknuts. Release hand lever and check to see that rear wheels free of any drag.

Willys Jeep Model (1946 On). Hand brake is independent type on drive shaft behind transmission. See Willys Jeep article in Car Model Section.

BRAKE PEDAL ADJUSTMENT

Brake Pedal Adjustment:—Pedal clearance or free travel before master cylinder piston begins to move should be ¼-½" (see Notes below for special settings on some cars) to insure master cylinder piston being back against its stop for correct compensating action with brakes released. To adjust, remove clevis pin in pedal link, hold piston rod from turning with wrench on hexagonal end and loosen locknut on link, turn link in or out of piston rod.

Chrysler, DeSoto, Dodge, Plymouth—Pedal free travel should be ⅜"-½" (1936), ¼"-⅜"(1937-38-39), ⅛-¼" (1940-41-42 Models). NOTE—See Special Service Notes (above) for pedal travel data on these models.

Chrysler Eights (With Vacuum Power Cylinder)—Refer to Bendix Vacuum Power Cylinder article for master cylinder pushrod adjustment. CAUTION—Power cylinder valve adjustment will be disturbed unless adjustments made exactly as directed.

Graham Models—Pedal free travel and clearance between pedal shank and underside of toeboard should be ½".

Jeep (Ford & Willys) Model. Pedal free travel should be ½" miinmum. Adjust by disconnecting pedal rod at brake pedal, loosening locknut on opposite end of rod, and turning rod in or out of piston link in master cylinder.

Studebaker Models—Pedal free travel should be ¼-⅜".

Willys Jeep Model (1946 On). Pedal free travel should be ½" minimum. Adjust by disconnecting pedal rod at brake pedal, loosening locknut on opposite end of rod, and turning rod in or out of piston link in master cylinder.

RELINING BRAKES:—See car model page for lining type and length and instructions where lining of unequal lengths used on forward and rear shoes in same wheel. Linings should be faced or ground concentrically after installation.

Shoe Removal:—Shoes held in place by coil spring retained by plain washer and 'C' type washer on each shoe. To remove shoes, pull out 'C' washer, disassemble plain washer and spring, take off return spring freeing shoes at toe end (use piston clamp on wheel cylinder and do not depress pedal with shoes disconnected). Remove 'C' washers n anchor pins, slide shoes off.

SERVICING:—Master Cylinders & Wheel Cylinders. See separate article on Hydraulic Brake Servicing for complete data.

BENDIX (LOCKHEED) HYDRAULIC SELF-CENTERING

Frazer, All Models (1947-48)
Kaiser, All Models (1947-48)
Nash "600", Series 4840 (1948)
Willys, Jeep Sta. Wgn. & Sedan Del. (1946-47-48)
Willys, Jeep Station Sedan 6-63 (1948)
Willys Jeepster, Model VJ-2 (1948)
Willys, Jeep Trucks 2T, 4T (1947-48)

DESCRIPTION: These brakes are same design as other Lockheed Hydraulic Double Anchor types except for "self-centering" feature on each car as follows:

Brake Shoe "Self-centering" Device—Each brake shoe fitted with rounded rocker on lower (anchor) end which bears against a solid block on the backing plate. This bearing block is machined with the rocker bearing surface aligned radially to the drum center so that shoes move radially out against the drum when brakes are applied and are automatically "centered with each brake application." Both shoes are held against the bearing block by a plain spring hooked in holes in each brake shoe web.

ADJUSTMENT: Before making adjustments, jack up all four wheels, check brake pedal clearance or free travel (see below), fully release hand brake and make certain that rear wheels are free, then adjust each wheel as follows:

Brake Pedal Clearance: Pedal must have approximately ¼" (Frazer & Kaiser), ¼-½" (Nash), ½" (Willys) travel before master cylinder piston begins to move. To adjust, loosen locknut on master cylinder piston rod, turn rod.

Brake Shoe Adjustment (For Wear or New Linings): Before making adjustments, centralize shoes by making a hard brake application (press firmly on brake pedal, then release pedal). At each wheel, adjust each brake shoe eccentric cam by turning cam out until shoe is tight in drum (with wrench installed on eccentric so that handle is upward, turn wrench away from wheel center-line), then back off eccentric until wheel just rotates freely without drag. Adjust each shoe eccentric in each wheel in this manner, then adjust parking brake (hand brake linkage) as directed below.

NOTE—If brakes adjusted by means of dummy drum or gauge, adjust shoes for following clearances:

Brake Shoe Clearance

	Heel (Each Shoe)	Toe
Frazer & Kaiser	.008"	.008"
Nash	.010"	.010"
Willys (All)	.005"	.008"

Hand Brake Adjustment (Frazer & Kaiser): With hand lever fully released, loosen locknut and turn clevis on rear end of lever cable at idler lever on frame cross-member to remove all slack from cables. When limit of adjustment reached, shift wheel equalizer-to-idler lever clevis pin to next set of holes in equalizer (three sets of holes), then make final adjustment at hand lever cable clevis as above. When properly adjusted, cables should have minimum slack without brake drag with hand lever in released position.

Hand Brake Adjustment (Nash): With hand lever released, first check position of hand lever cable pulley on front of dash (in engine compartment) and adjust cable position on pulley so that upper rear edge of pulley (segment type) is exactly 1⅝" from top of pulley bracket upper mounting screw (see Note below). Pull hand lever two notches "on" and leave in this position while adjusting cables. Loosen locknut on cable connector at wheel cable equalizer under car, remove all slack from cables, tighten locknut. Place hand lever in fully released position and make certain that rear wheels free of any drag.

NOTE—On 4840 cars, and 4740 after Serial No. K-170055, aligning pin hole provided in pulley bracket and pulley can be correctly located by inserting a J-1390 Gear Shift Aligning Pin through this hole.

Hand Brake Adjustment (Willys): After adjusting service brakes, pull hand brake lever "on" two notches, loosen locknut on connecting link between hand brake lever cross-shaft and wheel cable equalizer bar and tighten link adjustment until slight drag noted at each rear wheel, tighten locknut. Release hand lever and make certain that rear wheels free of all brake drag.

SERVICING (Master Cylinder & Wheel Cylinders): These units similar to types on other hydraulic brake installations. See separate article on Hydraulic Brake Servicing for data.

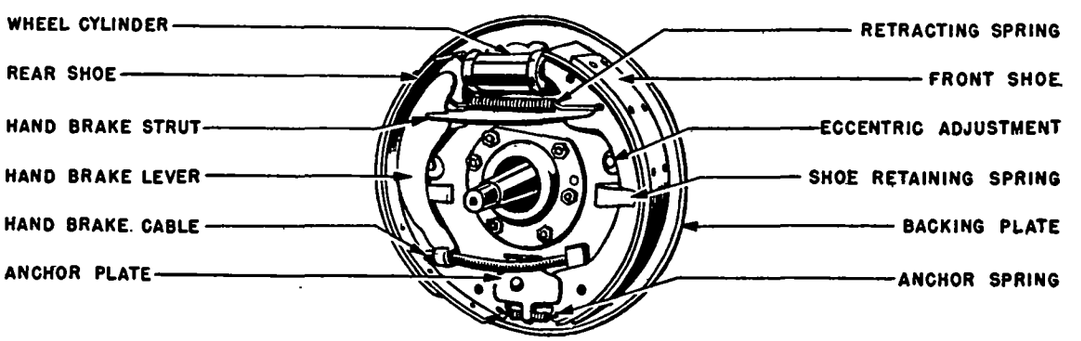

REAR BRAKE ASSY. (FRONT SAME EXCEPT HAND BRAKE LINKAGE OMITTED)

LOCKHEED (WAGNER) HYDRAULIC SELF-ADJUSTING

Studebaker Champion, 6G (1947), 7G (1948)
Studebaker Commander & Landcruiser, 14A (1947), 15A (1948)

DESCRIPTION: Two-shoe, hydraulic type with new self-centering, self-adjusting brake shoes. Master cylinder is compensating type and similar to type used on previous Studebaker and other car models. Hand lever (parking brake) actuates rear wheel service brakes through a cable linkage and is also similar to types used on other car models. New self-centering and self-adjusting brake shoe features are described below. Self-adjusting mechanism on 1948 cars differs from 1947 as follows:

1947 Type Contact Plug & Spring—Spring is simple spiral type located in contact plug stem (see illustration).

1948 Type Contact Plug & Spring—Spring is new torsion type and actuates contact plug through adjusting lever pin (see illustration). This spring also retains self-adjusting mechanism on brake shoe and eliminates use of two hairpin cotters used for this purpose in 1947 assembly.

OPERATION: Self-Centering Feature—Each brake shoe is fitted with a rounded rocker on the lower (anchor) end which bears against a solid block on the backing plate. This bearing block is machined with the rocker bearing surface aligned radially to the drum center so that the shoes move radially out against the drum when the brakes are applied and are automatically "centered" with each brake application. Both shoes are held against the bearing block by a plain spring hooked in holes in each brake shoe web.

Self-Adjusting Feature—Consists of an adjusting wedge and lever and contact plug assembly mounted on the shoe web of the **forward** brake shoe (rear shoe ordinarily does not require adjustment before relining of forward shoe is necessary and for this reason no automatic adjusting device is provided on this shoe). The contact plug (visible through the hole in the brake lining) is pinned on the adjusting lever which is pivoted on the shoe web. A spring-loaded adjusting wedge is mounted on the lever between the flat guide plate on the lever and the wedge guide on the shoe web. When the brake is released, the adjusting lever bears against the eccentric cam on the backing plate and holds the shoe in the released position. When the brake is applied, the entire mechanism moves out with the shoe until the contact plug strikes the brake drum. The contact plug and adjusting lever stop at this point and any additional movement of the brake shoe before the lining contacts the drum allows the spring to move the adjusting wedge inward to take up the clearance between the guide plate on the adjusting lever and the wedge guide on the shoe. This constitutes an "adjustment for wear" since the contact plug and adjusting lever have assumed a new relation with respect to the brake shoe and limit the movement of the shoe (when the brakes are released) to a position corresponding to the original drum clearance as set up by the initial adjustment of the eccentric cam when the shoes were installed. When the entire range of adjustment has been utilized, subsequent wear of the lining results in increased brake pedal travel which calls the operator's attention to the need for relining f the brakes.

ADJUSTMENT: Self-Centering Feature—All parts of this device are fixed in place. No adjustments are required or provided for.

Self-Adjusting Feature—An initial adjustment is required when new linings are installed. No further adjustment is required during the life of the lining (self-adjusting feature and self-centering feature automatically compensate for lining wear each time brakes are applied). After new or relined shoes are installed, check self-adjusting feature and adjust eccentric cams (all wheels) and parking brake (rear wheels only) as follows:

Self-Adjusting Mechanism Check: With shoes completely assembled on the backing plate, press contact plug in and completely retract wedge (pull out on adjusting wedge until it is felt to strike the stop), release contact plug, then release adjusting wedge. Press in on contact plug and note wedge action. Wedge should move in to take up the clearance. Repeat this test. Check contact plug spring tension by pressing and releasing contact plug while holding adjusting wedge in retracted position. Both tests should reveal positive spring action. NOTE—Self-adjusting mechanism should be overhauled if parts do not function correctly. CAUTION—Adjusting wedge must be in fully retracted position (pulled out against stop) after tests are made and before the initial adjustment of the brake shoes is attempted.

Initial (Eccentric Cam) Adjustment: Adjustments must be made with drums in place and **while drums are being rotated** in a forward direction (when adjusting forward shoes with self-adjusting feature) or in a backward direction (when adjusting rear shoe). Make certain that hand (parking) brake is fully released, then adjust each shoe in each wheel as follows:

Adjusting Forward Shoes (with Self-adjusting Feature). Place adjusting wrench on hexagonal head of eccentric cam adjuster with wrench handle upward. Turn brake drum in a **forward** direction and at the sam time move wrench handle outward until shoe has a decided drag on the drum (this will permit shoe to center itself), then back off eccentric cam adjuster until wheel turns freely without drag. NOTE—Eccentric cam adjuster is friction type and will slip on the shaft if excessive pressure is applied. This slippage is designed to prevent damage to the self-adjusting mechanism. CAUTION—If adjuster slips so freely on the shaft after extended service that the brakes cannot be adjusted properly, turn the eccentric cam by inserting a screwdriver blad in the slot in the end of the shaft.

Adjusting Rear Shoes—Place adjusting wrench on hexagonal head of eccentric cam adjuster with wrench handle upward. Turn brake drum in a **backward** direction and at the same time move wrench handle outward until shoe has a decided drag on the drum (this will permit shoe to center itself), then back off eccentric cam adjuster until wheel turns freely without drag.

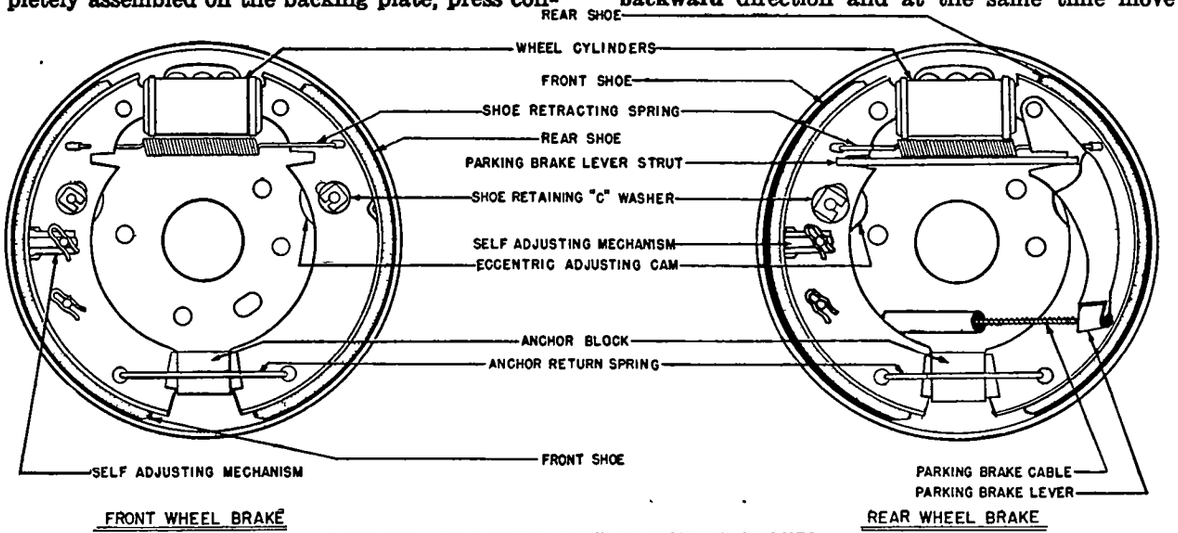

LOCKHEED (WAGNER) SELF-ADJUSTING BRAKES

Parking Brake Adjustment: Jack up rear end of car so that both rear wheels are free. Pull hand brake lever 4-5 notches "on". Loosen front nut on cable clip under front propeller shaft, tighten rear nut until heavy drag is felt when rear wheels are rotated, tighten front nut to hold adjustment. Place hand brake lever in fully released position, check each rear wheel for drag. Wheels must rotate freely without drag. NOTE—Brakes are equalized automatically.

Hill Holder Adjustment: This unit Optl. on Champion, Std. on Commander. See separate Hill Holder article for adjustment instructions.

SERVICING: Brake shoes should be removed for relining when the increased brake pedal travel indicates that the limit of automatic adjustment has been reached. NOTE—Continued use of the brakes after the self-adjusting mechanism has reached its limit will result in increased lining clearance (and pedal travel) and wear of the contact plug tip.

Brake Shoe Removal: Install clamp across brake cylinder boots in each wheel to retain wheel cylinder

CONTINUED ON NEXT PAGE

LOCKHEED SELF-ADJUSTING (C nt.)

pistons. Remove shoe retracting spring and anchor return spring. On rear wheel brakes only, pull parking brake lever toward center of wheel and unhook cable. Remove "C" washers from end of eccentric cam adjuster shaft on each brake shoe web. Pull heel of shoe away from anchor block, lift up on shoe until it clears eccentric cam adjuster shaft, then pull toe of shoe out until it is clear of wheel cylinder boot.

Self-adjusting Mechanism Disassembly—Remove two hairpin cotters from adjusting lever pins on brake shoe web. Press in on contact plug until it contacts shoe web and hold in this position, disconnect adjusting wedge spring, lift off adjusting lever, remove adjusting wedge, wedge guide, contact plug, and contact plug spring. NOTE—Discard old contact plug and install new part when relined shoes are installed. All other self-adjusting device parts should be cleaned, inspected for wear, and reinstalled if not worn or damaged.

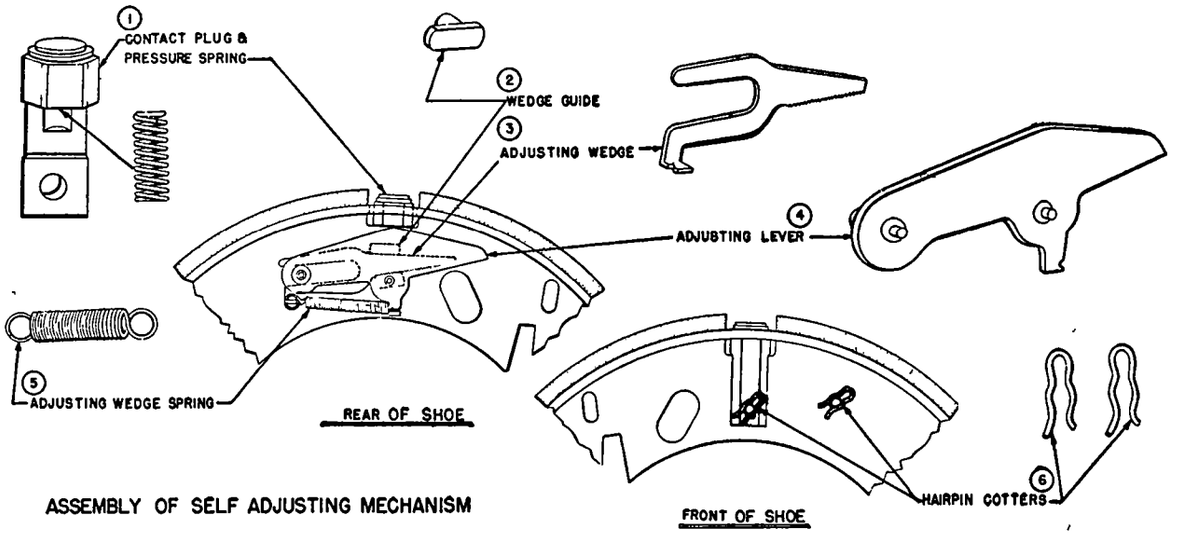

ASSEMBLY OF SELF ADJUSTING MECHANISM

1947 TYPE SELF-ADJUSTING MECHANISM

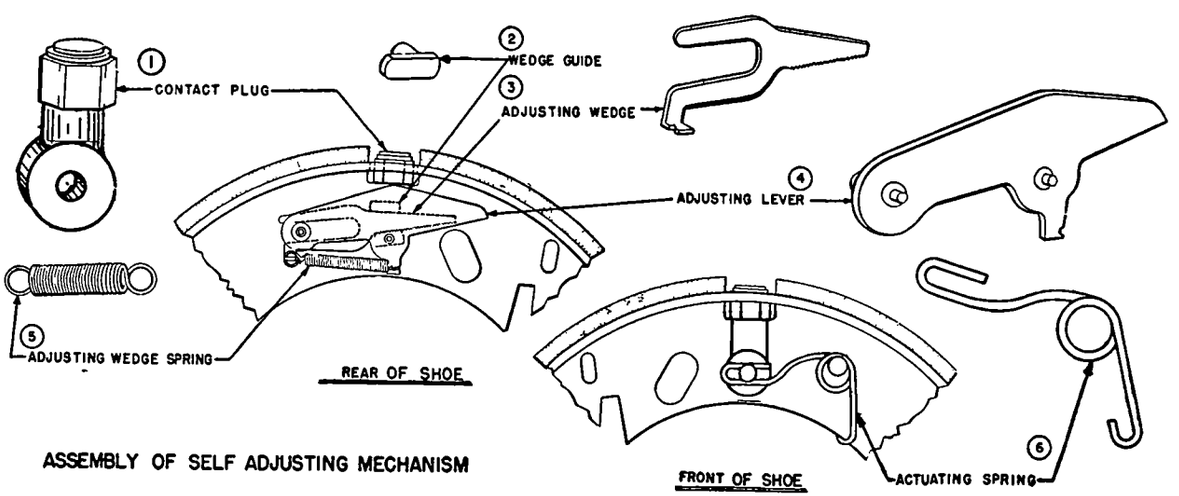

ASSEMBLY OF SELF ADJUSTING MECHANISM

1948 TYPE SELF-ADJUSTING MECHANISM

Relining Brake Shoes: Car manufacturer recommends that Lining Kits (with predrilled linings, new contact plugs, and plug adjusting gauge) be used when relining brake shoes. If predrilled linings not used, an accurately located ¾" hole for contact plug clearance must be drilled in lining for each forward brake shoe (high-speed edge hole saw recommended for this purpose) When riveting lining to shoe, make certain that there is a uniform clearance of 1/16" between the edge of the hole in the lining and the hole in the brake shoe.

CAUTION—If shoes are ground after lining installed, do not install self-adjusting mechanism until after grinding completed.

Self-Adjusting Mechanism Assembly: See illustration for proper location and order of installation of these parts. **Always use a new Contact Plug with new linings.** Press down on contact plug while installing adjusting wedge (pin on wedge must enter hole in contact plug) and make certain that lever is flat against shoe web. Push adjusting wedge in as far as possible while installing wedge-to-lever spring and use great care not to damage spring. After completing assembly, retract adjusting wedge (pull wedge out as far as possible) and adjust contact plug height as follows:

►***CAUTION—Actuating spring must be installed as shown in order to provide proper tension on contact plug and to retain all parts of self-adjusting mechanism on brake shoe.***

Contact Plug Height Adjustment—Make certain that adjusting wedge fully retracted, clamp brake shoe assembly in vise with contact plug upward and vise jaws gripping adjusting lever so that contact plug cannot move inward, install gauge tool, FL-1047, on contact plug (gauge is .005" template designed to fit over end of contact plug), file end of contact plug down flush with face of gauge.

NOTE—Face of contact plug must be from flush to not more than .005" above face of lining for correct self-adjusting action.

Brake Shoe Installation & Adjustment: Do not lubricate any part of the brake. When installing shoes, turn eccentric cam adjuster to released or minimum adjustment position, make certain that adjusting wedge of self-adjusting mechanism is in fully retracted position, centralize shoes approximately (by hand) after shoe retracting springs are installed. Check self-adjusting mechanism and adjust each brake shoe (see Adjustment section above).

Brake Pedal Clearance: Pedal must have ⅛" minimum, ¼" maximum, free travel to insure master cylinder piston being back against its stop when brakes released (for correct compensating action). To adjust, loosen locknut on pedal connector rod, turn large adjusting nut. Tighten locknut after adjustment completed.

Bleeding of Brake Lines: Brake system bleeding is done in same manner as on other Lockheed brake systems. See article on Hydraulic Brake Servicing for data.

Master Cylinder & Wheel Cylinder Servicing: Compensating type master cylinder and double-piston wheel cylinders are similar to types used on other Lockheed brake systems. See article on Hydraulic Brake Servicing for complete data.

LOCKHEED—CHRYSLER "SAFE-GUARD" HYDRAULIC

Chrysler 6, Model C34 7 Pass. Cars (1942)
Chrysler 6, Model C38 (1946-47-48)
Chrysler 8, Models C26, C27 (1940)
Chrysler 8, Models C30, C33 (1941)
Chrysler 8, Models C36, C37 (1942)
Chrysler 8, Models C39, C40 (1946-47-48)
De Soto, Model S10 7 Pass. Cars (1942)
De Soto, Model S11 (1946-47-48)
Dodge, Model D22 7 Pass. Cars (1942)
Dodge, Model D24 (1946-47-48)
Plymouth, Model P15 (1946-47-48)

SPECIAL SERVICE NOTES:—Bleeding Brake Lines—On front wheel brakes, each wheel cylinder must be bled separately. See Servicing data (below) for bleeding instructions.

Brake Anchor Pin Marks—Pins are marked by arrow on inner end (visible with drums removed) so that point of minimum adjustment can be readily secured by turning pins until arrows point toward each other (rear wheel brakes), or arrow on each pin points toward adjacent wheel cylinder (front wheel brakes). See adjusting instructions under "Major Adjustment" below.

Chrysler C27, C33, C37 Power Brake. These models have Bendix Vacuum Power Cylinder (Internal Valve Type) as regular equipment. Refer to separate article for adjustment and servicing instructions.

Chrysler C40 Power Brake—This model has new type "Vacdraulic" Vacuum Power Cylinder connected in hydraulic brake line (no mechanical linkage or linkage adjustments). Refer to separate article for all data on this unit.

DESCRIPTION: This Chrysler "Safe-Guard" brake system consists of two-cylinder type hydraulic brake (front wheels), single double-acting cylinder type hydraulic brake (rear wheels). Design is similar on all models listed above and consists of the following special front and rear wheel brakes:

Two-Cylinder (Front Wheel) Type—Consists of two independent single-acting brake cylinders mounted on the backing plate, each cylinder actuating one brake shoe. Each cylinder is mounted on the anchor pin of the other shoe (top cylinder mounted on rear shoe anchor pin and actuates forward shoe, bottom cylinder mounted on forward shoe anchor pin and actuates rear shoe). All shoes are of the "primary" or self-energizing type.

Single Cylinder (Rear Wheel) Type—Same as other "Lockheed Double Anchor Hydraulic" brake cylinders. Consists of single double-acting cylinder mounted at top of backing plate and actuating both brake shoes. Shoes are pivoted on anchors at bottom of backing plate.

ADJUSTMENT:—Before making adjustments, jack up all wheels, check brake pedal free travel (should be ⅛-¼" (to take up pushrod play) plus additional ⅝-¾" (to close off master cylinder relief port) before brakes begin to be applied. Total pedal travel to apply brakes should be 1¾-2". If Minor Adjustment does not give correct pedal travel, or if relief port is cut off with less than ¾" pedal travel, check brake pedal free play adjustment.

MINOR (WORN LINING) ADJUSTMENT

Minor Adjustment (For Wear):—Turn eccentric cam adjuster on backing plate out until shoe is solid against drum and wheel is locked then back eccentric off until wheel is free. Adjust each eccentric in this manner (one eccentric for each shoe, two on each wheel backing plate). Eccentric is held in position by spring tension and no locknuts are used. Adjustments should be made with brakes at room temperature (brakes will drag when cold if adjusted when drums are hot or immediately after car has been driven).

NOTE—Turning eccentrics out at top (toward rim of backing plate) will move brake shoes out toward drum and decrease clearance.

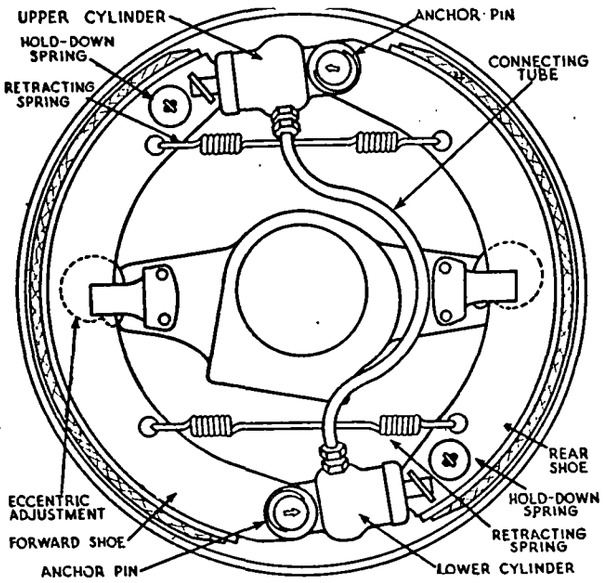

TWO-CYLINDER BRAKE ASSY.

MAJOR (NEW LINING) ADJUSTMENT

Major Adjustment (For New Linings):—Special adjusting gauge (MT-19-C) or cutaway drum must be used to check shoe clearance. Before making adjustments, set both anchor pins in minimum position by loosening locknuts on backing plate and turning anchor pin until arrow on inner end points toward adjacent wheel cylinder (on front wheel brakes), toward each other (rear wheel brakes). Install adjusting gauge on the wheel spindle and adjust each wheel as follows:

FRONT WHEELS

Front Wheels—With the adjusting gauge over the heel (anchor pin end) of the forward brake shoe, turn this lower anchor pin in clockwise direction (left hand side of car), counter-clockwise direction (right hand side of car) to move shoes out toward drum until clearance is correct (see table and gauge note), tighten anchor pin locknut. Move gauge to toe (wheel cylinder end) of shoe, adjust eccentric cam adjuster on backing plate (turn eccentric out toward rim of backing plate at top) until clearance is correct (see table and gauge note). Recheck clearance at heel end (readjust as necessary). Repeat adjustments for rear shoe (keeping in mind that anchor pin end and wheel cylinder end of shoe reversed from those on forward shoe), then adjust wheel on opposite side of car in same manner (anchor pin must be turned in opposite direction as directed above).

Front Wheel
Brake Shoe Clearances

Car Model	Heel (Anchor End)	Toe (Cyl. End)
Chrysler 6 ('42) 7 Pass.	.006"	.007"
Chrysler 6 ('46 On)	.006"	.006"
Chrysler 8 ('40-42)	.006"	.007"
Chrysler 8 ('46 On)	.006"	.006"
DeSoto ('42) 7 Pass.	.006"	.007"
De Soto ('46 On)	.006"	.006"
Dodge ('42) 7 Pass.	.006"	.007"
Dodge ('46 On)	.006"	.006"
Plymouth ('46 On)	.006"	.006"

Brake Gauge Note—When using MT-19 Brake Gauge, set the gauge finger so that mark "HEEL" is uppermost when checking **both heel and toe ends of brake shoes on 1946 & later cars** (and Heel of shoes only on 1942 and previous models). To check clearance at Toe end of shoes on 1942 and previous models, set the gauge finger so that mark "DRUM" is uppermost and use a **.007" feeler gauge between the gauge finger and the lining.** NOTE—Pointed edges of gauge finger are the gauging points (mark is on opposite side so that mark is uppermost when gauging point is down toward lining).

CAUTION—Do not use "TOE" position of gauge finger when checking these brakes (Toe position will give .012" clearance and is designed for use on previous car models only).

REAR WHEELS

Rear Wheels—With the adjusting gauge over the heel (anchor pin) end of the forward shoe, turn the anchor pin inward at the top (toward the other anchor pin) to move shoes out toward drum until clearance is correct (see table and gauge note below), tighten anchor pin locknut. Move gauge to toe (wheel cylinder) end of shoe, adjust eccentric cam adjuster on backing plate by turning eccentric outward at top (toward wheel rim) to move shoes out toward drum until clearance is correct (see table and gauge note below). Recheck clearance at heel end and readjust as necessary. Repeat these adjustments for the rear shoe and then adjust the other wheel in the same manner.

Rear Wheel
Brake Shoe Clearances

Car Model	Heel (Anchor End)	Toe (Cyl. End)
Chrysler 6, 7 Pass. ('42)	①	.007"
Chrysler 8 ('40-42)	①	.007"
Chrysler 6 & 8 ('46 On)	.006"	.006"
DeSoto 7 Pass. ('42)	①	.007"
De Soto ('46 On)	.006"	.006"
Dodge 7 Pass. ('42)	①	.007"
Dodge ('46 On)	.006"	.006"
Plymouth ('46 On)	.006"	.006"

①—.006" for Forward Shoe, .007" for Rear Shoe.

CONTINUED N NEXT PAGE

LOCKHEED-CHRYSLER "SAFE-GUARD" (C ntinu d)

Brake Gauge Note—When using MT-19 Brake Gauge, set the gauge finger so that mark "HEEL" is uppermost when checking **both heel and toe ends of all shoes on 1946 & later cars and heel of Front shoes only on 1942 and previous models.** To check clearance at toe end of all shoes, and heel end of Rear shoes, on 1942 and previous models, set gauge finger so that mark "DRUM" is uppermost and use a .007" feeler gauge between the gauge finger and the lining. CAUTION—Do not use the "TOE" position of gauge finger when checking these brakes (Toe position will give .012" clearance and is designed for use on previous car models only).

CAUTION—Anchor pins must always be turned to minimum adjustment position (with arrow on inner end pointed toward adjacent wheel cylinders (two cylinder brakes on front wheels), toward each other (single cyl. brakes on rear wheels) before adjustments are made. If this is not done, shoes will not be centralized in drum even though clearances are correct. Anchor pin inner ends are flattened so that wrench can be applied at this point and arrows checked while pins are being turned.

Brake Pedal Adjustment:—Brake pedal must have ⅛-¼" free travel to insure the master cylinder piston being back against its stop and compensating port uncovered when brakes released in order to provide for correct compensating action (brakes will drag if this port blocked). To adjust, loosen locknut on master cylinder end of pedal rod, turn large adjusting nut.

Chrysler Crown Imperial Power Brake. These cars Bendix Vacuum Power Cylinder article for master cylinder pushrod adjustment. Power cylinder adjustment will be disturbed unless adjustments made exactly as directed.

SERVICING: Bleeding Brake Lines—Bleeding of brake lines must be done exactly as outlined below in order to fully bleed both cylinders of the front wheel brake system (all air cannot be removed from system by bleeding one cylinder only).

Front Wheel Cylinders & Lines—Fill master cylinder supply tank with fresh fluid, attach bleeder hose to bleeder screw in center of upper wheel cylinder, submerge end of hose in fluid in clean glass container. Loosen bleeder screw ½-¾ turn, bleed line by pumping brake pedal slowly through one-half of pedal travel until fluid flow from hose is continuous and no air bubbles are evident. Then close upper bleeder screw. Connect hose to lower cylinder bleeder screw in center of lower wheel cylinder, open bleeder screw ½-¾ turn and bleed line between two brake cylinders in same manner. This is important.

Rear Wheel Cylinder & Lines—Bleed these wheels in usual manner (see separate article on Brake Servicing). One bleeder connection only is located on each rear wheel backing plate.

Front Wheel Cylinders: Both cylinders (two on each wheel) are single acting type with one piston. Pistons have rubber 'piston ring' in groove on piston (no separate piston cups used). To remove piston ring from piston, roll ring off end of piston. Install this rubber ring with lip on ring in toward inner end of cylinder and install piston spring with small end in (large end toward piston).

NOTE—No piston spring used on 1940 models.

Rear Wheel Cylinders: One double-acting cylinder used on each wheel. Cylinder is conventional type with double opposed pistons and piston spring. Pistons have rubber "piston ring" in groove in piston (same as Front Wheel Cylinders described above) and separate piston cups are not used.

NOTE—No piston spring used on 1940 models.

Master Cylinder: Compensating type of same design used on previous Chrysler and other car models. See separate article on Hydraulic Brake Servicing in Brake Section of manual for complete data.

Lining Specifications: See Brake Specifications on car model page (Car Model Section) for data.

CADILLAC (OWN) MECHANICAL

CADILLAC V16, ALL SERIES (1936)

DESCRIPTION:—Wheel Brakes—Two shoes per wheel, Shoes mounted on articulating links at anchor (forward) end and actuated by cam through links pivoted on shoes at rear end. Upper (self-energizing) shoe does major portion of forward car braking and is aluminum with thicker lining than lower (steel) shoe. Shoes returned to 'off' position by single retracting spring hooked between shoes. Adjustment provided at cam lever on backing plate at each wheel.

Linkage (All Series): The front and rear brakes are operated by pull rods and cables (cables at wheel end in conduit). Front wheel pull rods connected to rear cross-shaft, rear pull rods to front cross-shaft with pedal linked to equalizer between shafts for 60% front, 40% rear braking.

Hand Brake:—Hand brake lever linked to front cross-shaft and applies rear service brakes.

Power Unit:—Bendix internal valve type linked to brake pedal. See separate article for data.

ADJUSTMENT:—Check linkage if not known to be OK. before adjusting brakes at each wheel.

Linkage Adjustment:—See separate article on Bendix self-contained type Vacuum Power Unit for adjustment of brake pedal and lever, and valve lever. With pedal position correct and 1/32" clearance between end of clevis and pin at forward end of pedal pull-rod, and cross-shaft levers against stops, check cam lever position on each wheel by measuring distance from nearest face of cable clamp bracket to center of cable link pin in cam lever (rear wheels) or auxiliary lever (front wheels). Adjust clevises at cross-shaft ends of cables so that these distances are 3⅝" (front), 3 13/16" (rear).

Brake Adjustment:—

1—At each wheel, loosen cam bracket locking nut, apply brakes firmly to centralize cam bracket, tighten nuts before releasing brakes.

2—Check brake equalization between wheels. If braking action equal in all wheels, turn down all 4 cam lever adjusting nuts equal number of turns until pedal travel to apply brakes is 2¼"(1 1/6 turns of adjusting screw equal to 1" pedal travel). If braking action not equal, turn down each cam lever adjusting nuts until brakes drag, then back off all nuts same number of turns for correct pedal travel of 2¼". Recheck equalization.

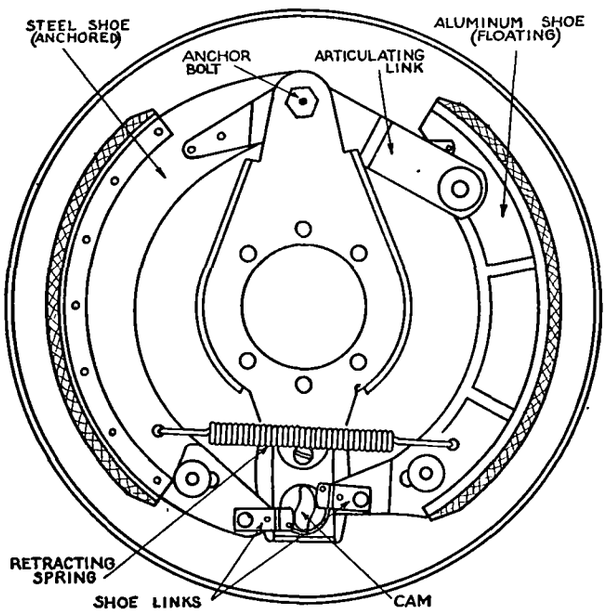

Hand Brake Adjustment:—With hand lever in 'off' position, brakes released, and cross-shaft levers against stops, adjust length of hand brake cable at cross-shaft end to eliminate all slack.

RELINING BRAKES:—See Car Model article for special lining specifications for each shoe. New linings should be chamfered 1/32" for distance of ¾" back at each end of shoe and rivet hole burrs removed.

SERVICING:—Brake Cables—Fittings provided for lubrication of cable conduits.
Brake Cams:—Lubricated by removing cotter pin in cam lever, withdrawing cam, packing the bearing behind cam with grease.

CHEVROLET HYDRAULIC

Passenger Cars, All Models (1936 to 1948)
Comm'l & Trucks, All Models (1936 to 1948)

►NOTES, CAUTIONS, & CHANGES

►**HYDROVAC BRAKES ON 1946-48 TRUCKS:** Optl. on 1½ Ton, Std. on 2 Ton Truck models. Consists of a combination vacuum-and-hydraulic braking system. See separate article on Hydrovac Brake System for complete data on this unit (all other brake adjustment data given below applies to these models).

►*CAUTION*—On trucks with Hydrovac, special brake system bleeding procedure is required. See special bleeding instructions under "Servicing" below.

►**1½ & 2 TON (1936-48) BRAKE CABLE CHANGE (For Increased Clearance between Tires and Cable):** Approximately 1" additional clearance between tires and brake cables can be secured by installation of following parts:

Hand Brake Cable Axle Bracket—Brackets approximately 1" longer than original type furnished under Part No. 3686657 (R. H.), 3686658 (L. H.) for all 1936-47 Trucks.

Hand Brake Cable & Clamp Assembly—New design assembly which holds cable inward after it leaves cable frame bracket furnished for all models as follows: 1939-46 Utility Models—3651403 (R. H.), 3651404 (L. H.). 1947-48 Half-Ton Comm'l—3686522. 1947-48 ¾ Ton Comm'l—3676305. 1947-48 One-Ton Comm'l—3684247. 1947-48 1½ & 2 Ton (137" & 161" WB)—3686686. 1947-48 2 Ton C-O-E (110" WB)—3686727. 1947-48 1½ & 2 Ton School Bus & 2 Ton C-O-E (134" & 158" WB)—3686685.

►**BRAKE SHOE INSTALLATION CHANGE (To Correct Complaints of Erratic Brake Action When Wet):** Brake lining on front wheels must be Inlite 599849 or Marshall Eclipse 3682131 (see identification data below). Manhattan 475518 lining (also furnished in Service Package Part No. 603872) **must not be used on front wheels.**

NOTE—All service packages with Manhattan lining now stamped "Use on Rear Brakes only."

Lining Identification—Inlite lining has blue identification on side, Marshall Eclipse has orange identification mark. Manhattan lining not marked but service packages containing this lining will be marked as noted above.

►*CAUTION—Manhattan lining must be used on rear wheels only. Inlite & Marshall Eclipse lining can be used on either front or rear brakes.*

DESCRIPTION

DESCRIPTION AND OPERATION:—Wheel Brakes—Two shoes per wheel similar to previous design in that shoes are mounted on articulating links at anchor pin end with upper end bearing directly on wheel cylinder piston adjusting screws. Rigid type hydraulic wheel cylinder mounted on backing plate between shoes. Shoes are forced out in contact with drum by piston movement when fluid displaced from master cylinder by pedal application flows through lines to wheel cylinder. Articulating links result in uniform shoe contact with drum and only one adjustment (at piston) provided. Shoes returned to off position when pedal released by single retracting spring linked between shoes.

Adjustment Note (1940 On). Slots provided in front wheel backing plates (closed by snap covers) on all models so that brakes can be adjusted without removing wheels (as required on 1939 and earlier models).

Stop Light Switch Note (1942 On). Mechanical type Stop Light Switch is used on all Passenger Cars and Trucks (hydraulic type switch on first 1942 Trucks). This switch requires special Brake Pedal Clearance setting on Passenger Cars only (Truck setting same as previous models). See Brake Pedal Clearance section below for data.

Hand Brake:—Hand lever applies rear wheel service shoes through cable actuated lever pivoted on one shoe and linked to other shoe by strut (passenger cars) or lever and link (1½ ton truck).

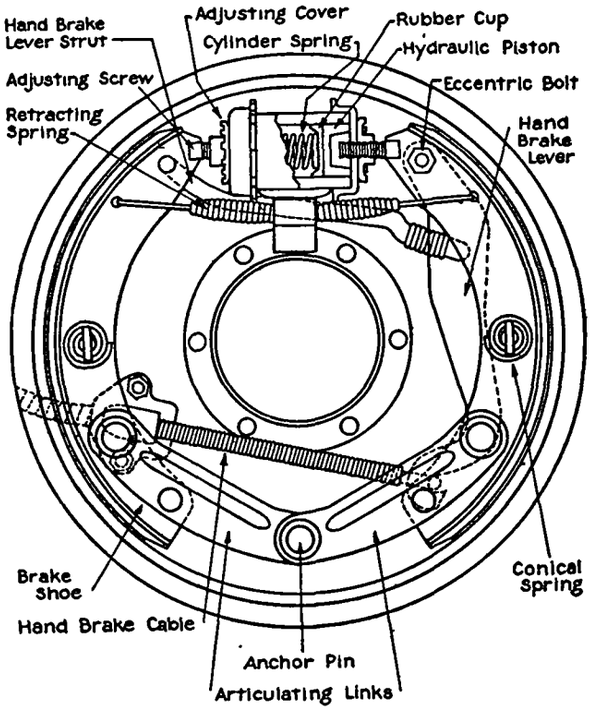

REAR BRAKE ASSY. (FRONT SAME EXCEPT HAND BRAKE LINKAGE OMITTED)

Hand Brake (1939 Passenger Cars). Hand Brake lever is mounted under cowl and is linked to bell-crank lever on left frame side-rail by non-adjustable rod. Bell-crank is linked to idler lever on second frame cross-member by non-adjustable rod with anti-rattle clip on rod at engine tie bar. This idler lever is linked to rear wheel hand brake cables by rods with adjusting clevises at cable connections. Free end of lever is guided by slotted guide plate.

Hand Brake (Passenger Cars 1940 On):—Cars have idler lever mounted on bracket welded to second cross-member (at rear of transmission) and linked to each rear wheel by cable with adjustment on each cable at idler lever end (see Adjustment data below).

Hand Brake (1947-48 ½ & ¾ Ton Trucks)—Rear wheel brakes are applied by a foot-operated pedal and released by a button under the instrument panel. See Parking Brake adjustment data below.

Master Cylinder:—Compensating type similar in design to type used on Lockheed Brakes. See Lockheed Brake article.

Master Cylinder Piston Primary Cup (1939 Model). New type rubber primary cup used which has brass support ring vulcanized in base to prevent cup imbedding in bleeder holes in piston. This new type primary cup can be used on previous car and truck models. NOTE—Old design truck primary cups cannot be used on 1939 truck models.

BLEEDING BRAKE SYSTEM: See separate article on Hydraulic Brake Servicing for complete bleeding directions (required when lines disconnected, to remove wrong type fluid whenever it has been used in system, or to remove air from lines caused by allowing master cylinder supply tank to become dry or by disconnecting lines.

Trucks with Hydrovac Brake System—When bleeding entire brake system, Hydrovac unit must **first** be bled at **two points** before bleeding the lines and wheel cylinders. Bleed the entire system exactly as detailed below (CAUTION—Engine must not be running and there must not be any vacuum in the Hydrovac system while bleeding these brakes).

Hydrovac Point #1—Remove bleeder valve screw on side of control valve housing on Hydrovac endplate, attach bleeder hose and submerge end of hose in brake fluid in a clean drain jar. Fill brake master cylinder reservoir with fluid, open bleeder valve ½-¾ turn, depress brake pedal slowly by hand, **close bleeder valve before releasing pedal.** Repeat these operations until fluid flows from the hose in a solid stream without bubbles, then close bleeder valve, remove hose, install valve screw.

Hydrovac Point #2—Attach bleeder hose at bleeder valve on side of Hydrovac unit outlet fitting (point at which brake lines to wheels connected). Bleed system at this point in exactly same manner as detailed for Point #1 (above).

Wheel Cylinders—After bleeding Hydrovac unit, proceed to bleed lines and wheel cylinders at each wheel in the usual manner.

BRAKE PEDAL ADJUSTMENT

Brake Pedal Clearance:—Clearance between pedal and underside of toeboard must be ¼" to insure master cylinder piston being back against its stop for correct compensating action when brakes released (clearance between edge of master cylinder piston primary cup and center of compensating port must be .035" min.). Adjust each model as follows: **Passenger Cars.** Loosen locknut on eccentric bolt (linking pedal and master cylinder piston rod), turn bolt until correct toeboard clearance secured, tighten locknut.

Passenger Cars (With mechanically operated Stop Light Switch). Clearance between upper face of pedal and first toe-board re-inforcing rib below pedal rod must be exactly 7/16". Adjust in same manner as previous models (above).

Trucks (1936-47). Loosen clevis locknut on rear end of master cylinder pushrod, turn pushrod until correct toeboard clearance secured, tighten locknut.

C NTINUED N NEXT PA E

CHEVROLET HYDRAULIC (C nt.)

NOTE—On 1942 Truck Models, same clearance of ¼" is correct for all models (whether hydraulic or mechanical type Stop Light Switch used).

Trucks (1947-48). Adjusted in same manner as previous trucks (above) but clearance must be measured differently. Distance from underside of depression in toe pan at pedal to top of pedal arm must be 13/16" with master cylinder piston against its stop.

ADJUSTMENT:—Jack up all four wheels, remove front wheels on 1936-39 Pass. Cars, ½ Ton, ¾ Ton Std. & Special, 1 Ton, and rear wheels also on ¾ Ton Special & 1 Ton Models. Disconnect hand brake rods at cable connectors (or at idler lever on 1940 & later Pass. Cars), remove adjusting hole covers on backing plate at each end of hydraulic cylinder (except rear wheels 1½, 2 Ton Trucks). Adjust each wheel as directed below. If brake drums have been removed previously, articulating pins should be aligned by applying brakes firmly before adjustments are made.

CAUTION—Hand brake rods must be disconnected to eliminate any possibility of shoes being held on by cables which would make it impossible to secure satisfactory brake adjustment.

ADJUSTMENT (WORN OR NEW LINING)

Pass. Cars & ½, ¾ Ton Truck (& 1941-47 1 Ton) Front & Rear Wheel Adjustment: Insert point of screwdriver in slot on backing plate at each end of wheel cylinder so as to engage notched adjusting covers on cylinder (adjusting cover on each end of cylinder controls one shoe), turn adjusting covers until shoe has slight drag on drum, then back cover off exactly 4 notches for clearance. Adjust all wheels in this manner, then adjust parking brake (see below) and check brake pedal clearance.

Trucks (All 1½ & 2 Ton, & 1947-48 1 Ton) Front Wheel Adjustment: Adjust in exact same manner as Pass. Cars (above), backing cover off exactly 5 notches (1941-47), 4 notches (1947-48) for clearance. Then adjust rear wheels as follows:

Rear Wheel Adjustment—Use wrench on hexagonal headed pinion shaft on brake backing plate (shaft turns adjusting covers through gear engagement). Turn pinion shaft clockwise (looking out toward backing plate) until shoe drags slightly, then back pinion shaft off 2/3 turn (four sides of hexagonal head) for correct running clearance. Adjust parking brake (see below) and check brake pedal clearance.

HAND BRAKE ADJUSTMENT

Parking Brake Adjustment (1936-38 Pass. Cars). Place hand lever in fully released position. Pull on forward end of each wheel cable to remove all slack, turn adjusting clevis on rear end of each brake rod until holes in clevis and end of cable line up, install clevis pins (hold clevis while tightening locknuts to prevent twisting of rods and cables. Check equalization and make any necessary re-adjustment by loosening adjusting clevis on rod to tight wheel (do not change wheel cylinder adjusting cover setting).

Adjustment (1939-48 Pass. Cars): Place hand lever in fully released position. Loosen both checknuts on each wheel cable at idler lever on frame cross-member (forward end of cables), pull cables forward out of conduit until definite stop is felt, hold cable in this position and tighten both checknuts on each cable so that cable is locked to idler lever toggle. Make certain that rear wheels are free.

Adjustment (1936-47 Trucks): Place hand lever in fully released position. Pull wheel cable end fitting (at front of rear frame cross-member) forward until a definite stop is felt, hold cable in this position, turn nut on forward rod down until it contacts (turn by hand only, do not use wrench), lock cable by turning rear nut up securely. Check equalization and make any necessary re-adjustment by loosening wheel cable to tight wheel slightly (do not change wheel cylinder adjusting cover setting). **Cab-Over Engine Note**—On Cab-over-Engine models before 1941, Front Cowling Assembly and Left Front Fender must be removed for access to hand lever mounting and pull rod clevis pin.

Adjustment (1947-48 ½ & ¾ Ton Trucks—Pedal type) This foot-operated type adjusted in same manner as other trucks (following). Also check release rod handle (under instrument panel) for ½" minimum clearance at support bracket. Adjustment provided at lower end of rod. CAUTION—This clearance necessary for correct locking action of pedal lock bar.

Adjustment (1947-48 1, 1½, 2 Ton Trucks): With brakes properly adjusted, place hand brake lever in fully released position. Disconnect brake cables at cross-shaft levers on frame by removing clevis pins, pull cable out of conduit by hand until a positive stop is felt, adjust clevis on end of cable by loosening locknut and turning clevis until clevis pin can just be inserted in lever. Tighten locknut and connect cables. Check for drag and equalization. Correct by readjusting cables.

CAUTION—Do not equalize parking brakes by changing wheel cylinder adjustment.

Toggle Lever Adjustment—This adjustment must be made whenever new rear brake shoes installed. After adjusting service (hydraulic) brakes, remove brake drum, loosen eccentric bolt locknut (lever pivot on shoe web below right end of hydraulic cylinder), hold toggle lever against shoe, turn eccentric bolt until only slight clearance between lever and bottom of slot in hand brake extension link, tighten locknut, recheck clearance. Adjust hand brake as directed above. This toggle lever is not used on 1½ and 2 Ton Trucks.

RELINING BRAKES:—Manufacturer recommends installation of new replacement shoes furnished with linings. Hard (semi-moulded or moulded) lining used which will have glazed appearance when burnished. See Car Model page for specifications for each model. Wheel cylinder piston clamp should be installed on piston when shoes removed.

To Remove Shoes:—Remove brake shoe return spring and conical hold-down springs. On rear brakes only remove toggle lever eccentric bolt and nut from rear brake shoe. Remove articulating link friction spring pin lock, pin and spring. Take out pin lock and pin on each shoe and remove articulating links.

NOTE—In assembling toggle lever on new shoes, see that high side of eccentric bolt is toward shoe in minimum adjustment position (high side indicated by flat ground in bolt head). Toggle lever adjusted as directed above under Hand Brake.

1½ & 2 Ton Truck Models. Wheels, brake drums, and wheel hubs must be removed for access to brake shoes. This will make it necessary to adjust wheel bearings when wheels re-installed (see car model page for wheel bearing instructions).

NOTE—Brake shoes on these truck models have individual anchors.

Brake Shoe Installation. When installing shoes, see that they contact all pads on anchor plate (3 pads for each shoe) by checking clearance at each pad with .002" feeler gauge. If shoes do not touch all pads, bend anchor plate.

SERVICING: Brake Linkage (Pass. Cars)—Brake cables are interchangeable (left and right).

1½ & 2 Ton Truck—Rear brake cables on these models are not interchangeable (left and right) and may be identified by string tracer woven under cable wire shield of left hand cable.

Model FC (1936)—Each rear brake cable should have spring, Part No. 592681 with clip installed 1 7/8" from front of flange plate bracket to hold cable away from wheel. Install spring on cars not equipped.

Brake Drum Removal—Rear brake drums held on axle shaft flange by wheel mounting nuts and two screws (Zipon nuts beginning 1940). To remove drums, remove wheel and then take out screws or remove the zipon nuts on two of the wheel studs. When installing drums, see that extra hole in drum and gaskets is lined up with notch in axle shaft flange to provide oil drainage hole (or tongue on web section of drum extending into drain hole in axle shaft flange on 1942 and later models).

Hand Brake Lever (1938 Models). Double tooth pawl and sector plate pivoted on hand brake lever and linked to mounting bracket so that sector plate moves in opposite direction when hand lever pulled to apply brakes (allows finer lever setting).

Brake Drag Correction (Trucks)—May be caused by gummy deposit of lining dust and fluid on wheel cylinders and pistons. Correct by thoroughly cleaning cylinders and pistons. NOTE—All parts should be thoroughly cleaned when brakes relined.

Master Cylinder:—Piston clearance in cylinder must be .001-.005". When reassembled clearance between lip on primary piston cup and center of compensating by-pass port should be .035".

Master Cylinder (HD, HE, T Only):—Special 'Vee' shaped ring installed on face of piston under primary cup to prevent cup imbedding in bleeder holes when brakes applied. See that this ring installed when assembling master cylinder.

Wheel Cylinders:—To disassemble wheel cylinders, with brake line disconnected and return spring on shoes removed, take out two mounting screws on backing plate. Remove cylinder, lift off adjusting cover and screw assemblies, withdraw pistons, piston cups and return spring. Examine bore. Piston clearance in cylinder should be .002-.004". Line must be bled when reinstalled.

NOTE—Wheel cylinders for front and rear wheels are of different bore and must be replaced in same wheel. No part of assembly interchangeable (see Car Model page for specifications).

FORD (OWN) MECHANICAL
1936 TYPE

PASS. CAR & TRUCK MODELS (1936)

DESCRIPTION & OPERATION:—Wheel Brakes—Two shoes per wheel, anchored at adjusting wedge end and actuated by brake operating wedge at other end of shoe. Shoe wedges or cams actuated by cranklevers on backing plate (rear wheels) or by lever on spring hanger through operating pin extending down through hollow kingpin (front wheels). Shoes returned to off position by retracting springs hooked between shoes at both ends.

Linkage:—Rod to each wheel from cross-shaft mounted on rear of 'X' member center connector. Linkage adjustment (clevis and locknut) at wheel end of each rod.

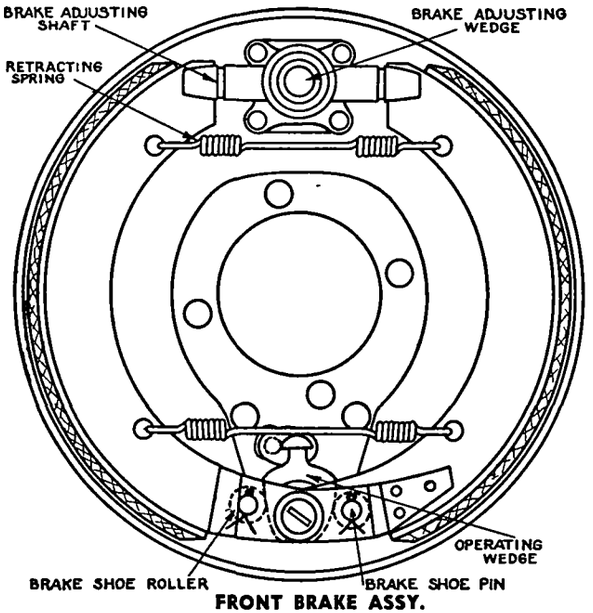

FRONT BRAKE ASSY.

Hand Brake:—Hand lever connected to cross-shaft and actuates all service brakes (passenger and commercial cars) or connected to second cross-shaft and actuates independent internal expanding brake bands in each rear wheel (trucks). Hand brake must be adjusted separately on trucks (instructions below).

ADJUSTMENT:—For Wear—Jack up all four wheels, check front wheel bearings, spindle bearings, spring shackle studs, shock absorber links, and radius mountings for looseness. Release hand lever, disconnect brake rods by taking out clevis pins at each wheel.

1—At each wheel, screw in adjusting screw all the way then back off until wheels are just free of drag. Brakes must be cold.

2—See that hand lever fully released. Disconnect brake rod, adjust rod length by turning clevis until clearance between rear end of hand lever rod clevis slot and rear face of cross-shaft lever pin is ⅛" (Passenger Cars), or rear face of pedal rod lever on service brake cross-shaft is 1 29/32" in front of cross-member (Trucks). Reconnect pedal.

3—Adjust length of each brake rod at wheel so that rods are 1/32" short (levers must be pulled in 1/32" to insert clevis pins). Reconnect brake rods.

4—Set hand lever in first notch (passenger and commercial cars) or apply brakes with pedal jack (trucks). Turn each wheel at least one revolution and equalize by backing off adjusting screw on tight wheels. When brakes equalized, back off adjusting screw on each rear wheel evenly until wheels are just free of drag.

New Shoes or Relined Brakes:—When installing shoes, use brake gauge to check shoe clearance. Clearance at all points (except chamfered ends) must be .010" minimum and must not exceed .030" at any point. Turn up adjusting screws until clearance at adjusting screw end is .010". Check wedge end clearance and if less than .020", install new brake shoe pins with oversize heads which raise shoe .010" and increase clearance by this amount. Then adjust brakes.

Hand Brake (Trucks):—Take up brake rods to rear wheels equal amount so that wheels are just free of drag with hand lever released. Equalize by applying brakes and slacking off rod to tight wheel

RELINING BRAKES:—New lining should be ground concentrically on special fixture and linings should be chamfered for distance of 1¼" back from each end.

FORD (OWN) MECHANICAL
1937-38 TYPE

FORD V8 "60", ALL MODELS (1937-38)
FORD V8 "85", ALL MODELS (1937-38)

NOTE:—75, 79, 81T, U, 817T Trucks. Hand brakes on these models are entirely independent, hand lever applying separate internal-expanding brake band in each rear wheel brake drum.

DESCRIPTION & OPERATION:—Wheel Brakes—Two shoes per wheel, anchored at adjusting screw end and actuated by wedge at opposite end. Shoes returned to off position by retracting spring at either end (see illustration).

Linkage:—Wheel brakes operated by cable from cross-shaft at rear of 'X' member on frame. Cables enclosed in conduit between frame and wheel. Hand lever linked to cross-shaft by conduit enclosed cable, brake pedal by adjustable rod.

Hand Brake:—Hand lever, under the instrument panel linked to cross-shaft by cable in conduit and applies all four service brakes.

MINOR (WORN LINING) ADJUSTMENT

ADJUSTMENT:—For Wear—Jack up all four wheels, check front wheel bearings, spindle bearings, spring shackle studs, shock absorber links, and radius rod mountings for looseness. Release hand lever. See that lower or front brake cable lever is against bottom of cross-shaft bracket (cars), operating lever against frame cross-member (trucks); if not, Major Adjustment required. At each wheel, turn adjusting screw in until shoes are tight in drum, then back screw off until all drag just removed. Hold brake pedal 'on' with pedal jack, check wheels for even drag. Equalize by backing off tightest wheels. Check tire inflation. Test brake action on Brake Tester or by road testing car.

MAJ R (NEW LINING) ADJUSTMENT

Major Adjustment (New Shoes, Relined Brakes etc):—Jack up all four wheels, check for looseness (see Wear Adjustment above). Remove clevis pins in front and rear brake cables at cross-shaft, remove wheel and hub assemblies. Adjust as follows:

1—At each wheel, install concentricity gauge and check shoes for distortion (clearance should be uniform around shoe, if not shoes should be replaced—See Overhaul data below). Re-install wheel and hub assemblies.

2—Check cross-shaft lever position. Front brake cable lever (lower) must be against bottom of cross-shaft bracket (cars), operating lever against cross-member (trucks). To adjust, remove pedal rod clevis pin at cross-shaft, loosen locknut and turn clevis until pin can be installed with lever against stop (pin must be at rear end of pedal rod slot).

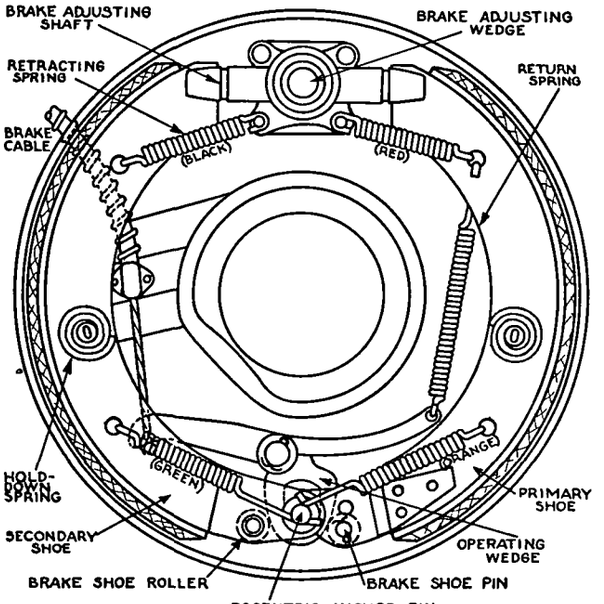

REAR BRAKE ASSY.

3—Check hand lever cable length. Cable must not hold cross-shaft lever away from stop with hand lever released. To adjust, place hand lever in released position, loosen locknut and clevis pin at hand lever end of cable, turn clevis until pin can be inserted without disturbing levers.

4—At each wheel, turn up adjusting screws until shoes are tight in drums. Adjust each wheel brake cable clevis at cross-shaft end so that pin can just be installed with 25 lbs. pull on cable (use special Ford SV-207 brake cable puller to apply tension to cables). NOTE—On trucks (81Y, 82Y rear brakes; 75, 79, 81T, U, 817T all brakes), eccentric anchor should be adjusted at same time by loosening anchor pin locknut and turning anchor pin slightly in both directions, while adjusting screws are being tightened, until shoes have been expanded to maximum. Then hold anchor pin from turning and tighten locknut securely using wrench with 20" handle. On all other models, new Carrier Plate Assemblies should be installed if eccentric anchor pin requires adjustment.

5—At each wheel, back off adjusting screw until wheel is just free of drag. Hold brake pedal on with

C NTINUED ON NEXT PAGE

FORD MECHANICAL (C nt.)

pedal jack and check wheels for even drag. Equalize by backing off tightest wheels. Check tire inflation. Test brake action on Brake Tester or by road testing.

SERVICING:—Brake Shoes—To remove shoes, disconnect retracting spring at each end of each shoe. Take out pin, remove plain washer on hold-down spring at center of shoe web. Pull shoes free at adjusting wedge end, lift off.

Cable Conduits—Whenever cable conduit clamps are loosened, to replace conduits, tighten clamp capscrews and then back off one half turn. Turn up adjusting screw until brake shoes are tight in drum. Use brake cable puller SV-207 and apply 300 lb. pull on cable, maintain this pull by tightening adjusting screw on tool, shake conduit vigorously to insure its seating in clamps, tighten clamp screws at carrier plate and frame. Readjust wheel brake.

CARRIER PLATE ASSEMBLIES:—When installing new carrier plate assemblies, disconnect all brake cables at cross-shaft, check spindle bearings, spring shackles, shock absorber links, and front radius rod mountings. Replace if looseness caused by wear is excessive. Examine brake drums and replace if scored or eccentric (maximum runout .010"). Check brake cross-shaft lever position. Adjust pedal rod if front brake cable lever not against bottom of cross-shaft bracket (see above). Install new brake carrier assembly and connect ball end of cable to lever. Tighten conduit clamp on backing plate securely then loosen both screws one half turn. Loosen conduit clamp screw at frame bracket one half turn. Adjust conduits as directed above (Servicing Cable Conduits). Then adjust brakes.

FORD-LOCKHEED HYDRAULIC FORD & MERCURY

Ford 6 & V8 Pass. Car Models (1939-48)—See Note
Ford Comm'l & Truck, All Models (1939-48)
Mercury, All Models (1939-48)—See Note

NOTE: Ford & Mercury (1946-48) Pass. Cars & Ford Light Duty Trucks—Brakes on these models are "self-centering" type and do not have adjustable anchor pins. These brakes are adjusted in the same manner as on other models except that Anchor Pin Adjustment (Major Adjustment) is not necessary and these instructions should be disregarded.

Lincoln-Zephyr Models—Brakes on these models are Bendix Hydraulic, Single Anchor type, without eccentric adjustment. *See "Ford-Bendix Hydraulic" Brakes (following) for data.*

DESCRIPTION & OPERATION:—Lockheed two-shoe, double anchor type. Two shoes per wheel, each mounted on individual eccentric anchor pin at lower or 'heel' end and bearing directly against opposed pistons of stationary wheel cylinder at upper or 'toe' end. Shoes are held against eccentric adjusting cams (wear adjustment) in 'off' position by a single retracting spring hooked between the two shoes at the toe end.

Anchor Pins (Ford & Mercury 1946-48 Self-centering type Brakes). On these models, anchor pins are fixed on backing plate and have special elongated washers which engage elongated holes in brake shoe web. With this mounting, shoes tend to "center" themselves in drum when brakes are applied.

Wheel Cylinders:—Rigid type mounted on backing plate with pposed pistons which bear directly against toes of brake shoes. Pistons are sealed by rubber cups held against piston heads by central spring and dirt is excluded from cylinder by rubber boot fitting over end of cylinder and brake shoe.

Passenger Car & 1 Ton Truck—Cylinders are stepped or two-stage bore type with larger end of cylinder toward front and actuating forward shoe. Front wheel cylinders larger than rear wheel.

Truck Models. Cylinders not stepped (both ends same size). Larger cylinders used on rear wheels.

NOTE—Wheel cylinder not interchangeable from right to left sides of car or from front to rear wheels.

Master Cylinder:—Compensating type with integral supply tank. Similar in design to type used on other Lockheed Hydraulic Brake applications.

Parking (Hand) Brake:—On Pass. Cars, ¾ Ton&1 Ton models, hand lever applies rear service brakes through cables connected to a strut and lever linkage on the brake shoes. On other truck models, hand lever applies an independent internal-expanding brake band in the rear wheel brake drums (1939), independent brake band on brake drum on propeller shaft at rear of transmission (1940 and later models).

SERVICING:—Bleeding Brake Lines. Fill master cylinder supply tank with genuine Ford Brake Fluid (keep tank filled during bleeding operation, bleeding must be repeated if fluid level low enough so that air enters cylinder and lines). Remove dustscrew on bleeder valve at wheel cylinder, install rubber tubing in bleeder valve and immerse other end f tubing in brake fluid in a container. Open bleeder valve and pump brake pedal with slow even strokes until only clean fluid flows from wheel cylinder (no trace of air or bubbles) being careful that fluid level maintained in master cylinder supply tank. Close bleeder valve, remove tubing, replace dustscrew. Bleed other wheels in same manner.

ADJUSTMENT:—Before adjusting, jack up all four wheels, remove one front wheel and inspect lining (to determine if new linings required), re-install wheel. Check front wheel bearing adjustment, spring shackles, shock absorber links, and radius rod mountings, tighten steering connections. Place hand lever in released position. Adjust each wheel as follows:

MINOR (WORN LINING) ADJUSTMENT

Minor Adjustment (For Wear):—Install wrench on eccentric adjusting cam on backing plate with wrench handle upward, turn cam by moving wrench handle out toward wheel rim until shoe is tight in drum, then turn cam back until wheel just turns freely without drag (do not turn cam back more than enough to free wheel, desired setting is with least possible amount of clearance). After adjusting forward shoe, repeat adjustment on rear shoe, then adjust all other wheels in same manner. Check pedal reserve, if reserve less than half total travel, repeat adjustment (if pedal is 'spongy', bleed lines). Check brake pedal clearance and adjust hand brake

►*CAUTION—Clearance between shoes and drum should be least amount possible without drag (no specific clearance specified).*

CONTINUED N NEXT PA E

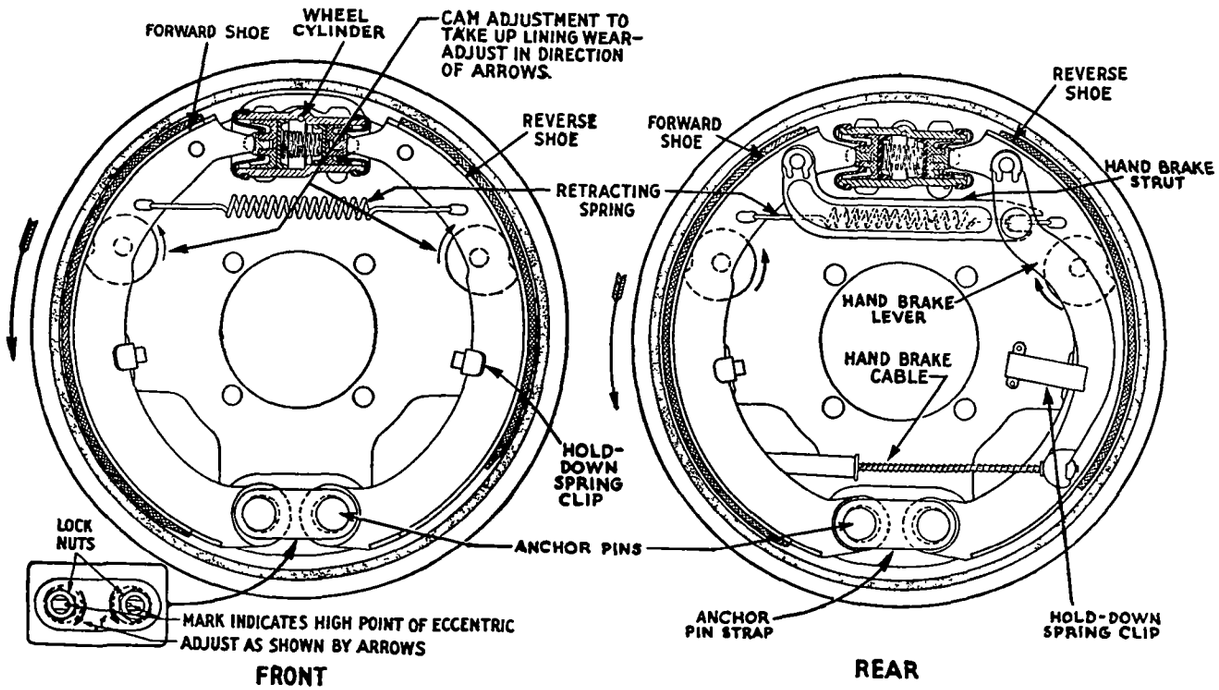

F RD-L CKHEED BRAKE ASSY.

FORD-LOCKHEED HYDRAULIC (C nt.)

MAJ R (NEW LININ) ADJUSTMENT

Major Adjustment (For relined brakes, etc.):—NOTE This adjustment not required on 1946-48 Pass. Cars and Light Trucks with "self-centering" type brakes Before installing brake drums, loosen eccentric anchor pin locknuts and turn each anchor pin so that marks on flatted ends of pins are together (marks indicate 'high' side of eccentric and in this minimum position will allow drums to be installed over new linings), turn eccentric adjusting cam for each shoe to minimum position. With drums installed, turn eccentric anchor pin toward adjacent anchor pin (wrench handle upward) until brake shoe is tight against drum, then back anchor pin off slightly until wheel turns freely without any drag. Hold anchor pin from turning and tighten locknut securely. Then adjust eccentric adjusting cam (see Minor Adjustment above) for correct toe clearance of the brake shoe. Adjust both shoes in each wheel in this manner, then adjust hand brake.

Brake Pedal Adjustment:—Brake pedal must have ¼" free movement (measured at pedal pad), to insure master cylinder piston being against its stop for correct compensating action when brakes released. To adjust, loosen locknut on pedal rod, turn rear section of rod (integral with large adjusting nut—not necessary to disconnect clevis pins), tighten locknut.

HAND BRAKE ADJUSTMENT

Passenger Cars (& 1939 1 Ton)—Place hand lever in fully released position. Depress the brake pedal until rear brake shoes applied firmly against drums, leave pedal in this position while adjustment being made. Pull forward on cables to remove all slack, adjust clevis on end of hand brake cable so that, with foot brake applied as above, end of hand lever has ½" travel before slack in cables is taken up. Release foot brake pedal. With hand lever in released position, check that rear wheels are free of any brake drag.

Trucks (1939)—Hand lever linked to cross-shaft by non-adjustable rod, cross-shaft linked to hand brake lever n each rear wheel backing plate by adjustable rods. To adjust, remove clevis pin in forward end of each rod at cross-shaft, loosen locknut, turn clevis on rod.

¾ & 1 Ton Truck (1940-48)—Place the hand brake lever in fully released position. Use pedal jack to depress brake pedal until rear brake shoes are applied firmly. Adjust each wheel cable at equalizer lever on frame cross-member by taking out clevis pin, loosening locknut, and turning clevis on cable end fitting until all slack is removed from cables and mounting bolt is centered in slot in equalizer plate. Adjust hand lever cable by taking out clevis pin, loosening locknut, and turning clevis on cable end fitting until hand lever has approximately ½" movement (with brake shoes applied as above). Release pedal, make certain rear wheels free of drag.

Trucks exc. ¾ & 1 Ton (1940-48)—Release hand brake lever. See that flat of cam rests on brake band ear (if not, remove clevis pin from rod above cam and adjust clevis as necessary so that flat of cam rests on ear of band, install clevis pin. Remov lockwire and turn anchor screw (on bracket on left side) in until clearance between lining and drum is .010" at this point, replace lockwire. Loosen locknut and turn bracket adjusting screw nut (on right side, adjusting screw head on bracket is slotted) until clearance between lining on lower half of band and drum is .010", tighten locknut. Then tighten nut on lower end of band adjusting rod (below ear on lower end of band) until clearance between lining on upper half of band and drum is likewise .010". Recheck rod linking cam and brake lever.

OVERHAUL:—Note—Factory recommends installation of factory reconditioned brake shoes (with new lining installed) whenever lining worn so that replacement required. Before removing brake shoes, install clamp on wheel cylinders (to retain wheel cylinder pistons) and be careful not to depress brake pedal with shoes off. This will eliminate necessity of bleeding lines when shoes installed.

Brake Shoe Installation:—Assemble retracting spring to shoes (and hand brake lever and link parts for rear wheels). Turn eccentric adjusting cams to minimum position. Hold shoes so that anchor pin ends overlap and upper ends spread sufficiently to enter wheel cylinder pistons, engage shoes in piston slots, spread lower ends of shoes until they are engaged under flat lip of hold-down springs. Install anchor pins making certain that eccentric is in place in hole in brake shoe and that anchor pin engages eccentric. Turn anchor pins so that notch in flatted end of each pin is lined up with notch in opposite pin, install anchor pin locknuts, connect hand brake cable to lever. Adjust shoes as directed in Major Adjustment above.

Master Cylinder & Wheel Cylinder Disassembly and Overhaul:—All service operations same as on other Lockheed Brakes. See article on Lockheed Double Anchor Hydraulic Brakes and separate article on Hydraulic Brake Servicing for complete data.

FORD-BENDIX HYDRAULIC (FORD, LINCOLN, MERCURY)

Ford Pass. Cars, Six 8HA & V8 8BA (1949)
Ford Half-Ton Truck, Series F-1 (1948)
Lincoln, All Zephyr & Cont'l Models (1939-48)
Lincoln & Cosmopolitan, 9EH & 9EL (1949)
Mercury, Model 9CM (1949)

►NOTES, CAUTIONS, & CHANGES

►**FORD HAND BRAKE LINKAGE CHANGE (To lessen effort required to set hand brake):** On first cars, pull required to set brake can be decreased by drilling new hole in equalizer lever and shifting wheel cable connector to this new hole. Locate new holes as follows:

Passenger Cars—Drill new 5/16" hole at point 13/32" from center of existing hole toward pivot end of lever.

Station Wagon & Convertible—Drill new 5/16" hole at point 9/16" from center of existing hole toward pivot end of lever (new hole center will be 1¼" from center of pivoting notch in lever).

►*NOTE—This change made in production on later cars.*

►*CAUTION*—If above procedure does not correct complaints of hand brake being hard to apply, remove hand lever assembly, check for burrs on hand brake shaft, clean up shaft with round file, apply light film of lubricant when reassembling.

►**FORD HAND BRAKE CABLE INTERFERENCE CORRECTION:** If cable or conduit rubs on frame or tires, check and correct following points:

Cable rubbing on intermediate cross-member—Bend rear edge of lower flange on cross-member slightly at point just above cable to provide clearance.

Cable Conduit rubbing on tires or striking carrier plate—Remove cable conduit clip on frame, revolve conduit toward center of car (twist conduit at carrier plate if necessary), re-install clip.

Cable Equalizer twisting—If equalizer twists on adjustment bolt, install additional nut on adjustment bolt in front of equalizer, tighten this nut after hand brake adjustment completed so that equalizer is clamped firmly on bolt between front and rear nuts.

►*NOTE—This clamp nut installed on later cars in production.*

►**LINCOLN & MERCURY HAND BRAKE LINKAGE CHANGE (for improved operation):** To lessen effort required to set brake on first cars, make following changes:

Re-route Brake Cable. Disconnect cable at lever, remove all clips down to spring clip at center of frame "X" member (do not disturb this clip), re-route cable and install new clips as follows: Install No. E.D. 11A-17278 clip at transmission case bottom rear shifter cover bolt, E.D. 353364-SB at brake master cylinder front bolt, route cable over top of steering column tube, install clip E.D. 353364-SA at upper rear corner of front fender apron (on Lincoln 121" WB, use clip 11A-14598 installed on fender apron 1½" to rear of wiring harness clip), route cable through hole in dash (use 91A-14602-A1 rubber grommet) and attach cable to hand lever. Adjust hand brake.

►*CAUTION—Avoid all sharp bends and kinks when installing the brake cable. Tape brake cable and hood latch control cables together to prevent rattles.*

Re-locate Cable Connection on Hand Lever (Mercury only)—Drill new 5/16" hole in hand brake lever at point 1.38" from center of pivot hole in lever and shift cable connection to this new hole to improve leverage.

Lubricate Hand Brake Control—Lubricate following points with Lubriplate or equivalent (use sparingly): 1. Lever Pivot at ratchet bar, 2. Ratchet Bar, 3. Dash Hinge Bracket, 4. hand lever and body bracket Bolt & Contact Surface.

Align Hand Brake Control—To insure alignment, first attach hand brake lever at body bracket, second attach ratchet bar housing assembly to instrument panel with hand lever in fully released position.

DESCRIPTION

DESCRIPTION: Brakes used on these models are Bendix Hydraulic, Single Anchor (Without Eccentric adjustment of same design as used on other car models.

ADJUSTMENT NOTE: Adjustments are made differently for wear (Minor Adjustment) and for new lining or shoe assemblies (Major Adjustment). Major adjustment should also be made whenever a

FORD-BENDIX HYDRAULIC (Cont.)

minor adjustment does not give satisfactory brake performance. Perform all following operations before adjusting brakes:

Preliminary Brake Adjustment Operations: Check master cylinder fluid level and fill to within ½" of top of filler neck, Check brake pedal free travel and adjust (see Brake Pedal Adjustment below) if not within limits of ¼-½". Check pedal reserve (distance from pedal pad to floor with brakes applied—brakes require adjustment if this distance less than ½ total pedal travel). Jack up all four wheels. Place hand lever in fully released position and make certain that cable slack is sufficient so that rear wheel brake shoes fully released.

►*CAUTION—Correct brake adjustment cannot be secured if hand brake cables so tight that brake shoes are held away from anchor pin.*

MINOR ADJUSTMENT (For Wear): First perform all preliminary operations under "Adjustment Note" above. At each wheel, make certain that anchor pin nut is tight (check with 16" wrench), remove adjusting hole cover on backing plate, insert adjusting tool or screwdriver in hole and engage notched adjusting screw, turn screw to expand shoes by moving tool handle in toward axle until brake drum can just be turned by hand, then back off adjusting screw approximately 14 notches until shoes are just free and drum turns without drag. Adjust parking (hand) brake cables (below).

Brake Pedal Adjustment: Pedal must have more than ¼", but less than ½", free travel measured at pedal pad before master cylinder piston begins to move. Adjust as follows:

Ford—Loosen locknut and turn eccentric bolt linking brake pedal to master cylinder piston rod.

Lincoln & Mercury—Loosen locknut on master cylinder end of pedal rod, turn connecting link.

Parking (Hand) Brake Adjustment: After adjusting service brakes, adjust parking brakes as follows:

►*CAUTION—Do not over-tighten cables which will hold brakes away from anchor pin and cause brake drag.*

Ford (Pass. Cars), Lincoln, Mercury—Place hand lever in fully released position. Tighten nut on connecting link at wheel cable equalizer (at idler lever on cross-member on Ford, in X-member on Lincoln & Mercury) to remove all slack from cables.

►*CAUTION—Front nut on adjustment bolt must be backed off before adjustment can be made and should be retightened after adjustment completed (see Ford Production Change Note above).*

Ford (Truck Series F-1)—Brake cable linkage and adjustment same as for Ford Series F-2 & F-3 Trucks. *See "Ford-Lockheed Hydraulic" Brakes for complete instructions.*

MAJOR ADJUSTMENT (For New or Relined Shoes): Perform all preliminary operations under "Adjustment Note" above. Turn brake drum so that inspection slot in web is at lower end of rear (secondary) shoe, insert .010" feeler between shoe and drum, move feeler up along shoe so that entire shoe assembly is wedged forward with primary (forward) shoe against drum. Insert screwdriver or adjusting tool through the adjusting slot on backing plate to engage notched adjusting screw, turn screw by moving tool handle inward toward axle (to move shoes out toward drum), or outward away from axle (to move shoes in away from drum), until .010" feeler is snug between secondary shoe and drum at point 1½" from adjusting screw end of shoe. Check clearance 1½" from opposite (anchor pin) end of this same shoe. If clearance not .010" loosen anchor pin locknut, tap anchor pin out toward drum (to decrease clearance), or inward away from drum (to increase clearance). Tighten anchor pin locknut securely with 16" wrench. Recheck clearance at both ends of secondary shoe and repeat adjustments if required. Adjust all four wheels in this manner. Then adjust parking (hand) brake cables (above).

BLEEDING BRAKE SYSTEM: *See complete "Hydraulic Brake Servicing" for bleeding instructions.*

BRAKE DRUM REPLACEMENT: Brake drums are "demountable" type (removable without disturbing wheel hub) on all models except Ford Pass. Car & Station Wagon **front wheels.** To remove brake drums after wheel has been removed, take off three speed nut (Ford Pass. Car Rear Wheels), or remove three capscrews (Ford Truck, Lincoln, Mercury), retaining drum on wheel hub or axle shaft flange.

Drum Regrinding Note—When refinishing drums, diameter must not be increased more than .030".

BRAKE SHOE REPLACEMENT: With wheels and brake drums removed, brake shoes are removed and replaced as follows:

Brake Shoe Removal—Disconnect return springs at anchor pin, remove hold-down cup, spring, and pin on each shoe. Disconnect hand brake cable at lever on rear wheel brake rear shoe. Pull shoes out at top to free wheel cylinder piston links, lift shoe assembly out, lift out hand brake strut and anti-rattle spring on rear wheel brakes. Disassemble shoes by removing adjusting screw spring (free spring by moving anchor pin end of shoes together) and lifting off adjusting screw assembly.

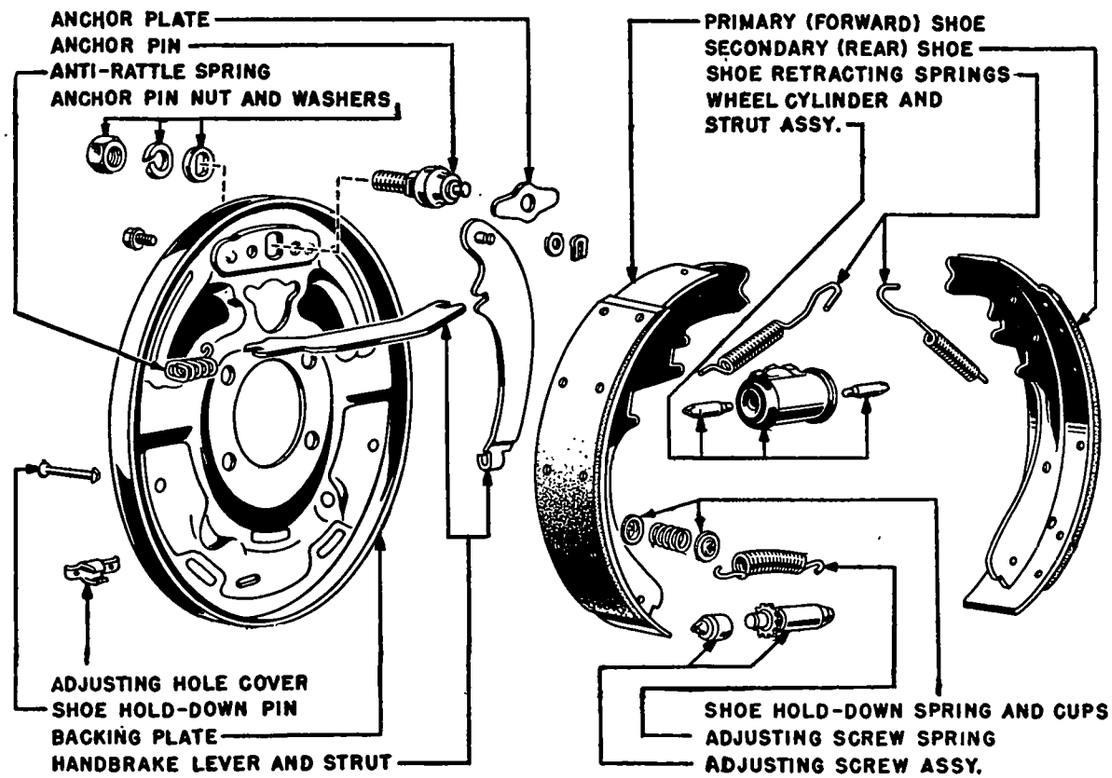

1949 F RD PASS. CARS (& P-1 TRUCK), 1939-49 LINC LN, 1949 MERCURY

HAWLEY MECHANICAL FLOATING LINING TYPE

CROSLEY, A (1939-40), CB41 (1941), CB42 (1942)

TYPE:—Hawley Neutral Shoe type with floating brake lining. Lining consists of a single piece of sufficient length to reach entirely around shoes with gap of 1/16" at ends. Lining is centered on shoes by rib on backing plate and conical retainer on wheel side.

DESCRIPTION & OPERATION:—Wheel Brakes. Two shoes per wheel, anchored at adjusting screw end and operated by cam at opposite end. Shoes are held against adjusting screw and cam by small coiled spring hooked between shoes at each end.

Linkage:—Wheel brakes operated by cables from main cross-shaft on frame. Cables enclosed in conduits at wheel ends and provided with adjusting clevises at cross-shaft.

Hand Brake:—Hand lever is linked to main cross-shaft on frame. Cables enclosed in conduits at wheel ends and provided with adjusting clevises at cross-shaft.

Hand Brake:—Hand lever is linked to main cross-shaft and applies all four wheel service brakes.

ADJUSTMENT:—Jack up all four wheels, remove clevis pins and disconnect all four wheel cables at cross-shaft. At each wheel, loosen locknut and tighten brake adjusting screw on backing plate (turn screw counter-clockwise) until slight drag noticed when wheel turned by hand, then back adjusting screw off (turn screw clockwise) until wheel is just free, tighten locknut.

Linkage Adjustment—Depress brake pedal 1" and hold in this position. Adjust clevis on cross-shaft end of each wheel cable so that brakes barely drag when cable connected to cross-shaft. Release pedal. Road test car and equalize brakes by turning adjusting screw on tight wheel slightly (turn screw clockwise to loosen brakes).

SERVICING:—Brake Lining Replacement—To remove and renew brake linings, jack up wheel, remove hub cap, wheel, and hub assembly. Remove conical brake lining retainer. Take out old lining. Insert new lining and re-install wheel.

Brake Lining Note—Use only genuine Crosley lining—furnished in correct length to fit around shoe with 1/16" gap at ends. Lining is not riveted on shoes and is installed loosely in drum.

Brake Cable Lubrication:—Whenever brake cables adjusted, fill cable conduits with grease. When connecting cables use care not to twist or buckle cables excessively.

HAWLEY MECHANICAL TWO-SHOE TYPE

Crosley, Model CC (1947-48)

TYPE: Two-shoe, four-wheel, mechanically operated (cable) type.

DESCRIPTION & OPERATION: Wheel Brakes—Two shoes per wheel, anchored at adjusting screw end and operated by cam at opposite end. Shoes are held against adjusting screw and cam by coiled springs hooked between the shoes (lighter spring at adjusting screw end, heavier spring at cam end of shoes).

Linkage: Wheel brakes operated by cables linked between cam operating levers on backing plates and levers on main cross-shaft on frame. Cables are enclosed in conduits at wheel ends and have adjusting clevises at cross-shaft ends.

Hand Brake: Parking brake handle on floor board in front of driver's seat linked directly to lever on main cross-shaft and applies all four service brakes. No adjustment is required.

ADJUSTMENT: Jack up all four wheels securely. Remove cotter pins and clevis pins from all four wheel cables at brake cross-shaft. Adjust as follows:

Brake Shoe Adjustment: Jack up all wheels, disconnect wheel cables by removing cotter pins and clevis pins from levers at each end of cross-shaft. Install cross-shaft spacer (see Spacer Note below) on each side of cross-shaft bearing at each end of shaft. Check brake pedal linkage adjustment and make certain that both upper and lower rods act on cross-shaft simultaneously. At each wheel, loosen adjusting screw locknut on backing plate, tighten adjusting screw (turn screw counter-clockwise) until brakes begin to drag, then back off screw (approximately ¼ turn) until wheel turns freely, tighten locknut.

Cross-shaft Spacer Note—Spacers consist of piece of bar stock, 3/16" thick, ½" wide, 3" long, with 30° bend at center (included angle 150°).

Brake Linkage Adjustment: After adjusting brake shoes (above), depress brake pedal 1" and hold it in this position by pulling hand brake lever "on". Adjust each wheel cable by loosening clevis locknut and turning clevis until wheel brake drags slightly when cable connected to cross-shaft lever. With all cables adjusted and connected, pull hand lever "on" for considerable brake drag, check all wheels for equal drag. Equalize by readjusting cables. Push brake pedal down hard, hold in this position by pulling hand lever "on". Check each wheel to see that all wheels are locked and that reserve cable travel (distance from clevis to brake cable clamp on backing plate) is ½" minimum. **Remove spacers from cross-shaft bearings.**

Hand Brake: No adjustment required.

SERVICING: Brake Lining Replacement—Manufacturer recommends that factory replacement shoes (with lining installed) be used. Lining is molded type and is ground concentrically after installation on shoes. CAUTION—Keep paired brake shoes together.

Brake Shoe Installation—Install heavier retracting spring on cam end of brake shoes with spring hooks inward toward backing plate, install lighter spring on adjusting screw end of brake shoes with spring hooks outward or away from backing plate.

CAUTION—Replacement brake shoes are ground in pairs and paired shoes should be kept together and installed on same wheel.

Cross-shaft Installation: Bearings must be assembled on cross-shaft when shaft installed on car. Insert bolts with head on inside of frame, install flat fabric bearing on bolts next to frame, place spacer on each bolt, install second flat fabric bearing, bearing plate, lockwashers and bolt nuts. Before tightening nuts, install cross-shaft spacer at each cross-shaft bearing (see Cross-shaft Spacer Note under Brake Shoe Adjustment above), to center the shaft, then tighten bolt nuts. Adjust the brakes.

►***CAUTION—See that cross-shaft remains centered in the slotted bearings while connecting cables and adjusting brakes.***

Brake Pedal Linkage Adjustment: With the brake pedal against the floor board stop, rotate the cross-shaft until lower bracket pin is against the front end of the slot in the lower (non-adjustable) brake pedal rod. Hold cross-shaft in this position, adjust clevis on forward end of upper brake pedal rod until upper bracket pin on cross-shaft is against the rear end of slot in upper pedal rod. This setting does not change in service and no adjustment is required when brakes are adjusted.

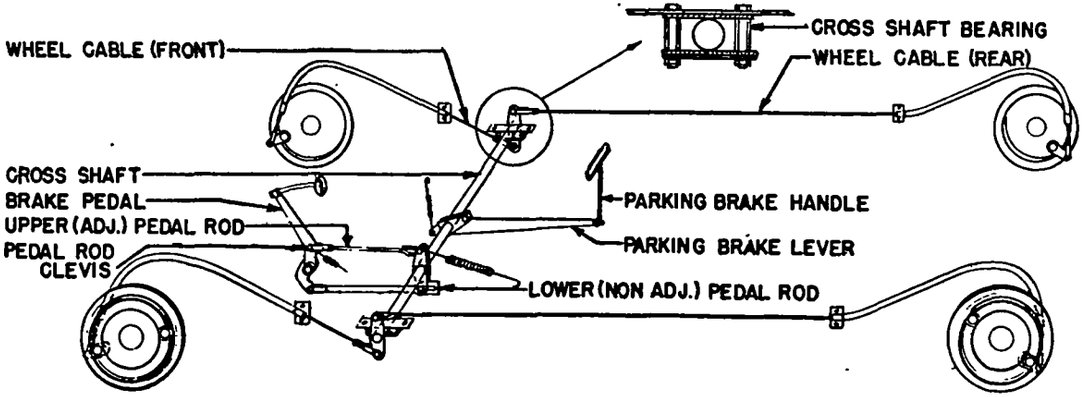

HAWLEY BRAKE SYSTEM

STEWART-WARNER BRAKES

PIERCE ARROW 8 & 12, ALL MODELS (1936-37-38)

POWER UNIT NOTE: Bendix Vacuum Power unit used on all models. *See "Bendix Vacuum Cylinder—Plain Type—External Valve" for complete data.*

DESCRIPTION AND OPERATION:—Wheel Brakes— Two shoes per wheel anchored at adjusting screw end (heel) and operated by floating cam on brake shaft at opposite end (toe). Front brake shoes released proportionally to turning angle when turned from straight-ahead position. Shoes held in off position by short retracting spring hooked to shoe at center. Adjustments consist of centralizing screw (set angularly on backing plate so that tapered head contacts web of one shoe) and adjusting nut at anchor end which expands shoe.

Linkage:—Consists of single cable in conduit from brake lever forward to front brake cross-shaft and rearward to rear brake cross-shaft. Brake operating cams float on ends of cross-shafts. Cables require adjustment only when chassis units serviced.

Hand Lever:—Applies all four service brakes. Provided with 'overrun' which provides automatic take-up in service. Overrun must be reset in lower position when brakes are adjusted.

ADJUSTMENT:—For Wear—Set hand lever in off position, see that pin is engaged in lower slot of brake rod overrun and that pin does not contact forward end of slot. Set front wheels in straight-ahead position (important). Jack up all 4 wheels, at each wheel, turn hexagonal adjusting screw clockwise until wheel can just be turned by hand, then back off adjusting nut 9 notches (front wheels), and 12 notches (rear wheels), tap nut snugly toward backing plate. One notch on nut moves shoe .001" (measured at center) and there are 6 notches per revolution of the nut. If wheel does not turn freely after adjusting, turn centralizing screw n backing plate in or clockwise until brake drags appreciably, then back screw off until wheel is free. Road test car and equalize wheels. Braking force is 54% front wheels, 46% rear wheels.

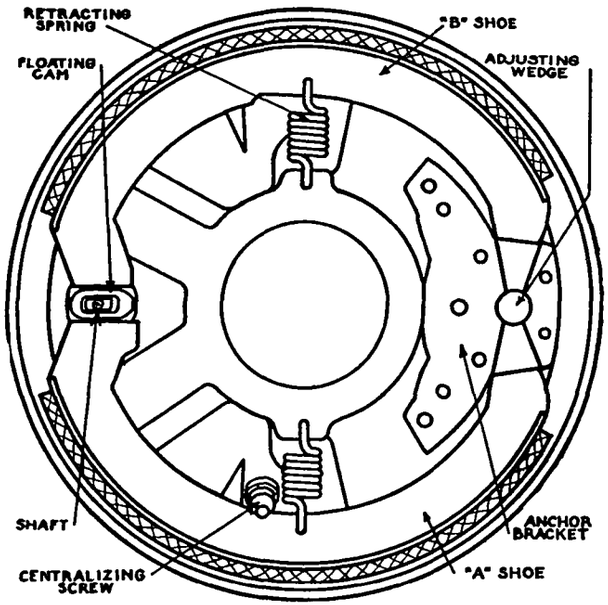

STEWART-WARNER BRAKE ASSY.

Hand Lever Adjustment:—After adjusting brakes (above), loosen locknut and adjust clevis at rear of hand lever brake rod until only slight clearance remains between lever pin and end of lower slot in overrun at forward end of brake rod.

Linkage Adjustment:—When cable adjustment required, see that cable conduit support springs are in place and fastened so that cable does not sag, place hand lever in 'off' position with pin engaging lower slot of rod overrun, set front wheels in straight-ahead position, loosen both cable adjustment locknuts and adjusting nuts at brake lever, turn up adjusting nut at each wheel until wheel can just be turned by hand, back off nut 2 notches, tap nut against backing plate. Tighten cable adjustment nuts until wheel can just be turned, tighten cable adjustment locknuts. Adjust wheel brakes as directed above.

RELINING BRAKES:—Manufacturer recommends installation of factory-lined shoes which are accurately ground. Shoes interchangeable in pairs.

SERVICING:—Removing and Installing Shoes—Use special spring tool to extend retracting spring permitting removal of shoe. If tool not used, pull 'A' shoe out radially until it hooks over two embossed shoe rests on backing plate, repeat with 'B' shoe, slide cam off shaft. Pull 'B' shoe away from backing plate to free it from rests, pull anchor end out of anchor bracket, holding cam end out so that it is free to overlap 'A' shoe, swing cam end against spindle, unhook spring, remove 'B' shoe.

Pull adjusting nut and wedge assembly out of anchor bracket, wipe all parts clean, lubricate bearing surfaces with graphite grease. See that tapered grooves in adjusting wedge assembly lines up with openings in anchor bracket when reassembling.

TYPE OF EQUIPMENT

CLUTCHES

Page

Auburn (Atwood) 2114
Borg & Beck
- 9A1, 10A1 2114
- 9A3, 10A3, 10A4, 11A3, 11A5 2114
- 9A6, 10A6, 11A6 2115
- 8A7, 9A7, 10A7 2115

Buick (Own) Single Plate 2125
Buick (Own) Crown Spring 2125
Cadillac (Own) Double Plate 2129
Chevrolet (Own) 1936-37 2127
Chevrolet (Own) 1938-48 2126
Hudson (Own) Single Plate 2128
Illinois (Graham) 2118
Inland 2118
Long
- 9AB, 11AB 2123
- 8½CB, 11CB 2119
- 9CF, 9½CF, 10CF, 11CF 2120
- 11CFS (Special Packard) 2122
- 12CB 2122
- 29A, 31A Double Plate 2123

Pontiac (Own) 1936-38 2129
Rockford 2124

CLUTCH CONTROLS

Bendix Vacuum 1936 2113
Hudson & Terraplane (Special Bendix) 1937 2102
Hudson & Terraplane (Special Bendix) 1938-40 2103
Hudson Vacumotive Drive 1941 2104
Hudson Vacumotive Drive 1942-47 2106
Hudson Vacumotive Drive 1948 2107
Packard 1937-39 2113
Packard Electromatic Clutch 1941 2108
Packard Electromatic Clutch 1942 2110
Packard Electromatic Clutch 1946-48 2112

CLUTCH FACING, REMOVAL, PEDAL ADJUSTMENT

See Individual *Car Model Pages*

CAR APPLICATION

CLUTCHES

	Page
AUBURN	
1936-37	2123
BANTAM	
1937-41	2124
BUICK	
1936-48	2125
CADILLAC	
1936-48 V8 (Long)	2120
1940 V8 (B & B)	2115
1936-37 V12	2120
1936-37 V16	2129
1938-40 V16	2122
CHEVROLET	
1936-37 Pass. Cars	2127
1938-48 Pass. Cars	2126
1936-37 Comm'l & Trucks	2127
1938-48 Comm'l & Trucks	2126
CHRYSLER	
1936-48	2115
CORD	
1936-37	2120
CROSLEY	
1939-48	2124
DE SOTO	
1936-48	2115
DODGE	
1936-48	2115
DUESENBERG	
1936-38	2123
FORD	
1937-39 "60" Pass. Cars	2119
1936-39 "85" Pass. Cars	2120
1940-49 Pass. Cars	2120
1936-48 Comm'l & Trucks	2120
FRAZER	
1947-48 (Auburn)	2114
1947-48 (B & B)	2115
GRAHAM	
1936-37	2118
1937-41	2120
HUDSON	
1936-48	2128
HUPMOBILE	
1936-40 Six	2115
1936-39 Eight	2120
JEEP	
1942-45 Army Model	2114
KAISER	
1947-48 (Auburn)	2114
1947-48 (B & B)	2115

	Page
LA SALLE	
1936	2114
1937-40 (Long)	2120
1940 (B & B)	2115
LINCOLN	
1936-40 V12	2122
1936-40 Zephyr	2120
1941-49	2120
MERCURY	
1939-48	2120
1949	2115
NASH	
1936-48	2115
NASH-LAFAYETTE	
1936-40	2115
OLDSMOBILE	
1936-48 Six	2115
1936 Eight	2114
1937-48 Eight	2115
PACKARD	
1937-48 Six	2120
1936-48 "120" Eight (Long)	2120
1940 Six & Eight (B & B)	2115
1941 Six Taxicab	2122
1936 Eight	2122
1936-41 Super 8 (Long)	2122
1940 Super 8 (B & B)	2115
1941-48 Super & Cust. 8	2120
1936-39 Twelve	2122
PIERCE ARROW	
1936-38	2122
PLYMOUTH	
1936-48 (B & B)	2115
1947-48 (Auburn)	2114
PONTIAC	
1936-38	2129
1939-48	2118
STUDEBAKER	
1936-48 (except Pres.)	2115
1936-37 President	2123
1938 President	2120
1939-42 President	2118
TERRAPLANE	
1936-38	2128
WILLYS	
1936-39 & '40 Comm'l	2124
1939 Overland	2119
1940-42 Pass. Cars	2114
1941-42 Comm'l	2114
1946-48	2114

CLUTCH CONTROLS

	Page
CHRYSLER—DE SOTO—DODGE	
1936	2113
HUDSON	
1936	2113
1937	2102
1938-40	2103
1941 Vacumotive Drive	2104
1942-47 Vacumotive Drive	2106
1948 Vacumotive Drive	2107

	Page
PACKARD	
1937-39	2113
1941 Electromatic	2108
1942 Electromatic	2110
1946-48 Electromatic	2112
PLYM UTH	
1936	2113
TERRAPLANE	
1936	2113
1937	2102
1938	2103

HUDSON & TERRAPLANE 1937 TYPE

Optional Equipment On:

HUDSON SIX, MODEL 73 (1937).
HUDSON EIGHT, MODELS 74, 75, 76, 77 (1937).
TERRAPLANE, MODELS 70, 71, 72 (1937).

DESCRIPTION:—Bendix Vacuum Cylinder type with accelerator pedal control and Cushion (pendulum) Valve. Similar to type used previously except that Cut-off Plunger has been discontinued and a solenoid operated valve installed instead. Valve solenoid is controlled by 1) Dash Control Switch, 2) Governor switch (on speedometer take-off at transmission), 3) Electric Hand Selector Switch, and 4) High Gear Ground Switch (on transmission) to prevent clutch being disengaged by the release of the accelerator pedal at speeds above 15 M.P.H. with transmission in high gear. These controls operate as follows:

Dash Control Switch—Main switch for valve solenoind circuit. With switch button pulled out, solenoid circuit is broken and valve is closed (Clutch Control inoperative). Allows Automatic Clutch to be cut in or out as desired.

Governor Switch—This switch is closed with car standing or moving less than 15 M.P.H. completing solenoid circuit to ground so that Automatic Clutch is operative. At speeds above 15 M.P.H., this switch is held open so that solenoid circuit is broken and Automatic Clutch cannot operate unless circuit is completed by the Electric Hand Selector Switch or the High Gear Ground Switch.

High Gear Ground Switch—At forward end of transmission and operated by high gear shifter rail. Closed in all gear positions except high gear. Switch is opened when transmission shifted into high gear so that Automatic Clutch is inoperative and will not disengage clutch at speeds above 15 M.P.H.

Electric Hand Selector Switch—Consists of a ground strap which completes solenoid circuit to ground in all switch positions except high gear. With Selector switch in high gear, flat on switch shaft is directly under ground strap and bakelite button on strap holds it away from shaft so that solenoid circuit is open and Automatic Clutch inoperative. Moving Selector switch to neutral or any other position completes solenoid circuit to ground so that Automatic Clutch is operative and shifts can be made at any car speed.

ADJUSTMENT:—Adjustments similar to those for preceding model and must be made in order as directed below. Before adjusting, see that engine idles smoothly and idling speed is set for 7 M.P.H. (engine must be run to supply vacuum and operate clutch while adjustments being made).

Accelerator Valve Plunger Adjustment:—See that accelerator valve plunger is back against its stop when accelerator pedal released. To check, disconnect throttle pull rod and check clearance between accelerator pedal bell-crank and toeboard. Adjust length of accelerator valve plunger rod (loosen locknut and turn clevis at rear end) so that bell-crank clearance is ½". NOTE—Cars not equipped with Clutch Control at factory have rubber bumper on accelerator pedal rod to act as stop for pedal lever. This bumper must be removed when Clutch Control installed (accelerator valve plunger must act as stop for pedal lever).

Piston Rod Adjustment:—Check distance from rear end of piston rod (not face of locknut) to center of piston rod clevis pin. Should be exactly 1⅞". To adjust, loosen locknut, turn clevis in or out of piston rod, tighten locknut.

Centering Piston Travel:—To check piston position in cylinder, push accelerator control valve plunger forward and pull piston rod backward to limit of travel with engine not running. Check clearance between front end of slot in piston rod lever and clevis pin of rod attached to this lever. Distance should be ⅛".

Throttle Rod Adjustment:—With engine idling and clutch disengaged by automatic control, pull back on carburetor throttle rod until piston rod begins to move backward, hold throttle rod in this position, turn clevis on forward end until clevis pin can just be inserted through clevis and extreme rear end of slot in throttle lever. With this setting, any additional throttle opening after piston rod begins to move will increase engine speed.

Cushion Valve Adjustment:—Remove fitting on right side of valve housing and check plunger position. With pendulum in extreme forward position, grooved section of plunger should be exactly in line with port in housing. To adjust (on first models with adjusting screw on forward face of pendulum housing), loosen locknut and turn screw. On later models with stop on forward face of housing which contacts rubber washer on bottom of pendulum, spring pendulum arm slightly. NOTE—Some first units not equipped with a stop (Install stop on these models by drilling through boss on housing and tapping hole for 10/32" by 1½" machine screw). Remove plunger spring and check free length, stretch spring to correct free length of 1⅝". Replace spring, turn spring adjusting screw in flush with face of locknut, tighten locknut.

Final Test & Adjustment:—Shift transmission into low gear, depress accelerator pedal ¼ or less (more than this throttle opening will bring cushion valve into action). If clutch engagement is harsh, piston rod should be shortened. If engine races before clutch engages, piston rod should be lengthened. When making these adjustments, change piston rod length by turning clevis ½ turn and repeat test until satisfactory operation secured. If satisfactory setting cannot be secured, see Trouble Shooting and special recommended changes to be made on early 1937 cars.

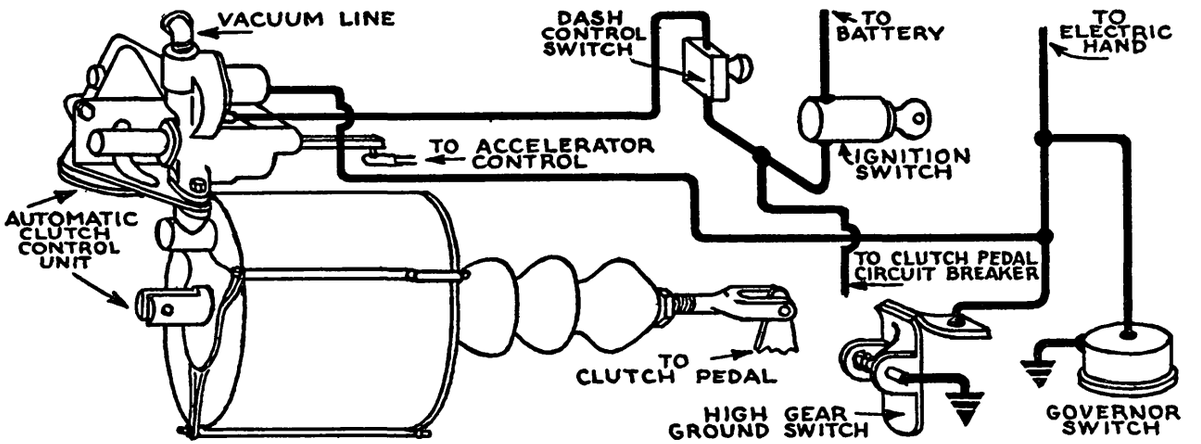

Early 1937 Cars. If engine races with half throttle before clutch engages, remove accelerator valve plunger, disconnect vacuum line from cushion valve to accelerator valve, file square port in accelerator valve body (in line with connection removed) 1/16" longer toward front of body. Use extreme care not to remove metal from the other three sides of the port and remove all burrs and filings. Increase width of tapered traverse slot located midway of plunger length by grinding off 1/16" of each of the tapered sides.

TROUBLE SHOOTING:—Clutch Disengagement slow when pedal released (at speeds below 15 MPH, in high gear, all speeds in other gears). Check accelerator pedal, throttle linkage, and accelerator valve plunger linkage for free movement and see that accelerator valve plunger snaps out against stop when pedal is released. Check carburetor throttle slow closing-device (carburetor throttle dashpot which prevents throttle closing until gasoline in cylinder escapes through check-valve in dashpot plunger), check for leaking or blocked vacuum lines and fittings, check solenoid valve for restriction caused by swollen head or sticking plunger. Check power cylinder for piston leakage by removing control valve assembly and holding finger over vacuum port on front of cylinder while piston rod is pulled out. If piston can be pulled out, cylinder must be dismantled and piston rebuilt.

Clutch Engagement too Rapid. Check for power cylinder piston leakage (see paragraph above), check cylinder head gasket for leaks. Check for leakage at atmospheric valve and around piston rod by placing finger over bleed line fitting in cylinder head and pulling out on piston rod. If piston moves out after 'dump slot' in piston rod reaches cushion point, leaks exist at one of these points. Check for leaks in bleed line from cylinder head to cushion valve, and from cushion valve to accelerator plunger valve housing.

ELECTRIC CONTROL TESTING:—On-Off Switch & Valve Solenoid. If clutch not disengaged with engine running and switch in 'on' position, connect jumper wire from hot terminal (relay or regulator 'B' terminal) to red-wire terminal on solenoid. If clutch operates, check wiring between ignition switch, On-Off switch, and solenoid; check switch

HUDSON & TERRAPLANE 1937 TYPE (C nt.)

for poor contact. If clutch does not operate, leave jumper wire in place, ground the other (yellow-wire) terminal. If clutch operates, check all ground switches (Shift rail switch, Governor switch, Electric Hand ground switch). If clutch does not operate, check solenoid for open-circuit and see that valve is not sticking.

Shift Rail Switch:—Disconnect Electric Hand jack (at lower end of steering column), disconnect yellow-wire at Governor Switch. Operate clutch by idling engine and depressing accelerator pedal. Clutch should operate in all gears except High Gear. If clutch does not operate in any gear, ground shift rail switch terminal. If clutch operates, replace switch. If clutch does not operate check or replace wire. If clutch operates in high gear, replace switch.

Wiring Harness:—After checking Shift Rail Switch, and with Governor Switch wire and Electric Hand Jack disconnected, shift transmission into High Gear. Insert one test prod connected to voltmeter or ammeter (ground other meter lead) in center socket of lower harness jack. Meter reading should be 6 volts (voltmeter), 3 amperes (ammeter). No reading indicates open-circuit in yellow-wire from solenoid ground terminal to jack. Leave transmission in high gear, shift meter test prod to Shift Rail Switch terminal. If 6 volt (voltmeter), 3 ampere (ammeter) reading not obtained, check yellow-wire connection at jack center terminal and at shift rail switch. Repeat this test at Governor Switch terminal. If these tests do not give satisfactory results, lower wiring harness should be replaced.

Selector Ground Switch:—To check ground switch in Electric Hand Selector, connect voltmeter or test lamp lead to hot terminal ('B' terminal of relay or regulator), connect other lead to center prong of upper wiring harness jack (do not use ammeter for this test). Lamp should light or voltmeter show reading of 5-6 volts with selector in all positions except High Gear. If reading not obtained, check selector ground to steering post and contact between ground strap and selector shaft. If reading obtained in high gear, remove selector and check thickness of bakelite button on ground strap and shape of strap.

Governor Switch:—Check by road testing or with rear wheels jacked up. Place selector in high gear, see that transmission high gear engaged, connect yellow-wire to governor switch. Operate engine. Clutch should operate when accelerator pedal depressed and released. If not, replace Governor Switch. Depress accelerator pedal until speedometer reads 25 MPH., release pedal. Clutch should remain engaged with speedometer reading above 20 MPH. but should disengage before speedometer drops to 16 MPH. If disengagement does not occur within this speed range, replace Governor Switch.

SERVICING:—Piston Lubrication. At 15000 mile intervals, remove piston rod guard, and with engine running and accelerator pedal depressed so that clutch is engaged, use oil can to squirt 1 ounce of Hudson Shock Absorber fluid in piston rod slot. Release accelerator pedal at same time so that piston rod movement as clutch is disengaged will draw fluid into cylinder. Remove piston rod clevis pin, work piston back and forth and rotate piston at same time to distribute fluid evenly on piston seal. When reconnecting piston rod, rotate piston one-half turn so piston seal wear will be uniform.

1938-40 HUDSON & TERRAPLANE

Optional Equipment On:
HUDSON '112', MODELS 90, 98 (1939)
HUDSON 6, 83 ('38), 91,2,3 ('39), 40,1,3,8 ('40)
HUDSON 8, 84,5,7 ('38), 95,7 ('39), 44,5,7 ('40)
TERRAPLANE, MODELS 80, 81, 82, 88 (1938)

IMPORTANT NOTE:—Power Cylinder Tension Spring—Should be installed on first cars not equipped with this spring at the factory. Spring acts as support for part of power cylinder weight at rear end. To install, mount clip (Part No. 33539) under nut on lower tripod clamp bolt, hook small end of spring (Part No. 155839) in clamp, drill ⅛" hole ⅝" in from, and slightly below, adjusting screw on lug of bell crank bracket and hook other end of spring in this hole. Spring installed in this manner at factory on later cars.

TYPE:—New design not similar to type used on 1937 models. Vacuum Cylinder is Internal Valve Type (control valve located within piston rod, operated by lever on piston rod bell-crank). Solenoid valve mounted on forward end of cylinder controls High-Gear lock-out operation and special open-throttle rapid-engagement only (see description below) and does not have any effect on normal clutch control operation. When engine is started, vacuum line to forward end of cylinder will be open (solenoid valve open), control valve within piston rod will be drawn forward admitting air to rear end of cylinder and piston will move forward to disengage clutch. When accelerator pedal is depressed, first motion of linkage moves control valve lever forward (rapid motion permitted by clearance between cushion point stop-screw and valve lever cam) pulling control valve to rear so that vacuum admitted to rear end of cylinder, piston spring then engages clutch rapidly until cushion point is reached when piston overtakes control valve and seals off rear end of cylinder. Further movement then possible only as valve lever cam is rotated under cushion point stop-screw so that very soft cushioning action or initial clutch engagement is secured. As soon as accelerator linkage play is taken up and carburetor throttle begins to open, final clutch engagement takes place rapidly (valve lever cam has special contour to secure this action). Clutch control designed to modify this normal engagement for special conditions as follows:

Compensator (For Initial Engagement)—When clutch disengaged manually (necessary to start engine), the end of the bell-crank yoke strikes a pin on the end of the intermediate lever (on which valve lever is mounted) swinging lever so that valve lever pivot is moved forward permitting clutch to engage deeper at the cushion point to compensate for oil on clutch disc cork inserts. As soon as clutch engages automatically, trip lever on piston rod yoke rotates compensator lever back to normal driving position. No adjustment is required but compensator must be in normal driving position when other clutch control adjustments are made.

Accelerator Switch (For wide-open throttle Engagement)—Consists of a switch on the dash operated by the accelerator pedal which controls vacuum cylinder solenoid valve circuits. With throttle closed, circuit completed through switch to both Governor Switch (left hand terminal—RW wire) and to High Gear Shift Rail Switch and Selector switch (right hand terminal—Y wire). When throttle opened sufficiently to rotate accelerator switch lever 5-10°, circuit to Governor Switch is broken (eliminating Governor control). When throttle opened approximately 1/2, circuit to Shift Rail Switch and Selector ground switch is broken. With all solenoid circuits to ground broken, solenoid valve cuts off vacuum and admits air to vacuum cylinder so that clutch engages rapidly (which is desirable when car started with throttle more than half open).

High Gear Lock-out (At speeds above 20 MPH)—This device operates in same manner as on 1937 models and prevents clutch disengaging when accelerator pedal is released at speeds above 20 MPH. with transmission and selector lever in High Gear. Electrical circuits are new (Governor, Shift Rail Switch, and Selector ground contact connected through Accelerator Switch—see paragraph above).

ADJUSTMENT:—Before making adjustments, engine must be properly tuned and warmed up so it idles smoothly at correct idle speed with vacuum reading of 18-21" of mercury (see Tune-up data on car model page). The car should be driven sufficiently to bring clutch units to normal operating temperatures. See that Compensator is in normal running position (see Compensator above) and make all Clutch, Throttle, and Automatic Clutch linkage adjustments listed below in order before adjusting 'Cushion Point' which controls clutch performance.

Clutch Pedal Adjustment—Remove clevis pin at lower end of clutch pedal connecting link, loosen locknut and turn clevis so that center of pedal shank clamp bolt is 1½" from toeboard with clutch fully engaged.

Accelerator Linkage—See that all linkage operates freely without binding. Adjust clevis at upper end of throttle rod connected to accelerator pedal bell-crank so that upper arm on bell-crank is ¼" from toeboard with accelerator pedal released and accelerator switch lever against its stop (this switch lever must act as stop for accelerator linkage). NOTE—On cars not factory equipped with Automatic Clutch control (no Accelerator Switch), rubber bumper is installed on accelerator pedal rod to act as stop for pedal bell-crank. This bumper must be removed when Accelerator Switch installed so that switch lever controls accelerator pedal position. **Important—Valve Cam Linkage**—Connecting rod on accelerator pedal bell-crank which operates valve cam linkage must be connected in third hole from end of bell-crank lower arm (see Note below). Adjust clevis on lower end of rod so that clearance between upper bell-crank and dash is ⅜" with engine idling (vacuum clutch control operative). **1938 Model Note**—Rod connected in second hole on early cars. Shift rod to third hole before adjustments are made.

Vacuum Cylinder Bell-crank Yoke—With engine not running, and vacuum cylinder piston in extreme rear position, take out cotter pin in valve lever pivot and hairpin at valve-rod-and-lever link, remove valve lever, adjust yoke at bell-crank end of operating rod so that clearance between front edge of clevis pin on bell-crank and front end of slot in yoke is ⅛". This setting will provide clearance at clutch throw-out bearing (with clutch engaged) without excessive play in operating linkage.

Piston Travel (Valv Linkag)—Make certain that valve cam lever operating rod guide block is mounted in rear (end) hole of cam lever (see Note below), and compensator pin in extreme rear posi-

CONTINUED ON NEXT PA E

HUDSON & TERRAPLANE 1938-40 TYPE (C nt.)

tion, operate engine to provide vacuum. With clutch disengaged, screw threaded sleeve (on operating rod at valve cam lever guide block) toward dash until piston rod just reaches its extreme forward position, then screw threaded sleeve away from dash until piston moves ¼" toward rear, hold sleeve and tighten locknut securely.

Important Note—On some early cars, guide block was located in center hole of cam lever. Guide block should be changed to rear hole during adjustment (allows for slightly faster throttle opening for same clutch engagement). On Models 84, 85, 87 it may be necessary to cut ⅛-¼" additional thread length on rod to permit sleeve adjustment (10-32 thread).

Cushion Point Adjustment:—With all linkage adjustments correctly made (above), block wheels and start engine (do not set brakes). Accelerate engine and manually engage and disengage clutch to dry clutch disc corks. Swing compensator lever to rear

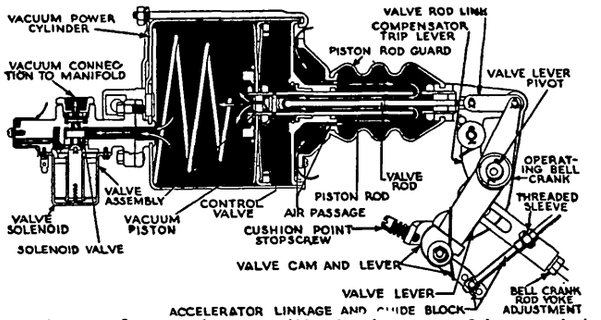

(normal running position), turn cushion point stopscrew clockwise or in until it contacts valve cam. With transmission in low gear, hold cam against stopscrew by pressing on back of cam lever, slowly turn stopscrew counter-clockwise or out until car tends to move forward (clutch beginning to drag against flywheel). Check carburetor throttle rod and then make final adjustment.

Throttl Rod Adjustment—See that accelerator rod engaged in correct hole in lever on dash (see table). Hold the accelerator pedal down so that valve lever cam just touches cushion point stopscrew—**Important**—Use wedge behind accelerator pedal bell-crank at toeboard to secure this throttle opening, pressure applied to any other point of accelerator linkage will prevent correct adjustment being secured. Adjust clevis at carburetor end of accelerator rod so that all lost motion is taken up and any additional pedal travel will open throttle. Check this adjustment whenever governor removed or carburetor setting is changed.

Car Model	Throttle Rod Engagement
80, 81, 88 ('38)	Bottom Hole
90, 98 ('39), 40, 48 ('40)	Bottom Hole
82, 83 ('38), 91,2,3 ('39)	Top Hole
41, 43 ('40)	Top Hole
84,5,7 ('38), 95,7 ('39)	Center Hole
44,5,7 ('40)	Center Hole

Final Adjustment:—Shift transmission into second gear, depress accelerator pedal slowly with engine running. Car should begin to move slightly upon initial throttle opening. If clutch engagement slow and engine speed excessive, turn cushion point stopscrew counter-clockwise or out slightly. If clutch engagement too rapid (engine stalls), turn screw clockwise or in slightly. Do not turn screw more than 1/2 turn without rechecking performance.

TROUBLE SHOOTING:—If Automatic Clutch operation slow or erratic, check vacuum lines for leaks, tighten connections, check gaskets, solenoid for sticking plunger, all linkage for excessive friction or binding (operate accelerator and watch operation of entire linkage system). To check vacuum cylinder for piston leaks, slide piston rod guard forward until 4 ports in piston rod are exposed, start engine and allow clutch to disengage automatically, close off piston rod ports by covering with fingers, excessive leakage will cause a perceptible suction at the ports (see Piston Lubrication under Servicing below).

SERVICING:—Vacuum Piston Lubrication, Piston Rod Guard Replacement, and Piston Rod Adjustment instructions are same as for 1941 Hudson 'Vacumotive' clutch control. ***Refer to Hudson Vacumotive Clutch Control article (following) for complete data.***

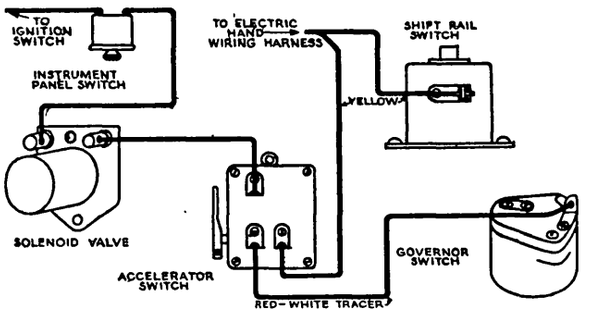

TESTING:—All testing procedure is same as for 1941 Hudson 'Vacumotive' Clutch Control except for Lower Wiring Harness and Selector Switch testing on cars with Electric Hand. ***Refer to Hudson Vacumotive Clutch Control article (following) for complete instructions and note following special data for cars with Electric Hand only:***

Shift Rail Switch & Lower Wiring Harness:—Disconnect connector between Automatic Clutch lower harness and Electric Hand lower harness, disconnect Red-White wire from Governor Switch. Automatic Clutch should operate in all gears except High. If it does not, ground Second-and-High Shift Rail Switch (left hand switch on transmission). If operation satisfactory, check switch for sticking operating ball or replace switch. If Automatic Clutch does not operate, replace Yellow wire between Accelerator switch, Shift Rail Switch, and Electric Hand harness. If Automatic Clutch operates in High Gear replace Shift Rail Switch.

Selector Ground Switch:—Connect voltmeter or test lamp clip to battery cable terminal (do not use ammeter), connect other test lead to 'Y' prong of Electric Hand upper harness jack. Test lamp should light, or voltmeter read 5-6 volts with selector in any gear position except high gear. If no light or reading secured, check selector for poor contact between ground finger and shaft or poor ground connection between selector and steering column. If lamp lights or reading obtained in high gear, dismantle selector and check for short-circuit between selector finger and shaft (check thickness and shape of bakelite insulating button).

HUDSON VACUMOTIVE DRIVE 1941 TYPE

Optl. Equipment On:
HUDSON, ALL MODELS (1941)

SPECIAL SERVICE NOTE & PRODUCTION CHANGE:—To correct complaints of Governor Switch not functioning or operating at incorrect speed (see Governor Switch data below) on first cars, install new Governor Switch, Part No. 162866, marked by Orange dots on terminal screws and Orange band around switch body. This new type Governor Switch has shaft bushings with reversed oil groove to prevent transmission lubricant working up into switch body and is installed at the factory on later cars.

DESCRIPTION & OPERATION:—Vacumotive Clutch Control consists of an internal valve type Vacuum Power Cylinder linked to the clutch throw-out mechanism so that the clutch can be operated manually (by depressing clutch pedal) or automatically (with engine running and 'off-on' switch control button on instrument panel pushed in) with accelerator pedal control. Clutch is disengaged whenever accelerator pedal released (except at speeds above 15 MPH. in high gear—see High Gear Lock-out below) and engages as soon as accelerator pedal is depressed to accelerate car. Solenoid valve mounted on forward end of cylinder controls High-gear lock-out control and special open-throttle rapid-engagement only (see description below) and does not affect normal clutch control operation. Control operates as follows: When engine is started, vacuum line to forward end of cylinder will be open (solenoid valve open), control valve within piston rod will be drawn forward admitting air to rear end of cylinder and piston will move forward to disengage clutch. When accelerator pedal is depressed, first motion of linkage moves control valve lever forward (rapid motion permitted by clearance between cushion point stop-screw and valve lever cam) pulling control valve to rear so that vacuum admitted to rear end of cylinder, piston spring then engages clutch rapidly until cushion point is reached when piston overtakes control valve and seals off rear end of cylinder. Further movement then possible only as valve lever cam is rotated under cushion point stop-screw so that very soft cushioning action or initial clutch engagement is secured. As soon as accelerator linkage play is taken up and carburetor throttle begins to open, final clutch engagement takes place rapidly (valve lever cam has special contour to secure this action). Clutch control designed to modify this normal engagement for special conditions as follows:

Compensator (For Initial Engagement)—When clutch disengaged manually (necessary to start engine), the end of the bell-crank yoke strikes a pin on the end of the intermediate lever (on which valve lever is mounted) swinging lever so that valve lever pivot is moved forward permitting clutch to engage deeper at the cushion point to compensate for oil on clutch disc cork inserts. As soon as clutch engages automatically, trip lever on piston rod yoke rotates compensator lever back to normal driving position. No adjustment is required but compensator must be in normal driving position when other clutch control adjustments are made.

Accelerator Switch (For wide-open throttle Engagement)—Consists of a switch on the dash oper-

CONTINUED ON NEXT PAGE

HUDSON VACUMOTIVE DRIVE 1941 TYPE (C nt.)

ated by the accelerator pedal which controls vacuum cylinder solenoid valve circuits. With throttle closed, circuit completed through switch to both Governor Switch (left hand terminal—RW wire) and to High Gear Shift Rail Switch and Selector switch (right hand terminal—Y wire). When throttle opened sufficiently to rotate accelerator switch lever 5-10°, circuit to Governor Switch is broken (eliminating Governor control). When throttle opened approximately 1/2, circuit to Shift Rail Switch and Selector ground switch is broken. With all solenoid circuits to ground broken, solenoid valve cuts off vacuum and admits air to vacuum cylinder so that clutch engages rapidly (which is desirable when car started with throttle more than half open).

High Gear Lock-out (At speeds above 15 MPH)—This device consists of a Shift Rail Switch on the transmission case which is opened by the shift rail when the transmission is in High Gear. This prevents clutch disengaging with transmission in high gear at speeds above 15 MPH. (when Governor Switch contacts will be open).

ADJUSTMENT:—Before making adjustments, engine must be properly tuned and warmed up so it idles smoothly at correct idle speed with vacuum reading of 18-21" of mercury (see Tune-up data on car model page). The car should be driven sufficiently to bring clutch units to normal operating temperatures. See that Compensator is in normal running position (see Compensator above) and make all Clutch, Throttle, and Automatic Clutch linkage adjustments listed below in order before adjusting 'Cushion Point' which controls clutch performance.

Clutch Pedal Adjustment—Remove clevis pin at lower end of clutch pedal connecting link, loosen locknut and turn clevis so that center of pedal shank clamp bolt is 1½" from toeboard with clutch fully engaged.

Clutch Control Linkage Adjustment—See that linkage works freely without binding. Adjust accelerator switch to bell crank rod so that clevis pin at switch end just slips into place with switch lever against the stop and clearance of 1/8" between stop on bellcrank (to which forward end of rod is connected) and flange of water jacket cover on side of engine block. See that valve lever cam operating rod is connected in correct hole in accelerator pedal link bellcrank (Top Hole for all 6 Cyl. Models, Bottom Hole for all 8 Cyl. Models), adjust threaded sleeve on rear end of this valve lever cam operating rod so that distance from end of threaded sleeve to end of rod is exactly 11/16" (6 Cyl. Models), 1 5/32" (8 Cyl. Models).

Throttle Linkage Adjustment:—See that carburetor throttle valve lever stopscrew set for correct 7½-8 MPH. or 600 RPM. hot or slow idle speed with fast idle inoperative. With throttle closed and fast idle inoperative, loosen locknut and turn accelerator cross-shaft stopscrew (on lever on left hand end of cross-shaft) until clearance between end of screw and stop on second lever is exactly 3/32", tighten locknut.

Vacuum Cylinder Bell-crank Yoke—With engine not running, and vacuum cylinder piston in extreme rear position, take out cotter pin in valve lever pivot and at end of valve-rod-and-lever link, remove valve lever, adjust yoke at bell-crank end of operating rod so that clearance between front edge f clevis pin on bell-crank and front end of slot in yoke is ⅛" (with rod pulled down, end should be ⅛" longer than required to enter hole in lever), push rod up and assemble to lever, install cotter pin. This setting is necessary to provide clearance at clutch throw-out bearing (when clutch engaged) without excessive play in operating linkage.

Piston Travel (Valve Linkage)—Make certain that valve cam lever operating rod guide block is mounted in rear (end) hole of cam lever, and compensator pin in extreme rear position, operate engine to provide vacuum. With clutch disengaged, outer end of piston rod should be ¼" back from its extreme forward position. To check, press back on outer face of valve lever and then release lever. Piston rod should move back ¼" when valve lever is released. If piston rod does not return ¼", adjust by turning threaded sleeve on rear end of valve lever cam operating rod in or out (see Clutch Control Linkage Adjustment above) until piston rod end returns to proper position. NOTE—Moving threaded sleeve away from dash will cause piston rod end to move toward dash, moving sleeve toward dash causes piston rod end to move away from dash.

Cushion Point Adjustment—With all linkage adjustments correctly made (above), block wheels and start engine (do not set brakes). Accelerate engine and manually engage and disengage clutch to dry clutch disc corks. Set brakes. Swing compensator lever to rear (normal running position), check compensator lever trip lever to see that it springs back properly after being pushed forward. Turn cushion point adjusting screw in or clockwise until it contacts cam. Shift transmission into Second Gear, hold adjusting screw against cam by pressing forward on back of valve lever, turn adjusting screw out or counter-clockwise until car tends to move forward (engine will slow down slightly).

Final Adjustment:—Shift transmission into second gear, depress accelerator pedal slowly with engine running. Car should begin to move slightly upon initial throttle opening. If clutch engagement slow and engine speed excessive, turn cushion point stopscrew counter-clockwise or out slightly. If clutch engagement too rapid (engine stalls), turn screw clockwise or in slightly. Do not turn screw more than ½ turn without rechecking performance.

TROUBLE SHOOTING:—If Automatic Clutch operation slow or erratic, check vacuum lines for leaks, tighten connections, check gaskets, solenoid for sticking plunger, all linkage for excessive friction or binding (operate accelerator and watch operation of entire linkage system). To check vacuum cylinder for piston leaks, slide piston rod guard forward until 4 ports in piston rod are exposed, start engine and allow clutch to disengage automatically, close off piston rod ports by covering with fingers, excessive leakage will cause a perceptible suction at the ports (see Piston Lubrication following).

SERVICING:—**Vacuum Cylinder Piston Lubrication**—At 10000 mile intervals, remove pipe plug in end of cylinder, inject exactly one ounce of Hudson Shock Absorber fluid. Take out piston rod bolt at bellcrank and disconnect valve-rod-to-lever link, rotate piston to spread lubricant over entire piston and oil wick. At 1000 mile intervals, place 2-3 drops of oil in bellcrank bracket oil hole and oil all pivot points of clutch control linkage.

Piston Rod Guard Replacement & Piston Rod Adjustment: See 1942 car model data (following).

TESTING:—Where test lamp required in making following tests, make up test lamp using 15 cp. Mazda No. 87 bulb and suitable leads. Make tests in order given below.

Valve Solenoid:—Disconnect Blue-White (BLW) wire from valve solenoid terminal and connect this wire to one test lamp lead. Ground the other solenoid terminal to which Brown-White (B-W) wire attached. Touch the second test lamp lead to the solenoid terminal from which BLW wire removed. With ignition turned on and dash 'Off-On' switch on, lamp should show dull glow. If lamp does not light, solenoid is open. If lamp burns brightly, solenoid is shorted. If circuit is normal, remove vacuum pipe connection, bushing, and bakelite valve disc. Insert narrow scale in opening and check plunger travel under light pressure. If plunger does not move 1/16-3/32" freely, check valve disc rubber and plunger interference. Tighten vacuum connections

Dash 'Off-On' Switch & Upper Wiring Harness:—If clutch does not disengage with fully closed throttle, valve lever rod in fully forward position, and dash switch 'on' (pushed in), connect jumper wire from battery cable terminal to solenoid BLW terminal. If clutch operates, check dash switch for poor contact, check wiring from dash switch to gas gauge to ignition switch for open-circuit.

Accelerator Switch:—Disconnect Governor Switch Red-White (RW) wire at accelerator switch terminal, place transmission shift lever in High Gear, see that ignition switch and dash 'off-on' switch turned on and accelerator pedal in idle position. Ground one test lamp lead, touch other lead to accelerator switch terminal from which RW wire removed. With 5° step of No. J-1190 test gauge between switch lever and its stop, lamp should show red glow. When 10° step of gauge inserted between lever and stop, lamp should go out. Transfer test lamp lead from RW terminal to Y terminal on switch. Lamp should show red glow until throttle ½ open, then go out. If not, replace switch.

Shift Rail Switch:—Disconnect the Red-White (R-W) wire at Governor Switch, check Automatic Clutch operation. Automatic Clutch should operate in all gears except High Gear. If it does not, ground shift rail switch terminal. If clutch operates satisfactorily, check switch for sticking operating ball or replace switch. If correct clutch operation not secured with shift rail switch grounded, check Yellow wire between shift rail switch and accelerator switch for open-circuits and replace wire. If automatic clutch operates with transmission in High Gear, replace switch.

Testing Wiring Harness—After testing switch for correct operation, and with Red-White wire disconnected from Governor Switch, shift transmission to high gear, turn on ignition, ground one test lamp lead, connect other lead to lower harness connector. Test lamp should show red glow. If lamp does not light, wiring is defective. Repeat test at Shift Rail and Governor Switch terminals. Recheck Accelerator switch before replacing wiring harness.

Governor Switch:—Check by road-testing or operating car with rear wheels blocked up so that engine can be run with transmission in gear. See that Red-White wire connected to Governor switch, operate engine, engage high gear. Check to see that Automatic Clutch operates when accelerator pedal is depressed and released. If it does not, replace Governor Switch. With high gear engaged, increase engine speed until speedometer reading is 25 M.P.H., release accelerator and note when clutch disengages. Clutch should be engaged at 20 M.P.H. but should disengage before speed decreases to 15 M. P.H. If clutch disengagement is not within this 15-20 M.P.H. speed range, replace Governor Switch.

HUDSON VACUMOTIVE DRIVE 1942-47 TYPE

Optl. Equipment On:

Hudson, All 6 & 8 Models (1942-47)

DRIVE-MASTER NOTE:—Vacumotive Drive Control is part of Drive-Master installation and is similar to separate unit described below except that the Throttle Lock Diaphragm and its Solenoid Valve are mounted on the clutch control assembly.

Refer to Hudson Drive-Master article in Transmission Section for complete data on Throttle Lock.

DESCRIPTION & OPERATION:—Vacumotive Drive control on 1942 cars is similar in design and operates in same manner as type used on 1941 cars except for addition of Throttle Lock device on cars with Drive-Master only. Two types of Governors are used as follows:

Governor (Cars without Drive-Master)—This type Governor has two terminals and 'Red with White Tracer' wire from Vacumotive Drive Accelerator Switch should be connected to Governor terminal which is copper plated. Second terminal (cadmium plated) is used for Overdrive control (not used on cars without Overdrive).

Governor (Cars with Drive-Master)—Governor is special type with 5 terminals (used for Vacumotive Drive, Drive-Master Transmission, and Overdrive control). Wires should be connected in accordance with wire color code figures stamped on side of governor cover plate at each terminal (connect Vacumotive Drive accelerator switch wire to 'RW' terminal).

ADJUSTMENT:—Before making adjustments, engine must be properly tuned and warmed up so that it idles smoothly at correct idle speed of 580-600 RPM. (see Note below) with vacuum reading of 18-21" of Mercury. Car should be driven sufficiently to bring clutch units to normal operating temperature. Make all Clutch, Throttle, and Vacumotive Drive adjustments as listed below, in order, before adjusting Cushion Point which controls clutch performance. Compensator must be in normal running position when adjustments are made.

NOTE—Idle speed of 580-600 RPM. is equivalent to 7½-8 MPH. (Cars with 4 1/9-1 Ratio Axle), 6½-7 MPH. (4 5/9-1 Ratio Axle), 6-6½ MPH. (4⅞-1 Ratio Axle). The 'VAC' button must be pushed in.

Clutch Pedal Adjustment—Clearance between upper face of pedal shank and underside of toeboard must be 1½" with clutch engaged. Make certain that control link is properly connected (see Pedal Adjustment under Clutch in Hudson 6 and Hudson 8 car model articles for adjustment instructions and link connection data.

Piston Travel (Valve Linkage)—Make certain that valve cam lever operating rod swivel is connected in rear (end) hole of cam lever and that compensator pin is away from its stop. Idle engine to provide vacuum. Press in on valve lever at valve link connection. Release lever and note if piston rod end moves back ½". If lever does not move back ½", screw threaded sleeve on end of operating rod at cam lever in r out on rod until piston rod end returns to proper position. Screwing sleeve in on rod will cause piston rod to move back toward dash, screwing sleeve out on rod will cause piston rod to move toward cylinder and away from dash.

Bell-crank Yoke—With engine shut off, check clearance between pin on piston rod bell-crank and end of slot in link on clutch operating pull rod. Clearance should be ⅛" and can be checked by pulling piston rod back as far as possible. In this position, front end of pull rod link should be flush with front edge of bell-crank. To adjust, loosen locknut on pull rod and turn adjusting nut in link. Tighten locknut and recheck clearance. NOTE—Excessive clearance at this point may cause clutch to drag (on cars with Drive-Master, this may cause throttle to lock and prevent completion of shift or cause complete failure of Drive-Master due to insufficient clutch switch travel), no clearance at this point will cause clutch to slip.

Accelerator Cross-shaft Adjusting Screw—Depress clutch pedal (this is important), start engine. Back off cam lever adjusting screw until clearance between end of screw and cam on lower end of valve lever is approximately ½", slowly rotate piston rod bell-crank until clutch begins to engage. Turn accelerator cross-shaft adjusting screw (on lever on left hand end of cross-shaft) until there is a slight increase in engine speed when car begins to move (turn screw in to increase engine speed, out to decrease engine speed). Make certain that locknut tightened after adjustment completed. NOTE—Excessive clearance of adjusting screw will cause engine to stagger on clutch engagement, insufficient clearance will cause excessive engine speed before clutch engages.

Cushion Point Adjustment—Depress clutch pedal, start engine. See that compensator pin is away from its stop. Set parking brake (to hold car), place gearshift lever in Second Gear position. Turn cam lever adjusting screw in fully, hold cam (on lower end of valve lever) against end of screw by pressing on back of cam, back out adjusting screw until engine stalls. Restart engine and repeat adjustment until engine again stalls. Make final adjustment by road testing car. NOTE—Incorrect cushion point adjustment will have same effect as incorrect accelerator cross-shaft adjusting screw clearance (see Note above).

Final Adjustment—Road test car and turn cam lever adjusting screw in or out until smoothest operation secured. Do not turn screw more than ½ turn at a time without rechecking performance.

TESTING:—If Vacumotive Drive does not operate satisfactorily, test circuits and control units as follows:

Upper Wiring Circuit—If clutch does not disengage with fully closed throttle when piston valve rod is in the extreme forward position, see that 'VAC' button in instrument panel is pushed in and that harness plug in dash is fully engaged. Connect test lamp from 'BW' wire terminal on solenoid to ground. Lamp should light. If lamp does not light, circuit is broken between ignition switch and solenoid terminal. Then ground the 'BW' wire terminal of wire connecting solenoid to accelerator switch. Solenoid should be heard to operate and clutch should disengage. If it does not, check Solenoid Valve as directed below.

Lower Wiring Circuit—Hold switch operating arm securely against its stop, disconnect 'RW' and 'Y' wires from accelerator switch terminals, ground 'RW' switch terminal. Clutch should release. If clutch does not release when 'RW' wire touched to its switch terminal, check Governor Switch as directed below. If clutch does not release when 'Y' wire touched to its switch terminal, check Shift Rail Switch as directed below. Reconnect 'RW' and 'Y' wires before making other tests.

Accelerator Switch—Remove accelerator switch rod clip at switch, disconnect 'RW' and 'Y' wires from switch, ground 'BW' switch terminal, move switch arm to 5° step (use gauge J-1190 to check arm movement). Clutch should remain disengaged with this 5° movement but should engage when arm moved to 10° position. Reconnect 'Y' wire and remove ground from 'BW' terminal. Clutch should release and should start to engage when switch arm is moved ½ of total travel.

Shift Rail Switch—To check Shift Rail Switch, disconnect 'RW' wire at Governor Switch terminal (this will cause clutch operation to be controlled solely by Shift Rail Switch). Connect test lamp between 'Y' wire at shift rail switch terminal and ground. Lamp should light. If lamp does not light, check for open circuit between accelerator switch and shift rail switch. Lamp should remain lighted when transmission gears shifted to all positions except High Gear and should go out in High Gear position. If lamp does not go out in High Gear, check for sticking switch ball or replace switch.

Governor Switch—See Governor Switch Note (under Description above) for different types used on cars with and without Overdrive. Check Gover-

CONTINUED ON NEXT PAGE

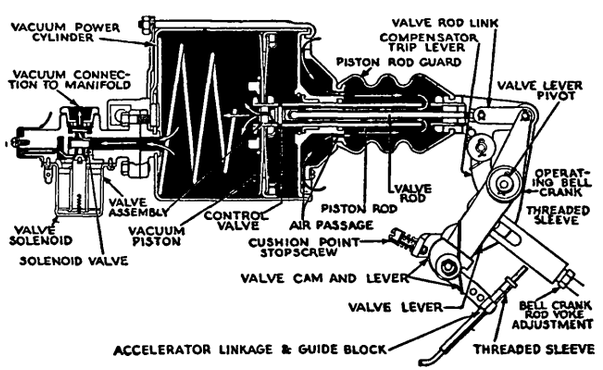

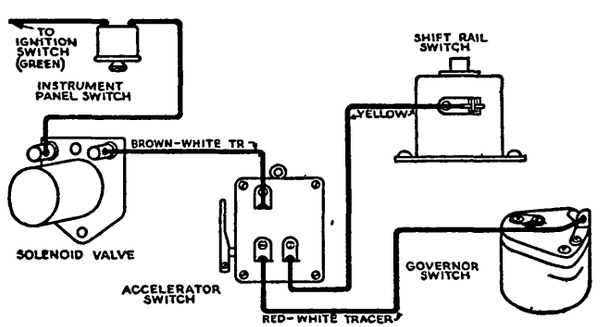

HUDSON VACUMOTIVE DRIVE 1942-47 TYPE (C nt.)

nor Switch by operating the car on the road (CAUTION—Be sure 'RW' wire is connected at Governor Switch when making these tests). Accelerate car to 30 MPH. speed in High Gear, release accelerator pedal, rest foot lightly on clutch pedal to determine when clutch releases. Clutch should be felt to release at car speed of 19 MPH. If clutch does not release at this speed, or if clutch releases at all speeds in high gear, replace Governor Switch.

Vacuum Piston Leaks—To check for piston leaks causing slow or erratic Vacumotive Drive operation, slide piston rod guard forward until the four circular ports in the piston rod are exposed. Start engine and with clutch held automatically in the disengaged position, cover piston rod ports with fingers. Any leakage will be evidenced by a suction at the port holes (slight suction permissible). If piston does not leak, check throttle and valve linkage for friction causing slow or sticky action and then check Solenoid Valve for sticking plunger.

Solenoid Valve Sticking—To check solenoid valve operation, remove both 'BW' wires from solenoid terminals, check with test lamp to determine which wire is hot. Connect test lamp between this hot wire and one terminal of solenoid valve, ground the other solenoid terminal. Lamp should show faint glow indicating normal circuit through solenoid. If lamp does not light, solenoid circuit is open, if lamp is bright, solenoid is short-circuited. If solenoid circuits check satisfactorily, disconnect vacuum line and remove large nut on top of solenoid, check solenoid valve by inserting narrow scale in opening and pressing lightly against plunger disc. If plunger does not move at least 5/64" freely, check for swollen valve disc and plunger interference. Replace valve disc if diameter is greater than 5/8", reconnect fittings tightly.

LUBRICATION:—Linkage—At 1000 mile intervals, lubricate all pivot points of Vacumotive Drive operating mechanism with few drops of light engine oil. Be sure to put several drops of oil in bellcrank bracket oil hole.

Vacuum Cylinder Piston Lubrication—At 10000 mile intervals, remove pipe plug in end of cylinder, inject exactly one ounce of Hudson Shock Absorber fluid. Take out piston rod bolt at bell-crank and disconnect valve-rod-to-lever-link, rotate piston to spread lubricant over entire piston and oil wick.

SERVICING:—All Vacumotive Drive units should be serviced by replacement if tests indicate that they are defective. Do not attempt to repair these units.

Piston Rod Guard Replacement:—To remove rubber boot or guard on piston rod, take out cotter pin in valve lever pivot and also in valve rod trunnion at upper end of valve lever, remove lever. Take out piston rod bolt in bell-crank, remove guard from groove in piston rod end, hold piston rod from turning with drift in bell-crank bolt hole, loosen locknut against rod end, remove piston rod end, remove guard. Install guard in same manner, adjust piston rod length, adjust cushion point stopscrew when valve lever reassembled (see Adjustment above).

Piston Rod Adjustment:—Whenever piston rod end removed or disturbed, position end on rod so that distance from center of vacuum cylinder mounting hole to center of bell-crank bolt hole in rod end is exactly 13 11/16" when fully extended, lock setting with locknut.

1948 HUDSON VACUMOTIVE DRIVE

Hudson 6 & 8, All Models (1948)

DRIVE-MASTER NOTE: Vacumotive Drive is also part of Drive-Master installation and when used with Drive-Master is similar to separate unit below except for additional Throttle Lock unit (mounted on Vacumotive power cylinder).

See "Hudson Drive-Master" in Transmission Section for Throttle Lock data.

DESCRIPTION & OPERATION: Vacumotive Drive on these cars is similar to design used on previous models except for relocation of units and linkage (see illustration) and new type wiring harness with plug connectors at each unit (plug-and-socket connectors eliminate possibility of wrong connections).

ADJUSTMENT: *Before adjusting Vacumotive Drive units, make all "Engine Adjustments" listed below, then make "Vacumotive Drive Adjustments in order and exactly as listed:*

Engine Adjustments: Make sure that engine properly tuned up, and clutch linkage adjusted, by checking and adjusting following points:

Engine Idle Speed—Must be set at 580-600 RPM. hot or slow idle speed. NOTE—Check with Vacumotive Drive control button on instrument panel "on".

Clutch Free Play—Clearance between lower face of clutch pedal and floor board must be 1½", with clutch engaged, to insure full disengagement of clutch when pedal depressed.

Accelerator Linkage—See that entire linkage (both accelerator and vacumotive drive) works freely without binding. Adjust accelerator pedal rod (adjusting nut at forward end of rod) so that clearance between underside of pedal and floor mat is 4 31/32" with pedal released. See that throttle valve is wide open when accelerator pedal fully depressed (if not, recheck above adjustments).

Accelerator Switch Linkage—With accelerator pedal released, see that accelerator bellcrank is against stop (see illustration), loosen accelerator switch mounting screws and position switch on mounting bracket so that switch arm is solidly against stop on switch, tighten mounting screws.

Vacumotive Drive Adjustments: Set brakes (to prevent car moving while making adjustments), place shift lever in neutral position, depress clutch pedal and start engine, hold clutch pedal down until Vacumotive Drive takes over and holds clutch disengaged. Run engine until normal operating temperature reached and engine idles at 580-600 RPM., then make following adjustments in order given:

CONTINUED ON NEXT PAGE

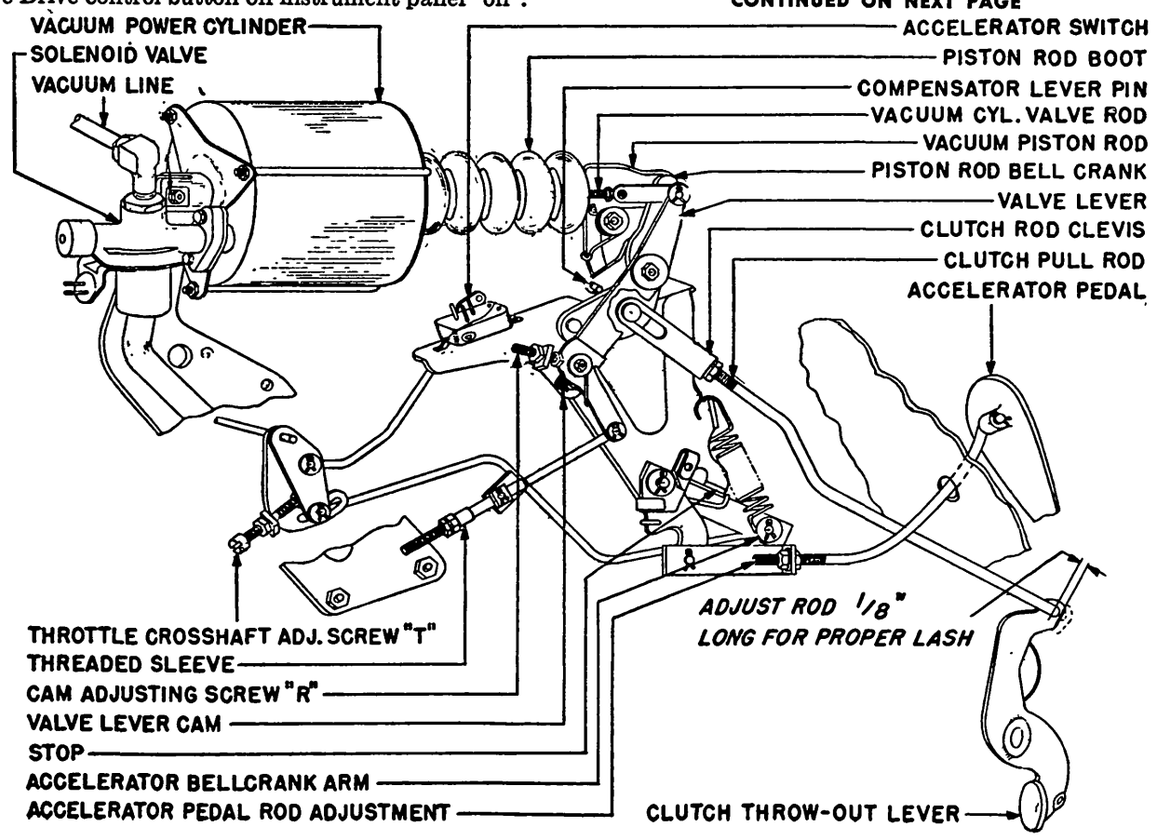

HUDSON VACUMOTIVE DRIVE 1948 (C ntinu d)

►*CAUTION—Compensator lever must be in upward position (starting position) when making adjustments. Lever will be correctly positioned for each adjustment if adjustments made exactly as follows:*

1) **Piston Travel**—With engine idling to provide vacuum, check piston position by pressing in on valve lever and then releasing lever. Piston should be ½" back from extreme forward position and should return to this position when lever released. Adjust by loosening locknut and turning threaded sleeve (see illustration).

►*NOTE*—Pushing lever down to normal running position will cause piston to move forward (if piston moves backward, eccentric is upside down).

2) **Clutch Pull-rod Lash**—Back out Cam Adjusting Screw "R" until clearance between screw and cam is ½" (this screw adjusted later in (4) below). With engine not running, push vacuum piston rod out fully (to rear), check clutch pull-rod for required ⅛" free play or lash by pulling rod forward and up. With correct lash, forward end of pull-rod clevis will just contact compensator lever pin. Adjust by loosening locknut and adjusting clevis on forward end of pull-rod.

3) **Throttle Cross-shaft Screw**—Depress clutch pedal manually and start engine. Engage transmission Second Gear, release brakes. Rotate accelerator bellcrank slowly until clutch drags, adjust Throttle Cross-shaft Adjusting Screw "T" until increase in engine speed to 800-1000 RPM. is noted as car begins to move.

4) **Cam Adjusting Screw (Cushion Point)**—Stop the engine. Depress clutch pedal manually and start engine. Engage transmission Second Gear, set brakes firmly to prevent car moving. Turn Cam Adjusting Screw "R" in fully, press valve lever cam forward against the cam adjusting screw and back screw out until engine stalls. NOTE—Final adjustment of this screw is made during "Fast Start" part of Final Road Test following.

5) **Final Road Test**—Check performance by road testing car and make necessary re-adjustments for Slow & Fast Starts as follows:

Slow Start—Start car up normally except that accelerator pedal should be depressed very slowly to put car in motion. Engine speed should increase slightly just before car starts to move. Adjust throttle cross-shaft adjusting screw "T" as necessary (see adjustment 3 above).

Fast Start—Start car up normally except that accelerator pedal should be rapidly pressed halfway to floor. Car should move forward smoothly without excessive clutch slippage. Turn cam adjusting screw "R" in or out as necessary (see adjustment 4 above).

►*CAUTION—Do not turn screw in more than 2 turns from initial seting (4 above) when making this final adjustment.*

LUBRICATION: Linkage and power cylinder should be lubricated at regular intervals as follows:

1000 Miles—Oil all pivot points in Vacumotive Clutch Mechanism with light engine oil.

CAUTION—Make certain that several drops of oil placed in piston rod bellcrank oil hole.

10000 Miles—Remove pipe plug in end of power cylinder, spray one oz. of Hudson Shock Absorber fluid through this hole.

1941 PACKARD ELECTROMATIC

PACKARD, ALL 1941 MODELS

SPECIAL SERVICE NOTES:—Clutch Adjustment—Clutch pedal free travel should be set at 2" on all cars with Electromatic Clutch and should be checked whenever car is serviced. To adjust, turn adjusting nut on connector link at clutch fork.

Governor Switch on Cars With Aero-Drive (Overdrive)—Governor switch has two sets of contacts and two terminals marked 'EC' and 'AD'. The 'AD' contacts are used for Aero-Drive control. See separate article on Packard Aero-Drive (Transmission Section) for data on this unit.

DESCRIPTION & OPERATION:—Electromatic Clutch Control consists of a vacuum power cylinder linked to the clutch throw-out mechanism by an overrunning type of linkage so that the clutch may be operated either manually (using clutch pedal with 'Lock-out' switch button on instrument panel pulled out), or automatically (power cylinder operation controlled by accelerator pedal). Power cylinder is actuated by manifold vacuum with accelerator pedal control (so that clutch disengaged whenever accelerator pedal released at car speeds below 17 MPH. in high gear—Governor switch prevents disengagement at speeds above 17 MPH). modified by electrically operated solenoid valves and switches to provide smooth clutch engagement under all operating conditions. Control valves and switches are used as follows:

Clutch Control Valve:—Mounted on left hand side of cylinder block and linked to accelerator pedal. Direct Speed Solenoid is mounted on underside and Low & Reverse Solenoid mounted on rear of control valve assembly. Control Valve is compound type and consists of a valve spool linked to the accelerator pedal and a valve sleeve actuated by a spring-loaded vacuum diaphragm which is subjected to same vacuum as exists in power cylinder. These two valve elements operate together to control the rate of air bleed into the power cylinder so as to provide proper clutch engagement for all normal operating conditions. Operation is modified for special conditions by Direct Speed Solenoid, Low and Reverse Solenoid and Second Speed Solenoid as follows:

Direct Speed Solenoid:—Consists of a solenoid operated master valve mounted on the control valve assembly and connected in the manifold vacuum line. This valve is closed when solenoid is de-energized so that entire Electromatic Clutch mechanism is inoperative. Solenoid is controlled by Lock-out Switch, Direct Speed Switch, Accelerator Switch and Governor Switch as follows:

Lock-out Switch—On instrument panel. This switch is connected to 'gauge' side of ignition switch and operates as a master switch for the Direct Speed Solenoid (solenoid de-energized and Electromatic Clutch inoperative when lock-out switch button pulled out). When lock-out switch button pushed in, direct speed solenoid is energized and Electromatic Clutch is operative except when circuit opened by other switches as follows:

Accelerator Switch & Governor Switch—These two switches are wired in series to control the Direct Speed Solenoid and make the Electromatic Clutch inoperative while the car is being operated. Accelerator switch is mounted on the dash and linked to the accelerator pedal so that the switch contacts are open and the Direct Speed Solenoid de-energized (Electromatic Clutch inoperative) while the accelerator pedal is depressed. When the accelerator pedal is released (as for gear shift), switch contacts close and solenoid is energized if car speed is below 17 MPH. At car speeds over 17 MPH., governor switch contacts 'EC' are open and direct speed solenoid is de-energized (Electromatic Clutch inoperative) except for over-riding action of Direct Speed Switch (below). NOTE—The 'AD' or second set of contacts in the Governor Switch control the Second Speed Solenoid as detailed below. These 'AD' contacts also control the Aero-Drive (Overdrive) cut-in point (overdrive operative only with these contacts closed).

Direct Speed Switch—Mounted on left side of transmission case and operated by Second-high shift lever. This switch over-rides Governor Switch so as to permit Second & High Gear shifts to be made at speeds above 17 MPH. (point where governor switch contacts open to de-energize Direct Speed Solenoid and make Electromatic Clutch inoperative). Switch contacts are closed except when transmission is in high gear and open when high gear engaged. When shift to Second Gear is desired at speeds above 17 MPH., first movement of shift lever closes switch contacts so that direct speed solenoid is energized as soon as accelerator pedal is released (circuit completed through accelerator switch).

Second Speed Solenoid Valve:—Consists of a solenoid operated choke valve in the air intake line between the air cleaner and the control valve assembly. When solenoid is energized, this valve restricts air bleed action and retards clutch engagement so as to prevent lurching or surging caused by too rapid clutch engagement with engine speed below that of car speed (retarded engagement allows engine speed to come up to that of car). Valve is controlled by Second Speed Switch and 'AD' contacts of Governor Switch as follows:

Second Speed Switch—Mounted on end of Second-High shifter rail on right side of transmission case. Switch contacts closed (to energize Second Speed Solenoid) only when Second Gear is engaged and circuit is completed through control relay (relay contacts closed) only when Governor Switch 'AD' contacts are closed (speeds above overdrive cut-in point of 22 MPH.).

Low & Reverse Solenoid:—Mounted on rear of control valve assembly. Consists of a solenoid plunger which increases the load on the control valve diaphragm spring so as to provide slower rate of clutch engagement when starting in low or reverse gear. Operates only when solenoid energized by Low & Reverse Switch.

Low & Reverse Switch—Mounted on end of Low-Reverse shift rail on right side of transmission case. Switch contacts are closed (to energize Low & Reverse Solenoid) only when Low or Reverse Gear is engaged and are open at all other times.

Control Relay: Auto-Lite Model HRH-4001. Special three unit type. Relay completes Electromatic Clutch circuits as shown in wiring diagram.

ADJUSTMENT:—Note—Before making adjustments, clutch pedal free movement should be checked and set to 2", engine must be tuned up and adjusted for smooth idling performance. With engine warm and idling at correct hot or slow idle speed of 8-10 MPH., make following adjustments in order:

CONTINUED ON NEXT PAGE

1941 PACKARD ELECTROMATIC (C ntinu d)

Accelerator & Throttle Linkage—Adjust carburetor cross-shaft lever linkage so that, with throttle operating lever 'G' (refer to Control Valve illustration) against stop pin 'D', the carburetor throttle lever is against the throttle stopscrew and the linkage is free and has normal play. Loosen locknuts and adjust turnbuckle on rod linking lever 'C' to accelerator pedal so that, with lug 'F' on lever holding lever 'G' against stop pin 'D', the clearance at the stop on the right end of the accelerator cross-shaft is 1/32-1/16".

Engine Speed Adjusting Screw Gap—With throttle control valve lever stop against throttle lever 'G', adjust engine speed adjusting screw 'I' so that gap between end of screw and lever 'C' is 7/32" as shown at 'J'.

Valve Rod Adjustment—Depress accelerator pedal just enough to take up clearance between engine speed adjusting screw and clutch control lever ('J' on illustration), adjust valve spool rod at 'H' until power cylinder piston rod just begins to move out of power cylinder (if piston rod begins to move before clearance taken up, screw valve spool rod out of clevis; if piston rod does not move when clearance taken up, screw rod into clevis). To check adjustment, with engine warmed up and idling and gear shifter lever in neutral, shift into Low Gear and slowly press on accelerator pedal. Car should start to creep forward at engine speed of approximately 900 RPM. If engine speed too high, increase gap by turning engine speed adjusting screw 'I' out, if engine speed too low, decrease gap by turning screw in (adjust ¼ turn at a time and recheck performance). IMPORTANT—Recheck engine speed adjusting screw gap (above) after making this adjustment. If original setting of 7/32" changed by more than 1/32", readjust valve spool rod by turning rod ½ turn out of clevis (gap too small), ½ turn in (gap too great). Recheck performance and readjust engine speed screw gap and valve spool rod until correct performance secured (low gear start at 900 RPM. with engine speed screw gap of 7/32" ±1/32").

Low & Reverse Engagement—This adjustment changes Second & High Engagement adjustment and should be made first. To check operation, turn ignition switch on (engine need not be started), place gear shift lever in Low Gear position, note whether adjusting screw 'K' on end of Low & Reverse Solenoid moves into solenoid body. If screw moves, adjustment is satisfactory. Check performance by operating engine, shifting into low gear, and depressing accelerator pedal. If clutch grabs (engagement too rapid), turn adjusting screw 'K' (Allen head screw—not knurled screw which is Second & High Engagement adjustment) ¼ turn at a time until smooth engagement is secured at engine speed not in excess of 900 RPM. If clutch slips (engagement too slow), turn adjusting screw out ¼ turn at a time until smooth engagement secured at not more than 900 Engine RPM. CAUTION—Adjusting this screw 'K' changes engine speed (turning screw in increases engine speed, turning screw out decreases engine speed). Check Valve Rod Adjustment (above) after making this adjustment. Then adjust Second & High Engagement as follows:

Second & High Engagement—After completing Low & Reverse Engagement adjustment (above), check second and high performance by making a Second Gear start. Car should just start to creep forward in Second gear at engine speed of 700 RPM. If clutch grabs (engagement too rapid), turn knurled adjusting screw 'M' (not Allen head screw) on end of Low & Reverse Solenoid body in ¼ turn at a time until smooth engegement is secured with engine speed not to exceed 700 RPM. If clutch slips (engagement too slow), turn adjusting screw 'M' out ¼ turn at a time until clutch begins to grab, then turn screw in ¼ turn at a time until smooth engagement is secured with engine speed not to exceed 700 RPM. CAUTION—Adjusting this screw changes engine speed (turning screw in increases engine speed, turning screw out decreases engine speed). Check Valve Rod adjustment (above) after making this adjustment.

Full Throttle Engagement—Check by road testing car and starting in Second Gear with full throttle. Adjust by turning Control Valve body plug 'N' (see illustration) out until clutch grabs, then turn plug in one notch at a time until smooth engagement is secured without causing engine to 'stumble'. (NOTE—Plug should not be turned in more than necessary, this setting should be made to secure fastest possible engagement without engine stumbling). If clutch slips and engine races during intermediate part of clutch engagement, back out Second & High Engagement adjusting screw 'M' (see above) to reduce slip.

Second Gear Shift-down from High—Adjust Direct Speed switch (on transmission case) as follows: Remove wire from switch terminal and connect test light in line between this wire and terminal on switch. Place steering column shift lever in High Gear position. Turn on ignition switch without starting engine. Test lamp should not be lighted. Move gearshift lever toward neutral. Lamp should light just after all slack in linkage is taken up but before shifter lever on transmission case moves out of detent. Adjust switch bracket to secure this setting (rotate bracket to move switch toward front of car for earlier closing of switch and lighting of lamp).

Accelerator Switch Adjustment—Adjust Accelerator Switch as follows: Remove either wire from switch terminal, connect test lamp between this terminal and battery terminal on control relay (hot lead). With ignition switch turned off and accelerator pedal fully released, lamp should light. Depress accelerator pedal slowly and note point at which lamp goes out. Lamp should go out just after stop on control valve lever 'C' contacts engine speed adjusting screw 'I' and gap 'J' has been taken up (refer to Control Valve illustration) but before carburetor throttle lever starts to move. Adjust by loosening locknuts and turning turnbuckle on rod linking accelerator switch to accelerator cross-

CONTINUED ON NEXT PAGE

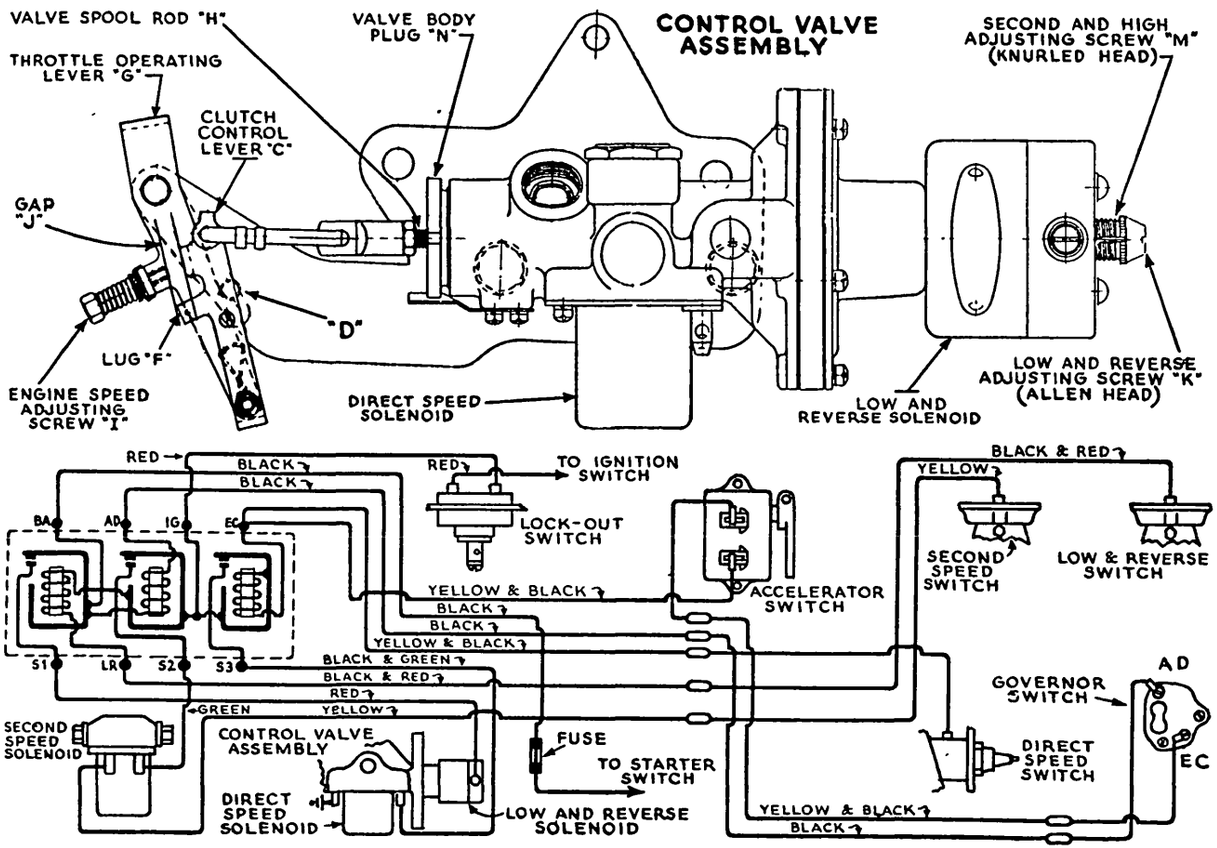

1941 PACKARD ELECTROMATIC (Continued)

shaft. Shorten the rod if the lamp goes out too soon. lengthen the rod if the lamp does not go out until after carburetor throttle lever starts to move.

Final Performance Check:—After making above adjustments, road test car and note performance

CHECKING ELECTRICAL UNITS:—Check Fuse, Control Switches, Control Relay, and Solenoids in order as directed below. NOTE—Switches should not be repaired and defective units should be replaced.

Control Relay Fuse:—Located in lead between starting switch and relay. If fuse is blown, check for shorted relay terminals (particularly 'BA' and 'S1' terminals), and shorted relay as follows: Disconnect lead at relay 'BA' terminal, connect test lamp between this wire and ground, install new fuse. Move wire back and forth to check for shorts. Lamp should burn steadily, if lamp blinks or fuse blows, lead is grounded. Examine relay terminals and make certain they are not shorted to dash. Check relay by removing grounding clip and touching test lamp lead to 'BA' terminal. If lamp lights, terminal or relay is shorted and relay should be replaced.

Control Switches:—Check each switch as follows (replace defective units):

Direct Speed Switch—Turn on ignition without starting engine, depress accelerator pedal to open accelerator switch, move gearshift lever back and forth between High Gear and Neutral. Relay should click when switch makes and breaks circuit. If no click noted, check switch adjustment (see 'High to Second Downshift' above) before replacing switch.

Low & Reverse Switch—Turn on ignition without starting engine. Move gearshift lever back and forth between Neutral & Low and Neutral & Reverse. Relay should click when contact is made as gear is engaged and also when contact is broken when gear disengaged. If no click noted, check Low & Reverse Switch adjustment (see Adjustment section above) before replacing switch.

Second Speed Switch—Remove Yellow wire from second speed solenoid, connect test lamp between this wire and 'hot' terminal on starter switch. Lamp should light when gearshift lever placed in Second Gear position and go out when gearshift lever moved out of second gear.

Accelerator Pedal Switch—See adjustment directions in Adjustment section above.

Governor Switch—To check 'AD' contacts, disconnect wire from 'AD' terminal on control relay, connect test lamp between this wire and the 'AD' terminal. Lamp should not light with ignition turned on or off. To check 'EC' contacts, disconnect wires on both 'AD' and 'EC' terminals on control relay, connect test lamp between wire removed from 'EC' terminal and the 'AD' terminal of the relay. Place gearshift lever in High Gear. Lamp should light.

Lockout Switch—Connect test lamp between 'IG' terminal on control relay and ground on dash. Turn ignition on. Lamp should light with lock-out switch button pushed in and should go out when button is pulled out.

Control Relay:—Check each winding (3 units) individually as follows:

S1 Winding—Connect test lamp between 'BA' and 'IG' terminals, see that ignition turned off, disconnect one wire from accelerator switch, place gearshift lever in high gear position, disconnect wire from 'LR' terminal. Grounding this terminal should cause test lamp to light. If lamp does not light, relay winding is open. See also S3 Winding test below.

S2 (Center) Winding—Connect test lamp to 'BA' terminal, touch other test lamp lead to 'AD' terminal. If lamp lights, S2 winding is shorted or Governor Switch 'AD' contacts are sticking closed (see Governor Switch testing above).

S3 Winding—Connect test lamp between 'BA' and 'IG' terminals. Lamp should be lighted with ignition turned off. Place gearshift lever in High Gear position, disconnect one wire from accelerator switch and disconnect wire from relay 'LR' terminal. If lamp remains lighted, 'EC', 'IG', or 'LR' terminals are grounded, S1 or S3 windings are grounded, or lockout switch or wiring is grounded. Install accelerator switch wire. Lamp should light, if lamp not lighted move gearshift lever to Neutral. If lamp lights, Accelerator Switch or Governor Switch 'EC' contacts are sticking open. If lamp does not light, S3 winding is open or direct speed switch does not close properly.

Relay Specifications

Contacts Close—2.8-3.6 volts (all units). Adjust by bending lower spring hanger slightly.
Contacts Open—1.8-2.6 volts (all units) when decreasing voltage from 6 volts. Adjust by varying height of stationary contact.
Contact Gap—.010" minimum (all units).
Air Gap—.030-.034" (all units) measured at center of core. Adjust by bending armature stop.

Solenoids:—Check each solenoid as follows:

Second Speed Solenoid—Make certain that ignition turned off and that gearshift lever in Neutral. Connect one test lamp lead to 'hot' terminal on starter switch, touch other test lamp lead to both terminals of Second Speed Solenoid Valve. If lamp lights, solenoid winding or terminals are grounded. To check for open-circuit, connect test lamp lead to one terminal, ground other terminal with ignition turned on. If lamp lights, winding is not open.

First & Reverse Solenoid—With one test lamp lead connected to 'hot' terminal on starter switch, touch other test lamp lead to Low & Reverse solenoid terminal. If lamp lights, winding is not open. Disconnect wire at Low & Reverse Solenoid terminal, connect test lamp between this wire and ground. Turn ignition on and ground relay 'LR' terminal or place gearshift lever in Low or Reverse position. Lamp should light. If lamp does not light, check Low & Reverse engagement (see Adjustment data).

Direct Speed Solenoid—With one test lamp lead connected to 'hot' terminal on starter switch, touch other test lamp lead to Direct Speed Solenoid terminal. If lamp lights winding is not open. To check solenoid wiring, turn ignition on, ground one test lamp lead and touch other lead to direct speed solenoid terminal. Lamp should light. If lamp does not light, Governor Switch 'EC' contacts are open or accelerator switch is defective or out of adjustment. Check both switches as directed above.

SERVICING:—Power Cylinder—Piston seal is oiled when assembled and does not require periodic lubrication. If piston becomes dry or sticks (piston rod motion will be jerky or rough), piston should be removed from cylinder and dipped in Bendix Vacuum Cylinder oil before being re-installed. NOTE—Above data applies to Piston type power cylinder.

Air Cleaner—Cleaner is dry type (do not oil cleaner element). When cleaner becomes dirty, filter should be replaced.

1942 PACKARD ELECTROMATIC

Packard, All Models 1942.

DESCRIPTION & OPERATION:—Electromatic Clutch control on 1942 car models operates in same manner as type used on 1941 cars except for design of control units and operation of Second Speed Solenoid as described below.

Clutch Power Cylinder—Power cylinder is now diaphragm type (this type used also on late 1941 cars and supersedes first piston type cylinder).

Control Relay—Two separate single-unit relays used instead of a single three-unit relay.

Clutch Control Wiring—New wiring diagram required for these new units (see illustration).

Second Speed Solenoid—Second Speed Switch (on transmission) is not used and solenoid is controlled as follows: Solenoid is controlled by contacts of second relay unit and circuit is completed to ground through Direct Speed Switch when transmission is in Second Gear (switch contacts closed in all positions except High Gear). Relay winding is controlled by Governor Switch 'AD' contacts so that winding is energized at all speeds above 22 MPH. which is the point at which the AD contacts close. Energizing of winding causes relay contacts to close and completes the circuit so that the Second Speed Solenoid is operative to control Full Throttle Starts in Second Gear.

Refer to preceding article on 1941 Packard Electromatic Clutch Control for complete description of operation of Electromatic Clutch with exception of Second Speed Solenoid as described above.

ADJUSTMENT:—Note—Before adjusting Electromatic Clutch, tune up engine and adjust carburetor for 8-10 MPH. hot or slow idle speed, set clutch pedal free play at 2", warm up engine so that choke valve is wide open and fast idle inoperative. Then adjust as follows:

Accelerator & Throttle Linkage—Adjust carburetor cross-shaft lever linkage so that throttle operating lever on cross-shaft is against pin on Electromatic Clutch Control Valve bracket with carburetor throttle lever stopscrew against stop and see that linkage is free with normal slack. Adjust turnbuckle on accelerator pedal lever rod so that clearance between lever and stop on end of cross-shaft is 1/32-1/16" with the lug on the clutch control valve lever holding the throttle operating lever against the stop pin on the clutch control valve bracket.

Engine Speed Adjusting Screw—With lug on clutch control valve lever against the throttle operating lever, turn engine speed adjusting screw on throttle operating lever so that clearance between end of screw and clutch control valve lever is 7/32".

Valve Rod Adjustment—With engine warmed up and idling, place gearshift lever in neutral, depress accelerator pedal just enough to take up clearance between engine speed adjusting screw and clutch control valve lever (above), loosen locknut and adjust valve spool rod clevis (linking valve spool and clutch control valve lever) until power cylinder piston rod just begins to move toward rear of car. If piston rod begins to move before clearance taken up between engine speed adjusting screw and clutch control valve lever, turn the valve spool rod out of the clevis; if piston rod does not start to move when all clearance is taken up, turn the valve spool rod into the clevis. Check adjustment by placing gearshift lever in Low Gear, depress accel-

CONTINUED ON NEXT PAGE

1942 PACKARD ELECTROMATIC (C ntinued)

erator pedal slowly. Car should start to creep forward at approximately 900 Engine RPM. If engine speed not correct, turn engine speed adjusting screw in slightly to increase engine speed, or out to decrease engine speed. Recheck engine speed adjusting screw setting (above) and if gap changed more than 1/32" from original 7/32" setting, turn valve spool rod out of clevis (if gap too small), into clevis (if gap too large) approximately ½ turn and recheck performance. Repeat these two adjustments until car starts to move in Low Gear at approximately 900 Engine RPM. with engine Speed Adjusting Screw gap of 7/32" plus or minus 1/32".

Low & Reverse Engagement—This adjustment affects Second & High Engagement (following) and must be made first. Use Allen Wrench section of ST-10175 adjusting tool for adjustment. To check adjustment, turn ignition on (engine need not be running), place gearshift lever in Low Gear position and note action of Allen Head Screw on end of Low & Reverse Solenoid (on rear end of clutch control valve assembly). Screw should move into solenoid. To check operation, start engine, place gearshift lever in Low Gear and depress accelerator pedal to start car. If engagement too rapid and clutch grabs, turn the Allen head adjusting screw in ¼ turn at a time until smooth engagement secured at engine speed not to exceed 900 RPM. If engagement too slow and clutch slips, turn screw out until clutch grabs and then turn screw in ¼ turn at a time until smooth engagement secured at engine speed not to exceed 900 RPM. NOTE—After making this adjustment, recheck Valve Rod Adjustment (above) and re-adjust as necessary.

Second & High Engagement—Make this adjustment only after Low & Reverse Engagement correctly adjusted (above). Start engine, place gearshift lever in Second Gear, depress accelerator pedal to start car and note performance. Car should just start to creep at 700 Engine RPM. If engagement too slow and clutch slips, turn knurled adjusting screw on end of Low & Reverse Solenoid (on rear end of clutch control valve assembly) out until clutch grabs, then turn screw in ¼ turn at a time until smooth engagement secured at engine speed not to exceed 900 RPM. Use screwdriver end of ST-10175 tool to make this adjustment.

Full Throttle Engagement—Check by making full throttle starts in Second Gear. Turn Valve Body Plug (large nut at forward end of valve control assembly) out until clutch grabs, then turn plug in 1 turn at a time until smooth engagement is secured without engine stumbling when clutch is fully engaged. NOTE—If engine races excessively and clutch slips while clutch is engaging, back out Second & High Adjusting Nut (above) slightly to reduce this slip.

High-to-Second Downshift—Disconnect wire from terminal on Direct Speed Switch (on left side of transmission), connect test lamp between this wire and switch terminal, place gearshift lever in High Gear, turn on ignition (do not start engine). Test lamp should not be lighted. Move gearshift lever toward neutral position and note point at which lamp comes on. Lamp should light just after all slack in linkage has been taken up but before transmission lever moves out of detent. Adjust switch position on bracket for correct operation (move switch toward front of car if lamp is not lighted at this point, move switch toward rear of car if lamp lights before this point reached).

Accelerator Switch—Disconnect one wire at switch terminal, connect test lamp between this terminal and a 'hot' point (such as battery terminal of relay), see that ignition is turned off. Lamp should be lighted with accelerator pedal fully released. Depress accelerator pedal and note point at which lamp goes out. Lamp should go out just after stop on control valve lever contacts engine speed adjusting screw on throttle operating lever but before carburetor throttle lever begins to move (engine speed adjusting screw must be set for 7/32" gap as directed above before this check is made). Adjust by turning turnbuckle on accelerator switch rod. Turn the turnbuckle so as to shorten the rod if lamp goes out too soon, lengthen rod if lamp does not go out until after throttle starts to open.

CHECKING ELECTRICAL UNITS:—Check Fuse, Control Switches, Control Relay, and Solenoid in order

Control Relay Fuse:—Located in lead between starting switch and relay. If fuse is blown, check for shorted relay terminals (particularly 'BA' and 'S1' terminals), and shorted relay as follows: Disconnect lead at relay 'BA' terminal, connect test lamp between this wire and ground, install new fuse. Move wire back and forth to check for shorts. Lamp should burn steadily, if lamp blinks or fuse blows, lead is grounded. Examine relay terminals and make certain they are not shorted to dash. Check relay by removing grounding clip and touching test lamp lead to 'BA' terminal. If lamp lights, terminal or relay is shorted and relay should be replaced.

Control Switches:—Check each switch as follows:

Direct Speed Switch—Turn on ignition without starting engine, depress accelerator pedal to open accelerator switch, move gearshift lever back and forth between High Gear and Neutral. Relay should click when switch makes and breaks circuit. If no click noted, check switch adjustment (see "High to Second Downshift" above) before replacing switch.

Low & Reverse Switch—Turn on ignition without starting engine. Move gearshift lever back and forth between Neutral & Low and Neutral & Reverse. Relay should click when contact is made as gear is engaged and also when contact is broken when gear disengaged. If no click noted, check Low & Reverse Switch adjustment (see Adjustment section above).

Governor Switch—To check 'AD' contacts, disconnect wire from 'AD' terminal on control relay, connect test lamp between this wire and the 'AD' terminal. Lamp should not light with ignition turned on or off. To check 'EC' contacts, disconnect wires on both 'AD' and 'EC' terminals on control relay, connect test lamp between wire removed from 'EC' terminal and the 'AD' terminal of the relay. Place gearshift lever in High Gear. Lamp should light.

Lockout Switch—Connect test lamp between 'IG' terminal on control relay and ground on dash. Turn ignition on. Lamp should light with lock-out switch button pushed in, go out with button out.

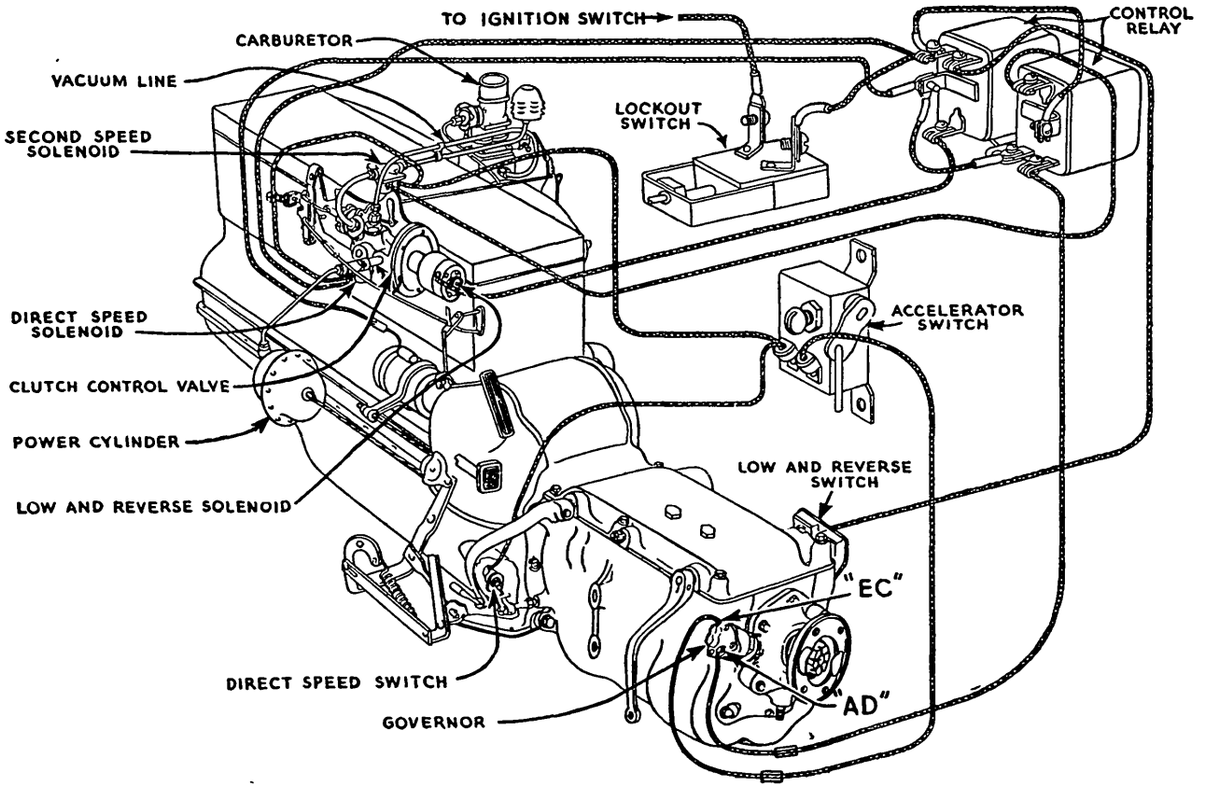

1946-48 PACKARD ELECTROMATIC

Packard "2100" Series, All Models (1946-47)
Packard "2200" Series, All Models (1948)

DESCRIPTION & OPERATION: Electromatic clutch on these cars is similar to design used on previous models except for simplified control mechanism (see illustration) and operates as follows:

Power Cylinder: Diaphragm type mounted on left side of engine and linked to clutch relay lever by pulley and cable mechanism (pulley mounted on lever, free end of cable anchored to bracket on starter). Rear chamber in cylinder is open to atmospheric pressure (through air cleaner) at all times. Front chamber is controlled by Control Valve and is connected to manifold vacuum (for clutch disengagement) or to the atmospheric pressure (for clutch engagement).

Control Valve Assembly: Consists of a hollow piston type valve controlling air-and-vacuum admission to forward chamber of power cylinder. A regulating diaphragm unit and accelerating linkage connection control the valve piston through a fulcrum lever linkage to provide correct clutch engagement under all operating conditions.

Lockout Solenoid Valve: This valve controls the vacuum line between the manifold and the Electromatic Clutch so that electromatic clutch is operative only with valve open. Valve is spring-loaded so that it is closed when solenoid is not energized (Lockout Switch "off"). Pressing the lockout switch (switch "on") energizes the solenoid and opens the valve whenever the circuit is completed to ground through one or more of the following control units:

Direct Speed Switch—Mounted on bracket to rear of power cylinder and actuated by idler lever of transmission shift linkage. Switch contacts are open with transmission in high gear (Electromatic clutch inoperative unless circuit completed by other controls) and are closed with transmission in neutral or any other gear (electromatic clutch operative regardless of position of any other controls).

Accelerator Switch—Mounted on dash and connected to accelerator pedal linkage. This switch is connected in series with governor and is effective only at low speeds (below governor cut-out point). Switch contacts are closed only with accelerator pedal released and prevents clutch disengagement with accelerator pedal depressed and engine running at more than idle speed (with transmission in high gear—when any other gear engaged, clutch operation is controlled by Direct Speed Switch

Governor—Mounted at rear of transmission. "EC" contacts control electromatic clutch operation ("AD" contacts control Overdrive) and are closed at car speeds below 22 MPH. completing lockout solenoid circuit so that electromatic clutch is operative (accelerator switch contacts must also be closed for clutch disengagement—see above). At speeds above 22 MPH., governor contacts remain open so that clutch does not disengage when accelerator pedal is released (with transmission in high gear—when any other gear engaged, clutch operation is controlled by Direct Speed Switch (above).

ADJUSTMENT: *CAUTION—Make all adjustments in order and exactly as follows:*

1) Clutch Pedal Free Play—Check and adjust free play to 1½" (see car model pages for instructions).

2) Power Cylinder Operating Cable—Check adjustment by depressing clutch pedal to toeboard (engine must be running and Electromatic clutch "on"). Pressure required to depress pedal should be very light to within ½" of toeboard, and pressure for final ½" movement of pedal should be same as required with Electromatic Clutch "off". If this ½" final travel with increased pressure not noted, adjust cable by backing off adjusting nut at anchor bracket on starter (see Note), tighten second nut on cable fitting, recheck operation.

▷Adjusting Note—If range of adjustment on cable fitting insufficient, grind off face of cable eye on bracket (Eight & Super Eight), shift bracket on starter (Custom Eight).

3) Accelerator Linkage—Adjust to remove excessive free play in linkage between accelerator pedal and carburetor throttle. Adjust carburetor-to-cross shaft link clevis for 1/16" clearance between throttle operating lever and stop on electromatic control valve bracket with carburetor throttle stopscrew against stop with fast idle cam in slow or hot idle position. Adjust accelerator-to-electromatic clutch operating lever rod (adjusting nut at control valve end of rod) so that pin enters hole in operating lever. Check to make certain that the valve operating lever rotates clockwise to the wide-open throttle position when accelerator pedal is depressed to point where accelerator bellcrank contacts overdrive kick-down switch plunger.

4) Control Valve Engine Speed Screw & Operating Rod—Operating rod requires adjustment only if correct setting of engine speed screw cannot be obtained.

Engine Speed Screw—Engine must be thoroughly warmed up and idling at hot or slow idle speed for this adjustment. With engine idling, place car on level floor, engage transmission Second Gear. Adjust engine speed screw so that car will just move when valve operating lever is brought up against the engine speed screw. If screw does not have sufficient range for correct adjustment (turns completely in or out before correct setting secured), adjust operating rod as follows:

Operating Rod—Engine must be warmed up and idling at hot or slow idle speed for this adjustment. Turn engine speed adjusting screw in to midpoint of travel, disconnect valve rod link at valve operating lever, hold throttle operating lever against stop on bracket. Position valve operating lever so that clearance between lever and stop is ⅛" and hold lever in this position. Move valve rod in slowly until power cylinder operating cable just starts to move out and hold valve rod in this position. Adjust clevis on forward end of valve rod until operating link can be engaged, secure link with spring clip lock. Then check and adjust Engine Speed Screw.

5) Direct Speed Switch—Disconnect lead at switch terminal, connect test light and battery between this terminal and ground. Place gear shift lever in High Gear position. Lamp should not light. Move gearshift lever toward neutral. Lamp should light when lost motion in linkage is taken up but before transmission shifter fork moves out of detent. Adjust switch by loosening clamp bolt and shifting bracket on mounting stud until correct performance secured.

CONTINUED ON NEXT PAGE

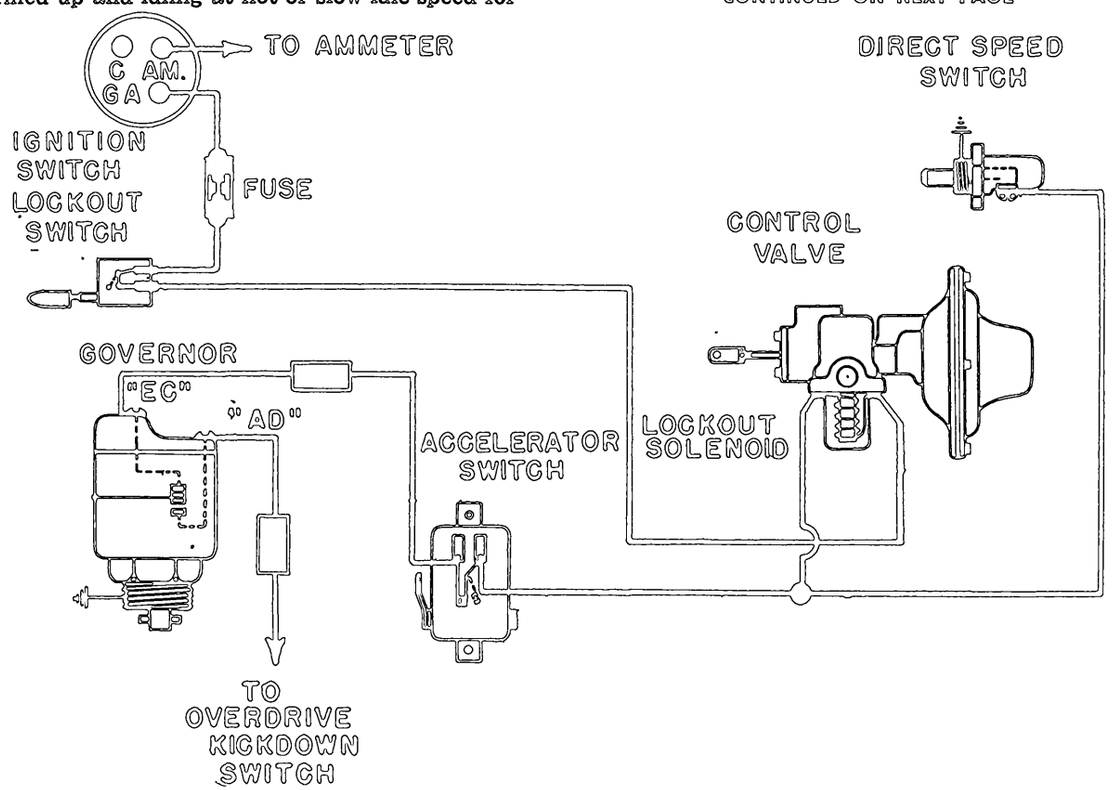

1946-48 PACKARD ELECTROMATIC (C ntinued)

6) Accelerator Switch—Disconnect both leads at switch terminals, ground one terminal, connect test lamp and battery to other terminal. With accelerator pedal released, **lamp should be lighted.** Depress accelerator pedal slowly until valve operating lever just contacts engine speed screw, **lamp should go out at this point.** If lamp remains lighted, loosen locknut and turn adjusting screw on face of switch until lamp goes out. Release accelerator pedal, lamp should light. Recheck setting, tighten adjusting screw locknut.

7) Governor—No adjustment provided. Governor should be replaced if operation unsatisfactory. See Testing of Control Switches (below).

8) Road Test & Fast Start at Full Throttle Setting: After preceding adjustments completed, road test car and make necessary adjustments for special fast starting with full throttle performance as follows:

Fast Start-with-Full Throttle Setting—Check performance by making fast starts (full throttle) in second gear. Clutch should engage as rapidly as possible without causing engine to stumble. To adjust, turn valve rod stop screw (on rear face of control valve diaphragm cover) out until screw head extends 1¼" from diaphragm cover (will cause very rapid clutch engagement on fast starts), then turn screw in or clockwise ¼ turn at a time and repeat tests until satisfactory clutch engagement is secured without excessive slippage.

►***CAUTION—Do not allow clutch to become overheated through excessive slippage when making this adjustment.***

Final Road Test Check—Test electromatic clutch operation under normal driving conditions. Readjust as required if clutch slippage is excessive or if engagement is too severe under any driving conditions.

TESTING ELECTRICAL UNITS: To check switches and other control units, use test lamp as directed

►***CAUTION—Check Electromatic Clutch Fuse first (in line between ignition switch and lockout switch) before making additional tests.***

Direct Speed Switch: See 5) under Adjustm't (above).

Accelerator Switch: See 6) under Adjustm't (above).

Lockout Switch: Disconnect red wire at Lockout Solenoid, connect one test lamp lead to this wire, ground other test lamp lead. Turn ignition switch "on". Press Lockout Switch knob for alternate "on" and "off" positions. Lamp should light with switch on, and should not be lighted with switch off. If lamp does not light with switch on, check for blown fuse and check line between ignition switch and lockout switch for open-circuits, replace switch. If lamp does not go out with switch off, switch is shorted and should be replaced.

Lockout Solenoid: Disconnect both wires at Lockout Solenoid terminals. Ground one terminal. Connect one test lamp lead to other terminal, connect other test lamp lead to ungrounded terminal of battery. Lamp should light. If lamp does not light, solenoid winding is open.

Governor: Connect one test lamp lead to ungrounded terminal of battery. Connect other test lamp lead to each governor terminal in turn. Lamp should light when connected to "EC" terminal (electromatic clutch contacts), and should not light when connected to "AD" terminal (Overdrive contacts).

BENDIX VACUUM POWER

Chrysler, DeSoto, & Dodg Models (1936)
Hudson & Terraplane Models (1936)
Plymouth Models (1936)

DESCRIPTION & OPERATION:—Bendix Clutch Control consists of a Vacuum Power Cylinder linked to the clutch throw-out lever. Rate of engagement is controlled by 'bleeding' air from the cylinder as the clutch engages. This operation is controlled by a two or three plunger valve assembly in the vacuum and bleeder lines as follows:

Accelerator Pedal Plunger—Linked to accelerator pedal so that groove near end of plunger lines up with vacuum passage in valve body opening vacuum line to cylinder when pedal is fully released. This vacuum port is cut off when pedal depressed and air admitted to cylinder through plunger slot.

Bleeder Plunger—Linked to accelerator pedal plunger and moves in conjunction with it. Taper on plunger controls air escape from opposite end of vacuum cylinder when piston moves back during clutch engagement (clutch movement is rapid during first part of stroke while air is escaping through slot or valve in piston rod, this port being cut off at 'cushion point' so that air remaining in cylinder is forced to escape through bleeder line and bleeder plunger slot during final stage of engagement.

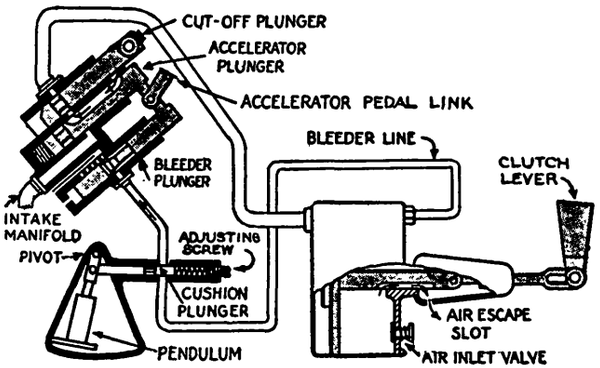

Cut-Off Plunger—Used to cut out automatic clutch operation when desired. On Chrysler and Hudson models, cut-off plunger linked to free-wheeling control so that automatic clutch inoperative when the free-wheeling feature is locked out. On Buick models, a separate control button on the instrument panel is used. Packard models have a control lever on the steering column.

Cushion Control—Consists of second control valve in bleeder line controlled by pendulum weight which prevents surging during high speed clutch engagement. Movement of pendulum when car surges causes plunger type valve to close momentarily delaying clutch engagement until car speed can be brought up to engine speed.

ADJUSTMENT:—Clutch pedal clearance and free movement, accelerator pedal linkage, and carburetor idling speed adjustments must be correctly made before automatic clutch is adjusted. Adjust automatic clutch when clutch adjusted as follows:

Chrysler, De Soto, Dodge, Plymouth Models:—Depress clutch pedal enough to take up pedal free movement (stop at point where throw-out bearing contacts release levers), check clearance between screw on power cylinder lever and operating lever on throw-out shaft. Loosen locknut and turn screw until clearance at this point is ⅛". Check clearance between accelerator plunger linkage and throttle valve linkage and set so plunger travel is 3/16" before throttle valve begins to open. Check Compensator action by road testing car using normal accelerator pedal action. If engine stalls, decrease clearance so that throttle valve opens sooner. If clutch engagement is delayed or engine speeds up, increase travel. If clutch engagement is rough or jerky with small throttle opening, loosen locknut, turn compensator adjusting nut on piston rod in slightly (later models). If clutch engagement is delayed, lengthen piston rod or turn compensator adjusting nut out slightly. Check starting in low gear with wide open throttle. If engagement is rough or jerky, loosen locknut and turn Cushion Control adjusting screw out. If clutch slippage excessive, turn adjusting screw in until performance is satisfactory.

Hudson & Terraplane Models: To check the setting, run the engine at idling speed, use control button to engage clutch without depressing accelerator pedal. If clutch engagement is rough or jerky, shorten piston cable slightly. If engagement is delayed, lengthen cable slightly. Use accelerator pedal to start car in normal manner. Clutch should begin to engage just as throttle valve begins to open. If clutch grabs, shorten accelerator plunger slightly. If clutch slips and engine speeds up before engagement, lengthen rod. On later models with Cushion Control, check operation by engaging and disengaging clutch with engine operating faster than normal. If engagement is rough or jerky, turn plunger adjusting screw out. If clutch slippage excessive, turn screw in.

PACKARD CLUTCH CONTROL

TWELVE, 1507,8 ('37), 1607,8 ('38), 1707,8 ('39)

DESCRIPTION:—Power cylinder is 'internal valve' type with control valve located within piston rod and actuated by pushrod extending out through piston rod to clutch lever clevis.

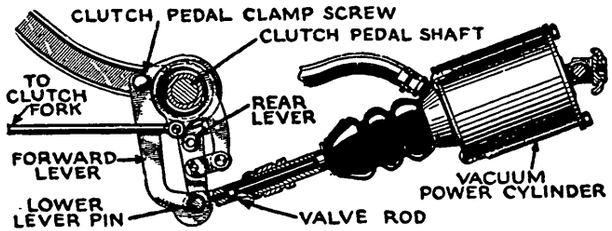

ADJUSTMENT:—Remove the front floor boards, depress clutch pedal several times, see that pedal is against toe board spring with clutch engaged. Loosen pedal clampscrew, press lower end of rear lever back and forward lever front at bottom until all clearance on pin at lower end of levers and on clutch pedal shaft at upper end of levers is at front, hold levers in this position, tighten clampscrew. Depress clutch pedal exactly 1 13/16", hold in this position, loosen locknut and turn adjusting nut on forward end of connecting rod at clutch fork until release bearing just contacts clutch release levers, tighten locknut. With correct adjustment, power cylinder valve will open just as release bearing contacts levers with pin at the lower end of the clutch pedal levers at front (clearance at rear).

AUBURN (ATWOOD)

MODEL TP-28-7
Willys, Speedway & Deluxe 440 (1940)
Willys, Americar & Plainsman 441 (1941)
Willys, Americar Model 442 (1942)

MODEL TP-28-7-1
Jeep, Ford & Willys Army Model (1942-45)
Willys, Pickup 441, Panel Del. 441P (1941)
Willys, Pickup & Taxicab Model 442 (1942)
Willys, Panel Delivery Model 442P (1942)

MODEL 8501-23
Willys Jeep, Universal Model CJ-2A (1946-47-48)
Willys Jeep Truck, Models 2T, 4T (1947-48)

MODEL 8501-19
Willys Jeep Station Wagon, 4-63 (1946-47-48)
Willys Jeep Sedan Delivery, 4-63 (1946-47-48)
Willys Jeepster, Model VJ-2 (1948)
Willys Jeep Station Sedan, 6 Cyl. 6-63 (1948)

MODEL 9251-11
Plymouth, Model P15 (1947-48) ①

MODEL 9251-15
Frazer, All Models (1947-48) ①
Kaiser, All Models (1947-48) ①

①—Part Production—Borg & Beck Clutches also used.

AUBURN-ATWOOD NOTE: Clutches made by Auburn Company and formerly listed as "Atwood" now called "Auburn" clutches.

WILLYS DRIVEN MEMBER NOTES: Various types used as follows:

1940 Commercial Models—These models equipped with Rockford Single Plate Clutch and Borg & Beck Driven Member. Refer to separate Rockford Clutch article and to Borg & Beck 9A6 Clutch article for complete data.

1940 Passenger Cars—Borg & Beck Driven Member used with Atwood Clutch on these models. Refer to Borg & Beck 9A6 Clutch article for 1940 driven member data.

1942 Commercial Models—Driven Member. Pickup & Panel Delivery Models are equipped with Borg & Beck Type 9A6 Driven Member. Refer to Borg & Beck clutch article for data on this unit. NOTE—Taxicab model is equipped with regular Passenger Car Type Driven Member (see data below).

Jeep (Army Model) Driven Member—Borg & Beck No. 11123. See Borg & Beck Model 9A6 article for driven member data.

Willys 1946-48 Driven Members—Borg & Beck Driven Members used on all models. See Borg & Beck Model 9A6 article for data.

DESCRIPTION (Except 9251): Single plate, dry disc. Cover consists of a three-legged spider with channel section legs in which the clutch springs and release levers are mounted. Release levers pivot on pins riveted in cover legs and actuate pressure plate through adjustable screws in pressure plate under outer end of each lever. Springs are mounted in cups on cover under each lever. Hairpin type retracting springs are mounted on each adjusting screw and are retained by the adjusting screw locknut.

Model 9251: Cover used on these models has continuous circular mounting flange. Lever design is similar to type used on other models with "spider" type cover.

REMOVAL OF CLUTCH: *See "Clutch" on car model page.*

SERVICING: Disassembly. Release lever pivot pins need not be removed for pressure plate servicing. To remove pressure plate, back off adjusting screw under outer end of each release lever until screws are free from pressure plate, remove pressure plate from beneath clutch cover spider.

Clutch Springs:—Three springs used (one spring under each release lever). Spring pressure should be as follows:

Clutch Spring Specifications

Car Model	Spring Pressure & Length
Frazer & Kaiser	239-263 lbs. at 1 13/16"
Plymouth	222-246 lbs. at 1 13/16"
Willys (All Models)	180-190 lbs. at 1 9/16"
Jeep (Army Model)	220-240 lbs. at 1 9/16"

Release Lever Adjustment:—Lever height should be checked with special ring gauge (hardened, ground ring .310" ± .010" assembled in clutch (or under pressure plate if clutch mounted on servicing fixture) in place of regular driven member. Loosen locknut on adjusting screw under outer end of each lever, and adjust each screw so that lever height (from face of flywheel or top face of servicing fixture to upper contact point on inner end of lever) is correct (see table below). All levers must be set exactly alike.

Release Lever Settings

Car Model	Release Lever Height ②
Frazer & Kaiser	1 15/16" ± 1/32"
Plymouth	1 15/16" ± 1/32"
Willys (All Models)	1 15/16" ± 1/64"
Jeep (Army Model)	1 15/16" ± 1/64"

②—Distance from face of flywheel (or fixture with ground ring assembled in place of driven member) to top of lever—all levers must be adjusted alike.

Reassembly:—When reassembling pressure plate, thread adjusting screws through locknut and retracting spring, and into pressure plate hole. Adjust release levers (above) before tightening locknuts.

DRIVEN MEMBER:—Atwood-Thelander Model TD-22-14. This model has hydraulic type dampener in hub which consists of four coil spring and plunger units operating in oil which provide dampening action similar to that of a direct-acting shock absorber. Entire dampener assembly is sealed within two cupped discs and cannot be serviced.

Facings—Facings are riveted individually to plate which is made up of spring segments riveted on hub. See car model article for facing specifications.

DRIVEN MEMBER: Borg & Beck Type. See Borg & Beck Model 9A6 Clutch article for complete data.

BORG & BECK MODELS 9A1, 3; 10A1, 3, 4; 11A3, 5

Assy. No. MODEL 10A4
881—La Salle, Model 36-50 (1936)
Oldsmobile, Model L-36 (1936)

NOTE:—Assembly Number—This number is stamped on clutch cover and can be used to identify individual clutch installations.

SPECIAL SERVICE NOTES:—9A1, 10A1 Models—These models do not have release lever struts and release levers bear directly against the pressure plate lugs. When servicing these models, disregard release lever strut data given below.

DESCRIPTION:—Single plate, dry disc type. Three release levers mounted on bolts piloted in pressure plate and held in clutch cover, actuate clutch through struts which provide 'knife-edge' action.

SERVICING:—Mark all parts before dismantling clutch and reassemble in same position (necessary to maintain balance). Replace grooved, checked or warped pressure plates. Replace springs when pressure plate discolored from heat (test springs as directed below).

Dismantling:—Place clutch on fixture or arbor press support pressure plate under release levers), place block across cover resting on spring bosses, compress cover slightly, remove metal staking in adjusting nuts by running hacksaw blade through slot, remove nuts, release pressure slowly, remove cover and springs. Remove release levers by grasping lever and eyebolt between thumb and forefinger, so that inner end of lever and upper end of eyebolt are pressed together. Lift strut over ridge in end of lever (press lower end back against lug), lift lever and eyebolt out.

Clutch Springs: Replace springs if weak or burned or if clutch has been subjected to excessive heat.

Spring Specifications—See Borg & Beck 10A6 data.

Assembling:—Place pressure plate on fixture or arbor press, supporting plate under release lever lugs. Install lever, eyebolt and strut assemblies by reversing removal procedure. Place pressure springs in seats on plate, install anti-rattler springs (see note) in cover, place cover on pressure plate. Make certain that pressure springs are seated and that anti-rattler springs are in place on release levers. Compress cover slowly guiding eyebolts through bolt holes in cover. If assembly made on fixture use clamps to clamp cover flange to plate at mounting holes. Assemble eyebolt nuts, turn nuts down until flush with head of bolt. Compress and release clutch levers several times to seat all working parts. Then adjust release lever heights.

Release Lever Adjustment (without Fixture):—Use Borg & Beck A1 type gauge plate, assemble plate in clutch on flywheel in place of driven plate, positioning gauge lugs under release levers. Place short scale or straightedge on edge on boss in center of gauge, adjust release levers by turning adjusting nuts on eyebolts in or out until release levers just contact edge of scale. All levers must be even within .005". Lock adjusting nuts by peening metal of nut into bolt slot. Recheck settings.

Release Lever Adjustment (On Fixture)—Install special lands (3J) on fixture under pressure plate, install lever indicating plate (3X) on levers (except Models 11A3, 5 where plate should not be used), set adjusting arm at correct figure as shown in table below, install arm and sleeve assembly on fixture, swing arm over each release lever in turn, turn release lever eyebolt nut until tip of lever just contacts indicating plate, lock nut by peening metal of nut into bolt slot, recheck setting.

Clutch Model	Lever Setting
9A1, 10A1	1 13/16"
9A3, 10A3	2 5/16"
10A4	2 5/32"
11A3, 11A5	1⅞"

DRIVEN MEMBER:—Manufacturer recommends installation of new driven member with n w clutch facings rather than relining clutch. Driven plate hub (Spring dampener) cannot be serviced in th field. See following article on Borg & Beck Model 9A6 Clutches for complete Driven Member data.

BORG & BECK MODELS 8A7, 9A6, 9A7, 10A6, 10A7, 11A6

	Model No.	Assy. No.
CADILLAC		
V8 Models—Some Cars (1940)—See Note	11A6	945
CHRYSLER		
Six, C7 (1936)	10A6	874
Six, C16 (1937)	10A7	899
Six, C18 (1938)	10A7	914
Six, Taxicab (1938)	11A6	917
Six, C22 (1939)	10A7	930
Six, Taxicab (1939)	11A6	931
Six C25 ('40), C28 ('41), C34 ('42)	10A7	①940
Six, Taxicab Models (1940-41-42)	11A6	②941
Six, C28 ('41), C34 ('42) Fluid Drive	9A7	953
Six, C38 (1946-47-48)	10A7	①930
Six, C38 (1946-47-48) Fluid Drive	9A7	953
Six, C38 7 Pass. Cars (1946-47)	10A6	961
Six, Taxicab (1946-47)	11A6	941
Six, Taxicab (1948)	11A6	929
Eight, C8 (1936), C14 (1937)	10A6	874
Eight, C9,10,11 (1936), C15,17 (1937)	11A6	871
Eight, C19 (1938)	11A6	916
Eight, C20 (1938)	11A6	915
Eight, C23 (1939)	11A6	929
Eight, C24 (1939)	10A6	933
Eight, C26 (1940)	11A6	941
Eight, C26,27 ('40), C30,33 ('41) Fl. Drive	10A6	939
Eight, C36,37 (1942) Fluid Drive	10A6	③961
Eight, C39,40 (1946-47)	11A6	941
Eight, C39, 40 (1946-47-48) Fluid Drive	10A6	961
DE SOTO		
S1, S2 (1936)	10A6	874
S3 (1937)	10A7	899
S5 (1938)	10A7	913
Taxicab (1938)	11A6	917
S6 (1939)	10A7	928
S7 (1940)	10A7	938
S8 (1941), S10 (1942)	10A7	④957
S8 (1941), S10 (1942) Fluid Drive	9A7	952
Taxicab Models (1939-40-41-42)	11A6	931
S11 (1946-47-48)	10A7	957
S11 (1946-47-48) Fluid Drive	9A7	952
Taxicab (1946-47-48)	11A6	931
DODGE		
D2 (1936) to Eng. No. 145331	10A6	870
D2 (1936), D5 (1937)	10A7	899
D8 (1938)	10A7	913
Taxicab Models (1936-37-38)	11A6	917
D11 (1939), D14,17 (1940)	10A7	⑤928
Taxicab Models (1939-40)	11A6	931
D19 (1941), D22 (1942)	10A7	④928
D19 (1941), D22 (1942) Fluid Drive	9A7	952
Taxicab Models (1941-42)	11A6	931
D-24 (1946-47-48)	10A7	④928
D-24 (1946-47-48) Fluid Drive	9A7	952
Taxicab (1946-47-48)	11A6	931
FRAZER		
All Models (1947-48) ⑨	9A7	951
HUPMOBILE		
618G (1936)	10A6	⑥890
822E ('38), 922E ('39), R ('40-41)	10A7	898
KAISER		
All Models (1947-48) ⑨	9A7	951
LA SALLE		
40-50,52 Some Cars (1940)—See Note	11A6	⑦
MERCURY		
Model 9CM (1949)	10A7	988
NASH		
Six, 3640A (1936)	9A6	876
Six, 3620 (1936)	10A6	877
Six, 3720 ('37), 3820 ('38), 3920 ('39)	10A7	902
Six, 3920 ('39) Later Cars	10A7	934
Six, 4020 ('40) To Eng. No. N6-39464	10A7	934
Six, 4020 ('40), 4160 ('41), 4260 ('42)	10A7	950
600, 4140 ('41), 4240 ('42)	8A7	959
600, 4640 (1946), 4740 (Early 1947)	8A7	975
600, 4740 (Late 1947), 4840 (1948)	8A7	987
Six, 4660 ('46), 4760 ('47), 4860 ('48)	10A7	950
Eight, 3680 (1936)	10A6	880
Eight, 3780 (1937), 3880 (1938)	10A6	883
Eight, 3980 (1939), 4080 (1940)	10A7	919
Eight, 4080 (1940) Later Cars	10A7	949
Eight, 4180 (1941), 4280 (1942)	10A7	950
NASH-LAFAYETTE		
3610 (1936)	9A6	876
3710 (1937), 3810 (1938)	9A6	906
3910 (1939), 4010 (1940)	9A6	932
4010 (1940) Early Cars	9A7	937
4010 (1940) Later Cars	9A7	951
OLDSMOBILE		
Six, F36 (1936)	9A6	873
Six, F37 ('37), F38 ('38), G39 ('39)	9A6	895
Six, G39 (1939) No. G15957 Up	9A7	924
Six, F39 (1939)	9A7	924
Six, All Models (1940-48)	9A7	924
Eight, L37 ('37), L38 ('38), L39 ('39)	10A7	897
Eight, L39 (1939) No. 318499 Up	10A7	927
Eight, All Models (1940-48)	10A7	927
PACKARD		
Six, (1940)—Eng. No. 17621 to 28824	10A7	948
Eight, (1940)—Eng. No. 300798 to 314328	10A7	922
Super 8 ('40)—Eng. No. 501610 to 503811	11A6	944
PLYMOUTH		
P1 (1936), P3,4 (1937)	9A6	869
P5, P6 (1938), P7, P8 (1939)	9A6	918
Taxicab Models (1936-37-38)	11A6	917
P9, P10 (1940)	9A7	926
P11, P12 (1941), P14 (1942)	9A7	⑧955
Taxicab Models (1939-40-41-42)	11A6	931
P15 (1946-47) 7 Pass	10A7	928
P15 (1946-47-48) ⑨	9A7	955
Taxicab (1946-47-48)	11A6	931
STUDEBAKER		
Dictator 3A,4A (1936), 5A,6A (1937)	9A6	869
Commander 7A,8A (1938), 9A (1939)	9A6	869
Commander 10A('40), 11A('41), 12A('42)	9A7	943
Commander 12A (1942)—Some Cars	9A7	963
Champion, All Models (1939-42)	8A7	925
Champion, 5G (1946)	8A7	959
Champion, 6G (1947), 7G (1948)	8A7	980
Commander, 14A (1947), 15A (1948)	9A7	943

①—Also use Assy. 940. ②—Also use Assy. 931.
③—Also use Assy. 939. ④—Also use Assy. 938.
⑤—Assembly No. 938 also used on D14, D17
⑥—Also use Assembly No. 877 and 878
⑦—Assembly Nos. 945 and 946—See Note.
⑧—Also use Assembly No. 926
⑨—Auburn Clutch also used on these models.

►NOTES, CAUTIONS, & CHANGES

ASSEMBLY NUMBER NOTE: This number stamped on clutch cover. Can be used to identify each model.

►**Borg-Warner UF-300 Fixture.** Recommended by manufacturer for use in servicing clutch. Fixture consists of surface plate, which duplicates driving surface of flywheel, clamp screws to clamp clutch cover against plate, arbor press to compress springs in dismantling clutch, and gauge standard for use in setting up release levers.

►**Nash "600" 4740 (1947) Clutch Changes**—*Different Clutches and various Driven Members (requiring special Release Lever Settings) used as follows:*

Clutch Assembly Change—Two types of Borg & Beck Model 8A7 clutches used in production:
Assy. No. 975 (First Cars—through July 1947).
Assy. 360987 (Later Cars—Beginning Aug. 1947).

►***CAUTION—Driven members not interchangeable on these clutches. Use Borg-Warner No. 381558 on Assy. No. 975, Borg-Warner No. 381736 on Assy. 360987.***

Driven Member Change—See Driven Member & Release Lever Setting Table for Nash following.

►**Oldsmobile Throw-out Bearing Lubrication**—Bearing is special carbon (graphite) disc type and is impregnated with petrolatum. On cars where clutch disengaged frequently, bearing should be lubricated at 5000 mile intervals using petrolatum or vaseline only in a small high pressure grease gun and filling through grease fitting on bearing until lubricant appears at vent hole at top. CAUTION—Do not use any other lubricant than petrolatum or vaseline with high melting point (130° F.).

►**Clutch Lever Eyebolt Change**—New type locking eyebolt and nut (for lever adjustment) used starting Sept. 1943. Threaded end of eyebolt has two notches (formerly slotted) and nut staked in place by peening metal of nut into notches with a blunt nose punch. Former slotted end type eyebolt has been discontinued. New eyebolt and nut furnished as an assembly (separate bolt and nut not furnished) and part numbers are as follows:

	Eyebolt and Nut Ass mbly New Assembly Bolt & Nut	Part Nos. Bolt	Replaces Nut
8A7, 9A7	11144	4193	4193
9A6, 10A6, 10A7	11373	3698	3141
11A6	10908	3700	3141

Buick 1940-48. Borglite Driven Member used on some cars (Long 'CF' type also used) with clutches of own make. Driven Member data below applies to these models.

Cadillac, LaSalle 1940—These models used only on cars listed below. Refer to Long 'CF' Clutch article for clutch used on other Cadillac & LaSalle cars.

Cars with Borg & Beck Clutch	
Cadillac 40-60S	Eng. No. 6E1064 to 6E 2054
Cadillac 40-62	Eng. No. 8E1040 to 8E2653
Cadillac 40-72	Eng. No. 7E107 to 7E483
Cadillac 40-75	Eng. No. 3E405 to 3E546
LaSalle 40-50 (No. 946)	Eng. No. 2E2874 to 2E6404
LaSalle 40-50 (No. 945)	Eng. No. 2E3054 to 2E5564
LaSalle 40-52 (No. 946)	Eng. No. 4E1899 to 4E5407

Chrysler Six, De Soto, Dodge '41-42 Models with Fluid Drive—These cars have new smaller (9A7) clutch than cars without Fluid Drive and clutch does not have Pressure Plate Baffle. These new 9A7 models require special lever setting (below).

Nash & Nash-Lafayette 1940—First type (1939 equipment) used on cars before Dec. 15th (4010,

CONTINUED ON NEXT PAGE

BORG & BECK MODELS (Cont.)

4020), Febr. 1st (4080). Later type clutch with Borglite Driven Member used on later cars.

Oldsmobile (1937-38)—A special clutch release plate and steel spacer assembled on release levers as part of clutch assembly. Held in place by special release lever return springs (anti-rattler springs and separate bearing plate retainers not used). See special instructions, in Assembling section below.

Oldsmobile 8 (1938)—Release lever spring ends hooked over cover rim and must be installed in cover before it is placed on pressure plate assembly. Release levers are guided on rectangular guide pins riveted to cover (see that guide pins enter lever slots when installing cover). Release levers on L-38 are ⅛" higher than F-38 (special lever setting). Special grooved facings used on models with Self-Shifting Transmission (not interchangeable with standard driven member).

Oldsmobile 1940-48. These clutches used only on cars with Std. Transmission. Cars with Optl. Hydra-Matic Drive do not have any clutch.

Packard 1940—These clutches used only on early cars. See Long 'CF' (6 & 8), 'CFS' (Super 8) clutch

Studebaker Champion 1939-40—New type driven member (with grooved facings) used on 1939 cars after Eng. No. 17804 and on all 1940 cars.

Studebaker Commander 12A 1942—No. 943 and 963 clutches are interchangeable and identical except No. 963 is specially balanced.

Willys 1936-48. Borg & Beck Driven Member is used with Rockford or Auburn (Atwood) Clutch.

DESCRIPTION:—Single plate, dry disc type. Three release levers mounted on bolts piloted in pressure plate and held in clutch cover, actuate clutch through struts which provide 'knife-edge' action. Servicing directions below apply to pressure plate assembly. See Driven Member Section if pressure plate not to be dismantled and rebuilt.

De Soto, Plymouth Models—Clutches on these cars have special grease pads installed on top of driving lugs on pressure plate. See Assembling Note

Pressure Plate Baffle—Used on some Chrysler, DeSoto, Dodge, Plymouth, Nash, Oldsmobile. Consists of a thin cupped steel disc assembled on pressure plate to prevent oil working in on facings. When baffle plate used, release levers must be set higher.

Duckbill Type Release Levers. On 1939 and later Oldsmobile, throw-out bearing ends of the levers are widened and flattened to increase bearing contact area so that no separate bearing plate required.

Borg-Lite Driven Member—Some 1939 and later Chrysler, DeSoto, Dodge, Plymouth, Nash, Oldsmobile models. New type light weight driven member. Requires special lever setting (see data below).

REMOVAL OF CLUTCH: *See "Clutch" on car model page.*

SERVICING:—Mark all parts before dismantling clutch and reassemble in same position (necessary to maintain balance). Replace grooved, checked or warped pressure plates. Replace springs when pressure plate discolored from heat (test springs as directed below).

DISASSEMBLY

Disassembly: Place clutch on fixture or arbor press support pressure plate under release levers), place block across cover resting on spring bosses, compress cover slightly, remove metal staking in adjusting nuts by running hacksaw blade through slot, remove nuts, release pressure slowly, remove cover and springs. Remove release levers by grasping lever and eyebolt between thumb and forefinger, so that inner end of lever and upper end of eyebolt are pressed together. Lift strut over ridge in end of lever (press lower end back against lug), lift lever and eyebolt out.

Clutch Springs:—Note spring color and install in same relative position (groups of two different springs used on some clutch models). Springs should check with table below. Replace springs if weak or burned or if clutch has been subjected to excessive heat.

Spring Specifications

Part No.	Pressure & Length	Color
2994	144 lbs. @ 1 11/16"	Yellow or Brown
3031	190 lbs. @ 1 11/16"	Dark Blue
3534	217½ lbs. @ 1 11/16"	Pink
3814	135 lbs. @ 1 11/16"	Purple
3817	110 lbs. @ 1 11/16"	Green
3951	155 lbs. @ 1 11/16"	None
4039	165 lbs. @ 1 11/16"	Light Blue
4190	160 lbs. @ 1½"	Tan
4211	170 lbs. @ 1½"	Orange
4214	175 lbs. @ 1 11/16"	Light Green
4308	150 lbs. @ 1½"	Lavender
4331	140 lbs. @ 1½"	Yellow
4446	195 lbs. @ 1½"	Red

Note—Pressures are plus or minus 5 lbs.

REASSEMBLY

Assembling:—Place pressure plate on fixture or arbor press supporting plate under release lever lugs. Install baffle plate (some models only—see Note below), install lever, eyebolt, and strut assemblies by reversing removal procedure. Place pressure plate springs on plate, install anti-rattler springs (see Note below) in cover, place cover on pressure plate. Make certain that springs are seated in cover recesses and anti-rattler springs in place on release levers. Compress cover slowly and guide eyebolts through holes in cover. If assembly made in fixture, use clamps to clamp cover flange to plate at mounting holes. Install eyebolt nuts and turn nuts down flush with head of bolt. Compress and release clutch several times to seat all working parts. Then adjust release lever heights.

NOTE—On Oldsmobile 1937 models where release lever springs used instead of anti-rattler springs, install these springs with cross-wire straddling lever tip and coils at either side of pressure plate lug. Free ends of springs will extend up so as to contact clutch cover when installed.

►**De Soto & Plymouth 1941-48 Grease Pads**—Three special grease-soaked pads installed on top of driving lugs on pressure plate. When assembling clutch, make certain that holes in pads are over eye bolts. If pads dry, dip them in good quality high-melting point grease which has been heated. Allow pads to dry before installing. Pads not furnished for service.

►**Oldsmobile 1937-38 Release Plate Spacer**—To replace spacer on release plate, place plate face down on bench, install spacer engaging the 3 prongs in the release plate holes, place a wooden block on the spacer lugs, tap spacer down until it is firmly seated on release plate bosses. Use extreme care not to distort spacer or mar spacer lugs which engage release lever slots. To install this assembly, place assembly on release levers with spacer down and lugs engaging release lever slots, lift lever return spring cross-wires and snap in place in release plate lug grooves.

►**Baffle Plate Installation Note (9A6, 9A7, 10A6, 10A7 Clutches):**—Place baffle plate on pressure plate with baffle plate ears on special low spring seat ribs (adjacent to release lever lug on plate in counter-clockwise direction) so that flanged edge of baffle fits depressions in pressure plate at base of each lug and baffle is retained by springs (which seat on ears) when installed. See that baffle plate ears are flat on spring seat ribs and that baffle seats fully in machined recess in plate (straighten ears if bent by handling).

(Model 11A6 Clutch)—Install baffle in same manner as above except that baffle ears must be seated on spring seats adjacent to lugs in clockwis direction.

RELEASE LEVER ADJUSTMENT (UF-300 FIXTURE)

Release Lever Adjustment (On Borg-Warner Universal Clutch Fixture UF-300):—Special lands must be installed on fixture under pressure plate lever lugs (all models with 3 levers—space lands equally on 4 lever types). Set adjusting arm on adjusting sleeve so that height of lower side of arm above bottom of sleeve is correct for each model (see table below), install indicating plate on levers (see special note below on Models 9A7, 10A7 with new duckbill

CONTINUED ON NEXT PAGE

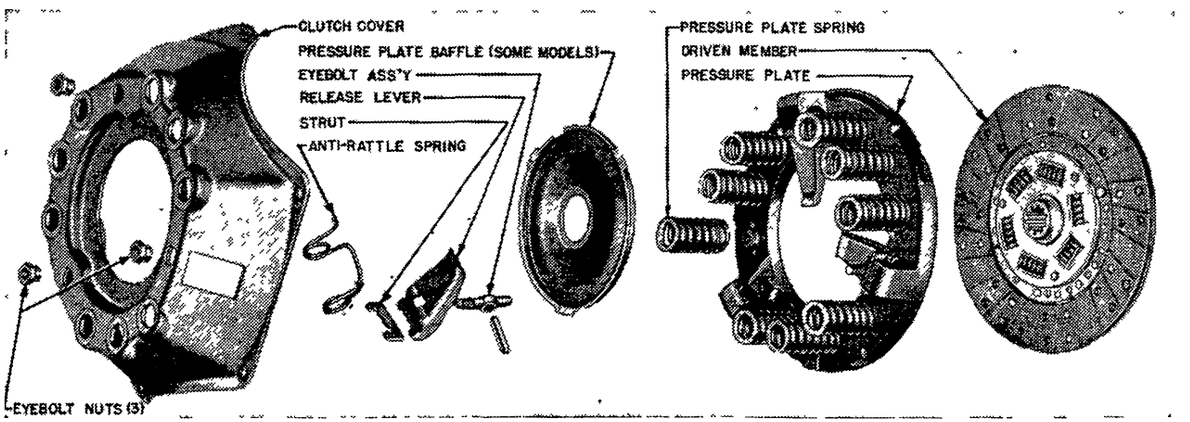

BORG & BECK MODELS (Cont.)

release levers). Adjust each lever so that it just contacts indicating plate or adjusting arm, lock lever adjusting nuts by peening metal of nut into slot of eyebolt (former type) or peen nut against notches in eyebolt (latest type). See Eyebolt Assembly change on preceding page for data on latest type eyebolt and nut.

Release Lever Settings
(Using Borg-Warner UF-300 Fixture)

Clutch Assy.	Lever Height
MODEL 8A7	
①925, 959, 975, 980	2 1/16"
MODEL 9A6	
869, 873, 876, 894, 895, 906, 911, 932	2 5/16"
③918	2⅜"
MODEL 9A7	
①924	See 9A7 Note
①926, 943, 951, 952, 953, 955	2 3/16"
937	2 5/16"
MODEL 10A6	
870, 874, 877, 878, 880, 883, 886, 890	2 5/16"
901, 904, 907, 923	2 5/16"
③933, 939	2 3/16"
①961	2 3/16"
MODEL 10A7	
897	2⅜"
898, 899, 902, 905, 922	2 5/16"
②913, 914, 919, 920, 934	2⅜"
①927	See 10A7 Note
③928, 930, 938, 940, 949, 950, 957	2 3/16"
①948	2 3/16"
①954	2⅛"
MODEL 11A6	
871, 879, 882, 884, 900 (See 11A6 Note)	1⅞"
908, 910	2½"
②915, 916, 917, 921	2½"
③929, 931, 941, 944, 945, 946	2¼"

①—Borglite Driven member used.
②—Pressure Plate Baffle used.
③—Borglite Driven member & Pressure Plate Baffle used.

9A7, 10A7 Note—These models with 'duckbill' type release levers must be adjusted in special manner (longer length of levers makes it impossible to install height sleeve on fixture). With clutch mounted on fixture, place special extension sleeve '3Z' on spindle (this sleeve correct height for lever adjustment), place indicating plate on levers with counterbored side up. Set adjusting arm flush with bottom of calibrated adjusting sleeve, install sleeve on spindle, adjust release levers in usual manner.

11A6 Note—Do not use indicating plate "3X" when adjusting levers on these models.

RELEASE LEVER ADJUSTMENT
(WITHOUT FIXTURE)
BORGLITE DRIVEN MEMBER

With Borglite Driven Member—Use special gauge plate, Borg-Warner #4234, and install clutch on flywheel with gauge plate in place of regular driven member with machined lugs on gauge directly under release levers on 3 lever types (on 4 lever types, place lugs in any position). Use short straightedge placed on edge on gauge plate hub and adjust release lever adjusting screw nuts until levers just contact edge of straightedge for all models marked 'flush' in table below (if lever setting marked 'high', a cut-out or step must be made in the edge of the straightedge at one end so that levers can be set higher than hub; if lever setting marked 'low', recess or step should be cut in straightedge at gauge hub so that end of straightedge extends below hub), lock adjustment by peening nut into eyebolt slot or into notches in eyebolt (latest type). See Eyebolt Assembly change on preceding page for data on latest type eyebolt and nut.

Release Lever Settings
(#4234 Gauge Plate—Borglite Driven Member)

Clutch Model	(With or Without Baffle)
8A7 (exc. 1947 Nash)	3/16" Low
8A7 (1947 Nash)	See Nash Note
9A7 (except Oldsmobile)	1/16" Low
9A7 (Oldsmobile)	Flush
10A6, 10A7 (including Oldsmobile)	Flush
11A6	1/16" High

►**Nash 4740 Release Lever Setting & Driven Member Changes:** Driven members changed in production as listed below. Release lever settings vary for each type member as listed in following table.

►***CAUTION—Release Levers must be set in accordance with type of Driven Member installed as follows:***

Driven Member (Nash No.)	Release Lever Setting
3121856 or 3123169 (First Cars)	1/16" Low
3124361 (Serial No. K-1178382 Up)	1/32" High
3125006 (Serial No. K-196325 Up)	1/32" High
3126326 Serv. Repl. (see Note)	1/16" Low

3126326 Note—This driven member has AMCO facings on both sides and is marked with a 1/16" identifying mark.

RELEASE LEVER ADJUSTMENT
STD. (NOT BORGLITE) DRIVEN MEMBER

With Standard Driven Member (not Borglite)—The #4234 gauge plate can be used on these models and levers should be set as shown in table below (adjust levers in same manner as directed above for types with Borglite Driven Member).

Release Lever Setting
(#4234 Gauge Plate—Std. not Borglite Driven Member)

Clutch Model	Lever Settings No Baffle	Lever Height With Baffle
8A7	3/16" Low	
9A6	1/8" High	3/16" High
9A7 (exc. Olds)	1/8" High	
9A7 (Oldsmobile)		(Borglite)
10A6	1/8" High	
10A7 (exc. Olds)	1/8" High	3/16" High
10A7 (Oldsmobile)	3/16" High	
11A6 (See Note)	3/16" High	1/4" High

NOTE 11A6 No. 908, 910 set ¼" high (no baffle).

3525 Gauge Plate—This gauge plate can be used on 1938 and earlier models. Settings are ⅛" less than shown in table above for #4234 gauge (except on 11A6 Without Baffle where setting is Flush).

RELEASE LEVER ADJUSTMENT
(CHRYSLER C-411 FIXTURE)

Using C-411 Fixture—Mount clutch on fixture, install spacer on fixture center screw when required (spacer not used on all clutches—see table below), install extension gauge (see Note below for special "Y" type extension gauge required with clutches which have baffles), tighten extension gauge locknut. With extended end of extension gauge directly over one release lever, insert correct feeler gauge (see table below) between gauge and release lever tip, turn lever adjusting screw nut until feeler is just snug, lock adjusting nut by peening metal of nut into adjusting screw slot. Adjust each lever in the same manner, using extreme care to secure uniform setting for all levers.

Extension Gaug Note—Extension gauge furnished originally with C-411 fixture will not clear small opening in baffle plate and special "Y" extension gauge (C-411-37A) used on clutches with baffles.

Chrysler Release Lever Settings
(For Chrysler Clutch Fixture C-411)

Clutch Assy. No.	Spacer	Feeler
869, 870, 871, 874, 899	None	A
908	1/16"	B
913 (DeSoto, Dodge)	1/16"	A
913 (Plymouth)	1/16"	B
914	1/16"	A
915	1/8"	A
916	3/16"	A
917 (Chrysler, DeSoto, Dodge)	3/16"	A
917 (Plymouth)	3/16"	B
918	1/16"	B
926, 930	None	D
928 (DeSoto, Dodge)	None	D
928 (Plymouth)	None	E
929	None	C
931 (Chrysler, DeSoto, Dodge)	None	C
931 (Plymouth)	None	E
933, 938, 939, 940	None	D
941	None	C
955	None	D
952, 953, 957	None	E

RELEASE LEVER ADJUSTMENT
(CHRYSLER C-585 FIXTURE)

With New C-585 Clutch Fixture—On this fixture, feeler gauges are located in base of fixture under clutch assembly. Install clutch assembly on fixture with release levers directly above feeler gauges (on 4-lever type 11" clutches, install clutch with two levers directly over two of the feeler gauges, adjust these levers, then rotate clutch so that other levers are over feelers and adjust these levers). Place correct spacer on center screw of fixture (see table below), install compression plate on center screw making certain that it rests directly against all release fingers (plate can be reversed to provide proper clearance on all models), install self-aligning washer, plain washer, and compression nut. Tighten compression nut until clutch fully compressed, install clutch housing clamps over cover bolt holes and tighten clamps securely. Adjust each release lever adjusting nut until slight drag secured on each feeler (all feelers alike), lock adjusting nuts and recheck adjustment.

Chrysler Release Lever Settings
(For Chrysler Clutch Fixture C-585)

Clutch Assy. No.	C-585 Spacer
869, 899	18
908, 917	15
913, 918	17
928, 938, 940, 957	21
931, 941	19
939, 952, 953, 955, 961	20

NOTE—See car application List (at beginning of article) for Assy. No. of clutch used on each car

DRIVEN MEMBER

►**Nash 4740 Driven Member Changes:** Various driven members used—furnished by manufacturer with facings installed. Each driven member requires special release lever setting. See Nash Note under "Release Lever Adjustment (Without Fixture) Borglite Driven Member."

Driven Member Replacement Note: ***Manufacturer recommends installation of new driven member with***

CONTINUED ON NEXT PAGE

BORG & BECK MODELS (C nt.)

new facings rather than relining plate. Driven member hub (Spring Dampener) cannot be serviced in the field. Two types of plates used: (1) Cushioning secured by slotting plate into concave and convex segments, (2) Separate cushioning springs under one facing. Type used can be determined by inspection. Servicing directions for each type are as follows:

New Borglite Typ Driven Member:—New type composite plate consisting of a small diameter disc with separate clock-spring type cushion segments (to which facings are riveted) riveted to outer rim. Segments are dished to provide soft engagement. This type of construction results in less weight at rim of driven member (which reduces spinning and allows quiet, fast gear shifting) without loss of strength in plate. Plate is balanced by additional rivets placed at rim of disc. Facings are riveted individually on cushion segments by one or two rivets in each segment.

Segmented Type Plate:—Driven plate slotted radially and segments alternately convex and concave. Tongue formed in each section by 'U' shaped cutaway. Each facing riveted individually at outer holes on convex side of segments (alternate segments) and to inner point of tongue on intervening concave segments.

To Remove Facings—Drill out rivets to remove old facings. Do not punch out rivets as this will distort disc and damage tongues.

Installing Facings—Insert rivets on facing side (head in countersunk hole of facing). Roll rivets on plate side—do not use split rivets. Each facing must be riveted individually with facing drilled to permit working through facing to head rivets for facing in opposite side.

Installing Driven Member—Plate marked 'Flywheel side'. Install with this side toward flywheel.

Cushion Spring Type Plate:—Facing on pressure plate side riveted only to series of individual cushion springs by two short rivets at tongue end of each spring. Cushion springs riveted to plate together with facing for flywheel side with two long rivets.

To Remove Facings—Drill out rivets when removing old facings to avoid danger of distorting disc and damaging cushion springs.

Installing Facings—Use complete new set of cushion springs if necessary to replace any of the springs. Install lining of flywheel side, inserting long rivets with heads in countersunk holes in facing, place cushion springs on opposite side of plate concave side down lining up springs so that tongue of one spring enters notch in next, roll rivets on spring side. If properly installed, holes in spring for pressure plate facing will line up with slot in plate. Install facing on cushion springs inserting short rivets with head in countersunk holes in facing, roll rivets on cushion spring side (work through holes in flywheel facing).

Installing Driven Member—Plate marked 'Flywheel Side'. Install with this side toward flywheel.

ILLINOIS (GRAHAM)

GRAHAM CRUSADER, 80, 80A ('36), 85 ('37)
GRAHAM, CAVAL. MODELS 90, 90-A (1936).
GRAHAM, SUPERCH'D MODEL 110 (1936).

DESCRIPTION:—Single plate dry disc type. Three release levers pivoted on eccentric pins in pressure plate lugs at flywheel brackets actuate clutch. Single large spiral clutch spring located between release lever plate and pressure plate. Pressure plate is heavy ribbed casting and is mounted on flywheel by three lugs engaging brackets bolted on flywheel independently (no conventional clutch cover used). NOTE—Mounting bolts are special type and no other type bolt should be used for replacement. One 5/16" lockwasher 3/32" thick must be used under each bolt head.

ADJUSTMENT:—When range of clutch pedal engagement has been used up, bracket mounting bolts on flywheel should be loosened one or two turns and the bracket shim pulled out from between the bracket and the face of the flywheel (shim holes slotted, not necessary to completely remove bolts). Adjust one bracket at a time, tighten bracket bolts before loosening next bracket. Discard shims.

SERVICING:—**Disassembly.** Drill out riveted end of each eccentric pin (at outer end of each release lever) using ¼" drill. **Important**—Any attempt to drive out pins without first drilling riveted end will break or distort pressure plate. Place assembly on arbor press, compress release lever plate and spring slightly, remove eccentric pins and release levers, back off press, lift off plate and spring.

Assembly:—New clutch spring and new eccentric pins must always be used. See that release levers and retaining plate are not worn and that ends of levers are free in plate. Place pressure plate on arbor press, install spring and retaining plate, compress spring, install release levers and eccentric pins turning nuts on pins up loosely, remove assembly from press and adjust release levers.

Release Lever Adjustment:—Mount pressure plate assembly on standard flywheel with three pieces of 5/16" key stock 1½" long between plate and face of flywheel midway between release levers (these pieces must be exactly same thickness, do not install driven member). Turn eccentric pins so that release levers are thrown in toward center of assembly as far as possible. Install special gauge ('U' shaped metal bar which forms parallel surface above retaining plate) over retaining plate, turn each eccentric pin so that face of retaining plate is parallel with underside of gauge in all positions, tighten locknuts securely.

Installation:—When installing clutch with new driven member or new facings, see that shims furnished with new plate are installed on flywheel under each mounting bracket (these shims are discarded to secure second range of adjustment as facings wear). NOTE—Long type driven member used on Model 90 after Eng. No. 207437, 110 after Eng. No. 109174, and furnished for replacement on these models and also Model 90A after May 15, 1936. See Long data below. When installing Long driven member on these cars, see that hub dampener is toward flywheel.

DRIVEN MEMBER:—Spring dampening device incorporated in driving plate hub. Driving plate segmented and facings riveted to plate individually. Manufacturer recommends use of new driven member with selected lining to maintain even thickness.

Illinois Type Driven Member:—Iron rivets used for one facing, copper or brass for other (facings riveted individually). Iron rivets must be drilled out, plate will be distorted if rivets driven out. See that new facings contact plate at all points, driven member must be of exact same thickness at all points.

Long Type Driven Member:—See article on Long Type 9CF clutches for complete driven member data.

INLAND

①PONTIAC 6 & 8, ALL MODELS (1939 to 1948)
STUDEBAKER PRES., ALL MODELS (1939 to 1942)
①—Clutch used only on cars with Synchro-mesh Transmission (no clutch with Hydra-Matic Drive).

►NOTES, CAUTIONS, & CHANGES

►**Pontiac 1941 & Later Models (except Taxicab) Clutch Service:** Pressure plate permanently assembled as part of cover assembly by four shallow 'U' shaped segments of flat spring steel riveted to pressure plate at center and to clutch cover flange at ends. These spring segments replace driving lugs and separate retracting springs used on previous models. CAUTION—Do not remove pressure plate or disturb spring segments. Clutch cover and pressure plate are serviced as an assembly (parts not furnished separately).

►**Pontiac 8 (1940) Clutch change to correct slipping.** Beginning Eng. No. 8-217982, clutch with heavier 1400 lb. clutch spring was used (first type clutch spring was 1200 lb.). This new clutch, Part No. 753615 marked 'New Style', should be installed to correct damage resulting from slipping caused by starting in second gear and gunning engine.

►**Pontiac Clutch Poor Release Complaints**—May be caused by the anti-rattle spring wearing into plate and binding at end of spring. To correct this condition, examine pressure plate and spring for indication of interference. Smooth up pressure plate to provide good bearing surface for face of spring. See that spring does not have end thrust on pressure plate lug (shorten end of spring if necessary). Lubricate spring with Lubriplate when reassembling. CAUTION—Driving lug slots must not be widened to correct poor release. Clearance in excess of .005" at either side of lug will cause clutch noise and roughness. When installing clutch, make certain that dowel in flywheel engages hole in cover (cover will be distorted and clutch out-of-balance if installed in any other position).

►**Pontiac Clutch Release Noises**—If clucking noise noted when pedal depressed to release clutch, examine felts at each end of clutch control countershaft (clutch linkage cross-shaft) and lubricate if dry. IMPORTANT—These felts should be lubricated at regular lubrication periods. Refer to 'Clutch Pedal Rattle Correction' for 1940 models in Pontiac Special Shop Notes in Car Model Section.

►**Pontiac Clutch Intermittent Buzzing Noise**—Noise at about 28 MPH. which is not continuous may be caused by loose dampener spring in clutch driven member hub.

►**Pontiac 1946 Clutch Release Bearing Noise Correction**—May be caused by excessive bearing clearance on first type support tube. See Clutch Notes in Pontiac Shop Notes in car model section for recommended correction.

►**Pontiac 1946 Release Bearing Support (New Type and recommended change on early 1946 cars).** See Clutch Notes in Pontiac Shop Notes in car model section for complete data.

►**Pontiac 1946 & Later Driven Member Caution**—Same size used on both Six & Eight but **must not be interchanged.** See Driven Member data below.

►**Studebaker Service Replacement Clutches**—Furnished with spacers installed at each pressure plate driving lug. These spacers must be removed when clutch installed on engine.

CONTINUED ON NEXT PAGE

INLAND (C ntinued)

DESCRIPTION:—Single plate dry disc type with diaphragm spring disc which takes the place of both pressure plate springs and release levers. Diaphragm spring is shaped like dished washer with inner rim slotted to form 18 segments or release fingers and is pivoted on inner and outer pivot rings assembled on inner surface of clutch cover by nine rivets. Diaphragm and pressure plate are linked by three tension or retracting springs mounted on edge of pressure plate by capscrews (springs and mounting screws visible through slots in cover). When diaphragm spring fingers depressed to release clutch, diaphragm pivots on inner pivot ring and resulting flexing action causes outer rim to move out relieving pressure on pressure plate and withdrawing plate from driven member. When diaphragm released to engage clutch, diaphragm flexs in opposite direction (pivoting on outer pivot ring). Pressure plate driving torque taken by three lugs on outer rim of plate which engage slots in cover.

Pontiac Anti-Rattle Spring—Consists of a flat spring installed between the pressure plate and the clutch cover in one of the cover holes adjacent to the '0' balance marked lug hole. This anti-rattle spring should be wired in place before pressure plate is removed and must not be installed in any other position. CAUTION—Changing position of anti-rattle spring will upset clutch balance.

REMOVAL OF CLUTCH: *See "Clutch" on car model page.*

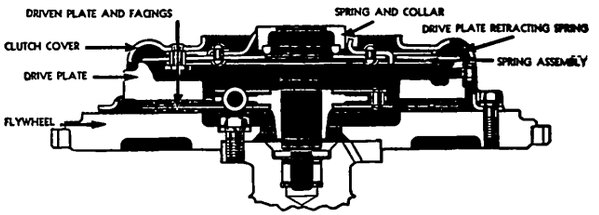

SERVICING: *CAUTION—Clutch on 1941 & later Pontiac cars (except Taxicab) cannot be disassembled (riveted construction).*

►**Clutch Handling Caution**—Pressure plate must not hang on retracting springs in clutch cover. When handling clutch cover assembly, support pressure plate by hand or invert assembly so that pressure plate is up.

Disassembly. On Pontiac models, wire anti-rattle spring (flat tension spring in hole on side of clutch cover adjacent to balance marked pressure plate lug slot) to cover so that it will be retained when pressure plate is removed—**shifting spring to any other position will upset clutch balance.** Working through holes in clutch cover, take out retracting spring mounting screws, withdraw three retracting springs, lift pressure plate out. This completes disassembly (cover, diaphragm, and release bearing plate serviced as an assembly only and should not be dismantled).

Assembly. Place cover and diaphragm assembly over pressure plate making certain that pressure plate lug marked '0' is engaged in cover slot which is similarly marked (mark on cover will be found on mounting flange below slot), install retracting springs and tighten mounting screws. On Pontiac models, make certain that anti-rattle spring is in place in cover in hole adjacent to balance-marked slot and that it bears on pressure plate edge.

NOTE—Manufacturer recommends that new retracting springs be used with clutch whenever a new or relined driven member is installed.

DRIVEN MEMBER:—Long 'CF' type driven members used on all models as follows:

Car Model	Driven Member Type
Pontiac Six (1939-40)	9CF-CS
Pontiac Six (1941-42)	9CF-TS
Pontiac Six (1946-48) See Note	9½CF-TS
Pontiac Eight (1939-40)	9½CF-CS
Pontiac Eight (1941-42)	9½CF-TS
Pontiac Eight (1946-48) See Note	9½CF-TS
Pontiac Taxicab	10CF-CS
Studebaker President	9½CF-CS

►**1946-48 Pontiac Driven Member Note**—Driven members on Six (Pontiac No. 508403) and Eight (Pontiac No. 505473) are the *same size but must not be interchanged.* Can be identified as follows:
Six Cylinder—Torsional springs in hub painted Orange & Dark Blue, facings stenciled "41-42 6 cyl."
Eight Cylinder—Torsional springs painted Brown and Blue, facings stenciled "41-42 8 cyl."

Driven Member Servicing: See Long "CF" clutch article for complete data and note following points:
Pontiac Models—Special fixture available for facing installation (J-1043 riveting anvil, J-846-8 rivet set) on all models. When using this fixture, place guide pins in 'P6' holes for all six cylinder models (lower set of holes on rim near nameplate) and place rivet in center 'P' hole (diametrically across rim from nameplate). On eight cylinder models place guide pins in 'P8' holes (upper set of holes on rim near nameplate) and use same rivet hole as for six cylinder cars. On Taxicabs, place guide pins in 'A' holes (approx. 45° around rim from P6 & P8 holes), place rivets in center 'A' holes (directly below part number and nameplate. Rotate facing and driven member on anvil as rivets installed.

LONG MODELS 8½CB, 11CB

MODEL 8½CB-CS6

Cover Assy. No. Used On:
BL-1449—Ford V8, "60" Pass. Cars (1937-38-39)
BL-4787—Willys Overland, Model 39 (1939)

NOTE:—Manufacturer recommends use of Borg-Warner UF-300 fixture for servicing clutch. Fixture consists of surface plate, which duplicates driving surface of flywheel, clamp screws to clamp cover against plate, arbor press to compress springs in dismantling clutch, and gauge standard for use in setting up release levers.

DESCRIPTION:—Single plate, dry disc type. Release levers pivoted on studs in outer rim of pressure plate with edge of cover at lever holes serving as fulcrum to actuate clutch. Servicing directions below apply to Pressure Plate and Cover Assembly

SERVICING:—Mark all parts before disassembling (reassemble in same positions to preserve balance). Replace grooved, warped, or cracked pressure plates, replace springs if pressure plate discolored from excessive heating.

Dismantling:—Free release lever stud nut locks by running hacksaw blade through slots. Place assembly on fixture or in arbor press, compress cover slightly, remove lever stud nuts, release pressure slowly, lift off cover plate and lever assembly. Free release lever tension springs, lift out levers. Lever studs are pressed in pressure plate and pinned in place (need not be removed unless pressure plate or studs being replaced—see servicing directions

Release Lever Studs:—Replacement studs furnished without drilled hole for lock pin. To install studs, start stud in pressure plate hole, use vise jaws as press to force studs in until end of stud is 13/16" plus or minus 1/32" above finished surface of pressure plate, drill studs through pressure plate hole (use No. 22 drill), drive lockpins in from inside (rounded end first).

Clutch Springs:—Replace springs if weak or burnt, or if pressure plate indicates clutch has heated excessively.

Model 8½CB Springs

Spring No.	Pressure & Length	Color
C-287 (Ford)	130-140 lbs. @ 1 9/32"	Blue
C-4784 (Overland)	140-150 lbs. @ 1 19/64"	White

Release Lever Assembly:—Invert cover, insert levers through slots in cover from inside, hook tension springs over levers and in spring holes in cover below lever slots. Cover is then ready to install on pressure plate.

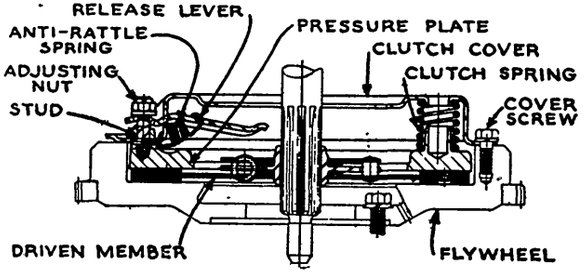

Pressure Plate Assembly:—Place pressure plate and stud assembly on fixture (see release lever stud servicing above), install springs on spring bosses on pressure plate, place cover in position on springs, compress cover until it is tight against #2 (8½CB), #8 (11CB) height sleeves placed under cover edge at clamps, guide lever studs through holes at outer ends of levers, install lockwashers and tighten lever nuts flush with ends of studs. Use clamps at height sleeves to hold cover, compress and release clutch several times (use weight on levers) to seat all parts, adjust lever heights.

Release Lever Adjustment (On Fixture):—Use lever adjusting arm and sleeve, setting lower face of lever exactly 1¼" (8½CB—Ford 60), 1 7/16" (8½CB Overland—with "3J" lands under pressure plate), 1 23/32" (11CB—Packard) above the bottom of the sleeve, tighten thumbnut. Swing arm over each release lever in turn, turn release lever nut until lever tip just contacts arm. Lock adjustment by peening nut into stud slot, recheck lever setting.

Release Lever Adjustment (Dial Indicator):—If dial indicator used, install indicator plate on lever tips, set indicator bracket at 1¾" (8½CB), 1 23/32" (11CB), set all levers for zero reading on dial indicator.

DRIVEN MEMBER:—Manufacturer recommends installation of replacement driven member (clutch disc) with new facings installed. See car model page for facing specifications.

CLUTCH INSTALLATION:—Manufacturer recommends that cover be compressed on clutch fixture or in arbor press and ¼" tapered wooden blocks be installed between inside edge of cover and levers to hold levers in released position while installing clutch on flywheel. This will prevent cover distortion when cover bolts are tightened (remove blocks after clutch installed).

LONG 9CF, 9½CF, 10CF, 11CF

	Clutch Model	Cover Assy. No.
CADILLAC		
V8, All Series (1936-39)	11CF-CI	BL-3890
V12, All Series (1936-37)	11CF-C	BL-3890
V8, All Series (1940)	①	BL-5004
V8, All Series (1941-42)	②	BL-5167
V8, Series 75 (1942)	11CF-TI	BL-4525
V8, Comm'l Models ('40-48)	11CF-TI	BL-5152
V8, All Series (1946-48)	③	BL-5167
C RD		
810 (1936), 812 (1937)	10CF-CI	BL-3731
FORD		
V8 '85' Pass. Cars ('35-40)	9CF-CS	BL-1441
V8 '60' Pass. Cars (1940)	9CF-CS	BL-1441
V8 '90' Pass. Cars (1941-42)	9CF-CS	BL-5102
6 Cyl. Pass. Cars (1941-48)	10CF-TI	BL-5222
V8 '100' Pass. Cars (1941-48)	10CF-TI	BL-5222
6 Cyl. Pass. Cars (1949)	9½CF-TS	263594
V8 '100' Pass. Cars (1949)	9½CF-TS	263594
V8 '85' Comm'l (1935-40)	9CF-CS	BL-1441
V8 '60' Comm'l (1937-40)	9CF-CS	BL-1441
4 Cyl. Comm'l (1941-42)	9CF-CS	BL-5102
V8 '90' Comm'l (1941-42)	9CF-CS	BL-5102
V8 '100' Comm'l (1941-48)	10CF-TI	BL-5222
6 Cyl. Comm'l (1941-48)	10CF-TI	BL-5222
V8 '60' ¾ & 1 Ton ('37-40)④	9CF-CS	BL-1441
4 Cyl. Truck Models (1941-42)	9CF-CS	BL-5102
V8 '85' ¾ & 1 Ton ('35-40)④	11CF-CI	BL-1440
V8 All ¾ & 1 Ton ('41-42)④	10CF-TI	BL-5122
6 Cyl. ¾ & 1 Ton ('41-42)④	11CF-CI	BL-1440
V8 All 1½ Ton (1935-40)	11CF-CI	BL-1440
6 Cyl. & V8 1½ Ton ('41-42)	11CF-CI	BL-1440
6 Cyl. & V8 ¾ Ton ('44-47)④	10CF-TI	BL-5222
6 Cyl. & V8 1½ Ton ('44-47)	11CF-CI	BL-1440
6 Cyl. & V8 2 Ton ('44-47)	11CF-CI	BL-1478
6 Cyl. & V8 Trks. (1948)	11CF-CI	⑥
Bus Models (1936-48)	11CF-CI	BL-1478
GRAHAM		
All Models (1937)—See Note	9CF-CS	BL-4235
All Models (1938-41)	9½CF-CS	BL-4114
HUPMOBILE		
Eight (1936-39)	10CF-CI	BL-3555
LA SALLE		
V8, All Series (1937-38)	11CF-10½CI	BL-3890
V8, All Series (1939)	10CF-CI	⑤BL-4671
V8, All Series (1940)	10CF-TI	BL-5034
LINC LN		
All Zephyr Models (1936-39)	10CF-CI	BL-3817
All Models (1940-41)	10CF-TI	BL-5078
All Models (1942-48)	10CF-TI	BL-5470
Lincoln & Cosmopolitan (1949)	11CF-10½TI	267044
MERCURY		
All Models (1939-40)	9CF-CS	BL-5102
All Models (1941-42)	10CF-TI	BL-5222
Cars with Liquamatic Dr. ('42)	9CF-CS	BL-5448
All Models (1946-48)	10CF-TI	BL-5222
PACKARD		
Six, All Models ('37-41) Std.	9½CF-CS	BL-4114
Six, With O.D. (1941)	10CF-CI	BL-3555
Six, Taxicab (1941)	11CF-CI	BL-5305
Six, All Models ('42-47) Std.	9½CF-CS	BL-5385
Six, Taxicab (1942-47)	11CF-CI	BL-5393
Six, with O.D. ('42-47)	10CF-CI	BL-5389
Eight, All Models ('35-41)	10CF-CI	BL-3555
Eight, Comm'l (1942)	10CF-CI	BL-5392
Eight, All Models ('42-47)	10CF-CI	BL-5389
Super 8 Models (1941) See Note	11CF-CI	BL-5300
PACKARD (C ntinued)		
Super & Cust. 8 ('42-47)	11CF-CI	BL-5391
Eight, 2201, 11 (1948)	10CF-TI	267954
Super 8, 2202, 32 (1948)	11CF-10½TI	268349
Cust. 8, 2206, 33 (1948)	11CF-TI	267953
Six, Taxicab (1948)	11CF-TI	268349
STUDEBAKER		
President 4C (1938)	9½CF-CS	BL-4114

①—11CF-10½CI (60S,62), 11CF-CI (72,75).
②—11CF-10½CI (60S,61,62,63), 11CF-CI (67,75).
③—11CF-10½CI (60S,61,62), 11CF-TI (75).
④3-Speed Trans. (BL-1440 with 4-Speed Trans.).
⑤—BL-3890 ('38 type) before Eng. No. 2D-700.
⑥—BL-1440 Std., BL-1478 Optl.

►NOTES, CAUTIONS, & CHANGES

►**Clutch Assembly Number Note:** This number is the Cover Assembly which includes all clutch parts except driven member. Clutch Model Number (9CF-CI, 9CF-CS, etc.) indicates also the type of driven member used on each car model.

►**Optional Replacement Clutch Assemblies:** The manufacturer lists following optional cover assemblies which can be used where complete assemblies to be replaced.

Optional Replacement Cover Assemblies

Clutch Model	Original Equipment	Optl. Replacement Assembly
9CF	BL-1441①	BL-5102
9½CF	BL-4114	BL-5385
9½CF	BL-5385	BL-4114
10CF	BL-3555	BL-5389
10CF	BL-3731	BL-5389
10CF	BL-4395	BL-5392
10CF	BL-4671	BL-5034
10CF	BL-5389	BL-3555
10CF	BL-5392	BL-4395
11CF	BL-5004	BL-5167
11CF	BL-5013	BL-5152
11CF	BL-5152	BL-5013
11CF	BL-5167	BL-5004
11CF	BL-5300	BL-4928② or BL-5391
11CF	BL-5305	BL-4721② or BL-5393
11CF	BL-5391	BL-4928② or BL-5300
11CF	BL-5393	BL-5305

①—Not made. For complete replacem't use BL-5102.
②—Riveted Assembly (Model 11CFS Special Type).

►**Long Driven Members (for other cars):** "CF" type driven members used on cars with other clutch models as shown in table below. Driven member data as shown below applies to these car models

Car Model	Long Driven Member
Buick 40 (1937-38)	10CF-CI
Buick 40A, B; 50 ('40-42)—Part	10CF-TS
Buick 40, 50 (1946-48)	10CF-TS
Buick 60,80,90 ('37)	11CF-CI
Buick 60, 70, 90 ('41-42)—Part	10½CF-TI
Buick 70 (1946-48)	10½CF-TI
LaSalle 35-50 (1935)	10CF-CI
Pontiac 6 & 8 (1936-38)	10CF-CI
Pontiac 6 ('39-40)	9CF-CS
Pontiac 6 ('41-42)	9CF-TS
Pontiac 8 ('39-40)	9½CF-CS
Pontiac 8 ('41-42)	9½CF-TS
Pontiac 6 & 8 (1946-48) See Note	9½CF-TS
Pontiac Taxicab (1946-48)	10CF-CS
Studebaker Pres. ('39-42)	9½CF-CS

Pontiac 1946-48 Models—Driven members used on Six & Eight Cylinder models are same size but are **not interchangeable** and may be identified as follows:

Six Cyl.—Torsional springs in hub painted Orange & Dark Blue, facings stenciled "41-42 6 cyl."

Eight Cyl.—Torsional springs painted Brown and Blue, facings stenciled "41-42 8 cyl."

CONTINUED ON NEXT PAGE

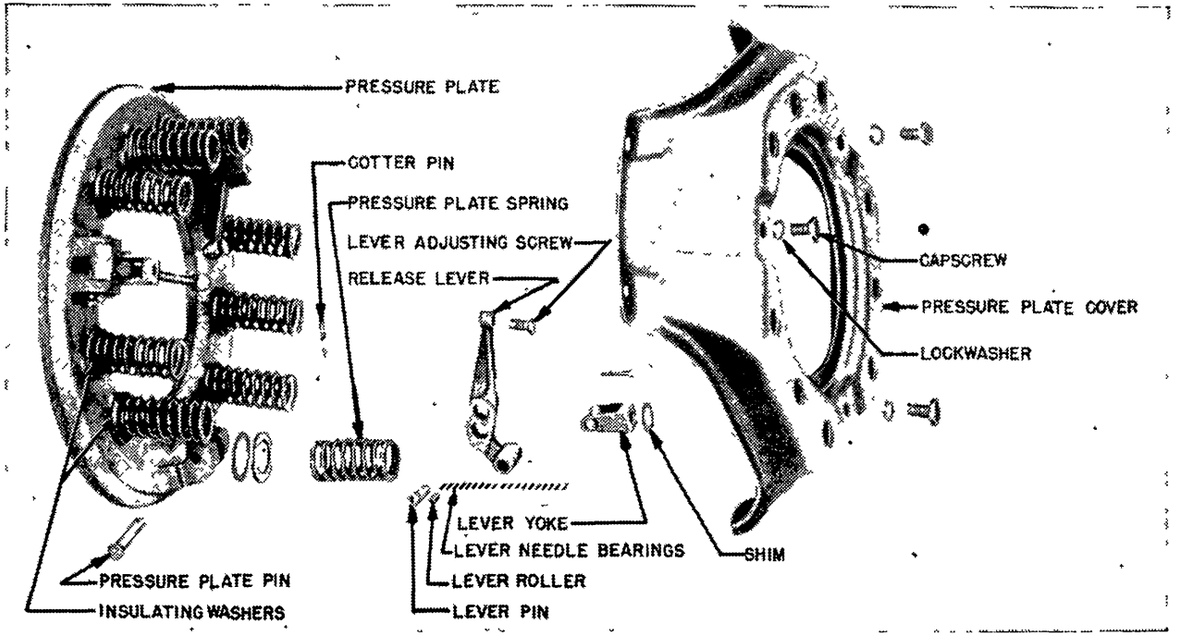

LONG 9CF, 9½CF, 10CF, 11CF (C nt.)

Buick 1940 & Later Models—Borg & Beck Borglite Driven Member also used on some cars.

Cadillac 1941 & Later Models—These clutches used only on cars with Std. Transmission. Cars with Optl. Hydra-matic Drive do not have any clutch.

Cadillac, LaSalle, Packard 1940 Models—Borg & Beck Clutches also used on these models. Refer to Borg & Beck Clutch article for data.

Graham 1937 Models—This model may be used as replacement on cars equipped with Illinois Clutch

Lincoln 1942 Models (With Liquamatic Drive)—Clutches used on these models have special Driven Member used with same cover assembly as on cars without Liquamatic Drive. Driven Members should not be interchanged.

Mercury 1942 Models (With Liquamatic Drive)—Smaller clutch (9" instead of 10") used on these cars.

Packard Taxicab & Super Eight 1941—These models used in late production and may also be used as replacement units on early cars equipped with Long 11CFS type clutch.

Packard 1942 Models (With Overdrive)—Special Driven Member used with Overdrive (Aero-Drive). Driven Members may be identified by paint mark on hub as follows: Cars with Aero-drive—White, Cars without Aero-drive—Blue. CAUTION—Do not interchange these driven members.

DESCRIPTION:—Single plate, dry disc type. Release levers formed with weight on outer end which increase pressure on driven member as engine speed increases. Levers pivoted on pressure plate on needle bearings with fulcrum located in yoke support on cover plate. Hardened-steel screw contact provided on lever tips. These screws staked in place and should be disturbed only when release lever adjustment (for new or relined driven plate) is to be made. Servicing directions below apply to pressure plate assembly. See Driven Member Section below if pressure plate not to be dismantled and rebuilt.

REMOVAL OF CLUTCH: *See "Clutch" on car model page.*

SERVICING:—Mark all parts before dismantling and reassemble in same position. Replace grooved, warped, or checked pressure plates. Replace springs when pressure plate discolored from heat (see Spring Testing below).

Clutch Fixture Note:—Manufacturer recommends use of Borg-Warner Universal Clutch Fixture UF-300 for all servicing and rebuilding operations.

DISASSEMBLY

Disassembly: Place clutch on fixture (supporting pressure plate on special lands under lugs) or arbor press. Compress cover plate slightly, take out assembly screws (lever yoke mounting screws) on cover, release pressure on cover plate slowly, lift off plate. Note whether washers used on yokes under assembly screws (these washers must be reinstalled if old pressure plate used again). See special directions below on removing and reinstalling release levers. Remove and test clutch springs.

Pressure Plate:—Pressure plate refacing by grinding or turning down on lathe will throw release levers out of adjustment. If pressure plate being refinished, remove .020" from face and install spacer washer .015" thick on release lever yoke under cover. NOTE—If washers are found on release lever yokes under cover when clutch disassembled, replace these washers (if old pressure plate used) or discard washers (if new pressure plate installed).

Clutch Springs:—Pressure springs should check with table below. Replace springs if weak or burned or if clutch has been subjected to excessive heat. Six springs used on 9CF, nine springs on 10CF, 11CF.

Spring Specifications

Spring Number	Pressure at 1 9/16"	No. of Coils	Color Mark
C-1965	90-100 lbs.	8¾	Lt. Green
C-2045	110-120 lbs.	8.8	Gray
C-2096	125-130 lbs.	8¾	Red
C-2141	130-140 lbs.	8½	Black
C-2686	145-150 lbs.	8¾	Yellow
C-2717	100-110 lbs.	8¾	Drk. Green
C-3431	150-160 lbs.	8½	Pink
C-3529	130-140 lbs.	8¾	None
C-4188	170-180 lbs.	7.4	Pl. or Orange
C-4873	145-153 lbs.	8¼	Brown
C-4905	158-168 lbs.	8¼	Tan
C-5333	125-135 lbs.	8¾	Blue

Release Lever Assembly:—Mount lever yoke on release lever, fasten by inserting flat-sided lever pin (flat side out or toward cover) and roller (place roller on flat side of pin). Insert lever in pressure plate lug, use roller pin sawed off to length of lever width as a guide and insert needle bearings, insert roller pin, pushing guide pin out, lock both lever pins with cotter pins. Thread release lever adjusting screws in ends of levers, turning screws down completely.

REASSEMBLY

Assembling:—Place pressure plate on fixture or arbor press. Assemble pressure springs, locator washers or insulator washers on plate, place washers on lever yokes (if washers used previously and old pressure plate being used). Place cover plate in position (lining up marks made before dismantling), compress cover slowly guiding lever weights through holes in cover and lining up yokes under cover plate holes. See that pressure springs are seated, insert cover screws in yokes, using lockwasher under screw head, tighten screws down securely. Compress and release clutch several times (using weight on release levers) to seat all parts. Then adjust release lever heights.

Release Lever Settings

9CF TYPES

Clutch No.	Lever Height
BL-1441, 3538, 4235, 5102	2 3/32"
①BL-5448	1 15/16"

9½CF TYPES

②BL-4114, 4328, 4442, 5385	2"

10CF TYPES

BL-3555, 3731, 3817, 4395, 4671	2⅛"
BL-4898, 5078	2"
BL-5034	1 15/16"
BL-5222, 5470	1¾"
BL-5148, 5389, 5392	2⅛"

11CF TYPES

BL-1440, 1478, 3607, 3800, 4525	2 7/32"
BL-3890	2 3/16"
BL-5004, 5013, 5152, 5167	1⅞"
BL-5143	1 15/16"
BL-5300, 5305, 5391, 5393	2 7/32"

①—Lever setting 2 7/16" if dial indicator (and special gauge plate) used. See data below.

②—Lever setting 2½" if dial indicator (and special gauge plate) used. See data below.

RELEASE LEVER ADJUSTMENT

Release Lever Adjustment (on Fixture):—Place special lands on fixture under pressure plate lugs, assemble lever adjusting arm and sleeve setting bottom of adjusting arm correct distance as showr in table above (all figures plus or minus 1/32") above bottom of sleeve and lock the adjusting arm with the thumbscrew. Swing arm over each release lever in turn, back off adjusting screw on tip of lever until rounded screw head just contacts arm, lock screws by inverting clutch so that screw head is supported and stake or peen lever into adjusting screw slot. Do not disturb lever yoke screws when making this adjustment.

Release Lever Adjustment (without Fixture):—Assemble the special lever setting disc or gauge on the flywheel in place of driven member, placing gauge so that lugs are under release levers and gauge is centered in clutch. Tighten all clutch cover bolts evenly. Place short straightedge on edge on top of gauge shoulder, turn adjusting screws at tips of release levers up or down until they contact straightedge, lock screws by peening metal of lever into screw slot. Lever heights must be equal within .005".

Release Lever Adjustment (Dial Indicator):—When using dial indicator to set release levers on Model 9CF (BL-5448 only), all 9½ CF, special indicating plate must be installed on levers and lever setting with this plate in place should be 2 7/16" 9CF (BL-5448 only), 2½" 9½CF, plus or minus 1/32", and lever heights equal within .005". This indicating plate is not used on other models.

►**Ford Release Lever Adjustment Note:** The release levers can be adjusted by assembling a gauge plate of the proper thickness (see table) between pressure plate and flywheel in place of regular driven member (use a spare flywheel and install clutch in usual manner on this flywheel), place a straightedge across top of clutch cover directly above release lever, measure from lower edge of straightedge to top of lever adjusting screw and set the adjusting screws so that these distances are correct and equal as follows:

Ford Clutch Lever Settings

Clutch Diameter	Gauge Thickness	Lever Height
9" Clutches	.340"	11/16"
10" Clutches	.295"	15/16"
11" Clutches	.365"	7/8"

DRIVEN MEMBER

NOTE: Clutch manufacturer recommends installation of new driven member with new clutch facings rather than relining clutch. Driven plate hub (Spring dampener) cannot be serviced in the field. Cushioning springs used under facing on pressure plate side of disc only.

To Remove Facings:—Drill out 12 iron rivets mounting cushion springs on plate (two rivets radially at center of each spring), remove spring and facing assembly, drill out rivets to remove springs from facing (replace springs as complete sets). Then drill out rivets mounting other facing on plate. Do not punch out rivets.

To Install Facings:—Install facings on flywheel side inserting brass rivets with heads in countersunk holes in facing and roll rivets on plate side (rivets

CONTINUED ON NEXT PA E

staggered in inner and outer holes alternately around facing or placed two in a row radially). Place cushion springs on second facing with clearance at center between spring and facing, insert brass rivets with head in countersunk holes in facing and roll on spring side. Rivet layout same as for first facing except that rivets staggered in opposite direction or radial rows offset from rivets for first facing. Brass rivets must not project more than 1/32" when rolled (plate and spring cutaway to provide clearance). Place cushion spring and facing assembly on plate, insert iron rivets through holes in plate and spring, roll rivets (work through holes in facing). Driven member should be balanced after new facings installed.

Installing Driven Member:—Install with hub nuts on flywheel side and cushioned facing toward transmission (plate on Cadillac V12 is solid hub type with no dampening device).

LONG 11CFS (SPECIAL)

MODEL 11CFS-CI

Cover Assy. No. Used On:

BL-4928—Packard Super 8 Models (1939-40-41)
Packard Custom Super 8 (1939-40-41)

BL-4721—Packard Comm'l '3A' Models (1939-40-41)
Packard Taxicab T1900 (1941)

►**1940 Clutch Production Change:** Borg & Beck Model 11A6 Clutch used on first cars (11CFS clutches resumed on later cars). *See "Borg & Beck 11A6" Clutches.*

►**1941 Clutch Production Change:** Long Type 11CF-CI Clutch used on late cars in production and available as optional replacement unit on cars with 11CFS-CI clutch. See Long 'CF" clutch article on preceding page for data on this type.

►**Optional Replacement Clutch Assemblies:** Manufacturer lists following optional cover assemblies which can be used for replacement (original 'CFS' clutches are riveted construction and serviced by replacement).

Optional Replacement Cover Assemblies

Original Equipment	Optional Replacement Clutch Model	Optional Replacement Assy. No.
BL-4721	11CF	BL-5305, BL-5393
BL-4928	11CF	BL-5300, BL-5391

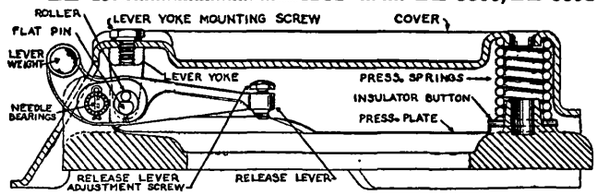

NOTE:—This clutch is a special type of riveted construction and cannot be dismantled. See description and servicing directions below.

DESCRIPTION:—Single plate, dry disc type of same design as other Long 'CF" semi-centrifugal clutches except for added spring segments as follows:

Spring Segments—Consist of three flat springs located between release levers which ar- riveted to lugs on pressure plate at inner ends and clutch cover flange at outer ends so that all clutch parts are permanently joined in one assembly (one clutch spring of each group extends through clearance hole in center of each spring segment).

SERVICING:—Cover assembly cannot be dismantled without removing spring segments (riveted to pressure plate and cover) and is serviced on an exchange basis.

WARNING—Clutch will not operate satisfactorily with spring segments removed.

DRIVEN MEMBER:—Long 'CF" Type. See Long 'CF" Clutch article for data.

LONG MODEL 12CB

MODEL 12CB-CL

Cover Assy. No. Used On:

BL-3260—Lincoln V12, All Models (1936-40)
BL-3237—Packard 8 (1936), Super 8 (1937-38)
BL-3095—Packard Super 8 (1936)
BL-3349—Packard Twelve (1936-39)
BL-3886—Pierce Arrow Eight (1936-37-38)
Pierce Arrow Twelve (1936-37-38)

MODEL 12CB-11½C

BL-4431—Cadillac V16, Series 90 (1938-40)

NOTE—Manufacturer recommends use of Borg-Warner UF-300 fixture for servicing clutch.

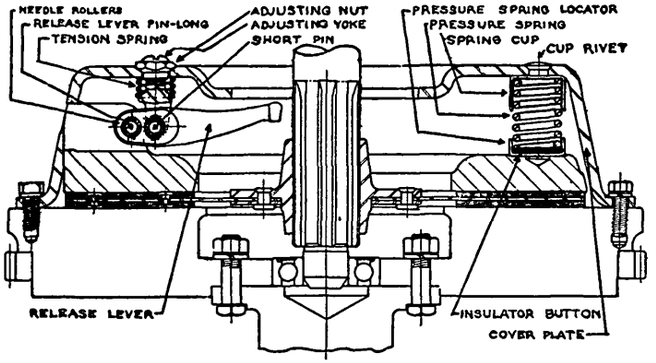

DESCRIPTION:—Single plate, dry disc type. Six release levers pivoted on pressure plate lugs with fulcrum on yoke on cover. Needle bearings used at both pivot points. Servicing directions below apply to pressure plate assembly. See Driven Member Section if pressure plate not to be dismantled and rebuilt.

SERVICING:—Mark all parts before dismantling, and reassemble in same position. Replace grooved, warped, or checked pressure plates. Replace springs when pressure plate discolored from heat (see Spring Testing below).

Dismantling:—Break release lever yoke bolt nuts by running hacksaw blade through bolt slots. Place clutch in fixture or arbor press, supporting pressure plate on special lands under release levers, compress cover slightly, take off release lever yoke bolt nuts, release pressure slowly, lift off cover plate. This will expose all parts of assembly. Remove and test clutch springs.

Clutch Springs:—Double release springs used in some models (Type C-2727 springs inside heavier outer spring). Check springs separately, replace all springs which do not test up to figures below or which appear burned or warped.

Spring Specifications

Spring Number	Pressure @ 1 9/16"	No. of Coils	Color Markings
C-2727	50-54 lbs.	14	Dark Green
C-2096	120-130 lbs.	8½	Red
C-2972	100-105 lbs.	10¼	Dark Green
C-3347	112-118 lbs.	8¾	Purple
C-3431	150-160 lbs.	8½	Pink

Release Lever Assembly:—Use lever pin sawed off to lever width as a guide, install needle bearings in inner hole of lever, install adjusting yoke, insert short lever pin (pushing guide pin out as pin inserted) install pin locks. First type pins locked by hair-pin type lockwire at each end. Later type has head on one end and is held by cotter pin at other. First type pins should be replaced by later type whenever encountered. Repeat operation above at outer lever hole and install lever in pressure plate lugs using long lever pin.

Assembling:—Place pressure plate on fixture or arbor press supporting on special lands under release levers, assemble pressure spring locators, locator buttons and springs on plate, place cover on plate, compress slowly guiding lever yoke adjusting bolts through holes in cover, see that springs seat properly, clamp cover down placing clamps at cover clamp bolt holes. Assemble release lever bolt nuts and turn nuts down flush with tops of bolts. Compress and release clutch several times (using weight on release levers) to seat all parts. Then adjust release levers.

Release Lever Adjustment (on Fixture):—Assemble lever adjusting arm and sleeve, set bottom of arm 2 13/32" above bottom of sleeve, lock with thumbscrew. Swing arm over each release lever in turn, turn adjusting nut until lever just contacts arm, lock nuts by peening metal of nut into bolt slot.

Release Lever Adjustment (without Fixture):—If gauge plate or dial indicator used to set up release levers, lever heights must be equal within .005". Lock adjustment by peening metal of nut into bolt slot.

DRIVEN MEMBER:—Manufacturer recommends installation of new driven member with new clutch facings rather than relining clutch. Driven plate hub (Spring dampener) cannot be serviced in the field. Cushioning springs are used under facing on pressure plate side of driven plate.

To Remove Facings:—Drill out iron rivets mounting cushion springs on plate, remove spring and facing assembly, drill out rivets to remove springs from facing (replace springs as complete sets). Then drill out rivets mounting other facing on plate. Do not punch out rivets.

To Install Facings:—Install facing on flywheel side inserting brass rivets with heads in countersunk holes in facing and roll rivets on plate side. Place cushion springs on second facing with clearance at center between spring and facing, insert brass rivets with heads in countersunk holes in facing and roll on spring side. Brass rivets must not project more than 1/32" when rolled (plate and spring cutaway to provide clearance). Place cushion spring and facing assembly on plate, insert iron rivets through holes in plate and spring, roll rivets (work through holes in facing). Driven member should be balanced after new facings installed.

LONG MODELS 29A, 31A

MODEL 31A

Cover Assy. No.
BL-2044—Duesenberg J & Schgd. SJ (1936-37)

NOTE:—Manufacturer recommends use of Borg-Warner UF-300 universal fixture for servicing clutch.

DESCRIPTION:—Double plate, dry disc type. Driven member consists of two discs bolted to hub on opposite sides of front driving plate so as to form an assembly. Driven discs clamped between flywheel and forward driving plate (front disc), between forward driving plate and rear driving plate or pressure plate (rear disc) when clutch engaged. Driving plates mounted loosely on studs in flywheel which serve as mounting posts for clutch cover plate. Six release levers pivoted on edge of slot in cover actuate pressure plate through bolts at outer end on which adjusting nuts located. Center plate actuated by three adjusting screws in rim of pressure plate. Twelve clutch springs used and mounted in groups of two between adjacent release levers.

SERVICING:—Mark all parts before dismantling so that clutch parts can be reassembled in same position. Driven member must be dismantled to remove driven discs for replacement or refacing. Pressure plate assembly need not be dismantled unless springs are to be checked or parts replaced (release levers will not require readjustment when clutch assembled unless pressure plate assembly disturbed).

Dismantling Driven Member:—Take off nuts on bolts in driven member hub holding driven discs, remove discs. On types with spring dampener in hub, be careful not to disturb dampener assembly. Nuts must be locked on bolts when driven member reassembled.

Dismantling Pressure Plate Assembly:—Take out three center plate adjusting screws in rim of pressure plate, break release lever bolt nut locks by running hacksaw blade through slot in nut. Place assembly in fixture or on arbor press, compress cover slightly, take off release lever bolt nuts, release pressure slowly, lift cover off. This will expose all parts of assembly.

Clutch Springs:—Check springs and replace if weak or if burned or warped. Replace springs if pressure plate warped or discolored indicating excessive heating.

Spring No.	Press. & Length	Free Length	No. Coils
C-1675	120-130# @ 1⅝"	2⅜"	8
"	130-140# @ 1 9/16"	2⅜"	8
C-1846	110-120# @ 1⅝"	2 13/32"	8¼
"	120-130# @ 1 9/16"	2 13/32"	8¼
C-1930	105-115# @ 1⅝"	2½"	9
C-1965	90-100# @ 1 9/16"	2¼"	8½
C-2141	130-140# @ 1 9/16"	2¾"	8½

Release Lever Assembly:—Place cover plate upside down on bench, install lever tension springs in cover with large end against cover (see illustration), install levers forcing springs into place under levers. Cover is then ready to install on pressure plate.

Pr ssure Plate Assembly:—Insert lever bolts through plate, place plate on fixture or arbor press, install springs on lever bolts, assemble spring locators, locator buttons and springs on plate. Install cover on pressure plate making certain that center plate adjusting screw holes (9/16") in rim of plate line up with holes in cover. Place #2 (29A), #4 (31A) height sleeves under edge of cover, compress cover about ½ until release lever bolts are just short of entering levers, install flat washers on top of lever bolt springs (washers must not be installed before cover assembled or cover will be distorted), compress cover all the way guiding lever bolts through holes in levers, install rockerwashers and nuts on lever bolts, turn nuts down until flush with tops of bolts. Compress and release clutch several times (use weight on release levers) to seat all parts. Then adjust lever heights.

Release Lever Adjustment (On Fixture):—Assemble lever adjusting arm and sleeve, setting bottom of arm exactly 1⅜" (29A), 1½" (31A) above bottom of sleeve, lock with thumbscrew. Swing arm over each release lever in turn, turn adjusting nut on release bolt until lever just contacts arm, lock nuts by peening metal of nut into slot in bolt.
NOTE—These settings correct with #2 (29A), #4 (31A) height sleeves under cover flange.

Release Lever Adjustment (Without Fixture):—If dial indicator used to set up release levers, lever heights must be equal within .005". Lock lever adjusting nuts by peening metal of nut into bolt slot.

DRIVEN MEMBER:—Manufacturer recommends installation of new driven member with new clutch facings rather than relining clutch. Driven plate hub (Spring Dampener) cannot be serviced in the field. Cushioning springs are used under facing on pressure plate side of driven plate.

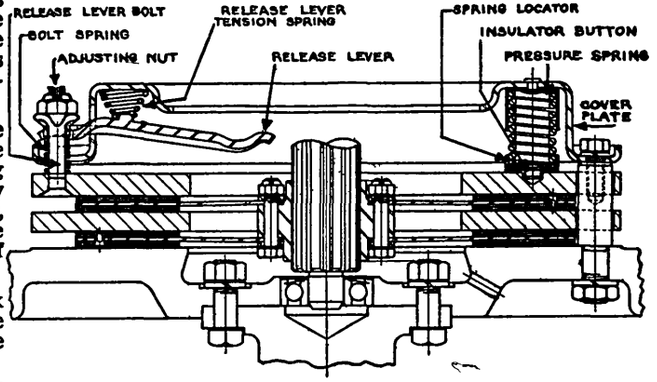

MODELS 29A, 31A

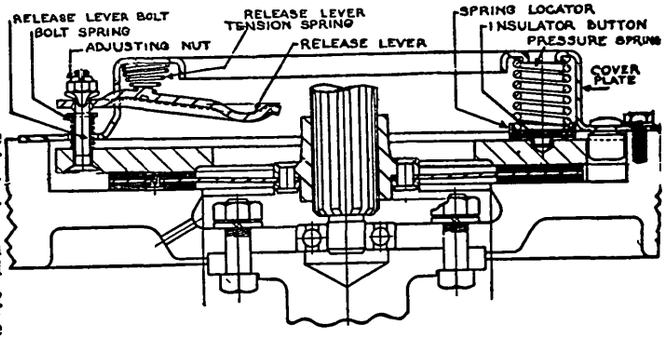

MODELS 9AB, 11AB

INSTALLING CLUTCH:—Driving plates must be free sliding fit on mounting studs in flywheel. Center (front) driving plate must be installed with separator springs (small leaf springs on rim of plate) against flywheel. These springs release forward driven member by moving driving plate back when clutch disengaged. Center plate adjusting screws must be adjusted after clutch installed in flywheel.

Center Plate Adjusting Screw Setting:—Turn each screw in or clockwise until it bottoms on center driving plate, then back each screw off 3 or 4 notches (see car page for each model). Screws are assembled with springs under head and locking plates which hold the adjustment.

LONG MODELS 9AB, 11AB

Car Model	Clutch Model	Cover Assy No.
Auburn 6, 654 (1936-37)	9AB-CS	BL-2984
Auburn 8, 852 (1936-37)	9AB-6CI	BL-2122
Auburn Schgd. 8, 852 (1936-37)	9AB-6CI	BL-2224
Studebaker Pres. 2C('36), 3C('37)	9AB-10CI	BL-2122

NOTE:—Manufacturer recommends use of Borg-Warner UF-300 fixture for servicing clutch. Fixture consists of surface plate, which duplicates driving surface of flywheel, clamp screws to clamp clutch cover against plate, arbor press to compress springs in dismantling clutch, and gauge standard for use in setting up release levers.

DESCRIPTION:—Single plate, dry disc type. Six release levers pivoted on release bolts at rim of pressure plate with edge of cover at lever hole serving as fulcrum to actuate clutch. Servicing directions below apply to pressure plate assembly.

SERVICING:—Mark all parts before disassembling and reassemble in same position. Replace grooved, warped, or checked pressure plates. Replace springs when pressure plate discolored from heat.

Dismantling:—Break release lever bolt nut locks by running hacksaw blade through bolt slots. Place clutch in fixture or arbor press, compress cover slightly, take off release lever bolt nuts, release pressure slowly, lift off the cover plate. Remove and test clutch springs.

Clutch Springs:—Pressure springs should check with table below. Replace springs if weak or burned or if clutch has been subjected to excessive heat. Twelve springs used on all models.

Spring Specifications

Spring No.	Pressure @ 1 9/16"	Free Length	No. Coils
C-1965	90-100 lbs.	2¼"	8¾
C-2045	110-120 lbs.	2¼"	8¾
C-2096	120-130 lbs.	2½"	8½
C-2141	130-140 lbs.	2¾"	8½
C-3097	110-120 lbs.	2¼"	8¾
C-3098	110-120 lbs.	2¼"	8¾
C-3410	120-130 lbs.	2 15/32"	8½

Release Lever Assembly:—Place cover plate upside down on bench, place lever tension springs on cover, install levers forcing springs into place under lever. Make certain that springs are seated within cover and that small end of spring engages lug on lever. Then install cover assembly on pressure plate.

CONTINUED ON NEXT PAGE

LONG 9AB, 11AB (C nt.)

Assembling:—Place pressure plate on fixture or arbor press, insert release lever bolts through plate, install springs on bolts, assemble spring locators, locator buttons and pressure springs on pressure plate. Install cover, compress cover about ½ until release bolts are just short of entering holes in levers, place flat washers on release lever bolt springs (washers must not be placed on springs before cover is installed or cover will bind and be distorted. Place the special #5 (9AB), #8 (11AB) height sleeves on fixture under cover edge at levers, compress cover until it rests on height sleeves, guiding release lever bolts through holes in levers, use clamps to hold cover plate down on height sleeves. Assemble the washers and nuts in release lever bolts turning nuts down until they are flush with tops of bolts. Compress and release clutch several times to seat all parts (use weight on release levers). Then adjust release lever heights.

Release Lever Adjustment (on Fixture):—Assemble lever adjusting arm and sleeve setting bottom of of adjusting arm 1 17/32" (9AB except all Fords), 1 19/32" (Ford Pass. Cars), 1⅝" (Ford Truck and Coach), 1 23/32" (All 11AB Clutches) above bottom of sleeves and lock with thumbnut. Swing arm over each lever in turn, set lever by turning release lever bolt until lever tip contacts arm. Lock adjustment by peening metal of nut into bolt slot.

Release Lev r Adjustment (without Fixture):—Use aligning shaft and adjustment sleeve (Studebaker Parts HMJ-278, 278-2). Insert shaft in splined hub of driven member (clutch installed in flywheel) place sleeve on shaft so that it contacts hub, place straightedge across top edge of sleeve, turn adjusting screws up until they contact straightedge. Lever heights must be equal within .020". Lock adjusting screws by peening metal into slots.

DRIVEN MEMBER:—Manufacturer recommends installation of new driven member with new clutch facings rather than relining clutch. Driven plate hub (Spring dampener) cannot be serviced in the field. Cushioning springs are used under facing on pressure plate side of driven plate.

To Remove Facings:—Drill out twelve iron rivets mounting cushion springs on plate (two rivets radially at center of each spring), remove spring and facing assembly, drill out rivets to remove springs from facing (replace springs as complete set). Then drill out rivets mounting other facing on plate.

To Install Facings:—Install facing on flywheel side of driven plate, inserting brass rivets with heads in countersunk holes in facing and rolling rivets on plate side. Rivets are staggered in inner and outer rows around plate. Place cushion springs on second facing with clearance between spring and plate at center. Insert brass rivets with head in countersunk holes in facing, roll rivets on spring side (rivets installed in inner and outer holes alternately around plate in opposite order to those on other facing). Brass rivets must not extend through plate or springs more than 1/32" (plate end spring cutaway to provide clearance). Place facing and cushion spring assembly on plate, insert iron rivets through holes in plate and cushion springs, roll rivets (working through holes in facings). Driven member should be balanced after new facings installed.

Installing Driven Member:—Install with hub bolt nuts on flywheel side and cushioned facing toward transmission.

ROCKFORD MODELS

Assembly Number	MODEL 8½SP
UCLA-3-1748	BANTAM, MODEL 60 (1937-38-39)
	BANTAM, MODEL 63 (1940)
	BANTAM, SUPER FOUR 65 (1940-41)
	MODEL 8II
UCLA-5-1098	WILLYS, MODEL 77 (1936)
UCLA-9-1098	WILLYS, 77 ('37), 38 ('38), 48 ('39)
UCLA-13-1098	WILLYS COMMERCIAL (1938-39)
	WILLYS PICKUP 440, PANEL 440P ('40)

NOTE:—Assembly Number—This is Part Number of Cover Assembly which consists of all clutch parts except Driven Member. See Driven Member data below.

Willys 48 (1939)—Long Model 8½CB Clutch used on some models (same type as used on Willys-Overland 39 ('39). See Long Clutch article for data on this type.

Bantam Production Change—On engines before No. 65-500, front facing is riveted to flywheel, rear facing riveted to pressure plate. On Engines after No. 65-500, front facing is free and floats between driven disc and flywheel.

DESCRIPTION:—Willys—Single plate, dry disc type, mounted in recess in flywheel with flat cover bolted to flywheel rim. Actuated by three release levers pivoted on steel ball in lever post on cover plate and linked to lever stud mounted on pressure plate by pin (lever stud extends through hole in cover plate).

Bantam—Release levers have fulcrum lug which engages cover and are linked to studs inserted through pressure plate (facing riveted on face of pressure plate and must be removed to remove these studs). Twelve short springs (¾" working height) are mounted in pockets in pressure plate and cover.

REMOVAL OF CLUTCH: *See "Clutch" on car model page.*

SERVICING:—Pressure plate assembly need not be dismantled when replacing driven member unless pressure springs are to be tested or replaced or other service work performed.

Dismantling:—Place cover assembly in arbor press with pressure plate down, compress cover slightly, remove cotter pins, lever pins, unhook lever springs, remove levers, release pressure slowly, lift off cover.

Clutch Springs:—Check springs and replace if weak or burnt. Springs should check with following figures:

Spring Specifications

Car Model	Spring Pressure & Height
Bantam	23-27 lbs. at ¾"
Willys (Pass. Cars)	140-150 lbs. at 1 13/16"
Willys (Comm'l.)	160-170 lbs. at 1 13/16"

Assembling (Willys):—Place pressure plate on press or fixture, install pressure springs on plate and place spring cups on springs. Install cover plate, guiding spring cups through holes in cover and making certain that stud holes are lined up. Compress cover slightly. See that steel balls on which levers pivot are in place in recess in end of each lever post. Hook lever springs on levers, then hook opposite end of springs under cover rim (springs must be engaged before levers installed, if springs installed later they may be stretched beyond limits and distorted). Force lever in position in slot in lever stud, insert lever pin and cotter pin. Check lever heights.

Bantam. Place pressure plate and release lever stud assembly on arbor press or clutch fixture (studs must be installed before facing riveted on pressure plate). Install clutch springs (12 used), install cover plate with lever studs extending through plate. With release lever springs in place, install levers and insert lever pins.

Release Lever Adjustment (Willys):—Levers adjusted by turning knurled adjusting screw which contacts steel post on lever post. Adjusting screws locked in position by end of lever spring which engages the serrations in the screw head. Levers must be equal so that all levers contact release bearing simultaneously and should be set so that lever tips are exactly 1 3/16" above top surface of clutch cover. Clearance between lever tips and release bearing should be 1/16" with clutch engaged.

Bantam. Levers not adjustable but lever tips should be exactly 1" above outer surface of facing on pressure plate (check with facing installed). Clearance between lever tips and face of release bearing should be 1/16" with clutch engaged.

DRIVEN MEMBER:—Bantam Models. Driven plate on this model consists of an unlined steel disc. Facings are riveted separately to face of flywheel and pressure plate (see Production Change Note above for floating facing used on Eng. No. 65-500 up).

Willys Models. Driven member is Borg and Beck type. See Borg & Beck Clutch article for data.

ROCKFORD (CROSLEY)

Assy. No.	MODEL 6TS
R-4608	Crosley, All Models (1939 to 1948)

DESCRIPTION:—Single plate dry disc type. Clutch assembly consists of three fulcrum brackets (mounting brackets) which are bolted individually on the flywheel. Release levers are pivoted on pins in fulcrum brackets and engage lugs on pressure plate with pressure spring mounted on pressure plate under each lever (3 springs used).

SERVICING:—Disassembly. Take out cotter pin and remove pin linking release lever to fulcrum bracket, remove release lever and spring. Repeat this operation at each of the three fulcrum brackets.

Assembly—Install fulcrum bracket on pressure plate lug, install spring, place release lever in position with hole in lever and fulcrum bracket lined up, install pin and secure with cotter pin.

Clutch Springs: Three used. Replace if weak or burnt. **Spring Pressure**—52½ lbs. at 13/16" height.

Release Lever Setting: No adjustment required.

DRIVEN MEMBER:—Consists of a steel disc with slotted rim on which linings are riveted in four separate segments. Each lining segment retained by three rivets with rivet heads reversed on alternate segments (rivet heads toward flywheel on adjacent segments).

Servicing—Facings not furnished separately and driven member should be serviced by replacement.

BUICK (OWN) SINGLE PLATE

SPECIAL, SERIES 40 (1936-37-38)
CENTURY, SERIES 60 (1936 to 1942)
ROADMASTER, SERIES 80 (1936 to 1939)
①ROADMASTER, SERIES 70 (1940 to 1948)
LIMITED, 80 (1940), 90 (1936 to 1942)

①—Clutch used only on cars with Synchro-mesh Transmission (no clutch with Dynaflow Drive).

►**Excessive Pedal Pressure and Noisy Clutch Disengagement Correction:** If the clutch pedal pressure required to disengage clutch exceeds 28 lbs., check for dry release linkage and lubricate clutch pressure plate driving lugs as follows: Remove clutch housing lower cover, turn clutch so that driving lug is at bottom, brush small amount of 'Lubriplate' on each lug as pedal is being operated (lubricate all 3 lugs in same manner). If clutch still noisy, check clutch release bearing support for correct assembly, brush Lubriplate on bearing surface between release bearing retainer and support. Release lever pins that are dry and noisy can be corrected by spraying dry powdered graphite into pressure plate assembly (graphite will work into bearing when clutch is operated).

►**Clutch Rattle Correction:** Rattles when the engine accelerated with clutch disengaged (similar to noise caused by loose connecting rods or pistons) may be caused by excessive clearance between pressure plate driving lugs and cover. To correct this condition, remove lower cover, turn clutch so that driving lug is down, **hold clutch pedal in disengaged position,** prick punch trailing edge of lug in 3 places so as to swell lug and take up clearance. Clearance between lug and cover should be .005-.008". Correct each lug in same manner.

►**Driven Member Note (1941 On):** Borg & Beck 'Borglite' and Long 'CF" type driven members used on these cars. Both types have woven facings which are grooved for quicker release. Driven members are balanced by installation of extra rivets or clips on driven member hub and these balance weights should not be removed. Driven members should be installed with large oil baffle toward transmission. Driven members are serviced as an assembly (parts not furnished separately).

DESCRIPTION:—Single plate, dry disc type. Clutch mounted in slight recess in face of flywheel with pressure plate lugs in grooves cut in flywheel rim so that drive transmitted directly from flywheel to plate. Clutch is actuated by three release levers pivoted on adjusting bolts in cover plate and linked to pressure plate by pins in lugs on plate. Servicing directions below apply to pressure plate assembly and need not be followed unless pressure plate, springs, or release levers to be examined or replaced.

1938 Models. Clutch spring pressures are heavier (approximately 5 lbs. per spring) but pedal pressure less than on previous models due to use of new over-center return spring.

1939 Models. Pressure plate assembly may be installed on earlier car models provided release lever heights correctly set (adjusting nuts not locked on new assemblies, levers should be correctly set and nuts then locked). Lever height increased on 1939 models due to use of new Borglite driven member.

REMOVAL OF CLUTCH: *See "Clutch" on car model page.*

SERVICING:—Mark all parts before dismantling and replace in same position to maintain balance.

Dismantling:—Place pressure plate assembly on arbor press, place block on cover (clearing release lever adjusting nuts) to take pressure, compress cover slightly, remove adjusting nuts, release pressure slowly. Lift off cover. This will expose all parts for inspection. Replace worn parts, check clutch springs.

Clutch Springs:—Check pressure springs and replace if weak or burned. Nine springs (3 groups of 3) used on Series 40 clutches, twelve springs (4 groups of 3) used on all other models.

Spring Specifications

Model	Pressure	Length
40 ('36-37)	145-150 lbs.	1¾"
40 ('38)	152 lbs.	1 11/16"
60,80,90 ('36-37-38)	130-135 lbs.	1¾"
60,70,80,90 ('39-40)	135-145 lbs.	1¾"
60, 70, 90 ('41-42)	144 lbs.	1¾"
70 ('46 On)	144 lbs.	1¾"

Assembling:—Place pressure plate on arbor press. Install pressure springs on plate. Place cover in position on springs, install guide pins on release lever adjusting bolts. Compress cover slightly guiding adjusting bolts through holes in cover, install adjusting nuts on bolts, remove assembly from arbor press.

Release Lever Height Adjustment:—Assemble gauge plate (see table below for type for each model) in flywheel in place of driven member, centering gauge in clutch with lugs on plate under release levers. Place short straightedge on top of gauge hub, or use dial indicator & service tool J-1013 mounting indicator on clutch so as to contact release lever tips. Turn adjusting nut until release lever just contacts straightedge or dial indicator and all levers are equal within .005", lock adjusting nut by peening metal into slots or crimping nut flange against flat on adjusting screw (1940-42 models). Check release lever runout after clutch installed on flywheel (must not exceed .005").

Gauge Plate

Model	Gauge Plate No.
40 (1936-38)	J-285 (See Note)
60, 80, 90 (1936-38)	J-685
60, 70, 80, 90 (1939-42)	J-1036
70 ('46 On)	J-1036

Model 40 Note—On 1938 model, use Adapter No. J-285-4 assembled on top of gauge plate. No adapter is used on 1936-37 models.

DRIVEN MEMBER:—Spring dampener type hub used on all models. Drill out old rivets to avoid distorting clutch disc when removing facings. Install new facings as follows:

1936—Borg and Beck driven member (with separate cushioning springs) used on Model 40, Long type driven member on Models 60, 80, 90. See article on Borg and Beck or Long Clutches.

1937 Models:—Long type driven member used on all models (see list below). Type used on Model 40 may be used for replacement on earlier models but old type driven member must not be used on 1937 cars (greater torque on new models). Type used on Models 60, 80, 90 same as previous type except that plate weight has been reduced by stamping holes in the plate. New type driven member is interchangeable with 1936 Models 60, 80, 90.

Model	Long Driven Member
40	10CF-CI
60, 80, 90	11CF-CI

See article on Long Model 'CF" clutches for complete data on these driven members.

1938 Models. Long Model 10-CF-CS driven member used on Model 40 (see Long 10-CF article for data). On Models 60, 80, 90 driven member is new Borg & Beck type balanced by weights installed on disc. Parts not furnished separately for this driven member.

1939-40 Models—Driven Member is Borglite type. See Borg & Beck Clutch article for complete data on this type driven member. NOTE—This new type driven member may be installed on 1938 cars if the release levers are set for the new 2" height (J-1036 gauge).

1941-48 Models. Both Borglite type (as in 1940) and new Long type Driven Members are used. Both types have woven facings which are grooved for quicker release. Driven members are balanced by use of extra rivets or clips on driven member hubs and these balance weights should not be removed. Driven members are serviced as an assembly (parts not furnished separately). CAUTION—Install driven member with large oil baffle toward transmission.

BUICK (OWN) CROWN SPRING

SPECIAL, SERIES 40 (1939 to 1948)
SUPER, SERIES 50 (1940 to 1948)

►**Excessive Pedal Pressure and Noisy Clutch Disengagement Correction:** If the clutch pedal pressure required to disengage clutch exceeds 35 lbs., check for dry release linkage and apply small amount of Lubriplate to clutch spring disc at points where it contacts cover. Check clutch release bearing support for correct assembly, brush Lubriplate on bearing surface between bearing retainer and support.

►**Clutch Dragging Correction:** If drag not caused by pedal free travel adjustment, remove clutch housing lower cover, hold pedal in disengaged position and check for clearance between crown spring disc and edge of cover with feeler gauge. Spring must contact cover at all points (clutch will not disengage properly unless firm bearing secured at all points). To correct this condition, disassemble clutch, place cover assembly on surface plate, check height of six ears to which retainer springs are hooked and bend ears so that distance from surface plate to upper edge of each ear is exactly 1⅝". Replace retainer springs if they are weak or distorted. CAUTION—Replace springs as complete set only (necessary to assure even spring tension).

►**Driven Member Note (1940 On):** Borg & Beck Borglite' and Long 'CF" type driven members used on 1940-47 cars. Both types have woven facings which are grooved for quicker release. Driven members are balanced by installation of extra rivets or clips on driven member hub and these balance weights should not be removed. Driven members should be installed with large oil baffle toward transmission. Driven members are serviced as an assembly (parts not furnished separately).

DESCRIPTION: Single plate, dry disc, of new design with corrugated spring disc which replaces both pressure springs and release levers used on former clutch. Corrugations on disc engage ears on inner rim of clutch cover and lugs on pressure plate. Disc pivots on cover plate ears when it is flexed to release clutch, relieving pressure on pressure plate which is then pulled away from driven

CONTINUED ON NEXT PAGE

BUICK CROWN SPRING (C nt.)

member by hairpin type retainer springs which pass through holes in pressure plate lugs and are hooked over cover ears.

REMOVAL OF CLUTCH: *See "Clutch" on car model page.*

SERVICING:—Mark pressure plate, spring disc and cover before disassembling clutch to insure reassembling in same positions (do not prick-punch spring disc, use paint or chalk for marking).

Disassembly: Use special tools No. J-1039-1 and J-1039-2 to unhook retainer springs from clutch cover ears working springs slightly toward center to permit tool engagement (do not hammer on tool which will distort cover), lift clutch cover off. Unhook retainer springs from spring disc by working one leg of each spring in through pressure plate lug toward center of clutch and other leg out, lift off spring disc, remove retainer springs from pressure plate lugs.

Reassembly: Install the retainer springs in pressure plate lugs with curved legs of springs up toward spring disc (push one leg of each spring in toward center of clutch and other leg out, lift off spring that it is just entered in hole in lug). Apply 'Lubriplate' lightly on spring disc at points where it contacts pressure plate and retainer springs (excess will ruin clutch facings), place spring disc on pressure plate, maneuver retainer spring loops over disc by turning springs so that they are properly aligned. Install cover, use special tools to engage retainer spring loops on cover ears. Make certain that marks on pressure plate, spring disc, and cover are lined up. This completes clutch assembly (no release lever adjustment, etc. required).

DRIVEN MEMBER:—New Borg & Beck 'Borglite' type with spiral grooved facings. Parts not furnished separately. Driven member assembly lighter than 1938 type and requires .005" additional release clearance. New type driven disc has nine separate cushion spring segments (to which facings are riveted) mounted individually on disc rim by two rivets each (center hole rivet found on some segments is balance weight).

Driven Member Installation on 1938 Cars. May be installed on 1938 Model 40 (without self-shifting transmission) provided that release levers are set higher than usual to secure additional release clearance (use J-285 gauge without adapter). **Do not install this type Driven Member on 1938 Model 40 cars with Self-shifting Transmission.**

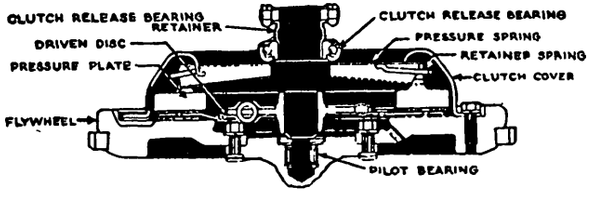

1940 & Later Models—Both Borglite and Long Driven Members used. Driven members serviced as an assembly and parts not furnished separately. When installing driven member, see that large washer or oil baffle is toward transmission.

1938-48 CHEVROLET (OWN)

Chevrolet No.	Used On:
①838955	Pass. Cars & Comm'l (½ Ton) 1938-48
838956	All Trucks (Optl. on ½ Ton) 1938-48

①—838956 Optl. (Heavy Duty) on these models.

CLUTCH TYPES:—Two sizes used—9" on Passenger Cars and Half Ton, 11" on all other trucks. Both types are same design and serviced in same manner but must not be interchanged. Clutch assemblies and parts (Cover and Pressure Plate) can be identified as follows:

Clutch Part Numbers		
Clutch Assy.	Clutch Cover	Pressure Plate
838955	838953①	838948③
838956	838954②	838949③

①—O.D. 11 7/16". ②—O.D. 13 1/16".
③—This part number cast in plate.

►NOTES, CAUTIONS, & CHANGES

CLUTCH SERVICE CAUTION (1938 ON): On these clutches, Clutch Cover, Diaphragm Spring, and Pivot Rings are a permanent assembly (rivets used instead of bolts) and cannot be disassembled.

Driven Member (Pass. Car & ½ Ton) Non-interchangeability: No. 838608 ('41 & Later) driven disc has heavier (.024") clock spring facing cushions which have a maximum drag release of .070" (.058" on 1940 model) for deeper cushioning action and improved clutch engagement. **This new type driven member must not be installed on previous models. If used on previous models, driven member would not release properly and resulting drag would cause gear clashing.**

►**Clutch Rattles at Idling Speed (Pedal Depressed & Clutch Disengaged) Correction:** May be due to insufficient tension of retracting springs and can be corrected without removing clutch from engine as follows: Remove clutch housing underpan, turn flywheel until one retracting spring is at bottom, remove bolt (work through hole in side of cover), withdraw spring, install new spring in same manner. Replace all three retracting springs in this way. If new springs do not correct rattles, check clearance between pressure plate lugs and edge of clutch cover slot. Clearance should be .002-.008" and clutch cover assembly or pressure plate should be replaced if clearance exceeds .010".

►**Clutch Pedal Pull-back Spring Replacement (1941 Trucks exc. C-O-E) to correct breakage:** Heavier type Pull-back Spring, No. 3664881, should be used for replacement of regular spring, No. 368244, where spring breakage is experienced. When installing this spring use special extension bracket as follows: **½ & ¾ Ton Models**—Use Extension No. 598070 and attach extension to steering gear mast jacket clamp bolt at steering gear housing.

¾ Ton (Long W. B.) & 1½ Ton Models—Use Extension No. 3664875 and attach extension to upper rear steering gear housing side cover attaching bolt.

►**Clutch Balance Caution:** When installing pressure plate make certain that '0' marks on one lug of plate and on clutch cover flange are lined up. When installing clutch in engine, line up 'X' marks on clutch cover and flywheel. This is necessary to maintain clutch balance.

DESCRIPTION:—Single plate, dry disc type of entirely new design with diaphragm spring which serves as clutch spring and release levers. Diaphragm spring is shaped like dished washer with inner rim slotted to form 18 release fingers and is pivoted on inner and outer pivot rings mounted on 9 bolts in clutch cover. When clutch engaged, diaphragm spring pivots on outer pivot ring and exerts pressure on pressure plate rim. When diaphragm spring fingers are depressed to disengage clutch, spring pivots on inner pivot ring and this dishing action causes outer rim to move out, relieving pressure on plate and pulling plate away from driven member (pressure plate linked to diaphragm spring by three small retracting springs bolted to pressure plate rim). Pressure plate drive taken through three lugs on rim which engage slots in cover. Throw-out bearing is a sealed ball bearing (permanently lubricated) and throw-out mechanism is positively actuated by release fork so that no pull-back spring required.

REMOVAL OF CLUTCH: *See "Clutch" on car model page.*

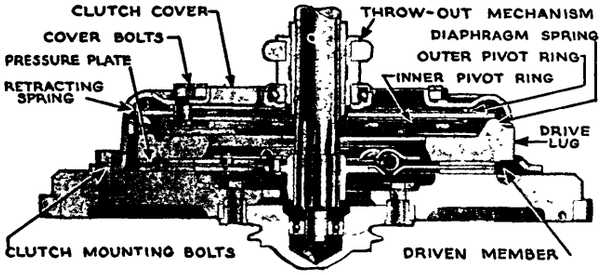

SERVICING:—Manufacturer recommends use of Clutch Pilot Tool K-411, to support clutch during disassembly, and Clutch Assembling Fixture J-1113, to compress diaphragm spring when disassembling and assembling pressure plate and cover assembly.

Retracting Spring Replacement. Does not require dismantling clutch. Remove clutch housing underpan, crank engine over until retracting spring bolt appears in lower opening, remove bolt, withdraw retracting spring, install new spring in same manner. Replace other retracting springs (3 used) in same manner.

Clutch Fork Removal. Can be removed without disturbing transmission. Remove flywheel underpan, disconnect clutch fork from pedal, use ⅞" and ¾" wrench to remove fork mounting, withdraw fork, remove ball retainer spring, ball retainer, ball. Pack ball seat in fork with high-melting point grease. NOTE—Install ball retainer spring with upturned ends down in ball retainer opening (will not seat in machined groove in fork if incorrectly installed).

Clutch Fork Installation—If retainer in groove in fork is worn, install new retainer being certain that high side of retainer is up (away from bottom of ball opening), and open end of retainer on the horizontal.

Clutch Fork & Bearing Installation. Pack ball seat in fork with small amount of high melting point grease. Install new retainer in clutch fork groove if old retainer worn, making certain that retainer installed with high side UP (away from bottom of bearing) and open end of retainer horizontal. Pack recess within throw-out bearing collar and coat throw-out fork groove lightly with high melting point grease before assembling to fork.

CONTINUED ON NEXT PAGE

1938-48 CHEVROLET (C nt.)

Disassembly: Take out screws and remove the three retracting springs through slots in cover (screws accessible through holes in side of cover), make certain that one pressure plate lug and cover marked to insure correct reassembly, remove pressure plate. On 1939-47 types this completes the disassembly operations (cover assembly riveted and cannot be dismantled). On 1938 type, disassemble cover assembly as follows:

Place assembly on Clutch Fixture J-1113 (make certain that pivot bolt heads seat in recesses in fixture), compress diaphragm spring until all pressure relieved from bolts. Remove nuts and lockwashers on nine cover bolts, tap cover lightly to free it and lift off, remove outer pivot ring and special washers on bolts. release diaphragm spring tension slowly, lift off diaphragm spring, second set of special washers and inner pivot ring.

Servicing: Wash all parts except the throw-out bearing in gasoline (see Caution below), examine pressure plate and flywheel face for scored or rough surface, check pressure plate drive lugs for burrs, see that lugs move freely in cover slots and that clearance in slots is .002-.008" (replace pressure plate or cover if clearance exceeds .010"). Check diaphragm spring and pivot rings for distortion or cracks. See that throw-out bearing is not rough and moves freely on clutch shaft sleeves, check transmission pilot hole in housing for run-out (must be less than .008"). Check clutch fork ball seat and ball fit, check driven disc and clutch shaft splines (replace disc if splines worn).

CAUTION—Throw-out bearing permanently lubricated and must not be soaked in gasoline which may dissolve lubricant on balls.

Reassembly: Reverse disassembly directions. Coat the special washers with graphite grease before installing. Make certain that lugs on pivot rings engage bolts (three pairs of lugs on each ring which must be placed at three of the bolts to prevent ring rotating). Install diaphragm spring with convex side up and compress spring so that it is flat while tightening bolt nuts on cover. Line up marks on pressure plate lug and cover when installing plate in cover assembly. See that cover plate nuts and retracting spring screws are tightened securely.

DRIVEN MEMBER: Two types used. 9" Diameter on Passenger Cars & ½ Ton, 10¾" on Trucks (this 10¾" type Optl. on Pass. Cars & ½ Ton). Driven members are as follows:

Car Model	Driven Member Part No.
Pass. Car (1938-40) ½ Ton (1938-41)	3847450
Pass. Car (1941 On) ½ Ton (1942 On)	①839608
Trucks exc. ½ Ton (1938 On)	609382

①—609382 Optl. (Heavy Duty) on these models.

CAUTION—Passenger car type driven members listed above must not be interchanged (No. 839608 will not release properly if installed on 1940 and previous cars). See Important Service Notes above for data on this new type driven member.

Facing Installation—Drill old rivets out from head side. Use riveting fixture to install new facings (fixture will flatten rivets exact correct amount of 7/32"), and reverse rivets in pairs (two each way). Facings are grooved type.

INSTALLATION:—Remove and repack clutch bearing before installing clutch (see instructions below). Line up 'x' marks on flywheel and clutch cover, install cover bolts and tighten all bolts evenly, one turn at a time, to prevent distorting cover. Pack recess within clutch throw-out collar with high melting point lubricant and coat throw-out fork groove with lubricant before installing throw-out assembly. Make certain that throw-out fork ball is snug fit in fork without endplay (install new ball if scored or worn), pack seat with high melting point grease, make certain that upturned ends of ball seat retainer spring point down in ball retainer opening (retainer will not seat in groove in fork if spring installed incorrectly), install fork and tighten ball retainer securely.

Clutch Pilot Bearing—Special oil seal type. Use puller to remove bearing, clean and repack bearing with high temperature grease, use special driver (with centering collar which engages pilot hole) to install bearing to insure alignment with transmission mounting pilot hole.

TROUBLE SHOOTING:—To correct clutch rattles at idling speed with clutch released, replace retracting springs, check clearance between drive lugs on pressure plate and slots in cover (if clearance exceeds .010", replace pressure plate or cover), check throw-out fork for loose fulcrum ball. See Retracting Spring and Clutch Fork data under Servicing above.

Clutch Rattles at idling speed (released)—Can be corrected by renewing retracting spring without removing clutch from engine by removing clutch housing underpan and turning flywheel until retracting springs are at the bottom (3 springs used). Remove spring bolt, withdraw spring, install new spring in same manner. Renew all three springs in same way. If new springs do not correct rattles, check clearance between pressure plate lugs and edge of clutch cover slot. Clearance should be .002-.008" and clutch cover assembly or pressure plate should be replaced if clearance exceeds .010".

CHEVROLET (OWN) 1936-37

STANDARD MODEL FC (1936)
MASTER MODEL FA, FD (1936), GB (1937)
MASTER DELUXE MODEL GA (1937)
COMMERCIAL, MODELS FB (1936), GC (1937)
TRUCK, MODELS R (1936), S (1937)

DESCRIPTION:—Single plate, dry disc type. Clutch assembled in flywheel recess with flat cover bolted to flywheel rim by 3 bolts at each release lever. Three release levers pivoted on cover plate actuate pressure plate by engaging brackets bolted on pressure plate bosses extending through holes in cover.

REMOVAL OF CLUTCH: *See "Clutch" on car model page.*

SERVICING:—Mark all parts before disassembling clutch, replace in same position to maintain balance. Servicing directions below apply to pressure plate assembly when dismantled for inspection or overhaul.

Dismantling:—Take out six capscrews mounting lever plates on pressure plate bosses, turning all screws out evenly to relieve pressure spring tension. Lift off cover and lever assembly. This will expose all parts for inspection. To remove levers, take off lever springs, pull out lever pivot pins, lift levers out.

Clutch Springs:—Replace weak or burned springs. Special colored springs assembled in center of each spring group on Standard models. All center springs must be same color on this model.

Spring Specifications

Model	Pressure	Length
All Models	90-100 lbs.	1 13/16"

Release Lever Assembly:—Install levers in place in cover plate brackets, insert lever pivot pins. Install hairpin shaped lever spring with loop on lever, engage spring eyes in lever pin grooves (push pin through and loop spring under pin, repeat at opposite end).

Assembling:—Place pressure plate on arbor press, assemble nine pressure springs on plate (see Springs above), place spring cups on springs, place cover plate in position guiding spring cups through holes in plate and pressure plate bosses through holes in lever brackets. Compress cover slightly, place lever plates over levers and start plate screws in pressure plate bosses. Turn all screws up evenly.

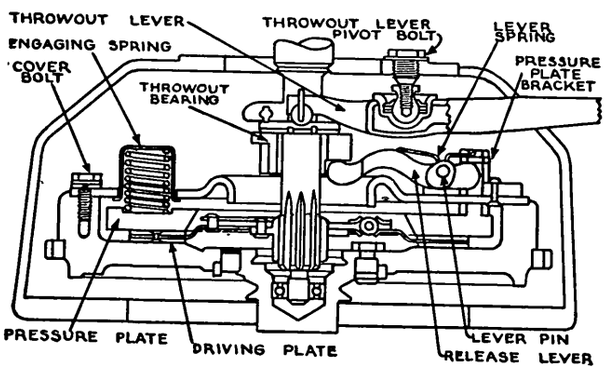

Release Lever Adjustment:—After clutch assembled to flywheel with driven member in place (use pilot shaft to center plate), mount dial indicator on clutch housing and check lever and bearing plate runout. If runout exceeds .020", install shims under lever plate of high lever, using shim of equal thickness at mounting screw at each end of plate.

DRIVEN MEMBER:—Type used on Passenger car models is 9", type used on 1½ Ton Trucks is larger (10") and must not be interchanged with passenger car types.

To Remove Facings:—Drill out old rivets from head side. Do not punch out rivets or plate will be distorted.

To Install Facings:—Rivets must be reversed in pairs (install two each way). Use special rivets furnished by manufacturer.

HUDSON (OWN)

Hudson 6 & 8, All Models (1936 to 1948)
Terraplane, All Models (1936 to 1938)

NOTE: Overdrive Cars 1940-47. Cars with Overdrive are equipped with new heavier 10" clutch (cover is 10" type and is of new type welded construction has added strengthening ribs and thicker mounting bolt bosses). Driven member used with this clutch (spring dampener on this type has six heavy dampener springs instead of the eight smaller springs used on regular driven member.

1942 Pressure Plate Driving Lugs (10" Clutch). Consist of three rectangular blocks bolted on inner face of clutch cover and engaging slots in pressure plate (replace driving pins in flywheel used on other models and previous 10" clutch design).

DESCRIPTION:—Single plate, cork insert type, operating in oil. Mounted on flywheel face by 16 capscrews in cover flange. Gasket used under cover flange to secure oil-tight joint and oil seal mounted on throw-out collar to retain clutch lubricant. Clutch actuated by 3 clutch fingers pivoted on retainers bolted to cover and linked to pressure plate by pins.

REMOVAL OF CLUTCH: *See "Clutch" on car model page.*

SERVICING:—Clutch assembly need not be dismantled when replacing driven member unless springs are to be tested or replaced, pressure plate replaced, or other service work required. *Check cover to determine whether disassembly required as follows:*

Checking Cover Assembly—Mount cover on flywheel or base plate with standard driven member (.200-.213" thick) and one gasket (.028-.032" uncompressed thickness) under flange (CAUTION—cover must be held by pressure on flange—not on cover flat or hub). Measure distance from contact surface of lowest clutch finger to top edge of cover hub. This distance should be 1¼-1½". If less than 1¼", clutch will perform satisfactorily if all fingers clear hub by at least ⅛". If distance greater than 1½", cover is distorted or fingers and retainers are worn. Dismantle for inspection as follows:

Dismantling:—Check punch marks near outer edge of pressure plate in line with mark on cover flange or make new marks to insure reassembly in same position. Place clutch assembly on special clutch fixture (#J-298-H) or in arbor press supporting pressure plate so that cover is free. Compress cover slightly, take off 3 nuts on clutch finger retainer bolts on cover, release pressure slowly, lift cover off.

Clutch Cover: Inner surface must be flat and free from scores at finger retainer holes. Front face must be flat within .005" when checked on a surface plate. Measure distance from face of cover flange (mounting face) to retainer washer seat on inner face of cover. This distance must be 2.350" minimum, 2.370" maximum, and equal within .008", measured ⅛" from edge of finger retainer holes. Straighten or replace cover if outside these limits.

▷*CAUTION—If cover hub bore considerably worn or scored, check engine rear support plate, flywheel, and bell housing for misalignment or shaft eccentricity.*

Clutch Fingers & Retainers: Check fingers at contact points and pin bore for wear or uneven bearing surfaces. Check retainers for wear at finger contact point in slot. Replace retainers if bearing area grooved deeper than .005". NOTE—Retainers can be continued in service by rotating them 180° when installing so that unworn portion contacts finger lobe.

Pressure Plate:—Examine plate, replace if scored. Check for warping (particularly if plate 'blued' due to overheating). Replace if warped more than .010".

Clutch Springs:—Special combinations of large (outer) and small (inner) springs used on different models (inner springs not used on all models). Check springs and replace if pressure less than service limit in table below. Springs should be replaced if pressure plate 'blued' indicating overheating in service.

SPRING SPECIFICATIONS

1936-37 Springs

	Pressure (new)	Service Limit	Length
Large Springs	120 lbs.	110 lbs.	1⅝"
Small (inner)	75 lbs.	60 lbs.	1⅝"

1938-42 Springs

Spring Part No.	Pressure & Length
45148	155 lbs. at 1¾"①
45149	135 lbs. at 1⅝"①
155224	80 lbs. at 1⅝"①

①—Plus or minus 5 lbs.

1946-48 Springs

Spring Part No.	Pressure @ 1⅝"
155224	135-145 lbs.
166251	180-190 lbs.

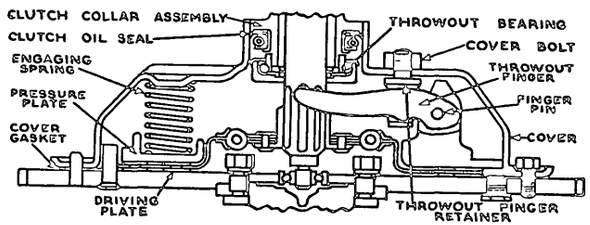

CLUTCH SPRING ASSEMBLIES

1938 Models

Car Model	Inner Spr. No.	Inner Spr. Type	Main Spr. No.	Main Spr. Type
80 Utility Coach & Coupe	6	155224	9	45148
80 Cab Pick-up, Panel Delivery, Station Wagon			9	45149
81	6	155224	9	45148
82, 88			9	45149
83, 84, 85, 87	3	155224	9	45149
89 (112)	3	155224	9	45148

1939 Models

Car Model	Inner Spring No. Used	Inner Spring Part No.	Outer Spring No. Used	Outer Spring Part No.
90 '112'	3	155224	9	45148
91, 92	6	155224	9	45148
93			12	45149
95, 97	3	155224	12	45149
98 (except Sedan)			12	45149
98 Sedan	3	155224	9	45148

1940 Models

40	3	155224	9	45148
40 (41 Eng.), 41	6	155224	9	45148
48, 40 & 41 (O.D.)			12	45148
43			12	45149
44, 45, 47	3	155224	12	45149
43, 44, 45, 47 (O.D.)	3	155224	12	45149

1941 Models

Car Model	Outer—Springs—No.	Outer—Springs—Part No.	Inner—Springs—No.	Inner—Springs—Part No.
10 Std.	9	45148	3	155224
10L, 11 Std.	9	45158	6	155224
12 Std.	12	45149		
18 Std.	12	45148		
10, 11, 12, 18 (Overdrive)	12	45149	3	155224
14, 15, 17 Std. & Overdrive	12	45149	3	155224

1942 Models

Car Model	Outer—Springs—No.	Outer—Springs—Part No.	Inner—Springs—No.	Inner—Springs—Part No.
20 Std.	9	45148	3	155224
20L, 21 Std.	9	45148	6	155224
22 Std.	12	45149	3	155224
28 Std.	12	45148	3	155224
20, 21, 22, 28 (Overdrive)	12	45149	3	155224
24, 25, 27 (Std. & Overdrive)	12	45149	6	155224

1946-47 Models

Car Model	Inner—Springs—No.	Inner—Springs—Part No.	Outer—Springs—No.	Outer—Springs—Part No.
51, 52, 171, 172 Std.①	9	166251	6	155224
51, 52, 171, 172 Optl.③	12	166251		None
58, 178 Std.②	12	166251		None
53, 54, 173, 174②	12	166251	3	155224

①—9" Clutch. ②—10" Clutch.
③—10" Clutch used on cars with Vacumotive Drive, Overdrive, or Drive-Master.

1948 Models

All Models	12	166251	3	155224

Assembling:—Check clutch throw-out fingers, see that they are straight and do not show wear at tip or retainer lug. Replace retainer washers if necessary. Place pressure plate on fixture with face down. Assemble springs, clutch fingers, retainers and retainer washers on plate. Place cover on top of pressure plate assembly (lining up marks on cover and plate), compress cover slowly, guiding retainer bolts through holes in cover, install lockwashers and nuts on each finger retainer, tighten retainer nuts evenly to 40-45 ft. lbs. after cover has been fully compressed. Remove assembly from fixture and check alignment of clutch fingers in retainers, turn retainers with heavy duty end wrench until fingers centered sideways in retainer slots. See that shoulder on retainers fully seated on wall of cover. Check clutch finger heights with clutch installed on flywheel (below).

▷*CAUTION—Retainer washers (copper or steel washer between retainer and cover) act as oil seals and must be flat and free from scores.*

INSTALLATION & ADJUSTMENT:—Shellac new gasket on face of cover flange, see that flywheel face is smooth and clean, use a clutch aligning arbor inserted through the clutch cover and driven plate to align driven plate, mount clutch assembly on flywheel (engaging two locating dowel pins on flywheel), install 16 cover screws, tighten screws evenly to 20-25 ft. lbs. (tighten screws diametrically opposite together to avoid distorting cover). Then align clutch fingers.

▷*CAUTION—Use of more than one gasket (1/32" thick) between clutch cover and flywheel will reduce effective pressure of clutch springs equally.*

Clutch Finger Alignment: With clutch installed on flywheel, check distance from contact end of lowest clutch finger to top edge of cover hub. This distance should be within 1¼" to 1½". If less than 1¼", clutch will operate satisfactorily providing fingers clear cover hub by at least ⅛". If distance greater than 1½", check cover for distortion (see Clutch Cover). Adjust all clutch fingers as follows:

Clutch Finger Adjustment—Use special finger adjusting gauge (#J-774) resting gauge on clutch cover so that pin is directly above clutch finger tip. Turn thumbscrew down until pin contacts finger. Repeat at other clutch fingers to secure final gauge setting equal to lowest finger. If any finger more

CONTINUED ON NEXT PAGE

HUDSON (C ntinued)

than .030" higher than others, adjust by installing thin (.005") washer between cover and retainer for this finger. If fingers more than .010" but less than .029" higher than others, turn gauge to higher finger, strike end of retainer bolt with soft hammer until gauge bar rests squarely on cover hub. With final setting, gauge bar should rest squarely on hub over all fingers and clearance between pin and end of thumbscrew must be less than .010" (all fingers equal within this amount—check with feeler gauge).

Throw-out Bearing & Oil Seal:—Insert 1/3 pint Hudsonite through clutch hub before installing throw-out collar assembly. Oil seal is pressed on collar behind throw-out bearing. When installing new oil seal, press firmly near inner diameter (pressure at point near rim may distort outer stamping and allow inner stamping and oil seal leather to revolve with shaft, this will cause noise similar to noisy throw-out bearing). Use arbor press to install throw-out bearing (do not drive on). See that bearing revolves smoothly and that oil seal inner stamping is tight in outer stamping before installing collar in clutch cover.

CAUTION—Install new grease retainer in annular recess in throw-out bearing when assembling bearing on collar. Soak this retainer and oil seal in engine oil for at least 30 minutes before installing.

DRIVEN PLATE:—Driven plate has spring-dampener type hub and facing consisting of cork inserts. Examine driven member, see that plate runs true and is not warped or distorted, and that springs in hub do not have appreciable free play. See that hub splines are not worn and are free from burrs. Corks must be in good condition. Black glaze indicates use of wrong lubricant. Soak driven plate in Hudsonite and clean corks, or replace driven member.

1938-39 Driven Plate. Heavier damper springs used on driven disc hub and disc is cupped. Two types of discs (with different number of cork inserts) as follows: 9" Models—90 cork inserts, 10" Models—108 cork inserts.

1940 Driven Member—Cork insert type. Driven Member used on cars with Overdrive is special type and may be identified by six larger dampener springs in hub assembly (std. type has 8 smaller springs).

1941 & Later Driven Members. Cork insert type. Different sizes used as follows:

1941 Driven Member Specifications

Car Model	Outside Diam.	No. of Corks
10, 10L, 11 Std.	9"	90
10, 10L 11 Overdrive	10"	108
12, 18 Std. & Overdrive	10"	108
14, 15, 17 Std. & Overdrive	10"	108

1942 Driven Member Specifications

Car Model	Outside Diameter	No. of Corks
20, 20L, 21 Std.	9"	90
20, 20L, 21 Overdrive	10"	108
22, 28 Std. & Overdrive	10"	108
24, 25, 27 Std. & Overdrive	10"	108

1946-47 Driven Member Specifications

Car Model	Outside Diameter	No. of Corks
6 Cyl. Pass. Cars Std.	9"	90
6 Cyl. Pass. Cars Overdrive	10"	108
6 Cyl. Business Cars	10"	108
8 Cyl. All Cars	10"	108

1948 Driven Member Specifications

Car Model	Outside Diameter	No. of Corks
All Models	10"	108

PONTIAC (OWN) 1936-38

Pontiac Six, All Models (1936-37-38)
Pontiac Eight, All Models (1936-37-38)

NOTE:—Driven member on these models is Long Model 10CF-CI (1936), Long 10CF-CS (1937-38). See article on Long Model 'CF" clutches for driven plate data.

1939 & Later Models. *See "Inland" Clutch.*

DESCRIPTION:—Single plate, dry disc type. Clutch mounted in recess in flywheel with cover bolted to flywheel rim. Clutch actuated by 3 release levers pivoted on lug or ridge on cover and linked to pressure plate by adjustable trunion screws (release lever height adjustment).

REMOVAL OF CLUTCH: *See "Clutch" on car model page.*

SERVICING:—Pressure plate assembly need not be dismantled when replacing driven member unless pressure springs are to be tested or replaced or other service work performed.

Dismantling:—Place pressure plate in arbor press, compress cover (not levers) slightly, unhook release lever springs, lift off bearing plate, loosen locknut, unscrew release lever trunion screw, lift off levers, release cover pressure slowly, lift off cover.

Clutch Springs:—Check springs and replace weak or burned. Spring pressure should be 145-150 lbs. compressed to 1 9/16".

Assembling:—With pressure plate on arbor press, place nine pressure springs in spring seats on plate, see that spring cups in place on cover, put cover on springs, compress cover slightly. Insert trunion screws in holes in ends of lever, thread locknut on screw, position levers on cover, turn screw into screw holes in pressure plate, turning all screws down evenly (do not tighten locknut) place release lever plate on levers, engage center loop of release lever springs on lever plate lugs, hook free ends of springs in holes in rim of cover plate.

NOTE—Release lever springs are double coil type. Coils are held together by tie wire. Measurement along tie wire from outside of spring coils should be 1 13/16".

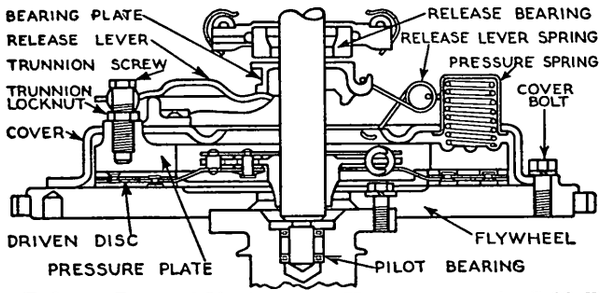

Release Lever Adjustment:—Use gauge plate J-285B and adapter, assembling gauge plate on flywheel in place of driven member with gauge plate centered so that adapter does not contact bearing plate and turned so that lugs are under release levers (in mounting clutch in flywheel, turn all cover screws down to avoid distorting cover). Loosen release lever trunion screw locknut, turn trunion screw until clearance between adapter lug and bearing plate is exactly .009-.011" (1936), .040" (1937-38). Hold adapter down while checking clearance with feeler gauge. Tighten locknut and recheck clearances (must be uniform for all levers).

CADILLAC (OWN) DOUBLE PLATE

V16, SERIES 90 (1936-37)

DESCRIPTION:—Double plate, dry disc type. Three driving plates mounted as an assembly (center plate bolted on flywheel rim by 4 studs and nuts, front and rear plates mounted on 4 pins which are press-fit in center plate and free sliding fit on others). Driven member consists of two driven discs mounted on opposite ends of clutch hub so that each disc clamped between two pressure plates when engaged. Twelve pressure springs (mounted in 4 groups of 3 on rear driving plate) under spring pressure plate which is mounted on eight studs (one at each side of each release lever) extending through center driving plate to forward plate. Release levers are "double" type and operate as follows:

Double Type—Double type lever consists of short outer lever pivoted on yoke on rear end of driving plate pin (yoke bolt extends through pin with nut on forward end) and actuating spring pressure plate through yoke bolt extending through plate (forward motion of spring plate when clutch disengaged transmitted to front driving plate by stud at each side of each release lever) and an inner long lever which actuates rear pressure plate (lever contacts bracket bolted on plate). The two levers are pinned together at a point near the throw-out bearing end.

SERVICING:—No adjustment for wear required. On Cadillac models, condition of plates can be checked by measuring from spring pressure plate ridge to tip of release levers. Replace if less than 1 13/32".

Driven Discs (Cadillac):—Manufacturer recommends that new driven discs be installed in matched pairs. Other parts not furnished separately. Driven discs thickness (with facings) is .335" (new), replace if less than .260" (worn limit).

INSTALLING NEW DRIVEN DISCS:—Clutch Rem val—Take off 4 nuts mounting center driving plate on flywheel rim (these nuts accessible through holes in rim of rear driving plate). Remove entire unit.

Dismantling Clutch (all models):—Place clutch assembly in arbor press, compress spring pressure plate slightly, take off nuts on spring pressure plate studs on front driving plate, release spring tension. Lift off front driving plate. Take off nuts on release lever pivot bolts at forward end of center plate driving pins (double release lever types only). Lift off rear driving plate, remove nuts on hub bolts.

Assembling Driven Member:—Assemble discs on center driving plate entering hub bolts from flywheel side, check assembly by supporting it on blocks on bench placing blocks under lower driven disc so that all clearance is between plate and upper disc. Clearance should be .030" (.025-.040"). Correct by installing spring washer Cadillac Part No. 873860. (.010" thick) between disc and clutch hub. If more than one disc used, total should be divided between both discs and hub. Lock hub bolts by punching nut down on flat on bolt.

Assembling and Installing Clutch:—Clearance between driving pin and driving plates should be .001-.0025" (new) and must not exceed .008" (worn limit). Center plate driving pin heights at release lever end must be alike within .0005". Replace center driving plate if plate or pins outside this limit. Balance marks (circle) must be lined up on all plates.

Releas Lever Adjustment: Manufacturer recommends that release lever yoke nuts not be disturbed when clutch is dismantled.

CAR APPLICATION

Page

BUICK
1936 Series 40 2202
1937-42 Series 40 2203
1940-42 Series 50 2203
1946-48 Series 40, 50 2204
1936 Series 60 2202
1937-42 Series 60 2203
1940-42 Series 70 2203
1946-48 Series 70 2204
1936-40 Series 80, 90 2202
1941-42 Series 90 2203

CADILLAC
1936 V8 60 (First Cars) 2205
1936-38 V8 Series 60 2206
1936-38 V8 All (except 60) 2205
1939 V8 Series 61 2206
1939 V8 All (except 61) 2205
1940 V8 Series 75 2205
1940 V8 All (except 75) 2206
1941-48 V8 All Series 2206
1935-37 V12 2205
1935-40 V16 2205

CHEVROLET
1936-38 2207
1939-48 2208

CHRYSLER
1936-38 2209
1939 2210
1940-48 2211

CORD
1936-37 ..... See Car Model Page

DE SOTO
1936-38 2209
1939 2210
1940-48 2211

DODGE
1939 2210
1940-48 2211

FORD
1949 Pass. Cars 2215

FRAZER
1947-48 2213

HUDSON
1940-48 2214

Page

KAISER
1947-48 2213

LA SALLE
1936-40 2206

LINCOLN
1949 2215

MERCURY
1949 2215

NASH
1941-42 "600" Six 2219
1946-48 "600" Six 2217
1940-48 Amb. Six 2217
1940-42 Amb. Eight 2217

NASH-LAFAYETTE
1940 2217

OLDSMOBILE
1936-38 2220
1939 2221
1940-48 2221

PACKARD
1936 "120" 2223
1937-40 All Models 2223
1941-42 All (except Clippers) 2225
1941-48 Clipper 2226

PLYMOUTH
1939 2210
1940-48 2211

PONTIAC
1936 2222
1937-38 2220
1939 2221
1940-48 2221

STUDEBAKER
1936-38 2227
1939 Comm. (First Cars) 2227
1939 (except first Comm.) 2228
1940-46 2228
1947-48 2229

WILLYS
1946-48 2231

BUICK 1936-40

Used on:

SERIES 40, 60, 80, 90 (1936)
ROADMASTER, MODEL 80 (1937-38-39)
LIMITED, MODEL 90 (1937-38-39); 80, 90 (1940)

NOTE:—Model 90 (1941)—This model has same type Independent Suspension as used on other 1941 models. See separate article (following) for complete data.

TYPE:—Design used on 1940 cars has following changes:

Lower Control Arms—Welded construction and furnished only as an assembly with frame bracket shaft and lower knuckle support pin and bushings (pins and bushings serviced separately).

Knuckle Support Upper & Lower Support Pins—Pins are threaded in knuckle support ends (lower pin locked by taper lock pin, upper pin locked by taper lock bolt) and are threaded in threaded bushings in both upper and lower control arms (bushings are threaded in control arms and no locking bolts used—bronze bushings used on previous models have been discontinued).

CHECKING & ADJUSTMENT:—Before making adjustments, place front wheels in straight ahead position (measurement from center of tire tread to lower control arm frame bracket shaft should be same on each side of car), and check following points:

Tire Inflation—26 lbs. (40), 28 lbs. (60,80,90 '36), 25 lbs. front, 30 lbs. rear (80,90 '37 to '40).

Frame Height—Measured on each side of car from lower face of rubber bumper flange (40) or cross member at side of bumper flange (60, 80, 90) to top surface of lower control arm. Should be 4 9/16" (40), 4¾"(60), 4 9/16"(80,90 '36), 4 27/32"(80,90 '37-40). If difference greater than ¼", disconnect one stabilizer link. If this does not level car, remove and check front springs, install shims or replace springs (see Springs below).

Kingpin Inclination—3½-4° (40 1936), 4½-5½° (60, 80, 90 1936), 4¼-5¼° (80 1937-38-39), 4-5° (90 1937 to 40, 80 1940).
NOTE—Car weight must be on wheels when checking adjustments.

Toe-In:—Should be 0-1/16" (depending on average camber (half sum of camber for each wheel). To check toe-in, measure between outside of tire treads at rear, roll car ahead ½ revolution, measure between same points on tires at front.

To Check—Roll car on floor 1 full revolution, then check by measuring to marks in center of tire tread at rear, roll car ½ wheel revolution, reapeat measurement to same marks. Correct toe in determined by 'average' camber (½ sum of camber for both wheels) and should be 7/32" for camber of 2° decreasing 1/32" for each ¼° to 0" for 0° camber (except ½°—1/16" and ¼°—1/32" (1936 cars) or 3/32" (1° Camber), 1/16" (¾-½° Camber), 1/32" (¼° (1° camber), 1/16" (¾-½° camber), 1/32" (¼° camber), 0" (0-Neg. ¼° Camber) for all models.

To Adjust—Turn each tie rod equally. Tie rod lengths should be equal and intermediate steering arm must be on center-line of car (equidistant from rear lower control arm inner brackets) when wheels straight-ahead (except 40 when steering arm thrown off center to correct steering wheel spoke location—see Steering Gear article). Correct steering arm position by increasing length of one tie rod and decreasing other.

Caster:—Machined bosses provided on each end of steering knuckle bosses (40) or caster adjuster (60, 80, 90) for protractor mounting when measuring caster. Caster should be 3-3½° (Model 40 1936), 1¾-2¼° (60,80 '36), ¾-1¼° (90 '36), 0° (80, 90 '37), Negative ⅞° (80,90 '38-39), 0° (80,90 '40). Allowable variation plus or minus ⅜°.

NOTE—On 80, 90 ('38-39), Negative Caster means that kingpin tilts forward at top.

To Adjust—Jack up front wheels, loosen nuts on caster adjusting bolt and pivot bolt (on inner face of knuckle support) one turn, loosen locknuts on adjusting screws which locate caster adjuster bolt in slotted hole in knuckle support. Back off one adjusting screw, tighten opposite screw equal amount so that caster adjuster is clamped tightly between them (turn front screw in to increase caster, rear screw in to decrease). One-fourth turn of screw changes caster ¼° (check toe in if caster changed greater amount). Tighten adjusting screw locknuts, caster adjuster bolt nut, pivot bolt nut. Recheck caster with car weight on wheels.

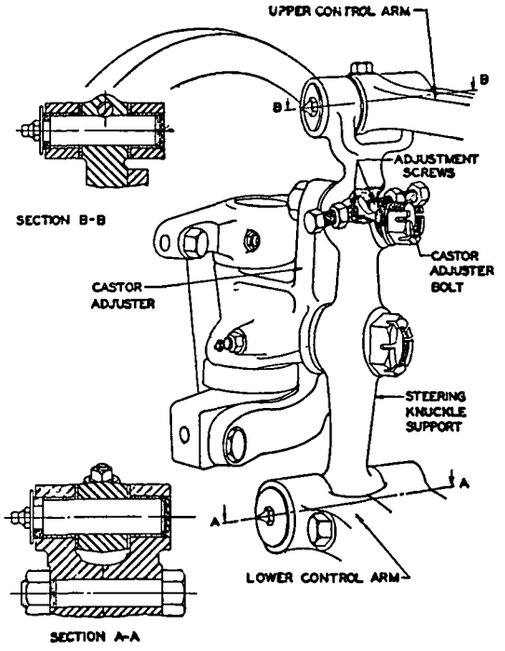

Camber:—Can be checked with protractor held against machined surface of bearing hub (with hub cap and dustcap removed. Should be Negative ¼° to Positive ¾° (All 1936 cars), Negative ¼° to Positive 1° (80, 90 1937 to 1940).

NOTE—Camber for 1937-40 models can also be checked by measuring distance from mark on center of tire tread on each wheel at top and bottom (see table below).

Model	Camber	Top—Distance—Bottom
80 ('37-39)	Neg. ¼°	59 59/64" 60 11/64"
80 ('37-39)	Pos. 1°	60 37/64" 59 9/16"
80 ('40)	Neg. ¼°	59 59/64" 60 11/64"
80 ('40)	Pos. 1°	60 13/32" 59 35/64"
90 ('37-40)	Neg. ¼°	59 59/64" 60 11/64"
90 ('37-40)	Pos. 1°	60 13/32" 59 35/64"

Steering Geometry (Toe-out on Turns):—With outer wheel turned exactly 20°, inner wheel should be turned 23¼° (40,60,80 '36), 23¾° (80 '37-38-39), 24° (90 '37-38-39-40, 80 '40) plus or minus ¾°. No adjustment provided (check for bent steering arms if incorrect).

CONTROL ARM ASSEMBLY:—Lower Knuckle Support—Pin is .0005-.002" (40), .0005-.0015" (60, 80, 90) press fit in knuckle support and is locked by clamp bolt. Use arbor press to remove and install pins—do not drive pins in or out. Pin clearance in control arm bushings should be .001-.0025". Side thrust of knuckle support taken by hardened bronze thrust washers on each side selected to give .000-.006" side clearance.

Lower Control Arm & Knuckle Support (80, 90 '40). Arms are pivoted on frame bracket shaft at inner ends on bushings which are threaded on shaft and are sealed by rubber seals on shaft which fit over inner ends of bushings. When installing shaft, center shaft in control arms so that distance from mounting bracket bolt hole center line to outer face of control arm is 2 15/16", thread bushings through control arm on shaft and tighten bushings securely making certain that seals fit over ends of bushings. Support pin at outer end of control arms is locked in knuckle support by taper pin. Pin bushings in each control arm are threaded type and are designed to cut their own threads in control arm as they are threaded on support pin. NOTE—Lower support pin bushings have 1¼" hexagonal head, upper support pin bushings are 1⅛" (may be identified in this manner).

Upper Knuckle Support:—Pin clearance in support is .0015-.004" and pin should assemble easily by hand. Pin locked by clamp bolt. Pin clearance in control arm bushings should be .0015-.003" (40), .001-.0025" (60, 80, 90). Side thrust washers and clearance same as above.

Upper Knuckle Support (80,90 '40). Bushings are threaded type and installed in same manner as lower support pin bushing (see data above).

Lower Control Arm:—Pivots on shaft bolted to cross member. Control arm carried on bushing threaded on shaft (front) and threaded on both shaft and in control arm end (rear). To assemble place control arm on shaft so that distance from center of shaft bracket bolt to outer face of rear control arm is 2 7/16" (40), 2 15/16" (60, 80, 90), thread rear bushing in arm and on shaft. Turn up tight and recheck distance. Thread front bushings on shaft, turn up until shoulder contacts face of arm. tighten clamp bolt. NOTE—Entire assembly should move freely (with spring not in place). Faulty alignment may be corrected by turning control arm shaft one turn in either direction to throw lower arm backward or forward. More than one turn will be in excess of caster adjustment.

SPRINGS:—Springs are paired and should have same free height. If not equal install ⅛" thick service washer and insulating washer on top of coil spring. Do not use more than two washers. If this does not correct car sag (unequal frame heights), check rear springs and frame alignment. Standard springs (identified by color) as follows:

CONTINUED ON NEXT PAGE

BUICK 1936-40 (C nt.)

1936-37 Spring Specifications

Car Model	(Spare at rear) Part No.	Color	(Fender wells) Part No.	Color
41 ('36)	1286635	Yellow	1292367	Green
46, C, S, 48 ('36)	1286635	Yellow	1293210	White
61, 66C, 66S, 68	1294664	Red	1294663	Yellow
81, 81C	1293553	Orange	1284760	Blue
90, 90L, 91			1293663	Green
80 ('37)	1298405	Orange	1298406	Blue
90 ('37)			1298407	Green

NOTE—Springs on 40 are smaller diameter and can be readily identified.

1938 Spring Specifications

Model	Spare at Rear Color	Free Lgth.	Fender Wells Color	Free Lgth
80 (All)	Orange	14¾"	Blue	14¾"
90 (All)	Blue	14⅝"	Green	14⅝"

1939-40 Spring Specifications

Model	(Spare at Rear) Part No.	Color	(Fender Wells) Part No.	Color
80 (all)	1309916	Orange	1309917	Blue
90 (all)	1309917	Blue	1309918	Green

FRONT STABILIZER SHAFT (1939):—Serviced in same manner as 40,60 (see following article).

Stabilizer Links—Same as Series 40 & 60 except that spacer not used on link bolt (grommet assem blies positioned by collars on bolt) and nut provided at each end of bolt for grommet assembly adjustment.

SHOCK ABSORBERS:—Front shocks mounted on frame by 4 special heat treated bolts and located by reaming out two bolt holes to close limits.

BUICK 1937-42

Used On:

SPECIAL SERIES 40 (1937 to 40), 40A,40B (1941-42)
SUPER SERIES 50 (1940-41-42)
CENTURY SERIES 60 (1937 to 42)
ROADMASTER SERIES 70 (1940-41-42)
LIMITED SERIES 90 (1941-42)

NOTE:—This type suspension used on Models 40, 60 is the same for 1937-38 except as noted below:

1938 Type Lower Control Arms:—Hardened bushings are threaded in inner ends of lower control arms and on bracket shaft (arms broached so that threads are cut by bushing when first installed). Bushings will not ordinarily require removal.

1939 Type:—Design same as for 1938 except as follows:

Lower Control Arm—One piece rubber bushings used at inner ends of control arms (frame connection) and retained by extension of lower control arm shaft bracket (inner end), flat washer and self-locking nut (outer end). Spring seat riveted to control arms and rivets must be removed to dismantle assembly.

Upper Control Arm (Shock Absorber)—Interchangeable on right and left side of car. Caster adjustment located at rear of control arm (left side) front of arm (right side).

NOTE—Upper and lower control arms and shaft not interchangeable with 1938 because of these changes. Knuckle Support and Steering Knuckle are interchangeable with 1938 parts.

1940-42 Type:—Design same as used on 1939 Series 40, 60 with changes as listed below. This type used on Series 90 (1941-42) only. Previous Series 90 have different type Independent Suspension (see preceding article).

Lower Control Arms—Fabric bushings used at inner ends of lower control arms (frame connection). These bushings swaged on grooved shaft and lower control arms pressed on bushing and shaft assembly with .002-.007" press fit. Control arm, bracket shaft, and spring seat cannot be dismantled and serviced as an assembly only. Rubber seals are used on knuckle support bolt at outer end of control arm.

Upper Control Arm (Shock Absorber Assembly)—Interchangeable on right and left side of car (same as 1940). Caster adjustment located at rear of control arm (left side of car), front of arm (right side). Seals are not used on knuckle support eccentric pin at outer end of upper control arm.

CHECKING & ADJUSTMENT:—Car weight must be on wheels. Adjust front wheel bearings and check following points first:

Tire Inflation—23 lbs. front, 28 lbs. rear (40, 60 '37-38-39); 25 lbs. front, 30 lbs. rear when tires are cold or 27 lbs. front, 34 lbs. rear when tires are warm (All '40-41 Models), 25 lbs. Cold or 28 lbs. warm (All '42 Models).

Kingpin Inclination—3½-4½° (All Models '37 to '40), 3½° with 1⅛° Camber (40, 50, 60, 70 '41), 4¾° with ⅞° Camber (90 '41), 4¼° with ⅜° Camber (40, 50, 60, 70 '42), 5¼° with ⅜° Camber (90 '42).

Frame Height—4¾" ('37-38), 4" (All Models '39-40), 3⅝" (40, 50, 60, 70 '41 with Std. Springs), 4" (40, 50, 60, 70 '41 Optl. High or Exp. Springs), 4" (90 '41-42), 3⅞" (40, 50, 60, 70 '42 with Std Springs), 4" (All 1942 Models with Optl. High or Exp. Springs). from lower face of frame cross-member to upper surface of lower control arm. Must be equal on both sides within ¼". If not correct, disconnect one stabilizer link. If this does not correct height differences, remove and check front springs (see spring data below), install special spacer washer #1310413 (⅛" thick) or replace springs.

NOTE—Car weight must be on wheels when checking all of the following adjustments.

Caster:—Machined surface provided on each end of steering knuckle bosses. Caster should be ¼° plus or minus ⅜° and equal within ¼° for both wheels (1937), **Negative** ⅞° (kingpin tilts forward at top) plus or minus ⅜° (1938-39), **Positive** ⅜° plus or minus ⅜° (1941), **Positive** ⅜° with limits of 1⅛° to 0° (1942). Caster should be equal within ½° on both sides of car. Use J-1521 Protractor tool to measure Caster & Camber.

To Adjust—Jack up the front wheels and loosen clamp bolt at upper end of knuckle support, remove lubricant fitting at forward end of top support pin bushing, insert Allen wrench No. J-720, turn support pin clockwise to increase, counter-clockwise to decrease caster, tighten clamp bolt, replace lubricant fitting, recheck caster. ¼ turn of wrench will change caster ¼°. If caster changed more than ¼°, check toe in. Use care not to turn support pin beyond ends of threads or bind knuckle support on upper control arm.

1939-42 Adjusting Note—The adjusting socket (for wrench) located at rear of control arm (left side), front of control arm (right side) under lubricant fitting (remove fitting for access).

Camber:—Can be checked by protractor held against machined edge f bearing hub with dust cap and hub cap removed. **Camber should be negative ¼°** to Positive 1° (All Models '37-38-39-40), Negative ⅛° to Positive 1⅛° (40, 50, 60, 70 '41 with Std. Springs), Positive ⅛° to Positive 1⅜° (40, 50, 60, 70 '41 with Optl. High Springs), Negative ⅜° to Positive ⅞° (90 '41 with Std. Springs), Positive ⅜° with limits of Neg. ⅝° to Pos. ⅞° (All 1942 models).

NOTE—Camber can be checked by measuring distance from mark on center of tire tread on each wheel at top and bottom (see table below). No adjustment. The standard upper control arm knuckle support pin can be replaced with special eccentric type (Group 6.178 Part No. 231760) to permit slight camber adjustments. Camber readings outside limits given above indicate bent parts which should be replaced.

Model	Camber	Top—Distance	Bottom
40 ('37-39)	Neg. ¼°	58 37/64"	58 13/16"
40 ('37-39)	Pos 1°	59 7/32"	58 15/64"
40, 50 ('40)	Neg. ¼°	58 19/32"	58 53/64"
40, 50 ('40)	Pos. 1°	59 15/64"	58 1/4"
40,40A,50 ('41)	Neg. ⅛°	58 21/32"	58 25/32"
40,40A,50 ('41)	Pos. 1⅛°	59 9/32"	58 7/32"
60 ('37-39)	Neg. ¼°	58 43/64"	58 29/32"
60 ('37-39)	Pos. 1°	59 5/16"	58 5/16"
60, 70 ('40)	Neg. ¼°	59 3/32"	59 21/64"
60, 70 ('40)	Pos. 1°	59 29/32"	58 3/4"
60, 70 ('41)	Neg. ⅛°	59 5/32"	58 9/32"
60, 70 ('41)	Pos. 1⅛°	59 25/32"	58 23/32"
90 ('41)	Pos. ⅜°	58 1/2"	58 7/8"
90 ('41)	Pos. ⅞°	59 1/4"	58 5/16"

Toe In:—Roll car ahead one revolution, then check by measuring to marks at center of tire tread at rear, roll car ½ wheel revolution, repeat measurement to same marks at front. Correct toe in determined by average camber (½ sum of camber for both wheels) and should be 3/32" (1° camber), 1/16" (¾-½° camber), 1/32" (¼° camber), 0" (0-Neg. ¼° camber). Toe-in should be 0-1/16" (1937-41), 1/16-⅛" (1942), depending on average camber.

To Adjust (1937)—Loosen clamp bolts at end of each tie rod, turn rod tubes equally in direction of forward wheel rotation to increase, or opposite direction to decrease toe in. ½ turn of tubes changes toe in 5/16". Tie rods lengths must be equal and intermediate steering arm must be on center-line of car (equi-distant from rear lower control arm inner brackets) with wheels straight ahead. Correct by shortening one tie rod and lengthening other rod equal amount.

To Adjust (1938-42 Models)—New type tie rods used (no intermediate steering arm, short left hand tie rod ball seat located in longer right hand tie rod near pitman arm ball seat). Adjust by loosening clamp bolt at wheel end of each tie rod and turning threaded sleeve (between tie rod and ball seat stud) equally at each side. One half turn of each sleeve will change toe-in 5/32".

Steering Geometry (Toe-out on Turns):—With outer wheel turned 20°, inner wheel should be turned exactly 23¼° (40 '37-38), 23¾° (60 '37-38), 22½° (40,60 '39), 22° (All Models '41), 21½° (All Models '42) plus or minus ¾°. No adjustment provided. Check for bent steering arms if steering geometry incorrect.

CONTROL ARM ASSEMBLY (ALL):—**Upper Knuckle Support Pin.** Consists of threaded pin screwed in upper end of knuckle support and in bushings in forward and rear forks of upper control arm. To assemble, screw pin in knuckle support, hold support centered in upper control arm fork, install rear (threaded) bushing turning bushing in against

CONTINUED ON NEXT PAGE

BUICK 1937-42 (C nt.)

arm. Then install front (plain) bushing being careful not to turn bushing in tight which will cause binding. Install clamp bolt on this bushing.

NOTE—Entire assembly (without spring) must move up and down freely without binding. Lower control arm shaft may be turned one full turn in either direction to correct binding but must not be turned more than this amount (caster adjustment insufficient for greater correction).

Upper Control Arm Note (1939-42). Upper control arms and shock absorber assembly interchangeable on right and left hand sides of car.

Lower Knuckle Support:—Consists of bolt threaded through lower control arm and bushing in lower end of knuckle support. To assemble, turn threaded bushing in lower end of knuckle support from rear until tight, position knuckle support in lower control arm fork, turn bolt in from front through forward arm, knuckle support bushing, rear arm, assemble washer and nut on rear end of bolt. Rubber seals are used on both ends of support bolt and should be installed on ends of arms before bolt is installed (pull seals down over ends of arms so that they seat on bolt between arm and end of knuckle support bushing after bolt is installed).

Lower Control Arm. Control arms threaded directly on ends of shaft bolted to cross-member. Must be installed separately with spring seat removed. Distance from center of bolt hole in shaft bracket to inner face of control arm at rear should be 1 7/32" (1937), 1⅜" (1938). On 1938 models, hardened bushings are installed in inner ends of control arms but will ordinarily not require removal.

1939 Note. Lower control arms riveted to spring seat and rivets must be removed to dismantle arms for bushing renewal, etc. Use 1938 type control arm bolts to secure spring seat when reassembling.

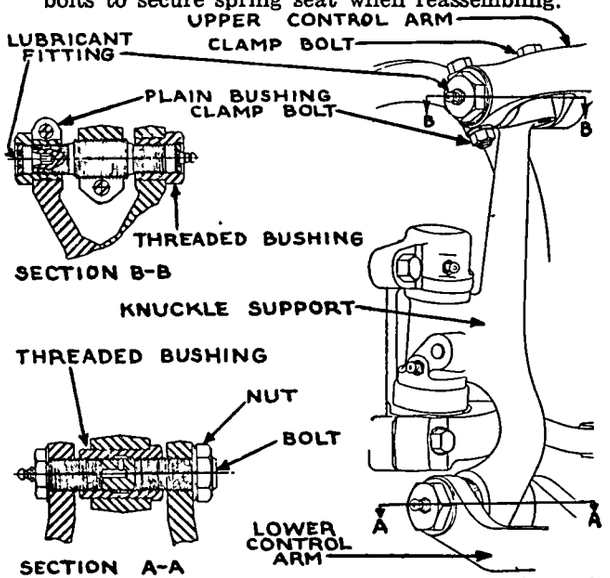

1940-42 Type—Control arms, bracket shaft, and spring seat serviced as an assembly and should not be dismantled (fabric bushings on bracket shaft at inner ends of arms are swaged on shaft and arms are press fit on bushings).

SPRINGS (1937-38):—Both springs should have same free height. If not equal, install not more than two ⅛" thick service spring washers No. 1290142 on top coil of short spring. Spring number stamped on flat of first coil and marked with paint for identification as follows:

1937 Spring Specifications

	(Spare at Rear)		(Fender Wells)	
Model	Part No.	Color	Part No.	Color
40 (all)	1297818	Yellow	1298801	White
60 (all)	1297819	Red	1298802	Brown

1938 Spring Specifications

	Spare at Rear		Fender Wells	
Model	Color	Free Lgth.	Color	Free Lgth.
40 (All)	Yellow	14⅛"	Red	14⅛"
60 (All)	Red	14¼"	Brown	14¼"

SPRINGS (1939-42):—Have special end coils and are installed as follows: **Upper End**—Coil pilots around cup attached to frame by shock absorber mounting bolt (cup will remain in place unless both spring and shock absorber removed) and has rubber insulator between frame and spring end. If frame height dimension indicates spring length incorrect by more than ¼", install special spacer shim #1310413 on top coil of short spring (replace spring if too long).

Lower End—End coil is not ground flat and must be carefully fitted in recess in spring seat.

1939 Spring Specifications

	(Spare at Rear)		(Fender Wells)	
Model	Part No.	Color	Part No.	Color
40 (all)	1310096	Yellow	1310360	Red
60 (all)	1310411	White	1310412	Brown

60 (all)—1310360 (Late cars with long frame).

1940 Spring Specifications

40 (except 41T)	1314889	Yellow	1314890	Red
41T	1314950	White		
51, 56S	1314950	White		
51C, 56C	1317791			
59	1314889	Yellow		
61, 61C, 66C	1314890	Red	1314891	Brown
66, 66S	1314950	White	1314890	Red
71, 76S	1315045	Green		
71C, 76C	1317792			

1941 Spring Specifications

Standard Springs

Car Model	Part No.	Color Mark
41, 46, 46S, 49	1317791	Blue & Green
51, 51C	1317791	Blue & Green
56, 56S, 56C	1317791	Blue & Green
61, 66, 66S	1317792	Blue & White
71, 71C, 76S, 76C	1317792	Blue & White

Optl. High Springs

41, 46, 46S	1314950	White
51, 51C	1314950	White
56, 56S, 56C	1314950	White
61	1315045	Green
66, 66S	1314950	White
71, 71C, 76S, 76C	1315045	Green

1942 Spring Specifications

	Part Number	
Car Model	Std. Spring	Optl. High Spring
44, 44C, 47, 48, 48S	1314889	1323255
41, 41SE, 46, 46S, 46SSE	1323255①	1314950
49	1314889	
51, 56C, 56S	1324479	1314950
61, 66S	1317792	1324483
71, 76C	1324482	1324483
76S	1317792	1324483
90, 90L, 91, 91F	1321203	

①—Supersedes No. 1314889 used on first cars.

CAUTION—Springs with same Part No. should be used on each side of car.

Optl. High Spring Note—These springs can be installed to correct excessive bottoming of standard springs with normal loads. High springs are ⅝" higher than std. springs but have same flexibility rate. NOTE—These high springs regularly installed on export cars.

NOTE—See Rear Suspension article for special springs to be installed with heavy duty rear springs

FRONT STABILIZER SHAFT (1939-42):—Disconnect links by removing link bolt nut, take out frame bracket mounting bolts. To service frame bracket rubber bushings, break weld between bracket and backing plate, remove backing plate. If bushings being re-located (due to popping out of bracket caused by excessive soaping when installed), clean outside of bushings thoroughly with steam or gasoline. To install new bushings, cut old bushings off, apply weak solution of water and soap suds to shaft and new bushings, slide bushings on shaft (avoid excessive soaping, do not use strong soap or grease). Clamp assembly in vise and wire backing plate to bracket (not necessary to weld), remove wire after stabilizer installed on car.

Stabilizer Links—When installing links, make certain that retainer installed at ends of rubber grommets and spacer installed on bolt at center. Tighten bolt nut to limit of threads so that overall length of grommet assembly at each end of link (distance between outer faces of upper and lower grommet retainers) is exactly 1 11/16".

SHOCK ABSORBERS:—Delco Double acting type. Mounted on frame by four special heat treated bolts and positioned by reaming out two bolt holes to provide .002-.007" clearance. See separate article for complete data.

BUICK 1946-48

Special, Series 40 (1946-47-48)
Super, Series 50 (1946-47-48)
Roadmaster, Series 70 (1946-47-48)

DESCRIPTION: Front suspension design is same as type used on previous Buick models except for the following points:

Steering Knuckle Support Upper Pivot Pin (Caster & Camber Adjustment)—Threaded center section of pin is eccentric to provide total camber adjustment of 2/3° (40'). Caster and camber must be adjusted together (turning of pin affects both settings).

NOTE—Rubber seals are used on pin at each side of knuckle support to seal inner ends of bushings.

Lower Control Arm Shaft & Bushings—New type threaded bushings (threaded in arm and on shaft) used with rubber seal on inner end. Lubricant fittings are fitted in outer end of each bushing and should be lubricated with chassis lubricant at regular 1000 mile intervals.

NOTE—This type Lower Control Arm, Shaft, and Bushing assembly similar to type furnished for service on 1942 car models and is interchangeable except

CONTINUED ON NEXT PAGE

BUICK 1946-48 (C nt.)

for the shaft. 1946 type shaft can be identified by mounting bolt holes which are 1⅞" between centers (2 5/16"on 1942 type shaft).

CHECKING & ADJUSTMENT: Same as for corresponding 1942 models except as noted below. ***See preceding article for complete data and note following new specifications and adjustment procedure:***

Tire Inflation—Inflate tires evenly as follows: 1946-47—25 lbs. (Cold), 28 lbs. (Warm) front and rear on all cars.
1948—(40 & 79 Estate Wagon) 26 lbs. Cold, 29 lbs. Warm. (Series 50) 24 lbs. Cold, 27 lbs. Warm. (Series 70) 22 lbs. Cold, 25 lbs. Warm.

Kingpin Inclination—4¼° with camber of ⅜°.

Frame Height—With front of car leveled and car at curb weight (gasoline, oil, and water, but no passengers), lower control arm height should be same on both sides of car.

Caster: Positive ⅜° desired. (1946-47 Limits) Pos. 1⅛° to 0°. (1948 Limits) Pos. ¼° to Pos. 1½°. Caster on both sides of car must be equal within ½°.

To Adjust—Turn eccentric upper steering knuckle support pin (use Allen Wrench J-720 inserted through lubricant fitting hole after removing lubricant fitting and loosening clamp bolt in upper end of knuckle support). Pin must be rotated in complete turns only to avoid changing camber adjustment (pin is eccentric). Caster and camber should be adjusted together and "averaged" so that resultant settings as near desired settings as possible and within limits.

Camber: Positive ⅜° desired (Limits ⅞° Pos. to ⅝° Neg.) and equal within ¾° on both sides of car.

To Adjust—Same as for Caster adjustment (above). Entire range of camber adjustment (2/3° or 40') is obtainable by ½ turn of eccentric pin in either direction. CAUTION—Turning eccentric pin changes both Caster and Camber settings. Adjust both caster and camber together and "average" settings (both settings as near desired setting as possible and within limits).

Toe In: 1/16-⅛" (measure between marked points on tires at front of wheel, then roll car ahead ½ revolution and measure between same points at rear of wheel).

Steering Geometry: With outer wheel turned 20°, inner wheel should be turned 21½° plus or minus ¾°.

SPRINGS: Optl. High Spring Note—These springs higher than standard springs and can be installed to correct excessive bottoming of springs with normal load. High springs have same flexibility rate as std. springs (regularly installed on export cars).

►**Rear Spring Note**—***See "Buick Rear Suspension" in Rear Axle Section for Std. and special Overload Rear Springs.***

1946-47 Spring Specifications

Car Model	Part No. Std. Spring	Optl. High Spring
41, 46S	1323255	1314950
51, 56S, 56C	1324479	1314950
59	1314950	
71, 76C	1324482	1324483
76S	1317792	1324483

1948 Spring Specifications
1948 Std. & Optl. Springs

Model	Std. Spring	Optl. High Spring
41, 46S	1314950	1335808
51, 56C, 56S	1314950	1335808
59	1314950	
71, 76C, 79	1337574	1335809

CADILLAC 1936-40

CADILLAC V8, SERIES 36-60 (1936) SEE NOTE
CADILLAC V8, SERIES 70,75 ('36), 65,70,75 ('37), 60S, 75 ('39), 75 ('40)
CADILLAC V12, SERIES 80, 85 (1936-37)
CADILLAC V16, SERIES 90 (1937-38-39-40)

NOTE:—First 36-60 Cadillac cars fitted with same type suspension as other Cadillac models. Later 36-60 cars have different type Suspension (similar to LaSalle 1936-40 and Cadillac 60 1937-38 models). See separate article (following) for data.

Cadillac 75 (1941)—This model has same type Independent Suspension as other 1941 Cadillac models. See separate article (following) for data.

CHECKING AND ADJUSTMENT:—Check these points first:

Kingpin Inclination—4°51' (LaSalle & Cadillac 36-60), 5°38' (V8 & V12 '36-37), 4°30' (V16 '37), 5°1' (V8 & V16 '38), 5°44' (60S '39), 5°1' (Other V8 & V16 '39-40).

Tire Inflation—Minimum pressure 26 lbs. (LaSalle & Cadillac 60), 28 lbs. (70 '36-37, 65 '37-38, 60S '38-39), 36 lbs. (90 '37), 32 lbs. (V8 75 '36-40, V12 '36-37, V16 '38-40).

Frame Height—3 13/16" (LaSalle & Cadillac 60), 5 3/16" (Other Cadillac '36 cars) ±¼" measured between lower face of frame side rail and upper surface of lower spring seat. Must be same on both sides of car. Check spring length and suspension unit assembly if car sags.

Wheel Runout—Must not exceed 3/32" with wheels in place on car. Mark high spot on tire and place wheel with mark at top vertically (to check toe in) or at one side (to check caster and camber).

Steering Geometry (Toe Out on Turns):—With outer wheel set at 20°, inner wheel should be turned exactly 22-23½° (All Models '36-37), 23¾° (60S, 65 '38), 23½° (75,90 '38), 22¾-24¼° (60S '39, 75, 90 '39-40). No adjustment. Check for bent steering arm if incorrect.

Front Wheel Stopscrew Adjustment (38-65, 75, 90):—With front wheels turned to straight ahead position, and steering gear roller on 'high point' of worm, mark steering wheel, then turn wheel exactly two full turns to the right, adjust right hand stopscrew so that it rests against stop. Adjust left hand stopscrew in same way with wheel turned two full turns to left.

NOTE—Stopscrews not installed on first 75 and 90 cars. May be installed by drilling .332" hole in web of steering knuckle support and tapping with ⅜-24 American thread tap.

Toe In:—Should be 0-1/16" (car in motion) or 1/32-3/32" (car at rest). Adjusted by changing length of both tie rods equally.

Caster (including 36-60 first cars): Should be 1½-2° 36-60 first cars), ¾-1¼° (36-75, 80, 85, 90), 0° plus or minus ¼° (65 '37-38, 70 '37, 75 '37-39, 85 '37, 90 '37-39), Negative ½° to 1° (75, 90 '40). Must be equal for both wheels within ¼°.

To Adjust—Loosen nuts on knuckle support upper and lower yokes, loosen clamp screw in upper end of knuckle support, remove lubrication fitting from front bushing of knuckle support upper pivot pin, insert Allen wrench, turn wrench clockwise to increase or counter-clockwise to decrease caster, tighten clamp screw and yoke nuts.

Model 90. Remove locking bolts in outer end of upper suspension arm yoke, turn threaded pin with wrench to adjust caster (full turns only to permit locking bolts to enter when replaced).

Camber (including 36-60 first cars): Should be ¼-1° (36-60 first cars), 0-½° (All Others). Must be equal within ¼° for both wheels.

To Adjust—Take off the retaining nut on the knuckle support yoke in lower control arm, pull yoke out of arm, rearrange spacers on yoke stud (cars normally set up with one spacer between yoke and control arm, one spacer between control arm and retaining nut). Place both spacers between control arm and retaining nut to increase camber, both spacers between yoke and control arm to decrease camber. Tighten retaining nut securely and lock in place after making adjustment.

CONTROL ARM ASSEMBLY (including 36-60 First Cars): Upper control arm is part of shock absorber assembly, lower control arm separate part.
Series 90 Note—No yoke used on upper control arm (remove knuckle pin to disconnect suspension).

Lower Control Arm:—One piece type mounted on shaft on cross member by plain bushing threaded on shaft (front) and threaded bushing screwed on shaft and in control arm (rear). To assemble, place bracket shaft in position centered in control arm, thread rear bushing in arm and on shaft, turn in until tight with shoulder contacting arm, thread front bushing on shaft, turn up until tight, install clamp bolt in control arm. Arm should move freely on shaft without binding.

Knuckle Support Pivot Pins:—On these models, upper and lower control arm yoke nuts can be taken off, and knuckle support, pivot pins and yokes removed as an assembly. If disassembled further, mark position of pins and bushings, when reassembling turn pins and bushings in to same point to maintain front end alignment. Check caster and camber.

Lower Control Arm Support Pin—Seals used. Support pin at outer end of control arm is threaded through bushings in both arms of yoke and is locked in lower end of knuckle support by lockpin. Rear bushing is threaded in yoke arm, front bushing is plain type (threaded on pin only) and is locked by clampscrew in yoke arm. Seals are installed on pin at inner end of each bushing (between bushings and knuckle support).

Upper Control Arm Support Pin—Pin is threaded in upper end of knuckle support and in bushing in each arm of yoke and is locked in knuckle support by clampscrew. Rear bushing is threaded in yoke arm, front bushing is plain type (threaded on pin only) and locked in yoke arm by clampscrew. Seals are installed at inner end of bushings (between bushings and knuckle support).

SPRINGS:—Part No. stamped on flat surface of end coil. Figure in table below following color indicates number of color markings. Replace springs if sagged more than ¼". See that insulator installed at top and bottom of each spring.

1936 Spring Specifications

Model	(Spare at Rear) Part No.	Length	(Fender wells) Part No.	Length
36-60 (1st. 4008)	1413232	14⅛"	1413233	14⅛"
36-70	1413788	14⅞"	1413789	14⅞"
36-75, 80	1413789	14⅞"	1413790	14⅞"
36-85	1413790	14⅞"	1413791	14⅞"

CONTINUED ON NEXT PAGE

CADILLAC 1936-40 (C nt.)

1937 Spring Specifications

Model	Part No.	Free Length	Color
37-65, 70 5W	1420986	15"	Yellow
37-65, 70 6W	1413788	15"	Brown (2)
37-75 5W	1413789	14⅞"	White
37-75 6W	1413790	14⅞"	Red
37-75 Comm.	1413791	15"	Yellow (2)
37-75 Spec. Bus	1420237	15"	Yellow (2)
37-85 5W	1413790	14⅞"	Red
37-85 6W	1413791	15"	Yellow (2)
37-90 5W	1404503	15⅛"	Tagged
37-90 6W	1404504	15⅛"	Tagged

1938 Spring Specifications

Model	Spring No.	Color Mark
60S 5W	1427281	Aluminum
60S 6W	1427280	Orange
65 5W	1413788	Brown
65 6W, 75 5W	1413789	White
75 6W, 90 5W	1413790	Red
90 6W	1413791	Yellow
50, 60, 65 Comm. (See Note)	1420986	Blue
50, 60, 65 Comm. Later	1413788	Brown
75 Comm	1413791	Yellow

NOTE—These springs used on first cars only with two ⅛" (No. 1290142) shims. Interchangeable with later springs providing shims used (first springs were ¼" shorter).

1939 Spring Specifications

Model	Part No.	Free Length	Color Mark
60S 5W	1428426	15"	Red
60S 6W	1427280	15"	Orange
75, 90 5W	1413789	14⅞"	White
75, 90 6W	1413790	14⅞"	Red
75 Com.	1413791	15"	Yellow

5W—Spare at rear. 6W—Fenderwells.
Com.—Commercial Chassis.

1940 Spring Specifications

Car Model	Spare at Rear Part No.	Fender Wells Part No.	Spring Normal Hgt
75	1413789	1413790	9 13/16"
75 Comm'l.	1413791		9 13/16"
90	1413790	1413791	9 13/16"

SHOCK ABSORBERS:—Shock absorber valve number stamped on outside cap.

CADILLAC 1936-48

CADILLAC V8, SERIES 36-60 (1936) SEE NOTE
CADILLAC V8, SERIES 60 ('37-38), 61 ('39)
CADILLAC V8, SERIES 60S,62,72 (1940)
CADILLAC V8, ALL SERIES (1941-42)
CADILLAC V8, ALL SERIES (1946-47-48)
LA SALLE V8, ALL SERIES (1936 to 1940)

NOTE:—**Cadillac 36-60 (First Cars) and other Cadillac Models)**—Have suspension system of different design and adjusted differently. See preceding Cadillac suspension article.

TYPE:—Independent 'parallelogram' type with coil springs. Design same as type used on 1940 Series (except Series 75 type which is not used). All models are similar and adjusted in same manner.

Lower Control Arms on Models 38-50, 38-60:—Hardened bushings are threaded in inner ends of lower control arms and on frame bracket shaft (arms threaded directly on shaft on previous design). Synthetic rubber seals are installed between bracket shaft and inner ends of lower control arm and also at each side of knuckle support at outer end of lower control arm. Rubber rebound cushions for front end are softer to reduce rebound shock.

Lower Control Arm (La Salle & Cadillac 39-61 only)—New type straight arms with rubber bushings at inner end (on frame bracket shaft). Arms are riveted to spring seat and rivets must be removed to dismantle assembly (for bushing renewal, etc.). Use bolts and nuts to fasten spring seat on arms when reassembling. Arms and steering knuckle supports have been redesigned for greater strength.

ADJUSTMENT:—Before making adjustments check wheels for balance, run-out, and tracking; check front wheel bearing adjustment, see that shock absorbers filled with fluid and operating properly, check steering gear adjustment, see that control arms operate freely and that control arm and knuckle support bushings are correctly installed. Place front wheels in straight ahead position and check following points first:

Tire Inflation—Check tires and inflate as follows:

Tire Inflation Pressure

50 (1936-39), 60 (1936-38), 62 (1940)	26 lbs.
50, 52 (1940)	24 lbs.
60S, 62, 72 (1940), 60S, 61, 62, 63 (1941-42)	28 lbs.
60S, 61, 62 (1946-48)	28 lbs.
67, 75 (1941-42), 75 (1946-48)	(Frt) 24, (R) 32 lbs.
76 Comm'l (1948)	(Frt) 34, (R) 36 lbs.

Wheel & Tire Run-Out—Check wheels for run-out and mark high point on tire. Place this mark vertically (at top of wheel) when checking Toe-in and Toe-out, horizontally (at one side of wheel) when checking Caster, Camber and Kingpin Inclination.

Kingpin Inclination—Crosswise inclination with specified Camber as follows:

Kingpin Inclination

All Models (1936-37)	4°51'
All Models (1938)	5°44'
50 (1939-40), 61 (1939), 52, 60S, 62 (1940)	5°6'
72 (1940)	5°1'
All Models (1941-48)	.5°51' (0° Camber)

NOTE—Car weight must be on wheels when checking adjustments.

Caster: As shown below. Must be equal on both sides of car within ½°. NOTE—Negative figures indicate Reverse Caster.

Caster Specifications

1936 (All Models)	Pos. ½° to Pos. 2°
1937 (All Models)	Pos. ¼° to Pos. 1°
1938 (All Models)	Neg. ¼° to Neg. 1¼°
1939 (All Models)	Neg. ¼° to Neg. 2¼°
1940 (All Models)	Neg. 1¾° to Neg. 2¼°
1941-47 (All Models)	Neg. 1¾° to Neg. 2¾°
1948 (All Models)	Neg. ½° to Pos. ½°

To Adjust (All Series)—Loosen the clampscrew in upper end of knuckle support, remove lubrication fitting in front bushing of upper control arm, insert Allen wrench, Tool J-720, through lubricant fitting hole, turn eccentric upper support pin in complete turns only, clockwise to increase caster, counter-clockwise to decrease caster. IMPORTANT—Camber will be disturbed unless pin turned in complete turns only.

Caster Adjustment Note—If correct caster adjustment cannot be secured within limits of turning of the upper support eccentric pin, greater range of adjustment can be secured by disconnecting lower support arm inner mounting shaft at frame crossmember and turning shaft in arms (screwing shaft to rear which will move support arms forward increases Caster).

Camber: As shown below. Must be equal on both sides of car within 1°. NOTE—If camber not correct, check Kingpin Inclination.

Camber Specifications

1936-37 (All Models)	Pos. ¼° to Pos. 1°
1938 (All Models)	Neg. ¼° to Pos. ½°
1939 (All Models)	Neg. ¼° to Pos. ¾°
1940 (All Models)	0° to Pos. ¾°
1941-48 (All Models)	0° plus or minus ⅜°

To Adjust (All Series)—Same as for the Caster Adjustment on these same cars (see Caster Adjustment above) except that entire range of adjustment secured in ½ turn of eccentric pin. Pin must not be turned more than ½ turn from point where correct caster secured or caster will be upset when this camber adjustment made.

Toe-in:—Should be 0-1/16" (car in motion), 1/32-3/32", car at rest) for all models. Measure with 'high' point of tire run-out in vertical position at top of wheel.

To Adjust (All Series)—Loosen the clamp bolts and turn tie rod adjuster (at wheel end of each tie rod) equally on both sides of car (to maintain correct position of steering gear).

Steering Geometry (Toe-out on turns):—With outer wheel turned exactly 20°, inner wheel should be turned exact amount shown in table below. Check for bent steering arms if incorrect. NOTE—On 1946-48 cars, inner wheel turning angle differs for right and left turns as shown.

1936-40 Steering Geometry

Car Model	Inner Wheel Angle①
1936-37 (All Models)	21¾-23¼°
1938 (All Models)	23½°
1939-40 (All Models)	22¼-23¾°

1941-48 Steering Geometry

Car Model	Inner Wheel① Right Turn	Left Turn
60S, 61, 62, 63 ('41-42)	24°42'	25°25'
67, 75 ('41-42)	23°6'	24° 7'
67, 75 Comm'l ('41-42)	23°6'	24° 7'
60S, 61, 62 ('46-48)	24°42'	25°25'
75, 75 & 76 Comm'l ('46-48)	23°6'	24° 7'

①—With outer wheel turned exactly 20°.

SERVICING (1936-39):—**Lower Control Arms.** Arms screwed directly on ends of mounting shaft. Must be assembled separately (spring seat and jack pad removed. To assemble, screw arms on shaft equally until distance on shaft between inner faces of arm eyes is 11" (1936), 10 15/16" (1937). Assemble spring seat and jack pad, tightening nuts securely. Distance between inner faces of arms at outer end must be 2⅜". On 1938 models, make certain that rubber seals are in place on bracket shaft at inner face of lower control arm ends before screwing arms on shaft. NOTE—Hardened bushings used at inner

CONTINUED ON NEXT PAGE

CADILLAC 1936-48 (C nt.)

ends of lower control arms on 1938 models only. 1939 LaSalle & Cadillac 39-61. Lower control arms are riveted on spring seat and rivets must be removed to dismantle arms for bushing or bracket renewal. Use bolts and nuts to secure spring seat to control arms when reassembling.

Knuckle Support Lower Pivot Pin:—Note position of threaded bushing in lower end of knuckle support on threaded pin before disassembling so it can be assembled in same position. With knuckle support positioned in lower control arm, screw threaded pin in front through arm and knuckle support bushings until tight (locking washer gripped under head), assemble locking washer and nut on rear end.

NOTE—On 1938 models, make certain that rubber seals are in place between knuckle support and inner face of lower control arm outer ends when installing pivot pin.

Knuckle Support Upper Pivot Pin:—Note position of threaded pin in support before disassembling so that it can be reassembled in same position. With knuckle support positioned in upper control arm, screw threaded pin in from rear through support and in plain bushing in front upper control arm. Screw rear threaded bushing in on pin and in rear control arm. Insert clamp bolts in control arm and knuckle support. Entire assembly should move up and down freely without binding.

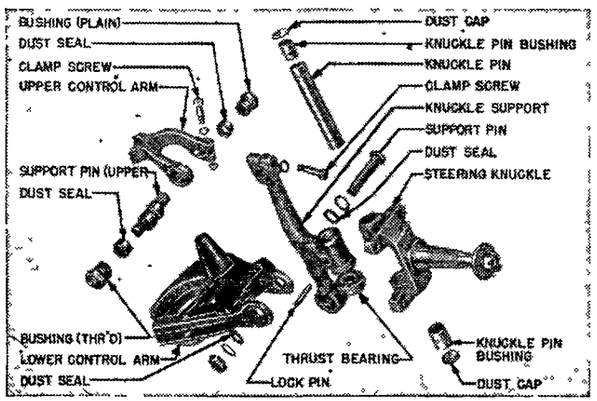

CADILLAC FRONT SUSPENSION

SERVICING (1940-48 Cars): Lower Control Arm and Knuckle Support Pin—Control arm mounted on inner frame bracket shaft by threaded bushings (bushings threaded on shaft and in control arms) with rubber seals on shaft. Shaft can be removed from control arms after bushings have been removed. Support pin at outer end of control arm is threaded through both control arms and bushing in lower end of knuckle support and has nut on rear end. Rubber seal is installed on support pin at front end of bushing (between knuckle support and front control arm).

Upper Control Arm Support Pin—This eccentric pin is threaded in bushings in each upper control arm and in upper end of knuckle support (rear bushing is threaded type and is screwed in control arm, front bushing is plain type and is locked in control arm by clamp bolt). A clampscrew in the upper end of the knuckle support locks the pin in the support to maintain caster and camber setting.

SPRINGS:—Part number is stamped on end coil of each spring. When installing springs see that insulator at top and bottom of each spring.

1936 Spring Specifications

Car Model	Part No.	Color Mark
50 5W	407558	
50 6W	407559	
60 (After 4008) 5W	1418331	
60 (After 4008) 6W	1413232	

1937 Spring Specifications

50,60 5W	1422058	Yellow
50,60 6W	1297819	Red
50,60 Comml.	1420986	Yellow

1938 Spring Specifications

50 5W (See Note)	1422058	Green
50 5W (Later Cars)	1427425	Yellow
50 6W (See Note)	1297819	Red
50 6W (Later Cars)	1427281	Aluminum
60 5W	1427425	Yellow
60 6W	1427281	Aluminum
50,60 Comml. (See Note)	1420986	Blue
50,60 Comml. (Later)	1413788	Brown

1938 Note—These springs used on first cars only with two ⅛" No. 1290142 shims. Interchangeable with later springs providing shims used with first type only (first springs were ¼" shorter).

1939 Spring Specifications

50,61 5W	1428427	Green
50,61 6W	1428428	White
50, 61 Comml.	1428429	Yellow

1940 Spring Specifications

50,52 5W	1428430	
50,52 6W	1428432	Green
50 Comml.	1428429	Yellow
60S,62 5W	1428431	None
60S, 62 6W	1428433	Pink
72 5W & 6W	1428432	Green

5W—Spare at Rear. 6W—Cars with Fenderwells.

1941 Spring Specifications

41-60S, 61, 63	1428431	None
41-62①	1428432	Green
41-62②	1428431	None
41-67, 75	1428433	Pink
41-62, 75 Comm'l.	1428429	Yellow

①—Before Engine Number 8340211.
②—After Engine Number 8340210.

1942 Spring Specifications

42-60S, 62	1428433	Orange
42-61, 63	1428432	None
42-67, 75	1428434	Pink
42-75 Comm'l.	1428429	Yellow

1946-47 Spring Specifications

60S, 62	1428433	Orange
61	1428432	None
75	1428434	Pink
75 Comm'l	1428429	Yellow

1948 Spring Specifications

61, 62 except Convertible	1428433	Orange
60S, 75, 62 Convertible	1428434	Pink
76 Comm'l	1428429	Yellow

NOTE—Frame height or spring height when installed on car should be 4½-5¼" (from top of lower spring seat to lower edge f frame side rail).

CHEVROLET KNEE-ACTION

MASTER MODEL FA (1936)
MASTER DELUXE MODEL GA (1937)
MASTER DELUXE MODEL HA (1938)

NOTE:—Kingpin and Floating Bushing (special oversize) data applies to Master Deluxe Models GA, HA (floating bushings standard equipment), and to Master models when original needle bearings replaced by bushings.

DESCRIPTION:—Same design as on Pontiac models (see Pontiac article for complete description and assembling directions for suspension unit).

1937. Kingpin design is new. Needle bearings have been discontinued and new type floating bushings are used (bushings free to turn within kingpin support).

CHECKING:—Manufacturer recommends that front wheels be removed and car supported on jacks or horses under front spindle at inner bearing cone to permit use of approved Chevrolet checking tools. Car weight must be on spindles when checks are made.

Suspension Unit Height:—Measure from bottom of kingpin support to bottom of brake flange plate. See table under Adjustment below for directions. If correct adjustment cannot be secured, remove adjusting plug, housing cover and spring, install knee-action spring checking tool, Part No. J-764, reassemble housing cover and adjusting plug, recheck height. If height is correct, spring is defective and should be replaced. If height is not correct, suspension unit is defective and should be replaced.

Kingpin Inclination:—7¾° crosswise (All Models). May be corrected by bending outer end of cross-member (kingpin support) if approved Chevrolet tools are used.

Camber:—¼° (All Models). Wrong camber dimension (after kingpin inclination checked and corrected) indicates that spindle is bent (replace Knee-action unit), or that kingpin bearings are worn (replace bearings).

Caster:—Kingpin caster 0°. Wheel caster effect secured by trailing wheel behind kingpin center. May be corrected by bending outer end of cross-member (kingpin support).

Toe In:—1/16-3/32". Check with car weight on wheels and roll car ahead at least one revolution before checking. Measure to chalk marks in center of tire tread, hub high, at rear, roll car ahead one half revolution, measure to same marks at front. Correct by loosening tie rod clamp bolts and changing length of rod.

Steering Geometry (Toe-out on Turns):—With outer wheel turned exactly 20°, inner wheel should be turned exactly 23°. Correct by replacing steering arms (no adjustment provided).

SERVICING:—To Remove Suspension Unit. Jack up car remove front wheel, remove two bolts and locking plate at bottom of front spring housing (radius rod bracket), turn unit outward, lift off brake assembly (hold radius rod to prevent it falling on floor). Remove steering arm nut, drive out steering arm with brass drift, remove kingpin lock pin. Remove dust

CONTINUED ON NEXT PAGE

CHEVROLET KNEE-ACTION (C nt.)

caps and locking rings from kingpin support yokes (at upper and lower ends). Drill ¼" hole in center f upper kingpin plug, insert punch through this hole, drive kingpin down until lower plug is driven out. Then use soft steel drift against lower end of kingpin, drive kingpin up to remove upper plug, remove kingpin (lower bushing is loose and will fall out). Remove suspension unit. Remove upper kingpin bushing.

Servicing:—Manufacturer recommends that no attempt be made to disassemble unit or make repairs other than replacement of springs, spring guide, adjusting plug, or housing cover (accessible after removing adjusting plug and cover at top of unit), or shock absorber units (bolted individually on front f housing).

To Install Suspension Unit:—Insert kingpin from below making certain that longest end from slot is up and that locking pin slot lines up with hole. Tap thrust bearing in place between upper support yoke and suspension unit knuckle with dust shield side up. Check clearance or endplay and install steel shim if greater than .006". Install kingpin bushings lining up oil grooves on outside with lubrication fittings on steering knuckles (upper bushing groove down, lower bushing groove up). Coat cork gasket with heavy oil or grease before installing on spindle, see that bearing spacer engages slot in spindle when assembling inner bearing cone. When installing radius rod, first screw bracket up tight on rod, then bring radius rod straight up without side motion, loosen bracket just enough to line it up with boss on front spring housing, place it in position on boss, install lock plate and two bracket bolts, tighten bolts securely. Check suspension unit height and adjust if required.

KINGPIN AND BUSHING SERVICING:—Replacement bushings are finished to size and no reaming required. Bushings should be free on kingpin and may be somewhat snug in support yoke. If new standard bushings are loose in support yokes, yokes should be reamed and special oversize replacement bushings (Part No. 603076) installed. Use special reamer KMO-108 to ream support yokes, install smaller pilot in lower yoke, insert reamer through top yoke and pilot, ream top yoke, then install larger pilot in top yoke, reverse reamer and ream lower yoke. Reamer will finish yoke to correct size for oversize bushings.

ADJUSTMENT:—**Suspension Unit Height.** Remove adjusting plug lockscrew and lock, remove plug, clean out the groove and fill with Permatex (this should be done whenever plug is disturbed), install adjusting plug and turn plug in until suspension unit height is correct (see table below). Adjusting plug must not be more than ⅛" above or below top edge of housing cover (if outside these limits, check spring and replace either spring or unit).

Suspension Unit Height

Car Model	Height
Chevrolet 1936 (Spare at Rear)	5⅜"
Chevrolet 1936 (Fender Wells)	4¾"
Chevrolet 1937-38	4⅞"

LUBRICATION:—Check level of lubricant in housing at 1000 mile intervals and keep housing full to l wer edge of filler plug hole. Use only G.M. Shock Insulation Fluid.

CHEVROLET 1939-48

Master Deluxe, JA (1939), KH (1940), AG (1941)
Special Deluxe, KA (1940), AH (1941)
All Pass. Car Models (1942 to 1948)

►**EXCESSIVE BUMPING CORRECTION (For Cars operated on rough roads or in heavy service):** Check front end to make certain that the lower control arm rubber bumpers are in place and replace any missing bumpers. Install heavy duty shock absorber valves (see Delco Parallel Cylinder Shock Absorber article for data) and if these measures do not correct complaints, heavy duty front springs may be installed (see Springs).

►**SUSPENSION UNIT REMOVAL NOTE:** Entire suspension unit assembly (consisting of frame crossmember and both control arm assemblies) may be removed from car as a unit for overhaul or replacement if desired. See Servicing data below.

DESCRIPTION: "S. L. A." (short and long arm) or parallelogram type similar to design used on other car models. Shock absorbers are new 'parallel cylinder' type and are assembled as unit with upper control arms (arms permanently assembled on shaft and welded together). Neoprene seals are used at inner and outer ends of lower control arm and outer end of upper arm.

CHECKING & ADJUSTMENT:—Check the following points first before checking or adjusting front suspension unit.

Tire Inflation: Check for correct pressures before checking front end specifications:
Std. 6.00x16 Tires (Front) 26 lbs. (Rear) 28 lbs.
Optl. 6.70x15 Tires (Front & Rear) 24 lbs.
Wheel Runout—Check and adjust front wheel bearings. Check wheel for tire and rim runout and eccentricity. Mark tire midway between high and low spots (mean point) and place this mark at top (vertically) when checking Camber, at side (horizontally) when checking Toe In.
Steering Gear & Connections—Check mounting bolts and tighten if necessary. Check tie rod ball and socket joints for excessive looseness.
Frame Height—Install special gauges at front and rear ends of car to level frame when checking or bounce car up and down several times to insure that it is in normal position. See Spring data for spring height check to detect sagging or unequal springs. NOTE—Make all checks with car weight on wheels (curb weight—car ready for road but no load).

Kingpin Inclination:—4¾° plus or minus ½°.

Caster:—0° plus or minus ½°. Adjusted by turning knuckle support eccentric upper pivot pin (same adjustment same as for Camber. See Camber (below).

Camber:—Neg. ¼° ± ½° (wheel tilts in at top).
Adjustment—Remove lubricant fitting on knuckle support upper pivot pin front bushing, loosen clamp bolt in upper end of knuckle support which clamps pivot pin. Insert ¼" Allen wrench through lubricant fitting hole in bushing to engage pivot pin, turn pivot pin clockwise to increase caster, counter-clockwise to decrease caster (pin is eccentric and this same movement will change Camber from minimum to maximum every half turn of the pin) until both caster and camber are correct within limits given above, tighten clamp bolt and replace lubricant fitting. One half-turn of pivot pin will change caster angle 39' and change camber angle from 0° to 1°2' depending upon positi n of pin.

Toe-In: (1939-42) 0" to 1/16" (1946-48) 0" to 1/8".
Adjustment—Loosen the clamp bolt at each end and turn left hand (short) tie rod. When tightening clamp bolts, make certain that both tie rod ends are in alignment with the ball studs.
NOTE—Right hand (long) tie rod is not adjustable.

Steering Geometry (Toe out on Turns)—Outer wheel turned in 20°, Inner wheel turned 24° plus or minus 2°. Not adjustable (replace steering arm).

SERVICING:—**Suspension Unit Assembly Removal**—Remove Front Fenders, Radiator, and Radiator Grille Assembly as a unit (see Chevrolet Shop Notes Car Model Section for data). Remove front bumper disconnect stabilizer from frame horns, remove pitman arm from steering gear. Take out bolts holding front cross-member to frame side rails, slide suspension unit assembly off over frame side rails at forward end. Install in same manner.

Upper Control Arm Pivot Pin:—To remove pin, raise car with chain hoist, place jack under spring seat so that it takes weight of car, remove wheel and tire assembly. Unscrew rear (threaded) bushing, remove front bushing clamp bolt, remove bushing. Loosen clamp bolt in upper end of knuckle support, unscrew pivot pin (use Allen wrench).

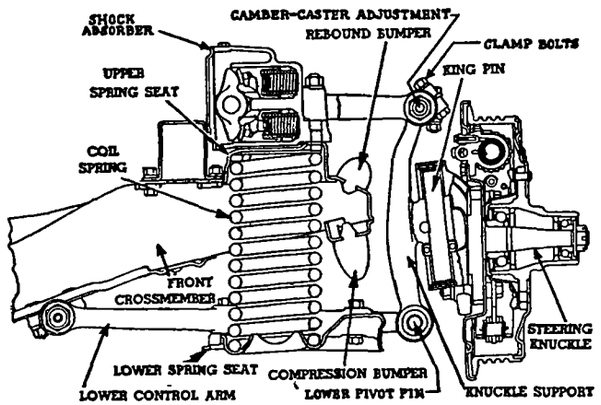

Assembly—Place Neoprene seal over end of each upper control arm (so seals will be out of the way while installing pivot pin). With knuckle in upper arm yoke, enter pivot pin through eye in control arm and screw pin in knuckle support (with Allen wrench socket hole in pin toward front of car) until larger diameter center section is centered in knuckle support. Hold knuckle support centered in control arm, thread rear bushing in control arm eye and on pivot pin, tighten bushing securely and make certain that support still centered in control arm yoke. Screw front bushing in on pivot pin until clearance between head of bushing and face of control arm is .020-.040". Use a wire hook to pull Neoprene bushings down over the ends of control arm so that they seat on pivot pin. Install front bushing clamp bolt. Adjust Caster and Camber (see instructions above).

Lower Control Arm Pivot Pin:—To remove, raise car install jack stand under inner side of lower spring seat, remove wheel and tire assembly, unscrew pivot pin (use socket wrench, remove pin through

CONTINUED ON NEXT PAGE

CHEVROLET 1939-48 (C nt.)

front arm), turn wheel to extreme utward position (will prevent knuckle support moving out at bottom), install block between upper control arm and cross-member to raise lower end of knuckle support clear of control arm yoke, unscrew bushing from support.

Assembly—Screw bushing securely in knuckle support from front end. Place new Neoprene seal on end of front lower control arm (so that it will be out of the way while installing pivot pin), place second seal on exposed end of bushing at rear of knuckle support. Thread pivot pin through front control arm, knuckle support bushing, and rear control arm while holding knuckle support centered in control arm yoke (if threads on pin and control arms do not index correctly, use 'C' clamp to compress arms slightly until pin enters rear control arm). Tighten pin securely. Use wire hook to pull Neoprene seal down over end of control arm so that it is seated on pivot pin between control arm and ahead of bushing, slip second seal off bushing so that it is seated on pivot pin.

Lower Control Arm Shaft (Frame Support):—To remove, disconnect stabilizer link at lower spring seat, remove front spring (see Spring Removal below), remove lower control arm pivot pin (see directions above), remove lower control arm assembly. Place assembly in vise, remove front and rear control arm shaft bushings. Take out two bolts mounting front control arm on spring seat, remove arm and shaft.

Assembly (1939-40)—Install retainer cups on ends of shaft with cupped shaped ends out, install new Neoprene seal on shaft next to each retainer, install shaft in control arm assembly with letter 'F' (forged on one bracket) toward front of car, bolt front control arm securely to spring seat (screw pivot pin through both control arm eyes first to maintain alignment while spring seat bolts are being tightened). Hold shaft centered between control arms, screw front and rear bushings on shaft and in control arms, tighten bushings securely, install assembly on car.

Assembly (1941-48)—Install Neoprene seal on end of shaft so that seals seat in recess at shoulder on shaft, install shaft in control arm assembly with letter 'F' (forged on one bracket) toward front of car. Install in same manner as directed above.

Front Stabilizer Shaft:—To remove, disconnect links by removing nut on upper end of link bolts and withdrawing bolts, then remove bolts from frame mounting brackets. To install stabilizer, make certain that steel spacer installed between frame and bracket, bolt bracket loosely to frame, install links, tighten bracket bolts only with links connected and car weight on wheels.

SPRINGS:—Removal—Disconnect stabilizer link from lower spring seat, support weight of car on stand jack at inner side of lower spring seat, remove cotter pins and nuts from lower control arm shaft bracket bolts, drive out bolts and install long drift punch through bolt hole in bracket and cross-member to maintain alignment, raise car with chain hoist to remove spring pressure. Remove jack from beneath lower control arm allowing control arm and spring seat to drop down to free spring.

Assembly—Make certain that spring installed with ground end (flat surface) up and that lower end-coil f spring fits in recess in spring seat. Reverse removal directions given above.

Heavy Duty Springs—Use only for severe operation. Will prevent spring bottoming and provide more clearance at front end. Install No. 5245543 to correct severe bumping, No. 5246233 in extreme cases. **NOTE**—1941 Std. springs are ⅛" longer than 1939-40 type and 1942 spring 1/16" longer than 1941 type to compensate for added weight of car.

Spring Specifications

Car Model	Spring Part No.	Color Mark
1939-41 (All)	3653059	White
1940-48 (All) Std.	3664086	Green
1940-47 (All) Optl.	5246233	Blue

Spring Shim Note—To compensate for variation in springs, one shim should be used with all springs marked by green dot on top coil, two shims with springs marked by yellow dot on top coil.

NOTE—Shims are Part No. 599810 (1/16" thick).

SPRING HEIGHT CHECK: To check spring height, insert steel scale inside spring with upper end of scale against center of upper spring seat, place straight edge diametrically across lower face of lower spring seat (line straight edge up with drain hole in seat). Reading on scale at straight edge should be 9 29/32" plus or minus 1/16" on 1946-47 cars.

Spring Height Correction—Spring height can be increased by installing **not more than two** Part No. 599810 Front Spring Shims between top of spring and upper spring seat. These shims are 1/16" thick. CAUTION—Use of more than two shims will cause spring coils to bottom before shock is taken up by rubber bumper.

CHRYSLER 1936

CHRYSLER AIRSTREAM SIX, MODEL C7 (1936).
CHRYSLER AIRSTREAM EIGHT, MODEL C8 ('36).
DE SOTO AIRSTREAM SIX, MODEL S1 (1936).

CHECKING AND ADJUSTMENT:—Check these points first:

Tire Inflation—28 lbs. (all models).

Frame Height—Should be 7¼-7⅜" measured from center of lower control arm yoke pin (knuckle support lower pivot pin) to top of frame cross-member. Allowable variation ⅛" plus or minus but both sides of car must be equal within ⅛". Adjusted by inserting spacer washer Part No. 657770 under spring on driver's side.

Toe In:—Measure to marks on center of tire tread hub high, at rear, roll car ahead ½ revolution, repeat measurement. Toe in should be 0-⅛".

To Adjust—Loosen tie rod end clamp bolts, set long tie rod at exactly 31 7/32", adjust length of shorter tie rod for toe in. Ball studs must be centered in tie rod slots when tightening clamp bolts to assure sufficient angular rotation of tie rod for extreme turns.

Caster:—Should be 1½°. Controlled by distance upper pivot pin screwed in bushing in upper (shock absorber) arm.

To Adjust—Loosen clamp bolt in knuckle support upper end, turn eccentric pin (hexagonal head at rear) in or out of bushing until clearance is exactly ⅜", tighten clamp bolt, check caster. This adjustment affects camber and should be made first.

Camber:—Should be +¼° and within limits of —¼° to +½°. Controlled by position of eccentric shoulder of upper pivot pin in knuckle support.

To Adjust—Loosen clamp bolt at upper end of knuckle support, and with correct Caster (⅜" clearance—see above), turn eccentric pin less than ½ rev lution in either directi n, recheck camber. Total adjustment obtained by ½ revolution of pin. Caster affected only slightly by this adjustment. Toe in is changed and must be checked after Camber adjustment made.

CONTROL ARM ASSEMBLY:—First screw knuckle support lower pin in support centrally (equal projection at each end), drive in taper lock pin and peen in place in support. Center support in lower control arms, screw threaded bushings on pivot pin and in control arm eyes loosely until shoulders contact outer faces of control arm. Center frame bracket shaft or bar in eyes on inner end of control arm. Screw threaded bushings on bar and in control arm eyes loosely until shoulders contact outer faces of control arm. Tighten all bushings with approximately 100 lbs. force on 24" lever. Tighten spring seat bolts securely, striking bolt heads with 2 lb. hammer to seat serrated washers. Check assembly to see that it moves up and down freely without binding.

SPRINGS:—See table below for type used on each car. If frame height not correct, or dimensions on right and left sides of car vary by more than ⅛", replac springs or install spacer between lower end of spring and silencer on low side.

Car Model	Spring Part Number Std.	With Fenderwells
Chrysler C7 ('36)	658462	658464
Chrysler C8 ('36)	660722①	660724②
7 Pass. Cars	660724	660726
DeSoto S1 ('36)	658464	

①—Replaced by 658464 (Serial No. 6714558 Up).
②—Replaced by 663466 (Serial No. 6714360 Up).

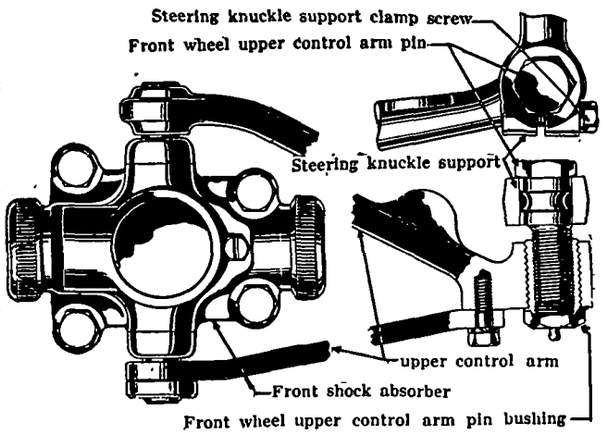

CHRYSLER 1937-38

Chrysler Royal, C16 (1937), C18 (1938)
Chrysler Imperial, C14 (1937), C19 (1938)
Chrysler Cust. Imperial, C15 (1937), C20 (1938)
De Soto, Model S3 (1937), S5 (1938)

1937 TYPE:—Design changed so that Shock Absorber is not incorporated in upper control arm (Direct Acting type used). Threaded bushing at outer end of upper control arm has been discontinued and eccentric bushing is threaded on upper control arm outer end and seated in upper end of knuckle support (locked by clamp bolt).

1938 TYPE:—Design same as type used in 1937 except for the following points:

CONTINUED ON NEXT PA E

CHRYSLER 1937-38 (C nt.)

Control Arm Seals:—Rubber seals now used at all moving points on upper and lower control arms (see Control Arm Assembly below).

Shock Absorber Mounting:—Linked to bolt at midpoint of upper control arm at top, outer end of lower control arm at bottom, this mounting results in reduced shock absorber piston movement.

Upper Control Arm Mounting:—Pivot bar at inner end of upper control arm bolted directly to frame bracket (take out pivot bar bolts to remove control arm). Control arm mounted on bar by threaded bushing at rear, plain bushing (locked by clamp bolt in control arm) at front. Both bushings threaded on pivot bar and have lubricant fittings.

CHECKING & ADJUSTMENT:—Car weight must be on wheels. Adjust front bearings and check these points first:

Tire Inflation—Inflate evenly to correct pressure.

King Pin Inclination—4¾-6° crosswise (all mod'ls).

Frame Height—Measure from underside of lower spring seat to top surface of frame cross-member on center line of spring. Should be 9¾-9⅞" (S5, C14, C18), 9½-9⅝" (C19), 10¼-10⅜" (C20), 10½-10⅝" (C15), 9⅞-10" (C16, S3 except 7 Pass.), 10 1/16-10 3/16" (C16, S3, 7 Pass.) plus or minus ⅛" but must be equal within ⅛" on both sides. Correct by installing special spacer washer between spring and silencer in lower spring seat.

Toe In:—Measure to marks at center of tire tread at rear of wheel and hub high, roll car ahead ½ wheel revolution, repeat measurement to same marks at front. Toe-in should be 1/16" (limits 0-1/8").

To Adjust (Except C15, C20). Loosen clamp bolts and first set longer tie rod so that length between ball end centers is exactly 30 15/16" (C14), 31 7/32" (C16, S3), 31⅝" (C18, S5), 30 25/32" (C19). Then adjust toe in by changing length of shorter tie rod in same manner.

To Adjust (C15, C20). Loosen tie rod bolts and turn both tie rods equally. Tie rod lengths must be equal after toe in adjustment completed. Correct by lengthening short rod and shortening long rod equal amounts.

NOTE—When tightening tie rod clamp bolts see that both ball studs centered in rod end slots to allow necessary angular rotation of the tie rod in operation. With wheels straight ahead, steering gear pitman arm must be approximately parallel to center-line of car and steering wheel center spoke must point straight down. Correct by removing steering wheel and correcting position.

Caster:—Should be 1½°. Controlled by distance knuckle support upper eccentric pin screwed on threaded end of upper control arm. Caster limits are ½-2½° (except C15, C20), 1-3° (C15, C20) and caster should not require adjustment unless control arm assembly has been dismantled.

To Adjust—Loosen clamp bolt in upper end of knuckle support, turn eccentric bushing (hexagonal head at rear) in or out. Bushing must not be turned in until it binds on control arm (at least one thread must be exposed) and caster must be set exactly (no variation). Tighten clamp bolt, check Camber.

Camber: Should be +¼° (limits —¼° to +½°).

To Adjust—Adjusted in same manner as caster except that eccentric bushing must not be turned more than ½ revolution from point where correct caster setting secured (½ revolution provides entire range of adjustment) and greater movement will disturb caster setting. Recheck toe in.

Steering Geometry:—With outer wheel turned exactly 20°, inner wheel should be turned exactly 22°40' (C18, S5 except 7 Pass.) 22°50' (C18, S5 7 Pass. models), 22°0' (C19), 22°15' (C20). No adjustment

CONTROL ARM ASSEMBLY:—Lower Control Arm. Center lower control arm pin in lower end of knuckle support, drive in tapered locking pin, peen in place. Assemble complete lower assembly (knuckle support, control arms, spring seat, inner shaft) loosely. Hold knuckle support centered in control arms, turn bushings at front and rear in loosely, hold inner support shaft centered in control arm, turn bushing at each end in loosely, tighten all bushings with 100 lb. force on 24" bar. Tighten spring seat bolts and seat serrated washers by srikking bolt heads with 2 lb. hammer. Check assembly to see that it moves freely without binding.

Upper Control Arm—Mounted at inner end on threaded pin which is spot welded in bracket. Should be removed by taking out bracket bolts. To assemble knuckle support on control arm, insert threaded outer end of control arm in knuckle support hole, turning bushing in on control arm end from rear, install clamp bolt in support.

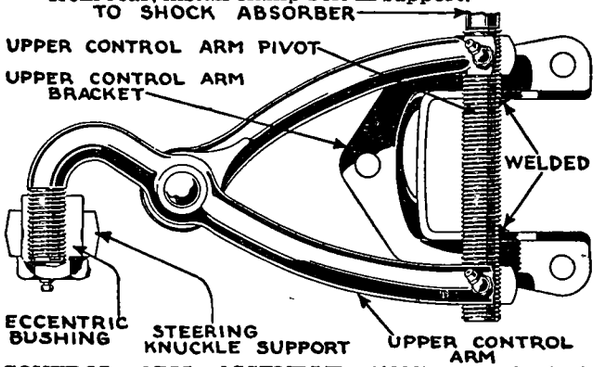

CONTROL ARM ASSEMBLY (1938):—Serviced in same manner as above (except upper control arm frame mounting—see description above). See that seal is in place on outer end of upper control arm before installing eccentric bushing (seal fits over end of bushing), on knuckle support lower pin (at each side of support), and on each end of frame bracket shaft at inner ends of lower control arms before assembling the lower arms and spring seat.

SPRINGS:—See table below for type used on each car. If frame height not correct, or dimensions on right and left sides of car vary by more than ⅛", replace spring or install spacer under low spring.

Car Model	Spring Part Number Std.	With Fenderwells
Chrysler C16 ('37)	670002	670004
7 Pass. Cars	660723	660725
Chrysler C14 ('37)	658465	660724
Chrysler C15 ('37)	674532	674534
Chrysler C18 ('38)	670002	----
7 Pass. Cars	670004	----
Chrysler C19 ('38)	670004	663466
Chrysler C20 ('38)	685553	674534
Extreme Duty	688753	688755
DeSoto S3 ('37)	670002	----
7 Pass. & Limo.	660723①	----
DeSoto S5 ('38)	670001	----
7 Pass. & Limo.	670004	----

①—Replaced by No. 660722.

CHRYSLER 1939

CHRYSLER ROYAL, MODEL C22 (1939)
CHRYSLER IMPERIAL, MODEL C23 (1939)
CHRYSLER CUSTOM IMPERIAL, C-24 (1939)
DE SOTO, MODEL S6 (1939)
DODGE LUXURY LINER, MODEL D11 (1939)
PLYMOUTH, STD. & DELUXE P7, P8 (1939)

TYPE:—Design used on Chrysler and DeSoto models is same as on corresponding 1938 cars (see preceding article). This design modified for Dodge and Plymouth models as follows:

Dodge, Plymouth Models (except 7 Pass.)—Lower coil of spring not ground flat and spring seat on lower control arm provided with recess to engage spring end (silencer formed to fit spring seat). Spacers cannot be installed to correct frame height on these models and springs must be replaced. Rubber bumpers mounted on control arms (upper bumper at shock absorber mounting stud, lower bumper on spring seat adjacent to spring.

Dodge, Plymouth (7 Pass.)—Design same as for other Chrysler models (spring lower coil ground and spacers may be installed).

CHECKING & ADJUSTMENT:—Car weight must be on wheels. Adjust front wheel bearings, inflate all tires evenly to correct pressure and check following points first:

Frame Height (Chrysler, De Soto, Dodge & Plymouth 7 Pass.):—Measure from underside of spring seat on lower control arm to top of frame cross-member on center-line of spring. Should be 9¾" (Chrysler C22, C23, De Soto), 10¾" (Chrysler C24), 9⅝-9⅞" (Dodge 7 Pass.), 9⅝-9¾" (Plymouth 7 Pass.). Allowable variation between right and left side of car is ⅛". Adjust by installing spacers between lower end of spring and silencer.

Dodge, Plymouth (except 7 Pass.)—Frame height measurement not made in same manner as on other models. Measure from top of spring seat on lower control arm (near spring seat inner bolt) to lower plate of front cross-member at frame side rail. Should be 6-6¼" (Dodge), 6-6⅛" (Plymouth). Allowable variation between right and left sides of car is ⅛". Adjust by replacing springs (not possible to install spacers).

Kingpin Inclination:—4¾-6° (Chrysler C22, C24, De Soto—Same as 1938), 5¾-7° (Chrysler C23), 5¼-6½° (Dodge, Plymouth except 7 Pass.), 4¾-6° (Dodge, Plymouth 7 Pass.).

Toe In:—1/16" (0-⅛") for all models—same as 1938. When checking toe in, measure to marks on center of tread at rear of wheel and hub high, roll car ahead ½ wheel revolution and repeat measurement to same marks at front.

Adjustment (except C24)—Set long tie rod first so that length between ball centers is 31⅝" (Chrysler C22, De Soto S6), 30 25/32" (Chrysler C23), 31 11/16" (Dodge, Plymouth), then adjust short (left hand) tie rod for correct toe in.

Adjustment (Chrysler C24)—Center steering. Adjust both tie rods equally for toe in. See that tie rod lengths equal after adjusting. Correct by lengthening short rod and shortening long rod equal amounts.

CONTINUED ON NEXT PAGE

CHRYSLER 1939 (C nt.)

NOTE—When tightening tie rod clamp bolts, see that both ball studs centered in rod end slots to allow for angular rotation of tie rod in operation.

Caster:—Limits are ½-2½° (Chrysler C22, De Soto S6), 1-3° (Chrysler C24), Neg. ½°-Pos. 1½° (Chrysler C23, Dodge & Plymouth except 7 Pass.), Pos. ½° —Pos. 2½° (Dodge & Plymouth 7 Pass.). Controlled by amount which knuckle support upper pivot bushing (eccentric camber adjustment) turned in on upper control arm. Not adjustable and should not require attention unless disassembled. See Camber Adjustment.

Camber:—Should be Pos. ¼° (Limits Neg. ¼° to Pos. ¾°) for Chrysler C22, C24, De Soto S6), 0° (Limits Neg. ¼° to Pos. ½°) for Chrysler C23, Dodge & Plymouth except 7 Pass. Plus ¼° (Limits Neg. ¼° to Pos. ¾°) for Dodge & Plymouth 7 Pass.

Adjustment—Same as for 1938 models. Turn eccentric bushing on knuckle support upper pivot pin not more than ½ revolution in either direction from point where correct caster secured (complete range of adjustment secured in ½ revolution).
NOTE—Eccentric bushing must not be turned up so that it binds on upper control arm (at least one or two threads on arm must be exposed beyond end of bushing).

CONTROL ARM ASSEMBLY:—Upper and lower control arms serviced in same manner as on 1938 car models (see preceding article) except as follows:

Dodge & Plymouth Models—When the upper and lower control arms are being assembled, check the distance from the front face of front lower control arm to center line of mounting holes in shaft bracket—should be 2 5/32" (except 7 Pass.), 2¼" (7 Pass.). Also check distance from rear face of rear upper control arm to center line of shaft mounting hole—should be 1 3/16" (except 7 Pass.), 1 9/16" (7 Pass.).

SPRINGS:—If frame height not correct and equal for both sides of car within ⅛" (see above), install spacer between spring and silencer at lower end (types with lower coil ground flat only) or replace spring. Spacer #657770 installed at lower end of spring on drivers side of car (top of spring on types with lower coil not ground flat).

1939 Spring Specifications

Car Model	Spring Number
Chrysler C22	670003
De Soto S6	670002
De Soto Taxicab	660722
Chrysler, De Soto 7 Pass	670004
Chrysler, De Soto 18" Wheels	661381
Chrysler, De Soto 7 Pass. & 18" W	661383
Chrysler C23	663466
Chrysler C23—Fender wells	660724
Chrysler C24	685553
Chrysler C24 Fender Wells (First)	674534
Chrysler C24 Fender Wells (Later)	852873
Dodge Spec. D11	695233
Dodge De Luxe D11	695234
Dodge 7 Pass	670003
Dodge 18" or 20" Wheels	695693
Plymouth P7, P8	695232
Plymouth 7 Pass	670003
Plymouth 18" or 20" Wheels	695692

CHRYSLER 1940-48

Chrysler 6 & 8, All Models (1940 to 1948)
De Soto, All Models (1940 to 1948)
Dodge, All Models (1940 to 1948)
Plymouth, All Models (1940 to 1948)

TYPE:—Independent 'parallelogram' type with coil springs. Design same as type used on previous models except for new spring design (all models) and new control arm design (1941 & later models) as follows:

Springs (1940 On)—On all Chrysler 6, De Soto Dodge, Plymouth models (except 7 Pass.), lower end of front spring is not ground flat and must be installed in recess formed in lower spring seat. On all 7 Pass. models, and on Chrysler Eights, both ends of spring are ground flat and lower spring seat is also flat. Springs are not interchangeable for this reason.

Upper Control Arm & Pivot Pin (1941 On)—Arm is new design one piece type with forked outer end and separate pivot pin screwed in eyes in forked outer end of arm. New type eccentric bushing installed on pin within fork for steering knuckle support. See Control Arm service data below.

CHECKING & ADJUSTMENT:—Before making adjustments, check wheel and tire balance and run-out, front wheel bearing adjustment and king pin bushing clearance, steering gear adjustment, and shock absorbers. See that springs and shock absorbers in normal position (grasp bumper and work front end of car up and down several times). Then check following points first:

Frame Height—With car standing on level floor, measure from center of lower control pin perpendicularly to floor at each end of arm (frame mounting shaft at inner end, knuckle support lower pivot pin at outer end). Measurement at outer end should be approximately ½" less than inner end and this difference between the two measurements must be equal on both sides of the car within ¼". If heights are not correct and not equal on both sides of car within ¼", install spacer on top of spring on low side of car or replace spring (see Spring data).

1940-41 Note—Use tool C-592 to measure distance from lower face of frame front cross-member lower plate (measure through hole in lower flange of frame side rail) to dimple on lower spring seat directly below this point. Distance should be 3½" (all 1940 models), 3⅜" (1941 models). Correct by installing spacer on low spring or replacing spring.

Tire Inflation (1940-47): Check and inflate to 28 lbs. front and rear (all models) except as follows: Chrysler Six, DeSoto, Dodge, Plymouth 7 Pass. models—30 lbs. (32 lbs. with larger 18" wheels).

Tire Inflation (1948): Check and inflate to correct pressure for each type tire (below) before checking front end specifications.
All Cars with Std. Tires—28 lbs. (except De Soto & Dodge long-wheelbase cars with 6.50x16 Tires—30 lbs.).
All Cars with Super-Cushion Tires—24 lbs.

Kingpin Inclination: 4¾-6° crosswise (all models).
NOTE—Car weight must be on wheels when checking adjustments.

Caster:—Negative 1° to Positive 1° (all models). Not adjustable. Controlled by distance knuckle support upper pivot pin bushing (eccentric camber adjustment) turned in on upper control arm. See Camber adjustment following.

Camber:—Positive ¼° preferred (0° to ¾° permissible) for all models. Correct kingpin inclination before adjusting camber.

NOTE—Special tool (narrow wrench designed to fit between knuckle support and upper control arm fork so as to engage eccentric bushing) must be used for Camber adjustment. This tool is No. C-611 (Chrysler Six, DeSoto, Dodge, Plymouth—except 7 Pass Models), C-619 (Chrysler Eight and all other 7 Pass. Models).

To Adjust—Loosen clampscrew in upper end of knuckle support, turn eccentric bushing in upper end of knuckle support not more than ½ revolution from place where correct caster is secured (bushing eccentric and entire range of adjustment secured in ½ turn). Bushing must not be turned so as to bind on upper control arm. On 1940 models, distance from shoulder on arm to rear of knuckle support should be ⅝" (9/16"-¾" permissible).

Toe-In: (1940-41) 0-⅛" (1942 On) 0-1/16". To check toe-in, set front wheels straight ahead, measure between center of tire treads, hub high, at front and rear of wheels.

To Adjust—Loosen clamp bolts on each tie rod (long rod right side, short rod left side), turn tie rods equally. Before tightening clamp bolts, make certain that ball studs at each end of rod are against same side (to permit angular rotation of rod on ball studs when making turns), and see that clamp bolt on inner (left) end of long tie rod is beneath the rod (to prevent interference on turns).

CAUTION—Make certain that steering wheel spokes in correct position and that steering gear roller is on 'high' mid-point of worm with wheels in straight ahead position. Steering wheel and pitman arm are located by master serrations on shafts and wheel position can be corrected only by adjusting tie rods (lengthen one rod, shorten other rod equally).

Steering Geometry (Toe-out on Turns)—With outer wheel turned exactly 20°, inner wheel should be turned exactly as listed below. No adjustment provided. Check for bent steering arms if incorrect.

Steering Geometry

Car Model	Inner Wheel①
1940-42 Chrysler 6 & De Soto exc. 7 Pass	22° ± 1°
1940-42 Chrysler 6 & De Soto 7 Pass	21½° ± 1°
1940-42 Chrysler 8	21½° ± 1°
1940-42 Dodge & Plymouth exc. 7 Pass	22° ± 1°
1940-42 Dodge & Plymouth 7 Pass	21½° ± 1°
1946-48 All Models	22½°

①—With Outer Wheel turned exactly 20°.

SERVICING:—Steering Knuckle & Kingpin Bushings—To remove, remove wheel and hub, block brake pedal, remove nuts fastening brake support to steering knuckle, remove steering arm from knuckle, lift complete backing plate & brake shoe assembly off and hang up on frame (Caution—assembly must not be allowed to hang on flexible brake tube, on Chrysler Eights, brake tube must be disconnected before assembly can be removed and lines must be bled when reconnected). Drive out kingpin taper lockpin. Drive punch into kingpin upper oil seal disc and pry disc out. Use soft brass drift to drive kingpin down which will force out lower oil seal disc, remove knuckle. Pull upper bearing out toward bottom (use puller C-328—bushings used at this point on Dodge & Plymouth except 7 Pass.—all 7

CONTINUED ON NEXT PAGE

CHRYSLER 1940-48 (C nt.)

Pass. models have roller bearing at top), pull lower bushing with same tool (roller bearing used at lower end on Chrysler Eight only). Install new lower bushing and line-ream with special tool using pilot in place of upper bearing (on Dodge and Plymouth, install upper bushing from top and line up oil hole with oil hole in knuckle. Install all roller bearings with trademark facing out (up on top bearing, down on lower bearing) and see that oil hole lines up with oil hole in knuckle. Use new seals, install seals with convex side in toward kingpin. Use a blunt drift to seat seals securely. When using welch plug type seals, stake seal in place after installation. Spring steel type seals need not be staked.

Upper Control Arm & Bushings (1940):—Same design as used on previous models with rubber seal on each end of frame bracket mounting shaft and on outer end of control arm at knuckle support bushing. When assembling control arm, center-line of rear mounting bolt hole in shaft should be 1" (Chrysler Six, DeSoto, Dodge, Plymouth except 7 Pass Sedans), 1 5/32" (Chrysler Eight & all 7 Pass. Sedans) to rear of front face of outer end of control arm. Knuckle support bushing should be turned in on arm until distance from rear face of knuckle support to shoulder on control arm is 5/8" (9/16-3/4").

Upper Control Arm & Bushing (1941 On): New type with forked outer end and separate pivot pin. Ordinarily serviced as complete assembly with frame mounting pivot bar (same design as 1940) but new pivot bar and bushings can be installed as follows: Use new bushings when installing pivot bar and use special spreader tool C-608 to maintain correct control arm spread while bushing being installed. Install pivot bar (with seal on each end of bar) in control arm, install spreader tool on inner ends of control arm and bolt pivot bar to tool using two capscrews and nuts (CAUTION—Spreader tool has two sets of mounting holes to accommodate all sizes of pivot bars—make certain that correct holes used). Make certain that spreader tool jaws seat firmly against inner faces of control arm ends, expand tool until it is just snug in arm, then expand tool so that arms spread exactly 1/16" from 'at rest' position. Start bushings on both ends of pivot bar, lubricate bushings with tapping compound or other suitable lubricants (bushings cut own threads), turn bushings in until shoulder contact surface of control arms, tighten bushings to at least 165 ft.lbs. Remove spreader tool, check to see that pivot bar moves freely before installing control arm on car. With pivot bar correctly installed, distance from center-line of pivot bar rear mounting bolt holes to center-line of control arm should be 1 5/16".

CAUTION—Do not rotate bar (will change setting).

Knuckle Support Upper Pivot Pin—Consists of a bolt threaded through both eyes of upper control arm from rear with nut on forward end. Seals are installed on pin at each side of eccentric bushing which is threaded on pin within control arm fork (bushing is clamped in upper end of knuckle support by clampscrew). With pin installed, over-all width of control arm fork (from front face of front eye to rear face of rear eye) should be 3 1/8" and eccentric bushing should be centered in fork.

Lower Control Arm & Bushings:—Control arms and spring seat are riveted assembly. Bushings at inner end (frame connection) are self-threading type and new bushings should be used when a new control arm assembly is installed as follows:

Control Arm Shaft Bushings—Special tool C-594 must be used to maintain control arm alignment when bushings installed. Insert bracket shaft in control arm, install special tool so that it engages legs of control arm and studs on tool enter shaft mounting bolt holes, install nuts on studs and tighten securely. Tool will position arm correctly so that rear face of arm is 2 5/32" (Chrysler Six, DeSoto, Dodge, Plymouth except 7 Pass. Sedans), 2 7/32" (Chrysler Eights and all 7 Pass. Sedans) in back of rear shaft mounting bolt hole center-line. Start both bushings on shaft, use lubricant such as tapping compound and turn bushings in until bushing shoulders contact faces of control arms (bushings will cut own thread in control arm bosses), tighten bushings with 165 ft. lb. force. Remove tool and make certain that shaft pivots freely in arms.

Knuckle Support Lower Pivot Pin & Bushings—Pin should be inserted through rear arm and is locked by nut and cotter pin on forward arm. To assemble control arm and knuckle support, see that bushing installed in knuckle support with head toward rear, position knuckle support between control arms so that distance from rear face of support to rear face of support pin boss on rear arm is exactly 15/16" (Chrysler Six, DeSoto, Dodge, Plymouth except 7 Pass. Sedans), 1 1/32" (Chrysler Eights and all 7 Passenger Sedans).

SPRINGS:—Springs used on Chrysler Six, DeSoto, Dodge, Plymouth (except 7 Pass. Sedans) do not have lower end coil ground flat and must be installed with spring end fitted into recess formed in lower spring seat (frame height will be incorrect if spring not properly installed). On Chrysler Eights and on all 7 Pass. Sedans, both ends of springs are ground flat and lower spring seat is also flat. When installing springs on all cars, see that silencer installed on lower end of all springs (in spring seat), and on upper end of spring (in seat in cross-member). If spacers used, these should be installed between upper end of spring and upper silencer.

Spring Identification Note—Part number stamped on all springs (last digit of number indicated by like number of grind marks).

CONTINUED ON NEXT PAGE

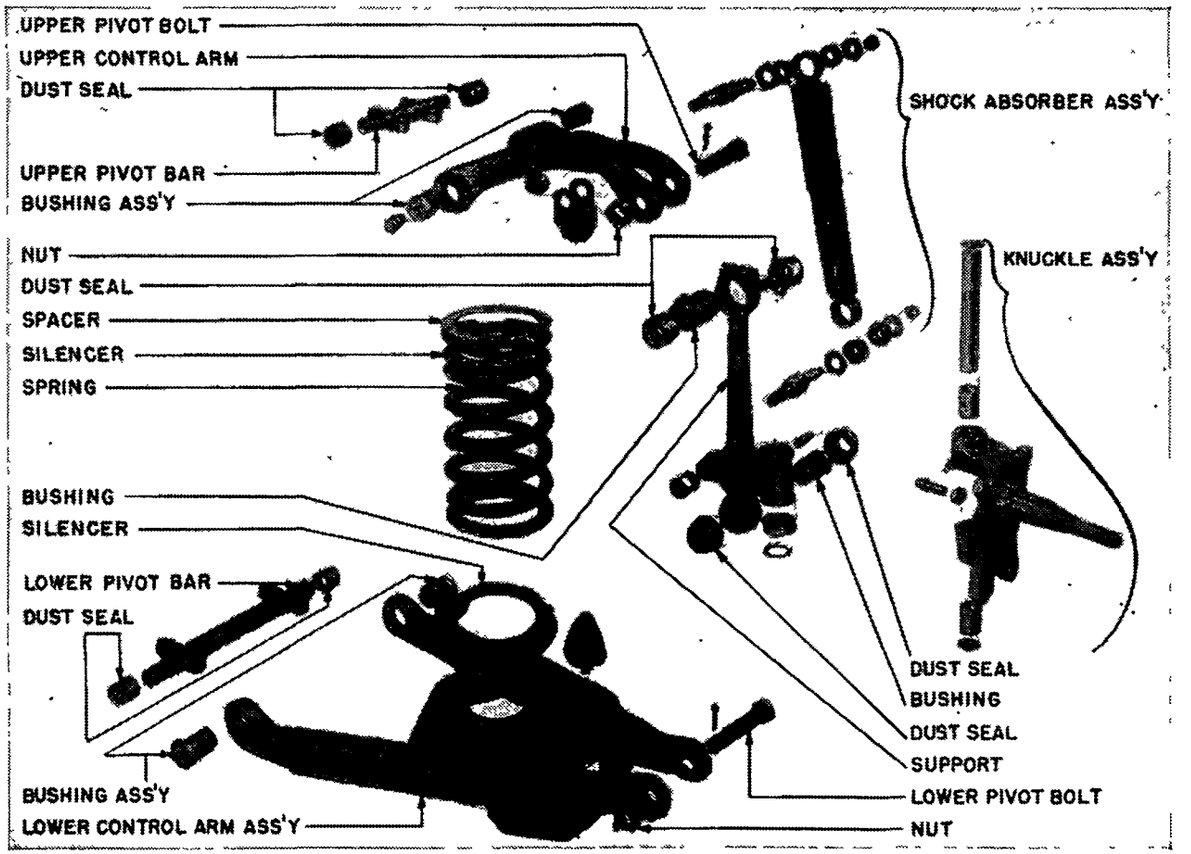

CHRYSLER, DE S T , D DGE, PLYM UTH FR NT SUSPENSION

CHRYSLER 1940-48 (C nt.)

1940 SPRING SPECIFICATIONS

Car Model	Spring Part No.
Chrysler C25 Royal	857304
Chrysler C25 Windsor	857305
Chrysler C25 18" Wheels (Com'l & Ext. Duty)	860073
Chrysler C25 7 Pass. & Limo. only	674534
Chrysler C26 Traveler	861069
Chrysler C26 New Yorker & Saratoga	861070
Chrysler C26 Comm'l. & Extreme Duty	860075
Chrysler C26 Exp. (Imp.—no Fluid Drive)	861070
Chrysler C27 Crown Imperial	854758
De Soto S7	857303
De Soto S7 Comm'l. & Extreme Duty	860073
De Soto 7 Pass. & Limo. only	674533
Dodge D14, 17	857302
Dodge D14, 17 18" Whls. (Comm'l & Ext. Duty)	860072
Dodge D14 7 Pass. & Limo. only	674533
Dodge D14 7 Pass.&Limo. (Comm'l&Ex. Duty)	860074
Plymouth P9, 10	857301
Plymouth P9, 10 18" or 20" Wheels	860071
Plymouth P9, 10 Comm'l. & Extreme Duty	860071
Plymouth P10 7 Pass. & Limo. only	674532

NOTE—Part No. 657770 spacer used on driver's side of car when Commercial (Comm'l.) or Extreme (Ext.) Duty springs installed.

1941 SPRING SPECIFICATIONS

Car Model	Chrysler Models	Part No.
C28S Royal Std.		857305
C28W Windsor Std.		857306
C28 7 Pass. & Limo. only		674532
C28 18" Whls., Comm'l. & Extreme Duty		860073①
C30 Std.		674534
C30 Comm'l. & Extreme Duty		860074
C33 Std.		852957
C33 Comm'l. & Extreme Duty		861113
DeSoto Models		
S8 Std.		864844
S8 7 Pass. & Limo. only		674532
S8 18" Whls., Comm'l. & Extreme Duty		860073①
Dodge Models		
D19 Std.②		864843
D19 4 door Sedan③		864844
Plymouth Models		
P11, P12 Std.		864842
P12 7 Pass. Std.		674531
P11, P12 (18" Wheels)		860071
P12 7 Pass. (18" Whls.)		860073

①—When this spring installed to replace Std. Spring No. 857305 or 857306 (Chrysler), 857306 (DeSoto), following parts must be installed also: #691144 Lower Spring Silencer (2 used), #691144 Upper Spring Silencer (2 used), #633295 Spacer (driver's side only), #859665 Lower Control Arm (right), #859666 Lower Control Arm (left).

②—Including 4 door Sedans before Serial No. 30,345,250.

③—4 door Sedans only after Serial No. 30,345,250.

1942 SPRING SPECIFICATIONS

Car Model	Chrysler Models	Part No.
C34 Std.		674532
C34 7 Pass. & Limo.		674534
C34 Extreme & Comm'l. Duty		957004
C34 7 Pass. Extreme & Comm'l.		860074
C36 Std.		852871
C36 Extreme & Comm'l. Duty		860075
C37 Std.		854758
C37 Extreme & Comm'l. Duty		861113
D Soto Models		
S10 Std.		674532
S10 7 Pass. & Limo.		674534
S10 Extreme & Comm'l. Duty		957003
Dodge Models		
D22 Std.		864844
D22 Std. with 18" Wheels		860072
D22 Extreme & Comm'l. Duty (18" Wheels)		957003
Plymouth Models		
P14 Std.		864843
P14 Std. with 18" Wheels		860071
P14 Extreme & Comm'l. Duty (18" Wheels)		957001

Spring Silencer—No. 691144 (All Models—Upper & Lower) except No. 854105 Lower Silencer used on Dodge & Plymouth models with Std. spring.

Spacer—No. 633295 used on driver's side of car on all models.

1946-48 SPRING SPECIFICATIONS

Car Model	Chrysler Models	⑧Part No.
C38 exc. 7 Pass. & Limo.①		⑨956773
C38 exc. 7 Pass. & Limo.②		1115444
C38 7 Pass. & Limo.①③		1123625
C38 7 Pass. & Limo.②		957005
C39 exc. Convertibles①③		1123625
C39②		957005
C39 Convertibles④③		1123625
C39 Convertibles⑤		1125025
C40		1125026
De Soto Models		
S11 First Cars exc. 7 Pass. & Limo.⑥		⑨956772
S11 RIGHT SIDE exc. 7 Pass. & Limo.⑦		956772
S11 LEFT SIDE exc. 7 Pass. & Limo.⑦		⑩956773
S11 exc. 7 Pass. & Limo.②		1115444
S11 7 Pass., Limo., Sub. Sedan①		1123624
S11 7 Pass., Limo., Sub. Sedan②		957005

Car Model	Dodge Models	⑧Part No.
D24 exc. 7 Pass. & Limo.①		864845
D24 exc. 7 Pass. & Limo.②		1115443
D24 7 Pass. & Limo.①		1115433
D24 7 Pass. & Limo.②		1115445
Plymouth Models		
P15 Std. Service		⑨1115244
P15 Extreme Duty & Comm'l.		1115441

①—Standard service. ②—Extreme Duty & Comm'l.

③—When replacing a spring on cars before Serial No. 70,020,626 (C38S), 70,539,294 (C38W), 6,765,652 (C39K), 7,029,641 (C39N), 7,400,509 (Town & Country), replace both front springs.

④—C39 Convertible Coupe up to Serial 7,051,679 & C39 Town & Country Conv. up to No. 7,403,744.

⑤—C39 Convertibles after above Serial Nos.

⑥—Up to Serial No. 6,171,445 (S11S), 5,820,938 (S11C).

⑦—S11S & S11C after above Serial Nos.

⑧—With Spacer No. 657770 on driver's side only and Silencer No. 691144 (Upper), 854105 (Lower). On springs with lower end ground flat, use Spacer No. 691144 at top and bottom.

⑨—Include No. 657770 Spacer with spring for left side of car.

⑩—Spacer No. 657770 not used with this spring.

FRAZER & KAISER

Frazer, All Models (1947-48)
Kaiser, All Models (1947-48)

DESCRIPTION: Independent, linked parallelogram type with coil springs and direct acting shock absorbers. Suspension system is made up of the following units:

Upper (Short) Control Arm—Pivoted on short mounting shaft bolted on top of frame side rail at inner end and linked to top of knuckle support by eccentric pin at outer end (eccentric pin is the camber adjustment). Threaded bushings are used at pivot points.

Lower (Long) Control Arm—Pivoted on mounting shaft bolted to underside of frame cross-member at inner end and linked to lower end of knuckle support by bolt at outer end. Threaded bushings are used at pivot points.

Coil Spring—Mounted on spring seat on lower control arm with upper end in special spring seat on frame.

Shock Absorber—Direct acting type mounted within the coil spring. Rubber bushings used at both ends. NOTE—Shock absorber can be removed without disturbing front suspension assembly (see Shock Absorber data below).

CHECKING & ADJUSTMENT: Check front wheel bearing adjustment, tire inflation pressure, steering gear adjustment, shock absorber action, and steering linkage for correct adjustment and freedom of movement, check front wheels and tires for run-out (maximum ¼" measured at center of tire sidewall, ⅛" measured at wheel rim), front and rear wheels and axles for alignment. Place car on level floor, check front springs for sag (see Spring data), then make following checks and adjustments in order given below.

Tire Inflation Pressures—With tires Cold: 6.50x15 Tires—28 lbs., 7.10x15 Tires—24 lbs. (front & rear).

Kingpin Inclination: 4¾-5¾° crosswise.

Camber: Positive ¼° desired. Limits 0° to Pos. ¾°.

Adjustment—Loosen clampscrew in upper end of steering knuckle support, remove lubricant fitting in bushing at outer end of upper control arm, insert Allen wrench through fitting hole, turn eccentric pivot pin in upper end of knuckle support not more than ½ turn from point where correct caster setting secured (entire range of adjustment secured in ½ turn of eccentric pin). If correct camber setting cannot be secured by above adjustment, new range of adjustment can be secured by adding or removing shims located between upper control arm inner pivot shaft and mounting bracket on frame (remove pivot shaft mounting capscrews for acess to shims). NOTE—These shims not provided on first cars (before Frazer No. F47-1602, Kaiser No. K100-1604).

Caster: 0° desired. Limits Neg. 1° to Pos. 1°.

Adjustment—Same as for Camber (above) except that eccentric pin should be rotated in complete turns only to avoid changing camber. Recheck camber setting after setting caster.

Toe-In: 1/16".

Adjustment—Loosen clamp bolt at each end of each tie rod, turn both tie rods equally.

Steering Geometry (Toe-out on Turns): With outer wheel turned exactly 23°, inner wheel should be turned 20°. No adjustment. Check front suspension assembly for bent parts if toe-out incorrect.

C NTINUED N NEXT PAGE

FRAZER & KAISER
(C ntinu d)

SHOCK ABSORBER REPLACEMENT: Raise car with jack placed under front cross-member to relieve tension on spring. Disconnect shock absorber at bottom by taking off nut on mounting stud and removing retainer, cushion, and lower half of shock absorber support. Compress shock absorber until lower mounting stud clears upper half of support on spring seat, remove support through spring coils. Disconnect shock absorber upper mounting by removing nut on top of upper control arm mounting bracket, lower shock absorber through hole in spring seat. Replace shock absorber in same manner. Make certain that retainers installed on mounting cushions.

UPPER CONTROL ARM REPLACEMENT: Support car on jacks under frame, remove front wheel. Install jack under spring seat to hold spring and lower arm. Remove lockscrew in upper end of knuckle support. Remove bushings in outer end of upper control arm, use Allen wrench to unscrew eccentric pin from knuckle support. Take out mounting screws in pivot shaft at inner end of control arm,

►***CAUTION—Do not lose camber adjustment shims under pivot shaft. These shims must be re-installed to maintain correct camber (not used on first cars).***

Pivot Shaft Bushing Installation: Install new bushings if old parts worn. To install bushings on pivot shaft at inner end of arm, assemble pivot shaft, new seals, and new bushings loosely in arm. Install Upper Suspension Arm Assembly Gauge, KF-7, tighten gauge setscrews to support control arm. Use thread cutting lubricant on bushings (bushings cut own thread), turn bushings in tight.

LOWER CONTROL ARM REPLACEMENT: Support car with jack under frame to rear to suspension unit. Disconnect front sway-eliminator link at spring seat, remove shock absorber (see above). Place jack under lower spring seat to support arm and spring. Take out pivot shaft mounting screws at inner end of arm. Relieve spring tension by lowering jack under spring seat. Disconnect control arm at knuckle support by unscrewing bolt from knuckle support bushing and arm. Lift out arm, spring, spring insulators.

►***CAUTION—Do not disturb bushing in lower end of knuckle support unless this bushing being replaced.***

Pivot Shaft Bushing Installation: Same as for upper control arm pivot shaft bushings (see data above), except that Lower Suspension Arm Assembly Gauge, KF-9, should be installed on inner end of arm to spread arm correctly while bushings being turned

KINGPIN BEARING REPLACEMENT: Disconnect steering arm. Drill ¼" hole in expansion plug above kingpin, pry plug out. Drive out kingpin locking pin, then drive kingpin and lower expansion plug out at bottom. Replace kingpin needle bearings with Driver KF-12. Install thrust bearing with open face down toward steering knuckle, install shims between knuckle support and thrust bearing, as required, so that pull required to turn steering knuckle is 2-5 lbs. measured at outer cotter pin hole.

SPRINGS: Springs are installed with insulator No. 201112 (Upper), 202245 (Lower) in spring seats. Upper spring seat is separate part, No. 201113.

Car Model	Spring Specifications	Part No.
Frazer & Kaiser		201111

Six, All Models (1940 to 1948)
Eight, All Models (1940 to 1948)

DESCRIPTION: Conventional type with knuckle support pivoted on outer ends of upper and lower support arms. Knuckle support upper pivot is an eccentric bushing (for Camber and Caster adjustment), lower support is a bushing and bolt assembly. Control arms are pivoted at inner ends on bracket shafts bolted to the frame with threaded type bushings and rubber seals at pivot points. Shock absorber is mounted in center of the coil spring with mounting studs passing through holes in upper and lower control arm brackets.

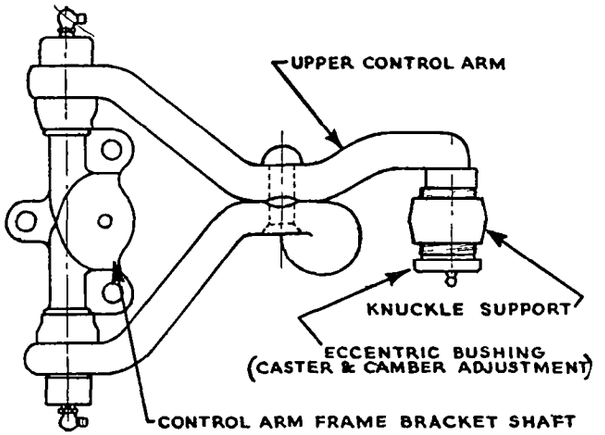

Upper Control Arm (1942 & Later Cars)—Steel stamping type (same as lower control arm) used beginning with late model 1942 cars. To adjust cars with this type control arm, new thin Eccentric Bushing Wrench No. KMO-366 must be used to turn the eccentric bushing (regular wrench is too thick to be inserted between control arm and knuckle support). New Upper Control Arm Spreader No. J-1860 is required to install bushings in this type arm. See instructions below. NOTE—Drop forged (1941 type) arm also used on 1942 cars.

CHECKING & ADJUSTMENT: Before checking specifications and making adjustments, always perform the following operations first:

Wheels & Tires—Check wheels and tires for balance and runout, correct if required. Inflate all tires to correct pressure. Check front wheel bearings and adjust if loose. Runout must not exceed 1/16-3/32". mark 'high' point on tire and place this mark at top of tire (vertical) when checking toe-in, at front of tire (horizontal) when checking Camber and Caster

Tire Inflation (1948)—Inflate tires to 24 lbs. front and rear (Std. 7.10x15 tires).

Steering Linkage & Kingpin Looseness—Check kingpin bushings, drag link and connecting rod ends, and steering gear for looseness. Adjust steering gear and replace worn bushings and end joints.

Frame Level and Spring Height—Level car by rocking car sideways (not endwise) several times and allowing it to come to rest. Check spring height at each side of car. If heights not equal within ½", replace or shim low spring (see Springs below).

HUDSON

NOTE—Car weight must be on wheels when checking following specifications.

Kingpin Inclination: Should be equal on both sides of car within ½°.

Kingpin Inclination	
1940-47	4° 36' Crosswise
1948	3° 36' Crosswise

NOTE—Kingpin inclination affected by Camber Adjustment (decreases as Camber increased).

Camber: As listed below. Should be equal within ½° on both sides of car. NOTE—Toe-in setting depends on Camber and should be checked when camber adjusted.

Camber Specification	
1940-47	Pos. ¼° to Pos. ¾°
1948	Pos. ½° to Pos. 1½°

To Adjust—Adjusted by turning knuckle support upper eccentric pivot pin (Same as Caster Adjustment). See Caster Adjustment below and turn eccentric bushing not more than ½ turn from point where correct caster is secured.

Caster: As listed below. Should be equal within ½° on both sides of car.

Caster Specification	
1940-47	0° plus or minus ½°
1948	Pos. ½° to Pos. 1½°

To Adjust—Loosen clamp bolt in upper end of knuckle support, turn eccentric bushing into support to increase caster, out of support to decrease caster. One complete turn of bushing will change caster ½°. Correct caster of 0° should be secured with center of knuckle support (clamp bolt center) exactly 1 11/32" ahead of face of upper support arm. After correct caster secured, turn bushing not more than ½ turn in either direction to adjust Camber (½ turn will give maximum camber adjustment of plus or minus ½°). Tighten clamp bolt. With Steel Stamping Type Upper Control Arm—Adjusted in same manner as drop forged arm type (above) except that special thin wrench, No. KMO-366, must be used to turn eccentric bushing.

Toe-In: As listed below. Measure at wheel rim with wheels set straight ahead and intermediate steering arm centered with tool J-1442.

Toe-In Specification	
1940-47	0" to 1/16"
1948	1/32" plus or minus 1/32"

To Adjust—Loosen clamp bolts and turn both tie rods equally. NOTE—Tie rod lengths must be equal.

Steering Geometry:—With inner wheel turned 30°, outer wheel should be turned exactly 25°. Allowable variation ½°. No adjustment provided (if incorrect, check for bent steering arms).

SERVICING: Spring Removal & Installation. To remove spring, support front of car on jack stand under inner side of lower support arm on side from which spring to be removed, remove shock absorber (see below), remove bolts from lower support arm inner pivot shaft bracket, raise car slowly and carefully until spring fully expanded. Install spring in same manner. Make certain that spring installed with flat end up and rubber-and-fibre silencer on upper end of spring, and see that lower end of spring properly seated in spring seat on lower support arm. Check spring height (see Springs below).

CONTINUED ON NEXT PAGE

HUDSON (C ntinued)

Shock Absorber Removal & Installation:—Remove retainer nut on upper mounting stud (on upper support arm frame bracket), remove washer and rubber bushing. Remove two screws holding shock absorber lower anchor plate on underside of spring seat on lower support arm, turn shock absorber ¼ turn, and lower through hole in spring seat, remove from below. Replace shock absorber in same way.

Upper Support Arm:—When installing frame mounting shaft bushings, use tool J-1360 installed on center stud of pivot shaft mounting, center arm in tool when bushing installed. See that seals installed on pivot shaft so that ends extend over ends of bushings. When installing knuckle support eccentric bushing, hold support 9/32" from shoulder on arm, screw into support and on arm until support is ⅞" from arm shoulder. Check Caster & Camber.

Upper Control Arm Pivot Pin & Eccentric Bushing (Steel Stamping Type)—Pivot consists of bolt and nut in eyes at outer end of arm and eccentric bushing clamped in upper end of knuckle support. To disassemble, loosen eccentric bushing clamp bolt, remove nut from pivot bolt, thread pivot bolt out of bushing and arm (eccentric bushing will remain in support). To assemble, install eccentric bushing in knuckle support (head of bushing toward front of car) but do not tighten clamp bolt. Hold knuckle support centralized in arm, thread bolt through arm and bushing until head is tight against arm, install nut and cotter pin. Tighten eccentric bushing clamp bolt after Caster & Camber have been adjusted.

Upper Control Arm Frame Pivot Bar & Bushings (Steel Stamping Type)—Bushings are threaded in arm and on pivot bar and must be installed exactly as follows: Install special gauge, No. J-1862, on outer stud of pivot bar, hold pivot centered in control arm and use special spreader tool, No. J-1860, to spread arms 1/16" so that gauge rests against outer faces of arms. Start bushings on both ends of pivot bar, lubricate bushings with tapping compound such as lard oil, thread bushings into arms until head seats against arms and tighten to 110 ft. lbs. Check to see that arm pivots freely on bar (arm should drop of own weight plus not less than 5 lb. pressure from a horizontal position). CAUTION—Do not rotate pivot bar in arm as this will disturb centered position and make it impossible to secure correct Caster and Camber adjustment.

Lower Support Arm:—When installing inner pivot shaft, use tool J-1052 to maintain exact distance of 11½" between inner faces of lower support arms while bushings are being installed. Distance from inner face of support arm to center-line of frame mounting bolt holes must be exactly 1½" for correct alignment. Make certain that seals installed on shaft so that end of seals extends over inner ends of bushings.

Lower Control Arm Pivot Bushings—Lower control arms on both sides of car are similar except that bushing hole at front of car is .010" larger than hole at rear and arms must not be interchanged for this reason (Arms can be identified by ¼" hole punched in top plate of left arm assembly—right arm has no hole). Bushings are self-threading and should be lubricated with tapping compound such as lard oil when being installed.

SPRINGS: Install springs with flat end up and silencer on upper end of spring. If spring height (measured from upper face of lower support arm to lower edge of upper rubber bumper support bracket) is not equal within ½" on each side of car, spring should be replaced (rock car sideways and allow it to come to rest naturally before checking heights). A maximum of 2 shims .120" thick may be installed on top of low spring to correct minor height differences (replace springs if more than 2 shims required).

1940 Spring Specifications

Car Model	Part No.	Color Mark
40, 41, 48	160510	Light Blue
43	160511	Yellow
44, 45	160512	White
47 Right Side	160512	White
47 Left Side	160513	Green

1941 Spring Specifications

10, 11, 12	162530	Brick Red
18	162531	Pink
14, 15, 17 (Right)	162532	Violet
14, 15, 17 (Left)	162533	Steel Gray

1942 Spring Specifications

20 21, 22	162530	Brick Red
28	162531	Chrome Orange
24, 25, 27 (Left Side)	162533	Saratoga Cream
24, 25, 27 (Right Side)	162532	Violet
All (Optl. Heavy Duty)	160512	

1946-47 Spring Specifications

Car Model	Spring Color Mark
51, 52 ('46), 171, 172 ('47)	Bronze
53, 54 ('46), 173, 174 ('47)	Orange, Violet, Cream
58 ('46), 178 ('47)	Yellow, White, Green

1948 Spring Specifications

Car Model	Color & Part No.
All 6 & 8 (Std.-Light Scale)	Pink—300442
All 6 & 8 (Optl.-Heavy Scale)	Red—301621

Spring Identification Note—Springs are paint marked (on two center coils) for identification and have part number stamped on flat end of spring together with Brinell mark and limit marks as follows:

Low Limit Spring Mark—1 Grind Mark or daub of White Paint on lower coil.

High Limit Spring Mark—2 Grind Marks or daub of Red Paint on lower coil.

►**Spring Installation Caution**—Use High Limit Springs on driver's side of car.

1949 FORD PASSENGER CARS, LINCOLN, AND MERCURY

Ford 6 & V8, 8HA & 8BA Pass. Cars (1949)
Lincoln & Cosmopolitan, 9EL & 9EH (1949)
Mercury, Model 9CM (1949)

►NOTES, CAUTIONS, & CHANGES

►**FORD PARTS PRODUCTION CHANGE & NEW FRONT END SPECIFICATIONS:** Ford cars after March 1, 1949 have new design IDLER ARM BRACKET and PITMAN ARM which require new Front End Specifications (Toe-In) as listed below.

►***CAUTION—These new design parts must be used together. Under no circumstances should the new and old design parts be used together on the same car.***

►**New Parts Identification:** Can be distinguished by differences in dimensions when compared with old design parts as follows:

New Idler Arm Bracket No. 8A-3351-C. Supersedes old design bracket 8A-3351-B. New design bracket is **longer** (5¼" overall changed from 5 1/16"), **thinner** (5/16" thick changed from 3/8"), and has nut at lower mounting hole (old design had capscrew thread at this mounting hole).

New Pitman Arm No. 8A-3590-B. Supersedes old design arm No. 8A-3590-A. New design arm has **greater offset** of ½" between flat surfaces of the bolt holes in the ends of the arm (changed from 3/16" offset of old design).

►**New Front End Specifications:** New Toe-In setting required for all cars with new design parts as listed above. *See Camber, Caster, and Toe-In data following.*

►**FORD FRONT SUSPENSION NOISE CORRECTION: Popping Noise (when brakes applied) or chucking noise in Front End** may be caused by incorrect Caster Adjustment resulting in caster adjusting bushing striking lower support arm.
See Caster Adjustment instructions.

►**FORD RIDING HEIGHT & CAR LEVELING CORRECTION:** Incorrect height or list to one side may be caused by use of unmatched springs or incorrect spring height. *Check Spring Height (see "Spring Height") and springs (see "Spring") following for specifications and correction procedure.*

►**MERCURY FRONT SPRING PRODUCTION CHANGE:** Springs changed after first 2600 cars as follows:

First 2600 Cars—Spring Part No. 8M-5310-A with **two No. 8M-5355 wax-impregnated paper shims** installed on top of spring to raise front end of car.

After 2600 Cars—Spring Part No. 8M-5310-C used. This spring is longer and **no paper shims needed.**

►***SPRING REPLACEMENT CAUTION—When using 8M-5310-C spring to replace 8M-5310-A, remove and discard the paper shims. It is not necessary to replace both front springs (8M-5310-C and 8M-5310-A with two 8M-5355 shims can be used together).***

DESCRIPTION

DESCRIPTION: Independent, linked parallelogram type with coil springs and independent shock absorbers. Suspension system is made up of the following units:

Upper (Short) Control Arm—Pivoted at inner end on short mounting shaft bolted on inner side of bracket on top of cross-member at frame side rail with threaded bushing and rubber seal on each end of shaft. Arm is pivoted at outer end on a bolt threaded through control arm eyes and through an eccentric bushing (camber adjustment) in upper end of wheel spindle support. Bushing is locked in wheel spindle support by a clampscrew and rubber seal is used on bolt at each side of bushing.

Lower (Long) Control Arm—Pivoted at inner and outer ends in exactly same manner as upper control arm (above). Bushing in lower arm is not eccentric (caster adjustment).

Coil Spring—Mounted on spring seat on lower control arm with upper end seated in pocket in frame side rail.

Shock Absorber—Direct acting hydraulic type mounted within coil spring with upper end bolted to upper control arm inner shaft mounting bracket

CONTINUED ON NEXT PA E

1949 FORD, LINCOLN, MERCURY (C ntinued)

and lower end bolted to mounting plate on lower control arm spring seat.

NOTE—Shock absorbers can be removed without disturbing front suspension assembly.

CHECKING & ADJUSTMENT: First check wheel bearing adjustment, wheel spindle wear, tire inflation pressure (see data below), wheel run-out and balance (run-out should not exceed ⅛"), steering linkage and steering gear for excessive looseness or play, then place car on level floor and check front end specifications with car at curb weight as follows:

Tire Inflation Pressure: For each tire size (Cold):
Ford 6.00x16—Front 28 lbs., Rear 25 lbs.
Ford 6.70x15—Front 24 lbs., Rear 21 lbs.
Ford Sta. Wagon 7.10x15 6 Ply—Front 25 lbs., Rear 30 lbs.
Mercury 7.10x15 4 Ply—Front & Rear 24 lbs.
Mercury Sta. Wagon 7.10x15 6 Ply—Front & Rear 30 lbs.
Lincoln 8.20x15—Front & Rear 24 lbs.

Ford Riding Height (Frame Height at Curb Weight): Before checking front end specifications, check frame height on level floor at curb weight (full tank of fuel but no passenger load) as follows:

Front End Height—Lightly jounce **rear** end of car several times to allow car to assume natural position. Measure from floor to center of lower support arm pivot pins at inner and outer ends of arm on each side of car. Height at inner end of arm should be ⅛" to 1" greater than height at outer end. **If inner end ⅛" greater to ¼" less than outer end,** install shim on spring (see Springs). **If inner end more than ¼" less than outer end,** replace spring (see Springs).

Rear End Height—Lightly jounce **front** end of car several times to allow car to assume natural position. Measure vertical distance from top of axle inner "U" bolt to underside of frame alongside bumper on each side of car (see "Frame Height" in table below). If distance not correct, check for correct spring (Part No. stamped on bottom of shortest leaf under clip plate) and replace spring if it has developed a "set".

Rear Frame Height

Model	Frame Height	Spring No.
3-Pass. Coupe	4 7/8"-6 1/16"	8A-5560-B
5 Pass. Coupe & Sedans	5 7/8"-7 3/8"	8A-5560-D
Convertible	5½"-7"	8A-5560-D
Station Wagon	7 7/8"-7 3/8"	8A-5560-F

Lincoln & Mercury Riding Height: With car at curb weight, measure distance from floor to center of lower control arm pivot pins at inner and outer ends of arm. Height at outer end of arm should be 1" less than at inner end of arm and measurement should be same on both sides of car. If distance not correct, or unequal, correct by shimming or replacing springs (see Springs).

Kingpin Inclination: 5° crosswise (all models).

Camber: (Ford) Positive ¼° to Positive ¾°. (Lincoln & Mercury) 0° to Positive ¾°.

►*FORD CAMBER NOTE—Above specifications correct for old and new design parts (see Ford Production Change Note) and supersede earlier specifications.*

Adjustment—Must be made exactly as follows to avoid possibility of binding and noise in front suspension system (as stated in Noise Correction Note above):

1) Back off clampscrew in **upper** end of spindle support one turn to free the bushing.

2) Install tool No. 3046-N on hexagonal head of bushing in **upper end** of spindle support, use wrench engaging boss on tool to turn bushing for desired camber.

3) See that support is against shoulder on bushing. When making minimum or maximum camber adjustment, back bushing off slightly to permit free-floating of clampscrew in groove in bushing.

4) Tighten clampscrew to 25-32 ft. lbs.

►*CAUTION—Clampscrew must not bind on side of groove in bushing (will prevent bushing being held securely and kept from moving in service).*

NOTE—Bushing is eccentric and entire range of adjustment should be secured within ½ turn.

►*CAUTION—If correct setting not obtained within range of camber bushing movement (½ turn), check all suspension parts for misalignment or wear.*

Caster: (Ford exc. Sta. Wagon) Pos. ¼° to Neg. ¾°. (Lincoln & Mercury) Positive ½° to Negative 1°.

►*FORD CASTER NOTE—Above specifications correct for old & new design parts (see Ford Production Change Note) and supersede earlier specifications.*

Adjustment—Must be made exactly as follows to avoid possibility of binding and noise in front suspension system (as stated in Noise Correction Note above):

1) Back off clampscrew in **lower** end of spindle support one turn to free the bushing.

2) Install tool No. 3089-N on hexagonal head of bushing in **lower end** of spindle support, use wrench engaging boss on tool to turn bushing for desired caster.

3) See that support is against shoulder on bushing and that clearance between bushing and arm is at least .045" (if bushing strikes arm when making maximum caster adjustment, back off bushing a minimum of ½ revolution for above clearance).

4) Tighten clampscrew to 25-32 ft. lbs.

►*CAUTION—Clampscrew must not bind on side of groove in bushing (binding will prevent clampscrew gripping bushing securely to prevent movement of bushing when screw tightened to recommended 25-32 ft. lbs.).*

►*CAUTION—If correct setting not obtained within range of caster bushing movement (⅛" either way), check all suspension parts for misalignment or wear.*

CONTINUED ON NEXT PAGE

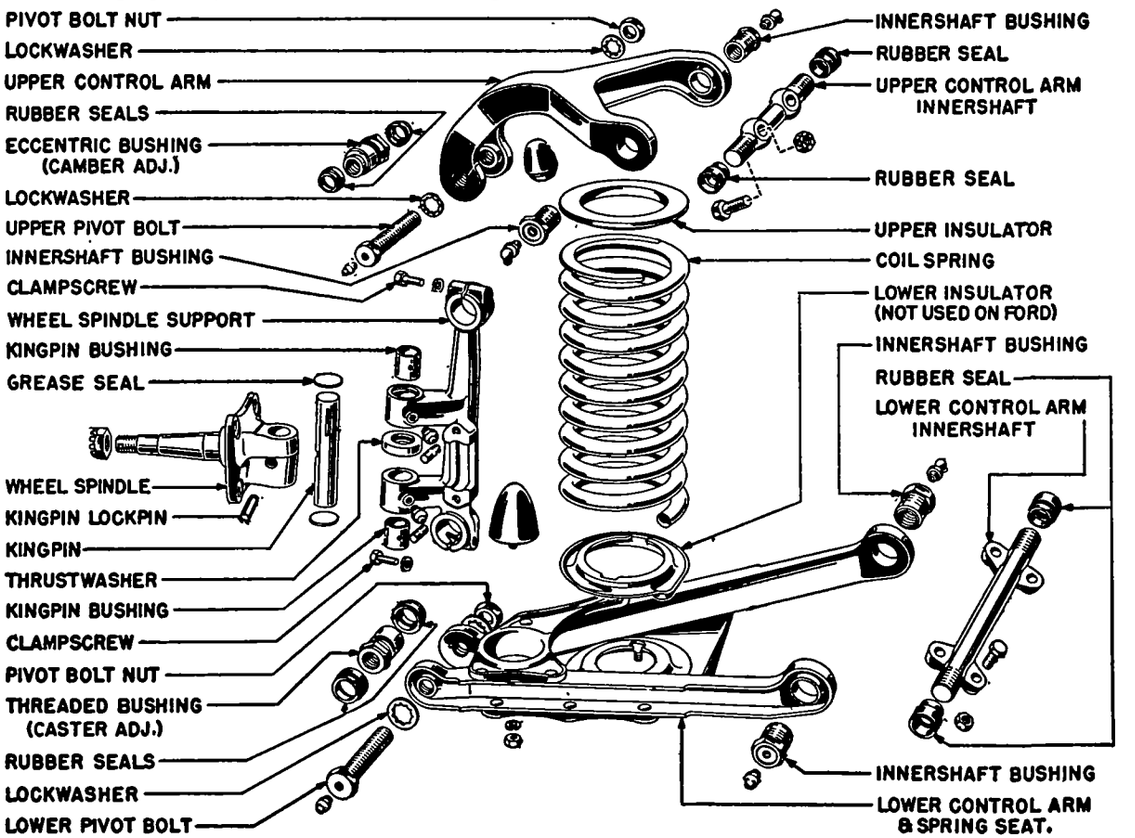

1949 FORD, LINCOLN, MERCURY FR NT SUSPENSION

1949 FORD, LINCOLN, MERCURY (C ntinu d)

►**Toe-In:** *CAUTION—Two settings used on Ford as follows:* **Ford (With Old Design Parts—Before Mar. 1, 1949) 1/8" Toe-out to 3/16" Toe-out.**

Ford (With New Design Parts—After Mar. 1, 1949) 1/16" Toe-in to 1/8" Toe-in.

Lincoln & Mercury—3/32" to 5/32" Toe-in.

►***FORD TOE-IN CAUTION—Correct setting must be used for cars with OLD and NEW design parts (as listed in Ford Production Change Note). Settings listed above supersede earlier specifications.***

Adjustment—With steering wheel turned to center position and with both front wheels positioned "straight-ahead", loosen clamp bolts on adjusting sleeve at outer end of each tie rod, **turn both adjusting sleeves equally to set toe-in.**

Steering Geometry (Toe-out on Turns): With wheels turned to maximum angle (against the non-adjustable stops), inner wheel should be 36° (Lincoln & Mercury), outer wheel 26°5' (Lincoln & Mercury). No adjustment provided. Check suspension system for bent parts if turning angle incorrect.

SHOCK ABSORBER REPLACEMENT: ***Not necessary to disturb front suspension assembly.*** Remove two capscrews (Ford), nuts on two mounting studs (Lincoln & Mercury) which hold shock absorber mounting plate on underside of spring seat on lower control arm. Remove nut on mounting stud at upper end of shock absorber, lower unit through hole in spring seat.

COIL SPRING REPLACEMENT: Support car on jack under frame. Remove shock absorber (see above). Disconnect stabilizer by removing end clip. Use a jack under the lower control arm inner shaft to hold shaft against cross-member, take out four mounting bolts in shaft. Lower jack slowly until spring tension is relieved, with spring fully extended, lift spring out. Install spring in same manner. See that flat end of spring is up, install insulator on top of spring (all models), and bottom of spring (Lincoln & Mercury only). Make certain that bottom of spring is properly seated in recess in spring seat on lower control arm. See "Springs" (below) for specifications.

LOWER CONTROL ARM REPLACEMENT: Remove coil spring (see above), remove nut on bolt linking control arm to wheel spindle support, unscrew bolt from arm and support bushing. Install arm in same manner. Hold support and bushing assembly centered in control arm while screwing bolt through bushing. Install new rubber seals on bolt (each side of support).

►**Lincoln & Mercury Lower Support Arm Frame Mounting Bolt Nut Change**—Nuts on bolts mounting inner shaft on frame were MARSDEN type (Part No. 34397-S) on first cars and **should be changed to** HUGLOCK type (Part No. 34447-S) whenever found in service.

UPPER CONTROL ARM REPLACEMENT: Raise car with a jack under the lower control arm spring seat. Remove wheel. Wire upper end of wheel spindle support to frame (to avoid movement of the support and damage to brake line when arm removed). Remove two capscrews mounting pivot shaft at inner end of control arm on frame. Remove nut on bolt linking upper arm to upper end of wheel spindle support, unscrew bolt from arm and support bushing, lift arm out. Install control arm in same manner. Hold support and bushing assembly centered in control arm while screwing bolt through bushing. Install new rubber seals on bolt (each side of support).

WHEEL SPINDLE SUPPORT REPLACEMENT: Raise car with a jack under the lower control arm spring seat. Remove wheel and brake drum assembly. Take out mounting bolts in backing plate, hang backing plate up on frame (to avoid disconnecting brake line). Drive out kingpin locking pin. Pry out grease seal plug in support above kingpin, drive kingpin down and out of support and wheel spindle (pin will force out lower grease seal plug). Remove nuts on bolts at upper and lower ends of support, unscrew bolts from control arms and support bushings. Lift out support. Bushings can be removed from support by removing clampscrew and pressing bushings out. Install support in same manner.

KINGPIN BUSHING REPLACEMENT: Bushings can be replaced without removing wheel spindle support from the car. Remove wheel spindle (see Wheel Spindle Support Removal), press old bushings out, press new bushings in and ream bushings to size listed below.

Kingpin Bushing—Maximum inside diameter of new bushings: (Ford) .8125-.8135", (Lincoln & Mercury) .9380-.9385". Wear limit inside diameter of old bushings: (Ford) .8185", (Lincoln & Mercury) .9435".

Kingpin—Maximum diameter of new kingpin: (Ford) .8115-.8120", (Lincoln & Mercury) .9365-.9370". Wear limit diameter of old kingpin: (Ford) .8170", (Lincoln & Mercury) .942".

Kingpin Clearance in Bushing—New limits (Ford) .0005-.002", (Lincoln & Mercury) .001-.002". Worn limits .009" for all models.

SPRINGS: Springs have upper end ground flat and are marked for identification as follows:

Part No. & Color Marks—Part number marked on outer diameter of flat end of spring coil and spring also paint marked (one or more daubs of special color) as listed in Spring table below.

►**Ford Spring Production Change Mark**—No. 8A-5310-B spring used on first cars has loaded height of 9.2" and is marked by 2-daubs of white paint. Spring used on later cars has loaded height of 9.5" and is marked by 4-daubs of white paint.

►***CAUTION—These springs must not be mixed (use springs with same marking on both sides of car).***

Low & High Limit Spring Marks—Springs are graded in low and high limit groups and marked by GRIND MARK on flat end of spring as follows:

Low Limit Spring—1 Grind Mark.

High Limit Spring—2 Grind Marks.

►***SPRING INSTALLATION CAUTION—Springs on both sides of car must be matched (both springs same—Low Limit or High Limit). Car will have visible list toward low limit spring side and camber adjustment will be difficult if unlike springs used.***

Ford Spring Shim Installation (to correct Riding Height): If riding height not correct (see Riding Height data) but within limits which can be corrected by installation of shim, install one shim (Part No. 8A-5355) between top of spring and spring insulator on low side of car.

►***CAUTION—Do not install more than ONE shim on the spring (spring will not be held in place if more than one shim used).***

1949 Spring Specifications

Car Model	Spring Part No.	Color Mark
Ford (exc. Convt.)	8A-5310-B	3 White
Ford (Convt. only)	8A-5310-C	4 Blue
Lincoln (Std.)	8L-5310-A	Red
Lincoln (H. D.)	8L-5310-B	Blue
Mercury (Std.)①	8M-5310-A	Yellow
Mercury (Std.)②	8M-5310-C	Yellow
Mercury (H. D.)①	8M-5310-B	Green
Mercury (H. D.)②	8M-5310-D	Green

①—First 2600 cars (used with two 8M-5355 shims).
②—After 2600 cars (no shims used).
③—First type marked by 2-daubs of white paint (loaded height 9.2"), Later type marked by 4-daubs of white paint (loaded height 9.5").
④—First springs marked by Yellow paint, changed to 2-daubs of BLUE paint to avoid confusion with Mercury springs.

NASH 1940-48

Nash Ambassador Six, All Models (1940 to 1948)
Nash "600", All Models (1946-47-48)
Nash Eight, All Models (1940-41-42)
Nash-Lafayette, Model 4010 (1940)

►**LOWER CONTROL ARM REPLACEMENT CAUTION (1940-42):** Threaded-bushing type control arm (as used on 1946 and later cars) are furnished for service and replace original type rubber-bushed control arm. See Servicing data for installation of new type arms.

►***CAUTION—Threaded-bushing type control arms require lubrication, previous type rubber-bushed control arms must not be lubricated.***

DESCRIPTION: Linked parallelogram type with vertical knuckle support linked to short upper control arms (shock absorber arms) and longer lower control arms pivoted at inner ends to bracket bolted on frame front cross member. Coil spring is seated at upper end in spring seat formed in cross member and at lower end in spring seat riveted to lower control arms.

Upper Control Arm (1941 & Later Cars): New type mounted on pivot bar on frame cross-member with Caster and Camber adjusting shims on bar at frame mounting bracket (see Adjustments below). Shock Absorbers are independently mounted (direct acting type). Knuckle support bushing on pivot pin at outer end of upper control arm is not eccentric (not used for Caster and Camber adjustment).

Shock Absorbers (1941 & Later Cars): Direct acting hydraulic type mounted with suspension coil spring.

Lower Control Arm (1946 & Later Cars): New threaded bushings used on inner ends of lower control arm. These bushings same as type used on upper control arm and **do require lubrication** (rubber bushings used previously were not lubricated).

"600" Front Suspension Unit Note: Entire unit assembled on box-type cross-member bolted to frame side members by four rubber-insulated bolts and may be removed as an assembly by taking out these

CONTINUED N NEXT PAGE

NASH 1940-48 (C nt.)

bolts. Upper control arm mounted on bracket on upper end of cylindrical coil spring housing at outer ends of cross-member (direct acting shock absorber mounted within spring). Steering knuckle (kingpin) is pivoted directly on outer end of upper control arm (ball-and-socket joint) and on outer end of lower control arm (ball type thrust bearing), no separate knuckle support being used. Adjustments are made in similar manner to Ambassador Six type.

CHECKING & ADJUSTMENT: Always check following points first before making any adjustments: CAUTION—Always place 2" blocks, Tool J-886, between frame top flange and front suspension upper control arms before jacking up car so as to remove weight from front wheels. Wheels must not be allowed to hang on control arms without these blocks being installed first.

Tire Inflation—Check tires and inflate to recommended pressure of 28 lbs. (4010, 4160, 4260), 27 lbs. (4020), 26 lbs. (4080, 4180, 4280), 25 lbs. (4640, 4740), 28 lbs. (4660, 4760), 24 lbs. (All 1948 cars).

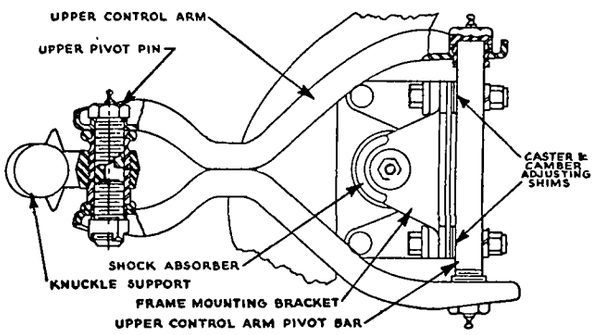

Front Wheel Bearings—Check for looseness and adjust front bearings if required.

Wheel & Tire Balance & Runout—Check wheel and tire assemblies for balance. Check front wheels for runout which must not exceed ⅛". Mark high point (point of greatest runout) on tire and place this mark on top (vertical) when checking toe-in and toe-out (steering geometry), place mark on side (horizontal) when checking Camber, Caster, and Kingpin inclination.

Frame Leveling—Before checking and adjusting front end, level car by rocking it sideways and allowing it to come to rest.

Kingpin Inclination: 4½° crosswise (All models except "600" models), 7½° crosswise (All "600" models). No adjustment.

Caster: Should be 0° to Negative ½° (All models except "600" models), Pos. ¼° to Pos. ¾° (All "600" models) with car weight on wheels.

Adjustment (1940)—Loosen clamp bolt in end of steering knuckle support, remove lubrication fitting in front bushing of outer end of upper control arm, insert special wrench, Tool J-720, in lubrication fitting hole and turn eccentric upper support pin clockwise to increase caster, counter-clockwise to decrease caster. Tighten knuckle support clamp bolt and replace lubrication fitting.

Adjustment (1941 On): Adjusting "C" washers installed on upper control arm pivot bar mounting bolts (between bar and frame bracket). These washers furnished 1/16" thick (equal to 1/3°). To adjust Caster, loosen pivot bar mounting bolts, add shim at front mounting bolt to increase Caster, add shim at rear mounting bolt to decrease Caster, tighten pivot bar bolts. Check Camber.

Camber:—Should be Positive ¼° to Positive ¾° for all models with car weight on wheels and car level

Adjustment (1940)—Adjust in same way as Caster above (wrench inserted through lubrication fitting hole in upper control arm front bushing) except that entire range of adjustment secured in ½ turn of eccentric pin. This adjustment changes caster but caster will be within limits given above providing that it has been correctly set first and pin is not turned more than ½ turn maximum.

Adjustment (1941 On): Uses the same "C" washers used for Caster setting (see Caster Adjustment above). To adjust Camber, 'C' washers should be added (to decrease Camber), removed (to increase Camber) equally at both pivot bar mounting bolts. One 1/16" thick 'C' washer will change Camber by 1/3° (normal factory installation consists of two 1/16" washers).

Toe-In: Measure 10" up from floor with wheels set in straight-ahead position.

Toe-In Specifications

1940-42 All Models	1/32—3/32"
1946-48 Amb. Models	1/16—3/16"
1946-48 "600" Models	1/8"—3/16"

Adjustment—Loosen clamp bolts and turn each outer tie rod equally toward front of car to decrease toe-in, toward rear to increase toe-in. Center connecting rod is not adjustable.

CAUTION—See that center connecting rod ball stud is not raised from its normal position while making toe-in adjustment and that outer tie rod ends are horizontal with ball studs fitting squarely in seats before tightening clamp bolts.

Toe-out (Steering Geometry):—With outer wheel turned 20°, inner wheel should be turned exactly as listed below. No adjustment provided. If toe-out incorrect, check for bent steering arms.

Toe-Out Specifications

1940-42 All Models	21° ± ¾°
1946-48 Amb. Models	21½°
1946-48 "600" Models	23¼°

SERVICING: First type (1940) and later type (1941 on) control arms, bushings, and pivot pins are disassembled as follows:

Upper Control Arm & Pivot Pin (1940): Eccentric pivot pin is threaded in upper end of knuckle support and in bushings in front and rear upper control arms. Rear bushing is threaded in control arm. Front bushing is plain type and is locked in control arm by clamp bolt. Clearance between front face of control arm and head on bushing must be 1/32".

Upper Control Arm (1941 & Later Cars): Control arm mounting pivot bar is mounted on bushings threaded in through arm at each end of bar with seals at inner end of each bushing. When installing pivot bar, position bar within arm so that clearance at each end is equal, thread bushings in arm and on bar, tighten bushings to 150 ft. lbs. (use Torque Wrench J-1254). When installing control arm assembly on car, make certain that insulators installed on mounting bolt at each side of frame mounting bracket and that 'C' washers installed between pivot bar and frame bracket. See Caster & Camber Adjustment (above) for 'C' washer data).

CAUTION—These 'C' washers control Caster and Camber and correct washers must be installed on each bolt.

Upper Control Arm Pivot Bolt (1941 & Later) Bolt threaded through eyes at outer end of upper control arm from the rear with a lockwasher and nut on end. Knuckle support is mounted on plain (not eccentric) bushings threaded on pivot pin between control arm eyes with seal at each end of bushing. When assembling pivot pin, see that bushing centered in control arm (clearance 3/16" and equal at each end of bushing), thread bolt in through control arm and bushing from front, install lockwasher and nut on rear end of bolt.

Lower Control Arm (1940-42): Control arm is mounted at inner (frame) end on rubber bushings on the ends of the frame mounting bar. Threaded bushings at outer end are same as type used on 1946 & later cars (following). When installing arm with rubber bushings, place plain washer on bar over bushing, tighten nut securely (shoulder on bar limits compression of rubber). ***Rubber bushings should not be lubricated.***

►**Replacement Arm & Bushing Note**—1946 & Later type lower control arm and threaded bushings furnished for replacement of the rubber-bushing type.

Lower Control Arm (1946 & Later): Lower control arm mounted at inner (frame) end on threaded bushings (same as used at outer end of arm). When installing arm, position mounting bar between arm so that clearance at each end is equal, tighten bushings to 150 ft. lbs.

Lower Control Arm Outer Pivot Pin. Pivot bolt is threaded in knuckle support bushing and in front and rear lower arms. Bushing is threaded on bolt and in lower end of knuckle support with rubber seal on bolt between each end of bushing and control arm. When assembling, bushing should be centered in control arm with equal clearance of 3/16" between each end of bushing and control arms.

SPRINGS: Coil springs same on all body styles and are interchangeable on 4010 and 4020. 4080 springs are paint marked for identification. Check spring heights on car with special height gauge, Tool J-709, which should fit between spring seat on lower control arm and lower face of front frame cross member. If spring height not correct, replace spring or install special ¼" spacer under spring.

NOTE—Springs not interchangeable between models (may be interchanged on right and left sides of same car—see Caution below). To correct complaints of springs bottoming on rough roads, ¼" thick spacers No. 3104309 may be installed between lower end of spring and spring insulator which will increase riding height by approximately ½". If two spacers used, install one spacer at lower end of spring and second spacer at top of spring. If car leans toward drivers side and high limit spring has been used (see Spring Identification Note below), install spacer on drivers side to level car.

1940 Spring Specifications

Model	Free Length	Loaded Height	Color Mark
4010, 20	13⅛"	9"	
4080	13⅞"	9"	Yellow

1941 Spring Specifications

Model	Free Length	Color Mark
4160	13⅛"	None
4180	13⅞"	Yellow

CONTINUED ON NEXT PAGE

NASH 1940-48 (C nt.)

1942 Spring Specifications

4260	15 1/16"	None
4280	15 3/16"	Yellow

Note—Color mark consists of paint mark on two center coils.

1946-47 Spring Specifications

Car Model	Free Length	Part No.
4640, 4740	15½"	3121238
4660, 4760	14 13/16"	①3111316

1948 Spring Specifications

Car Model	Free Length	Part No.
4840	15½"	3121238
4860	14 13/16"	①3111316

①—Spacer No. 3104309 (¼" thick) used with this spring.

Spring Identification Note—Springs are graded for load rate and may be identified by grind marks on end coil as follows: 1 Grind Mark—Low Limit, 2 Grind Marks—High Limit. Same type springs should be installed on both sides of car.

CAUTION—If one Low Limit and one High Limit Spring used, make certain that High Limit Spring installed on drivers side of car.

NASH "600" 1941-42

Nash "600", Model 4140 (1941), 4240 (1942)

►**1946 & LATER "600" NOTE:** Suspension unit is same design as used on Nash Ambassador models (see preceding article for data). Suspension unit described below used only on 1941-42 "600" cars.

DESCRIPTION: This suspension design consists of a sliding steering knuckle on a vertical fixed kingpin with the coil spring on the kingpin above the steering knuckle. Steering knuckle is mounted on 'hour-glass' type roller bearings and entire suspension system is covered by rubber boot or bellows to exclude dirt (bellows provided with breather with air cleaner mounted on frame). Kingpin is rigidly mounted on the front frame cross-member at the bottom and is positioned by two frame strut rods (Caster & Camber adjusters) at the top. In addition, both kingpins are tied together by a strut rod extending across the car between them and this rod serve also as the top mounting for the direct acting shock absorbers which are connected to the steering knuckles at the bottom (see illustration). With this type construction, wheel movement causes steering knuckle to slide up and down on the kingpin and is controlled by coil spring and shock absorber.

CHECKING & ADJUSTMENT:—Always check following points first before making any adjustments:

Tire Inflation—Check tires and inflate to 28 lbs. (Std. 5.50x16 tires), 22 lbs. (Optl. 6.00-16).

Front Wheel Bearings—Check for looseness and adjust bearings if required.

Wheel & Tire Balance & Runout—Check front wheels and tire assemblies for balance. Check front wheels for runout which must not exceed 1/16". Mark high point on tire (point of greatest runout) and place this mark vertically (at top of wheel) when checking toe-in and toe-out (steering geometry), place mark horizontally (on one side) when checking Caster, Camber, and Kingpin Inclination.

Wheel Straight-ahead Position—Wheels must be in straight ahead position with steering gear roller on 'high' point of worm. See Steering Gear article.

Spring or Frame Height—Springs should be same height so that car is level crosswise when at rest. See Spring data (below) for adjustment directions

NOTE—Car weight must be on wheels when following specifications are being checked.

Kingpin Inclination:—5½° crosswise. Not adjustable (affected by camber adjustment—See Camber).

Caster:—0° ± ¼°. Controlled by brace rods attached to top of kingpin and frame on each side of car.

To Adjust—Loosen nuts on frame bracket end of both brace rods attached to top of kingpin, turn nuts so as to shorten rear rod and lengthen front to increase caster, lengthen rear rod and shorten front rod to decrease caster. One and one-half turns of nut on each rod will change caster approximately ¼°. Tighten all nuts securely after adjustment completed. CAUTION—Rod can be adjusted only after nuts on second rod have been loosened to permit movement. Do not attempt to adjust one rod only.

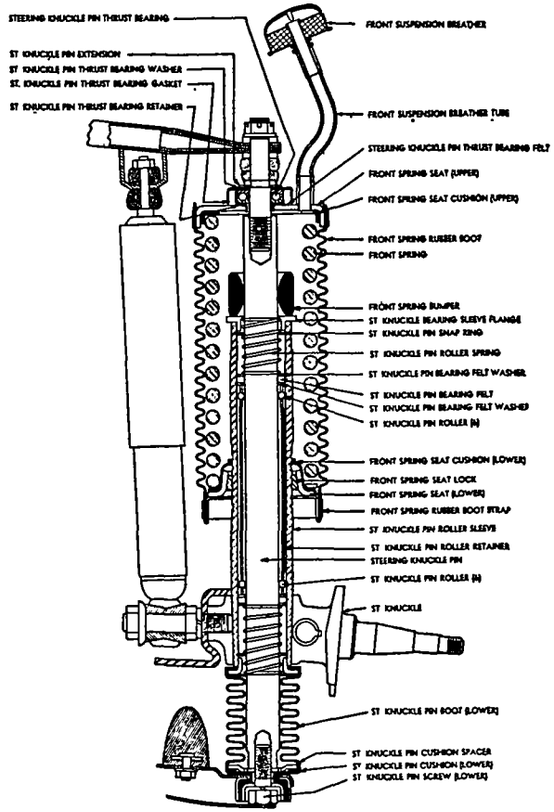

Camber:—0° to Pos. ½°. Controlled by brace rods at upper ends of kingpin (same as Caster). NOTE—Kingpins are tied together by non-adjustable strut rod at upper ends so that any increase of camber causes equal decrease of camber at other wheel.

To Adjust—Adjust in same manner as Caster (above) except that nuts should be turned so as to lengthen or shorten both the front and rear brace rods equally (Caster will be changed if rods adjusted unequally) and nuts must be loosened on opposite side of car to permit movement.

CAUTION—Rods on one side of car can be adjusted only after rods on opposite side have been loosened.

Toe-in:—0-1/16" measured approximately 10" up from floor. Do not move wheels while checking.

To Adjust—Loosen clamp bolts on adjusters at wheel end of each tie rod, turn both adjusters equally. CAUTION—After toe-in adjusted, tie rod adjuster clamp bolts must be turned toward ground to prevent interference with body sill as wheel moves

Toe-out (Steering Geometry):—With outer wheel turned 20°, inner wheel should be turned 21° plus ½°. No adjustment. Check for bent steering arms.

SERVICING:—**Suspension Unit Removal**—Loosen two clamps holding upper rubber boot (bellow) lower boot, install special clamps J-1608-SA-1 on lower coils of spring, raise wheels off floor and hook upper ends of clamps on top coil of spring, lower wheels and tighten clamps (clamps will hold spring compressed while unit being dismantled). Disconnect tie rods at steering knuckle arms, raise front end of car, remove wheel and brake drum, brake backing plate, and shock absorber. Remove steering knuckle pin screw holding lower end of kingpin on frame front cross-member (front axle channel), raise lower boot and install wrench on flats of kingpin to prevent it turning. Loosen nuts on brace rods at upper ends of both kingpins, remove strut or tierod extending across car between upper ends of kingpins, slip brace rods off top of kingpin, remove suspension unit from car.

Suspension Unit Disassembly—To dismantle assembly after removal from car (with upper boot loosened and clamps installed on springs), unscrew kingpin extension on upper end of kingpin, remove extension (with upper spring seat), lift off spring with clamps intact. Remove retainer spring and flange from upper end of kingpin by tapping lightly with hammer, remove lower spring seat and spring locks (locks are split washers installed in grooves in sleeve), remove screw, cushion and lower boot. Push kingpin toward upper end of sleeve and remove snap ring in groove in lower end of sleeve, then push kingpin toward lower end of sleeve and remove upper snap ring in same manner. Withdraw kingpin, roller retainer tube, and rollers from sleeve using care not to lose rollers (rollers will drop out of slots in retainer tube as it is withdrawn). Tap steering knuckle off lower end of sleeve. Wash all parts in clean gasoline and use extreme care to prevent dirt or other foreign matter entering assembly.

Suspension Unit Assembly—Clamp steering knuckle in vise and install sleeve. Lubricate kingpin, roller retainer and rollers with special Nash No. 94141 lubricant (pack the lubricant between roller retainer and kingpin), install assembly in sleeve (CAUTION—make certain that all rollers in place in retainer slots when retainer installed). Check to see that sleeve moves up and down and rotates freely on kingpin. Clamp unit in vise so that kingpin horizontal, install steel washer, felt washer, and second steel washer on upper end, push kingpin toward lower end of sleeve and install upper snap ring. Install same washer assembly on lower end of kingpin and install lower snap ring. Install lower retainer spring, flange, lower boot, cushion, disc and

CONTINUED ON NEXT PAGE

NASH "600" 1941-42 (C nt.)

screw (do not tighten screw as it must be removed to install unit on car). Place unit vertically and install lower spring seat and locks (locks regularly installed in center groove—see spring data below), tap upper spring and flange in place using special driver. Install upper bumper and spring, install kingpin extension and tighten securely (hold kingpin from turning by wrench on flats at lower end). Leave clamps on spring until unit installed on car.

Lubrication:—Unit is packed with special lubricant, Nash No. 94141 and requires no attention in service (see Assembly directions above). Dirt must be prevented from entering assembly and upper and lower boots must be in place. Lower boot must be kept free from excessive lubricant (lower end of kingpin wiped clean before boot installed).

Air Cleaner:—On frame and connected to vent tube leading to upper boot. Air cleaner should b removed and washed in gasoline every 5000 miles.

SPRINGS:—Front springs are same on all models and can be raised or lowered to compensate for unequal length and to level car crosswise. Spring height controlled by position of locks in slots on sleeve below lower spring seat. Shifting locks up or down one slot on sleeve will change spring length ⅜". Locks are regularly installed in middle slot in sleeve (1941 models), lower slot in sleeve (1942 models). NOTE—The additional lower grooves found on 1941 models are not used on 1942 models and consequently the spring can not be lowered on 1942 cars.

Spring Specifications

Car Model	Part No.
4140	3107019

NOTE—Right and Left springs are the same.

OLDSMOBILE & PONTIAC 1936-38

Oldsmobile Six & Eight, All Models (1936-37-38)
Pontiac Six & Eight, All Models (1937-38)

1938 TYPE: Design changed from 1937 as follows:
Control Arm Seals—Rubber seals installed at inner and outer ends of lower control arms.
Lower Control Arm Bushings—Hardened threaded bushings installed in inner ends of lower control arm on pivot shaft (arm not screwed on shaft).

CHECKING & ADJUSTMENT:—Car weight must be on wheels. Adjust front wheel bearings and check following points first:

Tire Inflation—Oldsmobile 24 lbs. (except rear tires on Six—28 lbs.). Pontiac 25 lbs. minimum (front), 30 lbs. minimum (rear).

Wheel Runout—Must not exceed ⅛". Mark high spot on tire and place wheel with mark at top vertically (to check toe in) or at side (to check caster and camber).

Kingpin Inclination—5°51' (Oldsmobile '36), 4°51' 10" (Oldsmobile '37-38), 4½-5° (Pontiac '37-38).

Frame Height—Car must be level crosswise of frame. Check by measuring distance from lower surface of frame siderail to top surface of lower spring seat on each side. Distances must be equal (replace spring if frame uneven due to spring sag). On Oldsmobile models, level frame while checking front end by inserting 2" wood blocks, Tool No. J-886 between upper control arm and frame flange.

Toe In:—Roll car forward one revolution with wheels straight ahead before checking (on Oldsmobile, use Centering gauge No. J-1023 to determine wheel position, distance to brake backing plate on each side should be 26¼" (F-36), 25¾" (L-36), 26 11/16" (all 1937-38 models). Measure toe in between tires 10" up from floor at front and rear (runout mark must be at top and wheel should not be disturbed while taking measurements). Toe in should be ⅛-3/16" (Oldsmobile), 0-1/16" (Pontiac).

To Adjust—Loosen clamp screws at each end of each tie rod, turn tie rods equally in direction of forward wheel revolution to decrease toe in, or p-posite direction to increase toe in.

Caster:—Machined bosses provided on steering knuckle support front face for protractor mounting. Caster should be 1½-2¼° (Oldsmobile 1936), ¼-1° (Oldsmobile 1937), 0 to Neg. ¾° (Oldsmobile 1938), Neg. ¾ to Neg. 1¼° (Pontiac 1937-38). These negative figures are Reverse Caster (kingpin tilted forward at top. Must be equal within ½°.

To Adjust—Loosen steering knuckle support clamp bolt, remove lubrication fitting in upper pivot pin front bushing, insert Allen wrench (J-720), turn pivot pin to thread support forward or backward on pin. Camber affected by this adjustment unless pin turned in complete revolutions only (start and stop at same point). Check camber.

Camber:—Should be ⅛ to 1° (Oldsmobile 1936-38), ⅜-¾° preferred (Service limits Neg. ½° to Pos. 1°) (Pontiac '37-38). Must be equal within ½°.

To Adjust—Same as Caster Adjustment (above) except that pin should be turned less than 180°. Pin is eccentric and maximum adjustment secured with one half turn. This adjustment changes Caster but not outside limits as given above if Caster set first at correct figure (see Caster adjustment above).

Steering Geometry (Toe out on Turns):—With outer wheel turned exactly 20°, inner wheel should be turned 22½-23½°. No adjustment provided.

CONTROL ARM ASSEMBLY:—Lower Control Arm—Control arms threaded on ends of shaft bolted to cross-member. Spring seat and jack pad must be removed and arms turned on shaft separately until distance from inner face to center line of shaft bracket bolt holes is 1 23/32" (front arm—1936), 1 7/32" (rear arm—1936), 1 7/32" (both arms—Oldsmobile 1937-38, Pontiac 1937), 1⅜" (both arms—Pontiac 1938). With spring seat and jack pad in place, distance between eyes at outer end of control arm should be 2⅜" (all models).

1938 Service Note:—When installing new bushings in lower control arm (or tightening old bushings before assembling arms), tighten bushings with 150 lb. force on 16" wrench. With bushing tight there should be no clearance between bushing flange and arm. See that rubber seals are in place on pivot shaft and on knuckle support lower pivot pin (at each side) before installing control arms.

New Spring Seats—Two holes must be drilled in seat after one arm is assembled. Bolt spring seat and bumper pad in place with two bolts, use bolt holes in control arms as pilot and drill two holes with 7/16" drill.

Knuckle Support Lower Pivot Pin:—Knuckle support threaded on bushing which is threaded on pivot pin. Pin threaded through control arm eyes and held by nut on rear end. To assemble, screw bushing in support lower end from rear until tight, hold support midway between lower control arms, thread pivot pin in from front through bushing and rear arm. Clearance in arms at either end of bushing must be ⅛" and exactly equal within 1 thread. Install lock washer and nut on pin.

1937 Knuckle Support Upper Pivot Pin—Eccentric upper pivot pin is threaded in support, in plain bushing in front shock absorber arm, and in threaded bushing in rear arm. Held by clamp bolt in knuckle support. To install, hold knuckle support in place in upper control arm, screw pivot pin in place in support (adjusting wrench hole end toward front) so that larger center section is centered in support, tighten clamp bolt. Start front bushing on pin until it engages front arm, center support in control arm yoke, thread rear bushing in on pin and in control arm, tighten securely. Turn front bushing in until clearance between head of bushing and front face of arm is 1/32", tighten clamp bolt.

NOTE—Clearance between threaded pins and bushings of front suspension should be .014-.018". Threaded construction requires this clearance for best performance (must not be changed).

SPRINGS:—Not interchangeable between models. If car is not level, check over-all length of springs and replace if sagged. When installing spring see that spring is centralized by four lugs in cross-member at top and spring seat at bottom.

1937 Oldsmobile Springs

May be identified by 2 daubs of paint as indicated.

Model	Inside Diam.	Color Tracer
F-37(all)	4 3/64"	Blue
L-37 (Spare at rear)	4 3/64"	Red
L-37 (Fender wells)	4 3/64"	Yellow

1938 Oldsmobile Springs

Model	(Spare at Rear)	(Fender Wells)
F-38	Brown	
L-38	Orange	Green

Pontiac Spring Specifications

Model	Outside Diam.	Free Length
Six 1937-38	5 3/16"	14"
Eight 1937-38	5 3/16"	14⅜"

SHOCK ABSORBERS:—Delco, double acting type. Positioned n frame by close-fitting bolts. See separate article for complete data and valve calibration.

OLDSMOBILE & PONTIAC 1939

OLDSMOBILE MODELS

Six, 60 Model F-39, 70 Model G-39 (1939)
Eight, 80 Model L-39 (1939)

PONTIAC MODELS

Six, Quality Six 39-25, Deluxe 39-26 (1939)
Eight, Deluxe Model 39-28 (1939)

TYPE:—Design same as for 1938 except as follows: **Lower Control Arm Assembly**—New type channel-section type arms which are riveted to spring seat (assembly cannot be dismantled). Seals are used on control arm shaft at control arm bushings (inner end) and on pivot pin at arm (outer end).

Spring—New type with top end only ground flat. Springs must be installed with this flat end up and end of lower coil fitted in recess in lower spring seat (coil end must register with hole in spring seat).

Steering Linkage—New type linkage with center (non-adjustable) tie rod linked between steering gear pitman arm and idler arm mounted on right hand frame side rail with individual adjustable tie rods between center tie rod and each wheel.

CHECKING & ADJUSTMENT:—Car weight must be on wheels. Adjust front wheel bearings and check following points first:

Tire Inflation—Inflate tires evenly as follows: Oldsmobile—24 lbs. (front), 26 lbs. (rear). Pontiac —27 lbs. (Quality Six 6.00x16), 30 lbs. (Others 6.00x 16), 25 lbs. (Others 6.50x16).

Wheel Runout—Check wheel and tire eccentricity or runout. Correct if in excess of ⅛". Mark high point on tire and turn tire so that mark at top (vertically) when checking toe in and toe out, or at side (midway between top and bottom) when checking Caster, Camber, and Kingpin Inclination.

Kingpin Inclination—4°51'10" (Oldsmobile), 4½-5° (Pontiac) crosswise.

Toe In Adjustment:—To adjust, loosen clamp bolts on adjuster near wheel end of each side tie rod, turn adjuster on each tie rod equally. Toe in should be ⅛-3/16" for Oldsmobile models, 0-⅛" for Pontiac models (same as for 1938).

NOTE—Make certain that tie rod end ball stud aligned in seat before tightening clamp bolts.

Caster:—Should be 0° to Negative ¾° (all Oldsmobile and Pontiac models) and equal for both wheels within ½°. Adjusted in same manner as in 1938 (loosen clamp bolt at upper end of steering knuckle support, remove lubricant fitting on upper pivot pin front bushing, insert Allen wrench through lubricant fitting hole, turn eccentric pivot pin clockwise to increase caster, counter-clockwise to decrease caster, in complete turns only—camber adjustment will be disturbed otherwise).

Camber:—Should be ⅛-1° and equal within ½° for both sides of car. Pontiac preferred camber is ⅜-¾° with service limits of Neg ½° to Pos. 1°. Camber can also be checked by measuring distance from square placed on level floor to wheel felloe at top and bottom. Distance at top should be 1/32-9/32" less than at bottom (wheel should lean ut at top) and both sides of car must be equal within 9/64". Adjust in same manner as for 1938 cars (turn upper pivot pin with Allen wrench in same manner as for Caster adjustment, do not turn pin more than 180° which provides entire range of adjustment—turning pivot pin more than this amount will change caster setting excessively).

Steering Geometry (toe out on turns):—With outer wheel turned exactly 20°, inner wheel should be turned 23° plus or minus ½° (all models). Correct by replacing steering arms (no adjustment).

CONTROL ARM ASSEMBLY:—Lower Control Arm—Serviced as an assembly and not interchangeable on right and left sides of car. Pivot shaft at inner ends of control arms can be removed by taking out bushing in each arm. To install shaft, install tool J-1052 or block between arms adjacent to shaft eyes so that distance between inner faces of arms at shaft eyes is exactly 11½" (necessary to prevent distortion of arms when bushings installed). Install shaft with seal on each end adjacent to mounting bracket, thread bushing in on shaft and in arm simultaneously (new bushings not threaded on outside and cut their own thread as they are turned in), tighten bushings with 150 lb. pull on 16" wrench (200 lbs. on 12" wrench) so that there is no clearance between bushing flange and control arm. See that distance between shaft bracket mounting holes and inner face of control arm is exactly 1½" at each end (turn shaft to centralize), and that seal ends lap over bushings.

Front Stabilizer Bar:—To remove, remove nut on upper end of link bolts, pull bolts out from below. Remove bracket bolts at stabilizer frame mounting, remove stabilizer bar. NOTE—On Oldsmobile L-39 Eight, radiator lower support (removable cross-member) must be removed with stabilizer (radiator need not be removed but must be supported while cross-member is out of car). Stabilizer bar rubber bearings (frame mounting) are serviced separately. When installing stabilizer links, make certain that spacer installed on bolt between arm and control arm mountings, place one rubber block and one steel retainer on both top and bottom of stabilizer arm and control arm bracket, tighten bolt nut to limit of threads and install locknut.

SPRINGS:—Removal & Installation—To remove springs, disconnect stabilizer link and tie rod, support car with chain hoist, install jack under spring seat on lower control arm, remove knuckle support lower pivot pin, raise car or lower jack under lower control arm to relieve tension on spring, remove spring. Install in same manner.

NOTE—Install spring with ground (flat) end up Spring lower end (not ground flat) must be fitted in recess in spring seat on lower control arm.

Spring Identification—Oldsmobile springs have part number stamped on outside of one end coil and paint mark as follows:

Oldsmobile Springs

Model	Diameter of Wire	Color Mark
F-39 '60'	.594"	Red
G-39 '70'	.608"	Yellow
L-39 '80'	.635"	Brown

Pontiac Springs

Model	Diameter of Wire	Free Length
39-25 Qual. 6	.630"	13 31/32"
39-26 Deluxe 6	.630"	14 3/16"
39-28 Deluxe 8	.635"	14 7/16"

OLDSMOBILE & PONTIAC 1940-48

OLDSMOBILE MODELS

Six & Eight, All Models (1940-48)

PONTIAC MODELS

Six & Eight, All Models (1940-48)

►**Oldsmobile Camber Adjustment (Upper Pivot Pin) Production Change:** Eccentricity of pin (for Camber adjustment) is 1/16" (1940 & 1942 cars), 3/32" (1941 cars). This special 3/32" pin can be secured from Oldsmobile Parts Dept., No. 506512, to provide greater range of adjustment on 1940 & later cars if required to secure correct setting.

►**Pontiac Camber Adjustment (Upper Pivot Pin) Production Change:** Pin with 1/16" eccentricity (for Camber adjustment) used on 1940 cars, new type with 3/32" eccentricity providing greater range of adjustment used on 1941 and later cars.

DESCRIPTION: Linked parallelogram type with coil springs. Design is similar on all models with exception of Upper Pivot Pin (camber adjustment) which was changed in 1941 as follows:

Camber Adjustment (Upper Pivot Pin)—Amount of eccentricity increased from 1/16" to 3/32" for greater range of camber adjustment (see Camber).

CHECKING & ADJUSTMENT: Check & adjust front wheel bearings, check kingpins for looseness, check shock absorbers and following points:

Tire Inflation—Check tires and inflate to following pressures:

	Front	Rear
Olds. 60, 90 ('40)	27 lbs.	27 lbs.
Olds. 70 ('40)	25 lbs.	25 lbs.
Olds. 66 ('41-42)	28 lbs.	28 lbs.
Olds. 68, 76, 78 ('41-42)	26 lbs.	26 lbs.
Olds. 96, 98 ('41-42)	24 lbs.	24 lbs.
Olds. 66, 68, 76, 78 ('46-47)	28 lbs.	28 lbs.
Olds. 98 ('46-47)	24 lbs.	24 lbs.
Olds. All Models ('48)	④	④
Pontiac 40-25, 26 ('40)	26 lbs.	28 lbs.
Pontiac 40-26, 28 ('40) ①	23 lbs.	25 lbs.
Pontiac 40-29 ('40)	28 lbs.	28 lbs.
Pontiac All ('41-42)	28 lbs.	28 lbs.
Pontiac ('42) ①	24 lbs.	24 lbs.
Pontiac All ('46-48) ②	28 lbs.	28 lbs.
Pontiac All ('46-48) ①	26 lbs.	26 lbs.
Pontiac Sta. Wgn. ('46-47) ③	32 lbs.	32 lbs.
Pontiac Sta. Wgn. ('48) ③	27 lbs.	36 lbs.

①—6.50x16 Tires. ②—6.00x16 Tires.
③—6 Ply 6.50x16 Tires.
④—28 lbs. (6.00x16, 6.50x16, 6.50x15 Tires), 24 lbs. (7.60x15 Tires), 22 lbs. (8.20x15 Tires).

Wheel Runout—Check wheels and tires for run-out. Must not exceed ⅛". Mark 'high' point on tire and place this mark at top (vertically) when checking Toe-in and Toe-out, at one side (horizontally) to check Caster, Camber & Kingpin Inclination.

Frame Height—Raise and lower front end of car several times by grasping front bumper to allow frame to come to normal level.

NOTE—Car weight must be on wheels and wheels should be set in straight ahead position when checking adjustment.

Kingpin Inclination: NOTE—Specifications on Pontiac supersedes original specification of 4⅜-4⅞° previously listed for these cars.

	Kingpin Inclination
Oldsmobile (All Models)	4°51'10" Crosswise
Pontiac (1940)	4⅜-5¼° Crosswise
Pontiac (1941-48)	5½-6° Crosswise

CONTINUED ON NEXT PAGE

OLDSMOBILE & PONTIAC 1940-48 (C ntinu d)

Caster: Must be equal within ½° on both sides. Machined bosses provided on front side of knuckle support for protractor mounting.

Caster Specifications

Oldsmobile (All Models)	0° to Neg. ¾°
Pontiac (All Models)	Neg. ¾° (Neg. ½° to Neg. 1°)

To Adjust—Loosen clamp bolt in upper end of knuckle support, remove lubricant fitting on front bushing of upper support pivot pin, insert Allen wrench J-720 through lubricant fitting hole and turn upper pivot pin clockwise to increase caster, counter-clockwise to decrease caster. CAUTION—Pin must always be turned in complete turns only to avoid disturbing camber adjustment (below).

Camber: Camber adjustment (upper pivot pin) eccentricity is 3/32" on Pontiac, 1/16" on Oldsmobile. Special No. 506512 pin is available from Oldsmobile Parts Dept. and can be installed if regular 1/16" pin does not give sufficient range of adjustment.

Camber Specifications

Oldsmobile (All Models)	Neg. ¼° to Pos. ¾°
Pontiac (1940)	Pos. ⅜° (0° to Pos. ⅝°)
Pontiac (1941-48)	0° (Neg. ¼° to Pos. ¼°)

To Adjust—Same as for Caster (above) except that entire range of adjustment secured in ½ turn of eccentric pivot pin. CAUTION—Do not turn pin more than ½ turn when adjusting camber to avoid disturbing caster adjustment.

Toe-In: Measure 9-10" above floor with wheels turned straight ahead.

Toe-In Specification

Oldsmobile (All Models)	1/16-1/8"
Pontiac (All Models)	0-1/16"

To Adjust—Loosen clamp bolts at wheel end of each tie rod, turn tie rod adjuster on each rod equally. On Oldsmobile, turn both adjusters in direction opposite to that in which wheel revolves to increase toe-in. On Pontiac, turn right hand adjuster in same direction wheel revolves, and left adjuster in opposite direction to increase toe-in.

Steering Geometry (toe-out on turns):—With outer wheel turned exactly 20°, inner wheel should be turned 23° ± ½°. No adjustment provided (check for bent steering arms if incorrect).

SERVICING: Lower Control Arm & Pivot Shaft. Serviced as an assembly and not interchangeable on right and left sides of car. Pivot shaft at inner ends of control arms can be removed by taking out bushing in each arm. To install shaft, install tool J-1052 or block between arms adjacent to shaft eyes so that distance between inner faces of arms at shaft eyes is exactly 11½" (necessary to prevent distortion of arms when bushings installed). Install shaft with seal on each end adjacent to mounting bracket, thread bushing in on shaft and in arm simultaneously (new bushings cut their own thread in arm as they are turned in), tighten bushings with 150 lb. pull on 16" wrench (200 lbs. on 12" wrench) so that there is no clearance between bushing flange and control arm. See that distance between shaft bracket mounting holes and inner face of control arm is exactly 1½" at each end (turn shaft to centralize), and that seal ends lap over bushings.

Knuckle Support Lower Pivot Pin—To install pin, slip rubber seal over outer end of each lower control arm, center knuckle support between lower control arms (approximately ⅛" between end of bushing and front arm, same distance between head of bushing and rear arm). Screw pivot pin through front arm, knuckle support bushing, rear arm, install nut on rear end of pin. Pull seals down over end of arms so that they seat on pin between arm and bushing at each side.

Knuckle Support Upper Pivot Pin—To install, center knuckle support in upper control arm yoke, screw pivot pin in until larger center section is centered in knuckle support, tighten clamp bolt. Install seal on pin at each side, start front bushing in on pin, then screw rear bushing in control arm and on pin and tighten securely. Turn front bushing in until clearance between front face or arm and head of bushing 1/32", tighten clamp bolt.

Kingpin Installation (Oldsmobile)—Bushings should be installed with oil hole lined up with oil hole in knuckle support and short groove on inner surface leading from oil hole to outer end of bushing (up on top bushing, down on lower bushing). Bushings should be burnished with J-722-1 burnishing tool and line-reamed to size with tool HM-592.

Kingpin Installation (Pontiac)—Bushings are floating type and should be installed with lubrication groove on inner face leading toward outer end of bushing (up on top bushing, down on lower).

SPRINGS:—Lower end of spring not ground flat and must be installed with end coil fitted into recess in lower spring seat. Upper end of spring is ground flat. CAUTION—Spring must be installed with flat (ground) end up and lower end fitted in spring seat. Oldsmobile springs are paint marked on end coil

OLDSMOBILE SPRING SPECIFICATIONS

1940 Oldsmobile Springs

Model	Wire Diameter	Color Mark
60, 70	.608"	Yellow
90	.635"	Brown

1941 Oldsmobile Springs

66	.587"	Green & Orange
68	.625"	Aluminum
76, 96	.619"	Green & Yellow
78, 98	.635"	Green & Brown

1942 Oldsmobile Springs

66	.608"	Green & Orange
68	.642"	Brown
76	.619"	Yellow
78, 98	.642"	Green & Gray

1946-47 Oldsmobile Springs

Car Model	Part No
66 (exc. Bus. Coupe & Convertible)	419273
66 (Business Coupe)	419798
66 (Convertible)	419276
66 (Station Wagon)	417864
76	418782
78, 98 (2-door Club Sedan)	418783
98 (4-door Sedan)	419540
98 (Convertible)	419534

1948 Oldsmobile Springs

Car Model	Color Mark & Part No.
66 exc. Sta. Wgn. & Conv.	Green & Blue—419273
66 Station Wagon	Green & Yellow—417864
66 Convertible	Green & Red—419276
76	Yellow & Rust—418782
68 exc. Sta. Wgn. & Conv.	Green & Rust—554166
68 Station Wagon	Brown—417862
78 (All) & 68 Convertible	Green & Gray—418783
98 except Convertible	Green—419534
98 Convertible	Yellow & Brown—554955

P NTIAC SPRING SPECIFICATI NS

1940 Pontiac Springs

Model	Wire Diameter	Free Length
40-25	.594"	14⅞"
40-26	.608"	14 27/32"
40-28	.635"	14 7/16"
40-29	.635"	14 27/32"

1941 Pontiac Springs

41-24, 26, 27	.608"	15 3/16"
41-25	.608"	14 27/32"
41-28, 29	.625"	15 15/32"

1942 Pontiac Springs

42-25	.608"	14 27/32"
42-26, 27	.608"	15 3/16"
42-28	.625"	15 15/32"

1946-47-48 Pontiac Springs

Car Model	Spring Part No.
25 Torpedo 6 (except Convt. & Taxi)	509037
26 Strmlnr. 6 (exc. Sta. Wgn. & Taxi)	509039
27 Torpedo 8 (except Convt.)	509039
28 Strmlnr. 8 (except Sta. Wgn.)	509040
25 & 27 Convertibles	509038
25 Taxicab	509039
26 Taxicab	509040
26 & 28 Station Wagon	508116

PONTIAC KNEE-ACTION

Deluxe Six, Model 36-26A (1936)

Eight, Model 36-28 (1936)

DESCRIPTION:—Entire suspension unit (wheel support arm, coil springs, shock absorber) pivoted on kingpin at outer end of frame cross-member and turns with wheel. Wheel support arm mounted on support arm shaft carried on needle bearings in housing. Crank in inner end of shaft has a needle bearing mounted roller pin on end which engages spring guide. Two coil springs (outer main spring, inner control spring) mounted between guide and upper spring seat which is positioned in housing by adjusting plug at upper end. Shock absorber units (independent compression and rebound units) mounted in front of case act directly on support arm lever. Entire unit filled with oil. An additional radius rod linked to wheel and support housing used to guide wheel.

CHECKING:—Place car on level, with weight on wheels (roll ahead several revolutions if front wheels previously jacked up. Check following points first.

Tire Inflation—Front wheels not less than 25 lbs. Rear wheels not less than 30 lbs.

Front Wheel Bearings—Adjust bearings, check king pins and tie rod ball ends for looseness.

Frame Leveling—Frame must be level from front to rear. On Pontiac, check height of front tubular cross-member lower face at center (15 11/16") and lower face of rear frame horns (19") level with jacks. If frame not level crosswise, see Suspension Unit Height Adjustment below.

Kingpin Inclination: 8¾° crosswise. No adjustment provided (other than by bending cross-member).

Camber: Negative ¼° to Positive ¼° measured with car weight on wheels or wheel spindles. No adjustment other than bending cross-member.

Caster:—King-pin caster 0° with frame level. Caster effect obtained by trailing wheel behind center line of king-pin. No adjustment provided ther than bending cross-member.

C NTINUED ON NEXT PAGE

PONTIAC KNEE-ACTION (Cont.)

Toe In:—0-1/16" (All Models). Adjusted by changing length of tie rod in usual manner.

SERVICING:—To Remove Suspension Unit—Jack up car, remove wheel, disconnect brake hose at frame (wheel brake must be 'bled' when replaced), remove hub and brake assembly, disconnect radius rod bracket at lower end of suspension unit, turn suspension unit outward, lift off brake assembly supporting radius rod, remove steering arm nut, drive steering arm out using special brass drift, remove king-pin lockpin and plug lockrings, blow out upper plug using special plug remover J-746, drive king-pin and lower plug out through bottom using brass drift (conventional bronze bushings used).

Disassembly:—Clean outside of unit thoroughly and clamp in vise at radius rod bracket boss. Remove capscrew from adjusting plug, lift out plug lock, install special K-477 adjusting nut wrench in plug slot securing wrench with capscrew, remove adjusting plug (this relieves tension on outer spring), remove housing cover, lift spring upper seat assembly out, remove outer spring (if spacer forward under spring this must be reinstalled if old spring used again—spacer for new spring furnished attached to spring), lift out inner spring, drain fluid from case, back off shock absorber capscrews slowly and evenly and remove shock absorber units (shock absorber units matched pairs and must be reinstalled in same position in same unit). Remove lockscrew from support arm shaft cover, loosen hexagonal nut, pull shaft out of spring seat and shaft lever assembly catching loose needle bearings which will drop out at this point. Insert brass drift through housing, drive off shaft end packing cover, lift lower spring seat and shaft assembly out.

Assembly:—Reverse disassembly directions above and note special points as follows: To assemble support arm shaft lever pin, place one spacer on pin, apply light film of grease, insert pin in lever, insert 32 loose rollers or needle bearings, place second spacer on pin. To assemble support arm shaft, place bearing spacer on shaft level side out, insert rubber packing in packing cover, then cork packing, use special support shaft seal and packing inserter to install this assembly on support arm shaft, apply light film of grease on shaft, assemble 49 rollers or needle bearings on shaft holding them in place with rubber band which can be removed after shaft started in housing, see that lockscrew hole in shaft lines up with hole in lever, tighten lockscrew securely and peen metal around screw hole to prevent screw working loose. When installing end cover (after 42 needle bearings and bearing retainer inserted at small end of shaft), use new cork packing, coat with Formagasket #1 (not Shellac), drive into place. To install shock absorber units, line up holes in piston and cylinder by compressing spring, insert cotter pin loosely, install capscrews loosely using new lead washers under screw head, raise support arm to relieve spring tension, pull out cotter pin, tighten capscrews evenly and securely. Coat housing cover gasket, adjusting plug threads and locking plate capscrew with gasket cement, coat threads in housing with white lead, coat bottom of adjusting plug with grease before installing these parts. Fill unit with shock absorber oil, turn adjusting plug in flush with housing (adjust after installation).

Installing:—King-pin ball thrust washer installed at top of support. If endplay more than .006" insert steel shim above bearing. See Adjustment for Radius Rod Bracket Installation.

ADJUSTMENT:—Radius Rod—Screw radius rod up tight against brake backing plate, then back off not more than ½-1 turn so that wheel moves freely. Screw radius rod bracket on rod until tight, then back off not more than ½-1 turn until free, mount bracket in suspension unit, turning screws in loosely, roll car ahead several revolutions and bounce frame up and down, tighten screws securely, note wheel

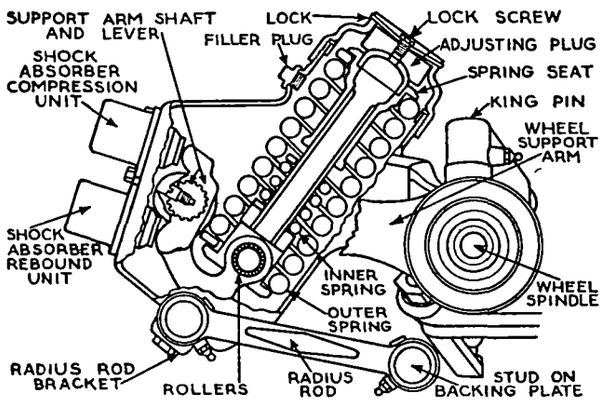

action. If wheel action stiff, file bracket boss slightly so that bracket can be placed in position by hand, install shim #496974—.010", #496910—.025" under screws. Wheel action must be free throughout range with bracket screws tight. Lock screws by turning up edge of lockplate under screwhead.

Frame Leveling:—Turn adjusting plug in housing cover not more than 2 turns in or 5 turns out from flush position so that distance from bottom of cross tube to bottom of brake drum is 5⅛" (1935), 5⅜" ('36) and equal on both sides of car, install lock and lock capscrew.

SHOCK ABSORBERS:—See separate article on "Special Knee-action Type" for complete data.

PACKARD 1936 SAFE-T-FLEX

"120" EIGHT, MODEL 120B (1936)

DESCRIPTION:—Consists of vertical wheel support arm pivoted at upper end on outer end of double shock absorber arm (shock absorber mounted on frame siderail at wheel), and at lower end on outer end of triangular arm mounted on frame cross member near center line of car (forward arm) and on frame side rail in front of cowl (rear or torque arm). Coil spring located between spring seat on lower control arm and upper seat on cross member. All pivot points on frame are rubber-bushed.

CHECKING & ADJUSTMENT: Check as follows:
Tire Inflation—22 lbs. (Conv.Coupe) 24 lbs. (others).
Frame Height—Load car so that top of frame side rail is 18" above floor and parallel to it.
Front Wheels—Check for runout, adjust bearings, turn wheels to straight ahead position.

Caster:—Should be 2° plus or minus ½°. Must be equal for both front wheels within ½°. Machined bosses on vertical wheel support for checking.

T Adjust—Jack up front end, take out 3 screws in torque arm rear socket, take off 2 nuts at forward end of torque arm freeing arm from forward or load carrying arm. Pull torque arm to rear until free, install wedge shim on torque arm studs, reinstall. Shims provided in two sizes; Part No. 0304699—½° taper, 0304698—1° taper. Install shims with thick end up to decrease, or down to increase caster. See that entire suspension unit moves up and down freely without binding after shims installed.

Camber:—Should be 1° plus or minus ¼°.
To Adjust—Jack up front end, support wheel, remove shock absorber link bushing bolt and pilot. Replace pilot with service pilot which throws top of wheel farther out to increase, or farther in to decrease, camber. Pilots furnished in four types as follows: Part No. 303075—0 offset, 303076—1/16" offset, 303077—⅛ offset, 303078—3/16" offset.

Toe In:—Should be 1/16-⅛". Check by measuring to center of tire tread at front and rear of wheels (spin wheel and chalk mark center of tread).

To Adjust—Loosen tie rod clamps, turn each tie rod equal amount. Check lengths after adjusting. If not equal, correct by shortening long rod and lengthening short rod equally to secure equal lengths.

SPRINGS:—Coiled helical type. All springs 5¼" diameter. Spring Rates as follows:

Model	Spring Rate (lbs. per in.)
120-B Std.	75 lbs.
120-B Export	110 lbs.
120-BA (Comm.)	130 lbs.

PACKARD 1937-40 SAFE-T-FLEX

'110' SIX, ALL MODELS (1937-38-39-40)
'120' EIGHT, ALL MODELS (1937-38-39-40)
SUPER EIGHT, ALL MODELS (1937-38-39-40)
TWELVE, ALL MODELS (1937-38-39)

NOTE:—This design similar to type used on previous '120' models.

CHECKING & ADJUSTMENT:—Car weight must be on wheels. Adjust front wheel bearings and check following points first:

Tire Inflation—Inflate all tires evenly to correct pressure.

Frame Height—Load car as indicated in table below and check height (front and rear). If heights not correct (within limits of plus or minus ¼"), replace or shim front springs (see spring data below), replace rear springs.

Front Height—Measure from floor to top of frame side rail at center-line of front spring.

Rear Height—Measure from under side of frame side rail to top of axle housing at rear of car.

IMPORTANT NOTE—Frame Heights must be correct as shown in table below when checking Caster and Camber.

Car Loads (for Frame Height Check)

Body Type	Front Seat	Rear
Coupes	300 lbs.	225 lbs.
5 Pass. Sedans	300 lbs.	375 lbs.
7 Pass. Sedans	300 lbs.	675 lbs.
Comm'l Chassis	300 lbs.	500 lbs.

CONTINUED ON NEXT PAGE

PACKARD 1937-40 SAFE-T-FLEX (C ntinu d)

Frame Heights

Model	Front Height	Rear Height
Six '37	17⅝"	4⅞"
Six '38-39	18¾"	6¼"
Six '40	18⅝"	6⅜"
Eight '37	18"	4⅞"
Eight (7 Pass.) '37	18⅛"	4⅞"
Eight '38-39	19¼"	6¼"
Eight 1801 '40	18¾"	6¼"
Eight 1801A '40	19¼"	6¼"
Super 8 '37-38	20⅛"	4¾"
Super 8 '39-40	19¼"	6¼"
Twelve '37	20 7/16"	4¼"
Twelve '38-39	20½"	4¼"

Kingpin Inclination—1° 30' (Six & Eight '37, Super Eight '37-38, Twelve '37-38-39), 1° 54' (Six & Eight '38-39-40, Super Eight '39-40).

Front Wheels—Set in straight ahead position. Check by measuring from backing plate on each wheel to frame siderail at first rivet behind bumper (must be equal within ⅛" with intermediate steering arm on center line of car). Correct by equalizing tie rod lengths.

Toe In:—Should be 1/32"-1/16" (Six '37-38-39, 120 Eight '37-38), 0-1/16" (120 Eight '39), 1/32-⅛" (Super Eight '37-38-39, Twelve '37-38), 0-⅛" (Twelve '39), 1/32-1/16" at hub height (all '40 Models).

To Adjust—Loosen tie rod clamps and turn each tie rod equally. If tie rod lengths not equal within ⅛" with correct toe in, wheels straight ahead, and intermediate steering arm on center line of car (see wheel section above), check for bent steering arm.

Caster:—Should be 2½° (Six & Eight '37, Super Eight '37-38, Comm'l. 1703A '39, 1803A '40), 1½° (Six '38-39-40, Eight 1601 '38, 1701 '39, 1801,1A '40), 0° (Eight 1602 '38, 1702 '39, Twelve '37-38-39), ½° (Super Eight '39), Negative 1° (Super Eight '40). All specifications are plus or minus ½° except Twelve which has allowable variation of minus ½° only (limits 0° to Neg. ½°).

To Adjust—Jack up front end, take out three screws in torque arm rear socket, take off two nuts at forward end f torque arm on front face of lower control arm, pull torque arm to rear until free. Install wedge shim furnished in ½° and 1° taper on torque arm with thick end up to decrease or down to increase caster, re-install torque arm. Check upper control arm pivot pin for alignment (if necessary, elongate shock absorber mounting bolt holes to line up pin).

Camber:—1° plus or minus ¼° (Six & Eight '37, Super Eight '37-38, Twelve '37-38-39), ½° plus or minus ½° (Six & Eight '38), ½° plus ¾° or minus 0° (Six, Eight, Super Eight '39-40).

To Adjust (Six, Eight, Super 8)—Jack up front end, support wheel, remove shock absorber link bushing bolt and pilot bushing. Install proper offset pilot (furnished in four sizes—0, 1/16", ⅛", 3/16" offset to throw top of wheel out (increase camber), or in (decrease camber). Pilots may be installed with ffset in either direction. 1/16" offset at pilot will change camber ⅓°. CAUTION—See that thimbles installed in both arms with offset in same direction (reversing offset will change camber).

To Adjust (Twelve)—Jack up front end, loosen shock absorber control arm yoke nut, install split washer between yoke and end of arm. Washers furnished ⅛", 3/16", ¼", 5/16" thick. 1/16" washer thickness will change camber 1/3°.

SERVICING:—**1939-40 Control Arm Damper.** Check by removing knuckle support upper pivot bolt at end of shock absorber arms and damper bolt at center of arms. Clearance between arms at damper friction disk should be .125-.135". If clearance not correct arms should be straightened or replaced. Damper tension spring pressure should be 105-115 lbs. compressed to 13/16". To assemble damper, install spring on bolt, insert bolt through arm which has larger hole, tighten nut securely so that opposite arm seated against shoulder on bolt. NOTE—This damper not used on Twelve.

Lower Control Arm Pivot Pin (Except Twelve)—Pivot pin is clamped in knuckle support and is mounted on special roller bearings in control arm ends with ball thrust bearing between knuckle support and rear arm. Bearing should be pre-loaded by installing thrust bearing shims (furnished in .001" thickness steps) between arm and support so that pull of 3-8 lbs. (1937), 1-6 lbs. '38-40) required to move upper end of knuckle support with upper pivot bolt removed (use spring scale hooked to upper end of support to check this pre-load).

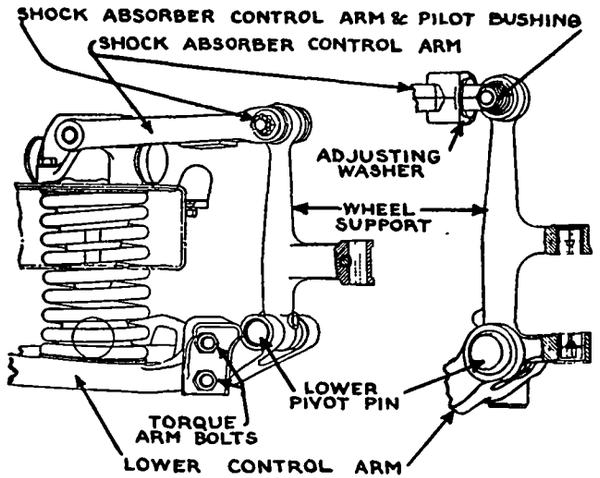

Lower Control Arm Pivot Pin (Twelve)—Pivot pin mounted on special roller bearing (rear end), adjustable tapered roller bearing (front end) with ball thrust bearing between knuckle support and front control arm. Front roller bearing should be adjusted by removing bearing cap and tightening bearing nut so that 5-6 lb. pull required to move upper end of support (upper pivot bolt removed). Make certain that bearing adjusting nut locknut securely tightened and lockplate ears turned up against nuts after making adjustments. Always use new bearing cap and install with special driver to seat cap in control arm.

Kingpin Bushings—Two types used, oil-impregnated bronze or split type steel-backed bronze bushings (later type superseding the solid bronze type). When installing new bushings, finish each type as directed below.

Oil-impregnated Bronz Bushings—Cannot be reamed and must be finished by burnishing to size with a burnishing bar (see table below). Use soap water to lubricate burnisher and install a long bolt between knuckle support yoke ends to prevent buckling while burnishing bar is being used.

Model	Burnishing Bar	Finished Diameter
Six & Eight '37-40	ST-5046	.866"
Super 8 '37,'39-40	ST-5046	.866"
Super 8 '38	ST-2006	1.063"
Twelve '37-38-39	ST-990	1.054"

NOTE—Kingpins also furnished .005" oversize.

Steel-backed, Bronze Bushings—May be finished by reaming or burnishing. See table above for burnishing bar type and finished diameter of bushing for each model.

Lower Control Arm Inner Bushings—Lower arms mounted on rubber bushings at inner end. To renew bushings, press new bushings in place in an arbor press using special bushing drift ST-5021 (Six, Eight, Super Eight), ST-989 (Twelve). Protect bushing with special sleeve ST-5099 (Six, Eight, Super Eight), ST-2003 (Twelve) to prevent bushing collapse while it is being pressed into place. **Important**—Check bushing alignment.

Bushing Alignment—Bushing must be started in hole in control arm so that flatted end of bushing pin is in correct position to prevent binding or excessive distortion of bushing when control arm installed on car. To check bushing alignment, install special dummy bolt with flatted end ST-5030 (Six & Eight '37, Super Eight '37-38), ST-5102 (Six & Eight '38-39, Super Eight '39), ST-987 (Twelve '37-38-39) in bolt hole at outer end of control arm, use straightedge installed on top of flatted end of bushing pin at inner end of arm and check clearence between straight edge and flatted portion of dummy bolt at outer end of arm (dummy bolt flat will indicate center line of bolt hole). Clearance should be ⅛" (Six, Eight, Super Eight '37-38), Flush or no clearance (Six, Eight, Super Eight '39), 9/32" (Twelve '37-38-39).

IMPORTANT NOTE—Above gauges cannot be used on 1940 models (new types required).

Wheel Support Upper Bushing—Rubber bushing type. Bushing may be renewed without removing wheel support from car by using special puller and pusher ST-5049.

Torque Arm—Dip torque arm rubber end bushings in soap water before assembling.

SPRINGS:—If frame height not correct (see above), install not more than two spacers #326836 (except Twelve), 341052 (Twelve) between upper spring cup and insulator on top of spring (if two spacers used, install insulator between spacers). Spacers are ¼" thick. If height cannot be corrected by this means, replace spring. Springs marked by 1, 2, or 3 color marks on center coils as follows:

1937 Spring Specifications

Model	Part No.	Free Lngth	Col r
120C	304408	14.63"	Gray
120C Del.	303849	15.16"	Brown
120CA	303285	13.12"	Yellow
120CA	311824	13.31"	Bronze
1500 Std.	232561	16.62"	White-Yellow
1500, 1 Fdr. Well	237559	16.24"	White-Orange
1501, 2 Std.	232480	16.62"	White-Red
1502 Fndr. Well	237425	16.57"	White-Green
1506 Std.	237905	15.84"	White-Blue
1506, 7 Fndr. Well	237686	16.39"	Red-Yellow
1507, 8 Std.	237906	16.12"	White-Yellow
1508 Fndr. Well	237907	16.74"	Red-Silver

C NTINUED N NEXT PAGE

PACKARD 1937-40 SAFE-T-FLEX (C ntinued)

1938 Spring Specifications

1600,R	326949	16 7/16"	Red-Green
1601,R; 1601-D, DR	326860	13⅝"	Green
1601,R; 1601-D,DR (FW)	326861	17⅛"	Silver
1601-A, AR	326925	15½"	White-Green
1602,R	326880	16½"	White-Blue
1602,R (FW)	326938	16 15/16"	Orange
1603	232561	16.62"	White-Yellow
1603,4 (FW)	237559	16.24"	White Orange
1604,5	232480	16.62"	White-Red
1605 (FW)	237425	16.57"	White-Green
1605—See Note	237853		White-Brown
1605 (FW)—See Note	237854		White-Pink
1607, 8	237686	16.39"	Red-Yellow
1607 (FW)	237907	16.74"	Red-Silver
1608 (FW)	240293		Green-White

(FW)—Cars with Fenderwells.

1600, 1601, 1602 Note—First cars equipped with short front spring with spacer collar on top of spring. When installing service springs, remove and discard this spacer collar (only long springs furnished).

1605 Note—8 Pass. Business Sedan & Limo. only.

1939 Spring Specifications

Model	Part No.	Color Marks
1700	335413	Yellow & Blue
1701	326860	Green
1701 FW	326861	Silver
1701A	326925	White & Green
1702	326880	White & Blue
1702 FW	326938	Orange
1703	335692	Red & Silver
1703 FW	338166	Yellow & Silver
1703A	338897	See Note
1705	338156	Orange & Purple
1705 FW	335990	Orange & Blue
1707, 1708	237686	Red & Yellow
1707 FW	237907	Red & Silver
1708 FW	240293	Green & White

NOTE—This spring Orange, Red and Silver.

1940 Spring Specifications

Model	Part No.	Color Marks
1800 Std.	348127	Yellow & Red
1801 Std.	348377	Yellow & Blue
1801 FW.	326860	Green
1803, 6 Std.	335692	Red & Silver
1803, 6 FW.	338166	Yellow & Silver
1803, 6 Exp.	338269	Blue & Silver
1803, 6 Exp. FW.	351708	Silver & White
1803A Comm'l.	326925	White & Green
1804, 7 Std.	354690	Orange, Red, Blue
1804, 7 FW.	354691	Orange, Red, Purple
1804, 7 Exp.	333736	Brown & Blue
1804, 7 Exp. FW.	333575	Brown & Silver
1805, 8 Std.	351256	Purple & Silver
1805, 8 FW.	354710	Yellow, Red, Silver
1805, 8 Exp.	351256	Purple & Silver
1805, 8 Exp. FW.	354710	Yellow, Red, Silver

Std.—Spare at Rear. FW.—Fender Well cars.

PACKARD 1941-42 SAFE-T-FLEX

'110' SIX, 1900 (1941), 2020 (1942)
'120' EIGHT, 1901, 1A (1941); 2001A, 21 (1942)
'160' SUPER EIGHT, 1903,3A,4,5 (1941)
'160' SUPER EIGHT, 2003A,23,4,5,55 (1942)
'180' CUSTOM SUPER EIGHT, 1906,7,8 (1941)
'180' CUSTOM SUPER EIGHT, 2007, 8 (1942)

NOTE:—Packard Clipper—This model has new 'parallelogram' type Independent Suspension. See separate article for data on Clipper models.

PRODUCTION CHANGE NOTE:—Kingpin Thrust Bearing (Six & Eight)—Special antimony-lead type thrust bearing used on first cars with roller bearings at each end of steering knuckle kingpin. These bearings changed on later cars to ball thrust bearing and bronze bushings on kingpin. Later type unit bearings only furnished for service. NOTE—New type ball thrust bearing can be installed without replacing roller bearings on kingpin if these bearings in good condition. Antimony-lead thrust bearing has tendency to bind and cause steering stiffness if not lubricated frequently.

Kingpin Bushings (Super Eight)—Antimony-lead bushings used on steering knuckle kingpin on first cars with ball thrust bearing. Changed to roller bearings on later cars (no change in thrust bearing). Roller bearings only furnished for service (antimony-lead bushings have tendency to bind and cause steering stiffness if not lubricated frequently).

TYPE:—Independent 'Safe-T-Flex' type. Same design as used on corresponding 1940 models (see Production Change Note above for different type bearings used).

CHECKING & ADJUSTMENT:—Check front wheel bearings and set wheels in straight ahead position, check following points first:

Tire Inflation—Check tires and inflate to correct pressure for each model.

Frame Height—Must be correct when checking caster and camber. To check, load car with 300 lbs. (front—all models), 225 lbs. (rear—Coupe), 375 lbs. (rear—5 Pass. Sedan), 675 lbs. (rear—7 Pass. Sedan), 500 lbs. (rear—1901A Hearse), 800 lbs. (rear—1903A Hearse). Measure from floor to top of frame side rail at front spring center-line (front) from underside of frame to top of axle housing (rear). If height not correct, install spacer or replace spring (see Springs below).

Car Model	Front	Rear
1900 Six	17⅝"	5¾"
1901 Eight	18⅛"	5¼"
1901A Comm'l.	18¾"	5¾"
1903, 4, 5, 6, 7, 8	18¾"	5¼"
1903A Comm'l.	19¼"	5¾"

1942 Models—Measure from floor to frame on each side to ascertain if car is level crosswise. If these measurements not equal on both sides within 1/16-5/16", check front springs and install spacer or replace spring on low side of car (See Springs).

Kingpin Inclination:—2½° crosswise (all models). NOTE—Car weight must be on wheels when checking following adjustments.

Toe-In:—0-1/16" (All Models). Measure between tires 10" up from floor. When checking toe-in, first set wheels straight ahead and correct tie rod lengths, if required, as follows: Install Steering Crank Aligning Gauge ST-5105 in frame cross-channel under steering crank (gauge indicates center-line of car). See that steering gear roller on high mid-point of worm with mark on cross-shaft in line with mark on case. Adjust tie rods (lengthen one rod, shorten other rod) until distance from mark on gauge to brake backing plate is same on both sides of car. Both tie rods should be equal within ½".

To Adjust—Loosen clamp bolts and turn both tie rods equally. Tie rod lengths must be equal within ⅛" after adjusting with intermediate steering arm centered and steering wheel roller on 'high' point of worm (adjust by shortening one rod, lengthening opposite rod equally). NOTE—If tie rod lengths not equal within ½" with intermediate steering arm centered and steering gear in straight ahead position, check for bent steering knuckle arms.

Caster:—Positive ½° plus or minus ½° (1941 Six & Eight), Pos. ¼° (1942 Six & Eight), Neg. ¾° plus or minus ½° (1941 Super 8 except 1903A), Pos. 2½° plus or minus ½° (1903A), Neg. 1° 15' plus or minus ½° 1942 Super Eight).

To Adjust—Install wedge shims (furnished in ½° and 1° taper) between front face of lower torque arm and lower control arm. Install shims with thick end up to decrease caster, thick end down to increase caster. If 1° shim does not correct caster, check for bent parts. Check torque arm alignment

Camber:—½° with limits ½° to 1¼° (1941 Models), 0° with limits of plus ¾° or minus ¼° (Right Wheel), plus 1° or minus 0° (Left Wheel) for 1942 models.

To Adjust—Remove support pin linking upper control arm and knuckle support, change pilot thimbles in outer end of each upper control arm. Thimbles furnished with offset of 0", 1/16", ⅛", 3/16", ¼" and change of 1/16" in offset will change camber ⅓°. CAUTION—Make certain that thimbles installed in both arms with offset in same direction

Steering Geometry (toe-out on turns):—With outer wheel turned exactly 20°, inner wheel should be turned 23½° (all models). N adjustment provided

SERVICING:—Upper Control Arm Damper—To check, remove knuckle support upper pivot bolt at outer end of shock absorber arms and damper bolt at center of arms. Clearance between arms at damper friction disk should be .125-.135". If clearance not correct arms should be straightened or replaced. Damper tension spring pressure should be 105-115 lbs. compressed to 13/16". To assemble damper, install spring on bolt, insert bolt through arm which has larger hole, tighten nut securely so that opposite arm seated against shoulder on bolt.

Upper Control Arm Pivot Pin—Knuckle support is mounted on two Harris type rubber bushings on pivot pin at outer end of upper control arm. When installing pivot pin, tighten nut securely (bushing compression regulated by spacer sleeve on pin).

Lower Control Arm Pivot Pin—Pivot pin is clamped in knuckle support and is mounted on special roller bearings in control arm ends with ball thrust bearing between knuckle support and rear arm. Bearing should be pre-loaded by installing thrust bearing shims (furnished in .001" thickness steps) between arm and support so that pull of 1-6 lbs, required to move upper end of knuckle support with upper

CONTINUED ON NEXT PAGE

PACKARD 1941-42 SAFE-T-FLEX (C ntinu d)

pivot bolt removed. CAUTION—Roller bearings are caged type and one of the two bearings must be renewed whenever pivot pin or either bearing is removed.

Lower Control Arm Frame Mounting—Arm is rubber bushed on frame bracket pin (two Harris type bushings used, bushings held by locking ring on pin at one end-washer). Bushings can be installed without using arbor press but must be aligned in neutral position (flat on pin must be in line with flat on special gauge bolt installed in hole in outer end of arm—use special gauge No. ST-5157.

Torque Arm Frame Mounting (Six, Eight, Super 8 1903, 6 Only)—Mounting at frame consists of two Harris type rubber bushings in end of arm. When installing torque arm, tighten mounting bolt until frame mounting bracket bottoms on bolt shoulder. NOTE—Frame mounting on other models consists of a hollow rubber ball installed on end of torque arm and clamped in frame bracket. Dip the hollow rubber ball in soap water to facilitate installation of torque arm ball.

Kingpin Bushings—See Production Change Note above. When installing the service bronze bushings, bushings should be finished to size by burnishing with Packard Burnisher ST-5046 or reamed to inside diameter of .866". Kingpins also furnished .005" oversize to compensate for worn spindle bushing holes. NOTE—When installing kingpins, adjust thrust bearing pre-load by installing shims (furnished in thickness steps of .001") so that force of 3½-5 lbs. applied at end of spindle is required to turn spindle on kingpin.

SPRINGS:—Springs paint-marked for identification as shown in table below. If frame height not correct, install not more than two spacers #326836 (¼" thick) between upper spring cup and insulator on top of spring (if two spacers used, install Insulator #326706 between spacers). If height cannot be corrected by this means, replace springs.

1942 Spring Specifications

Car Model	Spring Part No.
2020	362823
2021 Std.	348377
2021 F. W.	326860
2001A	326925
2003A	338897
2023	355692
2023 F. W.	338166
2004, 7	354690
2004, 7 F. W.	354691
2005, 8	351256
2005, 8 F. W.	354710
2008 F. W.	364609

F. W.—Fender Well Cars (Side Carrier).

1941 Spring Specifications

Model	Part No.	Color Marks
1900 Std.	362823	Red & White
1900T Taxicab	326860	Green
1901 Std.	348377	Yellow & Blue
1901 FW.	326860A	Green
1901 Sedan Exp. Std.	351223	Red & Purple
1901 Sedan Exp. FW	351224	Red & Brown
1901 Coupe Exp. Std.	351225	Red & Silver
1901 Coupe Exp. FW	351735	Orange & Yellow
1903 Std.	335692	Red & Silver
1903 FW.	338166	Yellow & Silver
1903 Exp. Std.	338269	Blue & Silver
1903 Exp. FW.	351708	Silver & White
1906 Std.	326861	Silver
1906 Exp. Std.	326861	Silver
1906 Chassis Std	335692	Red & Silver
1906 Chassis FW	338166	Yellow & Silver
1906 Chassis Exp. Std.	338269	Blue & Silver
1906 Chassis Exp. FW	351708	Silver & White
1904, 7 Std.	354690	Orange-Red-Blue
1904, 7 FW	354691	Orange-Red-Purple
1905, 8 Std.	351256	Purple & Silver
1905, 8 FW.	354710	Yellow-Red-Silver
1908 Std. (See Note)	354710	Yellow-Red-Silver
1908 FW. (See Note)	364609	Green-Red-Purple

Std.—Spare at rear. FW.—Cars with Fender Wells.
1908 Note—LeBaron Sedan & Limousine only.

PACKARD 1941-48 CLIPPER

Clipper Eight, Model 1951 (1941)
Six, 2000, 2010 (1942); 2100, 2130 (1946-47)
Eight, 2001, 2011 (1942), 2101, 2111 (1946-47)
Eight, Models 2201, 2211, (1948)
Super Eight, 2003 (1942), 2103, 2123 (1946-47)
Super Eight, 2202, 2222, 2232 (1948)
Custom Super 8, 2006 (1942), 2106, 2126 (1946-47)
Custom Eight, 2206, 2213, 2226, 2233 (1948)

NOTE:—This new type suspension used on Clipper models only. See separate article for different design used on other Packard models.

TYPE:—Independent 'parallelogram' type with coil springs. Design not like that used on other Packard models in that torque arm not used. Lower control arm consists of a double arm pivoted on a bracket shaft bolted on the front frame cross-member near the center with the lower spring seat riveted on the arms. Spring seat also serves as a mounting for the lower rubber bumper and has a connection for the front stabilizer bar link.

CHECKING & ADJUSTMENT:—Check front wheel bearings and adjust if necessary, check wheels and tires for balance and run-out, check shock absorber action. Set front wheels in straight ahead position and check following points first:

Tire Inflation (1941-47)—Inflate tires to 26 lbs. (Front—Six), 28 lbs. (Rear—Six), 28 lbs. Front & Rear (All Other Models).

Tire Inflation (1948)—Inflate tires (front & rear) to following pressures (cold):

2201 & 2211 (exc. St. Sedan), 2206, 2240	28 lbs.
2201 & 2211 Station Sedans	26 lbs.
2202, 2232, 2233	26 lbs.
2220, 2222, 2226	32 lbs.

Frame Height—Car must be loaded or pulled down to correct riding height when checking front end specifications as follows:

Front End—3½" from lower face of frame side rail to top of lower control arm.

Rear End—5" from lower face of frame side rail to top of rear axle housing.

Kingpin Inclination: As follows:

1941-47 All Models	5°35' Crosswise
1948 2232 & 2233 Convertibles	5°35' Crosswise
1948 2226 & 2213 Custom	2°30' Crosswise
1948 All Other Models	5°50' Crosswise

Caster: As listed below with correct Frame Height.

Caster Specifications

1941-47 All Six & Eight	Neg. 1° ± ½°
1942-47 All Super & Cust. Super 8	Neg. 2° ± ½°
1948 Six 2220	Neg. 2° ± ½°
1948 Six 2240 & Eight 2201, 2211	Neg. 1° ± ½°
1948 Super 8 2202, 2232	Neg. 1° ± ½°
1948 Super 8 2222	Neg. 2° ± ½°
1948 Custom 8 (All Models)	Neg. 2° ± ½°

To Adjust Caster—Loosen clamp bolt in upper end of knuckle support, remove lubrication fitting in front bushing at outer end of upper control arm, install Allen type wrench, special tool No. KMO-487, through lubrication fitting hole so as to engage socket in end of upper pivot pin, turn this eccentric pin clockwise to increase caster, counter-clockwise to decrease caster **in complete turns only**, tighten clamp bolt and re-install lubrication fitting. NOTE—This pin also controls camber and camber will be disturbed unless pin turned in complete turns only

Camber: 0° plus or minus ½° (All Models).

To Adjust Camber—Adjusted in same manner as Caster (above) except that entire range of adjustment secured in ½ turn of the eccentric pin. NOTE—This adjustment affects Caster and will be satisfactory if pin turned not more than ½ turn from point where correct caster adjustment is secured.

Toe-In:—0-1/16" (all models). Measure between tires 10" above floor. When checking toe-in, first set wheels straight ahead and correct tie rod lengths, if required, as follows: With wheels straight ahead, line up mark on steering gear case with mark on roller cross-shaft to insure roller being on high midpoint of worm, install Center Gauge J-2556 on frame cross-member, adjust tie rods (lengthen one rod, shorten opposite rod) until distance from mark on gauge to brake backing plate is same on both sides of car. CAUTION—See that steering marks kept in alignment while making this adjustment.

To Adjust Toe-In—Loosen clamp bolts on adjusting sleeve at outer end of each tie rod, turn both adjusting sleeves equally (to avoid disturbing steering gear position). Make certain that ball joint socket is horizontal or square with ball stud when tightening adjusting sleeve clamp bolts. NOTE—If correct toe-in adjustment cannot be secured by turning both tie rods equally within ½ turn (tie rod lengths equal within ½") without turning steering gear off high point of worm, steering gear pitman arm should be relocated on cross-shaft.

Steering Geometry:—With outer wheel turned exactly 20°, inner wheel should be turned 23° plus or minus ½°. No adjustment is provided. Check for incorrect Caster or bent steering arms if incorrect.

SERVICING:—Knuckle Support Upper Pivot Pin & Bushings—To assemble knuckle support and upper control arm, thread eccentric pivot pin in upper end of knuckle support until larger center section is centered in support with adjusting wrench socket toward front of car (approximately two threads exposed at rear of support), install clamp bolt in support and tighten securely, install seals on each end of pin (front seal approximately ⅛" shorter than rear). Hold knuckle support centered in end of upper control arm, thread rear bushing in arm and on pin partially, start front bushing on pin, then tighten rear bushing securely to 90-100 ft. lbs. Turn front bushing in until clearance between hexagonal

CONTINUED ON NEXT PAGE

PACKARD 1941-48 CLIPPER (C nt.)

head of bushing and front face of control arm is 1/32", install clamp bolt in front eye of control arm and tighten this clamp bolt securely.

Knuckle Support Lower Pivot Pin—Consists of a bolt threaded through eyes at outer end of lower control arm and a bushing which is threaded in knuckle support and on the bolt. Bolt is retained by a nut on the rear end. To assemble, install bushing in knuckle support, tighten bushing to 145-155 ft. lbs. Slip rubber seal over each end of bushing, hold knuckle support and bushing centered in lower control arm, thread bolt through arm and knuckle support bushing from front, install nut and washer on rear end of bolt, snap seals down over bushing and into place on the bolt at each end of bushing. NOTE—Clearance between inner face of control arm and end of knuckle support bushing should be ⅛".

Lower Control Arm Frame Mounting Pivot Shaft—Control arm is pivoted on shaft bolted to frame cross-member by bushings which are threaded in arm and on shaft. Shaft can be removed from arm by removing bushings. New bushings cut their own thread in the arm and must be installed as follows: Install special spreader tool J-1052 between inner ends of lower control arm to maintain correct distance of 11½" (plus or minus 3/64") between inner faces of control arm while bushings being installed (expand tool until correct distance of 11½" is secured). Hold pivot shaft centered in end of control arm so that distance from center-line of frame mounting holes to inner face of arm is 1½" at each end, see that seals installed on each end of shaft. Start bushing on shaft and in arm at same time, tighten bushings securely to 145-155 ft. lbs. Check to see that arm pivots freely on shaft and that 1½" dimension at each end is maintained (shaft can be rotated to centralize it in arm).

SPRINGS:—Removal & Installation—To remove spring, support car with jack under lower control arm, raise wheel 3-4" off floor, place jack stand under frame side rail, disconnect stabilizer link at lower control arm, install jack under lower control arm frame mounting bar (inner end), take out mounting bar bolts and nuts, lower jack slowly to relieve spring tension, lift spring out.

Installation. Install in same manner paying particular attention to spring marks (see Note below). Make certain that flattened (ground) end of spring is upward and centralized by four lugs on cross-member, see that lower end of spring indexes with hole in spring seat (lower end not flattened and must be properly installed in spring seat recess).

Spring Identification Note—Springs are graded and marked by notches (Grind Marks) on end of last flat coil as follows: 2 Grind Marks—High Limit, No Grind Mark—Normal, 1 Grind Mark—Low Limit. Springs must be installed in following combinations (#1 preferred) to maintain correct frame height.

Cars Without Electromatic Clutch

Comb.	Left Side	Right Side
#1	High Limit (2 marks)	Normal (No Marks)
#2	High Limit (2 Marks)	Low Limit (1 Mark)
#3	Same on both sides.	

Cars With Electromatic Clutch

#1	High Limit (2 Marks)	Low Limit (1 Mark)
#2	High Limit (2 Marks)	Normal (No Marks)
#3	Normal (No Marks)	Low Limit (1 Mark)

Spring Height—If car sags on left front corner or frame height above floor is not equal on both sides of car within 1/16-5/16", check springs to make certain that correct springs are installed.

1942 Spring Specifications

Car Model	Spring Part No.
2000	377253
2001	373862
2003, 2006	367740

1946-47 Spring Specifications

Car Model	U. S.—Part No.	Can. & Exp.
2100	367653	387864
2101, 2111	373862	387865
2103, 2106	367740	387866
2126	387552	

1948 Spring Specifications

Car Model	Color Mark & Part No.
2201, 2, 11	Orange & Brown—395720
2232	Red—367740
2206, 33	Orange & Silver—395721
2213	Red & Purple—382980
2222, 26	Orange & Yellow—387552

1948 Export Springs

2201, 2, 11, 32	Red & White—395723
2206, 33	Brown—384857
2222, 26	Orange & Yellow—387552

Shock Absorbers:—Houdaille double-acting type mounted on bracket on frame side rail and linked to lower control link at outer end.

Spring Mounting:—Spring bolted to lower spring plate by two 'U' bolts. Spring plate bolted on lower face of spring housing or cross-member.

Steering Linkage (all models)—New type with adjustable tie rod connected between steering gear pitman arm and idler arm mounted on right hand frame side rail. Pitman arm connected to left wheel, and idler arm connected to right wheel by non-adjustable reach rods.

CHECKING & ADJUSTMENT:—Car weight must be on wheels. Adjust front wheel bearings and check following points first:

Tire Inflation—33 lbs. (1936-38), 36 lbs. (Commander 1939).

Frame Height—Bounce car up and down several times to insure frame assuming normal position.

Kingpin Inclination—9½° all models before Serial Nos. 5,258,246 (Dict. South Bend), 5,803,288 (Dict. Pacific Coast), 7,111,836 (Pres.). 5½° all models after these numbers.

Caster:—Should be Neg. ¼° to Pos. ¾° (all models). Caster angle controlled by front spring and is not adjustable.

Camber: Should be 1-1½° (All models 1936-37), ¼-¾° (All models, 1938-39). Controlled by eccentric upper support pin.

To Adjust (All 1936-38 Models & 1939 Early Commander)—Loosen the two clamp bolts in the knuckle support upper end. Install wrench on hexagonal head of support pin, move wrench toward car frame to increase, or toward wheel to decrease camber. Tighten clamp bolts. Neutral position of pin is with wrench flats vertical.

Toe-In: 3/16" (limits 1/8-7/32") for all 1936-37 models, 1/16-1/8" for 1938-39 models.

To Adjust (1936-37 Models)—Loosen clamp bolts and turn longer (right hand) tie rod or reach rod. The shorter left hand tie rod is not adjustable.
NOTE—Non-adjustable reach rod (tie rod) fitted with non-adjustable spring loaded end which absorbs road shocks. Outer bearing (ball end) must be screwed in tight and clamp bolt kept tight at all times.

To Adjust (1938 Models & 1939 Early Commander)—Loosen clamp bolt at each end of center tie rod (between steering gear pitman arm and idler lever on frame), turn this center tie rod.
NOTE—The two reach rods (end rods) are not adjustable.

CONTROL ARM ASSEMBLY:—Upper Support Arm Inner Bushing—Support arm should be centered in frame brackets, straight rubber bushings pushed in from each end until they contact shoulder on arm, washer installed on outer end of bushing, and retainer screw turned up until it is tight (washer against shoulder on shaft). This will squeeze rubber out at each end forming flange at bracket. Bushings should not turn, all pivoting action being through elasticity of bushings.

Upper Support Outer Pivot Pin:—Eccentric pin clamped in upper end of knuckle support by tw clamp bolts. Assembled by placing knuckle support in position in upper support arm, installing eccentric pin in support, threading support pin bushings

C NTINUED N NEXT PA E

STUDEBAKER 1936-39 PLANAR

DICTATOR, 4A (1936), 6A (1937)
COMMANDER, 7A (1938)—SEE NOTE
STATE COMMANDER MODEL 8A (1938)
COMMANDER, 9A (1939)—SEE NOTE
PRESIDENT, 2C (1936), 3C (1937), 4C (1938)

NOTE—Model 7A called 'Six', Model 8A 'Commander' in early 1938.

1939 PRODUCTION CHANGE NOTE:—Commander Model 9A—Beginning with Serial No. 4112701, upper support arm changed to same type used on 1939 President Model (new type upper support arm frame bracket with shims for Camber adjustment located between bracket and frame). At the same time, the knuckle pin design and Shock Absorber mounting was likewise changed to the same type used on Champion & President Models. Data below applies to first type 1939 Commander Suspension only. *Refer to separate Studebaker Planar Type Suspension article (following page) for data on later 1939 Commander and all 1939 Champion and President Models.*

DESCRIPTION: 1936-37. Vertical steering knuckle support pivoted at lower end on outer end of transverse cantilever spring and at upper end on tubular support arm which is pivoted on frame siderail. An additional spring control link is linked to the support and the frame cross member directly below the spring to insure control and act as a jack pad in raising the car. Control link is rubber bushed at both ends and upper support arm is rubber bushed at frame end.

1938 Models (& Early 1939 Comm.): Design changed from 1937 type in the following respects:

STUDEBAKER 1936-39 PLANAR (C ntinu d)

in n pin through support arm yoke from front and rear and tightening all clamp bolts.

Lower Control Link:—Mounted on spring plate at inner end and lower end of knuckle support at outer end in rubber bushings. Coat bushings with soft soap when installing control link bolts. Draw bolt nuts down tight. Do not put grease or oil on rubber bushings.

FRONT SPRING:—T remove—Jack up front end with jacks placed under each frame side rail at rear of front wheels. Raise car approximately 3". Remove cotters, nuts and washers on outer ends of spring control link, drive bolts out (use brass drift). Remove threaded spring bolts at each end of spring. Take ut 10 bolts attaching spring plate to spring retaining channel, remove plate and control link assembly. Spring may then be taken out.

To Install—See that grease retainers at each end of spring channel are in place, coat spring channel and fill spring plate with fibrous grease before installing spring. Center spring eyes in spring support of knuckle support when installing spring bolts (⅛" minimum clearance between face of spring and inner face of support when entering bolt in threaded spring bushing). See that lock is in place under spring bolt head.

1938-39 Type—Spring is bolted to lower spring plate and can be removed with the plate after the spring plate bolts have been taken out.

STUDEBAKER 1939-46 PLANAR

CHAMPION, G ('39), 2G ('40), 3G ('41), 4G ('42)
CHAMPION, MODEL 5G (1946)
COMMANDER, 9A (1939)—SEE NOTE
COMMANDER, 10A ('40), 11A ('41), 12A ('42)
PRESIDENT, 5C ('39), 6C ('40), 7C ('41), 8C ('42)

PRODUCTION CHANGE NOTE:—Commander 9A (1939). This type Suspension used on 1939 Commander model beginning with Serial No. 4112701. See preceding article for data on early 1939 cars

Steering Reach Rod Change—Reach rod outer nd assemblies and inner rod have been changed and rods or parts are not interchangeable (right and left or inner and outer ends). Replacement parts must be ordered for, and installed, in correct locations as shown in table below.

CAUTION—Ball end on steering reach rod outer end assembly is larger and must be used only in this location (will cause interference if installed on inner end). Rawhide seals are used on both inner and outer end assemblies.

Steering Reach Rod Assembly

Car Model	9A, 5C	6C	10A
①R-LHC Cars	513446	513450	513450
②L-LHC Cars	513447	513451	513451
③R-RHC Cars	513448	513448	513452
④L-RHC Cars	513449	513449	513453

Reach Rod Outer End Assembly

⑤R (Right Side)	513303	513303	513303
⑥L (Left Side)	513304	513304	513304

Reach Rod Inner End Assembly

⑤R (Right Side)	513305	513305	513305
⑥L (Left Side)	513306	513306	513306

①—Right Side—Left Hand Drive Cars.
②—Left Side—Left Hand Drive Cars.
③—Right Side—Right Hand Drive Cars.
④—Left Side—Right Hand Drive Cars.
⑤—Include these symbols with Part Number when ordering replacements parts.

SPECIAL SERVICE NOTE:—Raising Front of Car—Whenever front end of car is raised to provide clearance for work under front end, special supports must be used so that weight properly distributed on suspension system. Use Planar Lifting Bar, Tool No. S-15, for this purpose, installing bar n jack and engaging bar under front spring.

Adjusting Tie Rod—Adjustment on early 1939 cars is made differently than on later 1939 and 1940-42 cars (center tie rod adjustable on early cars, right and left reach rods adjustable on later cars). See Tie Rod Adjustment (below) for complete instructions on each type.

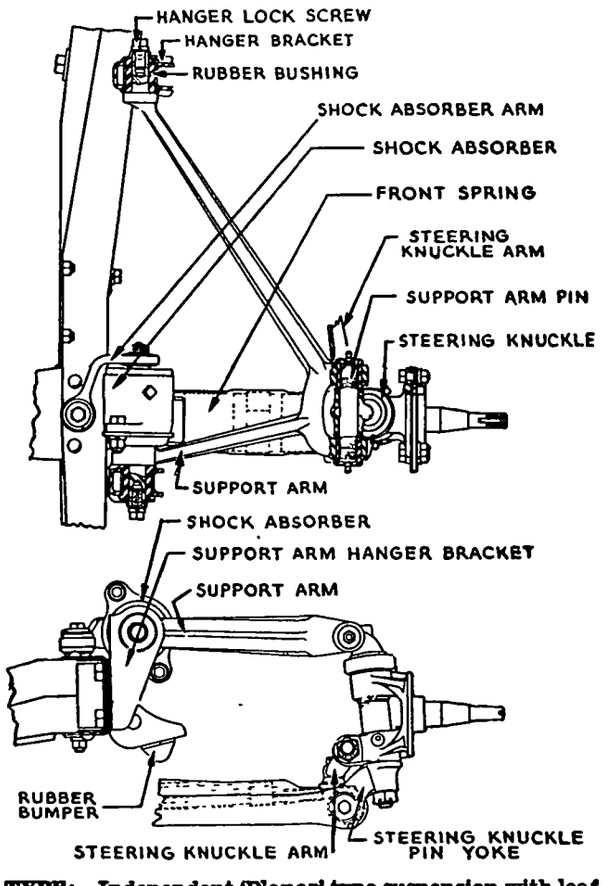

TYPE:—Independent 'Planar' type suspension with leaf type spring serving as lower control arm. Design similar to type used on previous models except for following features:

Upper Support Arm (1939-40 Comm. & President—Support arm is tubular type (as on previous models) with new type frame brackets and Camber adjustment shims between bracket and frame. Shock absorber mounted on front face of arm so that it pivots with arm (lever bolted to frame side rail and remains stationary). Knuckle pin (kingpin) has eye at upper end which is linked directly to support arm by pivot pin (no separate knuckle support) and has yoke at lower end for spring eye bolt (lower support pivot pin).

Upper Support Arm (1941-42 Comm. & Pres., All Champion Models)—Upper support arm is wishbone type with arms widely separated and attached to frame by individual brackets at inner end, yoked to knuckle pin (kingpin) pivot pin at outer end. Camber adjustment shims are located between the support arm brackets and the frame side rail. Knuckle pin has yoke at lower end for spring eye bolt (lower pivot pin and separate knuckle support is not used). Two outer leaves of spring are wrapped around knuckle pin pivot pin and lower control link used on 1941 models only (not used on 1939-40 Champion). Shock absorber is reversed type with lever bolted to frame so that it remains stationary while shock absorber body pivots with upper support arm.

Control Links (1941-46 Cars)—Stamped steel control links are used on all cars. These are pivoted on front spring plate (Champion), front frame crossmember (Commander & President) at center of car (inner end) and are attached by spring bolt to steering knuckle lower yoke at outer end.

Steering Gear Linkage—Steering Gear has insulated steering arm (bolted to adapter arm on steering gear shaft through rubber bushings) and non-adjustable link between steering arm and idler lever on bracket on right frame side rail. Each wheel linked individually to steering arm (left wheel) or idler lever (right wheel) by adjustable reach rod. See Toe-in adjustment for special reach rod adjusting instructions.

NOTE—On early 1939 Champion (before Serial No. 19899) and other early 1939 models, the outer reach rods are non-adjustable and toe in adjustment is made by turning the center adjustable tie rod as on 1938 models.

CHECKING & ADJUSTMENT:—Adjust front wheel bearings, check shock absorbers, steering gear adjustment, steering arm and tie rods for looseness. Check following points first:

Frame Height—Raise and lower front end several times by grasping bumper so that frame will assume normal position.

Tire Inflation—Check tires and inflate to 26 lbs. front & rear (Champion '39), 30 lbs. front & rear (Comm. & Pres. '39), 26-28 lbs. (front—Champ. & Comm. '40), 30-32 lbs. (rear—Champ. & Comm. '40), 30 lbs. front & rear (Pres. '40), 26 lbs. front—(Champ. '41-46), 28 lbs. rear (Champ. '41-46), 28 lbs. front & rear (Comm. '41-42), 26 lbs. front & rear (President '41-42).

Kingpin Inclination—5½° crosswise (all models).

Caster:—5½-6½° (Champion 1939), 1-2° (Champion 1941-46), Negative ¼° to Pos. ¾° (Commander & President 1939-40-41-42). Caster angle is determined by front spring and is not adjustable.

Camber:—½° (¼—¾°) for all models.

CONTINUED ON NEXT PAGE

STUDEBAKER 1939-46 PLANAR (C ntinued)

To Adjust—Loosen upper support arm frame mounting bracket bolts, remove shims from between mounting bracket and frame to decrease camber, add shims to increase camber (shims slotted). One thin shim will change camber ¼°, thick shims are equal to four thin shims. Tighten bracket bolts securely after adjusting. CAUTION—Make certain that shim thickness equal on both mounting brackets (add or remove shims equally at each bracket when making adjustments).

Toe-in:—⅛-7/32" (Champ. '40), 1/16-⅛" (all other models).

To Adjust (Early 1939 Models)—Loosen clamp bolt at each end of center tie rod (between steering gear pitman arm and idler lever on frame) and turn this center tie rod.

To Adjust (Later 1939 Models & 1940-46 Models). Set the steering gear in the "straight ahead" position (center of travel with lever lugs on 'high' points of cam), loosen clamp bolts and turn **left hand** reach rod until left hand wheel is in straight ahead position (parallel to rear wheel). Then loosen clamp bolts and turn **right hand** reach rod (between steering idler arm and right hand wheel) to adjust toe-in. CAUTION—Toe-in adjustment must be made exactly as detailed above to insure correct steering gear position.

Steering Geometry (toe-out on turns):—With outer wheel turned exactly 20°, inner wheel should be turned 22½-23° (Champion), 22-22½° (Commander and President). No adjustment provided. Check for bent steering arms if specification incorrect.

SERVICING:—Support Arm & Steering Knuckle Removal—Disconnect reach rods at steering arms. Support front end of car, remove spring bolt (lower pivot pin) by unscrewing bolt from lower steering knuckle yoke, spring eye, and lower control link. Take out two bolts mounting front shock absorber on upper control arm, take out shock absorber arm bolt in frame rail, remove shock absorber. Remove screws and washers on inner ends of upper control arm which retain frame mounting bracket rubber bushings, loosen control arm front frame bracket, remove shims from between bracket and frame (these shims control Camber and exact same number must be re-installed to avoid disturbing camber adjustment), slip frame bracket off control arm bushing and remove. Disengage steering knuckle lower yoke from spring eye, shift entire assembly forward to free upper control arm from rear frame mounting bracket bushing, remove assembly from beneath car.

Installation—When installing assembly on car, dip rubber bushing in gasoline before installing bushing in frame suport bracket (CAUTION—Oil, soap or hydraulic brake fluid must not be used on bushings as this will allow bushings to turn in brackets in service). Make certain that correct shim pack installed between support bracket and frame (re-install same shims removed when bracket taken off). See that steering knuckle lower yoke centered on spring eye (equal clearance at each side) when installing spring bolt. Hold control arm in horizontal position while tightening control arm screws at frame bracket (to insure proper position of rubber bushings in frame bracket).

Steering Knuckle Assembly:—Lower yoke is press fit on end of steering knuckle pin and must be removed and installed in an arbor press. To dismantle steering knuckle assembly, drive out taper lock pin in upper end of steering knuckle pin (this pin locks upper control arm pin in knuckle), remove pin bushings and pin, remove upper control arm. Remove nut and cotter pin from lower end of knuckle pin, press knuckle pin out of lower yoke, remove yoke and knuckle pin from steering knuckle.

Steering Knuckle Bearings—Knuckle pin mounted on needle bearing (top), bushing (bottom) with ball thrust bearing between upper end of pin and steering knuckle (endplay adjustment shims installed between bearing and knuckle). Use special Arbor, No. J-1294 (Champion), J-1277 (Commander & President—with sleeve), to press out bushing and needle bearing. Install new bushing first on Champion (bushing need not be reamed), then install spacer tube (oil holes in spacer and knuckle must line up), and needle bearing using arbor J-1294 to press bushing and needle bearing in place. On Commander & President, install bushing and needle bearing in same order (no spacer tube used) using arbor and sleeve J-1278. When installing knuckle pin, check endplay as follows:

Thrust Bearing & Endplay Adjustment—Install knuckle pin and thrust bearing in steering knuckle, check endplay which should be .003-.006" by placing feeler gauge on lower face of knuckle. Face of feeler gauge should be flush with edge of shoulder on steering knuckle pin. Add or remove shims between thrust bearing and upper face of steering knuckle to secure this desired endplay of .003-.006".

Upper Control Arm Pivot Pin—Before installing upper control arm pivot pin bushings, measure outside dimension of yoke at outer end of control arm with .010" feeler under one leg of caliper gauge (dimension will be total width plus .010"). Then use special spreader tool, No. J-1524 installed on outer end of control arm yoke to spread yoke exactly .010" so that caliper is snug on yoke without feeler gauge. With arm spread in this manner, assemble knuckle pin and pivot pin in control arm yoke, install bushings. After bushings have been tightened securely, remove spreader. See that taper lockpin installed in upper end of knuckle pin to lock pivot pin in place.

Insulated Steering Arm—To remove assembly from steering gear shaft, remove cotter pin, nut, and washer from steering gear lever shaft, use puller J-871 to remove assembly from shaft (On Champion, nuts on steering arm bushing studs can be removed and arm pulled off without disturbing adapter arm on steering gear lever shaft). Adapter shaft and steering gear shaft are marked and marks should be lined up when assembly re-installed.

SPRINGS:—Front spring is transverse leaf type. Spring eye is formed in main leaf and second leaf is wrapped around eye for additional strength.

STUDEBAKER 1947-48 PLANAR

Champion, Model 6G (1947), 7G (1948)
Commander & Land Cruiser, 14A (1947), 15A (1948)

►***1947-48 PRODUCTION CHANGES: Due to production changes as listed below, indicated parts not interchangeable on cars produced before and after these changes. Serial number should be noted when ordering these parts:***

►**Champion 7G (1948) Steering Knuckle & Wheel Bearing Change:** Following parts changed at Serial No. G-337,462 (South Bend) and **not interchangeable with parts on earlier cars:** Steering Knuckle (Right & Left), Front Wheel Hub and Drum (Right & Left), Inner & Outer Wheel Bearing Assemblies (Bearing Cup, Cone & Rollers), Brake Drum Oil Catcher, Felt Grease Washer & Retainer Assembly.

►**Champion 7G (1948) Auxiliary (Idler Lever) Steering Arm Change:** New assembly (arm, support and seal) with threaded type arm used beginning with Serial No. G-265,643 (LH. Cars—South Bend), G-267,693 RH. Cars—South Bend), G-824,691 (Los Angeles Cars). ***This type assembly must be used to replace first Bushing Type Arm which is not furnished for service.***

►**Commander 14A (1947) Caster Change:** Caster changed to —2° to —3° beginning with following numbers:

Comm. 14A—Serial No. 4,276,243 (South Bend) & 4,819,208 (Los Angeles).
Comm. 14A Convertible—4,276,102 (South Bend).
Land Cruiser 14AY—4,276,053 (South Bend), & 4,819,188 (Los Angeles).

Other Cars—Following cars also have new Caster specification: 4819196, 4819200, 4819201, 4819177, 4819180, 4819185.

►**Commander 14A (1947) Front Suspension Parts Change:** At same time Caster changed (see above) parts listed below were changed and are **not interchangeable with parts used on earlier cars:** Steering Knuckle (Right & Left), Steering Knuckle Shims, Steering Knuckle Arm (Right & Left), Steering Knuckle Upper Bushing (Early Cars) and Bearing Rollers (Later Cars), Steering Knuckle Upper Control Arm Support (Right & Left), King Pin (Right & Left), and King Pin Thrust Bearing.

DESCRIPTION. Planar type independent suspension with transverse spring. Design changed from type used on 1946 Champion and previous Studebaker models as follows:

Upper Control Arm—Consists of one-piece steel stamping pivoting on threaded bushing and threaded bolt in each frame bracket (inner end) and threaded bushing on threaded stud of steering knuckle upper support fitting (outer end). Rubber grease seals are used at each bushing.

Lower Control Arm—New pressed steel type pivoted on control shaft bolted on frame cross-member at inner end and on pin locked in lower end of kingpin at outer end. All pivot points have threaded bushings (threaded in arm and on control shaft (inner), pivot pin (outer). Rubber grease seals are used at each bushing.

Front Spring—Spring is transverse type bolted on steel support plate on frame cross-member. Outer end of spring rests on spring pad fitted in recess in lower control arm. Spring is used only to **support** car (lower control arm positions steering knuckle).

CONTINUED ON NEXT PAGE

STUDEBAKER 1947-48 PLANAR (C ntinued)

Shock Absorber—Mounted on side of frame rail (between upper control arm frame mounting brackets) with shock absorber arm bolted to midpoint of upper control arm.

CHECKING & ADJUSTMENT: Check front wheel bearing adjustment, tire inflation pressure, steering gear adjustment, shock absorber action, and steering linkage. Then check front suspension as follows:

Frame Height—Raise and lower front end of car several times by grasping front bumper to insure frame and wheels assuming normal position.

Tire Inflation Pressures: For each tire size (Cold):

Champion—(5.50x15 & 5.50x16) 30 lbs. Front, 28 lbs. Rear. (6.00x15) 28 lbs. Front, 26 lbs. Rear.

Commander—(6.50x15) 26 lbs. Front, 22 lbs. Rear.

Kingpin Inclination—5½° crosswise.

Camber: ½° plus or minus ¼°. Controlled by slotted shims located between each upper control arm bracket and frame.

To Adjust—Loosen upper control arm mounting bracket bolts, add shims (to increase camber), remove shims (to decrease camber) **equally at each bracket.** One thin shim will change camber approximately ¼° (thick shim equal to 4 thin shims).

CAUTION—Number and thickness of shims at each control arm bracket must be kept equal.

Caster: Not adjustable. Incorrect caster indicates bent parts or incorrect assembly (kingpin support not properly centered in control arms etc.).

►***PRODUCTION CHANGE NOTE—See 1947-48 Production Change Note for new parts and changed specifications.***

Caster Specifications

1947-48 Champion 6G & 7G	0° to Pos.1°
1947 Early Comm. & Land Cr. 14A	0° to Pos. 1°
①1947 Later Comm. & Land Cr. 14A	Neg. 2° to Neg. 3°
①1948 Comm. & Land Cruiser 15A	Neg. 2° to Neg. 3°

①—See 1947 Production Change Note for Serial Nos. at which this change made.

Toe In: 1/16-⅛". Do not adjust toe-in until wheels correctly positioned and entire steering linkage checked and adjusted as follows:

1). Left Hand Tie Rod Adjustment—Place steering wheel in straight-ahead position with cam lever studs on "high" points of cam, then line up left front wheel by stretching string between front and rear bumpers so that string contacts 1⅛" block (Champion), ½" block (Commander) placed against side of tire on rear wheel, adjust **left hand** tie rod so that front tire contacts string at front and rear of wheel, tighten tie rod clamp bolts. CAUTION—Do not disturb wheel position or this tie rod setting during remander of adjustment.

2). Center (Auxiliary) Tie Rod Adjustment—Adjust rod so that over-all length between centers of ball ends is equal to distance from lubricant fitting in auxiliary steering arm support to center of steering gear cam lever shaft (Champion), or to distance between lubricant fittings on the two steering bellcranks (Commander), tighten tie rod clamp bolts.

3). Toe-In (Right hand Tie Rod) Adjustment—Adjust right hand tie rod so that right wheel toed-in correct amount (1/16-⅛") with left wheel straight-ahead (see 1) above), tighten tie rod clamp bolts.

CAUTION—On Champion, all tie rod clamp bolts must be positioned so that they are horizontal and below tie rods to prevent interference.

Right-hand Drive Car Note—Reverse above directions for toe-in adjustment on these cars (set right hand tie rod first, adjust toe-in at left hand tie rod).

Steering Knuckle Stopscrew Setting—Adjust stopscrews for correct clearance with full right and left hand turns on each model as follows:

Champion—⅛" clearance between left hand backing plate and control arms for full left turn, ⅛" clearance between steering gear arm and frame on full right turn.

Commander—⅛" clearance between backing plate and control arms for full right and left turns.

SPRINGS: Front spring is transverse leaf type with spring cover. Spring does not have conventional eyes (ends rest on spring pads on lower control arms). Removal and installation of spring requires special procedure and tools as follows:

Spring Removal: Raise front end of car, remove wheel and tire assembly, unhook outer end of one outer tie rod from steering arm. Place spring unloader puller plate (HM-925-19) across top outer end of front frame cross-member, attach puller arms and nuts (HM-925-17). Place guide plate center pad (HM-925-18) on underside of spring directly below puller plate, hook puller (HM-925) to puller arms. Tighten puller to compress spring until lower control arm relieved of spring pressure, take out four bolts in lower control arm inner shaft, swing control arm down out of the way. Remove six bolts mounting front spring plate on front frame cross-member. Relieve spring tension and remove puller. Slide spring out over opposite lower control arm inner shaft. Remove front spring plate from spring by taking off nuts on four U-bolts.

Spring Installation—Install spring by reversing removal directions above and note the following points: Tighten nuts on U-bolts just enough to hold spring plate in place on spring. With spring in place under car, align two holes in spring plate with two holes in cross-member nearest lower control arm which is assembled to cross-member (use two punches). Compress spring using puller assembly, install all six bolts mounting front spring plate on front cross-member. After connecting lower control arm and removing puller, and **with car weight on wheels,** tighten the four U-bolt nuts to 75-80 ft. lbs. (Champion), 80-85 ft. lbs. (Commander).

1947-48 Spring Part Nos.

Car Model	Std.	Heavy Duty
Champ. '47 (10 Leaves)①	520045	520046
Champ. '47 (11 Leaves)②	520046	520046
Champ. '48 (10 Leaves)①	523775	523776
Champ. '48 (11 Leaves)②	523776	523776
Comm. '47 exc. Conv.	520048	520047
Comm. '47 Convertible	520047	520047
Comm. '48 exc. Conv.	523792	523791
Comm. '48 Convertible	523791	523791
Land Cruiser '47	520049	520047
Land Cruiser '48	523792	523791

①—Std. with 5.50x15 Tires.
②—Std. With 6.00x15 & 5.50x16 Tires.

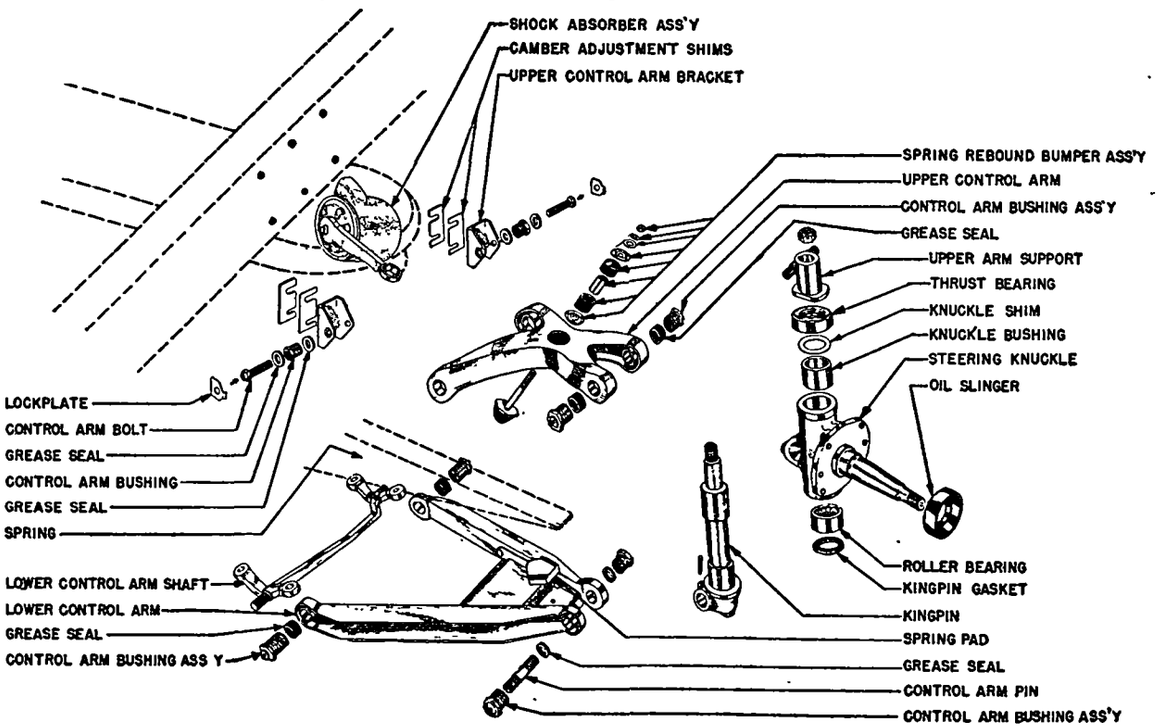

STUDEBAKER PLANAR FR NT SUSPENSI N

WILLYS

Jeep Station Wagon & Sedan Del. 4-63 (1946-48)
Jeepster, Model VJ-2 (1948)
Jeep Station Sedan, Six 6-63 (1948)

►**KNUCKLE SUPPORT INSTALLATION CAUTION:** on right & left side similar in appearance but must **not be interchanged** (results in wrong camber causing unstable steering). These parts marked for identification as follows:

Left Knuckle Support—Has part number—641026 (early cars) or letter "L" stamped on front face at center (later cars).

Right Knuckle Support—Has part number—641027 (early cars) or letter "R" stamped on front face at center (later cars).

DESCRIPTION: Planar type independent suspension with transverse spring serving as lower control arm (spring is "Dow" type with second leaf wrapped around spring eye in main leaf for safety). Short upper control arm is mounted at frame end on rubber bushings (movement of arm on frame bracket shaft permitted by flexing of rubber bushings). Direct acting type shock absorber is linked to spring pivot pin (lower end) and special mounting stud at midpoint of upper control arm (upper end).

CHECKING & ADJUSTMENT: Check front wheel bearing adjustment, tire inflation pressure, steering gear adjustment, shock absorber action, and steering linkage for correct adjustment and freedom of movement first, then check front suspension system as follows:

Tire Inflation—20 lbs. (front), 30 lbs. (rear).

Kingpin Inclination—5½° crosswise.

Caster: 1°. No adjustment (determined by design of front suspension units—correct by replacing necessary parts).

Camber: 1°. Controlled by shims under each upper control arm mounting bracket. CAUTION—Number and thickness of shims must be equal at each bracket.

To Adjust—Loosen upper control arm frame bracket mounting screws, remove shims from between bracket and frame (to decrease camber), add shims (to increase camber) **equally at each bracket.** Shims are furnished in thicknesses of .060" and .120" and are slotted to facilitate adjustment (bolts need not be completely removed).

Toe-In: 1/16-1/8" at curb weight (car ready for road with full tank of fuel and spare tire, but without load).

►*CAUTION—Toe-in varies slightly with load and should be measured with car at CURB WEIGHT.*

To Adjust—Turn steering wheel to straight-ahead position, adjust both tie rods so that each wheel is straight-ahead, then adjust both tie rods equally for correct toe in. Adjusters located at outer end of each tie rod and correct toe-in will be secured with approximately ¼ turn of adjusting sleeve on each tie rod from straight-ahead position. Tighten adjusting sleeve clampscrews when adjustment completed.

SUSPENSION ASSEMBLY: When disassembling suspension system for renewal of parts, assemble as follows:

Upper Support Arm & Knuckle Support: Upper support arm is mounted on rubber bushings at inner (frame) end and on pivot bolt threaded through eyes in arm and in bushing in knuckle support at outer end.

Frame Support Bushings—Install bushing half in each side of frame bracket, install plain washer, lockwasher, and nut on support arm bar, tighten nut securely (shoulder on bar limits compression of rubber bushings).

Knuckle Support Pivot Bolt—Install threaded bushing in support with head toward front, tighten bushing to 175 ft. lbs. Place rubber seal on each end of bushing, hold knuckle support centered in end of support arm and thread pivot bolt in from front through support arm eye and knuckle support bushing, install nut on rear end of bolt and secure with cotter pin.

Knuckle Support & Spring Pivot Bolt: When installing support on car, hold support centered on spring eye while installing pivot bolt.

►*CAUTION—Knuckle support must be centered on spring (at bottom) and on support arm (at top) to insure correct Caster specification.*

TYPE OF EQUIPMENT

REAR AXLES

	Page
Columbia Spiral Bevel & Hypoid	2302
Columbia Dual-ratio (Auburn)	2303
Columbia Two-Speed (Ford)	2303
Spicer (Salisbury) Spiral Bevel	2305
Spicer (Salisbury) Hypoid Semi-Floating	2306
Spicer (Salisbury) Hypoid Full-Floating	2307
Spicer (Salisbury) Hypoid Full-Floating Front Axle	2307
Timken Spiral Bevel Semi-Floating	2304

REAR AXLE SERVICING

	Page
Spiral Bevel & Hypoid Gear Adjustment	2302

CAR APPLICATION

REAR SUSPENSION

	Page
BUICK	
1938-48	2311
NASH	
1941-48 "600" Six	2337
OLDSMOBILE	
1939-40	2339
1941-48	2340
PACKARD	
1939-48	2340

CAR APPLICATION

REAR AXLES

	Page
AUBURN	
1936-37 (Columbia)	2302
BANTAM	
1937-41 (Spicer)	2305
BUICK	
1936-37 (Spiral Bevel)	2308
1937-48 (Hypoid)	2309
CADILLAC	
1936-48	2312
CHEVROLET	
1936 Pass. Cars	2313
1937-48 Pass. Cars	2314
1936-39 ½, ¾, 1 Ton Truck	2313
1936-39 1½ Ton Truck	2316
1940-42 ½, ¾ Ton Truck	2314
1946-48 ½ Ton Truck	2314
1946-48 ¾, 1 Ton Truck	2316
1940-48 1½, 2 Ton Truck	2316
1939-46 Two-Speed Truck	2319
1947-48 Two-Speed Truck (Hypoid)	2321
CHRYSLER	
1936-48 Six	2324
1936-48 Eight (exc. Crown Imp.)	2324
1940-48 Crown Imperial	2323
CORD	
1936-38	See Transm'n Sect.
CROSLEY	
1939-48 (Spicer)	2305
DE SOTO	
1936-48	2324
DODGE	
1936-48	2324
DUESENBERG	
1936-37	2333
FORD	
1936-48 Pass. Car & Comm'l	2325
1949 Passenger (exc. Sta. Wgn.)	2326
1949 Station Wagon	2327
1949 Sedan Delivery	2326
Two-Speed Pass. Car (Columbia)	2303
1936-48 Trucks	2328
1948 ½ Ton F-1 Truck	2327
Two-Speed Truck	2329
FRAZER	
1947-48 (Spicer)	2306
GRAHAM	
1936-37 (Spicer)	2305
1938-41 (Spicer)	2306
HUDSON	
1936-47	2331
1948	2332
HUPMOBILE	
1936-39 Six (Spicer)	2305
1939-40 Six (Spicer)	2306
1936-39 Eight (Spicer)	2306
JEEP	
1942-45 Rear Axle (Spicer)	2307
1942-45 Front Axle (Spicer)	2307
KAISER	
1947-48 (Spicer)	2306
LA SALLE	
1936-40	2312
LINCOLN	
1936-40 V12	2333
1936-37 Zephyr	2325
1938-40 Zephyr	2333
1941-48	2333
1949	2327
Two-Speed (Columbia)	2303
MERCURY	
1939-48	2325
1949	2327
Two-Speed (Columbia)	2303
NASH	
1936-39	2334
1940-48 Amb. Six & Eight	2335
1941-48 "600" Six	2336
NASH-LAFAYETTE	
1936-39	2334
1940	2335
OLDSMOBILE	
1936-46	2338
1947-48	2344
PACKARD	
1937-48 Six	2341
1936 Eight "120"	2341
1936 Eight (except 120)	2342
1937-48 Eight	2341
1936-38 Super Eight	2342
1939-48 Super Eight	2341
1940-48 Custom Eight	2341
1935-39 Twelve	2342
PLYMOUTH	
1936-48	2324
PONTIAC	
1936-46	2343
1947-48	2344
STUDEBAKER	
1936 (Spicer)	2305
1937-48 (Spicer)	2306
TERRAPLANE	
1936-38	2331
WILLYS	
1936-40 Pass. Cars	2346
1941-42 Pass. Cars	2347
1938-42 Comm'l (Spicer)	2305
1942 Comm'l—Later (Spicer)	2306
1946 Jeep Rear Axle (Early)	2307
1946-48 Jeep Rear Axle (Later)	2306
1946-48 Jeep Front Axle (Spicer)	2307
1946-48 Jeep Sta. Wagon 4-63	2306
1946-48 Jeep Sedan Delivery 4-63	2306
1947-48 Truck 2T, 4T (Timken)	2304
1947-48 Truck 4T (Frt. Axle)	2307
1948 Jeepster (Spicer)	2306
1948 Jeep Sta. Sedan 6-63	2306

SPIRAL BEVEL & HYPOID GEAR ADJUSTMENT (All Makes)

NOTE ON PINION SETTING GAUGES:—These gauges are designed to locate the pinion gear (with respect to ring gear center line) so as to duplicate the factory set up when the gears were burnished or run in. Mated gears of this type will run quieter and give more satisfactory service in this position and other settings should not be used. See separate articles for each type axle and complete instructions and specifications for use of these gauges.

RING AND PINION GEAR MESH:—To check gears, paint a number of ring gear teeth with some suitable indicator such as Prussian Blue or red lead mixed with oil. Rotate ring gear by hand applying tension on pinion shaft flange with a block of wood to simulate load. Indicator will be wiped off on teeth in area of tooth contact so that mesh can be judged. See illustration (No. 1) for desired tooth contact and possible variations which should be corrected as directed below. If desired, gears can be turned over a few times by the engine with the rear wheels jacked up and brakes applied for load (preliminary inspection of mesh should be made by turning gears by hand to avoid damage caused by running gears under load when badly meshed).

High Tooth Contact (Illustration No. 2):—Will be noisy and cause gear teeth to roll over at top if run for any length of time. To correct, move pinion in toward ring gear. If backlash is then insufficient, move ring gear away from pinion.

Low Tooth Contact (Illustration No. 3):—Will be noisy and gear teeth will groove or score if run with this setting. To correct, move pinion out or away from ring gear. If backlash is then excessive, move ring gear in toward pinion to decrease backlash.

Heel Contact (Illustration No. 4):—Will be noisy and cause excessive wear, chipping, and tooth breakage. To correct, move ring gear in toward pinion. If backlash is then insufficient, move pinion out or away from ring gear to increase backlash.

Toe Contact (Illustration No. 5):—Will be noisy and cause excessive wear due to small contact area, chipping, and tooth breakage. To correct, move ring gear away from pinion. If backlash then excessive, move pinion in toward ring gear.

Backlash Specifications:—See individual Rear Axle articles for recommended backlash for each axle type and complete directions on moving pinion and ring gears to secure above adjustments.

TROUBLE SHOOTING:—Before attempting to classify rear axle trouble from noise (hum or growl), eliminate other sources such as tires, engine, transmission as follows:

Tire Noise. Will change on different road surfaces and continue as speed decreases, will be more noticeable with low pressures. To check, coast car with gears in neutral from speed of 30 M.P.H. down. Rear axle noise will ordinarily disappear, tire noise will continue with lower tone as speed decreases.

Engine & Transmission. With car stationary, hold clutch disengaged, operate engine and vary speed through range in which noise previously noticed, check for similar sound. Then repeat test, engaging clutch to note transmission idling noises (gears in neutral). This will also check for muffler and exhaust noise.

REAR AXLE TROUBLE SHOOTING TABLE

REAR AXLE NOISY

1. **Drive Noise.** Most pronounced when car accelerated at constant rate from 15 to 45 M.P.H. Pinion should be moved in toward ring gear slightly.
2. **Coasting Noise.** Most evident when car allowed to coast from 45 M.P.H. down to 15 M.P.H. with throttle closed and clutch engaged. Pinion should be moved out or away from ring gear slightly.
3. **Float Noise.** Most evident when speed held constant at close intervals between 15 and 45 M.P.H. Correct by same adjustment as for coasting noise above, or by changing backlash slightly.

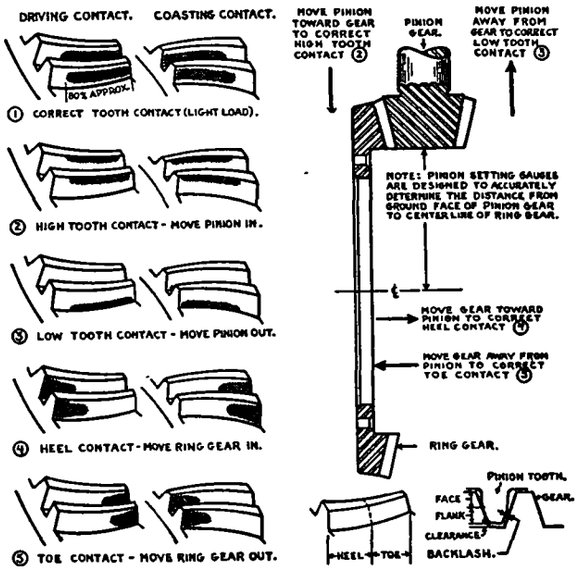

4. **Continuous Noise.** Check axle shaft bearing, differential bearing, pinion bearing adjustment. Check ring and pinion gear for incorrect adjustment, not matched or defective, gear teeth badly worn, scuffed or chipped. Backlash may be excessive or insufficient.
5. **Noisy on Turns.** Check for tight, binding, chipped, scuffed differential pinion gears or side gears, worn or rough thrust washers, excessive differential gear backlash, excessive axle shaft endplay.
6. **Intermittent Noise.** Check for sprung or warped differential case, excessive ring gear runout, loose or broken differential bearings.

REAR WHEELS DO NOT TURN

If rear wheels do not turn with engine running, transmission in gear, and propeller shaft rotating, check the following points:

1. **Axle Shaft**—Shaft broken or key sheared.
2. **Ring & Pinion Gear**—Teeth stripped, pinion gear shaft key (Hotchkiss Drive), pin (torque tube drive) sheared.
3. **Differential**—Side gear or pinion teeth stripped, differential pinion shaft or spider broken.

COLUMBIA

Used On:

Auburn Six, Model 654 (1936-37)
Auburn Eight, Model 852 (1936-37)
Auburn Schgd. Eight, 852 (1936-37)

NOTE:—Auburn Models. Dual Ratio is standard or optional on these models. Dual Ratio axle serviced in same manner as other axles except for Dual-Ratio feature. See special Dual Ratio data below.

TYPE:—Spiral bevel or hypoid gear, semi-floating type with Hotchkiss drive. Pinion integral with shaft and mounted on taper roller bearings seated directly in housing (bearings positioned by shoulders in housing or by pinion adjusting sleeve which is threaded in housing). Differential assembly mounted on taper roller bearings with adjusting nut at each side.

SERVICING:—Gear Adjustment. Paint gears to check mesh. Backlash should be .003-.005" (Auburn), .002-.003" (Pierce Arrow). See Pinion setting and Backlash adjustment under Differential Bearing Adjustment below.

Axle Replacement. Wheels mounted on single taper roller bearing (designed to take thrust in one direction, thrust in other direction transmitted to other bearing by thrust spacer in differential assembly). To remove axles, remove wheel, take off backing plate which retains wheel bearing, pull shaft and bearing out. Bearings adjusted by adding or removing shims between backing plate and flange on axle housing.

NOTE—On models with Dual-Ratio, speedometer driven by gear on axle shaft near wheel. Remove speedometer pinion assembly before pulling axle shaft. When reassembling speedometer pinion, see that endplay is .010".

OVERHAUL (SLEEVE ADJUSTMENT TYPE):—Pinion Bearing Adjustment. Bearings adjusted by nut on end of pinion shaft (rear universal flange retaining nut). To adjust bearings, back off locknut until lockwasher dowel pin can be freed from pinion nut, turn up nut until all endplay in pinion shaft has just been removed, replace locking washer and tighten locknut securely.

Pinion Setting:—Pinion located by adjusting sleeve in housing which contacts both bearings cups. To adjust pinion, take out two capscrews and remove pinion lock plate on side of housing, loosen housing clamp bolts, turn sleeve (threaded in housing) to move pinion forward or backward in relation to ring gear, tighten clamp bolts securely and replace lock plate.

Differential Bearing Adjustment:—Turn up adjusting nut at outside of each differential roller bearing. See that locks are in place and bearing caps securely tightened after making adjustment.

Ring Gear Backlash Adjustment. When adjusting backlash, back off one differential bearing adjusting nut and tighten opposite nut exactly equal amount so as not to disturb differential bearing adjustment.

CONTINUED ON NEXT PAGE

COLUMBIA (C nt.)

OVERHAUL (SHIM ADJUSTMENT TYPE):—Pinion Bearing Adjustment. Controlled by shims between front bearing cone and shoulder on pinion shaft. Shims furnished .100", .003, .005", .010" thick. See that pinion nut at rear universal joint flange is tight when checking bearing adjustment.

Pinion Setting:—Controlled by shims on pinion shaft between pinion and rear bearing cone. Shims furnished from .115" to .135" thick in .002" steps. Increase shim thickness to move pinion in toward ring gear, decrease shim thickness to move pinion out or away from ring gear.

Differential Bearing & Ring Gear Backlash Adjustment:—Same as for Sleeve adjustment type. See instructions above.

AUBURN DUAL-RATIO

TYPE:—Consists of a planetary reduction gear built in a housing around the differential assembly (ring gear mounted on this housing so that it transmits drive from engine to planetary pinions which are likewise mounted on it. Internal gear is integral with differential housing and sun gear is mounted on a sleeve which is free to revolve on the axle shaft within the dual-ratio housing. The control mechanism consists of a sliding clutch sleeve splined on the sun gear sleeve which is shifted by a vacuum cylinder so as to engage clutch teeth on a stationary gear bolted to the left hand differential bearing pedestal (high or dual-ratio drive through planetary gears), or similar clutch teeth on an extension of the dual-ratio housing (low or direct drive with planetary gears locked so that the entire mechanism revolves as a unit).

OPERATION:—Direct Drive. When the vacuum line from the intake manifold is connected to the rear end of the operating cylinder, the piston moves toward the axle, rotating the yoke and shifting the clutch sleeve in so that the dual-ratio housing (planetary pinion drive plate) and the sun gear are locked together and rotate as a unit. The pinions are thus prevented from rotating on their shafts and act merely as clutch teeth to revolve the large internal gear at the same rate as the housing (ring gear speed), affording a direct drive.

Dual-Ratio Drive. When vacuum is connected to the forward end of the cylinder, the clutch sleeve is shifted out so as to engage the stationary gear bolted to the axle housing (differential bearing pedestal) so that the sun gear is held stationary. The rotation of the dual-ratio housing causes the planetary pinions to revolve as they are carried around the sun gear causing the internal gear on the differential housing to revolve at a different rate, affording a high axle ratio.

SERVICING:—Serviced in same manner as other axle types (see preceding article on Columbia Axles) except for Dual-ratio disassembly and Differential Bearing adjustment as follows:

Dual-ratio Assembly:—Dual-ratio housing halves are bolted together by ring gear mounting capscrews. Taking out these screws will allow dual-ratio housing to be split, exposing all gears.

Differential Bearing Assembly. Clutch gear for dual-ratio drive bolted to left hand differential bearing pedestal with shoulder extending into pedestal to act as retainer for bearing cup (no adjusting nut used). Shims under the clutch gear flange are used for ring gear backlash adjustment.

Ring Gear Backlash Adjustment. Controlled by shims between stationary clutch gear flange and left hand differential bearing pedestal. Shims furnished .003", .010", .030" thick. Increase shim thickness to increase backlash, decrease shim thickness to move ring gear in and decrease backlash.

Differential Bearing Adjustment. After Ring Gear backlash correctly adjusted (above), adjust differential bearings by turning right hand differential bearing nut in to take up bearing endplay or looseness. See that lock plate installed and bearing cap securely tightened after completing adjustment.

COLUMBIA TWO-SPEED

Optional Equipment On::
FORD '85', PASS. CAR MODELS (1938-39-40-41)
LINCOLN-ZEPHYR, HB ('37), 86H ('38), 96H ('39)
LINCOLN, ZEPHYR & CONT'L. 06H ('40), 16H ('41)
LINCOLN, CUSTOM MODEL 168 H (1941)
MERCURY, 99A ('39), 09A ('40), 19A ('41)

NOTE:—This axle provides low axle ratio for power and acceleration (with planetary gears locked out) and a higher ratio to reduce engine R.P.M. at high speeds (with planetary gears operating). Do not confuse this type with the Ford Two-Speed Truck Axle which operates differently.

Model Changes—Two-speed axle used on all models is same design and operates in same manner. Minor differences in control units and installation procedure will be found on the various car models listed above.

Lincoln 1941 Overdrive—Warner Type R10 Overdrive unit (mounted on rear of transmission) also available for 1941 Lincoln models (both Overdrive Transmission and two-speed axle may be found on some cars). Refer to Warner Overdrive article for data on Overdrives.

TYPE:—Consists of a planetary gear reduction unit built in a special differential assembly case which is installed in place of the regular Ford or Lincoln-Zephyr differential (furnished with new right hand axle housing which replaces original housing). A vacuum cylinder mounted on the axle housing operates the planetary gear clutch and is controlled by a valve assembly linked to the clutch pedal and to a control button on the instrument board. An adapter (two-speed gear box) is provided for connection in the speedometer drive cable and is linked to the control button so that the speedometer drive ratio is changed for overdrive operation to insure speedometer reading accurately at all times. NOTE —Some 1939 cars have a speedometer drive gear on the right hand axle shaft and a driven gear assembly mounted on the axle housing. These cars do not require a separate adapter.

OPERATION:—With the dash control button pushed in (for direct drive), the sliding clutch in the rear axle locks the sun gear and the differential case (in which planetary pinions are mounted) so that the entire planetary gear system (sun gear, pinions, and outer internal gear) rotate as a unit and the ring gear drives the rear wheels directly. When the clutch is released and the control pulled out to the overdrive position, the vacuum cylinder pulls the sliding clutch out so that the differential case is free and engages the stationary clutch plate so that the sun gear is prevented from rotating. The ring gear then drives the differential case and pinions, and the rotation of the pinions (on the stationary sun gear) causes the internal gear and the axle shafts to revolve at a faster 'overdrive' speed.

INSTALLATION:—When Overdrive axle is installed, the regular Ford or Lincoln-Zephyr axle should be dismantled (center pinion mounting housing need not be removed but torque tube should be blocked up so that it does not hang on the universal joint ball housing). Right hand axle housing, differential case (right and left halves and bearing on right half), differential pinion spider, and ring gear bolts and nuts should be discarded (replaced by overdrive axle parts). Overdrive axle assembly should be assembled on pinion housing using original capscrews except for top front hole (special long capscrew and copper washer furnished wired to hole in which it should be installed). Original right hand axle shaft should be filed smooth for distance 8" back from side gear to remove all scale and high spots, thoroughly cleaned, and dipped in regular axle lubricant (5" at side gear end), then insert shaft through overdrive unit (these instructions for shafts without speedometer drive gear only). Original differential pinions should be assembled on new spider, bronze thrust washer installed on spider in back of each pinion (lubricate washers with axle lubricant before installing), and inserted in overdrive differential case so that spider engaged in slots in internal gear case and pinions properly meshed with side gear. Original left hand axle shaft should be threaded through new yellow bronze side gear thrust washer and original ring gear, washer tongues entered in slots in differential case through which differential spider was assembled, and ring gear bolted to face of differential case with new capscrews. Left hand axle housing can then be assembled. **Important**—See that ring gear and differential clean and free from all nicks to insure gear running true, tighten mounting screws evenly and securely and lock screws with lockwire. Make certain that side gear thrust washer tongues do not slip out of slots in case while gear is being installed.

Control and Speedometer Adapter (Ford):—Control valve is mounted on bracket bolted to top of left hand frame side rail ahead of steering gear (bracket center hole engages rivet head, other holes must be drilled for bolts). Special clip should be bolted to lower end of clutch pedal and connected to bell-crank on control valve by rod (see adjustment below). Forward vacuum tube connection on valve should be connected to manifold spacer installed between carburetor and manifold (manifold studs must be replaced with new longer studs when spacer installed). Vacuum connections at rear of valve should be connected to vacuum cylinder by rubber tubing and copper tubing running along left hand frame side rail (connect 'low' top connection on valve to right hand end of cylinder, 'high' bottom connection to left hand end of cylinder). Control button is installed in drilled hole in instrument panel (2½" up from starter button, 1⅝" to left of instrument cluster), and control cable taken through drilled hole in dash (3½" in from left

CONTINUED ON NEXT PAGE

COLUMBIA TWO-SPEED (C nt.)

edge). Connect cable wire to lever on top of valve, see that lever is in forward detent position and that control button in forward position against instrument panel, then tighten cable clamp on valve.

Speedometer Adapter—Adapter screws directly on speedometer head (install square key furnished for connection between adapter and speedometer bfore mounting) with regular speedometer cable connected to adapter and short control cable (from control button connected to adapter lever.

CAUTION—Control cables, speedometer cables and vacuum tubes must not be kinked or bent in short radius which will interfere with correct operation.

Control Button & Valve Assembly (Lincoln-Zephyr):—Control valve mounted on steering gear housing cover plate. Connected in same manner as Ford except as follows: Clutch pedal rod clip clamped to shaft at clutch pedal end and inside edge of engine mud pan notched to provide clearance for rod, control valve vacuum line connected to windshield wiper connection on manifold with special adapter, control valve mounted on lower edge of instrument panel 2½" to right of starter button.

Speedometer Adapter—Adapter should be mounted on left front side of dash and connected to speedometer by special short length of cable taken through 15/16" hole drilled in center of dash. Regular speedometer cable should be looped up on left side of engine compartment and connected to adapter.

ADJUSTMENT:—Control Valve Clutch Connection—Adjust clevis on valve operating rod at control valve end so that valve plunger is depressed ⅛" minimum, ¼" maximum with clutch pedal depressed to floor. Valve travel must not exceed ¼".

Control Button—Cable conduit should be positioned in clamp on valve body so that valve lever is in forward position (stopped by detent) with control button pushed in toward dash and fastened in this position by tightening clampscrew.

SERVICING:—Axle Lubrication—When first installed, axle should be filled with 4½ pints (Ford), 6 pints (Lincoln-Zephyr) recommended axle lubricant and car should be run with rear wheels jacked up (transmission in high, overdrive in low) for 5 minutes to circulate oil through overdrive unit. Axle should then be refilled to level of filler plug in overdrive case. **Always fill to level of overdrive filler plug, do not use regular axle filler plug for this purpose.**

Vacuum Cylinder Lubrication—At 10000 mile intervals, remove vacuum cylinder, lubricate leather piston cups thoroughly with Houghtons Cosmolubric #1000 hydraulic oil or equivalent.

Speedometer Adapter Lubrication—At 10000 miles, or sooner if noise develops, remove adapter, take out small plug on side and repack case with Alemite lubricant by hand—**do not use pressure.**

TROUBLE SHOOTING:—If overdrive axle does not shift properly, check all vacuum lines and connections for leaks, check tubes for kinks, sharp bends, or flattened spots, make certain that rubber tubing not cut or torn so as to obstruct opening at valve and copper tubing connections. Check valve settings (see adjustment section above).

OVERHAUL:—See Ford and Lincoln-Zephyr Rear Axle articles for axle servicing data.

TIMKEN SEMI-FLOATING

Model No. Used On:
51540—Willys Jeep Truck, 2T & 4T (1947-48)

DESCRIPTION: Spiral bevel, semi-floating type with Hotchkiss Drive. Axle housing is "split" type with one differential side bearing cup seated in recess in each half. Pinion is mounted on taper roller bearings in housing integral with right hand axle housing. Pinion bearing assembly is special type with a single outer race (bearing cup) for both roller bearings. Axle shafts are mounted on single taper roller bearing at each wheel, each bearing taking thrust in one direction while the thrust in the opposite direction is transmitted to the opposite bearing through the axle shafts.

AXLE SHAFT REMOVAL & WHEEL BEARING ADJUSTMENT: Same as for other Willys models. See Spicer Hypoid Semi-floating axle for complete data.

REAR AXLE DISASSEMBLY & REASSEMBLY: Remove eleven screws holding axle housing halves together, slide left housing half away (axle shaft will pull out of differential gear splines). Lift out differential assembly (pull out toward left so that right axle shaft is disengaged from differential gear splines). To remove side bearings, use Puller Tool No. W-104-20 to remove roller and cone assemblies from differential case shoulders, Tool W-200 to pull bearing cups from axle housing. To remove pinion assembly, take out bolts in housing holding bearing retainer (spacer) and cover, lift off cover and oil seal assembly, bearing retainer, and gaskets. Assemble Puller W-203 on end of pinion shaft, pull pinion and bearing assembly out toward front. See Pinion Assembly data below for disassembly of this unit.

Pinion Bearing Assembly: To dismantle this assembly, clamp pinion in vise (use brass jaws), bend up lips on locking washer, remove pinion locking nut, washer, and adjusting nut. Lift off front bearing cone and roller assembly, (slip fit on shaft), and bearing cup. Use Puller No. W-104-32 to remove rear bearing cone and rollers. To remove pinion bearing from housing, drive out two brass rivets in retaining plate from front of housing, remove plate, drive bearing out using a brass drift. To reassemble, install pilot bearing retainer, drive pilot bearing in place using Tool W-207, press pilot bearing inner cup on end of pinion shaft and install lockring (NOTE—New pinions furnished with cup and snap ring installed). Press rear pinion bearing cone and roller assembly firmly against pinion using Tool W-205, install bearing cup and front bearing cone and rollers, install washer, adjusting nut, locking washer, and locknut. Adjust pinion bearing pre-load (see below), securely tighten locknut and bend locking washer lip against nut. Install pinion assembly in housing using Installer Tool W-203. (CAUTION—Make certain pinion shaft enters pilot bearing in housing.) Check oil seal

CONTINUED ON NEXT PAGE

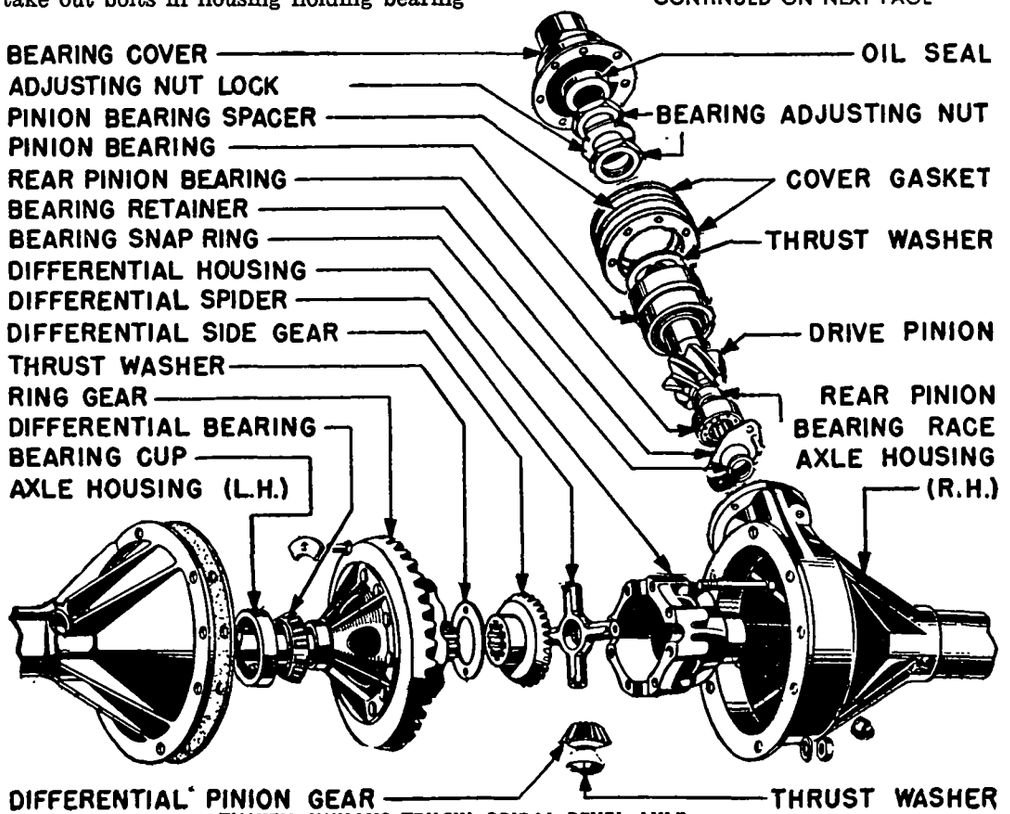

TIMKEN (WILLYS TRUCK) SPIRAL BEVEL AXLE

TIMKEN (C ntinu d)

in pinion shaft cover (install new seal, if required, with Tool W-199). Install bearing retainer and cover assembly on housing using new gaskets (CAUTION —Align oil drain hole with opening in housing), install retainer bolts and tighten securely.

Pinion Bearing Pre-load Adjustment: With pinion bearings assembled on pinion shaft, tighten adjusting nut to pre-load bearings so that torque required to turn pinion shaft is 12-18 in. lbs. Locknut must be tight when checking this pre-load.

Pinion Setting: Pinion position is not adjustable. Ring gear and pinion are furnished only in matched sets and ring-and-pinion gear mesh will be satisfactory if axle correctly assembled and backlash is within limits of .004-.008".

Differential Assembly: To dismantle assembly for replacement of parts, cut lockwire, remove nine screws, separate differential case halves. Replace Differential Pinions, Pinion Thrustwashers, Side Gears, and Gear Thrustwashers as **matched sets.** CAUTION—Use of mixed new and old parts will result in premature failure. Make certain that differential case screws are secured with lockwire when reassembling. Use Tool W-206 to install side bearing cone and roller assemblies on case, Tool W-204 to install bearing cups in housing. Before reassembling axle, examine ring gear thrust plate for wear and replace if necessary (plate is riveted in left hand housing).

Ring & Pinion Gear Backlash: .004-.018". Check backlash after axle completely reassembled.

SPICER (SALISBURY) SPIRAL BEVEL

Model No. Used On:

10 —Bantam, 60 (1937-38-39), 65 (1940-41)
11 —Crosley, A ('39-40), CB41 ('41), CB42 ('42)
11 —Crosley, Model CC (1947-48)
20 —Graham Crusader, 80, 80A ('36), 85 ('37)
40-1—Graham Cavalier, Model 90 (1936)
21 —Graham Cavalier, 90A ('36), 95 ('37)
31-1—Graham Cavalier, 95 ('37)—with O.D.
40-1—Graham Supercharger, 110 (1936)
31 —Graham Supercharger, 116 (1937)
42 —Graham Supercharger, 116 (1937)—Spec.
42 —Graham Supercharger, 120 (1937)
42 —Hupmobile 6, 822E (1938), 922E (1939)
— —Hupmobile 6, Model 618G (1936)
— —Studebaker Dictator, 3A, 4A (1936)
— —Studebaker President, 2C (1936)
21-1—Willys Comm'l, All Models (1938 to 1941)
21-1—Willys Comm'l, 441, 441P (Early 1942)

►**CROSLEY NOTE:** Crosley axle is new design with Torque Tube Drive. Serviced in same manner as other Spicer models after Torque Tube has been removed. 1941-47 Torque Tube is modified type for new universal joint mounting (in adapter at rear end of transmission case). ***Refer to Crosley Shop Notes in Car Model Section for Torque Tube data.***

►**1942 WILLYS NOTE:** This model 21-1 Rear Axle used on first 500 trucks only. Later trucks have new Type 41-4 Spicer Hypoid Axle (see following article).

DESCRIPTION: Spiral bevel, semi-floating type with Hotchkiss Drive. Pinion is integral with pinion shaft and mounted on taper roller bearings which seat directly in carrier housing (rear bearing positioned by shoulder in housing, front bearing by spacer on shaft on Axle Models 20, 30, 30-1 or by second shoulder in housing for Axle Models 40, 40-1, 51 (no spacer used). Differential carrier mounted on roller bearings in housing.

REMOVAL OF AXLE: *See "Rear Axle" on car model page.*

AXLE SHAFT REPLACEMENT & WHEEL BEARING ADJUSTMENT: When replacing an axle shaft, check endplay. Total endplay between shafts and spacer in differential which transmits thrust from one shaft to the other should be .002-.007" except as noted in the table below. Adjust endplay by removing shims between backing plate and axle housing flange (at one wheel if clearance less than maximum, both wheels if greater). Shims furnished .003", .005", .010", .030" thick.

Axle Shaft Endplay

Car Model	Endplay
Bantam	.005"
Crosley	.002-.007"
Studebaker	.001-.005"
All Other Cars	.002-.007"

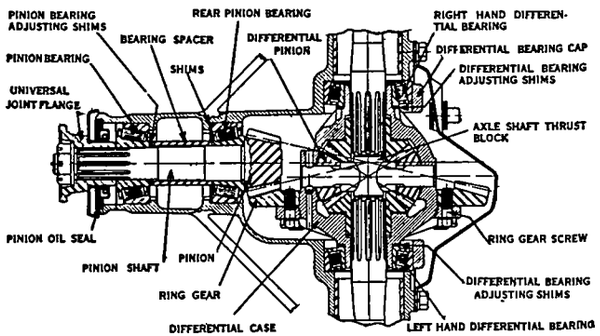

OVERHAUL: Disassembly—To remove differential assembly (with axle shafts out), take out bearing cap screws, make certain that bearing caps marked to insure correct reassembly, remove bearing caps, pry differential assembly out of housing. Remove nut on end of pinion shaft, pull rear universal joint companion flange, press or drive pinion out at rear of housing (use brass drift on end of shaft), **note number and thickness of shims** between spacer on shaft and front bearing cone (these shims control bearing adjustment). Use puller to remove pinion rear bearing cup from housing, **note number and thickness of shims** located in bearing cup recess in housing (these shims control pinion setting). Remove oil seal from front of housing, drive pinion front bearing cup out. Disassemble and service sub-assemblies as follows:

Pinion Bearing Assembly & Adjustment: When dismantling pinion assembly, pinion should be pressed out (to avoid damaging forward bearing) and oil seal should be pried out. Use new oil seal when reassembling if old seal damaged by removal. To adjust bearings, add or remove shims between forward bearing cone and spacer (or shoulder on pinion shaft on types where no spacer used), install universal joint flange and tighten nut securely. Pinion should rotate with slight drag (approximately .002" tight). Shims furnished .003", .005", .010", .030" thick.

Pinion Setting:—Use special pinion setting gauge, Salisbury No. J-772 or Studebaker No. HMJ-589, set gauge for correct zero position for each axle type or car model as shown in table below (correct for pinions marked 'O'). Figure etched on end of each pinion indicates amount in thousandths which pinion should be set ahead (plus figures) or in back (minus figures) of this zero position. Install gauge in axle housing in place of differential assembly, adjust pinion position by adding or removing shims between rear pinion bearing cup and shoulder in housing until correct gauge reading is secured (see note below for hypoid axles). Recheck pinion bearing adjustment (disturbed by pinion setting adjustment). Shims furnished .003", .005", .010" thick.

Axle Type.	Pinion Zero Setting.
10 (See Note)	.218"
11	See Model 11 Note
20, 21-1, 30, 30-1	.407"
40, 40-1, 42	.126"
50, 51	.000"
Studebaker Models.	
Dictator 3A, 4A (1936)	.126"
President 2C (1936)	.000"

Model 10 Note—A special smaller pinion gauge must be used for this model. This gauge has an endplate diameter of 2.714-2.716" (to engage differential bearing bore) and the end of the micrometer pointer extends 2.000" beyond the differential bearing center-line with micrometer set at zero.

Model 11 Note—This is special small axle and the regular pinion setting gauge cannot be used. Car manufacturer recommends that gear mesh be checked by painting the gears and turning them by hand.

Differential Bearing Adjustment:—Shims installed between bearing cones and differential case on each side. To adjust bearings, take out axle shafts, take off rear cover, remove capscrews and lift off differential bearing caps, then pull out differential assembly. Remove bearing cones, add or remove shims installed between bearing cone and case on each side until assembly will just slide into place in axle housing, then add additional shim thickness of .003-.006" (.008-.010" on Studebaker models), install assembly, tighten bearing caps. Ring gear should have fairly heavy drag when revolved by hand. Shims furnished .003", .005", .010", .030" thick.
NOTE—Early models fitted with adjusting nut at each bearing. These types adjusted by removing locks, loosening bearing caps, and turning up adjusting nuts to secure desired bearing adjustment.

Ring & Pinion Gear Adjustment: Paint gears to check mesh or check pinion setting (see directions below). Backlash should be .004-.008" on all cars except as noted in table below. Adjust backlash by shifting differential bearing adjusting shims from one side to the other (total shim thickness must not be changed to avoid disturbing differential bearing adjustment). See Pinion Setting and Differential Bearing Adjustment below.

Ring-and-Pinion Gear Backlash

Car Model	Backlash
Bantam	.008"
Crosley	.003-.008"
Hupmobile	.004-.007"
Studebaker	.002-.004"
All Other Cars	.004-.008"

Ring Gear Backlash:—Adjusted by transfering shims from behind left hand bearing to right hand bearing (to increase backlash), or from right to left (to decrease backlash). Total shim thickness must not be changed to maintain bearing adjustment. Moving ring gear .005" changes backlash .0035".

SPICER (SALISBURY) HYPOID SEMI-FLOATING

Spicer Model No.	Used On:
41-2	Frazer, All Models (1947-48)
41-2	Graham, Models 96 ('38-39), 108 ('40)
41-2	Graham, Schgr. 97 ('38-39), 107 ('40)
41-3	Graham, Hollywood Schgr. 109 (1940-41)
41-3	Graham, Hollywood Model 113 (1941)
50-2	Hupmobile 8, All Models (1936-38-39)
41-3	Hupmobile Skylark, Model R (1939-40)
41-2	Kaiser, All Models (1947-48)
— —	Studebaker Dictator, 5A, 6A (1937)
— —	Studebaker President, 3C (1937)
23	Studebaker Champ., All Models (1939-48)
41-2	Studebaker Comm., All Models (1938-48)
41-2	Studebaker Pres. All Models (1938-42)
41-4	Willys Comm'l, 442, 442P (Late 1942)
①41-2	Willys Jeep, Universal CJ-2A (1946-47-48)
23-1	Willys Jeep, Sta. Wgn. 4-63 (1946-47-48)
23-1	Willys Jeep, Sedan Del. 4-63 (1946-47-48)
23-1	Willys Jeepster, Model VJ-2 (1948)
23-1	Willys Jeep, Sta. Sedan 6-63 (1948)

①—Beginning Serial No. 13453. See Note below for axles used on earlier Jeeps.

►**NOTE: 1942 Willys Production Change.** Model 21-1 Spiral Bevel Type Rear Axle (4.9-1 Ratio) was used on first 500 trucks in 1942. After the first 500, the new type 41-4 Hypoid Gear Rear Axle (4.82-1 Ratio) was used. Refer to following article on Spicer Spiral Bevel Rear Axle for all data on first type equipment.

►**Willys Jeep CJ-2A (1946 Production Change.** Full-floating Spicer Model 23-2 Rear Axle used on cars before Serial No. 13453. *See Spicer Full-floating Rear Axle.*

DESCRIPTION: Hypoid gear, semi-floating type with Hotchkiss Drive. Hypoid gear pinion is integral with the pinion shaft and is mounted on taper roller bearings which seat directly against shoulders in housing. Bearing adjustment controlled by shims located between front bearing cone and spacer on pinion shaft (on models where no spacer used, shims are located between bearing cone and shoulder on pinion shaft). Pinion position controlled by shims installed between rear bearing cup and shoulder in housing (all models). Differential assembly mounted on taper roller bearings with adjusting shims on differential case hub at inner end of each bearing.

AXLE SHAFT REMOVAL & WHEEL BEARING ADJUSTMENT: Bearing adjustment (endplay) can be made without removing axle shafts (see below).

Axle Shaft Removal. Remove wheel, take off axle shaft nut and washer, use puller to remove hub and brake drum assembly. Disconnect brake line and cables, take out bolts mounting oil seal assembly and backing plate on axle housing flange and remove backing plate (do not lose wheel bearing shims), pull axle shaft and bearing assembly out. Use bearing puller and remove bearing from shaft.

Axle Shaft Endplay—Total endplay for both shafts should be .002-.007" (except as noted in table below). Endplay controlled by shims located between bearing retainer or brake backing plate and flange on end of axle housing. Adjust by adding or removing shims (shims are .003", .005", .010", .030" thick) equally at each wheel.

Axle Shaft Endplay

Car Model	Endplay
Frazer & Kaiser	.001-.006"
Studebaker ('37-46)	.001-.007"
Studebaker ('47 & Later)	.001-.005"
Willys	.001-.006"
All Other Cars	.002-.007"

REMOVAL OF AXLE: *See "Rear Axle" on car model page.*

OVERHAUL: Disassembly. To remove differential assembly (with axle shafts out), take out bearing cap screws, make certain that bearing caps marked to insure correct reassembly, install spreader tool on axle housing (Kaiser-Frazer & Willys No. W-129) to facilitate differential assembly removal, or pry assembly out using a pry bar on each side of differential case. Remove nut on end of pinion shaft, pull rear universal joint companion flange, press or drive pinion out at rear of housing (use brass drift on end of shaft), **note number and thickness of shims** between spacer on shaft and front bearing cone (these shims control bearing adjustment). Use puller to remove rear bearing cup from housing, **note number and thickness of shims** located in bearing cup recess in housing (these shims control pinion setting). Remove oil seal from front of housing, drive front pinion bearing cup out.

Pinion Bearing Assembly:—Make certain that pinion setting shims installed in housing ahead of rear bearing cup, insert pinion and rear bearing cone in housing from rear, install spacer and pinion

CONTINUED ON NEXT PAGE

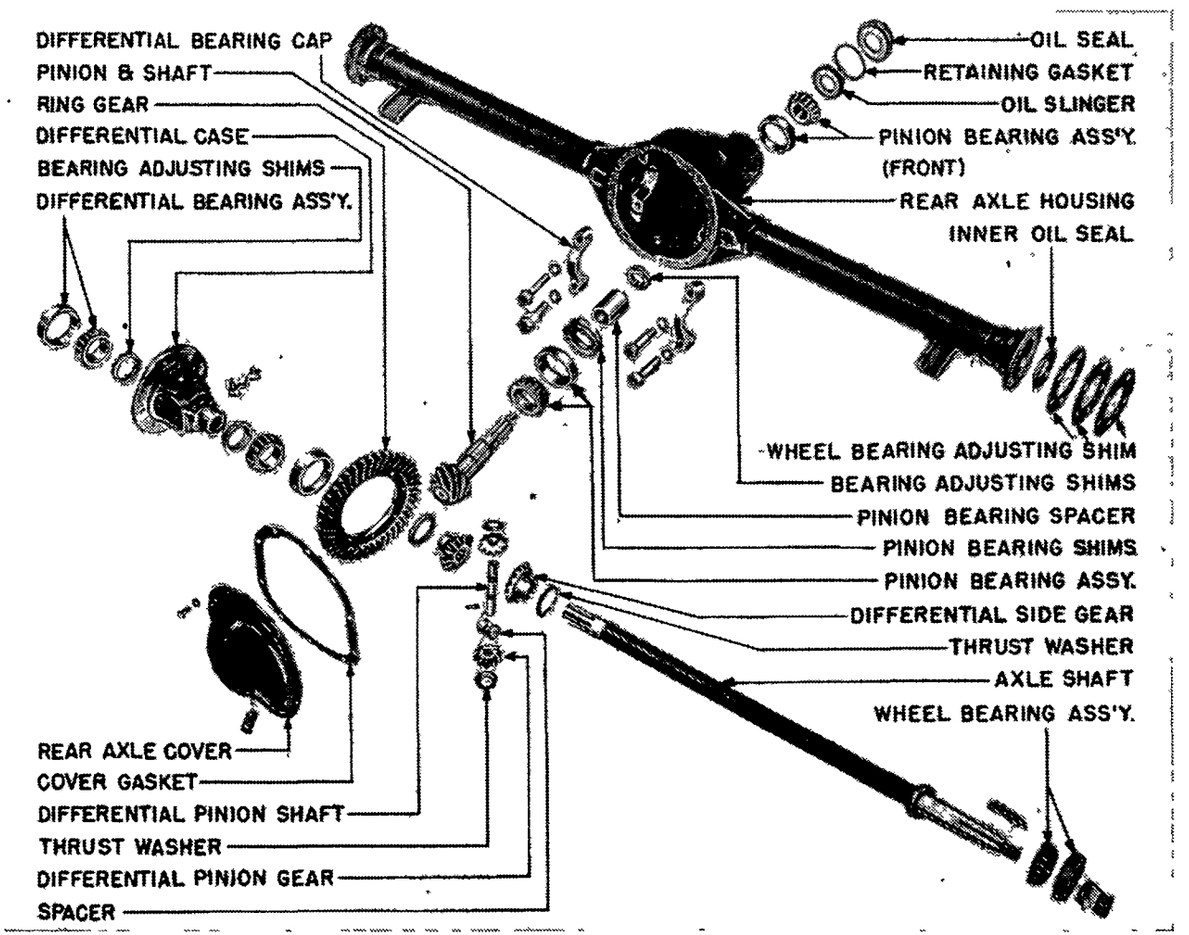

SPICER (SALISBURY) HYP ID EAR, SEMI-FL ATING AXLE

SPICER HYPOID (C nt.)

bearing adjusting shims on pinion shaft, tap front bearing cone on shaft, assemble universal joint flange, tighten nut securely (if bearing adjustment to be checked, oil seal assembly may be left out until adjustment completed).

Pinion Bearing Adjustment. With pinion shaft nut tight, pinion should rotate with slight drag (no endplay). Adjust by removing front bearing cone and adding or removing shims between cone and spacer or shoulder on shaft. Shims furnished .003," .005", .010", .030" thick.

Pinion Setting With Special Pinion Setting Gauge Salisbury No. J-772 (Studebaker Tool No. J-589-D): See Hypoid Gear Gauge Fitting Note below. Set micr meter gauge to correct figure for each axle model (see table below—this figure correct for standard pinions marked '0' on end) and correct micrometer for each pinion as follows: Figure etched on pinion indicates amount (in thousandths) that pinion should be set in toward ring gear (— figures) or out away from ring gear (+ figures). Install gauge in axle housing in place of differential assembly with side discs seated in differential bearing bores, add or remove shims located between rear bearing cup and shoulder in housing until micrometer pointer just contacts ground face of pinion gear (or adapter on Hypoid Gears—see Note below). Pinion setting shims are .003", .005", .010" thick.

Axle Type	Pinion Zero Setting
23, 41-2, 41-3, 41-4	.719"
50-2	.500"
Studebaker Models	
Dict. '37, All Models '38-39	.719"
President '37	.500"

►**Pinion Setting Note**—The above "Pinion Zero Setting' figure should be corrected by **adding** (when Pinions marked —), or **subtracting** (when pinions marked +), shim thickness equal in thousandths of inch to the figure stamped on the pinion immediately following + or — mark.

►**Hypoid Gear Gauge Fitting Note.** Pinions offset and micrometer gauge pointer will not contact ground face of pinion. Use special adapter on face of pinion and adjust so that micrometer pointer contacts face of offset plate on adapter. Special clamp can be bolted on face of axle housing which has setscrew to hold adapter on pinion.

Frazer & Kaiser Pinion Setting (Using K-F No. W-101 Pinion Setting Gauge)—Gauge consists of dial indicator and mounting fixture designed to be mounted on rear face of pinion (held in place by "C" clamp which is part of gauge). Gauge measures distance from face of pinion to differential carrier side bearing bore in housing and dial reading should be .719" for pinions marked "O". For pinions marked "+"or "—", dial reading should be less (pinions marked +) or greater (pinions marked —) by an amount equal to the figure following this plus or minus sign. Adjust pinion by adding or removing shims from behind rear bearing cup in housing and repeat test until correct dial reading is secured.

Willys Pinion Setting (Using Willys No. W-99 Pinion Setting Gauge)—Gauge consists of dial indicator and mounting fixture designed to be mounted on rear face of pinion (held in place by "C" clamp which is part of gauge). Before using this gauge, dial indicator must be set at zero through use of a "master gauge" supplied with this equipment. Set the dial indicator at zero with gauge pin resting on correct lobe of master gauge and with one-half turn tension on the gauge pin (master gauge table below). With pinion installed in axle housing (spacer tool W-126-6 can be installed on shaft in place of universal joint yoke), and with pinion setting gauge in place, dial reading should be ZERO for pinions marked "O", and should read PLUS (for pinions marked +) or MINUS (for pinions marked —) by an amount equal to the figure following this + or — sign on the pinion. Adjust by adding or removing shims from behind rear bearing cup in housing and repeat test until correct dial reading is secured.

Pinion Gauge Zero Setting

Rear Axle used on:	Master Gauge Lobe
CJ-2A Full-floating (Front & Rear)	D
CJ-2A Semi-floating (Rear)	B
4-63, 6-63, VJ-2	D

Differential Bearing Adjustment:—Shims installed on differential case hub at inner end of each bearing cone. To adjust differential bearings (with axle dismantled), remove bearing cones, add or remove shims until differential assembly will just slide into housing (no endplay when installed), then add additional .003-.006" shim thickness (except as noted below) to secure correct bearing pre-load. Shims furnished .003", .005", .010", .030" thick. With correct adjustment, fairly heavy drag should be felt when ring gear revolved by hand (test preferably with pinion out to avoid added drag of pinion bearings and oil seal). When installing differential assembly, tighten bearing cap screws securely.

Differential Bearing Pre-load

Car Model	Pre-load Shims
Frazer & Kaiser	.008"
Studebaker (All Models)	.008"
Willys	.008"
All Other Cars	.003-.006"

Ring & Pinion Gear Adjustment: Paint gears to check mesh, or check pinion setting (see directions below). Backlash should be .004-.008" (except as noted in table below). Adjust by shifting differential bearing adjusting shims from one side of differential case to the other. See Differential Bearing adjustment below. CAUTION—Total number of shims must not be changed in making this adjustment (would affect differential bearing adjustment).

Ring-and-Pinion Gear Backlash

Car Model	Backlash
Frazer & Kaiser	.003-.006"
Hupmobile ('36-40)	.004-.007"
Studebaker Champion ('39-40)	.003-.005"
Studebaker Other Models ('37-40)	.005-.007"
Studebaker All Models ('41-48)	.005-.007"
All Other Cars	.004-.008"

Ring Gear Backlash Adjustment. Adjust by transfering differential bearing adjusting shims from one side to the other (from left hand bearing to right hand bearing to increase backlash, from right to left to decrease backlash). Total shim thickness must not be changed. Shifting ring gear .005" will change backlash .0035".

SPICER (SALISBURY) FULL-FLOATING

REAR AXLE

Spicer No. Used On:

23-2—Willys Jeep, Model CJ-2A (1946)—See Note
23-2—Jeep, Ford & Willys Army Model (1942-45)

FRONT AXLE

25—Willys Jeep, Universal CJ-2A (1946-47-48)
Willys Jeep Truck, Model 4T (1947-48)
25—Jeep, Ford & Willys Army Model (1942-45)

NOTE: This full-floating type rear axle used only on first 1946 Jeeps. Later cars have semi-floating axle (see article on preceding page).

DESCRIPTION: Hypoid Gear, full-floating type, with Hotchkiss Drive. These axles similar to Spicer semi-floating type except for axle shaft and wheel bearings (wheel bearings on rear axle are double opposed taper roller bearing type which take thrust in both directions) so that no thrust block used at inner end of axle shafts.

FRONT AXLE (MODEL 25) NOTE: Differential assembly is same as that used in Model 23-2 Rear Axle and all data below on Disassembly, Pinion Bearing Assembly and Pinion Setting, Differential Bearing Adjustment, and Ring Gear Backlash, apply to this model also. *See Willys Jeep car page for data on wheel bearing adjustment.*

REMOVAL OF AXLE: *See "Rear Axle" on car model page.*

SERVICING: Gear Adjustment—Paint gears to check mesh, or check pinion setting (below). Backlash should be .005-.007". Adjusted by shifting differential bearing adjusting shims from one side of differential case to the other (see differential bearing adjustment below). CAUTION—Total shim thickness must not be changed when making this adjustment (will affect differential bearing adjustment).

AXLE SHAFT REMOVAL & WHEEL BEARING ADJUSTMENT: *See "Rear Axle" and "Front Axle" on Jeep, Willys Jeep, and Willys Jeep Truck car model pages.*

OVERHAUL: Disassembly—With axle out of the car and axle shafts removed, remove differential side bearing caps, pry differential assembly out of housing (use pry bar in each side of differential case opening). Remove nut on end of pinion shaft and pull universal joint yoke. Tap pinion out through rear of housing. Remove oil seal, front pinion bearing, pinion bearing adjusting shims, and spacer through front of housing; remove rear pinion bearing cup and pinion adjusting shims through rear of housing. CAUTION—Save pinion bearing shims and pinion setting shims for re-installation when axle reassembled. To dismantle differential assembly, take out mounting screws and remove ring gear (necessary to remove differential pinion shaft), use small drift to drive out differential pinion shaft lockpin, remove pinion shaft, pinion gears, side gears, and thrust washers (located behind each pinion and gear).

Pinion Bearing Assembly: Make certain that bearing adjusting shims installed between spacer and front bearing cone (for bearing adjustment), between rear bearing cup and shoulder in carrier housing (pinion setting for correct mesh with ring gear). If old parts being re-installed, install same number and thickness of shims removed when axle disas-

CONTINUED ON NEXT PAGE

SPICER FULL-FLOATING (C nt.)

sembled; if new parts being used, select shim thickness for correct adjustment as follows:

Pinion Bearing Adjustment—With universal joint yoke in place and pinion shaft nut tight, pinion should turn with a slight drag (no endplay). Adjust by adding or removing shims between spacer and front bearing cone (shims furnished .003", .005", .010", .030" thick).

Pinion Setting with Special Spicer (Salisbury) No. J-772: Setting is controlled by shims located between rear bearing cup and shoulder in housing. These shims furnished .003", .005", .010" thick. Shim thickness can be determined by checking pinion position with regular pinion setting gauge in same manner as on semi-floating type axles. Standard pinion setting for standard or '0' marked pinions is .719". From correct shim thickness required to secure this gauge reading, subtract (pinions marked +), or add (pinions marked —), a shim thickness in thousandths-of-an-inch equal to figure following this + or — mark on the end of the pinion. Final micrometer reading should be less (pinions marked +), or greater (pinions marked —) by amount equal to figure stamped on pinion. With this resultant shim thickness, pinion will be positioned for correct mesh with matched ring gear.

Willys Pinion Setting (Using Willys No. W-99 Pinion Setting Gauge)—Gauge consists of dial indicator and mounting fixture designed to be mounted on rear face of pinion (held in place by "C" clamp which is part of gauge). Before using this gauge, dial indicator must be set at zero through use of a "master gauge" supplied with this equipment. Set the dial indicator at zero with gauge pin resting on correct lobe of master gauge and with one-half turn tension on the gauge pin (master gauge table below). With pinion installed in axle housing (spacer tool W-126-6 can be installed on shaft in place of universal joint yoke), and with pinion setting gauge in place, dial reading should be ZERO for pinions marked "O", and should read PLUS (for pinions marked +) or MINUS (for pinions marked —) by an amount equal to the figure following this + or — sign on the pinion. Adjust by adding or removing shims from behind rear bearing cup in housing and repeat test until correct dial reading is secured.

Pinion Gauge Zero Setting

Rear Axle used on:	Master Gauge Lobe
CJ-2A Full-floating (Front & Rear)	D
4T Truck (Front)	D

Differential Bearing Adjustment: Bearing pre-load controlled by shims between differential case hubs and bearing cones on each side. To adjust bearings, add shims equal in amount to observed endplay of differential assembly in housing (measure with feeler gauge or dial indicator) **plus .008"** to provide a bearing pre-load or pinch-fit of this amount when assembly installed in housing. Location of shims (right and left) is determined by ring and pinion gear backlash.

Ring & Pinion Gear Backlash Adjustment: With differential bearings properly adjusted (.008" tight), shift shims from one side to other of differential case, as required, to secure correct backlash of .005-.007". Shifting one .005" shim will change backlash .0035". CAUTION—Make certain that total shim thickness for both sides unchanged (changing total shim thickness will upset differential bearing adj.).

BUICK SPIRAL BEVEL (1936)

Limited, Series 90 (1936)

TYPE: Spiral bevel gear, ¾ floating type with torque tube drive. Pinion shaft is integral with propeller shaft and carried on double row ball bearing (front), single row ball bearing (rear) with spacer between bearings. Front bearing mounted in adjusting sleeve. Oil seal located in forward end of sleeve. Differential assembly carried on ball bearings with adjusting nuts under bearing caps.

SERVICING:—Gear Adjustment. Check pinion setting (see instructions below) or paint gears to check mesh. Backlash should be .006-.010" (recommended figure stamped on each pinion with prefix 'L'). To adjust, back off one differential bearing adjusting nut, tighten opposite nut equal amount (see differential bearing adjustment below).

Axle Shaft Replacement Note—Before axle shaft can be taken out, the cotter pin and nut on the inner end of the shaft (in differential case) must be removed.

OVERHAUL:—Pinion Bearing Assembly. Bearing inner races should be press fit on shaft or pinion shoulder. See that pinion key engages bearing spacer to prevent spacer turning. Front double row ball bearing should have no side play (outer race movement), rear single row bearing sideplay .010" max. Bearing sleeve runout (assembled) .005" max.

Pinion Setting:—Standard setting (distance from nearest face of differential bearing boss in carrier to face of pinion) shown in table below (correct for pinions marked '0.') Figure etched on face of each pinion should be added (plus mark) or subtracted (minus mark) to secure setting. Use recommended pinion setting gauge (HMJ-162), set gauge for zero on master gauge using correct locating button for each model, install gauge in differential carrier (differential assembly removed), remove adjusting hole cover on side of pinion housing, loosen clamp bolt, turn adjusting sleeve until correct pinion setting secured, tighten clamp bolt, replace adjusting hole cover. See that lock engages slot.

Car Model.	Pinion Setting.
90 (1936)	3.875"

Ring Gear:—Drill out old rivets. Reface ring gear seat if runout exceeds .002". New ring gear runout must not exceed .006" installed (measure on back face, use differential hubs as centers).

Differential Gears:—Bronze thrust washers installed in back of side gears and pinions. Backlash between gears .008" maximum.

Differential Bearing Adjustment:—Back off bearing cap nuts on right hand differential bearing 1½ turns, tap cap lightly with hammer to loosen, free lock, back off bearing adjusting nut slowly and note point where outer bearing race stops turning with nut. If race does not turn with nut (caused by bearing wear or race turning on hub due to 'locking'), determine the 'just free' position by turning nut in until outer race just starts to turn with nut. For correct adjustment, turn adjusting nut in one notch minimum or two notches maximum from the just free position, tighten bearing cap nuts and replace adjusting nut lock.

Ring Gear Backlash Adjustment. Check backlash by rocking ring gear back and forth with pinion held stationary. To adjust backlash, back off one differential bearing adjusting nut and turn up p-posite nut equal amount (to avoid disturbing bearing adjustment).

BUICK SPIRAL BEVEL (1936-37)

Special Series 40, Century Series 60 (1936)
Roadmaster, Series 80 (1936-37)
Limited, Series 90 (1937)

TYPE:—Spiral bevel gear, semi-floating type with torque tube drive. Pinion integral with shaft and is splined and pinned to propeller shaft within torque tube. Pinion shaft mounted on double row ball bearing (front), roller bearing (rear). Bearings mounted directly in housing with spacer between them and held in place by setscrew and locknut on side of housing which engages tapered hole in spacer. Differential assembly carried on ball bearings with adjusting nuts under bearing caps on carrier.

REMOVAL OF AXLE: *See "Rear Axle" on car model page.*

SERVICING:—Gear Adjustment. Check pinion setting (see instructions below) or paint gears to check mesh. Backlash should be .006-.010" for new gears or slightly more for worn gears. To adjust, back off one differential bearing adjusting nut, tighten opposite nut equal amount (see differential bearing adjustment below).

Axle Replacement. Axles retained by 'C' washer (40), nut and cotter pin (others) at inner end in differential case. To remove axle, take out locking pin, withdraw differential pinion shaft, remove spacer block, pull axle in and remove 'C' washer or take off nut, then push axle out. Shafts formed with integral flange at outer end to which brake drums and wheels attached.

NOTE—Spacers should be selected to give axle shaft endplay of .000" minimum, .008" maximum. Model 40 spacers ground on two sides to provide minimum and maximum production limit sizes. Spacers for 60, 80, 90 are furnished std., and .020" oversize.

Propeller Shaft Front Bearing (90 1937)—Consists of a bronze bushing in a removable cast-iron sleeve seated against a shoulder in the forward end of the torque tube and held by a setscrew. Bushing assembly may be removed from rear end of torque tube after setscrew taken out. NOTE—Plug provided in torque tube at this bearing for lubrication. Use transmission oil.

OVERHAUL:—Pinion and shaft must be removed from propeller shaft by cutting off head of pin and disengaging splines to remove bearings. Use new pin when reassembling.

Pinion Bearing Assembly:—Bearings should be press fit on pinion shaft. Tighten pinion bearing nut securely and stake in place. When installing assembly in housing tap outer race of rear roller bearing forward against collar to prevent possibility of race rubbing on pinion. See that adjusting shims installed ahead of front bearing and tighten pinion adjusting setscrews securely.

Pinion Setting:—Standard setting shown in table below (Dimension 'A' distance from rear face of pinion to nearest face of differential bearing boss in carrier, 'B' distance to ring gear center line), add (plus figure) or subtract (minus figure) the amount in thousands stamped on rear face of pinion. Use approved pinion setting gauge (with master test fixture to check gauge '0' point). Set gauge for each model, install gauge in differential carrier (differential assembly removed) so that locating rings

CONTINUED ON NEXT PAGE

BUICK SPIRAL BEVEL (C nt.)

seat in side bearing holes, add or remove shims located ahead of front pinion bearing in housing until pinion location correct, tighten adjusting setscrews and locknuts securely. Adjusting shims furnished .012", .015", .018", .060" and 3/16" thick.

Car Model.	'A' Pinion Setting	'B'
40 (1936)	1.894"	3.4688"
60, 80 (1936)	1.947"	3.7187"
80, 90 (1937)	1.947"	3.7187"

Differential Bearing Adjustment:—Same as for other Buick models. See preceding article for complete instructions. Setting should be 1 notch minimum, 1½ notches maximum, tight or turned in from the just free position.

BUICK HYPOID

Special, Series 40 (1937 to 1948)
Super, Series 50 (1940 to 1948)
Century, Series 60 (1937 to 1942)
Roadmaster, Series 70 (1940 to 1948)
Limited, Series 80 & 90 (1938 to 1942)

DESCRIPTION (1937-38): Hypoid gear, semi-floating, with torque tube drive. Pinion shaft is splined and pinned to the propeller shaft in the torque tube. And the shaft is mounted on double row ball bearing (which takes thrust in both directions) at front, roller bearing at rear. Bearings mounted directly in housing and front bearing locked in place by collar which is held in housing by tapered setscrews. Locking collar serves as spacer between bearings on Models 80, 90 (On Models 40, 60 rear bearing outer race seats against shoulder in housing). Differential side bearings are Hyatt self-aligning (barrel) roller type with adjusting nut under bearing cap on carrier at each bearing.

1939 Rear Axle: Has design changes from 1938 type and new features as follows:

Series 40, 60 (1939)—Has **two-section Torque Tube** with rear section extending only to universal joint ball which is mounted on frame at rear of X member. Torque tube struts are not adjustable (bolt holes at forward end must be drilled in new torque tubes when installed). Pinion shaft front bearing has been increased in size and has one shielded side which must face forward. No pinion bearing washer (between bearing and seat in torque tube) is used as new type heavier pinion setting shims used which make this washer unnecessary. New type roller bearing is used at forward end of propeller shaft. Rear axle gears are not interchangeable with 1938 parts but rear wheel bearings, oil seals, axle shafts, and bearings (except double row pinion bearing) are interchangeable.

►*CAUTION—Special Removal and Installation Directions required to maintain alignment of engine and rear axle on 1939 cars with TWO-SECTION torque tube. See Buick Special Shop Notes in Car Model Section for Re-alignment instructions.*

Model 80, 90 ('39). Torque tube changed slightly (cast in differential carrier housing instead of being riveted) and strut bolts must be drilled in new torque tubes when installed. All axle parts, except for torque tube and axle housing interchangeable with 1938 parts.

1940 Rear Axle: Has design changes from 1939 type and new features as follows:

Series 40, 50, 60, 70 (1940)—Two-section torque tube (1939 type above) discontinued and 1940 torque tube is new type which is bolted on flange on differential carrier. Torque tube should not be removed from carrier and bolts should not be loosened when servicing axle (except when installing new gasket to correct oil leaks) as these parts furnished as an assembly only. Universal joint ball housing and torque tube connection same design as used on Series 80,90 except that no propeller shaft front bearing used. Right hand axle shaft ¾" longer than left hand shaft and shafts not interchangeable.

Series 80,90—Same design as used on corresponding 1939 models. Right hand axle shaft 15/16" longer than left hand shaft & shafts not interchangeable.

Axle Identification Markings (All Series)—Gear ratios of production axles marked by paint marks on both axle shaft flanged ends as follows:

Car Model	Axle Ratio	Color Mark
40 Std.	4.4-1	White
40 Optl.	3.9-1	Red
50 Std.	4.4-1	
60,70 Std.	3.9-1	Red
60 Optl.	3.6-1	Blue

1941-42 Rear Axle: Has design changes from 1940 type and new features as listed below (NOTE—Axle shaft retainer "C" washer used on late 1940 cars also).

Axle Identification Marking (All Models)—Axle ratios may be identified by figures stamped on underside of axle housing or paint marks on outer ends of both axle shaft flanges as follows:

Model	Ratio	Paint Mark
40 Single Carb. Std.	4.4-1	White
40 Single Carb. Optl.	3.9-1	Red
40,50 Compd. Carb.	4.1-1	None
50 Optl., 60,70 Std.	3.9-1	Red
60,70 Optl.	3.6-1	Blue
90 Std.	4.2-1	None

Axle Shaft Retainer 'C' Washer—New type reduced throat self-locking retainer washers are used. Special service tool, J-1515, is required to remove these new washers (tool is slotted driver used to engage ends of washer so that it can be driven out. NOTE—this new type self-locking washer used on late 1940 cars as well as all 1941 cars.

1946 & Later Rear Axle: Has design changes from 1942 type and new features as follows:

Ring & Pinion Gear Set—Gears are heavier and cannot be installed on previous car models unless new type differential case (below) likewise used.

Differential Case—The case has a heavier flange for use with new heavier type gears. Case and gear assemblies can be installed in 1942 cars as an assembly.

Pinion Bearing Lock Sleeve—Lock sleeve is longer to prevent rear roller bearing being forced over shoulder in carrier during assembly (see Caution below). This new lock sleeve which is 2 23/64" long has same part number as previous type (2⅛" long) and will be furnished as replacement for 1942 type. New pinion bearing spacer tool must be used when this new lock sleeve installed.

Pinion Bearings—Bearings are closer fit on pinion shaft. Rear roller bearing is a selective fit on shaft and should have .0003-.0009" clearance.

REMOVAL OF AXLE: *See "Rear Axle" on car model page.*

AXLE SHAFT REPLACEMENT: Axle shaft retained by "C" washer at inner end. To remove axle shaft, **at inner end (all models). To remove axle shaft, take out locking pin, remove differential pinion shaft and spacer block, push axle in and remove 'C' washer at inner end within differential side gear, (use tool J-1515 to drive washer from shaft slot), pull shaft out (wheel bearing inner race is press fit on shaft and will be removed with it, uter race is light press fit in axle housing and can be removed with J-528-B puller).**

NOTE—Right hand axle shafts are ¾" longer (40, 50,60,70), 15/16" longer (90) than left hand shafts and must not be interchanged.

Axle Shaft Endplay. Controlled by spacer block between axle ends in differential case and should be .000" minimum, .008" maximum. Four block sizes used in production, replacement spacer block

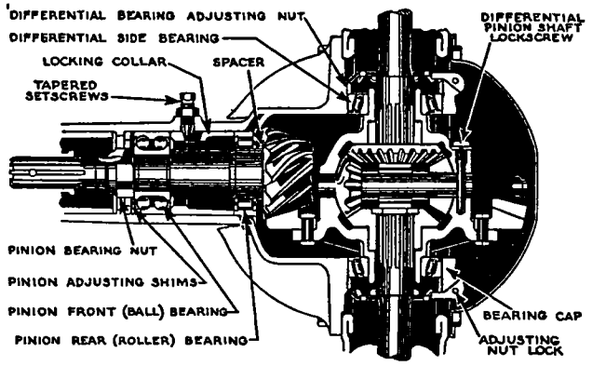

ground on all sides for min. and max. production sizes. Important—New bronze side gear thrust washers should be installed back of differential side gears before new axle shaft spacer block installed to correct excessive endplay.

►*CAUTION—Unless new thrust washers used, new spacer block alone will not secure correct .008" max. endplay (if old washers worn).*

NOTE—On all models beginning with 1938, right hand axle shaft is longer than left hand shaft and shafts are not interchangeable. Shafts also not interchangeable with earlier models.

PROPELLER SHAFT & FRONT BEARING: Propeller shaft is part of pinion & shaft assembly (see axle overhaul data following). Propeller shaft front bearing in torque tube is serviced as follows:

Propeller Shaft Front Bearing (40, 60 1939). The sleeve on the shaft (bearing race) is light press fit on shaft and will not be disturbed by shaft removal (will come out with shaft leaving bearing in torque tube. To dismantle bearing for servicing, remove propeller shaft, take out front oil seal, front bearing spacer, bearing roller assembly, bearing outer race, rear bearing spacer, and rear oil seal in order. When reassembling, use new oil seals, and remove bearing inner race sleeve from propeller shaft before installing shaft (oil seal will be damaged if shaft installed with sleeve in place).
Propeller Shaft Front Bearing (80,90 '38-39)—Bronze bushing in a cast-iron body seated against shoulder at forward end of torque tube and held in

C NTINUED N NEXT PAGE

BUICK HYPOID (C nt.)

place by setscrew. Shaft clearance in bushing should be .012-.016".

NOTE—Plug provided in torque tube at this bearing for lubrication. Use 10-W engine oil only.

Propeller Shaft Front Bearing (80, 90, '40-42). A bronze bushing and seal in a cast-iron body installed in forward end of torque tube and retained by setscrew. Bearing is lubricated from transmission but when new torque tube being installed, ½ pint of transmission oil should be poured in end of torque tube before it is attached to ball joint at transmission.

►**Torque Tube Caution (40, 50, 60, 70 Beginning 1942).** Torque tube bolted to carrier but **do not disturb** connection between torque tube flange and carrier flange unless installation of new gasket required to stop oil leaks (special gasket required). Tube and carrier are matched and must be kept lined up (furnished as an assembly only).

OVERHAUL: Disassembly. Mark differential bearing adjusting nuts and bearing caps before disassembling. To remove pinion and shaft assembly, loosen locknuts and take out taper setscrews on side of housing. To remove pinion from propeller shaft, file off head of pin and drive out, use tool J-1292-B to pull pinion from propeller shaft (this tool used also to install pinion). Pry up staked portion of pinion bearing nut, remove nut, press off pinion front bearing (use blocks under outer race), remove other parts of pinion assembly.

NOTE—Pinion Puller J-1292-B is used for 1940 and later cars only. Use puller J-862-A for 1939 and earlier cars.

Pinion Bearing Assembly:—Bearings should be press fit on pinion shaft (use tubing of correct diameter to engage inner race when pressing bearings on shaft). No inner race used for rear pinion bearing (outer race and rollers furnished as assembly) and spacer must be installed between rollers and pinion to prevent creeping. Tighten pinion bearing nut securely and stake into notch on shaft. Assemble pinion to propeller shaft riveting pin to prevent it loosening in service (see propeller shaft straightening below). When installing assembly in housing, tap outer race of rear bearing in against shoulder in housing or against bearing collar to prevent the race rubbing on pinion (use Pinion Bearing Spacer J-1192-A or J-1192-B—see Note below). Make certain that adjusting shims installed ahead of front bearing, tighten setscrews and locknuts securely.

Pinion Bearing Spacer Tool Note—Consists of a horseshoe shaped spacer which should be inserted between pinion and rear bearing when tapping on face of pinion to seat bearings in carrier (use bronze driving block on pinion, remove tool after installation completed). Spacer tool is No. J-1192-A (7/16" thick) used on 1942 and earlier cars with original lock sleeve (2⅛" long), or No. J-1192-B (¼" thick) used on 1946 and later cars (and earlier cars with new type lock sleeve 2 23/64" long).

►*CAUTION*—When installing pinion assembly with new type 2 23/64" lock sleeve, use Pinion Bearing Spacer **J-1192B (¼" thick)** inserted behind pinion to tap pinion forward into place so that front bearing outer race seats against shims in housing. Previous type Pinion Bearing Spacer **J-1192A (7/16" thick)** must only be used when previous type 2⅛" lock sleeve being used.

Front Pinion Bearing Note—On 1939 Series 40, 60 and all 1940 and later cars, front pinion bearing is shielded type and should be installed with shielded side toward front (splined end of shaft) with loading groove in outer race toward top to prevent oil leaking into torque tube.

Propeller Shaft Run-out: With the propeller shaft supported on 'Vee' blocks at point just behind splines at forward end and rear pinion bearing outer race at rear, run-out on tubular shaft 1½" back of forward end should be less than .005", run-out at center of tubular shaft should be less than .010", run-out at front pinion bearing outer race should be less than .001". With these limits, run-out at universal joint end (before joint connected) should be less than 1/16" (greater run-out will cause universal bushing wear and oil leaks).

CAUTION—Do not put oil in propeller shaft when installing pinion (will cause high speed roughness).

Ring Gear Installation:—Ring gear and pinion furnished only in matched sets. To remove old gear, drill out rivets with ¼" drill on differential case flange side (cutting rivets with chisel will distort case). Case run-out must be less than .002" with gear removed. Bolt ring gear in place with 5/16" bolts in alternate holes, then install opposite rivets between bolts, remove bolts and finish riveting. Run-out at back of gear must not exceed .004".

Pinion Setting (Using J-681-A Pinion Setting Gauge): Pinions marked on rear face of two teeth by an etched figure and plus or minus sign for necessary correction of standard setting (micrometer reading for standard settings given below). Plus sign indicates that pinion should be moved away from axle shaft center-line, minus sign toward axle center-line, the amount (in thousandths) of the figure following this plus or minus sign. Use J-681-A Pinion Setting Gauge, check micrometer '0' on test fixture, set micrometer to standard figure (as given in table below for each model, turn micrometer pointer in (for plus figure) or out (for minus figure) the amount stamped on face of pinion, install gauge in axle housing (with differential carrier removed) seating gauge rings on differential bearing posts, add or remove shims between pinion front bearing and shoulder in housing until micrometer pointer contacts face of adapter installed on pinion (adapter must be used on all hypoid gears). Shims furnished .011", .012", .015", .018", .060" and 3/16" thick.

►**1937-42 Pinion Setting Note**—Production pinions are not ground on face and have definite tooth for pinion setting gauge measurements. When using gauge, measure to blank tooth (between tooth which has factory inspection mark of letter and number, and tooth with + or — mark) and again at opposite side of pinion (place adapter on pinion with blank tooth up and then with blank tooth down) and average these two readings on 1942 and previous pinions (one reading only required on 1946 and later pinions with ground face—not necessary to "average" readings).

Pinion Setting Shims ('39 40, 60)—New heavier type shims used between pinion front double-row ball bearing and torque tube seat to adjust pinion for correct mesh (these shims eliminate thrust washer used on previous models). Shims furnished in .001" steps from .010" to .020" thick inclusive (use two shims for greater thicknesses).

Standard Pinion Setting (J-681-A Gauge)

Model	Micrometer Setting
40 ('36)	.711"
60, 80 ('36)	.461"
90 ('36)	.305"
40,60 ('37-38-39)	.379"
80,90 ('37)	.461"
80, 90 ('38-39-40), 90 ('41-42)	.203"
40, 50, 60, 70 ('40-41-42)	.379"
40, 50, 70 (1946 & Later)	.379"

NOTE—This J-681-A gauge can be used for pinion setting on previous models and standard micrometer readings given for these models above. Use adapter for all models with hypoid gears.

Ring & Pinion Gear Meshing Note—On 4.4 ratio axle, marked gear teeth must be meshed together (ring gear marked '26', pinion tooth marked '18').

Pinion Setting (Using J-2197 Pinion Setting Gauge: This new type gauge similar to previous type, J-681A, except that micrometer scale markings are **reversed.** This gauge is used in same manner as previous type (gauge rings seated in side bearing bores, micrometer set so that pointer contacts adapter plate on face of pinion gear) except that "nominal" or standard readings are new (see below) and that corrections for pinions marked (+) must be **added,** and corrections for pinions marked (—) must be **subtracted** from the nominal micrometer reading when this J-2197 gauge is used (this is reverse of procedure for old type J-681A gauge).

►**1946 (& Later) Pinion Setting Note**—Pinions are ground on face and **one** gauge reading will be sufficient to check pinion setting (not necessary to "average" two readings as for previous type).

Standard Pinion Setting (J-2197 Gauge)

Model	Micrometer Setting
40, 50, 60, 70 ('40-42)	.802"
80, 90 ('40-42)	.977"
40, 50, 70 (1946 & Later)	.802"

Differential Bearing Adjustment:—Remove adjusting nut locks, mark adjusting nuts, loosen right bearing capscrews ¾ turn and tap cap lightly to free nut, back off right hand nut slowly and note point where bearing race stops turning with nut, mark this new position, return nut to original position and repeat check. Race should stop turning at same point and number of notches nut has been turned is 'notches tight' of old setting. Correct setting is 1-1½ notches tight (1937 cars), 2-2½ notches tight for 1938 & later cars (nut turned in beyond 'free' position noted above). Tighten both bearing caps securely, check ring gear backlash. After all adjustments completed, install adjusting nut locks.

Ring & Pinion Gear Adjustment: Check pinion setting (see instructions above) or paint gears to check mesh. Backlash should be .006-.010" for new gears (slightly more for worn gears). Total lash measured at outside diameter of tire (one wheel jacked up) should not exceed ¾". To adjust backlash, back off one differential side bearing adjusting nut, tighten opposite nut equal amount (see Differential Bearing Adjustment above).

Ring Gear Backlash Adjustment. When adjusting ring gear backlash, make certain that differential side bearing adjustment not disturbed (back off one nut and tighten opposite nut equally). Check bearing adjustment. If adjusting nuts marked before dismantling, setting nuts up to original marks should give correct ring gear position.

NOTE—Backing off one nut and tightening other nut one notch will change backlash .004-.005".

BUICK REAR SUSPENSION

ALL SERIES (1938 to 1948)

SPECIAL SERVICE NOTES: Optional Springs for **Overloads or Special Operating Conditions.** When excessive bottoming of rear springs occurs with normal loads and standard springs, special Optional High (Export Type) Springs or Overload Special Rear Springs may be installed to correct this condition as follows:

►**Optional Higher (Export) Springs**—These springs are 5/8" higher with higher rate than standard springs and should be installed to correct excessive bottoming before resorting to Overload Springs (except for use with heavy trailers or when carrying heavy loads in rear compartment). Trim dimension must not be increased more than 1" (see Trim Dimension data below) and car will perform better if shock absorber calibration changed to optional type specified for use with these springs (see Shock Absorber article). CAUTION—Change springs in pairs (do not install one spring).

►**Overload Special Springs**—These springs are specified for customary overload of 200 lbs. and 500 lbs. (for heavy loads in rear compartment or with trailer) and will maintain correct Trim Dimension with these loads. To determine overload, weigh rear end of car when empty and again with regular load. Install springs in pairs and change shock absorber calibration to special type specified for use with these springs (see Shock Absorber articles). CAUTION—Rear axles should not be overloaded in excess of 500 lbs.

►**Front Spring Note**—Optional Higher (Export) Springs. These special springs also available for use on front end of car (do not require any change in shock absorber calibrations). Refer to Buick Independent Suspension article for complete Front Spring data.

DESCRIPTION: Coil spring type with conventional rear axle. Springs retained at top and bottom by steel plates and insulated from frame by rubberized fabric insulator at top. Radius Bar linked to frame and to axle housing on right side controls side movement. Shock absorbers are direct acting type (1938), double acting type (1939 on). On 1940 and later 40, 50, 60, 70 shock absorbers are parallel cylinder type and mounted on brake backing plate (wheel and brake drum must be removed to remove shock absorber) with arm linked to lower flange of frame side rail.

SERVICING: No adjustment required except that spring heights ('Trim' dimension) must be correct to insure satisfactory shock absorber action and springs must be removed and replaced as follows:

Spring Removal:—Disconnect lower ends of shock absorbers at axle bracket, raise rear of car to distend springs, remove bolts in upper and lower spring cups (upper bolt has right hand thread, lower bolt in spring bracket has left hand thread.

Spring Installation:—Make certain that insulator is in place between top of spring and frame, turn spring cups on bolts so that they are snug in end coils, see that rubber insulator in place on upper bolt, tighten bolts securely.

Trim Dimension (1938):—At curb weight, with full tank of gasoline, distance between spring seat on frame side rail and spring seat on rear axle bracket should be 14" maximum (if this 'trim' dimension greater than 14" shock absorber will be damaged on rebound). Replace spring if incorrect. If spring bottoms excessively under load, install special substitute springs (see Table #1—Special Springs) in matched pairs and check to see that these springs do not exceed 14" trim dimension.

1939 Models—Check distance between lower face of frame side rail at center-line of rubber bumper and top of axle housing. Distance should be 6¾-7¾ for all models. Replace springs if height incorrect.

1940 Models. Check from lower face of frame rail (straight section to rear of spring on 40,50,60,70; insulator seat on 80,90) to lower face of spring on axle housing bracket. This trim dimension should be 6¼-7¼" (40,50,60,70), 6¾-7¾" (80,90). If trim dimension outside these limits, replace spring (see spring data below).

1941 Models. At curb weight, distance from top of axle housing at center to raised flange on bracket on lower face of frame rail slightly forward of axle housing should be 5⅛-6" (40,50,60,70), 5½-6¼" (90). Replace rear spring if trim dimension too small (see Spring data).

1942 Models—Measurement should be taken from top of rear axle housing (all series) to top of raised flange on underside of frame side rail slightly to rear of axle (Series 40, 60, 90) or to flange at side of rubber bumper on frame rail directly above axle (50, 70). Replace springs if Trim not correct.
NOTE—Following specifications correct with Domestic (standard) springs. Trim dimension must not be increased more than 1" by special springs.

Trim Dimension

Model	Height (Std. Spring)
40, 60	5¼-6¼"
50, 70	6½-7¼"
90	5½-6¼"

SPRING SPECIFICATIONS: Spring part number stamped on flat of end coil and springs paint-marked on first coil for identifications as follows:

STANDARD REAR SPRINGS

1938 Standard Springs

Model	Part No.	Color	Length
40C, 41, 44, 47, 48	1304057	Yellow	18¾"
46, 46C, 46S, 66C, 66S	1304583	Blue	19¼"
60C, 61, 67, 68	1304584	Red	19"
80C, 81, 81F, 87	1304585	Orange	18¾"
90, 90L	1304586	Green	18¾"
91	1305032	White	18½"

1939 Standard Springs

Model	Part No.	Color Mark	Length
39-41, 41C, 48	1310363	Brown	20⅛"
39-46, 46C, 46S	1310361	Blue	20⅛"
39-61, 61C	1310362	Red	20⅛"
39-66C	1310363	Brown	20⅛"
39-66S	1310361	Blue	20⅛"
39-80C, 81, 81C, F, 87	1309893	Orange	20¼"
39-90, 90L	1308803	Green	20¼"
39-91	1309892	White	19⅞"

1940 Standard Springs

Car Model	Spring Part No.	Color Mark
41, 41C, 48	1312433	Yellow
41T	1310399	Red
46, 46S	1315049	Blue
46C	1315105	Brown
51	1312433	Yellow
51C	1317788	
56S	1315047	
56C	1317790	
59	1315231	
61, 61C	1310399	Red
66, 66S	1315049	Blue
66C	1315105	Brown
71	1310399	Red
71C	1317789	
76S	1312433	Yellow
76C	1317788	
80C; 81, F, C; 87, F	1309893	
90, 90L	1308803	
91	1309892	

1941 Standard Springs

41, 51, 51C	1317788	Blue-Yellow
46, 56	1321053	Blue-Brown
46S, 56S, 56C, 66	1317790	Blue-Aluminum
49	1315231	Red-Red
61, 71, 71C	1317789	Blue-Red
66S, 76S, 76C	1317788	Blue-Yellow

1941 Optl. High Springs

Car Model	Spring Part No.	Color Mark
41, 51, 51C	1312433	Yellow
46, 56	1315105	Brown
46S, 56S, 56C	1315047	Aluminum
61, 71, 71C	1310399	Red
66, 66S	1315047	Aluminum
76S, 76C	1312433	Yellow

1942 Std. & Optl. Springs

Model	Std. Spring	Optl. High Spring
44	1324550	1323253
44C, 46, 48	1324551	1324552
47, 46S, 46SSE, 48S	1324553	1315047
41, 41SE	1324549	1312433
49	1315231	
51	1322284	1324556
56S	1324559	1324558
56C	1324559	1322284
61	1324561	1310399
66S	1324549	1312433
71	1323977	1324557
76C, 76S	1322284	1324556
90, 90L, 91, 91F	1324562	

1946-47 Std. & Optl. Springs

Model	Std. Spring	Optl. High Spring
41	1324549	1312433
46S	1324553	1315047
51	1322284	1324556
56S, 56C	1324559	1323977
59	1331207	
71	1323977	1324557
76S, 76C	1322284	1324556

1948 Std. & Optl. Springs

Model	Std. Spring	Optl. High Spring
41	1324549	1312433
46S	1324553	1315047
51, 56C	1322284	1324556
56S	1324559	1323977
59	1331207	
71, 76C	1323977	1324557
76S	1322284	1324556
79	1331207	

CONTINUED ON NEXT PAGE

BUICK REAR SUSPENSION (C nt.)

HEAVY DUTY REAR SPRINGS

Heavy Duty (Overload Springs):—If spring bottoms excessively when loaded, a spring from a heavier model car may be installed providing that new spring does not increase trim dimension (above) more than 1". Make certain that same type spring installed on both right and left sides of car. For use with trailers or when heavy loads carried in rear compartment (not to exceed 500 lbs. in addition to normal passenger load of 500 lbs.), special rear springs may be installed as follows:

1938 Heavy Duty Springs

Model No.	Table #1 Part No.	Table #2 Part No.
40, 60 Coupes	1304057	1305364
40 (others)	1304584	1305364
60 (others)	1304585	1305364
80	1304586 (*)	1305365
90	1305365	1305366

(*)—1305364 may also be used.

Table #1—For cars where trim dimension less than 14" and when spring bottoms excessively with load. **Table #2**—For use with trailers or heavy loads in rear compartment (will maintain correct trim with 500 lb. overload on axle).

1939 Heavy Duty Springs

	Front Spring	Rear Springs 200 lbs. Overload	300 lbs.
40 Sedan	1311185*	1306461	1309893
40 Coupe	1311185	1310363	1304584
60 Sedan	1311186**	1304584	1309892
60 Coupe	1311186	1311621	1304584

*—With Spare at rear. No. 1311186 for Fender wells.
**—With Spare at rear. On Fender Well cars, install two steel shims No. 1310413 between spring and insulator at upper end of springs.

1940 Heavy Duty Springs

Model	200 lb. Overload	300 lb. Overload
41, 41C, 48, 51	1310399	1315233
46, 46S, 46C, 56S	1312433	1315231
61, 61C, 71	1315231	1315233
66, 66S, 66C	1312433	1315231
76S	1310399	1315233
80C; 81, F, C; 87, F	1304586	1305365
90, 90L, 91	1305385	1305366

1941 Heavy Duty Springs

Car Model	200 Lb. Overload	300 Lb. Overload
41, 51, 51C	1310399	1315233
46S, 56C, 56S, 66	1312433	1315231
46, 56	1315047	1315231
49	1315233	
61, 71, 71C	1315231	1315233
66S, 76C, 76S	1310399	1315233
90, 90L, 91, 91F	1304586	1305366

1942 Heavy Duty Springs

Model	200 lb. Type	500 lb. Type
41	1310399	1315233
44, 44C, 46, 48	1315047	1315231
46S, 47, 48S	1312433	1315233
49	1315233	
51	1324557	1324555
56C, 56S	1324556	1324560
61	1315231	1315233
66S	1310399	1315233
71	1324560	1324555
76C, 76S	1324557	1324555
90, 90L, 91, 91F	1304586	1305366

1946-47 Heavy Duty Springs

Model	200 Lb. Type	500 Lb. Type
41	1310399	1315233
46S	1312433	1315233
51	1324557	1324555
56S, 56C	1324556	1331207
59	1324555	
71	1331207	1324555
76S, 76C	1324557	1324555

1948 Heavy Duty Springs

Model	200 Lb. Type	500 Lb. Type
41	1310399	1315233
46S	1312433	1315233
51	1324557	1324555
56S	1324556	1331207
56C	1324557	1324555
59	1324555	
71	1331207	1324555
76S	1324557	1324555
76C	1331207	1324555
79	1324555	

NOTE—When installing these Heavy Duty Springs, rear trim dimension must not be increased more than 1" over trim dimension limits (see Trim Dimension data). Springs can be changed in pairs at front or rear, or at both ends of the car. See Buick Front Suspension article for front spring data.

Rear Stabilizers:—When installing stabilizer links, nuts should be tightened down to ends of threads which should compress rubber grommets to over-all length of 1 11/16" (to outer face of metal cup on each end of grommet), adjust nuts as required to secure this dimension. On 80, 90 models, grommet cups are positioned on link by collars and each grommet must be adjusted separately. On other models a tubular spacer is used on the link between the inner grommet cups. Over-all free length of new grommets is 7/8" (40, 50, 60, 70), 15/16" (80, 90).

Rear Radius Rod:—Consists of a tubular section rod with rubber bushed ends connected between bracket on frame at left side of car and bracket on rear axle spring seat at right side of car. Radius rods not interchangeable on all models due to differences in length.

CADILLAC SPIRAL BEVEL

V16, SERIES 90 (1936-37)

TYPE:—Spiral bevel, 3/4 floating type with Hotchkiss drive. Pinion is integral with shaft (rear universal joint flange splined on shaft and retained by pinion bearing nut). Pinion shaft mounted on double row ball bearing (front), single row ball bearing (rear). Front bearing mounted in adjusting sleeve with shims between sleeve and housing. Differential assembly mounted on roller bearings with adjusting nut at each side under bearing cap.

SERVICING:—*On V16 models, complete differential carrier should be returned to factory for service.*

CADILLAC & LA SALLE SPIRAL BEVEL & HYPOID

CADILLAC V8, ALL SERIES (1936 to 1948)
CADILLAC V12, ALL SERIES (1936-37)
CADILLAC V16, SERIES 90 (1938-39-40)
LA SALLE, ALL SERIES (1936 to 1940)

AXLE SERVICING CAUTION: Manufacturer recommends that service operations be limited to replacement of axle shafts and wheel bearings and oil seals.

►***CAUTION—Manufacturer recommends that all service on Differential Carrier Assembly be handled by replacement of complete unit. No attempt should be made to disassemble or adjust this unit in the field.***

►**PINION BEARING ADJUSTMENT CAUTION:** Pinion bearing adjustment controlled by rear universal joint yoke nut (compresses spacer or sleeve between bearings).

►***CAUTION—Loosening this yoke nut will disturb pinion bearing adjustment.***

►**REAR AXLE IDENTIFICATION MARKS:** Gear ratio of 1942 and later axles is indicated by marking (or lack of mark) stamped on bottom of differential case beneath center of pinion shaft as follows:

Model	Ratio	Rear Axle Mark
60S, 61, 62, 63 Std.	3.77-1	None
60S, 61, 62, 63 Optl.①	3.36-1	6
67, 75, 75 Com. Std.	4.27-1	4
67, 75, 75 Com. Optl.①	3.77-1	7

①—Std. on these models with Hydra-matic Drive.

DESCRIPTION: Spiral Bevel (1935-37 except Cadillac 37-60, LaSalle 37-50), Hypoid gear type (all models '38 on, and 37-50,60) with Hotchkiss drive. Differential housing is barrel type with provision made to remove and install pinions and side gears through right hand end (case closed by end cap screwed in housing and retained by locking screw or taper locking pin installed from outside of case. Differential assembly mounted on taper roller bearings (bearing cups seated in ends of differential housing) with threaded sleeve type adjusting nut at outer end of each bearing. Adjusting sleeves are locked by clamp bolt in each bearing post. Several types of pinion mountings used as follows:

Spiral Bevel Type Pinion Mounting—Pinion mounted on double row ball bearing (front), roller bearing without inner race (rear). Assembly retained in housing by spacer collar bearing against front bearing outer race and retained by taper locking screws in housing. Rear roller bearing outer race is seated against rear face of spacer collar.

1937 Hypoid Pinion Mounting—Same as for Spiral Bevel Pinion (above) except that rear roller bearing race seated against shoulder in housing and spacer collar shortened so that it does not extend beyond locking screws.

1938 Hypoid Pinion Mounting—Pinion mounted on taper roller bearings seated directly against shoulders in housing with spacer on shaft between bearing cups (see illustration). Bearing adjustment by shims between spacer and front bearing cup.

1939 & Later Pinion Mounting—Same as 1938 (above) except that compressible type steel spacer used and bearing adjusting shims omitted. Bearings are pre-loaded by turning up rear universal joint yoke nut which compresses or buckles the spacer.

CONTINUED ON NEXT PAGE

CADILLAC & LA SALLE SPIRAL BEVEL & HYPOID (Cont.)

►*CAUTION—Loosening or tightening this rear universal joint yoke nut will change pinion bearing adjustment.*

REMOVAL OF AXLE: *See "Rear Axle" on car model page.*

SERVICING & OVERHAUL:—Differential carrier assembly should be serviced by replacement. Manufacturer recommends that no attempt be made to disassemble axles further than removal of carrier assembly or replacement of pinion shaft and axle shaft oil seals.

Axle Shaft Removal & Installation—Use puller such as S-4567 five-jaw type to remove wheel hub and brake drum assembly, disconnect brake line, remove brake dust shield (backing plate). Use tool J-838 to pull shaft and bearing assembly out using care not to damage grease retainer next to inner side of wheel bearing. Install new oil seal (see below), re-install axle shaft in same manner.

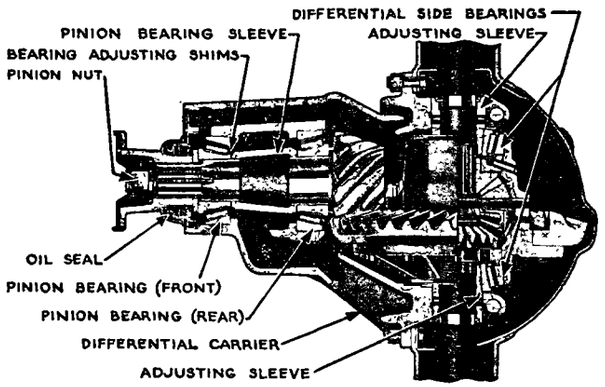

1937 REAR AXLE
(1938 & LATER AXLE SAME EXCEPT COMPRESSIBLE SPACER USED & SHIMS OMITTED)

Wheel Bearing Replacement—When replacing axle shaft oil seal, inspect wheel bearing for loss of lubricant (bearings are "sealed type" and lubricant may have been washed out by axle lubricant leaking past oil seal). If wheel bearing spins freely (indicating lack of lubricant), replace bearing.

Axle Shaft & Pinion Shaft Oil Seals—Make certain that all nicks and burrs removed from counterbore into which seal fits, carefully polish shaft on which seal leather bears. Soak oil seals in SAE #10 or 10-W oil for 24 hours before using, coat inner surface of oil seal with wheel bearing grease and coat outer surface of oil seal metal shell with P.O.B. or other good sealer compound, then press seal squarely into counterbore and against seat, using tool J-1355A (Axle Shaft), J-1357 (Pinion Shaft).

Carrier Assembly Installation—When installing carrier, tighten capscrews to 30-35 foot pounds tension. If oil leaks noted between carrier flange and housing, this can be corrected by installing extra gasket at this point with P.O.B. sealer on gaskets.

CHEVROLET SPIRAL BEVEL SEMI-FLOATING

Standard FC & Master FA, FD (1936)
½, ¾, 1 Ton Truck Models (1936 to 1939)

NOTE:—Axle used on each model may be identified by letter prefixed to axle number stamped on carrier

Truck Model	Axle Ratio	Prefix Letter
GC, HC, HD, JC, JD Std	4.11-1	B (or none)
GC, HC, JC Optl.	3.82-1	F or FB
HE, JE Optl.	4.11-1	T or TB

TYPE:—Spiral bevel, semi-floating type with torque tube drive. Pinion integral with shaft which is splined and pinned in bushing in rear end of tubular propeller shaft. Pinion shaft mounted on double row ball bearing at front (which takes thrust in both directions), roller bearing at rear (for radial load only, no inner race with this bearing). Differential assembly mounted on ball bearings with adjusting nut under bearing caps on outer ends.

REMOVAL OF AXLE: *See "Rear Axle" on car model page.*

SERVICING:—Gear Adjustment. Paint gears to check mesh. Backlash should be .004-.006" (1935 to 1938), .006-.010" ('39). Adjust by backing off one differential bearing adjusting nut and tighten opposite nut equally. See Pinion Setting and Differential Bearing Adjustment below.

Axle Replacement. Wheel mounting flange integral with axle shaft. Wheel bearings pressed in axle housing. To remove shafts, take off differential case cover, take out differential pinion shaft screw, pull out pinion shaft, remove spacer block, pry axle in and remove retaining 'C' washer (recessed in side gear), pull axle shaft out. When replacing axle see that 'C' washer seated in gear. Check endplay.

NOTE—Drum mounted on axle flange and held by wheel bolts (with wheel installed), two screws only (wheel removed). Drum can be removed separately without disturbing axle by taking out these screws. When installing brake drum on axle flange, use all new bolts, coat gasket between drum and oil deflector with shellac or paint on both sides to insure oil-tight joint, line up extra hole in brake drum and gasket with oil pocket in deflector and notch in axle shaft flange, install bolts and peen shoulder into countersink in axle flange so as to rivet these parts together.

Axle Shaft Endplay. Controlled by spacer block and should be Free Fit to .014" max. Spacers furnished in three sizes (one block for two larger sizes, obtained by turning block which is ground on all four sides) as follows: Std. Models (1936)—1.0105", 1.0195", 1.0285". Master Models (1936) and All Trucks (1936-39)—1.1485", 1.1575", 1.1675".

PROPELLER SHAFT & FRONT BEARING: Propeller shaft is part of pinion and shaft assembly (see axle overhaul data following). Propeller shaft front bearing (in torque tube) is serviced as follows:

Propeller Shaft Front Bearing. Consists of a bushing and leather oil seal seated against a shoulder in the housing at forward end of torque tube and an additional bushing (All Master and Truck models, Standard Model 1936 only) which engages the stub shaft of the universal joint. Bushings are doweled in place. Replace bushings when clearance exceeds .010". To remove bushings (front bushing must be removed to take out rear bushings), drill out dowel pins, drive bushing out with chisel through slot in housing, remove packing washer and retainer. Drive new bushing in until packing washer retainer seats against shoulder in housing, drill hole in bushing for new dowel pin, drive dowel in and prick-punch dowel head to prevent it loosening in service.

Front Propeller Shaft Assembly (HD, HE only). Same type as used on 1½ ton truck model except that bushing at forward end of housing engages front universal stub shaft (instead of propeller shaft. See 1½ ton truck axle article (following).

OVERHAUL:—Pinion Bearing Assembly. To dismantle assembly after propeller shaft removed from torque tube housing, loosen pinion bearing locknut, cut off head of rivet at rear end of propeller shaft, drive pinion shaft out of propeller shaft splines. Remove bearing locknut and press bearings off shaft. Front double row bearing should have no perceptible endplay (new bearings may have .001" tightness or drag). Rear ball bearing endplay .004-.006". Press bearings on shaft, asemble locking ring in front of rear bearing (roller bearing type only), install locking sleeve (ball bearing type) with tapered side toward pinion, use new locknut. Tighten locknut after pinion shaft riveted to propeller shaft and lock nut by peening metal into shaft keyway with a chisel. Maximum allowable runout at double row bearing .002".

Pinion Setting:—Pinion position controlled by shims in housing in front of front double row bearing. Standard shim assembly consists of one .188" spacer, one .015" and one .018" shim. With correct setting ring gear and pinion teeth will be flush at toe end of teeth. Vary the shim thickness as required to correct pinion position between .030" and .036" (two .015" or two .018" shims). Drive assembly into housing to seat bearings against shims, turn up three locking screws evenly to engage collar or locking sleeve, tighten securely, tighten locknuts.

Differential Bearing Assembly:—Install differential side bearings with the thick side of the inner race (marked 'thrust here') toward the differential case.

Differential Bearing Adjustment:—Differential ball bearings (Difrax type) have .018" max. sideplay (new). To adjust bearings, with differential bearing cap screws sufficiently tight to flatten lockwashers, turn adjusting nut in until snug, then turn nut in an additional 1-1½ notches (1936), or 1-2 notches ('37 & later) for correct bearing pre-load or tension install locks, tighten bearing cap screws.

Ring Gear Backlash Adjustment. When installing differential assembly, turn left hand adjsuting nut in until all backlash taken up between ring and pinion with ring gear turned so that high spot is at pinion (max. allowable runout .007"), then back off adjusting nut one notch. Adjust differential bearings by turning in right hand adjusting nut as directed above. This should give correct backlash .004-.006" (1936-38), .006-.010" (1939).

Ring Gear Replacement:—Ring gear riveted on differential case flange. To remove gear, cut off rivet heads on back of flange, drive rivets out with punch. When riveting new ring gear, install opposite rivets alternately using four bolts to hold gear on case. Run-out at back face of ring gear must not exceed .007" when installed.

CHEVROLET HYPOID SEMI-FLOATING

PASSENGER CAR TYPE

Passenger Cars, All Models (1937 to 1948)
Sedan Delivery, All Models (1937 to 1948)

TRUCK MODELS

Half-Ton, KC ('40), AJ, AK ('41), BJ, BK ('42)
Half-Ton, CK ('46), DP & EP ('47), FP ('48)
3/4 Ton, KD, KE ('40), AL, AN ('41), BL. BN ('42)

►**REAR AXLE VENT CHANGE (1940 ½ & ¾ Ton Truck—to prevent lubricant pumping out through Vent):** On first trucks with vent in torque tube, remove torque tube vent and plug this opening with pipe plug, provide new vent by drilling ⅛" hole through first axle housing cover bolt to left of top bolt and inserting 1/16" cotter pin through this hole (bend cotter to prevent it dropping out).

►*CAUTION*—If late type differential carrier and torque tube assembly (without vent) is used with first type Axle housing (without vent), a vent must be provided by drilling 11/32" hole in top of axle housing 8" to left of vertical centerline of axle. Thread hole with ⅛" tapered pipe tap, install #3652364 regular production vent. Use extreme care to remove all metal chips when drilling and tapping this hole. NOTE—If desired, the vent may be provided by drilling the housing cover bolt as directed above instead of installing this regular vent.

►**SHIFTING OF REAR SPRING ON AXLE CORRECTION (1941 ¾ Ton Truck):** This condition May be caused by head of spring center bolt being too short to engage spring seat properly to hold spring in position. Check center bolt and if spring fitted with original production bolt with ¼" thick head, replace bolt with new ⅜" thick type, No. 1288224, and re-install spring.

►**PINION BEARING LOCK SLEEVE LOCKSCREW INSTALLATION CAUTION:** Both lock sleeve face and tapered end of Lockscrew should be coated with Rear Axle Lubricant when these parts installed to prevent screw cutting or scoring face of sleeve when screws are tightened. CAUTION—If these parts not lubricated, and screw cuts face of lock sleeve, screw may bottom without forcing sleeve into position against bearing which may cause failure of pinion bearings or ring and pinion gear due to incorrect adjustment.

►**REVACYCLE DIFFERENTIAL PINION & SIDE GEARS (1946 & Later Pass. Cars):** Revacycle gears must be used together and must not be interchanged singly with previous type Involute Gears (mixing of gears will cause noisy operation and early failure). *See Chevrolet Shop Notes in Car Model Section for part numbers and identification data on Revacycle & Involute Gears.*

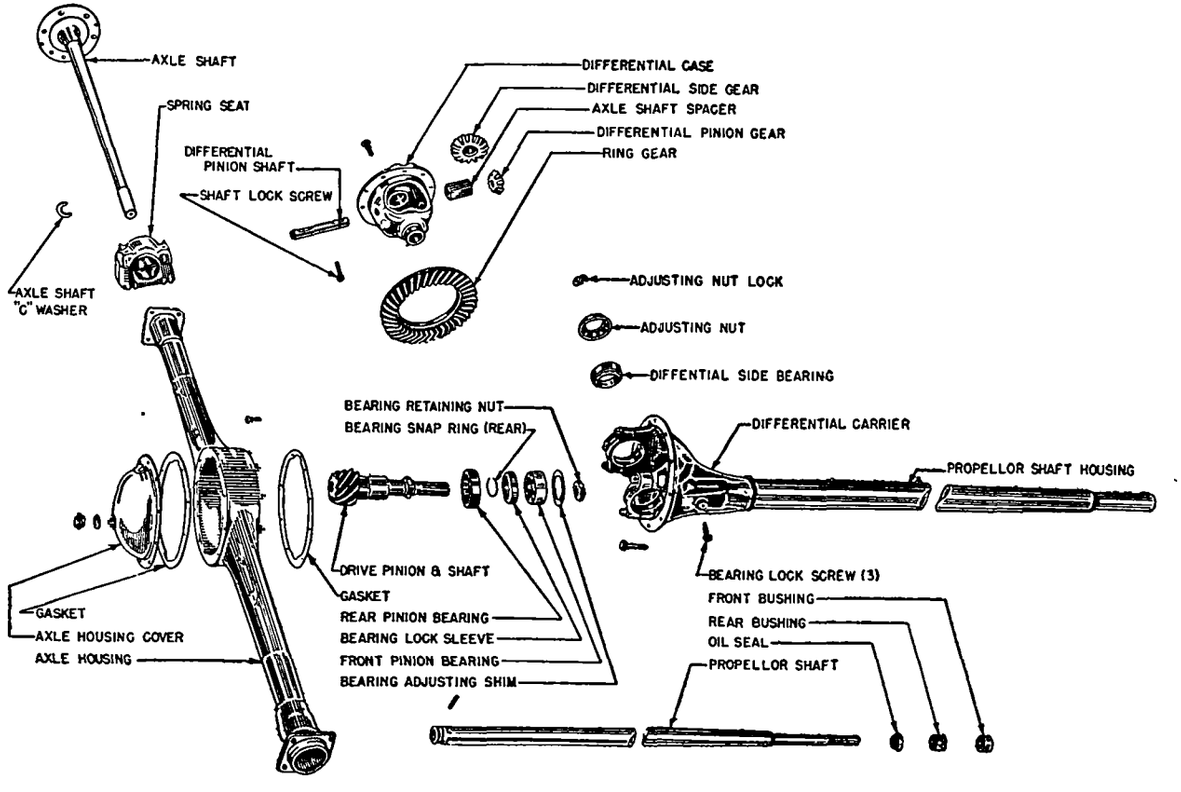

CHEVROLET HYPOID EAR, SEMI-FLOATIN AXLE

►**AXLE IDENTIFICATION NOTE:** Axles may be identified by prefix letter of serial number stamped on top right hand side of differential carrier as follows:

	Ratio	Marking
Master ('39-40)	3.73-1	C or CB
Master Deluxe ('39)	4.22-1	B
Mstr. & Spec. ('40)	4.11-1	B
AG,AH Std., ('41)	4.11-1	AG or AJ
AG,AH, Optl. ('41)	3.73-1	AH or AP
BG, BH Std.	4.11-1	2AG, 2AJ or BG
BG, BH Optl.	3.73-1	2AH, 2AP or BH
Pass. Cars ('46) Std	4.11-1	DA or DB
Pass. Cars ('46) Optl	3.73-1	DC or DD
Pass. Cars ('47) Std	4.11-1	EA or EB
Pass. Cars ('47) Optl	3.73-1	EC or ED
Pass. Cars ('48) Std	4.11-1	FA or FB
Pass. Cars ('48) Optl	3.73-1	FC or FD
Half-Ton ('46)	4.11-1	DE or DF
Half-Ton ('47)	4.11-1	EE or EF
Half-Ton ('48)	4.11-1	FE or FF

TRUCK AXLE NOTE: Truck axles are same design as those used on Passenger Car Models except they are of heavier construction. Truck axles also hav improved lubrication system as follows:

Pinion Bearing Lubrication—Drilled passage in differential carrier provided for greater oil flow to front (double row ball) pinion bearing. Oil retainer installed in carrier in front of rear (roller) pinion bearing retards oil return to axle housing so that front bearing operates in an oil bath.

3/4 Ton Models ('41-42). Axles are new Hotchkiss Drive type with rear universal joint yoke bolted on forward end of propeller shaft and oil seal installed in axle housing (no torque tube used). Serviced in same manner as other Axles except for oil seal data (see below). Disregard data on torque tube and propeller shaft when servicing these models.

¾ & 1 Ton Models (1946 On)—These models have new type Full-Floating axle. See separate article on "Chevrolet Truck Hypoid (Full-Floating)" axle.

DESCRIPTION: Hypoid gear, semi-floating type with torque tube drive. Pinion integral with shaft and splined and pinned in bushing in rear end of tubular propeller shaft. Pinion shaft mounted on double row ball bearing (front) which takes thrust in both directions, roller bearing (rear) which takes radial load only. Rear bearing does not have inner race and is assembled directly on shaft. Differential assembly mounted on 'barrel' type roller bearings with adjusting nut under bearing cap at outer end of each bearing.

REMOVAL OF AXLE: *See "Rear Axle" on car model page.*

AXLE SHAFT REPLACEMENT: Check endplay when installing axle shafts (see below).

Axle Shaft Removal—Remove wheels, take out two machine screws (1940 & before), two 'zipon' nuts (1940 on) mounting the brake drum on axle shaft flange and remove drum. Remove axle housing rear cover, take out pinion shaft screw, withdraw pinion shaft, lift out axle shaft spacer block. Push shafts in toward center of axle, remove 'C' washer at inner end within differential side gears, withdraw axle shaft. When replacing shaft, check endplay.

Axle Shaft Note—Axle shafts are of unequal length. See Chevrolet Shop Notes (in Car Model Section) for part numbers and identification markings.

CAUTION—Install longer axle shaft on right side.

New Axle Shaft Installation. Wheel hub bolts are press fit in axle flange and must be installed in new

CONTINUED ON NEXT PAGE

CHEVROLET HYPOID SEMI-FLOATING (C ntinu d)

shafts (these bolts hold oil deflector assembly on flange). Coat new gasket with heavy shellac or paint, install gasket and oil deflector on flange lining up oil holes (extra center hole of three closest together should be lined up with notch in flange, oil pocket in deflector should also line up with this notch), insert special wheel bolts and force heads down to deflector, peen shoulder on bolts into countersink around bolt holes in flange (this is very important). Check shaft endplay.

Axle Shaft Endplay (Passenger Cars)—Controlled by spacer assembled on differential pinion shaft between inner ends of axle shafts. Endplay should be from a free fit to .014" maximum. Select correct spacer block (see data below) to give this endplay. Install spacer block with ground faces of block toward axle shaft ends. NOTE—Medium spacer block ground on all four sides and may be installed either way to secure either of these two sizes.

Passenger Car Spacer Blocks

Part No.	Type
472547	Narrow (1.0105")
597254	Wide (1.0345")
473603	Medium (1.0195" & 1.0295")

Axle Shaft Endplay (Trucks)—Same as for Passenger Car (above) except that spacer blocks furnished in two types for three sizes as listed below (wide block ground on all four sides, may be installed either way).

Truck Spacer Blocks

Part No.	Type
370217	Narrow (1.1485")
372515	Wide (1.1575" & 1.1675")

Axle Bearing & Oil Seal Installation—Before installing new parts, make certain that axle housing is clean and smooth (remove old staking marks), coat outer diameter of seal retainer lightly with Permatex (use care not to get Permatex on seal). Assemble bearing, retainer, and oil seal on end of driver, seat parts in place in housing with few light blows of a hammer on the driver. Remove tool, stake oil seal in place with a prick punch. NOTE—Spring-loaded type seals are not staked.

PROPELLER SHAFT & FRONT BEARING: Propeller shaft is part of pinion and shaft assembly (see axle overhaul data following). ¾ ton truck has additional front propeller shaft for which data is given below. Propeller shaft front bearing (in torque tube) is serviced as follows:

Propeller Shaft Front Bearing. Consists of a bushing and leather oil seal seated against shoulder in housing at forward end of torque tube, and an additional bushing at the extreme end of the torque tube which engages the stub shaft of the universal joint. Both bushings are doweled in place. Replace bushings when clearance exceeds .010". To remove bushings (front bushing must be removed to take out rear bushing), drill out dowel pins, drive bushings out from rear end of torque tube. Install oil seal with open end of leather toward front, insert rear bushing, use J-968 bushing driver to seat bushing and oil seal firmly. Drill new dowel hole in bushing (being careful not to break through wall), coat dowel with Permatex to prevent oil leaks, peen dowel in place. Install new front bushing in same manner, using arbor to prevent damage to bushing while drilling dowel hole and installing dowel (bushing has very thin wall).

Front Propeller Shaft & Support Bearing (¾ Ton 1941-42). Consists of an enclosed type shaft with front universal ball joint assembled on forward end, and special intermediate support bearing and front yoke for intermediate universal joint bolted on rear end. Support bearing is of the permanently lubricated and sealed type and is mounted in a rubber cushion in the support bracket sleeve.

Disassembly—Clamp universal joint yoke in vise, remove cotter pin and nut from rear end of shaft, tap yoke off shaft with soft hammer, remove bearing dust shield. Wet rubber cushion (to soften soap used when cushion assembled), clamp support bracket in vise and move shaft housing from side to side to work cushion out of support, then slide cushion off housing, remove front universal ball retainer over rear end of housing. Remove bearing retainer snap ring in rear end of housing (compress ends of ring with pliers), use brass drift to drive propeller shaft and bearing out through rear end of housing. Press bearing off shaft in arbor press. CAUTION—Do not wash bearing in gasoline or attempt to lubricate it (bearing is permanently lubricated and sealed). Remove oil seal from housing only if seal being replaced (drive seal out toward front of housing). Soak new seal in light engine oil and install with free end or lip toward front end of housing.

Front Propeller Shaft Bushing—Consists of a thin wall bushing pressed in forward end of housing which engages front universal joint rear yoke. This bushing installed in same manner as Passenger Car type (see directions above).

Assembly—Press bearing on shaft in arbor press, assemble shaft and bearing in housing, seat bearing by tapping around outer race using soft drift, install snap ring. Install new cork packing in universal joint ball retainer (shellac cork in place), install retainer over housing, install rubber cushion on machined rear end of housing. Coat rubber cushion lightly with soft soap, assemble support bracket on cushion, install bearing dust shield and intermediate universal front yoke, tighten nut securely and install cotter pin.

OVERHAUL: Disassembly—Drain lubricant and remove rear housing cover. Remove axle shafts (see data above). Remove nuts retaining torque tube on axle housing, remove torque tube, propeller shaft and pinion assembly. Remove adjusting nut locks on differential side bearing caps, remove bearing cap screws. Remove bearing caps and adjusting nuts, lift differential assembly out. Dismantle and service sub-assemblies as follows:

Pinion Bearing & Propeller Shaft Assembly: To remove from torque tube, loosen locknuts and take out retaining screws on side of housing, withdraw assembly from torque tube. To dismantle assembly, drill out head of rivet pin in propeller shaft, loosen pinion bearing locknut, disassemble pinion from propeller shaft. Use J-996 pinion bearing remover to press double row ball bearing from pinion shaft, remove locking sleeve or bearing retaining collar, remove lock ring from pinion shaft, take off roller bearing. Front double row ball bearing must have no perceptible endplay (new bearings may be .001" tight or have some drag). Assemble in reverse order making certain that lock ring installed on shaft ahead of roller bearing (to prevent rollers creeping) and that locking sleeve installed with beveled edge toward pinion. Tighten bearing locknut securely and stake nut into slot in shaft. Use new rivet pin when assembling pinion and propeller shaft and rivet both ends of pin securely. Make certain that pinion setting shims installed in housing (see Pinion Setting below), insert propeller shaft assembly with spacer J-4050 between pinion and roller bearing to maintain proper pinion-to-bearing clearance, drive assembly down to seat bearings properly (use drift in hole in end of pinion, do not drive on end of pinion teeth). Make certain that locking sleeve down against front bearing, install the three tapered lockscrews, tighten these screws evenly and securely, tighten locknuts.

►*CAUTION*—Coat beveled face of pinion bearing lock sleeve and tapered ends of lockscrews with rear axle lubricant before installing to prevent screws cutting or scoring sleeve which would cause incorrect axle adjustment and early failure of bearings and gears.

Pinion Bearing Assembly Note (½ Ton 1941 & Later). To install pinion bearings on shaft, install rear roller bearing and lock ring, then thread pinion front bearing oil retainer on shaft with bevel of large diameter of retainer toward pinion, assemble bearing lock sleeve with bevel side toward pinion, install front double row ball bearing and bearing retainer nut. All other assembly and adjustment instructions same as for passenger car models.

Pinion Bearing Assembly & Seal (¾ Ton '41-42). Assemble pinion bearings in same manner as ½ Ton (above) except that rear universal joint yoke and oil deflecter (pressed on outer diameter of yoke) must be installed on pinion shaft and yoke retaining nut must be securely tightened before ring gear and pinion adjustments are made. When installing new pinion bearing retainer oil seals, soak seal thoroughly in light engine oil before it is installed.

Pinion Setting:—Pinion position controlled by shims installed in housing ahead of front bearing. Standard assembly .033" shim thickness (one .015" shim, one .018" shim) and should be used for new gears. Shim pack can be varied from .030" to .036" and shims are furnished as follows:

Part No.	Pinion Setting Shims Thickness
3657740	.012"
3657741	.015"
3657742	.018"
3657743	.021"

Differential Bearing Assembly:—Use special puller to remove bearings from differential case hubs (notches provided in case for puller so that pressure applied to inner races only). Use J-994 bearing replacer to install bearings. When installing differential assembly in carrier (third member), make certain that marks on bearing caps and carrier line up.

Differential Bearing Adjustment:—With carrier or third member assembly out of axle housing, tighten differential bearing cap screws until lockwashers are just flattened, turn right hand adjusting nut up until it is just snug, then turn nut additional 1-2 notches to locking position, tighten bearing cap screws evenly to 115-135 ft. lbs., install adjusting nut locks.

Ring Gear Backlash Adjustment. To set up differential assembly for correct backlash when installing assembly in carrier, turn left hand adjusting nut

CONTINUED ON NEXT PAGE

CHEVROLET HYPOID SEMI-FLOATING (C ntinu d)

in slowly until all backlash between ring gear and pinion taken up (revolve ring gear while making this adjustment), then back adjusting nut off one notch. Adjust differential bearings by turning right hand adjusting nut as directed above. This setting should give correct backlash of .005-.007". After bearing adjustment completed, recheck backlash and if not correct, adjust by backing off one adjusting nut and tightening opposite nut exactly the same amount to avoid disturbing bearing adjustment.

Ring Gear Replacement:—Run-out of differential case flange must not exceed .001" with ring gear removed. When installing ring gear, use guide pins in alternate bolt holes to position gear while bolts are being installed, use new lockwashers under bolt heads, tighten all bolts evenly to 85-95 ft. lbs. Check ring gear run-out which should not exceed .004" (measured on back face of gear).

CHEVROLET TRUCK SPIRAL BEVEL FULL-FLOATING

1½ TON TRUCK, ALL MODELS (1936 to 1939)
CAB-OVER-ENGINE TRUCK MODELS (1939)

DESCRIPTION: Spiral bevel, full-floating type with torque tube drive. Pinion integral with shaft and straddle mounted on double-row ball bearing (front), single row ball bearing (rear). Differential assembly mounted on barrel type roller bearings with adjusting nut under bearing cap on each side. Thrust button located behind ring gear at pinion. Differential assembly mounted on ball bearings with adjusting nut under bearing cap at outer end of each bearing.

REMOVAL OF AXLE: *See "Rear Axle" on car model page.*

AXLE SHAFT REPLACEMENT & WHEEL BEARING ADJUSTMENT: Take out eight capscrews in axle shaft flange at outer end, install two screws in tapped hole in flange (between regular screw holes) and turn these screws up evenly to loosen shaft. To adjust wheel bearings, remove axle shaft, remove locknut and star lock washer, turn inner ad-adjusting nut up tight and then back off to nearest tang of lock washer, install lock washer and locknut, bend lock washer tangs into notches on both nuts. When installing axle shaft, make certain that vellumoid gasket on inner face of flange is in good condition, use new soft steel locks under axle capscrews (axle lubricated by oil from differential case, gasket prevents leaks at hub, locks prevent leaks around mounting screws).

Wheel Bearing Adjustment—Wheel should be removed (permits more accurate bearing adjustment). Use special wrench J-870 to turn adjusting nut and tighten nut moderately tight while turning the hub (no spring in races and nut will come to definite stop under normal tension). After installing lock and locknut make certain that hub turns freely.

Wheel Bearing Assembly. No spacer used, inner bearing outer race seated against shoulder in hub, inner race seated against shoulder in axle housing, outer bearing outer race seated against snap ring in hub, inner race positioned by adjusting nut. Install outer bearing first, pressing inner race and roller assembly and outer race (thin edge down) into hub with special replacer J-872-1 until outer race just clears snap ring groove, then install snap ring in groove in hub and use special driver J-872-3 through capscrew holes in end of hub to drive outer race back in positive contact with snap ring. Install inner bearing outer race (thick edge down) in hub using driver J-872-4, then install inner race and roller assembly. Press oil seal in place in arbor press using replacer J-872-2, lock seal in place by prick-punching at three points on rim.

NOTE—Oil slinger in axle housing must be installed with special replacer J-973 (which pilots on housing) to insure correct alignment with slinger in hub.

PROPELLER SHAFT & BEARINGS: Front propeller shaft is separate part for which data is given below. Rear propeller shaft is part of pinion shaft assembly (see Axle Overhaul data). Front bearing of rear propeller shaft is serviced as follows:

Rear Propeller Shaft Front Bearing. Consists of a bronze bushing, packing washer and washer retainer in forward end of torque tube and retained by dowel pin in housing. Replace when clearance between shaft and bushing exceeds .010". To remove, drill out dowel, drive bushing out with chisel inserted through slot in housing. Install new bushing and packing assembly, then drill bushing in line with dowel hole, install new dowel and lock by prick-punching edge of housing.

Front Propeller Shaft Assembly. Consists of short front shaft and intermediate universal joint assembly. To dismantle assembly, remove rear universal joint by taking out capscrew in rear end of front shaft, take out snap ring holding ball bearing in front shaft housing, withdraw shaft and bearing assembly, press bearing from shaft. Bushing in forward end of shaft housing removed and installed in same manner as rear propeller shaft front bushing (above).

OVERHAUL: Pinion Bearing Assembly. Pinion shaft and propeller shaft splined and pinned in connecting sleeve. To dismantle, remove rivet in propeller shaft, use special tool and push sleeve off propeller shaft, then remove rivet in pinion shaft and press off sleeve. Use new rivets when reassembling. Bearings are press fit on pinion shaft. Rear single row ball bearing endplay .004-.006" new. Retained on pinion shaft by locking ring. Front double row ball bearing should have no endplay (.001" drag permissible when new). Tighten pinion shaft nut securely and stake in place by peening metal into shaft keyway.

Propeller Shaft Run-out. After assembling pinion and propeller shaft assembly, mount on 'Vee' blocks at ground surface on shaft (at rear of splines) at forward end, and at double row ball bearing at rear end. Maximum run-out for assembly is as follows: .003" at front single row bearing, .010" at finished part of propeller shaft in front of rear splines, .015" at center of propeller shaft (unfinished portion), .005" at extreme front end of propeller shaft.

Pinion Setting:—Pinion non-adjustable. Bearing should be seated against shoulder in housing and is retained by torque tube flange.

Ring & Pinion Gear Adjustment: Pinion not adjustable. Backlash should be .006-.010" (see Differential Bearing & Backlash Adjustment below).

Differential Bearing & Backlash Adjustment:—Adjusted in same manner as on passenger car models (see preceding article). Left hand adjusting nut should be backed off 2 notches from tight position to secure correct backlash of .006-.010". Right hand nut should be turned in 1½-2 notches from the snug position for correct bearing pre-load.

Differential Bearing Assembly. Bearings are press fit on differential case hubs. Use special puller to remove bearings applying pressure to inner race only (bearings will be damaged if pressure applied to outer race when removing or installing bearings).

Ring Gear Servicing:—Ring gear furnished riveted to differential case (not serviced separately). When installing ring gear, make certain that marks on differential case and cover line up. Tighten the bolts in cover evenly and lock with wire. Check ring gear run-out with differential bearings installed on case. Run-out measured on back of ring gear must not exceed .007".

Ring Gear Thrust Pad Adjustment. Replace thrust pad if bronze tip is worn. To adjust, loosen locknut on thrust pad screw (on left hand side of axle housing), turn screw in until thrust pad contacts back of ring gear, then back screw off 1/12 turn and tighten locknut. With correct adjustment clearance between thrust pad and ring gear should be .005-.010".

CHEVROLET TRUCK HYPOID FULL-FLOATING

¾ & 1 Ton Trucks, All Models (1946-47-48)
1½ Ton, C-O-E Trucks & School Bus (1940 to 1948)
2 Ton Truck, All Models (1946-47-48)

►**AXLE IDENTIFICATION MARKING:** Ratio indicated by axle serial number prefix stamped on housing. *See "Rear Axle" on individual truck model pages in Car Model Section.*

DESCRIPTION: Hypoid gear, full-floating. Similar to design used on previous Chevrolet Truck models except for new Hypoid Gears, Hotchkiss Drive (1941 and later), and new Ring Gear Mounting (ring gear held on differential case by same screws used to clamp differential case halves together). NOTE—Ring gear can be replaced without replacing differential case as was necessary on previous spiral bevel type.

Hotchkiss Drive Type (1941 On). No torque tube is used and rear universal joint yoke is bolted directly on end of pinion shaft. New type pinion bearing retainer and oil seal assembly is bolted on forward end of differential carrier.

Propeller Shaft Support Bearing (Std. 1946-47 & Replacement on Earlier Trucks)—New improved type double-row ball bearing mounted in neoprene insulators in support bracket on cross-member. 1947 type differs from 1946 type in using new wide neoprene insulator band and synthetic rubber-and-felt seals for increased stability and improved sealing. These support bearings are not sealed and have lubrication fitting for lubrication in service. NOTE—Complete Support Bearing Assembly (1947 type) furnished in kit, Part No. 609037, for replacement of old and new type bearings. Individual parts furnished for both types.

CONTINUED ON NEXT PAGE

CHEVROLET TRUCK HYPOID FULL-FLOATING (C nt.)

Splined Axle Shaft (1½ & 2 Ton Trucks—Late 1947 & 1948). New axle shaft with involute splines on flange at outer end of shaft which engage similar splines in wheel hub (concealed by hub cap retained by five capscrews). Removal of this axle requires new procedure. See Axle Shaft & Wheel Bearing data.

►¾ & 1 TON TRUCK AXLE (Beginning 1946): New hypoid gear, full-floating type similar to axles used on other trucks (as described above) except for the following features:

¾ & 1 Ton Pinion Bearing (Front)—Bearing consists of a double opposed taper roller bearing (separate roller and cone assemblies in a single bearing cup). A special spacer is used on the pinion shaft between the bearing cones. This spacer will provide correct bearing adjustment when the pinion shaft flange nut properly tightened (160-280 ft. lbs.). CAUTION—Correct spacer must be used with each bearing assembly. This bearing is furnished as an assembly consisting of: One double outer race, two inner race and roller assemblies, one special spacer). This spacer must be used with the particular bearing assembly for which it was intended.

¾ & 1 Ton Pinion Setting Adjustment Shims—Pinion position controlled by shims in pinion bearing counterbore of carrier. Average shim pack is .033" and shims are furnished in thicknesses of .012", .015", .018", .021".

Revacycle Differential Side Gears & Pinions—New type "Revacycle" gears. *See Chevrolet Shop Notes for data on identification of these gears.*

REMOVAL OF AXLE: *See "Rear Axle" on car model page.*

AXLE SHAFT REMOVAL & WHEEL BEARING ADJUSTMENT: Axle shafts can be removed and replaced without disturbing wheel bearings as follows:

Axle Shaft & Wheel Bearings (¾ & 1 Ton): To remove axle shaft, remove eight capscrews and lockwashers from axle shaft flange on wheel hub, install two ½"-13 capscrews in tapped holes in flange (between mounting screw holes), turn these screws up evenly to loosen axle shaft, withdraw shaft, discard old aluminum gasket. To install shaft, thoroughly clean axle shaft flange and end of wheel hub, use new aluminum gasket. Tighten all flange capscrews alternately and evenly to 85-95 ft. lbs.

NOTE—To correct complaints of leakage around flange bolts on ¾ & 1 Ton Trucks, coat flange bolt threads lightly with sealing compound (Permatex, Holdite, etc.) before installing. CAUTION—Use care that compound not forced into bearing.

Wheel Bearing Assembly (¾ & 1 Ton Trucks). To remove wheel bearings, remove axle shaft and wheel. Raise lip of adjusting nut lock, use wrench J-2222 to remove locknut, lock, inner adjusting nut, and lockwasher. Remove hub and drum assembly. Install clamp on wheel brake cylinder. Remove inner bearing and oil seal from hub with driver J-2232 (install driver, then press assembly out in an arbor press). To remove outer bearing, tap outer race away from snap ring, remove snap ring, press bearing from hub using bearing remover J-2230. Wash bearings in cleaning solvent, lubricate with engine oil and check for roughness, damaged rollers or retainers, cracked, chipped, or worn races. Pack the roller bearings with soft smooth cup grease. To install bearings, place inner race and roller assembly of outer bearing in wheel hub, install outer race with thin edge toward outer end of hub, press race into hub with replacer J-2223 until it clears snap ring groove, install snap ring, then press race back in positive contact with snap ring using J-2230 bearing remover inserted through bolt holes in outer end of hub. Install outer race of inner bearing in hub (wide edge of race inward) with replacer J-872-1 pressing race in against seat in hub. Install inner race and roller assembly, install oil seal using replacer J-2221. Lock seal in place by prick punching at three equally spaced points. Install wheel hub and drum (turn wheel to align bearing rollers), install thrustwasher and adjusting nut, adjust bearings, install lock and locknut.

Wheel Bearing Adjustment—Remove axle shafts (above), remove adjusting nut locknut and lock (within wheel hub), use special wrench J-2222, turn adjusting nut up tight, then back nut off ⅛ turn while rotating wheel by hand to see that it turns freely. Install lock and see that tangs line up with slots in adjusting nut, bend lock tang into slot in nut. Install and tighten outer locknut, bend lock tang into notch in nut. Replace axle shaft.

Axle Shaft & Wheel Bearings (1½ & 2 Ton Trucks with Bolted-on Type Axle Shaft): Wheels are mounted on double barrel type roller bearings in double barrel type roller bearings on outer end of axle housing and axle shafts can be removed without disturbing bearings. To remove axle shaft, bend lugs of lock plate away from bolt heads (on axle shaft flange on wheel hub), remove eight ½" capscrews, remove and discard lock plate. Install two ½"x14 capscrews in tapped holes in flange (between mounting screw holes), turn these screws up evenly to loosen axle shaft, remove axle and aluminum gasket. When installing shaft, use new aluminum gasket and new lock plate, tighten capscrews evenly and securely, then bend lock plate lugs against screw heads to retain screws in service.

Wheel Bearing Assembly & Adjustment—See 1½ and 2 Ton Splined Type Axle Shaft data below.

Axle Shaft & Wheel Bearings (1½ & 2 Ton Trucks with Splined Axle Shaft): Axle shaft flange has involute splines which engage similar splines in wheel hub. Shaft splines are tight fit (shaft removal requires use of puller) and shaft retained by hub cap (spacer in hub outside outer bearing race prevents shaft moving inward). To remove axle shaft, take out five screws, remove hub cap and gasket. Install special adapter J-1436-8 on regular J-1436 Rear Axle Shaft Bearing & Oil Seal Remover (remove puller jaws), thread adapter in hole in end of axle, pull axle shaft. Install axle shaft by indexing shaft and hub splines (may be necessary to move truck slightly to align splines in hub and differential side gears), tap shaft into place. Clean mating faces of hub and hub cap, use new gasket and hub cap, tighten hub cap screws securely.

Wheel Bearing Assembly (except ¾ & 1 Ton). To remove bearings, remove axle shaft, take out locknut, lock, adjusting nut, remove hub assembly. Install brake cylinder clamp. Use puller J-918-G to remove inner bearing and oil seal. To remov outer bearing from wheel hub, tap outer race to relieve tension on snap ring, remove snap ring on inside of hub, use long ⅛" punch inserted through mounting screw holes in end of hub and tap outer race ut of hub (inner race and roller assembly will

CONTINUED ON NEXT PAGE

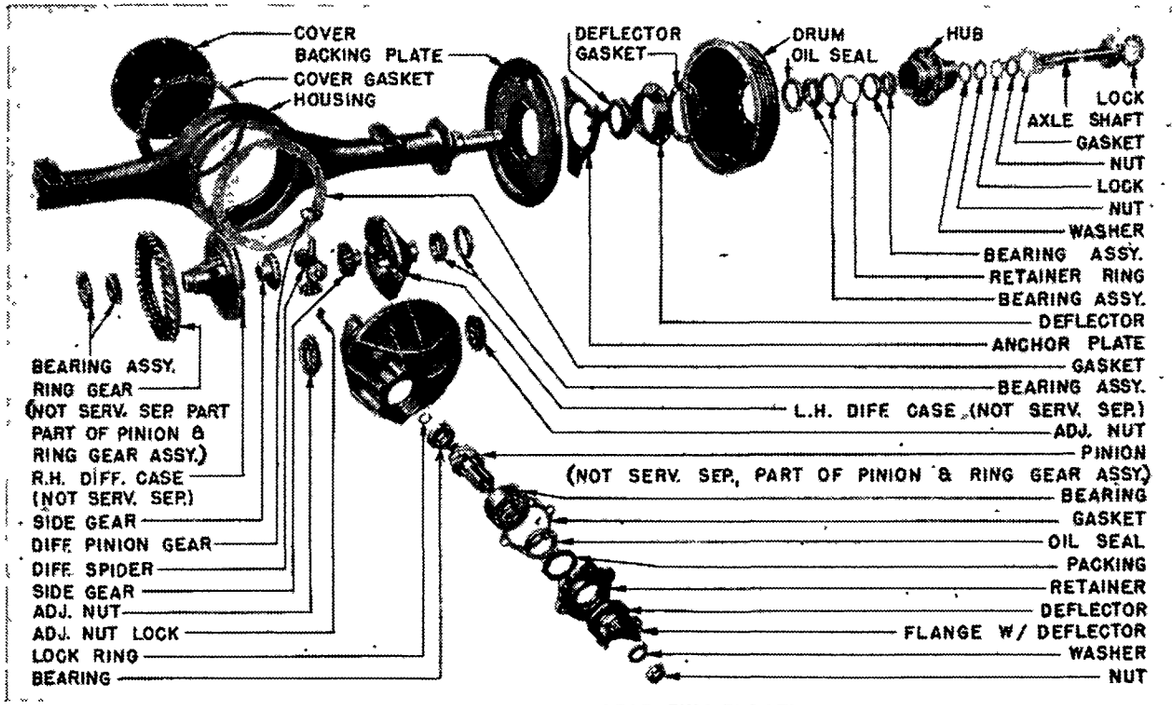

CHEVROLET TRUCK HYPOID GEAR, FULL-FLOATING

CHEVROLET TRUCK HYPOID FULL-FLOATING (C nt.)

come out with outer race—use extreme care to tap on outer race only and to drive race out evenly). Wash bearings in cleaning solvent, lubricate with engine oil, check for roughness, damaged rollers or retainers, cracked, chipped, worn races. Pack bearings with soft smooth cup grease. Place outer bearing inner race, roller assembly and outer race on wheel hub with thin edge of outer race toward hub, use bearing replacer J-872-1 in an arbor press and press bearing in hub just far enough so that snap ring can be installed, install snap ring, then tap bearing out against snap ring (use driver J-872-3 inserted through mounting screw holes and tap on outer race only). To install inner bearing, use special driver J-872-4 to press outer race in against seat (install with wide side of race toward hub), install inner race and roller assembly. Press oil seal in place using oil seal replacer J-872-2 in arbor press, stake oil seal in place by prick punching at three equally spaced points on edge. Install wheel hub and drum assembly (turn wheel to seat bearings) and adjust bearings (above).

NOTE—Oil slinger on rear axle housing must be installed with special tool J-973 so it will be correctly positioned in relation to slinger in wheel hub. Always install new slinger whenever removed.

Splined Axle Shaft Note—On models with axle shaft splined in wheel hub, make certain that spacer installed within hub between hub splines and outer bearing outer race (spacer prevents axle shaft moving too far into hub).

Wheel Bearing Adjustment—Remove axle shafts (above), remove adjusting nut locknut and lock (within wheel hub), use special wrench J-870 (see Note below) to turn adjusting nut up until it is tight, then back nut off 45° (⅛ turn). Rotate the wheel by hand to see that it turns freely. Install lock and see that tangs line up with slots in adjusting nut, bend lock tang into slot in nut. Install and tighten outer locknut, bend lock tang into notch in nut. Re-install axle shaft.

Adjusting Wrench J-870 Note—The wheel bearing adjusting nuts on later trucks do not have slots extending entirely across face of nut (slotted at outer edge only) and the J-870 wrench must be reworked for use n these models as follows: Remove wrench handle, mount wrench body in lathe and machine inner ends of wrench lugs to inside diameter of 2½".

FRONT PROPELLER SHAFT & SUPPORT BEARING ASSEMBLY: Front propeller shaft is enclosed type on all 1940 trucks, and on all later ¾ ton trucks (special type as described below). Shaft is supported at rear end (at intermediate universal joint) by a support bearing assembly mounted on the frame.

Front Propeller Shaft Assembly (1940):—First remove capscrews retaining rear universal joint ball retainer, remove retainer and ball. Use long socket wrench and remove capscrew in rear end of shaft (visible through hole in universal cross), remove universal from shaft. Take out snap ring retaining ball bearing in shaft housing, withdraw shaft and bearing from housing, press bearing from shaft.

Front Bearing—Consists of a bronze bushing and oil seal in forward end of shaft housing similar to rear propeller shaft front bearing (see below) and installed in same manner except that special driver J-1363 should be used.

Front Propeller Shaft & Support Bearing (1941 & Later Trucks): Not part of rear axle assembly. *See Chevrolet Shop Notes in Car Model Section for all data.*

REAR PROPELLER SHAFT: On 1940 trucks with Torque-tube drive, torque tube and propeller shaft are part of rear axle assembly (see disassembly data below). Propeller shaft front bearing (in torque tube) is serviced as follows:

Rear Propeller Shaft Front Bearing (1940):—Consists of bronze bushing and oil seal in forward end of housing retained by a dowel pin. To replace bushing, drill out dowel pin, use old shaft to drive out old bushing and oil seal from rear end of torque tube. Dip new oil seal in heavy oil, install in front end of torque tube with free end of leather toward front, use driver J-1362 to seat oil seal against shoulder in tube. Install bushing with end which has machined angle on face toward oil seal and seat bushing in tube with same J-1362 driver. Drill dowel hole in bushing (use care not to break through inner wall), install new dowel pin and peen in place.

Rear Propeller Shaft (1941 & Later Trucks): Conventional type shaft. Not part of rear axle assembly.

REAR AXLE DISASSEMBLY & REASSEMBLY (1940 Torque Tube Drive Type): Remove ring gear thrust pad, adjusting nut locks, bearing cap bolts and lock-washers, take off bearing caps (bearing caps now piloted on carrier by sleeve type dowels to maintain alignment), lift differential case and ring gear assembly out of carrier. Take out bolts mounting torque tube on differential carrier and remove torque tube, remove pinion and shaft assembly from carrier. Overhaul pinion assembly (pinion, bearings, and propeller shaft) as follows:

Pinion Bearing Assembly (1940):—Cut off the rivet heads holding pinion shaft in coupling, drive out rivets, use special replacer and removal press J-985 and press pinion and coupling off propeller shaft, use press plates and press coupling off pinion shaft in an arbor press. Remove lock ring retaining bearing on end of pinion shaft, use special press plate J-1453 and press pinion and shaft out of this bearing (use extreme care that press plate bears against inner race of bearing only—bearing will be damaged if pressure applied to outer race). Clamp pinion shaft in vise (use universal joint yoke as clamp plate), remove pinion bearing retaining nut. Thread special pinion bearing bearing remover over pinion (J-1439 for 6 tooth pinions, J-1440 for 7 tooth pinions) and against bearing, press bearing off shaft. To assemble, reverse directions given above and note following points: Use new bearing retaining nut, tighten nut securely and lock by cutting sleeve on nut in line with keyway and driving edge of nut sleeve into keyway. Install rear roller bearing on shaft with chamfered side of inner race toward pinion, use lock ring installer J-1364 to install lock ring on end of shaft. Make certain that holes in coupling and shaft line up when pressing coupling on, use new flat head rivets and securely rivet ends. Check runout.

Propeller Shaft Run-out—Support assembly n 'V' blocks at double row pinion bearing (rear end), ground diameter back of shaft splines (front end). Run-out must not exceed following maximums (straighten shaft assembly if excessive): .003" at roller bearing on rear end of shaft, .010" at finished part of shaft in front of coupling, .015" at rough section in middle of propeller shaft, .005" at extreme front end of shaft.

For overhaul data on all other sub-assemblies, see 1941 & later Rear Axle data (following).

REAR AXLE DISASSEMBLY & REASSEMBLY (1941 & Later Trucks): Take out mounting capscrews and remove differential carrier assembly from axle differential carrier assembly removed from axle housing, loosen thrust pad locknut and remove ring gear thrust pad. Remove adjusting nut locks, bearing cap bolts and lockwashers. Remove bearing caps by tapping on cap bosses to free caps from locating dowels (CAUTION—do not pry on cap which may damage machined face), remove adjusting nuts. Lift differential and ring gear assembly from carrier. Remove bolts attaching pinion bearing retainer on carrier, remove pinion and shaft assembly from carrier (if necessary, use brass drift against pilot end of pinion shaft to drive assembly out of housing). On ¾ and 1 Ton Axle, remove shims from inside of carrier housing and note number and thickness of these shims (shims control pinion setting and must be replaced when axle reassembled). Overhaul axle sub-assemblies as follows:

Pinion Bearing Assembly (All 1½ & 2 Ton Trucks): Remove nut on end of pinion shaft, remove universal joint and bearing retainer and oil seal from shaft. To remove rear pinion bearing, remove lock ring, use special press plate J-1453 to press shaft and pinion out of bearing (CAUTION—make certain that raised portion of plate against bearing inner race to avoid damage to bearing). Use special pinion bearing remover J-1439 (6 tooth pinion), J-1440 (7 tooth pinion) installed over pinion so that it engages inner race of double row ball bearing, press shaft and pinion out of bearing. Wash all parts in gasoline, inspect for wear or damage. To reassemble, press front double row ball bearing on shaft making certain that extended portion of bearing inner race is toward gear teeth (CAUTION—If bearing not installed in this manner, rapid wear and gear failure will result). Press rear bearing on end of shaft with chamfered side of inner race toward pinion and install lock ring. Install pinion bearing retainer and oil seal on hub of universal joint flange, install assembly on pinion shaft, install washer and nut on shaft, tighten nut to 160-280 ft. lbs., install cotter pin.

Bearing Retainer Oil Seal—If oil seal being replaced, soak new seal in light engine oil for one hour, install felt packing in bottom on seal recess, then install seal with open end of leather toward pinion bearing and press seal down against felt packing using J-2231 Oil Seal Replacer.

Pinion Bearing Assembly (¾ & 1 Ton Trucks): Remove cotter pin, nut, and washer from end of pinion shaft, remove universal joint flange, bearing retainer and oil seal. Remove rear bearing snap ring, press bearing off shaft using J-2229 press plate. Thread J-2224 front pinion bearing remover over pinion teeth, press front bearing off shaft. Wash all parts in cleaning solvent, examine bearing rollers and races for cracks, chips, and wear.

►*CAUTION*—Spacer installed on shaft between bearing inner races must be kept with bearing and reinstalled if bearing re-used (special spacer fur-

C NTINUED N NEXT PAGE

CHEVROLET TRUCK HYPOID FULL-FLOATING (C nt.)

nished with each bearing is designed to provide correct bearing pre-load when pinion shaft flange nut is properly tightened. This spacer furnished as part of pinion bearing assembly (assembly consists of: One Double Outer Race, Two Inner Race & Roller Assemblies, One Spacer).

To reassemble the bearings on the pinion shaft, press one inner race and roller assembly on shaft until it seats against pinion, install spacer on shaft, lubricate bearing rollers with engine oil, install outer race, press front inner race and roller assembly on shaft. Lubricate rear roller bearing, press bearing in place on end of pinion shaft using driver part of J-769 lock ring installer, install lock ring (thread ring on tapered pilot of lock ring installer, center pilot in end of pinion shaft, press ring off pilot and into groove in shaft). Install spacer on front end of pinion shaft, position pinion bearing retainer on hub of pinion shaft flange and install assembly on pinion shaft, assemble shaft washer and nut, tighten nut to 160-280 ft. lbs. (use torque wrench), install cotter pin.

Bearing Retainer Oil Seal—To replace oil seal, soak new oil seal and packing in engine oil, make certain that lip of leather seal is in toward pinion bearing, press seal and packing in place in retainer using J-2231 Oil Seal Replacer.

Pinion Setting (All 1½ & 2 Ton Trucks): Pinion position not adjustable. Double row ball bearing seats against shoulder in carrier and is retained by torque tube (1940), bearing retainer (1941 on).

►**IMPORTANT SERVICE CAUTION**—This double row bearing must be installed with the ⅛" projection of the bearing inner race extending back toward the pinion. If bearing incorrectly installed, it will cause excessive backlash and early failure of the ring and pinion gears.

Pinion Setting (¾ & 1 Ton Trucks): Pinion position controlled by shims installed in pinion bearing counterbore in carrier. When disassembling axle, note number and thickness of shims installed and re-install same number and thickness of shims if old ring and pinion gear being re-used. If new gears being installed, use one .015" shim, one .018" shim (.033" total which is average shim thickness) as a standard starting set-up, check gear mesh when axle completely reassembled. Shims furnished in thicknesses of .012", .015", .018", .021".

Differential Bearing Assembly:—Bearings are press fit on differential case hubs. Use special puller to remove bearings (puller fingers must fit in notches in case so that pressure applied to inner races only). Mark differential case halves before dis-assembly to insure reassembling in same position—this is very important. Remove twelve ½" bolts holding case halves and ring gear together, lift off case cover, remove differential pinions and side gears, tap ring gear off case with soft-faced hammer. When reassembling, oil pinions and side gears and install in left side of case, assemble right side of case being careful to line up marks made before dis-assembly, install guide pins in two opposite bolt holes (guide pins can be made up of two #3652253 ring gear screws with heads removed and end slotted to permit removal). Make certain that ring gear seat on case is clean and not burred, install ring gear n guide pins, install bolts in all holes (except guide pin holes), tighten all bolts evenly and securely until ring gear face is flush with flange on case, remove guide pins, install remaining bolts and tighten all bolts with a torque wrench to 85-95 ft. lbs. Use special driver J-2226 (¾ & 1 Ton), J-1488 (Other Trucks) to install differential side bearings on case hubs (wide side of inner race in).

Differential Bearing Adjustment:—When installing differential assembly in carrier, make certain that bearing cap marks line up with marks on carrier. tighten bearing capscrews until lock washers just flatten out, screw both bearing adjusting nuts up until snug to seat bearings. Back off right hand adjusting nut, tighten left hand nut until all clearance or backlash between ring gear and pinion is just taken up, then back off adjusting nut two notches to locking position (slot in nut in line with lock). Tighten right hand adjusting nut solidly, back nut off until free of bearing, then tighten right hand adjusting nut until all play in bearing is taken up, and then tighten nut one to two notches more to locking position, tighten bearing cap screws with a torque wrench to 95-105 ft. lbs. (¾ & 1 Ton), 130-160 ft. lbs. (Other Trucks), install adjusting nut locks. Check ring gear backlash as follows:

Ring Gear Backlash Adjustment—If backlash not correct after setting up bearings as directed above, loosen left hand adjusting nut one notch and tighten right hand nut one notch (if backlash less than .006" on ¾ & 1 Ton, or .005" on other trucks), or loosen right hand nut one notch and tighten left hand nut one notch (if backlash greater than .009" on ¾ & 1 Ton, or .008" on other trucks). In making any backlash adjustment, both adjusting nuts must be turned an exactly even number of notches (in an opposite direction) to avoid disturbing bearing adjustment.

Ring Gear Thrust Pad Adjustment:—Examine bronze tip on ring gear thrust pad and replace if worn. To adjust, tighten thrust pad adjusting screw until bronze tip engages back of ring gear lightly (turn gear while making adjustment), then back screw off 1/12 turn, hold screw from turning and tighten locknut. This adjustment will give clearance of .005-.007" between thrust pad and ring gear.

CHEVROLET TRUCK TWO-SPEED SPIRAL BEVEL

Optional Equipment On:
1½ & 2 Ton Truck Models (1939 to 1946)

►**1946 REAR AXLE PRODUCTION CHANGE:** Beginning with Axle No. BV-1781, new gear ratios, Revacycle differential gears, and other changes made as follows:

Revacycle Differential Side Gears & Pinions. Gears with new "Revacycle" tooth form supersede previous type Involute gears.
CAUTION—These Revacycle gears must not be interchanged with former type Involute gears. *See Chevrolet Shop Notes for complete data on identification of these gears.*

Ring Gear & Pinion Changes—Beginning with Axle No. BV-1781, new gear ratios used as follows: 6.03-1 High Gear, 8.00-1 Low Gear. Ring and pinion gears in this new axle have same number of teeth as former type but are **not interchangeable.** Pinion shaft is ⅛" longer and has shoulder which eliminates necessity for spacer and shim between bearings (formerly used for pinion bearing adjustment). New type pinion cage is used with bearing adjustment spacer located between shouder on shaft and inner race of front bearing. NOTE—Correct spacer installed in production and this spacer should be re-used unless new parts being installed (spacers range from .400" to .446" in .002" steps). Five pinion bearing shims are furnished for pinion bearing adjustment in service.

Propeller Shaft & Universal Joint Assembly—New type, Part No. 3682235, required for use with new longer pinion (above). Former type No. 3661051 must not be used with this new axle.

►**LATE 1946 REAR AXLE PRODUCTION CHANGE:** New Hypoid gear two-speed axle with vacuum shift control may be found on these trucks. *See "Chevrolet Truck Two-Speed (Hypoid Gear)" following.*

DESCRIPTION: Spiral bevel, double reduction type with conventional first reduction spiral bevel ring and pinion gear and a second reduction consisting of two helical gears on ring gear shaft meshing with two larger gears on differential case (ring gear mounted on short separate shaft in front of differential case and axle shafts). Two speed feature consists of a duplicate set f the double reduction gears with a shifting sleeve between the gears on the ring gear shaft so that either high or low speed set of gears can be engaged at the will of the operator (gears are constant-mesh type and free to revolve on shaft, one gear at a time is locked to the shaft by the shifting sleeve). Three spring-loaded poppet balls are located within the shifter sleeve to maintain its position and an additional lock pawl is located under the shift lever on the axle housing. This lever is linked to auxiliary shift lever in cab by a combination rod and cable linkage.

1941-46 Type—Axle modified for Hotchkiss Drive by redesigning of pinion bearing cage and use of new type pinion shaft which has locating shoulder and nut on end to retain rear universal joint flange. 1939-40 type pinion shaft was splined to engage propeller shaft coupling and pinion bearing cage had mounting flange for torque tube.

REMOVAL OF AXLE: *See "Rear Axle" on car model page.*

AXLE SHAFT REPLACEMENT & WHEEL BEARING ADJUSTMENT: Same as Full-floating truck axle (see preceding article) except that studs and conical locking sleeves used to retain axle shaft flange on wheel hub. To remove shafts, take off nuts on studs, install two 7/16"x14 (1939-40), ½"x13 (1941-46) capscrews in extra holes in axle flange, turn these screws up evenly to loosen axle shaft. Use care not to lose flange bolt locking sleeves.

Axle Shaft Gasket—Soft aluminum gasket used between wheel hub and axle shaft flange (can be used to replace vellumoid type used on 1939 axles). Install new gasket whenever axle shafts removed.

Wheel Bearing Servicing—Bearings installed in same manner as on full-floating truck axle. When using outer wheel bearing driver J-872-3, eight studs must be removed from hub to permit driver pins to engage bearing outer race unless driver reworked by drilling four 9/16" holes midway between pins, with this change, 4 studs only will need to be removed).

CONTINUED ON NEXT PAGE

CHEVROLET TRUCK TWO-SPEED SPIRAL BEVEL (C nt.)

OVERHAUL: Disassembly. Remove nut and washer on end of pinion shaft, remove the universal joint yoke. Mark differential bearing caps and adjusting nuts with punch to insure reassembly in exact same positions, remove tie wire, adjusting nut locks, bearing cap bolts, remove differential assembly from carrier. Take out pinion cage and propeller shaft assembly retaining nuts, remove assembly (two tapped holes provided in cage flange for removing tight cages) using extreme care not to lose shims under cage (these shims control pinion mesh). Remove shifter lever retaining nut and lockwasher, remove lever, being careful not to lose woodruff key and pawl, remove shaft bushing (raise bushing with screwdriver inserted through notch in carrier). Take off nuts and lockwashers on double reduction shaft bearing caps, remove bearing caps using extreme care not to lose shims under caps which control bearing adjustment and ring gear backlash (if necessary, use short bar between back of ring gear and carrier to remove left bearing cap which is piloted in carrier). Remove double reduction shaft assembly by sliding it toward left and pulling ring gear to rear so that assembly can be threaded past differential bearing supports. Remove shifter yoke, tap right hand bearing outer race out of carrier with soft drift punch.

Propeller Shaft & Pinion Assembly (1939-40):—To dismantle, cut off coupling rivet heads and drive out rivets, use special press to separate pinion from coupling. Raise pinion bearing locknut edge, remove locknut and thrust washer, press pinion out of bearings toward rear. To remove bearing outer races, use Front Wheel Bearing Outer Race Driver. NOTE—Pinion cage serviced with front and rear bearing outer races pressed in place. To reassemble, lubricate bearing races, install pinion and rear bearing in cage, press front bearing race assembly on shaft until slight drag felt when cage is turned. Install thrust washer, bearing nut, lockplate, and locknut. Adjust bearings by turning bearing nut until cage can be turned with slight drag, tighten locknut and bend lock plate tangs over both nuts. Install propeller shaft and coupling, install new rivets in coupling. Use new gasket and same shims removed with cage and install cage on carrier, being careful to line up oil holes in gasket and shims with hole in case (top right side).

Pinion Assembly (1941-46): To remove the pinion assembly from pinion cage, press pinion shaft, rear bearing and spacer out of cage toward rear. Drive oil seal out of cage to front end. Note number and thickness of shims between front bearing cone and spacer (these shims control bearing adjustment and must be replaced). Use pinion bearing remover J-1328 in arbor press to remove rear pinion bearing from shaft. Damaged pinion bearing outer races can be removed from cage by using a front wheel bearing outer race driver inserted through rear of cage to drive front bearing race out and a drift or punch inserted through front of cage to drive rear race out. Install new races using tool J-1322 (front race), J-1321 (rear race) taking care that races pressed squarely and firmly against seats in cage. NOTE—Pinion cage furnished for service with front and rear bearing races installed. To reassemble pinion, install rear bearing on pinion shaft, insert pinion, bearing, and spacer in cage, install same number and thickness of shims (as removed when dismantling assembly) on shaft and against front face of spacer, press front pinion bearing on shaft until it is stopped by coming in contact with shims and spacer. Shaft should now turn with slight drag. If pinion turns too freely or if drag too great, remove bearing and add or remove shims until correct adjustment secured. Shims are furnished in thicknesses of .021", .024", .031", .034". Install oil seal with open end of leather to rear (use driver to prevent damage), install universal joint yoke, washer, nut and cotter pin.

Pinion Assembly Installation Note—When installing pinion cage assembly in carrier, use new gasket and re-install same shim thickness as removed from between cage flange and face of carrier (these shims control pinion position—see Pinion Mesh Adjustment below). Line up oil holes in shims and gasket with holes in carrier and cage, see that cage assembly is installed with oil hole to top right side.

Double Reduction Shaft Assembly:—To disassemble, remove locking rings on bearing nuts, remove nut on end opposite ring gear first, remove bearing, low speed reduction gear, shifter sleeve, detent balls and springs (ball will fly out when sleeve removed, use care not to lose these parts). Clamp shaft in vise (engage clutch gear machined on shaft in copper vise jaws), remove bearing nut on ring gear end of shaft. Install shifter sleeve on shaft so that it bears against high speed reduction gear, install assembly in arbor press (supported on shifter sleeve), press bearing and ring gear off shaft, lift off high speed reduction gear. To reassemble, coat inner bearing surface of reduction gears with rear axle lubricant, install high speed double reduction gear with spur clutch teeth toward clutch gear on shaft, start ring gear on splines and press gear on shaft until clearance between face of high speed reduction gear and clutch gear on shaft is .015-.020" (.015" preferred —this clearance necessary to prevent scoring and for proper shifter sleeve travel). Start roller bearing on ring gear end of shaft, use sleeve over shaft and against bearing inner race, press bearing solidly against ring gear (use care not to press ring gear further on shaft which will take up clearance noted above). Install bearing retaining nut and tighten it securely with J-1316 wrench (using care not to shift ring gear position). See that nut is in a locking position and install nut locking ring. Install shifter sleeve on clutch gear with tapered face toward ring gear and three tapered teeth in line with detent balls and springs (see Note below), make certain that detent balls and springs are in place in shaft holes. See that spacer in place in groove of low speed reduction gear, install gear on shaft with spur clutch teeth toward clutch gear at center of shaft, press roller bearing on taper at end of shaft, install retaining nut and tighten nut with J-1316 wrench until clearance between face of low speed reduction gear and bearing inner race is .015-.020" (.015" preferred) with gear against clutch gear on shaft (NOTE—This clearance necessary to prevent scoring and for proper shifter sleeve travel). See that nut in locking position, install locking ring. When installing assembly in carrier, see that shifter fork engages shift sleeve, tap right hand bearing outer race in flush with case, use new gasket and install shims removed from under bearing cap when disassembled, being careful to line up cut-outs in gasket and shims with lubrication opening in housing, install bearing caps and tighten securely (inner race is permanently assembled in left hand bearing cap—bearing cap serviced with race installed). Install shifter shaft bushing, cork oil seal, shifter lock spring and pawl, key, shift lever, lockwasher, and nut. Check bearing adjustment (see below).

Shifter Sleeve Installation Note—Shifter sleeve has three tapered teeth which must line up with poppet balls and springs in shaft. These tapered teeth are unevenly spaced on the shaft and in the sleeve (two groups of 8 teeth and one group of 9 teeth between these tapered teeth). Determine the 9 tooth group on the sleeve and the 9 space-between-

CONTINUED ON NEXT PAGE

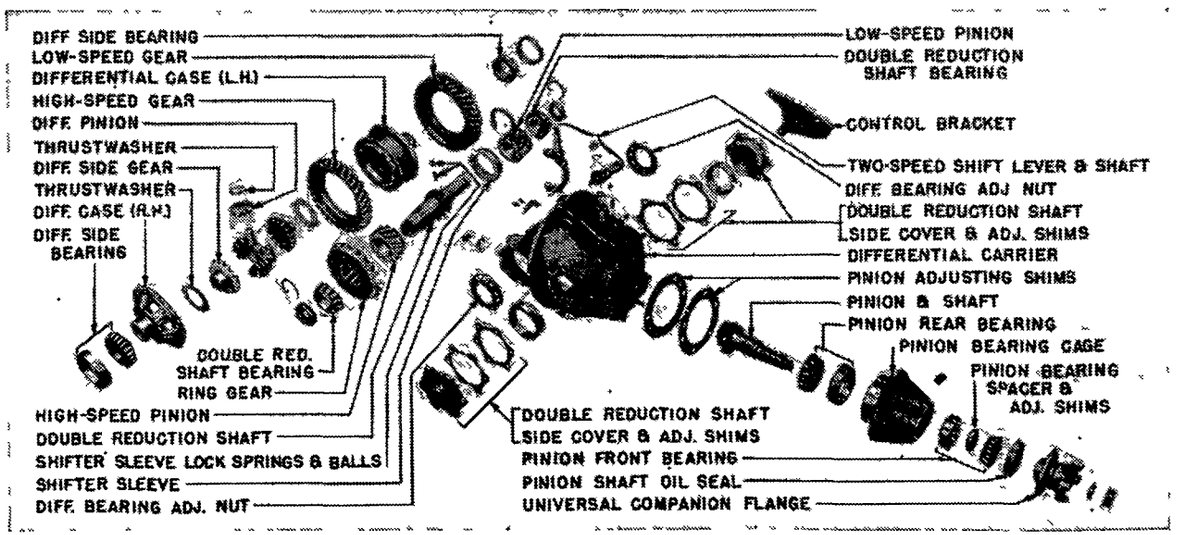

CHEVROLET TRUCK TWO-SPEED SPIRAL BEVEL GEAR AXLE

CHEVROLET TRUCK TWO-SPEED SPIRAL BEVEL (C nt.)

teeth group on the shaft and mesh these together. CAUTION—If sleeve and shaft not meshed in this manner, lock balls will be out of position.

Differential & Bearing Assembly:—To disassemble, remove lock wire, take out bolts in case, remove cover, high speed reduction gear, differential spider, pinions, and side gears (low speed reduction gear riveted to case and serviced as an assembly—do not remove this gear). To reassemble, lubricate thrust washers, side gear hubs and pinions, install in case. Install high speed reduction gear on pilot on case with flat side of gear toward case, match 'X' marks on cover and case, install four bolts first and tighten evenly and securely, then install balance of bolts and securely lock with wire. Lubricate differential side bearings, install races, install assembly in carrier, turn adjusting nuts up to marks made before disassembly, tighten bearing cap bolts snug, check bearing adjustment as directed below.

ADJUSTMENT:—**Pinion Mesh**—Check mesh by painting gears. If tooth bearing below pitch line (low contact), pinion is set too deep and should be moved out away from ring gear. If tooth bearing above pitch line (high contact), pinion should be moved in toward ring gear. To adjust, add shims between pinion cage and carrier (to move pinion out), remove shims (to move pinion in). When adjustment completed, tighten all pinion cage mounting bolts

Double Reduction Shaft Bearing & Ring Gear Backlash Adjustment:—With double reduction shaft bearing caps in place and securely tightened, shaft should turn by hand with slight drag. Adjust by adding or removing shims under bearing caps (shims furnished .003" and .005" thick). Then check ring gear backlash.

Ring Gear Backlash Adjustment—Check with dial indicator contacting heel of ring gear tooth. If backlash not .006-.012", adjust by transferring shims from one bearing cap to the other as follows: Move shim from left side to right side to increase backlash, move from right to left to decrease backlash.

CAUTION—Total shim thickness must not be changed (these shims control reduction shaft bearing adjustment). Check shift sleeve adjustment.

Shift Sleeve Adjustment—Check clearance between shift sleeve and each reduction gear pinion with shift lever moved to engage the gear. In High Ratio position, side of shifter sleeve should be flush against face of high speed double reduction gear and sleeve yoke shoes should have slight clearance in shifter sleeve recess at each side. In Low Ratio position, shifter sleeve should be flush against snap ring or spacer in low speed double reduction gear and yoke shoes should have same clearance in sleeve recess. Adjust by turning shifter lever stop pins with a pair of pliers (pins are eccentric and low side is indicated by groove in pin).

Differential Bearing Adjustment:—With bearing cap bolts tightened just snug and adjusting nuts turned up to align marks on nuts and case made before disassembly, check alignment of double reduction pinions. Align gears by backing off one adjusting nut and tightening opposite nut. Then adjust bearings by turning adjusting nut up tight and backing off 1 notch. Tighten bearing cap bolts securely, install adjusting nut locks and lock all bolts with wire.

Control Linkage Adjustment:—Disconnect front adjustable pull rod (at front end) and rear adjustable rod. Unscrew front connector from cable (at front frame bracket) and turn lock on cable so that it is 11/16" from end, replace connector and tighten locknut. Move connector so that front end is 2" from front face of bracket. Place hand lever vertical or slightly forward so that clearance between lever and front seat cushion riser is 6¾", adjust front pull rod length so that clevis pin can just be inserted, tighten locknut at connector. Move shift lever on axle housing to forward or Low Ratio position, see that detent ball engaged in notch, adjust rear pull rod so that clevis pin can just be installed. Shift to High Ratio position and see that detent ball engages notch.

IMPORTANT LUBRICATION NOTE:—When axle dismantled for service and reassembled, remove pipe plug in pinion cage and fill space between pinion bearings with 1 pint of regular lubricant for initial lubrication (no further attention required at this point in service).

CHEVROLET TRUCK TWO-SPEED HYPOID GEAR

Optl. On:
1½ & 2 TON TRUCK MODELS (1947-48)

DESCRIPTION: Hypoid Gear, double-reduction type with conventional first reduction hypoid ring and pinion gear and a second reduction consisting of two helical gears on the ring gear shaft (short separate shaft in front of differential case and axle shafts) which mesh with two larger gears on the differential case. These second reduction gears are constant-mesh type and one set at a time is engaged by the shifting sleeve on the ring gear shaft between the gears. Shifting sleeve locks the gear to the shaft and is actuated by the Vacuum Shift Control diaphragm as follows:

Vacuum Shift Control: Consists of a double-acting diaphragm type vacuum power cylinder mounted on axle carrier housing and linked directly to the double reduction gear shifter sleeve. Diaphragm pushrod is spring-loaded in the piston rod with spacers and stopwashers which limit pushrod travel. This enables the gear ratio to be "pre-selected" by movement of the selector valve on the instrument panel. When selector valve is moved to "Lo" or "Hi" range, a corresponding movement of the diaphragm and pushrod compresses the spring, and as soon as torque is relieved (by momentary letting up on accelerator pedal), the spring moves the piston rod and completes the shift. Shifting sleeve is centered in "Lo" and "Hi" positions by 3 spring-loaded poppet balls in the sleeve hub.

REMOVAL OF AXLE: *See "Rear Axle" on car model page for removal of carrier assembly from truck.*

AXLE SHAFT REPLACEMENT & WHEEL BEARING ADJUSTMENT: Same as for full-floating truck axle. *See "Chevrolet Truck Hypoid (Full-floating)" Rear Axle.*

VACUUM SHIFT CONTROL: Following operations can be performed without disassembling rear axle:

Vacuum Cylinder Diaphragm Replacement: Disconnect hoses at fittings on vacuum cylinder. Remove bolts holding two cylinder halves together, lift off outer half. Remove outer nut on pushrod **while holding inner nut stationary** with ½" wrench. Remove diaphragm plates and diaphragm. Reassemble new diaphragm in same manner using Permatex around pushrod hole in diaphragm plates to insure a good seal at this point. Check shifting operation in "Lo" and "Hi" range after unit reassembled.

►*CAUTION—Do not transpose hose connections.*

Oil Seal Replacement: Dismantle vacuum cylinder and remove diaphragm (see above). Remove nuts and washers on two mounting studs, lift inner half of vacuum cylinder off axle housing, drive old oil seal out. Soak new seal in engine oil, coat outer diameter of seal with permatex and install in cylinder with free side of leather down (in), press seal in place with tool J-968. Install inner half of cylinder on axle housing, reassemble diaphragm.

Shifter Spring Replacement: Dismantle vacuum cylinder and remove diaphragm (see Diaphragm Replacement above). Press in on end of pushrod to relieve spring pressure, remove snap ring from inner rim of piston rod, withdraw pushrod assembly. Clamp head of pushrod bolt in vise, remove two nuts, short spacer, stop washer, spring, long spacer, and stop washer from pushrod bolt. Reinstall parts in same order using a new spring. Tighten adjusting nut on pushrod until distance between outer faces of stop washers is 3½", install and tighten locknut being careful not to change adjustment. Lubricate inside of piston rod with engine oil, install pushrod and replace snap ring. Reassemble vacuum control.

DIFFERENTIAL CARRIER DISASSEMBLY: Mark differential bearing caps and carrier to insure reassembly in same position. Remove adjusting nut locks, adjusting nuts, and bearing caps, lift differential assembly out of carrier. Remove nuts on pinion cage mounting studs, take out lubrication plug. Install two 3/8" bolts in tapped holes in pinion cage flange, turn nuts up evenly to remove cage assembly. **Note number and thickness of shims under carrier flange** (these shims control pinion mesh). Loosen locknut on bolt attaching shifter fork to vacuum control piston rod, remove bolt. Remove nuts on vacuum cylinder mounting studs, remove cylinder, piston rod, mounting sleeve and shims (tap on end of piston rod to free it from shifter fork). Remove nuts on double reduction shaft bearing caps, remove caps and shims (use two 3/8" capscrews in tapped holes in left bearing cap to remove cap), **note number and thickness of shims removed at each bearing cap** (these shims control ring-and-pinion gear backlash and bearing adjustment). Slide double reduction shaft assembly to left and pull ring gear end to rear to clear differential bearing support, remove shaft assembly. Remove right bearing outer race by driving race through into carrier with driver J-872-1. Do not remove left bearing race (race is pressed in bearing cap and these parts furnished as an assembly). Disassemble and service the major sub-assemblies as follows:

Pinion Cage Disassembly & Reassembly: Remove nut on end of pinion shaft, remove universal joint flange. Support carrier end of pinion cage in arbor press, press pinion and rear bearing out of cage, remove bearing spacer from pinion shaft. Press front bearing and oil seal out of cage. To remove bearing from pinion shaft, use Pinion Bearing Remover J-2228 to prevent damage to bearing while

CONTINUED ON NEXT PAGE

CHEVROLET TRUCK TWO-SPEED HYPOID GEAR (C nt.)

pressing shaft out. Use long drift to drive bearing outer races out of pinion cage. Install new races in cage using special driver J-1322 (front race), J-2227 (rear race). Lubricate all parts before re-installing, make certain that bearing spacer in place on shaft between bearings, install universal flange but **do not install oil seal** until after bearing pre-load adjusted, tighten pinion nut to 75-150 ft. lbs., check and adjust bearing pre-load as directed below. After pre-load adjusted, soak new oil seal in engine oil, install oil seal with driver J-971 with free edge of seal toward bearing. Re-install universal flange, washer, and nut, tighten nut to 75-150 ft. lbs. and install cotter pin (CAUTION—do not back nut off to align cotter pin hole, stop tightening the nut at point where slot lines up with hole).

Pinion Bearing Pre-load Adjustment—Check pre-load by clamping pinion cage flange in vise and using spring scale and rod to measure torque required to turn pinion (pinion nut must first be correctly tightened to 75-150 ft. lbs.). Turning torque should be **12-18 in. lbs.** (or 1-1½ ft. lbs.). Adjust by installing spacer or shims of correct thickness on shaft between bearings (thinner shims will increase turning torque, thicker shims decrease turning torque). These adjusting shims furnished in seven thicknesses as listed below and combinations of **two** shims will provide necessary range of adjustment from .316" to .354" in .002" steps.

Adjusting Shim Part Nos.—3847424—.157", 3847425—.159", 3847426—.163", 3847427—.167", 3847428—.171", 3847429—.175", 3847430—.177".

Double Reduction Shaft Disassembly & Reassembly: Remove capscrew and bearing retainer washer on each end of shaft, support tooth side of ring gear on hardwood blocks in arbor press, press shaft out of ring gear and bearing. Remove high speed pinion, shifter sleeve and poppet balls and springs (CAUTION—balls and springs will fly out as sleeve is removed). Replace sleeve on shaft with tapered side against pinion, support sleeve on hardwood blocks in arbor press, press shaft out of bearing, lift off bearing and low speed pinion. When reassembling, lubricate all parts for initial lubrication, install high speed pinion with clutch teeth toward splines on shaft, see that ring gear key in place in shaft, press shaft in gear until shoulder on shaft is against gear, press bearing on shaft against gear, install bearing retainer washer and capscrews, tighten capscrews to 37-46 ft. lbs. and secure with lockwire. Install poppet springs and balls in shaft holes, install shifter sleeve on shaft with **heavy tapered end of sleeve toward ring gear and three tapered teeth on sleeve in line with poppet balls.** Install low speed pinion, press bearing on shaft firmly against shoulder, install bearing retainer washer and capscrews, tighten capscrews to 37-46 ft. lbs. and secure with lockwire.

Bearing Adjustment & Ring-and-pinion Gear Mesh Adjusted as part of Carrier Reassembly (below).

Differential Disassembly & Reassembly: Mark halves of case to insure correct reassembly. Remove nuts on eight long through-bolts, separate differential case halves, remove differential side gears, pinions, and thrust washers. To remove side bearing cone and roller assemblies, install J-1318 Differential Bearing Puller on bearing, support differential case in arbor press with bearing puller down, use drift inserted through case to press puller and bearing down off case hub. Press new bearings on hub firmly against shoulder on case using J-1312 Bearing Replacer. To replace double reduction gears, remove gear mounting nuts and bolts, tap gear off case, make certain that mating flanges of case and new gear are clean and smooth, tap gear in place, tighten mounting bolt nuts evenly to 70-110 ft. lbs. and secure with lockwire.

CAUTION—Double reduction gear mounting bolt nuts should be at inner face of differential case halves, nuts on long through-bolts should be on left side or AWAY from ring gear.

Differential Bearing Adjustment—Part of Carrier Reassembly (following).

DIFFERENTIAL CARRIER REASSEMBLY: Reverse disassembly directions and make the following adjustments during the reassembly operations:

Double Reduction Shaft Bearing Adjustment: Install assembly with same thickness of shims under each bearing cap as were removed during disassembly (install left cap first, tighten mounting stud nuts securely). With correct bearing adjustment, shaft should rotate with slight drag (bearing pre-load only—pinion must be out so that no pinion drag added). Adjust by adding or removing shims at right or left bearing cap (shims will be transferred from one side to the other during ring-and-pinion gear backlash adjustment). **After backlash adjusted,** tighten all bearing cap nuts to 75-95 ft. lbs.

Ring-and-Pinion Gear Mesh (Pinion Setting Adjustment): Install pinion cage in carrier with same thickness of shims under cage flange as were removed during disassembly, install nuts on 3 equally spaced mounting studs and tighten nuts securely. Check gear mesh by painting ring gear teeth with red lead or Prussian blue, rotate pinion by hand in both directions while pressing on back of ring gear to apply a load. Make necessary adjustment of pinion position for correct mesh by adding shims (to move pinion out), or removing shims (to move pinion in) from beneath pinion cage flange. These shims furnished .003", .005" thick. After adjusting

CONTINUED ON NEXT PAGE

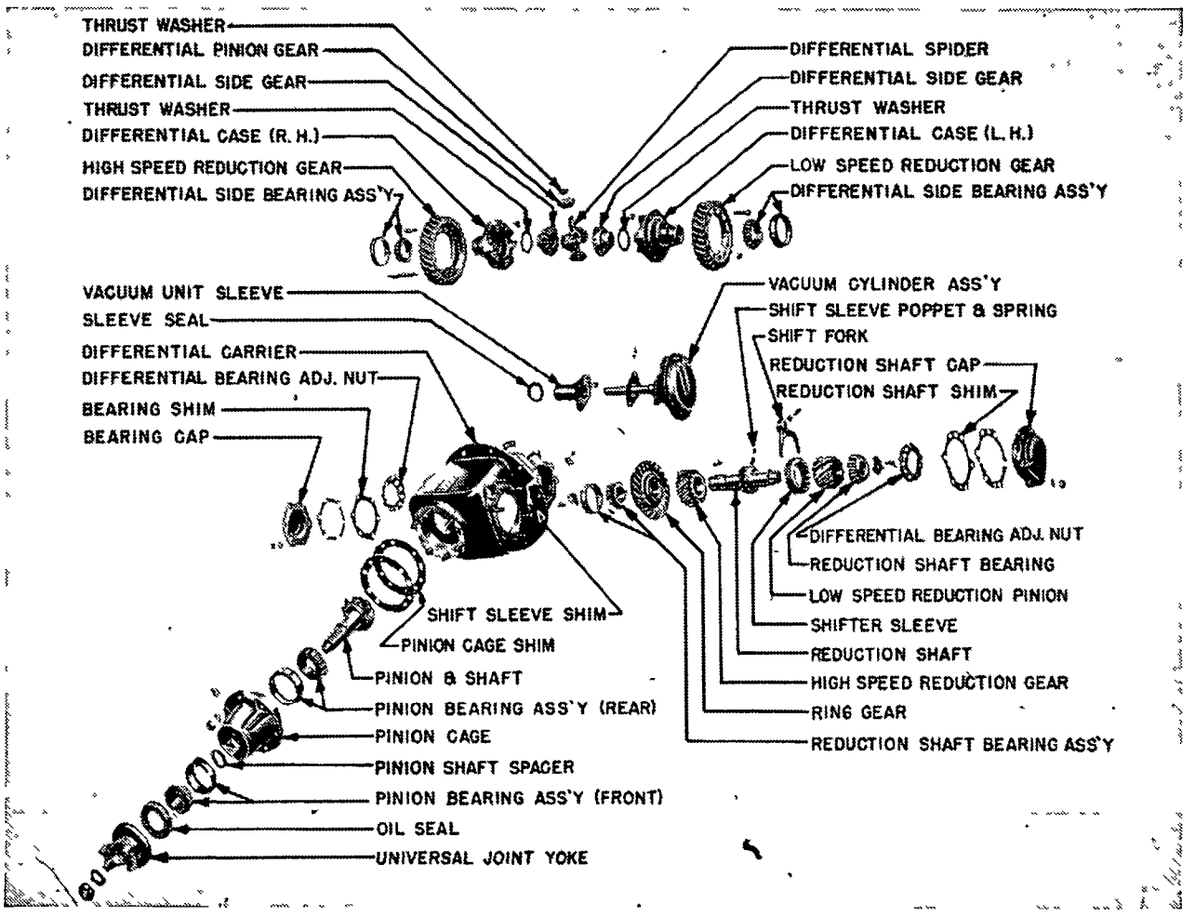

CHEVR LET TRUCK TW -SPEED HYPOID GEAR AXLE—WITH VACUUM C NTR L

CHEVROLET TRUCK TWO-SPEED HYPOID GEAR (C nt.)

pinion position and backlash (see below), install all pinion cage mounting stud nuts and tighten evenly to 115-130 ft. lbs.

Ring-and-Pinion Gear Backlash: Check backlash with dial indicator mounted on carrier. Backlash should be .008-.013". Adjust by transferring shims from under one double reduction shaft bearing cap to the other keeping total shim thickness constant to avoid disturbing bearing adjustment (move shims from left to right side to increase backlash, from right to left side to decrease backlash). These shims furnished .003", .005" thick. After adjustments completed, tighten bearing cap nuts to 75-95 ft. lbs.

Two-speed Shifter Mechanism Installation: With shifter sleeve in low-speed position, install shifter fork in sleeve with lock bolt hole toward rear of carrier. Place rubber oil seal on vacuum unit mounting sleeve and install sleeve in carrier with same thickness of shims under sleeve flange as were removed when unit disassembled. Use new gasket on vacuum cylinder piston rod, insert rod and cylinder assembly in sleeve, enter end of rod in shifter fork and line up hole in rod and fork, install taper bolt and tighten locknut securely. Tighten cylinder mounting stud nuts. Check assembly as follows:

Shifter Mechanism Adjustment—With shifter sleeve in low-speed position, check clearance at each side of shifter fork with a feeler gauge. If clearance less than .010" at either side of fork, loosen vacuum cylinder mounting nuts, add or remove shims from under mounting sleeve flange (shims slotted, not necessary to remove cylinder or sleeve), tighten nuts and recheck shifter fork clearance.

Differential Bearing Adjustment: When installing differential assembly, assemble adjusting nuts and bearing caps in accordance with marks. Tighten bearing cap stud nuts just snug. Shift differential to right or left (by turning up one adjusting nut and backing off opposite nut) until double reduction gears and pinions are centered. Position one adjusting nut in a locking position (slot in line with lock tang), tighten opposite adjusting nut until all clearance or endplay just removed, then **tighten each adjusting nut one additional notch** for correct bearing pre-load. Tighten bearing cap stud nuts evenly to 150-170 ft. lbs., install adjusting nut locks, secure bearing cap nuts with lockwire.

CHRYSLER (CROWN IMPERIAL)

Crown Imperial, All Models (1940 to 1948)

DESCRIPTION: Hypoid Gear, Semi-floating type with 'barrel type' differential case. Differential case has open end on right hand side through which differential gears are installed, this opening then being closed by cap which is threaded into case and locked by pin extending through drilled hole in case and cap. Right hand differential case side bearing is seated on shoulder on cap. Pinion shaft bearing cups are seated against shoulders in carrier bore and front bearing cone seats against shoulder on shaft (spacer washer between cone and shaft shoulder), no tubular shaft spacer being used. Special ring gear thrust pad and adjusting screw is installed in left hand side of differential carrier so as to contact back of ring gear.

REMOVAL OF AXLE: *See "Rear Axle" on car model page.*

AXLE SHAFT REPLACEMENT & WHEEL BEARING ADJUSTMENT: To remove axle shaft, first remove wheel, axle shaft nut, hub and shaft key (use special hub puller C-675. Disconnect brake line remove stud nuts holding oil seal and backing plate on housing, remove oil seal, backing plate, and wheel bearing adjusting shims (save shims and reinstall when assembling). Use shaft puller C-499 to pull shaft and bearing (if bearing to be removed use special puller C-293-C). When installing new shaft, adjust shim thickness at each wheel equally for desired endplay of .003-.008". Shims furnished in thicknesses of .005", .010", .0125", .030", .075".

NOTE—Shims should be installed or removed equally at each wheel.

Wheel Bearing Oil Seal—Use special puller C-358 or C-748 to remove oil seal from housing. Use special tool C-241 to install new oil seal. NOTE—If new seals being installed, soak seal in thin oil for 30 minutes, roll seal with smooth bar.

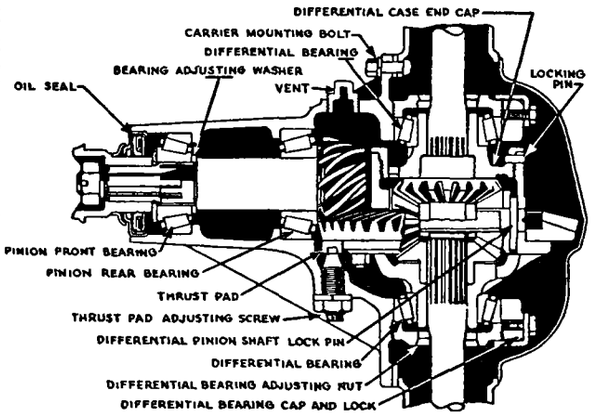

OVERHAUL: Disassembly. Mark differential bearing adjusting nuts and bearing caps to insure replacement in correct position. Remove adjusting nut locks, back off adjusting nuts, take out bearing cap screws, remove bearing caps, lift differential assembly out of carrier. Remove drive pinion shaft nut, pull universal joint drive pinion flange, remove pinion and shaft through rear end of carrier. Use special puller C-293-C to remove rear bearing from shaft. Use special puller C-358 or C-748 to remove oil seal, special tool C-359 to install new seal.

NOTE—Oil seal can be replaced without dismantling carrier. New seals should be soaked in thin oil for 30 minutes and seal worked by rolling with a smooth bar until leather is soft and pliable.

Pinion Bearing Adjustment:—Bearing should be .0015-.0020" tight (tension or "draw") with pinion shaft nut securely tightened. To check bearings, mount dial indicator so as to measure pinion shaft endplay. Install pinion bearing washer of sufficient thickness between front bearing cone and shoulder on pinion shaft so that shaft has measurable endplay (pinion assembly must be dismantled to change this washer). Then install washer which is thin enough to take up all endplay plus .002" to provide proper draw or tension on bearings (subtract measured endplay plus .002" from first washer thickness to find correct final washer thickness). This washer furnished in following thicknesses: .1790", .1810", .1830", .1850", .1870".

Pinion Setting: No shims are used between the pinion and the rear bearing cup, consequently pinion position is not adjustable. Shims between shoulder on shaft and front bearing cone control pinion bearing adjustment.

Differential Gear Assembly: To disassemble the case for differential gear and pinion servicing, first remove right hand differential side bearing roller and cone assembly (use Puller C-293-C). Center-punch and drill out the cap locking pins (pins on rim of differential case which lock cap in place), remove remaining pieces of pins with a punch. Mount the case in a vise, carefully heat the case by playing a torch around the outside (do not heat the cap) to a temperature **not greater than 360-400°F.** NOTE—Check heat by means of a piece of ordinary soft solder, when case is hot enough, the solder will just start to melt. Unscrew cap with special wrench DD-921 (start cover by jarring wrench handle with a heavy hammer blow) or use a blunt drift and heavy hammer. Cool parts in oil and proceed with disassembly procedure. Re-install differential case cover in same manner, drill new ¼" locking pin holes through cap, install new locking pins to lock cap in position.

Differential Gears—When reassembling the gears make certain that thrust washers installed behind each differential pinion and side gear and that thrust block installed on center of pinion shaft with spacer between block and each pinion. Peen edge of differential pinion shaft locking pin hole after pin installed to prevent pin working out in service. Clearance between the differential pinions and side gears should be .004-.012" and is controlled by thrust washer thickness installed in back of gears.

Differential Bearing Adjustment:—When installing carrier assembly, turn adjusting nuts up to marks made before disassembly, then check bearing adjustment as follows: Tighten both bearing adjusting nuts sufficiently to seat bearing cups solidly against rollers, then back off nuts to relieve strain and tighten until differential assembly turns with slight drag or bearing support pedestals 'spread' .008-.010" as measured at bearing caps (use dial indicator to measure this spread or outward movement of pedestals as nuts are tightened). Replace bearing and adjusting nut locks and tighten bearing cap screws securely.

Ring Gear Backlash Adjustment: When adjusting the backlash, note number of notches one adjusting nut is backed off and tighten opposite nut exactly same number of notches to avoid disturbing bearing adjustment. Make certain that ring gear thrust pad has sufficient clearance to permit ring gear movement and adjust thrust pad after correct backlash of .006-.010" is secured.

Ring Rear Thrust Pad Adjustment:—Clearance between thrust pad and back face of ring gear should be .006-.008". To adjust, loosen locknut on thrust pad stud (on left hand side of carrier housing), turn stud up finger tight, then back stud off slightly less than ⅛ turn, tighten locknut.

CHRYSLER SPIRAL BEVEL

CHRYSLER MODELS
Airflow Eight, Model C9 (1936), C17 (1937)
Imperial Eight, Model C10 (1936)
Custom Imperial, Model C11 (1936)

DE SOTO MODELS
Airstream Deluxe Model S1 (1936)

DODGE MODELS
Six, Model D2 (1936)

PLYMOUTH MODELS
Six, Models P1, P2 (1936)

TYPE:—Spiral bevel, semi-floating type with Hotchkiss drive. The pinion gear is integral with the pinion shaft and mounted on taper roller bearings which seat directly in carrier housing (positioned by spacer on shaft). Differential carrier mounted on roller bearings in housing.

REMOVAL OF AXLE: *See "Rear Axle" on car model page.*

SERVICING: Gear Adjustment. Backlash should be .006-.008" (All 1936 Models), .006-.010" (All 1937 models). Adjust by backing off one differential bearing adjusting nut and tightening opposite nut equally. See Pinion Setting and Differential Bearing Adjustment below.

Axle Replacement (Cars with double wheel bearings). See that endplay is .0025-.005" for each shaft. Adjusted by adding or removing shims between cup of inner wheel bearing and shoulder in axle housing.

Axle Replacement (Cars with single wheel bearings). Total endplay between shafts and spacer in differential which transmits thrust from one shaft to the other should be .003-.008". Take up clearance by removing or adding shims equally between rear wheel brake support and each end of axle housing at flange. Shims furnished .010", .0125", .030" thick.

OVERHAUL:—Pinion Bearing Adjustment. Check the pinion shaft endplay using a reliable dial indicator, if no endplay, disassemble to remove front pinion bearing, add shims at front face of spacer to give free endplay. Reassemble and recheck endplay. Then remove shims to take up all endplay plus an additional .004" (1936), or .002" (1937) shim to give the proper draw or tension. Pinion shaft bearing should be .004" (1936), .002" (1937) tight.

Pinion Setting:—Pinion position controlled by shims between pinion gear and pinion shaft rear bearing.

Differential Bearing Adjustment (All 1936 Models). Adjusting nuts should be tightened so bearings pre-loaded for .016" 'spread' of bearing supports. To adjust, set up a dial indicator on each side of drive gear with finger resting against one side of each bearing cap. Loosen bearing cap nuts slightly, free adjusting nut locks, then turn each adjusting nut in until total reading of both indicators is .016". Tighten bearing caps, replace adjusting nut locks.

(1937 Models). Tighten bearings to seat cups in place. Then back off adjusting nuts to relieve strain. Tighten nuts slightly to give slight drag when pulling ring gear by hand.

NOTE—Gear mesh should be checked whenever differential bearings adjusted. Also mark bearing cap and adjuster before disassembling to facilitate readjustment of bearings.

Ring Gear Backlash Adjustment. Check with dial indicator. Back off one adjusting nut, tighten opposite nut equal amount. Check bearing adjustment (above).

CHRYSLER HYPOID

CHRYSLER MODELS
Six, All Models (1936 to 1948)
Eight, Airstream Model C8 (1936)
Eight, All Models (1937 to 1939)
Eight, Saratoga, New Yorker and Town & Country Models (1940 to 1948)

DE SOTO MODELS
Airstream Cust. S1 & Airflow S2 (1936)
Six, All Models (1937 to 1948)

DODGE MODELS
Six, Model D2 (1936)
Six, All Models (1937 to 1948)

PLYMOUTH MODELS
Six, All Models (1937 to 1948)

►**RING & PINION GEAR CAUTION:** Both "Formate" and "Generated" type gears used. Both types of gears are **interchangeable in matched sets only.** Gears can be identified by part number (stamped on all gears) or by word "FORMATE" stamped on all formate gears and pinions. Gears and pinions of "Generated" type have part number only.

►***CAUTION—Ring and pinion gears should be installed as matched sets and both gears must be of same type (Formate or Generated).***

DESCRIPTION: Hypoid gear, semi-floating type with Hotchkiss drive. Pinion and shaft mounted on drive. Pinion integral with shaft and mounted on taper roller bearings seated directly in differential carrier housing. Bearings positioned by spacer on shaft and adjustment controlled by shims assembled between spacer and front bearing. Differential assembly mounted on taper roller bearings with adjusting nut at outer end of each bearing.

AXLE SHAFT REPLACEMENT & WHEEL BEARING ADJUSTMENT: To remove shaft, remove wheel, shaft nut, hub and brake drum assembly (use special hub puller C-675), disconnect brake line at wheel cylinder, take out stud nuts and remove oil seal and backing plate, remove and save wheel bearing adjusting shims, use puller C-499 (Chrysler, DeSoto), C-499A (Dodge), C-158 (Plymouth) to remove axle shaft and bearing assembly. To remove bearing from shaft, use puller C-293-C (Chrysler), C-293-E (DeSoto), C-293-D (Dodge), C-293 (Plym.).

When replacing shaft, check wheel bearing adjustment (endplay) as directed below.

Wheel Bearing Oil Seal—Use special seal puller C-358 or C-748 to remove oil seal from housing.

NOTE—If new oil seals installed, soak in thin oil for 30 minutes, roll seal with smooth bar before installing and use special tool C-201 (6 Cyl. cars), C-241 (8 Cyl. cars) to install seals.

Axle Shaft Endplay—Should be .003-.008". When dismantling axle, make certain that shims installed between backing plate and axle housing flange are saved and replaced when axle reassembled. If new shaft installed, adjust shim thickness for correct endplay as noted above (adjust equally at both wheels). Shims furnished in thicknesses of .010", .0125", .015", .030".

CONTINUED ON NEXT PAGE

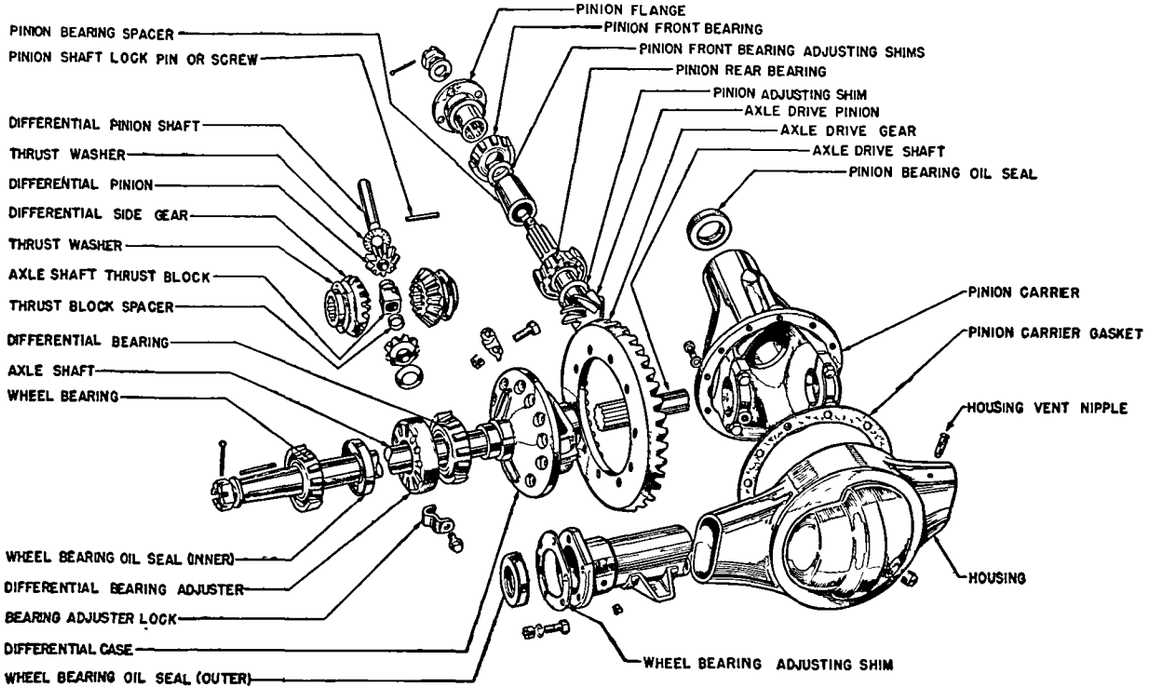

CHRYSLER, DE S TO, D D E, PLYM UTH HYPOID GEAR AXLE

CHRYSLER HYPOID (C nt.)

OVERHAUL: Disassembly. With differential carrier out of axle housing, mark both bearing adjuster nuts and bearing caps so that they can be installed in correct position and approximately right adjustment, remove bearing cap screws, lift out differential and ring gear assembly. To remove pinion, take off nut on end of pinion shaft, use tool C-452 to pull pinion flange. Pull pinion out through rear end of carrier housing. Use special puller C-293-C (Chrysler), C-293-E (DeSoto), C-293-D (Dodge), C-293 (Plymouth) to remove bearing from pinion shaft. Reassemble in same manner. Use tool C-496 to install pinion shaft flange.

Pinion Shaft Oil Seal. Can be removed and installed without removing differential bearing assembly or pinion. To remove, take off nut on end of pinion shaft, remove rear universal yoke flange, use puller C-358 or C-748 to remove oil seal. Soak new oil seals in thin engine oil for 30 minutes (seal leather must be soft and pliable), use special tool C-359 to install oil seal in carrier housing.

Pinion Bearing Adjustment: With pinion completely assembled in differential carrier, check pinion shaft endplay with dial indicator. If no endplay, take off pinion shaft nut, pull oil seal (see below), remove front bearing, add shims to give positive endplay reading, reassemble and check endplay (universal yoke flange must be in place and nut on shaft tight). Remove shims equal to observed endplay plus .004" (1936), .002" (1937 and later models) shim thickness which will give correct bearing "draw" or pre-load. Bearings should be .004" tight (1936), .0015-.0020" tight ('37 and later Chrysler & DeSoto), .0015-.0025" tight ('37 and later Dodge & Plymouth).

NOTE—These shims furnished in thicknesses of .010", .0125", .015", .018".

Pinion Setting:—Pinion position controlled by spacer washers installed on shaft between pinion and rear bearing. Pinion must be removed from carrier housing and bearings removed from shaft to change washer (or shims as used on some models) to correct pinion setting and gear mesh. See Ring & Pinion Gear Adjustment below also.

NOTE—Washers furnished in thicknesses of .0885", .090", .092", .094". Shims furnished .010", .0125", .015", .018" thick.

Differential Gear Assembly: The differential pinion gear shaft retained by pin or lockscrew. Clearance between differential side gears and pinions should be .004-.012" (controlled by thrust washer in back of each side gear). When assembling differential gears, make certain that thrust washer installed in back of each differential pinion and side gear, thrust block installed on pinion shaft at center, and that spacer installed between thrust block and each differential pinion. CAUTION—Thrust block must be properly centered in differential carrier. This block transmits end thrust from one axle shaft to the other.

Differential Bearing Adjustment:—Bearings should be just tight enough to cause slight drag when ring gear revolved by hand (assembly must not spin). Mark adjusting nuts and bearing caps before dismantling differential assembly to allow replacement in correct position. When installing assembly, tighten adjusting nuts with sufficient force to seat bearing cups solidly against shoulder in bore, back off nuts, then tighten just enough to cause slight drag (see Notes below), tighten bearing cap nuts securely and install adjusting nut locks.

1936 Models—Use dial indicator to check the spread at each differential bearing post and tighten adjusting nuts until total spread of both posts is .016" (sum of both indicator readings). This will provide correct bearing pre-load.

1941-42 Models. If dial indicators used to check spread of bearing posts, tighten adjusting nuts until spread of bearing support posts is .008-.010" measured at the bearing caps.

Ring & Pinion Gear Adjustment: Paint gears to check mesh. Backlash should be .006-.010". Adjusted by backing off one differential bearing adjusting nut and tightening opposite nut equally. See Pinion Setting & Differential Bearing Adjustment above.

Ring Gear Backlash Adjustment. Check with dial indicator. To adjust, back off one differential bearing adjusting nut, tighten opposite nut equally. Check differential bearing adjustment.

Ring Gear Replacement:—Ring gear is press fit on differential case and is held in place by bolts or by capscrews. Tighten all bolts nuts or screws evenly to 35-40 ft. lbs.

FORD, LINCOLN-ZEPHYR, MERCURY (PASSENGER CARS)

FORD MODELS
V8 '60', Pass. Car & Comm'l (1937 to 1940)
V8, '85', '90', '100' Pass. Car & Comm'l (1936 to 1948)
6 Cyl., Pass. Car & Comm'l Models (1941 to 1948)
4 Cyl., Comm'l Models (1941-42)

LINCOLN-ZEPHYR MODELS
Model 901-H (1936), HB (1937)

MERCURY MODELS
V8, All Models (1939 to 1948)

►**COMM'L AXLE NOTE (1942 & Later):** The rear axles on these models are similar to passenger car axles, except that Hotchkiss Drive is used. Pinion assembly is retained by a Pinion Bearing Retainer and Pinion Grease Retainer Support bolted on front face of pinion housing (in place of torque tube) and a rear universal joint yoke is bolted directly on the end of the pinion shaft. These axles serviced in same manner as passenger car types except that data on torque tube should be disregarded.

►**LINCOLN-ZEPHYR AXLE NOTE:** 1936-37 Models. Axle is similar in design to Ford axle and serviced in same manner.

►**1938 & Later Lincoln Models**—Hypoid gear axle. *See "Lincoln-Zephyr Hypoid Type" Rear Axle.*

DESCRIPTION: Spiral bevel gear, ¾ floating type with torque tube drive & straddle mounted pinion. Pinion mounted on double roller bearing (straddle mounted with additional roller bearing behind pinion). Pinion shaft splined and pinned to tubular propeller shaft. Differential assembly is mounted on roller bearings directly in axle housing (right and left hand housings bolted directly to pinion housing).

REMOVAL OF AXLE: *See "Rear Axle" on car model page.*

AXLE SHAFT REPLACEMENT: Remove axle shaft from inner end after axle dismantled and differential case bolts removed (side gears integral with shafts). When installing axles see that free travel or play at wheel keyway does not exceed .010" or endplay exceed .015". If play excessive, check differential gears for wear (pinion clearance .005" maximum).

CONTINUED ON NEXT PAGE

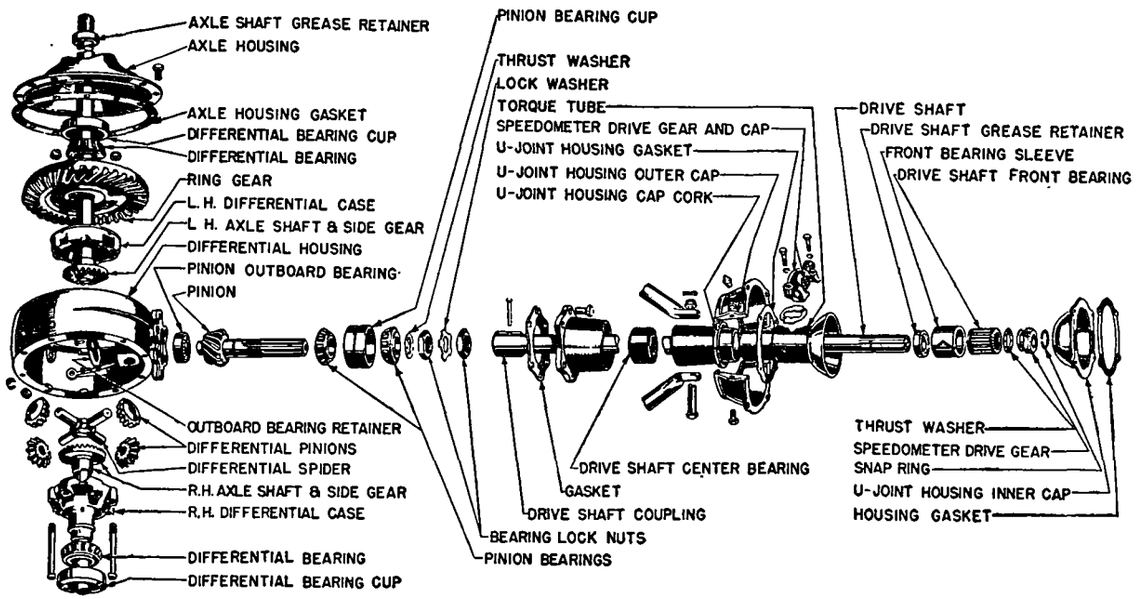

F RD, LINC LN-ZEPHYR, MERCURY (PASS. CAR) SPIRAL BEVEL GEAR AXLE

FORD, LINCOLN ZEPHYR, MERCURY PASSENGER CAR TYPE (C nt.)

PROPELLER SHAFT: Propeller shaft is part of rear axle assembly (pinned to pinion shaft). See overhaul data below. Propeller shaft bearings in torque tube are serviced as follows:

Propeller Shaft Forward Bearing:—In forward end of torque tube behind speedometer drive gear. Two types used (use B-4645-A roller assembly with split sleeve, 68-4645 with small rollers with solid sleeve). Use special puller SV-245 to remove solid sleeve from torque tube. Install new grease retainer (use tool A-310) with sharp edge of leather toward universal joint.

Propeller Shaft Center Bearing:—In torque tube at center. On types with solid propeller shaft, front bearing sleeve must be removed before center bearing can be removed with SV-186 tool (see above).

OVERHAUL: Disassembly. Remove speedometer driven gear assembly. Remove snap ring on forward end of propeller shaft, withdraw speedometer drive gear and thrust washer. Take out flange mounting screws at rear of torque tube, withdraw propeller shaft from tube toward rear. Drive out rivet in coupling, disconnect propeller shaft from pinion. Use AATA-1 driver to remove pinion assembly from housing, BV-92 puller to remove bearings.

Pinion Bearing Assembly:—Assemble bearings on pinion shaft (see Note below), tighten bearing locknuts so that bearing cup turns on cones with heavy drag. Heat housing (use approved heater or immerse housing neck in boiling water or hot oil for 1-2 minutes), install outboard bearing (use BV-94 driver), then with housing still hot install pinion assembly making certain that bearing cup is against shoulder in housing. Check pinion bearing adjustment only after installed in housing.

NOTE—Only bearings marked 'P' on end of cone should be used next to the pinion (install with 'P' marked end next to pinion).

Pinion Bearing Adjustment:—Use approved gauge ABV-129 to check bearing adjustment. The setting (torque required to turn pinion) should be 12-17 in.lbs. To adjust, tighten pinion bearing nut until correct gauge reading secured (check only after pinion assembly installed in axle housing), then tighten locknut securely and turn lockwasher ears over on nuts to prevent nuts loosening in service.

Differential Bearing Adjustment:—Assemble axle housings with gasket thickness of .008-.010" between right and left hand axle housing and pinion housing. Check bearing adjustment by rotating both axle shafts simultaneously (rotating one shaft will not turn differential assembly). Differential assembly should turn with a heavy drag. If clearance too great, replace gasket between right hand axle housing and pinion housing with one thinner gasket (B-4035-B) .004" thick. Check backlash.

Ring & Pinion Gear Backlash: Use a dial indicator to show pinion gear shaft movement with ring gear stationary. Backlash .006-.010" (Ford 1935-36), .012" max. (Ford '37 on), .010" (Mercury & Lin.-Zephyr) maximum. Adjust by increasing or decreasing thickness of gasket between left hand axle housing and pinion housing. Total gasket thickness must not be changed in order not to disturb bearing adjustment (increase or decrease right hand gasket thickness equally).

1949 FORD PASSENGER CARS (EXCEPT STATION WAGON)

Six & V8 Pass. Cars exc. Sta. Wgn. (1949)
Six & V8 Sedan Delivery (1949)

►**EXCESSIVE AXLE SHAFT ENDPLAY CORRECTION (Causing "Clunk" when car in motion):** Check for excessive endplay (use depth gauge through hole in axle shaft flange). If endplay more than .030", correct by installing special shim between bearing outer race and bearing seat in housing (endplay must be not less than .005").

►**Shim Note**—Shims can be made up from shim stock with I.D. 2.54-2.56", O.D. 2.820-2.800", .015" thick.

DESCRIPTION: Semi-floating, hypoid gear, Hitchkiss Drive type with "banjo" type housing and **separate Differential Carrier Assembly** which can be removed for work. Ring gear and differential assembly is mounted on taper roller bearings in carrier with adjusting nut (for bearing adjustment and gear backlash) under bearing cap at each side of assembly. Pinion is mounted on taper roller bearings in carrier with collapsible spacer (for bearing adjustment) between bearing cups. Axle shafts have integral flange at outer end for wheel mounting (no separate wheel hub) and wheel bearings are sealed, prelubricated, ball bearing type. Bearings are press fit on shafts and are retained by ring pressed on shaft behind bearing (bearings should be removed only for replacement).

AXLE SHAFT REPLACEMENT: Remove wheel, remove brake drum (retained by Tinnerman nuts on wheel studs). Remove nuts on axle retainer plate bolts (work through hole in flange), use Axle Shaft Puller 4235-P to pull axle shaft and bearing assembly out. Use care not to damage oil seal or dislodge backing plate (install one nut to retain backing plate). Check wheel bearing and oil seal in housing before replacing shaft.

►***CAUTION—Do not disturb wheel bearing or retainer unless replacement required. Old bearings cannot be re-installed.***

Wheel Bearing Replacement: Use special Axle Bearing Retainer Remover No. 2240-N to loosen bearing retainer, remove retainer from shaft. Use puller to remove bearing, or grind through both races and lift off bearing (NOTE—bearing cannot be re-used, always install new bearing). To install bearing, place retainer plate on shaft, use tool No. 1225-N to press NEW bearing firmly in place against shoulder on shaft, press retainer ring firmly against bearing.

►***CAUTION—Use extreme care not to damage oil seal bearing surface on axle shaft.***

Oil Seal Replacement: Soak new seal in engine oil for at least one-half hour. Use tool No. 4235-N to drive seal in place against shoulder in housing. Check fit of seal in housing to prevent oil leaks around seal.

REMOVAL OF AXLE: *See "Rear Axle" on car model page.*

AXLE DISASSEMBLY: Remove axle shafts (see above), remove nuts on carrier mounting bolts, lift carrier out of housing. Mark right and left hand differential bearing caps and adjusting nuts to insure correct reassembly. Remove bearing cap screws, lift off bearing caps, remove adjusting nuts, lift differential assembly out of carrier. To remove drive pinion, take off nut on pinion shaft at universal joint flange, pull flange off shaft. Remove pinion, rear bearing, and bearing spacer through rear of carrier. Discard spacer (new spacer must be used in reassembly). Use puller No. 4628-P to remove front and rear bearing cups from carrier bore (CAUTION —Save and re-install shims located in carrier behind rear bearing cup if same parts being re-installed—these shims control pinion setting). Overhaul and assemble all sub-assemblies as follows:

Pinion Bearing Assembly: Lubricate all bearings and thrust washers with hypoid gear oil before installation. Install front and rear bearing cups in carrier using Replacer No. 4628-N to seat cups firmly against shoulders in housing (CAUTION—Re-install

CONTINUED ON NEXT PAGE

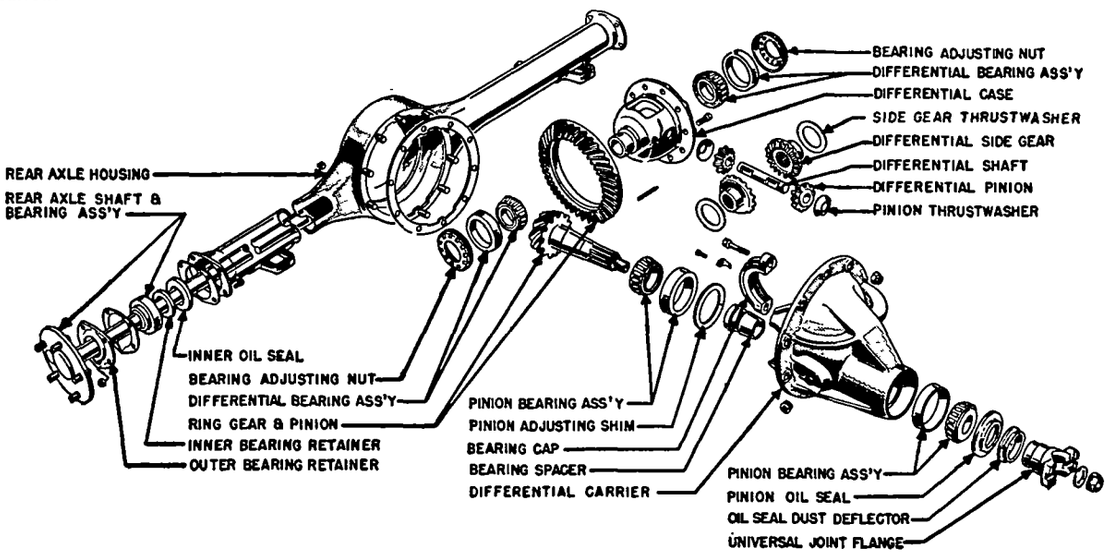

1949 FORD PASSEN ER CAR REAR AXLE

1949 FORD PASSENGER CARS (xc pt Stati n Wag n) C nt.

shims in housing behind rear bearing cup—these shims control pinion setting). Press rear bearing cone and roller assembly on pinion shaft, install NEW bearing spacer on shaft, insert assembly in carrier. On front end of shaft, install front bearing cone and rollers, oil seal, universal joint flange, washer, and nut. Adjust pinion bearings and check pinion setting (gear mesh).

Pinion Bearing Adjustment: 22-28 in. lbs. pre-load (turning torque). Tighten nut on end of pinion shaft until turning torque (to rotate shaft) is correct due to compression of spacer on shaft.

►***CAUTION—Install a new pinion bearing spacer each time the pinion nut is tightened to the specified shaft-turning torque.***

Pinion Setting: Pinion position must be checked when new parts installed or if same number and thickness of shims, as removed from behind rear bearing cup, not re-installed. To check setting with pinion installed in carrier mount Pinion Depth Gauge Tool No. 4610-P on carrier (mount pinion plate on carrier so that plate contacts face of pinion, see that semi-circular supports on flat plate seat evenly in differential side bearing seats), use micrometer to measure distance from underside of pinion plate to boss on top of bearing plate. This distance should be 2.000" plus or minus .002". If not correct, remove pinion and add or remove shims (furnished .003", .005", .010", .020" thick) behind rear bearing cup.

Differential Assembly: If assembly being dismantled, remove ring gear mounting capscrews, tap ring gear off case with a brass hammer. Drive differential pinion shaft lockpin out **from ring gear side** of case, slide shaft out, remove side gears, pinions, and thrust washers. Use Puller 4221-N to remove differential side bearing cone and roller assemblies. When reassembling, install differential side gears and pinions with thrust washer behind each gear, stake pinion shaft lockpin to prevent pin working out. Tighten ring gear mounting screws evenly to 35-40 ft. lbs. Use Driver 4222-N to install side bearings.

Differential Bearing & Ring Gear Backlash Adjustment: When installing differential assembly in carrier, move ring gear toward pinion until all backlash taken up, place adjusting nuts squarely against bearing cups and make certain they are properly meshed in carrier threads, install bearing caps (note markings), tighten bearing cap screws just enough to hold caps in place. Turn **left** hand adjusting nut in until ring gear backlash is zero (turn gear while securing this setting). Turn **right** hand adjusting nut in until it is snug, then **tighten** adjusting nut additional 1½-2½ notches for correct bearing pre-load. Check ring gear backlash and gear mesh (below), then tighten bearing cap screws to 70-80 ft. lbs., install adjusting nut locks and tighten lock capscrews to 15-20 ft. lbs.

Ring Gear Backlash & Gear Mesh: Differential bearing adjustment (above) should give correct gear backlash of .005-.008". Measure backlash with a dial indicator. If less than .005", back off left hand adjusting nut and tighten right hand nut exactly same number of notches to avoid disturbing bearing pre-load adjustment. If backlash more than .008", back off right hand adjusting nut and tighten left hand nut in same manner. After all adjustments completed, paint gear teeth with red lead and rotate gears in both directions to check tooth contact.

1949 LINCOLN & MERCURY, FORD STATION WAGON & F-1 TRUCK

Ford 6 & V8 Station Wagons (1949)
Ford Half-Ton Truck, Series F-1 (1948)
Lincoln & Cosmopolitan, 9EH & 9EL (1949)
Mercury, Model 9CM (1949)

DESCRIPTION: Semi-floating, hypoid gear, Hotchkiss drive type. This axle **does not have a separate Differential Carrier Assembly.** Ring gear and differential assembly is mounted on taper roller bearings seated directly in housing under bearing caps with shim adjustment for gear backlash and bearing pre-load. Pinion is mounted on taper roller bearings in housing with pinion setting shims in housing (behind rear bearing cup) and pinion bearing adjusting shims on shaft (between front bearing cone and shoulder on shaft). Axle shafts have integral flange at outer end for wheel mounting (no separate wheel hub) and wheel bearings are sealed, pre-lubricated, ball bearing type. Bearings are press fit on shaft and are retained by ring pressed on shaft behind bearing (remove bearings only for replacement).

AXLE SHAFT REPLACEMENT: Same as for Ford (see preceding data) except that special tools required: Axle Shaft Puller #4235, Bearing Remover and Replacer #4234, Bearing & Oil Seal Replacer #4245B.

REMOVAL OF AXLE: *See "Rear Axle" on car model page.*

REAR AXLE DISASSEMBLY & OVERHAUL: Remove axle shafts (see Axle Shaft data), remove cover assembly and gasket, install special Spreader Tool No. 4000-A on housing and **spread housing not more than .015".** Remove bearing cap screws, mark bearing caps and posts to insure correct reassembly, lift caps out, lift out differential assembly. To remove drive pinion, take off nut on pinion shaft at universal joint flange, pull flange (Tool No. 4858 for Lincoln & Mercury), withdraw pinion through rear of housing. Do not lose shims on pinion shaft next to front bearing cone (these shims control pinion bearing pre-load and **must be re-installed).** Remove oil seal at forward end of pinion housing, lift out front bearing cone and roller assembly. To remove bearing cups, use Tool No. 4628-B (front bearing on Lincoln & Mercury), 4628-D (rear bearing on Lincoln & Mercury). CAUTION—Save and re-install shims located in housing behind rear bearing cup—these shims control pinion setting. Overhaul and assemble all sub-assemblies as follows:

Pinion Bearing Assembly: Lubricate all bearings and thrust washers with hypoid gear oil before installation. Install front and rear bearing cups in housing using Replacer No. 4616 (Lincoln & Mercury) for front bearing cup, No. 4628-A (Lincoln & Mercury) for rear bearing cup (CAUTION—re-install shims in housing behind rear bearing cup—these shims control pinion setting). Install rear bearing cone and roller assembly on pinion shaft using Replacer No. 4621-A (Lincoln & Mercury), place bearing spacer on shaft (spacer not used on Lincoln), install assembly in housing. Re-install shims on pinion shaft (same shim thickness as removed from shaft unless new pinion being installed—see Pinion Bearing Adjustment below), install front bearing cone and roller assembly, oil slinger, oil seal assembly, dust deflector, universal joint flange, washer and nut. Adjust pinion bearings and check pinion setting (gear mesh) as follows:

CONTINUED ON NEXT PAGE

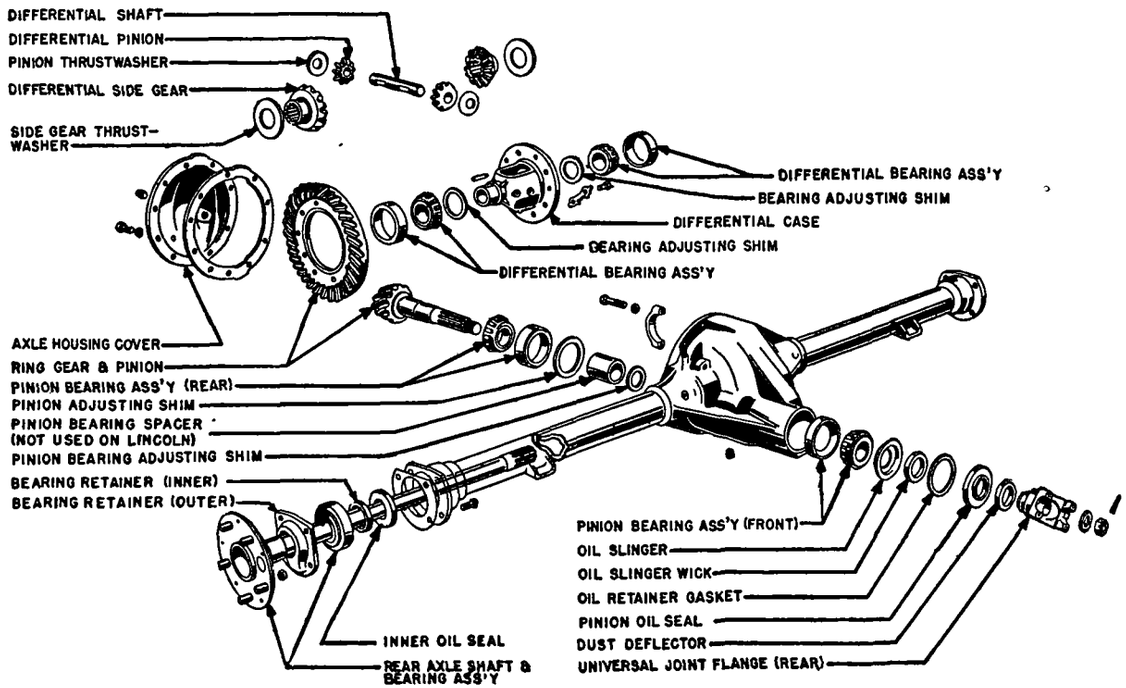

1949 LINCOLN & MERCURY, FORD STATION WAGON (& F-1 TRUCK) REAR AXLE

1949 LINCOLN & MERCURY FORD STA. WAGON (& F-1 TRUCK) (C ntinued)

Pinion Bearing Adjustment: 8-12 in. lbs. pre-load (Ford models & Mercury). To check (with nut on end of pinion shaft tight), measure torque required to turn shaft. To adjust, add or remove shims (furnished .003", .005", .010", .030" thick) on shaft behind front bearing cone.

►*CAUTION—Bearing adjustment will be affected by pinion setting adjustment (change of shim thickness in housing under rear bearing cup).*

Pinion Setting: Pinion position must be checked when new parts installed or when same number and thickness of shims, as removed from behind rear bearing cup, not re-installed. Check pinion position by using Pinion Depth Gauge No. 4020-A (Lincoln & Mercury) or by noting marking on end of pinion (stamped figures ranging from "—5" to "+10"). Adjust pinion by adding or removing shims in housing behind rear bearing cup and make final check of gear mesh by painting gear teeth after axle re-assembled.

Pinion Marking Note—Standard pinions are marked "0". When installing a "—" pinion, **add** shims equal in thousandths to the figure following this minus sign on the pinion; for "+" pinions, **subtract** shims similarly from the standard shim thickness (for pinions marked "0"). These shims furnished in thicknesses of .003", .005", .010" (Ford & Mercury), .0025-.0035", .0045-.0055", .009-.011" (Lincoln).

►*CAUTION—Changing shim thickness to adjust pinion position will disturb bearing adjustment unless same shim thickness is added or removed from shaft at front bearing cone (add or remove shims equally at both points).*

Differential Assembly: If assembly being dismantled, remove ring gear mounting capscrews, tap ring gear off case with a brass hammer, drive differential pinion shaft lockpin out from ring gear side of case, slide shaft out, remove side gears, pinions, and thrust washers. Use puller No. 4221-C (Lincoln & Mercury) to remove side bearing cone and roller assemblies. Note number and thickness of shims behind each bearing cup and **re-install same thickness at each point when axle reassembled** unless new parts being installed in which case shims should be omitted until differential bearing and ring gear backlash is adjusted (see below). When reassembling, install differential side gears and pinions with thrust washer behind each gear, stake pinion shaft lockpin to prevent pin working out. Tighten ring gear mounting screws evenly to 30-40 ft. lbs. (Ford & Mercury), 50-60 ft. lbs. (Lincoln). Use driver FLM-4221 (Lincoln & Mercury) to install side bearing cone and roller assemblies **with same shim thickness as removed behind each bearing cone unless new parts being installed** in which case install bearings without shims and then adjust bearings and ring gear backlash as follows:

Differential Bearing & Ring Gear Backlash Adjustment: Bearing adjustment and backlash should be correct if no new parts installed. If new parts used (and side bearings installed without shims as directed above), install assembly in axle housing with pinion out, use dial indicator to measure **total end-play** of assembly and note this figure. Select shims (furnished .003", .005", .010", .030" thick for Ford & Mercury; .0025-.0035", .0045-.0055", .009-.011", .027-.033" thick for Lincoln) equal to this amount **plus shims equal to bearing pre-load** (.005-.009" for Ford) which is correct TOTAL SHIM PACK for the axle (total for installation on both sides of case). After pinion installed in housing, re-install carrier assembly **without shims** and measure endplay from point where ring gear and pinion backlash is zero to point where differential assembly is solidly against left hand bearing (mount dial indicator at back face of ring gear, slide carrier back and forth). Select shims equal to this indicator reading less .005" for desired backlash from the total shim pack (above), install these shims on carrier behind **left hand** bearing cone, install remaining shims of total shim pack on carrier behind **right hand** bearing cone. Place carrier in housing, install bearing caps (note markings), tighten bearing cap screws to 60-70 ft. lbs. torque. Recheck ring gear backlash and gear mesh as follows:

Ring Gear Backlash & Gear Mesh: Measure backlash with a dial indicator. If not within limits of .003-.006" (Ford Truck), .003-.008" (Others), adjust by shifting shims behind side bearing cups from one side of the carrier to the other but **do not change total shim thickness** which would affect bearing pre-load (above). After all adjustments completed, paint gear teeth with red lead and rotate gears in both directions under load to check tooth contact.

FORD TRUCK FULL-FLOATING (TORQUE TUBE DRIVE)

V8 Trucks, All '60', '85', '95' Models (1936 to 1939)

DESCRIPTION: Spiral bevel gear, full-floating type with torque tube drive (all models). Pinion and shaft are straddle mounted on double taper roller bearings (front), plain roller bearing (rear). Front bearings mounted in sleeve in pinion housing (sleeve flange clamped between flanges on torque tube and pinion housing which is integral with right section of axle housing). Pinion shaft splined in rear end of tubular propeller shaft. Differential assembly mounted on taper roller bearings seated directly in recesses in axle halves.

REMOVAL OF AXLE: *See "Rear Axle" on car model page.*

AXLE SHAFT REPLACEMENT & WHEEL BEARING ADJUSTMENT: Axle shafts can be removed without disturbing wheel bearing adjustment but must be removed to adjust the bearings.

See Hotchkiss type axle (following) for Axle Shaft Removal and Wheel Bearing Adjustment.

PROPELLER SHAFT: Propeller shaft is part of rear axle assembly (see Overhaul data below). Front bearing in torque tube is serviced as follows:

Propeller Shaft Front Bearing:—In forward end of torque tube behind speedometer drive gear. Consists of two plain roller bearings side by side on shaft within split sleeve in torque tube. Use tool BB-309 to remove or install bearing sleeve, BB-140 to install new grease retainer in tube behind bearing sleeve.

OVERHAUL: Disassembly. Propeller shaft is removed from torque tube in same manner as passenger car model (see preceding article). Pinion bearing sleeve or cup clamped between torque tube flange and axle housing flange, use AAT13 tool to remove and install assembly after torque tube removed. Use BB-143 tool to remove bearing cups, BB-144 to install. Use tool BB-142 to remove and install pinion bearing roller and cone.

Pinion Bearing Assembly & Adjustment:—Tighten pinion nut (on pinion shaft in front of forward bearing) until force required to turn shaft is 12-16 in. lbs. Use ABV-129 gauge to check setting (gauge reads in. lbs. directly which is force in lbs. times distance out from center of shaft at which force is applied in inches). Tighten locknut securely and see that lockwasher ears turned over against both nuts

Ring & Pinion Gear Backlash: .008-.020" (1936), .004-.016" (1937-39). No adjustment.

Pinion Setting:—Not adjustable. Replace worn parts.

Differential Bearing Adjustment:—Not adjustable.

FORD TRUCK FULL-FLOATING (HOTCHKISS DRIVE)

V8 '60', All Truck Models (1940)
V8 '90' & '100' Trucks exc. ½ Ton (1940 to 1948)
4 Cyl., Truck Models (1941-42)
6 Cyl. Truck Models exc. ½ Ton (1941 to 1948)

DESCRIPTION: Spiral bevel gear, full-floating type with Hotchkiss drive. Similar to axle on previous truck models except that no torque tube is used.

¾ & 1 Ton Truck—Axle used on these models same as on other trucks except that pinion bearing sleeve (double bearing cup) is not flanged and is retained in housing by separate bearing retainer which is bolted on front end of housing with separate grease retainer assembly.

REMOVAL OF AXLE: *See "Rear Axle" on car model page.*

AXLE SHAFT REPLACEMENT & WHEEL BEARING ADJUSTMENT: This work can be done without disturbing wheels and hubs as follows:

Axle Shafts—Shafts can be removed without disturbing wheels and hubs as follows: Take out two screws in hub cap, remove cap. Remove nuts on 8 studs on axle shaft flange, turn two bolts (located between studs) in evenly to loosen axle shaft flang from hub. Then back off these two bolts, strike sharp blow on center of axle shaft flange to loosen locking cones on studs. Remove locking cones, pull shaft out. When installing shaft, see that new gasket in place under axle shaft flange, back off loosening bolts sufficiently to allow axle shaft to seat on hub, install locking cones on studs, tighten stud nuts evenly, then tighten two loosening bolts.

Wheel Bearing Adjustment—Remove axle shaft (above), remove outer locknut, lockplate, and grease retainer (except on ¾ and 1 Ton). Turn inner bearing adjusting nut up tight, then back nut off ⅛ turn, install lockplate being certain that locking pin in nut engages notch in lockplate (except ¾ & 1 Ton), bend lockplate tang against nut (¾ & 1 Ton). Install outer locknut and tighten securely. Rotate wheel by hand and see that it turns freely. Re-install axle shafts.

Wheel Bearing Assembly—To disassemble wheel bearings, remove axle shafts, remove outer locknut, grease retainer, lockplate and inner adjusting nut, remove wheel hub. Remove snap ring in inner end of hub. Use brass drift to tap inner bearing out until grease retainer comes out of hub, lift out bearing cone and roller assembly. Use puller 1239-Q to remove bearing cups from hub. Re-install parts in same manner using replacer 1239-P to install bear-

CONTINUED N NEXT PAGE

FORD TRUCK FULL-FLOATING HOTCHKISS DRIVE (C nt.)

ing cups and grease retainer in hub. Make certain that grease retainer snap ring installed, adjust wheel bearings after hub installed on axle (above).

RING GEAR BACKLASH: .004-.018". No adjustment.

OVERHAUL: Disassembly—Remove axle shafts and wheel hubs, take out capscrews holding left hand axle housing on right hand housing, remove left hand housing using care not to lose thrust pin and plate. Withdraw ring gear and differential assembly from housing (differential side bearing roller and cone assembly will come out on differential case hubs, bearing cones will remain in housing halves). Remove and service pinion assembly and differential assembly as directed below.

Pinion Bearing Assembly (Except ¾ & 1 Ton): To disassemble, take out screws mounting grease retainer and pinion sleeve flange on forward end of axle housing, lift off oil seal retainer. Remove pinion assembly using puller 4609-P and adapter 4609-P-4 (screw adapter on end of pinion shaft, mount puller on axle housing with mounting bolts passing through holes in pinion sleeve flange). Clamp pinion assembly in vise, remove locknut, lockwasher, adjusting nut, and thrust washer, lift pinion sleeve off (rear roller bearing roller and cone assembly will remain on shaft). Use puller 4221-A to remove and install this rear roller bearing on pinion shaft. To replace pinion shaft rear (pilot) bearing, remove inner race from end of pinion shaft by removing lock ring. Remove outer race and roller assembly from housing with replacer 4625-P, install new bearing with same tool and spacer 4625-P-7. To remove bearing cups from pinion bearing sleeve, use puller 4616-P. Install bearing cups with replacer 4616-Q and make certain that cups are flush with shoulder in sleeve. When assembling pinion, lubricate bearings with thin film of grease, insert pinion shaft and inner roller bearing in sleeve, install outer roller bearing ,thrust washer, and adjusting nut. Tighten adjusting nut until force required to turn pinion shaft is 12-16 in.lbs. which is correct bearing pre-load. Install lockwasher and locknut, bend lockwasher ears over both nuts with locknut tight.

Pinion Bearing Assembly Installation—Make certain that axle housing face and pinion sleeve flange are clean and smooth, align dowel pin in sleeve flange and hole in housing, press pinion assembly into housing until flange seats solidly, install new cork gasket in groove in sleeve flange, install oil seal retainer (see oil seal data below), install six capscrews and tighten screws securely.

Pinion Oil Seal—To replace oil seal, press old seal out of retainer using driver 4674-P-2 with adapter 4674-P-1. Install new seal with same tools. Make certain that sharp edge of seal leather faces toward inner end of retainer.

Pinion Bearing Assembly (¾ & 1 Ton): Pinion bearing sleeve is not flanged (sleeve forms pinion bearing cups) and is retained in axle housing by separate pinion bearing retainer. Pinion bearing assembly is serviced in exactly same manner as other trucks and requires same special tools (above) except that special adapter 4609-T-1 should be screwed on pinion shaft when pulling assembly out of housing. When assembling pinion, tighten adjusting nut until force required to turn pinion shaft is 12-16 in. lbs. which is correct bearing pre-load.

Pinion Bearing Assembly Installation—Same as for other trucks (above) except that oil return hole in pinion bearing retainer must be aligned with oil hole in housing.

Pinion Oil Seal—Same as given above.

Pinion Setting:—Pinion position not adjustable. If pinion mesh with ring gear not correct, replace all worn parts.

Differential Assembly:—To disassemble take out capscrews holding right hand half of differential case on left hand half, remove right half of case and lift out differential gears, pinions and pinion shaft. To remove differential bearing rollers and cones from differential case hubs, use special puller 4221-A with 4221-A-5 adapter. Replace these bearings with driver 4221-T (¾ & 1 Ton), 4221-P (Other Trucks). Use puller 4616-P (¾ & 1 Ton), 1239-Q (Other Trucks) to remove bearing cups from axle housings, replacer 4222-P to install these bearing cups. Ring gear is serviced as a unit with differential case and should not be removed. Replace differential spider if worn to diameter less than .745" (¾ & 1 Ton), .868" (Other Trucks), at gear bearing surfaces, replace spider gears if inside diameter worn to more than .758" (¾ & 1 Ton), .881" (Other Trucks). Replace side gears if splines worn so that backlash of new axle shaft in gear is more than .004". Replace spider gear thrust washers if worn to thickness of less than .025" (all models), side gear thrust washers if thickness less than .057" (¾ & 1 Ton), .055" (Other Trucks). Differential bearings are not adjustable and use of additional gaskets between axle housing halves for bearing adjustment not recommended.

Ring & Pinion Gear Backlash: .004-.018". No adjustment provided.

Assembly Note:—When reassembling axle, see that thrust block and thrust pin not worn and properly installed in left hand axle housing, use one 61-4035 gasket (¾ & 1 Ton), BB-4035 gasket (Others) between axle housing halves.

Ring Gear Thrust Block: Thrust block can be removed by driving out retaining pin using a long nosed drift to drive pin out of left hand axle housing. Install new thrust block in same manner making certain that pin is seated firmly in housing.

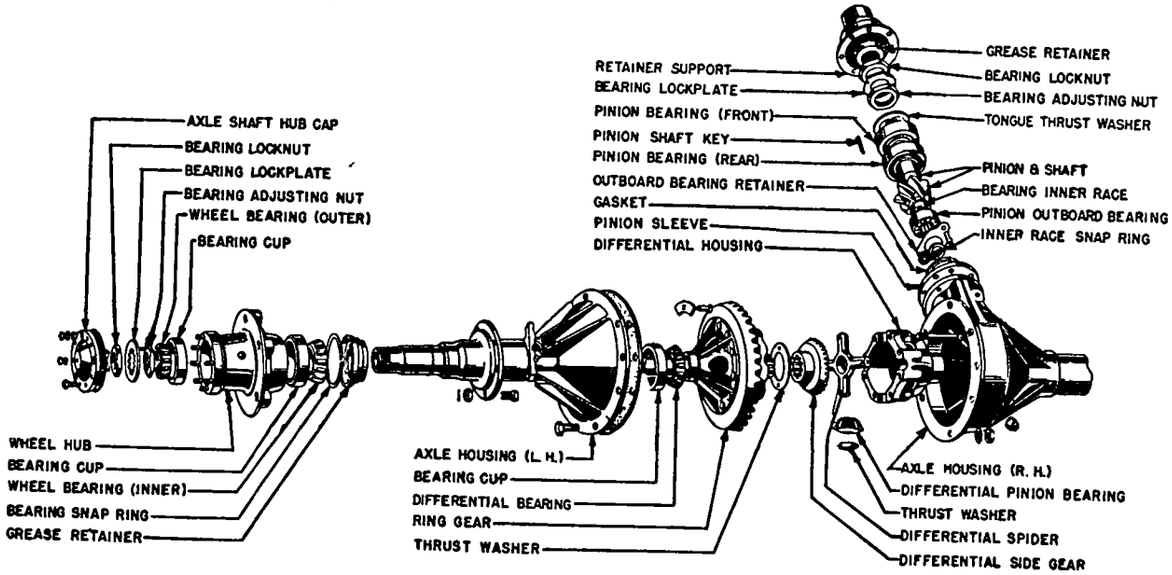

FORD TRUCK SPIRAL BEVEL GEAR, FULL-FLOATING AXLE (H TCHKISS DRIVE)

FORD TRUCK TWO-SPEED

Optional Equipment On:

All 1½ & 2 Ton Truck Models (1939 to 1948)

►**NOTE:** This axle provides ratio of 5.83-1 for speed with reduced engine R.P.M. (planetary gears locked out) and a ratio of 8.11-1 for power (with planetary gears operating—these gears provide a supplementary reduction of 1.39-1). Do not confuse this type with the Ford Overdrive Axle used on passenger car models which operates differently.

DESCRIPTION: Spiral bevel gear, full-floating type with torque tube drive (1939), Hotchkiss Drive (1940 & later trucks). The pinion shaft is straddle mounted on two taper roller bearings (front), plain roller bearing (rear). Pinion shaft is splined and pinned to propeller shaft within torque tube housing. Differential assembly mounted on taper roller bearings with bearing adjusting nut under bearing cap at outer end of each bearing.

Two-Speed (Planetary) Gears. Two speed design consists of a set of four planetary pinions mounted on hardened bronze pins in the differential case and meshing with an internal gear cut on the inner rim of the ring gear. A sliding gear clutch on the left side of the differential assembly (operated by a shift lever extending through the axle housing) controls the planetary system.

Lubrication System. Special lubricating system consists of a drum on the ring gear which picks up lubricant and a scraper tube which is held against the drum by light spring pressure so as to collect this lubricant. Scraper tube is divided by partition so that lubricant directed to front pinion

CONTINUED ON NEXT PAGE

FORD TRUCK TWO-SPEED (C ntinued)

bearings through one channel and to right differential bearing through second channel in housing.

REMOVAL OF AXLE: *See "Rear Axle" on car model page.*

AXLE SHAFT REPLACEMENT & WHEEL BEARING ADJUSTMENT: Same as for full-floating truck axle. *See "Ford Truck Full-floating" Rear Axle.*

OVERHAUL: With differential carrier assembly removed, disassemble carrier as follows:

Disassembly: Remove oil distributor locating screw and lockwasher from top of carrier (to left of oil filler plug), remove oil distributor plug and gasket, pull oil distributor and spring out of housing. Take out four capscrews and lockwashers retaining shift fork cover (CAUTION—Note location of the one longer capscrew and re-install this in same hole when reassembling axle), remove cover and gasket, remove plunger and spring from shift fork, pull shift lever out of shift fork (do not remove felt washer and retainer unless worn and require replacing), slide shift fork from housing, pull sliding clutch gear out. Mark right and left hand bearing adjusters and bearing caps to insure correct reassembly, remove lock wires, take out bearing cap bolts, remove bearing caps, adjusting nuts, and locks. Lift differential assembly out of carrier. Remove lock wire and bolts from ring gear, remove right hand gear support case by tapping gear with a brass hammer, remove left hand gear support case, high speed clutch plate thrust washer, and oil collector drum. Slide ring gear off differential and planetary gear case. To disassemble differential and planetary gear assembly, remove high speed clutch plate by tapping with a soft hammer (strike alternately and evenly on each side). Remove planetary gears and planetary gear bronze pins. Take out 12 capscrews in differential case, separate right and left halves of case, lift out differential side gear and thrust washers, pinions and thrust washers, and spider. To remove drive pinion assembly, remove cotter pin and nut on end of shaft, pull or drive universal shaft flange off end of shaft, take out six capscrews in pinion retainer. Drive pinion assembly out of housing using a soft brass drift to drive on inner end of shaft.

Pinion Bearing Assembly: To disassemble, clamp assembly in a vise, bend lockwasher ears away from pinion bearing nuts, remove nuts and lockwasher. Lift pinion sleeve (including bearing cup and spacer) off shaft. To replace pinion bearings, use puller to remove bearing cups from pinion sleeve or insert bar 3 7/16" long through hole in side of sleeve so that it rests on inner end of one bearing cup and press cup out in an arbor press, remove second cup similarly. Remove bearing roller and cone assemblies from pinion shaft with a puller. To remove rear (pilot) bearing, remove lockring on pinion end of bearing using a sharp screwdriver blade, slide outer race off, remove bearing rollers, press inner race off end of shaft. Press new rear bearing on shaft and stake bearing at four points (place a steel ball on end of shaft at inner race, strike ball with a hammer). Press bearing cups in pinion sleeve until they seat solidly against shoulder, press one roller and cone assembly on pinion shaft, insert pinion shaft in sleeve, place bearing adjustment spacer on shaft (see Pinion Bearing Adjustment below), install second roller and cone assembly, install bearing nut, lockwasher, locknut (bend lockwasher ears over nuts after bearing adjustment checked).

Pinion Bearing Adjustment—With pinion nut tight, force required to turn pinion shaft should be 12-16 in. lbs. If bearing adjustment not correct, install spacer of different thickness on pinion shaft between bearing cones. This spacer furnished in 12 different thicknesses from .513"/.514" thick (min.) to .543"/.544" thick (max.) for bearing adjustment.

Pinion Oil Seal—To replace oil seal, drive old seal out with a small punch, install new seal with Driver 4674-P-2 and Adapter 4674-P-1. Seal must be installed with sharp edge of leather facing inner end of retainer.

Pinion Setting: Pinion position controlled by shims installed between pinion sleeve flange and mating face of carrier. When installing pinion assembly, make certain that these faces are clean and smooth, install same thickness of shims between carrier face and pinion sleeve flange as removed when axle disassembled, line up dowel pin in sleeve with hole in carrier, drive assembly in until it seats solidly. Install new cork gasket in pinion sleeve groove, install oil seal retainer taking care that seal leather not damaged by keyway in shaft. Install and tighten six capscrews and lockwashers. After completely assembling axle, check ring and pinion gear mesh. Pinion position can be adjusted by changing shim thickness under sleeve flange. These shims furnished in four thicknesses from .00975"/.01025" (min.) to .028"/.032" (max.) for this adjustment.

Differential Gear & Bearing Assembly: To remove differential side bearings, tap old bearing roller and cone assemblies off drive gear case hubs using a drift inserted through holes in case back of each bearing (drive alternately and evenly through both holes). Press new bearings on hubs. Replace differential spider if worn to diameter of less than .934" at gear bearing surfaces, replace spider gears if inside diameter worn to more than .944". Replace side gears if splines worn so that backlash of new axle shaft in gear is more than .004". Replace spider gear thrust washers if thickness less than .025", side gear thrust washers if thickness less than .058". When reassembling unit, lubricate gears and thrust washers, make certain that long and short bolts installed in proper holes (8 long, 4 short), lock bolts with lockwire after properly tightened. Install planetary gear pins in holes in differential case, install gears, install high speed clutch plate on planetary gear pins with **chamfered teeth in toward planetary gears**, tap plate in place with a brass hammer. Place right hand gear support case on bench with open end up, lubricate and install thrust washer in case, install differential assembly with planetary gears upward, install ring gear with teeth facing downward and mesh internal gear teeth with planetary gears, line up bolt holes in gear with bolt holes in case. Place oil collector drum on ring gear with open side toward gear and engage tongues on drum in gear recesses. Lubricate high speed clutch plate thrust washer and install it on high speed clutch plate. Install left hand gear support case, install six bolts with heads against flange of right hand gear support case, tighten all bolt nuts securely and secure nuts with lockwire.

Differential Bearing Adjustment—When installing differential assembly in carrier, lubricate bear-

CONTINUED ON NEXT PAGE

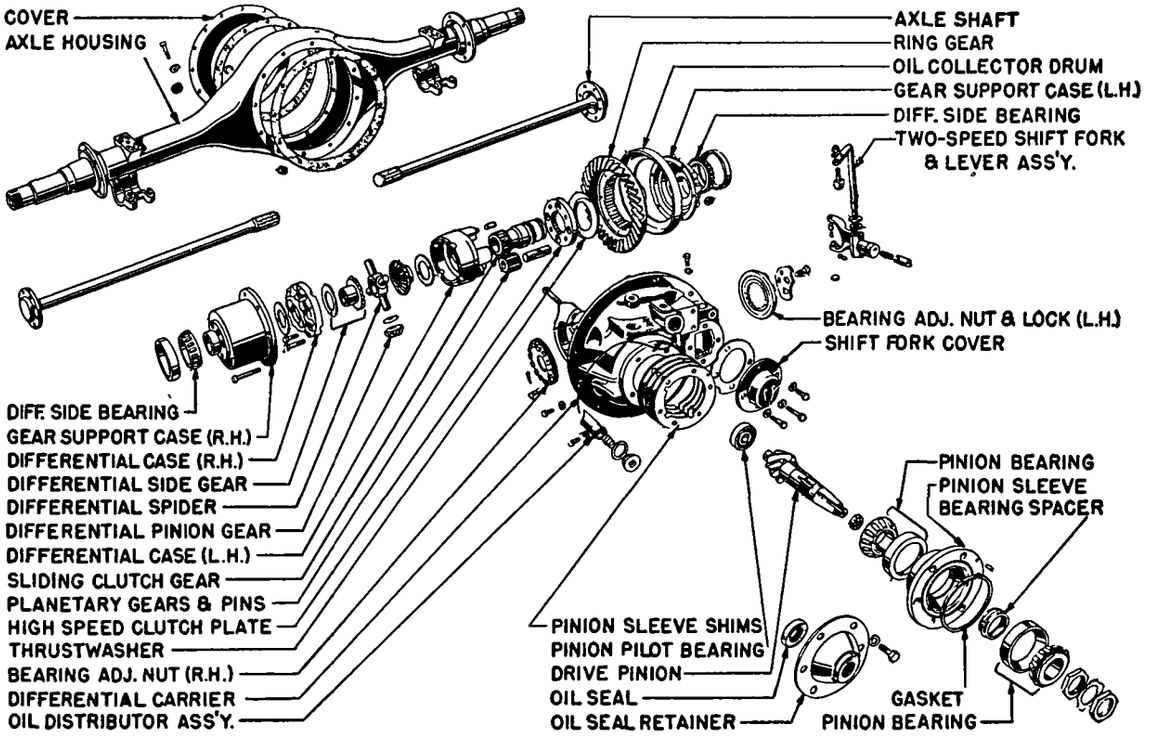

F RD TRUCK TW -SPEED REAR AXLE

FORD TRUCK TWO-SPEED (C ntinu d)

ings with thin film of grease, install bearing cups and adjusters, hold adjuster away from threads in carrier until bearing cap bolts are started, then lower cap and adjuster into mesh with carrier threads. Make certain that adjuster properly meshed in both cap and carrier before tightening cap bolts. Turn left hand adjuster up until ring and pinion gears mesh loosely, tighten right hand adjuster up as tightly as possible, then back off adjuster one notch. This setting will give correct bearing pre-load. After checking ring and pinion gear backlash, tighten both bearing cap bolts very tight, secure bolts with lockwire, install adjuster locks.

Ring Gear Backlash Adjustment: Back off the right hand differential bearing adjusting nut and turn up left hand nut until backlash between gears is .004-.018" (measured at gear teeth). Paint gears to check mesh, adjust ring gear position for correct lengthwise contact, adjust pinion position for correct contact on tooth (contact depth on face of tooth). After correct gear mesh and backlash secured, adjust differential bearings (above).

►*CAUTION*—When making this adjustment, back off one adjuster, and tighten opposite adjuster **exactly same number of notches** to avoid disturbing differential bearing adjustment.

HUDSON SPIRAL BEVEL

Used On:
HUDSON MODELS
Six, All Models (1936 to 1947)
Eight, All Models (1936 to 1947)
TERRAPLANE MODELS
All Models (1936 to 1938)

DESCRIPTION: Spiral bevel, semi-floating type. Rear cover welded in place requiring removal of differential carrier assembly for any work on axle. Pinion integral with shaft and mounted on taper roller bearings with bearing cups seated directly in housing. Differential assembly mounted on roller bearings with adjusting nut under bearing cap at each side.

1939 Type:—Design changed from 1938 type as follows: **Differential Carrier**—heavier construction with integral pinion shaft oil baffle; **Differential Case**—Heavier construction with additional reinforcing webs, ring gear mounting now eight 7/16" bolts (bolts 1/16" larger and two extra bolts used), differential hubs have greater diameter with larger side bearings; **Gears**—Ring gear same as previous model except for greater number of mounting bolts, pinion shaft increased in diameter with new larger pinion bearings; **Ring Gear Bolts**—Shakeproof lockwashers used instead of lockplates, bolts 1/16" larger.

Interchangeability of Parts—Following parts not interchangeable on previous models: Differential carrier, pinion gear and bearings, ring gear, differential case halves and bearings.
NOTE—Differential carrier and gear assembly may be installed on previous models as a unit. Optional ratio gear sets (for previous models) cannot be installed on 1939 cars.

1940 Type:—Same as 1939 type except construction is heavier throughout (housing wall section increased, carrier ribs and mounting flange heavier, and new perforated bronze thrust washers used on differential pinions (replaces bakelite type). Housing is vented by new threaded type vent with loose cap installed on housing in place of brake tube bolt. NOTE—New bronze thrust washer can be used on previous models as service replacement (has longer life).

Model 40—This model has 2¾" wheel bearings and axle shaft is 1 15/16" in diameter at bearing seat (other models have 2⅞" bearings and 1⅜" shaft). Special Optl. Gear Ratio of 4⅞-1 for this model only requires re-designed differential carrier and new pinion bearing spacer (ring gear larger than on other models).

1941-42 Type:—Axles on all models identical except for axle shaft diameter and wheel bearing size. Axle shafts on Models 10P & 10T are 1 5/16". All other six cylinder models (with 3x5" engine) and Eight Cylinder models have larger 1⅜" axle shafts and correspondingly larger wheel bearings.

Pinion Setting Shims—Differential carrier dimensions changed so that normal shim thickness in back of rear pinion bearing is .006" (was .056"). See Pinion Setting below.

1946-47 Type: Axles on all models are identical including axle shafts and wheel bearings (former smaller diameter shaft and wheel bearing used on models with small 6 cyl. engine no longer used).

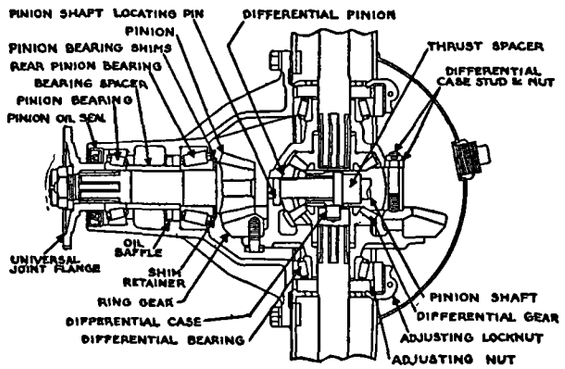

REMOVAL OF AXLE: *See "Rear Axle" on car model page.*

AXLE SHAFT REPLACEMENT & WHEEL BEARING ADJUSTMENT: Check and adjust bearings whenever axle shaft is replaced.

Axle Shaft Replacement. Remove rear wheels, axle shaft nut and washer, use wheel puller to remove hub and brake drum assembly (do not use knock-out type puller). Take off 4 nuts on wheel bearing adjusting cap, remove cap and bearing adjusting shims, use puller J-352 to remove shaft and bearing assembly. Use bearing remover to remove bearing cone and rollers from shaft, and special tool to re-install bearing.

Oil Seals—Use oil seal replacer tool J-353-1 to install new oil seal in bearing adjusting cap. Use tool HM-555 to remove old seal from axle housing, and use driver J-353-2 to install new seal assembly.

Wheel Bearing Adjustment Note—When installing axle shaft (above), adjust end play by installing correct shim thickness between bearing adjusting cap and backing plate so that shaft endplay is .004-.010" (before '39), .002-.004" ('39 and later), Adjustment should be made equally at both wheels in order to maintain centered position of thrust spacer on differential pinion shaft at inner ends of axle shafts.

Axle Shaft Thrust Button Renewal. Thrust button consists of hardened steel plug in inner end of axle shaft. To remove button, grind end flush with shaft, center punch button and drill through center with 11/32" drill, tap hole with ⅜-16 tap, screw in 3/8-16 capscrew, place head of screw in vise and tap end of shaft with soft hammer to remove button. Drive new button into place in shaft.

OVERHAUL: Disassembly. Mark differential bearing caps and adjusting nut positions (to facilitate reassembly), remove bearing caps and lift out ring gear and differential assembly. Use special puller J-354-A to remove differential bearing cones from differential case hubs making certain that puller fingers installed in notches in case so that they engage bearing cone. Remove bolts and lockwashers to remove ring gear. To disassemble differential gears, remove cotter pins and nuts and separate right and left halves of differential case. When reassembling differential gears, select thrust washers of correct thickness so that gears have no appreciable endplay when installed (it should be possible to turn gears by hand by grasping axle shafts). Install thrust washers with smooth side toward gears and rough side toward case.

Pinion Bearing Assembly:—To disassemble pinion and bearings from carrier, remove nut and washer on end of shaft, pull rear universal joint companion flange using puller J-456, withdraw pinion, spacer, and shims through rear of carrier. Use tool J-489 to remove oil seal from carrier, lift out front bearing cone, use tool HM-63 to remove bearing cups from carrier bore. Use tool J-1301 to remove rear bearing cone from pinion shaft. When reassembling, seat bearing cups in carrier with tool J-270-H, insert front bearing cone, install new oil seal with replacer tool J-353-1 (see Note below), install pinion, spacer and adjusting shims (see Bearing Adjustment and Pinion Setting below), install companion flange and tighten nut with torque wrench to 200 ft. lbs. while holding flange with special tool J-789.

Oil Seal Note—Two types used (with concave or flat outer surface). Both types installed in same manner but clearance must be maintained between edge of dust shield on companion flange and oil seal (will cause noise if there is contact at this point).

Pinion Bearing Adjustment—Re-install same pinion bearing adjustment shims between bearing spacer and front bearing cone, tighten pinion shaft nut securely with rear universal joint flange in place, check bearing adjustment. It should be just possible to turn pinion shaft with one hand. Add thin shim if bearings too tight. Pinion bearing endplay should be .000-.001".

Pinion Setting:—When reassembling pinion install same shim thickness between pinion and rear bearing cone to retain correct pinion position. Adjust pinion by adding or removing shims at this point.
NOTE—Standard pinion setting shim pack thickness is .056" (1939 and before), .006" (1941 and later). This difference caused by change in carrier bore dimensions and must be observed when servicing these axles.

CONTINUED ON NEXT PAGE

HUDSON SPIRAL BEVEL (C nt.)

Differential Bearing Adjustment:—To set up bearings when installing differential carrier, tighten differential bearing cap capscrews finger tight, turn left hand adjusting nut in until all play eliminated between pinion and ring gear, then tighten right hand adjusting nut securely. Set up dial indicator to check gear backlash, back off left hand adjusting nut one half notch and tighten right hand nut equal amount until gear backlash is .0005-.0035". Tighten bearing capscrews securely on left hand adjusting nut, turn right hand adjusting nut in one additional notch to secure correct bearing pre-load of .009" bearing tension. Tighten right hand bearing capscrews securely and install locks on both nuts.

Ring & Pinion Gear Adjustment: Paint gears to check gear mesh. Pinion position controlled by shims between pinion and rear bearing cone. Backlash should be .0005-.003". Adjusted by backing off one differential bearing adjusting nut and tightening opposite nut equally. See Pinion Setting and Differential Bearing Adjustment above.

Ring Gear Replacement:—With gear removed, run-out of gear mounting flange on differential case should not exceed .002". When installing gear, see that gear and case are clean and smooth and not nicked or burred. Use lockwashers on all gear mounting screws and tighten all screws uniformly and securely.

HUDSON HYPOID

Six & Eight, All Models (1948)

DESCRIPTION: New semi-floating, hypoid gear, Hotchkiss drive type with separate differential carrier assembly. Ring gear and differential assembly mounted on taper roller bearings in carrier with adjusting nut (for bearing adjustment and gear backlash) under bearing cap at each side of assembly. Pinion is mounted on taper roller bearings in carrier with spacer between bearing cones and shims on shaft behind rear bearing cone (for pinion setting) and between front bearing cone and spacer (for bearing adjustment). Axle shafts are mounted on single taper roller bearing at outer end and a spacer block on the differential pinion shaft transmits thrust from one shaft to the other. Carrier assembly should be removed from axle housing for all work.

AXLE SHAFT REPLACEMENT: Remove rear wheel, use puller to remove wheel hub and brake drum. Take off nuts on bearing adjusting cap studs, remove cap and oil seal assembly, remove bearing shims. Pull axle shaft and bearing assembly out of housing. Use bearing remover to remove bearing cone and rollers from shaft, and special tool to reinstall bearing. Adjust bearings when re-installing axle shaft.

Axle Shaft Thrust Button Note—Shaft has hardened steel plug insert at inner end (for spacer block contact). Thrust button can be renewed in same manner as on previous axles.

Wheel Bearing Adjustment: Shaft endplay should be .001-.004". Adjust endplay by installing correct shim thickness under bearing adjusting cap (shims furnished .003", .005", .015" thick) when replacing axle shaft. Adjust endplay equally at both wheel bearings to maintain centered position of spacer block on differential pinion shaft.

REAR AXLE DISASSEMBLY & OVERHAUL: With carrier assembly removed from housing, mark both bearing caps and adjusting nuts to insure reassembly in same relative positions. Remove bearing capscrews, lift off bearing caps, remove adjusting nuts, lift differential assembly out of carrier. To remove drive pinion, remove nut on pinion shaft at universal joint flange, pull flange, remove pinion, rear bearing cone and rollers, and bearing spacer out through rear of carrier (CAUTION—Do not lose bearing shims located on shaft between spacer and front bearing cone). Remove front oil seal, lift out front bearing cone and roller assembly. Use special tools to remove bearing cups from carrier. Use puller to remove rear bearing cone and roller assembly from pinion shaft (CAUTION—Do not lose pinion adjusting shims located on shaft behind rear bearing cone).

Pinion Bearing Assembly: Use special tools to seat pinion bearing cups in carrier bore. Insert bearing adjusting shims (see Pinion Bearing Adjustment below), front bearing cone and roller assembly, install oil washer and oil seal (see below). Place pinion shims on shaft (see Pinion Setting below), install rear pinion bearing cone and roller assembly using special tool to seat cone against shims, place bearing spacer on shaft, insert assembly in carrier. Install universal joint flange (with dirt shield on hub), tighten pinion shaft nut to 200 ft. lbs.

►**Pinion Oil Seal**—*CAUTION—Two types used.* First type Oil Seal No. 300312 (recessed type) must be used with first type No. 161012 Dirt Shield (on universal joint flange hub). Later type Oil Seal No. 301959 must not be used with this first type dirt shield, but both types of oil seal can be used with later type Dirt Shield No. 301817. Use special replacer tool to install oil seal in carrier bore.

Pinion Setting: Pinion position and gear mesh controlled by shims between pinion and rear bearing cone. When re-installing pinions, make certain that same number and thickness of shims (furnished .002", .003" thick), installed at this point as were removed when axle disassembled. Adjust pinion to obtain proper tooth contact by adding or removing shims at this point.

Pinion Bearing Adjustment: Bearing pre-load controlled by shims between spacer on shaft and front bearing cone. When re-installing pinion and bearings, make certain that same number and thickness of shims (furnished .002", .003", .004" thick) installed at this point as were removed when axle disassembled. Bearing resistance torque 27-32 in. lbs. (torque required to rotate pinion shaft).

Differential Assembly: To dismantle assembly, remove ring gear capscrews, press off ring gear, take out capscrews and separate differential case halves, lift out differential side gears, pinions, thrust washers, shaft, and thrust block. Use special puller to remove side bearing cone and rollers. When reassembling, see that ring gear seat on case is clean and free from burrs, use internal-tooth lockwashers on mounting screws, tighten screws evenly to 50 foot lbs. torque. Install brass thrust washer behind each differential pinion, see that locating pin in shaft engages hole in case and that thrust block in place on center of shaft. Install bakelite thrust washer behind each side gear (these washers control backlash and are furnished .031", .036", .041", .046", .051", .056"

CONTINUED ON NEXT PAGE

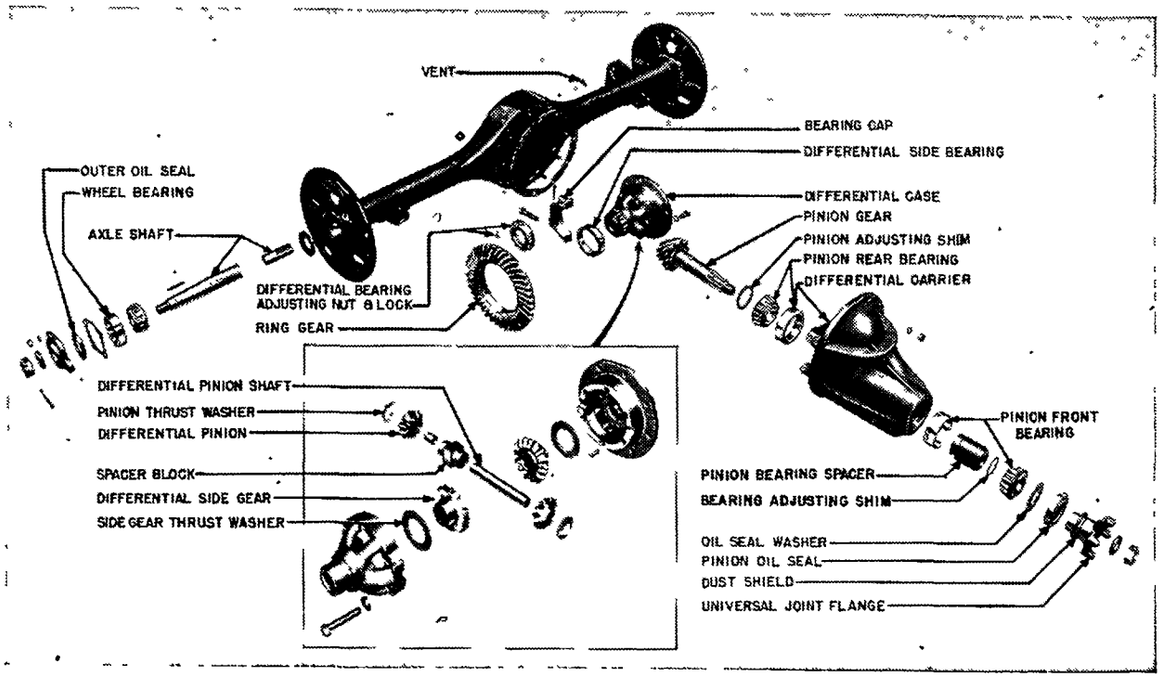

HUDS N HYPOID REAR AXLE

HUDSON HYPOID (C nt.)

thick for selective fit). Use special driver to install differential side bearing cone and rollers.

►NOTE—Ring gear should be heated in water to approx. 200°F. to facilitate installation.

Differential Bearing Adjustment & Ring Gear Backlash: When installing differential assembly in carrier, install adjusting nuts and bearing caps according to previous markings, tighten bearing capscrews finger tight. Turn left hand adjusting nut in until all backlash between ring and pinion gears is taken up, then tighten right hand adjusting nut tight. Set up dial indicator to check backlash, back off left hand adjusting nut and tighten right hand nut equally until correct backlash of .004-.006" is secured. Tighten left hand bearing cap screws to 55-65 ft. lbs. Turn right hand adjusting nut in one full notch to provide necessary .008-.012" spread for correct bearing pre-load, tighten bearing cap screws also to 55-65 ft. lbs., install adjusting nut locks.

Carrier Assembly Installation: Tighten carrier to axle housing nuts to 35-40 ft. lbs.

LINCOLN V12 SPIRAL BEVEL

LINCOLN V12 MODELS (1936 to 1940)

TYPE:—Spiral bevel, full floating type with torque tube drive. Pinion integral with shaft which is splined and pinned in sleeve at rear end of propeller shaft (propeller shaft should be disconnected by taking out pin and disengaging splines when pinion bearing assembly is to be dismantled). Pinion straddle mounted on two taper roller bearings (front), single roller bearing (at rear of pinion). Differential assembly mounted on taper roller bearings with adjusting nut under bearing cap at each side. Thrust block located behind ring gear at pinion is mounted on bracket bolted to carrier housing.

Propeller Shaft Front Bearing. Consists of a roller bearing assembled within the forward end of the torque tube (speedometer gear housing). Bearing is lubricated from universal joint and should not require servicing.

REMOVAL OF AXLE: *See "Rear Axle" on car model page.*

SERVICING:—Gear Adjustment. Paint gears to check mesh. Backlash should be .010". Adjusted by backing off one differential bearing adjusting nut and tightening opposite nut equally. See differential bearing adjustment below.

Axle Replacement. To remove shafts, remove locking ring at brake drum hub, pull shafts out (does not disturb wheels or wheel bearing adjustment). Shafts interchangeable.

Wheel Bearing Adjustment. Adjust bearings whenever removed for lubrication (5000 mile intervals). To remove. remove axle shafts, take off lock nut, lock washer, bearing nut on end of axle housing. When replacing bearings, turn up bearing nut so that bearing play is hardly perceptible, install lockwasher and lock nut.

OVERHAUL:—Pinion Bearing Assembly. Rear bearing held in place in housing by rivet adjacent to bearing hole (washers at each end of rivet engage bearing outer race). Pinion bearings seated in bearing sleeve against shoulder. Bearings adjusted by taking up pinion bearing nut at forward end f bearing assembly. Tighten lock nut securely and turn up lockwasher ears against nut after adjusting.

Pinion Setting:—Not adjustable. Replace worn parts.

Differential Bearing Adjustment:—To adjust, remove adjusting nut locks, loosen bearing cap nuts slightly, turn adjusting nuts. Replace locks and tighten bearing caps securely.

Ring Bear Backlash Adjustment:—When adjusting backlash, back off one differential bearing adjusting nut and tighten opposite nut exactly same amount to avoid disturbing bearing adjustment. Backlash should be .010".

LINCOLN (ZEPHYR) HYPOID

Used On:
ZEPHYR, ALL MODELS (1938 to 1942)
CONTINENTAL, ALL MODELS (1940-41-42)
CUSTOM, ALL MODELS (1941-42)
LINCOLN & CONT'L 66-H (1946-47-48)

TWO-SPEED AXLE NOTE:—Optl. on all models. This axle is Columbia Two-speed type. See separate article for data on this type.

DESCRIPTION: Hypoid gear, ¾-floating, with torque tube drive. Same design as used on previous model (see Ford, Lincoln, Mercury Rear Axle) except for pinion mounting as follows:

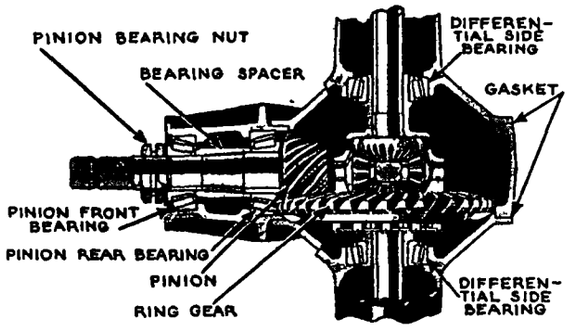

Pinion Assembly:—Pinion integral with shaft and mounted on taper roller bearings. Bearing cups seated directly against shoulders in housing. Bearing cones positioned on shaft by spacer.

Replacement Exchange Axle Assemblies—Assemblies consisting of differential housing (axle housing center section) with pinion gear installed (and set up for correct bearing adjustment and pinion gear mesh), and mated ring gear are furnished for all models as Part No. 86H-4020 (except 1942 models without Liquamatic Drive), No. 26H-4020 (1942 models without Liquamatic Drive only).

REMOVAL OF AXLE: *See "Rear Axle" on car model page.*

OVERHAUL:—Manufacturer recommends that Axle Assembly (Differential housing with Pinion installed) not be dismantled and should be serviced by Axle Assembly Exchange (Assembly furnished with Pinion installed, bearings adjusted, and set for marked backlash with mated Ring Gear). Overhaul data below applies to 1938 model.

Pinion Bearing Assembly—With propeller shaft disconnected, remove locknut and pinion bearing nut on forward end of pinion shaft, press pinion out toward rear. Use special pullers to remove bearing cups from housing.

Pini n Bearing Assembly & Adjustment:—Reverse dismantling directions above. Pinion bearing adjustment controlled by spacer on shaft between bearing cones (see also Pinion Bearing shims under Pinion mesh below). Spacers furnished in following thicknesses: 2.2700-2.2705", 2.2720-2.2725", 2.2740-2.2745", 2.2760-2.2765", 2.2780-2.2785", 2.2800-2.2805", 2.2820-2.2825", 2.2840-2.2845", 2.2860-2.2865", 2.2880-2.2885". With pinion assembled and pinion nut tight, pinion shaft should turn with 18-20 in. lbs. force (use ABV-129 gauge).

Pinion Bearing Adjustment—Correctly set at factory and should not be disturbed in service. Bearing pre-load should be 18-20 in. lbs. (measured with ABV-129 gauge).

Pinion Setting:—Pinion position controlled by shims installed between rear pinion bearing cup and shoulder in housing. These shims furnished .009", .010", .011", .012", .013", .014", .015" thick. First type shims (86H-4663-A to G) were flat washers 3.18" outside diameter. These shims superseded by new type (86H-4663-T to Z) cup-shaped shims installed between rear bearing and shoulder of pinion shaft. Whenever rear bearing cup removed, remove old shims and install new type.

Differential Bearing & Ring Gear Backlash Adjustment—Gaskets for installation between differential housing and right and left axle housings furnished in three thicknesses as follows: .008-.010" (86H-4035-A), .004-.006" (86H-4035-B), .013-.018" (86H-4035-C). Normal gasket thickness (for correct backlash and differential bearing adjustment) is .005-.008" at each side of differential housing. Vary thickness at left hand housing to adjust backlash (keep total thickness for both sides same to avoid disturbing differential bearing adjustment), vary thickness at right hand side to adjust differential bearings (without changing backlash).

Ring Gear Backlash—Should be .002-.004". Ring gears marked with etched figure indicating correct clearance for each ring and pinion gear set.

DUESENBERG HYPOID

MODEL J & SUPERCHARGED SJ (1936-37)

NOTE:—Rear axle should not require adjustment during the life of the car and manufacturer recommends that no attempt be made to dismantle assembly. Entire axle assembly should be removed from car if service work is required.

TYPE:—Hypoid gear, semi-floating type with torque tube drive. Pinion shaft integral with pinion and mounted on double row ball bearing (front), single row ball bearing (rear). Front bearing mounted in sleeve with pinion adjusting shims between sleeve flange and carrier flange. Pinion shaft is hollow and splined rear end of propeller shaft engages internal splines in forward end. Differential assembly mounted on single row ball bearing (left side), double row ball bearing (right side) with sleeve adjustment for ring gear backlash.

SERVICING:—Gear Adjustment. Ring gear backlash controlled by adjusting nut at right hand differential bearing. See also Pinion Setting below.

Axle Replacement. Complete axle shaft, brake drum, and wheel bearing assemblies may be removed by taking out 8 wheel bearing retainer bolts in axle housing flange on inner face of backing

CONTINUED ON NEXT PAGE

DUESENBERG (C nt.)

plates. Axles mounted on single row ball bearings which require no adjustment.

OVERHAUL:—Pinion Bearing Assembly. Bearings assembled on pinion shaft with spacer between them and held by pinion nut, lockwasher and locknut at forward end.

Pinion Setting:—Correct distance from rear face of pinion to center-line of ring gear marked on each pinion. Adjusted by adding or removing shims located between front bearing sleeve flange and carrier flange. When reassembling pinion, install same shim thickness at this point as previously to maintain pinion setting.

Differential Bearing Adjustment:—Ball bearings used. No adjustment required.

NASH SPIRAL BEVEL

NASH MODELS

Ambassador Six, All Models (1936 to 1939)
Ambassador Eight, All Models (1936 to 1939)
'400' Model 3640A (1936)

NASH-LAFAYETTE MODELS

All Models (1936 to 1939)

HYPOID AXLE NOTE:—Manufacturer recommends that Hypoid axles (used on some models) not be disassembled or serviced in the field. Service data below applies to Spiral Bevel axles only.

NOTE:—Two types used—"Small Type" (Six and Nash-Lafayette). "Large Type" (Nash 8). Axles similar except that Small Type does not have separate differential carrier (differential assembly mounted on bearings seated directly in housing). Large Type has separate carrier which can be removed from housing for servicing. Servicing operations are same for both exles except as noted below.

TYPE:—Spiral bevel, semi-floating type with Hotchkiss drive. Pinion integral with shaft and mounted on taper roller bearings seated directly in housing with spacer on shaft between bearing cones. Differential assembly mounted on taper roller bearings with adjusting sleeve at right hand bearing only (Small Type), both bearings (Large Type). NOTE—Small Type axle has shims for backlash adjustment located at left hand differential bearing.

REMOVAL OF AXLE: *See "Rear Axle" on car model page.*

SERVICING:—Gear Adjustment—Paint gears to check mesh. Backlash should be .005-.007". Backlash adjusted by adding or removing shims located behind left hand differential bearing (Small Type), backing off one differential bearing adjusting sleeve and turning up opposite sleeve equally (Large Type). See Pinion Setting and Differential Bearing Adjustment below.

Axle Shaft Replacement—To remove shaft (with wheel and hub removed), take off nuts on bearing retainer on backing plate, remove oil seal, retainer, backing plate and bearing adjusting shims. Pull axle and bearing assembly. When replacing shims adjust endplay by adding or removing shims between backing plate and housing flange to secure desired endplay of .004-.006" total. This adjustment must be made equally at b th wheels to insure thrust block being centered on differential pinion shaft.

OVERHAUL:—Disassembly—With axle shafts out, remove rear housing cover (Small Type only), loosen bearing cap bolts, mark adjusting sleeve position (to insure correct reassembly) and back sleeves off (sleeve at right hand end only on Small Type), remove bearing cap bolts and bearing caps, lift differential assembly out. To remove pinion, take off universal joint companion flange nut, pull flange, press pinion out of housing toward rear. Use pullers to remove bearings from housing.

Pinion Bearing Assembly:—Bearing adjustment controlled by shims located between spacer on shaft and forward bearing cone. When assembling pinion, install correct washer and shim pack (for correct pinion mesh—see Pinion Setting below) on pinion shaft against pinion, install rear bearing cone and bearing spacer. Install pinion shaft in housing, install sufficient shims on shaft in front of bearing spacer to insure positive endplay in shaft when assembled (for bearing adjustment), install front bearing cone, companion flange and nut, tighten nut securely, check bearing adjustment as directed below. NOTE—Do not install oil seal in front end of housing until after bearing adjustment completed, then install new seal.

Pinion Bearing Adjustment—Use dial indicator to check pinion shaft endplay with companion flange nut tight. Disassemble pinion shaft and remove shims from between front bearing cone and spacer equal to this endplay plus .003" additional to insure bearings being pre-loaded or set up .003" tight.

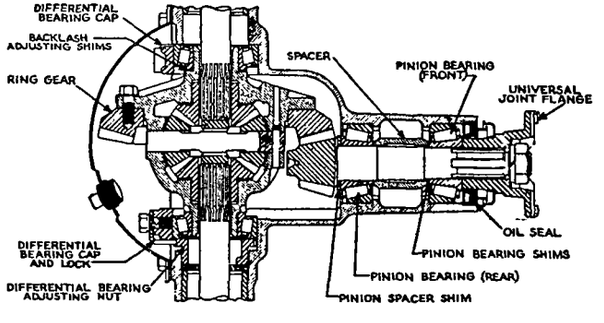

Pinion Setting:—Pinion mesh controlled by washer (or washer and shim pack) installed on shaft between pinion and rear bearing cone. Use Pinion Setting Gauge SE-534-A to determine washer thickness for pinions as follows: With pinion installed in housing or carrier, install gauge with end discs seated in differential bearing bores in housing, install rectangular checking block on rear face of pinion, turn gauge micrometer so that shaft just contacts ground surface of checking block (rock gauge slightly on end discs to secure extremely accurate reading). Subtract gauge reading from standard figure of .408" (Small Type), .190" (Large Type) which will give correct washer thickness for standard pinions (marked by =0 following the set number on the end of the pinion teeth). If pinion marked + r —, subtract shims (if pinion marked +), add shims (if pinion marked —) equal in .000" to the figure on the pinion following this plus or minus mark. Install washer and shims equal to this final figure on shaft between pinion and rear bearing cone and re-install pinion in housing.

Pinion Adjusting Washer Note—Washers for pinion adjustments are .129", .130", .131" thick and are used in combination with one to three .003" shims to make up all necessary thicknesses from .117" to .140" (in .001" steps—thicknesses outside these limits not required). Part Nos. for these washers and shims are as follows: Washer—No. 28283 (Small Type), 22838 (Large Type), Shims—No. 18742 (Small Type), 15578 (Large Type). CAUTION—Adjusting washer must be installed with chamfered side toward pinions and Shims (if used) between washer and bearing cone.

Differential Gear & Bearing Assembly:—To dismantle differential gear assembly, drive out pin in differential pinion shaft, remove shaft, axle shaft thrust block, pinions, side gears and thrust washers. When reassembling, make certain that thrust washers are installed on back of each side gear and pinion and that thrust block is installed on pinion shaft (this block transmits thrust from one shaft to the other). On Small Type axles only, shims are installed on differential case hub on left side (between case and differential side bearing) to control ring gear backlash. NOTE—On Large Type Axles, when installing differential assembly in carrier, tighten left hand bearing adjusting sleeve until all backlash removed between ring and pinion gears, then back off adjusting sleeve six notches or one half turn until notch is in line with lock on cap, make all bearing adjustments by turning right hand adjusting sleeve. This procedure will insure correct ring gear backlash of .005-.007".

Differential Bearing Adjustment:—With right hand bearing adjusting sleeve lock removed, and bearing cap loosened slightly so that sleeve can be turned, tighten adjusting sleeve until all bearing endplay is just removed and notch in sleeve lines up with lock, then tighten adjusting sleeve two notches additional to provide correct bearing pre-load, tighten bearing cap and install adjusting sleeve lock.

Ring Gear Backlash Adjustment (Small Type)—Check backlash at several points around ring gear. If backlash not within limits of .005-.007", dismantle axle, remove left hand differential side bearing, add or remove shims on hub behind bearing cone (add shims to increase backlash, remove shims to decrease backlash—.005" shim thickness will change backlash .0025"), reassemble axle. Readjust differential bearings (bearing adjustment will be affected by any change in shim thickness).

Ring Gear Backlash Adjustment (Large Type)—Check backlash at several points around ring gear. If outside limits of .005-.007" adjust by loosening both bearing caps and backing off right hand adjusting sleeve (to decrease backlash), left hand adjusting sleeve (to increase backlash), then **tighten opposite sleeve exactly same number of notches** to avoid disturbing differential bearing adjustment. See Note under Differential Bearing assembly above for correct setting up of differential bearings when assembling axle to insure backlash being correct.

NASH HYPOID

NASH MODELS

Ambassador Six, All Models (1940 to 1948)
Ambassador Eight, All Models (1940 to 1942)

NASH-LAFAYETTE MODELS

Model 4010 (1940)

►**REAR AXLE IDENTIFICATION TAG:** Ring & pinion gear ratio stamped on tag attached to axle by one of differential housing cover bolts.

►***CAUTION—Tag should be kept with axle parts and reinstalled when axle reassembled. Install new tag when gear ratios changed (tag furnished with gears).***

DESCRIPTION: Hypoid gear, semi-floating type with Hotchkiss drive. Pinion and shaft mounted on taper roller bearings seated directly in housing with spacer on shaft between bearing cones. Shims for bearing adjustment located between spacer and front bearing cone, washer for pinion setting adjustment between pinion and rear bearing cone. Differential assembly mounted on taper roller bearings seated directly in housing with adjusting nut at right hand bearing cap only (shims installed between left bearing cup and housing for backlash adjustment).

NOTE—Axles on all models similar except for size. May be identified by diameter of tubes (pressed and welded in center casting). Tubes are 2½" (All Sixes), 3" (Eights).

REMOVAL OF AXLE: *See "Rear Axle" on car model page.*

AXLE SHAFT REPLACEMENT & WHEEL BEARING ADJUSTMENT: To remove axle shaft after the wheel and hub removed, take off nuts on bearing retainer (rear brake support plate), remove oil seal, retainer plate, bearing adjusting shims, then pull axle shaft and bearing assembly. When installing shaft, add or remove shims between retainer plate and axle housing flange to secure desired axle shaft endplay of .002-.004". When installing shafts, bearing cup should be allowed to project slightly so that cup will be properly located by brake support plate as it is tightened in place. NOTE—Cars are assembled at factory with .046" shim thickness between right axle tube and brake support plate, and sufficient shim thickness on left side for desired axle shaft endplay of .002-.004". This allows endplay adjustment to be made at each wheel.

OVERHAUL: Disassembly. With axle shafts out, remove rear housing cover, mark adjusting nut on right hand differential side bearing to insure replacing in same position, back adjusting nut off, remove bearing cap bolts and bearing caps, lift differential assembly out. To remove pinion, remove nut on end of pinion shaft, pull universal joint flange using puller J-1412. Remove pinion shaft oil seal (discard seal and install new seal when reassembling axle). Tap end of pinion shaft with soft hammer to loosen front bearing cone, remove bearing cone and roller assembly, remove shims located behind bearing cone, **note number and thickness of these shims** which control bearing adjustment. Remove pinion and rear bearing assembly through rear of housing. Use long drift to drive pinion bearing cups from housing (recess provided behind each cup for this purpose). Use pinion bearing tool J-2245 to remove rear bearing from pinion shaft, **note number and thickness of washer or shims on shaft behind bearing** which control pinion setting (gear mesh). To remove differential side bearing cone and roller assemblies, use special puller J-2497 being careful that puller does not contact roller cage or damage shims in back of left hand bearing (these shims control ring and pinion gear backlash).

Pinion Bearing Assembly:—Bearing adjustment controlled by shims located on pinion shaft between spacer and forward bearing cone. When installing pinion, install correct washer and shim pack for correct pinion mesh (see Pinion Setting below) on shaft against pinion, install rear bearing cone and bearing spacer. Install sufficient shims on shaft in front of spacer to insure positive endplay of shaft when installed in housing, install front bearing cone, universal joint companion flange or special tool (splined sleeve) and tighten nut on shaft securely. Then check bearing adjustment as directed below. NOTE—Do not install oil seal until after bearing adjustment has been made.

Pinion Bearing Adjustment: Use a dial indicator to check pinion shaft endplay with companion flange nut securely tightened (oscillate shaft in both directions while applying end pressure to insure bearings seated). Disassemble pinion shaft and remove shims from between spacer and front bearing cone equal to the observed endplay **plus .003"** to insure correct bearing pre-load or set (.003" tight).

Pinion Bearing Pre-load Adjustment with Tool J-2496: With pinion installed in axle housing (make certain that spacer and bearing adjusting shims in place on shaft between bearing cones), install tool on end of shaft in place of universal joint flange, tighten pinion shaft nut securely. Attach spring scale to exact center of tool handle (will provide 6" arm), check torque required to turn pinion shaft. Desired torque is 15-18 in. lbs. (spring scale reading x 6) for .003" bearing pre-load. If less than 15 in. lbs., remove shims from between spacer and front bearing cone; if more than 18 in. lbs., add shims at this point. When bearing adjustment completed, install new oil seal using Tool J-1556, install universal joint companion flange using Tool J-1375, tighten pinion shaft nut to 105-110 ft. lbs.

Pinion Setting (1940-42—Using SE-534A or J-1739 Pinion Gauge): Pinion mesh controlled by washer or washer and shim pack installed on shaft between pinion and rear bearing cone. Use Pinion Gauge SE-534A (1940-41), J-1739 (1942 on) and thicker (1.0245") section of the gauge checking block to determine correct bearing washer thickness for each pinion as follows: Make certain that rear bearing cup properly seated in housing, coat bearing with film of light oil, install bearing and bearing cone, roll bearing back and forth while applying pressure to insure bearing being seated. Install rectangular checking block on bearing cone, install gauge and make certain that end discs seated in differential bearing bores in housing (tap lightly with hammer to insure seating). Turn gauge micrometer until end of shaft just contacts ground surface of checking block while pinion bearing is being rotated under pressure. Subtract gauge reading from .408" (1940-41), .400" (1942 & later) to determine the correct washer thickness for standard pinions (standard pinions are marked by figure =0 following the set number stamped on the end of the teeth). If pinion marked by + or — figure, subtract shims (if pinion marked +), add shims (if pinion marked —) equal in thousandths to the figure following this plus or minus mark. Install washer and shims equal to this final figure on the shaft between the pinion and the rear bearing cone **Pinion Adjusting Washer Note**—Pinion Adjusting Washers furnished in thicknesses of .118", .119", .129", .130", .131" and can be used with one to three No. 18742 shims (.003" thick) to provide all necessary pinion setting adjustment variations from .118" to .140" NOTE—.117" washer also for 1940-41 cars.

►***CAUTION***—Install washer with chamfered side toward pinion and shims (if used) between the washer and the bearing cone.

Pinion Setting without Gauge—If new pinion being installed and pinion setting gauge not available, note washer and shim thickness used for old pinion, secure standard washer thickness for this housing by adding (if pinion marked +), subtracting (if pinion marked —) shims equal to figure following this plus or minus mark on the old pinion, finally correct this standard washer thickness in accordance with new pinion marking as directed under Pinion Setting above.

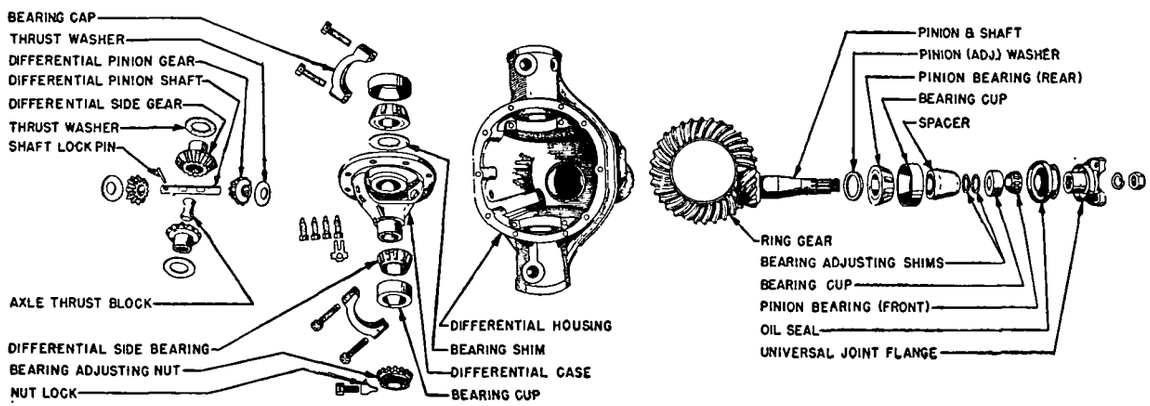

NASH HYPOID REAR AXLE (HOTCHKISS DRIVE)

CONTINUED ON NEXT PAGE

NASH HYPOID (C nt.)

Pinion Setting (1946-48—Using New Drive Pinion Gauge No. J-2499: With rear pinion bearing cup installed in housing, place bearing cone and roller assembly in cup, press in and revolve bearing cone so that rollers are properly seated. Bolt special gauge plate on bearing cone (thread bolt through housing and secure in place with cross-piece and thumbnut at forward end), make certain **that gauge plate does not contact housing** at any point. Mount dial indicator on tool with indicator button on top of gauge pin, set dial indicator at Zero with tension on gauge pin. Install tool in axle housing with **larger** diameter of adapter rings seated in side bearing seats (install adapters on tool with larger diameter rings outward). Swing gauge point across gauge plate and note highest reading of dial indicator, **subtract this reading from .140"** and resulting figure will be washer thickness required for a standard "0" pinion. If pinion is not standard (marked by — or + figure on end), add (if pinion marked —), or subtract (if pinion marked +) from the standard washer thickness an amount equal in thousandths to the figure following this — or + sign.

Differential Bearing Assembly: Use special puller J-2497 to remove bearing cone and roller assemblies from differential case. Note number and thickness of shims located behind left hand bearing cone (these shims control ring and pinion gear backlash). When installing bearings, make certain that same number and thickness of shims installed behind left hand bearing as were removed (place thickest shims against case), do not install any shims behind right hand bearing.

Differential Gear Assembly—To disassemble the **differential gear assembly, drive out pin in differential pinion shaft, remove shaft, axle shaft thrust block, pinions, side gears and thrust washers. When reassembling, make certain that thrust washers installed in back of each side gear and pinion and that thrust block is installed on pinion shaft (this block transmits thrust from one shaft to the other).**

►*CAUTION*—Always use new thrust washers for side gears and pinions. Install washers with oil pocket (pitted side) toward gears.

Differential Bearing Adjustment:—With lock on right hand bearing adjusting nut removed, and bearing cap loosened so that adjusting nut can be turned, turn adjusting nut up until all bearing endplay is just removed and notch on nut is in line with lock on bearing cap, then tighten adjusting nut additional 1-2 notches so that correct bearing pre-load of .004-.006" is secured. Tighten bearing cap screws to 105-110 ft. lbs., install adjusting nut lock. Recheck ring and pinion gear backlash.

Ring & Pinion Gear Adjustment: Gear mesh should be correct if pinion setting properly made (see above). Check gear tooth contact by painting gears. Check backlash as follows:

Ring Gear Backlash Adjustment—Check backlash with dial indicator at several points around ring gear. If backlash not within limits of .004-.006", dismantle axle, remove left hand differential side bearing, add or remove shims on hub behind bearing (add shims to decrease backlash, remove shims to increase backlash), reassemble axle, readjust differential bearings.

NASH "600" HYPOID

"600" Six, All Models (1941 to 1948)

►**REAR AXLE IDENTIFICATION TAG:** Ring and pinion gear ratio stamped on tag attached to axle housing by one of differential housing cover bolts.

►*CAUTION—Tag should be kept with axle parts and re-installed when axle reassembled. Install new tag when gear ratios changed (tag furnished with new gears).*

►**PROPELLER SHAFT COUPLING CHANGE (Beginning with 4640 Serial No. N4-101886):** *New type heavier coupling providing heavier section at point where propeller shaft and pinion shaft butt. To correct coupling failure, make certain this heavier coupling used and that coupling nut properly tightened (see below).* **Coupling Identification Note**—Threaded section of new heavier coupling is ⅞" long (1¼" on first type).

DESCRIPTION: Semi-floating, hypoid gear, torque Tube Drive and coil springing. Axle is similar in design to that used on other Nash models except for Torque Tube and Propeller Shaft data following.

Propeller Shaft Dampener (Not used on Cars with Overdrive)—Located on propeller shaft ahead of center bearing in torque tube. Consists of a tube type dampener clinched to split bushings which are forced into tube and secured to propeller shaft with extreme friction pressure. This dampener is designed to function principally during first 1000 miles of car operation and should be discarded if it is necessary to remove it from shaft. Dampeners cannot be re-installed and propeller shaft should be re-installed without tube.

Universal Joint Spring—Tapered coil spring backed by welded plug is installed in forward end of universal joint so that spring engages end of transmission driveshaft and assures correct location of universal joint. This spring must be in place when universal joint and propeller shaft assembly is installed.

REMOVAL OF AXLE: *See "Rear Axle" on car model page.*

AXLE SHAFT REPLACEMENT & WHEEL BEARING ADJUSTMENT: Same as for other Nash models. *See preceding "Nash Hypoid" Rear Axle for data.*

OVERHAUL: Axle has Torque Tube and Propeller Shaft Assembly (not used on other models) and differences in Pinion Setting and Differential Bearing adjustment instructions, these axles are serviced in same manner as other Nash models except for special procedure as follows:

Disassembly: No adjusting nut is used and differential assembly is positioned in axle housing by shim between differential bearing cup and housing at each side. To disassemble differential, mark bearing caps to insure correct reassembly, remove bearing cap bolts and caps, pry differential assembly out using care not to damage bearings or shims. When reassembling, place bearing cups and shims in position on bearings, tilt bearing cups slightly

CONTINUED ON NEXT PAGE

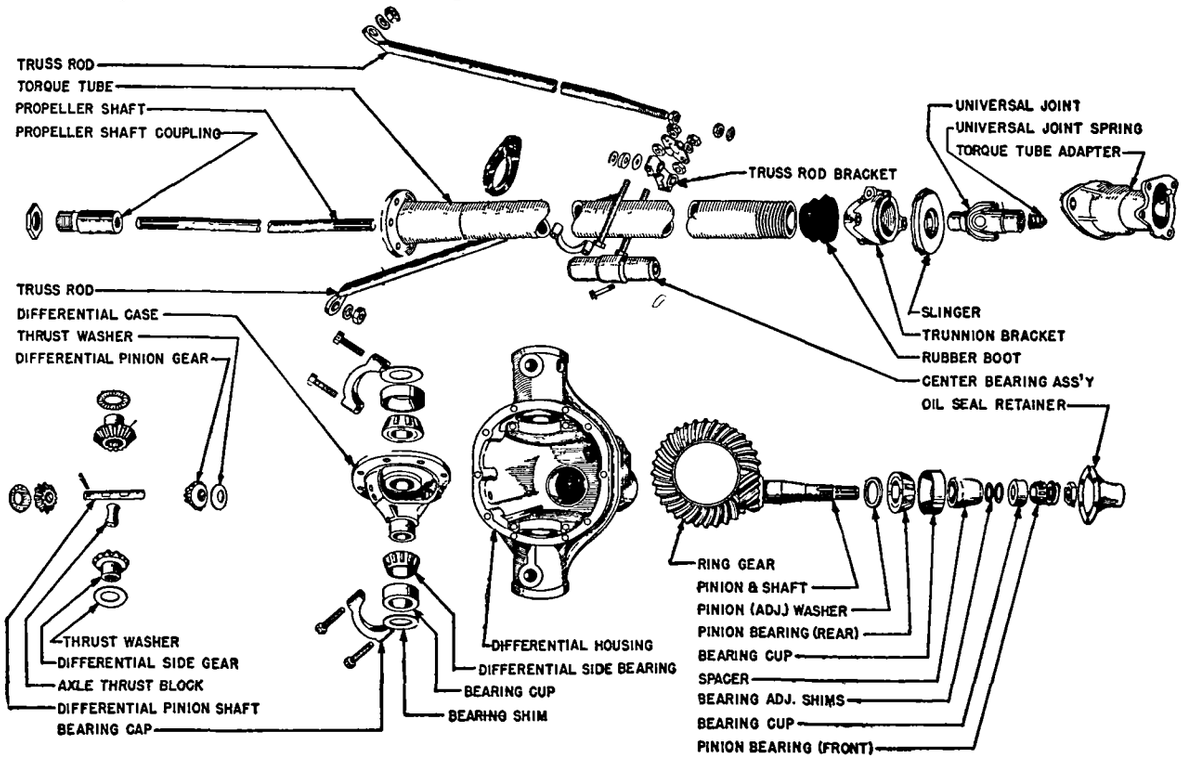

NASH "600" HYP ID GEAR AXLE (T RQUE TUBE DRIVE)

NASH "600" HYPOID (C nt.)

so that they enter seat in housing, force assembly into place in housing which will cause bearing cups to straighten on bearing rollers. If shims project, tap shims into place, install bearing caps and tighten bolts securely.

Pinion Bearing Assembly: Before pinion and bearings can be removed, propeller shaft must be disconnected by loosening coupling nut on rear end of shaft. Then remove the oil seal from housing, bend back lip of pinion nut locking plate, loosen nut. Pinion is then removed and installed in same manner as on Ambassador models.

Pinion Bearing Adjustment: Pinion bearings are adjusted in same manner as on Ambassador models. **Bearing Pre-load Adjustment with Tool J-2496**—See Ambassador model for complete instructions. Desired turning torque for "600" models is 12-14 in. lbs. for .003" bearing pre-load.

Pinion Setting: Pinion mesh controlled by washer on pinion shaft (see Washer Note below) and is adjusted in same manner as on Ambassador models. **Pinion Setting Procedure with Rear Drive Pinion Gauge No. J-2499**—See Amb. Six. Install adapter rings on tool with smaller diameter outward and seat this smaller diameter in side bearing seats in housing.

Pinion Setting Washer Note. Pinion checked and set in exactly same manner as on other Nash models but adjusting washers are furnished in thicknesses of .121" to .125" which is usual range of adjustment.

NOTE—Washers may be secured in thicknesses of .118" to .130", if required, for special adjustment.

Differential Bearing Adjustment: Bearing pre-load .004-.006". Controlled by shims between side bearing cups and axle housing at each side. To determine shim thickness, install carrier in housing with one .075" shim at each side, check endplay. If endplay noted, install next thicker shim on each side and recheck. With endplay just taken up, **install .005" thicker shim on right hand side** which will provide correct bearing pre-load of .004-.006". Tighten bearing cap screws to 55-60 ft. lbs. Check ring gear backlash with a dial indicator, finally check gear mesh by painting gear teeth with red lead and rotating gears.

Differential Bearing Adjusting Shim Note—These shims furnished in thicknesses of .075", .080", .085", .090", .095".

Ring Gear Backlash Adjustment: Should be .004-.006". Adjust by adding or removing shims between left hand differential bearing cup and housing, same shim thickness must be removed or added at right hand bearing to avoid disturbing differential bearing adjustment.

►*CAUTION—Total shim thickness must not be changed when adjusting backlash (will disturb bearing adjustment).*

TORQUE TUBE & PROPELLER SHAFT ASSEMBLY Removal & Disassembly: First unscrew the Trunnion Bracket from forward end of torque tube, remove rubber boot. Remove nuts from bolts holding truss rod clamp bracket and from truss rods, remove clamp bracket and truss rods (locating screw in upper half of bracket positions center bearing in torque tube). Take out bolts mounting torque tube on rear axle housing, remove torque tube, withdraw the propeller shaft and center bearing assembly (universal joint is light press fit on forward end of shaft and may be pried from the shaft, coupling at rear end of shaft is tight press fit). See that spring in forward end of universal joint is not lost and make certain this spring in place when assembly re-installed in car.

NOTE—If dampener on shaft (not used on cars with overdrive) removed from propeller shaft, discard this dampener assembly when re-installing propeller shaft (dampener cannot be re-installed and not needed after first 1000 miles of operation.

Propeller Shaft Coupling Nut Installation: When assembling propeller shaft to pinion shaft, align both shafts and **support propeller shaft for its full length to maintain this alignment** while coupling nut is being tightened. This is necessary to prevent coupling binding and to insure nut being properly tightened.

►*CAUTION—Make certain new type coupling used (see Propeller Shaft Coupling Change above) and coupling nut tightened exactly as directed to prevent coupling failure in service.*

Reassembly: Reverse disassembly directions. Make certain that nuts on both truss rods drawn up uniformly and securely locked so that torque tube and axle are properly aligned and that locating screw in clamp bracket upper half enters hole in center bearing so that bearing is properly positioned in torque tube. Adjust trunnion bracket when axle installed in car as directed below.

CAUTION—Stamped steel slinger which is press fit on universal joint rear yoke must not interfere with shoulder on front face of trunnion bracket (slinger prevents dirt entering torque tube at this point but noise will result unless some clearance exists). When assembling trunnion on torque tube, front end of propeller shaft should extend out ⅛-¼" beyond front face of trunnion bracket with shaft pushed in so that rear end is in contact with pinion shaft. Less clearance may cause contact between slinger and trunnion bracket, greater clearance will make slinger ineffective.

TORQUE TUBE TRUNNION BRACKET: On front end of torque tube. Must be properly installed and adjusted before rear axle and torque tube assembly installed on car. Follow adjustment and installation instructions listed below. Propeller shaft center bearing must also be lubricated every 5000 miles.

Trunnion Bracket Adjustment: With rear axle completely assembled (rear end of propeller shaft against pinion shaft, torque tube assembled on housing), position trunnion bracket on torque tube so that front end of propeller shaft projects ⅛" to ¼" beyond the face of trunnion bracket. After bracket properly positioned, adjust clampscrew on underside of bracket to remove all excess clearance between threads on bracket and tube without setting up excessive friction. Bracket must be free to move on threaded tube. Lock clampscrew nut with cotter pin. Rubber boot must be installed behind bracket to protect threads on tube from road dirt. Threaded parts require no lubrication except at time of assembly. Lubricate these parts sparingly.

►*CAUTION—If propeller shaft extends less than ⅛" beyond face of trunnion bracket, universal joint slinger may rub on bracket. If shaft extends more than ¼", effectiveness of slinger will be reduced.*

Trunnion Bracket Installation on Car: After bracket position adjusted (above), torque tube and rear axle justed as directed above, torque tube and rear axle assembly can be assembled to transmission as follows: Thread 2 special trunnion bracket studs (with tapered ends to rear) on trunnion bracket and lock with nuts and lock washers. Assemble plain stamped steel retainer, rubber cushion block (with small extension to front), steel retainer with pilot flange over extension on rubber block, on each stud. Install torque tube and rear axle assembly with trunnion bracket studs passing through holes in transmission (or overdrive) rear bearing retainer. Assemble steel retainer with pilot flange to rear, rubber block with extension to rear, and plain steel retainer on front end of studs. Tighten retainer nuts on studs until rubber cushions held under slight tension. Lock nuts with 'palnuts'.

Propeller Shaft Center Bearing Lubrication—Bearing must be lubricated every 5000 miles as follows: Take out locating screw on top side of upper clamp on torque tube at front end of truss rods, fill with light engine oil to overflowing in screw hole, replace screw and wire in place.

►*CAUTION—Do not turn propeller shaft or rear wheels with bearing locating screw out (bearing will move out of place).*

NASH "600" REAR SUSPENSION

"600" Six, All Models (1941 to 1948)

TYPE:—Consists of special coil springs installed in pockets in frame cross-member at upper end and in spring seats bolted to axle housing by clamp bolts at lower end. Direct acting shock absorbers are installed within springs (clamped in spring seat at lower end, bolted in extension bracket on frame cross-member at upper end) and extend through holes in cross-member. A transverse radius rod is bolted to frame cross-member (right side), and to axle housing (left side) with rubber cushions at each end.

SERVICING:—No servicing operations required. See separate Shock Absorber article for shock absorber servicing data and spring data below.

SPRINGS:—Same spring used on right and left sides of car. Spring is Nash Part No. 3107067.

Spring Specifications—Free length 16 9/16", length at curb load 9 13/16".

OLDSMOBILE (1936)

Six, Model F-36 & Eight L-36 (1936)

TYPE:—Spiral bevel, semi-floating type. Pinion integral with shaft and mounted on special long double row ball bearing. Differential assembly mounted on ball bearings which take thrust (adjusting nuts).

SERVICING:—Gear Adjustment. Check pinion setting or paint gears to check mesh. Backlash should be .004-.008". Adjusted by backing off one differential bearing adjusting nut and tightening opposite nut equally (see Differential Bearing adjustment).

Axle Replacement. Wheel bearings are special shielded type lubricated at factory. Sideplay on new bearings .008-.010", replace bearings when sideplay exceeds .015". Bearings pressed on shaft against shoulder (remove & install in an arbor press).

OVERHAUL:—Pinion Bearing Assembly. Shielded type (packed with lubricant at factory and should not be washed out). Bearing should have no endplay (replace if endplay noted). Bearing inner race is a press fit on pinion shaft (install in arbor press).

Pinion Setting:—Use Pinion Setting Gauge, J-705, install gauge in carrier in place of differential assembly, adjust micrometer so that stem contacts rear face of pinion. Gauge reading should be .0625" standard pinions with mark 'O' on end. Figure stamped on end of pinion should be added (minus figure), or subtracted (plus figure) from standard .0625" reading to secure setting for each pinion. Adjust pinion position by adding or removing shims between bearing retainer flange and carrier.

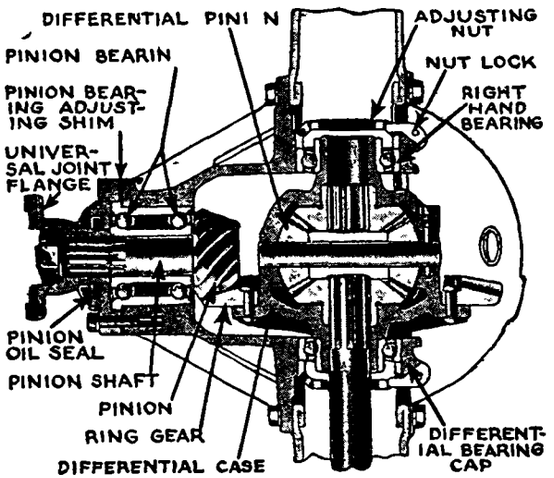

Differential Bearing Adjustment:—Back off bearing cap bolts one half turn, remove locks, turn adjusting nut in until bearing race just starts to turn, tighten nut 2 addt'l notches, tighten bearing caps.

Ring Gear Backlash Adjustment. To set up differential bearings for correct ring gear backlash when installing differential assembly, tighten bearing cap bolts securely and then back off one half turn, tighten left hand adjusting nut until all lash between ring gear and pinion taken up, then back off this nut exactly four notches to point where notch lines up with lock slot in cap. Then adjust differential bearings by turning up right hand adjusting nut (above). This will give correct backlash.

OLDSMOBILE (1937-46)

Six & Eight, All Models (1937 to 1946)

►**AXLE IDENTIFICATION NOTE:** Ring and pinion gear ratio stamped on upper outer surface of differential carrier of all axles for identification purposes as follows: 41:10—4.1-1 Ratio, 43:10—4.3-1 Ratio, 41:9—4.55-1 Ratio, 39:10—3.9-1 Ratio, 41:12—3.42-1 Ratio, 40:11—3.63-1 Ratio.

►**NEW AXLE ON 1947 & LATER CARS:** *See "1947-48 Oldsmobile & Pontiac" Rear Axle for new type with adjustable pinion bearing pre-load.*

DESCRIPTION: Spiral bevel gear (1937-38), Hypoid gear (1939 on), semi-floating type with Hotchkiss drive. Pinion integral with shaft and mounted on double row ball bearing at front (this bearing takes thrust in both directions), roller bearing at rear (takes radial load only, no inner race used with this bearing). Bearings mounted directly in housing (front bearing locked in place by retainer sleeve held by tapered lockscrews in housing, rear bearing seats against shoulder in housing). Differential assembly mounted on Hyatt self-aligning (barrel) roller bearings with adjusting nut under bearing cap at outer end of each bearing.

REMOVAL OF AXLE: *See "Rear Axle" on car model page.*

AXLE SHAFT REPLACEMENT: Wheel bearings not adjustable (ball bearings). Replace shafts as follows:

Axle Replacement. Wheel mounting flange integral with axle shaft. To remove shafts, remove wheel (wheel nuts on left side of car have left hand threads), take out two bolts holding brake drum on axle shaft flanges, remove drums, take off nuts on 4 bolts holding backing plate on axle housing flange, remove static collector, pull axle shaft bearing retaining plate away from backing plate (be careful not to disturb backing plate which will damage brake lines), withdraw axle shaft and bearing assembly using puller J-942, replace one nut to hold backing plate in position.

Wheel Bearings & Oil Seal. Bearings are shielded type (lubricated at factory) and pressed on axle shaft against shoulder at wheel end of shaft. Remove bearings only when new bearings installed (see Bearing Collar Note below). To remove, use tool J-947-2 (to prevent bursting of race), and plate J-947-1 and press bearing off shaft in arbor press. Install new bearings in same manner using tool J-947-3 and plate J-947-1 to insure pressure being applied to inner race only. Before installing shaft, make certain that double feather edge of leather oil seal is in good condition or install new seal using tool No. J-944 (1937-38 cars), J-1049 (1939 and later cars). Coat outer rim of seal with Permatex or White Lead to prevent oil leaks between seal and housing.

Bearing Collar Note—On all models, collar is installed on shaft behind bearing. Collar must be split with chisel before bearing removed. After new bearing installed, press new collar on shaft firmly against bearing with tapered end toward bearing.

Wheel Bearing Note—New wheel bearings have .008-.010" sideplay and should not be replaced unless sideplay exceed .015" or bearings are rough.

OVERHAUL: Disassembly. Mark both differential bearing adjusting nuts and caps to insure correct reassembly, remove bearings caps and adjusting nuts, lift differential assembly out of carrier. Remove rear universal companion flange nut, use tool J-962, remove flange from shaft, press pinion shaft

CONTINUED ON NEXT PAGE

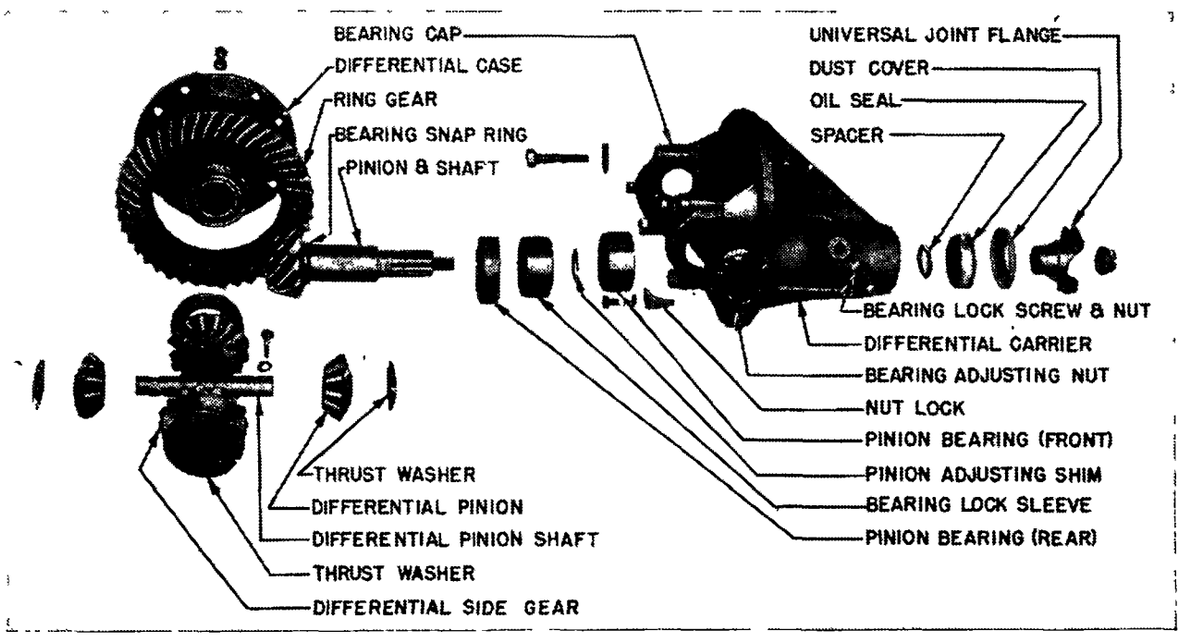

OLDSMOBILE 1937-46 (Cont.)

back through front ball bearing inner race and remove, remove and save shims installed on shaft directly back of this bearing. Do not remove snap ring on pinion shaft directly in front of pinion gear (this ring prevents rear bearing rollers from creeping on shaft). Remove rear bearing rollers (rollers cannot be removed singly on new bearings), use tool J-983 to pull outer race out of housing, take out 3 lockscrews in housing, remove locking sleeve, tap front bearing out.

Pinion Bearing Assembly:—Push front ball bearing into housing and tap lightly on outer race to seat bearing against shoulder in housing, insert bearing retainer sleeve (tapered end toward rear) and lock sleeve firmly in place against ball bearing race by turning up the three cone-pointed lockscrews evenly and securely and tightening lockscrew locknuts. Use tool J-940 to drive rear roller bearing outer race in place in carrier, coat the 14 bearing rollers with heavy grease and install in place in bearing race. Install correct shim thickness for each pinion against shoulder on pinion shaft (see Pinion Setting directions below), make certain that roller lock ring in place on pinion shaft at pinion end, install pinion in carrier guiding shaft through washer at forward end of carrier. Install companion flange, tighten flange nut (hold flange in vise). NOTE—Front ball bearing has slight 'pre-load' when new and should be replaced if any endplay noted. Pinion shaft should not be worn more than .0007" (compare with unworn shaft ahead of bearing). If any radial play noted at pinion when assembled, gears will not run quietly (replace roller bearing if shaft not worn).

Pinion Setting:—Standard shim thickness for each carrier indicated by marking on flange as follows: D5—.049", D4—.048', D3—.047", D2—.046", D1—.045", C—.044", S1—.043", S2—.042", S3—.041", S4—.040", S5—.039". 'D' indicates bearing shoulder deeper than standard, 'C' on center or standard, 'S' shallower than standard. These figures correct for standard or unmarked pinions. When pinion marked by plus or minus figure on face, shims should be added (+ sign), subtracted (— sign) from this standard shim thickness equal (in thousandths) to the figure following this plus or minus sign. Pinions which are unmarked do not require any correction to be made to the shim thickness as indicated by the carrier marking. Shims furnished in four sizes and colored for identification as listed below (use combinations of shims for all required thicknesses).

Shim Thickness	Part No.	Color
.012"	499528	Plain
.014"	503063	Blue
.015"	499529	Copper
.018"	499530	Plain

Pinion Marking Note—Standard pinions (which require no shim correction) are marked 'OC' (1937 cars) or are unmarked (later cars).

Differential Gear & Bearing Assembly:—To remove the differential side bearings, use tool HM-483B (1937-38 cars), HM-986 (1939 and later cars) installed so that pressure applied to bearing cone only. Use J-941 driver to install bearings. To dismantle differential gears and pinions, take out pinion shaft lockscrew and shaft, revolve pinions until aligned with openings in case, withdraw pinions, remove side gears and thrust washers. Install in same manner (thrust washers may be installed with either face toward gears).

Differential Bearing Adjustment:—Adjusting nuts and bearing caps should be marked before disassembly to insure correct replacement. To adjust bearings, loosen each bearing cap bolt one-half turn, remove locks, back off right hand adjusting nut until bearing outer race stops turning with nut, turn nut up until race begins to turn, tighten 3 notches, then repeat adjustment and turn nut up 1½-2 notches (1937-40 cars), 3-4 notches (1941 and later cars) from point where bearing race begins to turn with nut, tighten bearing cap bolts and install adjusting nut locks.

Ring & Pinion Gear Adjustment: Paint gears to check mesh. Backlash should be .004-.008". Adjusted by backing off one differential bearing adjusting nut and tightening opposite nut equally. See Pinion Setting and Differential Bearing Adjustment above.

Ring Gear Backlash Setting—When installing differential assembly in carrier, backlash adjustment will be simplified if left hand adjusting nut turned up to eliminate all backlash between ring gear and pinion (right hand nut must be backed off to permit this movement) and then backed off 4 notches so that lock slot in adjusting nut and bearing cap are lined up. Adjust differential bearings by turning right hand nut only and then check backlash which should be within limits of .004-.008".

OLDSMOBILE REAR SUSPENSION (1939-40)

Six & Eight, All Models (1939-40)

TYPE:—New type using coil springs with conventional rear axle. Springs are seated in bracket on frame at upper end, seat on rear end of support arm at lower end and support car only (all driving and braking torque taken by support arms which are mounted on rubber bushings on frame 'X' member at front end and bolted to axle housing near wheel at rear end). A track bar is linked between the frame cross-member and the axle housing to prevent side movement. Shock absorbers are mounted on rear ends of support bars under axle

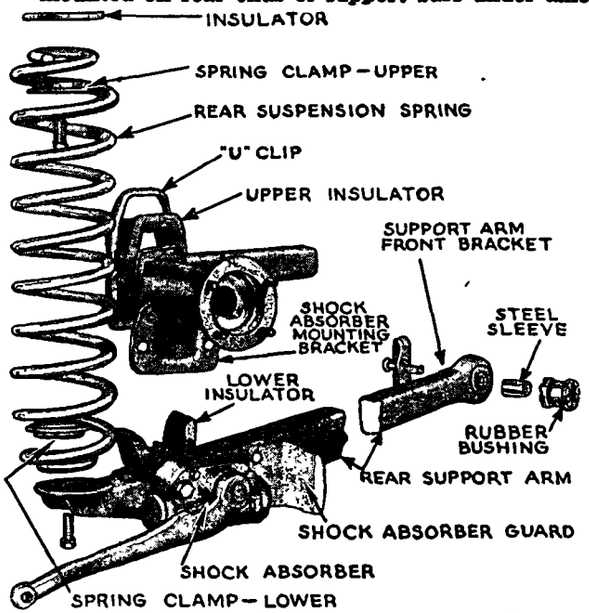

SERVICING:—Spring Removal—Disconnect brake hose at rear axle, disconnect shock absorber link at shock absorber arm, raise car to remove weight from spring, remove lower spring clamp and bolt (bolt has left hand thread), remove upper spring clamp and bolt, remove spring and insulator pad. CAUTION—Brake hose must be disconnected from axle whenever shock absorber arms or springs are disconnected to prevent damage.

Spring Installation:—Spring must be installed with 'curled' end (small diameter end coil) at bottom with curled end toward left side of car and pointing straight ahead (if spring has both ends curled, install with either end up, if one end is straight, this straight end must be installed at top). Place spring in position, install insulator on top of spring and spring clamps in end coils (lower clamp has grommet nut, upper clamp does not have nut which is located in frame side rail). Assembly will be facilitated if upper clamp and insulator are taped to spring. Line up holes in clamp and frame, lower car slightly to hold spring while bolts installed. Make certain that clamps turned so as to grip end coils tightly (clamps are cam shaped), install clamp bolts and tighten securely.

Support Arms:—To remove support arms, proceed as directed above for spring removal (without disturbing spring upper clamp bolt at frame). Disconnect rear axle housing 'U' bolt, free support arm from frame by loosening support arm brackets and removing support arm bolt. To install new rubber bushing in forward end of support arm, apply weak solution of soapy water to bushing, start bushing in arm, pound arm on wood block until bushing seated. Install steel bushing in same manner and make certain that it is centered in the rubber bushing. To install new insulators at rear axle, see that metal bearing edges of insulators are clean and free of rubber, apply soapy water to rubber to insure good seat. When replacing support arm, tighten U bolts to tension of 75 ft. lbs. (plus or minus 5 lbs.)

Track Bar:—Mounted on rubber bushings at both ends. To remove bar, take off nut on frame end bolt, pry bar forward to loosen serrated bolt from frame, then disconnect axle end of bar in same manner. When installing bar, attach at frame end first, lower car slightly on spring to align axle bolt holes.

REAR SPRINGS:—Spring part number is stamped on outside of one end coil (top or bottom—will not be visible with spring installed) and are paint-marked for identification as follows:

1939 Spring Specifications

Car Model	Color Mark
F-39 Bus. & Club Coupe	Blue
F-39 Tour. Coupe & Sedan	Red
G-39 Bus. & Club Coupe, Convertible	Green
L-39 Bus. & Club Coupe, Convertible	Green
G-39, L-39 Tour. Coupe & Sedan	Yellow

1940 Spring Specifications

F-40 Coupes	Blue (2)
F-40 Sedans	Red (2)
G-40 Coupes	Orange
G-40 Sedans	White
L-40 Coupes	Green
L-40 Sedans	Yell w

OLDSMOBILE REAR SUSPENSION (1941-48)

Six & Eight, All Models (1941 to 1948)

TYPE:—Coil spring type with support arms. Design changed from type used on 1940 models as follows:

Spring & Support Arm Axle Mounting—Mounting consists of an insulator bracket on the axle housing, insulators installed in upper and lower faces of bracket, insulator cups on outer ends of insulators, and spacer extending through entire assembly. This assembly is clamped between spring mounting plate (top) and support arm (bottom) by two bolts. Lower end of coil spring is clamped on this top spring mounting plate by the rear bolt (bolt threads into lower spring clamp).

Coil Springs—Spring are larger in diameter but shorter length than 1940 types.

Shock Absorbers—Shock absorbers now mounted on brake backing plates and linked to frame.

SERVICING:—**Spring Removal**—Disconnect brake hose at axle, disconnect propeller shaft at rear universal joint and remove, disconnect shock absorber arms from links. Remove upper spring bolt and axle housing rear insulator bolt (this bolt threads into lower spring clamp and anchors lower end of spring). Raise car to remove weight from spring, remove spring and upper insulator washer. CAUTION—Although rear springs can be removed by raising rear end of car until flexible brake connection is just taut (without disconnecting brake line), this method not recommended.

Spring Installation:—Spring must be installed with curled end of small diameter end coil at bottom (if both ends curled, spring may be installed either end up—some springs may have straight end which must be installed at top). Install spring with curled end of coil to rear and 1/16" to right of center-line through support arm. With spring in position, install insulator washer on top of spring and spring clamps in upper and lower end coils (lower clamp has grommet nut, upper clamp does not have nut which is located in frame side rail). Turn clamps so that they grip end coils snugly (clamps are cam shaped—assembly will be facilitated if clamps taped to spring). Line up holes in clamp and frame, lower car slightly to hold spring in place, install upper clamp bolt, thread rear insulator bolt up through insulator assembly and in to lower spring clamp, tighten both clamp bolts securely. CAUTION—See that spring clamps are seated snugly in springs and that spring does not ride on raised portion of mounting plate.

Axle Housing Insulators & Bolts:—See 'Spring & Support Arm Axle Mounting' description above for insulator assembly details. Upper and lower insulator halves are different sizes (upper half is longer) and must not be interchanged. Insulators are marked by words 'upper' and 'lower' molded in the rubber. Front axle housing insulator bolt is 5¾" long with right hand thread and should be installed with hexagon head at top. Rear bolt is 6" long with left hand thread and should be installed with hexagon head at bottom (bolt threads into lower spring clamp—no separate nut used). CAUTION—Both insulator bolts should be tightened uniformly. Do not tighten bolts singly.

Support Arms:—To remove support arms, proceed as directed for spring removal abov (do not disturb spring upper clamp bolt), removing both axle housing insulator bolts, push lower end of coil spring out of the way and remove insulators, plates, and cups. Free forward end of support arm from frame and remove arm. Install arm in same manner.

Track Bar:—Mounted on rubber bushings at each end. To remove bar, remove nut on stud at axle end, pry forward on arm to loosen serrated bolt, disconnect bar from frame cross-member bracket, rotate plate on frame end of track bar and remove bar.

REAR SPRINGS:—Spring part number stamped on outside of one end coil (will not be visible when installed on car) and are paint marked as follows:

1941 Rear Spring Specifications

Car Model	Wire Diameter	Paint Mark
66,68 5 Pass.	.568"	Green & White
66,68 2 Pass.	.540"	Green & Orange
76,78,96,98 5 Pass.	.587"	Green & Yellow
76,78,96,98 2 Pass.	.580"	Green & Aluminum

1942 Rear Spring Specifications

Car Model	Color Mark
66 Sedans & Conv. Coupe	Green & Brown
68 Sedans & Conv. Coupe	Green & Rust
66, 68 Club & Bus. Coupe	Green & Orange
66, 68 Station Wagon	Red
76, 78 Sedans	Green & Yellow
98 Tour. Sedan	Green & Gray or Red
98 Club Sedan	Green & Gray
98 Conv. Coupe	Green & Pale Green or Gray

1946-48 Rear Spring Specifications

Car Model	Part No.	Color Mark
66, 68 Sdns. & Convt.	417920	Grey
66, 68 Club Sdn. & Convt.	417866	Yellow & Rust
66, 68 Sta. Wgn.	1310399	Red
76, 78 (All)	415472	Green & Yellow
98 Club Sedan	415472	Green & Yellow
98 (Others)	416401	Green & Grey

PACKARD REAR SUSPENSION (EXCEPT CLIPPERS)

SIX, '110' MODEL 1700 (1939)
EIGHT,'120' 1701,1A,2('39),1801,1A('40), 1901,1A('41)
EIGHT '120' CONV. COUPE MODEL 2021 (1942)
SUPER EIGHT, 1703,4,5 (1939)
SUPER EIGHT, '160' 1803,4,5('40), 1903,4,5 ('41)
SUPER EIGHT, '160' 2004, 5 (1942)
CUSTOM SUPER 8, '180' 1806,7,8('40), 1906,7,8('41)
CUSTOM SUPER 8, '180' 2007, 8 (1942)

NOTE:—**Packard Six (1940-42)**—These models do not have this 'lateral stabilizer' and are equipped with direct acting shock absorbers at rear.

Shock Absorbers (All Models)—Servicing data given below applies only to 'fifth' shock absorber used on lateral stabilizer. Refer to Delco and Monroe Shock Absorber articles for servicing data for regular shock absorbers.

TYPE:—Consists of a special Lateral Stabilizer (with double acting shock absorber control), Anti-sway Bar, and opposed shock absorber mounting.

Lateral Stabilizer:—Connected between shock absorber (mounted on right side of frame cross-member above axle housing) and bracket on axle housing at left spring seat. This lateral stabilizer shock absorber is the 'Fifth' shock absorber.

Fifth Shock Absorber (for Stabilizer). Shock absorber is conventional double-acting vane type mounted on right side of frame cross-member with arm linked to lateral stabilizer bar. This type shock absorber can be refilled and adjusted as directed in Servicing section below.

Anti-Sway Bar:—Right end of bar is bolted to right hand shock absorber arm, left end of arm is pivoted in bracket bolted to underside of left hand spring seat and linked to frame (forward of axle) by link similar to those used on shock absorbers.

NOTE—Anti-sway bar not used on all car models.

SERVICING:—**Shock Absorber Refilling**—Remove filler plug, fill housing to level of bottom of filler plug hole with Houde 800 second fluid. Move arm up and down through two full strokes to eliminate all air from chamber, recheck fluid level.

Shock Absorber Adjustment:—Check adjustment by mounting shock absorber in vise with arm pointing up, attach 50 lb. weight to bolt hole in end of arm, check time required for arm to make complete stroke (from extreme upper to extreme lower position with weight attached). Time should be 18 seconds minimum, 24 seconds maximum at room temperature. If outside these limits, remove plug on end of shaft (at arm), turn adjusting needle valve in or out as required and recheck performance. Standard setting of valve is ¼ turn out from inner seated position. Tighten packing nut to correct leakage at valve.

Spring Leaf Inserts:—Spring leaves are separated by special rubber and lead alloy disks installed in cups at ends of leaves (various combinations of inserts used on various spring types). Springs should not be lubricated. If springs squeak, remove all metallic inserts, clean both sides of inserts with a wire brush and pack retainer cups with #3 cup grease when re-installing.

TROUBLE-SHOOTING:—If rear seat unsteady or rattles occur under car on rough roads, check lateral stabilizer shock absorber for free travel (arm should have no free travel and should require considerable force to move it). If refilling or adjustment does not correct shock absorber performance, replace unit. Check anti-sway bar and see that mounting bolts are tight at shock absorber arm.

PACKARD REAR SUSPENSION (CLIPPER MODELS)

Clipper Eight, Model 1951 (1941)
Six, Models 2000, 10 (1942, 2100, 30 (1946-47)
Eight, Models 2001, 11 (1942), 2101, 11 (1946-47)
Eight, Models 2201, 2211 (1948)
Super Eight, Model 2003 (1942), 2103, 2123 (1946-47)
Super Eight, Models 2202, 2222, 2232 (1948)
Custom Super Eight 2006 (1942), 2106, 2126 (1946-47)
Custom Eight, Models 2206, 2226, 2233 (1948)

NOTE:—Lateral Stabilizer shock absorber (Fifth Shock Absorber) is direct acting type on Clipper Models,

TYPE:—Consists of a special Lateral Stabilizer and Fifth Shock Absorber assembly used in conjunction with Direct Acting Rear Shock Absorbers. With exception of different types of shock absorbers used on Lateral Stabilizer for Clipper Models (Monroe Direct Acting), Suspension design is same as used on other Packard Models.

SERVICING:—**Shock Absorber Refilling**—See separate articles on Delco, and Monroe design (Fifth Shock Absorber) for capacity and filling data.

CONTINUED ON NEXT PAGE

PACKARD REAR SUSPENSION (C ntinued)

Fifth Shock Absorber (Clipper Models):—This model is not adjustable and must be dismantled for refilling or to change valve calibration. Refer to Monroe Direct Acting Shock Absorber article.

CAUTION—This shock absorber must be installed with air dome on side of body pointing upward and wrench slots in rod guide and seal assembly (at piston rod end of cylinder) must be turned at 45° to air dome so that air vent groove in guide will be at uppermost point in cylinder.

Rear Springs:—Rear springs are conventional leaf type but special interleaf inserts (3 different types used) are inserted in pockets at ends of leaves. Do not lubricate springs. When replacing springs, make certain that same insert combinations are used (different on various models).

PACKARD HYPOID

Clipper Eight, Model 1951 (1941)
Six, All Models (1937 to 1947)
Eight, "120" (1936-37)
Eight, All Models (1938 to 1948)
Super Eight, All Models (1939 to 1948)
Custom Super Eight, All Models (1940 to 1948)

►NOTES, CAUTIONS, & CHANGES

►**REAR AXLE OIL SEAL LEAKAGE CORRECTION:** *When replacing axle shaft oil seals to correct complaints of oil or grease on rear brake linings, check the following points:*

►**Axle Housing Vent**—*Must be kept open to prevent pressure building up in housing and forcing lubricant out.* Vent consists of drilled hole through screw attaching brake line tube junction on left side of axle housing. Remove and clean cap on screw, make certain that vent hole in screw open by running a wire through the hole (or remove screw and clean).

►**Brake Support Plate Drain Holes**—*Must be kept open to prevent oil or grease passing oil seal from being thrown on brake lining.* See that drain hole not clogged with dirt, grease, or undercoating, (normal drainage will prevent build-up of oil or grease in oil seal guard). Appearance of wheel bearing grease at this point indicates bearings overpacked (this condition will correct itself), appearance of rear axle lubricant indicates defective oil seal which should be corrected.

►**Excessive Shaft Endplay**—*Will cause seal wear and lubricant leakage.* Check and adjust endplay to .004-.007". When installing shaft, do not allow shaft to hang or drag on oil seal which may scuff seal or distort retainer.

►**Oil Seal Installation Cautions**—Before installing new seal, check old seal for proper contact on shaft and leakage around outer rim, check shaft for roughness at seal bearing surface. If inner edge (lip) of seal has not been in contact with shaft due to extending too far into housing, shim out new seal by installing special spacer (can be made by cutting a single coil from a horn ring spring) in housing back of seal. To correct oil leakage around rim of seal, apply light film of gasket paste in housing bore before installing seal.

CAUTION—Apply gasket paste only at point where seal contacts housing and use sparingly.

►**PINION BEARING SPACER CAUTION (Some 2103, 2106, 2126 Cars):** On these cars with rear axle carrier marked by two "8s" stamped in 1½" square pad on top of carrier, special 1/16" spacer used between pinion rear bearing cup and bearing cup shoulder in carrier. This spacer must always be used with these marked carriers.

►*CAUTION—Rear axle will be noisy due to incorrect ring and pinion gear mesh if spacer omitted.*

DESCRIPTION

DESCRIPTION: Hypoid gear, Angle-set (1936-37), semi-floating, same as Packard Senior Line except for pinion mounting. Pinion mounted on taper roller bearings seated directly against shoulders in carrier housing (at inner side of each bearing) and adjusted by flexible bearing sleeve on shaft. Differential assembly mounted on taper roller bearings with adjusting nut at outer end of each bearing

NOTE—On 1936 models, pinion is mounted on two single row ball bearings (each bearing taking thrust in one direction).

Ring Gear Support Roller (Some Models)—Consists of a roller-bearing-mounted roller mounted on an eccentric stud in the forward face of the differential carrier housing so as to act as a support for the back face of the ring gear. Roller is adjustable (see Servicing data below).

REMOVAL OF AXLE: *See "Rear Axle" on car model page.*

AXLE SHAFT REPLACEMENT & WHEEL BEARING ADJUSTMENT: See Oil Seal Leakage Correction above when replacing axle shafts. Use care not to damage oil seal.

Axle Shaft Replacement. To remove axle shaft, remove wheel, take off axle shaft nut and washer, remove hub and brake drum assembly (use puller), disconnect brake line, take out nuts in backing plate, remove seal guard, gasket, retainer, oil seal, backing plate, and bearing adjusting shims. Use puller J-2552 to remove axle shaft and wheel bearing.

►*CAUTION—Support weight of shaft while it is being withdrawn. Do not allow shaft to drag on inner oil seal (will damage or distort seal and cause oil leaks in service).*

Wheel Bearing Adjustment. Endplay up to .050" can be taken up by removing shims between backing plate and axle housing flange on one side. If endplay greater than .050", remove shims at both wheels equally for desired endplay of .004-.007".

NOTE—These shims furnished in thicknesses of .005", .007", .020".

DISASSEMBLY & OVERHAUL: With carrier assembly removed from axle housing, mark both bearing caps, adjusting nuts and pedestals to insure correct re-

CONTINUED ON NEXT PAGE

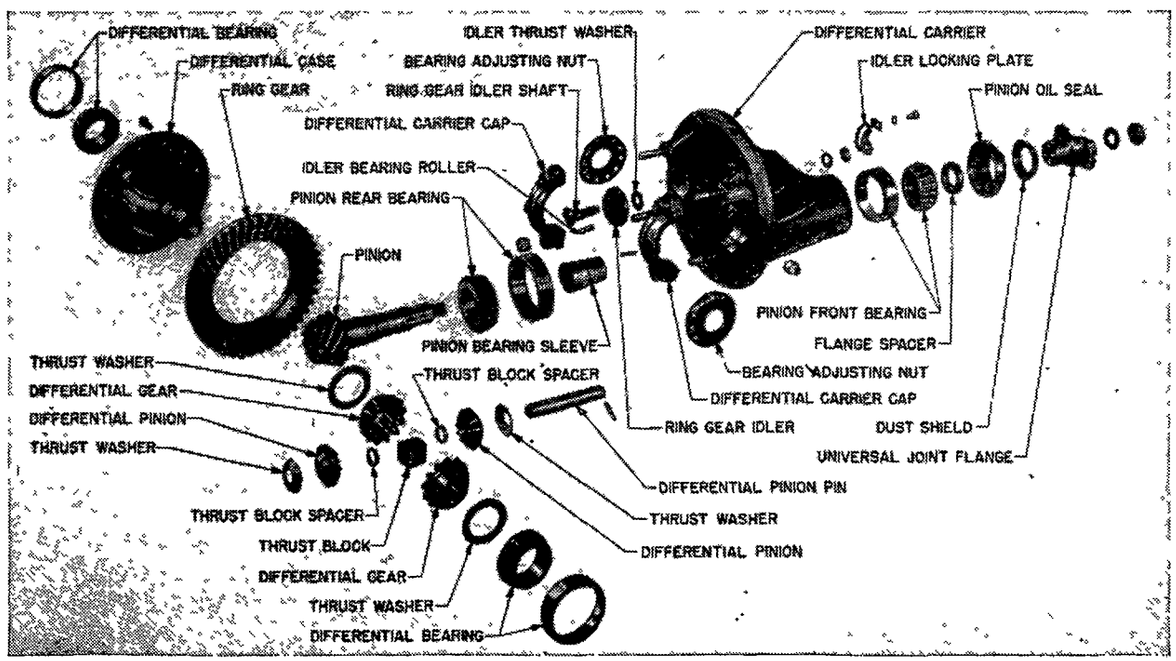

PACKARD HYPOID REAR AXLE

PACKARD HYPOID (C nt.)

assembly. Remove adjusting nut locks, loosen bearing cap stud nuts, back off adjusting nuts, remove bearing caps, lift out differential assembly. Remove nut on end of pinion shaft, use puller J-2576 to remove universal joint flange from shaft. Use a soft hammer to drive pinion, rear bearing, and sleeve out through rear of carrier. Remove pinion shaft oil seal, lift out front bearing cone and roller assembly. Do not remove pinion bearing cups from carrier unless replacement is required (CAUTION—If rear bearing cup removed, see Pinion Bearing Spacer Caution above for spacer used on some axles). If pinion rear bearing being replaced, use Adapter Plate J-2574 to press bearing off shaft in an arbor press.

Pinion Bearing Assembly (1936): Ball bearings used on pinion shaft. Bearing adjustment and pinion position controlled by spacer assembled in carrier in back of rear bearing outer race.

Pinion Bearing Adjustment: Tighten nut on end of pinion shaft until turning torque required to turn pinion shaft (pinion bearing drag only—ring gear out of carrier) is 2-2½ ft. lbs. or 24-30 in. lbs. Measure this torque with Preload Indicating Wrench and Adapter No. J-2751-B (torque wrench & socket). If new pinion bearing sleeve being used, it will be necessary to "collapse" the sleeve first by tightening nut until torque required to turn nut suddenly falls off. Then check pinion pre-load and tighten nut until force required to turn shaft is 2-2½ ft. lbs.

Pinion Nut Staking Note—If flat-type (Marsden) nut used on pinion shaft, nut must be staked in place at two or more points. New type nut (Hug-Lock) does not require staking. NOTE—Manufacturer recommends that new Hug-Lock type nut be used to replace earlier Marsden type nut whenever this type nut is removed in working on rear axles.

Pinion Bearing Assembly (1937 & Later): Press or tap pinion bearing cups in place in carrier bore (CAUTION—See Pinion Bearing Spacer Caution note above for spacer used on some axles). Press rear bearing cone and roller assembly on pinion shaft until tight against shoulder on shaft. Insert pinion in carrier, install spacer and front bearing cone and roller assembly on shaft. Install universal joint flange spacer (separate spacer used on some models only), lubricate new pinion bearing oil seal with engine oil, tap seal in place. Coat shaft splines with Lubriplate, install universal joint flange, dust shield, flange washer, and nut. Adjust bearings by tightening nut as follows:

Pinion Setting: On 1936 models, pinion position is controlled by spacer behind rear bearing outer race (same spacer as controls bearing pre-load). On 1937 and later models, pinion position not adjustable.

Differential Gear Assembly:—Differential side gear endplay should be .002-.005". Adjust by installing thrust washer of correct thickness between side gear and differential case. These washers furnished in various thicknesses as follows: .031" (No. 330797), .036" (324583), .041" (324584), .046" (324585). When assembling differential gears, make certain that thrust block and spacers (spacer on each side of block) installed on differential pinion pin between pinions. Lock the pinion pin in place by installing lockpin through hole in case and stake the edge of the hole to prevent pin working out in service.

Differential Bearing Assembly: Use puller TR-278R to remove side bearings from case. Bearing cones should be .001-.002" tight (if new bearing loose, replace case). Adjust bearings after assembly installed in carrier as follows:

Differential Bearing Adjustment—Bearings should be pre-loaded so that "spread" of bearing support pedestals of .010-.012" is secured. To make this adjustment, free adjusting nut locks. Loosen bearing cap nuts slightly to free adjusting nuts, make certain that there is some backlash between ring gear and pinion and clearance between ring gear and support roller (when used). Then back off right hand bearing adjusting nut until ring gear and differential assembly is loose in its bearings. Use accurate caliper and set caliper so that it will just slide over differential carrier with one leg resting on machined boss (adjusting nut lock pin boss) on each side of carrier **with .010" feeler between boss and caliper on one side.** Remove feeler, tighten right hand adjusting nut until caliper will just slide in place with the feeler removed (pedestals will have 'spread' this .010"). Correct pedestal spread should be .010-.012". After bearings adjusted and ring gear backlash checked (below), tighten bearing cap stud nuts to 65-70 ft. lbs. or bearing cap screws to 55-60 ft. lbs. and install adjusting nut locks. Adjust ring gear support roller clearance.

Ring Gear Support Roller Adjustment (Some Models only)—After adjusting ring gear backlash and differential bearing pre-load, adjust ring gear support roller by loosening lockscrew on roller stud sector plate and turning roller stud so that clearance between roller and back face of ring gear is .005". Make certain that sector plate and lockscrew are tight after making adjustment.

►*CAUTION—Rotate ring gear and make certain that mounting screw lock wires do not interfere with support roller.*

Ring Gear Backlash Adjustment: Backlash should be .004-.006". Adjust by backing off one bearing adjusting nut and tightening opposite nut exactly same number of notches to avoid disturbing bearing adjustment. NOTE—Backing off one nut and tightening opposite nut **one notch each** will change backlash approximately .004".

Ring Gear Replacement: When installing new gear, see that back face of gear and mounting face on differential case are clean and free from burrs. Check ring gear flange and pilot run-out on case which must not exceed .001". Install ring gear mounting screws, tighten screws evenly to 50-55 ft. lbs. (3/8"-24 screws), 70-80 ft. lbs. (7/16"-20 screws). Secure the mounting screws in pairs with lock wire through screw heads (CAUTION—see that lock wire does not interfere with support roller). Check ring gear for run-out after assembly mounted in carrier. Run-out at back face of ring gear must not exceed .004".

Lateral Stabilizer Installation (Clipper Models). The stabilizer must be installed in such a position that the air dome on the shock absorber (at one end of the stabilizer) is upward. Shock absorber rod guide and seal assembly (at piston rod end of shock absorber cylinder) must be turned so that wrench slots are at 45° to the air dome so air vent groove in guide will be at uppermost point in cylinder.

PACKARD "SENIOR LINE" HYPOID

Eight, All Models (1936)
Super Eight, All Models (1936-37-38)
Twelve, All Models (1936 to 1939)
IMPORTANT NOTE—Whenever rear universal joint flange is removed, fill pinion bearing oil reservoir with 1¼ ounces SAE. #50 oil after assembling spacer but before installing universal joint flange.

TYPE:—Angle-set, Hypoid gear, semi-floating type. Pinion straddle mounted on double row ball bearing front and rear. Front bearing mounted in sleeve with adjusting shims located between sleeve flange and carrier. Differential carrier mounted on roller bearings with adjusting nut under bearing caps on carrier.

REMOVAL OF AXLE: *See "Rear Axle" on car model page.*

SERVICING:—Gear Adjustment. Paint gears to check mesh. Backlash should be .003-.005". Adjust by taking up one differential bearing adjusting nut and backing off opposite nut equal amount. See differential bearing adjustment.

Axle Shaft Removal. To remove axle shaft, remove wheel, take off axle shaft nut and washer, remove hub and brake drum assembly (use puller), disconnect brake line, take out nuts in backing plate, remove backing plate, use puller to remove axle and bearing assembly.

Wheel Bearing Adjustment. Wheel bearings are double taper roller type and each wheel is adjusted independently. After axle shaft removed (see above) add or remove shims located between inner bearing cup and axle housing to secure desired endplay of .003" plus or minus .001". Coat inner face of bearing cap with good grade of gasket paste before installing.

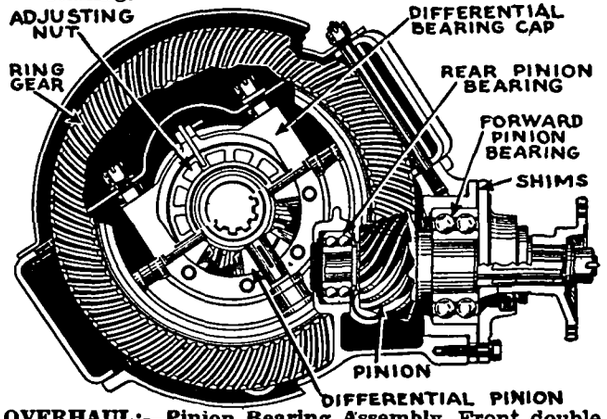

OVERHAUL:—Pinion Bearing Assembly. Front double row bearing held on pinion shaft by spacer and rear universal joint companion flange with pinion shaft nut at forward end.

Pinion Setting:—Pinion position controlled by shims installed between pinion carrier flange and face of differential carrier casting. Shims furnished .005", .008", .015" thick. Paint gears to check gear mesh.

Differential Bearing Adjustment (1935-36): Loosen bearing cap nuts ¾ turn, remove locks, turn right hand bearing adjusting nut up until some drag noticed when ring gear rotated by hand, tighten cap nuts and install locks.

CONTINUED ON NEXT PAGE

PACKARD "SENIOR LINE" HYPOID (C ntinu d)

Bearing Adjustment (1937-38-39). Bearings should be pre-loaded for .015" spread of support pedestals or differential bearing posts. To adjust, loosen bearing cap nuts ¾ turn, remove locks, back off right hand bearing adjustment nut until differential assembly is loose in bearings (make certain that left hand adjusting nut position allows backlash between ring and pinion gears). Use outside calipers to measure distance between outer faces of differential bearing posts with .015" feeler under one caliper leg, lock caliper. Tighten right hand bearing adjusting nut until posts are spread so that caliper will just slide over bearing cap lock bosses without feeler. Tighten bearing cap nuts, check backlash. Install adjusting nut locks after adjusting.

Ring Gear Backlash Adjustment. Back off one adjusting nut, tighten opposite nut equal amount. Check differential bearing adjustment above.

PONTIAC (1936)

Six & Eight, All Models (1936)

TYPE:—Spiral bevel, semi-floating type with torque tube drive. Pinion integral with shaft which is pinned and splined to propeller shaft within torque tube. Pinion shaft mounted on double row ball bearing (front), roller bearing (rear—at pinion). Front pinion bearing takes thrust in both directions, rear carries radial load only. Differential assembly carried on ball bearings with adjusting nuts under bearing caps on carrier.

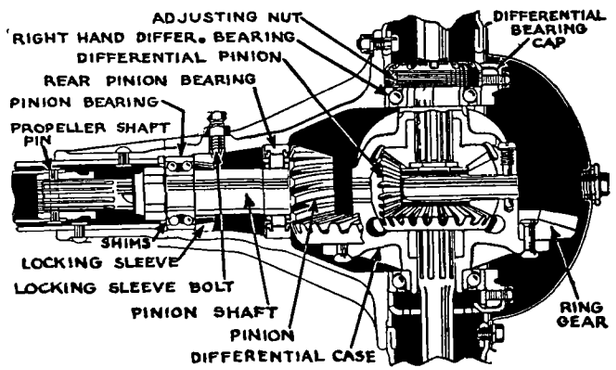

SERVICING:—**Gear Adjustment.** Paint gears to check mesh. Backlash should be .005-.010" for new gears or slightly more for worn gears. To adjust, back off one differential bearing adjusting nut, tighten opposite nut equal amount. See Pinion Setting and Differential Bearing Adjustment below.

Axle Replacement. Axles retained by 'C' washer at inner end in differential case. To remove axle, take out locking screw, withdraw differential pinion shaft, remove spacer block, pull axle in and remove 'C' washer, then push axle out. Shaft formed with wheel mounting flange integral.

Axle Shaft Endplay. Controlled by spacer block and should be Free Fit to .014" max. Spacer blocks furnished standard and .015" oversize.

OVERHAUL:—**Pinion Bearing Assembly.** With propeller shaft removed from torque tube, pinion shaft can be removed by cutting off head of pin and disengaging splines. Bearings are press fit on shaft and front double row ball bearing should have no perceptible endplay. When installing assembly in housing see that adjusting shims installed ahead of front bearing, tap pinion into seat against shims, with pinion screws drawn up evenly against pinion locking ring make final adjustment with full arm pull on 6-8" wrench for each screw.

Pinion Setting:—Adjusted by adding or removing shims located ahead of front pinion bearing in housing until location is correct. See Pinion Bearing Assembly (above) for directions.

Differential Bearing Adjustment:—Correct adjustment for both bearings is one to two notches tight of adjusting nut from point where outer race of bearing stops turning when nut backed off, if race does not turn when nut backed off, turn adjusting nut for each bearing up equally to point where race begins to turn, then one additional notch tight.

Ring Gear Backlash Adjustment. Back off one adjusting nut, tighten opposite nut equal amount. Check differential bearing adjustment above.

PONTIAC (1937-46)

Six & Eight, All Models (1937 to 1946).

►**AXLE IDENTIFICATION NOTE:** Rear Axles and Propeller Shaft marked for identification by paint mark on end of right hand axle shaft (Rear Axles), band of paint at rear end (Propeller Shaft) as follows:

1940 Models

Axle Ratio	Color Mark
4.3-1 Std.	White
4.55-1 Mtn.	Yellow
4.1-1 Plains	Green
3.9-1 Econ.	Red

Torpedo 40-29 Note—Axles for this model have blue mark on shaft in addition to ratio color mark.

1941 Models

Car Model	Rear Axle	Propeller Shaft
24,26 Std.	White	Yellow
25 Std.	Green	Green
27 Std.	Green	Red
28,29 Std.	White	Blue
3.9-1 Econ.(all)	Red	
4.55-1 Hvy.Duty(all)	Yellow	

1942 Models

42-25 (Std. 4.1-1)	Green	Green
42-26 (Std. 4.3-1)	White	Yellow
42-27 (Std. 4.1-1)	Green	Red
42-28 (Std. 4.3-1)	White	Blue
All (Optl. Econ. 3.9-1).	Red	
All (Optl. H. D. 4.55-1)	Yellow	

1946 Models

Model	Ratio	①Color Mark
46-25, 27	4.1-1	Green
46-46, 28	4.3-1	White
All (Econ.)	3.9-1	Red
All (Heavy Duty)	4.55-1	Yellow

①—On end of right hand axle shaft.

►**NEW AXLE ON 1947 & LATER CARS:** *See "1947-48 Oldsmobile & Pontiac" Rear Axle for new type with adjustable pinion bearing pre-load.*

DESCRIPTION: Spiral bevel gear (1937-38), Hypoid gear (1939 on), semi-floating type with Hotchkiss drive. Pinion integral with shaft and mounted on double row ball bearing (front), roller bearing (rear). Front bearing designed to take thrust in

CONTINUED ON NEXT PAGE

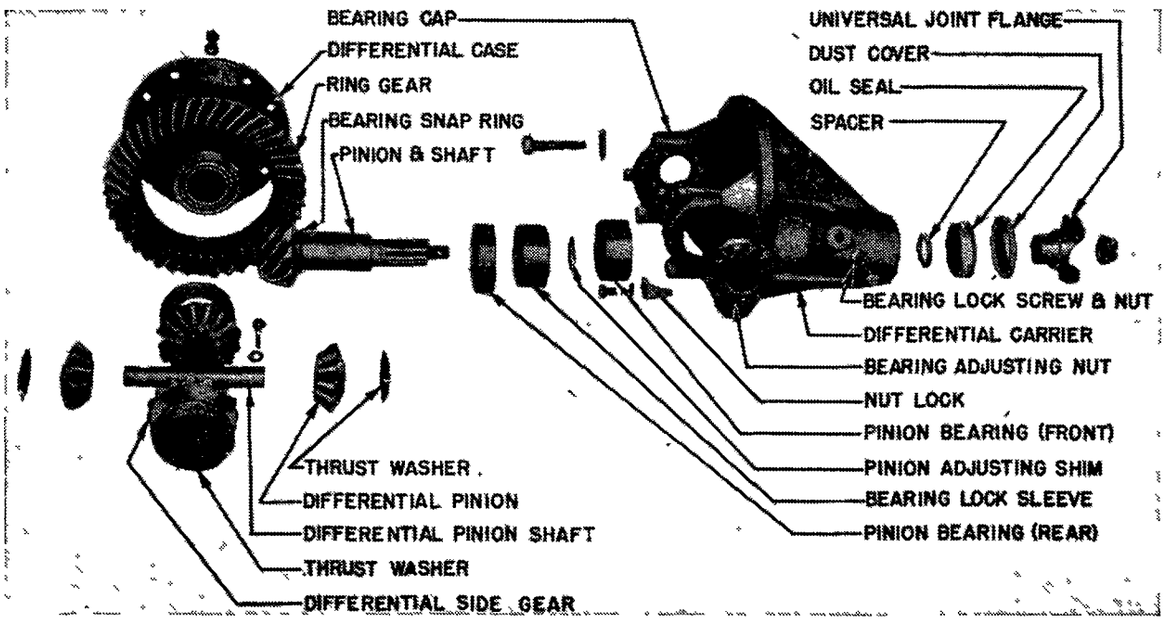

PONTIAC 1939-46 HYPOID GEAR AXLE

PONTIAC 1937-46 (C nt.)

both directions, rear bearing radial load nly. Differential assembly mounted on barrel type roller bearing at each side with adjusting nut under bearing cap at outer end of each bearing.

REMOVAL OF AXLE: *See "Rear Axle" on car model page.*

AXLE SHAFT REPLACEMENT: Wheel bearings not adjustable (ball bearings). Replace shafts as follows:

Axle Shaft Replacement. Wheel mounting flange integral with axle shaft. Bearings are special shielded type (lubricated at factory) pressed on axle shaft and held by retainer collar pressed on shaft. To remove shaft, remove wheel and brake drum, remove nuts from four bolts holding backing plate on housing, withdraw axle shaft (use puller J-942) taking care not to drag shaft on oil seal or to dislodge backing plate which will damage brake line. New bearings must be installed whenever removed from shaft. To remove bearings, use chisel to split retainer, press bearing off using special tool J-947 on outer race (pressure exerted on outer race which may burst if tool not used). Use same tool to install new bearing (pressure on inner race only) and retainer, pressing bearing on shaft against shoulder. Install shaft with left hand wheel studs on left hand side of car, shaft with right hand studs on right side of car. To renew oil seal, use tool J-943 to remove seal assembly, lubricate new seal with oil and coat outside rim of retainer with Permatex, use special tool J-944 (1937-38), J-1049 (1939 & later cars) to install the seal assembly.

NOTE—If edge of brake drum flange is not flush with surface of shield on backing plate when installed, use sufficient gaskets, Part No. 499776 or 499930 between drum and axle flange to align.

Rear Axle Oil Seal Leak Correction—Oil may leak out around outer edge of axle shaft seal (between seal and bore of axle housing). To correct this trouble and to prevent oil leaking at this point in service, always make certain that Permatex, Permagasket or other sealing compound is spread in bore of housing before installing seal and on both sides of rear brake oil deflector gasket.

OVERHAUL: Disassembly. Mark both differential bearing caps and adjusting nuts (to insure correct replacement), remove bearing caps and adjusting nuts, lift out ring gear and differential assembly. Remove universal joint flange nut, use puller J-962 and remove flange. Press pinion out of carrier taking care not to damage pinion shaft threads or oil washer. No further disassembly required if pinion setting only being adjusted (see Pinion setting below). Loosen locknuts and remove three wedging screws on outside of housing, press bearings and locking sleeve out of housing using tool J-964.

Pinion Bearing Assembly:—Double row ball bearing should have no endplay (replace if endplay is perceptible). Roller bearing may have moderate amount of radial clearance on pinion shaft (no inner race). Bearings are drive fit in carrier housing. To install, drive ball bearing in against shoulder in housing (use tool J-939), install locking sleeve against bearing, back off locknuts and install locking sleeve wedge screws (oil screws before installing, tighten each screw one-half turn at a time, finish with full arm swing on 6-8" wrench), tighten locknuts, drive rear roller bearing in against shoulder in case (use tool J-940). Install rear bearing spacer n pinion shaft, select correct shim thickness for each carrier and pinion (See Pini n Setting below), install shims n pinion shaft, press pinion in carrier through bearings being careful that no pressure exerted on pinion teeth and that bearing rollers are not wedged against shaft. Install universal joint flange (at right angles to cotter pin hole), tighten pinion nut

Pinion Setting:—Standard shim thickness for each carrier (indicated by mark on carrier flange) is as follows: D5—.049", D4—.048", D3—.047", D2—.046", D1—.045", 0—.044", S1—.043", S2—.042", S3—.041", S4—.040", S5—.039" ('D' indicates carrier bore deeper, 'S' shallower, than standard '0' dimension). To this standard shim thickness (which is correct for all unmarked or standard pinions), add additional shims (when pinion marked +), subtract shims (when pinion marked —) equal to amount of figure following this plus or minus mark on pinion (figure indicates shim thickness in thousandths). This total shim thickness will position pinion for correct mesh with ring gear. Shims furnished in four sizes and colored for identification as listed below (use combinations of shims for all required thicknesses).

Shim Thickness	Part No.	Color
.012"	499528	Plain
.014"	503063	Blue
.015"	499529	Copper
.018"	499530	Plain

NOTE—Unmarked pinions are standard and indicate no correction need be made to indicated carrier flange shim thickness.

Differential Gear & Bearing Assembly:—To disassemble, take out locking screw (in case at end of pinion shaft), withdraw shaft, take out differential gears, thrust washers and pinions. Shaft must be removed before 'mountain-ratio' ring gear can be removed. Differential bearing inner race is .0012" press fit on hub (if less than this amount, replace case or copper-plate hub). To remove bearing, use puller J-986 (exert pressure on inner race only), install in same manner using tool J-941. Replace bearings if rough r pitted.

Differential Bearing Adjustment:—Remove adjusting nut locks, back off bearing cap nuts just enough to relieve strain so that nuts can be turned, mark nut and cap to establish original position, back off right hand nut slowly until bearing race just stops turning with nut (amount nut turned indicates 'notches tight' of nut. Turn adjusting screw in until race just starts to turn with nut, then tighten nut additional 1½ min., 2½ max. (1940 & earlier cars), 2½ min., 4 max. (1941 and later cars) notches for correct bearing pre-load. Tighten bearing cap nuts securely and install adjusting nut locks.

Ring & Pinion Gear Adjustment: Paint gears to check mesh. Make certain that pinion flange nut, ring gear mounting screws, and pinion thrust bearing wedging screws are tight and that differential bearing adjustment is correct before checking gears. Backlash .003-.012". Adjust by backing off one differential bearing adjusting nut and tighten opposite nut equally. See Pinion Setting and Differential Bearing adjustment above.

Ring Gear Backlash Adjustment—When adjusting differential bearings (above), if ring gear has slight backlash (.005"), equalize differential bearing adadjustment by tightening each adjusting nut 1½-2 notches (do not make entire adjustment at right hand nut). Backlash can be adjusted without disturbing differential bearing adjustment by backing off one adjusting nut and tightening opposite nut exactly same number of notches. Recheck bearing adjustment after adjusting backlash.

Ring Gear Replacement:—Replace ring and pinion gears as matched sets. Ring gear mounted on differential case by special heat treated alloy steel capscrews (do not use ordinary screws). Use new heavy type lockwasher on each screw when installing.

1947-48 OLDSMOBILE & PONTIAC

Oldsmobile Six & Eight, All Models (1947-48)
Pontiac Six & Eight, All Models (1947-48)

►NOTES, CAUTIONS, & CHANGES

►**IMPORTANT SERVICE CAUTION:** Pinion bearing pre-load is controlled by universal joint companion flange nut on pinion shaft and bearing adjustment will be disturbed when this nut is loosened. **Pinion bearings must be adjusted each time companion flange nut is disturbed.** See Pinion Bearing Pre-load Adjustment (see "Disassembly" below) for data.

►**PINION BEARING PRE-LOAD CHANGE:** *Pinion bearing pre-load for bearings in service (after several thousand miles of use) should be 10-12 in. lbs. (supersedes original specification of 15-20 in. lbs.).* When re-adjusting bearings (necessary whenever universal joint companion flange nut loosened), set bearings to this new 10-12 in. lb. specification.

►*CAUTION—Above setting of 10-12 in. lbs. applies only to bearings AFTER several thousand miles of use. Pre-load for NEW BEARINGS should be 27-37 in. lbs.*

►**PINION BEARING SPACER CHANGE:** *Pinion bearing spacer changed from one-piece type to two-piece type No. 510424 (Front), 510525 (Rear).* See directions below for correct installation of these spacers.

►**REPLACEMENT AXLE SHAFT INSTALLATION CAUTION**—Axle shafts are covered with protective coating of rust inhibiting grease. This grease must be completely removed before shaft installed in car (particularly between axle flange and oil guard flange) to prevent grease melting and running out on brakes.

►**AXLE IDENTIFICATION NOTE:** Rear axles are marked to indicate gear ratios as listed below. See car model pages for Std. & Optl. gear ratios.

Oldsmobile Markings: Number stamped on upper surface of differential carrier (1947) or on underside of carrier housing at right horizontal bottom rib (1948) indicates ratio (number of teeth in ring and pinion gear as follows:
41:12 (3.42-1 Ratio), 40:11 (3.64-1 Ratio), 39:10 (3.9-1 Ratio), 41:10 (4.1-1 Ratio), 43:10 (4.3-1 Ratio), 41:9 (4.56-1 Ratio).

Pontiac Markings: Paint mark on end of right hand axle shaft indicates gear ratio as follows:
Violet (3.63-1 Ratio), Red (3.9-1 Ratio), Green (4.1-1 Ratio), White (4.3-1 Ratio), Yellow (4.55-1 Ratio).

DESCRIPTION

DESCRIPTION: New hypoid gear, semi-floating type. Design similar to axle used on previous models except for new pinion bearing assembly and other points listed below.
NOTE—This new type axle (with pinion bearing adjustment) may be identified by fact that the three pinion bearing lockscrews and locknuts on pinion housing of previous type axle are not used.

CONTINUED ON NEXT PAGE

1947-48 OLDSMOBILE & PONTIAC (C ntinued)

Pinion Shaft & Bearings—Pinion mounted on taper roller bearings (front and rear) and bearings are adjustable by tightening universal joint companion flange nut (see Servicing data below). Front and rear bearing cups are seated against shoulders in carrier housing and a compressible spacer is used on the pinion shaft between the bearing cones. Pinion position is adjusted by means of shims between rear bearing cup and carrier (standard shim thickness changed from previous models).

Differential Side Gears & Pinions—Gears are new type with "crowned" teeth to insure tooth bearing at center. Gears and pinions are interchangeable with previous type in **complete sets only** (individual gears and pinions must not be interchanged).

REMOVAL OF AXLE: *See "Rear Axle" on car model page.*

PINION SHAFT OIL SEAL RENEWAL (Without Disassembly of Rear Axle): Mark pinion shaft nut before loosening it and **retighten to exact same position** after oil seal installed (see oil seal data below). This will avoid necessity of resetting the pinion bearing pre-load. If new companion flange being installed, see Pinion Bearing Pre-load Adjustment below.

Oil Seal Installation—Always install new oil seal (old seal will be damaged by removal). Lubricate seal leather with oil and coat outer diameter of seal with Permatex No. 3 or similar sealer, tap seal in place in housing bore.

AXLE SHAFT REPLACEMENT: Wheel bearings not adjustable (ball bearings). Replace shafts as follows:

Axle Shaft Removal—Remove wheel and brake drum, remove nuts from four bolts attaching brake backing plate on axle housing, use puller J-942 to withdraw axle shaft and bearing assembly.

►*CAUTION—Use care not to dislodge backing plate which will damage brake line, or to drag shaft on oil seal which will damage or distort seal.*

Wheel Bearing & Oil Seal Installation—*Same as for previous models (see preceding Oldsmobile and Pontiac rear axle data).*

►**IMPORTANT SERVICE CAUTION:** Pinion bearing pre-load is controlled by universal joint companion flange nut on pinion shaft and bearing adjustment will be disturbed when this nut is loosened. **Pinion bearings must be adjusted each time companion flange nut is disturbed.**

DISASSEMBLY: With rear axle removed from car, remove axle shaft, take out mounting screws and remove carrier assembly. Disassemble carrier assembly as follows: Mark differential bearing caps and adjusting nuts to insure reassembling parts in same relative positions and to same settings. Remove the differential bearing caps and adjuster nuts, lift differential case and ring gear assembly out. Remove universal joint companion flange nut (use holding tool J-2933 and 1" socket wrench), pull companion flange (tool J962) taking care that pinion does not fall out. Remove pinion through rear of carrier using care not to damage pinion shaft threads or oil seal (if pinion does not slide out, tap pinion out with a soft hammer, or press pinion out in an arbor press), lift compressible spacer and shim from pinion shaft

(NOTE—On some cars, a shim .037-.045" thick may be found between spacer and front bearing cone, **this shim must be re-installed** if same spacer used when axle reassembled). Remove oil seal, lift front bearing cone and roller assembly out. Press front and rear bearing cups out of housing in an arbor press (use Front Pinion Bearing Race Remover J-2938 & Removable Handle J-2940; Rear Pinion Bearing Race Remover J-2936 & Removable Handle J-2940). Lift pinion adjusting shims out of housing (located behind rear bearing cup). To dismantle differential gears, remove locking screw, slide pinion shaft out, lift out gears, pinions, and thrust washers.

REASSEMBLY: Examine all parts for wear, re-install and adjust parts as follows:

Pinion Bearing Assembly: Pinion bearing cups are press fit in housing. Rear pinion bearing cone is press fit on pinion shaft, front bearing cone is light press fit to close sliding fit on shaft. Replace bearings if rough when rotated with hand pressure. Use J-2934 Pinion Bearing Removing Plates and J-358-1 Holder in an arbor press to remove rear bearing cone and roller assembly, J-2935 Installing Plate and same holder to install new bearing (bearing must seat solidly against shoulder on shaft). Install correct pinion adjusting shim pack (see Pinion Setting data below) against shoulder of rear bearing bore in carrier, press rear bearing cup in place using J-2937 Rear Pinion Bearing Outer Race Installer and J-2940 Handle, then install front bearing cup using J-2939 Front Pinion Bearing Outer Race Installer and J-2940 Handle. Place compressible spacer (and shim—see note below) or new type two-piece spacer (see Spacer Note below) on the pinion shaft, insert pinion in carrier, install front bearing cone and roller assembly (use arbor press if bearing is press fit). Install oil seal (oil the seal leather and outer diameter of seal with Permatex No. 3 or similar compound, tap seal in place using Bearing Installing Plate J-2935 to protect seal), install companion flange, oil the pinion shaft threads and face of the nut, turn nut on shaft loosely, then adjust bearing pre-load by tightening nut (below).

▷**Two-piece Pinion Bearing Spacer Installation**—When installing 2-piece pinion bearing spacer (see to .045" thick) is used between spacer and front bearing cone on some axles. This **shim must be re-installed** if the same spacer is re-used (discard shim if new spacer is used). A new spacer must be used when: 1) New Ring Gear & Pinion set installed, 2) Any part of either pinion bearing is changed, 3) New Carrier casting installed, 4) Pinion adjusting shim thickness increased.

▷**Pinion Bearing Spacer Shim Note**—A shim (.037" new type two-piece pinion bearing spacer (see change note above), install rear spacer No. 510524), with lighter end section (adjacent to collapsible portion of sleeve) against rear pinion bearing cone; install front spacer (No. 510525) with end on which chamfer is on outer diameter against front pinion bearing cone (end on which chamfer is on inner diameter should be against rear spacer). This installation will insure spacers seating solidly against each other and bearing cones.

Pinion Bearing Pre-load Adjustment: Use J-2933 Companion Flange Holding Tool on flange, tighten nut on pinion shaft until bearing endplay is taken up (companion flange is felt to contact spacer), then tighten nut slowly, turning pinion shaft frequently to seat bearing rollers, and check bearing pre-load

C NTINUED N NEXT PAGE

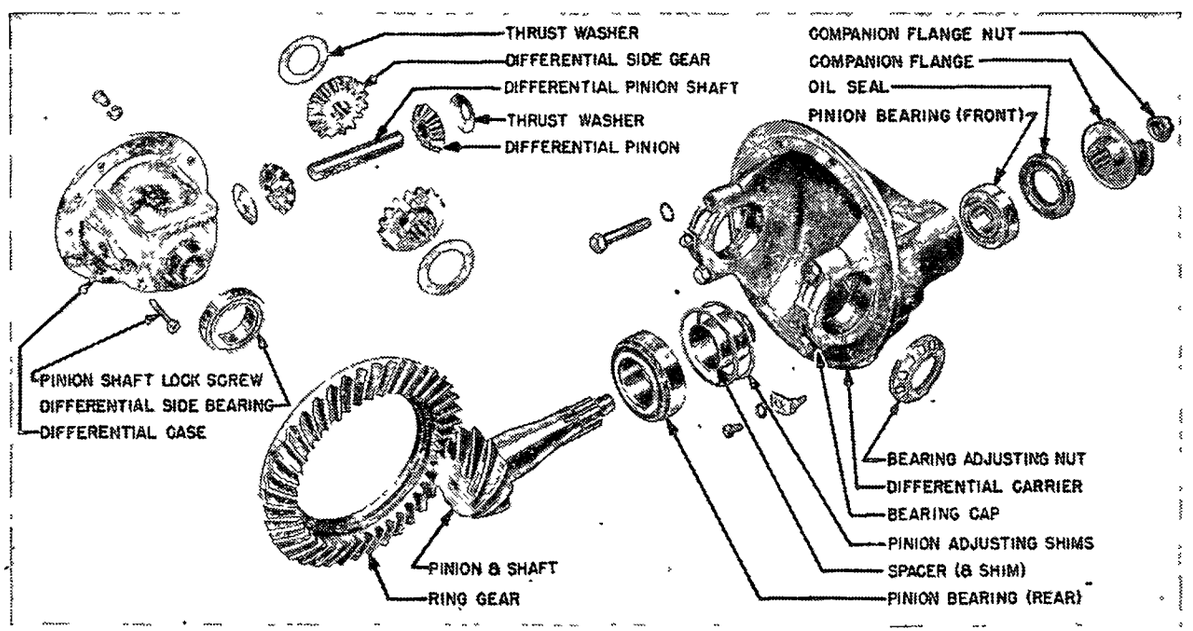

1947-48 LDSMOBILE & P NTIAC HYP ID REAR AXLE
►(TW -PIECE SPACER USED ON LATER CARS)

1947-48 OLDSMOBILE & PONTIAC (C ntinu d)

by measuring the pull required to turn the pinion shaft in inch-pounds (use torque indicating wrench or spring scale attached to companion flange holding tool). **Tighten nut only until correct bearing pre-load is secured** as listed below. After completing pre-load adjustment, secure the nut by staking end of pinion shaft into nut recesses.

Pinion Bearing Pre-load Setting

Pinion Bearings	Bearing Pre-load
New Bearings	27-37 in. lbs.
Old Bearings①	②10-12 in. lbs.

①—After several thousand miles usage.
②—Supersedes original specification of 15-20 in. lbs.

►*CAUTION*—When adjusting bearing pre-load, do not exceed maximum (37 inch-pound) specification. If this figure exceeded by tightening nut excessively, disassemble axle and **install new spacer.**

Pinion Setting: Standard shim thickness for each carrier is indicated by mark on carrier flange as follows: D5—.015", D4—.014", D3—.013", D2—.012", D1—.011", 0 (Std.)—.010", S1—.009", S2—.008", S3—.007", S4—.006", S5—.005" (NOTE—"D" indicates carrier deeper, "S" that carrier shallower than standard). To this standard shim thickness (which is correct for all standard or unmarked pinions), add additional shims (when pinion marked +) or subtract shims (when pinion marked —) equal in amount to the figure following this + or — mark on end of the pinion (figures indicate shim thickness in thousandths). This total shim thickness will correctly position pinion for proper mesh with ring gear and shims should be installed in carrier ahead of rear pinion bearing cup. Shims are furnished in sizes listed below and should be used in combination for required thickness.

Shim Thickness	Part No.	Identification Color
.002"	509263	Plain
.003"	509264	Blue
.004"	509265	Copper
.005"	509266	Plain
.010"	509267	Plain

Differential Bearing Assembly: Bearing cones must be a heavy press fit on differential case hubs. Replace bearings if loose or if bearing feels rough when rotated by hand. Use J-1158-B Differential Side Bearing Remover to remove old bearing roller and cone assemblies, J-941 Replacer to install new bearings. When reassembling axle, place ring gear and differential assembly in carrier so that backlash between ring gear and pinion is just taken up, place bearing adjusting nuts squarely against bearing cups, install bearing caps and tighten capscrews lightly (make certain that adjusting nut threads not crossed), then check differential bearing adjustment (below). If no new parts being installed, tighten bearing nuts to original position (as marked before disassembly).

Differential Bearing Adjustment: With adjusting nut locks removed and bearing capscrews loose enough so that bearing adjusting nuts can be turned, mark position of both adjusting nuts, back off right hand nut slowly to point where right bearing cup stops turning with the nut, mark this new position (amount the nut turned between these two points is "notches tight" of original setting and should be 2½ minimum, 4 maximum). If bearing cup did not turn with the nut when the nut was loosened, or if "notches tight" of original setting incorrect, adjust bearings by turning right hand adjusting nut up until bearing cup just begins to turn with nut, then tighten nut not less than 2½ notches, or more than 4 notches, additional. Check ring gear backlash (see note below), tighten bearing capscrews securely, install adjusting nut locks.

Ring & Pinion Gear Adjustment: Backlash should be .004-.006" (Oldsmobile), .003-.012" (Pontiac). Adjust by backing off one differential bearing adjusting nut and tightening opposite nut exactly equal amount (to avoid disturbing differential bearing adjustment). See Pinion Setting and Differential Bearing Adjustment data.

►**Ring Gear Backlash Adjustment Note**—When adjusting differential bearings (above), if ring gear has slight backlash (.005"), equalize differential bearing adjustment by tightening each adjusting nut 1½-2 notches (do not make entire adjustment at right hand nut). Backlash can be adjusted without disturbing differential bearing adjustment by backing off one bearing adjusting nut and tightening opposite nut exactly same number of notches.

WILLYS SPIRAL BEVEL

WILLYS, ALL MODELS (1936 to 1940)
WILLYS-OVERLAND, MODEL 39 (1939)

►**COMMERCIAL MODEL REAR AXLES:** Spicer (Salisbury) Model 21-1 used on all 1938-41 models.
See "Spicer (Salisbury) Spiral Bevel" Rear Axle for all data on these models.

DESCRIPTION: 1936. Spiral bevel, semi-floating. Pinion shaft integral with pinion and straddle mounted on two taper roller bearings (front), single roller bearing (rear). Differential assembly mounted on taper roller bearing at each side with adjusting shims in housing under bearing caps.

1937-40 Type—Spiral bevel, semi-floating type with Hotchkiss drive. Pinion mounted on taper roller bearings seated directly in housing with pinion bearing adjusting shims between front bearing cone and spacer, pinion adjusting shims in housing in front of rear bearing cup. See special directions below for pinion bearing adjustment and setting

NOTE—Differential assembly is Spicer Model 22.

REMOVAL OF AXLE: *See "Rear Axle" on car model page.*

AXLE SHAFT REPLACEMENT & WHEEL BEARING ADJUSTMENT: Check bearing adjustment (endplay) whenever axle shafts removed or replaced.

Axle Shaft Removal. Remove rear wheels, take off axle shaft nut and washer, pull hub and brake drum assembly (use puller), remove nuts on backing plate, remove oil deflector, oil seal, backing plate and brake assembly, pull axle shaft and bearing assembly. Use puller to remove bearing from shaft.

Axle Shaft Endplay. When replacing shaft, check endplay and adjust by adding or removing shims between bearing retainer and axle housing flange at each wheel. Wheel bearings designed to take thrust in one direction (transmitted through spacer to opposite shaft in other direction).

Endplay—.004-.006".

OVERHAUL: Disassembly. Remove differential housing cover, remove differential bearing caps, remove shims on right hand side of differential assembly first, then left hand shims (keep shims separate and install same shim pack at each point when reassembling axle). Take off nut and remove rear universal joint companion flange, use brass drift and drive pinion out of housing toward rear (rear bearing cone, rollers and bearing spacer will come out with shaft). Drive front bearing cup, rollers, and oil seal out toward front as an assembly (notches provided for drift in opposite sides of housing). Drive rear bearing cup out toward rear in same manner.

Pinion Bearing Adjustment (All 1936 Car Models). Shims installed on pinion shaft between fr nt bearing cones. When assembling pinion assembly, install same shim thickness as removed from old assembly for initial trial. Pinion should have no endplay but should turn freely with nut tight.

Bearing Adjustment (1937-40). Shims installed between front bearing cone and bearing spacer. Install shims removed from old assembly when reassembling pinion. Tighten nut securely and check adjustment. Pinion should have no endplay but should turn with 1 lb. pressure on 15" leverage (1937), 2 lbs. pressure on 10" leverage (1938-40). Adjust by adding or removing shims furnished .004", .010", .030" thick. Bearing adjustment changed by pinion setting adjustment and should be rechecked

NOTE—If dial indicator used to check pinion bearing adjustment, measure endplay, then remove shims equal to endplay plus additional .002" shim thickness to secure .002" tension or bearing pre-load.

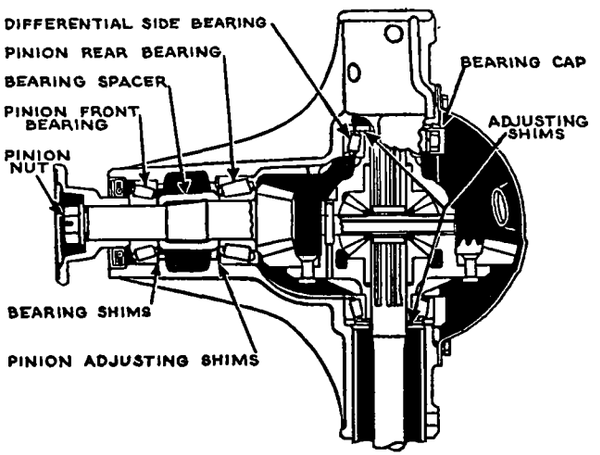

Pinion Setting (1936 Type): Shims located between pinion bearing shell or cup and shoulder in housing behind bearing. Add shims to move pinion away from ring gear, remove shims to move pinion toward ring gear.

1937-40 Type. Shims located between pinion rear bearing cup and shoulder in housing ahead of bearing. Install same number of shims as removed from old assembly when assembling pinion, check mesh. Add shims to move pinion in toward ring gear, remove shims to move pinion away from ring

CONTINUED ON NEXT PAGE

WILLYS SPIRAL BEVEL (C ntinu d)

gear. Shims furnished 004", .010", .030" thick. Recheck pinion bearing adjustment.

Pinion Setting Gauge—Available from factory for setting new pinions to insure correct mesh with ring gear (Part No. W-101—part of Kit No. W99). *See "Willys Hypoid" Rear Axle (following) for instructions on use of this pinion setting gauge.*

Differential Bearing Adjustment:—Shims located between bearing cups and housing on either side. Furnished .180", .184", .188", .192", .196" thick. Select shims for correct bearing adjustment. When removing differential assembly, take off bearing caps, remove shims on right hand side first, install same shim thickness when reassemblying.

Ring & Pinion Gear Adjustment: Paint gears to check mesh. Backlash should be .004-.008". Adjust as follows (see Pinion Setting & Differential Bearing Adjustment also):

Ring Gear Backlash Adjustment. Transfer shims from behind left hand differential bearing to right hand bearing to increase backlash, or from right to left to decrease backlash. Total shim thickness must not be changed to avoid disturbing differential bearing adjustment.

WILLYS HYPOID

AMERICAR & PLAINSMAN, MODEL 441 (1941)
AMERICAR MODEL 442 (1942)

►**COMMERCIAL MODEL REAR AXLES:** Pick-up and Panel Delivery is Spicer (Salisbury) Model 21-1. *See Spicer (Salisbury) Spiral Bevel Rear Axle article for data on this model.*

DESCRIPTION: Hypoid gear, semi-floating type with Hotchkiss drive. Pinion integral with shaft and mounted on taper roller bearings seated directly in housing with pinion bearing adjusting shims between front bearing cone and spacer, pinion adjusting shims in housing in front of rear bearing cup. Differential assembly is mounted on taper roller bearings with bearing and backlash adjusting shims installed between bearing cups and housing at each side.

REMOVAL OF AXLE: *See "Rear Axle" on car model page.*

AXLE SHAFT REPLACEMENT & WHEEL BEARING ADJUSTMENT: Check bearing adjustment (endplay) whenever axle shafts removed or replaced.

Axle Shaft Removal—Remove rear wheels, take off axle shaft nut and washer, pull hub and brake drum assembly (use puller), remove nuts on brake backing plate bolts, remove oil deflector, oil seal, bearing retainer, and bearing adjusting shims (Save shims for re-installation). Use puller to remove axle shaft and bearing assembly using extreme care not to disturb brake backing plate which would damage brake lines (or disconnect brake line and remove backing plate—if line disconnected, bleed brake lines when re-connected). Use puller to remove bearing from shaft.

Wheel Bearing Adjustment — When installing axle shaft, select shim thickness for installation between backing plate and bearing retainer so that axle shaft endplay is .004-.006". Wheel bearings designed to take thrust in one direction (transmitted through spacer on differential pinion shaft to opposite shaft in other direction).

OVERHAUL: Disassembly. Remove differential housing cover, remove differential bearing caps, remove shims on right hand side of differential assembly first, then left hand shims (keep shims separate and install same shim pack at each point when reassembling axle). Take off nut and remove rear universal joint companion flange, use brass drift and drive pinion out of housing toward rear (rear bearing cone, rollers and bearing spacer will come out with shaft). Drive front bearing cup, rollers, and oil seal out toward front as an assembly. Drive rear bearing cup out toward rear in same manner.

Pinion Bearing Adjustment:—Bearing pre-load controlled by shims installed between front pinion bearing cone and bearing spacer. When installing pinion, install same shim thickness at this point as removed when old pinion disassembled, install universal joint companion flange, tighten pinion shaft nut securely and check bearing adjustment. Adjust by adding or removing shims furnished .004", .010", .030" thick.

Pinion Setting:—Pinion position controlled by shims installed on pinion shaft between pinion and rear bearing cone. Install same shim thickness as removed from old pinion at this point when installing pinion, check mesh. Add shims to move pinion in toward ring gear, remove shims to move pinion out away from ring gear (shims .004", .010", .030" thick).

Pinion Setting with Willys Pinion Setting Gauge No. W-99—Gauge consists of dial indicator and mounting fixture designed to be mounted on rear face of pinion (held in place by "C" clamp which is part of gauge). Before using this gauge, dial indicator must be set at zero through use of a "master gauge" supplied with this equipment. Set the dial indicator at zero with gauge pin resting on correct lobe of master gauge and with one-half turn tension on the gauge pin (see Pinion Gauge Zero Setting below). With pinion installed in axle housing, install spacer tool W-126-6 on shaft in place of universal joint yoke, install pinion setting gauge. Dial reading should be ZERO for pinions marked "0" and should read PLUS (for pinions marked +) or MINUS (for pinions marked —) by an amount equal to the figure following this + or — sign on the pinion. Adjust pinion by adding or removing shims on pinion shaft between pinion and rear bearing cone (on 1937-40 spiral bevel axles, shims located in housing behind rear bearing cup). Repeat test until correct dial reading is secured.

Pinion Gauge Zero Setting

Rear Axle used on:	Master Gauge Lobe
Model 37, 38, 39, 4-40	A
Model 4-41, 4-42	C

Differential Bearing Adjustment:—Shims located between bearing cups and housing on either side. Furnished .180", .184", .188", .192", .196" thick. Select shims for correct bearing adjustment. When removing differential assembly, take off bearing caps, remove shims on right hand side first, install same shim thickness when reassembling.

Ring & Pinion Gear Adjustment: Paint gears to check mesh. Backlash should be .006-.008". Adjust as follows (see Pinion Setting & Differential Bearing Adjustment also):

Ring Gear Backlash Adjustment. Transfer shims from behind left hand differential bearing to right hand bearing to increase backlash, or from right to left to decrease backlash. Total shim thickness must not be changed to avoid disturbing differential bearing adjustment.

TYPE OF EQUIPMENT

	Page
Chrysler, DeSoto, Dodge Lateral Stabilizer (Monroe)	2414
Delco Single Acting Hydraulic Type	2403
Delco Double Acting Hydraulic Types	2402
Delco Special Knee-Action (Chevrolet-Pontiac) Type	2404
Delco Direct Acting Hydraulic '1936' Type	2409
Delco Direct Acting Hydraulic '1938' Buick Type	2407
Delco Direct Acting Hydraulic 1110 Type	2404
Delco Direct Acting Hydraulic 1000, 10, 20, 30, 40 Types	2405
Delco Direct Acting Hydraulic 1160, 1170, 1190 Types	2410
Delco Direct Acting Hydr. Adjustable 1000; 1110, 80, 90 Types	2408
Delco Direct Acting Hydr. Adjustable 930, 940, 1130, 40 Types	2407
Delco Parallel Cylinder Hydraulic Type	2404
Gabriel Double Acting Hydraulic Types	2411
Gabriel Direct Acting Hydraulic Type	2411
Houde (Houdaille) Hydraulic Types	2412
Houde (Houdaille) Lateral Stabilizer (Packard Fifth Shock)	2412
Monroe Single Acting Hydraulic Type	2414
Monroe Direct Acting Hydraulic 3 Tube Type	2414
Monroe Direct Acting Hydraulic 4 Tube Type	2413
Monroe Direct Acting Adjustable Type	2416
Monroe Lateral Stabilizer (Chrysler, DeSoto, Dodge Type)	2414
Monroe Lateral Stabilizer (Packard Clipper Fifth Shock)	2414
Packard "Fifth" Shock (Houde)	2412
Packard Clipper "Fifth" Shock (Monroe)	2414

CAR APPLICATION

	Page
AUBURN	
1936-37 Six	2413
1936-37 Eight	2409
BANTAM	
1937-39	See Car Model Page
1940-41	2414
BUICK	
1936-48 All Series—Front	2402
1936 Series 40—Rear	2403
1936 Series 60, 80, 90—Rear	2402
1937 All Series—Rear	2402
1938 All Series—Rear	2407
1939-42 Series 40, 50, 60, 70—Rear	2404
1939-42 Series 80, 90—Rear	2402
1946-48 Series 40, 50, 70—Rear	2404
CADILLAC	
1936-48 All Series	2402
CHEVROLET	
1936-38 Pass. Frt. (Knee-Action)	2404
1936-38 Pass. Front (Others)	2403
1936-38 Pass. Cars—Rear	2403
1939-40 Pass. Cars. (exc. Mstr.)	2404
1939 Master—Front	2404
1940 Master—Front	2405
1939-40 Master—Rear	2403
1941-48 Passenger Cars	2404
1938-48 Trucks (Single-acting)	2403
1939-48 Trucks (Double-acting)	2402
CHRYSLER	
1936-37 All Models—Front	2402
1936 Six & Eight—Rear	2403
1936-37 Others—Rear	2402
1937-38 All Models (Monroe)	2413
1938 All Models (Delco—Adj.)	2408
1938 All Can. Cars (Delco)	2410
1939 All Models (Monroe)	2414
1939 Six & Eight (Delco)	2404
1939-42 All (Delco—Adj.)	2407
1940 Six & Eight (Monroe)	2414
1941-48 Six & Eight (Delco)	2405
1941-48 Six & Eight (Monroe)	2414
1942-48 All—Lateral Stabilizer	2414
1946-48 Crown Imperial	2407
CORD	
1936-37	2402
CROSLEY	
1939-48 (Delco)	2403
1947 (Houde)	2412
DE SOTO	
1936 Front (Delco)	2402
1936 Rear (Delco)	2403
1937-38 (Delco)	2410
1939 (Delco)	2404
1939-40 (Delco 1"—Adj.)	2408
1939-42 (Delco 1⅜"—Adj.)	2407
1940-48 (Delco)	2405
1942-48 (Monroe)	2414
1942-48 Lateral Stabilizer	2414

CAR APPLICATION

	Page
DODGE	
1936 Front (Delco)	2402
1936 Rear (Delco)	2403
1937-38 (Delco)	2410
1938-40 (Delco 1"—Adj.)	2408
1939 (Delco)	2404
1939-42 (Delco 1⅜"—Adj.)	2407
1940-48 (Delco)	2405
1942-48 (Monroe)	2414
1942-48 Lateral Stabilizer	2414
FORD	
1936-48 Passenger Cars	2412
1936-47 Comm'l & Trucks	2412
1948 Light Trucks	2413
1949 (Delco)	2405
1949 (Houde)	2413
FRAZER	
1947-48	2414
GRAHAM	
1936	2409
1937-38	2410
1939	2404
1940-41	2405
HUDSON	
1936 All Models	2409
1937-38 6 & 8 exc. "112"	2410
1938 Six "112"	2413
1939 Early Six except 93	2413
1939 Later Six except 93	2414
1939 Six Model 93	2404
1939 Eight	2404
1939 Export	2407
1940 Six except 43	2414
1940 Six Model 43	2405
1940 Eight	2405
1941-42 Six exc. 12 & 22 Sedans	2414
1941-42 6 (12 & 22) 8 Sedans	2405
1941-42 Eight Coupes	2414
1946-48 6 & 8 (Delco)	2405
1946-48 6 (Monroe)	2414
HUPMOBILE	
1936-40 Six & Eight	2411
JEEP	
1942-45	2416
KAISER	
1947-48	2414
LA SALLE	
1936-40	2402
LINCOLN	
1936-48	2412
1949	2413
MERCURY	
1939-48	2412
1949	2413
NASH NASH-LAFAYETTE	
1936-39 (Gabriel)	2411
1938 (Delco)	2408
1939 (Delco)	2404
1940 (Delco)	2402
1940 (Delco)—Rear	2405
1941-42 All Models	2405
1946-48 "600" (Delco)	2405
1946-48 Amb. 6 (Monroe)	2414
OLDSMOBILE	
1936-40 6 & 8—Front & Rear	2402
1941-48 6 & 8—Front	2402
1941-48 6 & 8—Rear	2404
PACKARD	
1936-38 All exc. '38 "120"	2402
1938 Eight "120"	2412
1939 All Models	2402
1939 All (Fifth Shock)	2412
1940 6 & 8 exc. Comm'l—Front	2404
1940 Six—Rear	2414
1940 Eight exc. Comm'l—Rear	2405
1940 Eight Comm'l	2402
1940 Super 8 1803, 6—Front	2404
1940 Super 8 1803, 6—Rear	2414
1940 Super 8 1804, 5, 7, 8	2402
1940-42 Export	2407
1940 All (Fifth Shock)	2412
1941-42 All Models—Front	2402
1941-42 All (Delco)—Rear	2405
1941-42 All (Monroe)—Rear	2414
1941-42 All Clippers (5th Shock)	2414
1941-42 All Others (5th Shock)	2412
1946-48 All Models—Front	2402
1946-48 Six & Eight—Rear	2405
1946-48 Super 8 (Delco)—Rear	2405
1946-48 Super 8 (Monroe)—Rear	2414
1946-48 All (Fifth Shock)	2414
PIERCE ARROW	
1936-38	2412
PLYMOUTH	
1936 Front (Delco)	2402
1936 Rear (Delco)	2403
1937-38 (Delco)	2410
1939 (Delco)	2404
1939-40 (Delco 1"—Adj.)	2408
1939-42 (Delco 1⅜"—Adj.)	2407
1940-48 (Delco)	2405
1946-48 (Monroe)	2414
PONTIAC	
1936 Front (Knee-Action)	2404
1936 Front (Others)	2403
1936 All Models—Rear	2403
1937-48 6 & 8—Front	2402
1937-38 6 & 8—Rear	2410
1939 6 & 8—Rear	2404
1940-48 6 & 8—Rear	2405
STUDEBAKER	
1936 All Models	2412
1937 All Models (Early)	2410
1937 All Models (Later)	2408
1938-48 All Models	2412
TERRAPLANE	
1936-38	2413
WILLYS	
1936	2414
1937-39	2413
1939-40	2414
1940	2411
1941-42	2416
1946 Early Jeep (Monroe Adj.)	2416
1946-48 Civ. Jeep (Monroe)	2414
1946-48 Civ. Jeep (Delco)	2405
1946-47 Early 4-63 (Monroe Adj.)	2416
1946-48 4-63, VJ-2, 6-63 (Monroe)	2414
1946-48 4-63, VJ-2, 6-63 (Delco)	2405
1947-48 Jeep Truck	2411

DELCO DOUBLE-ACTING

		Front	Rear
BUICK			
1936-37	All Series		
1938	40, 60	1947-A, B	
1938	80, 90	1902-C, D	———
1939	80, 90	1902-C, D	1751-R, S
1939-48	40, 40A, 50, 60, 70	1948-A	See Note
1940	80, 90	1902-E, F	1751-R, S
1941-42	90	1948-A	1757-A, B
CADILLAC			
1936-37	All Series		
1938	60	1946-E, F	1751-G, H
1939-40	60S	1946-G, H	1751-G, H
1941-48	60S, 61, 62	1946-G, H	1754-N, P
1939	61	1946-G, H	1751-V, W
1940-47	62, 75 Comm'l	1946-G, H	1751-V, W
1941-42	63	1946-G, H	1754-N, P
1938	65, 75, 90	1951-C, D	2052-A, B
1941-42	67	1946-G, H	2008-C, D
1940	72	1946-G, H	2007-N, P
1939-40	75, 90	1951-C, D	2010-C, D
1941-48	75	1946-G, H	2007-N, P
CHEVROLET			
1939	JC	———	1731-T, U
1939-40	JD, JE, KD, E	———	1732-N, P
1939-42	V, YR, S, T	———	2000-V, W
1940	WA, B, C	1731-C, D	2000-V
1940	WD, E, F	1730-C, D	———
1940-42	KC, AJ, AK, BK, BJ	1731-C, D	1731-T, U
1941-42	AL, AN, BL, BN	1731-C, D	1722-C, D
		1731-C, D	1722-E, F
1941-42	YU, V, W, MU, Y	1730-C, D	2000-V, W
1941-42	Special	1721-V, W	2004-C, D
1942	MR, S, T	1731-C, D	2000-V, W
1942	MU, V, W, Y	1730-C, D	2000-V, W
1946-48	½ Ton	1730-A, B	1731-T, U
1946-48	¾ Ton	1731-C, D	1722-C, D
1946-47	1½ Ton	1731-C, D	2000-V, W
1946-47	1, 1½ Ton	1730-C, D	1722-E, F
1946-48	C-O-E	1730-C, D	———
CHRYSLER			
1936-37	All Models		
CORD			
1936-37	All Models		
DE SOTO			
1936	All Models	Front only	
DODGE			
1936	All Models	Front only	
GRAHAM			
1939	96, 97	1737-C, D	1721-J, K
LA SALLE			
1936-37	All Series		
1938	50	1946-E, F	1751-G, H
1939-40	50, 52	1946-G, H	1751-V, W
NASH			
1939	All Models	1723-L, M	1723-N, P
1940	4020, 4080, Lafayette	1947-C, D	1723-N, P
1940	Export	1947-C, D	See Note
OLDSMOBILE			
1936-37	All Models		
1938	F-L	1947-A, B	1713-E, F
1939	All Models	1947-C, D	1751-T, U
1940	All Models	1947-C, D	1754-L, M
1941-48	All Models	1947-C, D	See Note
PACKARD			
1936-37	All Models		
1938	Six	1966-A, B	1751-L, M
PACKARD (Continued)			
1938	Eight	1966-A, B	1751-J, K
1938	Twelve	1952-A, B	2006-G, K
1939	Six & Eight	1966-C, D	1751-M, Z
1939	Twelve	1952-A, B	2006-G, H
1940	1801A, 3A	1966-C, D	1751-M, Z
1940	Super Eight	1966-C, D	2007-G, H
1941-42	(Exc. Clipper)	1966-C, D	See Note
1941-48	Clipper	1946-J, K	See Note
PLYMOUTH			
1936	All Models	Front only	
PONTIAC			
1937	Six & Eight	Front only	
1938	Six & Eight	1947-A, B	———
1939-48	Six & Eight	1947-C, D	See Note
1939	All Exp.	1947-C, D	1754-A, B
1940	25 Exp.	1947-C, D	1754-E, F
1940	26, 28 Exp.	1947-C, D	1754-A, B
1940	29 Exp.	1947-C, D	1754-G, H
1941-42	25, 27 Exp.	1947-C, D	1754-R, S
1941-42	Others Exp.	1947-C, D	1754-T, U

NOTE:—Where other type shock absorbers are used for front or rear of car, see separate articles for data on Delco Single Acting, Direct Acting, or Parallel Cylinder types and Monroe Direct Acting type.

Buick 40, 50, 60, 70 ('39-40), All Cars ('41-48). Front shock absorbers are interchangeable from right to left side of car (single model used).

Buick 40, 50, 60, 70 (1939 to 1948). Rear shock absorbers are Delco Parallel Cylinder type. See separate article for complete data.

Nash & Nash-Lafayette—Rear Shock Absorbers are Delco Direct Acting type (see separate article for data).

Oldsmobile Models (1941-48). Rear shock absorbers are Parallel Cylinder type. Refer to separate article for data on this type shock absorber.

Packard Rear Shock Absorbers (1941 to 1948)—Rear shock absorbers are Delco or Monroe Direct Acting

Packard Rear Stabilizer (1939-48). Houde Rotary type used on Non-Clipper models, Monroe Direct Acting 3-tube type used on Clipper Models.

Pontiac (1939)—Three different valve calibrations have been used (changed after 4000 cars and again after 54000 cars). The Rear Shock Absorbers on domestic cars are Delco Direct Acting type (same valve changes made on these models also). See separate article for data on Direct acting types.

Pontiac Models (1940 to 1948). Rear shock absorbers are Delco Direct Acting type. Refer to separate article for complete data on these direct acting models.

TYPE:—Opposed piston types (Units for Independent suspension cars have double lever arm) with valve arrangement and fluid flow as follows:

Type 1713—Center discharge type (compression and rebound valves combined with intake valves and mounted in piston heads). Fluid flows directly between each cylinder and central reservoir chamber.

Types 1721, 22, 23, 30, 31, 32, 37—Center discharge type with outside rebound valve (rebound valve is plug type installed in tapped hole in housing). Compression valve combined with intake valve and located in compression piston head. Valve in rebound piston head is simple intake check valve.

Types 1751, 54, 57—End to end discharge type with outside compression and rebound valves (valves are plug type installed in tapped holes in housing). Spring-loaded intake check valve is located in piston head.

Type 1902—Center discharge type with Inertia Control. Compression and rebound valves are combined with intake valves and located in piston heads. Inertia control consists of an inertia weight controlled rebound valve which controls fluid flow through by-pass channel and static valve (static valve is plug type installed in tapped hole in housing). Static valve controls rebound except when cut off by inertia valve closing (on rough roads) in which case rebound controlled by rebound valve in piston head.

Types 1947, 48—Center discharge type. Compression and rebound valves are combined with intake valves and located in piston head). Type 1948 is inverted with cam and shaft located below centerline of cylinders.

Types 1946, 51, 52, 66—End-to-end discharge type with outside compression and rebound valves. Both valves are plug type installed in tapped holes in housing. Spring-loaded intake check valve is located in piston head.

Types 2000, 2004—Center discharge type with outside rebound valve (rebound valve is plug type installed in tapped hole in housing). Compression valve is combined with intake valve and located in compression piston head. Valve in rebound piston head is simple intake valve.

Types 2006, 7, 8—End-to-end discharge type with outside compression and rebound valves. Both valves are plug type installed in tapped holes in housing. Spring-loaded intake check valve is located in piston head.

Type 2010—End-to-end discharge type with Ride Control Adjustment. Compression and rebound valves are plug type and installed in tapped holes in housing. Intake check valve is spring-loaded type and located in piston head. Ride Control Adjustment consists of a separate control with a slotted adjustment screw located on the underside of the shock absorber housing (see Adjustment below).

Type 2052—End-to-end discharge type with Inertia control and Ride Control adjustment. Compression, Rebound, and Static (Inertia) Valves are plug type installed in tapped holes in housing. Ride control adjustment consists of a separate control valve which is adjusted by means of a slotted adjustment screw on the side of the shock absorber housing (standard setting with mark on valve stem in line with 'M' mark on valve cap nut, turn to 'S' mark for softer action, 'F' mark for firmer action).

DESCRIPTION & OPERATION:—Operates on same principle as single acting type. Piston is double-ended (shock absorber cam engages piston at center) and cylinder is formed with compression chamber at each end. Fluid forced out of one chamber and regulated by 'Compression' valve to control shock when car springs are compressed, and out of opposite chamber and regulated by 'Rebound' valve to control rebound when car springs return to normal position. In each case, when fluid is forced out of one chamber into the reservoir through the relief valve, it flows freely into the opposite chamber (where piston is making a suction stroke) through the intake check valve in the piston head. On most designs, intake valve and relief valve are incorporated in a single assembly mounted in the piston head at each end (see special types below).

'End to End' Discharge Type. On this type, fluid is not expelled into the reservoir from the chamber but flows through a channel in the shock absorber

CONTINUED ON NEXT PAGE

DELCO DOUBLE-ACTING (C nt.)

casting to the opposite chamber which is not under compression. Compression and rebound valves are located under plugs on the side of the shock absorber and each control the fluid flow through the channel in one direction. Intake valve in each piston head (or in one piston head only on some models) consists of a simple spring-loaded disc check valve which allows fluid to flow freely into chamber (when fluid in chamber not under compression) to make up for any loss in operation.

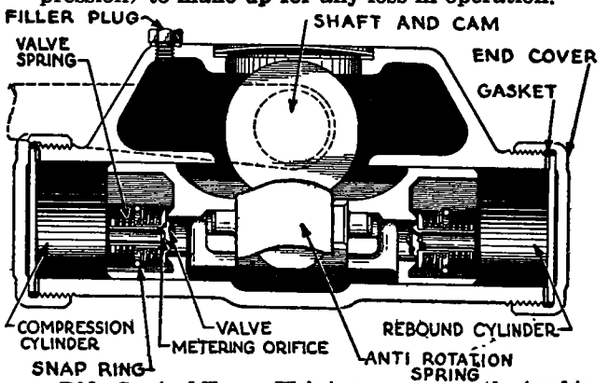

Ride Control Types. This type employes the 'end to end' discharge system and has an adjustable by-pass valve or 'Control' valve which supplements the rebound valve and is adjustable at the shock absorber (Cadillac '36-37, etc.). On these types, intake valve is mounted in the compression chamber piston head only.

Inertia Control. Consists of a 'static' (restricting) valve and 'inertia' (cut-off) valve controlling a by-pass around the regular rebound valve through which fluid is allowed to flow from the shock absorber chamber during rebound. Inertia valve remains open as long as frame and body movement is small, so that static valve (which has lighter action than regular rebound valve) controls fluid escape and provides a very soft action. Whenever frame and body movement upward is sudden or severe, inertia weight lags behind (consists of a large lead weight balanced on a spring) closing the inertia valve and cutting off the flow through the static valve. Rebound action is then controlled by the regular rebound valve.

NOTE—On some models, special valve design used which consists of two thin spring steel washers inserted between tapered valve and valve seat. Old type valves (without these washers) must not be used in place of this new type (valves will leak and performance will be unsatisfactory).

ADJUSTMENT:—When adjusting ride control types, see that all shock absorbers adjusted evenly. On types without ride control, only adjustment for ride control is by replacing compression and rebound valves.

Cadillac Ride Control—On all models, the standard setting is with mark on adjusting screw in line with 'M' mark on valve locking cap. To change adjustment, press up on locking cap to free adjusting screw, turn screw clockwise to 'F' position (for firm control), counter-clockwise to 'S' position (for soft control). CAUTION—Both shock absorbers (right and left) must be adjusted alike.

Other Models—No adjustment provided other than changing compression and rebound valves.

SERVICING:—**Disassembly.** Use special fixture to clamp shock absorber on bench (do not clamp cylinder in vise.) Use special wrench to remove end cap at each end of cylinder. Remove retainer ring or snap ring which locks valve assembly in piston head, remove valve assemblies. On types with compression, rebound, or control valves mounted under plugs on side of case, unscrew plugs, remove valve assemblies. When installing valve assemblies, use special tool to compress spring while snap ring installed. Make certain that snap ring installed with open end out (to facilitate removal of ring).

Assembly. Use new gasket under end caps and make certain that end caps are securely tightened Apply small amount of Lubriplate or soft soap between end cap and end plate, and between end plate and gasket to prevent damage to gasket when end cap is tightened.

NOTE—Shock absorber can be filled with fluid after one end cap installed by mounting shock absorber so that open end is up and filling with fluid while arm is being worked to expel air. Always check fluid level by removing filler plug after assembly completed and with shock absorber in same position as when mounted on car.

REFILLING:—Remove filler plug on side or top of shock absorber body (on Inertia Control types, also remove vent plug on top of Inertia weight housing), use genuine shock absorber fluid and fill to level of filler plug hole, replace plug, move car up and down several times, remove plug and add additional fluid (if required) to bring level up to plug hole. NOTE—When filling shock absorber after servicing or when performance is unsatisfactory, move shock absorber arm up and down to expel all air from cylinder.

DELCO SINGLE-ACTING

1936-37 CAR MODELS

Buick, Series 40 (1936)
①Chevrolet, All Cars (1936-37)
Chrysler 6, Model C7 (1936)—Rear Only
Chrysler 8, Model C8 (1936)—Rear Only
De Soto, Model S1 (1936)
Dodge, Model D2 (1936)
Plymouth, Models P1, P2 (1936)—Rear Only
①Pontiac 6 & 8, All Models (1936)
①—Rear shocks only on cars with Knee-Action.

1938 & LATER MODELS

Car Model	Front—Delco No.—Rear	
Chevrolet Mstr. Del. HA ('38)	See Note	1431-V-W
Chevrolet Mstr. HB ('38)	1201-A,B	1201-C,D
Chevrolet Trk. HC,HD ('38)	1201-A,B	1201-C,D
Chevrolet Trk. HE ('38)	1201-A,B	None
Chevrolet Mstr. JB ('39)	See Note	1201-C,D
Chevrolet Trk. JC ('39)	1430-CA,DA	1430-LA,MA
Chevrolet Trk. JD,JE ('39)	1430-CA,DA	1431-X,Y
Chevrolet Mstr. KB ('40)	See Note	1201-E,F
Chevrolet Trk. KC ('40)	1430-CA,DA	1430-LA,MA
Chevrolet Trk. KD,KE ('40)	1430-CA,DA	1431-X,Y
Chevrolet Trk. AK,AJ ('41)	1430-CA,DA	1430-LA,MA
Chevrolet Trk. AL,AN ('41)	1430-CA,DA	1431-X,Y
Chevrolet BK, BJ ('42)	1430-CA, DA	1430-LA, MA
Chevrolet BL, BN ('42)	1430-CA, DA	1431-X, Y
Chevrolet ½ Ton ('46-48	1430-CA, DA	1430-LA, MA
Chev. ¾, 1½ Ton ('46-48)	1430-CA, DA	1430-X, Y
Crosley A ('39-40),CB41 ('41)	1201-G,H	1201-J,K
Crosley 42 (1942)	1201-G, H	1201-J, K
Crosley CC (1947-48)	1438-T, U	1438-V, W

NOTE:—Where car models marked 'Rear Only' or 'See Note' above, other shock absorbers are Delco Double Acting, Delco Direct Acting, or Delco Special Knee Action type. See separate articles for data on these types.

DESCRIPTION & OPERATION:—Shock absorber arm is pivoted on a shaft in the shock absorber case with an operating cam locked on this shaft within the case. Cam is always in contact with the piston in the shock absorber cylinder (piston forced out against cam by heavy spring within cylinder). Cylinder is kept filled with fluid which flows freely through intake check valve in piston head from fluid reservoir in case which surrounds cylinder. On rebound, after car springs have been compressed by road shock, shock absorber arm can return to original position only by forcing piston back into cylinder and displacing fluid which has filled the cylinder during the outward stroke. Fluid can flow out of cylinder only through rebound or relief valve located under filler plug on opposite end of case (on some models this valve is incorporated in intake valve assembly in piston). This valve restricts fluid flow and provides shock absorbing action.

NOTE—On Buick 40, rebound valve is two stage or double type providing softer control for light road shocks.

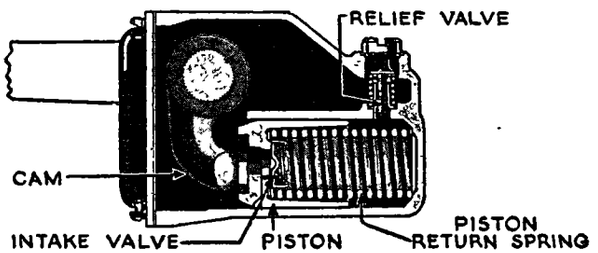

SERVICING:—**Disassembly.** Use special fixture to clamp shock absorber on bench (clamping cylinder in vise will cause piston to bind). Take out relief valve plug, relief valve. Remove end cover screws, take off cover and gasket. Rotate arm, remove piston, spring and intake valve. Do not remove shock absorber arm or shaft, replace shock absorber if bearing wear excessive or if packing washers worn so oil leaks around shaft (caused by operation with low oil level). Intake valve or intake and relief valve assembly can be removed from open end of piston after piston and spring have been separated.

Assembly. Use new gasket under cover and new lead washer under filler and relief valve plugs. Tighten cover screws securely to prevent leaks.

Filling. Remove filler plug, fill reservoir to level of plug hole with genuine Shock Insulating Fluid, replace plug, work arm up and down vigorously to work oil into cylinder, then remove plug and adjust fluid level so that it is level with lower edge of filler plug hole.

ADJUSTMENT:—Ride adjustment can be made only by replacing valves.

IMPORTANT NOTE—Shock absorbers on both sides of car must have same valve calibration (Right & Left Front same, Right & Left Rear same).

DELCO SPECIAL (KNEE-ACTION) (CHEVROLET & PONTIAC)

Chevrolet Master Model FA (1936)
Chevrolet Master Deluxe, GA ('37), HA ('38)
Pontiac Six 36-26A, Eight 36-28 (1936)

NOTE:—This type used on front end of these models in conjunction with special 'Knee Action' unit. See separate article on Delco Single Acting Shock Absorbers for type used on rear end.

DESCRIPTION & OPERATION:—Similar in design to Single Acting type (spring loaded single acting piston with intake and relief valve assemblies located in head). Two units used (upper—compression unit, lower—rebound unit) so that double acting shock absorber action provided. Units are bolted directly on front face of knee action case with pistons extending through case to contact cams on suspension unit shaft. Shock absorbers operate on fluid used to fill suspension unit case and case acts as reservoir

SERVICING:—**Disassembly.** To remove units, turn all three capscrews in mounting flange out evenly one turn at a time to relieve spring pressure. With unit removed, withdraw piston, spring, valve assembly.

Assembly. Assemble spring, valve and piston in cylinder, press piston in until small hole on side lines up with hole in cylinder under mounting flange, insert cotter pin in this hole to hold assembly together while it is being installed (withdraw cotter pin as soon as mounting screws are started).

ADJUSTMENT:—No adjustment provided. Valve assemblies are calibrated and should not be changed.

DELCO PARALLEL CYLINDER

Car Model	Front—Delco No.—Rear
Buick 40,60 ('39) First	See Note — 2103-A,B
Buick 40,60 ('39) Later	See Note — 2103-E,F
Buick 40,50,60,70 ('40)	See Note — 2105-A,B
Buick 40, 50, 60, 70 ('41-42)	See Note — 2105-C,D
Buick 40, 50, 70 ('46-48)	See Note — 2105-C, D
Chevrolet JA ('39)	2200-A,B — 2100-A,B
Chevrolet KA,KH ('40)	2200-A,B — 2100-A,B
Chevrolet Pass. Cars ('41-48)	2200-A, B — 2100-A, B
Oldsmobile 66, 68 ('41-48)	See Note — 2105-G, H
Oldsmobile 76,78,96,98 ('41)	See Note — 2105-E,F
Oldsmobile 76, 78 98 ('42-48)	See Note — 2105-E, F
Packard 6 & 8 1800, 1 ('40)	2206-A,B — See Note
Packard Super 8 1803,6 ('40)	2206-A,B — See Note

SPECIAL SERVICE NOTES:—**Buick Models 40,60 (1939).** First type shock absorbers listed above (2103A,B) used on early cars with short frame side rails. Later type 2103-E, F used on longer frame (these models have heavier arms and new valve calibration).

►**Chevrolet 1941 Model Shock Absorber Valve Change to correct noise**—If front shock absorbers on first cars develop 'crunching' noise, new type Compression Valve, Part No. 1069124, should be installed on both front shock absorbers (used on later cars).

NOTE—Valve is same calibration and marked in same manner as preceding valve but may be identified by fact that spring top coil is wound close to valve stem body.

CAUTION—New valves should be installed in both front shock absorbers at same time even though noise correction made for one shock absorber only.

►**Chevrolet Valve Change for correcting excessive bumping**—Passenger cars operating on unusually rough roads or in Oil Field work may have excessive bumping in front end. To correct this condition heavy duty front shock absorber valves may be installed as follows to stiffen front end slightly.

	Marking	Part Number
Compression Valve	0F	5334612
Rebound Valve	3F	1069146

NOTE—Lower control arm rubber bumpers should be checked to make certain that they are in place. Heavy duty front springs are available for correcting above condition where shock absorber valve changes above fail to correct bumping. Refer to Chevrolet Front Suspension article for data.

Chevrolet 1942 Rear Shock Absorber Links. Rear shock absorber links on passenger car models for 1942 are new type with tapered link studs which are vulcanized to the rubber grommets in each eye of the link. Studs cannot be removed from link and links are serviced as an assembly with studs and rubber grommets installed.

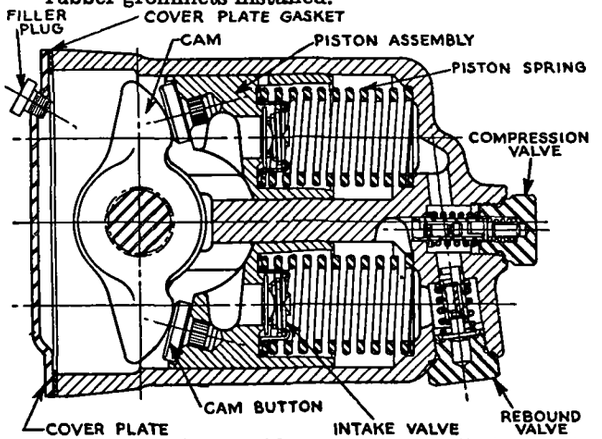

TYPE:—New design double acting hydraulic type with end-to-end discharge. Independent pistons are used (located in parallel cylinders). Each piston is held out against lever arm cam by a spring installed in the cylinder and has a plain intake valve in the piston head. Fluid displaced by the piston movement flows through a channel in the housing to the opposite cylinder and is controlled by the compression and rebound valves which are installed in tapped holes in the housing (valves are plug type).

ADJUSTMENT:—The standard valves can be changed for special operating conditions, if necessary, by removing valve plug and taking out valve assembly. Make certain that valve plugs are securely tightened to prevent leaks. Valve calibration is stamped on valve for identification.

IMPORTANT NOTE—Shock absorbers on both sides of car must have same valve calibration (Right & Left Front same, Right & Left Rear same).

REFILLING:—Fluid level in shock absorber should be checked twice yearly and level maintained at bottom of filler plug hole. When adding fluid, move car up and down several times to displace all air in cylinder. When filling to correct poor perfomance complaints, disconnect shock absorber link and move arm through full stroke several times, then recheck level. Use only Delco Shock Absorber fluid.

SERVICING:—No service operations possible other than tightening valve and filler plugs and tightening cover or replacing cover gasket to stop leaks. Pistons, springs, and intake check valve assemblies cannot be removed or serviced.

DELCO DIRECT-ACTING TYPE 1110

Car Model	Delco Model N. Front	Rear
Chevrolet Mstr. JB ('39)	1116M	
Chrysler C22, 23 ('39)	1110C	1111T
De Soto Model S6 (1939)	1110C	1111T
Dodge Model D11 (1939)	1110C	1111T
Dodge D11 ('39)—20" Wheels	1110C	1111W
Graham 96, 97 (1939)	1112J	1120N
Hudson 6 & 8 93, 5, 7 ('39)	1113R	1120S
Nash-Lafayette Std. 3910 ('39)	1112N	1117DD
Nash-Lafayette Del. 3910 ('39)	1112Q	1117DD
Nash Ambass. 6 3920 ('39)	1112P	1117DD
Nash Ambass. 8 3980 ('39)	1112M	1117DD
Plymouth P7, P8 (1939)	1110C	1111T
Plymouth P7, 8 ('39) 20" Whls.	1110C	1111W
Pontiac 6 39-25, 26 (1939)		1116V
Pontiac 8 39-28 (1939)		1116V

NOTE:—**Chevrolet Models**—Delco Single Acting Hydraulic type shock absorbers used on rear end.

Chrysler, De Soto, Dodge, Plymouth Models—Three separate valve calibrations for 'Soft', 'Firm', and 'Super' Control used on these models. Monroe Direct Acting shock absorbers used on some Chrysler cars and Delco Adjustable Direct Acting Shock Absorbers (1" and 1⅜" Cylinder Types) used on Export Cars.

Nash-Lafayette & Nash Models—Gabriel Direct Acting Shock Absorbers used on some cars.

Pontiac Models—Three different valve calibrations have been used (changed after 4000 cars and again after 54000 cars).

TYPE:—Double acting piston type similar to previous types except for new piston guide oil seal (double type), new valve assemblies, and new lower housing without filler plug. NOTE—Filler plugs provided on some models but should not be used when refilling units—see refilling directions below).

SERVICING:—**Disassembly**—To service shock absorbers, remove unit from car, clamp in vise in upright position (engage lower mounting eye in vise jaws, use special clamping fixture for bayonet end types—do not clamp shock absorber tube in vise jaws), pull out to fully extended position, insert prongs of special wrench through holes in outer dust shield tube on side opposite model number stamping so as to engage slots in top of piston rod guide, unscrew guide from upper end of reservoir tube, lift entire top assembly (dust shield, piston rod, pressure tube and compression valve assembly) out of lower reservoir tube. Press in on compression valve plunger (at lower end of pressure tube) and pour out old fluid in cylinder. Remove compression valve from end of cylinder by tapping with blunt chisel against groove in edge of valve body (valve assembly is light press fit in cylinder), do not dismantle valve (serviced as an assembly). Mount top assembly in vise (grip upper mounting eye in vise jaws), press cylinder down on piston press so that piston rod nut accessible, remove nut, lift off piston and valve parts, remove pressure tube and piston rod guide as an assembly. Tap guide and seal assembly out of pressure tube (guide is press fit in upper end of tube). Do not remove oil seal from guide (serviced as an assembly).

Servicing—Wash all parts in naptha or gasoline and dry with compressed air (do not use cleaning compounds which may damage oil seal).

CONTINUED N NEXT PAGE

DELCO DIRECT-ACTING TYPE 1110 (C ntinued)

Reassembly—Install guide in top end of pressure tube (press on outer rim of guide only—not on oil seal), use special thimble (Chrysler MT-104, Pontiac J-475-3) on piston rod end (to prevent damage to oil seal) and install pressure tube and guide assembly on piston rod. Install valve parts and piston in correct order (see illustration), then install piston nut. With nut tight, check piston alignment by working piston up and down in cylinder. If piston binds, loosen nut, work piston up and down several times, tighten nut and recheck alignment. When piston works freely in cylinder, tighten piston nut with 20 lb. pull on 5" wrench (100 in. lbs.), stake nut to prevent loosening in service. Pull cylinder up on piston rod, measure exact correct amount of new fluid in measuring cup (see Capacity Chart above), pour fluid into cylinder above piston until cylinder is full. Install compression valve in end of cylinder and tap in place with a soft mallet. Pour remainder of fluid into reservoir tube. Install new gasket in upper end of tube, install top assembly and tighten guide securely with special wrench.

NOTE—Install rear shock absorbers on car with stone shield (welded to reservoir tube) to front.

REFILLING:—All shock absorbers should be removed from car and disassembled, old fluid poured out, and refilled with exact correct amount of new fluid when reassembled. See chart below for correct fluid capacity for each type and servicing section (following for disassembly directions.

NOTE—Shock Absorbers with filler plugs at lower end should be refilled in same manner as types without plugs by disassembling units. Do not disturb filler plugs (used for initial filling at factory). Capacity for each unit determined by suffix letter of model number (1110-C) as follows:

Fluid Capacity (With Filler Plug)

Letter Model	Ozs. Capacity	CCs.	Model Letter	Ozs. Capacity	CCs.
A	3½	104	N	5⅝	166
B	3⅝	109	P	5¾	171
C	3⅞	114	Q	6	177
D	4	119	R	6⅛	182
E	4¼	124	S	6¼	187
F	4⅜	129	T	6½	192
G	4½	135	U	6⅝	197
H	4¾	140	V	6⅞	203
J	4⅞	145	W	7	208
K	5⅛	150	X	7¼	213
L	5¼	156	Y	7⅜	218
M	5½	161	Z	7½	223

Fluid Capacity (No Filler Plug)

Model Letter	Ozs.	Model Letter	Ozs.
A	3½	R	6
B	3⅝	S	6¼
C	3¾	T	6⅜
D	4	U	6½
E	4⅛	V	6¾
F	4¼	W	7
G	4½	X	7⅛
H	4⅝	Y	7¼
J	4⅞	Z	7⅜
K	5	AA	7½
L	5⅛	BB	7¾
M	5⅜	CC	8
N	5½	DD	8⅛
P	5⅝	EE	8¼
Q	5⅞	FF	8⅜

NOTE—If shock absorber has hex-head filler plug, use special larger capacity specifications on these models: A-4¾ ozs., B—5¼ ozs., C—5¼ ozs.

ADJUSTMENT:—Ride adjustment can be made only by replacing valves.

IMPORTANT NOTE—Shock absorbers on both sides of car must have same valve calibration (Right & Left Front same, Right & Left Rear same).

TROUBLE SHOOTING:—Shock Absorber Noisy. See that mounting brackets are tight. Replace rubber grommets in shock absorber mounting eyes if worn. Check shock absorber alignment. See that unit not striking or rubbing on frame or body or other parts of car. Disconnect one end of shock absorber and operate by hand to make certain that piston not binding in cylinder. Dismantle unit, check fluid level, see that valves correctly assembled and that piston rod nut tight on piston.

Oil Leaks—Tighten piston rod guide securely. If leakage continues at piston rod or around edge of guide, dismantle unit, replace guide and seal assembly, make certain that new gasket installed at top of reservoir tube when guide reassembled.

Performance Unsatisfactory—Operate shock absorber by hand to see that piston not binding in cylinder and all parts operate freely. Dismantle unit and check fluid level and valve assembly. Change valves for unusual operating conditions.

DELCO DIRECT-ACTING TYPES 1000, 10, 20, 30, 40

1940 CAR MODELS

Car Model	Delco Model Nos. Front	Rear
Chevrolet KB (1940)	1000-N	
Chrysler C25, 26 ('40)	1000-C	1001-T
Chrysler C25 (1940)①	1000-C	1001-W
De Soto S7 (1940)	1000-C	1001-T
De Soto S7 ('40)①	1000-C	1001-W
Dodge D14, 17 (1940)	1000-C	1001-T
Dodge D14, 17 ('40)③	1000-C	1001-W
Graham 107, 108, 109		
Hudson 43, 44, 47 (1940)	1007-C	1008-S
Nash & Nash-Lafayette (1940)③		1006-DD
Nash & Nash-Lafayette (1940)④		1006-EE
Packard '120' 1801 (1940)		1001-V
Plymouth P9, 10 (1940)	1000-C	1001-T
Plymouth P9, 10 ('40)②	1000-C	1001-W
Pontiac—all models ('40)		1000-V

①—18" Wheels. ②—20" Wheels.
③—Light Springs. ④—Heavy Springs.

1941 CAR MODELS

Car Model	Front	Rear
Chrysler C28,30,33 ('41) Exp.	1000-C	1001-T
Chrysler C28 (1941)①	1000-C	1001-W
DeSoto S8 (1941)	1000-C	1001-T
Dodge D19 (1941)	1000-C	1001-T
Dodge D19 (1941)②	1000-C	1001-W
Graham 109, 13 (1941)	1016-M	1008-N
Hudson 12, 14, 15, 17 ('41) ③	1007-C	1008-S
Nash 4140 ('41) Sedans	1026-N	1023-BB
Nash 4142,3,5 ('41)	1026-N	1023-Z
Nash 4160, 80 ('41)	1016-E	1023-BB
Packard 1901, 1A, 3A, 4 ,5, 7, 8 ('41)		1021-V
Plym uth P11,P12 (1941)	1000-C	1001-T
Pontiac—All Models (1941)		1024-V

①—Cars with 18" wheels. ③—Cars with 20" wheels.
③—Except Coupes which have Monroe equipment.

1942 CAR M DELS

Car Model	Front	Rear
Dodge D22 (1942)	1000-C	1001-T
Dodge D22 (1942)①	1000-C	1001-W
Hudson 22, 24, 27 (1942)②	1007-C	1008-S
Nash 4240 (1942)③④	1026-N	1022-BB
Nash 4240 (1942)⑥⑤	1026-N	1022-Z
Nash 4260, 80 (1942)	1016-E	1023-BB
Packard 2001, 11, 30 (1942)		1020-V
Packard 2001A, 3A, 4, 5, 7, 8, 21, 55 ('42)		1021-V
Pontiac All Models (1942)		1024-V

1946-49 CAR MODELS

Car Model	Front	Rear
Chrysler C38, C39 (1946-48)	1030-C	1030-T
De Soto S11 (1946-48)	1030-C	1030-T
Dodge D24 (1946-48)	1030-C	1031-T
⑦Ford Pass. Cars (1949)	1037-F	1031-R
Hudson 6 & 8 (1946-47)	1037-C	1041-S
Hudson 6 & 8 (1948)	301240	301241
Nash "600" (1946-47)	1035-F	1036-BB
Nash "600" (1948)	1018-E	1029-CC
Packard 6, 2100; 8, 2101, 11 ('46-47)		1040-V
Packard Cust. Super 8 2123, 26 ('46-47)		1040-V
Packard 8 & Super 8 (1948)		1040-V
Plymouth P15 (1946-48)	1030-C	1031-T
Pontiac 6 & 8 (1946-48)		1044-V
⑦Willys Civ. Jeep CJ-2A ('46-48)	1030-K	1031-K
⑦Willys 4-63, 6-63, VJ-2 ('46-48)	1030-C	1031-Q

SPECIAL TYPES—SEE NOTE

Car Model	Front	Rear
Plymouth P14 (1942)	"C" Type	"T" Type
Plymouth P14 (1942)①	"C" Type	"W" Type

①—Cars with 18" Wheels.
②—Except Coupe and Club Coupe (Monroe).
③—Except Models 4242, 4243, 4245.
④—With Export Springs (Except 4242, 3, 5).
⑤—Models 4242, 4243, 4245 only.
⑥—Models 4242, 3, 5 with Export Springs.
⑦—Sealed type. Cannot be refilled or dismantled.

SPECIAL SERVICE NOTES:—Refilling Caution—These shock absorbers do not require periodic servicing or refilling and need not be disassembled for inspection and filling unless performance is unsatisfactory. NOTE—Packard shock absorbers should be refilled at 10,000 mile intervals.

Chevrolet KB—Rear shock absorbers are Delco Single Acting type. See separate article for data.

Chrysler, DeSoto, Dodge, Plymouth Models—Delco Direct Acting Adjustable Shock Absorbers are optional or special equipment on these models. See separate article (following) for data. Monroe Direct Acting Shock Absorbers also used on Chrysler DeSoto and Dodge. See separate articles for data.

Hudson 1942 Shock Absorber Changes for Operation on Rough Roads. Special 'Heavy Duty' valve calibration available to provide more control when cars operated on rough roads. Regular shock absorbers can be changed to provide this heavy duty control by disassembling shock absorber (see Servicing below) and changing some valve parts to secure Heavy Duty Calibration.

Hudson—Monroe Direct Acting Shock Absorbers are used on Coupes and on other Hudson models.

Nash 1940 Models—Front shock absorbers on these models are Delco double acting type (combined with Independent Front Suspension system).

CONTINUED N NEXT PA E

DELCO DIRECT-ACTING TYPES 1000, 10, 20, 30, 40 (C nt.)

Packard—Front Shock Absorbers are Delco Double Acting type (part of Independent Suspension). Rear Shock Absorbers on other Packard models are Monroe Direct Acting Type (Domestic) or Delco Direct Acting Adjustable Type (Export). Refer to separate articles on these types for complete data.

Plymouth 1942 Models. Shock absorbers are same design as Delco types and are serviced in same manner as Delco units described below. Capacities are the same as shown in the Delco Capacity table for units of the same suffix number (C, T, W).

Pontiac—Front Shock Absorbers are Delco double acting type (part of front suspension assembly).

TYPE:—Double acting, three-tube, piston type similar to the types used on the preceding car models in that piston rod diameter is ½" and seal can be replaced (requires new service tools). NOTE—These models do not have filler plugs and must be disassembled for refilling (see Refilling directions following).

REFILLING:—Shock absorbers must be removed from car and disassembled as follows: Clamp lower eye in vise with shock absorber vertical (use special two-piece fixture #730 to hold bayonet end types—do not clamp bayonet end or shock absorber tube in vise). Pull shock absorber out to fully extended position, insert prongs of special wrench through holes in dust cover tube so as to engage slots in top guide (at upper end of reservoir tube—use care not to mar piston rod), unscrew guide, lift entire top assembly off, remove wrench. Remove lower end assembly (reservoir tube) from vise and pour out old fluid. Tap inlet and compression valve assembly out of lower end of pressure tube (top assembly), pull pressure tube out of dust tube and piston rod assembly so as to remove all old fluid from cylinder. Clamp top eye of shock absorber in vise with top assembly vertical and pressure tube fully extended. Measure exact correct amount of new fluid (see Fluid Capacity data below) and pour fluid into pressure tube until it is filled within ¼" of top, pour remainder of fluid into reservoir tube before it is installed. Install inlet and compression valve assembly in end of pressure tube. Clamp reservoir tube in vise, install new rod guide retainer gasket in top of reservoir tube (soak gasket in fluid and see that it seats properly in upper end of tube), install top assembly and turn in clockwise direction to engage threads on guide in reservoir tube, then extend shock absorber fully and use special wrench to tighten rod guide securely.

Fluid Capacity:—Fluid capacity differs for each type shock absorber and correct amount can be determined by suffix letter of model number or collapsed length as explained below.

Model Suffix Letter—Letter following model number—1000-C—indicates capacity as shown in table below. NOTE—Do not confuse this letter with valve calibration lettering which is also stamped on outer dust tube of shock absorber.

Collapsed Length—Fluid capacity may also be determined by measuring length with shock absorber fully collapsed. On 'Eye End' types, measure from center of eye on each end (on eye end types with one bayonet end, measure from center of eye to base of bayonet stem on opposite end). On 'Bayonet End' types, measure from base of bayonet stem on each end.

Fluid Capacity (Part No. Suffix Letter)

Model Letter	Ozs.	Model Letter	Ozs.
A	3½	R	6
B	3⅝	S	6¼
C	3¾	T	6⅜
D	4	U	6½
E	4⅛	V	6¾
F	4¼	W	7
G	4½	X	7⅛
H	4⅝	Y	7¼
J	4⅞	Z	7⅜
K	5	AA	7½
L	5⅛	BB	7¾
M	5⅜	CC	8
N	5½	DD	8⅛
P	5⅝	EE	8¼
Q	5⅞	FF	8⅜

Fluid Capacity (Collapsed Length)

Eye Type	Bayonet Type	Cap. Ozs.	Eye Type	Bayonet Type	Cap. Ozs.
8-8¼"	7¼"	3½		11 1/16"	6¼
8½"	7½-7¾"	3⅝		11 7/16"	6⅜
8¾"	8"	3⅞	12¼"		6⅜
9"	8¼"	4	12 7/16"	11½"	6¼
9¼"	8½"	4¼	12½"	12"	6⅝
9½"	8¾"	4⅜	12 11/16"	11¾"	6½
	9"	4½	12¾"		6¾
9¾"		4⅝	13"	12¼"	6⅞
10"	9¼"	4¾		12½"	7
10¼"	9½"	5	13¼"		7⅛
10½"	9¾"	5⅛	13½"	12¾"	7¼
10 11/16"		5⅛	13¾"	13"	7⅜
	10"	5⅜	13 15/16"		7⅜
11"		5½	14 3/16"	13¼"	7½
11¼"	10¼"	5⅝	14 7/16"	13½"	7¾
11 5/16"		5¼	14 11/16"	13¾"	8
11 7/16"	10½"	5¾	14 15/16"	14"	8⅛
11½"	10¾"	5⅞	15 3/16"	14¼"	8¼
11¾"	11"	6	15 7/16"	14½"	8⅜
12"	11¼"	6⅛			

SERVICING:—Disassembly—Remove top assembly (outer tubes, piston rod, and piston) as directed under Refilling (above). Unscrew piston rod nut (nut is staked in place), remove piston and valve parts (mark piston to insure replacement in same position on piston rod, note position of valve parts to insure correct order of replacement). Withdraw pressure tube and piston rod guide (see guide removal directions below if seal is to be replaced). Wash all parts of shock absorber in gasoline and dry with air (do not use solvents which will damage seal). All parts must be absolutely clean and dry.

Piston Rod Guide Seal Renewal—Remove guide from end of pressure tube by inserting handle of long screwdriver in tube and tapping guide out using care not to damage guide threads. Use Seal Extractor Fixture #724 (for shock absorbers with ½" piston rod) clamped in vise with round end up, place guide assembly on end of extractor and hold firmly while seal is being pried out with screwdriver. Press new seal in being careful to press only on outer edge of seal on types with leather wiper or raised center portion (use old shock absorber piston as press tool). On types without this leather wiper or raised center portion, apply pressure evenly on all sides of seal (use round stock of same diameter as seal).

CONTROL VALVES:—Consist of Compression and Inlet Valve Assemby (seated in lower end of pressure tube) and Rebound and Relief Valve (assembled on piston and held in place by piston nut).

Compression & Inlet Valve Assembly—This assembly cannot be dismantled and must be replaced as a unit.

Rebound & Relief Valve—See illustrations of valve assemblies which differ on the various models.

Piston & Valve Assembly—When re-installing old piston, use care to line up marks on piston and rod (made before disassembly) to prevent piston binding in cylinder and install all valve parts in same order as removed. If new piston being installed, check for binding in cylinder after piston nut is tightened by moving tube up and down. If piston binds, loosen nut and try new position on rod. Piston can also be seated before piston nut is tightened

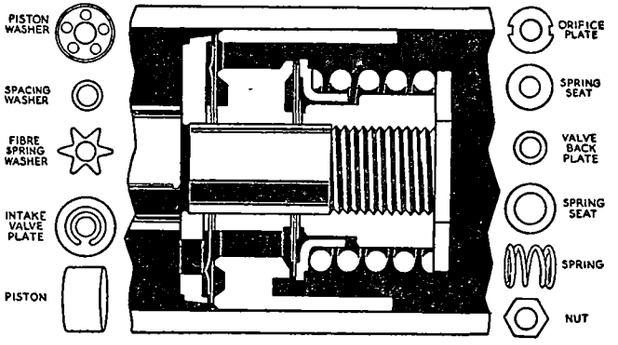

Types 1000, 1001, 1024, 1044

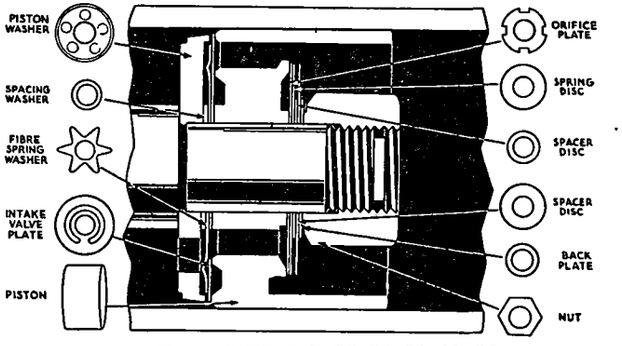

Types 1006, 7, 8, 16, 20, 21, 23, 26

by pulling cylinder out to fully extended position and then rotated 90° and forced down on piston. Nut should then be tightened and staked in position to prevent loosening in service. Recheck for binding (move arm through entire travel).

Reassembly—If piston rod removed from rod guide (for seal removal, etc.), install special #721 thimble on end of rod when installing rod through seal assembly and rod guide to prevent damage to seal. Install piston and valve assembly (above), then fill with exact correct amount of new fluid and reassemble as directed under Refilling above.

IMPORTANT SERVICE NOTE—Shock absorbers on both sides of car must have same valve calibration (Right & Left Front same, Right & Left Rear same).

DELCO DIRECT-ACTING 1938 BUICK TYPE

Car Models	Model No.
Buick, Models 38-40, 60, 80, 90 (1938)	1100-S

NOTE:—This type shock absorber used at rear end only in conjunction with new type rear suspension. Delco double-acting hydraulic shock absorbers used at front end (part of suspension assembly).

TYPE:—This type has larger (1⅜") piston and may be identified by larger dust shield (outer tube) which is approximately 2⅝" in diameter. Similar to design used on other models except for valve assemblies (see Servicing), special orifice in rod guide at top of upper cylinder (this orifice will keep cylinder free of air if shock absorber properly mounted on car), and baffle ring assembled below rod guide at upper end of reservoir tube.

REFILLING:—Shock Absorber must be removed from car (see special Removing instructions), all old fluid pumped out, and refilled with exact correct amount of new fluid twice each year. See preceding Direct Acting Shock Absorber article for complete instructions. If Delco #494 filling cup used, assemble with #490 shut-off valve and adapter. Buick type filler cup is No. J-1108. Capacity is 10½ ozs.

REMOVING & INSTALLING SHOCK ABSORBERS:—Removal. Take out two bolts mounting upper bracket on frame, remove shock absorber and upper bracket as a unit. To remove bracket, use Frame Bracket Tool (Delco #583, Buick No. J-1111), and compress upper rubber grommet slightly in a vise or press, remove snap ring from bracket stud.

Installing. Make certain that stone shield is on forward side (necessary for correct action of top cylinder rod guide orifice).

SERVICING:—Serviced in same manner as other Delco types (see following article on 1⅜" Direct Acting Shock Absorbers for complete data and note following points:

Disassembly. Collapse shock absorber to shortest length and remove knock-out plug on side of dust shield (this will prevent damage to piston rod). Extend shock absorber, install special wrench (Delco #582, Buick No. J-1117) and unscrew rod guide retainer nut being careful not to damage piston rod with wrench. If gaskets stick to reservoir tube when lifting off top unit, pull up on dust shield.

Rebound Valve Assembly. To disassemble, use ⅝" socket wrench to remove nut on lower end of piston rod under piston, lift off valve spring, valve reinforcing plate, valve back plate, spring disc, and orifice plate. Mark piston to insure replacing in same position on rod, remove piston, valve plate, spacer washer, spring washer, and bushing. Assemble in same order making certain that dowel on bushing engages hole in piston. Replace spring, orifice plate, or spring disc to secure lighter or heavier rebound resistance.

Compression & Intake Valve Assembly. Has new type valve assembly consisting of spider (riveted to spring stud), valve disc and spring seat in cage at upper end of spring. Valve assembly retained by light spring at lower end of cage and safety hairpin spring at upper end. To disassemble, depress octagonal washer at lower end of spring stud until head of stud is freed from grooves in washer, turn washer 45° and slip off. Change spring or valve disc for lighter or heavier compression resistance. Reassemble in same order. Valve assembly is light press fit end of pressure tube (tap on and off).

Piston Rod Guide & Seal. Can be removed from reservoir tube by tapping lightly. Seal cannot be serviced and complete guide and seal assembly should be replaced if seal is defective. When installing, make certain that baffle is in place on lower surface of guide, use new reservoir gaskets (dip gaskets in shock absorber fluid), install cork gasket first, then rubber gasket on shoulder on guide assembly. Use special thimble (Delco #583, Buick No. J-1109) on piston rod end when installing rod through guide assembly to avoid damage to seal.

CONTROL VALVE CALIBRATION:—Standard valve calibration for all 1938 models as follows:

Car Model	Compr. Valve	Rebound Valve	Orifice Plug
40C,41,44,46	6C	2E6	3
46C,46S,47,48	6D	2E6	3
61,64,66C,66S,67,68	6D	2E6	3
80C,81,81F	6D	2F8	3
90, 90L, 91, 91F	8D	2G8	3

DELCO DIRECT-ACTING (ADJUSTABLE) TYPES 930, 940, 1130, 1140

CHRYSLER				
1939-41	Crown Imperial		1134-E	1130-W
1942	Crown Imperial		1142-D	1140-W
1946-48	Crown Imperial		942-D	940-W
CHRYSLER-DE SOTO-DODGE-PLYMOUTH				
1939-41	Export		1134-E	1130-W
1939-41	Export	18" or 20" whls.	1134-E	1130-Y
1942	Export		1142-D	1140-W
1942	Export	18" wheels	1142-D	1140-Y
HUDSON				
1939	Export		1132-S	1131-T
PACKARD				
1940-42	Export			1130-W

MODEL IDENTIFICATION NOTE:—1" and 1⅜" Shock Absorber models can be readily distinguished by diameter of outer dust shield tube which is approximately 2" (1" types), 2⅝" (1⅜" types).

NOTE:—Chrysler, De Soto, Dodge Models—Shock Absorbers used on domestic cars are Monroe Direct Acting type. Refer to Monroe Shock Absorber article for complete data.

Packard Models—Delco or Monroe Direct Acting Shock Absorbers used on domestic cars. See separate articles for data on these types.

Plymouth Models—Shock Absorbers used on domestic cars are similar to Delco (non-adjustable) Direct Acting type. Refer to preceding article for data.

TYPE:—1⅜" piston, double acting, three tube, piston type with adjustment for Soft and Firm control (some models only). NOTE—Disregard all Adjustment data given below when servicing the non-adjustable types.

Orifice Plug—Consists of a calibrated metering restriction installed in the piston rod guide at the top of the pressure tube which allows fluid to escape from the cylinder directly into the reservoir tube when the shock absorber is being extended (rebound stroke). See Orifice Plug service data below.

REFILLING:—Shock absorber must be removed from car, disassembled, old fluid poured out, and filled with exact correct amount of new fluid when being reassembled. See disassembly directions under Servicing data (below) for complete directions. NOTE—Set adjustable types in Soft position before disassembling (see Adjustment directions following) and knock-out plugs in dust tube slots must be removed before wrench can be inserted. Retainer nut is separate part and not combined with rod guide and oil seal assembly. When assembling shock absorber use new cork and rubber guide gaskets under retainer nut (install cork gasket first and rubber gasket on top). IMPORTANT—Check Adjustment before re-installing shock absorber on car.

Fluid Capacity:—Differs for each type and correct amount can be determined by model letter or collapsed length as follows:

Model Suffix Letter—Letter following model number—1134-W—indicates capacity as shown in table below. NOTE—Do not confuse this letter with valve calibration lettering which is also stamped on outer dust tube of shock absorber following model designation.

Model Letter	Fluid Capacity Ozs.	Model Letter	Ozs.
D	6½	T	11⅛
E	6¾	U	11½
L	8¾	W	12
Q	10⅛	Y	12⅝
S	10½		

ADJUSTMENT:—Disconnect lower end of shock absorber or remove unit from car (upper end must be held stationary while adjustment being made). Collapse unit fully and turn lower end in direction of arrow on tube (counter-clockwise) until tang on adjusting cam engages slot in lower end of pressure cylinder within unit (determine engagement by feel). Note position of notch on dust tube in relation to marks on cylinder (3 notches spaced 120° apart on cylinder for two positions—'S' Soft, 'F' Firm; if unit has been disassembled these marks may not indicate setting correctly). To change setting, rotate lower end of unit in counter-clockwise direction only until a stop position is felt (unit will tend to lengthen slightly in Soft position, shorten slightly in Firm position). There are six stop positions in one revolution which are alternately Soft and Firm (collapsed length changes approximately 1/16" between positions). In order to line up reference marks on housing in each position, rotate lower end 1/6 revolution to change setting from Soft to Firm or Firm to Soft (one notch will be in line with 'S' or 'F' figure at end of each 1/6 turn). IMPORTANT NOTE—Shock absorbers on both sides of car must be set alike for balanced operation.

SERVICING:—Disassembly—Clamp lower ey in vise with shock absorber vertical (use special fixture for bayonet end types—do not clamp bayonet end or shock absorber tube in vise), remove knock-out plugs in dust tube holes, pull shock absorber out to fully extended position, insert prongs of special wrench #582 in dust tube hole and engage slots in retainer nut (use care not to mar piston rod), unscrew retainer nut, lift entire top assembly off. Tap compression valve assembly out of lower end of pressure tube. Use Allen wrench to unscrew nut on lower end of piston rod (nut seats in adjusting cam so that ordinary wrench cannot be used), withdraw piston and valve parts (mark piston to insure replacement in same position on piston rod, note position of valve parts to insure correct order of replacement). Wash shock absorber parts in gasoline (do not use solvents which will damage seal), dry with air. All parts must be absolutely clean and dry.

C NTINUED ON NEXT PA E

DELCO DIRECT-ACTING (ADJUSTABLE) TYPES 930, 940, 1130, 1140 (C nt.)

Rod Guide & Seal Assembly (All Models except 1140 Types). On these models, seal is integral part of guide assembly and cannot be removed (serviced as an assembly). If guide removed from pressure tube, make certain that baffle ring installed on upper end of tube under guide with open end at seal drain hole (diametrically across from Orifice Plug).

Rod Guide & Seal Assembly (1140 Types). On these models, rod guide screws directly into upper end of reservoir tube (no separate retainer nut used) and seal is serviceable. To replace seal, remove guide from pressure tube by inserting long brass rod or wooden screwdriver handle in tube and tap guide out. Pry old seal out of guide (**do not** use seal extractor #724 used on small shock absorbers as this tool will damage bearing surface of guide). Install new cork seal gasket, press new seal in place in arbor press, being careful to apply pressure evenly on outer edge of seal only (do not press on center raised portion).

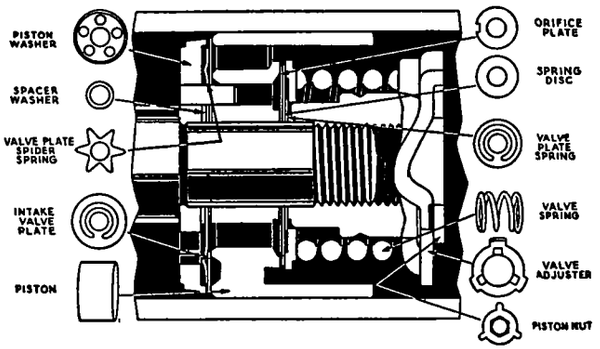

Orifice Plug Replacement. Orifice plug can be replaced if necessary. Use special screw extractor to remove old plug (make certain extractor does not bottom in plug) and discard plug (NOTE—plug will be damaged by removal and must not be re-used). Press new plug in place (point end in) until outer edge of plug is flush with surface of rod guide.

CAUTION—Use great care not to burr or otherwise damage orifice plugs when installing.

Rebound Valve Assembly—When re-installing old piston, use care to line up marks on piston and rod (made before disassembly) to prevent piston binding in cylinder. If piston not marked, or new piston being installed, align piston in cylinder before piston rod nut is tightened by pulling tube out to fully extended position and then rotating tube 90° and forcing it down on piston. Nut should then be tightened and staked to prevent loosening in service. All valve parts should be installed in same order as removed and adjustment cam should be turned to 'Soft' position (spring not compressed).

NOTE—On non-adjustable types, use Valve Assembly Sleeve No. 581 to center valve parts properly while assembling valve in piston.

Compression Valve Assembly—Serviced as an assembly but can be dismantled to change valve parts. To disassemble, use special tool to press in on valve washer (on lower end of intake valve stem), turn washer until hole registers with square end on stem, remove washer. Remove hairpin retainer spring in upper end f valve mounting and remove valve parts.

Reassembly—If piston rod removed from rod guide, use special thimble #583 installed on end of piston rod when inserting rod through seal and guide (will prevent threads on rod damaging seal). Install piston and valve assemblies (above), then fill with exact correct amount of new fluid and complete assembly by reversing disassembly directions above. Use new gaskets under retainer nut (install cork gasket first, rubber gasket on top). Check setting marks on shock absorber tube (if notch on dust tube not in line with 'S' mark, make new notch in line with mark and fill up old notch). Check shock absorber setting and adjust before installing on car.

CONTROL VALVES Valves consist of Compression Valve (seated in lower end of pressure tube), Rebound Valve (assembled on piston), and Orifice Plug (in rod guide at top of pressure tube).

Compression Valve—Performance controlled by spring disc and valve spring (heavy inner spring).

Rebound Valve—Performance controlled by Orifice Plate, Spring Disc and Valve Spring (see illustration for valve assembly).

IMPORTANT SERVICE NOTE—Shock Absorbers on both sides of car must have same valve calibration and be adjusted alike for balanced performance (Right & Left Front same, Right & Left Rear same).

DELCO DIRECT-ACTING (ADJUSTABLE) TYPE 1180 (1937 TYPE)

Car Model	Model Number Front	Rear
Studebaker Dict., 5A (Late '37)	1180-L	1182-U
Studebaker Dict., 6A (Late '37)	1181-S	1182-U
Studebaker Pres., 3C (Late '37)	1181-S	1182-X

DESCRIPTION & OPERATION:—Similar to type used on early 1937 cars except for adjustable feature. This consists of a mask or shield over the rebound valve orifice which can be turned to open or close the orifice ports providing a softer or firmer action. Shock absorber need not be dismantled for adjustment.

REFILLING:—Refilled in same manner as other types (see preceding article) using filler cup #494 and shut-off valve #490. Note rebound orifice setting (see adjustment instructions below) and take care not to disturb this setting when manipulating shock absorber. Capacity can be determined by suffix letter of model number as shown in table below.

Fluid Capacity Chart

Model Letter	Capacity Ozs.	CCs.	Model Letter	Capacity Ozs.	CCs.
A	3½	104	N	5⅝	166
B	3⅝	109	P	5¾	171
C	3⅞	114	Q	6	177
D	4	119	R	6⅛	182
E	4¼	124	S	6¼	187
F	4⅜	129	T	6½	192
G	4½	135	U	6⅝	197
H	4¾	140	V	6⅞	203
J	4⅞	145	W	7	208
K	5⅛	150	X	7¼	213
L	5¼	156	Y	7⅜	218
M	5½	161	Z	7½	223

ADJUSTMENT:—Disconnect bottom end of shock absorber and collapse unit so that notch at lower end of dust shield is adjacent to graduations on reservoir tube. Hold in this collapsed position and rotate lower end until ratchet spring on rebound orifice valve can be felt to engage notch in lower end of cylinder. With 'normal' factory setting, notch in lower edge of dust shield should line up with inverted 'V' at center of graduations at this point. To adjust, turn cylinder to right for firmer action, left for softer action as indicated on scale, being careful not to allow ratchet spring to disengage from notch in cylinder. Shock absorbers on both sides of car must be adjusted equally. This is important.

SERVICING:—Serviced in same manner as other types except that rebound orifice setting must be set at 'normal' (notch in dust shield in line with 'V' of scale with ratchet engaged in notch in lower end of cylinder) before unit is disassembled. Take care not to change ratchet adjustment when removing piston nut (valve assembled as unit on nut). Check normal, or standard position when unit is reassembled, and if necessary make a new notch on the dust shield opposite the 'V' of the scale to indicate this position (fill up old notch to avoid possibility of confusion).

Compression & Rebound Valves

Car Model	Compr. Valve Front	Compr. Valve Rear	Rebound Valve Front	Rebound Valve Rear
Studebaker 5A	C2	E2	425	550
Studebaker 6A	C2	E2	175	650
Studebaker 3C	C2	D1	75	550

DELCO DIRECT-ACTING (ADJUSTABLE) TYPES 1000, 1110, 1180, 1190

1938 CAR MODELS

Car Model	Model Numbers Front	Rear
Chrysler Royal C18 (1938) Export	1183-D	1184-U
Chrysler Imp. C19 (1938) Export	1183-D	1184-U
Chrysler Cust. Imp. C20 ('38) Ex.	1183-D	1184-U
Dodge, Mod. D8-7 Pass. Cars (1938)	1183-U	1184-U
Dodge D8 7 Pass. (Late 1938)	1192-T	1192-T
Nash-Lafayette Model 3810 (1938)	1187-K	1189-N
Nash-Lafayette 3810 (Late '38)	1197-K	1199-N
Nash 6 & 8 (Early 1938)	1187-K	1189-N
Nash 6 & 8 (Late 1938)	1197-K	1199-N

1939 CAR MODELS

Chrysler C22, 23 ('39) Exp.	1114C	1115T
De Soto S6 (1939) Exp.	1114C	1115T
Dodge D11 ('39) Exp.	1114C	1115T
Dodge D11 Exp. 20" Wheels	1114C	1115W
Plymouth P7, 8 ('39) Exp.	1114C	1115T
Plymouth P7, 8 Exp. 20" Wheels	1114C	1115W

1940 CAR MODELS

Chrysler C25, 26 ('40) Exp.	1002-C	1003-T
Chrysler C25 (1940) ① Exp.	1002-C	1003-W
De Soto S7 (1940) Exp.	1002-C	1003-T
De Soto S7 ('40) ① Exp.	1002-C	1003-W
Dodge D14, 17 ('40) ②	1002-C	1003-W
Dodge D14, 17 ('40) ② Exp.	1002-C	1003-T
Plymouth P9, 10 ('40) ②	1002-C	1003-W
Plymouth P9, 10 ('40) ② Exp.	1002-C	1003-T

①—Cars with 18" Wheels.
②—Cars with 18" or 20" Wheels.

C NTINUED ON NEXT PA E

DELCO DIRECT-ACTING (ADJUSTABLE) TYPES 1000, 1110, 1180, 1190 (Cont.)

NOTE:—Chrysler, DeSoto, Dodge, Plymouth Models. Delco Direct Acting (non-adjustable) and Monroe Direct Acting Shock Absorbers also used on these models. See separate articles for data, these types.

Nash Models. Gabriel Direct Acting Shocks used on some cars. See Gabriel article for data.

TYPE:—Double acting piston type similar to other Delco models except for adjustable feature which consists of an adjustment cam assembled on the piston rod nut below the piston by which the spring tension of the Rebound valve can be varied from 'Soft' to 'Firm' for special operating conditions. This adjustment can be made without dismantling the shock absorber (see Adjustment section below).

REFILLING:—Shock absorbers must be removed from car, all old fluid pumped out, and refilled with exact correct amount of new fluid in same manner as other Delco models. Capacity designated by suffix or last letter of model number (see car list above) for each model as shown in following table. See preceding Direct Acting Shock Absorber article for complete filling directions.

1939 Type—Shock absorbers must be removed from car and disassembled, old fluid poured out, and refilled with exact correct amount of new fluid when reassembled. See chart below for correct capacity for each type and Servicing section (following) for disassembly directions. NOTE—Shock absorbers with filler plugs at lower end should be disassembled for refilling in same manner as types without plugs. Do not disturb filler plug (used for initial filling at factory).

Fluid Capacity—Capacity for each unit determined by suffix letter of model number (1114-C) as follows:

Fluid Capacity—1" Types

Model Letter	Ounces	CCs.	Model Letter	Ounces	CCs.
A	3½	104	N	5⅝	166
B	3⅝	109	P	5¾	171
C	3⅞	114	Q	6	177
D	4	119	R	6⅛	182
E	4¼	124	S	6¼	187
F	4⅜	129	T	6½	192
G	4½	135	U	6⅝	197
H	4¾	140	V	6⅞	203
J	4⅞	145	W	7	208
K	5⅛	150	X	7¼	213
L	5¼	156	Y	7⅜	218
M	5½	161	Z	7½	223

A, B, C Note—When these units fitted with hexagonal headed filler plug, capacity is 4¾ ozs. (A), 5¼ ozs. (B, C).

ADJUSTMENT:—Disconnect lower end of shock absorber (keep upper end stationary), collapse unit fully and rotate lower end of shock absorber until adjustment engages (tang on adjusting cam washer will engage slot in pressure cylinder lower end within unit). Note position of notch on dust shield with relation to mark on cylinder (two settings only —'F' firm, 'S' soft). To change setting, rotate lower end of shock absorber in counter-clockwise direction only as viewed from below until a stop position is felt (unit will tend to shorten slightly when approaching 'Firm' position, lengthen when approaching 'Soft' position). There are six stop positions in one complete revolution which are alternately Soft and Firm. In order to line up reference notch on dust shield with mark on reservoir tube in each position, turn lower end 1/6 revolution (to change setting from Firm to Soft), or 5/6 revolution (to change setting from Soft to Firm). See that filler plug points toward rear of car when re-connecting shock absorber. Adjust shock absorbers on both sides of car for same setting to insure balanced operation.

SERVICING:—Serviced in same manner as other Delco type (see preceding Direct Acting Shock Absorber article) except for following points:

Disassembly. Set shock absorber in 'Soft' position before disassembling. This is important. When clamp fixture (#493) used to hold 'bayonet end' type on bench, filler plug must be removed and special steel plug (#44288) installed in filler plug hole to prevent sheering off plug when shock absorber turned with wrench.

Rebound Valve Assembly. Use Allen wrench (#488) to remove piston rod nut (regular wrench cannot be used as nut has tangs which engage adjusting cam washer), lift off adjusting cam washer, valve spring, valve back plate, spring disc, and orifice plate (orifice plate not used on all models). Mark piston to insure replacing in same position on rod, remove piston, valve plate, spacer washer, spring washer and bushing. Assemble in same order. Replace valve spring, orifice plate, or spring disc for lighter or heavier rebound resistance.

Assembling. When installing piston rod nut, see that tangs on nut are in depressions in cam washer so that spring is not compressed (soft position). Stake nut on rod to prevent loosening in service. Check reference marks as follows: With shock absorber completely reassembled and filled with fluid, collapse unit and turn until tang on adjusting cam washer is felt to engage notch in pressure cylinder lower end. If notch on dust shield does not line up with 'S' mark on pressure cylinder, cut new notch in dust shield in line with 'S' mark, fill up old notch to prevent confusion. NOTE—Before making new notch, make certain no one of the three identical soft settings (equi-distant apart in one complete counter-clockwise revolution of shock absorber lower half) lines up with old notch. Adjust shock absorber for Firm or Soft action before installing on car (See Adjustment section above).

IMPORTANT NOTE—Always adjust shock absorbers on both sides of car for same setting to insure balanced operation).

DELCO DIRECT-ACTING 1936 TYPES

Car Model	Delco Part No. Front	Rear
Auburn Eight, 852 (1936-37)		
Graham Crusader 80, 80A (1936)	1150-A	1150-A
Graham Cavalier 90, 90A (1936)	1150-A	1150-A
Graham Supercharger 110 (1936)	1150-A	1150-A
Hudson 6 & 8 (1936)	1152-A	1151-C

DESCRIPTION & OPERATION:—Direct acting type. Consists of a piston rod and piston attached to the car frame working within a compression cylinder attached to the axle. Reservoir cylinder surrounds compression cylinder and has a leather oil seal at its upper end which contacts piston rod. Outer dust shield cylinder is attached to upper or piston rod end of shock absorber. On compression stroke the fluid displaced from the lower end of the cylinder flows through valve ports in the piston into the upper portion of the cylinder. Excess fluid (to compensate for displacement of piston rod in upper end of cylinder) is expelled through a bleed hole in the flapper valve at the lower end of the cylinder into the reservoir. On rebound stroke, fluid is trapped in upper cylinder until valve plate is sprung away from valve disc (valve assembly mounted on top of piston), and then flows through piston ports into lower end of cylinder. Flapper valve permits free flow of fluid into lower cylinder from reserv ir so that cylinder is kept full at all times.

REFILLING:—Remove shock absorber from car, pull out to fully extended position, remove filler plug and lead washer. Place unit in horizontal position on bench with filler plug hole up (use special fixture, do not clamp housing in vise). Pour genuine Delco fluid slowly into fluid hole until fluid rises to top of bleeder hole at side of filler hole. Do not fill above this point as sufficient air space must be left above fluid in reservoir. See that lead washer is in good condition and tighten filler plug securely.

Hudson Models. Special filler cup furnished so that required amount of fluid can be installed. Remove old fluid by pumping piston back and forth with filler plug and gasket removed. Clamp base end of shock absorber in vise (mounting eye, not housing) so that housing is horizontal and filler plug hole up. Collapse to shortest length, screw filler cup in place in filler hole, pour correct amount of fluid in cup (see table), pull shock absorber out to fully extended position and work piston back and forth with short quick strokes to draw all of fluid in, remove filler cup, install filler plug.

Capacity (Fluid Ounces).

Car Model.	Front	Rear
Hudson 6 & 8	4¾ ozs.	5¼ ozs.

SERVICING:—Disassembly. Remove all old fluid by pumping the shock absorber piston up and down with filler plug removed. Clamp top eye of shock absorber in vise (do not clamp housing), collapse shock absorber and turn slowly until pin in top engages hole in top guide (top of pin must be flush with outside top surface of housing), continue turning toward left until top unit can be lifted off. Clamp top eye in vise, remove piston nut, take off piston, valve plate, valve disc, spring and guide. Remove piston rod guide and oil seal assemblies.

Servicing. Wash all parts with gasoline and dry with air.

Reassembly. Reverse disassembly directions. Use special two or three prong tool when assembling valves. Install piston on tool with valve side down, press ends of pins against valve to compress spring so that end of bushing projects slightly above top surface of valve disc, press piston down into tube until it bottoms against bushing maintaining tool pressure on valve, withdraw tool without releasing pressure on piston, install nut loosely. Extend shock absorber to full length, rotate 90° and collapse it again before tightening piston nut securely. This will align piston on rod. To check assembly, use tool to see that valve can be depressed slightly.

DELCO DIRECT-ACTING TYPES 1160, 1170, 1190

Used On:	Model Number Front	Rear
Chrysler (Can.), C18,19,20('38)	1162-D	1163-U
De Soto, Model S3 (1937)	1162-G	1163-U
DeSoto, Model S5 (1938)	1162-D	1163-U
DeSoto S5 (Late 1938)	1177-C	1178-T
Dodge, Model D5 (1937)	Made by Chrysler	
Dodge, Model D8 (1938)	1162-U	1163-U
Dodge D8 (20" wheels) '38	1162-X	1163-X
Dodge D8 (Late 1938)	1177-T	1178-T
Dodge D8 20" Whls. (Late '38)	1177-W	1178-W
Graham, Crus. Model 85 (1937)	1165-L	1166-K
Graham, Cav. Model 95 (1937)	1166-K	1166-K
Graham, Schgr. 116, 120 (1937)	1166-K	1166-K
Graham, Std. & Spec. 96 ('38)	B1161-K	B1163-P
Graham, Schgr. 97 (1938)	B1161-K	B1163-P
Hudson, All Models (1937)	1175-S	1174-T
Hudson Six, 83 (1938)	1164-S	1163-T
Hudson Eight, 84,5,7 ('38)	1164-S	1163-T
Plymouth, P3, P4 (1937)	1162-U	1163-U
Plymouth P3,4 (20" wheels) '37	1162-X	1163-X
Plymouth, P3,4 Exp.(1) '37	1162-U	1163-U
Plymouth, P3,4 Exp.(2) '37	1162-X	1163-X
Plymouth, P5,6 (1938)	1162-U	1163-U
Plymouth, P5,6 (20" wh.) '38	1162-X	1163-X
Plymouth P5, 6 (Late 1938)	1177-T	1178-T
Plymouth 20" Whls. (Late '38)	1177-W	1178-W
Pontiac 6 & 8 (Early 1937)		1169-U
Pontiac 6 & 8 (1937)		1174-U
Pontiac 6 (Late '37 & '38)		P1163-U
Pontiac 8 (Late '37 & '38)		S1163-U
Pontiac 6 (Late 1938)		P1193-U
Pontiac 8 (Late 1938)		S1193-U
Studebaker 5A (Early 1937)	1165-L	1167-U
Studebaker 5A (Late 1937)	1173-L	1172-U
Studebaker 6A (Early 1937)	1166-S	1167-U
Studebaker 6A (Late 1937)	1171-S	1172-U
Studebaker 3C (Early 1937)	1166-S	1167-X
Studebaker 3C (Late 1937)	1171-S	1172-X

(1) Soft Ride. (2) Firm Ride & 20" wheel Equipment.

DESCRIPTION & OPERATION: Direct Acting type. Consists of a piston rod and piston attached to the car frame working within a compression cylinder attached to the axle. Reservoir cylinder surrounds compression cylinder and oil seal at upper end contacts piston rod. Outer dust shield cylinder is attached to upper piston rod end of shock absorber. Rebound valve (two types used—see illustration) is located within the piston and controls fluid flow through piston holes from one end of cylinder to the other on compression and rebound. Excess fluid (on compression) is forced out into reservoir chamber through compression valve (in center of compression and intake valve assembly) at bottom of compression cylinder. On rebound, this fluid flows back into the cylinder through the intake valve

REFILLING:—10,000 Mile Intervals. Remove shock absorber from car, clean thoroughly particularly around filler plug at lower end, pull shock out to extended position, remove filler plug, pump all old fluid out by repeated strokes with filler opening down. Clamp eye at filler plug end in vise at 45° angle with filler hole up (on bayonet type, clamp eye at top in vise), collapse shock absorber to shortest length, screw special filling cup (#494) in filler hole, close shut-off valve, pour correct amount f fluid (see table below) in cup, pen shut-off valve, pull shock absorber ut to fully extended position, work piston back and forth using short quick strokes until all fluid is drawn into cylinder, replace filler plug and tighten securely.

Capacity Note—Capacity designated by suffix or last letter of model number (see car listing above) as shown in following table for each 'model letter'.

Fluid Capacity

Model Letter	Ounces	CCs.	Model Letter	Ounces	CCs.
A	3½	104	N	5⅝	156
B	3⅝	109	P	5¾	171
C	3⅞	114	Q	6	177
D	4	119	R	6⅛	182
E	4¼	124	S	6¼	187
F	4⅜	129	T	6½	192
G	4½	135	U	6⅝	197
H	4¾	140	V	6⅞	203
J	4⅞	145	W	7	208
K	5⅛	150	X	7¼	213
L	5¼	156	Y	7⅜	218
M	5½	161	Z	7½	223

SERVICING:—Disassembling—Thoroughly clean shock absorber, pull out to fully extended position, clamp vertically in vise engaging flat of filler end eye in vise jaws (End Eye Type), or engage filler plug in slot of fixture (#493) clamped in vise (Bayonet End Type), insert special wrench (#491) through slot in dust shield so that lugs engage slots in top guide (see that wrench does not damage piston rod), unscrew this guide, lift top of unit off, remove wrench. Compression and intake valve assembly cage is light press fit in cylinder and may be removed by light tapping. Wash all parts in gasoline and dry with air. If valve assemblies are to be taken apart r oil seal renewed follow directions below.

Oil Seal Assembly & Top Guide Renewal—Clamp top eye of shock absorber in vise, disassemble and remove rebound valve assembly and piston (see below), pull compression cylinder and top guide assembly off piston rod. If guide is to be renewed, remove from cylinder tube by tapping lightly (press fit). Use special puller No. 534 to remove old seal assembly. Insert new piston rod seal gasket using flat end of 1 1/16" round stock to seat gasket evenly on shoulder in guide. Use this same 1 1/16" stock to press in new seal assembly until it rests firmly n gasket (use arbor press—pressure must not be great enough to distort top of seal). Use special thimble (#496) on end of piston rod when inserting rod through seal to avoid damage.

Compression & Intake Valve Assembly—Support assembly on bench, spring end up, engage special tool (#492) under stem head and over square washer so that recessed portion of tool engages open side of washer, press down on tool and press washer from under stem head. Assembly can then be taken apart. Reassemble in same position. Cylindrical valve (on stem) or spring (heavy spring which engages collar on valve) may be changed to alter shock absorber performance.

Piston Rebound Valve—Various types of Rebound Valve assemblies have been used (see illustrations). To disassemble all types, clamp top eye in vise, use special socket wrench to remove piston nut. Mark piston in line with punch mark on rod (replace in same position), remove valve assembly parts and piston. To alter shock absorber performance,

CONTINUED ON NEXT PAGE

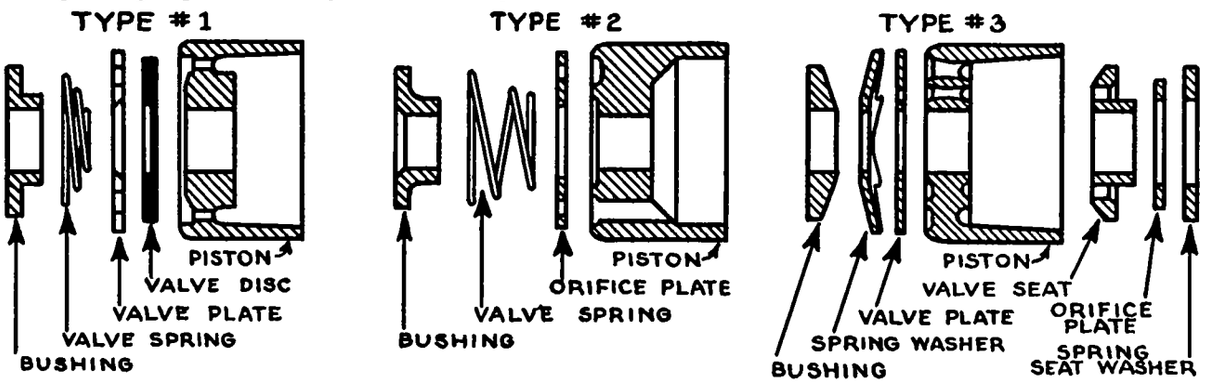

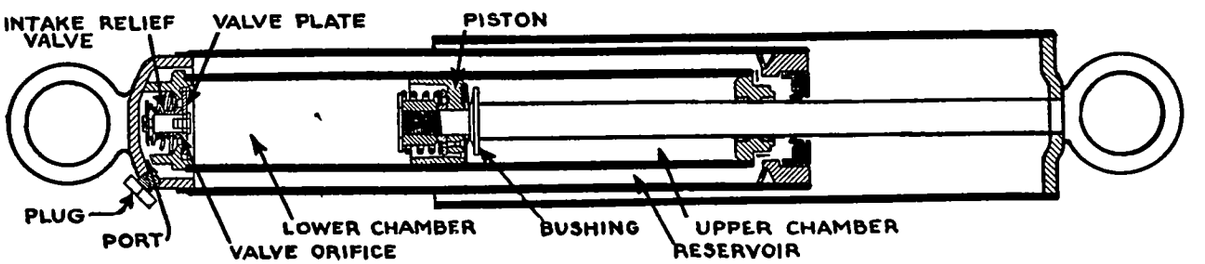

DELCO DIRECT-ACTING TYPES 1160, 1170, 1190 (C nt.)

change Valve plate (Type 1), orifice plate (Type 2), valve spring or orifice plate (Type 3). Reassemble valve parts in original positions. Tighten piston nut securely and stake to prevent loosening.

Car Model	Valve Assembly Illustration
De Soto, Dodge, Plymouth	Type 3
Graham	Type 1
Hudson, Pontiac	Type 3
Studebaker	Type 2

Reassembling—See that all valve assemblies made correctly (see illustrations). Assemble piston in exact original position on piston rod. If new piston installed, before tightening piston nut, pull pressure cylinder to fully extended position, rotate 90°, force downward to locate piston properly on rod. Tighten piston nut securely and stake. Operate through entire travel to make certain that piston does not bind. Use new rubber gasket in reservoir tube under top guide (dip gasket in shock absorber fluid and stretch to fit), replace steel gasket retainer if necessary. Reassemble shock absorber by reversing disassembling directions making certain that top guide is securely tightened to prevent leakage past gasket.

TROUBLE SHOOTING:—Shock Absorber Noisy. See that shock absorber brackets on frame are tight and that shock absorber does not strike or rub on frame or chassis parts. Check rubber mounting bushings, replace if worn. Check shock absorber, see that dust shield does not strike reservoir tube, operate shock absorber by hand slowly and see that piston does not bind in compression tube. Check fluid. Disassemble shock absorber and check valves.

Oil Leaks—If fluid leaks at filler plug, tighten plug. If fluid leaks at top, see that top guide is screwed down tightly. Replace guide seal assembly or top guide gasket (see Servicing data).

CONTROL VALVE CALIBRATION:—Standard calibration for all models as given below.

Car Model	Compr. Valve Front	Compr. Valve Rear	Rebound Valve Front	Rebound Valve Rear
Chrysler C18	HO	C1	OD6	OF6
Chrysler C19	JO	C1	OF8	OF6C
Chrysler C20	JO	C1	OF8	OF6
DeSoto S3	EO	B1	OC6	1F6
DeSoto S5	HO	C1	OD6	OF6
Dodge D8	E1	C1	OO6	OF6
Dodge D8 (20" Wh.)	E1	B1	OE6	OJ8
Graham 85	B2	C4	5-0	5-4
Graham 95, 116, 120	B2	A4	7-0	9-0
Graham 96, 97	B2	A2	1T1010	2R1D10
Hudson 73,4,5,6,7	C3	A4	3L	3N
Hudson 83, 4, 5, 7	E3	B3	2D6	2E6
Nash 3810, 3820	B1	B1	3NV6	3HR6
Nash 3880	A2	B2	2AD4	OBD6
Plymouth P3,4	E1	B1	004	1F6
Plym. P3,4(20" wh.)	E1	B1	004	1F6
Plym. P3,4 Exp.(1)	E1	B1	004	1F6
Plym. P3,4 Exp.(2)	E1	4B	OE6	OJ6
Plymouth P5, P6	E1	C1	OO6	OF6
Plym'th P5,6(20"W)	E1	B1	OE6	OJ8
Pontiac 6 37-26CA		A2		1N
Pontiac 8 37-28CA		A2		1N
Pontiac 6 38-26DA		B2		4R8
Pontiac 8 38-28DA		A2		1J6
Studebaker 5A	B1	C2	2-76	2-70
Studebaker 6A	B2	C2	2-110	2-67
Studebaker 3C	B2	B1	3-98	2-67

(1) Soft Ride. (2) Firm Ride & 20" wheel Equipment.

GABRIEL DOUBLE-ACTING

Car Model	MODEL NOS.: Front	Rear
Hupmobile 6, 618G ('36)	LT	LT
Hupmobile 8, 621N ('36)		
Hupmobile 6, 822E('38), 922E('39)	KT	KT
Hupmobile 8, 825H('38), 925H('39)	OT	KT
Nash Amb. 6, 3620('36), 3720('37)	KT	KT
Nash "400", 3640 & 3640A ('36)	LT	LT
Nash Amb. 8, 3680 ('36), 3780 ('37)	OT	KT
Nash-Lafayette 3610 ('36)	LT	LT
Nash-Lafayette 3610 (Late '36)	LT	①P
Nash-Lafayette 3710 ('37)	KT	LT

①—Gabriel-Walex type.

DESCRIPTION & OPERATION:—Single vane, double acting, hydraulic type. Vane mounted on shaft displaces fluid from working chambers on compression and rebound. Fluid flow from chamber restricted by non-adjustable fixed orifice on compression, adjustable piston valve on rebound. Rebound valve control types are as follows:

Manual Adjustment. Consists of an adjusting screw within filler plug opening which can be turned to vary action.

Ride Control Type. Adjusting lever on shock absorber case linked to dash control lever so that shock absorber action can be varied by driver.

Automatic Thermostatic Control Type. This type fitted with adjusting screw located within filler plug opening but screw connected to valve by thermostatic element so that valve position is automatically compensated for temperature variation.

SERVICING:—Fluid Level. Inspect at 5000 mile intervals and fill with genuine Gabriel fluid to level even with bottom of filler plug hole (unit must be in normal mounting position). Work arm up and down several times to expel air bubbles.

ADJUSTMENT:—Ride Control Types. All units should be adjusted evenly. Linkage should be adjusted so that levers are against stops when dash control button is in extreme inner or outer position.

Manual & Thermostatic Control Types. Use special filler plug wrench and adjusting tool, remove filler plug, use wrench to turn adjusting screw slightly in or clockwise for firmer action, out or counter-clockwise for softer action. Adjustment range is from 1½ to 3 turns out from the inner seated position (see table below for standard setting for each car model). To adjust setting, turn screw in until it is seated (count turns required to determine original setting), then turn screw out specified amount for correct setting. Do not use excessive force when turning screw in to check seated position.

Car Model	SETTING (Turns Open): Front	Rear
Hupmobile 6, 618G ('36)	1¾	2
Hupmobile 6, 822E ('38), 922E ('39)	2⅛	2
Hupmobile 8, 825H ('38), 925H ('39)	2	1¾
Nash Amb. 6, 3620 ('36)	2½	3
Nash "400', 3640 & 3640A Sedan ('36)	3	2½
Nash "400", 3642 & 3642R Coupe ('36)	2½	2¼
Nash Amb. 8, 3680 ('36)	2⅜	3
Nash Amb. 6, 3720 ('37)	2¼	2
Nash Amb. 8, 3780 ('37)	2¾	2⅛
Nash-Lafayette, 3610 Sedan ('36)	3	2½
Nash-Lafayette, 3612, 12R Coupe ('36)	2⅞	2¼
Nash-Lafayette, 3710 Sedan ('37)	2½	2⅛
Nash-Lafayette, 3710 Coupe ('37)	2⅝	2

GABRIEL DIRECT-ACTING ADJUSTABLE TYPE

1938-39 CAR MODELS

Nash, Amb. 6 & 8 Models (1938-39)
Nash-Lafayette, Model 3810 (1938), 3910 (1939)

1940 CAR MODELS

Car Model	Front	Rear
Hupmobile Sen. 6 922E ('39)	B-6002	B-7006
Hupmobile Skylark R ('39-40)	B-7005	B-7504
Willys 440 (1940)	B-5375	B-6250

1947-48 MODELS

Willys Trucks, 2T, 4T ('47-48)....BBB-726....BBB-870

NOTE:—**Hupmobile Models**—For data on Gabriel Double Acting (rotary) Shock Absorbers used on first 1939 cars, see preceding article.

Nash & Nash-Lafayette—Delco Direct Acting Shock Absorbers used on some cars.

Willys—Monroe Direct Acting Shock Absorbers (3 tube type) also used on Passenger Cars.

TYPE:—Direct Acting, adjustable, piston type. Shock Absorber case is welded in assembly and cannot be dismantled for servicing or refilling.

SERVICING:—Serviced by replacement (case is welded and Shock Absorber cannot be dismantled).

ADJUSTMENT:—Shock absorbers set at factory for standard control (see table below) and performance should be satisfactory for all average riding conditions. Before changing adjustment to correct riding complaints, see that tires are properly inflated, springs & shackles lubricated & adjusted.

To Adjust—Remove shock absorber from car r disconnect lower mounting (necessary in order to collapse instrument fully). Collapse shock absorber fully by pressing upper and lower halves together and hold in this position until adjustment completed. Turn shock absorber cylinder to right (clockwise) slowly until adjustment key can be felt to drop into and engage slot in valve (within shock absorber). Continue to turn cylinder to right until a definite stop is felt (¾-2 turns rotation) indicating that valve is closed. Then turn cylinder to left (counter-clockwise), to open valv , desired number of turns

IMPORTANT NOTE—Shock absorbers on both sides of car must always be adjusted alike (Right & Left Front same, Right & Left Rear same).

Adjustment Table

Car Model	Valve Opening (No. of Turns) Soft	Standard	Firm
Hupmobile (All)	2	¾	¼
Willys (Pass. Cars) Front	2	¾	¼
Willys (Sedan) Rear	2	⅝	¼
Willys (Coupe) Rear	2	⅞	¼
Willys (Truck) All		1	

Adjustment Note—When specific recommendations not available, shock absorbers may be set as follows: Very Firm to Firm Control—¼-¾ turn open, Standard Control—¾-1¼ turns open, Soft Control —1¼-2 turns open.

CAUTION—Adjustment valve must be at least ¼ turn open (operating with valve fully closed will damage shock absorber and mountings). Maximum adjustment is 2 turns open (do not force valve beyond this position). Use hand pressure nly when making adjustments and do not force beyond fully closed and fully open positions. Operate shock absorber only in upright position (d not invert). When installing rear shock absorbers, see that stone shield faces forward.

HOUDE (HOUDAILLE) ROTARY TYPE

1936-37 CAR MODELS

Ford, Lincoln V12, Lincoln Zephyr (1936-37)
Pierce Arrow 8 & 12, All Models (1936-37)
Studebaker, Dictator & President (1936)

1938 CAR MODELS

Car Models.	Houde Model No. Front.	Rear.
Ford, All Models (1938)	BBDE	BBDU
Lincoln, V12 Model (1938)	ALG	ALG
Lincoln-Zephyr, Model 86H (1938)	BBLCE	BBCU
Packard 8, Series 1601, 1A, 2 (1938)	OBBDI	OBBCF
Pierce Arrow 8 & 12 (1938)	APGH	AGH
Studebaker Comm. & Pres. ('38)	BEDVS	ASC

1939 CAR MODELS

Ford, All Models (1939)	BBDK	BBDW
Lincoln V12 Model (1939)	ALG	ALG
Lincoln Zephyr 96H (1939)	BBLCE	BBCU
Mercury Model 99A (1939)	BBDK	BBDW
Packard Rear Stabilizer (1939)		NFT
Studebaker Champ. G (1939)	BBFS	ACHS
Studebaker Comm. 9A (1939)	BBFFS	ACHS
Studebaker Pres. 5C (1939)	BBFS	ACHS

1940 CAR MODELS

Ford All '60' & '85' ('40)	BBDM	BBDX
Lincoln V12 (1940)	ALG	ALG
Lincoln-Zephyr 06H (1940)	BBCM	BBCX
Mercury 09A (1940)	BBDM	BBDX
Packard Rear Stabilizer (1940)		NFT
Studebaker Champ. 2G (1940)	BBFSS	BBDS
Studebaker Comm. & Pres. ('40)	BBFS	ACHS

1941 CAR MODELS

Ford Pass. Car Models (41)	BBCN	BBCZ
Ford Comm'l. (1941)	BBCME	BBCZ
Ford Truck (1941)	BBCME	BBG
Lincoln All Models (1941)	BBCHN	BBCLZ
Mercury Model 19A (1941)	BBCN	BBCZ
Packard Rear Stabilizer (1941)		NFT
Studebaker Champ.3G ('41)	BBFS2	BBDS
Studebaker Comm.11A ('41)	BBFS2	ACHS2
Studebaker Pres. 7C (1941)	BBFS2	ACHS2

1942 CAR MODELS

Ford Pass. & Comm'l ('42)	BBCN	BBCZ
Ford Truck Models (1942)	BBCME	BBG
	BBCHMS	BBCLL
		BBCLT
Lincoln, All Models (1942)	BBCHO	BBCLY
Mercury, Model 29A (1942)	BBCN	BBCZ
Packard Rear Stabilizer ('42 exc. Clipper)		NFT
Studebaker Champ. 4G ('42)	BBFS-5	BBDS-2
Studebaker Comm. 12A ('42)	BBFS-4	ACHS-3
Studebaker Pres. 8C ('42)	BBFS-4	ACHS-3

1946-48 CAR MODELS

Crosley CC (1947-48)		
Ford, All Models ('46-48)	BBCN-3	BBCZ-3
Lincoln, All Models ('46-48)	BBCHO-6	BBCLY-6
Mercury, All Models ('46-48)	BBCN-3	BBCZ-3
Studebaker Champ. 5G ('46)	BBFS-10	BBDS-5
Studebaker 6G ('47) ,7G ('48)	A-14269	A-11477, 8
Studebaker 14A ('47), 15A ('48)	A-14269	A-14174

NOTE:—1938 Packard. Front shock absorbers special double lever type (shaft extended through case with lever mounted on each end, levers serve as upper control arm of independent front suspension assembly). Units have base mounting lugs and are bolted on top of frame side rail. No adjustment provided (replace valves to change action).

Production Change Note—First type shock absorber with domed filler plug (using #1402 fluid) should be replaced by later thermostatic control type exchange shock absorbers with flat filler plug (use #800 fluid).

Packard 1939-42 Models. Single shock absorber, shock absorber of the rear suspension system (lateral stabilizer control). Regular rear shock absorbers on these models are Delco or Monroe Direct Acting Type. See separate articles for data on these types.

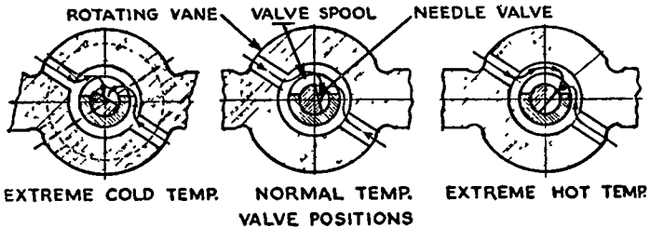

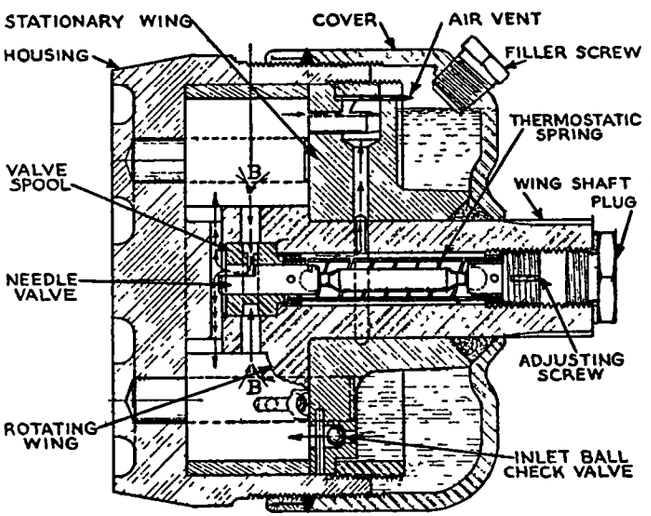

Crosley ('47-48); Ford, Lincoln, Zephyr, Mercury (1939-48); Studebaker (1946-48). A new spring-loaded automatic type packing gland is used which does not require attention in service. With this type construction, packing is installed within the housing end cover and uniform pressure is maintained on the packing by a spiral spring.

NOTE—These shock absorbers can be identified by three drill spots on raised lugs on cover.

New Houdaille L-1404 Fluid (1946-48)—This is the only type fluid to be used in 1946-48 Houde shock absorber with round top filler plugs, **do not use earlier type fluid.** This is a new castor oil base fluid which gives improved cold weather performance. This fluid can be used in earlier type shock absorbers.

DESCRIPTION & OPERATION:—Double vane, hydraulic type. Case is divided into two semi-circular chambers by stationary wing or partition. Rotating wing is integral with shaft to which shock absorber arm is attached and moves backward and forward in the chamber displacing the fluid from the compression space (in front of the moving vane) to the non-compression space behind it. Fluid escape from compression chamber is regulated by valves in the movable wingshaft as detailed below for each type. In addition, on the compression stroke (when car springs compressed by road shock) fluid is allowed to flow through ball check valves in the stationary wing into the opposite non-compression chamber which lessens the shock absorbing action. On the rebound these check valves close and all fluid flow is regulated by the movable wingshaft valves.

Adjustable Orifice Type. By-pass in rotating wing-shaft controlled by needle valve which is adjustable by turning handle at end of shaft within shock absorber lever or by removing plug on end of shaft and turning valve stem with special adjusting tool.

Thermostatic Automatic Ride Control Type. By-pass valve in rotating wingshaft consists of an inserted valve spool and a needle valve controlled by a thermostatic coil. The opposite end of the thermostatic coil is connected to an adjusting screw under the plug on the end of the shaft within the shock absorber arm (this adjustment not provided on all models). Needle valve is formed with a flat portion within the valve spool which causes valve to close somewhat under the impact of fluid velocity so that flow is restricted to provide firmer control on rough roads. Thermostatic coil positions valve so that action is uniform for all temperatures.

ADJUSTMENT:—Adjustment provided for both Adjustable Orifice type and Automatic Thermostatic Control type so that softer or firmer shock absorber action can be secured for particular operating conditions. Adjustments are sensitive and screw should not be turned more than 1/32" at a time (road test car to check performance).

Adjustable Orifice Type (Crosley, Ford, Lincoln-Zephyr, Studebaker Champion Front & Rear, Studebaker Comm. & Pres. Front only). On these models adjusting handle or pointer located on end of shaft within lever. Original standard setting indicated by one or two chisel marks on shaft (center pointer on single mark or between double marks), turn handle clockwise to increase, or counter-clockwise to decrease shock absorber action. Stops provided to limit motion in each direction. Do not force adjusting handle beyond stops.

Adjustable Orifice Type (All 1938 and earlier Studebaker Models—Front Shock Absorbers Only). Adjusted in same manner as Automatic Thermostatic Control types (adjusting valve stem under plug on end of shaft which can be turned by special tool toward 'O' mark for softer action, 'S' mark for firmer action. Valve must not be turned beyond marks (turning valve beyond 'S' mark will result in excessive pressures and damage to unit).

Automatic Thermostatic Type (Lincoln, Pierce Arrow, Studebaker rear units)—Remove cap on end of wingshaft within shock absorber arm, note position of arrow on adjusting screw within shaft recess (with standard factory setting, arrow should

CONTINUED N NEXT PA E

HOUDE (HOUDAILLE) C nt.

be in line with reference mark on shaft between 'O' and 'S' marks. Reference marks 'O' (open), 'S' (shut) indicate limits of adjustment and adjusting screw must never be turned so that arrow is beyond these points. This is important as additional adjustment may cause excessive pressure and leakage. To adjust, use special adjusting tool, turn screw 1/32" at a time toward 'O' for softer action or toward 'S' for firmer action, road test car before repeating adjustment. See that copper gasket under cap is in good condition and tighten cap securely.

Packard 1938 Type—See Production Change Note (above) for later type thermostatic control shock absorbers which should be installed on cars with first type units. Shock absorbers are adjustable by turning adjusting screw in shaft (accessible by taking out plug) but adjustment is very sensitive and screw should not be turned more than 1/16 turn at a time. **Do not turn screw more than ½ turn**

Packard 'Fifth' Shock Absorber—Shock absorber must be removed from car, disconnected from lateral stabilizer arm and clamped vertically in vise (regular mounting position) to check action. Arm should have no free travel and should have considerable resistance to movement. If free travel is noted, check fluid level and fill to bottom of filler plug hole with Houde 800-second fluid. Move arm up and down through two full strokes to expel air and recheck travel. Unit is adjustable by removing plug in end of shaft (at shock absorber arm) and turning needle valve (slotted end of valve visible after plug removed). Turn needle valve in (clockwise) for increased resistance and firmer action, or out (counter-clockwise) for less resistance and softer action. CAUTION—Do not turn needle valve in so far that it is completely closed. This will cause damage to unit.

SERVICING:—Fluid Level. Inspect at 5000 mile intervals and fill with genuine Houdaille fluid, even with bottom of filler plug hole (unit must be in normal mounting position). Work arm up and down several times to expel all air bubbles.

Fluid Recommendations—Ford, Lincoln, Mercury Models—Ford Shock Absorber Fluid. Packard—Houde 800 second fluid. Studebaker (All Models) and Crosley—Houde No. L-1404 (new 1946-48 fluid).

CAUTION—All 1946-48 Houde Shock Absorbers with **round top filler plug** designed for use with L-1404 fluid only (new castor oil base fluid which gives improved cold weather performance). Do not use earlier type fluid in these units.

HOUDE (HOUDAILLE) DIRECT ACTING

Car Model	Front	Rear
Ford 6 & V8 Pass. Car ('49)	H-180	H-190
Ford F1, F2, F3 Truck ('48)	H-160	H-170
Lincoln, 9EH, 9EL (1949)		
Mercury, 9CM (1949)		

TYPE:—Direct Acting, piston type. Shock Absorber is permanently sealed and cannot be dismantled or refilled.

SERVICING:—Serviced by replacement (permanently sealed and cannot be refilled or repaired).

MONROE DIRECT-ACTING FOUR-TUBE TYPE

1936-37 CAR MODELS

Auburn Six, 654 (1936-37)
Terraplane, 61, 62 (1936)

1937 CAR MODELS

Used On:	Front	Rear
Chrysler, Model C14 (1937)	665566	665899
Chrysler, Model C15 (1937)	665567	665899
Chrysler, Model C16 (1937)	665568	665899
Terraplane, 70, 71, 72 (1937)	635702	635703
Willys, Model 37 (1937)	152941	152942

1938 CAR MODELS

Car Model	Front	Rear
Chrysler, Royal C18	676739	682604
Chrysler, Imp. C19	683091	682604
Chrysler, Cust. Imp. C20	683091	682604
Hudson 112 Model 89	156778	*156578
Terraplane 80, 81, 82, 88	156577	156578
Willys 38 (Pass. Car)	635702	635703
Willys CP-38 (Pick-up)	635702	636450

*—156779 also used.

1939 CAR MODELS

Hudson '112' Model 90 (1939)	156778	157800
Hudson 6, 91, 92, 98 Sedan ('39)	157400	157801
Willys-Overland 39 ('39) Std.	637509	637508
Willys-Overland 39 ('39) H. D.	637645	637644
Willys 48 (1939) Std. Cont.	637509	637508
Willys 48 (1939) H. D. Cont.	637645	637644

These part numbers stamped on outside of dust shield on shock absorber.

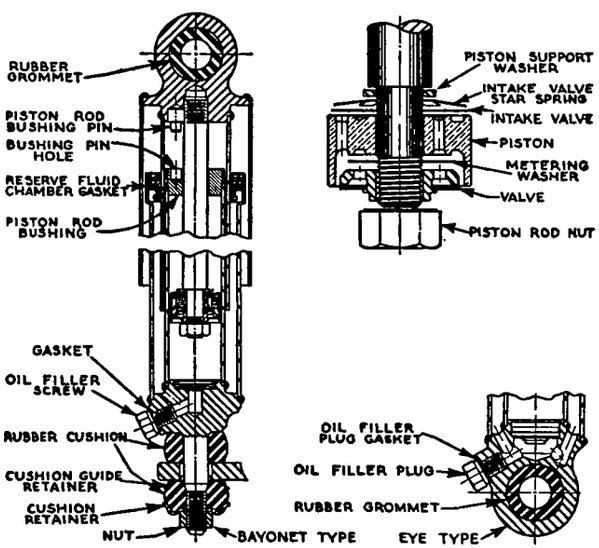

NOTE:—Hudson 1939 Cars. Beginning with Car No. 41494 (90&98 Sedan), 39272 (91, 92), new type shock absorbers were used. See following article for data.

CAUTION:—New fluid must not be added until all old fluid has been removed from shock absorber. Correct amount of fluid should be used (see Refilling directions below).

DESCRIPTION & OPERATION:—Direct acting type. Consists of a piston rod and piston attached to the car frame working within a compression cylinder attached to the axle. Reservoir cylinder surrounds compression cylinder with oil seal at upper end contacting inner of two concentric dust shield cylinders attached to the upper piston rod end of the shock absorber. Control valves (assembly with piston) control fluid flow through piston holes from one end of cylinder to the other on compression and rebound. Excess fluid (on compression) is forced out through bleed hole at lower end of cylinder into reservoir. On rebound, this fluid flows back into the cylinder through a flapper valve.

NOTE—On 1937 Terraplanes, a valve similar to the piston valves located at the bottom of the compression cylinder below the flapper valve and bleed hole. This valve does not open on compression until pressure builds up to a definite point improving the control.

REFILLING:—Use special refill kit and filler cup to measure fluid. Remove shock absorber from car, clean all dirt from around fillers plug at lower end of shock absorber, remove plug, pump all old fluid out by repeated strokes with filler plug opening down. Clamp shock absorber in vise at lower end with filler opening up. Compress unit, screw filler cup in opening, pour exact amount of fluid in cup (see table below), fully extend shock absorber which will draw all fluid in, remove filler cup, replace filler plug (using new gasket), tighten securely.

Fluid Capacity

Car Model	Front	Rear
Chrysler C14, C16	4¾ ozs.	5½ ozs.
Chrysler C15	4¼ ozs.	5½ ozs.
Chrysler C18, C19, C20	4 ozs.	5½ ozs.
Hudson 89 '38	5 ozs.	5½ ozs.
Hudson All '39	5 ozs.	5½ ozs.
Overland 39 '39	3¾ ozs.	4¼ ozs.
Terraplane All 1936	4 ozs.	5 ozs.
Terraplane All '37-38	5 ozs.	5 ozs.
Willys All '37-38-39	3¾ ozs.	4¼ ozs.

SERVICING:—Disassembly—Clamp base of unit in vise. Compress top fully and rotate until pin in top engages hole in piston rod bushing, tap top lightly to insure full engagement of pin, turn top counter-clockwise (using bar engaged in grommet hole) until bushing is freed from cylinder, pull top off. Clamp top of unit in vise, remove piston rod nut. Valve and piston assembly can then be dismantled.

Servicing—Wash all parts with gasoline and dry with air. Oil seal or gasket at top of reservoir cylinder cannot be removed (replace shock absorber if oil leaks at this point). Flapper valve and control valve (Terraplane) at lower end of compression cylinder are staked in place and cannot be taken out.

Reassembly—Reverse disassembling directions. See that washers and valve springs are correctly assembled n piston rod (see illustration). Tighten

C NTINUED N NEXT PA E

MONROE DIRECT-ACTING FOUR-TUBE TYPE (C nt.)

piston rod nut securely and stake to prevent loosening.

TROUBLE SHOOTING:—Shock Absorber Noisy. See that brackets are tight on frame, check rubber grommets at top and bottom, replace if worn or loose. See that shock absorber does not strike frame. On rear units, see that gravel shield (welded to lower tube) is toward front of car. Drive car with shock absorbers removed. If noise definitely located in shock absorber, check fluid, or disassemble as directed above.

Oil Leaks. If oil leaks at filler plug, replace plug gasket. If oil leaks excessively at oil seal gasket at upper end of reservoir cylinder (oil will run down cylinder and be apparent at lower end of dust cover), shock absorber must be replaced (oil seal permanently assembled in cylinder and cannot be serviced).

Performance Unsatisfactory. Check fluid, check tire inflation and springs. Valve calibration may be changed for special service requirements such as heavy loads (Heavy Control) or low speeds on smooth roads (Light Control).

IMPORTANT NOTE—Shock absorbers on both sides of car must have same valve calibration (Right & Left Front same, Right & Left Rear same).

MONROE SINGLE-ACTING

Bantam, Model 65 (1940-41)—Pass. Cars Only.
Willys, Model 77 (1936)

NOTE:—This type shock absorber used on passenger car models only. See Bantam car model page for data n Friction Type Shock Absorbers used on other cars.

DESCRIPTION & OPERATION:—Single Acting, hydraulic type. Piston within cylinder is held out against cam on shock absorber shaft by spring within cylinder. On outward stroke (when car springs compressed by road shock), fluid flows freely into cylinder through check valve in piston head. On rebound stroke, fluid escape from cylinder is restricted by adjusting needle valve in by-pass channel and by relief valve in piston head.

ADJUSTMENT:—Adjusting needle valve should be turned in for firmer action, out for softer action. To adjust, turn valve in until it is lightly seated, then back valve off required amount to secure desired shock absorber action.

Willys Note—Standard setting of needle valve is ⅔ turn open from inner seated position.

CAUTION—Valve must not be set at less than 1/6 turn open. Shock absorber will be damaged if operated with valve completely closed.

SERVICING:—Refilling. Remove top cover screw, fill case with Monroe fluid to level even with lower edge of screw hole.

Disassembly. Take out cover screws, remove cover and gasket, withdraw piston, spring and valve assembly. When reassembling, see that gasket in good condition and tighten cover screws securely to prevent leaks.

MONROE DIRECT-ACTING THREE-TUBE TYPE

1939 CAR MODELS

Car Model	Car Mfg. Part Nos. Front	Rear
Chrysler C22, C23 ('39)	696240	696242
Chrysler 8, C24 ('39)	696241	696242
Hudson 90,1,2,8 (Late '39)		See Note

1940 CAR MODELS

Chrysler C25,26 ('40)	854568	854570
Hudson 40,1,2,8 ('40) ①	160101	160107
Hudson 40,1,2,8 ('40) ②	160102	160108
Packard 1800 (1940)		347416
Packard 1803,6 ('40)		351194
Willys 48, Overland 39 (Late '39)		See Note
Willys 440 (1940)	638316	638317

①—Regular Springs. ②—Heavy Duty Springs.

1941 CAR MODELS

Chrysler C28, C30 ('41)	854568	854570
Hudson 10, 11, 18 ('41) ①	160101	160107
Hudson 10,11,12,14,15,18 ('41) ②	161657	161658
Hudson 10,11,12,14,15,18 ('41) ③	161636	160108
Packard 1900 (1941)		364630
Packard 1903, 6 (Early 1941)		364725
Packard 1903, 6 (Late 1941)		371197
Packard 1951 Clipper (1941)		371196

①—Sedan Models. ②—Coupe Models.
③—All Models equipped with Heavy Duty Springs.

1942 CAR MODELS

Chrysler C34, C36 (1942)	955025	955026
De Soto S10 (1942)	955029	955030
Dodge D22 (1942)	955029	955030
Hudson 20, 1, 8 (Early '42) ②	164545	164546
Hudson 20, 1, 8 (Late '42) ②	164786	164787
Hudson 20, 1, 8 (Early '42) ③	164547	164548
Hudson 20, 1, 8 (Late '42) ③	164545	164546
Hudson 22, 4, 5 (Early '42) ③	164547	164548
Hudson 22, 4, 5 (Late '42) ③	164545	164546
Packard 2000, 10 (1942)		371195
Packard 2020 (1942)		364030
Packard 2001, 1R (1942)		379465
Packard 2003, 23, 6 (1942)		371197

②—Sedans only. ③—Coupes only.

1946-48 CAR MODELS

Chrysler C38, 39 (1946-48)	K-11148	K-11149
De Soto S11 (1946-48)	K-11148	K-11149
Dodge D24 (1946-48)	K-11148	K-11149
Frazer, All Models (1947-48)	201490	201493
Hudson Six (1946-47)	166572	166573
Hudson 6 & 8 (1948)	300350	300351
Kaiser, All Models (1947-48)	201490	201493
Nash Amb. 6 (1946-48)	K-11431	K-11432
Packard Super 8 2103, 6 (1946-47)		384887
Packard Custom Eight (1948)		18096
Plymouth P15 (1946-48)	K-11148	K-11149
Willys Civ. Jeep (Late 46-48)	K-11436	K-11436
Willys 4-63, 6-63, VJ-2 (46-48)	K-18004	K-18005

LATERAL STABILIZER—"FIFTH" SHOCK

①Chrysler 6 (1942-Early 1946)	956790
①Chrysler 6 (Late 1946-48)	1123482
Chrysler 8, All Models (1942-Early 1946)	956790
Chrysler 8, All Models (Late 1946-48)	1123482
①De Soto & Dodge (1942-Early 1946)	956790
①De Soto & Dodge (Late 1946-48)	1123482
Packard Clipper, All Models (1941 to 1948)	373935

①—8 Pass. Sedan, Conv. Coupe, and Town & Country.

PRODUCTION CHANGE NOTE:—Packard 1903,6— Valves changed in production, and with this valve change, Shock Absorber Assembly Number was changed from Monroe No. 11423 to 11428.

Packard Fifth Shock Absorber. This is a Direct Acting Shock Absorber built in one end of the rear Lateral Stabilizer Arm. This type is similar to other Monroe shock absorbers except that an air dome is provided on one side of the outer reservoir tube Install stabilizer with this air dome upward.

Chrysler, De Soto, Dodge Fifth Shock Absorber— Similar to Packard type described above.

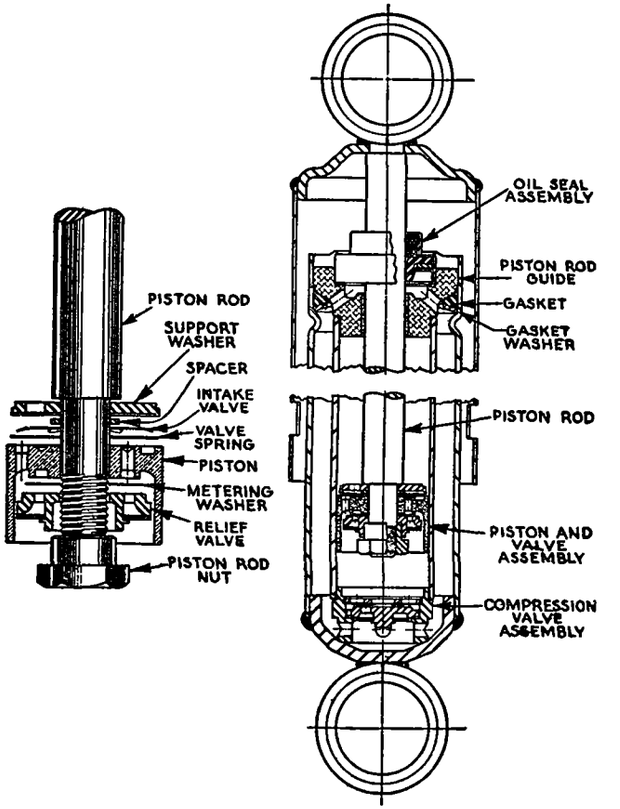

Hudson 1939 Models—These shock absorbers used beginning with car No. 41494 (90, 98 Sedan), 39272 (90, 91). Refer to preceding article for data on Monroe Direct Acting Four Tube Type Shock Absorbers used on cars before above numbers.

Hudson 1942 Model Change. Shock absorbers were changed in production (as listed above) approximately Nov. 15, 1941. Valve calibrations on all models can be changed to secure greater control for exceptional road conditions if desired.

Willys 48 & Willys-Overland 39—These new '3 Tube' Shock Absorbers, Model 637798 (Front), 637799 (Rear), used on 1939 cars after Serial N . 13313 (Std.), 14039 (Heavy Duty). Data on this new type

CONTINUED ON NEXT PAGE

MONROE DIRECT-ACTING THREE-TUBE TYPE (C nt.)

given below. Refer to preceding article on Monroe Direct Acting Four Tube Type Shock Absorbers for data on type used on first cars.

NOTE:—Chrysler Models—Delco Direct Acting Shock Absorbers used on some cars (see Delco article).

Hudson Models—Delco Direct Acting Shock Absorbers used on other Hudson models (see Delco).

Packard Models—Delco Direct Acting Shock Absorbers used on export cars and other Packard models. Fifth Shock Absorber (rear suspension control on other models than those listed above is Houde Model NFT double acting type. Refer to Delco and Houde Shock Absorber articles for data.

SPECIAL SERVICE NOTES:—Stabilizer 'Fifth' Shock Absorber—Stabilizer and shock absorber assembly must be mounted on car so that air dome on side of reservoir tube is upward and wrench slots in rod guide must be turned at 45° angle to dome. If any lag or free travel noted at center of shock absorber piston stroke, check position of rod guide slots and turn guide so that slots are 45° from dome. If this does not correct trouble, shock absorber should be disassembled, new rod guide assembly installed, and shock absorber refilled as directed in Servicing section below. With shock absorber functioning correctly, no lag or free travel should be evident and considerable resistance to movement in either direction should be noted.

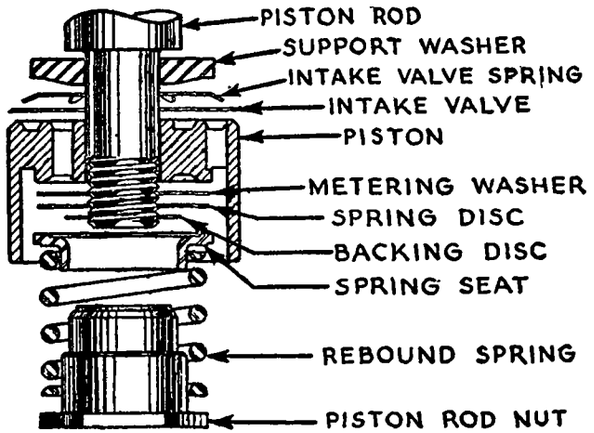

TYPE:—Double acting, hydraulic, piston type with '3 tube' construction (Inner Pressure Tube and Reservoir Tube are part of lower assembly, Outer Dust Tube part of top assembly). New type rod guide and seal assembly is screwed in upper end of reservoir tube and requires special T-317 wrench for removal (wrench inserted through slots in dust tube with shock absorber fully extended). Compression valve is light press fit in lower end of pressure tube (must be removed for refilling) and is serviced as an assembly. Rebound relief valve (on piston rod) differs on various car models.

REFILLING:—Refill at 25000 mile intervals for ordinary driving conditions (more frequently for hard service or if unit shows serious leakage or loss of control). To refill, disassemble unit as directed in Service section below, clean out all old fluid and wash all parts, install correct amount of new fluid when reassembling.

Monroe 3 Tube Type Fluid Capacity Chart

Car Model	Front	Rear
Chrysler (1939)	3⅞ ozs.	6½ ozs.
Chrysler (1940 to 1948)	3¾ ozs.	6⅜ ozs.
①Chrysler, DeSoto, Dodge (1942-Early 1946)	3¾ ozs.	
De Soto & Dodge ('42-48)	3¾ ozs.	6⅜ ozs.
Hudson (1939)	6 ozs.	6½ ozs.
Hudson (1940 to 1942)	3¾ ozs.	6⅜ ozs.
Packard (1940 to 1942)		6¾ ozs.
①Packard Clipper (1941 to 1948)	3¾ ozs.	
Willys (1939-40)	4¾ ozs.	5½ ozs.

①—Lateral Stabilizer 'Fifth' Shock Absorber.

SERVICING:—Disassembly—Remove shock absorber from car, clamp lower eye in vise with unit vertical, (use special T-360 clamping block for Hudson), pull out to fully extended position, insert prongs of special T-317 wrench through slots in outer dust tube so as to engage holes in top of piston rod guide, turn wrench counter-clockwise to unscrew guide from reservoir tube, lift entire head assembly out. Clamp upper eye in vise so that head assembly mounted vertically, remove compression valve assembly by tapping it lightly while working assembly out of pressure tube. Remove nut on end of piston rod, remove piston and valve parts from piston rod. If piston rod seal to be replaced, remove pressure tube and piston rod guide from piston rod, tap guide out of pressure tube (guide is press fit in end of tube). Seal should not be removed from guide (serviced as an assembly). CAUTION—Do not clamp pressure tube in vise and use extreme care not to distort tube.

Servicing—Wash all parts in clean naptha or gasoline, replace all worn or defective parts, always use new gasket under piston rod guide in reservoir tube when reassembling.

Reassembling & Refilling—Use Thimble T-347 to install piston guide on piston rod to avoid damage to seal, install all valve parts and piston in correct order (see illustration—metering washer not used on all models), tighten piston nut securely. Measure correct amount of new fluid in measuring cup, pull pressure tube and guide up on piston rod, pour fluid into tube above piston until tube is full. Install compression valve assembly on upper end of pressure tube, tapping valves securely in place in tube and using extreme care not to spill fluid out of tube. Clamp base assembly in vise vertically, pour remainder of fluid into reservoir tube. Use new gasket in top of reservoir tube, install head assembly and tighten piston rod guide securely with T-317 wrench.

Lateral Stabilizer 'Fifth' Shock Note—When installing rod guide, make certain that wrench slots are turned at angle of 45° to air dome on reservoir (necessary to prevent leakage in service). When installing stabilizer on car, make certain that air dome on reservoir is upward (shock absorber will not operate in any other position).

NOTE—See that stone shield (on lower tube) faces forward on rear shock absorbers when installed.

TROUBLE SHOOTING:—Shock Absorber Noisy. Make certain that mounting bolts are tight and that shock absorber not striking any part of car. If rubber grommets in mounting eyes are worn, install new grommets, using liquid soap, if grommets tight fit, to assist in working grommets in eyes.

Fluid Leaks. If fluid leakage serious, disassemble unit and replace piston rod guide and seal assembly. **Performance Unsatisfactory.** Check tire inflation, spring and shackle lubrication and adjustment first. Check fluid level in shock absorber and refill.

CONTROL VALVE CALIBRATION:—Standard Control relief valve and metering washer calibration should provide satisfactory control for normal operating conditions. Shock absorber performance can be varied for special operating conditions by changing valve calibration to 'Light' or 'Heavy Control'.

CONTROL VALVES:—Consists of Rebound Relief Valve (on piston rod under piston) and Compression Valve Assembly (in lower end of pressure tube). Compression valve cannot be dismantled and is serviced as an assembly.

All Models—Rebound Relief Valves built up of valve discs installed on piston rod directly below metering washer (in groups with spacer disc between groups—total number of valve discs and location of spacers differs on various models). Chrysler models have a spring below the valve assembly which increases the tension of the valve spring disc (see illustration). NOTE—This valve spring not used on other models (see illustration).

De Soto, Dodge Note—Relief Valves on these models are coded as follows:

Car Model	Relief Valve Code
De Soto S10 (Front & Rear)	1H8
Dodge D22 (Front & Rear)	1H8

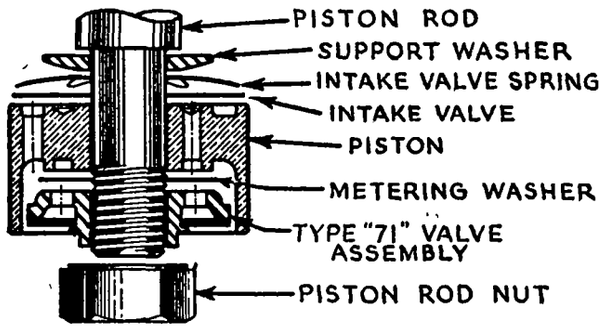

Chrysler '39 Type—Type '74' valve assembly installed on piston rod directly below metering washer. Valve assembly should not be dismantled and should be replaced as an assembly. NOTE—Metering washers are not used on front shock absorbers.

Hudson '39, Packard & Willys '39—Type '71' valve assembly installed on piston rod directly below metering washer. These Type 71 valves cannot be disassembled and are serviced as an assembly.

Compression Valves (All Models)—These valves consist of an assembly installed in the lower end of the pressure tube. Compression valves are furnished as an assembly only and should not be dismantled.

IMPORTANT NOTE—Shock absorbers on both sides of car must have same valve calibration (Right & Left Front same, Right & Left Rear same).

MONROE DIRECT-ACTING ADJUSTABLE TYPE

Car Model	Assembly No.① Front	Rear
②Jeep, Army Model (1942-45)	A-6902	A-6903
③Willys Americar (1941-42)	639022	639008
④Willys Americar (1941-42)	639187	639188
Willys Comm'l (1941-42)	639187	639587
②Willys Civ. Jeep CJ-2A (Early '46)	....	....
Willys Jeep Sta. Wag. 4-63 ('46-47)	645606	645607
Willys Jeep Sed. Del. 4-63 ('46-47)	645606	645607

①—Car mfg. number stamped on outer dust shield.
②—Refillable by dismantling shock absorber.
③—Standard Control. ④—Heavy Duty Control.

ARMY JEEP & EARLY 1946 WILLYS CIV. JEEP NOTE: Shock absorbers on these models are refillable by dismantling shock absorbers as described in Monroe Direct Acting 3 Tube Type article. Fluid capacity for Willys Civilian Jeep, 5 oz. (front), 5¾ oz. (rear).

TYPE:—Direct Acting, adjustable, piston type. Shock Absorber case is welded in assembly and cannot be dismantled for servicing or refilling.

SERVICING:—Serviced by replacement (case is welded and Shock Absorber cannot be dismantled).

ADJUSTMENT:—Shock absorbers set at factory for standard control (see table below) and performance should be satisfactory for all average riding conditions. Before changing adjustment to correct riding complaints, see that tires are properly inflated, springs and shackles lubricated and properly adjusted.

To Adjust—Remove shock absorber from car or disconnect lower mounting (necessary in order to collapse instrument fully). Collapse shock absorber fully by pressing upper and lower halves together and hold in this position until adjustment completed. Turn shock absorber cylinder to right (clockwise) slowly until adjustment key can be felt to drop into and engage slot in valve (within shock absorber). Continue to turn cylinder to right until a definite stop is felt (4 turns maximum) which indicates that valve is closed. Then turn cylinder to left (counter-clockwise), to open valve desired number of turns as shown in table below.

IMPORTANT NOTE—Shock absorbers on both sides of car must always be adjusted alike (Right & Left Front same, Right & Left Rear same).

Adjustment Table

Control	Valve Opening
Firm Control	0-1½ turns
Standard (Average)	1½-2½ turns
Soft Control	2½-4 turns

CAUTION—Use hand pressure only when making adjustments and do not force beyond fully closed and fully open where definite stop will be felt. Maximum range of adjustment is 4 full turns. Operate shock absorber only in upright position.

STEERING GEAR INDEX

TYPE OF EQUIPMENT

	Page
Gemmer	
Worm-and-Sector	2502
Worm-and-Roller, Types 250, 300, 330, 370	2503
Worm-and-Roller, Types 305, 335, 375	2506
Worm-and-Roller (Special Lincoln V12)	2502
Ford 1949 Passenger Cars	2505
Lavine	2502
Ross	
Cam-and-Lever	2508
Cam-and-Twin Lever	2509
Cam-and-Roller	2510
Saginaw (G.M.)	
Ball-Bearing Worm & Nut	2515
Worm-and-Roller 1936-37	2512
Worm-and-Roller 1937-48	2513
Chevrolet	2510
Chevrolet Truck 1937-40	2512

CAR APPLICATION

	Page
AUBURN	
1936-37 Six	2508
1936-37 Eight	2510
BANTAM	
1937-38	2502
1939 60 (Cam & Twin Lever)	2509
1939-41	2508
BUICK	
1936	2512
1937-40	2513
1941-48	2515
CADILLAC	
1936	2512
1937 V8 (except 75)	2513
1937 V8 Series 75	2512
1937 V12 & V16	2512
1938-40 (except 72)	2513
1940 Series 72	2515
1941-48	2515
CHEVROLET	
1936 Passenger Cars	2510
1937 Master Deluxe Pass. Cars	2510
1937 Master Pass. Cars	2512
1938-48 Passenger Cars	2510
1936 Trucks	2510
1937-40 Trucks	2512
1941-48 Trucks	2515
CHRYSLER	
1936-37	2503
1938-48	2506
CORD	
1936-37	2503
CROSLEY	
1939-48	2508
DE SOTO	
1936-37	2503
1938-48	2506
DODGE	
1936-38	2503
1939-40 (except 7 Passenger)	2503
1939-40 7 Passenger Cars	2506
1941-48	2506
DUESENBERG	
1936-37	2510
FORD	
1936 Passenger Cars	2502
1937-48 Passenger Cars	2506
1949 Passenger Cars	2505
1936-37 Trucks	2502
1938-48 Trucks	2506
1938-48 Buses	2503
FRAZER	
1947-48	2506
GRAHAM	
1936-37 (except Schgrs.)	2508
1936 Schgr. 110	2510
1937 Schgr. 116, 120	2509
1938-41	2509
HUDSON	
1936	2502
1937-48	2506
HUPMOBILE	
1936 Six	2508
1938-40 Six	2506
1936-39 Eight	2503
JEEP	
1942-45 Army Models	2509
KAISER	
1947-48	2506
LA SALLE	
1936	2512
1937-40	2513
LINCOLN	
1936-40 V12	2502
1936-40 (Zephyr)	2503
1941-48	2503
1949	2506
MERCURY	
1939-49	2506
NASH	
1936	2503
1937-42 Amb. 6 & 8	2506
1941-42 "600" Six	2503
1946-48	2506
NASH-LAFAYETTE	
1936	2503
1937-40	2506
OLDSMOBILE	
1936	2512
1937-48	2513
PACKARD	
1936	2503
1937-42 Six & Eight	2503
1946-48 Six & Eight	2506
1937-38 Super Eight	2506
1939-42 Super Eight	2503
1946-48 Super & Custom Eight	2506
1937-39 Twelve	2506
PIERCE ARROW	
1936-38	2510
PLYMOUTH	
1936-39	2503
1940 (except 7 Passenger)	2503
1940 7 Passenger Cars	2506
1941-48	2506
PONTIAC	
1936	2512
1937-48	2513
STUDEBAKER	
1936 Dict. (Cam & Lever)	2508
1936 Dict. (Cam & Twin Lever)	2509
1936 President	2510
1937-48	2509
TERRAPLANE	
1936	2502
1937-38	2506
WILLYS	
1936-39	2502
1940 Passenger Cars	2503
1941-42 Passenger Cars	2509
1940-41 Commercial	2502
1941-42 Commercial	2509
1946-48	2509

LAVINE

Bantam, Model 60 (1937-38)
Willys, Model 77 (1936)

DESCRIPTION:—Steering worm on steering wheel shaft mounted on ball thrust bearings at top and bottom. Rotating nut or drive block on cross-shaft lever engages worm through two balls which are free to turn in block and worm. Adjustments provided for cross-shaft endplay (lash or play in steering wheel) and for worm shaft endplay (up and down movement of shaft and wheel).

ADJUSTMENT:—Before making any adjustment, jack up front end of car, turn wheels to straight ahead position, disconnect drag link at steering gear ball arm. See that front wheels turn freely without drag and without excessive looseness at drag link and tie rod ends. With steering wheel in straight ahead position, adjust as follows:

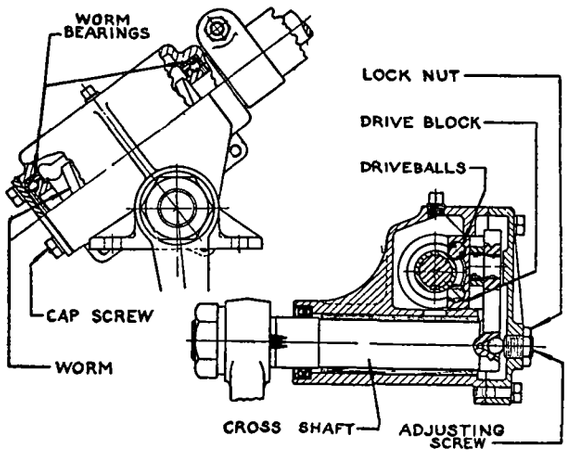

LAVINE STEERING GEAR

Cross-Shaft Endplay (Backlash between Drive Block and Worm):—Loosen locknut on adjusting screw on cover plate at inner end of cross-shaft, turn adjusting screw clockwise until all steering wheel play is eliminated, hold screw and tighten locknut. Check by rotating wheel through range from right to left extreme end positions. Wheel should be free at all positions. If wheel binds at any point, back off adjustment screw slightly.

Worm Shaft Endplay:—Check endplay by grasping steering wheel rim and noting movement when wheel pulled up. To adjust, take out four capscrews in housing lower end cover, take off cover, remove sufficient shims under cover to eliminate endplay, replace cover and tighten cover screws securely, check by rotating wheel through range from right to left extreme end position. Worm shaft should not bind at any point.

Note:—When adjustments completed, steering wheel should have no appreciable lash at center straight ahead position and should turn freely throughout range.

GEMMER WORM-AND-SECTOR

Ford V8, Pass. Cars (1936)
Ford V8, Trucks (1936-37)
Hudson 6 & 8, All Models (1936)
Terraplane, All Models (1936)
Willys Pass. Cars, All Models (1937-39)
Willys Comm'l, All Models (1940-41)
Willys-Overland, Model 39 (1939)

DESCRIPTION:—Consists of 'hour glass' type worm mounted on steering shaft and carried on roller bearings at top and bottom. Bearings are provided with an automatic take-up under housing cover at upper end which eliminates necessity for adjustment except after considerable wear. The three-tooth sector on the cross-shaft engages the worm. Cross-shaft is provided with endplay adjustment. Housing cover in which cross-shaft is mounted is provided with eccentric adjusting sleeve and eccentric rivet adjustments to adjust sector clearance

ADJUSTMENT:—Before making adjustments, jack up front wheels and disconnect drag link to free steering gear (front wheels should turn freely with not more than 10 lbs. pull on drag link in either direction). Align steering column by loosening frame bracket bolts to allow gear to shift in frame, tighten bolts, then loosen instrument board bracket bolts to allow bracket to shift in alignment with column, tighten bracket bolts. Adjust as follows:

Worm Bearing Endplay:—Evidenced as up and down movement of steering wheel. Adjust when this exceeds .010" (to check, turn wheel 1 turn off center, hold wheel, shake front wheels). To adjust, loosen jacket clamp bolt above housing upper cover, shift clamp up 3/8" above lower end of jacket, loosen instrument board bracket clamp, work jacket down until lower end is against housing arm, remove housing capscrews, work jacket up as far as possible. This will provide approximately 3/8" clearance between housing cap and housing. Clip and remove one shim, reassemble gear, locating jacket clamp as near bottom end of jacket as possible. Check adjustment. Wheel should turn freely without stiffness.

Cross-shaft Endplay:—See that housing cover nuts and jam nut are securely tightened. Turn steering wheel to extreme end position and then back 1/8 turn. Loosen locknut and turn adjusting screw in housing at inner end of cross-shaft until shaft rotates freely with no endplay, tighten locknut.

Sector Tooth Mesh in Worm:—Turn steering wheel to 'straight ahead position' midway between end points, loosen housing cover nuts 1/4 turn and eccentric sleeve jam nut 1/2 turn. Turn eccentric adjusting sleeve slowly clockwise until backlash can just be felt at ball end of steering arm. Check by turning steering wheel throughout full travel. If wheel is too tight in any position, turn eccentric sleeve counter-clockwise until wheel is free and then readjust. Sleeve must be turned clockwise to finish adjustment. Tighten eccentric sleeve jam nut, then tighten cover nuts. With correct adjustment sector should have minimum clearance at center position and gradually increased clearance toward ends.

Centralization of Tooth Contact:—Check clearance or backlash between sector teeth and worm at points 1/3 turn of steering wheel each side of center position. If clearance is not equal, note at which point (right or left) backlash is greatest, loosen cover nuts and eccentric sleeve jam nut, turn eccentric rivet in notch in edge of cover slightly clockwise (if greater clearance with wheel turned to right) or counter-clockwise (if greater clearance with wheel turned to left). Tighten cover nuts and jam nut securely, repeat test.

Steering Wheel Position (Hudson-Terraplane'36):—On these models, steering wheel spoke with trademark on underside must point straight down with wheels in 'straight ahead position'. If this spoke more than 2" on either side (position affected by Caster adjustment), steering gear pitman arm should be bent (first cars) or drag link adjusted (later cars) as follows:

To Bend Pitman Arm—Wrap hardened pitman arm ball in wet rags, drip water on ball, heat arm 2" above ball with torch until color begins to show, bend arm with bending bar approximately 3/64" backward (if spoke to right of center) or forward (if spoke to left of center) to correct each 1" that spoke is off center. Drag link must be disconnected and ball protected as directed to prevent destroying hardened finish.

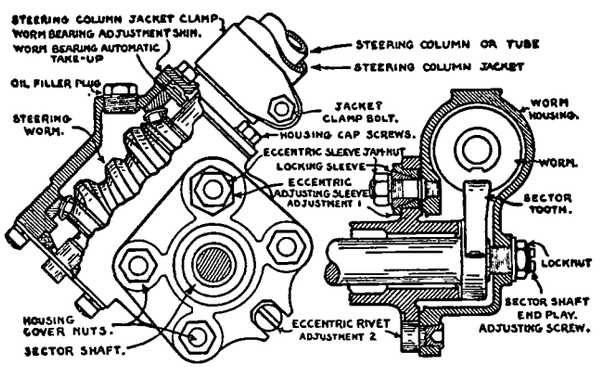

GEMMER WORM-AND-SECTOR TYPE

To Adjust Drag Link—See Car Pages for serial numbers of cars on which adjustable drag link used. Adjustment consists of shims placed at both ends of pitman arm ball seats at rear end of drag link. Transfer shims from one position to the other to throw pitman arm back (wheel spoke to right) or forward (wheel spoke to left).

GEMMER WORM-AND-ROLLER (LINCOLN V12)

Lincoln V12, All Models (1936 to 1940)

NOTE:—This model similar in design and operation to other Gemmer models. Adjustments are not similar and are given below.

ADJUSTMENTS:—Make adjustments as follows:

Worm Bearing Endplay:—Take out worm adjusting nut lockscrew and plug on top of steering gear housing at upper end. Insert punch through plug hole, engage notches in adjusting nut, turn adjusting nut clockwise (down) until all endplay removed. If notch in worm adjusting nut does not coincide with lockscrew hole, back adjustment off slightly (do not tighten excessively to permit lockscrew to be entered). Insert lockscrew and tighten securely, replace plug.

CONTINUED ON NEXT PAGE

GEMMER (LINCOLN) C nt.

Roller Shaft Endplay:—Remove locking screw on housing at inner end of cross-shaft (do not remove locking plate). Turn adjusting screw clockwise until all endplay removed. If hole in locking plate does not register with locking screw hole, back adjusting screw off slightly (do not tighten excessively to permit entry of locking screw), insert locking screw and tighten securely.

NOTE—Adjusting screw can be removed and locking plate turned over to secure better position of locking screw hole if necessary.

Roller Mesh in Worm:—Turn steering wheel to straight ahead position, disconnect connecting rod ball from steering gear connecting rod arm. Take out lock bolt in eccentric bushing plate on outside of frame side rail, turn plate clockwise until all play taken up (test by moving steering arm), insert lock bolt and tighten securely. Check adjustment by turning wheel off the straight ahead position. Small amount of play should be noted in all positions except straight ahead.

Final Check:—After adjustments completed, steering wheel should turn freely from one end position to the other without binding at any point. No play should be noticeable in center straight ahead position but small amount of play should exist at other points.

GEMMER WORM-AND-ROLLER TYPES 250, 300, 330, 370

Car Model	Gemmer Model
Chrysler 6, All Models (1936-37)	300
Chrysler 8, Model C8, C9 (1936)	
Chrysler 8, Imp. C10 ('36), C14 ('37)	330
Chrysler Cust. Imp. C11 ('36), C15 ('37)	370
Chrysler 8, Airflow C17 (1937)	370
Cord, Models 810 (1936), 812 (1937)	330
DeSoto, All Models (1936-37)	300
Dodge, Model D2 (1936)	
Dodge, All Models exc. 7 Pass. (1937-40)	①
Ford, All Bus Models (1938 to 1948)	370
Hupmobile Eight, All Models (1936-39)	300
Lincoln, Zephyr Models (1936 to 1940)	330
Lincoln, All Models (1941 to 1948)	330
Nash Six, 3620, 3640, 3640A (1936)	
Nash "600", 4140 (1941), 4240 (1942)	250
Nash Eight, Model 3680 (1936)	
Nash-Lafayette, Model 3610 (1936)	
Packard 8, Super 8, 12 Models (1936)	
Packard 6 & 8, All Models (1937 to 1942)	②
Packard Super 8, All (1939 to 1942)	②
Plymouth, Model P1, P2 (1936)	
Plymouth, All Models exc. 7 Pass. (1937-40)	①
Willys, Model 440 Pass. Cars (1940)	250

①—Own Make but similar to Model 300.
②—Own Make but similar to Model 330.

NOTE:—Steering Column Gear Shifts—For adjustment and servicing directions (removal, etc.) of steering column mounted gear shifts as used on some models, see separate articles on "Transmission Controls" in following section.

Model 250—This is a new model which is similar to Model 300 except for size and fact that worm is mounted on ball bearings (each bearing takes thrust in one direction). This steering gear is adjusted and serviced same as other Gemmer models.

Model 370—Roller cross-shaft on this model is straddle mounted with additional bearing in side cover. Serviced in same manner as other types.

Chrysler 330, 370; Cord 330 Models—Roller shaft 'straddle mounted' on these models with additional roller bearing on cover plate at adjusting screw end of shaft. Adjusted in same manner as other types.

Dodge, Plymouth Models—These steering gears built by Chrysler but similar in design to Gemmer Model 300 and adjusted in same manner. Steering gear on 7 Passenger Sedan models is similar to Gemmer Model 305 with push-pull adjustments (see following article).

Lincoln Model 330—Steering gear has a straddle mounted roller shaft with additional shaft bushing mounted in side cover on housing. Adjusted in same manner as other models.

Packard Models—These steering gears built by Packard but similar in design to Gemmer Model 330 and adjusted in same manner.

DESCRIPTION:—Consists of 'hour glass' type worm mounted on steering shaft and carried on roller bearings at top and bottom. Bearings provided with shim adjustment under cover at lower end of case. A double-tooth roller on the cross-shaft engages the worm. Roller is mounted on double-ball bearing or on needle bearings and is free to turn at point of contact with worm. Cross-shaft mounting is integral with housing and endplay adjustment provided by adjusting screw on side cover. Roller mesh with worm adjustable by shims on cross-shaft.

ADJUSTMENT:—Before making adjustments jack up front wheels and disconnect drag link to free steering gear (front wheels should turn freely with not more than 10 lbs. pull on drag link in either direction (except Packard models). 45 lbs. (Packard models). Align steering column by loosening frame bracket bolts to allow gear to shift in frame, then loosen instrument board bracket bolts to allow bracket to shift, tighten bracket bolts. Make adjustments in order as follows:

Worm Bearing Endplay:—Evidenced as up-and-down play of steering wheel. Check by turning wheel one turn to right from center 'straight ahead position', secure wheel, shake front wheels, note endplay. To adjust all models with shims under lower cover (see Note below for spring-loaded type), loosen four screws on lower cover, separate top shim, clip shim and remove using care not to damage other shims. Tighten cover screws and check adjustment. Wheel should turn freely without any stiffness or appreciable endplay. If spring scale used, force required to turn wheel (through scale attached to rim) should agree with figures in table below. If less than minimum figure, remove additional shim, if more than maximum figure, add shim.

Car Model	Worm Bearing Setting
Chrysler C7, C8, C9, C10, C11	① ¼—1¼ lbs.
Chrysler C14, C15, C16, C17	① ½—1 lb.
DeSoto S2, S3; Dodge D2, D5	① ¼—1¼ lbs.
Dodge D8,D11,D14,D17	① ½—1 lb.
Plymouth P3, P4, P7, P8	① ¼—1¼ lbs.
Plymouth P5,P6,P9,P10	① ½—1 lb.
Packard 1937-42	② 1½—2¼ lbs.

①Worm bearing drag only with roller on midpoint of worm (roller cross-shaft out or Roller shaft endplay adjusting screw backed off).
②With steering wheel turned so that roller off or away from midpoint on worm.

Spring Loaded Type—On this type gear, a spring washer is located under the lower worm bearing cup so as to control worm shaft endplay. Requires no adjustment. If this type gear develops endplay, remove lower cover and examine spring washer, replace if broken.

Roller Shaft (Cross-Shaft) Endplay:—Turn steering wheel to extreme end position and then back ⅛ turn. Check cross-shaft endplay at steering arm hub. To adjust, loosen locknut, turn up adjusting screw in inner cover until shaft turns freely with no endplay, tighten locknut.

Roller Mesh in Worm:—Turn steering wheel to center 'straight ahead position,' shake steering arm to determine play or backlash. If this exceeds 1/32", steering gear must be removed from car and roller shaft position adjusted. With gear out of car and held in vise, take off steering arm nut, remove steering arm, take off side cover, remove roller and cross-shaft. See that all shims on shaft behind roller are removed from housing. Remove steering jacket, replace wheel on steering shaft, check worm shaft bearing adjustment. Remove one shim, reinstall roller shaft, assembling roller shaft thrust washer with chamfered side next to roller shaft thrust face. Check by turning steering wheel nearly to extreme left position, hold roller shaft in against worm, turn wheel to center position, check play at splined end of roller shaft. If play apparent, remove additional shim and repeat test. Replace housing cover, reassemble steering arm (drive arm in roller shaft), adjust roller shaft endplay (see above). If adjustments have been made correctly, play at ball end of steering arm should be .006" and wheel should turn throughout range without heavy drag. Pull at steering wheel rim required to turn steering gear through center position must be within limits shown below. If outside these limits recheck adjustments (add or remove thin shim on roller shaft).

CAUTION—Make certain that thick thrust washer (between adjusting shims and shoulder on roller shaft) is installed with bevel face or chamfer toward roller (away from splined end of shaft). Use special thimble (Packard No. ST-5032) or wrap splined end of roller shaft with tape to avoid damage to oil seal when installing roller shaft.

Car Model	Steering Gear Setting
Chrysler C7, DeSoto S2, S3	1—4 lbs.
Chrysler C8, C9, C11	½—3 lbs.
Chrysler C14, C15, C17	1—2½ lbs.
Chrysler C16	1½—3½ lbs.
Dodge & Plymouth '36-37	1—4 lbs.
Dodge & Plymouth '38-40	1½—3½ lbs.
Plymouth P7, P8	¾—2¾ lbs.
Packard 1937-42	3—4½ lbs.

STEERING GEAR POSITION:—With steering gear at mid-point, steering wheel position should be correct, intermediate steering arm should be parallel to center-line of car and wheels should point straight ahead. For all models with independent springing, see Front Suspension articles for tie rod

CONTINUED ON NEXT PAGE

GEMMER WORM-AND-ROLLER TYPES 250, 300, 330, 370 (C nt.)

adjustment to correct intermediate steering arm position, and check special points as follows:

Chrysler, DeSoto, Dodge, Plymouth Steering Wheel Height—Steering wheel may be lowered by installing special steering post bracket at dash. Steering gear frame bolts must be loosened to allow steering column to be aligned with new bracket without springing which will cause bearings to bind.

Nash '600' Models (1941-42). Steering wheel is marked on underside of hub and this marked spoke should be in line with wide serration on upper end of steering column tube and pointing straight down with roller on 'high' mid-point of worm. Front wheels should point straight ahead in this position.

Packard (1937-39). Steering gears can be raised or lowered by installing special brackets at dash as shown in table below. When installing new bracket, loosen steering gear mounting bolts on frame to allow gear to align with new bracket without springing which will cause binding of the shaft and jacket.

Dash Bracket

Model	To Raise	Standard	To Lower	
115C	320284	315612	320285	
120C	320286	315611	320287	
1600	326798 (¾")	326806		
	324850 (1⅝")	326806		
1601,2	324850 (1½")	326798	326806	(11/16")
1700	333104 (⅝")	333101		
1701,2,3,5		333104	333101	(⅝")

Packard (1940-41). Steering wheel height not adjustable but can be raised or lowered by installing instrument panel bracket from other models as follows: Six—Wheel cannot be lowered but can be raised approximately ⅝" by installing bracket from Eight. **Eight & Super Eight**—Wheel cannot be raised but can be lowered ⅝" by installing bracket from Six. NOTE—Seat can be lowered approximately ½" by removing two wooden strips under seat frame, or raised approximately ⅝" by installing special No. 337373 tapered wedges.

Packard 1942 Models. Steering lever and gear case are marked and marks will line up when roller is on 'high' mid-point of worm. Install steering wheel so that spoke location is correct with these marks together. Front wheels should point straight ahead in this position.

SPECIAL SERVICE NOTES:—On independent Suspension cars, check linkage and intermediate steering gear arms as noted below (intermediate steering arms not used on all cars—on some cars, both tie rods linked directly to steering gear pitman arm).

Steering Linkage (with Intermediate Steering Arm):—On all models with intermediate steering arm, toe in adjustment should be made by adjusting both tie rods equally and tie rod lengths should be checked and equalized to insure intermediate steering arm being centered (on center-line of car) and steering gear roller on high point of worm with wheels in straight ahead position.

Steering Linkage (No Intermediate Steering Arm):—On Chrysler, DeSoto, Dodge, Plymouth models without intermediate steering arm, the longer (right hand) tie rod should be adjusted to the correct length first (see table below) and toe in adjustment should then be made by adjusting the shorter (left hand) tie rod. This will insure steering gear roller being on worm high-point with wheels straight.

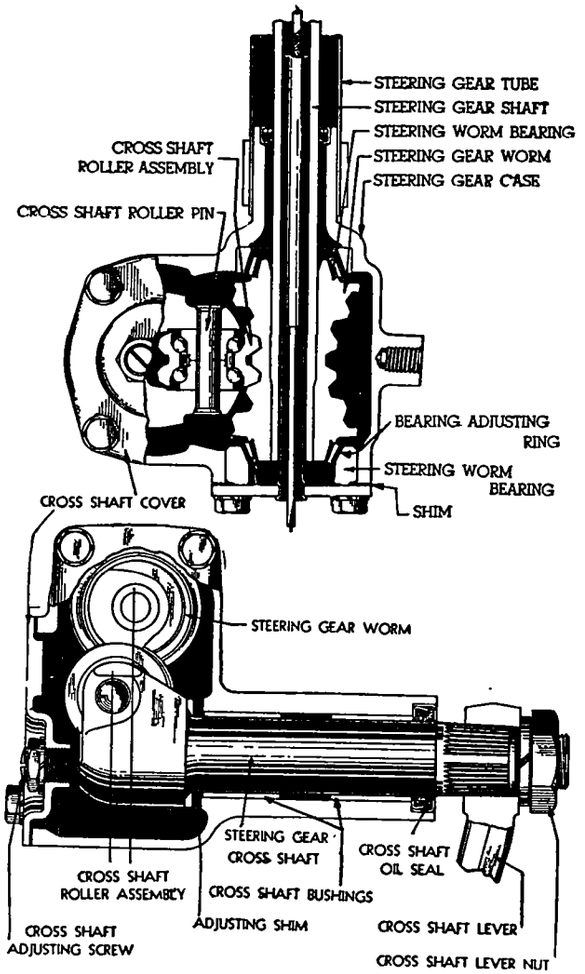

Car Model	Long Tie Rod Setting
Chrysler C7, C8, C16	31 7/32"
Chrysler C14	30 15/16"
De Soto S1, S3	31 7/32"
Dodge D11, Plymouth P7, P8	31 11/16"

Dodge & Plymouth 1940 Models—Adjust toe-in by adjusting both tie rods equally. If steering wheel roller is not on 'high' point of steering wheel worm with wheels in straight-ahead position, correct steering wheel position by shortening one tie rod and lengthening other tie rod equally.

Nash '600' (1941-42). This model has cross type linkage with steering gear pitman arm connected directly to right hand tie rod (steering arms extend toward front of car) and left hand tie rod connected to the right hand rod at a point near the steering gear. With front wheels in straight-ahead position and steering wheel roller on 'high' point of worm, wide serration on steering tube should point downward and steering wheel should be installed with line on lower face of wheel hub in line with this wide serration.

CAUTION—When tightening tie rod adjuster clamp bolts, make certain that bolts are down toward the ground (necessary to prevent bolts striking body sill when front wheel raises over bumps).

Chrysler C6, CZ '35; DeSoto SF '35—Intermediate steering arm roller bearings adjusted by tightening nut on bolt on top of arm. Tighten nut until arm turns with slight drag, then back nut off 1/6 turn and install cotter pin.

Chrysler Model C17 Intermediate Linkage—Consists of intermediate lever on left front corner of frame which is connected to steering gear pitman arm by adjustable intermediate link at top and to wheel steering arm by adjustable drag link at bottom. When installing this assembly, turn nut on intermediate lever shaft up solid and then back off to nearest cotter pin hole. Adjust upper intermediate link length to exactly 29 5/16" by loosening clamp bolts and turning tube. With steering wheel at mid-point, adjust lower drag link length so that wheels are straight ahead.

Packard '37-38—Adjust bearing pre-load by adding or removing gaskets under bearing covers until force of 3½-4½ lbs. required to move arm when applied at radius of 9 1/6" (attach spring scale to ball on arm).

Packard 1939—Bearings pre-loaded by spring washer on bolt shank above intermediate steering arm. Later cars had longer bolt with additional plain washer at each end of bolt (use this later type for replacement on all cars).

Packard (Clipper Models)—Linkage consists of a center connecting rod linked between steering gear arm and idler arm on right frame side rail with individual tie rods from this connecting rod to each wheel. Toe-in adjustments should be made by turning adjuster tube at outer end of each tie rod equally (within ½ turn). Tie rod lengths must be equal within ½". If steering gear roller not on midpoint of worm (with marks on case and lever lined up) with front wheels in straight ahead position, and this can not be corrected by shortening one tie rod and lengthening other rod (within limits given above), relocate steering gear arm on shaft.

Packard (1941-42). Intermediate steering arm with individual tie rod for each wheel. If steering gear roller not on 'high' midpoint of worm and intermediate steering arm not centered with wheels straight ahead, check tie rod lengths (must be equal within ⅛") and correct by lengthening one rod and shortening other exactly equal amount (to avoid disturbing tie rod adjustment). Intermediate steering arm bearing is pre-loaded by spring washer on top (nut end) of arm shaft. Bearing not adjustable and nut should be tightened until it bottoms on bearing shoulder.

1949 FORD 6 & V8 PASS. CARS

Ford 6 Cyl. & V8 Pass. Car Models (1949)

►**STEERING LINKAGE PRODUCTION CHANGE (New Idler Arm Bracket & Pitman Arm) On Cars After March 1, 1949:** ***See "1949 Ford Passenger Cars, Lincoln and Mercury" Front Suspension for Identification of these Parts and NEW Front Suspension Settings required when they are used.***

►***CAUTION—These new parts must be used together.***

►**STEERING IDLER ARM LOOSENESS COMPLAINTS:** May be caused by incorrect adjustment. ***See Idler Arm Adjustment under Steering Linkage (below).***

DESCRIPTION: Worm-and-roller type with worm gear on steering column shaft meshing with double-tooth roller on cross-shaft (sector shaft) on which the pitman arm is mounted. Worm gear and shaft are mounted on taper roller bearings with bearing adjusting shims between housing and top cover at lower end of jacket tube. Cross-shaft is mounted on needle roller bearings in bottom cover on housing. Cross-shaft endplay is controlled by "sector shaft adjusting screw" on top of housing (and thrust-washers installed in cover which bear against shoulder on cross-shaft). Worm and roller mesh or backlash adjustment is provided in the eccentricity of the bottom cover (rotating cover moves roller in or away from worm).

ADJUSTMENT: Make all adjustments in the following order and exactly as directed.

Worm Shaft Endplay (Bearing Pre-load): Before checking, disconnect steering linkage at pitman arm and back off cross-shaft (sector shaft) adjustment (see below) so that the true bearing pre-load can be measured. Attach spring scale to wheel spoke at steering wheel rim, check pull required to turn wheel.

Bearing Pre-load—½-1¼ pounds (measured as above).

Adjustment—Loosen steering column jacket clamp at bottom of instrument panel. Remove capscrews in top cover on steering column housing. Work cap and column jacket upward sufficiently to provide access to adjusting shims located between cap and housing, carefully separate first shim from remainder of shim pack, clip and remove shim (see Shim Note below). Work cap down on housing, re-install capscrews, recheck bearing pre-load. Repeat adjustment, as required, until correct bearing pre-load secured.

►***CAUTION—Do not exceed bearing pre-load specifications and see that wheel turns freely throughout travel without binding or stiffness.***

►**Adjusting Shim Note**—These shims furnished in four thicknesses as follows: Part No. B-3593A (.022"), B-3593B (.005"), B-3593C (.010"), B-3593D (.020").

Worm-and-Roller Mesh (Backlash): Check with steering wheel turned to center "straight-ahead" position (mid-point of travel at which backlash is at a minimum). Attach spring scale to wheel spoke at wheel rim, check pull required to turn wheel.

Backlash Setting—1¾-2 lbs. measured as above (this figure includes worm bearing pre-load of ½-1¼ lbs. adjusted previously).

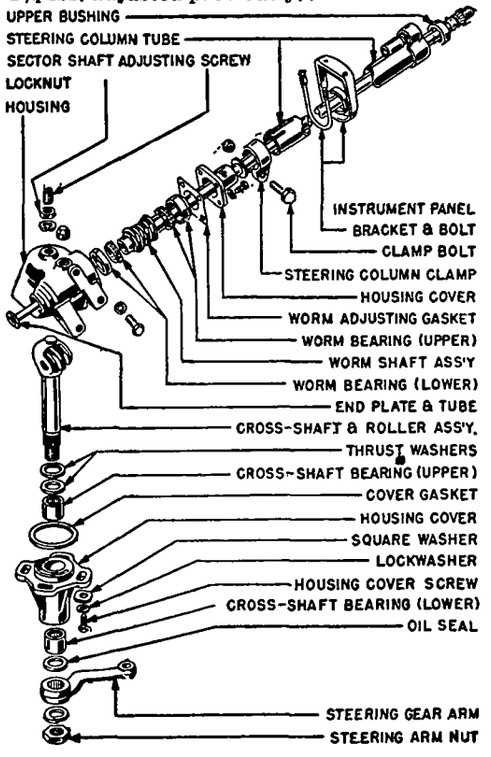

1949 FORD PASS. CAR STEERING GEAR

Adjustment—Loosen sector shaft housing (bottom cover) capscrews (NOTE—not necessary to remove screws—screw holes slotted to permit this adjustment). Rotate housing in a clockwise or **right hand direction** until all backlash is just removed, tighten cover screws, recheck backlash setting (above). Repeat adjustment, as required, until correct backlash setting is secured. Make certain that square washer (adjusting slot cover plate) and lockwasher in place on each cover screw and that screws are securely tightened.

►***CAUTION—See that wheel turns freely through entire travel without binding or stiffness.***

Cross-shaft (Sector Shaft) Endplay: Loosen locknut on sector shaft adjusting screw (on top of housing), turn screw in (clockwise) until all endplay in shaft has been taken up without causing any binding as shaft is rotated, tighten locknut.

STEERING WHEEL REMOVAL: Remove horn button and ring assembly (see below), remove nut on steering column shaft, pull wheel.
Installation—Shaft and wheel hub have "master spline" so that wheel can only be installed in correct position. Pitman arm and steering gear cross-shaft have similar master spline to insure correct positioning of arm.

Horn Button & Ring Assembly Removal: Press down evenly on horn button and turn assembly in either direction to release retainer, then lift assembly out.

STEERING LINKAGE: Consists of an intermediate rod linked between the steering gear pitman arm and an idler arm pivoted on a bracket on the right side of the frame with individual tie rods extending from this intermediate link to each wheel. An adjusting sleeve is provided at the outer end of each tie rod for toe-in or toe-out adjustments.

See "1949 Ford, Lincoln, Mercury Front Suspension" for front end specifications and adjustment data.

Steering Linkage Adjustment: If linkage disconnected or out of adjustment, set linkage up as follows to insure correct steering wheel position: With linkage connected, and idler arm correctly adjusted (see below), turn steering wheel to center mid-point of travel (turn wheel from one end position to the other, counting the turns, then turn wheel back from end position one-half this number of turns) with spokes horizontal. Loosen clamp bolts on each tie rod and turn each tie rod adjuster, as necessary, so that both front wheels are in "straight-ahead" position. Then adjust toe-in or toe-out by turning each tie rod adjuster **equally** to avoid disturbing steering wheel position.

Steering Idler Arm Adjustment: Check idler arm for excessive looseness and adjust as follows: Remove bolts mounting idler arm bracket on frame. Tighten idler arm bushing in bracket to 85-100 ft. lbs. Turn idler arm bracket and bushing assembly down on arm until it is tight (this is left hand thread), then **back arm and bushing off** approximately 1 turn, re-install bracket mounting bolts.

CAUTION—Idler arm will bind in bushing unless bracket and bushing backed off as above.

GEMMER WORM-AND-ROLLER (WITH PUSH-PULL ADJUSTMENT) TYPES 305, 335, 375

Car Model	Gemmer Model
Chrysler 6, All Models (1938-39-40)	305
Chrysler 6, All exc. 7 Pass. (1941-42)	305
Chrysler 6, 7 Pass. Models (1941-42)	335
Chrysler 6, All exc. 7 Pass. (1946-48)	②
Chrysler 6, 7 Pass. Models (1946-48)	③
Chrysler 6, Town & Country (1947-48)	③
Chrysler 8, Imp. C19 ('38), C23 ('39)	335
Chrysler 8, Cust. Imp. C20 ('38), C24 ('39)	375
Chrysler 8, All Models (1940-42)	335
Chrysler 8, All Models (1946-48)	③
DeSoto, All Models (1938-39-40)	305
De Soto, All exc. 7 Pass. (1941-42)	305
De Soto, 7 Pass. Models (1941-42)	335
De Soto, All exc. 7 Pass. (1946-48)	②
De Soto, 7 Pass. & Suburban (1946-48)	③
Dodge, All 7 Pass. Models (1937-40)	①
Dodge, All Models (1941-48)	①
Ford V8, All Pass. Car Models (1937-40)	305
Ford 6 Cyl. & V8, All Pass. Cars (1941-48)	②
Ford Truck, All Models (1938-42)	335
Ford Truck, ½ & ¾ Ton (1944-48)	②
Ford Truck, Others (1944-48)	③
Frazer, All Models (1947-48)	305
Hudson 6, All Models (1937-47)	305
Hudson 6, All Models (1948)	335
Hudson 8, All Models (1937-38-39)	305
Hudson 8, All Models (1940-48)	335
Hupmobile 6, All Models (1938-39-40)	305
Kaiser, All Models (1947-48)	305
Lincoln & Cosmopolitan, 9EL, 9EH (1949)	335
Mercury, All Models (1939-42)	305
Mercury, All Models (1946-48)	②
Mercury, Model 9CM (1949)	335
Nash "600", All Models (1946-47-48)	305
Nash Amb. 6, All Models (1937-48)	305
Nash 8, All Models (1937-42)	335
Nash-LaFayette, All Models (1937-40)	305
Packard 6 & 8, All Models (1946-48)	③
Packard Super 8, All Models (1937-38)	④
Packard Super & Cust. 8, All Models (1946-48)	③
Packard 12, All Models (1937-38-39)	④
Plymouth, All Models (1940-48)	①
Terraplane, All Models (1937-38)	305

①—Own Make but similar to Gemmer Model 305 (except 7 Pass.), Model 335 (7 Pass. Models).
②—Own Make but similar to Gemmer Model 305.
③—Own Make but similar to Gemmer Model 335.
④—Own Make but similar to Gemmer Model 375.

NOTE:—Steering Column Gear Shifts—For Adjustment, Servicing, and Removal of steering column mounted gear shifts, see "Transmission Controls."

Model 375. This model has a 'straddle-mounted' roller shaft with additional roller bearing at adjusting screw end of shaft within side cover. Adjusted in same manner as other models.

►**HUDSON FRONT SUSPENSION CHECK:** Check entire front suspension system for free turning without binding by placing roller plates under front wheels, disconnecting drag link, and checking pull by means of spring scale hooked over tire tread. If pull not correct (see table), lubricate kingpins and tie rod ends, check entire Front Suspension assy.

Hudson Front Wheel Turning Pull	
1942-47 Six	26 lbs. max.
1942-47 Eight	27 lbs. max.
1948 Six & Eight	28 lbs. max.

DESCRIPTION:—These models are similar in design to ther Gemmer Worm and Roller types except that washer on adjusting screw head engages slot in end of roller shaft so that shaft is prevented from moving in either direction (push-pull adjustment).

ADJUSTMENT:—Before making adjustments, disconnect drag link at steering arm and jack up front wheels. Wheels should turn freely in both directions with not more than 10 lbs. pull on drag link (except Packard) or 45 lbs. pull on intermediate arm at ball end (Packard models). Align steering column by loosening frame bracket bolts to allow gear to shift in frame, tighten bolts. Then loosen dash bracket bolts to allow bracket to be aligned with column, if necessary shim bracket or elongate mounting holes so that column will not be sprung when bracket bolts are tightened.

Worm Bearing Endplay:—Check by turning steering wheel one turn to right, secure wheel, shake front wheels (drag link must be connected), check movement of steering wheel hub on column jacket. If endplay perceptible, adjust by loosening four screws in lower cover about ⅛", clip and remove top shim, being careful not to mar remaining shims. Tighten cover screws, check adjustment. Wheel should turn freely without stiffness at any point and pull at steering wheel rim not exceed limits in table below (check with spring scale hooked to wheel rim and apply pull tangent to rim). If outside these limits, add or remove additional shims.

Car Model	Worm Bearing Setting
Chrysler, DeSoto '40	①½-1 lb.
Chrysler, De Soto '41-48	①⅜-¾ lb.
Dodge, Plymouth '40	①½-1 lb.
Dodge, Plymouth '41-48	①⅜-¾ lb.
Frazer, Kaiser	½-1 lb.
Hudson '48	¾ lb.
Packard '46-48	②½-1 lb.

①—Worm bearing drag only (roller cross-shaft out of housing or adjusting screw backed off).
②—With drag link disconnected and steering wheel ⅛ turn away from either end position.

Roller Mesh in Worm:—Check by turning steering wheel to center position (turn wheel back one-half total number of turns from either end position r place marked spoke straight up or straight down), shake steering arm at ball end. If play or backlash exceeds 1/32", adjust roller shaft position as follows:

CONTINUED ON NEXT PAGE

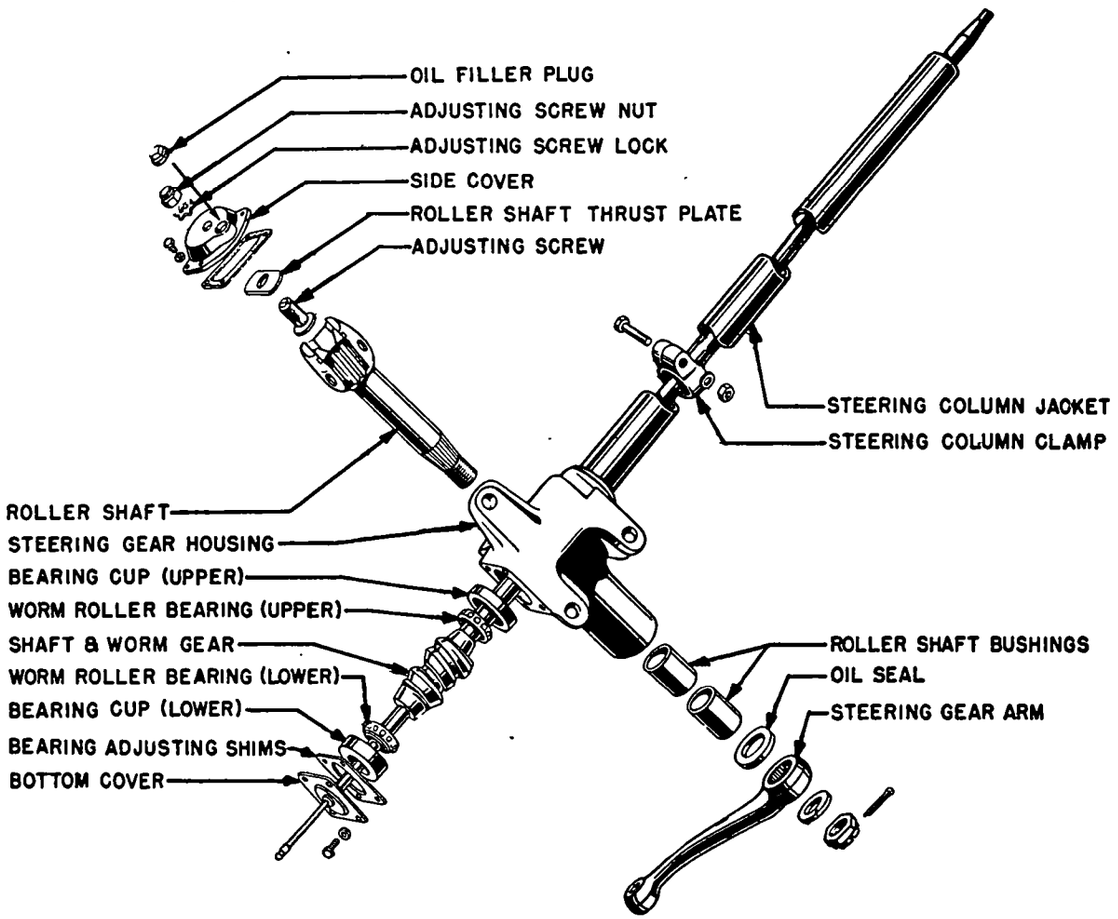

GEMMER MODEL 305, 335 STEERING GEAR

GEMMER WORM-AND-ROLLER TYPES 305, 335, 375 (C nt.)

Adjustment (see **Packard Note**)—Remove adjust-screw cap nut on side cover, slide locking plate off until it clears lock boss on cover, turn slotted adjusting screw in just enough to take up backlash (further movement will cause damage to gear), engage locking plate, replace cap nut. Steering wheel should turn freely throughout entire range without binding at any point. Check adjustment by noting pull required to turn wheel through center 'high' point (use spring scale attached to rim of wheel and apply pull tangent to rim). If pull outside limits, recheck adjustment.

Car Model	Steering Gear Setting
Chrysler, DeSoto '40	1½-3½ lbs.
Chrysler, De Soto '41-48	1-2¼ lbs.
Dodge, Plymouth '40	1½-3½ lbs.
Dodge, Plymouth '41-48	1-2¼ lbs.
Ford, Lincoln, Mercury	3 lbs.
Frazer, Kaiser	1½-3½ lbs.
Hudson '41-48	2 lbs.
Packard '46-48	①1½-2 lbs.

①—2 lbs. max. at center mid-point (¾ lb. less at either side of mid-point).

Packard 1937-39 Note. On these car models, engage Allen wrench in adjusting screw, turn screw in until pull on steering wheel rim required to move wheel through center position is 3-4½ lbs., engage locking washer, replace cap nut.

STEERING WHEEL POSITION:—With steering gear at midpoint (roller on high point of worm), intermediate steering arm should be on center-line of car (when used), wheels should point straight ahead, and steering wheel position should be correct as noted below. Check steering wheel position and height as follows:

Hudson, Terraplane Models—Flat spot on serrated end of steering tube should point straight down with roller on high point (center) of worm (visible after taking off horn button and wheel). If wheels not straight ahead with steering gear in this position, shift shims located at front and rear of pitman arm ball in drag link. Install steering wheel so that trademarked spoke (mark under spoke near rim) is straight down. Steering wheel adjustable for height by loosening 3 frame bracket bolts (to allow gear to shift in frame), loosening dash bracket bolts and moving wheel up or down. Add or remove bracket shims, tighten bracket bolts, move wheel to align gear in frame, tighten frame bracket bolts.

Hudson 1942-48. Notch in end of shaft should point straight down (visible with horn button and contact plate removed) and steering wheel spokes should be horizontal with roller on 'high' mid-point of worm. If wheel position not correct, adjust by shifting shims from one ball seat to the other in the steering arm end of the drag link.

Frazer & Kaiser. Column shaft and steering wheel serrations have "flats" which must be matched when wheel installed. If wheel spokes not horizontal with front wheels straight-ahead, adjust as follows: Disconnect drag link, locate steering wheel in center position (turn wheel back ½ full travel from either end position) with steering gear roller on "high" mid-point of worm and wheel spokes horizontal, set front wheels in straight-ahead position. Adjust both tie rods for equal length with idler lever in centered position. Then adjust drag link until it can be re-connected without disturbing position of steering wheel or front wheels.

Lincoln & Mercury 1949. To align steering wheel, disconnect connecting link at steering gear arm, locate steering wheel in center position (turn wheel back ½ full travel from either end position) with steering gear roller on "high" mid-point of worm and wheel spokes horizontal, set front wheel in straight-ahead position. Adjust both tie rods equally until connecting link can be reconnected to steering gear arm without disturbing position of steering wheel and front wheels.

►*CAUTION*—Both tie rods must be adjusted equally (turn both adjusters equally in opposite direction) to avoid disturbing original toe-in setting. Recheck toe-in after adjustments have been made.

Nash Models 1940-48. Steering wheel marked on underside of hub. Install steering wheel with this mark straight down and in line with wide serration on upper end of steering gear tube. In this position, steering gear roller should be on 'high' mid-point of worm and front wheels should point straight ahead.

Packard Models—Steering wheel height adjustment provided by adjustable bracket at dash. When adjusting wheel height, loosen steering gear mounting bolts at frame to allow steering gear to shift without springing column which will cause binding between shaft and column jacket.

Horn Button & Horn Ring Servicing:—To remove horn button (or horn ring) for access to steering wheel nut to remove wheel or service steering gear, proceed as follows:

Chrysler, DeSoto, Dodge, Plymouth Models—Horn button or horn ring retainer is held in place by screws inserted from beneath steering wheel hub and all parts can be lifted off after retainer screws have been taken out. On models with Horn Ring, the contact plate is mounted on the top of the steering wheel hub by three additional screws which must also be taken out (accessible after retainer, ornament, and horn ring have been lifted off).

Hudson Horn Button—To remove button, disconnect horn wire, push down on horn button and rotate button to right or left to free it from retainer. Pull horn wire up slightly and push wire sleeve into large opening of contact cup, lift contact cup from horn button retainer. Steering wheel nut must be removed before the horn button retainer can be lifted off.

CAUTION—When reassembling horn button, make certain that bakelite sleeve on horn wire is inserted through large opening of contact cup and into the small opening with the flange of the sleeve on top of the cup (not underneath).

Hudson Horn Ring—To remove horn ring assembly, take out two screws and lockwashers installed on underside of steering wheel hub and one screw at upper end of escutcheon bezel, lift off bezel and escutcheon. Take out attaching screw and remove wheel-to-horn wire contact strip. Remove upper horn ring spring retainer screw and lockwasher. Remove ring silencer rubber, contact strip, and contact clip bakelite spacer. Take out upper spacer screw in ring spacer retainer, remove upper ring spring retainer, lift out horn ring spring. Horn wire, upper terminal, insulator, rubber sleeve and lower terminal are then accessible and can be removed (lower spring retainer is held on by steering wheel nut). NOTE—Apply small amount of chassis lubricant to head of brass terminal before assembling

Hudson 1948 Horn Ring—To remove assembly, take out four screws on underside of steering wheel. Lift off ornament, retainer, spring, and contact cup as an assembly.

Frazer & Kaiser Horn Ring—To remove, pry out medallion (horn button) carefully with a screwdriver (loosen gradually and evenly in clockwise direction around steering wheel rim). Disconnect horn wire at bottom of steering column, remove two screws in horn ring, then remove three screws holding contact plate to wheel. Lift out three spacers, pull contact plate and horn wire through steering column.

Frazer Manhattan Horn Ring—To remove, take off four nuts securing medallion on wheel, lift medallion off. Disconnect horn wire, detach contact plate from wheel, remove plate by pulling horn wire up through steering column.

STEERING LINKAGE: Special linkage and intermediate steering arms on Independent Suspension cars should be adjusted as follows:

Intermediate Steering Arm Adjustments: Intermediate steering arm on frame front cross-member transmits motion from steering gear (through drag link) to each front wheel (through independent tie rods). Arms must be correctly positioned as follows:

Chrysler 1938-39 Custom Imperial C20, 24. Arm on frame cross-member and linked to each front wheel by individual tie rods and to steering gear pitman arm by short drag link. When adjusting toe in, both tie rods should be turned equally and lengths must be equal after adjusting to insure correct steering gear position (intermediate arm should be on center-line of car with wheels straight ahead).

Bearing Adjustment—Arm mounted on taper roller bearings. To adjust, tighten nut on upper end of steering arm bolt until slight drag felt when arm revolved, then back nut off 1/6 turn and install cotter pin.

Frazer & Kaiser—Adjust both tie rods for equal lengths. Intermediate arm should then be centered with steering wheel in straight-ahead position (mid-point of travel). To remove intermediate arm, drive out tapered pin, unscrew lower bushing, use Allen wrench to unscrew pivot pin from idler arm, remove upper bushing, withdraw lever.

Hudson—To adjust intermediate steering arm for centered position use gauge tool J-2953 as follows: Remove center steering nut and front bolt from arm support bracket, install gauge clamp over steering arm, install gauge, insert bolt at front of gauge in hole in bracket from which bolt removed. Attach screw to center steering arm shaft, adjust gauge rods to contact both sides of front wheel evenly. Repeat procedure for opposite wheel, adjust tie rods equally until gauge reading is same on both sides

►*CAUTION*—Whenever steering arm removed, replace original type Marsden locknut with new Elastic stop nut (this new nut lessens chance of distorting pivot spacer when nut is tightened.

Nash 1946-48 "600" Models. Before adjusting toe-in, adjust tie-rods so that intermediate idler lever is centered with steering wheel in center mid-point of travel.

CONTINUED ON NEXT PAGE

GEMMER WORM-AND-ROLLER TYPES 305, 335, 375 (C nt.)

Packard Models—Intermediate steering arm pivoted on frame cross-member linked to each wheel by individual adjustable tie rod and to steering gear pitman arm by adjustable drag link. Toe in adjustments should be mad by turning both tie rods equally and lengths must be equal after adjustment. Steering gear roller must be on high point of worm with wheels in straight ahead position and intermediate steering arm on center-line of car (adjust drag link length to secure this setting).

Bearing Adjustment (Super 8)—Arm mounted on cup-and-cone ball bearings and adjustable by turning nut on upper end of steering arm bolt. Tighten nut until force required to turn arm (measured at ball on end of arm) is 3-4 lbs.

Bearing Adjustment (Twelve)—Arm mounted on two taper roller bearings. Adjustable by adding or removing gaskets under bearing covers. With correct adjustment, force required to turn arm should be 3½-4½ lbs. measured at ball end of arm with drag link and tie rods disconnected.

Drag Link Ball (Hudson '112' 1938):—To correct excessive movement of rear drag link socket in pitman arm ball, install special larger-than-standard drag link ball seats No. 158592 (.998" diameter). These larger ball seats used on 1939 cars before No. 17607 (drag link with parallel ends on later cars).

Steering Linkage Adjustments: When intermediate steering arms (above) not used, steering linkage should be adjusted as follows:

Chrysler, De Soto, Dodge 1938-39 Models. No intermediate steering arm used and steering gear pitman arm linked directly to each wheel by individual tie rods. When adjusting toe in, set longer (right hand) tie rod to exact length between ball centers as shown in table below, and then set toe in by adjusting shorter (left hand) tie rod.

Car Model	Long Tie Rod Setting
Chrysler C18, C22; DeSoto S5, S6	31 5/8"
Chrysler C19, C20	30 25/32"
Dodge D11	31 11/16"

Chrysler, De Soto, Dodge, Plymouth 1940-48 Models. Steering gear pitman arm is connected directly to each wheel by long (right hand), short (left hand) tie rod. Toe-in adjustments should be made by shortening or lengthening both tie rods equally. If steering gear roller not on 'high' mid-point of worm with wheels in straight ahead position (after toe-in adjustment completed), correct steering gear position by lengthening one tie rod and shortening other rod exactly equal amount (to avoid disturbing toe-in adjustment).

CAUTION—When tightening clamp bolts, make certain that both ends of tie rod against same side of ball end studs (so that rod can rotate slightly on ball ends) and that clamp bolt on left end of long tie rod is below tie rod (to prevent interference on turns).

Chrysler Crown Imperial (1942-47) Steering Arm Anti-Shock Insulators. Steering arm must be removed from steering gear for servicing r renewal of insulators. With new insulators assembled in steering arm, check measurement from top flange of upper insulator to lower flange of lower insulator which should be ⅜" before stud nuts are tightened (this will insure insulators not being tightened beyond shock absorbing ability). Reassemble steering arm with chamfered surface of plate toward insulator side. Tighten stud nuts and measure compression of insulators. If insulators compressed more than 1/64", reduce thickness of insulator flange with a sanding disc. Over-all measurement of insulators when compressed should be 1 23/64".

Lincoln & Mercury 1949 Models. Center connecting rod is linked between steering gear pitman arm and idler lever on right side of frame with individual tie rods from this connecting rod to each wheel. See steering wheel position adjustment above.

Nash Amb. 6 & 8 Models. Center connecting rod is linked between steering gear arm and idler arm on right frame side rail with individual tie rods from this connecting rod to each wheel. Toe-in adjustments should be made by lengthening or shortening both tie rods equally. If steering gear roller not on 'high' mid-point of worm with wheel straight ahead, correct by lengthening one tie rod and shortening other tie rod equally (to avoid disturbing toe-in adjustment).

CAUTION—When adjusting toe-in, inner tie rod ball stud must be forced down to normal running position. After making adjustment, see that outer tie rod ball stud is at right angles to ball seat on outer end of rod, locate clamps to rear with clamp-screws vertical to ground, force down tie rod at inner ball ends and tighten clampscrews in this position.

ROSS CAM-AND-LEVER

Car Model	Ross Model No.
Auburn 6, Model 654 (1936-37)	
Bantam, Model 60 (1939), 63 (1940)	S-12
Bantam, Super Four 65 (1940-41)	S-12
Crosley, All Models (1939 to 1948)	S-12
Graham Crusader, 80 (1936), 85 (1937)	
Graham Cavalier, 90 (1936), 95 (1937)	
Hupmobile 6, Model 618G (1936)	
Studebaker Dictator, 3A, 4A (1936)	

DESCRIPTION:—Consists of a worm-like cam mounted on steering wheel shaft engaging a tapered stud mounted on inner end of cross-shaft lever. Cross-shaft is carried in plain bushings and is adjustable for endplay. Cam is carried on ball thrust bearings at upper and lower end and bearing clearance or endplay is adjustable. Stud track in cam is grooved deeper at each end to provide minimum clearance at center. Adjustments must be made with wheel turned to 'straight ahead position' so that stud is at center of cam groove .

ADJUSTMENT:—Free steering gear from load by disconnecting drag link or jacking up front end of car. Loosen instrument board bracket clamp, loosen jacket tube clamp screw (if no clamp screw used, jacket tube is press-fit in adjusting plug and will turn with plug). Make adjustments in order:

Cam Endplay (Adjusting Nut Type):—Up and down movement of steering wheel. Loosen housing plate adjusting screw and locknut (to free stud in cam groove). Loosen adjusting plug lockscrew locknut and back off lockscrew. Turn adjusting plug in until slight drag felt when turning wheel, then back off plug about 1/6 turn until wheel turns freely without any up-and-down movement, tighten lock-screw and locknut. Tighten instrument board bracket, check wheel. If movement is stiff steering column is sprung or out of alignment and must be corrected.

Cam Endplay (Shim Type):—Unscrew four clamp screws in upper cover, move cover up as far as possible (about ¼"). Separate top (.003") shim from remainder, clip and remove. Replace upper cover screws and tighten securely. Check adjustment. Wheel should turn freely (with light grip on rim) without any up-and-down movement with barely perceptible drag at mid-point. Remove additional shims, if necessary, until this adjustment secured. Shims are .003" (top), .010" (middle), .030" (bottom) thick with paper gaskets between. Do not destroy or remove gaskets between remaining shims.

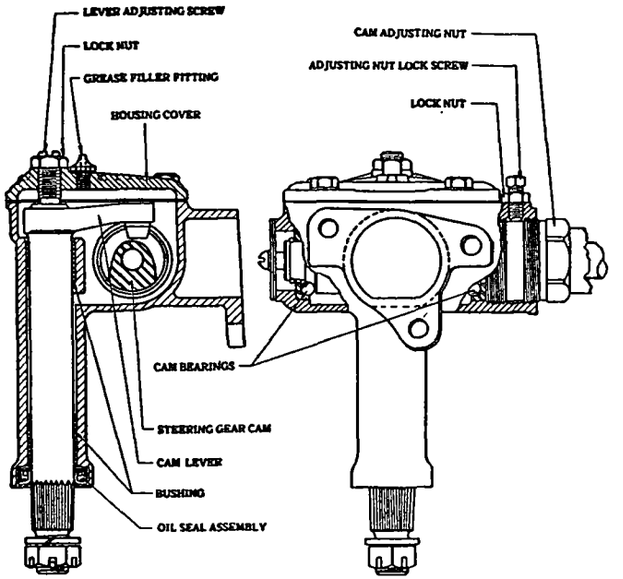

ROSS CAM-AND-LEVER TYPE

Steering Column Alignment:—Loosen frame bracket bolts to permit gear to shift into alignment with instrument board bracket, tighten frame bolts. Loosen instrument board bracket bolts to allow bracket to shift to position of column, tighten bracket bolts. If bracket position not adjustable, change bracket mounting holes so that bracket is aligned with column, do not spring column to bracket.

Lever Shaft Endplay (Steering Wheel Backlash):—Turn wheel to straight ahead position so that stud at high point of cam. Never adjust with stud at other points. This will cause binding at center position. Loosen locknut on side cover adjusting screw (on inner cover plate), turn screw up until slight drag felt at center position when wheel turned from one extreme to other, tighten locknut. Drag must be slight and perceptible only in midposition.

Steering Wheel Position:—With drag link disconnected at steering arm, count number of wheel revolution from extreme right to extreme left, turn wheel back ½ this number of turns so that stud is at high point of cam. Turn wheels to 'straight ahead' position, see if drag link can be engaged with ball on steering arm without turning steering wheel. If not, take off nut, pull steering arm, replace arm in position to engage drag link, tighten nut.

ROSS CAM-AND-TWIN LEVER

Car Model	Ross Model No.
Bantam, Model 60 (1939)—See Note	T-12
Graham, Schgr. Models 116, 120 (1937)	T-14
Graham, Models 96, 97 (1938-39)	T-14
Graham, Models 107, 108 (1940)	T-14
Graham, Hollywood Models 109, 113 (1941)	T-14
Jeep, Ford & Willys Army Model (1942-45)	T-12
Studebaker Dictator, 3A, 4A ('36), 5A, 6A ('37)	T-14
Studebaker Champion, All (1939-48)	T-12
Studebaker Commander All (1938-48)	T-14
Studebaker President, Model 3C (1937)	T-21
Studebaker President, All Models (1938-42)	T-14
Willys, All Models (1941-42)	T-12
Willys Jeep, Universal CJ-2A (1946-48)	T-12
Willys Jeep, Sta. Wgn. 4-63 (1946-48)	T-12
Willys Jeep Sta. Sedan 6-63 (1948)	T-12
Willys Jeepster, Model VJ-2 (1948)	T-12
Willys Jeep Truck, 2T, 4T (1947-48)	T-12

NOTE:—Bantam 1939—Ross Cam-and-Lever Model S-12 (Single Lever Type) used on first cars.

Studebaker Dictator 1936—Ross Cam-and-Lever (Single Lever) Steering Gear used on first cars.

DESCRIPTION:—Consists of a worm-shaped cam mounted on the steering column shaft engaging two tapered studs mounted on the inner end of the cross-shaft lever. Cross-shaft is mounted on plain bushings and is adjustable for end-play. Cam is mounted on ball thrust bearings at upper and lower ends and bearing clearance or endplay is adjustable. Stud track in cam is grooved deeper at ends to provide minimum clearance at each stud in 'straight ahead' position. All adjustments must be made with wheel turned to this straight ahead position.

ADJUSTMENT:—Before making adjustments, free steering gear from load by jacking up front wheels or disconnecting drag link (see Studebaker Steering Linkage data below). Check steering gear alignment. If stiffness evident with instrument panel bracket clamp tight, align steering gear as follows: Loosen steering gear frame bracket bolts to allow gear to shift on frame, retighten frame bolts. Loosen instrument panel bracket bolts to allow bracket to shift into alignment with steering column, tighten bracket bolts (if bracket position not adjustable, shim or otherwise change bracket position so that column not sprung when bracket bolts tightened).

Cam Endplay Adjustment—Check up-and-down movement of steering wheel and shaft in steering column jacket. If adjustment required, first loosen locknut and back off adjusting screw on housing side cover to relieve bearings of side thrust. Then remove four retaining screws in top cover on upper end of steering gear housing, move cover up on column jacket as far as possible (about ¼"), clip and remove a thin shim in shim pack under cover (shims are installed between paper gaskets and are .003", .010", .030" or .002", .003", .010" thick), using extreme care not to damage remaining shims and paper gaskets. Re-install cover, tighten cover screws, check adjustment. Wheel should turn with barely perceptible drag (thumb and forefinger grip on wheel rim) and should have no up-and-down movement. Then adjust Cam and Lever Backlash.

Cam and Lever Backlash—Check end-play or lost-motion of lever shaft at pitman arm with steering gear turned to center position with lever studs on high points of cam. If play evident, adjust by loosening locknut on steering gear housing side cover and turning adjusting screw in until play just taken up and steering wheel turns freely throughout entire range with barely perceptible drag at center position, hold adjusting screw and tighten locknut.

►*CAUTION*—This adjustment must be made only with lever studs on high points of cam (straight ahead position). If adjusted in any other position, gear will bind at this center point.

STEERING WHEEL POSITION: Check steering wheel for correct installation as follows:

Studebaker Models—Steering wheel center spoke (3 spoke types) should point straight down, or spokes should be horizontal (2 spoke type) with steering gear in straight-ahead position and lever studs on high points of cam. To check, count number of turns of the wheel from one extreme end position to the other, then turn wheel back exactly one-half this number of turns. If steering wheel spoke position not correct, remove wheel and re-install on shaft in correct position. See Linkage data below for pitman arm installation and location.

Other Models—Before connecting drag link, turn steering wheel to center position with lever stud on high point of cam (count number of turns of wheel from one end position to the other, then turn back ½ this number of turns), place front wheels in straight ahead position, then connect drag link without disturbing position of steering gear or front wheels.

Horn Button & Horn Ring (Studebaker):—To remove button or horn ring for access to steering wheel retainer nut (to remove wheel or service steering gear), hold wheel stationary, rotate button or horn ring cap 1/3 turn and lift out. Use puller J-1594 (or adapter J-1594X with Utility Puller HM-925) to remove steering wheel.

STEERING LINKAGE: Special linkage on cars with Independent Suspension should be adjusted as follows:

Studebaker 1940-46 Steering Linkage: The steering gear arm is special insulated type (see data below and tie rod for left wheel is connected directly to this arm. A connecting rod is linked between the steering arm and an idler lever on the right frame side rail with tie rod for right hand wheel connected to this idler lever. Toe-in on these models must be adjusted as directed below to insure all parts of linkage being correctly adjusted.

Toe-in Adjustment—See that marks on the end of steering gear lever shaft and steering arm adapter (short arm on shaft to which insulated steering arm is bolted) are in line and adjacent to each other. Set steering wheel in center position with lever studs on high points of cam (see Steering Wheel Position above), loosen clamp bolts on left hand tie rod (between steering arm and left wheel), turn this left hand rod until left front wheel is straight ahead (wheel should be parallel to rear wheel but ⅜" in (Champ. '40-46), ⅝" in (Comm. & Pres. '40), 1 1/32" in (Comm. '41-42), 1 3/32" in (Pres. '41-42) due to wider rear tread, tighten the clampbolt. Adjust the toe-in by turning the right hand tie rod only without disturbing position of left hand tie rod after it has been correctly set f r straight ahead position.

NOTE—This insulated steering arm also used on 1939 Champion cars beginning with Serial No. 19899. See Front Suspension article (in Front Suspension Section) for toe in adjustment on earlier cars.

Insulated Steering Arm—On Champion, insulated steering arm can be removed by taking off nuts on two studs (on which neoprene insulators are mounted) without disturbing position of adapter on steering gear lever shaft. If adapter being removed, use puller J-871 and make certain that punchmarks on shaft and adapter lined up when adapter replaced. On Commander & President, pull insulated steering arm and adapter as an assembly using puller J-871 after removing cotter pin, nut and washer from lever shaft and disconnecting left tie rod and connecting rod from steering arm. Assembly can then be dismantled by taking off nuts on two mounting studs. When reassembling, tighten nuts on studs until washers seat against shoulders on studs. See that punchmarks on adapter and end of steering gear lever shaft line up when assembly installed.

Connecting Rod Idler Arm—Spring washer used on upper end of idler lever stud on Commander and President models to prevent idler lever rattles. This

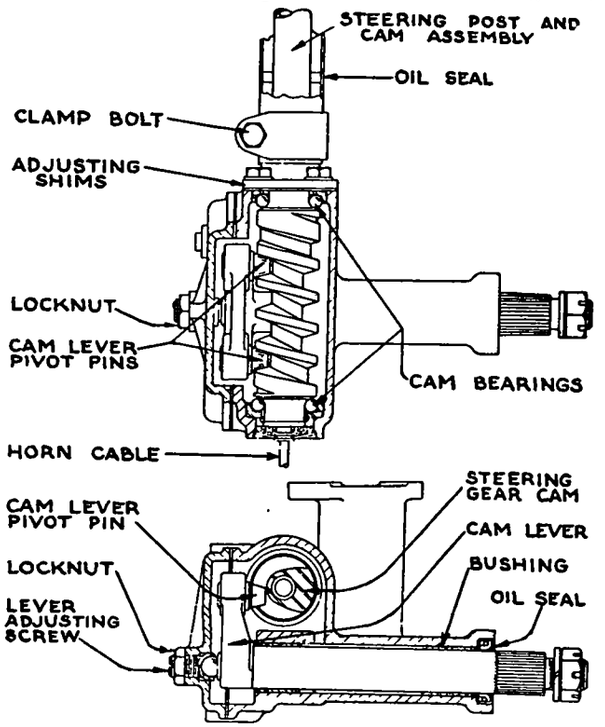

ROSS CAM-AND-TWIN LEVER TYPE

spring washer not used on Champion and idler lever stud nut should be tightened just enough to eliminate all up-and-down play of lever without causing lever to bind in bracket.

Studebaker Champion 1947-48 Steering Linkage: See previous type (above) with the insulated steering gear arm and idler lever on right hand frame side rail to which auxiliary (center) tie rod is attached. When adjusting toe-in on this model, follow instructions below exactly to insure all parts of linkage being correctly adjusted.

CONTINUED ON NEXT PAGE

ROSS CAM-AND-TWIN LEVER (C ntinu d)

Toe-In Adjustment—See that steering arm correctly installed on steering gear lever shaft (punchmark on both parts aligned), set steering wheel in straight ahead position (cam lever studs on 'high' points of cam—see Steering Wheel data above), adjust **left hand tie rod** so that left front wheel in straight ahead position (check by stretching string from front to rear of car with string contacting front tire at front and rear of front wheel, and outer surface of 1⅛" thick block held against tire on rear wheel). Then adjust auxiliary (center) tie rod length so that length between tie rod ball stud centers is exactly equal to distance from center of steering gear arm shaft to center of lubricant fitting on idler arm shaft. Finally set toe-in by adjusting length of **right hand tie rod** only.

CAUTION—After completing adjustment, see that all tie rod clamp bolts tight and positioned horizontally on underside of rods (necessary to provide clearance).

Insulated Steering Arm—Same type as on previous Champion models and serviced in same manner except that puller J-871-0 should be used.

Auxiliary (Idler) Steering Arm—To remove arm, loosen threaded bushing in arm but do not remove it, disconnect steering arm support from frame bracket, unscrew support arm from threaded bushing (left hand thread), then unscrew bushing from idler arm, remove rubber seal. To install arm, screw threaded bushing into idler arm, install new rubber seal on support, screw support into bushing until it bottoms, **then back support off ½ turn** (this is important to allow front wheels to turn in both directions—will not turn to left otherwise). Mount support on bracket, tighten mounting screws securely, tighten threaded bushing in idler arm to 105-115 ft. lbs. torque.

Studebaker Commander 1947-48 Steering Linkage: New type with bellcranks mounted on right & left frame side rails. Forward ends of bell cranks are connected together by auxiliary (center) tie rod with individual tie rods from rear end of each bell crank to wheel on same side of car. Steering gear reach rod is connected to operating lever on upper end of left hand bell crank shaft. When adjusting toe-in on this model, follow directions below exactly to insure all parts of linkage being correctly adjusted.

Toe-In Adjustment—Same as for Champion cars (above) except that ½" block should be placed against rear tire when aligning left front wheel in straight ahead position, and auxiliary (center) tie rod length should be set at exactly same length as distance between lubricant fittings in lower ends of bell crank shafts.

Steering Bell Cranks—To remove, disconnect reach rod (left bell crank only) and tie rods from bell cranks, remove nut on upper end of bell crank shaft, remove clamp bolt from operating lever, remove operating lever and washer, remove bell crank and shaft from lower end of support tube. To service bearings, see special instructions below. To install bell cranks, insert bell crank and shaft in support tube, install thrust washer and operating lever on upper end of shaft, aligning punchmarks on shaft and lever (left hand bell crank only), insert lever clamp bolt **but do not tighten it,** install washer and nut on shaft, tighten nut until all endplay has been taken up but shaft turns freely, then tighten operating lever clamp bolt.

Bell Crank Bearing Servicing—To remove needle bearings from support tube, insert Driver Adapter J-2033-3 in tube against upper end of lower bearing, insert Driver J-2033-2 and drive upper bearing out at top of tube. Remove lower bearing similarly using Pilot J-2033-1 in upper bearing recess. To install bearings, insert Pilot J-2033-1 in upper bearing recess, place lower bearing on Driver J-2033-2, drive bearing into tube until shoulder on driver is flush with end of tube. Install upper bearing similarly after removing pilot.

CAUTION—Drive only against lettered end of bearing. Do not drive directly against bearing with a hammer.

Willys Jeep Models & Army Jeep Steering Linkage: Consists of an idler arm mounted on the front frame cross-member to which the steering gear drag link is connected. Right hand tie rod is connected to this idler arm while left hand tie rod is connected to special socket on right hand tie rod inner end fitting.

Idler Arm Servicing—To remove arm, drive out taper lock pin in idler arm shaft frame bracket, remove shaft and needle bearing assembly from below. Install in same manner. Idler arm will be correctly positioned if toe-in adjustment is properly made (see individual car pages for toe-in adjustment).

ROSS CAM-AND-ROLLER

Auburn 8 & Schgd. 8, Model 852 (1936-37)
Duesenberg, Model J & SJ (1936-37)
Graham Supercharger, Model 110 (1936)
Pierce Arrow 8, All Models (1936-38)
Pierce Arrow 12, All Models (1936-38)
Studebaker, President Model 2C (1936)

DESCRIPTION:—Similar in design to Cam-and-Lever Type with cam adjusting nut (see preceding article) except that tapered stud in lever shaft is mounted on double-row roller bearing and is free to turn at point of contact with lever.

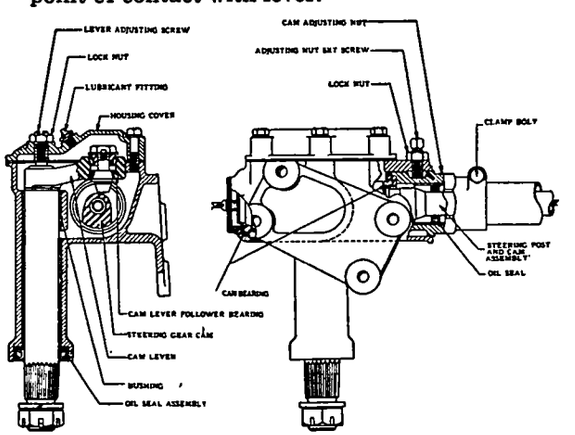

ROSS CAM-AND-ROLLER TYPE

ADJUSTMENT:—Cam Endplay, Steering Column Alignment, Lever Shaft Endplay or Steering Wheel Backlash, and Front Wheel Position adjusted in same manner as Cam-and-Lever Type with Cam Adjusting Nut (see preceding article). If these adjustments do not result in satisfactory performance, check and adjust stud roller bearing unit on lever shaft.

Stud Roller Bearing Adjustment:—Stud should have no perceptible end play and should turn with a slight drag when stud nut is gripped with the fingers (slightly tighter with new bearings). To adjust, straighten out prong in locking washer, tighten nut. If stud clamped to prevent turning, be careful not to mar or burr bearing surface of stud. Tap stud lightly to check adjustment, turn prong of locking washer up against nut (use new washer or different prong of old washer and remove prongs which have been used previously). Wash all grease out of bearing with gasoline and recheck adjustment.

SAGINAW (CHEVROLET) TYPES

WORM-AND-SECTOR TYPE
Standard FC, Master FD Pass. Cars (1936)
Comm'l Model FB & All Trucks (1936)

WORM-AND-ROLLER TYPE
Master Model FA Pass. Cars (1936)
Master Deluxe Model GA Pass. Cars (1937)
Pass. Cars & Sedan Del. All Models (1938 to 1948)

►NOTES, CAUTIONS, & CHANGES

►**1941 Master Deluxe Horn Button Rattle Complaints:** 1942 Horn Button Cushion 754933 (sponge rubber Part No. 754933, as used on 1942 cars (sponge rubber ring which presses outward on horn button retainer prongs)- may be installed on 1941 Master Deluxe models to correct horn button rattle complaints.

►**1942 Stylemaster Horn Button Rattle Complaints:** If complaints of horn button rattles noted on these cars, make certain that horn button cushion is properly installed. This cushion consists of a sponge rubber ring and ring must be installed so that it presses outward on horn button retainer prongs.

►**Rubber-cushioned Steering Gear Arm Note: Will** affect steering stability (increased looseness) if bushings become oil-soaked. See Steering Linkage section (below) for bushing renewal instructions.

►**Tie-Rod Packing Fitting Note:** Packing must be correctly fitted when tie rod ball ends installed to insure good seal and prevent entrance of dirt which will cause excessive wear. When installing tie rod ends, place ball stud end of tie rod in steering arm with a hand push fit (omit packing), mark ball stud flush with bottom of steering arm. Remove ball stud, measure from mark to top of dust cover, select correct packing in accordance with this distance (see table below), install packing, re-install ball stud and tighten ball stud nut securely.

Tie Rod Ball Stud Packing

Ball Stud Measurement①	Packing No.	Thickness
3/32-1/8"	3658604	1/8"
1/8-3/16"	599247	3/16"
3/16-1/4"	599836	1/4"

①—If measurement less than 3/32" or more than 1/4", replace worn or damaged knuckle arm, pitman arm, tie rod or tie rod end.

►**Horn Blowing Cap Change (Late '46-47 Stylemaster Cars & Trucks & Replacement on 1941-42 Models).** New type horn blowing cap assembly used which has plate to lock cap securely in place. Removal and installation of cap will be made easier by using

CONTINUED ON NEXT PAGE

SAGINAW (CHEVROLET) TYPES (C ntinu d)

Brake Main Cylinder Inspection Cover No. 592865 as a tool. This new horn blowing cap not used on Cab-over-Engine trucks.

NOTE—Horn button spring used with this new cap on Stylemaster cars is 5/32" shorter than spring used previously. Old type spring may be used with new cap but will increase pressure required to depress cap.

►**Steering Gear on Master GB and Trucks beginning 1937.** These have Saginaw Worm-and-Sector type Steering Gear which is adjusted differently. See following article for adjustment directions.

DESCRIPTION

DESCRIPTION: Worm & Sector or Worm & Roller similar to other Saginaw models. Adjustments are not made in same manner as on other models and instructions below should be followed.

Worm & Roller Types. Double tooth roller forms the outer race for a double row ball bearing (all models except HB), loose needle or roller bearings (HB). On ball bearing types, inner race is made up of two sections held together by a snap ring at the center and bearing is pre-loaded to insure long life without adjustment. Roller and bearing assembly is retained in cross-shaft lever by capscrew. On the needle bearing (HB) type, side thrust is taken by a thrust washer assembled on each side of the roller. Roller and bearing assembly is retained by a riveted pin and cannot be dismantled.

1939 Master Deluxe JA—Steering shaft upper bearing in mast jacket has been changed to spring-loaded ball bearing. Ball bearing mounting ring is insulated from mast jacket and serves as horn button contact as on previous models.

ADJUSTMENT: Jack up front wheels, turn steering wheel to straight ahead position, disconnect steering connecting rod or drag link from pitman arm (note ball seat and spring assembly so that parts may be replaced in same order). See that reference mark on pitman arm and roller shaft line up, tighten pitman arm nut with 18" wrench. Disconnect horn wire at mast jacket.

1939 Model Note—Disconnect the steering connecting rod (drag link) on Master 85 models, remove pitman arm from steering gear roller shaft on Master Deluxe models before making adjustments. Align steering column on Master model in same manner as in 1938. Master Deluxe model has new type frame mounting (cross-shaft vertical).

Steering Column Alignment:—Tighten dash bracket clamp, loosen frame bracket mounting bolts so that steering gear is free, check clearance between bracket and frame with feeler gauge. If clearance exceeds .031", install spacer shim, Part No. 476612, to avoid springing column when frame bolts tightened.

NOTE—Master Deluxe ('39-40-41) and Special Deluxe ('40-41) models have different type frame mounting bracket and cannot be aligned in this manner.

Worm Shaft Endplay (1936-38): Loosen clamp on the jacket at instrument board, loosen housing clamp bolt (at upper end of steering gear housing), see that adjusting sleeve clamp bolt (at lower end of mast jacket directly above housing clamp bolt) is tight, check to see that roller and worm have sufficient backlash to permit adjustment, turn mast jacket and adjusting sleeve down (grip clamp bolt with wrench) until all endplay removed from worm shaft and pull required to turn wheel is 1½-1¾ lbs. (All Models 1936-37), 1-1½ lbs. (Models HA, HB '38) measured at wheel rim. Tighten housing clamp bolt, securely, loosen adjusting sleeve clamp bolt, turn mast jacket (sleeve will not turn if housing clamp bolt tight) until horn wire is at bottom, tighten clamp bolt and instrument board clamp bolt, connect horn wire.

Worm Shaft Endplay (1939-48): Adjusting nut on steering gear housing is provided with hexagonal head so that adjustment simplified and should be made as follows: Loosen mast jacket clamp bolt (on lower end of jacket above housing, loosen housing clamp bolt (to free adjuster), use 1 9/16" wrench to turn adjuster at upper end of housing clockwise until all endplay removed and steering gear turns freely, tighten housing clamp bolt and mast jacket clamp bolt (not necessary to loosen instrument panel bracket clamp, do not turn mast jacket clamp when making adjustment as was required on previous models. Check adjustment by noting pull required to turn wheel (use spring scale attached to wheel rim). Pull should be ½ lb. Recheck adjustment if incorrect.

CAUTION—Some backlash must exist between worm and roller when making above adjustment. If necessary, loosen locknut and back off roller shaft adjusting screw to provide backlash.

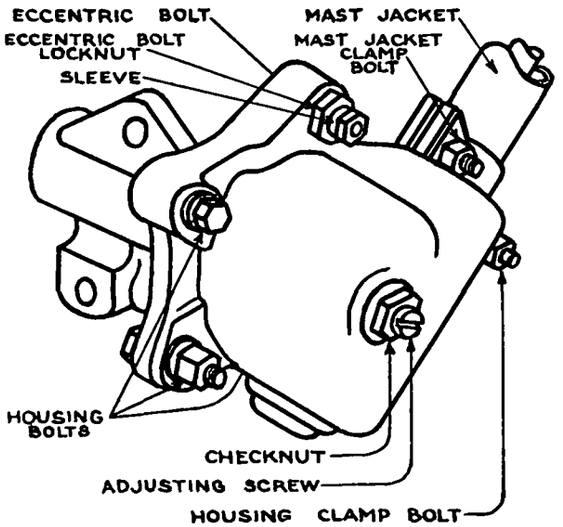

SAGINAW (CHEVROLET PASS. CAR) TYPE

Roller Shaft Endplay:—Loosen locknut on engine side of steering gear housing, turn adjusting screw in until endplay has just been removed (or turn screw in until tight, back screw off until it is free, finally turn screw in until it just contacts end of roller shaft), hold adjusting screw from turning and tighten locknut.

NOTE—Adjusting screw located on side of housing (Master), on top of housing (Master Delux & Special Deluxe, and all models beginning 1942).

Worm and Roller Backlash:—Turn steering wheel to center or straight ahead position (turn wheel back one half total number of turns from either end p - sition). Loosen three housing-to-bracket bolts, check backlash or play at pitman arm, loosen eccentric bolt locknut one half turn, turn eccentric bolt and eccentric sleeve equally in opposite directions until all backlash removed (approximately ⅛ turn should be sufficient). Tighten eccentric bolt locknut and housing bolts, check adjustment by noting pull at wheel rim required to turn wheel through center position. Should be 1¾-2½ lbs. (All Models 1935-37), 1½-2½ lbs. (1938-39 Models), 1⅜ lbs. (1940 and later) measured at rim of the wheel. With correct adjustment, wheel should turn freely through entire range and should have no backlash at center position. CAUTION—When making this adjustment, use extreme care not to turn eccentric bolt and sleeve more than necessary to take up play, any excess will damage steering gear).

REMOVAL OF STEERING GEAR: 1939 Master Deluxe. Steering gear can be removed from this car for overhaul without disturbing Vacuum Gearshift as follows: Remove horn button, steering wheel nut, steering wheel (use special puller and adapter), remove mast jacket upper bearing spring, spring seat, and bearing with horn wire. Remove mast jacket grommet from dash, loosen mast jacket instrument panel bracket clamp bolts and lower mast jacket clamp. Remove pitman arm (use J-1025 puller), loosen front screws in engine rear side pan, remove steering gear frame mounting bolts. Raise front end of car so that wheels approximately 6" off floor, pull steering gear assembly down and out of car without disturbing mast jacket.

STEERING LINKAGE: Special type (with independent suspension) which must be adjusted as follows: **Master Deluxe 1939-41, Special Deluxe 1940-41, All Cars beginning 1942.** Cars have individual tie rods between special rubber-cushioned steering gear pitman arm and each wheel. Long right hand tie rod is non-adjustable and toe-in adjustments should be made by turning short left hand tie rod which will insure steering gear roller being on high point of worm with wheels in straight ahead position. NOTE—Make certain that both tie rod ends are square on ball studs when tightening clamp bolts.

Rubber-cushioned Pitman Arm Servicing—Replac rubber bushings if oil-soaked. To dismantle assembly, clamp Pitman arm plate (steering arm) in vise, remove cotter pins, nuts, lockwashers from each stud, remove retainer plate, Pitman arm, and bushings. Install new bushing on each stud (metal insert toward plate), install Pitman arm, place additional bushing on each stud (metal insert out toward retainer plate), install retainer plate, lockwashers, and nuts. Tighten nuts evenly to 30-40 ft. lbs. torque, install cotter pins.

HORN RING ADJUSTMENT (Spec. Deluxe 1940-41, Fleetmaster & Fleetline Cars 1942 On): The horn ring tension is adjustable by turning steering wheel lower hub housing. To adjust, loosen lockscrew, turn hub under steering wheel until desired horn ring contact secured, then tighten lockscrew. To adjust tension (pressure required to sound horn), remove ornamental cap in center of wheel, turn two adjusting screws (in recess in wheel) clockwise to increase tension, counter-clockwise to decrease tension.

SAGINAW (CHEVROLET TRUCK) TYPE

Master Model GB Pass. Cars (1937)
All Truck Models incl. ½ Ton (1937 to 1940)

NOTE: 1941 & Later Models. Trucks have Saginaw Ball bearing worm-and-nut type steering gear.

►**1940 ½, ¾, 1½ Ton Truck Steering Gear Noise Correction.** If steering gears on these trucks develop a "squawking" noise, check adjustment as directed above and see that the correct special steering gear lubricant is used. If this does not correct trouble and steering gear binds or squawks when wheel is turned with truck standing still, remove and discard regular pitman shaft spacer #263583 and install new Pitman Shaft Bushing #266300 in its place making certain that the open ends of the oil grooves in the bushing are in toward the worm and sector. This bushing increases bearing surface for sector shaft.

NOTE—When installing this bushing, replace the following parts also which may be worn: Washer #263307, Packing #262155 & Retainer #262156.

DESCRIPTION:—New type steering gear with 'hour-glass' type worm and three-tooth sector. Worm bearing adjusting screw located on lower housing cover in center of adjusting plate which controls sector mesh with worm (worm bearings mounted in eccentric sleeve which is rotated by adjuster).

ADJUSTMENTS:—Jack up front wheels, turn steering wheel to straight ahead position, disconnect steering connecting rod or drag link from pitman arm (note ball seat and spring assembly so that parts can be replaced in same position). See that reference mark on pitman arm and sector shaft are lined up, tighten pitman arm nut with 18" wrench. Make adjustments in following order:

Steering Column Alignment—Check by loosening frame mounting bolts (instrument panel bracket must be tight). If clearance between steering gear bracket and frame rail exceeds .031", install shim No. 476612 before tightening mounting bolts to prevent column being sprung out of alignment.

Worm Shaft Endplay—With drag link disconnected from pitman arm, turn steering wheel to point near one end position (must not be at center 'high' point of worm). Tighten three cover screws on steering gear lower cover, loosen locknut and turn adjusting screw (in center of lower cover plate) until slight drag felt when wheel is turned, check in other extreme end position before tightening locknut. Check adjustment by noting pull required to turn wheel at point near end position which should be 1⅛ lbs. max. measured at wheel rim. CAUTION—Do not back adjusting screw out when making adjustment.

Sector Shaft (cross-shaft) Endplay—Tighten four screws in side cover plate on housing, loosen locknut and turn adjusting screw on cover plate in until endplay has just been removed, hold screw and tighten locknut. CAUTION—Do not use excessive force or turn screw in beyond point where all endplay just taken up when making this adjustment.

Worm and Sector Backlash—Place steering wheel in center position with sector gear on high point of worm (count number of turns of wheel from one end position to the other, then turn wheel back ½ this number of turns). Check backlash or lost motion between sector gear and worm. To adjust, loosen hexagonal headed lockscrew in lash adjuster on lower cover plate, tap lash adjuster in direction of arrow cut in adjuster not more than 1/16" at a time until play taken up and pull at steering wheel rim required to turn wheel through center position is 1¾-2½ lbs., tighten lash adjuster lockscrew. Check to see that cross-shaft has no play in center position and turns without binding.

SAGINAW WORM-AND-ROLLER 1936-37

Buick, All Series (1936)
Cadillac & LaSalle, All Series (1936)
Cadillac, V8 75, V12 & V16 (1937)
Oldsmobile 6 & 8, All Models (1936)
Pontiac 6 & 8, All Models (1936)

NOTE: Cadillac V8 & V12 (some cars). Steering gear offset from steering wheel shaft and two Mechanics Model 1½C universal joints are used.

DESCRIPTION:—Consists of 'hour-glass' type worm on steering shaft and carried on roller bearings in housing. Worm engages double tooth roller carried on ball bearings in cross-shaft lever. Roller is free to turn at point of contact with worm. Worm provides minimum clearance at center 'straight-ahead position' with greater clearance at ends. Adjustments provided at upper end of housing (worm bearing adjustment), inner end of cross-shaft (cross shaft endplay) and housing cover (roller mesh).

ADJUSTMENT:—Jack up front wheels, turn steering wheel to 'straight-ahead position' (wheel turned halfway back from either end position), disconnect drag link at steering gear pitman arm, note ball seat, washer and spring assembly so that they may be reassembled in same order. See that reference mark on pitman arm and shaft are lined up, if pitman arm removed, replace in correct position and tighten nut securely with 18" wrench. Loosen steering post bracket, check column alignment (shim bracket out to column if necessary) tighten bracket bolts. Make following adjustments in order:

Cross-Shaft (Roller Shaft) Endplay:—See that frame mounting bolts are tight, loosen locknut, turn adjusting screw on side of housing at inner end of cross-shaft up until all endplay removed, tighten locknut. Check by turning shaft to extreme end positions (just clear of stops) and noting that pitman arm does not drag when turned.

Worm Shaft Endplay:—Evidenced as up-and-down movement of steering wheel. To adjust, turn wheel to extreme right position, loosen clamp bolt at upper end of housing one turn or loosen locknut and back off lockscrew, and loosen column jacket clamp screw so that large adjusting nut at top of housing may be turned. Turn down adjusting nut until force required to turn wheel (measured by spring scale hooked to spoke at wheel rim and tangent to rim) is 1¼ lbs. on all models (except Pontiac 6 & 8 1936 —½-1 lbs.) Nut must be turned down only to complete adjustment. Pressure in excess of these figures indicate bearings too tight.

Cadillac V-8, 355D Series 30, V-12 370D, V-16 452D V-16, 90. Worm shaft endplay adjustment provided by plug at lower end of steering gear. To adjust, turn wheel to extreme end position (right or left), loosen lower clamp bolt and turn plug up until 1¼ lb. pull (measured as above) necessary to turn wheel, tighten lower clamp bolt.

Worm and Roller Backlash:—Turn wheel to 'straight-ahead position' (½ total number of turns back from end position or with wheel in position noted below). Check backlash by moving pitman arm back and forth. Loosen housing to frame bolts and pivot bolt ¼ turn, or loosen housing cover stud nuts ¼ turn then loosen eccentric locknut ¼ turn, turn eccentric bolt clockwise and eccentric sleeve counter-clockwise slowly and simultaneously until backlash is taken up (approximately ⅛ turn should be sufficient). Tighten all nuts. Check by turning wheel to right and left. Back off adjustment slightly if excessive binding is encountered at high spots. Force required to turn wheel through center measured on spring scale at wheel rim should be 2¼ lbs.

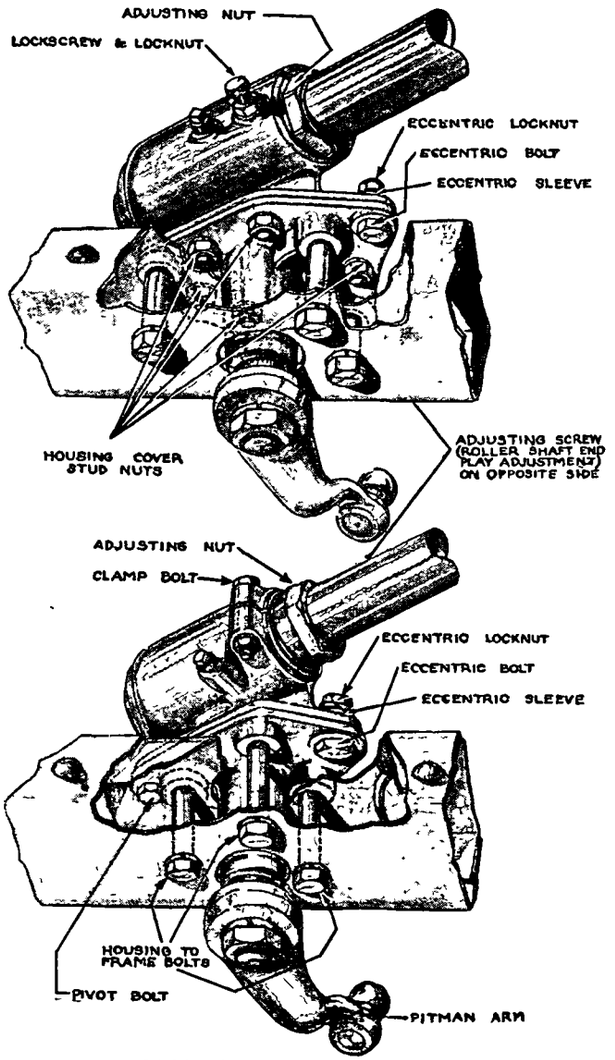

SAGINAW WORM-AND-ROLLER TYPE

Cadillac V-8, 355D Series 30, V-12 370D, V-16 452D V-16, 90. Backlash adjustment of worm-and-roller provided for by worm sleeve extending from gear case along steering gear shaft. With wheel in position as noted above, loosen upper clamp bolt, turn worm (eccentric) sleeve to take up backlash. Tighten clamp bolt. Check according to directions given above (spring tension should be 2-2½ lbs.)

SAGINAW WORM-AND-ROLLER 1937-48

Buick, All Series (1937 to 1940)
Cadillac V8, Series 60, 65, 70 (1937)
Cadillac V8 & V16, All Series (1938-40)
LaSalle V8, All Series (1937 to 1940)
Oldsmobile 6 & 8, All Models (1937 to 1948)
Pontiac 6 & 8, All Models (1937 to 1948)

►NOTES, CAUTIONS, & CHANGES

►**1941 Pontiac Noise Correction (with Std. Steering Wheel).** To correct noise which may be telegraphed by the steering column on first cars with standard steering wheel being amplified by steering wheel center ornament, a new insulated type steering wheel cap, Part No. 506745 can be installed to correct this condition. This new type steering wheel cap was used in production starting with the following car serial numbers:

Model	Pontiac	Linden
Deluxe Torpedo 6	P6JA 55089	L6JA 19092
Streamliner Torpedo 6	P6JB 41866	L6JB 11079
Deluxe Torpedo 8	P8JA 19375	L8JA 6468
Streamliner Torpedo 8	P8JB 33070	L8JB 7630

►**1941 Pontiac—Installation of 1942 Horn Button on cars with standard steering wheel.** This horn button (center sounding button) may be installed on 1941 cars with horn sounding key in each spoke as follows: Disconnect horn button wire at horn relay, remove steering wheel center cap, remove screw in inner end of each horn sounding key, remove and discard original connection ring (extending from one key to the other), replace screws to retain keys (keys will be inoperative). Install 1942 type contact cup so that connection is through hole in cup. Prickpunch wheel through indentation in cup, drill wheel to take this indentation (necessary to prevent cup turning and shearing connector when steering wheel nut is tightened). Enlarge slots in new 1942 type Trim Ring to provide clearance over contact bars. NOTE—Following parts are required to make this installation: No. 507572 Trim Ring, 507537 Ferrule, 507532 Cap, 265172 Contact Plate, 264584 Separator, 506741 Retainer, 265173 Lock Ring, and 263703 Clamp Ring.

►**1942 Pontiac Deluxe Horn Ring Ground Spring Installation**—To correct complaints of shock being noticed when ring depressed to sound horn, make certain that ground spring installed in steering wheel and that this spring makes good electrical contact. Ground spring is located in recess in top of wheel hub beneath horn ring hub and must make good connection between horn ring and wheel. NOTE—New 1946 type Horn Button Ground Plate, No. 509553, should be used to service the coiled ground spring, No. 507960, used originally.

►**1946-48 Pontiac Deluxe—Installation of Ground Plate to correct complaints of Horn not operating or "shocks" when horn button depressed.** Caused by misalignment of metal cup insert in hub so that no contact secured with coiled ground spring. Correct by installing two new ground plates, No. 509553, as follows: Remove sponge rubber ring, install two ground plates diametrically opposite each other with longer leg upright against hub, replace sponge rubber ring. NOTE—These ground plates will be used to service the coiled ground spring No. 507960.

►**Cadillac 75 & 90 Steering Gear Chuckling Noise Correction.** Caused by lower universal joint striking steering gear case, loosen universal joint clamp-screw, use bar or heavy screwdriver to force universal yoke up approximately 1/32", hold in this position and tighten clamp bolt. NOTE—If lower joint yoke cannot be forced up on shaft, loosen clamp bolt holding upper universal joint upper yoke on steering column shaft, force assembly downward and tighten clamp bolt. It should then be possible to raise lower joint lower yoke without trouble.

DESCRIPTION:—New type Steering Gear with 'hour-glass' type worm and double-tooth roller. Worm bearing adjusting screw now located on lower housing cover in center of adjusting plate which controls worm mesh in roller (worm bearings mounted in eccentric sleeve which is rotated by adjuster).

ADJUSTMENTS:—Jack up front wheels, turn steering wheel to straight ahead position, disconnect steering connecting rod or drag link from pitman arm (noting ball seat and spring assembly so that parts can be reassembled in same order), see that reference mark on pitman arm and roller shaft are lined up, tighten pitman arm nut with 18" wrench, check column alignment by noting pull at steering wheel rim required to turn wheel through center position (if pull exceeds 1¾-2¼ lbs., align column

Steering Column Alignment—Loosen dash bracket (except Buick), gear mounting bolts in frame bracket (Buick). If this relieves binding, shim bracket out so that column will not be sprung when bolts are tightened.

Cadillac Models—To correct up and down alignment, install special spacer Part No. 1419066 (37-50, 60), 405554 (37-65, 70) between instrument board and bracket. To correct alignment sideways, install special washer Part No. 871588 under front steering gear housing-to-frame bolts (if column to left of bracket), or rear bolts (if column to right).

Roller Shaft Endplay:—Tighten side cover plate screws, loosen adjusting screw jam nut, turn slotted adjusting screw down tight by hand, then back screw off 5-10°, or turn adjusting screw in until all endplay is just taken up, hold adjusting screw from turning and tighten jam nut. Check to make certain that wheel turns freely through entire range

Worm Shaft Endplay:—Loosen adjusting screw jam nut on lower cover, turn slotted adjusting screw in slowly until pull at steering wheel rim required to turn wheel in extreme end positions (just clear of stops is correct as shown in table below, hold adjusting screw, tighten locknut, recheck setting. CAUTION—Do not back adjusting screw off which will allow bearings to get out of alignment.

Car Model	Worm Bearing Setting
Buick (all)	1 lb. max.
Cadillac & LaSalle '37-38	①1-1¼ lbs.
Cadillac & LaSalle '39	②1-1½ lbs.
Cadillac & LaSalle '40	③¾-1 lb.
Oldsmobile (all)	1-1½ lbs.
Pontiac '37-38	½-1 lb.
Pontiac '39-48	⅜-⅝ lb.

①—1¼-1½ lbs. on cars driven less than 1000 miles.
②—1¼-1¾ lbs. on cars driven less than 1000 miles.
③—1-1¼ lbs. on cars driven less than 1000 miles.

Worm and Roller Backlash:—Tighten three lower housing cover mounting screws. Center steering wheel (turn wheel back ½ total number of turns from either end position or with marked spoke straight down (Buick, Pontiac), straight up (Oldsmobile). Check backlash or play at pitman arm ball end. To adjust, loosen lash adjuster lockscrew (hexagonal screw in adjuster slot), tap lash adjuster in direction of arrow above screw, not more than 1/16" at a time, until pull at steering wheel rim required to turn wheel through center position is correct as shown in table below, tighten lash adjuster lockscrew. Check to see that steering gear turns through entire range without binding.

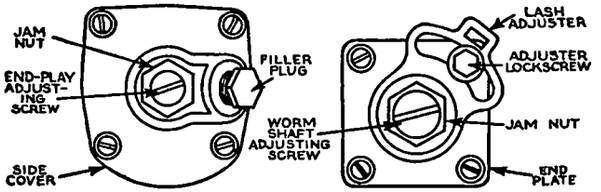

SAGINAW WORM-AND-R LLER TYPE ADJUSTMENTS

CAUTION—Lash adjuster must not be tightened beyond point where maximum pull required as shown in table below and lash adjuster should not be backed off when making adjustments (tighten adjuster only, use care not to tighten excessively).

Car Model	Backlash Setting
Buick '37-38-39	1¾ lbs.
Buick '40	2½ lbs. max.
Cadillac & LaSalle '37-38-39	①2-2½ lbs.
Cadillac & LaSalle '40	②1½-2 lbs.
Oldsmobile (all)	1¾-2¼ lbs.
Pontiac '37-38	1½-2 lbs.
Pontiac '39-48	1¼-1¾ lbs.

①—2½-3 lbs. on cars driven less than 1000 miles.
②—2-2½ lbs. on cars driven less than 1000 miles.

STEERING WHEEL POSITION:—See articles on Independent Suspension for tie rod adjustment to correct intermediate steering arm position. Steering wheel height and position adjustments as follows.

Buick 1937 Models:—Height is not adjustable as long (left hand) dash bracket bolt burred to prevent removal. If this bolt is removed, standard ⅜" spacer on dash bracket (80, 90 only) may be removed or replaced by spacers furnished ¼", ½", ⅝" thick to provide ½" wheel height variation. Loosen gear frame bracket bolts to permit steering gear to shift into alignment with new bracket position. Marked spoke on steering wheel (mark on under side of spoke at hub) should be straight down with roller on midpoint of worm and wheels straight ahead (drag link connected). Drag link not adjustable, but tie rods can be turned not more than 1 turn to throw intermediate steering arm 3/16" maximum off center, which will rotate steering wheel 2⅞" at rim, to correct spoke location. Relocate wheel stops.

Buick 40, 60 (1938):—Steering wheel height not adjustable but wheel can be raised 13/16" by installing 38-80 or 90 steering column bracket. When installing this bracket, elongate two rear steering gear mounting holes in frame ⅛" at upper end (do not touch front hole which locates gear), cut out dash mat, floor mat, and steering column floor felt pad and make certain that clearance between steering column and dash flange and toeboard is ¼", slot instrument panel holes if required so that satisfactory lock operation secured.

Steering Wheel Position. Intermediate steering arm not used on these models, steering gear pitman arm being connected directly to right hand wheel by long tie rod which has seat for short left hand tie rod near pitman arm end. Tie rods adjusted by

CONTINUED ON NEXT PAGE

SAGINAW WORM-AND-ROLLER 1937-48 (Continued)

loosening clamp bolt and turning threaded sleeve at wheel end of each rod (rods should be adjusted equally). If indented spoke on steering wheel more than ¾" from straight down position, adjust by lengthening one tie rod and shortening opposite tie rod equal amount (to avoid disturbing toe in).

Buick 80, 90 (1938):—Adjusted in same manner as 1937 models (change spacer on dash bracket to adjust wheel height, shorten one tie rod and lengthen opposite rod not more than one complete turn which will shift wheel rim 2⅞" and throw intermediate steering arm 7/32" off center to center indented spoke). Intermediate steering arm bearing pre-load should be set at 4-5 lbs.

Buick 1939:—Wheel height not adjustable. Use special puller J-1120 (used for 1938 cars with self-shifting transmission) to remove steering wheel. Install wheel so that notch in steering tube (on right side) is in line with locating mark on wheel (this mark 90° counter-clockwise from marked spoke on solid-spoke wheels and in line with mark on underside of hub on flexible-spoke wheels).

Buick 1940:—Steering wheel spoke with small indentation on underside near hub should point straight down with roller on high point of worm and wheels in straight ahead position. If wheel position incorrect, see that mark on steering tube (visible with horn ring and cover removed) is toward indented spoke. CAUTION—Direction Signal switch must be in 'off' position whenever steering wheel removed

Cadillac, LaSalle 1939:—Install steering wheel with middle spoke vertical and in line with notch in end of steering column shaft. On 39-75 and 39-90 cars, clamp bolt holding lower universal joint on worm shaft should be horizontal in this position.

Cadillac & LaSalle 1940:—Center steering wheel spoke should point straight down and roller should be on high point of worm (within 10°) with wheels in straight ahead position. Adjust by changing tie rod lengths (see Steering Linkage below).

Oldsmobile 1937:—Spoke opposite mark on hub (visible with horn button removed) should be straight up with roller on midpoint of worm and wheels straight ahead. Correct by removing wheel and changing its position on serrations in hub. Mark on column shaft and keyway must be in line.

Oldsmobile 1938:—Standard (3 spoke) wheel should be assembled with spoke opposite mark on hub (visible with horn button removed) straight down with roller on midpoint of worm and wheels straight ahead. Correct by removing wheel and shifting position on shaft serrations (mark on shaft should be lined up with hub mark). On the two spoke (bar type) steering wheel, bar should be horizontal.

Oldsmobile 1939:—Install steering wheel with mark on hub in line with mark on shaft and spoke which is next to horn button connector pointing down (two widely spaced spokes will be up). Steering linkage is same design as used on La Salle.

Oldsmobile 1940-41:—On three-spoke wheels, spoke next to horn button connector opening should point straight down with roller on high point of worm and wheels in straight ahead position (mark on wheel should be adjacent to, and in line with, mark on shaft). Adjust by removing wheel and changing position on shaft. Make certain that steering wheel nut staked to prevent loosening in service.

Oldsmobile 1942-48 Std. Type (Horn Button): Three spoke type. Spoke next to horn button connector opening should point straight down with roller on high point of worm and wheels in straight ahead position. Mark on wheel hub should be adjacent to and in line with mark on steering gear shaft (visible with horn button removed). Adjust by removing wheel and installing it in correct position. Make certain that nut staked to prevent it loosening.

Oldsmobile Optl. Type (With Horn Ring)—Three spoke type. Spoke directly opposite horn connector opening should point straight down with roller on high point of worm and wheels straight ahead.

Pontiac 1937-38:—Steering wheel should be assembled with one spoke straight down within 5° with roller on midpoint of worm and wheels straight ahead. Keyway should be in line with this spoke and emblem on wheel should read across horizontally.

Pontiac 1939:—Install the steering wheel with key on shaft pointing up and two wide-spaced spokes horizontal in straight ahead position (narrow spaced spoke must point straight down within 5°). Steering linkage same design as used on La Salle (see Cadillac-La Salle paragraph above). If idler arm dismantled, turn bushing in on mounting stud so that distance from top face of arm to shoulder on support is exactly 23/32" when reassembled.

Pontiac 1940-48 Two Spoke (Std.) Type: The spokes should be horizontal and even and steering wheel emblem should be horizontal with steering gear roller on high point of worm and front wheels in straight ahead position. IMPORTANT NOTE—See Special Service Notes for 1941 noise correction.

Three-spoke Deluxe Type—Lower center spoke of steering wheel should point straight down (within 5°) and steering wheel emblem should be horizontal with steering gear roller on high point of worm and front wheels in straight ahead position.

HORN BUTTON OR RING REMOVAL: To remove button or horn ring for access to steering wheel retainer nut (to remove wheel or service steering gear), proceed as follows on each model:

Oldsmobile Horn Button—Button is retained by three dimples on horn button retainer cup and rubber ring in horn button. To remove button, insert sharp instrument underneath edge of button and pry upward. Contact assembly may be disassembled after steering wheel nut has been removed.

Oldsmobile Horn Ring (Optl. Wheel)—Remove emblem by taking out screws on outer edge. Remove two screws holding horn ring on contact plate, remove horn ring. NOTE—When installing horn ring, see that contact plate guide is located in wheel puller holes and hook horn ring over lower extension of contact plate.

Pontiac Horn Button—To remove button, disconnect horn wire at horn, press down on outer edge of horn button at one side which will tip button so that opposite edge can be grasped, pull horn button assembly out of retainer cup. When installing button, line up small projections on horn button retainer with depressions in cup, make certain that emblem on button is properly aligned, press button into place, reconnect horn wire.

Pontiac Horn Ring (Optl. Wheel)—Disconnect horn wire at horn relay, lift center cap out of horn ring, remove nuts and washers from steering column shaft. Lift entire horn ring assembly straight out (assembly includes contact ring, horn ring, contact assembly, horn ring insulator and lower spacer, horn ring side guide insulators, contact separator and attaching parts). Horn ring may be removed by taking out four small screws. NOTE—When installing horn ring assembly on steering wheel, make certain that ground spring (when used) or ground plates (see Special Service Note above) are in place in recess in wheel hub and not distorted or displaced when cap re-installed. See that horn ring cap is tight and does not rattle (bend locking retainers so cap snaps into place tightly.

STEERING LINKAGE ADJUSTMENTS:—Check and adjust the following points when servicing steering gear and linkage:

Intermediate Steering Arm:—On Independent Suspension cars with intermediate steering arm (not used on all models), see that intermediate steering arm is parallel to center-line of car with steering gear roller on high point of worm and front wheels in straight ahead position. When servicing linkage check these points:

Buick Intermediate Steering Arm Bearing 1937-40. Adjust bearing pre-load by turning nut on bearing shaft so that force required to turn arm is 1½ lbs. Max. (40,60 '37), 3-4 lbs. (80,90 '37), 4-5 lbs. (80,90 '38-40) measured at ball end of arm with draglink and tie rods disconnected. NOTE—This intermediate steering arm not used on 40,60 ('38-39) or 40,50, 60,70 ('40) models.

Cadillac 37-50, 60 (1937)—Springs in the steering connecting rod at steering gear arm pivot were changed in production. New type is longer and heavier. Install new type springs (Part No. 263699) to correct chucking noise when driven over rough roads (first cars only). Check intermediate steering arm looseness if steering rattles develop. If tightening of the pivot bolt on cross-member does not correct looseness, install special shim, Part No. 1300203, at bottom of steering arm pin.

Cadillac & LaSalle 1937-40. Intermediate steering arm mounted on fulcrum bolt or separate bracket bolted on frame front cross-member. When installing intermedaite arm, pack ball bearings with G-12 wheel bearing grease and tighten fulcrum bolt just enough to remove all play without causing bind. NOTE—Cadillac 60S,61,62 & LaSalle '39-40 models do not have intermediate steering arm. See Steering Linkage data below for special idler arm data (idler arm mounted on right hand frame rail and linked to steering gear pitman arm by drag link.

Steering Linkage:—On all models, toe-in adjustments should be made by adjusting both tie rods (individual rod to each wheel) equally to avoid disturbing steering wheel position. If steering gear roller is not on high point of worm with front wheels in straight ahead position, correct by shortening one tie rod and lengthening other tie rod equally to avoid disturbing toe-in adjustment. Special idler arms should be serviced as follows:

Cadillac, LaSalle Intermediate Steering Arm Rattles (1938-39)—On Models 38-50, 38-60, 39-60S, check intermediate steering arm for looseness if rattles develop in steering system. Tighten bolt on lower face of frame cross-member moderately tight. If this does not correct rattle, install additional shim at bottom of steering arm pivot pin.

Cadillac 60S,61,62; LaSalle '39-40. Idler arm mounted on threaded bushing screwed in lever and secured by lock ring. When installing idler arm, tighten idler arm support ¼-1¼ turns after it seats firmly against the rubber bushing.

CONTINUED ON NEXT PAGE

SAGINAW WORM-AND-ROLLER 1937-48 (C ntinu d)

Oldsmobile 1939—Idler arm mounted on frame support by bushing which is threaded on support and in arm. If arm removed, install so that clearance between upper face of arm and shoulder on support is exactly 23/32". Assembly will be simplified if bushing first screwed in idler arm so that it is tight, and support removed from frame and screwed into bushing until clearance is correct.

Pontiac 1939—Idler arm mounting same as Oldsmobile. See Oldsmobile directions above for assembly and arm clearance (23/32").

Oldsmobile & Pontiac 1940-48—Linkage is same design on all cars and consists of a connecting rod between steering gear pitman arm and idler lever on right hand frame side rail and individual tie rods between connecting rod and each wheel.

Idler Arm Bushing Installation—With arm support removed from frame, screw bushing into idler arm and tighten securely, install seal on support and screw support into bushing until distance from shoulder on support to top face of idler arm is 23/32" plus or minus 1/32". Install assembly on car.

SAGINAW BALL BEARING WORM-AND-NUT

Buick, All Series (1941 to 1948)
Cadillac V8, Series 72 (1940)
Cadillac V8, All Series (1941 to 1948)
Chevrolet Trucks, All Models (1941 to 1948)

►NOTES, CAUTIONS, & CHANGES

►**1940 Cadillac Note**—Other 1940 Cadillac Models have Saginaw Worm-and-Roller type steering gear.

►**1942 Chevrolet Truck Production Change:** Early 1942 trucks (including C-O-E) equipped with the steering gear used on 1941 models (66-¼" ball type) which may be identified by 5/16" side cover-to-housing attaching bolts (Conventional Models) or by casting No. 266856 cast in housing on pitman arm side (Cab-Over-Engine Models). Later models have new type steering gears as follows:

Conventional Models (Late 1942)—These models have new steering gear with 60-9/32" balls which may be identified by ⅜" diameter of side cover-to-housing bolts (first type 5/16"). This new steering gear is similar to first type design and serviced in same manner except for different number and size of balls.

Cab-Over-Engine Models (Late 1942)—New steering gear used on these models has 106-9/32" balls and may be identified by Casting No. 267135 cast in housing on pitman arm side (first type No. 266856). This new steering gear is similar to first type design and serviced in same manner except for different number and size of balls.

Interchangeability of Steering Gears—Complete steering gear assemblies are interchangeable on corresponding 1941 and 1942 truck models. Service data is given below for all types (early & later designs). Note particularly special ball and ball guide data on each type.

►**1946-47 Chevrolet 1½ & 2 Ton Steering Arm & Tie Rod Change**—Steering arms on trucks with heavy duty axle changed in production to provide greater front axle changed in production to provide greater tire clearance (axle changed to move tie rod ends in toward center-line 25/32"). A total of three different types of steering arms and tie rods have been used on these models and special tie rod must be used with each steering arm (proper toe-in adjustment cannot be secured if wrong type tie rod used).

See Chevrolet Shop Notes in Car Model Section for complete data on these various Steering Arms and Tie Rods.

DESCRIPTION: New design Worm-and-Nut type steering gear with circulating ball contact. Balls are assembled in groove between worm and nut in two groups with return channels assembled on back of nut so that balls are free to move through circuit as nut moves up and down on worm (each circuit has 33 balls of which 23 or a total of 46 in both circuits carry the load). Gear teeth on nut mesh with sector teeth on cross-shaft so that cross-shaft (and steering gear pitman arm) rotate as the steering wheel is turned and the nut moves up and down

ADJUSTMENT: Adjustments must be made in order and exactly as follows:

Steering Gear Alignment: Check for binding by loosening frame bracket mounting bolts (Buick), steering column bracket at instrument panel (Cadillac, Chevrolet) and noting clearance between steering gear and frame or bracket. If clearance exists at these points (indicating that column will be sprung when bolts tightened), loosen frame mounting bolts to allow steering gear to shift on frame to align with steering column bracket, or shim bracket.

Buick Note—Steering gear is trunnion mounted on bracket so that it is free to swing in both directions when bracket mounting bolts are loosened. The gear pivots in the trunnion mounting straps for movement from side-to-side while the entire steering gear and mounting bracket pivots around the lower frame mounting bolt for up-and-down movement (other bolt holes are slotted).

Worm Shaft Endplay: Disconnect the drag link rod at pitman arm, loosen steering column bracket, loosen locknut and back off pitman shaft adjusting nut a few turns (this adjusting nut on side cover on upper or lower side of housing). Turn wheel to within 1 turn of extreme end of travel (CAUTION—do not turn steering wheel hard against stops which will damage ball return mechanism). Loosen locknut and turn worm bearing adjusting screw (on bottom endplate of housing) until pull at wheel rim required to turn wheel (use spring scale such as J-544A) is correct (see table below), hold adjusting screw, tighten locknut. Tighten steering column bracket bolts and recheck bearing adjustment. If increase in pull noted (indicating that steering column sprung), check steering gear alignment as directed above.

Car Model	Worm Bearing Setting
Buick	7/8-1 1/8 lbs.
Cadillac	①1-1½ lbs.
Chevrolet Truck	1-1½ lbs.

①—1 1/8-1½ lbs. on cars driven less than 1000 miles.

►**Adjusting Note**—Special tools available as follows: J-1592—Buick Locknut Wrench, KMO-695—Buick Adjuster Bit (used with ratchet wrench), KMO-616—Cadillac Locknut Wrench.

Pitman Shaft Endplay (Nut & Sector Mesh Adjustment): Turn wheel to center position with nut on high point of gear. Tighten pitman shaft adjusting nut on lower side cover until pull at wheel rim required to turn wheel through center high point as measured on spring scale attached to wheel rim is correct (see table below), hold adjusting nut and tighten locknut.

CONTINUED ON NEXT PAGE

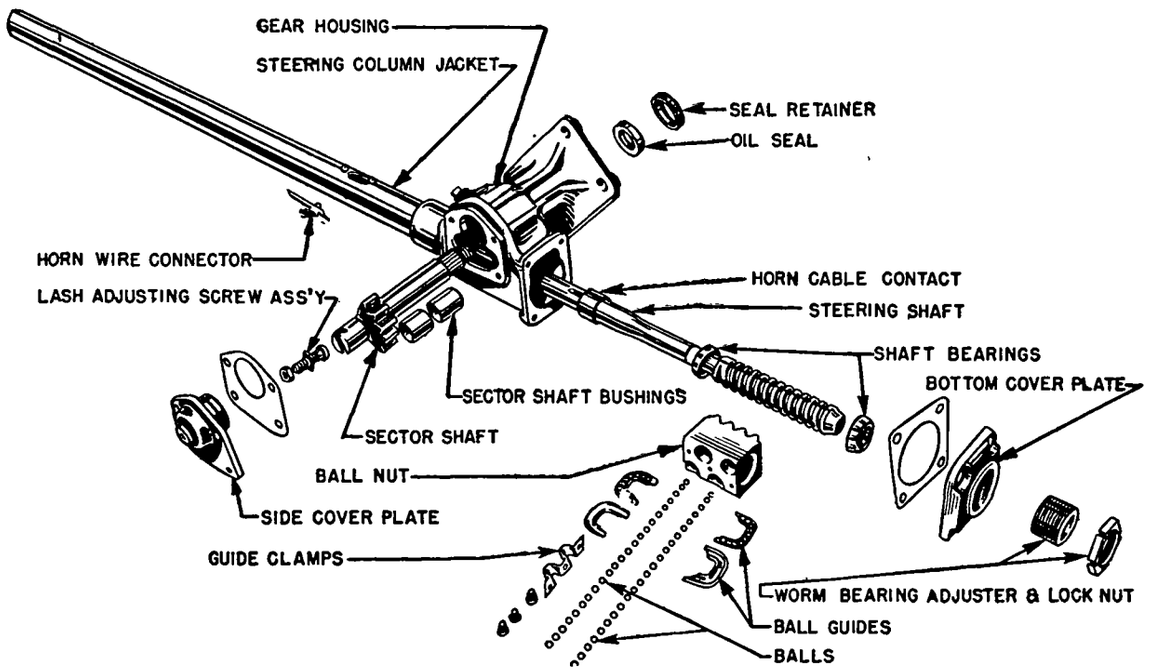

SAGINAW BALL-BEARING WORM-AND-NUT STEERING GEAR

SAGINAW BALL BEARING WORM-AND-NUT (C nt.)

Car Model	Backlash Setting
Buick	2-2¼ lbs.
Cadillac	①1½-2 lbs.
Chevrolet Truck	2-2½ lbs.

①—2-2½ lbs. on cars driven less than 1000 miles.

►**Adjustment Caution**—This is push-pull type adjustment and controls pitman arm shaft endplay as well as gear mesh (see "Lash Adjuster" data under steering gear Disassembly below).

STEERING WHEEL POSITION: The wheel position and height (when adjustable) checked as follows:

Buick (Steering Wheel Position)—Steering wheel spoke with small indentation on underside near hub should point straight down with roller on high point of worm and wheels in straight ahead position. If wheel position incorrect, see that notch on steering tube (visible with horn ring and cover removed) is toward indented spoke. CAUTION—Directional signal switch must be in 'off' position whenever steering wheel removed or replaced.

Buick (1941) Steering Wheel Height—All cars have steering column set in highest position. Wheels can be lowered up to 11/16" by installation of two No. 1321253 spacers installed between steering column bracket and lower edge of instrument bracket. When installing shims, loosen steering gear frame mounting bolts (to allow steering gear to shift to new position), use new longer bolts (see note below) to attach bracket to instrument panel, tighten frame mounting bolts after bracket installed and check alignment. NOTE—New bolts required as follows: No. 1321260—4 15/16" (40,50 Left Side), 1321063—4 7/16" (40,50 Right Side, 60,70,90 Left Side), 173030—3 ¾" (60,70,90 Right Side).

Buick (1942) Steering Wheel Height—All cars have steering column in highest position. Steering wheel can be lowered to maximum of 11/16" by installation of two No. 1321987 (40A), No. 1321253 (40B, 50, 60, 70, 90) spacers between steering column bracket and lower edge of instrument panel. When installing spacers, loosen steering gear frame bracket mounting bolts to allow gear to shift on frame, use new longer bolts (see note below) to attach bracket to instrument panel, tighten frame mounting bolts after bracket installed, check alignment. NOTE—New instrument panel bracket bolts required as follows: No. 1321954—2¼" (40A Left Side), 123798—1¾" (40A Right Side), 1325013—4 11/16" (40B, 50, 60, 90 Left Side), 1325016—4 3/16" (40B, 50, 60, 90 Right Side; 70 Left Side), 1324888—3 11/16" (70 Right Side).

Buick (1948) Steering Wheel Height—Wheel cannot be raised but may be lowered approximately 11/16" by installation of two special spacers between steering column bracket and lower flange of instrument panel (requires use of longer bolts). Spacers are No. 1321253, bolts are No. 1325016—4 3/16" long (Right Side 40, 50; Left Side 70), No. 1325013—4 11/16" long (Left Side 40, 50), No. 1324888—3 11/16" long (Right Side 70).

►*CAUTION—See Steering Alignment instructions above.*

Cadillac—Steering wheels should be installed so that middle spoke is vertical and directly opposite notch in end of steering column shaft (Std. 3 spoke type), or both spokes exactly horizontal (Special 2 spoke type) with nut on high center point of worm and front wheels in straight ahead position. Clearance between lower face of steering wheel and top of directional signal switch housing should be 1/16—3/32" (Std. & Deluxe Steering Wheel) as measured between the housing and the horn ring with horn ring depressed until it touches steering wheel spoke). Adjust by moving steering wheel and lower jacket up or down in upper jacket, then tighten clamp holding lower jacket in upper jacket.

HORN BUTTON OR RING REMOVAL: To remove button or horn ring for access to steering wheel retainer nut (to remove wheel or to service steering gear), proceed as follows:

Buick (With Solid Spoke Wheel)—Pry out horn button cap carefully.

Buick (With Flexible Spoke Wheel)—Pry off monogram and bezel assembly, take out three mounting screws, remove horn button operating wheel.

Cadillac—Hold wheel stationary, depress the button, turn button counter-clockwise until catch is released, lift button out, remove horn button retainer ring and spring. On Special model, remove horn ring, take out three screws holding retainer and rubber gasket to horn ring and remove parts.

STEERING LINKAGE: Special linkage is used on cars with independent suspension and should be adjusted as follows:

Buick—Linkage on all models is same design (long right hand tie rod between steering arm and right wheel, short left hand tie rod between the other tie rod and the left wheel). Adjuster at wheel end of each tie rod should be turned equally when making toe-in adjustments. If steering gear nut not on center high point of worm with front wheels in straight ahead position, adjust by lengthening one tie rod and shortening other tie rod exactly equal amounts (so toe-in setting not disturbed). **Cadillac**—All models have same steering linkage (connecting rod between steering gear arm and idler lever on right side of frame, individual tie rods from connecting rod to each wheel). Tie rods should be adjusted equally when setting toe-in. If steering wheel position not correct and steering gear roller not on high mid-point of worm with wheels in straight ahead position, correct by shortening one tie rod and lengthening other tie rod equally. Recheck toe-in. Idler lever is threaded in bushing which is threaded in support. To remove arm, take out two bolts mounting support on frame side rail, turn support off threaded bushing in arm.

DISASSEMBLY OF STEERING GEAR: Remove steering wheel, disconnect drag link, remove steering gear and column assembly from car. Remove steering column upper bearing. Loosen locknuts and back off both adjusting screws (on lower side and bottom cover plates). Remove screws on side cover and remove the cover assembly from housing so that pitman arm shaft and sector gear will be disengaged from nut. Take out bottom cover screws, remove cover, lower worm bearing, cup and thrust washer. Pull steering worm and nut assembly out through lower end of housing. CAUTION—Hold shaft in horizontal position and use extreme care that nut is not allowed to run down on worm against stops which will damage ball return mechanism (nut will move on shaft of own weight if shaft is tilted). Manufacturer recommends that worm nut and ball assembly not be dismantled.

Lash Adjuster (Sector shaft endplay)—With lash adjuster screw and shim installed in slot in end of sector cross-shaft, check clearance or endplay with feeler inserted between head of screw and bottom of slot in cross-shaft. Clearance should not exceed .002" and is adjusted by installing lash adjuster shim of correct thickness (Chevrolet Adjuster Shim Pkg. #605142 shims .063", .065", .067", .069" thick.

Ball Nut Assembly—To disassemble ball nut (required only if nut binds or is tight on worm), remove screws and ball guide clamp, withdraw guides (use clean pan to catch balls), hold nut upside down and rotate wormshaft back and forth until all balls drop out into pan (use extreme care to save every ball—these are special types and no other types of balls should be used in steering gear under any circumstances), remove nut from worm (nut can be pulled off end of worm after all balls removed). Wash all parts in clean gasoline, dry with clean cloth and examine for signs of wear or damage. To reassemble ball nut, divide balls into two equal groups of 30, 33, or 53 depending on total number used—see note below (each group installed separately in one ball circuit). Install nut on wormshaft so that grooves in nut and worm lined up with ball guide holes up and shaft horizontal. Drop balls into one guide hole and turn wormshaft gradually away from this hole until approximately ⅔ of balls have been installed and circuit filled to bottom of other guide hole on this circuit (if worm reaches end of travel before circuit completely filled, hold balls down with blunt end of clean punch and work wormshaft back and forth until circuit solidly filled with balls). Lay one half of ball guide on bench and install remaining balls (approximately ⅓) in guide using heavy grease to retain balls, assemble other half of guide, install assembly on nut so that ends of guide enter guide holes of the ball circuit which has been previously filled with balls, tap guide down into place lightly. Fill second ball circuit and install second ball guide assembly in same manner, install guide clamp and tighten clamp screws securely.

►*CHEVROLET BALL NOTE*—All 1941 & first type Chevrolet 1942 steering gears have 66-¼" balls installed in two separate groups of 33 each. Later trucks use two different types of steering gears (see Production Change Note above) with different numbers of balls as follows: Conventional Models—60-9/32" balls installed in two groups of 30 each. Cab-Over-Engine Models—106-9/32" balls installed in two groups of 53 each.

►*CAUTION*—Use extreme care to install exactly correct number of balls in each ball circuit. Steering gear will not operate satisfactorily if incorrect number or wrong type of balls used.

Reassembly: All Replacement Shaft and Nut Assemblies are taped to prevent nut moving on worm. When removing tape, hold shaft horizontally and use extreme care that nut does not run down on worm against stops which will damage ball return mechanism. Install shaft and nut assembly in steering gear housing, replace worm bearing, cup, thrust washer, gasket, bottom cover plate, insert and tighten cover screws. Install upper bearing spring seat and spring, bearing washer, cotter pin, steering wheel. Adjust worm bearings (see Adjustment above). Rotate steering wheel until nut in center of travel so that center tooth of pitman arm shaft sector gear will engage center tooth space on nut, push shaft and side cover into place, tighten cover screws.

►**NOTE—Three Separate Indexes:**

Transmission Controls ..... **Pg. 2601**
Transmissions ..... **Pg. 2602**
Overdrives ..... **Pg. 2603**

CAR APPLICATION
TRANSMISSION CONTROLS

BUICK — Page
1938 Series 40 (Self-shifting) 2670
1939-40 2604
1941-48 (Synchro-mesh) 2605
1948 (Dynaflow) 2665

CADILLAC
1938-41 2606
1941 (Hydra-Matic) 2673
1942 (Hydra-Matic) 2676
1942-48 (Synchro-mesh) 2607
1946-48 (Hydra-Matic) 2679

CHEVROLET
1939 2609
1940-48 2610
1947-48 Trucks 2608

CHRYSLER
1939-40 2612
1941 Vacamatic (Overdrive) 2692
1941-42 Vacamatic (Underdrive) 2693
1942 Vacamatic (Underdrive) 2696
1941-42 (Power-shift) 2613
1941-48 (Synchro-mesh) 2613
1946-48 (Hydr. Cont. Trans.) 2697

CORD
1936-37 2617

DE SOTO
1939-40 2612
1941-42 Simplimatic 2693
1942 (Late) Simplimatic 2696
1941-42 (Power-shift) 2613
1941-48 (Synchro-mesh) 2613
1946-48 (Tip-Toe Shift) 2697

DODGE
1939-40 2612
1941-42 (Power-shift) 2613
1941-48 (Synchro-mesh) 2613

FORD
1940-49 2615

FRAZER
1947-48 2615

GRAHAM
1938 (Evans Vacuum) 2616
1939-41 2615

HUDSON
1936 (Electric Hand) 2618
1936-37 (Electric Hand) 2621
1938-39 (Electric Hand) 2623
1939-40 2628
1941-48 2628
1942-47 (Drive-Master) 2624
1948 (Drive-Master) 2626

HUPMOBILE — Page
1939-40 2615

KAISER
1947-48 2615

LA SALLE
1938-40 2606

LINCOLN
1940-49 2615
1942 (Liquamatic) 2702

MERCURY
1940-49 2615
1942 (Liquamatic) 2702

NASH
1938 Early (Evans Vacuum) 2629
1938 Late (Evans Vacuum) 2630
1939-40 2631
1941-48 2632

NASH-LAFAYETTE
1938 Early (Evans Vacuum) 2629
1938 Late (Evans Vacuum) 2630
1939-40 2631

OLDSMOBILE
1937-38 (Self-shifting) 2670
1939 (Self-shifting) 2672
1939 (Synchro-mesh) 2632
1940-48 (Synchro-mesh) 2633
1940-41 (Hydra-Matic) 2673
1942 (Hydra-Matic) 2676
1946-48 (Hydra-Matic) 2679

PACKARD
1939-48 2633

PLYMOUTH
1939-40 2612
1941-42 (Power-shift) 2613
1941-48 (Synchro-mesh) 2613

PONTIAC
1938-39 2634
1940-48 2635
1948 (Hydra-Matic) 2679

STUDEBAKER
1938 (Evans Vacuum) 2636
1939-48 2637

TERRAPLANE
1936 (Electric Hand) 2618
1936-37 (Electric Hand) 2621
1938 (Electric Hand) 2623

WILLYS
1940-48 2638

TRANSMISSION INDEX—OVERDRIVE INDEX (SEE FOLLOWING PAGES) ➔

TRANSMISSION INDEX

CAR APPLICATION
TRANSMISSIONS

AUBURN — Page
- 1936-37 Six (Warner) 2640
- 1936-37 Eight (Detroit) 2638

BANTAM
- 1937 (Warner) 2640
- 1938-41 (Warner) 2646

BUICK
- 1936-39 Series 40 (Synchro-mesh) 2662
- 1938 Series 40 (Self-shifting) 2670
- 1936-39 Series 60, 80, 90 2661
- 1940-42 Series 60, 70, 80, 90 2661
- 1940-48 Series 40, 50 2664
- 1946-48 Series 70 (Synchro-mesh) 2661
- 1948 Series 70 (Dynaflow) 2665

CADILLAC
- 1936 2668
- 1937 V16 2668
- 1937-48 (Synchro-mesh) 2669
- 1941 (Hydra-Matic) 2673
- 1942 (Hydra-Matic) 2676
- 1946-48 (Hydra-Matic) 2679

CHEVROLET
- 1936-39 Passenger Cars 2685
- 1940-48 Passenger Cars 2686
- 1937-39 Truck (3-Speed) 2685
- 1940-48 Truck 3-Speed) 2686
- 1936-47 Truck (4-Speed) 2688
- 1948 Truck (4-Speed) 2689

CHRYSLER
- 1936-37 6 & 8 (Warner-No Ovdr.) 2640
- 1936 6 & 8 (Warner-Int. Ovdr.) 2644
- 1936-38 8 (Warner-R1 Ovdr.) 2643
- 1937-38 6 & 8 (Warner-R6 Ovdr.) 2644
- 1938-39 6 & 8 (Warner-No Ovdr.) 2646
- 1939 6 & 8 (Warner-R6 Ovdr.) 2649
- 1940-42 6 & 8 (Synchro-mesh) 2690
- 1941-42 6 Vacamatic (Undrdr.) 2693
- 1941 8 Vacamatic (Overdrive) 2692
- 1942 8 Vacamatic (Underdrive) 2693
- 1942 Late 6 & 8 Vacamatic (U'drv.) 2696
- 1946-48 (Synchro-mesh) 2690
- 1946-48 (Hydr. Contr. Transm.) 2697

C RD
- 1936-37 2700

CR SLEY
- 1939-42 (Warner) 2646
- 1947-48 (Warner) 2648

DE S TO
- 1936-37 (Warner-No Overdrive) 2640
- 1936 (Warner-Integral Ovdr.) 2644
- 1937-38 (Warner-R6 Overdrive) 2644
- 1938-39 (Warner-No Overdrive) 2646
- 1939 (Warner-R6 Overdrive) 2649
- 1940-42 (Synchro-mesh) 2690
- 1941-42 Simplimatic (Underdrive) 2693
- 1942 Simplimatic (Underdrive) 2696
- 1946-48 (Synchro-mesh) 2690
- 1946-48 (Tip-Toe Shift) 2697

DODGE — Page
- 1936-37 (Warner) 2640
- 1938-39 (Warner) 2646
- 1940-48 2690

FORD
- 1936-48 Passenger Cars 2701
- 1949 Passenger Cars 2706
- 1940-48 Truck (3-Speed) 2701
- 1936-48 Truck (4-Speed) 2709

FRAZER
- 1947-48 (Warner-No Overdrive) 2648
- 1947-48 (Warner-R10 Overdrive) 2658

GRAHAM
- 1936-37 (Warner-No Overdrive) 2640
- 1936 (Warner-Integral Ovdr.) 2644
- 1937 (Warner-R6 Overdrive) 2644
- 1938-39 (Warner-No Overdrive) 2641
- 1938-40 (Warner-R6 Overdrive) 2642
- 1939-40 (Warner-R6 Overdrive) 2649
- 1940-41 (Warner-No Overdrive) 2646

HUDSON
- 1936-40 2710
- 1941-47 (Synchro-mesh) 2711
- 1942-47 (Drive-Master) 2624
- 1948 (Synchro-mesh) 2712
- 1948 (Drive-Master) 2626

HUPMOBILE
- 1936 6 & 8 (Warner-No Overdrive) 2640
- 1936 6 (Warner-Integral Ovdr.) 2644
- 1936-39 Eight (Warner-R1 Ovdr.) 2643
- 1938-40 Six (Warner-No Ovdr.) 2646
- 1938-39 Six (Warner-R6 Ovdr.) 2644

JEEP
- 1942-45 Transmission (Warner) 2646
- 1942-45 Transfer Case (Spicer) 2639

KAISER
- 1947-48 (Warner) 2648

LA SALLE
- 1936 2668
- 1937-40 2669

LINCOLN
- 1936-40 V12 2713
- 1936-42 Zephyr 2701
- 1942 (Liquamatic) 2702
- 1946-48 2701
- 1949 2706

MERCURY
- 1939-48 2701
- 1942 (Liquamatic) 2702
- 1949 2706

CAR APPLICATION
TRANSMISSIONS (C nt.)

NASH — Page
- 1936-38 6 & 8 (No Overdrive) 2714
- 1936-38 6 & 8 (Warner-Int. Ovdr.) 2644
- 1936-38 6 & 8 (Warner-R1 Ovdr.) 2643
- 1936-39 6 & 8 (Warner-R6 Ovdr.) 2644
- 1939-40 2714
- 1941-48 Amb. 6 & 8 2717
- 1941-42 "600" (Warner-No Ovdr.) 2646
- 1941-42 "600" (Warner-R7 Ovdr.) 2649
- 1946-48 "600" 2716

NASH-LAFAYETTE
- 1936-38 (No Overdrive) 2714
- 1936-38 (Warner-Integral Ovdr.) 2644
- 1936-38 (Warner-R1 Overdrive) 2643
- 1936-39 (Warner-R6 Overdrive) 2644
- 1939-40 2714

OLDSMOBILE
- 1936-39 (Synchro-mesh) 2662
- 1937-38 (Self-shifting) 2670
- 1939 (Self-shifting) 2672
- 1940-41 (Hydra-Matic) 2673
- 1940-48 (Synchro-mesh) 2664
- 1942 (Hydra-Matic) 2676
- 1946-48 (Hydra-Matic) 2679

PACKARD
- 1936-38 Six & "120" Eight 2719
- 1936-38 8 & Super 8 2720
- 1936-39 Twelve 2720
- 1939 6, 8, Super 8 2719
- 1940-48 2720

PIERCE ARROW
- 1936-37 (Warner-No Overdrive) 2640
- 1936-38 (Warner-R1 Overdrive) 2643

PLYMOUTH
- 1936-37 (Warner) 2640
- 1938-39 (Warner) 2646
- 1940-48 2690

PONTIAC — Page
- 1936-39 2662
- 1940-48 (Synchro-mesh) 2664
- 1948 (Hydra-Matic) 2679

STUDEBAKER
- 1936-37 Dict. (Warner-No Ovdr.) 2640
- 1936-37 Pres. (Warner-No Ovdr.) 2640
- 1936 Dict. (Warner-Int. Ovdr.) 2644
- 1936 Pres. (Warner-R1 Ovdr.) 2643
- 1937 Dict. (Warner-R6 Ovdr.) 2644
- 1937 Pres. (Warner-R6 Ovdr.) 2644
- 1937 Pres. (Warner Auto. Ovdr.) 2645
- 1938-39 Comm. (Warner-No Ovdr.) 2641
- 1938-39 Comm. (Warner-R6 Ovdr.) 2642
- 1938-39 Pres. (Warner-No Ovdr.) 2641
- 1938-39 Pres. (Warner-R6 Ovdr.) 2642
- 1939-42 Champ. (Warner-No Ovdr.) 2646
- 1939-46 Champ. (R6, R7 Ovdr.) 2649
- 1939-42 Comm. (R6, R7 Ovdr.) 2649
- 1940-42 Comm. & Pres. (No Ovdr.) 2646
- 1941-42 Pres. (R6, R7 Ovdr.) 2649
- 1946-48 (Warner-No Overdrive) 2648
- 1947-48 (Warner-R10 Overdrive) 2658

TERRAPLANE
- 1936-38 2710

WILLYS
- 1936 2700
- 1937 (Warner) 2640
- 1938-42 (Warner-No Overdrive) 2646
- 1941-42 (Warner-R7 Overdrive) 2649
- 1946-48 Jeep Transm. (Warner) 2648
- 1946-48 Jeep Trnsfr. Case (Spicer) 2639
- 1946-48 (Warner-No Overdrive) 2648
- 1946-48 (Warner-R10 Overdrive) 2658

TYPE OF EQUIPMENT
TRANSMISSIONS

Page

DETROIT 2638

SPICER
- Transfer Case (Jeep) 2639

WARNER
- Free-Wheel Unit 2640
- 1936-37 (Without Overdrive) 2640
- 1936-39 (With R1 Overdrive) 2643
- 1936 (With Integral Overdrive) 2644
- 1937-38 (With R6 "No Kick-down" Overdrive) 2644
- 1938-39 Horizontal (Without Overdrive) 2641
- 1938-39 Horizontal (With R6 Overdrive) 2642
- 1938-45 (No Overdrive) 2646
- 1939-46 (With R6 & R7 "Kick-down" Overdrive) 2649
- 1946-48 (No Overdrive) 2648
- 1946-48 (With R10 "Kick-down" Overdrive) 2658

← **TRANSMISSION CONTROL INDEX** (SEE PRECEDING PAGE)

OVERDRIVE INDEX (SEE F LLOWING PAGE) →

OVERDRIVE INDEX

TYPE OF EQUIPMENT

OVERDRIVES

COLUMBIA — Page
- Dual Ratio 2-Speed Axle (Rear Axle Sec.) ... 2303
- Ford 2-Speed Axle (Rear Axle Sec.) ... 2303

SPICER
- Transfer Case, 2-Speed (Jeep) ... 2639

WARNER
- Integral ... 2644
- R1 ... 2643
- R6—No "Kick-down" (Conventional Transmission) ... 2645
- R6 (Horizontal Transmission) ... 2642
- Automatic (1937 Studebaker President) ... 2645
- R6 & R7 "Kick-down" ... 2651
- R9 "Kick-down" ... 2655
- Special R10 "Kick-down" (1941-48 Lincoln) ... 2704
- Special R10 (1949 Ford—Lincoln—Mercury) ... 2708
- R10 "Kick-down" ... 2659

OVERDRIVE CONTROLS

WARNER — Page
- R6 & R7 "Kick-down" Control ... 2653
- R9 "Kick-down" Control ... 2656
- Special R10 "Kick-down" Control (1941-48 Lincoln) ... 2705
- Special R10 Control (1949 Ford—Lincoln—Mercury) ... 2660
- R10 "Kick-down" Control ... 2660

CAR APPLICATION

OVERDRIVES

AUBURN — Page
- Dual Ratio ... 2303

CHRYSLER
- 1936 Six (Warner Integral) ... 2644
- 1936 Eight (Warner Integral) ... 2644
- 1936-38 Eight (R1) ... 2643
- 1937-38 6 & 8 (R6-No Kick-down) ... 2645
- 1939-40 Six (R6 & R7) ... 2651
- 1939-41 Eight (R6 & R7) ... 2651
- 1941 Eight (Vacamatic Overdrive) ... 2692

DE SOTO
- 1936 (Warner Integral) ... 2644
- 1937-38 (R6-No Kick-down) ... 2645
- 1939-40 (R6 & R7) ... 2651

FORD
- Two-Speed Axle (Pass. Cars) ... 2303
- 1949 (Special R10) ... 2708

FRAZER
- 1947-48 (R10) ... 2659

GRAHAM
- 1936 (Warner Integral) ... 2644
- 1937 (R6-No Kick-down) ... 2645
- 1938-40 (R6) ... 2642
- 1939-40 (R6 & R7) ... 2651

HUDSON
- 1940 (R6) ... 2651
- 1941-47 (R9) ... 2655
- 1948 (R10) ... 2659

HUPMOBILE
- 1936 Six (Warner Integral) ... 2644
- 1936-39 Eight (R1) ... 2643
- 1938-39 Six (R6-No Kick-down) ... 2645

JEEP
- 1942-45 Transfer Case (Spicer) ... 2639

LINCOLN — Page
- Two-Speed Axle ... 2303
- 1941-48 (Special R10) ... 2704
- 1949 (Special R10) ... 2708

MERCURY
- Two-Speed Axle ... 2303
- 1949 (Special R10) ... 2708

NASH
- 1936-38 (R1) ... 2643
- 1936-38 (Warner Integral) ... 2644
- 1936-39 (R6-No Kick-down) ... 2645
- 1940-46 (R6 & R7) ... 2651
- 1946-48 (R10) ... 2659

NASH-LAFAYETTE
- 1936-38 (R1) ... 2643
- 1936-38 (Warner Integral) ... 2644
- 1936-39 (R6-No Kick-down) ... 2645
- 1940 (R6) ... 2651

PACKARD
- 1939 (R6) ... 2651
- 1940-48 (R9) ... 2655

PIERCE ARROW
- 1936-38 (R1) ... 2643

STUDEBAKER
- 1936 Dict. (Warner Integral) ... 2644
- 1936 Pres. (R1) ... 2643
- 1937 Dict. (R6-No Kick-down) ... 2645
- 1937 Pres. (R6-No Kick-down) ... 2645
- 1937 Pres. (Warner Automatic) ... 2645
- 1938 Comm. & Pres. (R6) ... 2642
- 1939-42 (R6 & R7) ... 2651
- 1942 Pres. (R9) ... 2655
- 1946 Champ. (R7) ... 2651
- 1947-48 (R10) ... 2659

WILLYS
- 1941-42 (R7) ... 2651
- 1946-48 Jeep Trnsfr. Case (Spicer) ... 2639
- 1946-48 (R10) ... 2659

TRANSMISSION CONTROL INDEX—TRANSMISSION INDEX (SEE PRECEDING PAGES)

BUICK 1939 HANDI-SHIFT

BUICK, MODELS 39-40, 60, 80, 90 (1939)

NOTE:—Transmission used with this type control is similar to that used on previous models except for shifter mechanism (selector shaft with two fingers which engage slots in shifter shafts—endwise movement of shaft for cross-shift at neutral insures that only one finger engaged at a time). See separate article for complete Transmission servicing data.

TYPE:—Handi-shift remote control with shift lever mounted on steering column under steering wheel. Shift lever linked to selector shaft in transmission case by control rod (for gear engagement), and selector cable (for cross-shift). Movement of shift lever toward or away from steering wheel causes endwise motion of control shaft and actuates selector cable so as to pull on selector shaft (to engage low-reverse shifter shaft) or push on selector shaft (to engage second-high shifter shaft), one shifter shaft only being engaged at a time (when one finger of selector shaft engages notch in one shifter shaft, other finger is disengaged from opposite shaft and this free shifter shaft is prevented from moving by notch on shaft engaging larger diameter of selector shaft). Movement of shift lever forward and backward rotates selector shaft in transmission to engage gears.

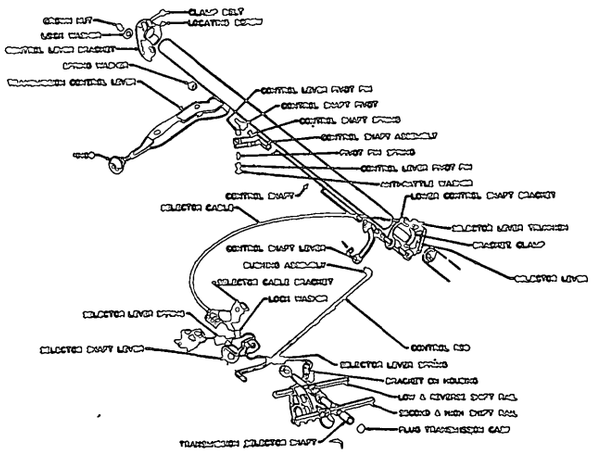

ADJUSTMENT:—Place steering column shift lever in second gear position. Loosen clamp bolt on control shaft lever at lower end of control shaft (lever is serrated so as to grip smooth shaft firmly and slotted end of lever may need to be spread slightly to free shaft—clamp bolt groove on shaft will permit ⅛" up and down movement of the lever), loosen Allen type setscrew locking selector cable wire in trunnion at selector lever on control shaft lower bracket. Move shift lever forward in second gear position until clearance between lever and steering gear mast jacket is 1/16" (use scale or 1/16" stock as spacer). Set selector shaft lever on transmission in second gear position (push selector shaft into transmission case as far as possible and shift forward until detents can be felt to engage. Tighten control shaft lever clamp bolt securely without disturbing position of shift lever or selector shaft, then press in on end of selector cable wire at control shaft trunnion (make certain that selector shaft pushed in transmission case as far as possible), tighten Allen setscrew in selector cable trunnion securely.

NOTE—This adjustment provides farthest forward position of shift lever. If operator desires closer position of lever, leave more than 1/16" clearance between shift lever and steering gear mast jacket in second gear position (above). Make certain that shift lever has full stroke so that low and high gears are properly engaged.

SERVICING:—Steering Column Unit—See that shift lever bracket is tight on upper end of steering column mast jacket and that locating setscrew is centered in mast jacket hole. Shift lever should move freely on pivot pins (to remove lever, press in on both pivot pins to clear lever; when installing lever see that spring in place between pivot pins and that anti-rattle washer installed on one pin). Make certain that control shaft does not bind on grommet at floor boards and that all joints operate freely. Lever at lower end of control shaft should contact rubber bumper (on shaft between lever and shaft bushing) with shaft in lower (Neutral, Second, High) position but bumper must not prevent full stroke of shaft necessary to push selector shaft into transmission case as far as possible (lever can be adjusted ⅛" up or down on shaft by loosening clamp bolt). Make certain that control shaft lower bracket is tight on steering column mast jacket and that locating tip on bracket is centered in hole in mast jacket.

Transmission Case Unit—Selector cable must not be kinked or bent at sharp angles and bracket on transmission case must be lined up so that cable wire is straight (bent bracket for alignment). Selector lever springs designed for over-center action (no spring tension in neutral position) and must be hooked to brackets and lever in correct manner. Selector shaft must not bind in transmission case seal (lever side of case) and must rotate freely.

NOTE—To avoid damage to seal, shaft must always be removed through opposite side of case (free lever and shift fingers on shaft, drive shaft through case which will drive out sealing plug in case) and installed on seal side of case (seal plug hole on opposite side of case with sealing compound).

BUICK 1940

MODELS 40-40, 50, 60, 70, 80, 90 (1940)

TYPE:—Remote control type with steering column mounted gearshift lever. Design changed from that used on 1939 car models as follows:

Gearshift Lever—Lever pivoted in bracket on outer control shaft with inner end engaging socket assembly on upper end of selector control rod (within control shaft) so that rod is pressed down when lever raised to Low-Reverse position. Direction Signal now located in separate housing on upper end of steering column.

Control Shaft Adjustment—Adjustment provided so that gearshift lever position may be varied to suit operator and consists of double lever arrangement at lower end of control shaft on steering column (lower lever fixed on shaft, upper lever to which shift rod attached is clamped to lower lever by clamp bolt and can be changed to new position after clamp bolt loosened).

Selector Rod & Lever Assembly—Selector control rod in control shaft on steering column now linked to new type selector shaft and lever assembly in transmission by selector rod (no cable used). Adjustment consists of socket assembly threaded on upper end of selector control rod.

ADJUSTMENT:—Place gearshift lever in neutral position. Adjust lever position so that it does not contact edge of hole in housing nut in Second-High position by removing selector control lever (to which lower end of selector control rod attached) from steering column bracket and selector control rod, turning rod in or clockwise until it bottoms in control lever socket (on upper end of rod), and then backing rod out exactly 2 complete turns. Move outer selector lever on transmission case to extreme rear or Second-High position (this is small forward lever on vertical shaft). Adjust trunnion on forward end of control rod so that clearance between shift lever and edge of hole in housing nut is approximately 1/16" with rod and trunnion connected. Loosen two screws in bracket at lower end of control shaft, place .020" feeler between insulating washer and control shaft nut (directly above bracket), hold control shaft assembly in uppermost poistion, tap bracket up until feeler gauge is just gripped between washer and nut, tighten bracket screws securely.

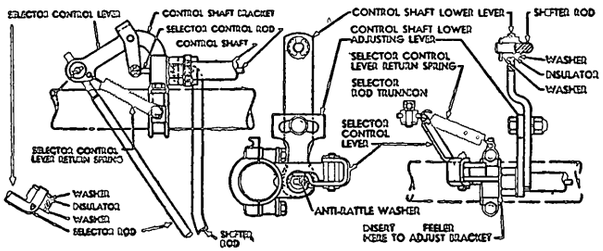

Gearshift Lever Position—To locate shift lever for convenience of operator, loosen clamp bolt on control shaft levers (at lower end of shaft), move shift lever and control shaft assembly forward or backward to suit operator, then tighten clamp bolt. CAUTION—This adjustment is limited and shift lever must not be moved so far in either direction that it interferes with steering column jacket when gears are engaged. Check lever for full travel after making this adjustment.

SERVICING:—Steering Column Unit—Control shaft upper bearing is located in Direction Signal switch housing on steering gear and spring washer, insulating washer, and bearing must be assembled in correct order if dismantled. Lower bearing bracket is clamped on steering column by two bolts and bracket has locating tongue which must enter slot in column jacket (slotted hole in jacket permits bracket to be moved up or down for adjustment as directed above). When installing assembly, make certain that control shaft does not bind in rubber grommet which seals hole in dash.

Gearshift Lever—Lever bearing is spherical type installed on ball on lever and clamped in lever bracket by housing nut. To renew bearing, remove gearshift lever knob (screwed on end of lever), unscrew housing nut, slip nut and bearing off end of lever. Install bearing with smaller radius toward column bracket and lubricate all movable parts of lever and socket assembly with Lubriplate. Make certain that small anti-rattle spring installed in

CONTINUED ON NEXT PAGE

BUICK 1940 (C nt.)

inner end of control lever and that spring and upper seat are in place in socket above lever end.

Idler Lever (Series 50, 70 Only)—These models have idler lever on flywheel housing which must be lubricated at regular chassis lubrication periods or more often if shifting is difficult.

Transmission Case Shifter Mechanism—Selector shaft and shifter shaft mechanism (for gear engagement) similar to type used on 1939 cars. Cross-shift selector lever and shaft (vertical shaft and small forward lever on transmission case) are new type. See separate Transmission article for disassembly and servicing directions. CAUTION—Selector shaft must be removed through right side of transmission case and installed on left side to avoid damage to oil seal. Cross-shift lever must be removed from vertical shaft before selector shaft driven out (to permit cross-shift lever to disengage from shaft).

BUICK 1941-48

All Series (1941-48) With Synchro-mesh Trans.

►*NOTE—This control not used with Dynaflow Drive.*

TYPE—Remote control type with steering column mounted gearshift lever. Design changed from that used on 1940 models as follows:

Gearshift Lever—Lever pivot or bearing formed in housing by fabricated bushing installed in inserted bearing seat and held in place by control housing cap or nut.

Control Shaft—Consists of a tube concentric with steering gear shaft with lower lever welded in place on lower end of tube and control lever housing keyed and clamped on upper end of tube. Tube is mounted on bearing in steering gear housing at lower end and on metal and fabric bearing in direction switch housing at upper end. Lever at lower end of tube is linked to idler lever (pivoted on steering gear housing) by non-adjustable rod with adjustable rod between the idler lever and the shift lever on the transmission case.

Selector Rod—Consists of a square rod within the steering column jacket which is pinned to the selector control lever pivoted on the steering column jacket at the lower end of the rod. This selector control lever is linked to selector lever on transmission case by a rod which has an adjustable trunnion at the steering column end.

Steering Gear Jacket—Two piece type with flanged slot at point where control shaft lower lever emerges. Upper section has mounting bracket for selector control lever and thrust washer assembly consisting of upper fabric and lower plain steel washer for control shaft end thrust installed in lower end. Lower section has bearing for lower end of control rod and shedder to protect bearing from dirt installed in upper end.

ADJUSTMENT:—Adjust selector control rod and shift rod separately as follows:

Selector Rod—Shift transmission to neutral. Disconnect selector rod at selector control lever on steering column, move rod to rear as far as possible, adjust trunnion position on forward end of rod so that trunnion pin engages bushing in selector control lever without disturbing position of lever or gearshift lever, connect rod.

Control Shaft Shift Rod — Shift transmission gears to second speed position. Loosen locknut (at steering column) so that control lever clears edge of slot in steering column mast jacket by ⅛", tighten locknut and connect rod. Shift gears to high speed position and check clearance. Clearance must be maintained at both upper and lower edges of slot in steering column mast jacket.

SERVICING:—Steering Column Unit—Control shaft upper bearing consists of a metal and fabric bearing pressed on upper end of control shaft lever housing in directional switch housing with a flat fabric upper thrust washer, plain steel washer, and spring washer assembled above bearing in that order. Control lever housing is key-slotted in two places and is clamped on upper end of control shaft tube by a clampscrew. Thrust in the opposite direction is taken by a fabric lower thrust washer and a plain steel washer installed between lower end of control lever housing and a plate welded in place in the steering column mast jacket. Control shaft lower bearing consists of a bushing pressed in the upper end of the steering column lower mast jacket with a flanged shedder pressed in the housing above the bearing (shedder fits within cup formed on lower end of control shaft lower lever so that dirt and water excluded from bearing). To service upper and lower bearings, use tool J-1583 to remove bearings, tool J-1585 (upper), J-1587 (lower) to install new bearings. See that thrust washers properly installed when replacing bearings.

CAUTION—When installing control shaft, use great care not to score bearings which will cause hard shifting (bearings are fabric which is soft). Always install new bearings when old bearings removed.

Gearshift Lever—Lever bearing is fabricated bushing which is formed when lever housing nut is tightened. When installing lever, make certain that plunger spring and plunger are in place at upper end of selector rod and that anti-rattle grommet is installed on inner end of gearshift lever. Install bearing seat on lever, then install lever in control lever housing, making certain that inner end engages selector rod properly. Install bearing on lever ball with small outside diameter toward outer end of housing, tighten housing nut securely so that shoulder in nut seats which will lock bearing seat in housing assembly.

Idler Lever—Idler lever on lower end of steering column is fitted with a bushing and pivots on a bolt on the idler lever bracket. When installing lever, make certain that spring washer and plain washer are in place between lever bushing and head of bolt to prevent rattles. Lubricate idler lever at regular intervals (lubricant fitting provided on bolt).

Transmission Case Shifter Mechanism—Refer to separate Transmission article for complete servicing data.

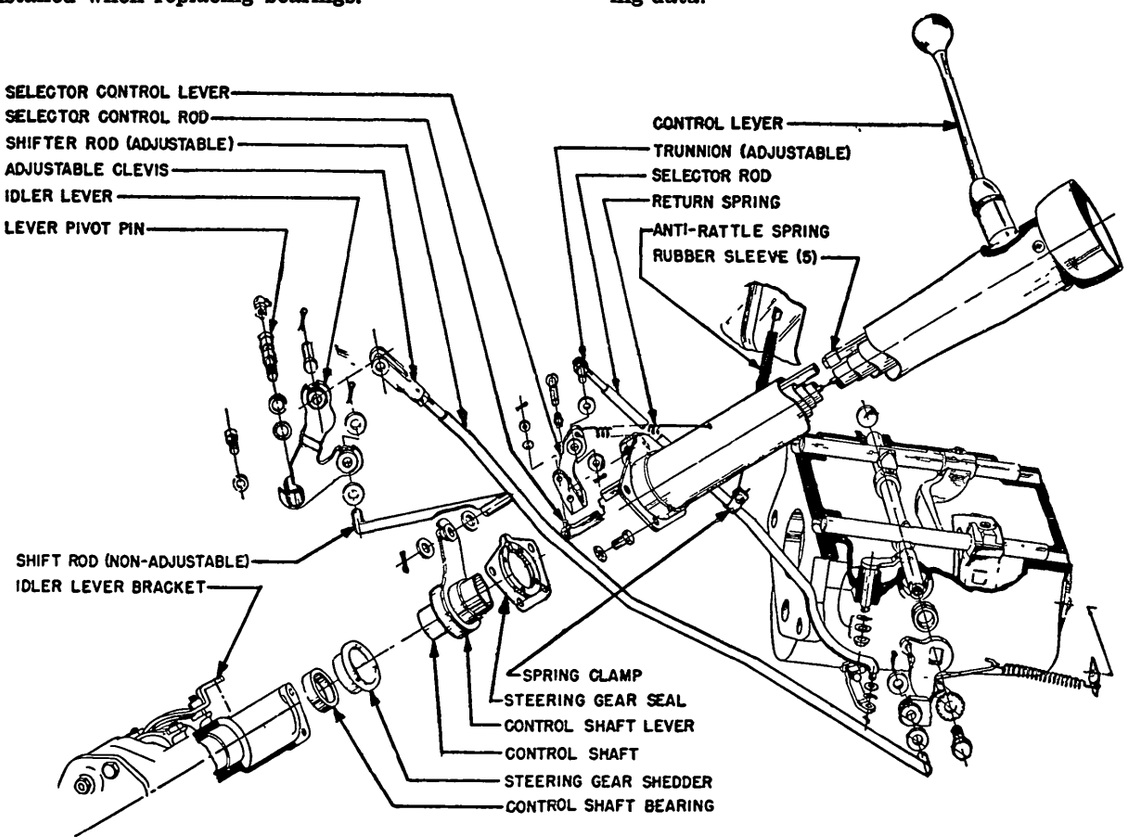

BUICK TRANSMISSION CONTROL (1941-48)

CADILLAC & LA SALLE 1938

ALL CADILLAC & LA SALLE MODELS (1938)

NOTE:—Transmission used with this type control similar to previous model except for new shifter mechanism (conventional shifter shafts not used).

TYPE:—Consists of special shift lever assembly mounted on steering column under steering wheel. Lever can be moved toward or away from steering wheel at neutral position to engage lug on either of two concentric shafts at side of steering column. Movement of lever then engages gears by rotating shaft which is linked to shift lever on transmission case by adjustable rod. Inner shaft (upper lug—engaged by pressing shift lever away from steering wheel) is linked to forward shifter shaft lever on transmission and controls second-and-high, outer shaft (lower lug—engaged by pressing shift lever toward steering wheel is linked to rear lever on transmission and controls low-and-reverse sliding gear. Lugs on shafts must be lined up to permit this cross-motion at neutral.

ADJUSTMENT:—Shifter Rods. Make certain that steering column control lever, torsion shafts, and transmission gears and shifter mechanism in neutral (spring loaded lock balls engage notches on inner ends of transmission levers in each gear position). Tighten adjustable end of each rod in succession (adjusting clevis and locknut at rear end of each rod) until control lever just starts to move. This adjustment must be accurately made or control lever will not cross over at neutral from high & second to low & reverse torsion tube lug.

Shifter Levers. See Note below for first cars on which spacers and spring-washers not used. Use tool J-1204 installed on lower end of steering column shafts (tool cannot be used on first cars with tapped hole at lower end of inner shaft instead of groove). Loosen clampscrews on both shaft levers (leave loose while tension being adjusted), tighten thumbscrew on tool until correct feel secured for low gear shift (lever action smooth with no binding or up-and-down play in the tube), tighten clampscrews on low-and-reverse lever. Check second-and-high lever action, adjust in same manner and tighten clampscrew on lever. If tool not used, make trial setting for each lever, check shifting action.

NOTE—If correct setting cannot be secured on first cars (without spring-washers), disassemble levers at lower end of control and reassemble with correct washers as follows: At bottom of shifting tube bracket install two spring-washers (#1425904), spacer #1427417, low-and-reverse lever, two spring-washers (#1424479), second-and-high lever.

SERVICING:—Entire steering column mechanism exposed by removing steering wheel. Transmission case mechanism not disturbed by transmission removal (disconnect control rods at transmission case, on Model 60 only remove levers also—see assembly directions below for lever replacement).

Assembly:—Assemble the control in order beginning at the steering column shift lever and working toward the transmission. Assemble levers as directed below and adjust control rod lengths (see Adjustment above).

Steering Column Shaft Levers—Lever at lower end of inner shaft can be assembled in two positions. Install lever in lower position (50, 60, 60S), upper position (75, 90).

Transmission Shifter Shaft Levers—Levers can be installed in two positions. Install levers in upper position on all models.

CADILLAC & LA SALLE 1939

CADILLAC V8, SERIES 39-60S, 61, 75 (1939)

CADILLAC V16, SERIES 39-90 (1939)

LA SALLE V8, SERIES 39-50 (1939)

TYPE:—Same design as used on 1938 car models except as follows: Steering Column Control Shaft Levers assembled differently with outer shaft lever (low-reverse) above mounting bracket and spring washers between mounting bracket and lower lever only. Transmission case forward shift lever (second-high) shortened for more convenient shifting.

ADJUSTMENT:—See that steering column shift lever, control shafts, and transmission case shift levers are all in neutral position. Loosen locknut and turn adjustable end (transmission case end) of each control rod until shift lever can be lifted into low-reverse position without interference. This adjustment important to insure correct cross-over at neutral from Second-high position to low-reverse position.

SERVICING STEERING COLUMN UNIT:—Disassembly—Remove horn button, steering wheel nut and steering wheel. Remove lower (second-high) lever on steering column, loosen clampscrew holding upper (low-reverse) lever in place. Remove cross-over spring at upper end of steering column, loosen clampscrew holding upper shifter housing to steering column. Lift upper housing with shifter tube and shaft attached from steering column. Pull inner (second-high) shaft out of outer tube, remove gear shift lever, pull outer (low-reverse) tube out of housing.

Reassembly—Reverse disassembly directions given above, making certain that lug on low-reverse shifting tube points away from center of housing and clamping bolt washer on lower steering column bracket engages slot in column on 39-50 and 61 cars. Install two anti-rattle spring washers between bracket and upper (low-reverse) lever, three washers between bracket and lower (second-high) lever (see Note below). Adjust connecting rods after installation completed.

NOTE—Some cars equipped with only one anti-rattle spring washer (between bracket and lower lever). To correct rattles on these cars, install four additional washers as directed above.

Control Shaft Lever Adjustment:—Use tool J-1204 (same tool used for 1938 models) installing tool on lower end of control shaft assembly. Tighten tool thumbscrew lightly, loosen clamping screws on both levers, turn down thumbscrew on tool until high gear shift is smooth and not too tight (test with shift lever, control shaft clamping screws may be left loose while making adjustment), tighten lever clamping screw when correct adjustment secured, remove tool. Push upper lever down on shaft until clearance between lever and upper face of support bracket is .005" (measure with feeler gauge), tighten clamping screw. If tool not used, pry lower lever up with screwdriver to secure tension on spring washers, tighten clampscrew, check setting. Repeat these trial settings until satisfactory operation secured. Adjust control rods as directed above.

TROUBLE SHOOTING:—Shifter Rattles—Adjust control shaft levers (above) to correct excessive clearance. See that correct number of anti-rattle spring washers used between bracket and levers (see Reassembly Note above).

Hard Shifting—Check control shaft lever adjustment (above) for insufficient clearance. Check shifter control lever and control tube and shaft lugs for chipped lugs, incorrect adjustment, or other interference preventing smooth operation of lever.

IMPORTANT SERVICE NOTE—Detent springs on all first 1939 cars were .022" and were changed on later cars to .018" (except 39-90). To correct hard shifting complaints, install these later type detent springs on first cars (except 39-90).

SERVICING TRANSMISSION UNIT:—See Transmission article for data (shifter shafts and quadrants, and interlock mechanism can only be removed from within transmission case after transmission dismantled).

CADILLAC & LA SALLE 1940-41

CADILLAC V8, SERIES 40-60S, 62, 72, 75 (1940)
CADILLAC V16, SERIES 40-90 (1940)
CADILLAC V8, SERIES 41-60S,61,62,63,67,75 ('41)
LA SALLE V8, SERIES 40-50, 52 (1940)

NOTE:—This control used only with Standard 3-speed synchro-mesh transmission. Control used with Optional Hydra-matic Transmission is different design and is adjusted as directed in Hydra-matic Transmission article.

TYPE:—Same design as used on 1939 Cadillac and La Salle models except that hairpin type anti-rattle spring installed on lower end of control shaft on steering column (this spring not used on Cadillac 75, 90 (1940) models.

ADJUSTMENT:—Place gearshift lever in neutral position on Second-High side (normal position). Disconnect Low-Reverse rod at rear lever on transmission case, place lever in neutral (can be checked by feel of detent balls engaging notch in lever shaft sector), adjust rod length by loosening locknut and turning rod end until gearshift lever can be lifted freely into Low-Reverse position with rod connected and without disturbing position of transmission case shift lever. Then adjust Second-High rod (connected to forward lever on transmission case). To adjust this rod, place gearshift lever in neutral, disconnect rod, place transmission case lever in neutral, then adjust rod length so that it can be connected without disturbing position of either rod. Recheck low-reverse rod adjustment to insure smooth cross-over of shift lever from Second-High to Low-Reverse position at neutral.

Shifter Levers—To adjust lever positions on control tube and shaft, disconnect rods on levers, remove anti-rattle spring from second-high lever, install special tool No. J-1204 on lower end of Second-High control shaft, tighten thumbscrew on tool slightly. Loosen clampscrew on Second-High lever (lower lever), tighten thumbscrew on tool until 2 lbs. force required to move this lever back and forth (measure with spring scale attached to outer end of lever), tighten clampscrew and remove tool.

CONTINUED ON NEXT PAGE

CADILLAC & LA SALLE 1940-41 (C nt.)

NOTE—Low-Reverse (upper) lever does not require adjustment.

SERVICING:—Disassembly—Remove horn button or horn ring and steering wheel, remove anti-rattle spring (at lower end of control shaft). Loosen clampscrew and remove Second-High (lower) lever, loosen clampscrew on Low-Reverse (upper) lever, remove cross-over spring at upper end of control shaft. Loosen clampscrew holding upper shifter housing on steering column, disconnect three wires of direction signal switch, lift upper housing and shifter control assembly up and off steering column. Remove pin and collar on lower end of Second-High (inner) shaft, pull this shaft out of Low-Reverse tube at upper end. Remove gearshift lever and flat anti-rattle spring directly below lever, pull Low-Reverse tube out of housing.

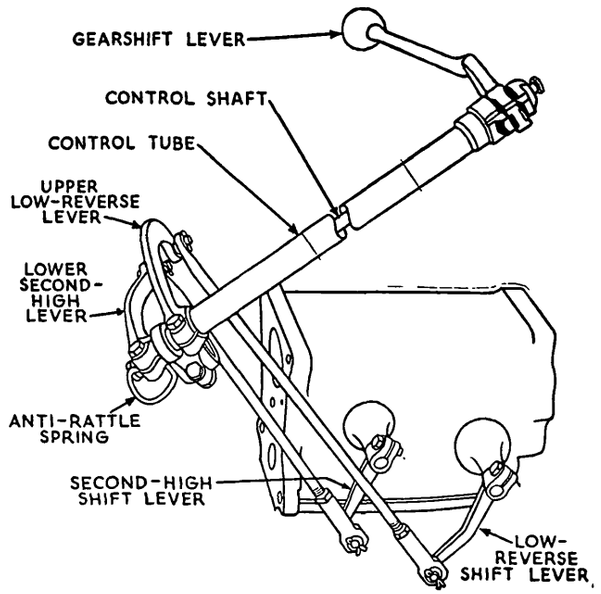

Reassembly ('40). Install Low-reverse tube in housing with lug pointing away from center, hold lever in position and install Second-High shaft. Place two spring washers on lower end of shaft with concave sides up and install shaft collar and pin. Push housing and shaft assembly down in place next to steering column, slip Low-Reverse lever on tube before entering assembly in lower bracket. Install two spring washers with concave side up on lower end of Second-High shaft, install lever on shaft. Position housing so that shift lever does not strike at any point and tighten housing clampscrew. Install steering wheel. Adjust levers and control rods as directed above. NOTE—If new Second-High shaft being installed, see directions below for positioning collar on lower end of shaft (shaft must be drilled for pin).

Reassembly ('41). Install Low-reverse tube in housing with lug pointing away from center, install flat cross-over spring under gearshift lever, hold lever in position and install Second-High shaft. Slip one spring washer with convex side up over bottom end of second-high shaft and hold washer in place against end of low-reverse tube. Install collar at lower end of second-high shaft and press locking pin in place. Push housing assembly with shifting shaft and shifting tube down in place on steering column making certain that direction signal wires pass through hole in steering column bracket on instrument panel and that low-reverse shifter lever installed on end of low-reverse shift tube before entering tube in lower bracket (if bracket has been removed, re-install bracket and install small clip spring washer in bracket hole, then push shaft through bracket). Install one anti-rattle spring washer with concave side up on lower end of second-high shaft, install second-high lever. Position shifter housing below steering wheel so that clearance between underside of wheel hub and top of housing is 1/16". Install steering wheel, connect direction signal wires. Adjust shifter levers and shifter rods as directed above.

Lower Bracket Mounting—If lower bracket removed, make certain that clamping bolt washer on bracket engages slot in steering column. This is important to position bracket properly.

Shifter Shaft & Tube Replacement:—Adjustment between Low-Reverse (outer) tube and Second-High (inner) shaft maintained by collar on lower end of shaft. Shaft must be drilled for correct location of collar locking pin if either tube or shaft replaced. To locate collar pin hole in shaft, assemble control on bench without the two anti-rattle spring washers located between the collar and tube (upper washers). Pull shaft through tube until all clearance taken up between upper ends, place .021" feeler thickness between collar and lower end of tube, drill and ream for locking pin without disturbing position of collar (use #32 drill and ⅛" or .1245-.1255" reamer). Then assemble control as directed above making certain that spring washers properly installed.

TROUBLE SHOOTING:—Hard Shifting—Check rod and lever adjustments (above). Check clutch for incorrect pedal adjustment, dragging or spinning clutch. Check transmission for improper or low lubricant, damaged gears, worn synchronizer drums or broken detent springs.

Slipping out of Gear—Check adjustment, see that shift lever has full travel and that rod lengths correct. Check rubber connections at ends of connecting rods. Check for loose rear engine support.

CADILLAC 1942-48

All Series (1942-48) With Synchro-mesh Trans.

►**HYDRA-MATIC DRIVE NOTE**—See separate article on Cadillac Hydra-matic Drive for adjustment directions on control lever and linkage used on cars with Hydra-matic Drive. Data below applies to cars with Std. 3 speed transmission only.

DESCRIPTION: Remote control type with steering column mounted gearshift lever. Gearshift lever is pivoted in carrier mounted on upper end of steering jacket and engages shifter tube within steering gear jacket (jacket is notched out for shifter levers on lower end of shifter tube). A single shifter tube is used and normally engages Second-High shifter lever (lower lever) being held in this position by the cross-over spring installed in the jacket at the lower end of the shifter tube. Raising up on gearshift lever causes shifter tube to move down in jacket so as to engage Low-Reverse shifter lever (upper lever). Engagement is by means of shifter keys which engage the levers and tube (keys separated by spacer on tube). Rods connecting shifter levers on steering column and shifter shaft levers on transmission case are adjustable.

ADJUSTMENT: Place gearshift lever in neutral position on Second-High side (normal position). Disconnect Low-Reverse shifter rod at lever on transmission case (rear lever), adjust length of rod so that gearshift lever can be lifted freely into Low-Reverse position with rod connected and without disturbing neutral position of transmission shifter lever and shaft. Adjust Second-High shifter rod (connected to forward lever on transmission case) in same manner. With correct adjustment, cross-over at neutral from Low-Reverse to Second-High positions of gearshift lever should be made freely and without disturbing neutral position of transmission gears and shifter shaft levers.

DISASSEMBLY (1942-47): Loosen clamp holding lower steering column jacket to upper jacket, remove steering gear column and lower jacket as a unit. Remove cross-over spring, seat, and washer from upper end of lower jacket. Remove 4 screws holding Direction Signal Switch and housing in cup support, pull switch, feed wire, and housing off cup, take out 4 Phillips Head screws holding cup and retainer on jacket flange, remove cup. Remove dust shields on lower shifter levers, remove bolts holding cross-over keys in position and slide keys toward outer ends of levers, remove metal dustcover between keys. Slide bearing retainer carrier and shift tube out through upper end of jacket as an assembly. Remove spacer bushing between shifter levers, pull Second-High lever up until lever bushing clears lower edge of slot in jacket, remove lever. Push Low-Reverse lever down until lever bushing clears upper edge of slot in jacket, remove lever. Remove two anti-rattle spring washers from Low-Reverse lever bushings, slide cross-over keys out of slots in both levers. Remove rubber trim pad and insulator from steering column jacket. Remove carrier and bearing retainer from end of shift yoke on upper end of shifter tube, remove retainer ring holding bearing retainer to carrier and remove bearing retainer with bearing and thrust washer.

DISASSEMBLY (1948): Remove steering wheel. Remove upper bearing spring and seat, and cap over end of selector lever at carrier. Drive pin out of carrier boss, remove selector lever. Unscrew and remove direction signal lever. Remove steering column cover panel. Disconnect direction signal switch leads at connectors near steering jacket. Take out four screws, pull switch, wires and housing off cup support (CAUTION—Attach string to wires at lower end housing before pulling wires out, string can be used to pull wires back in). Remove four screws mounting cup support and bearing retainer on jacket flange, remove cup support. Disconnect horn wire at terminal on steering jacket. Remove dust shields over lower shifting levers, and dust cover between levers. Remove bolts holding cross-over keys in levers, slide keys toward outer end of levers. Slide bearing retainer carrier and shift tube out of steering jacket upper end as a unit. Disconnect control rods from shift levers at lower end of steering

CONTINUED ON NEXT PAGE

CADILLAC 1942-48 (Cont.)

column, loosen clamp holding lower and upper steering jackets. Raise front end of car and disconnect rod at pitman arm. Take out steering gear mounting bolts. Lower steering gear housing and shaft out of car. Remove spacer bushing between shift levers. Pull Second-and-High lever up until lever bushing clears slot in jacket, remove lever. Push Low-and-Reverse lever down until lever bushing clears slot in jacket, remove lever, remove two anti-rattle spring washers from lever bushings. Remove carrier and bearing retainer from end of shift yoke on upper end of shift tube. Remove retaining ring holding bearing retainer to carrier and remove retainer with bearing and thrustwasher.

REASSEMBLY (ALL CARS): Reverse disassembly directions (above) and note the following points when assembling shifter mechanism:

Shift Lever Cross-over Keys—Install keys with tapered ends toward jacket end of levers and with small ends of tapers toward bottom of lever slots.

Low-Reverse Lever Anti-rattle Springs—Install both washers so that they are nested together with concave side up toward upper end of jacket.

Shifter Lever Endplay—After installing shift levers and spacer bushing, check for endplay in levers and remove excessive play by installing shims.

Steering Jacket (1942-47): When installing upper jacket and steering mechanism, see that upper jacket laps over lower jacket approximately 1½", tighten clamp snug but not tight.

Steering Wheel Clearance (1948): When installing steering wheel and horn ring, see that clearance between top of housing and face of wheel hub is 1/16-3/32" (standard wheel). Clearance between top of housing and bottom of horn ring should be 1/32" (Special wheel), when horn ring is depressed so that it strikes steering wheel spoke.

Shifter Rod Connection—Rods should be installed on top of lever with two anti-rattle washers nested together with convex side up (install washers on bottom side of lever).

TROUBLE SHOOTING: If transmission gear engagement not satisfactory, check as follows:

Hard Shifting Complaints:

(1) Check and adjust shift linkage.

(2) Check clutch pedal free play adjustment (set for minimum free travel of 7/8" if clutch dragging). If clutch still drags, check for warped driven member and binding of driven member on shaft.

(3) Check transmission for damaged or tight gears, worn synchronizing drums, broken synchronizer detent springs.

Slipping out of Gear Complaints:

(1) Check and adjust shift linkage. See that control rod rubber bushings not binding (bronze-lined rubber bushings at outer ends of shift levers must not bind on levers—disassemble levers, free bushings, lubricate thoroughly with Lubriplate).

(2) Check Second-speed gear for looseness on shaft or wear in gear or clutch sleeve (slipping out of Second Gear).

(3) Check for misalignment of transmission mounting screw holes, warped or misaligned flywheel housing or transmission case, shim mounting if matching faces run-out more than .003" (slipping out of High Gear).

CHEVROLET 1947-48 TRUCKS

Chevrolet ¾ & 1 Ton Truck (1947-48)

Chevrolet "Dubl-Duti", ¾ & 1 Ton (1948)

DESCRIPTION: Remote control type with gearshift lever mounted on steering column. Gearshift lever is pivoted in mounting bracket on upper end of steering column and has engaging dog or lug on lower end of control shaft which engages one or the other of the two "inner levers" in the housing at the lower end of the steering column. These inner levers are linked to the shifter levers on the side of the transmission case by means of adjustable rods (see Adjustment below). Gearshift lever is normally in the "Second-High" (lower) position in which it is held by a spring at the lower end of the control shaft and must be raised, against spring tension, to shift lug into engagement with the "Low-Reverse" lever and rod (upper position).

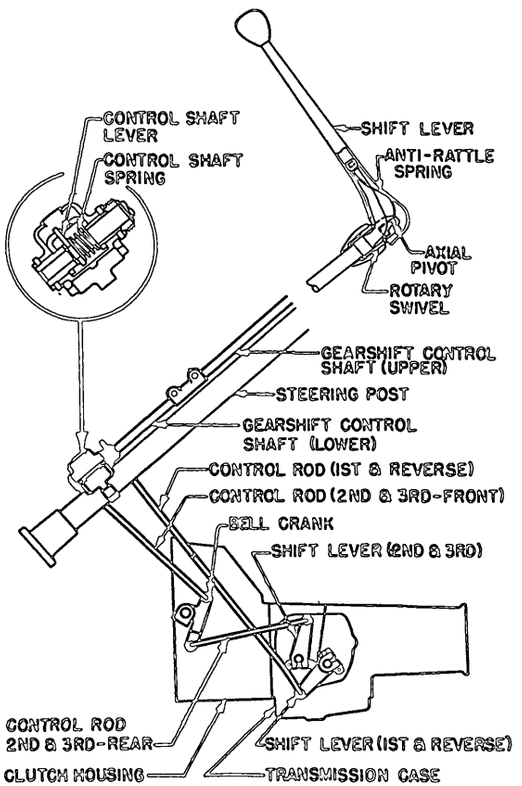

CHEVROLET ½ AND ¾ TON TRUCK TRANSMISSION CONTROL

ADJUSTMENT: Adjust in order as follows:

▷Dubl-Duti (Forward Control) Adjustment Note—Front floor pan must be removed for access to control rod swivels as follows: Take out pan attaching screws, disconnect wiring to stop light switch, disconnect accelerator pedal rod, remove pan.

1—There should be 7/8" clearance between steering col. shift lever pivot pin hole center and top of upper support just below lever. To adjust, remove upper bolt from shaft clamp on steering column (between upper and lower control shafts), take out 2 screws in upper support (just below lever), remove shift lever (with upper control shaft). Screw upper support up or down for 7/8" desired clearance. Reinstall assembly on steering column.

2—There should be 2 9/16" ± 1/8" clearance between end of gearshift lever and underside of steering wheel rim. Loosen 2 housing assembly clamp bolts (at lower end of steering col. mast jacket), raise or lower housing (with control shafts and lever on upper end) until correct clearance obtained. Tighten clamp bolts.

3—Gearshift lever should be horizontal with transmission in neutral. To adjust, disconnect 2nd & 3rd control rod swivel from housing outer lever (lower lever at lower end of steering col.). Move this lever to set gearshift lever in horizontal position, then adjust swivel on end of rod so that lever position not disturbed when rod connected.

4—Check shifter gate alignment on inner levers in housing with cover removed. To adjust, disconnect 1st & Reverse control rod swivel from housing outer lever (upper lever at lower end of steering col.). Move the outer lever to align upper shifter gate with lower shifter gate in housing, then adjust swivel on end of rod so that lever position not disturbed when rod connected.

TRANSMISSION SHIFTER DISASSEMBLY: Cover on side of transmission case must be removed as follows: Disconnect shifter rods, drain lubricant, take out shift lever lock bolts, and pull lever off each shifter shaft. Remove cover from transmission. Take out shifter interlock retainer capscrews, remove retainer which permits removal of shifter shaft and fork assemblies, poppets and springs or interlock from cover.

Cover Installation—Hump on side of First and Reverse Shifter Fork must be toward rear of transmission. Install cover (using new cover gasket) with gears and shifter forks in neutral. Install shift lever on each shifter shaft and tighten lock bolts.

DUBL-DUTI (FORWARD CONTROL) CONTROL RODS: Consist of upper rods (from steering column to idler levers on flywheel housing), and lower rods (from idler levers to transmission case shifter shaft levers).

Disassembly of Control Rods: Remove front floor pan (take out attaching screws, disconnect wiring to stop light switch, disconnect accelerator pedal rod, remove pan). Disconnect rods by removing cotter pins, flat washers, and springs at each end (remove upper rods and swivels as an assembly).

▷*CAUTION—Note position of each rod and re-install in exact same location.*

CHEVROLET 1939

MASTER DELUXE MODEL JA, MASTER JB (1939)

►**GEARSHIFT LEVER RATTLE CORRECTION:** Anti-rattle bushing should be installed on the control shaft lever on lower end of steering column to correct rattles at this point on first cars (new type lever No. 3650931 with anti-rattle bushing is used in production on later cars). See installation directions below.

DESCRIPTION: Vacuum assistor control type with shift lever mounted on steering column under steering wheel and vacuum cylinder assembly mounted on bracket at left of transmission case. Steering column unit consists of an outer control shaft (linked to gear engagement lever on side of transmission case) and an inner selector rod (linked to selector or cross-shift bell crank on forward end of transmission case cover. Cross-shift mechanism is entirely mechanical and vacuum power is used only for gear engagement. Vacuum cylinder is new type with control valve located in piston rod with separate hose connections for vacuum (forward hose—connected to vacuum pipe from intake manifold) and air (rear hose—connected to air cleaner on frame). Valve control mechanism is mounted under protective boot on gear engagement lever and is designed to provide a 'follow-up' action (vacuum cylinder piston follows action of steering column gear shift lever exactly).

OPERATION:—Selector mechanism (mechanical linkage for cross-shift) and gear engagement mechanism (mechanical linkage with vacuum assistor) operate independently as follows:

Selector (Cross-shift)—Steering column gear shift lever is spring-loaded in lower (Second-High) position. Lifting up on lever in neutral position depresses push rod in control shaft and actuates selector bell crank on transmission cover through a lever on lower end of control shaft and selector rod connector.

Vacuum Cylinder (Gear Engagement)—Sleeve valve in vacuum cylinder piston rod is normally centered so that air is admitted to both ends of cylinder and piston has no tendency to move. When shift lever moved backward (for Low or High) or forward (for Reverse or Second), the clearance at the control rod clevis pin 'A' and the piston rod yoke pin 'B' allows an initial movement of the inner sleeve valve rod (before gear engagement lever begins to move) which admits vacuum to one end of the cylinder and causes the vacuum cylinder piston to follow-up the control rod. This piston movement sets up a reaction in the control valve lever mechanism (reactionary lever tip moves in one direction, idler lever in opposite direction) which results in a movement of the valve rod to cut off the vacuum port and stop the piston rod as soon as the steering column shift lever movement stops (whether in gear-engaged position or intermediate points).

ADJUSTMENT:—If operation unsatisfactory, or if shift mechanism dismantled for servicing, adjust each unit as follows:

Steering Column Control Assembly—See Servicing directions below for dimensions to which parts set up when assembled (no service required).

Selector Rod—Pull selector control rod (attached to selector bell crank on transmission cover) forward firmly against its stop, loosen locknut and adjust swivel on forward end of rod until swivel pin is ⅛" to rear of hole in lever, tighten locknut. Pull lever toward rear and connect rod installing anti-rattle spring, flat washer and cotter pin on swivel pin. NOTE—Pulling lever back in this manner necessary to place selector linkage under spring tension to insure remaining normally in second-high position and to prevent rattles.

Control Rod (Gear Engagement) Linkage—Set shift lever on steering column in horizontal (neutral) position. See that clevis pin at rear end of control is exactly centered in hole in gear engagement lever on transmission case (remove boot on lever), adjust swivel on forward end of rod so that pin lines up with hole in control shaft lever, engage pin in lever, install anti-rattle spring and lock on pin.

Vacuum Cylinder Control Valve—A special adjusting bushing must be used for this adjustment. This bushing should be made up to following dimensions: Inside Diameter—.373-.378", Outside Diameter—.685-.688". Length—1 1/32". To adjust, remove control rod clevis pin 'A' on lever on transmission case, remove boot on lever which covers valve lever assembly, remove vacuum cylinder piston rod yoke clevis pin 'B' which will disconnect piston rod and valve links from lever assembly, push piston into cylinder to provide clearance for adjustments, thread special adjusting bushing through valve link eyes, install clevis pin in piston rod yoke and bushing. Operate engine to provide vacuum (if adjustment made on bench, separate vacuum source must be provided). Move valve links out or away from cylinder until all clearance between bushing and clevis pin is toward front, Piston rod should move slowly out of cylinder. Move valve links toward cylinder until all clearance between bushing and clevis pin is toward rear. Piston rod should move slowly into cylinder. If piston rod moves out but does not move in, valve links are set too far in toward cylinder; if piston rod moves in but does not move out, valve links are set too far out from cylinder. To adjust, remove clevis pin, screw valve links in or out on valve rod ½ turn at a time and repeat test until correct operation is secured, reassemble linkage.

STEERING COLUMN UNIT DISASSEMBLY: Remove steering wheel, mast jacket bearing spring, instrument panel nuts and clamp, raise toeboard grommet up about 12", disconnect selector rod and control rod from levers at lower end of control shaft, remove locknut and selector control lever guide at lower end of control shaft. Remove screws from lower support bracket, unscrew bracket from control shaft, loosen clamp on control shaft lever, remove lever and counter-balancing spring from end of control shaft, remove control shaft and gear shift lever (do not remove upper support bracket from mast jacket). To remove gear shift lever from control shaft, press in on pivot pin on each side of housing, remove lever. Then remove selector push rod assembly through top of control shaft.

Servicing—Remove all burrs from gear shaft lever housing in control shaft and push rod opening at top of shaft. See that selector pushrod is free in control shaft (if rubber bushing tight in tube, replace with #3651629 Neoprene bushing). Make certain that shift lever pivot pins are free in lever and in control shaft housing.

Reassembly—Install selector pushrod in control shaft, assembly pivot pins in shift lever (with spring between them and anti-rattle washer on one pin, shim on opposite pin), install lever in control shaft housing by compressing pin spring until pins enter housing and slipping open end of lever over end of push rod, check to see that shift lever and pushrod operate freely. Check upper support bracket by measuring from top of bracket to top of mast jacket (should be ⅜" Master Deluxe, 1 3/16" Master), see that mast jacket key enters keyway on bracket, tighten bracket screw securely. Install control shaft through instrument panel bracket and toeboard grommet, assemble counterbalancing spring and lever on lower end of shaft (slip up on D section as far as possible), screw lower support bracket on shaft so that shaft extends 3/16" through bracket, enter upper end of control shaft in upper support bracket, allowing end of counterbalancing spring to drop in behind mast jacket, install lower support bracket on mast jacket and make certain that key on jacket enters keyway on bracket, install bracket cap, tighten screws loosely. Check lever position on mast jacket by placing straight-

CONTINUED ON NEXT PAGE

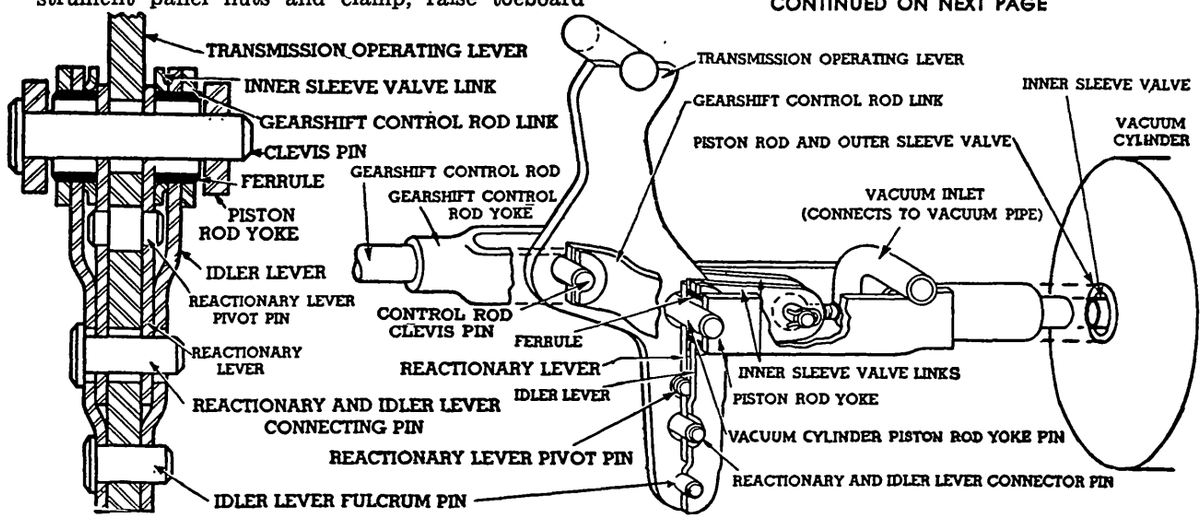

CHEVROLET TRANSMISSION CONTROL (1939)

CHEVROLET 1939 (Cont.)

edge across top of jacket and measuring from straightedge to center of shift lever pivot pin (should be 1 1/32" Master Deluxe, 1 23/32" Master) and adjust by shifting lower support bracket up or down on mast jacket, then tighten lower bracket screws securely. Adjust shift lever on lower end of control shaft so that clearance between lever and upper face of lower support bracket is 3/16", tighten clamp bolt on lever securely and hook end of counterbalancing spring under lever. Engage end of selector lever bell crank in guide, screw guide on selector control rod until clearance between upper face of guide and lower end of control shaft is 1/16", install guide locknut and tighten securely. Check mast jacket height by measuring from top of jacket to shoulder on steering gear shaft (should be 1 17/64" Master Deluxe, 23/32" Master) and adjust by loosening mast jacket clamp at steering gear housing and moving mast jacket up or down. Turn mast jacket until control shaft is in center of instrument panel bracket hole, tighten instrument panel bracket nuts first and mast jacket clamp bolt last. Adjust selector rod and control rod (above).

TRANSMISSION LEVER LINKAGE DISASSEMBLY: Remove clevis pins from control rods and wires around end of transmission operating lever rubber boot, remove boot. Remove clevis pin from vacuum cylinder piston rod yoke and lever system, remove two shift control rod links (with bushing sleeves on which vacuum cylinder control valve links are mounted), push piston rod back into cylinder and install clevis pin through piston rod yoke and valve links (this will prevent valve links turning and upsetting valve adjustment). Take out transmission case cover capscrews, remove cover, idler lever fulcrum pin and connecting pin, dismantle levers.

Servicing—Wash cover and levers in gasoline, inspect for wear at pin holes and any burrs or roughness preventing free movement. Check transmission shifter interlock for free movement of selector, and see that shifter mechanism operates freely.

Reassembly—Coat reactionary and idler levers lightly with graphite grease, install reactionary lever pivot pin in operating lever, assemble reactionary levers and idler levers, installing clevis pins and cotter pins. Install transmission cover on case, making certain that shifter interlock ends fit into slots in shifter yokes and that cover capscrews are tightened securely. Remove piston rod clevis pin, pull rubber boot forward on yoke so that valve links extend beyond yoke, connect valve links by pushing bushing sleeves (on control rod links) through eyes in idler levers and valve links. Push piston rod yoke forward over reactionary levers, line up link holes and install clevis pin and cotter pin. Coat inside of leather boot lightly with graphite grease, install boot over reactionary levers, install shift control rod, line up holes in control rod clevis, boot washers, and control links, install clevis pin and cotter pin. Secure forward end of rubber boot and operating lever boot with wires. Connect selector control rod. See Adjustment Section above for Selector rod, Control rod, and Vacuum cylinder valve adjustment.

ANTI-RATTLE BUSHING INSTALLATION (FIRST CARS):—To correct rattles at control rod swivel connection on lever, install new lever No. 3650931 or drill out swivel connection hole in lever to 9/16" (hole in old lever was 25/64"), install new anti-rattle bushing No. 3652244 and use new lock No. 3652249 to retain bushing (pinch ends of lock together securely).

VACUUM CYLINDER REMOVAL: Disconnect piston rod and valve links (see illustration and Transmission Control Linkage above), disconnect vacuum and air hose lines at vacuum cylinder fittings, remove cotter pin, unscrew nut on cylinder stud. Installation—Install rubber cushion and steel retainer on mounting stud, thread stud through lower hole on mounting bracket, install steel retainer, rubber cushion, flat washer, and nut on stud in this order, tighten nut just enough to insert cotter pin. CAUTION—Washers and cushions must be assembled in this order and nut not tightened excessively in order to provide necessary flexibility in cylinder mounting. Connect valve links and piston rod yoke. When installing vacuum hose, make certain that clampscrew is toward rear and vertical (to provide clearance for speedometer cable).

Vacuum Cylinder Lubrication:—Disconnect vacuum hose at vacuum stack, shift transmission into second gear (to open vacuum port to forward end of cylinder), pour ½ oz. Shock Insulating Fluid into cylinder through stack, allow transmission to stand for several minutes (to allow fluid to drain into cylinder). Shift transmission into third gear (to open vacuum port to rear end of cylinder), repeat lubrication. After several minutes, shift transmission between second and third gears several times to work fluid into piston leather, connect hose.

Air Cleaner Servicing:—At 10,000 mile intervals, remove cleaner, wash in gasoline, dip in engine oil before re-installing.

TROUBLE SHOOTING:—Sticky or sluggish Shift—Check shift lever for binding by disconnecting selector control rod and moving lever up and down. If lever does not return to lower position freely, check pivot pins for binding in housing, gear shift lever clearance in bracket, burrs or roughness in bracket, rubber anti-rattle bushing on selector push rod binding in control shaft, selector rod bell crank binding in lower support, incorrect clearance between selector rod guide and control shaft, bent selector push rod, selector lever binding in transmission cover. See Servicing Steering Column Unit above for assembling directions.

Hard Shifting—Check vacuum line for leaks (if shift hard in all gears), check vacuum hose clamp for interference with speedometer cable (if shift hard in high gear only), lubricate vacuum cylinder (see Vacuum Cylinder Servicing above), remove leather boot on lever system (transmission operating lever), clean out old grease and lubricate with graphite grease (see Transmission Control Linkage servicing above for lever assembly).

Creeping out of Gear—Check vacuum hose clamp for interference, check shift linkage and lever system for binding or sticking, adjust vacuum cylinder valve (see Adjustment above).

Blocking out of Gear—Check selector lever on transmission case for full stroke by disconnecting rod and moving lever and rod full distance in both directions. If selector rod too long (caused by bending), install new rod. If lever movement in forward direction insufficient, check steering column unit assembly (see Steering Column Servicing data above for dimensions). Check vacuum hose clamp for interference.

Excessive lash in Shift Lever—Tighten clamp bolt connecting shift control lever to control shaft. This lever must be firmly locked to shaft.

CHEVROLET 1940-48

All Pass. Cars & Sedan Del. (1940 to 1948)

▷NOTES, CAUTIONS, & CHANGES

▷Gearshift Lever Rattle Correction: Caused by play at swivel in upper support and should be correct as follows: Install special Gearshift Control Anti-rattle Spring, #606418, by snapping spring over gearshift control shaft and steering mast jacket at point immediately below instrument panel mast jacket clamp. This 'S' shaped spring will correct rattle without causing drag on control shaft.

▷Gearshift Lever Flutter (Idle or High Speed) Correction—May cause jumping out of High Gear at high speed. To correct, install Vacuum Cyl. Valve Friction Spring, No. 3655072, as follows: Slip forward end of rubber boot off rear end of metal boot over reactionary levers, take out two bolts fastening halves of metal boot together and remove top half. Remove piston rod yoke clevis pin and disconnect piston rod yoke and valve link from reactionary levers. Pull out vacuum cylinder valve rod, snap friction spring in place on rod about midway between valve and valve rod guide with spring 'prongs' pointing out toward clevis pin yoke, reassemble rods and boot.

▷Cabriolet Cars (1941-42) Vacuum Cylinder Tubing. An "S" shaped piece of tubing was used to connect vacuum lines near the X-member to prevent interference and damage to vacuum line at this point on these models only and rubber hoses must be cemented to this tube (no cement used on first 1941 cars). When installing units, use sufficient cement (Chevrolet #378727—Melflex or U. S. Rubber Cement Type M-5036, #121177—Inter-coastal SMR-2218) to provide good seal at both ends of tube and rotate tube so that no interference exists before cement sets.
CAUTION—Cement tube on all early 1941 cars which were not cemented in production.

DESCRIPTION

DESCRIPTION: Vacuum assistor, with gearshift lever mounted on steering column and vacuum power cylinder mounted on bracket at left side of transmission case. Design changed from type used on 1939 models as follows (new vacuum cylinder mounting used on 1942 and later models only):

Gearshift Lever (Steering Column Unit)—One shaft only is used (in tubular housing on steering column) and operates both selector (cross-shift) rod and gear engagement (vacuum cylinder) rod. Gearshift lever is new type and lifts up on control shaft when lever lifted into Low-Reverse position.

Vacuum Cylinder & Linkage—Reactionary lever assembly now riveted together and covered by metal boot. Mounting changed to provide for new type side-mounted transmission shift mechanism. Vacuum cylinder operates in same manner as 1939 type.

Transmission Case Shifter Mechanism—New type shifter mechanism mounted in side cover on transmission case. See Chevrolet Transmission article for shifter servicing data.

Vacuum Cylinder Mounting (1941 On). Bracket is separate part mounted on left side of transmission case by three bolts (was integral part of universal joint ball collar). This new mounting permits rear axle and universal joint to be disassembled without disturbing shift mechanism.

CONTINUED ON NEXT PAGE

CHEVROLET 1940-48 (C ntinu d)

ADJUSTMENT: If operation unsatisfactory or shift mechanism dismantled for servicing, adjust as follows:

Steering Column Control Assembly—See Servicing data below for dimensions to which parts should be set up when assembled.

Selector Rod—Loosen check nut on selector rod adjustment (at lower end of steering column), pull selector rod forward as far as possible, adjust swivel on rod by screwing it up or down on rod so that distance between lower side of steering wheel and top of gearshift lever is 1 27/32" with selector rod connected to selector control lever. Install washer and cotter pin on swivel pivot and lock adjustment by tightening selector rod check nut.

Control Rod (Gear Engagement Rod)—Set gearshift lever in horizontal position, loosen checknut on control rod. Push control rod to rear until all clearance has been taken up and note location of swivel with reference to shift control lever, then pull rod forward until all clearance has been taken up and again note swivel location. Neutral valve position is midway these two positions. Hold control rod in this neutral position, adjust swivel position on control rod (screw swivel up or down on rod) until swivel pivot just enters hole in shift control lever. Install flat washer and cotter pin on swivel pivot, lock adjustment by tightening control rod check nut.

STEERING COLUMN UNIT DISASSEMBLY & REASSEMBLY: The gearshift lever can be removed without completely disassembling unit as follows:

Gearshift Lever Removal—Place shift lever in Reverse, depressing pivot pins 3/32" and then lifting up and out on lever. To remove anti-rattle spring and pivot pin spring, compress legs of pivot pin spring and lift up. When reassembling gearshift lever, coat control shaft ball with graphite grease, install anti-rattle spring in control shaft ball and over neck of control shaft, thread pivot pins on ends of spring and in holes in gearshift lever swivel, thread gearshift lever over this assembly, compress pivot pins and press down on top of lever until pivot pins snap into place.

Disassembly—Disconnect gear engagement control rod and selector rod at lower end of steering column by taking out cotter pins and removing flat washers. Remove clamp bolt on shift lever at lower end of control shaft, remove lever and spring. Remove horn button and steering wheel nut, pull steering wheel (use puller J-1618 to protect shaft threads). Remove instrument panel steering column jacket clamp. Take out two screws in upper support on steering column jacket, pull control shaft and upper support up and out of lower support. If gearshift lever to be removed, see preceding paragraph for directions.

Lower Support Bushing Servicing—If bushing worn, press old bushing out, press new bushing in until distance from face of support to lower end of bushing is 19/64".

Reassembly—Screw gearshift lever swivel into upper support until shoulder on swivel extends approximately ⅛" above support. Install control shaft by threading it through upper support and swivel. Install gearshift lever (see above). Install lower support on steering column jacket and see that key engages slot, tighten clamp bolts just snug (excessive tightening will collapse jacket). Screw upper support up or down on swivel until clearance between lower edge of gearshift lever and top of support is 3/32-⅛". Thread toeboard grommet over control shaft, install control shaft through lower support and attach upper support to steering column by installing two screws. Install spring and lever on lower end of control shaft making certain that end of selector operating lever is engaged in slot on control shaft lever, install clamp bolt and tighten securely. With steering wheel removed, check distance from top of horn blowing ring on mast jacket to top of shoulder on steer-gear shaft. Distance should be 1¼" (plus 1/32", minus 0"). If not correct, loosen mast jacket clamp at steering gear housing, move mast jacket up or down as required, tighten clamp. Adjust Control Rod and Selector Rod (see Adjustment above). Check distance from upper face of control shaft lever to lower face of lower support bracket on steering column. If this distance not ¾", adjust by loosening lower support clamp bolts and moving support up or down on steering column.

CAUTION—Do not tighten support clamp bolts excessively which will collapse steering column jacket.

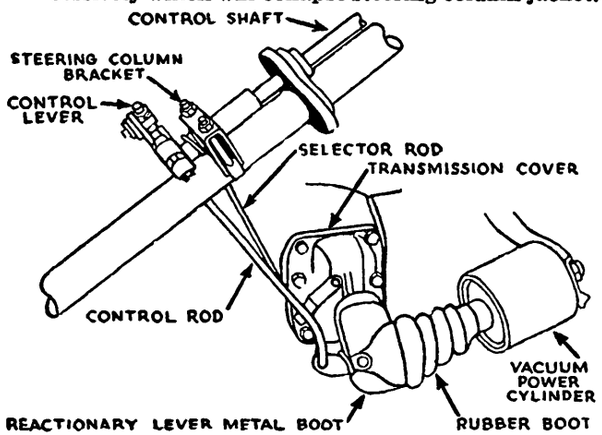

TRANSMISSION LEVER LINKAGE DISASSEMBLY:

Note—Reactionary lever assembly is of riveted construction and cannot be disassembled (service as an assembly).

Disassembly—Disconnect shift control rod from reactionary lever assembly, remove vacuum hose from vacuum inlet stack and slip forward end of rubber boot off rear end of metal boot. Remove two screws holding metal boot halves together, lift off outer half of boot. Take out piston rod yoke clevis pin, push cylinder rod into cylinder to disconnect it from reactionary lever, then re-install clevis pin to prevent valve adjustment being disturbed. Loosen operating lever clamp bolt, pull reactionary lever assembly off operating lever shaft, remove second half of metal boot.

Servicing—Clean reactionary lever assembly with clean gasoline, examine rubber seal at front of metal boot and replace if damaged.

Reassembly—Coat reactionary levers lightly with graphite grease, place inner half of metal boot on operating lever shaft, thread rubber seal over idler lever, install reactionary lever assembly on operating lever shaft to point just beyond chamfered end of shaft and tighten clamp bolt. Pull piston rod forward and connect yoke and valve link to reactionary levers, install piston rod valve clevis pin. Assemble outer half of metal boot and install the two retaining screws. Slip end of rubber boot over rear end of metal boot, install vacuum hose and shift control rod.

VACUUM CYLINDER REMOVAL: Disconnect both the vacuum and air hoses, remove outer half of the metal boot and disconnect piston rod and valve links from reactionary levers (see Servicing Transmission Lever Linkage above for directions). Take off cotter pin and nut on cylinder mounting stud, remove vacuum cylinder.

Installation—Install rubber cushion and steel retainer on mounting stud, insert stud through hole in bracket, install steel retainer, rubber cushion, flat washer and nut on stud, tighten nut just sufficiently to allow cotterpin to be installed (mounting must be flexible). Connect piston rod yoke and valve link to reactionary levers, install vacuum and air hoses.

Vacuum Cylinder Lubrication:—Must be removed from car as directed above (cannot be lubricated on car). Stand the cylinder on the mounting end, pull valve link forward to open valve, pour ½ oz. shock absorber insulating fluid into cylinder through vacuum inlet stack. Push valve rod into cylinder as far as possible, pour additional ½ oz. of fluid into vacuum inlet stack. Allow time for fluid to flow into cylinder, then work piston rod in and out several times and turn rod at same time to spread fluid over cylinder walls and piston leather. NOTE—Cylinder can be washed out by following directions given above using 2 ozs. of fluid and draining fluid by inverting cylinder and moving valve rod until fluid flows out. Repeat until fluid drained from cylinder is clean (cylinder need not be lubricated after this process completed).

Vacuum Cylinder Valve Adjustment:—If vacuum valve adjustment disturbed by dismantling or servicing operations, adjust as follows: Disconnect piston rod and valve link from reactionary levers (see Servicing Transmission Lever Linkage above for directions). Install special adjusting bushing J1452-5 within valve link and re-install clevis pin. Run engine to provide vacuum source. Move valve link out or away from cylinder until all clearance between link and adjusting bushing is toward front of car, piston rod should move out of cylinder slowly in this position. Then move link in toward cylinder until all clearance between link and adjusting bushing toward rear of car, piston rod should move into cylinder in this position. If piston rod moves out but does not move in, valve link should be screwed out on valve rod. If piston rod moves in but does not move out, valve link should be screwed in on valve rod. To adjust, remove clevis pin and change valve link position ½ turn at a time until correct operation is secured.

Valve Friction Spring Installation:—To install spring, remove outer half of reactionary lever boot and disconnect reactionary levers from vacuum cylinder (see Transmission Lever Linkage Disassembly directions above), pull out on valve rod in vacuum cylinder, snap friction spring in place on rod midway between valve and valve rod guide with closed end of spring toward back of cylinder, push valve rod back into place, connect r actionary levers and replace metal boot.

NOTE—This spring necessary to prevent 'flutter' in gearshift lever at idling speed.

Air Cleaner Servicing:—At 10000 mile intervals, remove cleaner, wash in gasoline, and dip in engine oil before re-installing.

CHRYSLER, DE SOTO, DODGE & PLYMOUTH 1939

CHRYSLER, MODELS C22,C23,C24 (1939)
DE SOTO, MODEL S6 (1939)
DODGE, MODEL D11 (1939)
PLYMOUTH, DELUXE MODEL P8 (1939)

TYPE:—Remote control type with gear shift lever on steering column under steering wheel and gear shift tube (operating shaft) within steering column jacket. Special type steering column jacket is used which consists of two halves bolted together at a flanged joint (in front of the dash) which is slotted for the lever attached to the lower end of the shift lever tube. This lever is linked to the shift lever on the transmission case by a control rod (for gear engagement) and also operates the selector cable (for cross-shift) through a plunger on the steering column below the lever. Plunger and cable assembly is spring-loaded by a spring behind the rail shift lever on the shift lever shaft in the transmission case so that selector cable and plunger assembly normally in Second-High position.

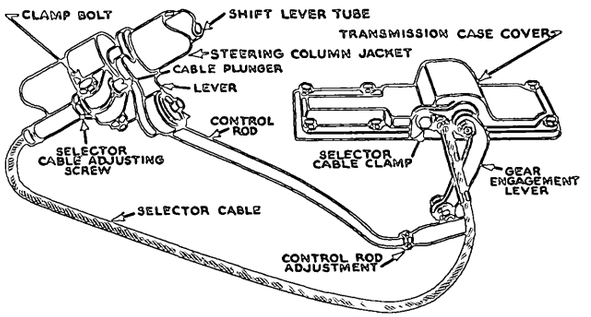

ADJUSTMENT:—Control Rod (Gear Engagement)—Remove nut and disconnect control rod from lever on side of transmission case. Make certain that transmission gears are in neutral and that steering column shift lever is in neutral position (mid-point of stroke where up-and-down movement for cross-shift is possible). Loosen locknut at adjustable joint on transmission end of control rod, turn joint on rod until ball joint stud freely enters hole in lever with lever moved back approximately ⅛" toward rear to take up all free movement (all models except Chrysler C23, C24), or exactly centered with free movement divided toward front and rear (Chrysler C23, C24), tighten locknut and connect rod.

Selector Cable (Cross-shift)—Make certain that steering column shift lever in neutral position, loosen clamp bolt locking adjusting nut in steering column jacket flange, back adjusting screw out until play or clearance is evident between end of plunger and steering column tube lever plate, then turn screw in just enough to take up this clearance, tighten clamp bolt. CAUTION—Do not turn adjusting screw in more than enough to eliminate plunger endplay (will cause plunger and plate to wear).

SERVICING STEERING COLUMN UNIT:—Disassembly—Remove steering wheel. Remove screws holding draft pad to dash, pull pad 6" up on steering column jacket, remove screws holding steering column clamp to instrument panel bracket, free hand brake and overdrive control cables and overdrive control bracket from steering column. Loosen clamp bolt and remove selector cable adjusting nut from steering column jacket flange, disconnect control rod at steering column lever. Take out capscrews holding upper and lower sections of steering column jacket together, pull upper section with gear shifter tube assembly off at upper end of steering gear shaft. Remove screws on lower face of shift lever housing (hold housing in place by hand to prevent loss of shift lever ball and spring), lift housing off, remove spring and ball from under shift lever. Remove nut on upper end of shift lever tube, remove shift lever, withdraw tube from lower end of jacket.

Reassembly—Reverse disassembly directions above. Bushings are press fit in column jacket and should be removed with a puller. NOTE—If draft pad to be removed, coat lower end of column jacket with thin film of soft soap and work pad off.

SERVICING TRANSMISSION UNIT:—Disassembly—Take out selector cable mounting screw, pull cable assembly out of transmission cover, disconnect control rod at lever on transmission case. Remove transmission case cover. To remove shift lever and shaft, remove nut on opposite end of shaft from lever, pull shaft and lever assembly out, lift out rail shifter lever and spring.

CAUTION—Do not remove shift lever from shaft which will destroy alignment between lever and keyway in shaft which positions rail shifter lever (shifter finger). Lever and shaft serviced as an assembly only.

CHRYSLER, DE SOTO, DODGE 1940

CHRYSLER, MODEL C25 ROYAL & WINDSOR ('40)
CHRYSLER, C26 TRAVELER, SARATOGA, NEW YORKER (1940)
CHRYSLER, MODEL C26 CROWN IMPERIAL ('40)
DE SOTO, MODEL S7 CUSTOM & DELUXE (1940)
DODGE LUXURY LINER, D14 DELUXE, D17 CUSTOM (1940)

TYPE:—Same design as used on 1939 cars except as follows:

Transmission Case Shifter Mechanism—New design built in side cover on transmission case. Gear engagement finger or lever is mounted on vertical shaft which is connected to steering column gearshift tube lever by control rod. This gear engagement lever is normally in lower position on shaft (held down by spring on shaft above lever) in engagement with Second-High shifter shaft, and is lifted so as to engage the Low-Reverse shifter shaft by the lever on the horizontal cross-shift shaft to which the cross-shift selector cable is attached. Entire shifter mechanism is assembled in side cover and may be removed for servicing by taking out cover attaching screws. For servicing directions, see Chrysler Transmission article.

ADJUSTMENT:—Control Rod (Gear Engagement)—Disconnect control rod from lever at lower end of steering column control tube. See that transmission gears and shift lever on transmission case in neutral (can be determined by feel of detent balls engaging neutral notches in shifter shafts). Place gearshift lever approximately 10° above horizontal and hold in this position. Adjust control rod length so that it slips freely over pin on control tube lever, tighten locknut, replace cotter pin, flat washer and rubber grommet.

Selector Cable (Cross-shift)—Place gearshift lever in neutral position, see that transmission gears in neutral. Loosen locknut on selector cable at transmission selector lever (rear lever on transmission case side cover), tighten acorn nut on cable until all play removed from cable, then back off ½ turn for clearance, tighten locknut.

SERVICING:—Note—Steering gear assembly must be removed from car to permit gearshift control to be dismantled.

Disassembly—With steering gear out of car and steering wheel removed, remove steering wheel upper column bushing (use Puller C-580), remove nut on upper end of gearshift tube (special wrench C-595). Take out bolts in flanges and separate upper and lower steering gear jacket halves. Remove upper column jacket from steering gear shaft and remove control tube through lower end of jacket. Gearshift lever assembly may then be removed through slot in side of upper column jacket.

Assembly—Assemble by reversing disassembly directions given above. Do not lubricate bushings (3 used) in upper column jacket and use special drift, Tool C-581, to install upper bushing in upper end of housing. Adjust control rod and selector cable as directed above when control installed on car.

Transmission Case Shift Mechanism—See Chrysler Transmission article for servicing instructions.

PLYMOUTH 1940

ROADKING MODEL P9, DELUXE MODEL P10 ('40)

This Control not similar to type used on 1939 cars.

TYPE:—Remote control type with steering column mounted gearshift lever. Design not same as type used in 1939 and consists of new steering column unit and new transmission unit as follows:

Steering Column Unit—Gearshift lever mounted on pivot stud screwed in upper support bracket on steering column and pinned to external control shaft mounted in brackets on steering column (not within column jacket as in 1939). Control shaft has cable connection (for cross-shift) and lever assembly (for gear engagement) mounted on lower end and is normally held in the upper (Second-High) position by return spring on lower end. When gearshift lever lifted up for Low-Reverse engagement, control shaft is forced down and actuates cross-shift cable which is connected to rear lever on transmission case. Control shaft lever assembly consists of a lower adjusting lever and upper idler lever to which connnecting rod is attached. Levers are clamped together by clampscrew and may be adjusted after clampscrew has been loosened.

Transmission Case Shifter Mechanism—Same design as on other Chrysler models.

ADJUSTMENT:—Control Rod (Gear Engagement)—Loosen lock bolt clamping levers together at lower end of control shaft on steering column, see that shift lever on transmission case side cover is in neutral position (can be determined by feel of detent balls engaging notches in shifter shafts). Place gearshift lever approximately 10° above horizontal and hold in this position while tightening lever clamp bolt.

Selector Cable (Cross-shift)—Place gearshift lever in neutral position, see that transmission gears are in neutral. Loosen locknut on selector cable at transmission selector lever (rear lever on transmission case side cover), tighten acorn nut

CONTINUED ON NEXT PAGE

PLYMOUTH 1940 (C ntinu d)

on cable until all play removed from cable, back nut off ½ turn for clearance, tighten locknut.

SERVICING:—Disassembly of Steering Column Unit—Remove horn button, horn wire, and steering wheel. Disconnect rod on lever at lower end of control shaft, disconnect selector cable and remove levers and spring from shaft. Remove attaching screws in upper support bracket on steering column—CAUTION—screws have nuts on inner end which must be held while screws taken out and then removed to prevent them dropping down in steering gear jacket which would necessitate steering gear removal from car to recover these nuts. Pull control shaft and gearshift lever assembly up and remove from car. To disassemble gearshift lever, press in on bearing pins on both sides of lever (pins assembled with spring between them), withdraw pivot stud. Drive out clevis pin and remove gearshift lever from control shaft.

Assembly—Reassemble by reversing dissembly directions given above. Make certain that spring and ball assembled in pivot stud and that flat antirattle installed on upper end of control shaft in gearshift lever. Adjust control rod and selector cable as directed above after control installed on the car.

CHRYSLER, DE SOTO, DODGE & PLYMOUTH 1941-48

Chrysler 6 & 8, All Models (1941 to 1948)
De Soto, All Models (1941 to 1948)
Dodge, All Models (1941 to 1948)
Plymouth, All Models (1941 to 1948)

NOTE:—Power Shift—Power shift with vacuum power cylinder is Optional Equipment on all models. This type is adjusted differently. See separate article (following) for Power Shift adjustment.

Vacamatic, Simplimatic, & Hydraulically Controlled Transmissions—Special controls are used in conjunction with these optional transmissions. See articles on these transmissions for control data.

DESCRIPTION: Remote control with gearshift lever mounted on steering column. Steering column unit is new design (not same as 1940 type) with gearshift rod at right side of steering column (not within column jacket as on 1940 cars). On all models except Plymouth, steering column and shift rod are enclosed by additional casing extending from upper lever pivot bracket to edge of instrument panel. Gearshift lever is mounted on bushing in pivot bracket (shift control rod slotted at this point to clear bearing) so that the lever pin engages the yoke on the outer end of the control rod. Control rod is mounted in bushings at upper and lower ends (upper bushing in gearshift lever pivot bracket, lower bushing in mounting collar on steering column jacket). Gear engagement lever bolted on lower end of control rod is linked to shift lever on transmission case by two rods with an idler lever mounted on bracket on flywheel housing between the front and rear rods (this idler lever not used on Dodge and Plymouth models with one shift rod only). A collar on the lower end of the control rod engages the selector lever pivoted on the steering column and linked to the cross-shift lever on the transmission case by a single rod. A spring installed on the control rod below the steering column bushing collar holds the control rod down so that the selector lever and rod is in the Second-High position except when gearshift lever is raised for Low-Reverse engagement which pulls control rod up against spring tension and rotates the selector lever and rod to the Low-Reverse position.

Transmission Case Shifter Mechanism—Refer to Chrysler Transmission article for complete data.

ADJUSTMENT:—Control Rod (Gear Engagement) — Loosen nut on control rod connector stud on lever at lower end of steering column control rod, make certain that transmission gears and shift lever are in neutral position (can be determined by feel of detent balls engaging neutral notches in shifter shafts), see that steering column gearshift lever is horizontal, tighten stud nut securely (stud hole in lever is slotted to permit this adjustment).

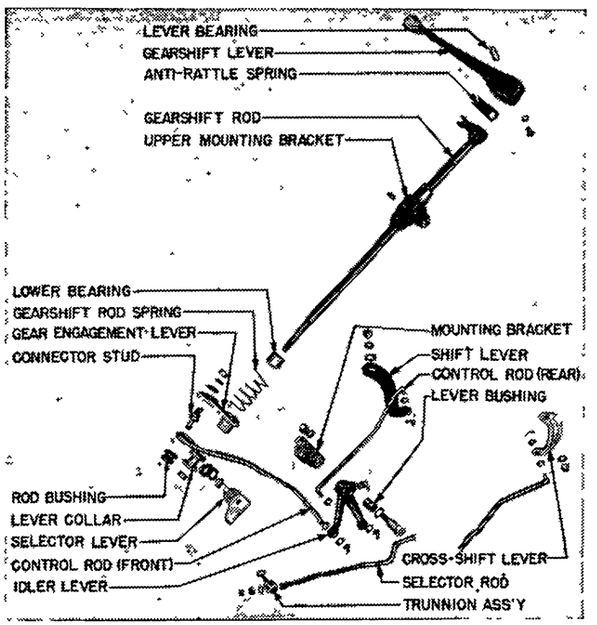

Selector Rod (1941 Models)—See that transmission gears are in neutral position. Adjust selector rod as follows: On all models except Plymouth, loosen locknut on forward end of selector rod at trunnion on steering column selector lever, tighten adjusting nut until all play removed from rod and lever, then back nut off ½ turn to provide correct operating clearance, tighten locknut. On Plymouth, loosen locknut on rear end of selector rod at transmission case cross-shift lever, tighten adjusting nut on rod to take up all play, back nut off ½ turn and tighten locknut.

Selector Rod (1942-48): See that transmission gears are in neutral position. Adjust selector rod as follows: On all models, loosen locknut on forward end of selector rod at trunnion on steering column selector lever, tighten adjusting nut until all play removed from rod and lever, then back nut off ½ turn to provide correct operating clearance, tighten locknut.

SERVICING:—Disassembly—Remove horn button, horn wire and steering wheel. Disconnect selector rod and gearshift rod at steering column. Take off nut on lower end of control rod and remove rod end (selector lever collar), lever and spring from lower end of rod. Take out two screws attaching gearshift lever pivot bracket to steering column (except Plymouth). Gearshift lever and control rod can then be withdrawn at upper end of steering column except that on 1941-42 DeSoto & Dodge cars, remove attaching bolts and separate steering column bracket at dash, then withdraw gearshift lever and control rod as an assembly. On Plymouth models, remove gearshift lever (see below), then withdraw control rod at upper end without disturbing lever pivot bracket. Install control rod in same manner and adjust rods as directed above.

Gearshift Lever Removal—To remove lever from control rod, remove shift lever bearing and screw from lever and pivot bracket. Press down on end of lever so that end clears control rod, then pull lever out to disengage lever pin from fork on rod. Install lever in same manner.

Idler Lever Lubrication—Idler lever on bracket on left hand side of clutch housing has regular lubrication fitting and should be lubricated at 6000 mile intervals with semi-fluid chassis lubricant to prevent lever sticking which will cause hard shifting.

CHRYSLER, DE SOTO, DODGE & PLYMOUTH 1941-42 POWER SHIFT

Chrysler 6 & 8, All Models (1941-42)
DeSoto, All Models (1941-42)
Dodge, All Models (1941-42)
Plymouth, All Models (1941-42)

TYPE:—Power shift consists of a vacuum power cylinder linked to the gear engagement rod at the transmission case so that all of the effort required to shift gears is supplied by the power cylinder. Power is not used for the selector rod or cross-shift mechanism and this operates in the same manner as on the standard manual gearshift.

Steering Column Control—Design is same as used on cars without power shift (see preceding article) and is serviced in same manner. Adjustments are not made in same manner and rods should be adjusted as directed below.

Power Linkage—Consists of a valve lever, reaction lever and relay lever assembly pivoted on a shaft on a bracket bolted on the left side of the transmission case. Control rod from steering column control rod lever is linked to valve lever and an additional short non-adjustable rod is linked between the relay lever and the shift lever on the transmission case.

Power Cylinder—Consists of an internal-valve type vacuum power cylinder mounted on a bracket at the left of the transmission case with the piston rod linked to the relay lever so that power is applied to transmission case shift lever. Control valve is located within piston rod with valve rod extending out though piston rod and linked to lever assembly. Vacuum line (from manifold) is connected to inlet pipe extending out through side of piston rod boot and air intake hose from cylinder is connected to air cleaner mounted on frame.

1942 Type Changes:—Powermatic control on 1942 car models differs from type used on 1941 cars in the following respects:

Idler Lever (Bellcrank)—Mounted on bracket on left side of clutch housing and connected to gear engagement rods (two rods used).

CONTINUED ON NEXT PAGE

CHRYSLER, DE SOTO, DODGE & PLYMOUTH 1941-42 POWER SHIFT (Continued)

Neutral Detent Spring Adjustment—Not used on 1942 cars and adjustment not required.

Power Cylinder Lever Boot—Lower end of levers protected by two-piece leather boot which is laced together with wire. Boot must be removed to disassemble levers or make adjustments.

ADJUSTMENTS:—Note—Leather boot on lower end of levers must be removed before levers can be adjusted or disconnected. Remove by taking out wire CAUTION—Boot must be re-installed when adjustment completed. See important Caution below when making adjustments. Before making adjustments, see that all linkage moves freely and does not bind at any point, lubricate all linkage bearing points. See that piston rod boot is intact and that vacuum line and air line connections are tight. Examine air cleaner and clean filter element if required. Make Neutral Adjustment and also adjust valve if gear engagement is slow or sluggish in either direction (Low & High or Second & Reverse).

Power Cylinder Valve Adjustment—To adjust valve, remove piston rod boot, take out valve rod clevis pin (which links valve rod clevis to lever assembly), shorten valve rod by turning clevis in on rod (if Low or High shift sluggish), lengthen valve rod by turning clevis out on rod (if Second or Reverse shift sluggish) one-half turn at a time, reconnect valve rod by inserting clevis pin and check performance (too much adjustment will cause shift to be sluggish in the other direction). Repeat adjustment until performance is satisfactory in both directions. If proper performance cannot be secured, lubricate power cylinder (see Servicing below) or replace power cylinder assembly.

ADJUSTMENT CAUTION—Always jack up rear wheels free of floor and securely block in this position when making adjustments. This is particularly important when running engine to supply vacuum for power shift performance tests as tests may result in gear engagement which would cause car to move. This is particularly important if work being performed under car.

Neutral Adjustment (1941 Models)—Adjustment locates boss on detent spring (mounted on lever bracket) in relation to notch in valve lever which is connected to steering column shift control rod. Adjust with engine running to supply vacuum and with rear wheels jacked up so that car will not move if gears are engaged. Disconnect selector rod and loosen detent spring mounting bolt (see Note below). Move power lever and links back and forth slightly and at same time move selector lever until a positive and clean 'cross-over' is felt at neutral position. Hold levers in this position, move detent spring so that boss indexes with notch in lever and tighten detent spring bolt. Connect selector rod and adjust this rod as follows: On all models except Plymouth, loosen locknut and tighten adjusting nut on forward end of selector rod (at trunnion on steering column selector lever) until all play has been taken up in rod and lever, then back off nut ½ turn for correct operating clearance, tighten locknut. On 1941 Plymouth, loosen locknut at rear end of selector rod (at transmission case cross-shift lever), tighten adjusting nut until all play taken up, then back off nut ½ turn and tighten locknut. Check performance.

Detent Spring Note—Two types of detent springs have been used. First type consisted of a flat spring with boss for lever notch engagement. Second type consists of a ball and spring assembly to provide more positive detent action. Both types are adjusted alike as directed above.

NOTE—Neutral detent spring is not used on 1942 car models and above adjustment is not required on these cars.

SERVICING:—Power shift serviced as a unit and service parts furnished for boots and linkage only. Vacuum power cylinder should be serviced by replacement as a unit.

Power Cylinder Lubrication — Power cylinder must be removed from engine for lubrication. To remove, remove leather boot, disconnect vacuum line and air cleaner line at cylinder. Take out power pin linking piston rod yoke to relay lever (pin should be re-inserted as soon as lever freed from yoke to prevent valve clevis turning on rod which would disturb valve setting). Remove nut on anchor stud at mounting bracket on rear end of cylinder, remove cylinder from engine. Clamp cylinder in bench vise in horizontal position (clamp at mounting stud). Locate piston rod in midposition, press in on valve rod and pour ½ oz. of shock absorber fluid or ice machine or transformer oil in vacuum inlet pipe. Allow sufficient time for oil to run down into cylinder, pull out on valve rod and pour in additional ½ oz. of oil. This will lubricate both sides of piston. Work piston through full travel several times, rotate piston in cylinder meanwhile so that oil distributed over entire cylinder and piston packing surfaces. Re-install power cylinder on car, replace leather boot. Inject ½ oz. semi-fluid chassis lubricant into boot.

Air Cleaner—Should be cleaned and re-oiled at 10000 mile intervals or more frequently if car operated in dusty territory. To service cleaner, remove two screws mounting cleaner on frame, remove cleaner element, clean element in kerosene, re-oil by dipping in SAE. #50 engine oil and re-install on car.

Idler Lever—Idler lever on left side of clutch housing fitted with regular lubricaton fitting. Lubricate at 6000 mile intervals using regular semi-fluid chassis lubricant.

Transmission Case Shifter Mechanism — Same type as used on cars with standard shift control. See Chrysler Transmission article.

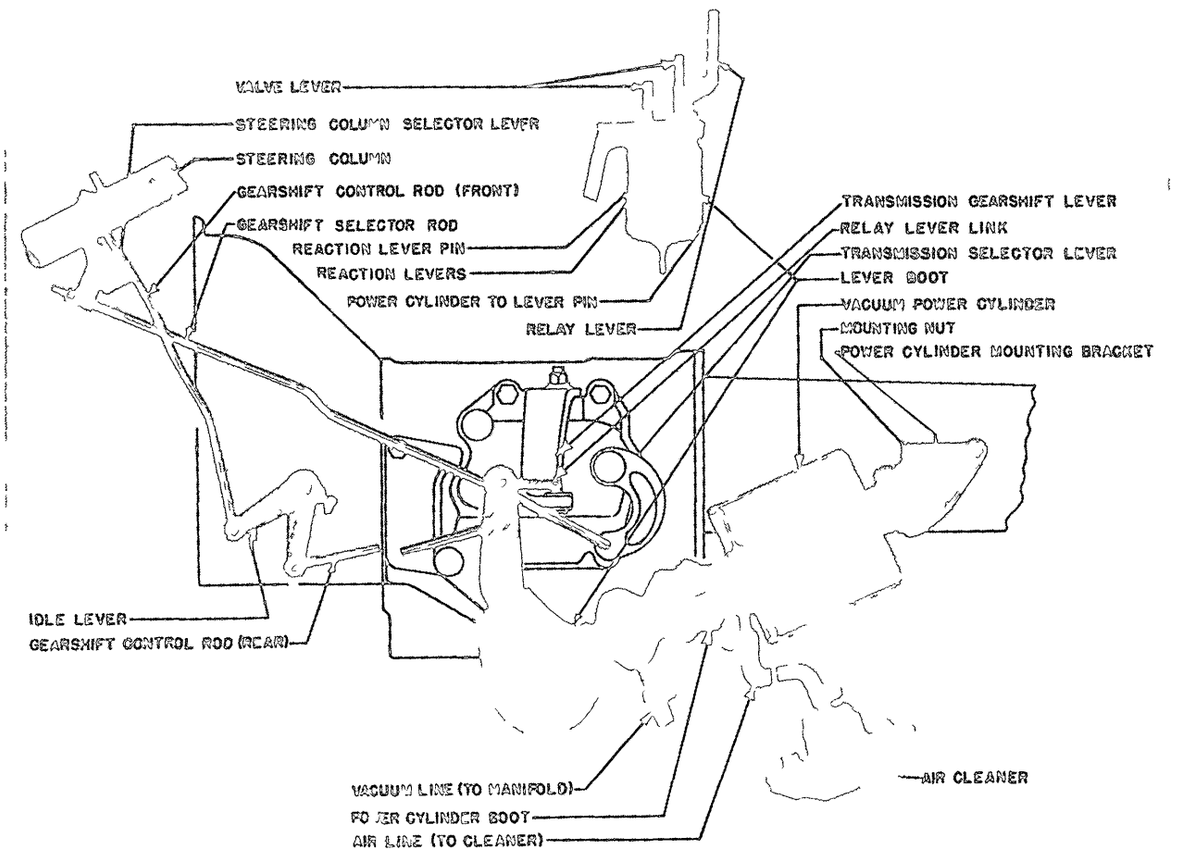

CHRYSLER, DE SOTO, DODGE, PLYMOUTH "POWERMATIC" TRANSMISSION CONTROL

FORD, LINCOLN, MERCURY

FORD MODELS
6 Cyl. Passenger Cars (1941 to 1949)
V8 Passenger Cars (1940 to 1949)
LINCOLN MODELS
All Models (1940 to 1949)
MERCURY MODELS
All Models (1940 to 1949)

NOTE:—Lincoln & Mercury Models with Liquamatic Transmission—Steering column gearshift control on cars with Liquamatic Drive is similar to type used with standard 3-speed synchro-mesh transmission for which data is given below.

Lincoln and 1949 Ford & Mercury Linkage Adjustment Note—On these models, adjusting clevises or trunnions are located at forward end of control rods (lower end of steering column). On 1948 and previous Ford & Mercury models, adjusting clevises are located at transmission case end of rods.

DESCRIPTION: Remote control with steering column mounted gearshift lever. Used in connection with transmission having special shifter mechanism on transmission case side cover which consists of separate Low-Reverse (rear) shift lever and Second-High (front) lever. Steering column unit consists of a control tube with a clutch pin at the lower end which normally engages the lower (second-high) lever on the steering column. When the gear shift lever is raised to engage Low or Reverse, the control tube is lifted up so that the clutch pin engages the upper (Low-Reverse) lever. These levers are connected to shift levers on transmission case by adjustable control rods.

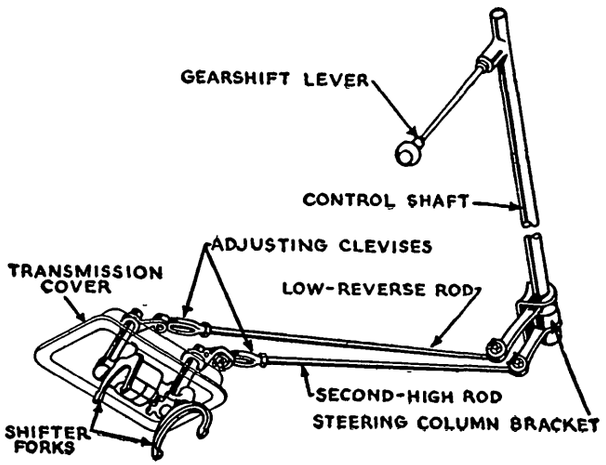

ADJUSTMENT:—Adjustment should be checked whenever steering column position is changed or when linkage disconnected. Before making adjustments, make certain that both shift levers on transmission case are in neutral with detent balls engaging neutral notch in shifter shaft sectors (can be determined by feel with control rods disconnected). Disconnect Low-Reverse control rod at adjustment end (see Note), loosen locknut and adjust clevis on end of rod so that gearshift lever moves up and down freely (cross-shift at neutral) with control rod connected. Second-High control rod will not ordinarily require adjustment. Make certain that gearshift lever has full travel in both directions so that gears are fully engaged (detent balls should engage end notches in shifter shaft sectors with gears engaged).

NOTE—Adjusting nuts on control rods are located at transmission end of rods (1948 & previous Ford and Mercury), steering column end of rods (All Lincoln and 1949 Ford & Mercury). When making adjustments, rods should be disconnected at end at which adjustment is located.

SERVICING:—Steering Column Unit—Steering column unit is mounted on steering column by retainer clamped in bracket bolted on column and can be dismantled after bracket has been loosened and retainer setscrew removed. Gearshift lever is pivoted on pin in control tube elbow and inner end engages fulcrum pin within upper end of control tube. If assembly dismantled, make certain that spring installed at lower end of fulcrum pin and that bushing and boot installed on upper end of fulcrum pin when it is reassembled. Sleeve type insulator should be installed on end of gearshift lever before lever is installed.

Transmission Case Shifter Mechanism—See Transmission article for servicing data.

HUPMOBILE

ALL MODELS (1939-40)

NOTE:—Transmissions used with this type control are conventional except for shifter linkage in transmission case cover. See separate articles for Transmission servicing data.

TYPE:—Remote control type with shift lever mounted on steering column beneath steering wheel. Shift lever linked by control rod to lever on side of transmission (for gear engagement) and by selector cable to small lever on transmission case cover (for cross-shift). Backward and forward movement of the shift lever actuates the control rod and gear engagement lever on the transmission case, up and down movement of the shift lever actuates the selector cable and small cross-shift lever on transmission cover. Normal position of the shift lever is in the lower (second-high) range and it must be lifted to engage low or reverse.

ADJUSTMENT:—Control Rod (Gear Engagement)—See that rods are properly connected at idler bell crank on frame side rail (bell crank short lever must point forward and be connected to steering column lever, bell crank long lever must point up and be connected to transmission lever). Disconnect forward control rod at lever on lower end of steering column. Set steering column shift lever in neutral position and parallel to dash. See that gear engagement lever on transmission case is in neutral position (determine by feel of detent engagement). Loosen locknut and adjust coupling on threaded end of control rod so that hole in rod coupling lines up with ball stud on steering column lever, tighten locknut and connect rod.

Selector Cable (Cross-shift)—See that cable conduit mounting bracket nuts on transmission cover are tight. Place steering column shift lever in neutral position of second-high range (lever mounted down away from steering wheel and parallel to dash). Disconnect cable from lever on transmission cover by removing nut on ball stud, place lever in second-high (forward position), loosen locknut and adjust coupling on threaded end of selector cable so that ball stud lines up with second hole from end of cross-shift lever, tighten nut and connect cable to lever.

FRAZER & KAISER

Frazer, All Models (1947-48)
Kaiser, All Models (1947-48)

DESCRIPTION: Remote control with steering column mounted gearshift lever under the steering wheel. Steering column unit consists of a single control tube mounted on brackets on steering column with lower end of tube engaging one or the other of the two levers mounted at this point. These levers are linked to shifter shaft levers on transmission case by rods which have adjustment at transmission case end. Control shaft is normally held down in the lower position (Second-High position). Shaft is raised by lifting up on gearshift lever (for Low-Reverse position).

ADJUSTMENT: With gearshift lever in neutral, disconnect both control rods at transmission case, align levers at lower end of steering column by installing aligning pin (¼" drill rod) through hole in each lever and hole in bracket. See that each of the shifter shafts on the transmission is in neutral position (can be determined by feel of detents engaging neutral notch in shaft). Adjust each rod at transmission end by means of clevises provided so that shifter shafts will be in neutral position with steering column levers aligned with aligning pin. After adjustment completed, remove aligning pin from steering column levers.

GRAHAM 1939-41

GRAHAM, 96, 97 (1939), 107, 108 (1940)
GRAHAM HOLLYWOOD, 109 ('40-41), 113 ('41)

NOTE:—Transmission used with this control similar to other 'Horizontal' types except for shift mechanism (two levers on cover on side of case—forward lever for cross-shift, rear lever for gear engagement). See separate article for complete Transmission servicing data.

TYPE:—Remote control type with shift lever mounted on steering column. Shift lever pivoted on bracket on steering column so that up-and-down motion of lever actuates selector (cross-shift) shaft and rod linked to forward lever on transmission case, while backward-and-forward motion of lever rotates control shaft and moves lever and rod linked to rear (gear engagement lever on transmission case).

ADJUSTMENT:—Adjust both control rods at transmission lever (rear end) as follows:

Cross-shift Linkage—See that steering column shift lever in normal neutral position, remove clevis pin linking rod to forward cross-shift lever on transmission, loosen locknut on clevis. Pull transmission lever up (forward) as far as possible, adjust clevis on control rod so that clevis pin can just be inserted without disturbing position of transmission lever or steering column shift lever, tighten clevis locknut.

Gear Engagement Linkage—Loosen both nuts on control rod at rear gear engagement lever on transmission. Place steering column shift lever in second gear position (push lever as far forward as possible). Move transmission case lever forward as far as possible, hold in this position and turn down top nut on control rod until lower face of nut is exactly 3/16" from face of square trunnion block on lever then tighten lower nut securely.

GRAHAM (EVANS VACUUM)

GRAHAM STD. & SPEC., MODEL 96 (1938)
GRAHAM SUPERCHARGER, MODEL 97 (1938)

NOTE:—Transmission used with this type shift control is similar to standard model except for shifter mechanism. See Graham Transmission article for servicing data.

TYPE:—Remotely controlled, manually operated, mechanical gear shift with vacuum booster. Control unit on dash consists of miniature gear shift linked to selector lever on transmission (for cross-shift to engage Low-Reverse or Second-High shifter rails) and to valve operating lever (intermediate lever) on shift lever (for gear engagement). Gears can be engaged by dash shift lever when engine is not running (to start car by towing or coasting with gears engaged) although in normal operation dash shift lever merely operates cross-shift and Operating Valve and actual gear engagement effected by Vacuum Cylinder which is linked directly to shift lever. Operating Valve is combined piston and diaphragm type linked to intermediate lever on shift lever (to which dash shift lever also connected) and controls air and vacuum admission to each end of Vacuum Cylinder. When dash shift lever moved forward (Reverse or Second Gear), or backward (Low or High Gear), this motion first operates valve which admits air to one end of vacuum cylinder but without cutting off vacuum connection to opposite end (cylinder normally vacuum-suspended) so that piston moves toward vacuum end of cylinder and resultant shift lever movement engages gears. The intermediate lever moves with the shift lever and tends to balance the vacuum cylinder so that the piston follows the dash shift lever movement exactly. When shift is completed (or dash shift lever movement stopped), piston remains stationary in that position until new shift is made by the dash shift lever (or lever is returned to neutral).

CHECKING & ADJUSTMENT:—Whenever adjustment required due to unsatisfactory operation, removal or replacement of units, or linkage being disconnected, check and adjust entire mechanism in order as given below.

Operating Valve Linkage:—Remove clevis pin in lever at lower end of vertical shaft on dash (to disconnect dash control unit). Check operation of shift cylinder and operating valve linkage (intermediate lever and shift lever). Free linkage if it is binding. Remove clevis pin at rear end of operating valve plunger, see that plunger moves freely and has maximum travel of 5/16". If plunger binds, loosen large mounting nut at rear of valve assembly, if this frees plunger, check gaskets between nut and bracket and between bracket and valve body (these gaskets installed to prevent misalignment of valve which might cause plunger to stick). If linkage and valve plunger operate freely, connect plunger to intermediate lever by installing clevis pin.

Dash Gear Shift Unit Linkage:—Disconnect selector rod at lever on forward side of dash (lower dash unit rod) by taking out wire 'hairpin' and freeing trunnion from lever. Tighten nut on selector lever on left side of transmission case (forward lever). Operate dash shift lever and make certain that linkage is free in all positions. Check for excessive play in lever, adjust by turning nut at shift lever end of lower connecting rod under instrument panel.

Linkage Neutral Setting:—With all linkage operating freely, and with rod at lower end of vertical shaft still disconnected, operate engine to furnish vacuum to shift mechanism. This will cause Operating Valve and linkage to automatically assume correct neutral position. Place dash shift lever in neutral position, adjust connecting rod at lower end of vertical shaft by loosening locknut and turning clevis at forward end of rod until rod can be connected to lever on shaft without disturbing position of shift lever or valve and vacuum cylinder linkage, tighten clevis locknut and install clevis pin. If this adjustment correctly made, selector rod and lever should move freely throughout entire travel (for cross-shift which is only possible at neutral position).

Selector Rod Setting:—Move dash gear shift lever to one side of slot at neutral as far as possible without springing lever, hold in this position and pull selector rod in same direction to limit of travel, adjust swivel block or trunnion on upper end of rod so that is can be installed in hole on dash unit lever without disturbing position of linkage, install trunnion and fasten with lock wire.

Checking Vacuumatic Shift Operation:—After making adjustments listed above, operate gear shift in all positions, watch linkage action and make certain that no interference exists at any point.

SERVICING:—**Vacuum Cylinder.** To remove cylinder, disconnect both vacuum lines at cylinder, take out clevis pin at forward end of piston rod, take out cotter pin and remove nut holding cylinder on attaching bracket, remove cylinder. Install cylinder in same manner, adjusting piston rod length before installing clevis pin as follows:

Vacuum Cylinder Adjustment—With vacuum cylinder piston rod disconnected, move transmission shift lever to extreme rear or reverse position, push piston into cylinder until it bottoms, loosen locknut and adjust piston rod length by turning clevis until rod is ⅛" too short to line up with hole in shift lever (one half of shift lever hole should be visible through piston rod clevis), pull piston out of cylinder until holes line up and install clevis pin.

Operating Valve:—To remove valve assembly, remove clevis pin at rear end of valve plunger, disconnect vacuum lines at valve by loosening hose clamps, take off large nut at rear end of valve body, remove valve assembly. If new valve being installed, remove air cleaner unit from top of old valve and install on new unit. When installing valve, make certain that gasket is in place between valve body and mounting bracket and also between bracket and large mounting nut, **leave nut slightly loose until all adjustments made.** Connect vacuum lines, align valve so that air cleaner points to left and vacuum line connection from engine manifold is on top, operate shift in all positions to make certain that linkage does not strike vacuum pipes or connections, then tighten the large mounting nut. Install clevis pin at rear end of valve plunger, make certain that there is no bind at this point, adjust selector and shift linkage as directed in 'Adjustment' section above.

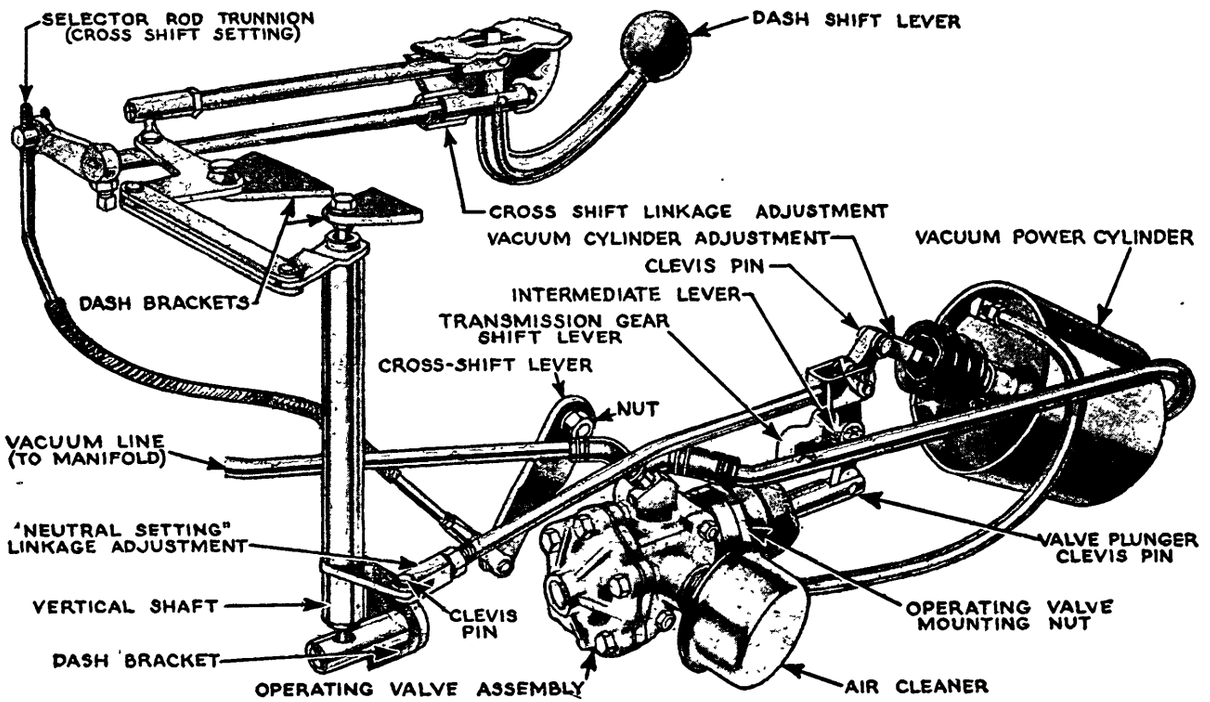

RAHAM 1938 (EVANS) VACUUM TYPE TRANSMISSION CONTROL

CORD REMOTE CONTROL GEARSHIFT

CORD, MODELS 810 (1936), 812 (1937), SUPERCHARGED MODEL 812 (1937)

TRANSMISSION NOTE:—Transmission is unconventional in that drive in all four speeds is through transmission gears (no direct drive—pinion mounted directly on end of countershaft). Gears engaged through three shifter rails on right hand side of transmission case by forward-and-backward motion of shifter shaft lever (cross-shaft at front of case) and are selected by endwise motion of the shaft to engage one of the shifter rails. Shaft is normally engaged with center (Second-Third) rail and moves to the left to engage the Low-Reverse rail, or to the right to engage the Fourth Speed rail. Neutral position secured by centralizing shift lever (power piston centralized by neutral switch).

OPERATION:—Cord transmission control is of the pneumatic type (utilizing manifold vacuum) with electrical control of the vacuum cylinder valves. Transmission is not conventional and the control is not entirely similar to other Bendix types. Forward and backward motion of the shift lever to engage gears is effected by the double-acting 'Power Cylinder' mounted on the transmission case cover. Control of the vacuum connection to each end of the cylinder is effected by a solenoid operated valve in the Selector Valve Assembly (#1 solenoid for forward or First-Third engagement, #2 solenoid for backward or Reverse-Second-Fourth engagement). Power cylinder piston is normally centered in cylinder in neutral position (See Neutral Switch below).

Endwise movement of the shift lever shaft to engage shifter rails effected by Diaphragm Cylinder on shifter shaft on front of transmission case on right side. Diaphragm normally centered by springs within case so that shifter shaft engages center (Second-Third) shifter rail. Control of vacuum connection to each end of diaphragm cylinder effected by solenoid operated valves in Selector Valve Assembly (#3 solenoid for left hand or First-Reverse engagement, #4 solenoid for right hand or Fourth speed engagement).

All solenoid controlled valves are mounted as an assembly on the right side of the transmission case and have a common vacuum line connection (at front of unit) and air intake (at rear of unit). Valves are poppet type and are normally held down at lower end of stroke by spring at upper end of valve plunger when solenoid is not energized (vacuum cut off and cylinder open to atmosphere). Valves are pulled up when solenoid is energized (cutting off air and opening vacuum port so that air is evacuated from cylinder). Solenoid circuits are controlled by Selector Switch, Clutch Pedal Cutout Switch, Interlock Switch, and Neutral Switch (in Power Cylinder) as follows:

Selector Switch—Located on steering column below steering wheel. Consists of a gate type switch lever which duplicates conventional shift lever motion to pre-select gear position (or neutral) which is next desired (lever must be raised against spring tension before it can be shifted to 'Reverse' and is shifted to the right and forward to the 'Fourth' position from a point between Third and Neutral). This selection may be made at any time and no shift occurs until the clutch pedal cutout switch contacts are closed by depressing the clutch pedal.

Clutch Pedal Cutout Switch—Located on left side of engine and linked to clutch throw-out shaft so that circuit is open when clutch is engaged and is closed only when pedal depressed to disengage clutch. Acts as a main switch for transmission control circuits and shift will occur when clutch disengaged if new gear position has been set on selector switch since last previous clutch disengagement. Startix 'IGN' lead connected to cutout switch so that Startix operative only with clutch disengaged and Transmission Control operative.

Interlock Switch—This switch interrupts circuit from selector switch to power unit solenoid valves to insure a cross shift in neutral (from one shifter rail to another) if this is necessary in order to secure the gear engagement set on the selector switch. Interlock switch lever is linked to Diaphragm Cylinder shaft (shifting shaft) and will close a new set of circuits after Diaphragm Cylinder operates so that the shift to a different gear position will be completed. Interlock switch does not operate as long as shifts are confined to a single shifter rail (Reverse-low or second-third).

Neutral Switch—Located in end of Power Cylinder. Consists of central stationary contact and two movable contact arms each connected to one power cylinder solenoid valve. Neutral switch operating lever in cylinder is linked to contact arms so that both sets of contacts are open when piston is centralized in cylinder. Movement of cylinder in either direction from center allows one set of contacts to close and when stationary contact is 'live' (as will normally be the case with selector switch lever in neutral) solenoid valve will be energized and vacuum connection made at one end of cylinder so that piston will be drawn back toward center. At center position circuit will be broken by movement of operating lever.

ADJUSTMENT:—Mechanical adjustments provided for each unit of Transmission Control. Make these adjustments in order noted below. Check adjustments by jacking up front end of car, removing splash shield over driving unit, and running engine so that control can be operated and performance noted.

Clutch Pedal Cutout Switch Adjustment—With motor running, depress clutch pedal fully, note whether circuit through cutout switch completed (can be checked readily by moving selector lever back and forth in neutral from Reverse-First to Second-Third end of slot and noting if shifter cross shaft moves accordingly). If no action noted, connect test lamp between red wire terminal on cutout switch and ground. Lamp should light. If lamp does not light, adjust switch by removing clevis pin from operating rod and turn clevis rod until lamp lights. If adjustment cannot be secured check line from cutout switch to ignition switch, check cutout switch for open-circuit, replace if necessary. Release clutch pedal slowly until clutch begins to engage, then release pedal ⅛-¼" more, hold in this position, adjust cutout switch rod length by turning clevis so that switch contact just broken (lamp will go out at this point).

Power Cylinder Adjustment—With motor running, place selector switch in neutral, depress clutch pedal fully, see that transmission is in neutral. Remove clevis pin connecting shift lever and piston rod, adjust clevis on end of piston rod so that pin can be inserted freely in clevis and hole in shift lever. Insert pin, move piston backward and forward to point where considerable pressure back toward center is noted (neutral switch coming into action). Travel in each direction should be approximately equal and transmission should be in neutral when piston comes to rest in center position. This test checks Neutral Switch operation as well as power cylinder adjustment.

CONTINUED ON NEXT PAGE

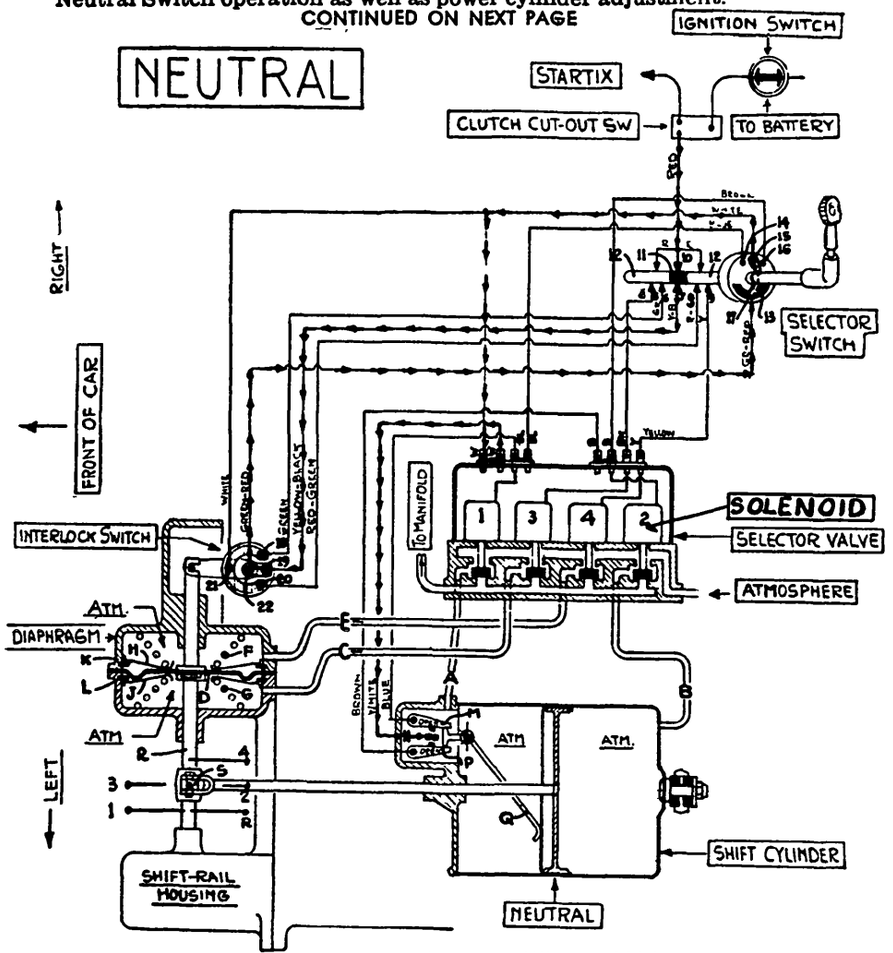

CORD TRANSMISSION CONTROL WIRING DIAGRAM

CORD REMOTE CONTROL GEARSHIFT (Cont.)

Interlock Switch Adjustment—Remove green wire with red tracer on Interlock Switch, connect test lamp to this wire and ground lamp on transmission case. With motor running, place selector switch in neutral, depress clutch pedal fully, move transmission shift lever by hand to extreme left hand position, allow lever to come back slowly toward center neutral position, note point at which test lamp lights and travel from this point to center neutral position. Repeat test by moving lever to extreme right hand position and noting travel from point where lamp lights to center neutral position. Travel should be the same on each side. Adjust by loosening four screws mounting interlock switch on diaphragm housing, move switch sideways, tighten screws, repeat test. With correct adjustment lamp should light at approximate midpoint of travel between extreme right or left hand position and center or approximately 1/8-3/16" from center position.

SERVICING:—Repair operations to clutch cutout switch, interlock switch, and solenoid assembly are not recommended by manufacturer and entire unit should be replaced if satisfactory performance not secured by adjustment.

HUDSON & TERRAPLANE 1936 ELECTRIC HAND

HUDSON, SIX MODEL 63 (1936), EIGHT MODELS 64, 65, 66, 67 (1936)
TERRAPLANE, MODELS 61 DELUXE, 62 CUSTOM (1936)

NOTE:—See following article for improved type Electric Hand on late 1936 cars.

DESCRIPTION:—The Electric Hand Automatic Transmission is of the pneumatic type (utilizing manifold vacuum) with electric control of the vacuum cylinder valves. The transmission is entirely conventional and shifting of gears is effected by the usual shift lever (a 'stubbed' lever is used but an extension for the lever is provided for hand shifting). The actual engagement of the gears is effected by the large 'Shift Cylinder' located on the left side of the transmission case (backward and forward movement of the shift lever). A smaller 'Diaphragm Cylinder' located above the Shift Cylinder controls the right and left movement of the shift lever necessary to engage Reverse-Low or Second-High shifter rails (this is similar to the right and left movement of the hand shift lever in 'neutral').

Selector Switch—Located below steering wheel on steering column. Consists of a gate type switch lever which duplicates the conventional shift lever movements to pre-select the gear position (or neutral position) which is next desired. This selection may be made at any time as no action results until the clutch pedal circuit breaker is closed. A cutout switch is located on the Selector Switch housing. This switch is normally closed and is opened only to cut out automatic shift when hand shifting used.

Clutch Pedal Circuit Breaker—New type push-pull switch replacing rotary type used previously. Switch provides 'lost-motion' necessary for correct closing and opening of the circuit.

Transmission Shifter Rail Lock Bars—New feature on 1936 type. Consists of spring loaded plunger and ball detent which engages notch in shifter rail and prevents shifter rail movement until clutch is disengaged which raises lock bar and releases ball plunger. One lock bar mounted on each side of transmission case and operated by adjustable linkage from clutch throw-out shaft. See adjustment below.

Contact Plate Assembly—Contact plate sliding block now operated by rod connected to plate at lower end of shift lever (first type sliding block mounted directly on this plate). Sliding block has been redesigned and consists of six contact fingers pivoted individually on block and held in contact with plate by coiled springs on pivot rod.

Interlock Switch—Located on clutch housing and connected to the Diaphragm Cylinder lever. Does not operate as long as no cross motion of the shift lever is required (for example, in shifting from Low to Reverse, or Second to High). When this cross motion is required, the second set of circuits (to move shift lever from neutral to the new gear position) are completed by the rotation of the Interlock Switch spider as the Diaphragm Cylinder completes the cross motion of the shift lever.

Power Unit Solenoid Valves—Valves have been redesigned and are now poppet type. Valves are held at upper end of stroke (cutting off vacuum and admitting air to cylinder) by spring at lower end of valve plunger when solenoid is not energized, and are pulled down (cutting off air and opening vacuum port) when solenoid is energized. Air cleaner element in valve assembly cover has been discontinued and air connection is by means of a separate tube connected to the lower end of the carburetor air cleaner.

ADJUSTMENT:—Mechanical adjustments provided for each unit. All adjustments should be checked, in order given below, whenever Electric Hand is serviced or when settings are disturbed by work on engine, clutch or transmission.

Clutch Pedal Circuit Breaker—Circuit through switch should not be completed until clutch is disengaged with pedal depressed half way to floor board (to avoid gear clash caused by engine driving car when shift is made). To adjust, take out clevis pin in linkage at circuit breaker, loosen locknut on rod, turn clevis. With correct setting, notch on forward end of circuit breaker rod should be flush with housing. Transmission shifter rail locks must be released when circuit breaker makes contact (see shifter rail lock adjustment below). Circuit breaker contact must not be broken until clutch has started to engage to insure gears meshing when car is not in motion and gear teeth strike). Check by running engine, shifting transmission into low or reverse, engaging clutch slowly. Car should start to move before 'click' of cross shift linkage, which indicates circuit breaker contact broken, is heard.

CONTINUED ON NEXT PAGE

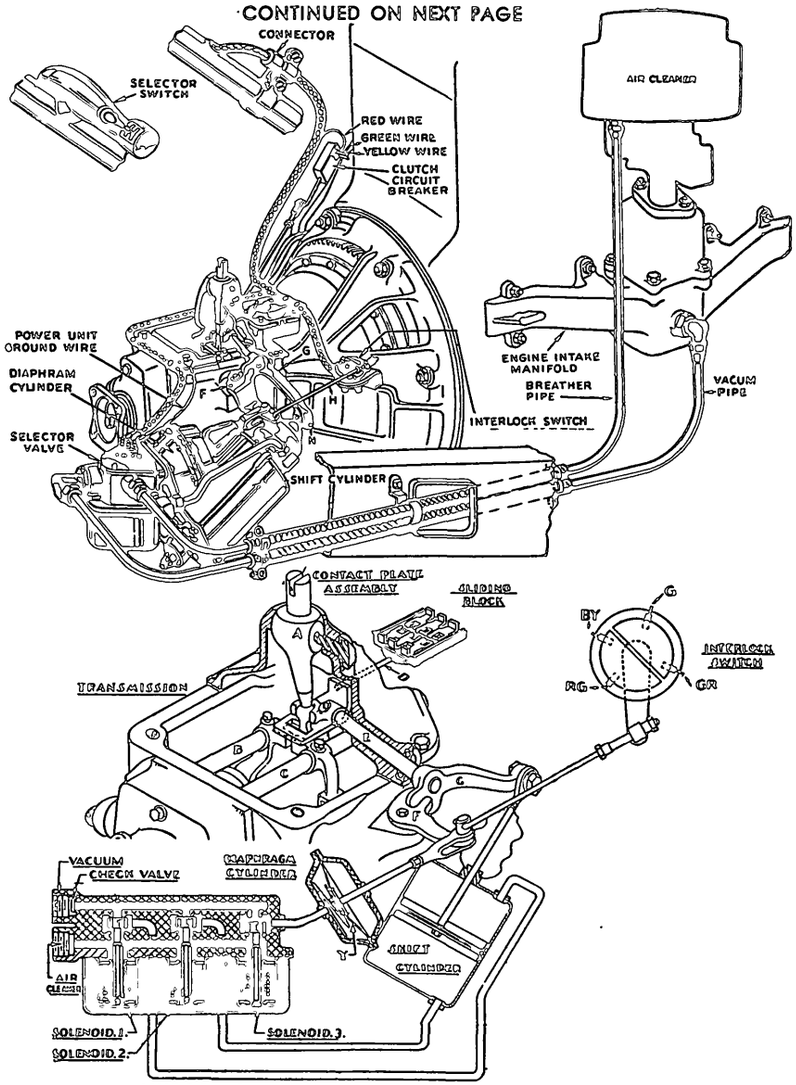

HUDSON & TERRAPLANE 1936 ELECTRIC HAND

HUDSON & TERRAPLANE 1936 ELECTRIC HAND (C nt.)

Transmission Shifter Rail Locks—Shifter rail locks (on each side of transmission case) must be released when circuit breaker contact made. Check by depressing clutch pedal to point where circuit completed through circuit breaker (halfway to floor—see paragraph above). Shifter rail lock bar link should be raised so that notch in link is opposite end of plunger in transmission case. Adjust by turning nut on link operating rod at lever on throw-out shaft (this adjustment provided at each lock link. Check to see that lock link drawn down so that plunger is held in when clutch is engaged. This is important to prevent transmission jumping out of gear. If lock links not drawn down with transmission in gear and clutch engaged, recheck lock setting (above), check power cylinder piston rod length, check circuit breaker contact opening point. If this does not correct lock action, use Lower Harness Test Lamp Set and check contact plate position to determine whether power cut off before shift completed (see Testing below).

Power Unit Mounting—Power unit must have sufficient clearance so that it does not strike frame 'X' member and must be lined up so that power cylinder piston rod enters fork of shifting lever freely with transmission in high (forward) or second (rearward) position. Maximum clearance secured by pushing up on unit while tightening nuts on studs which hold mounting bracket on transmission. Power unit cylinder mounting stud nut should be tightened just enough to insert cotter pin. This will insure maximum flexing of rubber mounting blocks for alignment.

Power Cylinder Piston Rod Adjustment—Piston rod movement must be sufficient to complete shifts in either direction. To adjust, place transmission in high gear, hold shift lever forward to take up all lash, take out pin linking piston rod to shift lever, pull piston all the way forward, loosen locknut on piston rod, turn rod eye out until it is ¼" farther forward than hole is in shift lever, tighten locknut. Check adjustment by placing transmission in second gear, hold shift lever backward to take up all lash, push piston all the way in, see that piston rod eye is ¼" farther back than hole in shift lever. Line up eye and shift lever hole by pulling piston out slightly, insert pin.

Diaphragm Cylinder (Cross Shift Control Mechanism) Adjustment—With transmission in high or second gear, remove clevis pin from diaphragm cylinder rod yoke at cross shift bell-crank. Spring in diaphragm cylinder should move rod and yoke ¼" farther forward. Loosen locknut and turn yoke until rod must be moved ¼" back in order to insert clevis pin. Hold clevis from turning while tightening clevis locknut to avoid damaging diaphragm. Shift transmission to all gear positions, see that bell-crank contacts lobe on shift lever only at outer end of bell-crank fork and that mechanism does not bind. Check action of stub shift lever on transmission case cover to see that fulcrum dowel screw does not bind in lever ball groove. First type dowel screw (Part No. 35442) was 23/32" long and a 1/16" plain washer was assembled under the head in addition to the lock. Dowel screw later changed to Part No. 151787 which is 21/32" and washer omitted. Washers must be used with first type screw to prevent binding.

Interlock Switch Adjustment—Check by using Electric Hand to shift transmission into low and then into high or second. Interlock switch lever must line up with reference line on switch cover marked 'S/H' when these shifts completed. To adjust, loosen jam nut on forward end of switch rod, turn adjusting sleeve (head of sleeve directly behind switch lever), tighten jam nut. Shift transmission to low, back to high, recheck switch. Operation of switch can be checked with Lower Harness Test Lamp Set in Testing section below (circuit in switch should change at same distance from end of cross shift travel in each direction).

Contact Plate Adjustment—Lower Harness Test Lamp Set must be used to check operation of main contact plate. See directions in Testing section below.

TROUBLE SHOOTING:—Complete testing of the Electric Hand requires the use of a Master Selector Switch to check Selector Switch and upper wiring harness, a Power Unit Test Cable to check shift mechanism or Power Unit, and a Lower Harness Test Lamp set to check the lower wiring harness and switches (this must be used in conjunction with a Selector Switch which is known to be operating satisfactorily). Directions for use of this test equipment is given under 'Testing' below. Before making complete tests, check following points:

1. See that Cutout Switch on Selector Switch is closed or 'on'.
2. Check transmission by hand shifting in all positions. See that lever moves into each gear position freely with clutch pedal depressed to point where circuit breaker circuit is closed (starter will be operative). Adjust Interlock straps on transmission if necessary. See that correct lubricant is used in transmission case and that shifting is not being retarded by oil which is too heavy for prevailing temperatures.
3. Check vacuum line and fittings. If hard shifting experienced in cold weather, check power cylinder for gasoline condensation from manifold. If this trouble experienced, shift vacuum line connection from lower to upper hole on manifold (upper hole for automatic clutch connection, if clutch not used hole closed by plug, if clutch installed use tee connection. Use plug to close lower manifold hole.
4. Check wiring harness for breaks or damaged insulation, check connections on Interlock switch, Contact Plate Junction Block (check soldered connections, see that terminals are not shorted to cover, examine for broken parts, note condition of contacts), Selector Valve Junction Block, and Steering Column Jack (remove covers by twisting with jack assembled, check soldered connections within covers).
5. Check Circuit Breaker setting (see Adjustment above). Test for short-circuit by pressing starter button with clutch engaged. If starter operates, replace circuit breaker. Test for open-circuit by pressing starter button with clutch pedal depressed. If starter operates, circuit through circuit breaker is satisfactory. If starter does not operate, connect test lamp between yellow wire terminal on circuit breaker and ground. If lamp lights,

CONTINUED ON NEXT PAGE

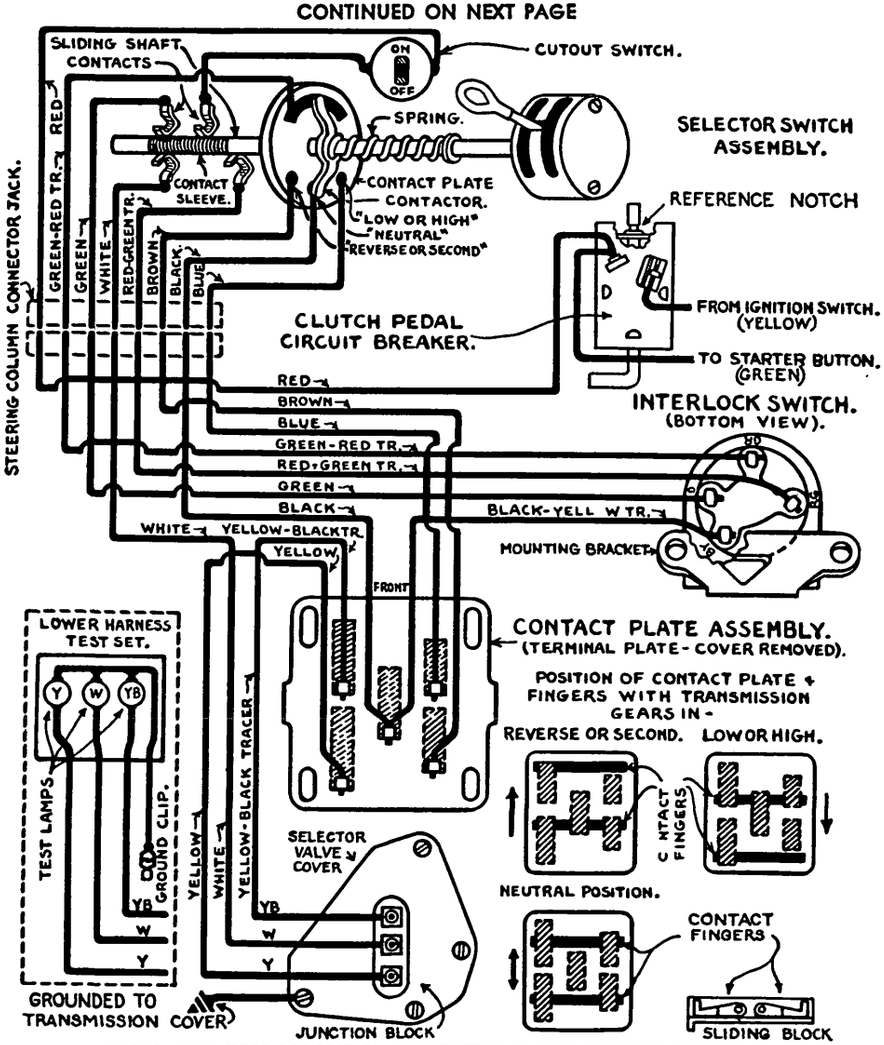

HUDSON & TERRAPLANE 1936 ELECTRIC HAND WIRING DIAGRAM

HUDSON & TERRAPLANE 1936 ELECTRIC HAND (Cont.)

circuit breaker is open and should be replaced. If lamp does not light, check wire from circuit breaker to ignition switch for open-circuit.

6. Check for short-circuits in Electric Hand by turning on instrument light and shifting into each gear position. If light dims noticeably, a short-circuit is indicated for that position (valve solenoids should draw approximately 2.5 amperes each).

If Electric Hand operation is unsatisfactory after completing these checks, use test equipment and make complete tests outlined below.

Trouble Shooting Table

If transmission fails to shift into or out of any of the gear positions noted below, check the wire indicated for open or short-circuits. A defective selector switch may cause any of the conditions noted and selector switch should first be checked by substituting a master selector switch or a selector switch known to be operating correctly and the Electric Hand operation noted.

1. In or out of any position—Check Red Wire (feed from circuit breaker). If transmission will shift into neutral by moving selector switch to opposite side at neutral, check Green Wire with Red Tracer.
2. Into Low or Reverse—Check White Wire and Green Wire. If transmission shifts to neutral instead of low, check Green Wire with Red Tracer. If cross-shift is still correctly made, check Green Wire.
3. Into Low or High—Check Blue Wire. If transmission also fails to shift out of Second or Reverse, check Yellow Wire with Black Tracer.
4. Into Second or Reverse—Check Brown Wire. If transmission also fails to shift out of Low or High, check Yellow Wire.
5. Into Second or High—Check Red Wire with Green Tracer.
6. Into Neutral—Check Black Wire. Transmission will shift to neutral from Second or High by moving selector switch to left at neutral for the cross-shift.
7. Into or out of some positions except when started by hand—Examine contact plate assembly and see that contact surfaces are clean.
8. Transmission is slow in making any shift involving a cross-shift—Check Black Wire with Yellow Tracer.

TESTING ELECTRIC HAND:—*Selector Switch and Upper Wiring Assembly*—Disconnect Selector Switch jack at lower end of steering column, plug in Master Selector Switch (no ground required). Operate Master Selector Switch to shift into all gear positions. If Electric Hand operates satisfactorily, replace complete Selector Switch and upper wiring assembly (all parts down to and including the upper half of the jack). Test lamp on Master Selector Switch (6-8 volts, 32 cp., must be single contact type) should burn at half-brilliance if circuits are normal. A short-circuit will cause fuse (7½ ampere) to blow and lamp to burn at full-brilliance. When this occurs leave Selector Switch in this position and check all circuits involved for short-circuits. Do not replace fuse until short-circuit has been located and corrected. Use only 7½ ampere fuse for replacement.

Shift Mechanism (Power Unit)—Connect power unit test cable to red wire terminal on circuit breaker. Operate engine with clutch disengaged and rear wheels jacked up so that shifts can be made. Touch the test prod of the test cable to the points indicated and note whether transmission shifts properly (some tests require contacting two terminals on the Selector Valve junction block at the same time). Terminals are designated by the color of the wires attached as follows: 'YB'—terminal toward front of car (yellow wire, black tracer), 'W'—center terminal (white wire, no tracer), 'Y'—terminal toward rear of car (yellow wire, no tracer).

1. Test Prod on YB—Transmission should shift into high gear.
2. Test Prod on Y—Transmission should shift into second gear.
3. Test Prod on W—With transmission in neutral, cross-shift or left-right movement of lever should be made.
4. Test Prod on W and YB—Transmission should shift into low gear.
5. Test Prod on W and Y—Transmission should shift into reverse gear.

If any of these shifts are not made, check valve solenoid by connecting accurate ammeter between terminal and circuit breaker lead (ammeter lead should be merely touched to terminal to avoid damage if solenoid dead short-circuited). Current draw should be approximately 2.5 amperes. Larger current indicates that solenoid is shorted, smaller current indicates an open-circuit. If current draw is satisfactory, examine valve to see that it is free and not sticking in upper position, check for vacuum leakage in valves, lines or shift units. Check units for mechanical drag by disconnecting shift cylinder from lever (G) and Diaphragm Cylinder from bellcrank (F). If units do not operate when disconnected, entire Power Unit (Shift Cylinder, Diaphragm Cylinder, Selector Valve Assembly) must be rebuilt or replaced.

Switches and Lower Wiring Harness—Disconnect wires on selector valve junction block and connect these wires to clips on Lower Harness Test Set in accordance with wire color (see illustration). Attach Test Set ground clip to clean place on engine for good ground connection. Make tests by manipulating selector switch (selector switch must be known to be OK) and shift lever and noting whether correct test lamps light (lamps designated by color of wire connected to leads as for shift mechanism test above). See that ignition is turned on, Cutout switch turned on, and clutch held completely disengaged and make following tests:

1. Place selector lever in neutral (right end of slot). Shift transmission to neutral manually. Lamp 'YB' should light when shift lever moved short distance toward second gear. Lamp 'Y' should light when shift lever moved equal distance toward high gear.
2. Place transmission shift lever in neutral. Move selector lever to low gear position. Lamp 'W' only should light.
3. Place transmission shift lever in neutral. Move selector lever to each gear position in turn. Lamps should light as follows: High gear—'Y', Second gear—'YB'. Low or Reverse—'W' only.
4. With selector lever in each gear position in turn as above (3), complete shift by moving shift lever to same position. Lamps should go out when shift completed except that lamp 'W' will remain lighted with transmission in low or reverse (lamp 'Y' will light momentarily when transmission shifted to low, and lamp 'YB' during shift to reverse—these lamps do not light during test (3) since no vacuum available to operate Diaphragm Cylinder and Interlock Switch which occurs when transmission shifted manually).

If above tests indicate that proper circuits are not being completed (correct lamps do not light or go out at the right time, or additional lamps light), replace Lower Harness. After replacing lower harness, check Contact Plate Assembly adjustment as directed below.

Contact Plate Assembly Adjustment—If lamp 'Y' or 'YB' are lighted with transmission shift lever in neutral (Test 1 above) or if lever movement forward to light lamp 'YB' and rearward to light lamp 'Y' are not equal, contact plate requires adjustment. To adjust, loosen four screws holding contact plate assembly, shift plate slightly to rear (if 'YB' lighted in neutral) or to front if (if 'Y' lighted in neutral) until lamp goes out, tighten screws. With correct adjustment, movement forward and backward to light each lamp should be equal. Screw holes in contact plate are slotted to permit this movement. If plate is not free to move, remove from transmission and carefully cut off locating dowel pins.

Transmission Shifter Rail Lock Action—If correct lock action cannot be secured, connect Lower Harness Test Lamp Set (as directed above), move selector lever to low gear position, depress clutch pedal. Lamps 'W' and 'YB' should be lighted. Shift transmission manually toward low gear until lamp 'YB' goes out, release clutch pedal. Shifter rail lock bars should both drop down. If right hand lock bar is not down, leave clutch engaged and pull shift lever to complete shift, noting movement necessary. If more than slight movement required before lock bar moves down, adjustment of contact plate, replacement of contact plate sliding block, or replacement of transmission cover linkage is required. To determine whether adjustment will correct condition, move selector lever to reverse, depress clutch pedal. Lamps 'W' and 'Y' will be lighted. Move shift lever toward reverse until lamp 'Y' just goes out. Release clutch. If lock bar at right of transmission goes down, contact plate can be moved back slightly for longer contact in low. If lock bar does not go down and considerable shifting lever movement necessary before lock bar goes down, sliding block or linkage in transmission cover must be replaced.

Interlock Switch Setting—Shift transmission to low gear manually, place selector lever in high gear, depress clutch pedal. Lamp 'Y' should light and remain lighted until transmission is shifted manually to neutral. Lamp 'YB' should light when cross shift to second-high side is completed. If lamp 'YB' lights before cross shift is practically completed, interlock switch adjustment is incorrect (see adjustment above). With correct adjustment shift lever travel in either direction at neutral to light lamp should be equal. To check, place selector lever in low, move shift lever to left in neutral, note travel before lamp 'YB' lights. Then place selector lever in high, and shifter lever at extreme left in neutral, move shifter lever to right, note travel before lamp 'YB' lights. Travel in either direction should be equal.

REMOVAL AND INSTALLATION:—*Selector Switch Assembly*—To remove, disconnect connector jack at lower end of steering column by lifting cap from jack until lug is out of groove in jack base, then turn cap ¼ turn. Separate jack halves, unsolder wires on upper half, pull off jack and loom on cable. Take off

CONTINUED ON NEXT PAGE

HUDSON & TERRAPLANE 1936 ELECTRIC HAND (C nt.)

end cap and washer on selector switch, loosen selector housing mounting bolt nut inside housing, slide selector housing downward and remove, withdraw wires from steering column.

To Disassemble—Take out cutout switch cover screws, remove switch plate, lift switch up and unsolder wires, pull wires out of end of housing from which end cap previously removed, insert cotter pin puller through hole to right of cutout switch and press lock ring out of groove in switch base, pull wires and switch base out of housing, remove switch rotor and spring. Remove two screws in 'H' plate cap (selector lever segment), hold cap to right and remove washer retainer, washer, spring, and lever, turn selector switch shaft ¼ turn to right (clockwise facing selector lever end) and withdraw.

To Assemble—Assemble in reverse order as above. See that rotor is inserted with side with three contacts to left and that it slides over tongue on shaft. See that switch base tongue engages groove in bottom of housing, and that locking ring engages groove in housing.

To Install—See that eight wires of selector switch harness are laid out flat side-by-side and do not cross (clips can be used to hold wires). Feed wires down through steering column tube. Install selector switch on steering column so that head of mounting bolt enters wire hole in column, move selector up so that bolt shank engages slot, tighten nut inside selector housing. Pull wires down in steering column so they do not project through end cap hole on selector, install loom on lower end, solder wires to upper half of connector jack. In making connections, designated wire colors must be connected to marked terminals as follows: 'R'—red wire, 'BK'—black, 'G'—green, 'RG'—red with green tracer, 'W'—white, 'GR'—green with red tracer, 'B'—brown, 'BL'—blue.

Contact Plate Assembly:—To remove, take out four capscrews in cover, lift up cover and plate, remove sliding block. Unsolder wires on contact plate if plate to be removed from harness.

To Install—When soldering wires on contact plate lugs, designated wire colors must be connected to marked lugs as follows: 'YB'—yellow wire with black tracer, 'Y'—yellow, 'BY-BK'—black wire with yellow tracer and black wire, 'BL'—blue, 'B'—brown. When inserting sliding block into contact plate guides make certain that driving block on lug is to rear when assembled. Insert one ounce of contact plate grease (No. 48705) in cavity in transmission cover in which sliding block operates before installing assembly.

Power Cylinder:—To remove power cylinder from power unit assembly (with assembly off the car), disconnect vacuum lines, remove three end plate stay-bolts, remove cylinder from assembly.

To Disassemble—Use special tool HMO-12-1 to remove cylinder end plate, remove end plate inner seal, pull out piston and rod assembly, take off piston rod nut, disassemble pistons.

To Assemble—Put felt retainer and piston plate on rod, wrap packing ring around retainer with the felt ring over it, put leather cup packing and center plate on rod to hold felt and packing ring in place, then put second leather cup packing and second plate on rod. Wrap packing ring and felt around second felt retainer, install in place in packing on rod, install piston rod nut, tighten securely and stake in place.

To Install—Saturate leather packing cups and felts in Hudson shock absorber oil until leather is soft and pliable, then install piston assembly in cylinder being careful not to turn edges of packing cups back when inserting. Use new end-plate inner seal and end plate gasket, install end plate, draw down in to place by tightening stay bolt nuts evenly and securely when attaching cylinder to bracket. Test seal by holding thumb on front vacuum line connection and pulling on piston rod. Rod should move out only slightly and air compressed in cylinder should resist further movement.

NOTE—Vacuum line should be disconnected at front of cylinder and one ounce Hudson Shock Absorber Fluid injected in cylinder at 15000 mile intervals to maintain piston seal.

Diaphragm Cylinder:—Mounted on mounting bracket by mounting plug and washer at vacuum connection and can be disassembled without being removed from bracket.

To Disassemble—Remove rod yoke, locknut and rod guard, take out six bolts in flange, remove housing cover and diaphragm assembly. Take off rod nut and disassemble diaphragm.

To Assemble—Reverse operations above. See that spring is seated in flanged plate, and hold diaphragm rod in while tightening flange bolts to avoid distortion of diaphragm. Tighten all bolts evenly and securely to insure tight seal. Check by pushing rod in and then holding finger over vacuum connection in mounting bracket. The rod should not move out.

Selector Valve Unit:—Mounted on mounting bracket by four screws. Wash unit with gasoline (brush off only, do not dip in gasoline) before disassembling.

To Disassemble—Take out four screws in cover plate, lift cover slightly and unsolder wires from terminal block. Remove solenoid cover stud, washer and gasket, remove cover. Remove three screws in solenoid retainer, remove retainer and solenoid being careful not to loosen springs from bottom of valve plunger. Remove valve seats and valve assemblies from body (if necessary tap seats out with blunt bar inserted through center holes in housing, do not attempt to pull on valve plunger). Remove rubber valve heads from valve plunger washer. Take out check valve nut and check valve in vacuum connection.

Servicing—Wash all parts except solenoids and rubber valve heads in gasoline. See that all dirt removed from valve body passages.

To assemble—Reverse disassembly operations. Use new rubber valve heads if old heads swollen or spongy from gasoline, or worn or cut. When reassembled, valve travel up and down should be 1/32-1/16". Movement must not be less than 1/32" or performance will be sluggish. Use new cover gasket and solenoid retainer gasket and see that cover screws fastened securely to keep out water and dirt.

HUDSON & TERRAPLANE 1936-37 ELECTRIC HAND

Hudson Custom Six, Model 63 (1936) After No. 638319—See Note.
Hudson Deluxe Eight, Model 64 (1936) After No. 644398—See Note.
Hudson Custom Eight, Model 65 (1936) After No. 652078—See Note.
Hudson Deluxe Eight, Model 66 (1936) After No. 663201.
Hudson Custom Eight, Model 67 (1936) After No. 674296.
Terraplane Deluxe, Model 61 (1936) After No. 6151381—See Note.
Terraplane Custom, Model 62 (1936) After No. 6213759—See Note.
Hudson Six, Model 73 (1937)—All Cars.
Hudson Eight, Custom & Deluxe Models 74, 75, 76, 77 (1937) All Cars.
Terraplane, Models 70, 71, 72 (1937) All Cars.

NOTE:—Serial numbers for 1936 models apply with the following exceptions: (63) 638351 to 638470 inc., (64) 644439 to 644464 inc., (65) 652159 to 652160 inc., (61) 6151401 to 6151779 inc., (62) 6213901 to 6213963 inc.

DESCRIPTION:—Same as type used on previous models except for the following

Selector Switch—Special high gear lock-out switch or solenoid gear ground strap added for Automatic Clutch control (see separate article for Automatic Clutch data). Extra wire (yellow) added in Selector switch harness and extra terminal (Y) provided on jack for this circuit. On cars without Automatic Clutch, extra wire not provided in lower harness and standard 8-wire harness used. This line and lock-out switch do not enter into Electric Hand operation.

Contact Plate Assembly—Discontinued. New 'Neutral Switch' mounted in end of power cylinder used to return piston to neutral position (see Power Cylinder). High Gear Ground Switch and Governor Switch on transmission case are part of Automatic Clutch Control and do not enter into Electric Hand operation

Diaphragm Cylinder & Power Cylinder—Size increased. Power Cylinder has Neutral Switch mounted on rear end plate.

Neutral Switch—Consists of stationary central contact and two movable contact arms each connected to one of the power cylinder solenoid valves. Neutral switch operating lever in cylinder is linked to contact arms so that both sets of contacts are open when piston centralized in cylinder (transmission neutral position). Movement of piston in either direction from center allows one set of contacts to close and, whenever center contact is live (as will be the case with Selector Switch and Transmission in neutral) solenoid valve will be opened and vacuum connection completed to one end of cylinder so that piston will be drawn back toward center. At center neutral position, circuit will be broken by operating lever.

ADJUSTMENT:—Mechanical adjustments for Clutch Pedal Circuit Breaker, Transmission Shifter Rail Locks, Power Unit Mounting, and Diaphragm Cylinder same as for previous model (see 1936 article—disregard Contact Plate instructions). Power Cylinder Piston Rod adjustment is new.

Power Cylinder Piston Rod Adjustment—Run engine, hold clutch pedal depressed. See that all wiring in place and Selector Switch Cut-out Switch 'on'. Remove clevis from piston rod, loosen locknut, adjust piston rod length so that clevis pin can just be inserted with Selector Switch and Transmission in neutral. For more exact setting, use Lower Harness Test Set. Disconnect wires on terminals on solenoid valve cover, attach Lower Harness Test Set (YB clip to BL

CONTINUED ON NEXT PAGE

HUDSON & TERRAPLANE 1936-37 ELECTRIC HAND (C nt.)

wire, W clip to W wire, Y clip to B wire, ground clip to chassis). Place Selector Switch in neutral, depress clutch, turn on ignition but do not start engine (engine must not be running for this test). Use manual shift lever, shift transmission toward high gear until 'Y' lamp lights, then toward second until 'YB' lamp lights. Movement in each direction must be equal and lamps should not be lighted in neutral position. Adjust by lengthening piston rod (Lamp YB will light sooner) or shortening rod (Lamp Y will light sooner).

TESTING:—All tests made in same manner as on previous model. Terminal markings and wire colors have been changed in some cases so that some test instructions are new as given below.

Selector Switch and Upper Wiring Harness:—Use Master Selector Switch plugged in at jack at lower end of steering column (adapter required for new 9 prong jack if old type 8 prong Selector Switch jack used). Make tests in same manner as previously (see 1936 data). To check switch circuits, disconnect jack at lower end of steering column, test by touching test lamp prods to prongs on upper half of jack as follows (test lamp should light in each case):

Selector Switch Position	Current Supply	Test Lamp Prod.
1. Neutral, High or Second	R	RG
2. Low or Reverse	R	G-W
3. Low or High	GR	BL
4. Second or Reverse	GR	B
5. Neutral	GR	BK

If lamp does not light for Test #1 or #2, check Selector Switch Cut-out Switch, red wires in harness, and contact in selector switch. If lamp lights for one test but not for the other, check wire to which lamp connected (see table) and contact in selector switch to which wire is connected. If lamp flickers as selector switch moved from one position to another in Test #2, check contact sleeve for roughness and check contact finger tension. If lamp does not light for Tests #3, 4, 5, check GR wire and connection at selector switch. If lamp does not light for one test only, check wire to which lamp connected (see table) and connection at Selector switch. If lamp lights when test prod touched to any other than indicated terminals. Check for short-circuits and rotor shaft wear.

Shift Mechanism (Power Unit):—Connect Power Unit Test Cable to Red Wire terminal on circuit breaker. Operate engine with clutch disengaged and rear wheels jacked up so that shifts may be made. Touch test prod of the test cable to points indicated (two points simultaneously in some cases) and note whether shifts made properly. Terminals on solenoid valve cover (at which tests made) are labeled as follows: #1 (front) BL, #2 W, #3 B, #4 BK, (rear—junction only, not used in making this test).

1. Test Prod on BL—Transmission should shift into High Gear.
2. Test Prod on B—Transmission should shift into Second Gear.
3. Test Prod on W—With transmission in neutral, cross-shift or left-right movement of lever should be made.
4. Test Prod on W & BL—Transmission should shift into Lower Gear.
5. Test Prod on W & B—Transmission should shift into Reverse Gear.

If any shifts not made, check valve solenoid by connecting accurate ammeter between terminal and circuit breaker lead (merely touch ammeter lead to terminal to avoid damage if solenoid dead short circuited). Current draw should be 2.5 amperes. Larger current indicates solenoid short-circuited, smaller draw open-circuits. If current draw satisfactory, examine valve to see that it is free and not sticking, check for vacuum leaks in valves, lines, or shift units. Check units for mechanical drag by disconnecting shift cylinder and diaphragm cylinder rods. If units do not operate when disconnected, Power Unit (Shift Cylinder, Diaphragm Cylinder, Selector Valve) must be rebuilt or replaced.

Switches & Lower Wiring Harness:—Disconnect all wires (except those on BK terminal) on solenoid valve cover, connect these wires to clips on Lower Harness Test Set (YB clip to BL wire, W clip to W wire, Y clip to B wire, ground clip to chassis). Make tests by manipulating Selector Switch (Selector switch must be OK) and shift lever and noting if correct test lamps light. Turn on ignition, hold clutch disengaged, see that Selector switch Cut-out switch 'on'.

1. Place selector switch in neutral. Shift transmission to neutral manually. Lamp YB should light when shift lever moved short distance toward second gear, lamp Y when shift lever moved equal distance toward high gear (see Power Cylinder Piston Rod Adjustment above).
2. Place transmission shift lever in neutral. Move selector switch to low gear. Lamp W only should light.
3. Place transmission shift lever in neutral. Move selector switch to second gear, Lamp Y should light. Move selector switch to high. Lamp YB should light.
4. With selector switch in each gear position in turn, complete shift by moving transmission shift lever to same gear position. Lamps should light (and remain lighted until clutch pedal released) as follows: High Gear—YB. Second Gear—Y. Low & Reverse—W and when cross-shift completed, YB for low or Y for reverse.
5. With transmission in high or low gear, move selector switch to neutral. Lamp Y should light. With transmission in second move selector switch to neutral. Lamp YB should light.

If lamps do not light as indicated, or if additional lamps light, check or replace lower wiring harness and Interlock switch.

Lower Wiring Harness—Disconnect jack at lower end of steering column. Use test prod connected to hot lead to supply current to terminal designated on lower half of jack, ground one test lamp lead. Test lamp should light when other lead touched to designated terminal on Interlock Switch, Solenoid Valve Cover terminals, or Circuit Breaker.

Hot Prod — Connection — Test Lamp	Hot Prod — Connection — Test Lamp
R.....R (Clutch Circuit Breaker)	W.....W (Solenoid Valve Cover)
BK.....BY (Interlock Switch)	GR.....GR (Interlock Switch)
BK.....BK (Solenoid Valve)	B.....B (Solenoid Valve Cover)
G.....G (Interlock Switch)	BL.....BL (Solenoid Valve Cover)
RG.....RG (Interlock Switch)	

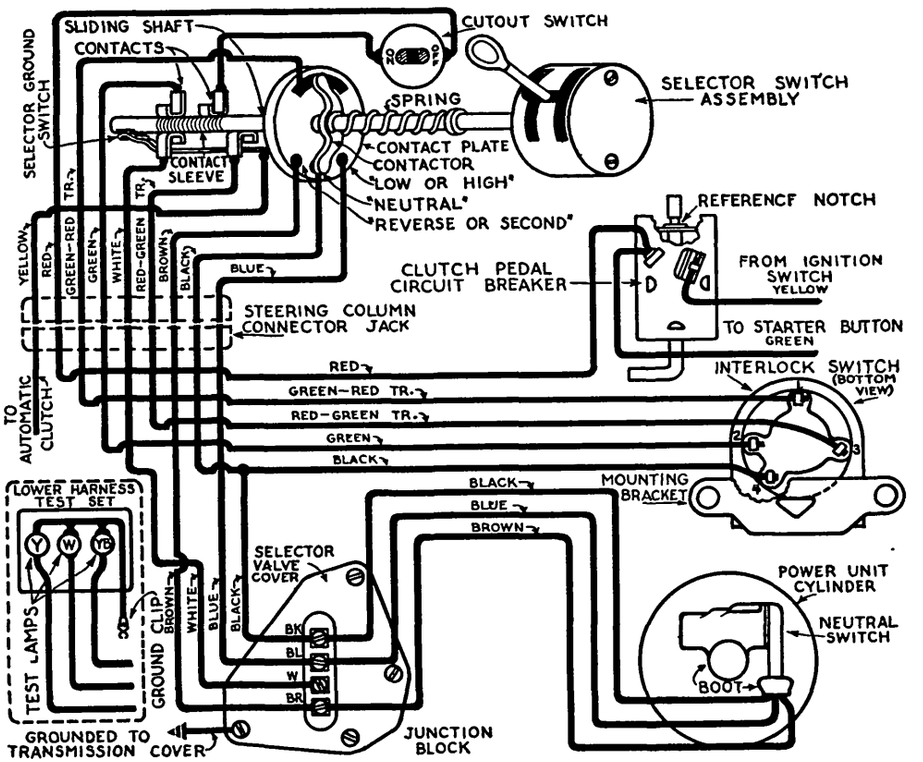

HUDSON & TERRAPLANE 1936-37 ELECTRIC HAND WIRING DIAGRAM

TROUBLE SHOOTING:—Same as for previous model (see 1936 article). Yellow wire, and Yellow wire with Black tracer are no longer used and need not be checked. If transmission is slow in making any shift involving a cross-shift, check the Black wire (was Black wire with Yellow tracer).

REMOVAL & INSTALLATION:—Same as for previous model (see 1936 article) with exception of Neutral Switch in Power Cylinder which is new.

Neutral Switch—Remove two screws in neutral switch cover and withdraw the switch before taking off power cylinder end plate. After end plate has been removed, take out two screws in neutral switch operating bracket and remove operating mechanism. When re-installing Neutral Switch, see that gasket is in good condition, and that the operating lever is between the two bakelite arms on which the movable contacts of the switch are mounted.

HUDSON & TERRAPLANE 1938-39 ELECTRIC HAND

HUDSON 6, 83 ('38), 91, 92, 93, 98 ('39)
HUDSON 8, 85,86,87 ('38), 95,97 ('39)
TERRAPLANE, MODELS 80, 81, 82, 88 (1938)

NOTE:—Electric Hand not available for Hudson '112'.

TYPE:—Same design as type used on previous models except for new Interlock Switch design (incorporated in Diaphragm Cylinder), new Gear Abutment Indicator, and minor changes in other units as listed below.

Interlock Switch—Breaker contact type mounted in housing which is integral with diaphragm cylinder cover and operated by spring-loaded camshaft linked to diaphragm rod by crank-and-lever mechanism (crank is mounted on floating sleeve on diaphragm rod, sleeve movement being limited by flange at diaphragm end of rod, stop pin at outer end, and provides slight 'lost' motion required for correct switch operation). No switch adjustment is required.

Gear Abutment Indicator—Consists of a rigidly mounted solenoid in the extreme left hand end of the selector switch housing and a detent rotor assembly mounted on the end or the selector switch shaft next to the solenoid. Solenoid is energized whenever selector lever moved to left end of neutral slot (lead taken from diaphragm solenoid contactor in selector and circuit completed to ground through right hand shift rail switch on top of transmission). When solenoid energized, detent rotor slides along flattened portion of selector shaft until detent balls engage slots in face of solenoid. This prevents rotor revolving with shaft as selector lever moved toward Reverse or Low Gear positions, flattened shaft acting as a cam to expand rotor plungers against tension of plunger spring on outer rim of rotor and spring sets up a back pressure against the selector shaft and lever. If gear abutment occurs within transmission, this spring pressure will cause selector lever to snap back to neutral as soon as it is released. However, if gears mesh properly, operating ball in shift rail switch will drop into notch in shifter rail as soon as gear meshing ¾ complete, opening switch and breaking solenoid circuit. This releases rotor which revolves to normal position on selector shaft so that there is no tendency of the selector lever to move from its position.

Clutch Pedal Circuit Breaker—New type mounting used which makes linkage adjustment unnecessary. Switch mounting bracket holes are slotted to permit limited up-and-down movement but switch is normally held in one positon by springs on mounting screws. Lug on clutch shaft operating lever engages slot in switch mounting bracket so that switch is pulled down to new position as required when clutch engagement point changes due to clutch facing wear.

Automatic Clutch Selector Switch Terminal—Automatic clutch high gear lock-out switch in Selector has been changed to same type contactor used for other circuits. See Automatic Clutch article for data on this switch as well as complete automatic clutch wiring.

ADJUSTMENT:—Make adjustments in order as listed below. No Clutch pedal circuit breaker or separate Interlock Switch adjustment required for 1938 equipment.

Diaphragm Cylinder (Cross-shift) Rod:—This adjustment also controls Interlock switch timing. Remove clevis pin at forward end of diaphragm rod (at cross-shift lever on transmission), push rubber boot back to expose clevis locknut, loosen locknut (clevis must be on lever when loosening or tightening this nut to prevent rod turning which would damage rubber diaphragm), turn clevis so that rod is 3/16" long, requiring diaphragm return spring to be compressed this amount to line up clevis and lever holes, with transmission in neutral. If clevis placed on lever to check this setting, only 1/16" width of lever hole should be visible through clevis pin hole. Install clevis pin, make certain that locknut tightened and rubber boot pulled forward over locknut onto clevis stem.

Power Cylinder Piston Rod:—Run engine, hold clutch pedal down, place selector lever in neutral position, remove clevis pin which links piston rod and shift lever on transmission, make certain that transmission in neutral, adjust piston rod length so that holes in rod and lever line up, install clevis pin.

Power Unit Mounting:—Power unit must be mounted more firmly than previous models (plain nut and additional 3/32" washer used instead of castellated nut). Make certain that both washers in place (one 1/16" washer, one 3/32" washer), turn nut down until cotter pin can just be installed behind nut.

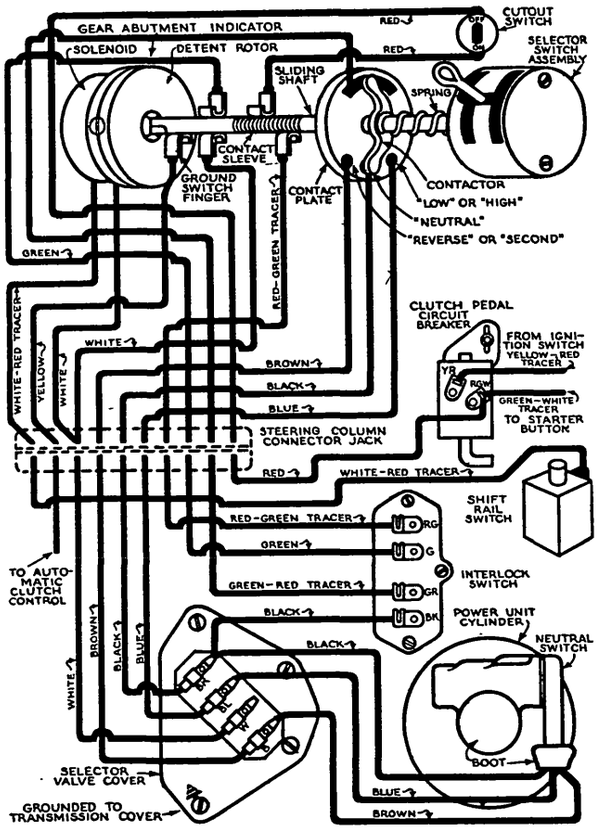

HUDSON & TERRAPLANE 1938-39 ELECTRIC HAND WIRING DIAGRAM

TESTING:—All tests made in same manner as on 1937 model except as noted below.

Selector Switch & Upper Wiring Harness:—One additional wire (White with Red Tracer—for Gear Abutment Solenoid circuit) used in upper and lower wiring harness with new 10-prong jack. All other wire colors same as in 1937 and tests made in same manner as on previous model. If old type Electric Hand Test kit used, Adapter No. J-813-5 must be used.

Power Unit & Lower Wiring Harness:—New Test Lamp Kit available with five test lamps (3 lamps labeled Y-B, W-W, YB-BL correspond to same three lamps in old test kit). New Lamps are simple test lamps with double leads as follows: "Valve Solenoid" lamp—Leads G-87 and H-87—15 cp., Mazda No. 87 bulb; "Abutment Indicator" Lamp—Leads H-63 and G-63—3 cp., Mazda No. 63. If new test kit not available, test lamps with suitable leads can be made up for Valve Solenoid and Abutment Indicator testing. Old test lamp kit can be used to check lower wiring harness. Make tests in same manner as on 1937 type.

Valve Solenoids:—Use 'Valve Solenoid' Test lamp in new kit or make up test lamp using 15 cp. bulb to test solenoids (using lamp will eliminate possibility of burning out test meter if solenoid shorted). Disconnect leads on power unit, clip one test lamp lead (H87) to battery terminal, touch other lead (G87 prod) to each solenoid terminal in turn (see wiring diagram). Lamp should burn with dull red glow. If lamp does not light, solenoid is open. If lamp lights brightly, solenoid is short-circuited. When solenoids disassembled, make certain they are clean and free from dirt, oil or grease, that plungers have 1/16" minimum travel, and use new valve discs when reassembling.

Abutment Indicator:—If selector lever will not stay in Low or Reverse Gear after shift has been completed in transmission, disengage clutch and hold in this position, place selector lever in gear position and hold it in place while selector 'Off-On' switch moved to 'Off' position. If click is heard in selector when switch reaches off position, check for short-circuit in wiring or defective Shift Rail Switch (see tests below). If no click is heard, replace detent rotor assembly. With transmission in neutral, turn on ignition but do not start engine, depress clutch pedal and hold in this position, shift selector lever to Low or Reverse and release lever. If lever does not return to neutral when released, check for open-circuit or defective Shift Rail Switch. If lever returns to neutral from one position but not from the other, check for excessive friction in selector 'H' slot or bind or drag in selector switch shaft.

Abutment Indicator Solenoid—Ground 'WR' prong of upper wiring harness jack. Use 'Abutment Indicator' test lamp in new kit or make up test lamp using 3 cp. bulb, clip one test lamp lead (H63) to battery cable terminal, touch other lead (G63 prod) to 'W' prong of jack. Lamp should burn with dull red glow. If lamp does not light, solenoid is open. If lamp burns brightly, solenoid is short-circuited. If ohmmeter used to check solenoid circuit, meter reading should be 10 ohms between 'W' and 'WR' prongs in upper wiring harness jack.

CONTINUED ON NEXT PAGE

HUDSON & TERRAPLANE 1938-39 ELECTRIC HAND (C nt.)

Shift Rail Switch—Use 'Abutment Indicator' test lamp (or 3 cp. test lamp mentioned above for Abutment Indicator Solenoid testing), disconnect lead (WR wire) on Shift Rail switch (left hand switch on transmission), connect test lamp between battery cable terminal and shift rail terminal. Use manual shift lever to shift transmission into Low and then into Reverse. Test lamp should remain lighted until each shift ¾ completed and should then go out. If lamp indicates switch not operating correctly, examine switch ball and see that it is free in pilot hole, replace switch.

Abutment Indicator Wiring—With 'WR' wire disconnected from shift rail switch, clip one test lamp lead to battery cable terminal, other lead to this 'WR' wire. Place selector lever in neutral. Lamp should not light. If lamp is lighted, Abutment Indicator wiring is shorted. Separate wiring harness jack. If lamp goes out, short-circuit is in upper wiring harness. If lamp remains lighted, short-circuit is in lower wiring harness.

Interlock Switch:—Use new Test Lamp Kit (connect leads used for Power Unit testing to each of three Interlock Switch terminals, connect 'H63' Gear Abutment test lamp lead to fourth terminal, ground G63 lead and regular test kit ground lead to engine), or connect 3 cp. test lamps between each Interlock Switch terminal and ground. Turn ignition on (do not start engine—use hand shift lever to shift transmission as required in tests), depress clutch pedal and hold in this position while making following tests:

1. With transmission in neutral, and selector lever in neutral, all four lamps should be lighted.
2. Shift transmission and selector lever to Low Gear position. Lamps connected to 'G' and 'GR' terminal only should light.
3. Shift transmission and selector lever to High Gear position. Lamps attached to 'GR' and 'RG' terminals only should light.

If lamps do not light in this order, or other lamps are lighted, remove and inspect or replace switch.

SERVICING:—Units serviced in same manner as previous model except for new units listed below.

Abutment Indicator:—To disassemble, take off end cap on left end of selector housing (turn cap counter-clockwise), pull solenoid out and rotate downward at same time being careful not to damage solenoid leads. Slide rotor out off shaft by using small bent wire or hook. When replacing rotor make certain that face with two steel detent balls is out (toward solenoid). To replace solenoid, part wiring harness jack at lower end of steering column, remove upper cover by bending back cover lugs, unsolder White and White-Red tracer wires, fasten length of small iron fish-wire to these wires and pull it into tube as other wires withdrawn. Use fish-wire to draw new solenoid leads into place (wires must be carefully straightened and laid parallel in tube), solder wires to correct jack prongs. When installing solenoid, make certain that leads not pinched, engage lug on solenoid in slot in housing, see that solenoid retaining spring in place in center of housing cap.

Interlock Switch:—To remove switch, take out three screws in cover, withdraw switch. To install switch, use manual shift lever to operate switch camshaft (swing lever from left to right) or push in on diaphragm rod until both cams are in line with center of shaft, slip switch into place. Make certain that switch gasket is in good condition, line up cover and gasket holes.

Diaphragm Replacement:—To disassemble Diaphragm Cylinder assembly, disconnect vacuum lines, take out four nuts and wire clip and remove valve assembly (valve assembly must be pulled away from cylinder endplate as nuts are turned off). Remove nut (bushing type) holding diaphragm housing to cylinder bracket, remove clevis, locknut and rod guard, take out six nuts in housing flange, remove rear half of housing and return spring. Pull diaphragm and rod assembly out of front housing, unhooking camshaft operating link from camshaft arm by rotating floating sleeve as rod is pulled out. Remove diaphragm rod nut and diaphragm assembly. When reassembling, make certain that diaphragm rod nut is staked in place after installing diaphragm, hold diaphragm rod in (compressing return spring) so that spring will not distort housing halves while flange screws are being tightened. To check diaphragm seal, push diaphragm rod in, place finger over mounting hole. If seal is tight, rod will not move out.

HUDSON 1942-47 DRIVE-MASTER

Hudson 6 & 8, All Models (1942 to 1947)

NOTE: Overdrive—Overdrive is a separate option and may be found installed on cars with or without Drive-Master. Refer to separate article on Warner Type R9B Overdrive for complete data on this unit.

Vacumotive Drive—This clutch control is an integral part of the Drive-Master installation but may also be found on cars without Drive-Master. Refer to Hudson Vacumotive Drive article (in Clutch Section (Clutch Controls) for all data on this unit except Throttle Lock which is used on Drive-Master cars only (Throttle Lock data given below).

Transmission Servicing—Transmission used with Drive-Master is same type used as Std. Equipment See separate article on Hudson Transmission for complete transmission servicing data.

1946-47 Wiring Changes: Wiring connection terminals changed to simplify connections as follows:

Power Unit—Individual wire terminals replaced by three-prong plug to insure correct wire connections (ground wire still connected to individual terminal marked "BK").

Governor—Individual wire terminals replaced by a single four-prong plug.

Clutch Control Solenoid—Two individual Douglas type terminals on Throttle Lock Solenoid replaced by single two-prong connector. Terminals on Clutch Control Solenoid unchanged (operation not affected by reversed connections).

Accelerator Switch—Three individual Douglas type terminals replaced by single three-prong connector.

Hose Connections—A spring is now installed between ends of tubing inside hoses and hose clamps have been added to prevent spring pushing tubing out of hose connections. This type connection is designed to prevent tubing ends cutting hose.

IMPORTANT DRIVE-MASTER OPERATING NOTES: Changing From Manual Shift to Drive-Master Shifting—When pressing 'OFF' button (for manual shifting) or 'HDM' button (for automatic shifting), steering column gearshift lever should be in Neutral position.

Low & Reverse Gear Shifting—When shifting into or out of these gears (requires manual movement of gearshift lever), hesitate momentarily in Neutral, then move gearshift lever into desired position.

Second Gear Downshift—When shifting down into Second at speeds above High Gear engagement speed, clutch must be disengaged manually while moving gearshift lever to Second Gear position.

DESCRIPTION: Drive-Master consists of an automatic clutch control (Vacumotive Clutch) and a conventional 3-speed transmission with a special automatic gearshift mechanism for automatic shifting between Second (Pick-up Gear) and High (Direct Drive) dependent on the car speed and without movement of the gearshift lever from the High position. A transfer mechanism is provided so that gears can be shifted manually if desired. Low Gear and Reverse Gear must be engaged by manual operation of the gearshift lever in the usual manner.

Vacumotive Drive:—Similar to type used on cars without Drive-Master except for Throttle Lock (below). Refer to Hudson Vacumotive Drive article in Clutch Section (Clutch Controls) for data.

Throttle Lock—Consists of a diaphragm type power unit and solenoid valve mounted on the clutch control unit with diaphragm linked to accelerator cross-shaft lever by flexible cable so that carburetor throttle and linkage held in 'closed' position while shifts are being made (solenoid valve energized). Throttle linkage is released when shift completed (solenoid valve de-energized). Accelerator pedal rod is linked to the cross-shaft by a spring which absorbs pedal movement when the throttle is locked.

Transmission Power Unit:—Consists of a double-acting vacuum power cylinder (for gear engagement), spring-loaded diaphragm type Transfer Assembly (manual or automatic gearshifting clutch key) and operating solenoid valves assembled as a unit and mounted on the frame at the left side of the transmission case. Power cylinder is linked to loose lever on transmission case gear engagement shifter shaft so that power cylinder operation engages Second or High Gear (cylinder is double-acting type) when the lever and shaft are coupled by the transfer key. Transfer key is pivoted on bracket on shifter shaft and linked to the transfer diaphragm so that operation of the diaphragm engages the power cylinder lever (for automatic shifting) or a second loose lever on the shaft which is linked to the steering column gearshift lever (for manual shifting). These units are controlled by the following switches:

Circuit-Breaker—Drive-Master circuits are protected by thermostatic type circuit breaker mounted on car wiring fuse block and connected in 'feed' line. Alternate opening and closing of contacts protects circuits in event of short-circuit.

Instrument Panel Switch—This is an off-on master control switch with three buttons: 'OFF', 'VAC', and 'HDM'. With 'OFF' button pressed in, both Vacumotive Drive and Drive-Master are inoperative so that both gear shifting and clutch

CONTINUED ON NEXT PAGE

HUDSON 1942-47 DRIVE-MASTER (C ntinu d)

engagement can be operated manually. With 'VAC' button pressed in, Vacumotive Drive is operative and Drive-Master is inoperative so that gear shifting can be operated manually with automatic clutch operation. With 'HDM' button pressed in, both Vacumotive Drive and Drive-Master are operative for complete automatic operation.

Transmission Switch Assembly—Consists of a switch box mounted on the left side of the transmission case containing four distinct control switches as follows:

1)—Transfer Switch. Operated by cross-shift lever on transmission case and controls Transfer Diaphragm Solenoid Valve. Switch contacts close and energize solenoid valve when steering column gearshift lever is moved over to Second-High side at neutral so that transfer diaphragm engages transfer key with power cylinder operating lever on transmission case shifter shaft for automatic shifting.

2)—Clutch Switch. Operated by clutch throw-out mechanism and controls Power Cylinder (gear engagement operation). Switch contacts close when clutch is disengaged and energize Power Cylinder Solenoid valve (Second or High depending on Selector Switch and Governor position) so that power cylinder engages gears. Switch contacts open when clutch engages so that power cylinder valve is de-energized.

3)—Selector Switch. Operated by steering column gearshift lever and provides means to over-rule or by-pass governor to permit downshift from High to Second above the automatic Second-to-High shifting speed. With gearshift lever in High position, selector switch completes circuit to governor so that shifting is controlled by governor in accordance with car speed. When gearshift lever is moved to Second, selector switch breaks circuit to governor and completes circuit to power cylinder second gear solenoid valve so that shift to second occurs regardless of car speed.

4)—Neutral & Limit Switches. Both switches are operated by power cylinder gear engagement lever. Neutral switch provides for a shift to Neutral from Second or High when further automatic shifting is not desired (preparatory to manual shift to Low Gear or Reverse Gear) and completes circuit to power cylinder Second Gear Solenoid Valve (if transmission in High) or High Gear Solenoid Valve (if transmision in Second). When the power cylinder operates, the switch cam opens the contacts as the lever reaches Neutral so that power cylinder lever stops in this position. Limit Switch controls Throttle Lock operation (see Throttle Lock above).

Governor—Governor is two-stage type with low-speed and high-speed contacts and is driven off the transmission driveshaft (mounted at rear of transmission case). It controls speed at which automatic shifting between Pick-up Gear or Second and High occurs and is used also to control the Vacumotive Drive high speed lock-out and Overdrive engagement speed. With gearshift lever in High and car speeds below 13 MPH., circuit is completed through governor contacts to power cylinder second gear solenoid valve so that Second Gear is engaged automatically. At speeds of 13 MPH. and above, this circuit is broken and circuit completed to high gear solenoid valve so that an automatic shift to High can occur. When car speed decreases to approximately 10½ MPH, this sequence is reversed for automatic downshift to Second. Governor can be over-ruled at speeds above the High Gear engagement point by moving the gearshift lever to Second Gear position which actuates the Selector Switch (see Selector Switch above).

OPERATION: With the control switch "HDM" button pushed in and steering column gearshift lever on Second-High side of slot at neutral or in High position (normal position for car operation with Drive-Master), circuit to solenoid valve of Transfer Diaphragm is completed through Transfer Switch and diaphragm operates to engage power cylinder lever with transmission shifter shaft for automatic shifting. Shifts then occur as follows:

Second or Pick-up Gear (Starting)—With engine idling and car standing still, clutch will be disengaged by Vacumotive Drive Control. With gearshift lever in High, circuit will be completed through Transfer Switch, Clutch Switch, Selector Switch. and Governor low-speed contacts to power cylinder Second Gear Solenoid Valve causing the power cylinder to shift the transmission into Second. When the accelerator pedal is depressed to start the car, clutch engages and clutch switch contacts open to break the solenoid valve circuit. Car starts up in Second and can be accelerated to any speed without shifting as long as accelerator pedal is not released.

High Gear—At car speed of approximately 13 MPH., governor opens power cylinder second gear solenoid valve circuit and completes high gear solenoid valve circuit. When accelerator pedal is released momentarily, Vacumotive Drive control disengages clutch, closing contacts of the clutch switch. Power cylinder then shifts transmission into High. As soon as accelerator pedal is again depressed, clutch engages and clutch switch breaks the solenoid valve circuit. When car speed drops below approximately 10½ MPH., the above Second-High shift sequence is reversed and power cylinder shifts transmission back to Second.

Second Gear Downshift (In High Speed Range)—This downshift to Second can be secured at speeds above normal High Gear engagement speed by moving gearshift lever to Second Gear position which operates selector switch and completes circuit power cylinder second gear solenoid valve (selector switch also breaks circuit through governor to high gear solenoid valve). When accelerator pedal is released and clutch disengages, clutch switch completes solenoid valve circuit and power cylinder shifts transmission into Second Gear. Transmission remains in Second until shift lever is moved to Neutral or High.

Neutral—When gearshift lever is moved to Neutral, circuit is completed through Selector Switch to Neutral Switch which is directly connected to both power cylinder solenoid valves (circuit completed to Second Gear Solenoid valve if transmission in High, or to High Gear Solenoid Valve if transmission in Second). This causes a shift toward the opposite gear to be started by the power cylinder but the neutral switch cam is linked to the power cylinder operating lever so that, when the lever and transmission gears reach neutral, neutral switch cam opens solenoid valve circuit and stops the shifting operation with gears in neutral.

CHECKING & ADJUSTMENT: Before making adjustments on Drive-Master units, check all of the following points: See that battery is in good condition and not discharged (Specific Gravity of 1200 or higher). See that all wiring connections are clean and tight, make certain that connector plug on Transmission Switch is pushed in firmly so that it is held securely by lock clips and that Body & Chassis Wiring Connector Plug (front of dash on left side) is pushed in fully. Check all rods connecting power units, transmission, and switches to make certain that they are securely held by clips and work freely. Check Vacumotive Drive and accelerator linkage to see that rods are locked by clips, all bearing points well lubricated, and that linkage works freely. Make certain that throttle linkage returns solidly to stop on accelerator switch when accelerator pedal is released (this is important). Check clutch pedal free travel (See Hudson car model pages for specifications and adjustment instructions), then check and adjust units as follows:

Vacumotive Drive Control:—Check operation by pushing in 'VAC' button on instrument panel and noting clutch operation when car is operated (shift gears manually). If clutch operation not correct, adjust Vacumotive Drive. ***See "Hudson Vacumotive Drive" in Clutch Section for complete adjustment directions on this unit.***

CONTINUED ON NEXT PAGE

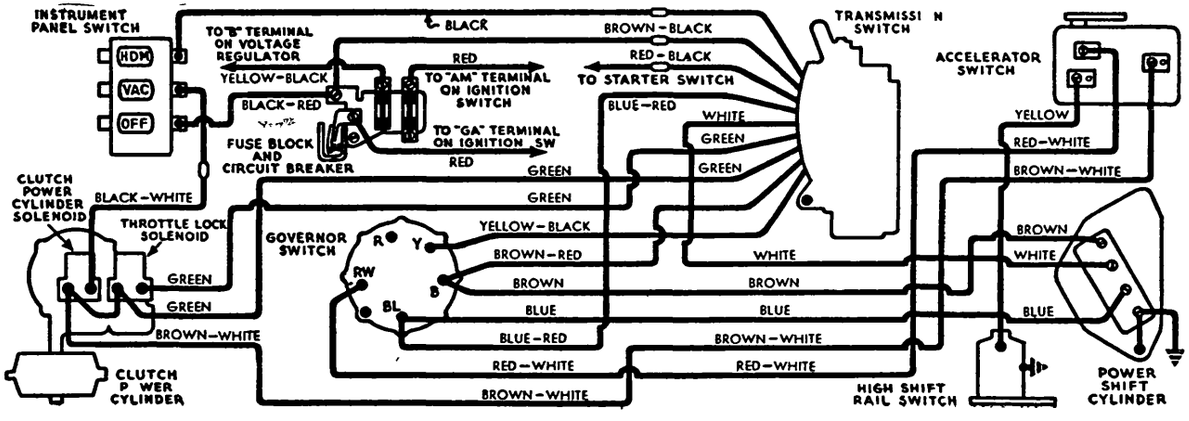

HUDS N 1942-47 DRIVE-MASTER WIRING DIAGRAM

HUDSON 1942-47 DRIVE-MASTER (Continued)

Drive-Master Control Units: Check and adjust each of the Drive-Master units as follows:

Throttle Lock:—With engine running at normal idling speed, connect jumper wire from battery to one of the throttle lock valve solenoid terminals which will cause throttle lock to operate (make certain that solenoid ground wire is in place). Turn nuts on lower end of diaphragm rod up against block on throttle lever, remove jumper wire, then turn upper nut up 2½ turns additional and lock nut by turning lower nut up against it.

Cross-Shift Cable: Make certain that cross-shift cable system is free and not binding or sticking. Check by operating Handy Shift lever on steering column. When lever is released in neutral, it should return to the Second-High end of the cross-shift travel (up-and-down lever movement) of its own accord.

Power Lever Stop: Controls position of angular travel of power shift lever (power lever rests on top of stop screw when transmission shifted into High Gear, against bottom of stopscrew when shifted into Second). To adjust, shift transmission manually into Second Gear, engage transfer key in notch in power lever (push power cylinder piston rod forward until key can be engaged), loosen Allen setscrew locking adjusting screw, turn adjusting screw down until it just contacts power lever, then back screw off ½ turn, lock adjusting screw by tightening setscrew securely.

NOTE—On 1946 and later cars, adjusting screw slotted on both ends to permit adjustment being made from underneath car (shift transmission into High gear, turn screw up until it contacts lever, then back screw off ½ turn).

Neutral Switch:—Back off both locknuts on power shift lever end of neutral switch rod (inner lever on transmission case shifter shaft) so that rod is free, move neutral switch lever on transmission switch case to neutral so that pointer in arc on lower end of lever lines up with line on switch case and lock lever in this position by installing 10-32 screw in hole in case visible through slot directly above pointer arc (this is important—do not attempt to hold lever in position while making adjustment). Shift transmission to neutral manually (shift into High or Second, then back to Neutral, move gearshift lever up-and-down in neutral to make certain that cross-shift is free and that transmission is exactly in neutral). Pull backward on transfer key rod and move power cylinder rod backward or forward until transfer key engages notch in power lever. NOTE—If it is impossible to fully engage transfer key in manual or power shift lever, first adjust Transfer Diaphragm Rod (below). With transfer key fully engaged in power lever notch, securely tighten both nuts on neutral switch rod against trunnion on power shift lever. Remove locking screw from neutral switch lever.

Power Cylinder Rod: Shift transmission to neutral manually, pull backward on transfer key rod and fully engage transfer key in notch in power lever. Measure distance from rim of power cylinder front housing to outer end of piston shaft. Distance should be exactly 4" (even with outer edge of longer indicator lug of Power Unit Gauge J-1861). To adjust, loosen locknut and turn piston shaft on rod, tighten locknut.

Transfer Key Ball Joint:—Transfer key ball joint (diaphragm rod connection) must work freely without appreciable looseness. To adjust, loosen locknut and turn threaded sleeve on rod in toward connector to take up play, tighten locknut.

IMPORTANT NOTE—Ball joint must be lubricated every 1000 miles with good grade of viscous chassis lubricant. Lubricant fitting accessible by removing dirt shield attached to bottom of engine rear crossmember and left hand frame brace cross-member (lubricate clutch and brake pedal shaft bushing fitting at same time). Be sure to re-install dirt shield.

Transfer Diaphragm Rod:—See that transfer key engaged in manual shift lever (normal position with power off). With diaphragm rod connected and ball joint adjustment correct (above), the outer end of the diaphragm shaft should be exactly 3¼" beyond the face of the diaphragm housing (even with outer edge of shorter indicator lug of Power Unit Gauge J-1861). To adjust, hold diaphragm shaft from turning, loosen locknut, turn rod in or out of shaft (not necessary to disconnect rod), tighten locknut. CAUTION—Diaphragm will be damaged if shaft allowed to turn (hold shaft securely while loosening and tightening locknut).

SERVICING: All Vacumotive Drive and Drive-Master units (Power Shift Unit, Transmission Switch, Governor, Instrument Panel Switch, etc.) should be serviced by replacement if tests indicate that units are defective. Do not attempt internal repairs.

HUDSON 1948 DRIVE-MASTER

Hudson 6 & 8, All Models (1948)

OVERDRIVE TRANSMISSION NOTE: Overdrive is a separate option and may be found installed on cars with Drive-Master Transmission. Overdrive unit is Warner Type AS1-R10D. *See Warner Overdrive article for data on this unit.*

DESCRIPTION: Drive-Master transmission consists of a conventional 3-speed transmission with automatic controls as follows:

Vacumotive Drive: Automatic clutch control similar to type used on cars without Drive-Master except for Throttle Lock for which adjustments are given below. *See complete "Hudson Vacumotive Drive" article in previous release for all data other than Throttle Lock.*

Drive-Master Control Units: Similar to design used on previous Hudson models except for different mounting of units and necessary linkage changes as follows:

Transmission Power Unit—Complete unit (Power Cylinder, Transfer Diaphragm Cylinder, and Solenoid Valves) mounted on bracket bolted on left side of engine block.

Transmission Switch—Mounted on power unit mounting bracket on left side of engine.

Transfer Mechanism—Mounted on bracket on rear of power unit mounting. Unit is new design three-lever type with power lever (inner) linked to power

CONTINUED ON NEXT PAGE

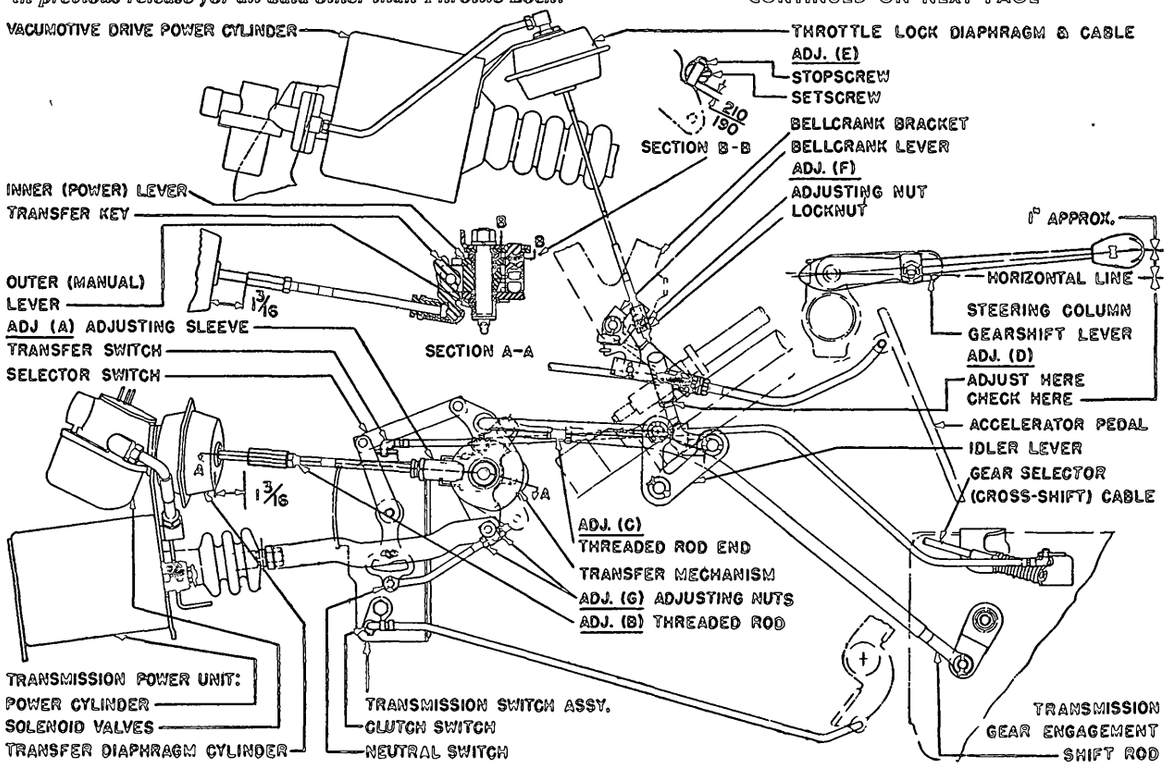

HUDSON 1948 DRIVE-MASTER (C ntinu d)

cylinder by non-adjustable strap, manual lever (outer) linked to gearshift lever on steering column, and center gear engagement lever linked to shift lever on transmission case by new adjustable rod. This center lever has transfer key (operated by Transfer Diaphragm Cylinder) by which lever is locked to inner lever (for automatic shifting), or outer lever (for manual shifting). Detent ball and spring is provided for both inner and outer levers to positively locate them in each gear position.

Instrument Panel Control Switch: Rotary type.

Center "Off" Position—Manual gear shifting and clutch operation.

Left "On" Position—Manual gear shifting with automatic clutch operation (Vacumotive Drive on).

Right "On" Position—Automatic gear shifting and clutch operation (Drive-Master & Vacumotive Drive on).

Drive-Master Fuse: 10 ampere. On back of instrument panel control switch.

OPERATION: All units operate in exactly same manner as on previous models. Shifting limits are as follows:

Automatic Second-to-High Shift—9.5 to 14 MPH.

Automatic High-to-Second Shift—9 to 12 MPH.

Vacumotive Drive Cutout (In High Gear)—16 MPH. (minimum), 21 MPH. (maximum) and must be inoperative at all higher speeds.

CHECKING & ADJUSTMENT: Check all of the following points before making any Drive-Master adjustments:

1. Engine Performance—Engine vacuum reading should be 19-21".

2. Vacuum Connections—Check lines for leaks.

3. Battery—In good condition and not discharged (gravity reading of not less than 1225).

4. All Electrical Connections Clean & Tight—Check following plug connectors particularly: Clutch Power Unit Solenoids, Accelerator Switch, Transmission Power Unit, Transmission Switch, Governor, and Shift Rail Terminal.

5. Accelerator Linkage—Must work freely and return solidly against stop on accelerator switch when accelerator pedal is released. This is important to insure clutch release (necessary for Drive-Master operation).

6. Clutch Pedal Free Travel—Must be 1½". Starter switch must become operative before pedal is within 2" of floor.

7. Vacumotive Drive Operation—Check operation by placing control switch in left hand "on" position and noting clutch action while manually shifting gears. *See complete "Hudson Vacumotive Drive" article in previous release for Vacumotive Drive adjustments.*

8. Drive-Master Adjustment—After all above points checked, adjust Drive-Master units in following order:

(A) Transfer Key Ball Joint: Joint at transfer key end of diaphragm cylinder rod must operate freely without any perceptible endplay. To adjust, loosen locknut on rod, turn adjusting sleeve inward to take up all play. Ball joint must work freely.

Lubrication Note—Lubricate with viscous chassis lubricant through grease fitting on transfer key (pull diaphragm rod forward for clearance).

(B) Transfer Diaphragm Rod: With steering column shift lever and outer (manual) lever of transfer mechanism in neutral, check distance from rear face of diaphragm cylinder to front face of rod end (round portion of rod), which should be 1 3/16". To adjust, **hold diaphragm rod from turning** with wrench on hexagonal end, loosen locknut, turn outer rod in or out (knurled section provided for gripping with pliers).

►*CAUTION—Do not allow diaphragm rod to turn when adjusting (will damage diaphragm).*

(C) Transmission Shift Rod: With transmission in neutral, disconnect shift rod at front end (center lever connection at transfer mechanism). Push or pull slightly on rod until neutral cross-over action is free, see that gear engagement lever is in neutral position (jiggle lever to engage neutral detent), adjust rod length by loosening locknut and turning end fitting so rod can be connected without disturbing position of transmission shift lever or transfer gear engagement lever. Connect rod and recheck cross-over action. Re-adjust by shortening or lengthening rod ½-turn at a time until action is free.

(D) Manual Lever (Gearshift Lever Position): Adjust rod linking shifter shaft on steering column to idler lever at lower end of column (loosen locknut and turn rod in end fitting) until gearshift lever under steering wheel is approximately 1" above a horizontal position in neutral.

(E) Power Lever Stop: Run the engine for vacuum, place control switch in HDM position (right hand "on" position), shift to second gear. Turn stopscrew on transfer mechanism down until it just contacts power lever (inner lever), then **turn stopscrew down additional ½-turn,** tighten Allen head setscrew to lock stopscrew in this position.

(F) Throttle Lock: Run engine and connect jumper wire from battery negative post or other hot terminal to either of the two upper throttle lock solenoid terminal pins (lower pin not used) to cause throttle lock to operate. Loosen locknut and turn adjusting nut on threaded fitting at lower end of throttle lock cable until accelerator pedal bellcrank lever is held solidly against stop on bellcrank bracket when accelerator pedal is depressed, tighten locknut.

►*CAUTION—Cable must not be adjusted so short that accelerator cross-shaft is deflected when throttle lock operates.*

(G) Neutral Switch: Run engine with control switch HDM position, shift transmission to neutral. Disconnect transmission shift rod at forward end (center lever of transfer mechanism), move gear shift lever on steering column to Second Gear position, then back to Neutral position. Jiggle shift rod until cross-over action in transmission is free. Check length of shift lever rod in relation to position of transfer mechanism lever from which it was disconnected but **do not change adjustment of this rod.** Adjust neutral switch rod length (see below), then repeat test procedure (move gearshift lever to Second, back to Neutral, check rod length), until gear shift rod can be connected without disturbing position of levers.

►*CAUTION—Do not change transmission shift rod length when making this adjustment.*

Neutral Switch Rod Adjustment—Adjust by backing off one nut, and tightening opposite nut, on threaded end of neutral switch rod at transfer mechanism center lever. If transmission shift rod appeared to be too short when making above test, **shorten** neutral switch rod by turning up rear nut, if shift rod appeared to be too long, **lengthen** neutral switch rod by turning up front nut. Tighten opposite nut to lock adjustment in each case.

Final Performance Check: After all adjustments completed, check for free cross-over action (gear shift lever must return to second-high side from any position in neutral) and transfer key should move from engagement with power lever to engagement with manual lever as steering column gear shift lever is moved upward in neutral.

►*NOTE*—If cross-over action not free, recheck Transmission Shift Rod Adjustment and Neutral Switch Adjustment (above), see that cross-over switch rod is centered in clip at clutch housing.

DRIVE-MASTER SERVICING: All units which do not operate satisfactorily after adjustment should be replaced.

TRANSMISSION SERVICING: See Hudson std. transmission article.

REMOVAL & INSTALLATION OF DRIVE-MASTER: Units can be removed separately as follows:

Power Cylinder & Transfer Diaphragm: Disconnect diaphragm engaging rod from rod end, disconnect shift strap by removing bolt attaching strap to power cylinder. Disconnect battery cables, remove battery and battery tray and support. Disconnect vacuum lines at transfer diaphragm solenoids. Remove cotter pins, nuts, ferrules, washers, and rubber bushings from power cylinder mounting studs, remove power cylinder and diaphragm assembly.

►*INSTALLATION CAUTION*—Adjust Transfer Key Ball Joint (Adjustment A), and Transfer Diaphragm Rod (Adjustment B) after unit re-installed.

Transmission Control Switch: Remove distributor (6 Cyl. models only). Disconnect clutch operating rod, transfer switch rod, neutral and limit switch rod, and selector switch rod. Remove bolt, lockwasher, and nut at top and bottom of switch, remove switch from mounting bracket.

Power Unit Mounting Bracket: To remove this bracket from the engine, first remove power unit and transmission control switch (see above), disconnect shift rod and cross-over rod at power shift and at manual shift bell-crank, disconnect clutch rod at transmission control switch. Remove two bolts at lower bracket support, one bolt at oil pan at forward end, two nuts and lockwashers at side of cylinder block. Lift off bracket with power shift shaft and shift levers as an assembly.

Drive-Master Shift Shaft & Shift Shaft Levers: Remove shift shaft nut at rear of support bracket (disconnect transfer switch rod at switch for wrench clearance). Disconnect power shift rod by taking out cotter pin and clevis pin. Slide shift shaft out toward fender (CAUTION—use care not to lose detent balls and springs which may fall out of retainers).

►*INSTALLATION CAUTION*—When re-installing shift shaft, lubricate detent balls with water-resistant grease and make certain detent ball springs correctly positioned as follows:

Hand Shift Lever Detent Ball Spring—Part No. 163442 (19 pound tension when compressed to 11/16"). Install this spring in Drive-Master mounting bracket pin for hand shift lever assembly.

Power Shift Lever Detent Ball Spring—Part No. 41236 (30 pound tension when compressed to 13/16"). Install this spring on shift shaft lever pin of shift shaft lever.

HUDSON 1939-40 HANDY-SHIFT

Six, All Models (1939-40)
Eight, All Models (1939-40)

NOTE:—Handy shift control may be installed on Business Cars by dealers or secured from factory as option.

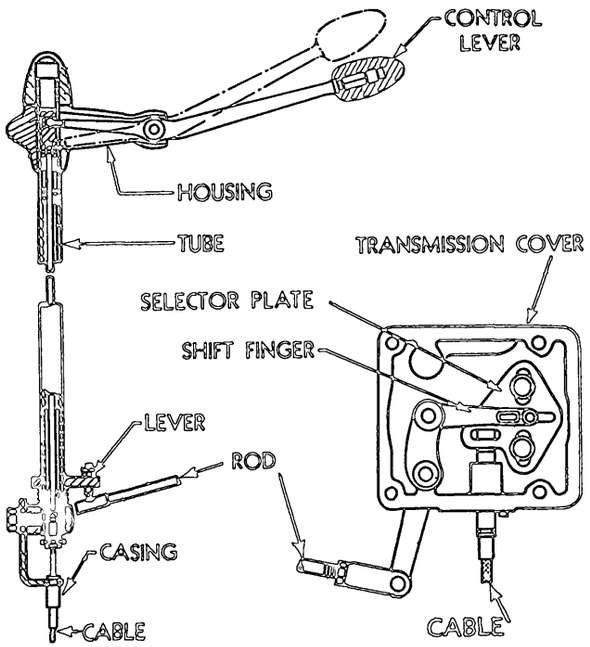

INSTALLATION ON EARLIER MODELS:—Field installation kits available for installation of Handy shift control on all 1937-38 Hudson and Terraplane models.

TYPE:—Handy shift remote control type with shift lever mounted on steering column beneath steering wheel. Shift lever linked to control rod and lever on transmission case (for gear engagement), selector cable and selector plate in transmission cover (for cross-shift). Backward and forward movement of the shift lever rotates the control tube and actuates the lever on the transmission case which is linked to the shifter lug engaging the shifter shafts in the transmission. Up and down movement of the shift lever actuates the selector cable and moves the selector plate in the transmission sidewise so as to engage the shifter lug with the correct shifter shaft. Normal position of the lever is with the lug engaging the second-high shifter shaft (lever should be raised to engage low-reverse shifter shaft).

ADJUSTMENT:—Operating Rod (Gear Engagement)—Hand lever should be at right angles to center-line of car in neutral position. To adjust, disconnect operating rod by removing cotter pin and clevis pin in yoke at transmission end of rod. See that shift lever on steering wheel and lever on transmission case are in neutral position, loosen locknut and turn yoke on rod until clevis pin can just be inserted without disturbing position of either lever. Tighten locknut and connect rod.

Selector Cable (Cross-shift)—Place steering column shift lever in 'up' position (low-reverse) at neutral and block in this position while adjustment being made. Loosen selector cable conduit bracket capscrew at lower end of steering column and pull up on conduit bracket until all slack removed from cable and cross-shift shaft in transmission is fully over on low-reverse side. Tighten bracket capscrew. See that spring lock in cable has clearance at top and bottom of travel.

SERVICING:—Remove horn button and steering wheel to remove any part of handy shift steering column unit. See illustration for construction of transmission case end of unit.

HUDSON 1941-47 HANDY-SHIFT

Six, All Models (1941 to 1947)
Eight, All Models (1941 to 1947)

TYPE:—Remote control type with steering column mounted gearshift lever. Design same as used on previous models except as follows:

Steering Column Unit—Cross-shift control cable ends protected by boots at both steering column and transmission case ends. Operating rod (gear engagement rod) has new type ends with adjusting clevis at forward (steering column) end of rod.

Transmission Case Shifter Mechanism — New type design used in conjunction with new synchromesh transmission. Gears are engaged by lever on inner end of shaft in side of transmission case which engages upper or lower shifter rail in case. This shaft and lever are shifted in or out (for cross-shift at neutral) by an inner lever on a vertical cross-shift shaft. Selector cable is connected to outer lever on this vertical shaft.

ADJUSTMENT:—Operating Rod (Gear Engagement)—With gearshift lever and transmission gears in neutral position, disconnect operating rod at lever on steering column by removing cotter pin and clevis pin, loosen locknut and turn clevis on rod until clevis pin can just be installed without disturbing position of transmission case shift lever and with gearshift lever in neutral and at right angles to centerline of car. Tighten locknut and connect rod.

Selector Cable (Cross-shift)—Place steering column shift lever in Low-Reverse or 'up' position at neutral and block in this position while adjustment being made. Loosen selector cable conduit bracket capscrew at lower end of steering column and move conduit bracket up until all slack removed from cable and shift lever at transmission case is fully over in Low-reverse position (lever to rear), tighten bracket capscrew securely. See that anchor on steering column end of cable (at lower end of control lever pushrod) has clearance at top and bottom of travel.

SERVICING:—Removal of steering column unit requires that horn button and steering wheel be removed first. Steering column can then be serviced as follows:

Gearshift Lever Removal—Remove control tube upper bracket clamp bolt (use Phillips type screwdriver), remove upper bracket and fulcrum bracket ring. Use Allen wrench (1941-42), or conventional wrench (1946-47) to remove the control lever fulcrum, withdraw control lever & anti-rattle washer. Remove selector cable anchor (at lower end of steering column unit), push end of pushrod up for access to control lever upper end. Assemble in same manner applying small amount of viscous chassis grease to bracket before installing.

NOTE—On 1946-47 cars, shift lever mounting bracket screws are self-locking, dowel type. Point of screw enters hole in jacket tube to positively anchor the bracket.

Steering Column Unit—Remove front seat cushion, accelerator pedal, floor mat, transmission opening cover, horn button and steering wheel. Disconnect control rod at steering column end, remove selector cable anchor bracket bolt, remove cable anchor and jacket tube bracket cap, pull jacket tube and control tube off steering column tube. Remove control tube upper bracket clamp bolt (Phillips type screw-driver), bracket, and bracket ring. Remove gearshift lever (see above). Remove fulcrum bracket setscrew, mark control tube and fulcrum bracket (to insure reassembly in same relative positions), press tube out of bracket. To remove lower bracket, remove clamp bolt and slide bracket off. Reassemble in same manner being careful to line up marks on control tube and fulcrum bracket. Adjust control rod and selector cable as directed above.

Transmission Case Shifter Mechanism—Refer to Hudson Transmission article for servicing data.

HUDSON 1948 HANDY-SHIFT

Six & Eight, All Models (1948)

▷DRIVE-MASTER CAUTION: Handy-shift control used on Drive-master cars but should be adjusted in conjunction with other Drive-master units.
See "Hudson 1948 Drive-Master" in this section.

DESCRIPTION: Remote control with steering column mounted gearshift lever. Design is same as used on previous Hudson models except for new gear engagement linkage as follows:

Gear Engagement Rods & Lever—New idler lever or bellcrank is pivoted on stud on steering gear mounting flange with forward rod extending from bellcrank to control tube on steering column, and rear rod extending from bellcrank to shift lever on transmission case. Linkage is adjusted by means of an adjusting clevis on the bellcrank end of the rear rod.

ADJUSTMENT: Check and adjust linkage in order as follows (Selector cable should only require adjustment if hard shifting, particularly in Second Gear, has been noted):

Gearshift Lever Position—Lever should be in crosswise (horizontal) position in neutral. If lever position not correct, remove clevis pin and adjust clevis on forward end of rear control rod at bellcrank on steering gear.

Gear Engagement Rod—Disconnect rear control rod at bellcrank on steering gear by removing clevis pin. Place gearshift lever in neutral position (see above). Make certain that the shift lever on side

CONTINUED ON NEXT PAGE

HUDSON 1948 HANDY-SHIFT (C ntinu d)

of transmission is in neutral (can be determined by feel), loosen locknut and adjust clevis on forward end of rear rod until clevis pin can just be inserted in clevis and bellcrank without disturbing position of gearshift lever or transmission shift lever.

Selector Cable (Cross-shift)—Move gearshift lever to extreme upper (Low-Reverse) position in neutral and block or hold lever in this position while adjusting. Loosen cable casing anchor bracket capscrew on steering column, pull anchor bracket up (screw hole slotted to permit this adjustment) until all slack removed from casing and shifter shaft inner lever on transmission case is fully over in the "Low-Reverse" position. Tighten anchor bracket capscrew and see that anchor has clearance at top and bottom.

REMOVAL OF CONTROL UNITS: Gearshift pushrod (cross-shift selector cable rod) can be removed separately, or entire steering column gearshift unit can be removed as follows:

Gearshift Pushrod Removal: Remove steering wheel. Take out clamp bolt and remove control tube upper bracket and fulcrum bracket ring. Remove fulcrum screw from gearshift lever, remove lever and anti-rattle spring washer. Disconnect cross-shift cable at lower end of steering column unit by removing hairpin clip. Remove anchor bracket capscrew, pull pushrod down far enough to remove key attaching pushrod to pushrod upper end fitting, remove this end fitting, use a wire hook to remove compression spring and seat at upper end of pushrod. Pushrod can then be withdrawn from control tube.

Installation—Coat pushrod end fittings with viscous chassis lubricant when installing them in control tube, assemble parts by reversing removal instructions.

Gearshift Assembly Removal: Remove horn ring and steering wheel. Lift carpet around steering column, remove metal and rubber dustcovers at floor opening. Remove setscrew from gearshift lever fulcrum bracket and clamp bolt from control tube upper bracket. Remove retainer plate and steering jacket tube clamp at instrument panel. Disconnect cross-shift cable from pushrod at lower end of control tube by taking out hairpin clip. Free cable anchor bracket by taking out capscrew. Disconnect gear engagement rod (forward rod) at lever on lower end of control tube. Remove compression spring and spring seat washer from lower end of control tube. Control tube assembly can then be removed.

Installation—Assemble parts by reversing removal instructions (above). Before installing control tube upper bracket, check condition of spacer ring (between gearshift lever fulcrum bracket and upper bracket) and replace ring if less than .025" thick. Adjust controls after installation completed.

►**Anchor Bracket & Cross-shift Cable Installation Caution**—These parts must be correctly positioned when installed. *See "Selector Cable (Cross-shift)" Adjustment above.*

Transmission Case Shifter Mechanism: *See "Hudson 1948 Transmission."*

NASH EARLY 1938 (EVANS VACUUM)

NASH AMBASSADOR 6, MODEL 3820 (1938)
NASH AMBASSADOR 8, MODEL 3880 (1938)
NASH-LAFAYETTE, MODEL 3810 (1938)

NOTE:—Transmission used with this type shift control is similar to standard model except for special shifter mechanism. See Nash Transmission article for Transmission servicing data.

GEAR ENGAGEMENT WITH ENGINE NOT RUNNING:—Gears cannot be engaged by means of dash gear shift lever with engine not running (no vacuum). If engine is to be started by engaging gears and towing or coasting car, raise engine hood on right hand side, move connecting rod (between shift cylinder and transmission) slowly to the rear. This will engage high gear.

TYPE:—Consists of miniature gear shift control unit on instrument panel and power units mounted on engine (Diaphragm unit for cross-shift mounted on right side of transmission case, Shift Cylinder and Valve Assembly for gear engagement mounted on bracket on right side of crankcase). Units operated by vacuum (connection to manifold on left side of engine) and controlled by dash gear shift lever as follows:

Diaphragm Unit (Cross-shift)—Control valve for Diaphragm unit located on back of instrument panel control unit. When gear shift lever moved to left at neutral (for low or reverse engagement), valve opens vacuum line to diaphragm chamber, diaphragm moves out against spring pressure and shifts rear end of shift cylinder connecting rod and transmission actuating lever away from transmission case to enage the low-and-reverse shifter shaft in the transmission. When gear shift lever moved to right at neutral (for second or high engagement), the control valve cuts off the vacuum to the Diaphragm unit and vents the diaphragm chamber to the atmosphere. The spring then moves the connecting rod and actuating lever toward the transmission case to engage the second-and-high shifter shaft. This is the normal position of the actuating lever.

Shift Cylinder (Gear Engagement)—Selector valve for Shift Cylinder is combined piston and diaphragm type controlling air and vacuum admission to each end of cylinder. Valve is linked to dash gear shift lever through intermediate vertical lever pivoted on shift cylinder connecting rod at piston rod end. When gear shift lever moved either forward (reverse or second) or backward (low or high), valve stem movement admits air into one end of cylinder but without cutting off vacuum connection to opposite end (cylinder normally vacuum-suspended) so that piston moves toward vacuum end and resultant connecting rod and actuating lever movement engages gears. The vertical intermediate lever moves with the connecting rod and tends to balance the shift cylinder so that the piston movement follows the dash gear shift lever movement exactly. When shift is completed (or dash lever movement stopped), piston remains stationary in that position until a new shift is made by the dash gear shift lever (or lever is returned to neutral).

Clutch Pedal Vacuum Lock—Consists of a main control valve mounted on the vacuum cylinder and connected in vacuum line between manifold and vacuum power unit. This valve operated by clutch pedal (linked to lever on right hand end of clutch throwout shaft) so that vacuum shift operative only with clutch disengaged.

ADJUSTMENT:—Whenever linkage disconnected or disturbed by removal of other units, adjust in following order and then check operation as directed below.

Diaphragm (Cross-Shift) Unit:—With diaphragm

CONTINUED ON NEXT PAGE

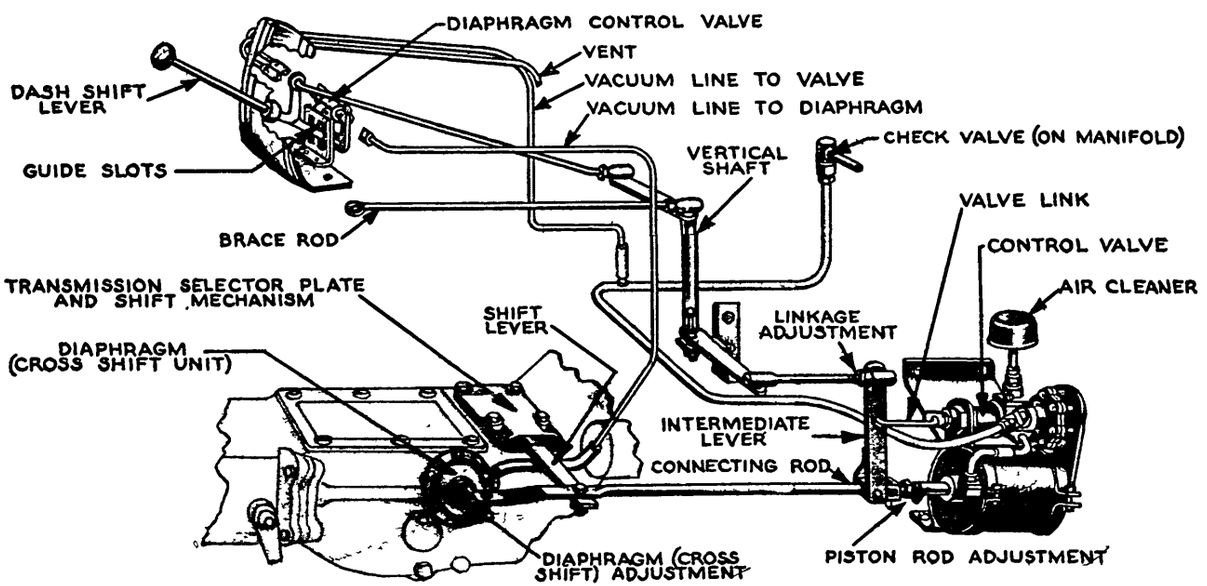

NASH 1938 (EVANS) VACUUM TYPE TRANSMISSION CONTROL

NASH EARLY 1938 (EVANS VACUUM) (Continued)

link disconnected from connecting rod, adjust length of link (loosen locknut at swivel joint, turn swivel joint) or bend end of connecting rod so that diaphragm cross-shaft must be pulled out ⅛" before link can be connected to connecting rod. This will prevent cross-shaft bottoming in diaphragm in operation. See that linkage permits full right and left movement of transmission actuating lever (approximately 9/16" travel), adjust by bending connecting rod.

Transmission Selector Plate Alignment—Make certain that selector plate slot lines up with slots in shifter shafts in transmission cover. To adjust, loosen two screws on plate. Misalignment of plate will interfere with cross-shift operation.

Shift Cylinder Piston Rod Length:—With piston rod disconnected from forward end of connecting rod, make certain that connecting rod and actuating lever is in neutral position (check by moving lever back and forth for cross-shift), place piston in mid-position in cylinder (pull piston rod out until distance from extreme rear edge of cylinder packing gland to locknut seat on end of rod is exactly 2 5/16"), adjust piston rod clevis by loosening locknut and turning clevis until pin can just be inserted in clevis and connecting rod, tighten locknut.

Linkage Adjustment:—After adjusting Diaphragm and Shift Cylinder, place dash gear shift lever in neutral position, loosen nut on ball connector at top of intermediate lever, shift connector (hole is slotted) until center of connector is exactly 5 5/16" above pivot pin at lower end of intermediate lever, tighten ball connector nut. Adjust length of rod attached to this ball connector (rod links intermediate lever and lever on vertical shaft at left rear of engine) by loosening locknut at forward swivel joint and turning rod until selector valve is in neutral position (vacuum line open to both ends of cylinder) and distance from extreme outer end of valve housing to end of stem (end of cylindrical stem rod) is ¼". With correct setting, all pivot points on intermediate lever should be in nearly vertical line and end pins should be exactly 5 5/16" apart.

To Check Linkage Adjustment—Disconnect vacuum line from engine at selector valve, make certain that dash gear shift lever and transmission actuating lever are in neutral position, run engine, connect vacuum line momentarily. If shift cylinder piston tends to move to rear, rod at upper end of intermediate lever should be shortened slightly; if piston moves forward, rod should be lengthened slightly (adjust rod as directed in preceding paragraph).

Vacuum Lock Adjustment:—Should be adjusted so that valve opens just after clutch is definitely released. Check with car in gear and clutch pedal depressed to point where clutch is free. Vacuum lock valve should be closed but should open with slight additional pedal depression. To adjust, make certain that clutch pedal adjusted for correct 1" (max.) free pedal travel, loosen trunnion clamp bolt on clutch throw-out shaft lever, move trunnion toward flanged end (spring end) of trunnion sleeve on vacuum lock connector rod for earlier valve opening (move trunnion away from flange for later opening), tighten trunnion clamp bolt and check performance.

NOTE—When installing the trunnion sleeve and spring assembly on the vacuum lock connector rod, install forward lock block exactly 3¾" from end of operating rod, install spring, sleeve (with flanged end toward spring), engage throw-out shaft lever trunnion on sleeve, install rear lock block moving block on rod until sleeve compresses spring 1/16", hook return spring to hole in rear end of rod and to hole in frame X member, adjust trunnion on sleeve as directed above. With correct adjustment trunnion should be approximately centered on sleeve with clutch engaged.

Checking Vacuum Shift:—Make following tests to determine if linkage adjustments correct and shift mechanism operating satisfactorily:

1. With engine running, disengage clutch, place dash shift lever in low gear position, engage clutch, check gear engagement. Then disengage clutch, shift dash lever to high gear, engage clutch. If transmission is still in low gear, rod at upper end of intermediate lever is too long and should be shortened slightly.

2. Repeat above test engaging Reverse and then Second gear. If transmission does not shift out of Reverse, intermediate lever rod is too short and should be lengthened slightly. See adjustment above.

TROUBLE SHOOTING:—If Transmission operation unsatisfactory, check following points:

1. Does not shift into any gear. Check all vacuum lines for leaks, tighten connections. Examine check-valve in vacuum line connection at engine (this valve designed to prevent pressure in manifold, caused by backfires, from entering lines). See that linkage operates freely, lubricate pivots and ball connectors.

2. Does not shift into Low or Reverse. Check vacuum line from main line to diaphragm valve on dash unit, vacuum line from dash unit to Diaphragm, tighten connections. Check Diaphragm adjustment and selector plate alignment in transmission cover, check connecting rod adjustment.

3. Does not shift from Low-to-High or Reverse-to-Second. Check linkage adjustment (intermediate lever rod too long or too short).

4. Transmission slips out of gear. See that rod linking dash gear shift lever and lever at top of vertical shaft is free from interference and not striking body in any position.

CONDITIONED-AIR CAR NOTE:—Transmission control dash unit can be removed on these cars without disturbing any part of air-conditioning unit by removing Glove Compartment and Ash Tray first.

NASH LATE 1938 (EVANS VACUUM)

NASH LAFAYETTE, MODEL 3810 (LATE 1938)
NASH AMBASSADOR 6, 3820 (LATE 1938)
NASH AMBASSADOR 8, 3880 (LATE 1938)

NOTE:—This type control used on cars beginning with following serial numbers—(3810) LH-13214 & LR-70845, (3820) N6-19595, (3880) N8-8048.

TYPE:—Design similar to that used on early 1938 cars except that vacuum diaphragm not used, mechanical cross-shift linkage provided (with new type shifter mechanism in transmission) and clutch pedal operated Vacuum Lock used as follows:

Transmission Shift Mechanism—Gear engagement lever is linked to center of pivot plate which engages pin on each shifter shaft so that lever movement (to engage gears) causes pivot plate to pivot on one shifter shaft pin (locked in place by cross-shift lever cam) and actuate opposite shifter shaft (unlocked by cross-shift lever cam). No actual cross-shift movement of gear engagement lever occurs (shifter shaft movement depends on shaft lock being freed by cross-shift lever). Cross-shift lever cam has two recesses which permit interlock pins (below cam) to move out of engagement with notch in shifter shaft when cam recess aligns with pin. NOTE—In forward cross-shift lever position, left hand (Second & High) shifter shaft is free; in rear position, right hand (Low & Reverse) shifter shaft is free.

Cross-shift Linkage—Consists of a separate linkage between the instrument panel shift lever and a vertical shaft (within gear engagement vertical shaft on 3820, 3880, mounted separately on 3810) which is linked to a cross-shift lever and shaft on the transmission cover. Cross-shift is mechanical and does not employ vacuum power.

Clutch Pedal Vacuum Lock—Consists of a main control valve mounted on the vacuum cylinder and connected in vacuum line between manifold and vacuum power unit. This valve operated by clutch pedal (linked to lever on right hand end of clutch throwout shaft) so that vacuum shift operative only with clutch disengaged.

ADJUSTMENT:—Adjustments are made differently than on first type control. Make adjustments in order as follows:

Cross-Shift Linkage:—Disconnect adjustable rod (which links lever at lower end of vertical shaft to intermediate leyer on piston rod connector link) at vertical shaft end. Place instrument panel gear shift lever in Reverse Gear position, move gear engagement lever on transmission case in neutral position, pull piston rod out of vacuum cylinder so that distance from outer face of piston rod boss on cylinder to inner face of piston rod locknut is exactly 2 5/16" and see that piston rod link pin is centered in elongated hole of connector. Disconnect cross-shift rod (which links instrument panel shift lever cross-shift shaft to lever on top end of vertical shaft) at vertical shaft lever end, move cross-shift cam lever on transmission case to extreme rear position, adjust trunnion on right hand end of cross-shift rod so that ball joint end slips freely into hole on vertical shaft lever, connect rod. Connect adjustable rod between vertical shaft and piston rod intermediate levers.

Gear Engagement Lever Adjustment:—Place instrument panel shift lever in Low Gear position. Adjust rod linking lever at lower end of vertical shaft to intermediate lever on piston rod connector (adjustable ball joint end and locknut at intermediate lever end of rod) so that when instrument panel shift lever moved from low gear to neutral position it is free to cross over to second-high side just before lever shank contacts reverse offset in shifter gate (guide plate on back of instrument panel unit).

Clutch Pedal Vacuum Lock:—Should be adjusted so that valve opens just after clutch is definitely released. Check with car in gear and clutch pedal depressed to point where clutch is free. Vacuum lock valve should be closed but should open with

CONTINUED ON NEXT PAGE

NASH LATE 1938 (EVANS VACUUM) (C ntinued)

slight additional pedal depression. To adjust, make certain that clutch pedal adjusted for correct 1" (max.) free pedal travel, loosen trunnion clamp bolt on clutch throw-out shaft lever, move trunnion toward flanged end (spring end) of trunnion sleeve on vacuum lock connector rod for earlier valve opening (move trunnion away from flange for later opening), tighten trunnion clamp bolt and check performance.

NOTE—When installing the trunnion sleeve and spring assembly on the vacuum lock connector rod, install forward lock block exactly 3¾" from end of operating rod, install spring, sleeve (with flanged end toward spring), engage throw-out shaft lever trunnion on sleeve, install rear lock block moving block on rod until sleeve compresses spring 1/16", hook return spring to hole in rear end of rod and to hole in frame X member, adjust trunnion on sleeve as directed above. With correct adjustment, trunnion should be approximately centered on sleeve with clutch engaged.

NASH 1939

NASH-LAFAYETTE, MODEL 3910 (1939)
NASH AMBASSADOR 6, MODEL 3920 (1939)
NASH AMBASSADOR 8, MODEL 3980 (1939)

NOTE:—This type control used in conjunction with special transmission with constant-mesh gears (all speeds). See separate article on Nash Transmission for Transmission servicing data.

TYPE:—Remote control type with shift lever mounted on upper end of control tube under steering wheel. Control tube is mounted on bracket on steering column (upper end) and bracket on frame (lower end) to provide both forward-and-backward motion (for gear engagement), up-and-down motion (for cross-shift at neutral). Operating mechanism at lower end of steering column consists of a gear segment on the lower end of the control tube which meshes with one of two gear segments mounted on ends of two concentric cross-shafts. Levers at opposite ends of these shafts are connected to shift levers on transmission case by rods. Cross-shaft assembly is mounted on ball-and-socket type joints on frame bracket (left end), bracket on crankcase (right end) and outer shaft is mounted on ballbearings on inner shaft. A selector pin in the lower end of the shift lever control tube and a slotted selector plate on the bottom of the lower mounting bracket permits cross-shift to be made only in neutral position and also limits movement of shift lever in the various gear engaged positions. This cross-shift consists of lifting the shift lever and control tube assembly so that the control tube gear segment is lifted out of mesh with the cross-shaft lower gear segment (on inner shaft and connected to the forward or second-high shifter lever on the transmission case) and meshed with the cross-shaft upper gear segment (on outer shaft and connected to rear or low-reverse shifter lever on transmission). A centering spring on a rod connected between a bracket on the control tube lower mounting bracket and a lever on the lower end of the control tube assists in retaining shift lever in neutral or engaged positions and facilitates the lever return to neutral.

ADJUSTMENT:—See that clearance between upper edge of selector pin in lower end of control tube and lower face of selector plate is 1/64" with shift lever in lower or second-high position (adjusted by changing position of upper mounting bracket—see Servicing data below). Disconnect rods linking cross-shaft levers and shift levers on transmission case, place steering column shift lever in neutral (selector pin in line with notch in selector plate), see that forward shift lever on transmission case in neutral position (detent plunger engaging center notch on shifter shaft sector), loosen ball stud mounting nut on inner cross-shaft lever (long lever, nearest engine), adjust position of ball stud so that rod can be connected without disturbing shift lever or transmission case lever, tighten ball stud nut. Adjust outer cross-shaft lever (small lever, nearest frame) ball stud in same manner with rear transmission lever in neutral and shift lever engaging upper gear segment with selector pin in line with selector plate slot. Check operation to make certain that cross-shafts operate freely and that levers and rods do not interfere with other parts in any position or during engine movement.

SERVICING:—Control Tube Upper Mounting Bracket—Mounted on steering column by clamp bolts. Adjust position of bracket on steering column so that clearance between upper edge of selector pin in lower end of control tube and lower face of selector plate is 1/64" with shift lever in lower or second-high position.

Cross-Shaft Assembly:—Outer shaft ball bearing cups are driven in ends of shaft and bearing cones are fitted on inner shaft. Bearings should be packed with adhesive oil and rubber seal installed at outer end. Adjust by positioning second-high lever on inner shaft to control bearing endplay (lever is keyed to shaft and locked by clamp bolt.

Cross-shaft Adjustment—Gear segment mesh controlled by left hand (frame bracket) shaft mounting stud. To adjust, loosen locknuts on stud, turn stud with screwdriver to position shaft assembly so that gear segments mesh freely with minimum clearance, tighten both locknuts. Shaft is spring-loaded on engine bracket mounting stud to keep shaft in contact with frame bracket stud.

NASH 1940

NASH, SIX MODEL 4020, EIGHT MODEL 4080 (1940)
NASH-LAFAYETTE, MODEL 4010 (1940)

TYPE:—Remote control type with steering column mounted gearshift lever. Design not similar to type used on 1939 car models. Shifter lever on lower end of gearshift rod has two cone-shaped prongs which engage rubber grommets in shift levers mounted on threaded bracket on steering column, these levers being connected through rods and idler levers to shift levers on transmission case. Shifter lever is normally engaged with lower (Second-High) shift lever and is lifted up so as to disengage this lever and engage upper (Low-Reverse) shift lever when gearshift lever is moved up toward steering wheel in neutral.

ADJUSTMENT:—If overshift stops out of adjustment (caused by removal or dismantling of transmission etc.), adjust these stops as directed below first, then adjust connecting rods as follows: Install aligning pin, Tool J-1390, through holes in both shift levers and notch in mounting bracket between levers (pin will hold levers in neutral position while adjustment being made). Loosen setscrews and locknuts in connecting rod trunnions at outer end of each shift lever on transmission case cover, adjust each rod by carefully placing shift lever in neutral position (determine by feel of detent plungers engaging notch in shifter fork sector), tighten trunnion setscrew and locknut without disturbing lever position, remove aligning pin.

Overshift Stop Adjustment:—To adjust stops, loosen shift lever trunnion stopscrews so that levers can be moved freely. Move Second-High lever (front lever) to rear to engage Second Gear. Loosen locknut and back off second gear stopscrew (front screw on right hand side of case), make certain that detent plunger engaged in second gear notch in shifter fork sector (determine by feel), tighten stopscrew until very slight overshift or additional travel of lever toward rear is possible, then tighten locknut. Move Low-Reverse lever (rear lever) toward front to engage Low Gear, adjust stopscrew (rear screw on right hand side of case) in same manner as for second gear (above) to permit slight overshift of lever toward front. Then move Low-Reverse lever to rear to engage Reverse Gear, adjust reverse overshift stop (angle stop mounted on left rear transmission case cover screw) for minimum clearance with detent plunger engaged in reverse fork sector notch (stop must be parallel to lever and cover screw securely tightened). Then adjust connecting rods as directed above. NOTE—High Gear overshift stop is located within transmission case and cover must be removed to adjust this stop.

SERVICING:—Gearshift Lever—Lever pivoted on threaded bushing with fixed pivot and adjustable pivot screw. Threaded bushing turns in upper jacket tube bracket and must be installed with one full thread exposed above bracket to insure full travel and maximum bearing area of bushing threads in bracket. Lever must be securely fastened to threaded bushing by tightening adjustable screw and locked with capnut.

Shift Lever Assembly (Steering Column Unit)—Shift levers at lower end of control rod on steering column are mounted on threaded bearing tube which is mounted in lower support bracket and positioned by retaining screw and locknut in bracket. This threaded bearing tube also supports lower end of control rod and guides selector pin which allows cross-shift (up and down motion to engage one or the other shift lever) to be made only at neutral. If this assembly dismantled, screw shift levers on each end of bearing tube (one lever above bracket, other lever below bracket) with aligning pin bosses in until distance between inner faces of levers (not rubber grommets) is 1⅜". Install aligning pin through holes in both levers and notch in mounting bracket, adjust pronged shifter lever (keyed and clamped on control rod) up or down until prongs enter rubber grommets on levers and fully disengage from one lever when engaged in opposite lever, then tighten bearing tube retaining screw and locknut on side of lower support bracket. Screw on lower end of shift rod retains selector pin and limits up and down travel of control rod. This screw also retains rubber boot which seals lower end of bearing tube.

Idler Lever and Shaft—Idler levers are mounted on vertical shaft which is pivoted on crankcase flange at lower end and supported by tie rod extending to bracket on steering column at upper end. Adjust bracket on steering column so that shaft is vertical with engine idle. This mounting provides for engine movement due to torque reaction and noise is prevented by tension spring at lower end of shaft.

NASH 1941-48

"600" Six, All Models (1941 to 1948)
Ambassador Six, All Models (1940 to 1948)
Ambassador Eight, All Models (1941-42)

DESCRIPTION: Remote control type with steering column mounted gearshift lever. Steering column unit consists of a single control shaft mounted in upper and lower brackets on steering column with key in lower end which engages one or the other of the two levers mounted on the lower bracket. These levers are linked to shifter shaft levers on transmission case by rods which have adjustment at transmission case end. Control shaft is normally held down in the lower position (engaging lower Second-High lever) by a spring installed on the lower end of the shaft. Shaft is raised so as to engage upper Low-Reverse lever by lifting up on gearshift lever (lever pivots on bearing screwed in upper bracket and engages integral arm on upper end of control shaft).

ADJUSTMENT: With gearshift lever in neutral, install special aligning pin J-1390 through holes in both flanges of steering column lower bracket and through holes in both levers so that levers are aligned in this neutral position. Loosen locknut and back off setscrew on each rod trunnion on transmission case shifter shaft levers. Carefully position each shifter shaft so that gears are in neutral (can be determined by feel of detents engaging neutral notch in sector on inner end of shafts), tighten setscrews securely and lock with locknuts. Remove aligning pin.

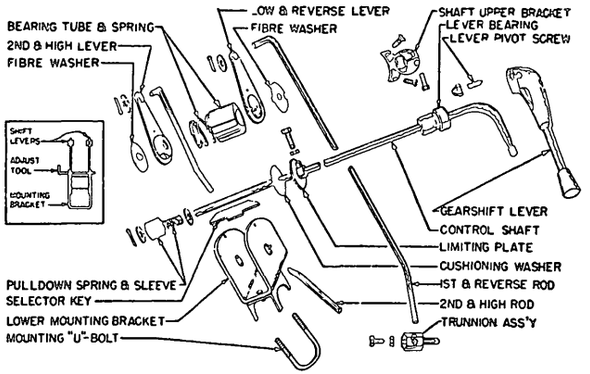

REMOVAL & DISASSEMBLY: Steering column unit must be disassembled to permit removal as follows:

▷*CAUTION*—Gearshift control shaft upper bracket mounting screws are threaded into split ring within steering column jacket and care must be taken when removing screws not to displace this split ring (steering gear must be dismantled to replace split ring if it is pushed out of position). Ring is held in place in jacket by spring tension.

Steering Column Unit—Disconnect rods at levers on steering column, remove cotter pin in lower end of control shaft, remove plain washer, pull-down spring, rubber sleeve, and second washer from end of shaft. Remove lower mounting bracket "U" bolt, free mounting bracket locating dowel from hole in steering column. Rotate control shaft until selector key lines up with notch in mounting bracket, work bracket assembly down and off shaft (shifter levers, washers, bearing tube and spring will come off with bracket as an assembly). Lift out selector key (1940-42 cars—not necessary on later cars). Remove setscrew in limiting plate, slide plate and rubber washer off lower end of shaft.

Gearshift Lever, Shaft, & Upper Bracket—Take out gearshift lever pivot screw and pin, remove lever. Loosen upper bracket clampscrew, remove bearing hub from bracket. Remove two bracket capscrews (see CAUTION below), lift out shaft and bracket assembly.

▷*CAUTION*—Bracket screws must be removed as follows to prevent displacing split ring within column jacket: Remove top screw, loosen bottom screw, then insert small drift in upper screw hole to hold split ring while bottom screw being removed. Remove bracket, replace one screw to hold ring in position until bracket re-installed.

INSTALLATION: Reverse the removal & disassembly directions given above and note the following important points:

Gearshift Lever & Upper Bracket—Apply light film of Lubriplate to shaft and threaded part of bearing hub, screw bearing down in bracket so that clearance will exist between shift lever and bracket with lever in Low-Reverse position.

Lower Bracket & Lever Assembly—Apply light film of Lubriplate on all rubber surfaces, make certain that bracket locating tongue engages hole in jacket tube when bracket installed. Install bracket with slotted hole uppermost. See that levers and spring installed properly (fibre washer between each lever and bracket flange, spring within bearing tube between levers). Install pulldown spring and washer assembly on lower end of control shaft and install cotter pin.

Limiting Plate Adjustment—Must be adjusted so that control shaft selector key does not rub on lower flange of mounting bracket. To adjust, loosen locknut and back off adjusting setscrew. Engage control shaft with Second-High lever fully, then raise shaft slightly to provide clearance between key and lower flange of bracket, position limiting plate so that rubber cushioning washer is against top flange of bracket, tighten setscrew and lock with locknut.

OLDSMOBILE 1939 HANDI-SHIFT

SERIES 60 SIX, MODEL F-39 (1939)
SERIES 70 SIX, MODEL G-39 (1939)
SERIES 80 EIGHT, MODEL L-39 (1939)

TYPE:—Handi-shift remote control with steering column mounted shift lever. Shift lever pivoted on bracket on upper end of control shaft on steering column so that up-and-down motion of lever actuates selector rod (within control shaft) and selector cable (for cross-shift) while backward-and-forward motion of lever rotates control shaft and actuates control rod (for gear engagement). Shift lever normally held down in Second-High position by spring on lower end of selector rod and must be raised against spring tension for Low-Reverse.

ADJUSTMENT:—Selector Cable—See that shift lever and transmission gears in neutral position, measure distance from lower edge of steering wheel rim to upper edge of shift lever. Distance should be 2 7/16-2 9/16". To adjust, back off one nut on cable coupling at lower end of selector rod (top nut to increase distance, lower nut to decrease distance), tighten opposite nut. Make certain that both nuts tight after making adjustment.

Control Shaft Rod—With shift lever and transmission gears in neutral, shift lever should be approximately 1½" above (forward) horizontal position. To adjust, take out clevis pin at selector shaft lever (transmission case) end of control rod, make certain that transmission gears and selector shaft lever in neutral position, place shift lever in neutral position, install J-1082 gauge on selector cable anchor bracket on steering column so that control rod end (extending through control shaft lever) engages slot in gauge. Loosen locknut and adjust clevis on transmission case end of control rod until clevis pin can be entered in clevis and selector shaft lever freely, tighten locknut. NOTE—This adjustment should be made whenever control rod is disconnected at either end.

SERVICING STEERING COLUMN UNIT:—To remove shift lever, use tool J-1044 to press in on both pivot pins and release lever. Use care not to lose pivot pins and spring or tension spring in socket on inner end of lever. Lever clearance in bracket controlled by shims assembled on pivot pins. Install shims as required to secure free fit but make certain that anti-rattle washer installed on one pin. When installing lever, make certain that tension spring in place in inner end of lever and that lever tip is inserted under plunger and plunger spring in upper end of control shaft.

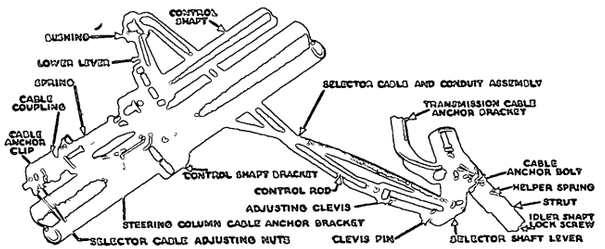

SERVICING TRANSMISSION UNIT—Disassembly—Disconnect control rod from selector shaft lever, and selector cable clip from transmission case cable anchor bracket. Unscrew cable from selector shaft, remove cable, selector shaft lever and springs (selector cable connector locks lever on shaft). Remove transmission cover, use tool KMO-244 to take out setscrews in selector shaft shift fingers, withdraw shaft through side of case being careful not to drop shift fingers or cams into transmission case. Do not remove selector shaft oil seal unless new seal to be installed (seals cannot be re-installed).

Reassembly—With selector shaft installed in transmission case, place special aligning tool J-1066 in end of shaft (where selector cable normally attached), position selector cable anchor bracket so that tool is centered in anchor bracket selector cable slot, tighten anchor bracket mounting bolt. This adjustment important to preserve selector cable alignment and prevent wire binding in cable conduit. Remove tool, install selector shaft lever, selector cable (make certain that cable screw tight in selector shaft and that cable clip tight on anchor bracket), control rod and lever spring.

NOTE—Selector shaft lever spring has over-center linkage (no tendency to rotate shaft in neutral position) and must be correctly installed. Spring link must be below selector shaft and hooked to pin on transmission side of lever.

OLDSMOBILE 1940-48 HANDI-SHIFT

Six & Eight, All Models (1940 to 1948)

►**HYDRA-MATIC DRIVE NOTE:** Control data below applies to Synchro-mesh transmission cars only. Hydra-Matic Drive control is of different design and adjusted differently. *See Oldsmobile Hydra-Matic Drive.*

DESCRIPTION: Remote control with steering column mounted gearshift lever. Design on all models is similar except for following changes:

1940 & Later Gearshift Lever & Selector Linkage: Changed from previous design as follows:

Gearshift Lever—Lever now pivoted on plain pin in control shaft bracket. Pin is retained by retainer ring and entire shift lever pivot assembly is enclosed by rubber boot.

Selector Rod & Lever Assembly—Selector control rod in control shaft on steering column now connected to new type selector lever and shaft assembly in transmission by connecting rod (no cable used). Adjustment provided on lower end of selector control rod at connection to lever.

1941 & Later Control Rod Linkage: New idler lever and redesigned linkage used as follows:

Control Rod (Gear Engagement) Linkage—New relay lever (idler lever) mounted on left side of engine with front non-adjustable rod connected between this idler lever and lever on steering column and additional rear adjustable rod connected between idler lever and gear shift lever on transmission case. Rear rod has adjusting clevis on transmission case end.

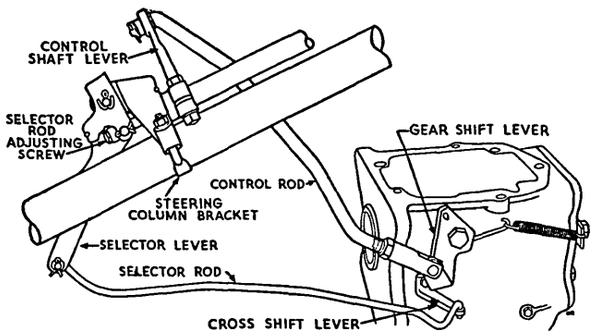

ADJUSTMENT: Adjust in the following order:

Selector Rod (Cross-shift) Linkage—See that both shift lever and transmission gears in neutral, check vertical distance from top of gearshift lever to lower face of steering wheel rim. This distance should be 2 11/16—2 13/16". To adjust, remove cotter pin and take out lock pin in lever which engages adjusting screw on lower end of selector rod, turn adjusting screw up to reduce lever-to-wheel distance, down to increase this distance. Install lock pin from engine side making certain that it passes through waved spring washer on inside of lever, install cotter pin.

Control Rod (Gear Engagement)—With transmission gears in neutral, gearshift lever should be 1½" (1940), ½" (1941-47) above the horizontal. To adjust, disconnect shift rod at lever on transmission case (upper gear engagement lever), see that this lever in neutral position (can be determined by feel of detent balls engaging notches in shifter shafts). Install aligning gauge J-1445 (1940), J-1609 (1941 on see Note) on lower end of control shaft and steering column so notch in gauge engages control shaft lever. Gauge will hold lever in correct neutral position 1½" (1940), ½" (1941 on) above the horizontal. Loosen locknut and turn adjusting clevis on transmission end of shift rod until clevis pin can just be inserted without disturbing position of transmission shift lever. Tighten locknut and connect rod, remove gauge. NOTE—This adjustment should be made each time shift rod is disconnected at either end. Improper adjustment may cause interference with brake pedal.

Aligning Gauge Note—New Part No. J-1872 gauge required for Series 66, 68 Convertible Models and all Series 98 Models which have larger (1¾") diameter steering column.

DISASSEMBLY & REMOVAL: As follows:

Gearshift Lever Removal—To remove lever, slide rubber cover toward outer edge to expose retainer ring, remove retainer ring, take out shift lever pivot pin, remove lever being careful not to lose shims and washers between lever and bracket. When reinstalling lever, make certain that anti-rattle spring in place on inner end of lever and that spring washer installed on pin on one side of lever and install shims (as required) on opposite side of lever so that lever operates freely without excessive sideplay or rattles.

Transmission Case Shifter Mechanism—Selector shaft and shifter shafts (for gear engagement) are same design as used on previous models. See Transmission article for dismantling and servicing directions. CAUTION—Selector shaft must be removed through right side of case and installed on left side to avoid damage to oil seal. Lower lever must be removed from vertical cross-shift shaft before selector shaft is driven out (to permit upper lever on shaft to disengage from selector shaft).

PACKARD HANDI-SHIFT

Six, All Models (1939 to 1947)
Eight & Super Eight, All Models (1939 to 1948)
Custom & Super Cust. 8, (1940 to 1948)

►**Shifter Shaft Rattle Correction (1948 Cars)**—To correct complaints of shifter shaft rattles noted within steering column shroud, Anti-rattle Spring No. 377870, and Anti-rattle Spring Plug No. 338043, can be installed as follows: Remove steering wheel, install plug in end of shifter shaft, install spring by placing center of spring in groove around plug and snapping ends of spring in against re-inforcing wall of steering column wheel web cup.

NOTE—This spring and plug installed in production on later 1948 cars.

►**Gearshift Lever Vibration & Linkage Rattle Correction (1940)**—Caused by loss of dampening due to lubrication of bellcrank levers. See Bellcrank Friction Dampeners under Servicing (below) for adjustment and correction of this condition.

►**Control Lever Misalignment Caution**—For work on car in proximity to control rods or shift levers on transmission case, always install 3/16" lock pin through alignment holes in both levers on lower end of control tube on steering column to prevent accidental gear engagement (which can occur without movement of shift lever). **If this occurs, shift lever cannot be operated until gears and control rods reset in neutral position.**

DESCRIPTION: Handi-shift, remote control with gearshift lever on steering column below steering wheel. Shift lever is mounted on control tube which has a lug at the lower end to engage the operating levers which are mounted loosely on the lower end of the tube (these levers connected by rods to shift levers on transmission case cover). The lug normally engages the upper (Second-High) lever and is moved down to engage the lower (Low-Reverse) lever by lifting up on the shift lever which depresses the lug control shaft within the control tube (this shaft spring-loaded by spring at lower end). Each lever is connected to an individual lever on the transmission case by two adjustable rods and an intermediate bell crank (top lever on control shaft connected to left hand bell crank and forward lever on transmission, lower lever on control tube connected to right hand bell crank and rear lever on transmission). Interlock and detent balls and plunger are located in transmission cover and engage notches in sectors on the shifter lever shafts.

1941 & Later Models—These models have special High Gear Steering Column Lever Stop and new Idler Assembly as follows (these units not used on 1940 and previous models):

Idler Lever Assembly (Clipper Models)—Idler levers mounted on hinged bracket on engine with stay rod connecting top of idler lever shaft to steering gear case. No assist spring used. Lubricant fitting on idler lever hinge should be lubricated with chassis lubricant at 1000 mile intervals (idler levers packed with lubricant and require no attention). Control adjusted in same manner as other models.

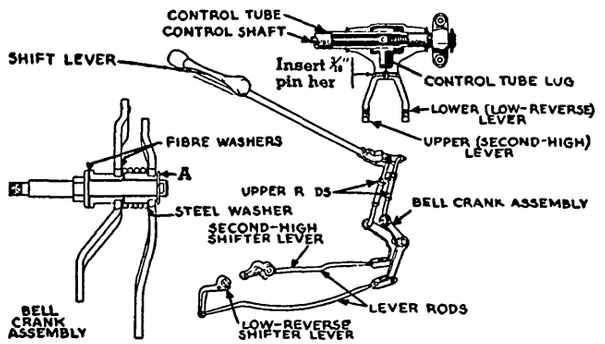

High Gear Steering Column Lever Stop (Other Models)—Consists of an adjustable rubber bumper on steering column bracket which engages lever in third or high gear position so as to take up all slack in linkage. See Adjustment directions below.

Idler Lever Assembly (Other Models)—Second & High Idler Lever mounted on roller bearings on bracket shaft mounted on brake master cylinder (Low & Reverse idler lever mounted on plain bushings). Bearings are packed with lubricant at assembly and require lubrication only when disassembled. Over-center type assist spring is used on Second & High Idler lever (not used for Low & Reverse lever).

ADJUSTMENT: See that the gearshift lever is in neutral, insert 3/16" rod or drill through alignment holes in both levers at lower end of control tube and leave this pin in place while adjustment being made. Disconnect control rods at bell cranks, place shifter levers on transmission in neutral position

CONTINUED ON NEXT PAGE

PACKARD HANDI-SHIFT (Cont.)

(determine by feel when detent ball engages center notch on shifter lever shaft sector within case). Adjust both control rods at each bell crank (adjust upper rod by loosening locknuts and turning adjusting sleeve, adjust lower rod by loosening locknut and turning clevis at bell crank end of rod) so that lengths are correct, connect rods, remove locking pin from alignment hole in steering column levers.

High-Gear Lever Stop (1941-42)—Loosen the locknut and adjust stop by turning mounting stud so that rubber cap on stop is compressed at least ⅛" with shift lever and transmission gears in 3rd. speed or High Gear position.

Assist Spring (1941-42)—Place the special Gauge ST-5209 on upper side of Second-High idler lever, loosen assist spring anchor bolt and position spring so that gauge makes contact with idler lever bearing (at center), assist spring anchor (forward end) and idler lever control rod hole in lever (rear end).

SERVICING: 1940 Bellcrank Friction Dampeners. Bell crank levers are spring-loaded and assembled with special friction washers to provide dampening effect and prevent noise or rattles (see illustration). To check adjustment, disconnect all rods at bell cranks, connect spring scale at upper end of longest (left hand) bell crank. Force required to move lever should be 2-3 lbs. If adjustment not correct, remove cotter pin and add additional washers under end washer 'A' to increase friction.

CAUTION—Bell cranks must not be lubricated (bushings are oil-impregnated type and shaft is zinc-plated). Lubrication will reduce dampening effect and may cause rattles or excessive vibration at steering column shift lever. If bell cranks have been oiled, disassemble, wash in gasoline, and reassemble dry.

Idler Lever Bellcrank (1941 & Later Cars)—Second and High Lever is mounted on roller bearings which are packed with lubricant at assembly. These bearings require lubrication only when disassembled.

PONTIAC 1938 SAFETY-SHIFT

PONTIAC SIX, MODEL 38-26DA (1938)
PONTIAC EIGHT, MODEL 38-28DA (1938)

NOTE:—Transmission used with this control similar to standard model except for special shifter mechanism. See Pontiac Transmission article for Transmission servicing data.

TYPE:—Consists of special shift lever assembly mounted on steering column and linked by Shift Control Rod and Selector Control Cable to special type shift lever and selector plate and shift bar assembly in transmission case cover. Provides remote control with conventional cross and endwise movement of the shift lever. Shift lever under steering wheel is mounted on pivot which is integral with shifter shaft. Inner end of lever extends through pivot fulcrum to engage selector rod within shifter shaft. This selector rod linked to selector plate in transmission by selector cable so that movement of shift lever toward-or-away from steering wheel shifts selector plate sidewise to engage low-and-reverse or second-and-high shifter fork. Steering column shifter shaft (on which shift lever mounted) is linked to pivot shaft outer lever on transmission case so that forward-and-backward movement of the shift lever rotates the pivot shaft and the lever at the inner end engages the gears.

ADJUSTMENT:—Adjustments provided in both selector linkage (selector control cable) and engagement linkage (shift control rod) for correct position of shift lever in neutral position as follows:

Selector Control Cable—Clearance between shift lever and underside of steering wheel should be 2 11/16 - 2 13/16" with lever in normal position at neutral. To adjust, remove front floor center plate and inspection hole cover on transmission case cover, back off one locknut and tighten opposite nut on selector control cable end at selector plate hook (one nut at each side of hook, move both nuts toward end of flexible wire cable to move shift lever away from wheel, or in opposite direction to move lever toward wheel). Tighten nuts securely.

Shift Control Rod—Shift lever should be horizontal in neutral position. To adjust, loosen locknut at inner end of control rod ball stud on transmission case pivot shaft outer lever, turn stud (stud is eccentric), tighten locknut securely.

Shift Control Rod Endplug Assembly—Whenever rod is disconnected or endplug assemblies disturbed, make certain that parts are installed in correct order and adjust by turning plug tightly in seat assembly and then backing plug off ⅛-⅜ turn before installing cotter pin.

SERVICING:—Disassembly. Remove front compartment floor mat and center floor panel, steering wheel (Use Puller J-1143), shift lever (use Tool J-1140 to compress pivot fulcrums, be careful not to lose fulcrum cups, springs, shims, and anti-rattler washer when lever is pulled out). Disconnect steering column bracket mounting bolts and loosen bracket clamp bolt (Use #4 Phillips screwdriver), remove left hood side panel, disconnect horn button, remove pedal plates. Disconnect selector control cable at lower shift shaft support (use #2 Phillips screwdriver), remove support, disconnect control rod at upper end. Loosen upper support locking bolt (use #2 Phillips screwdriver), pull upper support and shaft assembly up on steering column, sliding rubber grommet up to steering column bracket and then removing both grommet and bracket off upper end of steering column jacket as shift shaft assembly is removed. Pull selector rod out through top of shift shaft. This completes disassembly of steering column unit. To disassemble transmission case unit, remove nut and pull out outer lever off pivot shaft, remove inspection hole cover, loosen locknut on selector cable end, lift cable out of selector plate hook, disconnect cable at side of transmission case and pull cable out being careful not to kink cable. Remove transmission cover screws and lift cover off.

Servicing—Whenever control disassembled, lubricate all threads, plugs, plungers, bearings, ball joints, and anti-rattle springs with Lubriplate. Do not apply lubricant to rubber anti-rattle sleeve on control rod (if sleeve not in place at approximate center of rod, wrap rod with tape to ⅜" maximum diameter).

Assembly—Reverse disassembly directions. Make certain that all springs and plungers replaced in same relative positions. Excessive looseness in shift lever can be corrected by installing extra shims on upper fulcrum cup. Selector control cable must be assembled so that it passes below brake tube.

PONTIAC 1939 SAFETY-SHIFT

QUALITY SIX, MODEL 39-25 (1939)
DELUXE SIX, MODEL 39-26 (1939)
DELUXE EIGHT, MODEL 39-28 (1939)

NOTE:—Transmission used with this type control similar to that used on previous models except for shifter mechanism (selector shaft with two fingers which engage slots in shifter shafts—endwise movement of shaft for cross-shift at neutral insures that only one finger engaged at a time). See separate article for complete Transmission servicing data.

SPECIAL SERVICE NOTES:—Shifter Rod Binding—Caused by misalignment of shifter rod and lever on lower end of steering column and will be most noticeable when shifting out of low gear. To check, disconnect rod at steering column lever, note position of rod end in relation to hole in lever as selector shaft moved in and out of low gear position. Correct by bending rod so that rod end enters hole in lever freely without binding.

TYPE:—Safety-shift remote control with shift lever mounted on steering column under steering wheel. Shift lever pivoted on bracket on steering wheel and engages shank of steering column control shaft so that up-and-down movement actuates selector cable (for cross-shift) and forward-and-backward movement actuates control rod (for gear engagement). Control shaft and shift lever held down in Second-High position by spring hooked to clip on lever at lower end of control shaft and must be raised against spring tension for Low-Reverse.

ADJUSTMENT:—See that ⅛" clearance exists between control shaft upper bearing flange (shift lever pivot) and upper face of steering column support bracket (necessary for free movement of shift lever as bearing screws in and out of bracket as shaft rotates). Adjust by removing shift lever and screwing bearing in or out of bracket (see Servicing section below for directions). Adjust selector cable and control shaft lever as follows:

Selector Cable—Loosen locknut and turn selector cable screw in or out of control shaft lower end until distance from lower edge of steering wheel rim to upper edge of shift lever is 2⅞-3⅛" (turn screw in to raise lever, out to lower lever) in neutral position with control shaft retracting spring connected to hold shaft down in second-high position. Tighten locknut securely and replace rubber cable seal after making adjustment.

Control Rod Lever—With transmission selector shaft in neutral, steering column shift lever should be approximately horizontal. To adjust, loosen clamp bolt which locks idler lever and control shaft lever together (at lower end of control shaft), shift idler lever and control rod in relation to short shaft lever, tighten clamp bolt. NOTE—Shift lever can be lowered (moved toward driver) up to 1½" in neutral position if desired for less reach in shifting.

SERVICING STEERING COLUMN UNIT:—Disassembly. Remove steering wheel (use J-452 puller), remove shift lever (use J-1044 tool) by pressing in on pivot pin on either side of lever until pins clear holes in lever, being careful not to lose pivot pins and springs or anti-rattle spring in end of control shaft (within shift lever). Disconnect selector cable by

CONTINUED ON NEXT PAGE

PONTIAC 1939 SAFETY-SHIFT (Continued)

unscrewing adjusting screw from lower end of control shaft, remove control rod and lever assembly (do not loosen clamp bolt locking both levers together—if this bolt loosened, levers must be adjusted when re-installed). Loosen clampscrews on control shaft lower support, remove support being careful not to lose flat anti-rattle spring which is in support keyway. Remove upper support screws from steering column mast jacket (use Phillips #2 screwdriver), pull upper support and control shaft upward parallel with steering column being careful not to lose anti-rattle spring and cup located in hole in underside of upper support.

Servicing—Clean all parts and apply Lubriplate or Delco Brake Lubricant as follows: inner and outer faces of control shaft upper bearing, shift lever pivot pin holes, pivot pins and springs, control shaft ends and flat at top, shaft hole in lower control shaft support, threaded hole in upper control shaft support, anti-rattle springs and cups.

Reassembly—Reverse disassembly directions given above. Make certain that anti-rattle spring installed in end of control shaft within shift lever, on one shift lever pivot pin, in cup in upper support bracket, and in lower support bracket keyway. Adjust selector cable and control shaft levers as directed in Adjustment Section above.

IMPORTANT NOTE—When installing control shaft upper bearing in upper support bracket, see that clearance between bearing flange and bracket is ⅛" (bearing screws in and out of bracket as shaft is rotated). Turning bearing ½ turn will change clearance 1/32".

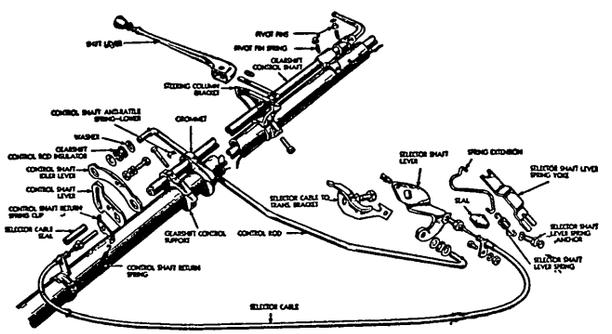

SERVICING TRANSMISSION UNIT:—Disassembly. Remove bolt in cable clip on transmission case bracket, back off cable screw in end of selector shaft, remove cable (this screw also holds selector shaft lever on shaft), remove selector lever and lever spring (spring is over-center type and has no tendency to rotate lever with shaft in neutral position). Remove transmission case cover, free shift fingers from selector shaft (use special J-1046 tool to back out setscrews locking fingers on shaft), withdraw shaft.

Servicing—Clean parts and apply Lubriplate to transmission end of control rod (do not lubricate steering column end of rod which would damage rubber insulator), over-center spring yoke anchor, and selector shaft lever pin groove.

Reassembly—Reverse disassembling directions. Make certain that selector shaft lever spring is correctly installed.

TROUBLE SHOOTING:—Shift Lever position incorrect—Adjust as directed in Adjustment section above. **Shift Lever rattles or has excessive play**—Install extra washers on shift lever pivot pins (make certain that one anti-rattle washer always used). **Shift Lever travel excessive**—See that threaded selector cable end tight in selector shaft at transmission, tighten selector cable anchor bracket mounting bolt.

Shift Lever sticks or does not return to Second-High side at Neutral—See that selector cable not kinked or bent at sharp angles and that return spring correctly hooked to control shaft lower end and to underside of selector cable clip on steering column.

Shift Lever vibrates on rough roads—See that control shaft return spring correctly connected (above).

Control Shaft, Rod, or Cable rattles—See that anti-rattle spring installed between control shaft and lower support on steering column. Install special anti-rattle spring, #501772, on selector cable to prevent rattling against steering column, wrap speedometer cable with tape to prevent contact with cable.

PONTIAC 1940-48 SAFETY-SHIFT

Six & Eight, All Models (1940 to 1948)

►**HYDRA-MATIC DRIVE NOTE:** Control data given below applies to Synchro-mesh Transmission cars only. Hyda-Matic Drive control is of different design and adjusted differently. *See 1948 Pontiac Hydra-Matic Drive.*

►**1941 Streamliner & Custom Six & Eight Control Rod Production Change**—A single shifter rod (between steering column lever and shift lever on transmission case) used on these models beginning with the following Serial Numbers:

	Pontiac	Linden	South Gate
41-24	P6JB-25488	L6JB-6379	C6JB-4044
41-26	P6JC-4884	L6JC-2404	C6JC-1789
41-28	P8JB-19031	L8JB-4349	C8JB-3246
41-29	P8JC-7794	L8JC-3274	C8JC-1957

►**Installing Single Rod on First 1941 Cars**—New single rod furnished for service replacement on all cars. When installing new single rod on first cars (with front and rear rods and intermediate idler lever), proceed as follows: Remove clutch and brake pedal toe plate, cut off shifter rod idler lever bracket and re-install plate. Install the following new parts—506712 Gearshift Control Rod, 506713 Transmission Shifter Lever, 505760 Gearshift Control Shaft Idler Lever (these are levers to which rod attaches at front and rear ends). Discard old parts.

►**Hard Shifting Complaints**—To correct complaints, examine linkage and make following corrections:

Rear Shift Rod Alignment—On cars with front and rear control rods and intermediate idler lever, check rear shift rod and see that ends are parallel so that rod does not bind in transmission shift lever as gears engaged. See note above for installation of new type single rod to replace this double rod and idler lever assembly.

Idler Lever Bracket—Check idler lever bracket for looseness allowing lever to bind on rods. If bracket loose at mounting rivets, remove toe plate and securely weld bracket or remove idler lever and install new type single rod.

Control Shaft Toeboard Grommet—See that rubber grommet on steering column and shift control shaft at toeboard does not bind on shaft and prevent free up-and-down movement (required for cross-shift at neutral). Correct by trimming rubber at point where bind occurs and applying few drops of brake fluid to shaft.

Control Shaft & Gearshift L ver Clearance—If shoulders on shaft not machined low enough, they will strike gear shift lever fulcrum cups and prevent full Low and Reverse gear engagement causing hard shifting. To check this dimension, remove control shaft, place small square on shaft so that upper edge even with tops of shoulders on shaft, measure perpendicular distance from top of square to bottom of fulcrum ball on end of shaft. Distance should be 1 1/16". If incorrect, rework shaft as follows: If over-all length of shaft (from lower end to tops of shoulders at upper end) is more than 32 11/32"±1/32", file shoulders down to secure correct 1 1/16" fulcrum ball height. If over-all length of shaft within limits given above, bend ball end of shaft to secure correct fulcrum ball height.

DESCRIPTION: Remote control with steering column mounted gearshift lever. Same design as used on previous models except for new Selector Rod and Lever Assembly as follows (see Production Change Note above for different type used on late 1941 and and all later car models).

Selector Rod & Lever Assembly—Control shaft on steering column has special collar which engages new selector control lever assembly, this lever being connected to new type selector shaft and lever assembly in transmission by selector rod (no cable used). Adjustment provided at steering column lever assembly (double levers clamped together by bolt, outer idler lever can be shifted after bolt has been loosened).

ADJUSTMENT:—Gearshift Lever Clearance—Clearance between upper edge of control shaft upper support and shoulder on upper control shaft bearing which is screwed in the bracket must be ⅛" minimum, 5/32" maximum, to avoid interference when engaging gears. If clearance incorrect, adjust by removing gearshift lever (see Servicing data below), screw bearing in or out of support bracket.

Selector Rod (Cross-shift)—With gearshift lever in neutral on Second-High side (normal position), distance from lower edge of steering wheel rim to upper edge of gearshift lever should be 2⅞" (plus or minus ⅛"). To adjust, loosen clamp bolt holding selector control lever and selector control idler lever together (these are levers pivoted on lower suport bracket on steering column), see that selector rod and levers are in Second-High position (rod moved to rear as far as possible), place gearshift lever in correct position and tighten lever clamp bolt.

CONTINUED ON NEXT PAGE

PONTIAC 1940-48 SAFETY-SHIFT (Continued)

Control Rod (Gear Engagement)—With gearshift lever in neutral, lever should be approximately horizontal but can be varied approximately 1½" to suit individual operators. To adjust, loosen clamp bolt holding control shaft lever and control shaft idler lever together (these are levers mounted on lower end of control shaft on steering column), see that control rod and transmission case shifter lever are in neutral, move gearshift lever to desired position and tighten lever clamp bolt. Check to make certain that gearshift lever has full travel required for gear engagement without interference after making this adjustment.

REMOVAL & DISASSEMBLY: Remove front compartment floor mat, center floor panel, and steering wheel (use puller J-452). Remove gearshift lever using tool J-1044 to remove shift lever pins and springs, use care not to lose spring washer and shims, disconnect return spring hooked to clip on lower end of control shaft, remove selector control lever pivot pin. Take out screw in lower end of control shaft, remove selector lever collar, control shaft lever and idler lever assembly from shaft. Remove screws in upper support bracket at upper end of control shaft (use Philips #2 screwdriver). Pull upper support and control shaft assembly up parallel to steering column and lift out being careful not to lose anti-rattle spring and spring cup (in upper support), flat anti-rattle spring (in lower suport).

Reassembly—Reassemble by reversing disassembly directions given above. Make certain that anti-rattle spring installed in lower support bracket and upper support bracket (spring and cup must be installed in upper bracket before bracket mounted on steering column). Lubricate all moving parts (including anti-rattle springs) with Lubriplate before assembling. Use caster oil in insulators at rod connections in levers (oil or grease will cause insulators to swell and bind on rods).

Gearshift Lever Assembly—One anti-rattle spring washer must always be used on gearshift lever pivot pin and shims should be installed as required to take up excessive clearance so that lever operates freely without excessive play or rattles.

Transmission Case Shifter Mechanism—Refer to Pontiac Transmission article for dismantling and servicing directions. CAUTION—Selector shaft must be removed through right side of case and installed on left side to avoid damage to oil seal. Lower lever must be removed from vertical cross-shift shaft before the selector shaft is driven out (to permit upper lever on shaft to disengage from selector shaft).

STUDEBAKER 1938 (EVANS VACUUM)

STUDEBAKER COMMANDER (SIX), 7A (1938)
STUDEBAKER STATE COMMANDER (COMM.), 8A (1938)
STUDEBAKER PRESIDENT, MODEL 4C (1938)

NOTE:—Transmission used with this type shift control is similar to standard model except for special shifter mechanism. See Studebaker Transmission article for Transmission servicing data.

TYPE:—Remotely controlled, vacuum operated (see note), mechanical gear shift. Control unit on dash consists of miniature gear shift linked to selector lever on transmission case (for cross-shift to engage Low-Reverse or Second-High shifter rails) and to intermediate lever on valve-and-vacuum-cylinder linkage (for gear engagement). Dash shift lever operates selector lever for cross-shift at neutral mechanically without vacuum power, but when shift lever moved forward (Reverse or Second) or backward (low or High) this motion first operates valve which admits air to one end of vacuum cylinder but without cutting off vacuum connection to

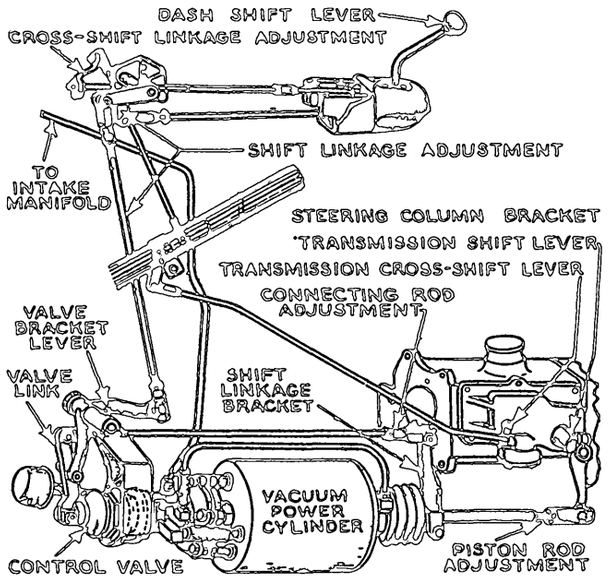

opposite end (cylinder normally vacuum suspended) so that piston moves toward vacuum end of cylinder and, as piston rod connected directly to shift lever on side of transmission case, this motion engages gears. The valve linkage moves with the piston rod and valve tends to balance the vacuum cylinder so that piston follows dash shift lever movement exactly. When shift is completed (or when dash shift lever is stopped in any position), piston remains stationary in that position until a new shift is made with the dash shift lever (or lever is returned to neutral).

NOTE—Gears can be engaged by dash shift lever when engine is not running (no vacuum) although additional effort required. This will allow engine to be started by engaging gears and towing or coasting car when necessary.

CHECKING & ADJUSTMENT:—Whenever linkage disconnected or disturbed by removal of other units, check and adjust entire mechanism in order as directed below.

Selector (Cross-shift) Linkage:—Move dash shift lever to extreme left hand side of cross-slot at neutral and hold in this position while adjustment being made. Disconnect connecting rod at lever on front of dash (upper right hand dash unit shaft), see that selector lever on transmission (front short lever) is in extreme forward position, adjust connecting rod length so that it can just be connected to lever without disturbing dash shift lever or selector lever.

Dash Unit Shift Linkage:—With dash gear shift lever in neutral, adjust length of connecting rod (lower dash unit rod) between dash unit and lever on cross-shaft on front of dash so that this lever (to which rod attached) is parallel with front face of dash.

Vacuum Cylinder Piston Rod:—Make certain that shift lever on side of transmission case (rear lever) is in neutral position (check by moving lever back and forth for cross-shift which can be made only at neutral), measure distance from extreme rear end of vacuum cylinder to shoulder at rear end of piston rod. This distance should be exactly 10¾" and piston should be at mid-point in cylinder. Adjust by loosening locknut and turning clevis at rear end of piston rod.

Shift Linkage:—Check position of bracket mounted on piston rod (to which shift linkage connected). Bracket should be exactly 6 13/16" from shoulder at rear end of piston rod. Adjust by loosening clamp bolt at lower end of bracket and shifting bracket on rod. Connecting rod linked to upper end of this bracket should be exactly 14 1/16" long between clevis pin centers. To adjust, loosen locknut and turn clevis on rear end of rod.

Valve Linkage:—With all other adjustments correctly made and dash gear shift lever in neutral position, adjust length of vertical rod connecting lever on valve mounting bracket and cross-shaft lever on front of dash so that valve is in center (neutral) position and all pivot points on valve link are approxdmately vertical. Check this adjustment as directed below.

To Check Valve Setting—Disconnect vacuum line from engine at valve. Operate engine (to supply vacuum), make certain that dash gear shift lever and transmission shift lever are in neutral position, connect vacuum line momentarily. If piston rod tends to move to rear, connecting rod should be lengthened slightly, if piston rod moves forward, connecting rod should be shortened slightly. Repeat test until satisfactory valve setting secured.

STUDEBAKER
1939 COMMANDER & PRESIDENT

COMMANDER, MODEL 9A (1939)
PRESIDENT, MODEL 5C (1939)

NOTE:—Transmission used with this type control similar to standard type except for shift mechanism (two levers on cover on side of transmission case—forward lever for cross-shift, rear lever for gear engagement). See separate article for complete Transmission servicing data.

TYPE:—Remote control type with shift lever mounted on steering column. Shift lever pivoted on bracket on steering column control shaft so that up-and-down motion of lever actuates selector (cross-shift) shaft within control shaft and forward (cross-shift) lever on transmission case. Backward-and-forward motion of shift lever rotates control shaft and actuates rear (gear engagement) lever on transmission case. Shift lever normally held down in Second-High position by spring in control shaft below lever and must be lifted against spring tension for Low-Reverse.

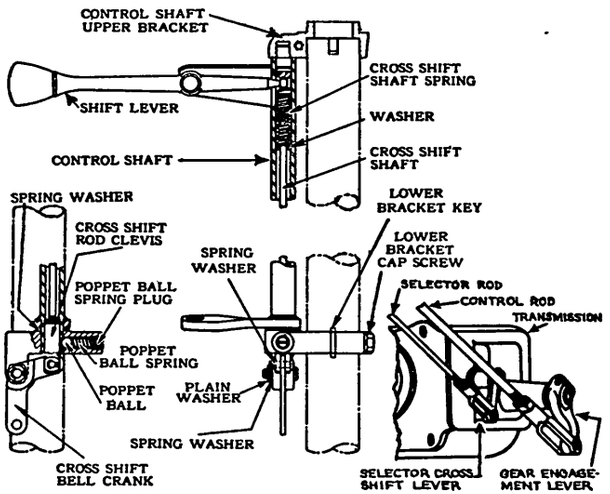

ADJUSTMENT:—Disconnect both control rods at transmission case levers by taking out clevis pins. Rotate shift lever to neutral position (can be determined by poppet ball at lower end of control shaft engaging shaft at this point). Disconnect cross-shift (inner) shaft from cross-shift bell crank at lower end of steering column assembly by taking out clevis pin. Set shift lever parallel with steering wheel and adjust cross-shift shaft length by turning clevis on lower end of shaft until upper edge of clevis slot lines up with lower face of lower bracket, install clevis pin connecting cross-shift shaft and bell crank. Without disturbing position of shift lever, move forward (cross-shift) lever on transmission case as far forward as possible, adjust length of control rod (loosen locknut and turn clevis on transmission end of rod) until clevis pin enters hole in rod clevis and cross-shift lever freely, install clevis pin. Set rear (gear engagement) lever on transmission case in neutral position (approximate center of travel—may be determined by detents engaging shift rails at this point), adjust length of control rod (loosen locknut and turn clevis at transmission end of rod) until clevis pin enters hole in clevis and lever freely, install clevis pin.

SERVICING:—**Disassembly**—Disconnect both control rods at lower end of steering column unit. Take out shift lever fulcrum pin screw and pin, remove shift lever being careful not to lose spring washer on fulcrum pin. Remove plug on poppet ball boss on lower support bracket, take out spring and poppet ball. Disconnect cross-shift shaft from bell crank at lower end of steering column by taking out clevis pin. Remove lower support bracket capscrews, remove key from slot in steering column jacket, slide support bracket down on steering column until control shaft and bearing plug clear socket in upper support bracket, remove assembly. To remove inner cross-shift shaft, unscrew clevis from lower end of shaft, withdraw shaft, spring, washer, and insulator through upper end of control shaft.
Servicing—Apply Lubriplate to upper and lower ends of cross-shift shaft (these points packed with Lubriplate at assembly).
Reassembly—Reverse disassembly directions given above. When installing lower support bracket, slide bracket up on steering column until light tension placed on spring washer located between lower control lever and upper face of bracket (some tension required to prevent rattles, but bracket should not be pushed up so far as to cause excessive friction at this point). Key slot in steering column is elongated to permit this adjustment. Adjust both control rods as directed above.

STUDEBAKER 1939-48

Champion, All Models (1939 to 1948)
Commander, All Models (1940 to 1948)
President, All Models (1940-41-42)

►**SPECIAL SERVICE TOOL NOTE:** (1940-46) Gauge No. J-1308-A required for adjustment of transmission control on 1940-46 cars. Gauge J-1308 (1939 Champion) can be worked over for 1940-46 cars by reducing over-all width across prongs from .750" to .672" by grinding equal amount (.039") off outer face of each prong and maintaining 1/16" chamfer at 45° on end of prong. With this change, gauge can be used both for 1939 Champion and all 1940-46 cars.
1947-48 Service Tool—New gauge No. J-1308-B required for transmission control adjustment on these cars. Old type Gauge J-1308-A (1940-46 cars) can be reworked for use on 1947 cars by milling out a section of the tool handle 7/16" by 1⅜" long (at right angles to plane of the tool prongs) to provide clearance when tool inserted in shift control box on steering column.

DESCRIPTION: Remote control with gearshift lever on steering column below steering wheel. Shift lever is pivoted at inner end in pin screwed in upper bracket and is linked to control shaft by fulcrum pin so that up-and-down movement of the lever (for cross-shift) lifts the entire control shaft and backward-and-forward movement (for gear engagement) rotates the shaft. An integral lug or lever on the lower end of the control shaft (within control housing on steering column) engages a fork attached to the lower control lever (second-high) and is lifted to engage the fork attached to the upper control lever (Low-reverse) when shift lever is lifted up toward steering wheel (lug normally held down in second-high position by spring on lower end of control shaft below control housing). Control levers are connected to shift levers on side of transmission case by adjustable rods (forward lever for second-high, rear lever for low-reverse). Control housing is entirely enclosed and provided with lubricant fitting so that it can be kept filled with chassis lubricant.
1940 & Later Cars—Design is same as 1939 cars (above) except that cross-over travel of control shaft lug (up-and-down movement of control in neutral position) reduced to ⅜".
►*NOTE*—This reduced travel requires use of special gauge (or reworked gauge) for adjustment purposes. See Special Service Tool Note above.

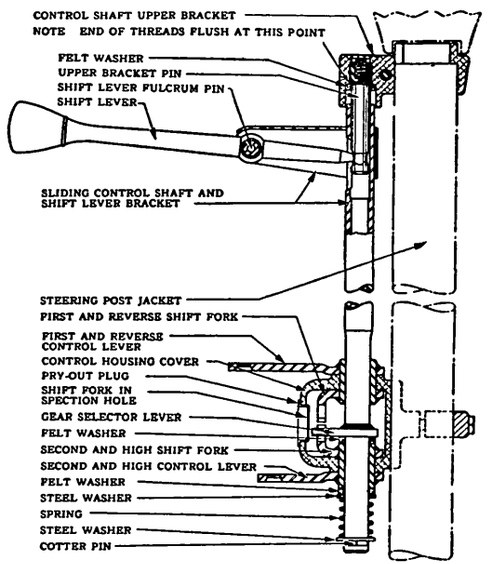

ADJUSTMENT:—See that clearance between lower edge of instrument panel and control shaft is 1/16-⅛" (loosen clamp bolts and rotate steering column slightly to secure this clearance). Use special plug gauge (see "Special Service Tool Note" above) for special gauges) to align the control housing forks and levers in neutral position. To install gauge, pry out inspection plug in control housing cover, insert forked end of gauge in inspection hole, press up on control shaft until gauge prongs can be pressed in so as to engage both control lever forks, leave gauge in place until adjustments completed. Disconnect both rods at shift levers on transmission case, place each shift lever in neutral position (determine by feel of detent plungers engaging notches in sectors on shift lever shafts). Loosen locknut and adjust clevis on transmission end of each control rod so that clevis pins can just be inserted, connect rods, remove gauge and replace control housing inspection plug.

SERVICING:—If control mechanism removed from steering column, coat upper bracket pin threads and shift lever ball with Lubriplate, turn pin into upper bracket so that end of thread on pin is flush with lower fac of bracket. Make certain that key on lower control housing mounting bracket engages notch in steering column. Control housing lever and fork assembly cannot be dismantled.
Lubrication—Lubricate gear shift control box on steering column with chassis lubricant every 10,000 miles.

WILLYS 1940-48

Model 440 Passenger Cars (1940)
Americar, Model 441 (1941), 442 (1942)
Jeep, Universal Model CJ-2A (1946)—First Cars
Jeep, Sta. Wgn. & Sedan Del. 4-63 (1946-47-48)
Jeepster, Model VJ-2 (1948)
Jeep Station Sedan, Model 6-63 (1948)
Jeep Truck, Models 2T, 4T (1947-48)

▷Hard Shifting & Gearshift Rattle Complaints on First Cars—If shift does not operate smoothly and positively, or if rattles noted, correct these complaints as follows:

Shift Not Smooth and Positive—Check linkage and adjust control rods.

Shift sticks or does not disengage—Check adjustment. If adjustment does not correct trouble, check Clutch Clearance (Servicing—above) and adjust clearance or replace Clutch Lever and Housing Assembly.

Gearshift Rattles—Check Gearshift Lever Clearance and Control Shaft Dampener position (Servicing—above). NOTE—If gearshift lever breaks at the weld (first cars only) and lever can not be welded, install new Control Shaft Assembly #638022.

DESCRIPTION: Remote control with gearshift lever on control shaft under steering wheel. Shaft has dog clutch at lower end (pin in shaft engages slots in levers) by which it is engaged with upper lever (connected to rear lever on transmission case) for Low-Reverse, or lower lever (connected to front lever on transmission case) for Second-High engagement. Control rods connecting steering column levers and transmission case levers have adjusting clevises at transmission case end.

ADJUSTMENT:—Disconnect both control rods at transmission case levers by removing clevis pins, make certain that both levers are in neutral position (can be determined by feel of detents engaging notches in shifter lever shaft sectors). Place steering column shift lever in neutral position, install aligning tool (short piece of ¼" drill rod) through hole in each lever and hole in boss on steering column clutch housing (at lower end of control shaft) to hold levers in neutral position while adjustment being made. Loosen locknut and adjust clevis at transmission end of each control rod until clevis pin can just be inserted without disturbing position of transmission case lever. Tighten locknut and install clevis pin. Remove aligning tool. Check operation. If shaft pin strikes edges of slots in lever clutches, disconnect low-and-reverse control rod at transmission lever (rear lever) and lengthen or shorten rod slightly so that shaft pin engages both clutch slots smoothly.

REMOVAL & INSTALLATION: To remove the assembly from steering column, remove steering wheel, remove floor boards, disconnect control shaft dampener at cowl. Assembly can then be removed by taking out gearshift lever and freeing housing assembly clamp bracket at lower end of steering column. When re-installing, note following points:

Clutch Clearance—Clearance between faces of shift clutches must be .015-.031" (1/64" to 1/32"). Can be checked by removing lubrication fitting on clutch housing and inserting narrow feeler gauge through this hole. If clearance not correct or if clutch assembly has been dismantled, check clutch pin clearance in slots (must not exceed .009"—replace Clutch Lever and Housing Assembly #116221 if clearance excessive) and set up levers as follows: Screw upper clutch lever in housing as far as possible, then back lever out one full turn until alignment holes line up. Then screw lower clutch lever into housing until clutch face contacts upper clutch lever face, then back lever off ½ turn max. which will give correct clearance of .015-.031" between clutch faces. If alignment holes do not line up in this position, remove lower clutch lever and grind off clutch face squarely not more than .015". It is very important that lower clutch lever be backed off exactly ¼ turn from position where it contacts upper clutch lever and that alignment holes line up in this position. If correct clearance between clutch faces cannot be secured by this method, or if control shaft clutch pin has more than .009" clearance in clutch slots, replace entire Clutch Lever and Housing Assembly #116221.

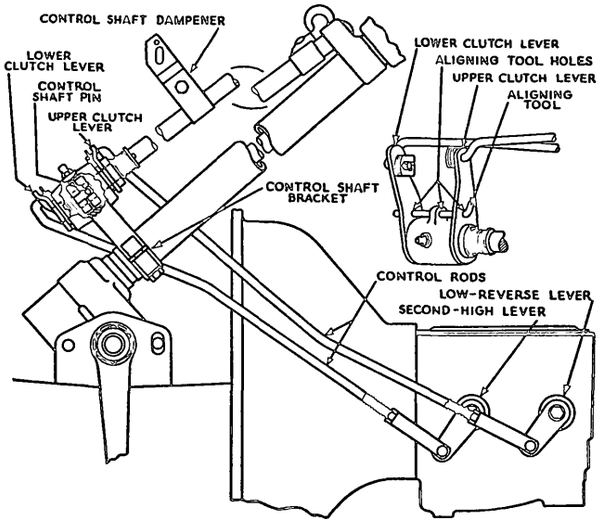

Control Shaft Bracket Position—When installing steering column assembly, see that steering gear outer casing or jacket is positioned so that gear shift control shaft clutch pin bottoms in upper clutch slot when gear shift lever and shaft is in the uppermost position (Low-Reverse). If jacket and brackets installed too far down on steering gear shaft, gear shift control shaft will bottom in upper bracket and prevent clutch pin fully disengaging from lower (Second-High) clutch slots.

Gearshift Lever Clearance—Lever sideplay at fulcrum pin must not exceed .005" (excessive play will cause rattles). To reduce sideplay, add thin washer (.005-.010") under head of fulcrum pin or grind down shoulder on pin so that it will squeeze stamping closer to lever when installed. Also see that anti-rattle trigger spring on gearshift lever has sufficient tension on lever to dampen rattles.

Control Shaft Dampener—When installing dampener, see that it is positioned on cowl so that tension applied to shaft and that dampener cross bolt spacer short enough so that slight drag results on shaft when cross bolt is tightened.

DETROIT TRANSMISSION

Auburn Eight, Model 852 (1936-37)
Auburn Supercharged Eight, 852 (1936-37)

TYPE:—Constant-mesh, synchro-mesh (second and high), sliding spur gear (low and reverse). Clutch shaft and main drive gear mounted on ball bearing in case. Mainshaft mounted on roller bearing at forward end, ball bearing at rear. Countershaft mounted on bushings on stationary countershaft with thrust washer at each end.

Synchronizing Unit. Consists of synchronizing cones on gear hubs and drums on sliding sleeve splined to mainshaft. Synchronizing sleeve (inner) and clutch sleeve (outer) centered by spring-loaded detent balls and move as a unit until synchronizing drums and cones engage. When synchronization completed, outer clutch sleeve slides further to engage gears.

SERVICING:—Disassembly—To disassemble, remove shift lever, cover, shifter shaft and fork assemblies, taking care not to lose lock balls and springs. Remove rear bearing retainer, take out rear bearing lock ring (at front end of bearing inside case). Pull mainshaft to rear as far as possible and tilt up so that second speed gear thrust washer locking plunger is accessible, depress plunger to free washer, withdraw synchronizing unit, washer, and gear from mainshaft, remove mainshaft. Remove main drive gear bearing retainer on front end of case. Drive out countershaft toward rear, allowing counter gear cluster to drop down in case. Remove main drive gear and bearing assembly. Lift out counter gear cluster, taking care not to damage thrust washers. To remove reverse idler, take out cotter pins and drive shaft forward in case.

Main Drive Gear & Bearing Assembly:—See that bearing lock ring is in place in bearing hole in case, install shims under bearing retainer so that bearing outer race is held in case without any endplay.

Mainshaft & Bearing Assembly:—Installed in same manner as main drive gear bearing (bearing lock ring in case, shims under rear retainer so that outer race held snugly without endplay).

Counter Gear Assembly:—Install rotating thrust washer (pinned to end of gear cluster) before inserting gears in case, then install stationary bronze thrust washers and insert countershaft. Make certain that reverse idler shaft and countershaft are locked in place.

SPICER TRANSFER CASE

Jeep, Ford & Willys Army Model (1942-45)
Willys Jeep, Universal Model CJ-2A (1946-47-48)
Willys Jeep Truck, Model 4T (1947-48)

DESCRIPTION: Transfer case consists of an auxiliary transmission bolted on the rear face of the regular transmission and performing these functions:

1) Provides auxiliary speed range (Low & High) controlled by right hand shift lever (Low range useable only when Front Wheel Drive engaged).

2) Enables Front Wheel Drive to be engaged or disengaged (controlled by left hand shift lever).

NOTE—Front wheel drive should not be used on dry hard surfaced roads.

3) Provides offset drive for front wheels to clear engine (drive for front and rear wheels taken from shaft at right of transfer case).

REMOVAL: Transfer case is removed as a unit with transmission (see Transmission Removal data on car model page). Then separate transfer case from transmission as follows: Take out screws and remove rear cover, remove nut on end of shaft and pull gear off end of mainshaft, remove five transfer case mounting screws, pull transfer case off transmission while **tapping on end of mainshaft** with a soft hammer (CAUTION—Do not allow mainshaft to pull out of transmission case, this would allow transmission synchronizer parts to fall down in transmission case) leaving mainshaft and rear bearing in transmission, place transfer case on bench.

DISASSEMBLY: Take out four screws and remove rear propeller shaft universal yoke, hand brake assembly and brake linkage. Remove transfer case lower cover. Take out retaining screw and remove intermediate shaft lockplate (on rear face of case), drive intermediate shaft out toward rear of case, withdraw intermediate gear, thrust washers, and roller bearing from case. Take out plugs and remove detent poppet balls and springs from both shift rails, move front wheel drive shift rail to engaged (forward) position. Take out mounting screws and remove front output bearing cap and shaft assembly (see disassembly note below) taking care not to lose shift rail interlock plunger. Remove output shaft snap ring and thrust washer. Take out mounting screws and remove rear output bearing cap and shaft assembly (see disassembly note below) which will allow sliding gear and constant mesh gear to be removed from bottom of case. Remove setscrew in sliding gear shift fork, remove shift rail and lift out shift fork.

Front Output Bearing Cap Disassembly Note—Remove nut on end of shaft, pull universal joint yoke, remove oil seal. Take out setscrew in shift fork, remove front drive clutch gear and fork as a unit. Remove output shaft through rear of cap, pressing the shaft out of the bearing using care not to damage bearing. Remove bearing snap ring, remove bearing through rear of cap.

Rear Output Bearing Cap Disassembly Note—Remove nut on end of shaft, pull universal joint companion flange, remove oil seal. Remove speedometer driven gear assembly. Withdraw output shaft through inner end of cap. NOTE—Bearing cone is press fit on shaft and can be pressed off if necessary.

REASSEMBLY: Assemble parts in reverse order of disassembly directions given above and note the following points:

Output Shaft Bearing Adjustment—Install shims between rear output shaft bearing cap and transfer case, as necessary, so that shaft endplay is .004-.008" with front and rear bearing cap mounting screws tight.

Transfer Case Mounting on Transmission—Make certain that countershaft and reverse idler shaft lockplate (on rear face of transmission case) is properly positioned so that it fits into recess in front face of transfer case when transfer case installed.

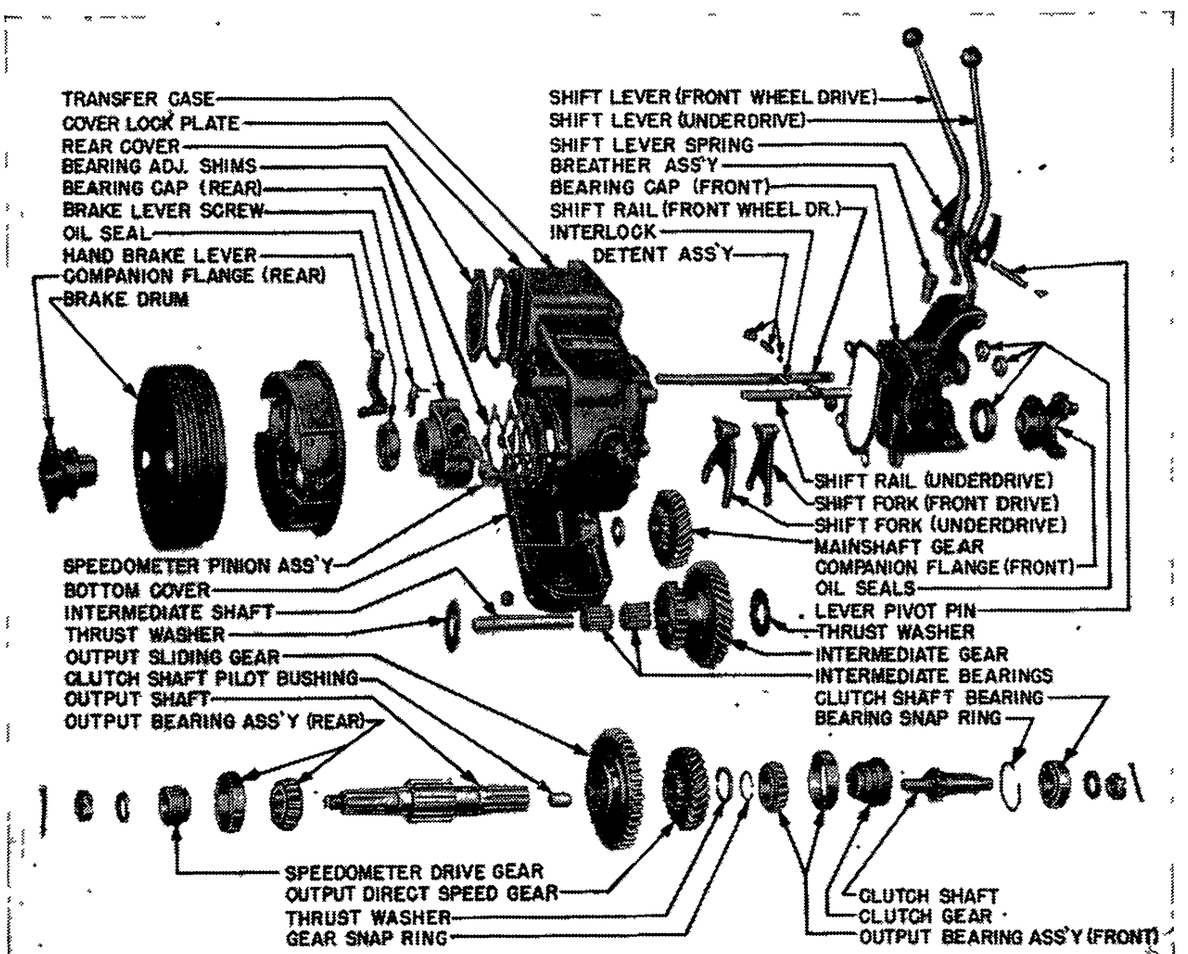

SPICER TRANSFER CASE (FOR FOUR-WHEEL DRIVE)

WARNER 1936-37 TRANSMISSIONS (WITHOUT OVERDRIVE)

Auburn Six, Model 654 (1936-37)
Bantam, Model 60 (1937)
Chrysler Six, C7 (1936), C16 (1937)
Chrysler Eight, Model C8 (1936)
Chrysler Imperial, C9 (1936), C14 (1937)
DeSoto, S1, S2 (1936), S3 (1937)
Dodge, Models D2 (1936), D5 (1937)
Graham Crusader, 80, 80A (1936), 85 (1937)
Graham Cavalier, 90, 90A (1936), 95 (1937)
Graham Supercharger, 110 (1936), 116, 120 (1937)
Hupmobile Six, Model 616G (1936)
Hupmobile Eight, Model 621N (1936)
Pierce Arrow 8 & 12 Models (1935-37)
Plymouth, P1, P2 (1936), P3, P4 (1937)
Studebaker, Dictator Models (1936-37)
Studebaker, President Models (1936-37)
Willys, Model 37 (1937)

NOTE:—Free-wheeling used as standard or optional equipment on some models. See separate articles

Chrysler Imperial Model C9. This model has splined shaft extension at rear of case. Can be removed by taking out housing capscrews and withdrawing to rear to disengage extension shaft from mainshaft splines.

TYPE:—Constant-mesh, synchro-mesh, helical gear (second and high), sliding spur or helical gear (low and reverse). Main drive gear and shaft mounted on ball bearing in front of transmission case. Mainshaft mounted on roller bearing (front), ball bearing (rear). Counter gear cluster mounted on bronze bushings, or roller bearings (caged type or loose rollers) on stationary countershaft. Reverse idler mounted on bronze bushing (loose roller bearing on some Chrysler models) on stationary shaft. Second speed and high gears engaged by sliding clutch sleeve (splined on synchronizing unit spline sleeve) which engages clutch teeth on second speed and main drive gear hubs.

Synchronizing Unit. Consists of synchronizing cones on main drive gear and second speed gear and drums on ends of sliding sleeve splined to mainshaft within sliding clutch sleeve. These two sleeves are centered by spring-loaded detent balls which engage a groove in the outer clutch sleeve and move as a unit when the clutch sleeve is shifted to engage second or high until the synchronizing drum and cone engage. When synchronization is completed, clutch sleeve engages clutch teeth on gears.

REMOVAL OF TRANSMISSION: *See "Transmission" on car model page.*

SERVICING:—Disassembly. Remove shift lever, cover, shifter shaft and fork assemblies, being careful not to lose lock balls and springs. Remove universal joint flange nut, pull flange. Take out rear bearing retainer screws, withdraw rear bearing retainer, mainshaft, second speed gear and synchronizing unit as an assembly, being careful not to allow clutch sleeve to move on inner synchronizing sleeve which will allow detent balls and springs to jump out. See note below for types where rear bearing mounted directly in case so that mainshaft assembly cannot be withdrawn through rear of case. Take out screw in countershaft and reverse idler locking plate screw and remove plate, drive out countershaft toward the rear (on types where loose roller bearings used, use dummy shaft or arbor to drive out countershaft leaving the arbor in the gear cluster until it is re-installed, arbor will prevent rollers falling out). Take out screws in bearing retainer on front of case, pull clutch shaft main drive gear and bearing assembly out toward front. Lift out counter gear cluster, being careful not to lose thrust washers and spacers. To remove reverse idler, drive shaft out toward rear (on types with loose roller bearings, rollers will fall out and care should be taken that they are not lost).

NOTE—When rear mainshaft bearing mounted directly in case, pull mainshaft assembly to rear until bearing is free of case, tip shaft up and remove synchronizing unit, and if necessary second speed gear (see dismantling instructions below). Remove bearing snap ring, push shaft forward and remove through top of case.

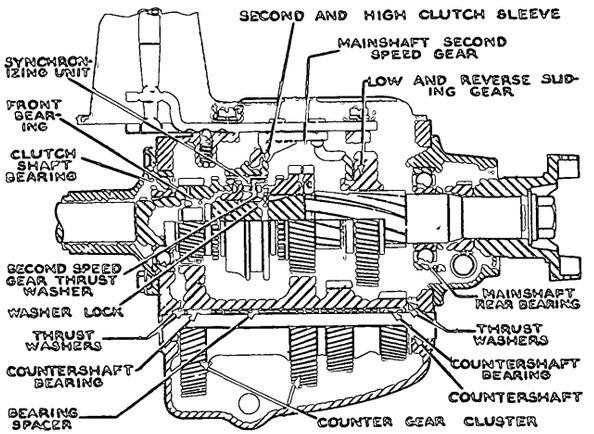

Countershaft Locking Key Note. On models where locking plate not used, countershaft and reverse idler shaft retained by key in recess in rear face of case which engages slot in shaft. On these models, drive countershaft out to the rear (with rear bearing adapter free) until key is exposed, remove key drive shaft out (use dummy shaft or arbor).

Mainshaft & Bearing Assembly:—Bearing is press fit on mainshaft (press bearing on and off shaft). Bearing is retained in case by snap ring at rear, or by snap ring at forward end.

Synchronizing Unit:—Mark outer clutch sleeve and inner synchronizing sleeve before dismantling and assemble in same positions. Use care not to lose detent balls and springs (wrap in cloth when pushing clutch sleeve off so that balls will be caught when they spring out). Use special assembling clips when reassembling. Install on mainshaft with longer hub on both sleeves toward front (see illustration).

Second Speed Gear Assembly:—See Note and special instructions below for removal of early type with thrust washers locked in place by key. On types with front thrust washer locked by plunger in shaft under washer, use a wire to depress plunger and free washer, turn washer so that prongs on inner edge line up with splineways on shaft, pull washer and gear off, taking care not to lose lock plunger and spring. When installing thrust washer, see that it is turned so that prongs engage slots in splines and that it is locked in place by plunger. Gear endplay controlled by thrust washer thickness (furnished in various thicknesses) is .003-.008".

NOTE—On some models, additional thrust washer used at rear of gear against shoulder on shaft. This washer locked in place by pin or by locking plunger and spring in same manner as front washer.

Locking Key (Early type). Gear positioned by thrust washer at each end which is locked on shaft by key within gear bushing. To remove gear, insert wire in oil hole at center of gear between teeth, rotate gear until wire can be pushed through hole in bushing, depress plunger under locking key, use wire or flat tool to push key forward until it clears rear thrust washer, rotate washer until prongs on inner edge line up with shaft splineways, move washer to rear slightly. Move key back to free front washer (plunger will engage key at center position and must be depressed again to allow key to be shifted further), withdraw wire and move second speed gear back to expose front thrust washer, rotate washer until prongs are freed from splines, remove washer and gear. When installing gear, make certain that prongs on both washers engage slots in splines, that key engages both washers to prevent any rotation which would allow them to disengage, and that key is locked in place by plunger. When replacing gear bushing see that omitted spline (for key) is directly over plunger.

Counter Gear Assembly:—See that bearing spacer installed in gear cluster between bearings. On types with loose rollers, see that rollers installed around arbor, coat end of gear with cup grease to hold rollers in place. Install steel spacers or thrust washers next to gear at each end (not used at front end on some models), bronze washers between steel spacers and case. Install countershaft from rear, driving out arbor toward front (when used). Gear endplay is adjusted by selecting thrust washers of correct thickness and should be .002-.008".

WARNER FREE-WHEEL UNIT

Pierce Arrow 8 & 12, All Models (1936)

DESCRIPTION & OPERATION:—Cam and roller type. Cam splined on mainshaft, outer sleeve splined on mounting ring on transmission stub drive shaft. Rollers are located in pockets in cam and wedge between cam and sleeve when engine is driving rear wheels. When car coasts, rollers shift in cam pockets allowing sleeve to rotate faster than cam (free wheeling). On the later type units, stub drive shaft extends through free wheel unit and is mounted on bearing in pocket in mainshaft.

Locking Device. Consists of a sliding clutch gear splined on the mainshaft which can be shifted to the rear to engage clutch teeth in the free wheel sleeve, locking the shaft and sleeve together. Clutch clutch gear is controlled by shifter shaft linked to dash control button. A locking plunger is provided so that free-wheel locked out in reverse gear.

SERVICING:—Remove housing cover and shift lever assembly. Take out free wheel housing mounting screws on rear of transmission case, withdraw unit to rear. Dismantle shifter shaft mechanism to free sliding clutch gear and fork. To dismantle cam and rollers, take out snap ring in sleeve at forward end, remove retainer washer, jar assembly on bench to remove rollers. When reassembling, make certain that cam is correctly installed (if cam reversed, engine will not drive car).

WARNER HORIZONTAL TRANSMISSIONS (WITHOUT OVERDRIVE)

Model AS2-T88.
GRAHAM STD. & SPEC., MODEL 96 (1938)
GRAHAM STD. & SPEC. MODEL 96 (1939)
GRAHAM SUPERCHARGER, MODEL 97 (1938)
GRAHAM SUPERCHARGER, MODEL 97 (1939)
STUDEBAKER SIX & COMM., 7A (1938)
STUDEBAKER COMM. STATE COMM., 8A (1938)
STUDEBAKER COMMANDER, MODEL 9A (1939)
STUDEBAKER PRESIDENT, MODEL 4C (1938)
STUDEBAKER PRESIDENT, MODEL 5C (1939)
Model AS4-T88—See Note.
GRAHAM, MODELS 96, 97 (1938)
STUDEBAKER, MODELS 7A, 8A, 4C (1938)

NOTE:—1938 Models. Transmission with Overdrive (R6 Type) optional on these car models. See following article for Overdrive servicing data and special Disassembly Directions for Transmission and Overdrive.

1939 Models—Transmission with Overdrive (Special type with electrical 'kick-down' control optional on these models. See following article for data.

Model AS4-T88. This model used on Graham and Studebaker cars with Evans Vacuum Gear Shift. Similar to standard transmission except for shifter mechanism and serviced in same manner. See articles on Evans Vacuum Gear Shift for adjustment and servicing data on this equipment.

Transmission Controls. Remote steering column mounted types optional on all car models. See separate articles on "Transmission Controls" for complete data on each type.

TYPE:—Constant-mesh, synchro-mesh, helical gear type (second and high), sliding helical gear (low and reverse). Clutch shaft and main drive gear mounted on ball bearing in front end of transmission case. Mainshaft mounted on roller bearing (in main drive gear hub) at front end and ball bearing (in bearing retainer) at rear end. Counter gear cluster mounted on roller bearings on stationary shaft with thrust washers at each end. Reverse idler gear mounted on bronze bushing on stationary shaft (countershaft and reverse idler shaft retained by locking plate on rear face of case). Second and high gears engaged by sliding clutch sleeve (splined on clutch gear which is splined on mainshaft) which engages clutch teeth cut on the main drive gear and second speed gear hubs.

Lug Type Blocking Synchronizer (Graham, Studebaker with conventional shift lever)—Synchronizer rings loosely mounted in ends of inner clutch sleeve and retained by snap rings. Rings actuated in usual manner by inner clutch sleeve (inner and outer clutch sleeves centralized by poppet balls and springs and move as a unit for synchronization). Three lugs on the synchronizer rings block or prevent gear engagement until synchronization is completed when the outer clutch sleeve slides on the inner sleeve to engage clutch teeth on gear hub.

1939 Wire Bound Strut Blocking Synchronizer (Graham, Studebaker Models with Steering-column Gear Shift):—Synchronizer rings are free in ends of inner clutch sleeve and are actuated by three struts which fit in slots in inner clutch sleeve and engage notches in the rings. Struts are centered in outer clutch sleeve by a locking wire or ring (engaging notches in the struts) and move with the outer clutch sleeve to force the synchronizer rings against the cones on the gear hub for synchronization. Teeth on the outer rim of the synchronizer rings block or prevent gear engagement until synchronization completed when the final movement of the outer clutch sleeve causes the clutch teeth on the rim of the sleeve to slide past the synchronizer ring teeth and engage the clutch teeth on the gear hub. Inner clutch sleeve is stationary on mainshaft and does not move during synchronization and gear engagement.

REMOVAL OF TRANSMISSION: *See "Transmission" on car model page.*

SERVICING:—Disassembly. Remove gear shift lever, take out cover screws (on side of case on Graham and Studebaker models) and remove cover, remove shifter rods or rails and forks taking care not to lose interlock balls and springs. Lock transmission by shifting into two gears at once, remove nut on rear end of mainshaft, pull rear companion flange and brake drum (on models using shaft type parking brake). Remove capscrews on rear bearing retainer, take out screw and remove countershaft locking plate, use dummy shaft or arbor and drive countershaft out to rear leaving arbor in counter gear cluster to retain loose bearing rollers (see note below for removal of countershafts with locking keys). Pull rear bearing retainer and mainshaft assembly through rear of case as a unit (if synchronizing unit allowed to slide off shaft and removed separately, see that sleeve not allowed to come off clutch gear which will cause detent balls and springs to fly out). Take out front bearing retainer capscrews (on front of the case) and withdraw the retainer. Main drive gear must be removed at rear (tap gear forward slightly, remove bearing snap ring at bearing hole in case, drive gear back into case and remove through rear end. Lift out counter gear assembly taking care not to lose the loose bearing rollers at each end or the thrust washrs. To remove reverse idler gear, drive shaft out to rear using a brass drift.

Countershaft Locking Key Note. On models where locking plate not used, countershaft (and reverse idler shaft) retained by key in recess in rear face of case which engages slot in shaft. On these models, drive countershaft out to rear (with rear bearing adapter removed) until key is exposed, remove key and drive shaft out (use dummy shaft or arbor and leave arbor in counter gear cluster to retain bearing rollers until shaft is reinstalled).

Mainshaft & Bearing Assembly:—Bearing is press fit on mainshaft and is held in place by companion flange and nut at rear end of shaft (speedometer drive gear acts as spacer on shaft). Bearing is retained in recess in rear retainer by snap ring at forward end (remove snap ring to remove bearing). When installing bearing, select snap ring for tight fit in groove.

Synchronizing Unit (Lug Type):—Mark inner and outer sleeves to assure assembling in same position. Use extreme care not to lose detent balls and springs (wrap assembly in cloth when pushing sleeve off so that balls will be caught when they fly out). Rings retained by snap ring in clutch gear hub. Use special assembling clips to install synchronizer balls and springs. Install synchronizing unit on mainshaft with longer hub of clutch gear and sleeve toward front (see illustration).

Wire-Bound Strut Type Synchronizers—Install struts in inner sleeve, install lock wire so that it engages notches in struts with open end of wire midway between two struts (synchronizer will not operate if wire installed with open end at strut so that strut free to move endwise). When installing inner sleeve and strut assembly in outer sleeve, narrow strips of .003" feeler stock can be installed directly over each strut to prevent wire disengaging from strut slot when it is contracted to enter sleeve. CAUTION—Make certain that hook on open end of lock wire is engaged between two clutch teeth in outer sleeve. Remove feeler strips used for assembly before installing synchronizer on mainshaft. See Second Speed Gear Assembly for installation instructions.

Second Speed Gear Assembly (with Lug Type Synchronizer):—Retained by thrust washer and lock plunger or locking plate at forward end (see directions below for dismantling each type). When installing gear, check endplay which should be .002" minimum, .008" maximum. Adjust by installing thrust washer of correct thickness.

Disassembly of Locking Plunger Type—Use wire or pointed tool to depress plunger in shaft (under thrust washer at forward end of gear), rotate washer until notches on inner edge line up with splines on shaft, withdraw gear and washer from forward end of shaft. When installing gear, see that washer is turned so that it is retained by shaft splines and that plunger engages notch in washer to prevent it rotating in service.

Disassembly of Locking Plate Type—Bend up three fingers on lock plate which engage groove in thrust washer, slide lock plate off shaft. Rotate washer to line up notches and splines on shaft, remove washer and gear. Use new lock plate when installing gear, make certain that thrust washer turned so that it engages shaft splines and that lock plate fingers locked firmly in thrust washer grooves to prevent washer turning in service.

Second Speed Gear Assembly (with Wire Bound Strut type Synchronizer):—Second speed gear and inner sleeve or hub of synchronizer mounted as an assembly on the mainshaft and retained by snap ring on forward end of shaft. To disassemble, remove snap ring in front of synchronizer inner sleeve, withdraw synchronizer assembly and second speed gear. When reassembling, make certain that second speed gear endplay is .003-.014" with synchronizer inner sleeve pressed forward against snap ring.

Main Drive Gear & Bearing:—Bearing retained on clutch shaft by thrust washer and snap ring at forward end (within bearing retainer). If bearing removed, use new snap ring selected for tight fit in groove (furnished in various thicknesses). Front bearing for mainshaft (roller type) located within drive gear hub and rollers are retained by snap ring at rear end of gear hub.

Counter Gear Assembly:—See that bearing spacer installed in gear cluster between bearings and that rollers are in place around dummy shaft or arbor (end of gear can be coated with grease to retain rollers during assembly). Install gears with steel and bronze thrust washer at each end (steel washer toward gears, bronze washer toward case), insert countershaft from rear end, pushing out arbor as shaft is installed. Check endplay with feeler gauge between bronze thrust washer and rear of case with gear cluster forced toward front. Endplay should be .002" minimum, .008" maximum. Adjust by changing thrust washers (furnished in three thicknesses). Make certain that locking plate and screw installed to retain countershaft and reverse idler shaft.

WARNER HORIZONTAL TRANSMISSIONS (WITH R6 OVERDRIVE)

Model AS1-T8S
GRAHAM, MODELS 96, 97 (1938)
GRAHAM, MODELS 96, 97 (1939) FIRST CARS
STUDEBAKER, SIX & COMM. 7A (1938)
STUDEBAKER, COMM. STATE COMM. 8A (1938)
STUDEBAKER, PRESIDENT MODEL 4C (1938)

Model AS3-T8S—See Note.
GRAHAM, MODELS 96, 97 (1938)
STUDEBAKER, MODELS 7A, 8A, 4C (1938)

Model AS7-T8S—See Note
STUDEBAKER COMMANDER, MODEL 9A (1939)
STUDEBAKER PRESIDENT, MODEL 5C (1939)

Model AS9-T8S—See Note
GRAHAM, STD. & SPECIAL 96 ('39), 108 ('40)
GRAHAM, SUPERCHARGER 97 ('39), 107 ('40)

NOTE:—Model AS3-T8S. This model used on Graham, Studebaker cars with Evans Vacuum Gear Shift. Similar to standard transmission except for shifter mechanism and serviced in same manner. See articles on Evans Vacuum Gear Shift for adjustment and servicing data on this equipment.

Models AS7-T8S, AS9-T8S. These models equipped with new type Overdrive which has electrical 'kick-down' control. Refer to separate articles on Warner Electrical 'Kick-down' Overdrive Control & Warner Transmission with Electrical Control Overdrive for data on Overdrive and control. Transmission servicing data is given below.

Transmission Controls. Remote steering column mounted types optional on all car models. See separate articles on "Transmission Controls" for complete data on each type.

TYPE:—Constant-mesh, synchro-mesh, helical gear type (second and high), sliding helical gear (low and reverse). Synchronizing unit is new 'blocker type'. Design similar to transmission used on these same car models as standard equipment (see preceding article).

Overdrive Unit. Type R6. Mounted in separate case bolted on rear face of transmission case. Transmission mainshaft extends through into overdrive case serving as mounting shaft for Planetary Pinion, Annulus Gear and Pawl, and Free Wheeling Cam assemblies.

SERVICING:—Transmission & Overdrive Disassembly. Remove gear shift lever, take out cover screws (on side of case on Graham and Studebaker models), remove cover, shifter rods or rails and forks taking care not to lose interlock balls and springs. Remove universal joint flange nut and flange (use puller). Remove speedometer drive pinion. Take out mounting screws in overdrive mounting flange on rear face of transmission case, hold mainshaft in forward position, withdraw overdrive housing and rear shaft assembly (take care not to lose free-wheeling rollers which will be free to fall out). Take out capscrew in rear end of transmission mainshaft, withdraw free-wheeling cam and cage assembly, overdrive clutch pawl core and annulus gear assembly, and planetary pinion cage assembly. Remove snap ring on mainshaft at rear end of stationary sun gear. Remainder of transmission disassembly is same as for standard type (see preceding article) except as noted below. See Overdrive section (following) for complete Overdrive servicing data.

Transmission Mainshaft Rear Bearing. Bearing retained in adapter plate by snap ring in bearing recess on forward side. Bearing positioned on mainshaft by thrust washer and snap ring at rear (accessible after removing bearing and shaft assembly from adapter). When reassembling, select snap ring for tight fit in groove (furnished in four thicknesses).

Countershaft and Reverse Idler Shaft Locks. Shafts are locked in place by woodruff key in recess in rear face of transmission case (under adapter plate) which engages notch in shaft. To remove shaft (on models with hole in adapter plate in line with countershaft hole in case), tap adapter plate to rear about ¼", drive countershaft to rear until key clears case, use long screwdriver inserted between case and adapter plate and remove key, then drive countershaft out through adapter plate hole. On other models, adapter plate and mainshaft assembly must be removed before countershaft can be driven out.

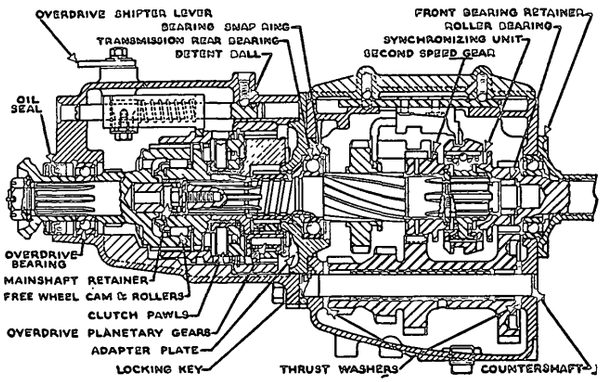

Counter Gear Endplay. Should be .002" minimum, .011" maximum. Adjusted by installing thrust washers of correct thickness.

REMOVAL OF TRANSMISSION: *See "Transmission" on car model page.*

SERVICING:—Disassembly. To dismantle housing and drive shaft assembly, use brass drift to drive shaft out toward front end, lift out clutch pawl core. Bearing retained in housing by snap ring at each end. When installing bearing, select snap ring at rear end of correct thickness to prevent any bearing sideplay in housing (snap ring furnished in four thicknesses).

Clutch Pawl Core Assembly. To dismantle, use plug of correct size and press out steel bushing in pawl core. Mark or note position of clutch pawl adjusting screws (to insure correct adjustment when installed), remove these screws and take out pawls, lock plate and spring. When assembling these parts turn adjusting screws in until screw heads are flush with counterbore in screw holes (see adjustment instructions below).

Stationary Sun Gear. This gear press fit in adapter plate and retained by snap ring at forward end. To remove sun gear (with transmission mainshaft and rear bearing removed from adapter plate), take out oil baffle, remove snap ring on end of sun gear, drive gear out of plate toward rear. Install gear in same manner.

Planetary Pinion Gears. Pinion gears are split type (gear sections linked by spring within gear which rotate each half in opposite direction to take up backlash and insure quiet operation). Gear teeth in each section will rotate out of line when pinions unmeshed from annulus gear and sun gear and must be rotated back into correct position (marked teeth in each section together) when installed. See assembling directions below.

OVERDRIVE UNIT

Overdrive Assembly:—Place clutch pawl core and annulus gear assembly in position on planetary pinion cage hub so that annulus gear meshes with narrow section of pinions only. Install pinion cage on transmission mainshaft so that sun gear meshes with wider section of pinions only. Rotate annulus gear clockwise (to wind up pinion gear springs) until marked tooth on each section of each pinion lines up with marked tooth on adjoining section, then push entire assembly forward so that both annulus gear and sun gear are fully meshed with pinions (force of approximately 11-16 inch lbs. required to wind up these split pinions so that marks line up). Assemble free wheeling cam and cage on mainshaft, install retaining screw and lockwasher on rear end of shaft, tighten screw securely and make certain that bushing is in place in recess in shaft (this bushing engages plug on forward end of overdrive drive shaft). Insert free wheeling rollers (use cup grease to retain rollers while installing hub, or hold rollers in place with rubber band which can be removed after hub started in place). Rotate free wheeling roller cage counter-clockwise (viewed from rear end), slide overdrive drive shaft in place, install speedometer gear on shaft. Install clutch pawl shell in overdrive housing and engage shifter collar in groove. Hold overdrive housing upside down and work it into place on drive shaft until lockout bar contacts adapter plate, rotate housing into correct position (manipulate lockout lever if housing does not slide into position freely).

ADJUSTMENT:—Overdrive clutch pawl adjusting screws correctly set at factory for cut-in speed as noted below and should not be disturbed. If overdrive disassembled or adjustment required for other reasons, adjust as follows: Drive car until lubricant in case is warm, jack up rear wheels, drain overdrive case. Remove adjusting hold plug on top of case. With transmission gears in neutral, line up pawl slots in clutch gear with adjustment opening in pawl shell and overdrive housing by turning the propeller shaft. Engage high gear, place control button in Overdrive position, hold clutch pedal down so that slight drag placed on propeller shaft, rock shaft back and forth until one adjusting screw head is visible through holes. Turn screw in (clockwise) to increase cut-in speed, out to decrease cut-in speed. Two full turns of the screw will change cut-in speed approximately 6 M.P.H. Repeat adjustment at second adjusting screw (rotate screw into line in same manner as used for first screw) using extreme care to adjust both screws exactly alike. One screw has single screwdriver slot, opposite screw has double slot so that screws can be identified, make certain that same screw is not adjusted twice.

Car Model	Overdrive Cut-in Speed
Graham (all models)	43 M.P.H.
Studebaker (all models)	40-45 M.P.H.

WARNER 1936-39 TRANSMISSIONS (WITH R1 OVERDRIVE)

Chrysler Imperial, Model C10 (1936)
Chrysler Cust. Imperial, C11 ('36), C15 ('37)
Chrysler Airflow, Model C17 (1937)
Hupmobile Eight, Model 621N (1936)
Nash 6 & 8, All Models (1936-38)—Some Cars
Pierce Arrow 8 & 12, All Models (1936-37)
Studebaker President, 2C (1936)—Optl.

MODEL AS18-T85

Chrysler Custom Imperial, C20 (1938)

MODEL AS1-T82A

Pierce Arrow 8 & 12, All Models (1938)

MODEL AS11-T85

Hupmobile 8, 825H (1938), 925H (1939)

NOTE:—These models fitted with Model R1 Overdrive unit in separate case bolted on rear face of transmission case and driven from transmission mainshaft through splined coupling. See separate article (following) for Overdrive servicing data.

TYPE:—Constant-mesh, synchro-mesh (second and high), all helical gear type. Similar in design to regular transmission without overdrive and serviced in same manner (see preceding article).

Chrysler C20 (1938). This model fitted with new 'Blocker' type synchronizing unit. See Chrysler C19 data on Warner 1938-42 Transmissions (without Overdrive) article on following pages.

Nash Note. Other types of Warner Transmissions and Overdrive units also used. See separate articles for data.

REMOVAL OF TRANSMISSION: *See "Transmission" on car model page.*

SERVICING:—Disassembly. To remove Overdrive unit, take out mounting screws in overdrive case flange on rear face of transmission case flange, pull unit straight back to disengage shaft from splined coupling of transmission mainshaft. Overdrive case clamps rear bearing retainer in place in transmission case (Chrysler), retains rear bearing (Pierce Arrow models) when bolted in place. With overdrive unit removed, transmission serviced in same manner as other types without overdrive. See preceding article for complete data.

WARNER R1 OVERDRIVE

Chrysler Imperial, Model C10 (1936)
Chrysler Cust. Imperial, All Models (1936-38)
Chrysler Airflow, Model C17 (1937)
Hupmobile 8, All Models (1936-39)
Nash 6 & 8, All Models (1936-38)—Some Cars
Pierce Arrow 8 & 12, All Models (1936-38)
Studebaker President, 2C (1936)

DESCRIPTION & OPERATION:—Overdrive consists of a planetary gear system with a centrifugally operated actuating clutch and a free wheel unit built in the overdrive case. The outer ring or internal gear of the planetary system is part of the 'sleeve and shaft assembly' permanently connected to the rear axle, while the small central 'sun' gear is stationary (bolted directly to the front face of the overdrive case—spring loaded dampener built in sun gear mounting on some models). The planet gears (pinion assembly) are driven by the engine when overdrive is operative and revolve freely at other times. Overdrive is driven by a sliding shaft splined to the transmission mainshaft which can be shifted backward and forward by means of the dash control button.

Direct Drive Position. Shaft shifted to rear so that clutch teeth at rear end engage free wheel cam and sleeve and shaft assembly. Drive transmitted directly to rear axle. Free wheeling locked out and overdrive inoperative (centrifugal clutch assembly free and not positively driven).

Free wheel & Overdrive Position. Shaft shifted forward to engage free wheel cam and clutch pawl driving flange. Drive transmitted to rear axle through free wheel cam and rollers (free wheel operative at speeds below overdrive cut-in point). Clutch assembly is rotated at engine speed and as speed increases to cut-in point, weights tend to fly out and engage clutch shell which is part of planetary pinion assembly (pinned together by pinion shafts). However pinions and clutch shell rotate at less than engine speed (being driven by ring gear which is part of sleeve and shaft assembly) so that clutch pawls cannot engage. When car is allowed to free wheel (accelerator pedal released momentarily), speed of clutch drops down to pinion speed and pawls engage in notches in shell. Engine then drives pinion assembly and, as pinions rotate on their shafts as the assembly is rotated, ring gear is

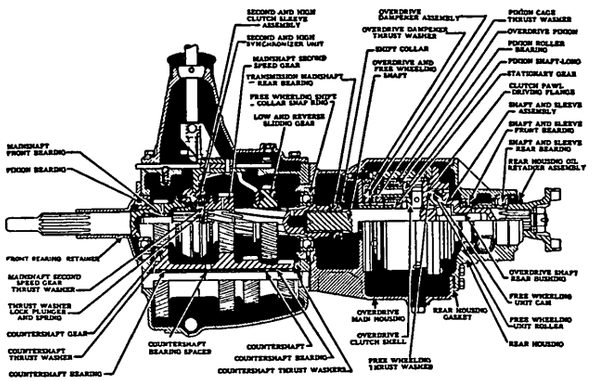

rotated at more than engine speed so that sleeve and shaft assembly drive rear axle at greater than engine speed (overdrive). When engine speed decreases to a point approximately 8-10 M.P.H. below cut-in point, clutch pawl springs withdraw pawls from engagement with shell (car must free wheel momentarily to allow this disengagement to occur) and engine again drives car through free wheel cam and rollers.

ADJUSTMENT:—Cut-in point for overdrive is set at factory and should not require adjustment. To adjust, remove the adjusting hole plug on top of case), drain lubricant, place transmission gears in neutral, rotate propeller shaft until holes in free wheel case and clutch shell line up with hole in case. Then engage high gear, depress clutch pedal so that slight drag placed on shaft, rock propeller shaft back and forth to rotate clutch pawl flange until adjusting screw head is visible in hole. Turn screw clockwise or in to increase cut-in speed, counter-clockwise or out to decrease cut-in speed) (two full turns will change cut-in speed 6 M.P.H.). Rock shaft again to bring second adjusting screw in line with hole, repeat adjustment. Adjust both screws equally. NOTE—one screw has double slot in head so that they can be distinguished to avoid possibility of adjusting same screw twice. Check to see that screws have not been turned so far that they interfere with the clutch shell.

First Type (Without Adjusting Plug). On these models, remove drain plug at bottom of case, drain lubricant, adjust through drain plug hole in same manner as directed above.

SERVICING:—Disassembly. Take out rear housing capscrews, withdraw rear housing and shaft and sleeve assembly, and free wheel assembly. Remove clutch shaft shifting collar snap ring, withdraw clutch pawl assembly, pinion assembly, and shaft through rear of case. To remove stationary sun gear, turn down lockwasher lips, mark mounting flange and case to insure reassembly in same position, remove mounting screws. Damper assembly cannot be serviced and should not be dismantled. Sun gear can be removed by taking out lock ring and pressing gear out of damper member.

Overdrive Shaft & Sleeve Assembly:—Sleeve is riveted to shaft flange and should not be removed. To remove assembly from rear housing, remove propeller shaft flange and speedometer drive pinion, press shaft out of housing toward front, remove oil seal from rear. When reassembling, see that rear ball bearing seated against shoulder in housing and snap ring at rear engaged in slot, front roller bearing seated against snap ring in housing at rear, and that speedometer drive gear snap ring at forward end of gear installed with open end at oil escape hole in shaft.

Pinion Gear Assembly:—Helical type gears can be disengaged and engaged with sun and ring gear by rotating assembly slightly. When spring-loaded spur gears used, line up gear halves against spring tension when meshing these gears (springs tend to rotate gear sections to take up backlash, insuring quiet operation).

Overdrive Assembly:—Install sun gear and damper assembly using new lock washers under screw heads and turning lips up against screws to prevent loosening. See that oil holes in damper plate and case line up to insure lubricant circulation. Install damper thrust washer, overdrive shift rail fork and spring, shift rail (compress spring and install horseshoe lock), planet pinion cage, pawl core, pawl core shell, clutch shaft (from rear of case), shift collar and lock ring, free wheeling cam. Install free wheeling roller springs, compress springs and install rollers. Install free wheeling cam thrust washer and lock in place with cotter pins. Install rear retainer and shaft and sleeve (annulus gear) assembly, adjust endplay as directed below.

Overdrive Endplay Adjustment. See that all gaskets previously used between overdrive housing and rear housing flange are replaced (these gaskets control endplay). To determine correct gasket when new parts have been installed, assemble rear housing (omitting all gaskets), using two screws drawing up finger tight. Use feeler gauge to check clearance between main housing flange and rear housing flange. Assemble gaskets equal in thickness to this clearance plus .015-.025" for endplay (use micrometer to check gasket thickness) and install this gasket pack under rear housing flange.

WARNER 1936 TRANSMISSIONS (WITH INTEGRAL OVERDRIVE)

CHRYSLER, MODELS C7, C8 (1936)
DE SOTO, MODELS S1, S2 (1936)—SEE NOTE
GRAHAM, MODELS 90, 110 (1936)
HUPMOBILE SIX, MODEL 618-G (1936)
NASH, ALL MODELS (1935-38)—SOME CARS.
REO FLYING CLOUD, MODEL 6-D (1936)
STUDEBAKER DICTATOR, 3A, 4A (1936)

NOTE:—DeSoto S2 (1936) standard transmission not equipped with Overdrive unit but similar in all other respects (including case). When servicing this type transmission, follow instructions below, disregarding Overdrive data.

Nash Note. Other types of Warner Transmissions and Overdrive units also used. See separate articles

NOTE:—Overdrive unit on these models is mounted on an extension of the transmission mainshaft within the transmission case and must be disassembled in order to remove it from the shaft.

TYPE:—Constant-mesh, synchro-mesh (second and high), all helical gear type. Similar to regular transmissions without overdrive except that overdrive is an integral unit with the transmission and located within the transmission case.

REMOVAL OF TRANSMISSION: *See "Transmission" on car model pages.*

SERVICING:—Disassembly. Remove gear shift, cover, shifter shaft and fork assemblies, taking care not to lose lock balls and springs. Remove universal joint flange nut, pull flange. Take out transmission rear cover flange screws, pull flange (two tapped holes provided in flange, screw 5/16" capscrews in these holes to pull flange). Take off nuts on six overdrive ring gear bolts at rear of unit, remove overdrive shaft assembly. Take off free-wheeling cam retaining nut on rear end of mainshaft, remove free-wheeling cam and roller assembly. Remove oil baffle, overdrive ring gear assembly, overdrive ring gear bearing. Take out capscrews mounting stationary sun gear on case, remove gear. Take out lubricant equalizing trough through top of case. Take off nut on side of case, remove free-wheel shift lever, remove control shaft lock setscrew, move shaft in to disengage shifter gear notch, move sleeve forward at rear end of shaft and remove horseshoe lock, tap shaft forward out of shifter fork and case (shaft will drive out plug at forward end of case), remove shifter fork through top of case. Remove transmission mainshaft gear and synchronizing unit assembly through rear of case. Remove reverse drive countershaft out toward rear of case, using an arbor or dummy shaft and leaving this arbor in the counter gear assembly until it is re-installed (this will retain loose roller bearings). Remove bearing retainer on front end of case, take out clutch shaft main drive gear and bearing assembly at front end. Remove counter gear assembly through rear of case, being careful not to lose bearing rollers or thrust washers.

Synchronizing Unit:—Serviced in same manner as on other Warner models. Mark parts before dismantling and assemble in same positions. Use extreme care not to lose detent balls and springs.

Second Speed Gear Assembly. Retained on shaft by thrust washer locked in place by plunger and spring in shaft. Use a wire to depress plunger, turn washer until prongs line up with splineways on shaft, remove washer and gear. When reassembling see that plunger engages thrust washer and that washer prongs are turned into notches in splines.

Counter Gear Assembly. When installing, see that loose rollers are in place in each end. Install steel thrust washer next to gear, bronze washer next to case at each end (steel washer omitted at forward end on some models). Install counter shaft from rear, driving dummy shaft out at forward end.

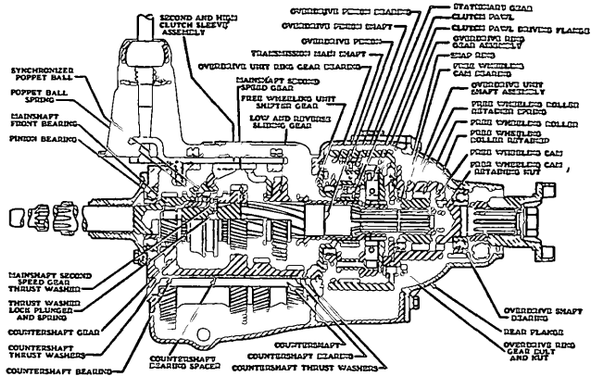

OVERDRIVE UNIT

SERVICING:—Ring Gear & Clutch Assembly. To dismantle, take out snap ring, tap out forward plate, remove pinion gears and clutch plate. If clutch pawl adjusting screws are removed, count the number of 'clicks' (half-turns) when turning screws out and turn screws in exactly the same amount when re-installing so that cut-in speed will not be changed (both screws should be adjusted alike).

Pinion Gear Assembly. Pinions are made in two halves and spring loaded (spring tends to rotate halves and take up backlash, one pinion of each set has spring reversed). Assembly will be easier if pinions meshed on stationary sun gear first and then installed in ring gear assembly (withdraw sun gear and install separately in case).

Free-wheeling Roller Assembly. Rubber band can be used to hold free-wheeling rollers in position and wire threaded through overdrive unit shaft assembly to hold cage in released position while assembling overdrive unit shaft assembly. Withdraw wire and remove rubber band as assembly goes into place.

ADJUSTMENT:—Cut-in point should not require adjustment. To adjust, remove large adjusting hole plug on top of case, jack up rear end of car, turn propeller shaft until one hole in clutch shell lines up with adjusting hole. Engage high gear, rotate propeller shaft until one adjusting screw head lines up with hole in shell. Turn screw in to increase cut-in speed, out to decrease cut-in speed. Two full turns will change cut-in speed approximately 6 MPH. Turn screws only in half-turns so that locking washer is engaged to prevent screw turning in service. After adjusting one screw, turn propeller shaft ¾ revolution so that second adjusting screw is lined up, adjust this screw equally. Important—both screws must be adjusted equally. One screw has single slot, opposite screw has double slot so that they may be distinguished (use care not to adjust same screw twice). Check adjustment and make certain that screws not turned out so as to strike clutch shell.

WARNER 1937-38 TRANSMISSIONS (WITH R6 OVERDRIVE)

CHRYSLER SIX, MODEL C16 (1937)
CHRYSLER IMPERIAL, MODEL C14 (1937)
DE SOTO, MODEL S3 (1937)
GRAHAM CAVALIER, MODEL 95 (1937)
GRAHAM SUPERCHARGER, MODELS 116,120('37)
HUPMOBILE SIX, 822-E (1938), 922-E (1939)
NASH, ALL MODELS (1935-39)—SOME CARS
NASH-LAFAYETTE, (1935-39)—SOME CARS
STUDEBAKER DICTATOR, 5A, 6A (1937)
STUDEBAKER PRESIDENT, MODEL 3C (1937)

Model AS1-T86A.

CHRYSLER ROYAL, MODEL C18 (1938)
DE SOTO, MODEL S5 (1938)
DODGE, EXPORT MODELS (1938)
PLYMOUTH, EXPORT MODELS (1938)

Model AS2-T85A.

CHRYSLER IMPERIAL, MODEL C19 (1938)

NOTE:—All models fitted with Overdrive unit in separate case bolted on rear end of transmission case. Transmission mainshaft extends into Overdrive case with overdrive planetary gear and clutch pawl assembly mounted on it so that overdrive unit must be dismantled in order to disassemble transmission. Complete instructions given below.

Nash Note. Other types of Warner Transmissions and Overdrive units also used. See separate articles for data.

Studebaker Pres. 3C ('37). Overdrive used on this model is special automatic type. See separate article (following) for data on this type.

TYPE:—Constant-mesh, synchro-mesh (second and high), all helical gear type. Similar in design to regular transmission (see preceding article) except for mainshaft extension and overdrive unit which require special disassembling directions (below).

REMOVAL OF TRANSMISSION: *See "Transmission" on car model page.*

SERVICING:—Disassembly. Remove shift lever, cover, shifter shaft and fork assemblies, being careful not to lose lock balls and springs. Lock transmission by shifting into two gears at once, remove drive shaft nut at universal joint flange, pull flange. Remove speedometer drive pinion. Take out screws mounting overdrive unit on transmission case, withdraw overdrive housing (free wheeling rollers will fall out, take care not to lose rollers). Remove free wheeling cam locking screw on rear end of shaft, withdraw free wheeling cam and cage assembly, remove ring or annulus gear and bushing assembly. This completes overdrive removal (stationary sun gear integral with adapter which serves as mainshaft rear bearing retainer). See preceding article for transmission disassembly and servicing directions.

WARNER R6 OVERDRIVE (NO "KICK-DOWN")

Chrysler 6 & 8, C14, C16 ('37), C18, C19 ('38)
DeSoto, Models S3 (1937), S5 (1938)
Dodge & Plymouth, Export Models (1938)
Graham, Models 95, 116, 120 (1937)
Hupmobile Six, 822E (1938), 922E (1939)
Nash & Nash-Lafayette, Some Cars (1936-39)
Studebaker Dict. 5A, 6A; Pres. 3C (1937)

DESCRIPTION: Planetary gear unit with centrifugal pawl type engagement. Engages when accelerator pedal released momentarily at car speed above cut-in point (control button must be in "in" or unlocked position). No provision for "kick-down" (car speed must be reduced to below cut-in speed).

ADJUSTMENT: Cut-in point should not require adjustment. To adjust, remove large adjusting hole plug on top of case, jack up rear end of car, turn propeller shaft until one hole in clutch shell lines up with adjusting hole. Engage high gear, rotate propeller shaft until one adjusting screw head lines up with hole in shell. Turn screw in to increase cut-in speed, out to decrease cut-in speed. Two full turns will change cut-in speed approximately 6 MPH. Turn screws only in half-turns so that locking washer is engaged to prevent screw turning in service. After adjusting one screw, turn propeller shaft ¾ revolution so that second adjusting screw is lined up, adjust this screw equally. **Important**—both screws must be adjusted equally. One screw has single slot, opposite screw has double slot so that they may be distinguished (use care not to adjust same screw twice). Check adjustment and make certain that screws not turned out so as to strike clutch shell.

TRANSMISSION DISASSEMBLY: *See "Warner 1937-38 Transmission" on preceding page.*

REMOVAL OF OVERDRIVE: *See "Overdrive" or "Transmission" on car model page.*

OVERDRIVE DISASSEMBLY & REASSEMBLY: **Housing & Driveshaft Assembly**—To remove shaft, drive shaft out of housing with brass drift. Operate shifting arm while removing shifting sleeve from housing. See that shifter collar engages groove in sleeve when sleeve replaced in housing. Install shifter sleeve and housing after overdrive has been assembled on transmission case, starting housing upside down until lockout rod touches adapter plate and then rotating housing into correct position (manipulate lever to assist assembly).

Free wheeling Cam & Roller Assembly:—Fill cage openings with cup grease to hold rollers in place while assembling, rotate cage assembly counter-clockwise on cam (viewed from rear) while installing overdrive mainshaft (drive shaft). Make certain that oilite thrust washer on face of free wheel cam is installed with chamfered side toward front of car.

Ring Gear & Clutch Assembly:—To remove clutch assembly, take out snap ring in rim at rear, lift clutch out. Press out overdrive clutch plain bearing using a plug of correct size, take out clutch pawl adjusting screws taking care to measure distance from top of each screw to marks on clutch core first, and counting the number of 'clicks' (half-turns) while removing the screws. When installing, turn screws in exactly this same number of clicks so that the original cut-in speed setting will not be disturbed. When installing clutch pawl sleeve, lock pawls in engaged position, press sleeve in flush with forward face of overdrive clutch, free pawls.

Stationary Sun Gear & Pinion Assembly:—Pinion assembly can be removed by rotating gears off sun gear (gears are helical type). When installing sun gear (adapter plate) see that paper gaskets are in place on each side. Oilite thrust washer should be installed on pinion gear hub at rear.

WARNER AUTOMATIC OVERDRIVE (1937 STUDEBAKER PRESIDENT)

STUDEBAKER PRESIDENT, MODEL 3C (1937)

NOTE:—Overdrive unit is mounted in separate case bolted to rear of transmission case but transmission mainshaft extends through into overdrive unit

DESCRIPTION & OPERATION:—Overdrive is similar to previous designs except for new type sun gear and new type clutch pawl and driving head assembly which allow overdrive to be cut in or out at the will of the operator at speeds above the cut-in point

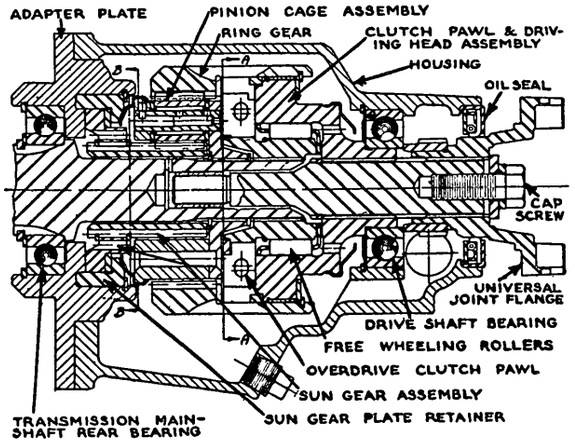

of 35 M.P.H. Free wheel operates only momentarily during change from direct drive to overdrive and car coasts against engine compression at all speeds. Sun gear is mounted freely on mainshaft and is prevented from rotating by a stationary pawl in the sun gear plate retainer which is free to oscillate between spring bumpers in the adapter plate lugs (pawl is forced out of engagement permitting sun gear to rotate freely for 'conventional overdrive' as described below. Clutch pawls are spring loaded and in the inner position two of the pawls lock the clutch hub or free wheel cam (which is splined on the mainshaft) to the driving head assembly (integral with drive shaft for 'direct drive.' At speeds above 35 M.P.H. pawls move out and engage slots in ring gear for 'overdrive.' Pawl springs are of unequal tension, so that one pawl tends to disengage and engage first (engagement taking place as soon as the second pawl disengages) so that the disengaged period is very short. The third pawl with very light spring tension (single spring) is not used for direct drive and tends to engage the overdrive at lower speed but does not actually transmit drive (pawl contour such that it merely maintains drive connection when driving pawls disengage.

Direct Drive. Effective at speeds below 35 M.P.H. Engine drives rear wheels directly through clutch hub splined to mainshaft and driving head assembly (these parts locked together by clutch pawls being in inner position). Pinion cage assembly rotates at engine speed but ring gear is free to revolve on bushing on driving head assembly.

Overdrive. At speeds above 35 M.P.H. Cut in by releasing accelerator pedal momentarily and then gradually accelerating engine which allows clutch pawls to engage ring gear slots. Sun gear plate retainer is rotated clockwise against spring buffer allowing stationary pawl to engage sun gear slot holding gear stationary. Engine drives pinion cage assembly causing ring gear to revolve at faster than engine speed (overdrive). Ring gear locked to driving head assembly by clutch pawls which transmit power to rear axle. Clutch hub (free wheel cam) also rotating at engine speed, this rotation being allowed by the free wheel action.

Conventional Overdrive. At speeds above 35 M.P.H. Cut in by releasing accelerator pedal momentarily and then quickly accelerating engine. Coasting causes reversal of drive reaction on sun gear, rotating sun gear plate retainer counter-clockwise so that stationary pawl is partly disengaged from slot (inclined surface of pawl pressed against stationary pin), and subsequent sun gear rotation (when engine quickly accelerated) forces pawl out of engagement permitting sun gear to rotate. Engine then drives through clutch hub and free wheel rollers to rear axle. Clutch pawls remain in outer position (locking ring gear to driving head assembly) but engine power is not transmitted through planetary gear system since sun gear is free to revolve. Overdrive can be engaged again by releasing accelerator pedal somewhat and then accelerating engine

ADJUSTMENT:—Hairpin type springs used on clutch pawls (except sun gear pawl) and no adjustment needed. Do not change sun gear pawl adjustment.

TRANSMISSION DISASSEMBLY: *See "Warner 1937-38 Transmission" on preceding page.*

REMOVAL OF OVERDRIVE: *See "Overdrive" on car model page.*

OVERDRIVE DISASSEMBLY: Remove the U-joint flange capscrew, pull flange. Remove stationary pawl adjusting screw and spring from boss at forward end of case (mark screw or note number of turns required to turn screw out so that original setting can be restored when overdrive reassembled). Take out capscrews mounting overdrive on transmission case, slide overdrive case and rear bearing off toward rear (bearing retained in case by snap ring at front). Use pointed tools and pry lock ring out of groove at rear end of ring gear. Withdraw overrunning clutch (free wheel) and pawl assembly. Remove lock ring on mainshaft holding pinion cage in place, withdraw pinion cage assembly and ring gear. Remove lock ring in adapter plate at rear of sun gear plate retainer, withdraw sun gear assembly.

Overdrive Assembly. Reverse disassembly instructions above. See that all thrust washers and shims are replaced. Use special pusher to install universal joint flange (must not be driven on shaft). Turn stationary pawl adjusting screw in to exactly same position as originally to secure same setting.

1938-45 WARNER TRANSMISSIONS (NO OVERDRIVE)

Car Model	Warner Model
Bantam, Model 60 (1938-39)	
Bantam, 63 (1940), 65 (1940-41)	AS1-T34E
Chrysler 6, C18 (1938), C22 (1939)	
Chrysler 8, C19 (1938), C23 (1939)	
Crosley, All Models (1939 to 1942)	AS1-T92
DeSoto, S5 (1938), S6 (1939)	
Dodge, D8 (1938), D11 (1939)	
Graham, Hollywood 109, 113 (1940-41)	
Hupmobile 6, All Models (1938-40)	
Jeep, Army Model (1942-45)	AS2-T34J.
Nash '600', All Models (1941-42)	AS3-T34G
Plymouth, P5, P6 (1938), P7, P8 (1939)	
Studebaker Champion, G (1939)	AS1-T34F
Studebaker Champion, 2G (1940)	AS5-T34F
Studebaker Commander, 10A (1940)	AS1-T36C
Studebaker President, 6C (1940)	AS1-T36C
Studebaker Champ. All (1941-42)	AS1-T34G
Studebaker Comm., All (1941-42)	AS1-T36D
Studebaker Pres., All (1941-42)	AS1-T36D
Willys, All Models (1938-39)	
Willys, Speedway 440 (1940)	AS3-T34D
Willys, Deluxe 440 (1940)	AS4-T34F
Willys, Pickup & Panel 440 (1940)	AS3-T34D
Willys, All Models (1941-42)	AS5-T34G

▷Studebaker Champion (1939-40) Correction for Shifting into 2 Gears at once—If this occurs on 1939 & early 1940 cars, when gears shifted forcibly with car standing still or with heavy lubricant, correct by disassembling transmission and installing #199652 Interlock assembly as follows: Remove transmission cover drive out pin in low-reverse shaft pull shaft out of case as far as possible, remove old detent plungers and spring, install new assembly, reassemble transmission. When installing low-reverse shaft pin, coat pin with shellac and drive pin in 1/8-3/16" beyond surface of pin hole. NOTE—This trouble should not be experienced on later 1940 cars.

▷Steering Column Gear Shift Note—Used on all car models except Bantam and Crosley cars. See separate "Transmission Control" articles for data.

▷Overdrive Transmission Note—Optl. on all cars except Bantam, Crosley, Dodge & Plymouth. See separate articles on Transmissions with Overdrives

DESCRIPTION: Constant-mesh, synchro-mesh (Second & High), sliding gear (Low & Reverse). Same design as used on previous car models except for Synchronizer design and shift mechanism (cars with steering column mounted gearshift).

Crosley Transmission—This transmission is similar to other types except that no synchronizing mechanism is used (second speed gear shifted forward to engage clutch teeth on main drive gear for direct drive). Torque tube is bolted on rear end of case with adapter for universal joint on 1941-42 model only. This transmission serviced in same manner as other models after torque tube or adapter removed. Disregard Synchronizer data.

Willys Note—Low & Reverse sliding gear is straight spur type (other gears helical). See Willys Transfer Case Note (below) for data on transmission used on 4-wheel drive models.

Jeep Transfer Case—2-speed transfer case (Spicer Model 18) is mounted directly on rear of transmission case with transmission mainshaft rear bearing mounted in the transfer case housing. See Spicer Transfer Case article for complete data on this unit.

CAUTION—Transfer case must be partially dismantled (drive gear removed from mainshaft) before it can be taken off the transmission case.

Synchronizer Assemblies:—Type used on each car (except Crosley—none used) as follows:

Blocking Type Synchronizer (Chrysler C18, DeSoto S5)—Synchronizing rings are loose in inner synchronizing sleeve and have cam lugs on inner end which engage slots in clutch sleeve. Rings are actuated by inner clutch sleeve (inner and outer sleeves centralized by poppet balls and springs and move as a unit during synchronization) and have teeth on outer rim which engage the clutch teeth on the outer sleeve and block or prevent engagement until synchronization completed. The final movement of the outer clutch sleeve causes the teeth on the rim of the sleeve to slide past the teeth on the synchronizer ring and engage clutch teeth on gear hub.

Drag Ring Type Blocking Synchronizer (Chrysler C22, De Soto, Dodge, Plymouth P8)—Synchronizer rings are loose in ends of inner clutch sleeve and are actuated by a drag or friction ring within the outer clutch sleeve which contacts lugs on the synchronizer rings (initial movement of outer clutch sleeve carries drag ring with it and forces synchronizer rings in contact with cones on gear hubs). Teeth on synchronizer rings block or prevent gear engagement until synchronization completed when final movement of outer clutch sleeve causes clutch teeth on rim of sleeve to slide past teeth on synchronizer ring and engage clutch teeth on gear hub. Inner clutch sleeve is stationary on mainshaft

Lug Type Blocking Synchronizer (Chrysler C19, C23)—Synchronizer rings loosely mounted in ends of inner clutch sleeve and retained by snap rings. Rings are actuated in usual manner by the inner clutch sleeve (inner and outer clutch sleeves centralized by poppet balls and springs and move as a unit for synchronization). Three lugs on synchronizer rings (in recesses in inner clutch sleeve) block or prevent gear engagement until synchronization has been completed when the final movement of outer sleeve engages clutch teeth on gear hub.

Double Blocker—Double Spring Type Synchronizer (T34F, T34G, T36C, T36D, T36E, T90A, T90C, T90E, T96 Models)—Synchronizer rings are free in inner clutch sleeve and are actuated by three shifting plates or struts which fit in slots in inner clutch sleeve and engage notches in the rings. Struts are centered in outer clutch sleeve by two wire springs (within struts on either side of inner clutch sleeve web) and move with the outer clutch sleeve to engage the synchronizer rings with the cones on the gear hub. Inner clutch sleeve is stationary on the shaft (retained together with second speed gear by lock ring) and does not move. Blocking action is same as on other types of blocking synchronizers.

CONTINUED ON NEXT PAGE

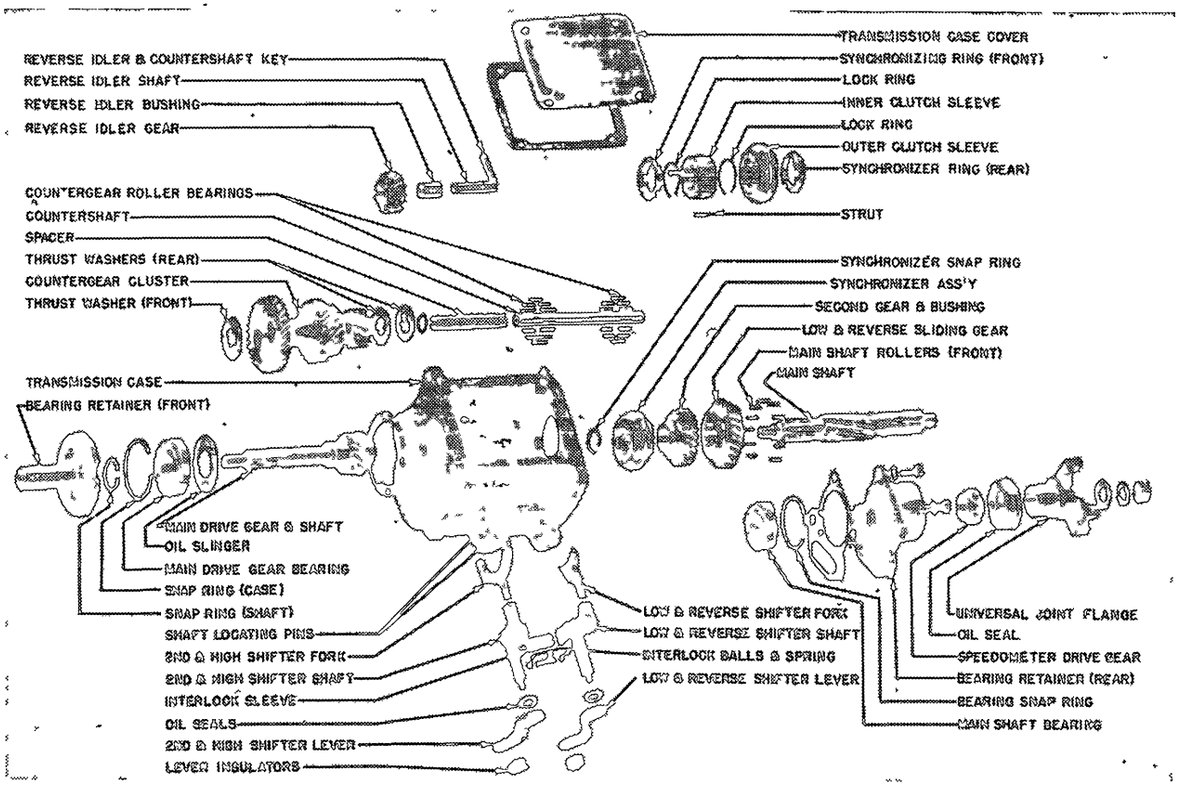

WARNER 1938-45 TRANSMISSIONS (NO OVERDRIVE) WITH REMOTE CONTROL

1938-45 WARNER TRANSMISSIONS (NO OVERDRIVE) C nt.

Synchronizer (Other Models)—Conventional type with inner and outer sleeves centered by poppet balls and springs (synchronizer rings or cones fixed in inner sleeve).

Gearshift Mechanism (T84F, T84G, T86C, T86D, T86E, T90C, T90E, T96 Models): Consists of two shifter shafts and levers in side of transmission, each lever operating independently (rear lever for Low & Reverse, forward lever for Second & High) with forks on inner ends of lever shafts engaging sliding gear (Low-Reverse), synchronizer clutch sleeve (Second-High). Interlock and detent plungers are mounted in boss in case between shafts and engage notched sectors on each shifter shaft.

REMOVAL OF TRANSMISSION: *See "Transmission" on car model page.*

DISASSEMBLY (All Models): Remove transmission cover, mark both synchronizer rings and inner and outer synchronizer clutch sleeves to insure reassembly in same positions. Drive out shift lever shaft lockpins (in holes in shaft bosses on outside of case) from below, pull levers out as far as possible to allow removal of mainshaft and gears. On Studebaker & Nash, remove main drive gear bearing retainer (on front of case), remove large snap ring from bearing outer race and small snap ring from shaft, install special thrust yoke J-1525 (Nash & Stude. Champ.), J-1526 (Stude. Comm. & Pres.), on mainshaft to take endthrust of the puller and prevent damage to synchronizers, use puller plate J-1298 and puller HM-925 to remove main drive gear bearing from front of case. On other models, main drive gear and bearing can be removed as a unit after countershaft has been removed to drop countergear cluster and disengage drive gear from countergear. Remove nut on rear end of driveshaft, use puller to remove universal joint yoke (on models where separate front yoke used), remove speedometer pinion, take out rear bearing retainer (transmission extension) mounting screws and remove retainer, slide main shaft and rear bearing assembly to rear until bearing free of case. On Nash and Studebaker (where main drive gear bearing previously removed), lift drive gear up so that it clears countergears, remove drive gear from front of case. On all models, push mainshaft assembly away from shifter shafts, remove second & high shifter fork, remove snap ring from forward end of mainshaft (in front of synchronizer unit inner clutch sleeve), slide synchronizer unit, second speed gear, and low speed gear off mainshaft and withdraw shaft from rear of case, lift synchronizer and gears out through top of case. To remove countergear assembly, remove lockplate from slot at rear end of countershaft, drive countershaft out toward rear using dummy shaft or arbor and leaving this arbor in countergear cluster to retain bearing rollers until asssembly re-installed in case (arbor will be driven out by countershaft as shaft installed). Lift out countergears and thrust washers, noting location of each washer.

Models T84F, T84G, T86C, T86D, T86E, T90A, T90E, T96 (With Gearshift levers on side of transmission case)—On these transmission models, shift lever shaft lockpins (in hole in shaft bosses on outside of case) should be driven out from below and levers pulled out as far as possible to permit removal of mainshaft and gears. When reassembling transmission, see shifter mechanism data (below).

Bantam, Willys Disassembly Note—Mainshaft assembly cannot be removed through rear of case and must be dismantled and removed as follows: Pull shaft back until rear bearing is clear of case, tip forward end up and remove synchronizer as a unit (use care not to allow outer clutch sleeve to move on inner sleeve which will release poppet balls and springs), remove second speed gear and low speed gear, then remove shaft.

Crosley Note—No rear bearing retainer used on this model and bearing is held in case by lock ring on each side of outer race. To remove mainshaft and bearing, remove speedometer gear snap ring, speedometer gear and key, rear bearing snap rings, rear bearing and oil retainer washer, then pull mainshaft out through rear of case.

REASSEMBLY (All Models): Reverse disassembly directions and note data on sub-assemblies below.

Mainshaft Installation: See that low & reverse gear properly engaged with shifter shoe when installing gear on shaft. When installing countergear cluster, install thrust washers at each end in same relative positions as removed and insert countershaft through rear end of case. Make certain that countershaft lockplate engages slots in both countershaft and reverse idler shaft.

Main Drive Gear Endplay—Endplay controlled by thickness of bearing retainer snap ring and snap ring should be selected for snug fit so that bearing has no endplay on shaft. These snap rings furnished in various thicknesses.

Mainshaft Endplay—Controlled by rear main bearing snap ring thickness. Bearing retainer snap rings (on shaft and under bearing retainer on case) should be selected for snug fit in grooves.

Synchronizer Assembly (Drag Ring Type):—Install drag ring on inner clutch sleeve so that depressions on spring are directly in line with synchronizer ring lug holes in sleeve and retain in position with three pins inserted through holes so as to pass over spring in slot at center of sleeve while sleeve is being inserted in outer clutch sleeve. Make certain that open ends of drag ring straddle a tooth on the outer sleeve and line up marks on inner and outer sleeves, then remove assembling pins and install synchronizer rings (with spreader spring installed behind high speed ring with three raised fingers toward ring). See Second Speed Gear Assembly data.

Lug Type Synchronizers—Synchronizer rings are retained in inner clutch sleeve snap rings. With snap rings installed, synchronizer rings should be free to rotate. Backlash between inner and outer sleeves should be .000-.001 (sleeves are selective fit). On Chrysler models, pressure required to break poppets (so that outer sleeve moves on inner sleeve) should be 26-34 lbs.

Double Blocker, Double Spring Synchronizers—Install struts with open face toward inner clutch sleeve, and hooked end of each spring wire engaged in same strut (free end of spring will be between this strut and next strut in each direction—springs installed in opposite directions). See Second Speed Gear data below for installation directions.

Other Type Synchronizers—Inner and outer clutch sleeves marked by etched line to maintain alignment and must be reassembled with these lines together (if synchronizer not marked, mark both sleeves before disassembling and assemble in same relative position). On Bantam and Willys models, pressure required to break poppets (so that outer sleeve moves on inner sleeve) should be 45-58 lbs.

Second Speed Gear Assembly (Locking Plate Type on Chrysler C18, DeSoto S5, Dodge D8, Plymouth P5,6) Gear retained by thrust washer and special locking plate on forward end. To disassemble, for gear removal, bend up three fingers on lock plate which engage groove in thrust washer, slide lock plate off shaft and discard (do not re-use lock plates). Rotate washer to line up notches and splines on shaft, remove washer and gear. To reassemble, use new lock plate, make certain that thrust washer turned so that it engages shaft splines and that lock plate locked in washer grooves to prevent loosening.

Second Speed Gear Assembly (Drag Ring & Wire Bound Strut Type Synchronizers):—Second speed gear and inner sleeve or hub of synchronizer mounted as an assembly on mainshaft and retained by snap ring on forward end of shaft. To disassemble, remove snap ring in front of synchronizer inner sleeve, withdraw synchronizer assembly and second speed gear. When reassembling, make certain that second speed gear endplay is .003-.008" (Chrysler, DeSoto, Dodge, Plymouth), .003-.014" (others) with synchronizer inner sleeve pressed forward against snap ring.

Second Speed Gear Assembly (Double Blocker, Double Spring Type Synchronizers):—Gear and inner sleeve or hub of synchronizer mounted on mainshaft as an assembly and retained by snap ring at forward end of synchronizer. To disassemble, remove snap ring, withdraw synchronizer assembly and gear. When reassembling make certain that second speed gear has .004-.008" endplay with synchronizer hub pressed forward against snap ring (endplay adjusted by installing snap ring of correct thickness). See that synchronizer ring turns freely after assembly (gears not engaged). Clearance between front face of second speed gear and rear face of synchronizer outer sleeve should be .035" maximum when shifted into Second Gear.

Second Speed Gear Assembly (Lug Type & Conventional Synchronizers):—Synchronizer assembly is free on shaft and can be removed as an assembly. Second speed gear is retained by a snap ring locked by a spring-loaded plunger in the shaft. To remove gear, depress plunger (under washer on front of gear), rotate washer to line up notches with splines on shaft, withdraw washer, remove gear being careful not to lose plunger and spring. Install gear in same manner, make certain that washer turned so that lugs engage notches in shaft splines and that plunger engages washer to prevent turning

Counter Gear Endplay Adjustment (Chrysler, DeSoto, Dodge, Plymouth Models):—Thrust washers furnished in three thicknesses for endplay adjustment and marked as follows: A—thinnest, B, C—thickest. Select washers so that endplay is .002-.008" (check with feeler gauge).

Gearshift Mechanism:—Shifter shafts can be withdrawn through case after nut on outer end of lever has been removed and lever taken off. When reassembling shafts, see that interlock and detent plungers and springs are correctly installed and engage notches in sectors on shifter shafts, install oil seal in recess in case at outer ends of shafts, coat shaft lockpins with Permatex or shellac and drive pins in 1/8-3/16" past flush position.

Transmission Extention Housing Bearing (1941-42 Studebaker Models):—This is an outer race and needle bearing assembly installed in housing. Use bearing remover tool J-1606 to remove old bearing and to install new bearing assembly.

1946-48 WARNER TRANSMISSIONS (NO OVERDRIVE)

►**LINCOLN 1949 TRANSMISSION**—*See Pg. 2706 "1949 Ford, Lincoln, Mercury Transmission."*

Car Model	Warner Model
Crosley, All Models (1947-48)	AS1-T92
Frazer, All Models (1947-48)	AS11-T86E
Kaiser, All Models (1947-48)	AS11-T86E
Studebaker Champ. 5G (1946)	AS1-T84G
Studebaker Champ. 6G ('47), 7G ('48)	AS1-T96
Studebaker Comm. 14A ('47) ,15A ('48)	AS1-T86E
Willys Jeep, CJ-2A (1946-47)	①AS3-T90A
Willys Jeep, CJ-2A (1947-48)	②AS1-T90C
Willys Jeep, Sta. Wgn. 4-63 (1946-48)	AS1-T90E
Willys Jeep Truck 2T (1947-48)	AS1-T90E
Willys Jeep Truck 4T (1947-48)	AS3-T90A

①—Steering Column Mtd. Gearshift.
②—Floor mounted Gearshift.

►**Steering Column Mtd. Gearshift**—Used on all cars except Crosley & Willys Jeep. *See individual "Transmission Control" data.*

►**Overdrive Transmission Note**—Optl. on all cars. See "Warner Overdrive Transmission" data.

►**Willys Jeep & 4T Truck Transfer Case**—Two-speed (Spicer Model 18) Transfer Case on transmission with transmission mainshaft rear bearing mounted in transfer case housing. See Spicer Transfer Case for data.

►***CAUTION—Transfer case must be partly dismantled (drive gear removed from mainshaft) before it can be removed from transmission.***

DESCRIPTION: 3-speed, all helical gear type (except Crosley & Willys — See Notes). Constant-mesh, synchro-mesh (Second & High), sliding gear (Low & Reverse). Synchronizers are Double-Blocker, Double-Spring type. Transmissions are similar design to types used on corresponding previous car models.

Crosley Transmission—Similar to other types except that no synchronizing mechanism is used (second-speed gear shifted forward to engage clutch teeth on main drive gear for High) and gears are spur type. Torque tube is bolted on rear end of case with adapter for universal joint. This transmission disassembled in same manner as other types after torque tube or adapter removed (disregard all synchronizer data).

Willys Jeep CJ-2A Note—AS1-T90C transmission has spur type sliding gear and floor-mounted gearshift (entire gearshift mechanism lifts off as unit with top cover). Transfer case is mounted on rear end (see Willys Transfer Case Note above).

Willys Jeep Truck Note—These transmissions have spur type sliding gear. AS3-T90A (4T) transmission has Transfer Case mounted on rear end (see Willys Transfer Case Note above).

REMOVAL OF TRANSMISSION: *See "Transmission" on car model page.*

DISASSEMBLY OF TRANSMISSION: Take out cover screws, remove cover and gasket. Mark synchronizer parts (rings, sleeve, hub) to insure reassembly in same relative positions. Take out capscrews and remove bearing retainer on front of case. On Studebaker models, take out bearing snap rings (large ring on bearing, small ring on shaft), install special Synchronizer Ring Protector J-1525 (Studebaker Champion 1946), J-2040 (Champ. 1947 on), J-2039 (Commander) to prevent damage to synchronizer, use Puller Plate J-1298 and Puller HM-925 to remove main drive gear bearing from shaft (NOTE—on other cars, main drive gear and bearing assembly can be removed after countergear cluster has been dropped to provide clearance). Take out rear bearing retainer capscrews, remove bearing retainer from shaft (on models where bearing mounted in recess in retainer, pry retainer out so that puller can be engaged, use puller to remove retainer). Slide speedometer gear off mainshaft (if gear does not come out with retainer and bearing assembly). Tip mainshaft toward right as far as possible (on models where rear bearing mounted directly in case, move shaft to rear until bearing clears case), disengage Second & High Shift Fork and Low & Reverse Shift Shoe and lift these parts out. On models where opening in rear of case permits, withdraw complete mainshaft assembly through this rear opening. On other models, remove main drive gear (lift gear through top of case if bearing removed previously, otherwise tap gear and bearing assembly out through front of case using a soft drift and taking care not to damage gear teeth). If mainshaft cannot be removed as an assembly, remove snap ring from groove at forward end of shaft, slide synchronizer assembly, second speed gear, and sliding gear off shaft (lift these parts out through top of case), remove mainshaft through rear of case. Lift out countergear assembly. Drive reverse idler shaft out at rear of case (use brass drift), lift gear and bushing out. To remove shifter shaft assemblies, remove levers on outer ends of shafts, drive out lockpins in shaft bosses on side of case, push shaft and lever assemblies through and remove from case (CAUTION—do not lose detent balls, spring and interlock pulnger located in boss in case between lever sectors).

REASSEMBLY OF TRANSMISSION: Reverse the disassembly directions given above and note special data on all sub-assemblies as follows:

Shift Mechanism: Install complete detent and interlock assembly (plunger, spring, poppet balls, and spacer pin on Frazer & Kaiser) in boss in case, insert shift shaft and levers from within, insert shift shaft lockpins loosely in holes in case to hold levers in place, check and adjust interlock plunger clearance (see below), then drive shaft lockpins down into place, install new oil seal on outer end of each shaft, install outer levers.

Interlock Plunger Clearance—.001-.005" (except Willys), .001-.007" (Willys) clearance between end of plunger and shift lever sector with one lever in neutral and other lever in any gear. To check, place one lever in neutral, move other lever to any gear position, use feeler gauge between end of plunger and lever sector. Adjust by installing plunger of correct length. Plunger furnished in five lengths and marked for identification as follows: Unmarked —1.299", A—1.295", B—1.291", C—1.287", D—1.303".

CONTINUED ON NEXT PAGE

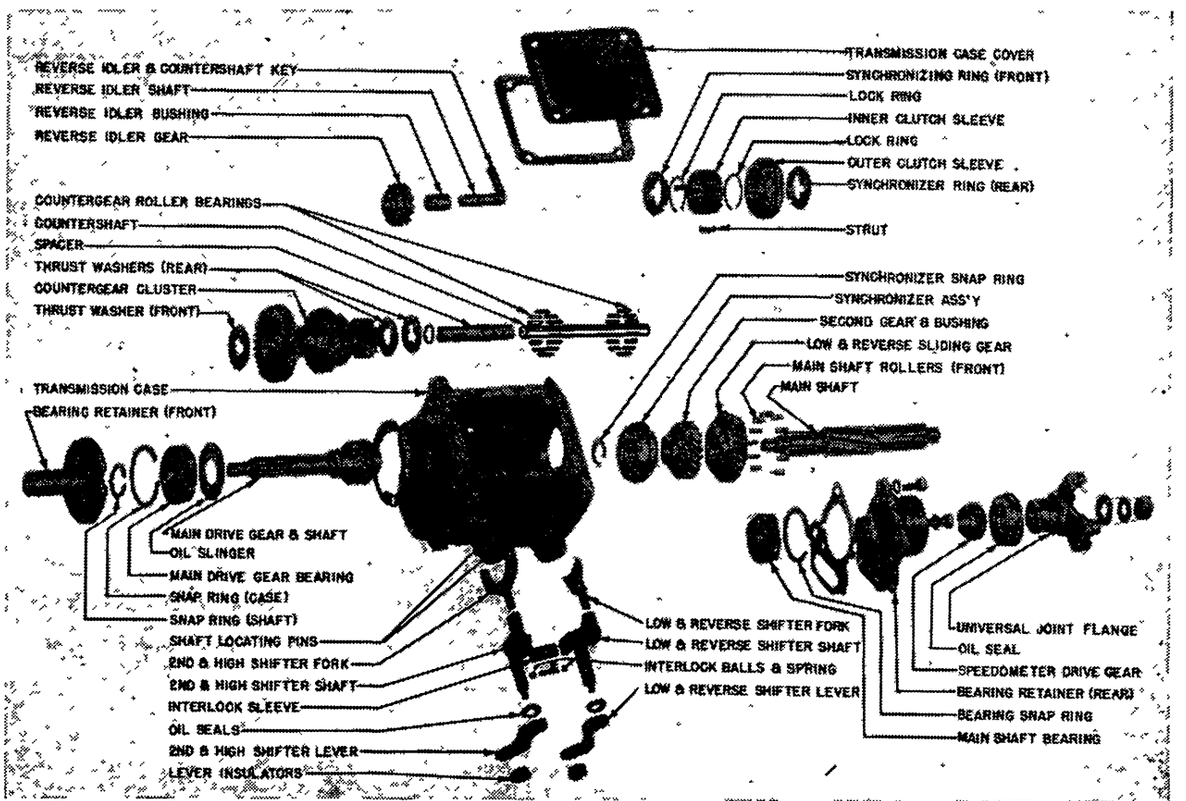

WARNER 1946-48 TRANSMISSIONS (NO OVERDRIVE) WITH REM TE CONTROL

1946-48 WARNER TRANSMISSIONS (NO OVERDRIVE) C nt.

Reverse Idler Gear & Shaft: Position gear with offset (longer end of hub) toward front of case, drive shaft in until lockplate slot lines up with rear face of case.

Countergear Cluster: To assemble, install dummy shaft and spacer in gear cluster, install bearing rollers and bearing retainer washer in each end of gear, using grease to retain parts (see Willys note below), install bronze thrust washer on each end with tongue of front washer forward (to engage notch in case), tongue of rear washer forward (to engage notch in gear), install steel thrust washer on rear and install entire assembly in case. Drive countershaft in from rear (pushing dummy shaft out at forward end) until lockplate slot lines up with rear face of case. Check countergear endplay which should be .004-.006" (Frazer & Kaiser), .012-.018" (Willys Jeep & Trucks). Install lockplate to retain countershaft and reverse idler shaft.

Willys Jeep & 4T Truck Bearings—Countershaft has double bearings (two sets of bearing rollers in tandem) at each end of countergear. Install one set of bearing rollers, bearing washer, second set of rollers, second bearing washer, at each end.

Main Drive Gear Assembly: If removed and installed as an assembly, this assembly must be re-installed before countershaft inserted (countergear cluster at bottom of case to provide clearance). Use driver to install bearing on shaft. On Studebaker, where gear installed in case without bearing, use Synchronizer Protector Ring J-2040 (Champ.), J-2039 (Comm.) to take thrust when driving bearing on shaft and into case. Select snap rings (large ring on bearing, small ring on shaft) for snug fit without play (these rings furnished in various thicknesses).

Mainshaft Assembly: When installing mainshaft in case, make certain that pilot bearing rollers in place in recess of main drive gear (use cup grease to hold rollers until shaft inserted). Install sliding gear with shift fork channel toward rear (Studebaker Champion and Willys 4-63 & 6-63) toward front (All others), engage shifter shoe in gear (shifter shoe offset should be in same direction as gear channel above). Install second speed gear with clutch teeth toward front, install synchronizer (see data below) with clutch sleeve offset toward front, install snap ring in shaft groove to retain these assemblies. Engage second-high shifter fork in channel in sychronizer sleeve.

Synchronizer Assembly—If synchronizer dismantled, assemble parts according to marks made previously. Install spring in each end of hub with free end of each spring engaging the same strut and springs pointing in opposite directions. Make certain that struts engage slots in synchronizer rings.

Rear Bearing Retainer: On models where rear bearing mounted in retainer, bearing can be lifted out after snap ring removed (speedometer gear accessible with bearing out). Oil seal should be replaced with special driver. When reassembling, make certain that bearing snap ring is snug fit in groove (furnished in various thicknesses). When installing, use new gasket, tap retainer in place on shaft with special driver. Tighten universal joint companion flange nut securely.

►***CAUTION—Speedometer drive gear will slip if companion flange nut not securely tightened.***

1939-46 WARNER O.D. TRANSMISSION (R6 & R7 "KICK-DOWN" OVERDRIVE)

Car Model	Warner Model
Chrysler 6, Model C22 (1939)	AS3-T86A
Chrysler 8, Models C23, C24 (1939)	AS5-T85A
DeSoto, Model S6 (1939)	AS3-T86A
Graham, 96, 97 (1939), 107, 108 (1940)	AS9-T88
Nash "600", 4140 (1941), 4240 (1942)	AS4-T84G
Studebaker Champ. G (1939)	AS2-T84F
Studebaker Champ 2G (1940)	AS6-T84F
Studebaker Champ. 3G, 4G (1941-42)	AS2-T84G
Studebaker Champ. 6G (1946)	AS2-T84G
Studebaker Comm. 9A, Pres. 5C ('39)	AS7-T88
Studebaker Comm. 10A, Pres. 6C ('40)	AS2-T86C
Studebaker Comm. 11A, 12A (1941-42)	AS2-T86D
Studebaker Pres. 7C, 8C (1941-42)	①AS2-T86D
Willys, 441 (1941), 442 (1942)	

①—See Production Change Note below for Late 1942 Transmission changes.

►NOTES, CAUTIONS, & CHANGES

►**Overdrive Units on Chrysler, DeSoto, Hudson, Nash, Packard Models)—These overdrives are used in conjunction with transmissions manufactured by the car factories. Refer to separate articles on each make of Transmission for transmission servicing data. Overdrive servicing data is given below.**

►**Nash Early 1946 Overdrive Control Production Changes:** The R7C Overdrive Unit (Cars from Service Serial No. N6-86001 to N6-120026) was used with **two different types of controls.**

See "Warner R6 & R7 Overdrive Controls".

►**Studebaker Pres. (late 1942) Overdrive Production Change**—The R7C Overdrive listed above was **used on early 1942 cars only. Beginning with Serial No. 7147625, a new type R9C Overdrive was used (Transmission Model T86D-R9C). This R9C Overdrive is special electrical control type without centrifugal pawls. Refer to separate article (following)**

►**Studebaker 1941 Overdrive Free-wheel Unit Bearing Change**—To correct complaints of free-wheel slippage when "kicking" down into direct drive, **high speed vibration, or grease leaks at rear bearing retainer caused by wear in free-wheeling cam bearing (bushing within free-wheel cam), this bushing should be replaced by new type Torrington Needle Roller Bearing No. 515378 (this bearing used in production on Late 1941 and all 1942 cars). To install this bearing, disassemble overdrive unit (see Servicing data below), remove bushing, install new type bearing by pushing on face of bearing which is marked with word 'Torrington', reassemble overdrive unit. CAUTION—When making this correction, see that capscrew holding free-wheel cam on shaft is tight.**

►**AS7-T88 & AS9-T88 Transmission Note**—These models are "Horizontal Type" with transmission cover on side of case. Except for this feature, these models are disassembled in same manner as other transmissions.

►**Overdrive Control Note**—The R6 & R7 Overdrives **have 'kick-down' type electrical control. See Warner Overdrive Control article (following) for complete adjustment data and specifications for Solenoid, Relay, and Throttle Switch adjustment.**
Steering Column Gearshift—See separate Transmission Control articles for adjustment directions on gearshift on each car model.

DESCRIPTION: Constant-mesh, synchro-mesh (2nd, High), sliding gear (Low & Reverse), all helical gear type. Main drive gear mounted on ball bearing in front end of case. Mainshaft mounted on pilot roller bearing in main drive gear hub (front end), ball bearing in bearing retainer or overdrive adapter bolted to rear of case (rear end) and extends through into overdrive unit. Counter gear cluster mounted on roller bearings on stationary countershaft with spacer between bearings and thrust washer at each end. Reverse idler gear mounted on plain bushing on short shaft which is retained by key which engages slot in case at rear end.

Overdrive Unit (R6, R7): Same as other Type R6 overdrive units except for sun gear mounting and control as follows: Sun gear is free to revolve on transmission mainshaft and is held stationary (for overdrive) by a spring-loaded, solenoid controlled clutch pawl mounted on the overdrive adapter plate. The pawl slides between two guide plates and in the inner position engages the sun gear blocker plate so as to prevent rotation of the sun gear. When the pawl is withdrawn by the solenoid to free the sun gear, a balk ring (assembled loosely on blocker plate) is dragged around sufficiently to block the pawl in the withdrawn position (when torque reversed by accelerator pedal release, balk ring returned to original position so that pawl can engage), but is prevented from further rotation by lugs on the rim of the ring.

Synchronizing Units:—Various types used as follows:

Drag Ring Blocking Typ (Chrysler C22, DeSoto)—Synchronizer rings are loose in ends of inner clutch sleeve and are actuated by a drag or friction ring within the outer clutch sleeve which contacts lugs on the synchronizer rings (initial movement of outer clutch sleeve carries drag ring with it and forces synchronizer rings in contact with cones on gear hubs). Teeth on synchronizer rings block or prevent gear engagement until synchronization completed when final movement of outer clutch sleeve causes clutch teeth on rim of sleeve to slide past teeth on synchronizer ring and engage clutch teeth on gear hubs. Inner clutch sleeve is stationary on shaft and does not move during synchronization and gear engagement.

Blocking Lug Type (Chrysler C23, C24)—Synchronizer rings mounted loosely in ends of inner clutch sleeve (retained by snap rings) and are actuated in usual manner by inner clutch sleeve (inner and outer sleeves centered by poppet balls and springs and move as a unit during synchronization). Three lugs on synchronizer rings block or prevent gear engagement until synchronization completed when the final movement of the outer clutch sleeve engages the clutch teeth on the gear hubs.

CONTINUED ON NEXT PAGE

1939-46 WARNER O.D. TRANSMISSION (R6 & R7 "KICK-DOWN" OVERDRIVE) Continued

Wire Bound Strut Blocking Type (Graham, Studebaker)—Synchronizer rings are free in ends of inner clutch sleeve and are actuated by three struts which fit in slots in inner clutch sleeve and engage notches in the rings. Struts are centered in outer clutch sleeve by a locking wire or ring engaging notches in the struts and move with the clutch sleeve to force the synchronizer rings against the cones on the gear hubs for synchronization. Teeth on the outer rim of the synchronizer rings block or prevent gear engagement until synchronization completed when final movement of outer clutch sleeve causes clutch teeth on rim of sleeve to slide past teeth on rings and engage clutch teeth on gear hubs. Inner clutch sleeve is stationary on shaft and does not move during synchronization and gear engagement.

Double Blocker-Double Spring Type (All 1940-46 Models)—Synchronizer rings are free in ends of inner clutch sleeve and are actuated by three shifting plates or struts which fit in slots in inner clutch sleeve and engage notches in synchronizer rings. Struts are centered in outer clutch sleeve by two wire springs (within struts on either side of inner clutch sleeve web) and move with the outer clutch sleeve to engage the synchronizer rings with the cones on the gear hubs. Inner clutch sleeve is stationary on the shaft and does not move (retained together with second speed gear by lock ring in groove in shaft). Blocking action is same as on other types of blocking synchronizers.

Gearshift Mechanism (All 1940-46 Cars)—Consists of shifter shafts and lever installed in side of transmission case. Each lever operates independently (rear lever for Low & Reverse, forward lever for Second & High) with forks on inner ends of lever shafts engaging sliding gear (Low-Reverse), synchronizer clutch sleeve (Second-High). Interlock and detent plungers are mounted in boss in case between levers and engage notches in sectors on inner ends of lever shafts (On Studebaker T86C, T86D, interlock plunger only mounted as above with separate detent plungers mounted in holes in each end of case and accessible by taking out plugs which close outer ends of these plunger holes).

REMOVAL OF TRANSMISSION: *See "Transmission" on car model page.*

TRANSMISSION & OVERDRIVE OVERHAUL NOTES: Note the following points when disassembling either the overdrive or transmission unit:

Chrysler 1940-41 Overdrive Note—Adapter plate and overdrive case are held together by three special screws inserted in holes in front face of adapter plate. Overdrive assembly must be removed from the transmission as a unit with the adapter plate and mainshaft assembly, and screws removed with special tool C-577, before adapter plate can be removed or overdrive disassembled.

Nash 4140, 4240 Note—No universal joint companion flange used and rear bearing retained by snap ring on shaft at rear of bearing. This snap ring must be removed first in order to remove overdrive case without disturbing shaft and free-wheeling roller assembly (shaft will come out with case otherwise).

Studebaker 1941-46 Note—No universal joint companion flange used and rear bearing retained by oil seal and retainer housing bolted on rear end of overdrive case and by snap ring installed on shaft at rear of bearing. When removing overdrive case, first remove retainer and take out snap ring (use special pliers #187) so that case can be withdrawn without disturbing free-wheel roller assembly.

Gearshift Mechanism (All 1940-46 Cars)—When disassembling transmissions with shifter shafts in side of transmission case, drive out shaft lockpins (in shaft boss on case)and pull shafts out as far as possible. When reassembling transmission, make certain that interlock and detent plungers and springs are properly installed (see Gearshift Mechanism servicing data below).

DISASSEMBLY OF OVERDRIVE: See Overhaul Notes above. Remove speedometer pinion. Take out five screws holding overdrive on transmission case, pull case and rear shaft assembly to rear using extreme care not to lose free-wheeling rollers which will be free to drop out and to prevent adapter plate moving away from transmission case (if transmission not being dismantled also). On all models except Packard, nut on universal joint companion flange can be removed, flange removed with puller, and shaft held in place while case is withdrawn without disturbing overdrive free-wheeling cam and roller assembly, if desired. Rear shaft assembly should then be removed. Take out capscrew in free-wheeling hub (on rear end of mainshaft), remove washer, bushing, and free-wheeling cam and roller assembly. Remove overdrive clutch pawl, ring gear, and pinions as an assembly (do not pull ring gear off pinions unless servicing required—pinions are split type on some models and must be wound up before being meshed in ring gear). Remove adapter snap ring and thrust plate. Take out two mounting screws and withdraw solenoid taking care not to lose shims (gaskets) under solenoid mounting plate. Remove solenoid base plate and plunger assembly by tilting base and pawl to disengage plunger, remove gasket, spring, pawl, and pawl guide plates. Remove snap ring on mainshaft at rear of sun gear, withdraw sun gear assembly.

DISASSEMBLY OF TRANSMISSION: See Overhaul Notes above. Remove cover and shift rails (when used), use care not to lose interlock and poppet balls and springs which are located under rails. Withdraw overdrive adapter plate and mainshaft assembly through rear of transmission case (On Chrysler C23, C24 models see that synchronizer unit does not fall off shaft—if removed from front end of shaft first, do not allow inner and outer clutch sleeves to come apart which will allow poppet balls and springs to fly out). Take out capscrews and remove front bearing retainer on front end of case. Use arbor or dummy shaft and drive countershaft out of case to rear, removing key from slot in rear

CONTINUED ON NEXT PAGE

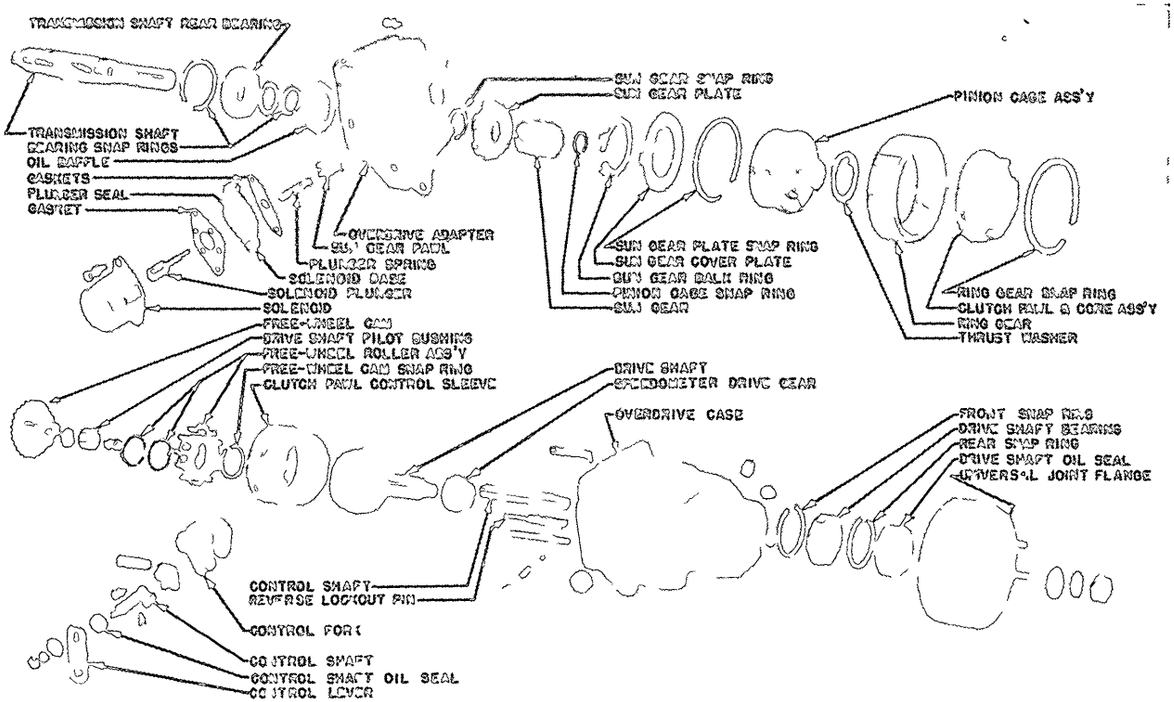

WARNER TYPE R7 OVERDRIVE (TYPE R6 SIMILAR)

1939-46 WARNER O.D. TRANSMISSION (R6 & R7 "KICK-DOWN" OVERDRIVE) Continued

end of shaft as soon as it is exposed, and leaving arbor in counter gear cluster to retain bearings until re-installed, allow counter gear cluster to drop down in case. Remove drive gear bearing snap ring (on bearing outer race at front end of case), push gear and bearing assembly through into case and remove at rear end. Remove counter gear cluster and thrust washers. To remove reverse idler gear, drive shaft out to rear, remove key from slot at rear of shaft, lift out gear and bushing assembly.

Mainshaft & Bearing Assembly:—Shaft and bearing can be removed from adapter plate by removing snap ring in adapter at front of bearing, and pulling shaft and bearing forward. To remove bearing, take out snap ring on shaft at rear of bearing, remove thrust washer, press bearing off shaft. Reassemble in same manner.

S cond Speed Gear Assembly (With Drag Ring and Wire Bound Strut Type Synchronizers):—Gear and inner clutch sleeve of synchronizer unit retained on shaft as an assembly by a snap ring in front of the synchronizer unit. To remove, take out snap ring, withdraw synchronizer unit and gear from shaft. Do not remove bushing from gear (serviced as an assembly). When reassembled, second speed gear endplay should be .003-.008" (Chrysler models), .003-.014" (others) with synchronizer pressed forward against snap ring.

(With Double Blocker, Double Spring Synchronizers). Gear and inner sleeve or hub of synchronizer mounted on shaft as an assembly and retained by snap ring in front of synchronizer. To remove, take out snap ring, withdraw synchronizer and gear from shaft. When reassembling, check second speed gear endplay with synchronizer hub pressed forward against snap ring. Endplay should be .004-.008" (controlled by snap ring thickness).

(With Blocking Lug Type Synchronizer)—Gear retained by thrust washer and locking plunger at forward end. To remove gear (with synchronizer unit off shaft), press down on locking plunger to release washer, rotate washer until notches on inner rim line up with splines on shaft, withdraw washer and gear, being careful not to lose locking plunger and spring which will fly out when gear removed. Install in same manner, making certain that washer turned so it engages shaft splines and that locking plunger engages washer to prevent turning and loosening in service.

Synchronizer Assembly:—Mark inner and outer clutch sleeves and both synchronizer rings to insure reassembly in same relative positions (on some types synchronizer rings are loose and can be lifted off directly). Service each type as follows:

Drag Ring Type—Install drag ring on inner clutch sleeve so that depressions on ring are directly in line with synchronizer ring lug holes in sleeve and retain in this position with three pins inserted through lug holes so as to pass over ring in slot at center of sleeve while sleeve being inserted in outer clutch sleeve. Make certain that open ends of drag ring straddle a tooth on the outer clutch sleeve and line up marks on inner and outer sleeves, then remove assembling pins and install synchronizer rings with spreader spring behind high speed synchronizer ring installed so that three raised fingers on spring are toward ring (spreader spring not used for second speed synchronizer ring). See Second Speed Gear data for installation instructions.

Lug Type—Synchronizer rings retained by snap rings and can be lifted out when snap ring removed. See that rings are free to turn with snap ring in place. Backlash between inner and outer clutch sleeves should be .000-.001" (sleeves are selective fit). Pressure required to break poppets so that outer sleeve slides on inner sleeve should be 26-34 lbs. (Chrysler C23, C24).

Wire Bound Strut Type—Install struts on inner sleeve, install lock wire so that it engages notches on struts with open end of wire midway between two struts. When installing inner sleeve and strut assembly in outer sleeve, narrow strips of .003" shim stock can be installed directly over each strut to prevent wire disengaging from strut notch when it is contracted to enter outer sleeve. CAUTION—See that hook on end of lock wire is engaged between two clutch teeth on outer sleeve. Remove feeler strips used for assembly. See Second Speed Gear data for installation instructions.

Double Blocker, Double Spring Type—Install struts with open face toward inner clutch sleeve and hooked end of each spring wire engaged in same strut (free ends of springs will be between this strut and next strut in each direction—springs installed in opposite direction). See Second Speed Gear data above for installation on shaft.

Main Drive Gear & Bearing Assembly:—To remove bearing, remove snap ring on shaft in front of bearing, take off thrust washer, press bearing off shaft. Install bearing with shielded side toward gear, use new snap ring and make certain that it is snug fit in groove. When installing gear and bearing assembly in transmission see that retainer fits properly on case and that bearing snap ring is held snugly between retainer and case so that gear has no endplay.

Counter Gear Assembly:—If bearings removed from counter gear, use grease to hold rollers in place and install rollers on dummy shaft or arbor in gear cluster. Install steel washer next to gear and bronze thrust washer between steel washer and case at each end (steel washer not used at front end on Chrysler C23, C24). Drive countershaft in from rear end (displacing arbor at front) and make certain that locking key installed in notch at rear end of shaft so as to engage slot in case. Check endplay with feeler gauge. Endplay should be .002-.008" (On Chrysler models, adjust by selecting thrust washers of correct thickness—washers furnished in three thicknesses, A—thinnest, B, C—thickest).

Gearshift Mechanism:—Shifter shafts can be withdrawn through case after nut on outer end of lever shaft removed and lever taken off. When reassembling shafts, see that interlock and detent plungers and springs are properly installed and that plungers engage sectors on inner ends of shifter shafts. Install oil seal in recess in case at outer ends of shafts, coat shaft lock pins with Permatex or shellac, see that shaft grooves lined up with lockpin holes, drive pins in ⅛-3/16" past flush position.

WARNER R6 & R7 OVERDRIVES (WITH "KICK-DOWN")

Car Model	Warner Model
Chrysler 6, Model C22 (1939)	①AS3-T86A
Chrysler 8, Models C23, C24 (1939)	①AS5-T85A
Chrysler 6, C25 (1940)	④AS1-R7B
Chrysler 8, C26, C27 (1940)	④AS1-R7B
Chrysler 8, C30, C33 (1941)	⑤AS1-R7B
DeSoto, Model S6 (1939)	①AS3-T86A
DeSoto, Model S7 (1940)	④AS1-R7B
Graham, 96, 97 ('39), 107, 108 ('40)	①AS9-T88
Hudson 6 & 8, All Models (1940)	③AS13-R6
Nash 6, Model 4020 (1940)	③AS12-R6
Nash 6, 4160 ('41), 4260 ('42)	④AS1-R7C
Nash "600", 4140 ('41), 4240 ('42)	①AS4-T84G
Nash 8, Model 4080 (1940)	③AS12-R6
Nash 8, 4180 ('41), 4280 ('42)	④AS1-R7C
Nash Amb. 6, 4660 (Early 1946) ②	④AS1-R7C
Nash-Lafayette, 4010 (1940)	③AS12-R6
Packard, 6, 8, Super 8 Models ('39)	③AS9-R6
Studebaker Champ. G (1939)	①AS2-T84F
Studebaker Champ. 2G (1940)	①AS6-T84F
Studebaker Champ. 3G ('41), 4G ('42)	①AS2-T84G
Studebaker Champ. 5G (1946)	①AS2-T84G
Studebaker Comm. 9A, Pres. 5C ('39)	①AS7-T88
Studebaker Comm. 10A, Pres. 6C ('40)	①AS2-T86C
Studebaker Comm. 11A ('41), 12A ('42)	①AS2-T86D
Studebaker Pres. 7C (1941)	①AS2-T86D
Studebaker Pres. 8C ('42) See Note	①AS2-T86D
Willys, 441 (1941), 442 (1942)	①

①—Transmission with R6 or R7 Overdrive.
②—Before Service Serial No. N6-120026 (R10 Overdrive after this number). See Production Change Note for various controls used with this R7 Overdrive.
③—Type R6 Overdrive. ④—Type R7 Overdrive.
⑤—Type R7 Overdrive (part of Vacamatic Overdrive Transmission.

►**Nash Early 1946 Overdrive Control Production Changes:** The R7C Overdrive Unit (Cars from Service Serial No. N6-86001 to N6-120026) was used with two different types of controls. *See "Warner R6 & R7 Overdrive Controls".*

►**Nash Amb. 6 (Late 1946) Overdrive Change**—New type Warner R10 Overdrive used on cars after Service Serial No. N6-120026. *See "Warner R10 Overdrive".*

►**Chrysler 8 (1941) Overdrive Note**—Used in conjunction with Chrysler Vacamatic Overdrive Transmission. See separate article for Vacamatic Transmission description.

►**Studebaker Pres. (1942) Overdrive Change**—Used on first cars only. Beginning with Serial No. 7147625, Type R9C Overdrive was used. See separate article on Type R9 Overdrive for data on this type.

REMOVAL OF OVERDRIVE: *See "Overdrive" or "Transmission" on car model page.*

DISASSEMBLY: See "Disassembly of Overdrive" in preceding Warner Overdrive Transmission data.

►*CAUTION—Note the following important points:*

Overdrive Shift Mechanism (1941-46 Cars): On all models except Chrysler, new limiting pin installed in side of case to limit travel of overdrive shift shaft and fork (replaces spring-loaded ball type detent). To disassemble shift control, remove lockwire and withdraw reverse lock-out pin through front of case, rotate shift fork and disengage shift collar,

CONTINUED ON NEXT PAGE

WARNER R6 & R7 OVERDRIVES (WITH "KICK-DOWN") Cont.

remove shift collar. To remove shift shaft and fork assembly, take out limiting screw on side of case, remove setscrew in fork (work through hole in case after removing plug from this hole), withdraw shaft, lift fork out. To remove shift lever and shaft, take off nut on outer end of shaft, remove lever, loosen setscrew in case, withdraw shaft from within case. Reassemble shift mechanism in same order.

Overdrive Mainshaft & Bearing Assembly (except Packard):—Bearing is retained in overdrive case by snap ring installed at each side of outer race and is positioned on shaft by speedometer gear hub (front), universal joint yoke hub (rear). Oil seal is assembled in end of case and can be removed with a puller after universal joint yoke has been removed. Do not remove oil slinger which is spun on rear end of free-wheeling sleeve.

Overdrive Mainshaft & Rear Bearing Assembly (Packard Models):—Two types of rear bearings used as noted below. On cars with first type bearing, universal joint flange nut (at rear end of shaft) controls bearing pre-load, do not loosen this nut which will disturb bearing adjustment. See bearing pre-load adjustment instructions below if bearings dismantled or adjustment disturbed. On later cars (may be identified by letter 'M' stamped on side of universal joint flange), this nut does not control bearing adjustment and should be kept tight.

IMPORTANT SERVICE NOTE—This second type bearing adjustment (Solid Spacer No. 341264, Belleville Spring Washer No. 341266) should be installed on all first cars (with compressible spacer type adjustment) whenever overdrive disassembled or bearings removed.

Overdrive Unit Rear Bearing (First Type)—Consists of two ball bearings with compressible spacer on shaft between inner races. Bearing adjustment controlled by tension of universal joint flange nut on rear end of shaft. If bearings dismantled or bearing adjustment lost by loosening of universal flange nut, install bearings with snap rings in place in housing between bearing outer races, use new spacer on shaft between bearings and adjust as follows: Clamp universal flange in vise with overdrive case vertical, tighten flange nut slightly, check force required to spin overdrive case on shaft using spring scale hooked in mounting hole on boss at rear of case (first reading should be oil seal drag only), tighten nut a little at a time and repeat check until 3¼-4¼ lbs. additional pull required to spin case. NOTE—If nut tightened so that bearing pre-load of 5 lbs. or more (net after subtracting oil seal drag), new spacer sleeve must be installed and adjustment repeated.

Overdrive Unit Rear Bearing (Later Type)—Solid spacer used on shaft between bearings and bearings pre-loaded by Belleville spring washer assembly between bearings (spring washer rims engage bearing snap rings in housing). With this type assembly, universal flange nut should be tightened securely (does not adjust bearings). NOTE—Cars with this type bearing adjustment assembly may be identified by letter 'M' stamped on side of universal joint flange yoke.

Sun Gear & Plate Assembly:—To remove sun gear from plate, remove snap ring at end of sun gear, slide plate off gear. Check balk ring friction on sun gear plate, 8-10 lb. pull should be required to rotate ring clockwise on plate. When installing sun gear, make certain that oil slots in plate and gear line up. Sun Gear Pawl & Balk Ring Clearance—Clearance between end of pawl and face of lug on balk ring should be .015" with balk ring rotated to block out pawl. If solenoid assembled, clearance can be checked by energizing solenoid so that pawl is withdrawn. Adjust by adding or removing solenoid gaskets.

Overdrive Solenoid: See following article on Warner Overdrive Control for complete solenoid specifications and servicing data.

Pinion Cage Assembly:—To remove pinion assembly, pull pinions out of ring gear. Assembly cannot be dismantled (oil slinger which is spun on pinion cage retains pinion shaft pins). When remeshing split type pinions in ring gear, wind up narrow half of each split pinion 1½ teeth so that marked teeth on wide and narrow halves of pinion are together, mesh ring gear with pinions held in this position. When installing pinion gears, mesh wide half of each split pinion with sun gear, then install ring gear so that it meshes with narrow half of each pinion only, revolve sun gear counter-clockwise (transmission mainshaft must be held from turning which may be accomplished by shifting transmission into two gears at once) until pinions are wound up approximately 1½ turns and marked pinion teeth are together, then push ring gear into place so that pinions fully meshed with ring gear and sun gear.

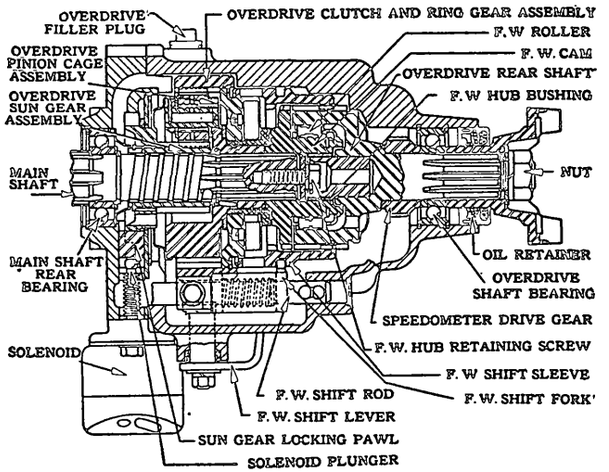

Ring Gear & Clutch Pawl Assembly:—Take out snap ring in inner rim of ring gear, remove clutch pawl and core assembly from ring gear. Clutch pawl adjusting screws, washers, and springs can be removed but no further disassembly is possible (clutch core must be concentric with gear teeth and cannot be reamed sufficiently accurately in the field, parts are not furnished separately). CAUTION—If adjusting screws removed, count number of notches or 'clicks' as each screw is turned out so that screws can be replaced in exactly same position. These screws control cut-in speed (see adjustment directions below).

Clutch Pawl & Pinion Cage Thrust Washer—Bronze thrust washers between clutch pawl hub and pinion cage should be installed with projection on washer engaging notch on hub (washer can be retained with cup grease while assembling parts). Clutch core assembly endplay should be .005-.010" with all parts installed on mainshaft and retaining screw tight.

ASSEMBLY & INSTALLATION: Reverse disassembly directions and note following points: Make certain that snap ring installed on mainshaft in back of sun gear assembly (this ring limits sun gear and planet pinion gear assembly endplay); see that planet pinions are correctly wound up before being meshed in ring gear (split type only); make certain 2 pawl guide plates in position (when used), turn sun gear so that lobe on plate is in line with pawl slot, install pawl with relief notch toward rear. Pack free-wheel rollers in cage with grease to retain rollers while rear shaft being installed. Install case by placing shaft assembly in vertical position, invert case (with clutch collar in case and engaging control fork) and lower on shaft so that collar engages teeth on free-wheel sleeve and cam. When installing overdrive unit on transmission, make certain that reverse lock-out pin in place and install mounting screw with star washer in lower right hand hole of transmission case (necessary to prevent oil leaks).

ADJUSTMENT (Cut-in Speed) Should not require adjustment but can be adjusted in same manner as on previous models by removing plug on top of overdrive case, turning shaft until hole in clutch shell and adjusting screw in clutch pawl assembly (two screws—adjust in succession) line up with hole in case, and turning adjusting screw in to increase cut-in speed, out to decrease cut-in speed. Make certain that screws not turned so far as to cause interference. With standard setting, cut-in speed should be as follows:

Car Model	Cut-in Speed
Chrysler, DeSoto ('39-40-41)	25 MPH.
Hudson ('40)	30-35 MPH.
Nash '40-42	33 MPH.
Packard ('39)	30 (26-30) MPH.
Studebaker ('39)	30 MPH.
Studebaker Champ. '40-46	32-36 MPH.
Studebaker Comm. & Pres. ('40)	28-32 MPH.
Studebaker Comm. & Pres. '41-42	32-36 MPH.
Willys '41-42	32 MPH.

CAUTION—Both adjusting screws must be adjusted exactly alike. One screw marked by single slot, opposite screw has double slot, to avoid possibility of adjusting same screw twice.

Overdrive Lock-out Control Adjustment:—To adjust loosen screw which holds control wire on lever at overdrive case, push hand control button at instrument panel in as far as possible and then pull button out ⅛" (to insure full travel of lever), move control lever on overdrive case to extreme rear position (Overdrive position), tighten control wire screw and locknut securely.

Reverse Lock-out Plunger (Nash 1940)—Reverse lock-out pin is actuated by lever mounted on adjustable stud in rear end of transmission case. To check adjustment, place transmission gears in reverse, see that overdrive is locked out, check clearance between lock-out lever and roller on end of shift fork plate. Clearance must not exceed .005". Adjust by screwing lever mounting stud in or out of transmission case.

WARNER R6 & R7 OVERDRIVE CONTROL

Chyrsler 6 & 8, All Models (1939-40)
Chrysler 8, All Models (1941)—See Note
DeSoto, All Models (1939-40)
Graham, All Models (1939-40)
Hudson 6 & 8, All Models (1940)
Nash 6, All Models (1940-42)
Nash Amb. 6, 4660 (Early 1946)—See Note
Nash 8, All Models (1940-42)
Nash-Lafayette, Model 4010 (1940)
Packard 6, 8, Super 8, All Models (1939)
Studebaker Champ., All Models (1939-46)
Studebaker Comm., All Models (1939-42)
Studebaker Pres., All (1939-42)—See Note
Willys, Passenger Car Models (1941-42)

►**Chrysler 8 (1941) Control Note**—Control used in conjunction with special Vacamatic Overdrive Transmission. Refer to separate article for Chrysler Vacamatic Transmission data.

►**Nash Amb. 6 (Early 1946) Production Change**—Two different types of controls used as follows:

Service Serial No. N6-86001 to N6-95333—Delco-Remy Relay No. 1116798 and Solenoid No. 1118004. Same as units used on previous Nash models.

Service Serial No. N6-95333 to N6-120026—Auto-Lite Relay No. HRT-4001 and Solenoid No. SSB-4002. Same as units used on other cars (not like units used on previous Nash cars).

►**Nash Amb. 6 (Late 1946) Overdrive Change**—New type R10B Overdrive (with different control system) used on cars after Service Serial No. N6-120026. *See "Warner R10 Overdrive Controls."*

►**Studebaker Pres. (Late 1942) Overdrive Change**—R7C Overdrive used on first 1942 cars only. Beginning with Serial No. 7147625, a new type electrical control overdrive R9C was used with different type control design. Refer to separate articles (following) for data on these late 1942 cars.

►**Packard 1939 Overdrive Production Change**—On cars without Reverse Switch (original equipment on later cars), manufacturer recommends that this switch and new type relay (with extra terminal for switch connection) be installed. See illustration for wiring connections for this new type equipment.

DESCRIPTION:—Control system consists of an operating solenoid (on overdrive case), control relay, and accelerator pedal operated throttle 'kick-down' switch which makes it possible to return to Direct Drive (from Overdrive) at speeds above the overdrive cut-in point, at the will of the operator, simply by depressing the accelerator pedal beyond the wide open throttle position so as to close the throttle switch contacts.

Nash Models (1940-Early 1946) with Delco-Remy Control Units—Transmission solenoid used on this model does not have ignition contacts or provision for cutting out ignition in order to allow solenoid to disengage sun gear pawl. Ignition control is effected by a second relay unit in the Transmission Relay case. On all cars with overdrive, the customary ignition feed wire (from ammeter to ignition switch) is omitted, and the switch feed is taken through the transmission relay Series Relay contacts. The high initial current draw of the transmission solenoid (when accelerator pedal depressed to close throttle switch contact which causes closing of transmission relay Shunt Relay contacts and allows current to flow through both transmission solenoid windings) causes the Series Relay contacts to open and opens the ignition circuit so that the ignition is cut out. As soon as the transmission solenoid withdraws the sun gear pawl, the bottoming of the solenoid plunger opens the solenoid contacts so that current flow through the pull-in coil is interrupted. The remaining current flow through the solenoid hold-in coil (approx. 1 ampere) is not sufficient to hold the Shunt Relay contacts open, the contacts close and ignition is restored. As soon as accelerator pedal is released (opening throttle switch contacts), transmission relay Shunt Relay contacts open and current flow through solenoid hold-in coil is interrupted. The solenoid plunger spring then causes the pawl to re-engage in the sun gear plate slot.

Nash 1946 Amb. 6 (No. N6-95333 to N6-120026) with Auto-Lite Control Units—Control relay and solenoid operate in same manner as other cars (below) with ignition interrupter contacts built in solenoid (relay is single type).

Other Models—Operate in same manner as in '41-42 (small plunger in transmission solenoid closes ignition contacts and shorts out ignition, large plunger then withdraws pawl and opens ignition contacts so that ignition is restored).

OPERATION:—With the car operating in overdrive (for all accelerator pedal positions between idle and wide-open throttle) the solenoid pawl is held in the 'in' position by a spring on the solenoid plunger stem to engage the sun gear blocker plate and prevent rotation of the sun gear. When the accelerator pedal is fully depressed (for return to Direct Drive), the closing of the throttle switch completes the relay circuit, closing the relay contacts so that the overdrive solenoid is energized. Current flows through both solenoid coils (solenoid main contacts which control 'starting coil' are normally closed) and the solenoid operates in successive steps as follows: 1) small plunger 'B' is drawn in so that contactor 'C' completes circuit from 'IGN' terminal to ground, cutting out the ignition momentarily by shorting out the breaker contacts and grounding the coil directly, causing the engine to miss several firing impulses; 2) As soon as pressure on gear teeth removed (by engine not firing), the solenoid plunger 'F', to which the sun gear pawl is attached, is drawn in so that the sun gear blocker plate and sun gear are released and allowed to rotate for direct drive. 3) This movement of the large plunger 'F' forces the small plunger 'B' out, first opening the ignition contacts and restoring the ignition, and then opening the main solenoid contacts so that the current flow through the 'starting coil' is interrupted. Current continues to flow through the fine 'holding coil' winding and this is sufficient to hold the pawl out of engagement (see specifications below for relative starting and holding coil current draw). When the accelerator pedal is returned to any position below wide open throttle, the opening of the throttle switch contacts opens the relay and solenoid circuits. The sun gear pawl spring then engages the pawl in the sun gear blocker plate and the car returns to Overdrive.

NOTE—The entire solenoid operation is so rapid and the ignition is cut out for so short an interval that it is not apparent to the operator. If for any reason the solenoid is unable to withdraw the pawl, the combined current draw of the starting and holding coils will cause the relay fuse (in ammeter lead at relay) to blow, restoring the ignition. The car will then operate in a normal manner except that it will not be possible to return to direct drive from overdrive.

CAR WIRING CIRCUITS: Refer to individual car wiring diagrams in Car Model Section for complete transmission control wiring diagrams.

FUSES:—Fuses located on solenoid relay to protect solenoid circuits (not used on all models). If solenoid does not withdraw sun gear pawl, for any reason, fuse will blow which will restore ignition and allow car to be driven normally except that

CONTINUED ON NEXT PAGE

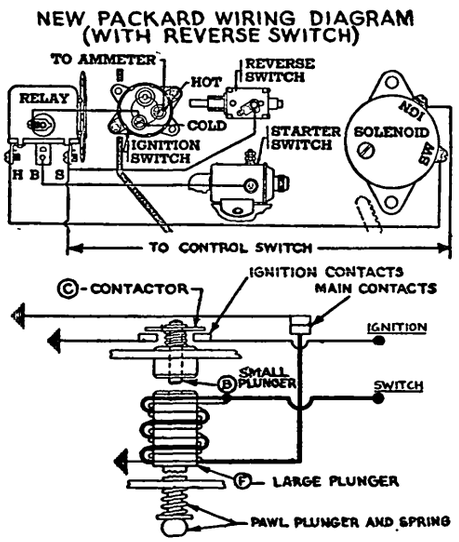

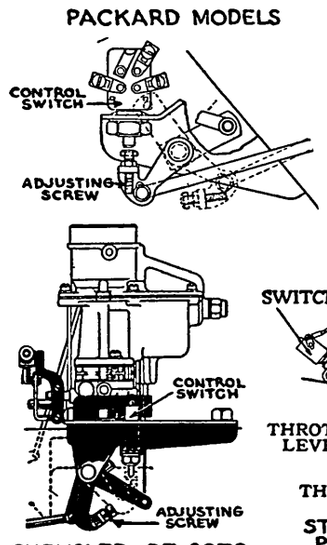

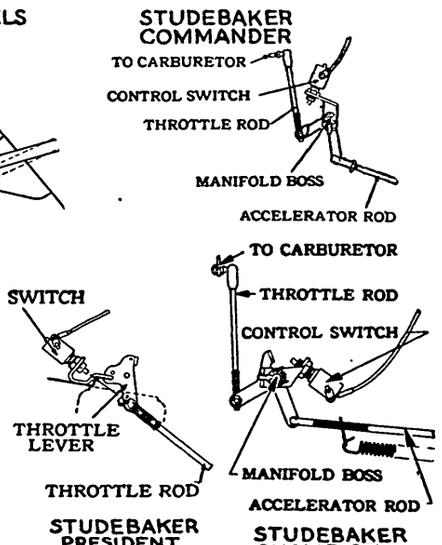

OVERDRIVE CONTR LS (WARNER TYPE R6 & R7 OVERDRIVES)

WARNER OVERDRIVE CONTROL R6 & R7 (C ntinued)

overdrive 'kick-down' feature will not operate. CAUTION—Do not use fuse of any other capacity than that shown in following table (no fuse used on Graham, Nash, Packard models).

Car Model	Fuse Capacity
Chrysler '39	14 amperes
Chrysler '40-41	20 amperes
Hudson '40①	20 amperes
Nash '46②	20 amperes
Studebaker '39-40-41	14 amperes
Studebaker '41-46	20 amperes
Willys '41-42	20 amperes

①—On first Hudson cars, fuse located in holder in relay case. After car No. 48622, fuse mounted in clip on bottom of relay.
②—On cars with Auto-Lite control units only (fuse mounted on HRT-4001 Relay).

ADJUSTMENT:—Check and adjust throttle switch linkage on each car model as directed below whenever linkage is disconnected or disturbed by carburetor linkage adjustment, removal of units, etc.

Chrysler, DeSoto Models—Depress accelerator pedal until throttle valve just reaches wide open position (remove air cleaner and sight down carburetor barrel to determine this position), hold in this position while making adjustment. Loosen locknut and turn switch plunger contact screw until clearance between contact screw head and switch plunger is exactly 3/32", tighten locknut.

Graham Models—Adjust position of operating block (on connector rod linking bell crank and throttle valve lever) so that throttle kick-down switch plunger is depressed not more than 1/32" with wide open throttle. See that linkage over-travel insures closing of switch contacts before accelerator pedal bottoms on toeboard. NOTE—Carburetor throttle lever should be set so that end is approximately 7/16" above center of shaft when throttle closed and accelerator pedal rod should be connected in top hole on bell crank.

Hudson Models—Contact disc on accelerator connecting rod should just contact throttle switch plunger with throttle valve wide open. To adjust, remove air cleaner (to observe throttle valve), open throttle until valve is just wide open, loosen adjusting nuts above and below contact disc on rod, move contact disc up or down until it contacts switch plunger, tighten mounting nuts.

Nash & Nash-Lafayette—Throttle switch is mounted on the dash and is cable operated. To adjust, loosen locknut and adjust switch position on mounting bracket so that contacts close when throttle is wide open and spring on carburetor throttle shaft pulley just begins to compress. Check accelerator pedal over-travel and adjust stopscrew on floor board so that pedal has sufficient travel beyond full-throttle position to operate switch.

Packard Six, Eight, Super Eight—Depress accelerator pedal until throttle valve is just wide open, hold in this position, loosen locknut on switch plunger tappet screw (on accelerator cross-shaft lever) and adjust screw so that clearance between face of screw and end of switch plunger is exactly .046", tighten locknut. See that accelerator pedal has sufficient over-travel to close switch contacts before bottoming on floor boards.

Studebaker Champion, Commander, President—Depress accelerator pedal until throttle valve is just wide open and throttle lever contacts wide open throttle stop, hold in this position, loosen locknut on switch mounting stud, turn switch in or out of mounting bracket until small shoe on idler lever (Champion, Commander), end of accelerator rod (President) just contacts switch plunger, tighten locknut.

Willys—Adjust position of switch on mounting bracket so that contact shoe on end of accelerator rod just contacts switch plunger (maximum clearance 1/32") with carburetor throttle valve wide open. See that linkage has sufficient over-travel to close switch contacts.

OVERDRIVE SOLENOID REMOVAL: If necessary to remove solenoid (for transmission and overdrive removal or for servicing), take out two capscrews in mounting flange, withdraw solenoid case without disturbing base plate and plunger assembly.

CAUTION—Do not lose gaskets under solenoid assembly. These gaskets control pawl mesh and must be replaced when solenoid installed.

Servicing—No servicing required other than to keep contacts clean and parallel so as to make good electrical contact. To remove cover for contact inspection, disconnect wires, take out flat headed screw, pull cover off base. See that lower face of contact disc on plunger 'B' and contact plates (which short out ignition) are clean and smooth. Resurface main contacts (which control 'starting coil' circuit) with a file, if necessary, to secure smooth parallel contact surfaces. Check contact gaps and solenoid performance (see specifications below).

SOLENOID & RELAY SPECIFICATIONS: Various makes and types used on these cars as follows:

Overdrive Control Units

Car Model	Control Relay	Solenoid
Chrysler 6 ('39-40)	A-L. HR-4201	A-L. SSB-4001
Chrysler 8 ('39-41)	A-L. HR-4201	A-L. SSB-4001
DeSoto ('39-40)	A-L. HR-4201	A-L. SSB-4001
Graham ('39-40)	RBM. No. 4740	D-R. 1569
Hudson 6 & 8 ('40)	A-L. HR-4201	D-R. 1569
Nash ('40-46)②	D-R. 1116798①	D-R. 1118004
Nash ('46)③	A-L. HRT-4001	A-L. SSB-4002
Packard ('39)	RBM. No. 4780	D-R. 1569
Studebaker ('39)	A-L. HR-4201S	D-R. 1569
Studebaker ('40)	A-L. HR-4201	D-R. 1118001
Studebaker ('41)	A-L. HR-4201	D-R. 1118013
Studebaker ('42-46)	A-L. HRB-4301	D-R. 1118013
Willys ('41-42)	A-L. HR-4201AS	D-R. 1569

A-L.—Auto-Lite. D-R.—Delco-Remy.
①—D-R. No. 1116827 also used on 1942 cars.
②—1946 cars before Service Serial No. N6-95333.
③—1946 cars from Service Serial No. N6-95333 to N6-120026.

Specifications for each type of equipment are as follows:

AUTO-LITE SOLENOIDS

Small Plunger 'B'—Should close with 2.5 volts min., 4 volts max. (6 volt units), 5 volts min., 8 volts max. (12 volt units) with large plunger 'F' 3/8" from bottom.
Large Plunger 'F'—Should exert pull of 21 lbs. min. (70° F.), 15 lbs. min. (210° F.) when 3/8" from bottomed position.
Contact Gap (main contacts)—.047" plus or minus .015" with large plunger 'F' bottomed in coil.
Current Draw (At 70° F.)—'Both coils' figure is for both Holding and Starting coils together (main contacts closed). 'Holding Coil' figure is for Holding coil only (main contacts open—plunger bottomed in coil).

Six Volt Units

	Min.	Amperes	Max.	Volts
Both Coils	29.0		31.0	3
Holding Coil	1.2		1.3	6

Twelve Volt Units

Both Coils	14		15	6
Holding Coil	.55		.65	12

AUTO-LITE RELAYS

Contact Gap—.026" (HR-4201, S, SA), .034-.038" (HRB-4301), .015" Minimum (HRT-4001). Adjust by bending armature stop.

Air Gap—.012-.017" (except "HRT"), .031-.034" (HRT-4001) with contacts closed. Adjust by changing height of stationary contact.

Closing Voltage—2.5-3.5 volts (HR-4201, S, SA), 2.8-3.6 volts (HRB-4301), 4.0 volts max. (HRT-4001).

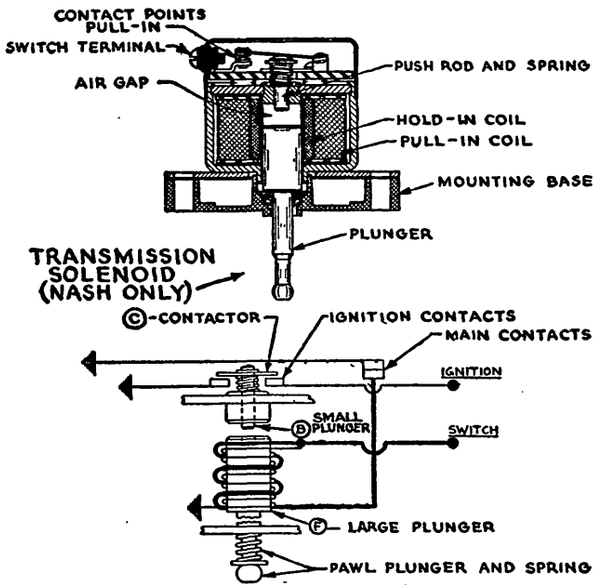

TRANSMISSION SOLENOID (ALL OTHERS)

Current Draw—Measure between 'TH.SW' and 'IGN. SW.' terminals. Current should be 1.07-1.15 amperes at 6.0 volts (HR-4201, S, SA—winding resistance 5.2-5.6 ohms), .44-.46 ampere at 6.0 volts (HRB-4301 winding resistance 12.9-13.5 ohms), .35-.39 amperes at 6.0 volts (HRT-4001—winding resistance 15.5-17.1 ohms).

R-B-M RELAYS

Contacts Close—3.5-4.5 volts.
Current Draw—¾ ampere.
NOTE—No fuse used with this relay on Graham and Packard models.

DELCO-REMY SOLENOIDS

Model 1569 (Six Volt), 1573 (Twelve Volt)
No. 1118001, 1118013 (6 volt)

Small Plunger 'B'—Should close at 5.0 volts, (6 volt units), 6-10 volts (12 volt units) with 3/8" gap of large plunger.

CONTINUED N NEXT PAGE

WARNER OVERDRIVE CONTROL
R6 & R7 (C ntinu d)

Large Plunger 'F'—Should close against 16 lb. pull with ⅜" plunger air gap at 6.3 volts max. (6 volt units), 12.6 volts max. (12 volt units) with both coils operating.
Contact Gap (main contacts)—.020-.060" with large plunger 'F' bottomed in coil.
Contact Spring Tension—10-13 ounces.
Current Draw—'Both Coil' figure is for both starting coil and holding coil together (main contacts closed), 'Holding Coil' figure for holding coil only (main contacts open—plunger bottomed in coil).

Six Volt Units

	Amperes	Volts
Both Coils	28-34	6.0-6.38
Holding Coil	9-1.1	6.0-6.35

Twelve Volt Units

Both Coils	24.5-27.5	12.0-12.75
Holding Coil	.66-.72	12.0-12.75

Model No. 1118004 (Nash)

NOTE—This solenoid does not have small plunger and ignition contacts. Both windings are connected to the single solenoid terminal (starting coil circuit is opened by the opening of the main contacts as the plunger bottoms in the coil, holding coil only then holds plunger in coil).
Solenoid Plunger—Should close against 16 lbs. pull with ⅜" plunger air gap at 6.3 volts maximum.
Current Draw—28-34 amperes at 6.0 volts (Both coils—main contacts closed), .9-1.1 amperes at 6.0 volts (Holding coil only—main contacts open).

DELCO-REMY RELAYS
Model 1116798 & 1116827 (Nash)

NOTE—This unit consists of two separate relays which operate as follows: **Series Relay**—Winding connected in series with shunt relay contacts. All current for solenoid goes through this winding. When armature attracted to core, contacts open and break ignition circuit (all ignition current goes through this series relay contacts). Current draw of solenoid holding coil is not sufficient to hold armature down and closing of contacts restores ignition as soon as transmission solenoid operates (which cuts out solenoid starting coil and causes solenoid current to drop from approximately 30 amperes to 1 ampere—see solenoid specifications above). **Shunt Relay**—Winding is connected in throttle switch circuit and contacts control current flow to transmission solenoid (closing of contacts when armature attracted to core completes solenoid circuit, contacts remain closed until throttle switch contacts are opened).

Series Relay Specifications
Contacts Open—13.0-16.0 amperes.
Contacts Close (Armature released)—6 amps. min.
Contact Gap—.030".

Shunt Relay Specifications
Contacts Close—3.0-4.0 volts.
Contact Gap—.025".
Air Gap—.012" (with contacts closed).

TROUBLE SHOOTING:—If overdrive does not operate, check for blown fuse on relay. This fuse will blow if control system does not operate properly. If fuse blows continuously, check wiring circuits for grounds or shorts, make certain that ignition circuit is shorted out momentarily when solenoid first energized (necessary to relieve gear load so that solenoid can withdraw pawl), see that pawl plunger operates freely without binding.

WARNER R9 OVERDRIVE

Car Model	Warner Model
Hudson 6 & 8, All Models (1941-42)	①AS1-R9B
Hudson 6 & 8, All Models (1946-47)	①AS2-R9B
Packard 6 & 8, All Models (1940)	① AS1-R9
Packard 6 & 8, All Models (1941-48)	①AS2-R9
Packard Super 8, All Models (1940-48)	①AS1-R9A
Packard Cust. 8, All Models (1940-48)	①AS1-R9A
Studebaker Pres., 8C (1942) See Note	②R9C

①—Overdrive only (used with own transmission).
②—Part of T86D-R9C Transmission & Overdrive.

►**Packard Correction for locking of overdrive after transmission shifted into Reverse**—*See "Warner R9 Overdrive Control" (following) for installation of Reverse Lock-out Switch and removal of overdrive wiring harness connector.*

►**Hudson & Packard Overdrive Note**—Overdrive is used in conjunction with transmissions built by each car manufacturer. Refer to separate transmission articles for transmission servicing data.

►**Studebaker Pres. Note**—This Overdrive Transmission used on Late 1942 cars only (beginning with Serial No. 7147625). Refer to preceding article on Warner Overdrive Transmission for first type Overdrive and servicing data on all transmission models.

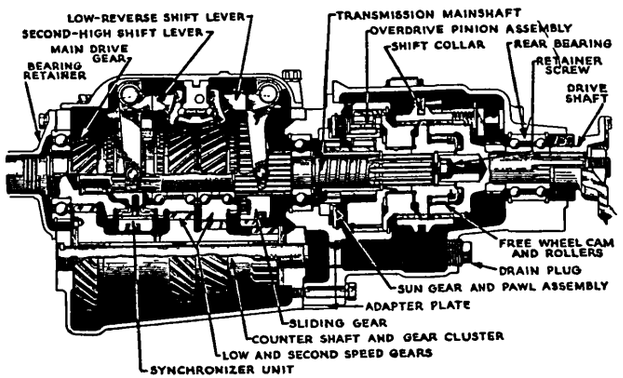

DESCRIPTION: Simplified overdrive without centrifugal clutch pawls. Ring gear mounting plate is linked directly to final drive shaft by shift collar (shift collar also engages free-wheel cam when overdrive locked out) so that engine drives rear wheels through overdrive pinion gears (when overdrive operative) or through free-wheel mechanism (for direct drive below overdrive cut-in speed and also for the 'kick-down' direct drive—drive is exactly the same in both instances).

OPERATION: Overdrive cut-in and cut-out is controlled electrically by a solenoid which operates in exactly opposite manner from the kick-down solenoids used on models with centrifugal clutch pawls (solenoid plunger pushes pawl in to engage sun gear for overdrive, pulls pawl out to disengage sun gear for both direct drive below cut-in speed and for kick-down direct drive). Pawl is pushed in electrically and is pulled out by a spring within the solenoid case. *See Transmission Control article (following) for solenoid description and s rvicing data.*

REMOVAL OF OVERDRIVE: *See "Overdrive" on car model page.*

DISASSEMBLY: Except for omission of centrifugal clutch pawl assembly, these overdrives serviced in same manner as other Warner models. *Refer to preceding Warner Overdrive article for complete instructions and note following additional data:*

Overdrive Solenoid (All Models)—Solenoid is special Delco-Remy unit and not similar to units used with R6 and R7 overdrives. To remove solenoid and pawl rod (plunger) assembly, it is necessary to disassemble overdrive in order to disengage pawl from ball end of pawl rod. Solenoid and pawl rod can then be removed by taking out two mounting screws in base mounting flange. Refer to Overdrive Control article (following) for complete solenoid servicing and adjusting data.

Driveshaft Rear Bearing (All Packard)—Bearing is new type double-row ball bearing which is pre-loaded in assembly so that no pre-load adjustment or special installation directions required. Bearing is retained in overdrive case by snap ring at each end of bearing outer race.

Sun Gear Pawl Interlock Plunger (Hudson)—Consists of two plungers and an intermediate lever installed in the adapter plate flange so that one plunger engages the shifter rail and forces the other plunger into engagement with the sun gear pawl with the overdrive locked out which prevents the pawl operating. Long plunger (shift rail plunger) furnished in six different lengths. Install plunger of correct length so that clearance between lower end of plunger and tip of interlock intermediate lever is .008-.021" with long plunger in shift rail groove and top of short plunger against sun gear pawl. CAUTION—See special assembling directions below to insure correct operation of this interlock.

Sun Gear Pawl Interlock Plunger (Packard 6 and 8 1941-48): Same as Hudson type (above) with two plungers and intermediate lever. Long plunger is furnished in three different sizes for clearance adjustment.

Sun Gear Pawl Interlock Plunger (Packard Super 8 and Custom 8, Studebaker Pres.). Single short plunger installed in hole in overdrive case engages notch in side of sun gear pawl when the control button is operated to lock-out the overdrive. Plunger prevents pawl engaging sun gear. Clearance between end of interlock plunger and side of pawl should be .010" in overdrive position (pawl engaged in sun gear mounting plate slot).

Governor Switch—Switch is mounted on rear end of overdrive case and is driven by the speedometer drive gear. Remove governor switch assembly before dismantling overdrive.

ADJUSTMENT:—Lockout Control Button Linkage—Button should clear bracket by ⅛" when pushed in to insure full travel of control travel on overdrive case. To adjust, loosen control cable at binding screw on lever on left side of overdrive case, push control button in as far as possible, then pull button out ⅛" (all models except Hudson), ½" (Hudson).

C NTINUED ON NEXT PAGE

WARNER R9 OVERDRIVE (C nt.)

Move the control lever on overdrive case to rear as far as possible, then move lever forward until a resistance is just felt and tighten control cable binding screw.

Governor: Mounted on rear end of overdrive case and driven from final driveshaft. Controls cut-in speed (overdrive can be engaged at any speed above point where governor contacts close).

Hudson Note—Governor is special two-terminal type (used also for Vacumotive Drive control). Overdrive lead should be connected to cadmium plated terminal (Vacumotive Drive terminal is copper-plated).

Packard Note—This Governor used only for Overdrive control. Special two-terminal type used on cars with Electromatic Clutch control also. Overdrive lead should be connected to 'AD' terminal of this type governor (Electromatic Clutch lead connected to 'EC' terminal).

Cut-In Speed—Not adjustable (do not attempt to change cut-in speed by stretching or changing governor springs).

Car Model	Cut-In Speed
Hudson (All Models)	22 MPH.
Packard (Overdrive Only)	22 MPH.
Packard (With Electromatic Clutch)	20 MPH.
Studebaker	20 MPH.

OVERDRIVE INSTALLATION:—Hudson Models—When installing overdrive case, use Overdrive Aligning Pilot J-1579 to align case so that interlock lever and plungers will have clearance for correct operation. Install pilot in lower hole of overdrive case so that it engages hole in adapter plate and transmission. Leave pilot in place until the other four mounting bolts have been installed and tightened, then remove pilot and install last mounting bolt.

WARNER R9 OVERDRIVE CONTROL

Hudson 6 & 8, All Models (1941 to 1947)
Packard 6 & 8, All Models (1940 to 1948)
Packard Super & Cust. 8, All (1940 to 1948)
Studebaker Pres., 8C (1942) No. 7147625 Up

►**Hudson 1941 Governor Change to Correct Complaints of Overdrive Cutting-in Late or not Operating:** Governor changed and new type with reversed oil groove in shaft bushings to prevent oil working up into switch body used on later cars. This new Governor Switch, Part No. 162867, used on later cars and may be identified by purple dots on terminal screw heads and purple band around switch body. Install this new switch on early cars to correct complaints of overdrive cutting in late (25-30 MPH.) or not operating.

►**Packard 1941-47 Clipper Reverse Switch Installation to correct locking of overdrive after transmission shifted into Reverse—**Caused by incorrect electrical or mechanical operation. Install Reverse Lock-out & Backing Light Switch furnished in Kit No. 394484 as follows: Mount switch on gear shifter shaft mounting bracket on steering column with wire terminals up, and position switch so that plunger depressed and contacts opened (between switch terminals #1 and #2) when switch lever moved to Reverse position (Low-Reverse shifter shaft engages switch plunger). Disconnect wire at Overdrive Relay #1 terminal (cut this wire back to point where it enters harness). Connect long wire furnished in kit between starting switch "hot" terminal and #1 terminal on Lock-out Switch, routing wire along wiring harness. Connect short wire (with fuse cartridge) between #2 terminal on Lock-out Switch and #1 terminal on Overdrive Relay. Install fuse and check operation. Adjust switch, as necessary, so that overdrive circuit is open (#1 relay terminal not live) with gearshift lever in Reverse Position.

NOTE—See 1948 Packard wiring diagram for circuits using this lock-out "Safety" switch (this switch used in production on 1948 Cars).

BACKING LIGHT NOTE—Lock-out Switch terminals #3 and #4 used only when backing lights installed.

►**Packard Overdrive Control Wiring Connector Removal:** To correct complaints of locking of overdrive after transmission shifted into Reverse, check for short-circuits in electrical circuits caused by water or corrosion inside overdrive wiring harness connector (see 1948 Packard wiring diagrams). If this trouble noted, or to eliminate possibility of trouble at this point, remove connector, splice and solder wires together, tape wires and apply coat of shellac over tape.

NOTE—This connector not used on late 1948 cars.

DESCRIPTION:—Special design, electrical control with 'kick-down' direct drive feature. New type Transmission Solenoid is 'push type' and pushes pawl in to engage sun gear mounting plate slot (to hold sun gear stationary for overdrive) when solenoid is energized. Spring in solenoid case pulls pawl out to disengage sun gear (for direct drive) when solenoid circuit is broken. Both solenoid windings (Pull-in Coil and Hold-in Coil) are energized to engage pawl for overdrive, Hold-in coil only is energized during entire period in which car is in overdrive. Solenoid is controlled by a Lock-out Switch (operated in conjunction with the lock-out control knob on the instrument panel), Governor Switch, Throttle kick-down Switch, and two unit relay (Control Relay and Timing Relay) as follows:

Lock-out Switch—Connected in series with kick-down switch and governor switch. Contacts are closed with control knob pushed in (for overdrive) and are opened when control knob pulled out (to lock-out overdrive).

Governor Switch—Centrifugal type switch mounted on rear of overdrive case and driven by speedometer drive gear. Acts as the main switch to engage overdrive (switch contacts close at cut-in speed of 22 M.P.H. and remain closed until speed drops below 17 M.P.H.). Governor switch is not adjustable and cut-in speed can be changed only by installing special switch springs (see Adjustment data below).

Throttl Kick-d wn Switch—Switch contacts are normally closed (throttle wide open or less) and are opened when the accelerator pedal is fully depressed to operate the kick-down for direct drive.

Control & Timing Relay—Consists of two units, a double contact (upper and lower contacts) Control Relay which controls the transmission solenoid circuit, and a single contact Timing Relay which controls the ignition 'cut-out' which permits the sun gear pawl to be withdrawn from the sun gear for return to direct drive (kick-down direct drive, or direct drive below cut-in speed).

OPERATION: Overdrive Engagement—Throttle switch and lock-out switch contacts are normally closed (control knob pushed in). At cut-in speed of 22 M.P.H., governor switch contacts close which completes circuit for Control Relay winding. Control relay upper contacts open and lower contacts close which completes circuit for both pull-in and hold-in coils in transmission solenoid. This causes the solenoid plunger to bottom in the coil, compressing the pawl spring, and causing the pawl to be pushed into engagement with the sun gear mounting plate slot so that the overdrive is operative (spring engages pawl as soon as accelerator pedal released momentarily). On Packard, dash indicator light controlled by solenoid upper contacts lights to indicate that overdrive should be engaged, light goes out as soon as overdrive is engaged). The bottoming of the solenoid plunger in the coil opens the pull-in coil contacts in the solenoid (lower contacts) and cuts this pull-in coil out of action. The hold-in coil remains energized during the entire time the overdrive is engaged and holds the solenoid plunger bottomed in the coil.

Overdrive Disengagement—When the overdrive engages, the timing relay contacts close (this relay winding is connected in series with the solenoid hold-in coil) and the solenoid upper contacts also close, but the ignition is not cut out because the control relay upper contacts have already opened (all three sets of contacts are connected in series in the ignition cut-out or ground circuit). When the throttle switch contacts are open (when accelerator pedal depressed fully for kick-down direct drive) or governor switch contacts open (for return to direct drive at speeds below 17 M.P.H.), the control relay upper contacts close first and, since the other two sets of contacts are also closed, the ignition is shorted or cut out momentarily to allow the solenoid spring to disengage the pawl from the sun gear for direct drive. The timing relay winding circuit is opened by the opening of the control relay contacts (which occurs before the control relay upper contacts close) but the 'time delay' feature of this timing relay causes a very short interval to elapse before the timing relay contacts open. As soon as these contacts open, or when the solenoid upper contacts open (which occurs as soon as the spring pulls the pawl out of engagement), the ignition ground circuit is broken and ignition is restored (both sets of contacts protect the ignition circuit when the overdrive is not operating).

ADJUSTMENT: Check and adjust units as follows:

Hudson Throttle Switch (1941)—Adjust switch whenever carburetor linkage adjusted or disconnected. To check setting, remove carburetor air cleaner to observe throttle valve, depress accelerator so that throttle valve just wide open, loosen nuts on accelerator pedal rod and adjust position of contact washer on rod so that it is just contacting throttle switch plunger, tighten both nuts to retain contact washer in this position.

CONTINUED ON NEXT PAGE

WARNER R9 OVERDRIVE CONTROL (C ntinu d)

Hudson Throttle Switch (1942-47). Switch must open and relay operate just after throttle is fully open. If relay does not operate, loosen locknut and adjust throttle switch up under accelerator pedal until pedal just contacts switch plunger with throttle wide open. If relay does not operate when pedal depressed beyond wide open throttle position, replace throttle switch.

Packard Throttle Switch—Should be adjusted whenever carburetor linkage adjusted or disconnected. To check setting, remove air cleaner (to observe throttle valve), open throttle until valve is just wide open. If tappet screw on accelerator link lever does not contact throttle switch plunger at this point, adjust by loosening locknut and turning screw in or out of lever.

Studebaker Throttle Switch—Depress accelerator pedal until throttle valve is wide open and throttle lever contacts wide open throttle stop, hold in this position, loosen locknut on switch mounting stud, adjust switch on mounting bracket until end of accelerator rod just contacts switch plunger, tighten locknut.

Governor Switch—Governor switch is not adjustable and no attempt should be made to change cut-in speed by stretching spring or shimming cover.

NOTE—See Special Service Notes above for production changes and special Governor Switch data.

Hudson Note—Governor is special two-terminal type (used also for Vacumotive Drive control). Overdrive lead should be connected to cadmium plated terminal (Vacumotive Drive terminal is copper-plated).

Packard Note—This Governor used only for Overdrive control. Special two-terminal type used on cars with Electromatic Clutch control also. Overdrive lead should be connected to 'AD' terminal of this type governor (Electromatic Clutch lead connected to 'EC' terminal).

Car Model	Cut-in Speed
Hudson (All Models)	22 MPH.
Packard '40	22 MPH.①
Packard '41-48 (Overdrive Only)	22 MPH.
Packard '41-42 (Electromatic Clutch)	20 MPH.
Studebaker '42	20 MPH.

①—Std. Governor No. 355075. 26MPH.—No. 347478 Governor. 33 MPH.—No. 354943 Governor.

FUSE:—Packard. 30 ampere. Located in fuse container in the line between the starting switch and the Solenoid Relay '1' terminal. Do not use fuse of any other capacity at this point.

Studebaker. Fuse is located in socket on side of control relay mounted on front of dash.

SERVICING: Control Units—Switches and Governors should be serviced by replacement. Relays and Solenoids can be checked and adjusted as follows:

Control Relay (Hudson & Packard Models): Delco-Remy No. 1116823 (std. 6 volt), 1116802 (Exp. 12 volt). Relay is special two-unit type (Control Relay and Timing Relay) and each unit is adjusted differently as follows:

Control Relay

Air Gap—.012" (lower contacts closed), .032" (lower contacts open). Check first with armature held down so lower contacts closed, adjust by loosening two screws on hinge bracket on back of relay and raising or lowering armature, see that gap uniform across whole surface of core. Then check air gap with armature released (upper contacts closed), adjust by bending upper contact support—do not loosen hinge bracket screws.

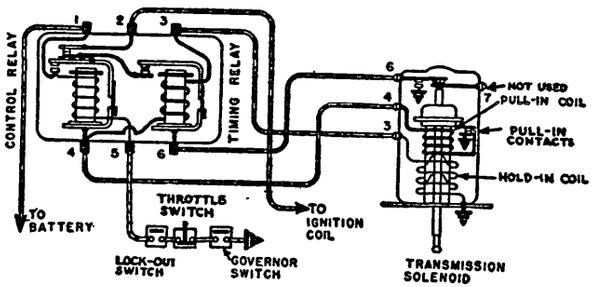

Hudson Wiring Diagram

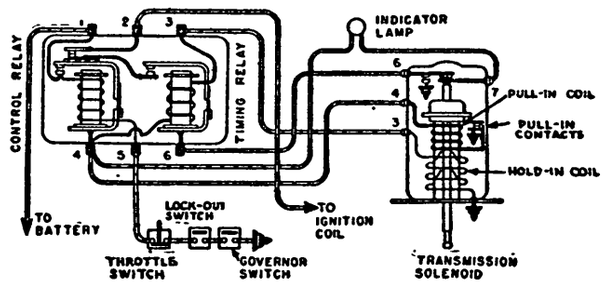

Packard Wiring Diagram

Contact Gap—.022" (top contacts) with lower contacts held closed. Should be correct if air gaps correct (above) and contact spring not bent.

Closing Voltage—3.4-4.0 (6 volt units), 6.8-8.0 volts (12 volt units). CAUTION—This voltage will attract armature and close lower contacts (upper contacts open as lower contacts close). To check closing, connect battery and variable rheostat to relay terminals #1 and 5, increase voltage and note when contacts close. To adjust, bend spring hanger at upper and lower end of spiral armature spring.

Timing Relay

Air Gap—.031" with contacts open. Adjust by bending upper armature stop—**do not disturb armature hinge bracket mounting screws.**

Contact Gap—.022". Adjust by bending lower contact support.

Closing Voltage—.6-1.1 volt (6 volt units), 1.2-2.2 volts (12 volt units). To check closing, connect battery and variable rheostat to terminals #3 and 4, increase voltage and note when contacts close.

'Time Delay' Action—.1-.2 seconds (between instant current flow through winding is stopped and opening of contacts). To check timing action on car, operate engine at medium speed, close control relay lower contacts by hand (timing relay contacts will close), release control relay contacts and note interval before timing relay contacts open (lag should be noticeable). Adjust by bending spring hangers on upper and lower end of spiral armature spring (increase spring tension to shorten time interval).

Control Relay (Studebaker): Auto-Lite Model HRB-4301. This is a conventional single unit relay (similar to horn relays, etc.).

Contact Gap—.034-.038" (bend armature stop).

Air Gap—.012-.017" with contacts closed. Adjust by raising or lowering stationary contact support.

Closing Voltage—2.8-3.6 volts. Adjust by changing armature spring tension (bend lower sprg. hanger).

Coil Winding Current—.44-.46 amperes at 6.0 volts (coil winding resistance 12.9-13.5 ohms).

Transmission Solenoid (All Models): Delco-Remy No. 1118005 (Std. 6 volt), 1118007 (Export 12 volts). Solenoid cover can be removed for inspection and servicing by removing two nuts on studs on cover.

CAUTION—Pawl rod must not be forced into solenoid with cover removed. This will damage the contact plate flat springs.

Solenoid Operation Test—Plunger actuating voltage should be 4.9 volts (6 volt units), 6.8 volts (12 volt units) max. at room temperature. To check performance, block pawl rod so that it cannot move out of solenoid when plunger is actuated, remove solenoid cover, connect voltmeter, battery, and variable rheostat between terminals #3 and 4 (connect these terminals together) and ground on solenoid case. Increase voltage and note voltage reading at point where plunger is actuated.

Pull-in Coil Contact Gap—With solenoid bottomed in coil, pull-in coil contact gap should be .018-.040". Remove solenoid cover to check these contacts. See Pawl Rod Adjustment below.

Solenoid Current Draw—To check current connect battery and ammeter between #4 terminal and ground on solenoid case (Pull-in Coil), or #3 terminal and case (Hold-in Coil). This check must be made at specified voltage. 'Both Coil' figure below is for both Pull-in and Hold-in Coil together, 'Hold-in Coil' figure is for Hold-in coil only.

6 Volt Units

Both Coils	31.0-36.0 amperes at 6.0 volts.
Hold-in Coil	1.4-1.6 amperes at 6.0 volts.

12 Volt Units

Both Coils	14.0-16.0 amperes at 12.0 volts.
Hold-in Coils	1.0-1.2 amperes at 12.0 volts.

Pawl Rod Adjustment—With pawl rod assembly removed from solenoid, check length from lower face of adjusting nut on upper end of pawl rod to lower edge of plunger. This distance should be 2.022-2.037". To adjust, press down on locking spring below adjusting nut so that prong on spring clears notch in nut, turn nut on plunger. CAUTION—Use care not to distort locking spring and see that prong on spring engages notch in nut after adjustment completed.

1946-48 WARNER O.D. TRANSMISSION (R10 "KICK-DOWN" OVERDRIVE)

▷LINCOLN 1949 OVERDRIVE TRANSMISSION—*See Pg. 2706 "1949 Ford, Lincoln, Mercury Transmission."*

Car Model	Warner Model
Frazer, All Models (1947-48)	AS12-T86E
Studebaker Champion (1947-48)	AS2-T96
Studebaker Commander (1947-48)	AS2-T86E
Willys Jeep Sta. Wgn. 4-63 (1946-48)	AS12-T96
Willys Jeep Sta. Sedan 6-63 (1948)	AS20-T96
Willys Jeepster VJ-2 (1948)	AS18-T96

DESCRIPTION: Three-speed, all helical gear type. Constant-mesh, synchro-mesh (Second & High), sliding gear (Low & Reverse). Synchronizers are Double-Blocker, Double-Spring type as described below. All transmissions have a top cover (for access to gears), and shifter mechanism located in side of case (individual shifter shaft assemblies for Low-Reverse and Second-High).

Synchronizer Unit: Synchronizer rings are free in ends of inner clutch sleeve and are actuated by three struts which fit in slots in inner clutch sleeve and engage notches in the rings. Struts are centered in outer clutch sleeve by a locking wire or ring engaging notches in the struts and move with the clutch sleeve to force the synchronizer rings against the cones on the gear hubs for synchronization. Teeth on the outer rim of the synchronizer rings block or prevent gear engagement until synchronization completed when final movement of outer clutch sleeve causes clutch teeth on rim of sleeve to slide past teeth on rings and engage clutch teeth on gear hubs. Inner clutch sleeve is stationary on shaft and does not move during synchronization and gear engagement.

Overdrive Unit (Type R10): New design, solenoid operated type (no centrifugal pawls). Overdrive does not have centrifugal pawl assembly and control is effected by engaging sun gear pawl to hold sun gear stationary (for Overdrive), or disengaging pawl to allow sun gear to rotate freely (Direct Drive below cut-in speed, and Kick-down Direct Drive—power transmission through overdrive unit is same in both cases). New type Solenoid is used with this type overdrive. Solenoid pushes pawl in (for overdrive) when energized, and pawl is withdrawn by spring (for direct drive) when solenoid is not energized. Overdrive unit is mounted on rear of the transmission case in same manner as previous types (bolted to case with adapter plate which serves as rear bearing retainer and solenoid mounting plate).

REMOVAL OF TRANSMISSION: *See "Transmission" on car model page.*

DISASSEMBLY: Remove Overdrive case and disassemble Overdrive (see "Warner R10 Overdrive" following). Take out transmission case cover screws, remove cover and gasket. Mark synchronizer parts (rings, sleeve, hub) to insure reassembly in same relative positions. Take out capscrews and remove bearing retainer on front of case. Take out bearing snap rings (large ring on bearing, small ring on shaft), use special puller to remove bearing from shaft (On Studebaker, use special Synchronizer Ring Protector J-2040 Champion, J-2039 Commander, to prevent damage to synchronizer). Pull adapter plate and mainshaft to rear and tip shaft toward right side of case to disengage Second & High Shift Fork and Low & Reverse Shift Shoe and lift these parts out, then withdraw adapter and mainshaft assembly (including gears and synchronizer) through rear of case. Lift main drive gear out through top of case. Remove countershaft and reverse idler shaft locking key, drive countershaft out through rear of case using an arbor or dummy shaft (leave arbor within gear cluster to retain bearings until shaft re-installed), lift countergear and thrustwasher assembly out through top of case. Use brass drift to drive reverse idler shaft out through rear of case, lift out gear and bushing. To remove shifter shaft assemblies, remove levers on outer end of shafts, drive out lockpins in shaft bosses on side of case, push shafts through and remove from within case.

▷*CAUTION—When removing shifter shafts, do not lose detent balls, springs, and interlock plunger (in boss in case between lever sectors).*

REASSEMBLY: Reverse disassembly directions given above and note special data on sub-assemblies as follows:

Shift Mechanism: Install complete detent and interlock assembly (plunger, spring, poppet balls) in boss in case, insert shift shaft and levers from within, insert shift shaft lockpins loosely in holes in case to hold levers in place, check and adjust interlock plunger clearance (see below), then drive shaft lockpins down into place, install new oil seal on outer end of each shaft, install outer levers.

Interlock Plunger Clearance—.001-.005" (except Willys), .001-.007" (Willys) clearance between end of plunger and shift lever sector with one lever in neutral and other lever in any gear. To check, place one lever in neutral, move other lever to any gear position, use feeler gauge between end of plunger and lever sector. Adjust by installing plunger of correct length. Plunger furnished in five lengths and marked for identification as follows: Unmarked —1.299", A—1.295", B—1.291", C—1.287", D—1.303".

Second Speed Gear: Retained on mainshaft as an assembly with synchronizer unit by snap ring at forward end of shaft. To remove gear, use snap ring pliers to take out snap ring, slide synchronizer unit off shaft (as an assembly), slide gear off. Install second speed gear with clutch teeth and synchronizer hub end forward (toward synchronizer). NOTE—Second speed gear furnished as an assembly with bushing.

CONTINUED ON NEXT PAGE

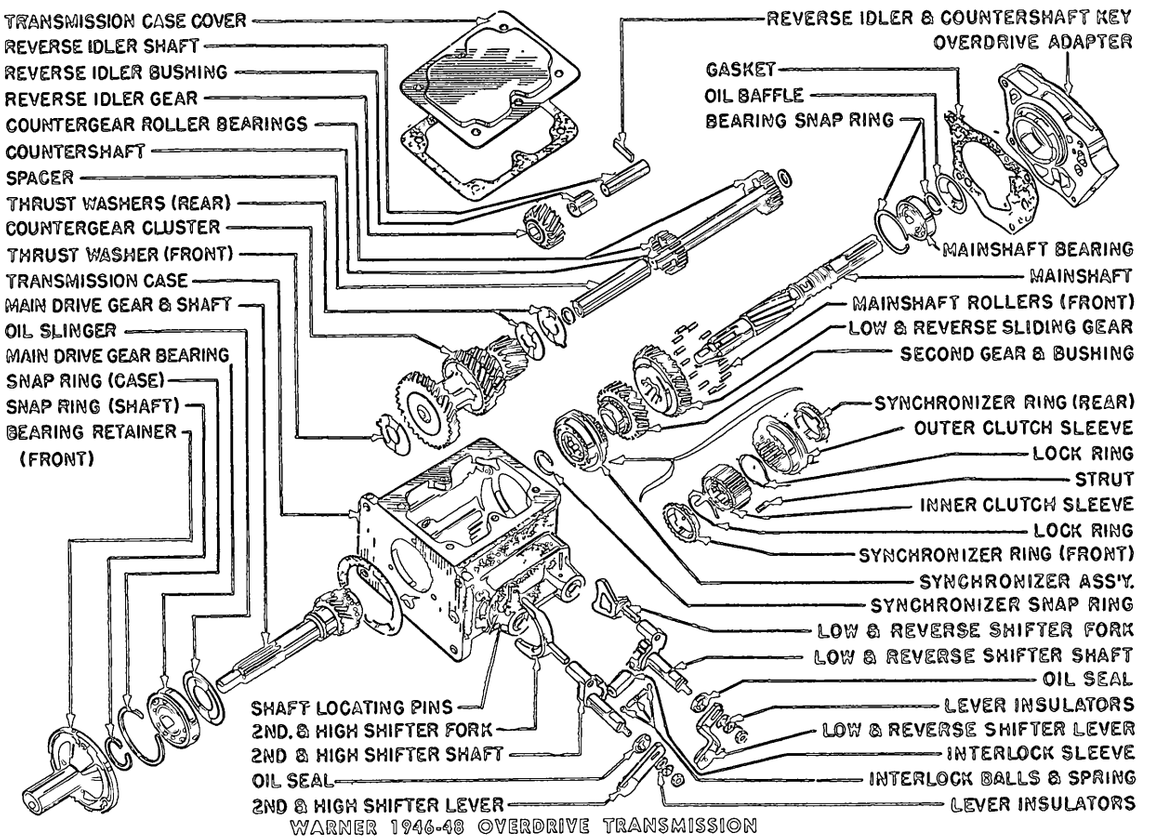

WARNER 1946-48 OVERDRIVE TRANSMISSION

1946-48 WARNER O.D. TRANSMISSION (R10 "KICK-DOWN" OVERDRIVE) (Continued)

Low & Reverse (Sliding) Gear: Can be removed from shaft after synchronizer unit and second speed gear removed (above). See Mainshaft Assembly (below).

Reverse Idler Gear & Shaft: Position gear with offset (longer end of hub) toward front of case, drive shaft in until lockplate slot lines up with rear face of case.

Countergear Cluster: To assemble, install dummy shaft and spacer in gear cluster, install bearing rollers and bearing retainer washer in each end of gear, using grease to retain parts, install bronze thrust washer on each end with tongue of front washer forward (to engage notch in case), tongue of rear washer forward (to engage notch in gear), install steel thrust washer on rear and install entire assembly in case. Drive countershaft in from rear (pushing dummy shaft out at forward end) until lockplate slot lines up with rear face of case. Check countergear endplay which should be .004-.006" (Frazer & Kaiser), .012-.018" (Willys Jeep). Install lockplate to retain countershaft and reverse idler shaft.

Main Drive Gear Assembly: If removed and installed as an assembly, this assembly must be re-installed before countershaft inserted (countergear cluster at bottom of case to provide clearance). Use driver to install bearing on shaft. On Studebaker, where gear installed in case without bearing, use Synchronizer Protector Ring J-2040 (Champ.), J-2039 (Comm.) to take thrust when driving bearing on shaft and into case. Select snap rings (large ring on bearing, small ring on shaft) for snug fit without play (these rings furnished in various thicknesses).

Mainshaft Assembly: If synchronizer and gears removed from shaft, install sliding gear with shift fork channel toward rear (Studebaker Champion & Willys), toward front (Studebaker Commander & Frazer). Install second speed gear with clutch teeth toward front, install synchronizer (see data below) with clutch sleeve offset toward front, install snap ring in shaft groove to retain these assemblies.

Synchronizer Assembly—If synchronizer dismantled, assemble parts according to marks made previously. Install spring in each end of hub with free end of each spring engaging the same strut and springs pointing in opposite directions. Make certain that struts engage slots in synchronizer rings.

Mainshaft Installation: When installing mainshaft in case, make certain that pilot bearing rollers in place in recess in main drive gear (use grease to hold rollers until mainshaft inserted). Engage Low & Reverse Shifter Shoe in sliding gear with offset in same direction as channel in gear (see above), engage Second & High Shifter Fork in synchronizer sleeve channel.

Overdrive Reassembly: See "Warner R10 Overdrive" (following).

WARNER R10 OVERDRIVE

►**1941-48 LINCOLN**—*See Pg. 2704 "1941-48 Lincoln Overdrive (Special Warner R10)."*

►**1949 FORD, LINCOLN, MERCURY**—*See Pg. 2708 "1949 Ford, Lincoln, Mercury (Warner R10)."*

Car Model	Warner Model
Frazer, All Models (1947-48)	①AS12-T86E
Hudson 6 & 8, All Models (1948)	②AS1-R10D
Nash "600" Series (1947-48)	②AS1-R10B
Nash Amb. 6 Series (1946-48) ③	②AS2-R10B
Studebaker Champion (1947-48)	①AS2-T96
Studebaker Commander (1947-48)	①AS2-T86E
Willys Jeep Sta. Wgn. 4-63 (1946-48)	①AS12-T96
Willys Jeep Sta. Sedan 6-63 (1948)	①AS20-T96
Willys Jeepster VJ-2 (1948)	①AS18-T96

①—Transmission with Type R10 Overdrive unit.
②—Overdrive unit only (used with car manufacturer's own transmission).
③—Beginning 1946 Service Serial No. N6-120026.

DESCRIPTION: Overdrive is solenoid operated type (no centrifugal pawls) with governor control and accelerator controlled "kick-down." Engagement and disengagement is effected by movement of the sun gear pawl, the solenoid plunger pushing the pawl in to engage the sun gear for overdrive, and withdrawing the pawl for direct drive (direct drive below the cut-in speed and "kick-down" direct drive). See Overdrive Control section below for data

REMOVAL OF OVERDRIVE: *See "Overdrive" on car model page.*

DISASSEMBLY OF OVERDRIVE: Remove nut on rear end of shaft, pull the universal companion flange. Disconnect the leads at Lock-out Switch and remove switch, remove Governor by unscrewing it from housing. Drive out tapered pin holding control lever shaft in overdrive case, pull shaft out as far as possible to disengage operating cam from shift rail. Remove four mounting screws holding overdrive case on transmission case, withdraw case while tapping on rear end of shaft with a soft hammer to prevent

CONTINUED ON NEXT PAGE

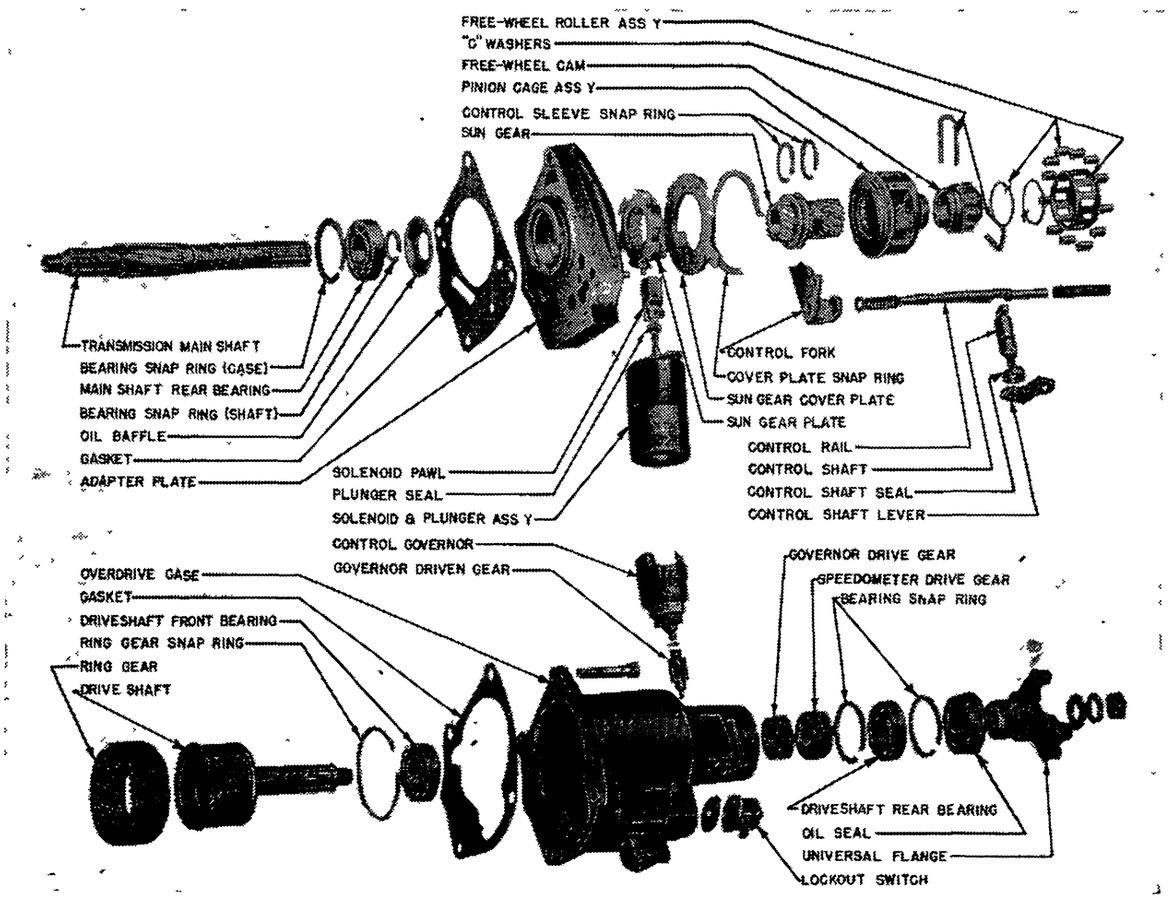

WARNER TYPE R10 OVERDRIVE

WARNER R10 OVERDRIVE (Cont.)

the shaft coming off with the housing (this would allow free-wheel rollers to drop out). Then disassemble each part of the overdrive as follows:

Overdrive Case (incl. control parts)—Remove reverse lock-up spring from housing, take off nut and remove control lever from shaft, remove control shaft from within case, remove shaft oil seal. Working through rear of case, use brass drift and drive front bearing out toward front of case, lift out speedometer and governor drive gears. Pull oil seal in rear end of case, remove snap ring at each side of rear bearing, remove bearing.

Driveshaft & Gear Assembly—Install one screw to hold adapter plate in position on transmission case. Pull driveshaft off to rear (CAUTION—catch free-wheel rollers as they fall out). Ring gear can be removed from driveshaft by taking out snap ring at rear end of gear. Remove retaining clip ("C" washer) from shaft at rear of free-wheel cam, slide free-wheel unit and pinion cage assembly off rear of shaft (these units can be separated by taking out retaining clip or "C" washer at rear of pinion cage). Remove overdrive sun gear and shift rail assembly as a unit by sliding them off rear of shaft.

Overdrive Solenoid—Remove mounting capscrews and lockwashers at mounting flange, rotate solenoid clockwise ¼ turn to disengage plunger from pawl, withdraw solenoid and plunger assembly.

Adapter Plate Sun Gear Parts—Remove large snap ring from adapter plate (in front of sun gear cover plate), withdraw sun gear cover plate, sun gear blocker assembly (with balk ring), and solenoid pawl. NOTE—Adapter plate is removed as a unit with transmission mainshaft, gears, and synchronizer. Do not disturb adapter plate unless transmission being disassembled.

REASSEMBLY OF OVERDRIVE: Assemble parts in reverse order from disassembly directions (above) and note the following important points:

Sun Gear Blocker, Pawl & Solenoid—Install pawl with notched side upward, rotate blocker assembly so that opening in balk ring is opposite pawl. When installing solenoid, insert plunger stem with solenoid turned 90° from mounting position, then rotate solenoid 90° counter-clockwise to engage pawl and install mounting screws.

Free-Wheel Assembly—If free-wheel cam retainer and springs removed from free-wheel cam, first note position of springs and replace in exactly same positions. Springs must place tension on cam so that it is held normally in a counter-clockwise position (viewed from rear) in retainer with rollers on "high" ends of cam ramps (outward or engaged position).

Overdrive Pinion & Free-Wheel Installation—With these parts installed on shaft, and retaining clips ("C" washers) properly installed, insert free-wheeling rollers in cage and use heavy grease to hold them in position, turn cage and rollers counter-clockwise to low or disengaged position (use a rubber band looped around assembly to provide sufficient pressure on rollers to hold them in this position against the spring tension), then install driveshaft and ring gear assembly.

Overdrive Case and Control Mechanism—Make certain that rear bearing snap rings are properly seated and snug in grooves (rear snap ring furnished in various thicknesses). Attach overdrive conduit bracket to housing by lower left mounting screw. Install new oil seal in rear of case (use special driver). Tighten universal companion flange nut. Push control shaft in and make certain that cam engages slot in control rail, install control shaft tapered pin to retain shaft.

▷*CAUTION—Universal companion flange nut must be securely tightened to prevent governor and speedometer drive gears slipping on shaft.*

OVERDRIVE CONTROL: *See Warner Type R10 Overdrive Control article.*

TRANSMISSION DISASSEMBLY & REASSEMBLY: *See Warner Transmission article.*

WARNER R10 OVERDRIVE CONTROL

▷1941-48 LINCOLN—*See Pg. 2705 "1941-48 Lincoln Overdrive Control."*

Ford, 6 Cyl. & V8 Models (1949)
Frazer, All Models (1947-48)
Hudson 6 & 8, All Models (1948)
Lincoln, Models 9EH, 9EL (1949)
Mercury, Model 9CM (1949)
Nash "600" Series (1947-48)
Nash Amb. 6 Series (1946-48)
Studebaker, All Models (1947-48)
Willys Jeep Sta. Wgn. (1946-48)
Willys Sta. Sedan & Jeepster (1948)

OVERDRIVE CONTROL: Control units consist of a Governor (cut-in speed controlled by closing of governor contacts, cut-out speed by opening of contacts), Solenoid (solenoid pushes pawl in to engage overdrive, return spring on solenoid plunger stem pulls pawl out to disengage overdrive), Throttle Kick-down Switch (switch breaks solenoid circuit when accelerator pedal fully depressed causing overdrive to disengage for "kick-down" direct drive), Control Relay, and Lock-out Switch (switch mounted on overdrive case and actuated by control shaft —opens governor circuit when overdrive "locked out" by control button on instrument panel). Adjust units as follows:

Governor:	Cut-in Speed	Warner Part No.
Ford	26 MPH. max.	AR11-72
Frazer	26.5 MPH.	AR10B-72B
Hudson	18.5-21 MPH.	①
Lincoln		AR11-72
Mercury	26 MPH. max.	AR11-72
Nash	25 MPH.	AR10B-72C
Studebaker Ch.	27-30 MPH.②	③AR10B-72
Studebaker Com.	31.5 MPH.	③AR10B-72
Willys	29 MPH.	AR10B-72E

①—Hudson No. 165829 (without Drive-Master), No. 165831 (with Drive-Master).

②—Minimum cut-out speed 24 MPH. (minimum difference between cut-in & cut-out speeds 3 MPH.)

③—AR10B-72D Optional.

Adjustment—Governor should be replaced if overdrive cut-in speed is not correct (see table above).

▷*CAUTION—Before replacing governor* (if overdrive does not engage, or cut-in and cut-out speeds not correct, make certain that universal joint companion flange nut (on rear end of overdrive driveshaft) is tight. Looseness of this nut will allow governor and speedometer drive gears to slip on overdrive shaft.

Solenoid (All models except Hudson): Warner No. 3AR10B-62 (Auto-Lite No. SSB-4002 or Delco-Remy No. 1118132) used on all models except Ford Station Wagon & Convertibles.

Ford Station Wagon & Convertible—Warner No. 3AR10E-62. Special type for offset mounting (on adapter). See description in overdrive article.

Solenoid (Hudson Models): Warner No. AR10D-62 (Hudson No. 301757). Special three-terminal type (not similar to solenoids on other overdrives).

Control Relay (All Models except Hudson): Single unit type as listed below (see car wiring diagram for relay connections and circuits).

Control Relay

Ford, Lincoln, Mercury	Ford No. 8M-6915
Frazer	Auto-Lite HRT-4001
Nash	Auto-Lite HRT-4101
Studebaker, Willys	Auto-Lite HRT-4001

HRT-4001, HRT-4101 Specifications

Contacts Close—4.0 volts maximum. Adjust by changing armature spring tension (bend lower spring hanger).

Contacts Open—.6-1.0 volts. Adjust by varying height of stationary contact.

Contact Gap—.015" minimum.

Air Gap—.031-.034" with contacts open. Adjust by bending armature stop.

Control Relay (Hudson Models): Hudson No. 165826. Special two-unit relay (similar to type used on previous Hudson models).

Throttle Kick-down Switch: Switch is mounted so that switch plunger actuated by accelerator pedal linkage or idler lever (contacts plunger in wide open throttle position, additional movement of pedal depresses plunger).

Adjustment—On all models, loosen locknut on threaded switch stem, position switch so that accelerator linkage just contacts switch plunger with accelerator pedal and carburetor throttle lever in wide open throttle position. Make certain that accelerator pedal has sufficient additional travel to actuate switch.

Lock-out Switch: This switch does not require adjustment. Make certain that switch contacts are open (circuit to governor broken) when overdrive is locked out (control button on instrument panel pulled out).

Overdrive Fuse: In cartridge type holder on control relay (not used on Hudson).

Fuse Capacity

Ford, Lincoln, Mercury	30 amperes
Frazer, Nash, Studebaker, Willys	20 amperes

Overdrive Wiring Diagram: See individual car wiring diagrams on car model pages for overdrive wiring.

BUICK 60, 80, 90 (1936-39)

MODELS 60, 80, 90 (1936-37-38-39)

NOTE:—Transmission used on these models similar except that Second Speed Gear mounted on roller bearings (1936), bronze bushing (1937-38). On 1937-38, second speed synchronizing drum is larger.

1939 Type:—Design changed from 1938 as follows:

Shifter Mechanism—New type cable and rod actuated shifter shafts for 'Handi-shift' steering column mounted gearshift lever.

Synchronizing Unit—Both synchronizing drums are same size (second speed drum reduced in size).

Rear Bearing Retainer—Model 60 retainer new type (similar to 40) with flanged end for front torque tube mounting. Mainshaft splined for front propeller shaft engagement and bearing inner race positioned on shaft by snap ring. Model 80, 90 retainer same as 1938 but not interchangeable.

TYPE:—Constant-mesh, synchro-mesh, all helical gear type (sliding gear for low and reverse). Clutch shaft and main drive gear mounted on shielded ball bearing at front of transmission case (bearing takes gear thrust). Mainshaft mounted on roller bearing (front), ball bearing (rear) which takes gear thrust. Second speed gear positioned by shoulder on shaft at rear, thrust washer and locking ring at front end. Counter gears mounted on roller bearings (cageless type) on stationary shaft.

Synchronizing Unit:—Consists of two synchronizing drums mounted on the ends of three pin cams which extend through holes in the sliding clutch ring. Synchronizing drum assembly is centered on the clutch sleeve by detent springs which engage the notches in the pin cams. The entire assembly moves as a unit when the clutch sleeve is shifted until the synchronizing drums and cones engage, synchronizing unit then rotates (relative to clutch sleeve) until cam surfaces on clutch ring engage pin cams. Synchronizing drums are driven through this engagement until synchronization is completed.

REMOVAL OF TRANSMISSION: *See "Transmission" on car model page.*

SERVICING:—**Disassembly.** Remove transmission cover, retainer springs and balls, shifter forks and shafts. Remove torque ball retainer and torque ball at rear of transmission, remove universal joint (use puller). Take out mounting screws and remove rear bearing retainer. Remove mainshaft rear bearing from case and shaft. Pull main shaft assembly (including low speed sliding gear, second speed gear, and synchronizing unit) to rear to disengage forward end of shaft from roller bearing in main drive gear, then remove assembly through top of case. Remove main drive gear bearing snap ring (on front end of case), tap main drive gear and bearing assembly back into case and remove through top opening. Remove countershaft lockscrew (at rear end of shaft), drive countershaft out toward rear using special dummy shaft or arbor J-101 (.935" diameter, 7.700" long) and allow this arbor to remain within counter gear cluster until replaced in transmission (arbor will retain loose rollers), remove counter gear cluster through top of case being careful not to lose bronze and steel thrust washers. To remove reverse idler, take out shaft retaining screw, drive out shaft, lift out gear and bronze thrust washers.

39-60 Note—Shift rails and selector shaft need not be removed to take out transmission mainshaft if they are properly positioned as follows: Shift transmission into high gear, loosen shifter fork on low-and-reverse rail by removing lockscrew, remove rear bearing retainer, pull speedometer gear (press fit on shaft), remove gear spacer and horseshoe shaped rear bearing retainer ring, pull rear bearing, remove mainshaft through top of case.

1939 Selector Shaft Disassembly—Remove both shift rails, take out self-locking setscrews in selector shaft cams, move right cam toward center of case and remove horseshoe lock holding shaft, remove shaft by driving it out through right hand side of case (plug which closes opening will be driven out with shaft). IMPORTANT—Shaft must not be removed from left side which will damage oil seal. Always remove shaft from right and install on left side. Seal plug hole on right side of case

Mainshaft & Second Speed Gear Assembly:—Mainshaft rear bearing should be .0004" tight to .0005" loose on shaft. .0002" tight to .001" loose in case. Shaft should have no perceptible endplay. Low and reverse sliding gear backlash .003" maximum.

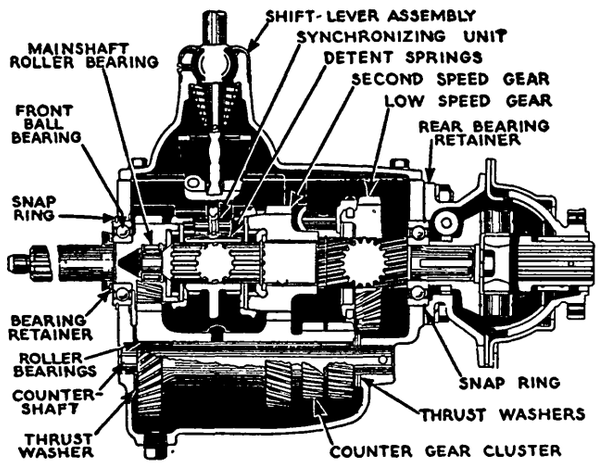

Mainshaft Bearings (60 '39). Rear bearing inner race held on shaft by snap ring with spacer between snap ring and speedometer gear which is press fit on shaft (instead of yoke as on 80, 90).

Second Speed Gear (1936). To remove second speed gear assembly, remove snap ring at front end, slide complete assembly off shaft. To dismantle bearing assembly, remove snap ring at rear, pull out roller bearing sleeve and bearings. When installing gear, see that rear thrust washer correctly assembled (this acts as oil feed for roller bearings).

Second Speed Gear (1937-39). Bronze-bushed. Clearance between bushing and shaft should be .0005-.0025". Endplay should be .003-.013". To remove gear, remove snap ring at forward end, remove thrust washer, withdraw gear from shaft. Thrust washer tongue must be engaged in slot in shaft (elongated spline). NOTE—Do not engage thrust washer in oil slot which extends entire length.

Second Speed Gear Snap Ring ('39). Groove for snap ring which retains gear is rounded at bottom and a second snap ring is installed in this groove to position the gear retaining snap ring.

Synchronizing Unit and Clutch Sleeve:—Cannot be dismantled r serviced (except for detent springs which are furnished separately) and should be replaced as an assembly. Endplay when assembled should be ⅛" min., 3/16" max. (cone-to-cone engagement). Less than ⅛" endplay may cause cone drag and noise in neutral, more than 3/16" endplay may cause gear clash during engagement. To check action (with transmission cover off), press down on retainer ball of second and third speed shaft to determine neutral position, note that forward motion (to engage high) is less than rearward motion (to engage second speed cone). This setting necessary to prevent drag between second speed gears which would cause noise in neutral. Clutch sleeve clearance on shaft .001-.003". Backlash between clutch shaft and mainshaft splines .001-.003".

1939 Type—Both drums are same size. Use extreme care to install bronze drum toward second speed gear and inner clutch sleeve with end marked 'S' toward second speed gear.

Main Drive Gear & Clutch Shaft Bearing:—Bearing is held on shaft by snap ring. Bearing should be .0003" tight to .0007" loose on shaft and .0002" tight to .001" loose in case. Shaft endplay should be .013" tight to .002" loose.

Counter Gear Cluster:—On all models, do not remove dummy shaft used to retain loose roller bearings in gear until assembly has been installed in transmission, then drive out dummy shaft with regular shaft as it is installed. Steel thrust washer used at outer ends of roller bearings, steel spacer between rollers in gear cluster. Bearing clearance on shaft should be .0002-.0021". Endplay should be .010-.024". Make certain that bronze thrust washer installed at front end of gear cluster, bronze and steel washers at rear (steel washer next to case).

Reverse Idler Gear:—Bushing clearance on shaft should be .0027-.0042". Endplay should be .004-.016". Make certain that bronze thrust washer installed at each end of gear.

Speedometer Gear Assembly ('38-39):—New type (without rear bearing in retainer—not interchangeable with 1937 type). Driven gear is carried in sleeve screwed in transmission rear bearing retainer.

1940-48 BUICK 60, 70, 80, 90

Series 60 (1940-41-42)
Series 70 (1940 to 1948)—See Note
Series 80 (1940)
Series 90 (1940-41-42)

►**Series 70 (1948) Optl. Dynaflow Transmission**—Synchro-mesh Transmission (below) is standard with Dynaflow Transmission Optl.
See "Buick Dynaflow Drive" Transmission.

DESCRIPTION: Constant-mesh, synchro-mesh (2nd & High), sliding gear (Low & Reverse), all-helical gear type. Same design as used on preceding models except for following changes:

Shifter Mechanism—New cross-shift mechanism used consisting of vertical shaft in side of transmission case with lever on upper end engaging selector shaft so that movement of the selector lever on the transmission case (small forward lever) shifts the selector shaft sidewise in the transmission to engage low-reverse or second-high rail.

Synchronizer Cones & Gears—Synchronizing cones have 7° angle and are marked 'S' for use with second speed gear. Service gears are marked "7" and must be used with these cones (do not confuse these gears with types used on previous models).

CONTINUED N NEXT PAGE

1940-48 BUICK 60, 70, 80, 90 (Cont.)

Countershaft & Reverse Idler Shaft Retainers—Shafts are retained by special grooved lockpin which is driven into hole in case so as to enter hole in shaft. Pin must be driven through into shaft before shafts can be removed and new pin must be used when shafts re-installed.

REMOVAL OF TRANSMISSION: *See "Transmission" on car model page.*

DISASSEMBLY (1940-47): Remove the cover, drive countershaft locking pin in until it is completely within shaft, use service tool J-1001 (dummy shaft) to drive countershaft out through rear of case leaving tool in countergear cluster until it is replaced in case (tool will retain bearing rollers and spacer). Take out mounting screws and remove universal joint ball and cover, remove speedometer drive pinion, take out screw in end of shaft and pull universal joint yoke, then take out mounting screws and remove rear bearing retainer. Loosen lockscrews in both shifting forks, move synchronizer drum assembly to high gear position. Move entire mainshaft assembly back until forward end clears pilot bearing in drive gear, lift shaft up and to left until fork clears collar on synchronizer, move fork to rear in case. Move shaft to right to clear Low-Reverse shifter fork, move fork forward. Remove synchronizer assembly from shaft. Take out second speed gear snap ring, slide second speed gear forward on shaft, take out low speed gear stop ring. Support gears by hand and withdraw mainshaft and bearing through rear of case. Lift out second speed and low speed gears. Remove main drive gear snap ring (on front of case), tap gear through into case and remove through top. Lift out countergear cluster being careful not to lose steel and bronze thrust washers. To remove reverse idler, drive lockpin into shaft, drive shaft out.

DISASSEMBLY (1948): Remove transmission cover and gasket, speedometer drive pinion, thrust plate and gasket, torque ball, retainers and shims from rear bearing retainer (use guide pins to remove torque ball and retainer). Remove retainer bolt and washer, pull universal joint from shaft (use J-859A puller with pressure plug inserted in main shaft and "C" washer in groove in puller body on front side of yoke to take thrust). Remove spacer from mainshaft, remove rear bearing retainer and gasket. Move mainshaft back until bearing clears case, remove bearing snap ring, pull bearing, spacer, and speedometer drive gear from shaft, using puller J-1134. Remove setscrews from shifter yokes, using special tool J-2895. Lift mainshaft assembly (shaft, gears, and synchronizer) out through top of case. Mainshaft assembly can be dismantled on the bench by sliding off synchronizer assembly, removing second speed gear snap ring, and sliding gear off. Remainder of transmission disassembly is same as for previous models (above).

REASSEMBLY: Reverse disassembly directions above and note following important data:

Retaining Snap Rings—Use all new snap rings and retainers. Before installing snap ring which retains second gear speed thrustwasher, install wire spacer ring, Part No. 1309249, in groove in shaft (this spacer centers the snap ring around the shaft). Use Snap Ring Replacer J-1267 to avoid distorting ring.

Mainshaft & Bearing Assembly:—Rear main bearing should be .0007" tight to .0002" loose on shaft and .0002" tight to .001" loose in case. Bearing is held on shaft by universal joint front companion flange and is retained in case by snap ring in groove in outer race which is clamped between case and retainer. Low and reverse gear backlash on shaft should be .003" maximum.

Synchronizer Assembly:—Cannot be dismantled and should be replaced as a unit. Clutch sleeve clearance on shaft and backlash should be .001-.003".

Main Drive Gear & Bearing:—Bearing is shielded type and should be installed with shielded side in (toward gear teeth). Bearing inner race and oil slinger are retained on shaft by snap ring installed in groove in shaft. Bearing should be .0003" tight to .0007" loose on shaft and .0002" tight to .001" loose in case. Pilot bearing in gear hub is composed of 14 loose rollers which are prevented from moving out by snap ring installed in gear hub.

Countergear Assembly:—Mounted on roller bearings in each end with spacer between bearings. When removing gear cluster, leave dummy shaft or arbor within gear cluster to retain rollers until gears replaced (drive arbor out as countershaft installed). Install roller bearing retaining washer on each end of gear cluster with bronze thrust washer between gears and case (front), bronze washer and steel washer (rear). Use new lockpin to retain countershaft (see Lockpin data below). Countergear bearing clearance should be .0002-.0021" and gear cluster endplay should be .010-.024".

Countershaft & Reverse Idler Retainers:—With countershaft and reverse idler shaft out of engine, remove locking pins from shaft and discard these pins (pins must not be re-used). After shafts reinstalled in transmission case, line up holes in case and shaft, coat new locking pin with white lead or other sealing compound and drive pin in to the following depth:

Countershaft Lockpin—Flush with surface of case.

Reverse Idler Lockpin—(1940-47) 5/8" to 3/4", (1948) 1" below surface of boss on case.

Shifter Mechanism:—Before removing selector shaft, remove lever on cross-shift (vertical) shaft to permit lever on upper end of this shaft to disengage from selector shaft as shaft is driven out. Remove lever on left end of selector shaft, take out locking screws in each selector cam, drive shaft out through right side of case (shaft will dislodge sealing plug in hole). This is important to avoid damage to oil seal on lever end of shaft. Inner selector shaft and lever can then be lifted out of case. When replacing this lever, make certain that spring washer, plain washer, and seal are assembled on shaft within case. Inspect condition of selector oil seal (see oil seal data below if seal being replaced). Coat oil seal with Lubriplate, insert shaft through left side of case. Install new welch plug in shaft hole on right side of case (seal plug with white lead or other sealing compound). See that selector shaft slides freely

Selector Shaft Oil Seal—When replacing seal, coat outer surface of seal with white lead or other sealing compound, insert seal with feather edge of seal inward.

IMPORTANT NOTE—Interlock bushing must be installed with large diameter toward transmission case (not toward shifter cam). If reversed, no interlock control of second and high shift rail will result and shift into Low or Reverse may lock gears.

1936-39 BUICK-OLDSMOBILE-PONTIAC

BUICK MODELS

Buick Series 40 (1936 to 1939)

OLDSMOBILE MODELS

Oldsmobile 6 & 8, All Models (1936 to 1939)

PONTIAC MODELS

Pontiac 6 & 8, All Models (1936 to 1939)

SPECIAL SERVICE NOTES:—Easier Shifting on 1939 Pontiac—To make shifting into Second Gear easier on 1939 cars, new type 1940 shifter shaft can be installed on these cars (new shaft has tapered section between center and end detent poppet ball grooves in shaft). To make this change, dismantle transmission and install new No. 1312495 Second-and-High Shifter Shaft and new No. 1314658 shaft Poppet Ball Spring.

Buick 1938, Oldsmobile 1938-39. Special automatic Self-shifting Transmission optional on these models. See separate article for data on this type.

TYPE:—Constant-mesh, synchro-mesh type with all helical gears. Main drive gear integral with clutch shaft and mounted on ball bearing which takes gear thrust. Mainshaft mounted on roller bearing (front), ball bearing (rear) which takes gear thrust. Second speed gear positioned on rear of mainshaft by locking ring at front and thrust washer at rear between gear and bearing. Sliding sleeve, which engages gears, is splined on shaft. Low speed sliding gear is splined on this sleeve at the center and is held stationary when the sleeve is shifted to engage second or high. Counter gear cluster and reverse idler gear mounted on bronze bushings on stationary shaft with thrust washer at each end.

1939 Type:—Design changed from 1938 as follows:

Shifter Mechanism—New type cable and rod actuated shifter shafts for steering column mounted gear shift lever. See Service directions below for disassembling data and separate articles on Buick, Oldsmobile, and Pontiac Transmission controls for adjustment directions.

Synchronizing Unit—Same design as for 1938 except that no detent springs are used. On Buick, aluminum synchronizing cones used for high gear end on some cars.

Rear Bearing Retainer—Rear bearing inner race positioned on shaft by snap ring with spacer between snap ring and speedometer gear which is press fit on shaft. On Oldsmobile (except 6-60) and Pontiac (except Quality 6 39-25), additional Durex bronze bushing located in bearing retainer extension housing. On Buick Model, retainer is flanged to engage front torque tube and mainshaft is splined to engage front propeller shaft.

Countershaft Bushing Spacer—Spacer not used on 1939 models (bushing oiled by lubricant openings in case at ends of counter gear).

Reverse Idler Lockpin (Buick Only)—New type locking pin used which is driven in case. Pin must be driven completely into shaft to remove gear.

Synchronizing Unit:—Consists of synchronizing cones formed integrally with main drive gear and second speed gear and drums assembled loosely on cones by snap rings. Drums engaged by detent springs assembled in splines on mainshaft (under sliding sleeve) and cams formed on ends of sliding

CONTINUED ON NEXT PAGE

BUICK-OLDSMOBILE-PONTIAC 1936-39 (C ntinued)

sleeve and are driven by prongs on the drum which engage slots in the sliding sleeve. An anti-rattle spring is located within the second speed synchronizing drums (not used on 1938-39 models).

NOTE—Design similar on all models except that on models before 1938, synchronizing drums had three prongs and drum for second speed gear was larger (not interchangeable as on 1938-39 model). Detent springs not used on 1939 models.

REMOVAL OF TRANSMISSION: *See "Transmission" on car model page.*

SERVICING:—Disassembly (1936-38). Remove cover, interlock plates, shifter rails and forks. On Oldsmobile models, loosen universal joint flange capscrew. Take out rear retainer screws, rotate retainer clockwise to uncover rear end of countershaft, drive countershaft out to rear (do not lose locking ball in slot in rear end of shaft on 1938 models) and allow counter gear cluster to drop down in case. Pull bearing retainer and mainshaft assembly out through rear of case (slide low speed gear off sleeve and remove through top). Remove main drive gear bearing snap ring (on front end of case—see note), tap main drive gear and bearing assembly out and remove through rear end of case. Lift out counter gear cluster and thrust washers. To remove reverse idler gear, take out locking screw in lower left hand corner of case, drive shaft out, lift out gear and thrust washers.

NOTE—On Buick 1936-37 models, snap ring located under front bearing retainer which must be removed first. On 1935 car models only, snap ring is located in front of drive gear inside case and is removed by pinching ends of ring together to free it from slot in housing.

Disassembly (1939):—Remove transmission cover, shift rails (being careful not to lose poppet balls and springs which are under rails, shift forks and selector shaft (use tool KMO-244—Oldsmobile, J-1044—Pontiac, to remove lockscrews in shifter forks and selector shaft cams) being careful not to lose cams when selector shaft withdrawn. **Buick Note**—Selector shaft must be driven out through right side of case (with plug which seals hole)—withdrawing shaft from left side of case will damage oil seal. Remove rear bearing retainer screws, withdraw bearing retainer and mainshaft through rear of case as an assembly with the rear bearing and second speed gear, allowing the low speed gear and sliding clutch sleeve to slide off and remain in the transmission case. Lift sliding clutch and low speed gear out through top of case. Push countershaft out of case toward rear being careful not to lose locking ball in groove in shaft and case at rear end. Remove main drive gear bearing snap ring (in bearing outer race on front of case), remove main drive gear through case. Lift out counter gear cluster and thrust washers. To remove reverse idler gear, take out locking screw (Oldsmobile, Pontiac), drive locking pin in so that it is completely within shaft (Buick), remove shaft, lift gear and thrust washers out. On Buick models, remove pin from shaft and use new pin when reassembling (drive pin in so that outer end ⅝-¾" past flush surface of transmission case.

Buick Selector Shaft Installation—Install shaft through oil seal on left side of transmission case and seal hole on right side of case (originally closed by plug) with sealing compound.

Mainshaft & Bearing Assembly:—To dismantle, remove sliding sleeve and detent springs (not used on 1939 models), disengage second speed gear synchronizing drum snap ring and remove drum. On models with universal joint companion flange bolted on rear end of shaft, remove nut and companion flange. Take out second speed gear snap ring at forward end of gear, remove thrust washer and gear. Take out snap ring in bearing retainer in front of bearing, remove shaft and bearing from retainer by tapping end of shaft on wooden block. When replacing bearing, see that shielded side of bearing is toward front (next to gear) on 1939 cars without oil collector.

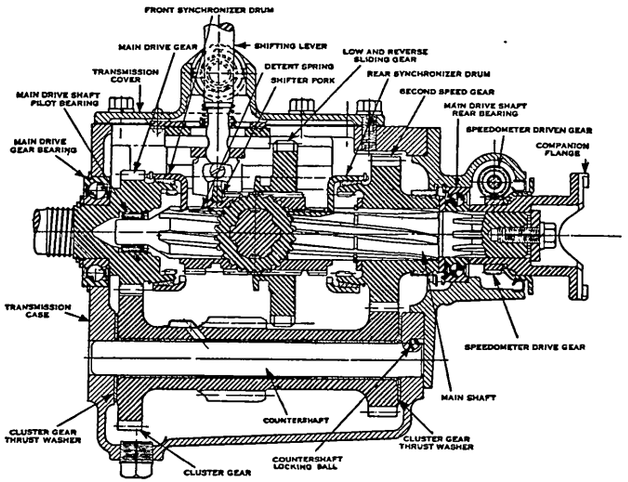

Mainshaft Rear Bushing (Oldsmobile 70, 80)—Durex type bronze bushing installed in rear end of rear bearing housing. Bushings cannot be reamed and new bushing should be installed whenever old bushing removed from housing. Use tool J-1060-1 to press old bushing out and driver J-1050 to install new bushing.

Mainshaft Rear Bushing (Pontiac Deluxe 6 & 8)—Durex type installed in rear end rear bearing retainer. Cannot be serviced in the field (replace rear bearing retainer if bushing worn—new bushings are line-reamed in production). Oil seal at rear of retainer can be removed by prying out with a screwdriver, use wood block as driver when installing seal. NOTE—These Durex bronze bushings must not be cleaned with degreasing compound. Oil bushing with transmission oil when reassembling.

Buick Specifications—Mainshaft rear bearing should be .0004" tight to .0005" loose (before '39), .0007" tight to .0002" loose ('39) on shaft and should be .0011" tight to .0005" loose in case (all models). Mainshaft should have no perceptible endplay. Clutch sleeve clearance and backlash on mainshaft should be .001-.003". Low and reverse sliding gear backlash should be .003" max.

Pontiac Specifications—Mainshaft rear bearing should be .0004-.0005" on shaft, .0005-.0011" in case (before '39), .0007" tight to .0002" loose on shaft and .0011" tight to .0005" loose in case ('39). Clutch sleeve clearance on shaft and backlash should be .001-.003". Low and reverse gear backlash in splines should be .003".

Synchronizing Unit:—Both synchronizing drums same size and interchangeable beginning with 1938 (see Buick '39 Note below). Drums retained on gear cones by snap ring and may be removed by expanding ring. On 1937 and previous models, make certain that anti-rattle spring installed in second speed drum.

Buick 1939 Note—Synchronizing drum installed on second speed gear must always be **bronze.** Aluminum drums used for high speed gear on some 1939 cars.

Second Speed Gear:—Held in place on shaft by steel thrust washer and snap ring at forward end, steel thrust washer (between gear and bearing) at rear end. Make certain that oil sleeve is in place on gear hub at rear end (not used on 1939 models).

Buick Specifications—Second speed gear clearance on shaft should be .0005-.0025" (before '39), .001-.0026" ('39). Gear endplay should be .005-.007" (all models).

Pontiac Specifications—Second speed gear clearance on shaft should be .0015-.0026" (before '39), .0005-.0027" ('39). Gear endplay should be .002-.006" (before '39), .000-.010" ('39).

Main Drive Gear & Clutch Shaft Bearing:—Remove high speed synchronizing drum (disengage snap ring), remove bearing retainer snap ring, washer, and bearing. On models with bearing retainer nut, remove snap ring and then back off nut (left hand thread). Where shielded type bearing used, install bearing with shielded side toward gear. Press bearing on shaft using tube against inner race, drill new hole for bearing nut lock ring if old hole does not line up.

Buick Specifications—Drive gear bearing should be .0003" tight to .0007" loose on gear, .0002" tight to .001" loose in case. Shaft endplay should be .013" tight to .002" loose. Pilot bearing for forward end of mainshaft (in drive gear hub) is loose roller type. Rollers retained by snap ring.

Pontiac Specifications—Drive gear bearing clearance should be .0003-.0007" on gear and .0002-.001" in case (before '39), .0003" tight to .0007" loose on gear and .0002" tight to .001" loose in case ('39).

Counter Gear Cluster:—When replacing this assembly, see that thrust washers installed at each end. Endplay with washers in place should be .016-.028" and clearance on shaft .0033-.005" (Buick), endplay should be .011-.019" (Pontiac). See that lock ball is in place in end of shaft and that it engages slot in case when shaft installed, use new gasket under bearing retainer (if old gasket damaged by removal).

Reverse Idler:—Clearance on shaft should be .0027-.0042" (Buick), .002-.004" (Pontiac). Endplay should be .004-.016" (Buick).

Buick 1939 Note—Shaft locked by new type pin which must be driven completely into shaft before shaft can be removed. Remove pin from shaft before reinstalling shaft in case. Use new pin and drive pin in so that outer end is ⅝-¾" past flush surface of transmission case.

1940-48 BUICK-OLDSMOBILE-PONTIAC SYNCHRO-MESH

BUICK MODELS

Buick, Series 40, 50 (1940 to 1948)

OLDSMOBILE MODELS

Oldsmobile 6 & 8, All Models (1940 to 1948)

PONTIAC MODELS

Pontiac 6 & 8, All Models (1940 to 1948)

▷Oldsmobile & Pontiac Optl. Hydra-Matic Drive—Synchro-mesh transmission (below) is Std. with Hydra-Matic Drive (automatic transmission with Fluid Coupling) Optl.

See "Cadillac, Oldsmobile, Pontiac Hydra-Matic Drive."

▷Pontiac 1940 Gearshift Lever Stiffness Complaints To correct stiffness in the lever and difficulty in complaints of stiffness in lever and difficulty in moving lever toward wheel (for cross-shift), dismantle transmission and remove vertical selector lever shaft, clean shaft and hole in transmission case thoroughly and lubricate shaft and hole in case with Lubriplate when shaft re-installed (see Servicing below for dismantling instructions).

DESCRIPTION: Constant-mesh, synchro-mesh (2nd. & High), sliding gear (Low & Reverse), all helical gear type. Same design as used on preceding car models except for the following changes:

Shifter Mechanism—New cross-shift mechanism consisting of a vertical shaft on side of transmission case with inner lever at upper end engaging selector shaft so that movement of selector lever on transmission case (small forward lever) shifts the selector shaft sideways in the transmission to engage the Low-Reverse or Second-High shifter rail.

Countershaft Bearings—Countergear cluster now mounted on roller bearings (loose rollers) at either end with spacer on shaft between bearings. Special service tool (dummy shaft) must be used when removing countershaft to retain bearing rollers.

Synchronizer Cones & Gears (Buick only)—Synchronizing cones have 8° angle and must be used with new gears marked '8' (do not confuse these gears with gears used on previous models). Bronze cones must always be used with Second Speed Gear.

REMOVAL OF TRANSMISSION: *See "Transmission" on car model page.*

DISASSEMBLY: Remove transmission cover and speedometer driven gear assembly. Disconnect spring on shifter lever on left side of case. Take out rear bearing retainer screws, set transmission in high gear position (to prevent sliding sleeve and low speed gear from dropping down into case), withdraw bearing retainer, second speed gear, and mainshaft assembly through rear of case. Remove setscrews from shifter forks and selector shaft cams (use tool J-2895), take out retainer screw and remove lever from left end of selector shaft, remove lever from lower end of vertical shaft (necessary to permit inner lever on upper end of shaft to disengage from selector shaft), drive selector shaft out through right side of case (this is important to prevent damage to oil seal on lever end of shaft), remove selector cams from case. Remove shifter rails at front of case (on Buick & Oldsmobile, plug at front end of Second-High rail must be removed also—see Note), rear of case (Pontiac), do not lose the detent balls and springs which are located under rails on all models. Lift out shifter forks, sliding sleeve and low speed gear. Use special tool (arbor or dummy shaft) J-1334 (Buick), J-1449 (Oldsmobile & Pontiac) to drive countershaft out through rear of case, leaving tool within counter gear cluster to retain bearing rollers until shaft is replaced. Remove snap ring on main drive gear bearing (on front of case), tap main drive gear and bearing through into case and lift out. Lift countergear cluster out being careful not to lose thrust washers on either end of cluster or bearing rollers. To remove reverse idler, drive locking pin into shaft, drive shaft out, remove gear.

▷Buick & Oldsmobile Shifter Rail Note—Forks can be removed without entirely removing shifter rails by pushing rails toward back of case sufficiently to slip forks off (will not disturb poppet balls and springs or second-high rail welch plug).

▷Oldsmobile 1940 Note—On this model, shaft is tained by a setscrew in the case which must be removed before shaft can be driven out.

REASSEMBLY: Reverse disassembly directions above and note following data on servicing of sub-assemblies.

Synchronizing Unit:—No detent springs used. Synchronizer drums are retained on gears by snap rings (remove by releasing snap rings).

Buick Note—Make certain that drum used on second speed gear is Bronze (aluminum drums used on some models for high gear).

Mainshaft & Rear Bearing Assembly: To disassemble parts, remove second speed synchronizing drum by prying retainer over shoulder on gear (leave retainer in drum). Remove snap ring from shaft, using Remover Tool J-1019 (Buick), J-1130 (Oldsmobile & Pontiac), remove thrustwasher and second speed gear. On Buick models, remove retaining bolt and washer on end of shaft and use Puller J-682-A to remove universal joint (install pressure plug in rear end of shaft, insert puller body in universal rear yoke and install "C" washer in puller groove ahead of yoke to take thrust). On all models, remove rear bearing snap ring, remove mainshaft and bearing by tapping end of shaft on wooden block. When installing bearing, see that shielded side forward (toward second speed gear). Bearing should be .0007" tight to .0002" loose on shaft and .0011" tight to .0005" loose in bearing retainer.

CONTINUED ON NEXT PAGE

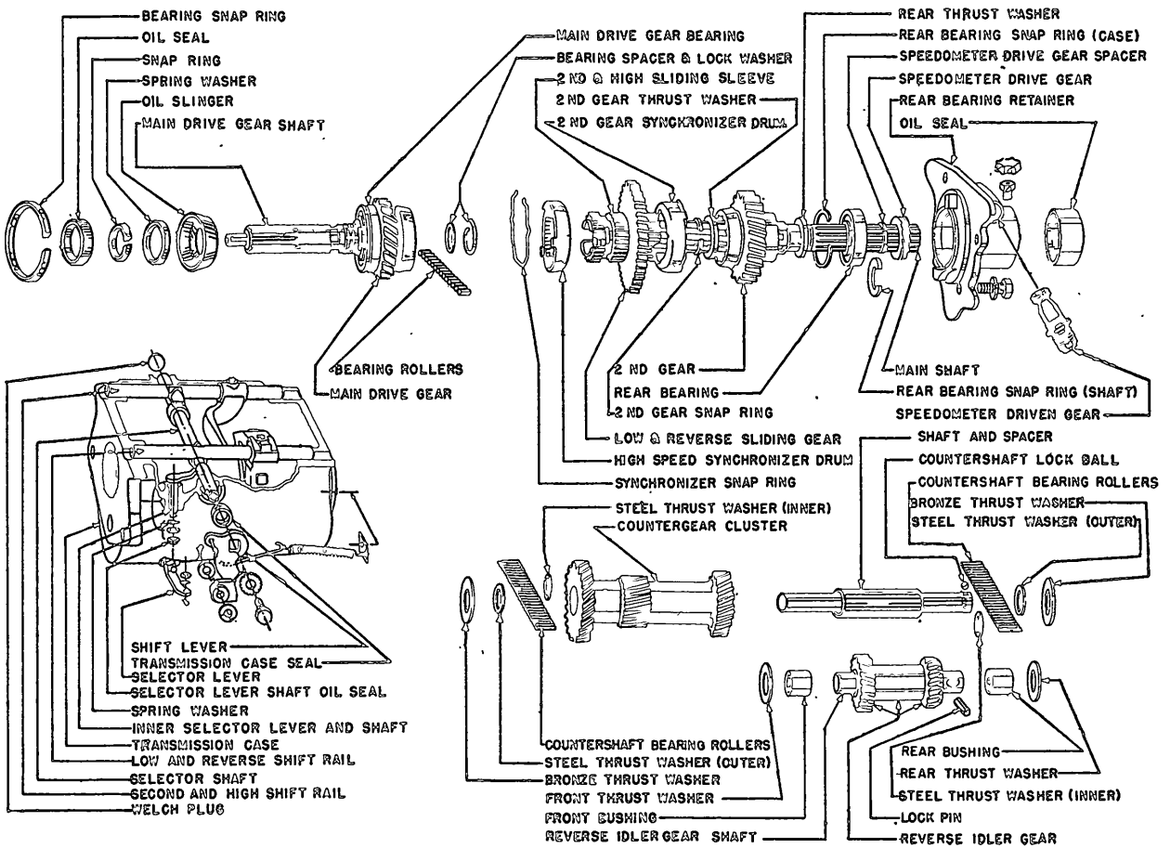

BUICK-OLDSMOBILE-PONTIAC 1940-48 TRANSMISSION

BUICK-OLDSMOBILE-PONTIAC 1940-48 (C ntinu d)

Mainshaft Rear Bushing (Oldsmobile G-40, L-40 '40; 76, 78, 96, 98 '41; 76, 78, 98 '42-47 11" Extension Housing). A steel-backed, bronze bushing used in transmission extension housing to support mainshaft. Bushing can be replaced after oil seal removed from end of housing by using tool J-1450 to remove old bushing and install new bushing. New bushings must be reamed after installation to provide .0025-.004" clearance on shaft (reamer is part of J-1450 tool set).

IMPORTANT INSTALLATION NOTE (OLDSMOBILE)—When transmission installed on above models, fill the transmission rear bearing housing assembly with ½ pint transmission lubricant after transmission has been installed in car.

Rear Oil Seal (Oldsmobile)—New oil seal must be installed in rear end of rear bearing retainer whenever oil seal removed. Soak new oil seals in engine oil for 5 minutes, install seal with felt to rear using tool J-1050. NOTE—New type oil seal has shoulder locates it. See that housing vent open.

Rear Oil Seal (Pontiac)—Old oil seals can be removed by prying with a screwdriver. Use tool J-1323 to install new oil seals (seal has extension rim which will be damaged if tool not used).

Main Drive Gear & Bearing:—Bearing can be removed from shaft after lock ring has been removed by tapping end of shaft on wooden block. When installing bearing, see that shielded side is toward gear. Bearing should be .0003" tight to .0007" loose on shaft and .0002" tight to .001" loose in case.

Pilot Bearing (Oldsmobile Models)—Pilot bearing in flywheel consists of special Durex bushing installed with flat end in (no felt used on 1942 models—front wheel bearing lubricant used in reservoir). Bushing is retained by special sheet metal retainer pressed in end of crankshaft. To replace bearing, use puller J-1448 to remove old bushing, clean out all old lubricant, use tool J-1329 to install new bushing (install bushing with flat end in), use adapter J-1329-2 on tool J-1329 to install new retainer, insert ¼ oz. front wheel bearing lubricant in recess in front of bushing.

NOTE—An oil-soaked felt is installed in recess in back of bushing on Oldsmobile 1940-41 cars. Soak felt in #30 SAE. engine oil before installation. This felt not used on 1942 cars (see Lubricant data).

Pontiac (1946-47) Main Drive Gear Oil Slinger and Oil Seal)—An oil slinger and spring washer are installed on main drive gear hub ahead of the bearing (retained by bearing snap ring). Install new felt oil seal (lubricate felt with engine oil) against shoulder on shaft directly forward of oil slinger each time transmission is installed in car.

►*CAUTION*—Do not install oil seal in groove in main drive gear shaft (on 1946-47 cars—seal location changed from this groove). Later gears do not have this groove.

Second Speed Gear:—Clearance on shaft should be .001-.0026" (Buick), .0005-.0027" (Pontiac). Endplay should be .000-.010". When installing gear, make certain that thrust washer installed in front of gear, use special thimble J-1267 (Oldsmobile) to start snap ring on end of shaft.

Countergear Assembly:—If rollers removed from gear cluster, use arbor as assembly tool, make certain that spacer and thrust washers assembled in gear cluster, then install rollers, using grease to retain them in place. Install assembly in case, making certain that small steel thrust washer installed next to bearing rollers and large bronze thrust washer between gear cluster and case at each end, insert countershaft from rear and push arbor out through front of case. See that lock ball in place in rear end of shaft and that ball engages groove in case to prevent shaft from turning. Countergear clearance should be .0005-.0024". Endplay should be .0176-.0296" (Buick), .009-.021" (Pontiac).

Reverse Idler Gear Assembly:—Remove old lockpin from reverse idler gear shaft and discard pin (use new pin for reassembly). Idler gear bushing clearance on shaft should be .0027-.0042". When installing gear, line up lock pin hole in shaft and case, use new lockpin, coat lockpin with white lead or other sealing compound, drive pin in to the following depth:

Buick—(1940-47) 5/8-¾" (1948) 25/32".
Oldsmobile & Pontiac—¾".

Shifter Mechanism:—Selector shaft must be removed when transmission is disassembled (see Disassembly directions above). To remove shaft, use KMO-244 tool to remove shifter cam setscrews, remove lever on left end of shaft by taking out retainer screw, remove lever on lower end of cross-shift shaft (necessary to allow inner selector lever on upper end of shaft to disengage from selector shaft). Drive selector shaft out through right side of case (this is important to avoid damage to oil seal on lever end of shaft). With selector shaft out, inner selector lever and shaft can be lifted out. See that this shaft and hole in case are clean, lubricate with Lubriplate when shaft replaced being certain that spring washer, plain washer and oil seal installed on upper end of shaft within case. Install selector shaft through left side of case and install new welch plug to close hole on right side (use white lead or other sealing compound to seal the plug).

►*CAUTION*—When installing lever on selector shaft, hold shaft with wrench to avoid damaging selector cams. Make certain that lockwasher installed on lever retainer screw.

BUICK DYNAFLOW DRIVE

Buick Roadmaster, Series 70 (1948)

►**STARTING OF ENGINE BY TOWING OR PUSHING CAR:** On Dynaflow cars, place control lever in neutral "N" position until car reaches a speed of 15 MPH. and then move lever to "L" position, or when car reaches a speed of 30 MPH. move lever to "D" position, to crank engine. Place lever in neutral "N" position to warm up engine.

►**USE OF EMERGENCY LOW FOR ADDITIONAL BRAKING ON GRADES:** Car speed should be reduced to below 40 MPH. before control lever is moved from Drive "D" to Low "L".

DESCRIPTION: The "Dynaflow Drive" transmission consists essentially of two units (1) Torque Converter Assembly mounted directly on the flywheel in the bell housing, and (2) Planetary Gear Unit mounted in the transmission case directly behind the torque converter. Torque Converter action is entirely automatic while the Planetary Unit is controlled by the driver through a Control Lever on the steering wheel (provides Emergency Low, Reverse, Neutral, and Parking—see Operation below). The operation and control of the transmission is through a hydraulic system for which oil pressure iss upplied by two oil pumps built in the transmission (forward pump in recess in rear face of bell housing, rear pump in recess at rear of transmission case). An oil cooler on the side of the transmission case maintains oil at operating temperature.

Torque Converter Description: Torque converter consists of the five independent rotating members listed and the operation of the unit varies in accordance with car speed and load conditions as described below (transition from one type of operation to another is gradual so these phases should not be considered as distinct "steps").

Torque Converter Members

(1) Primary Pump (Driving Member). Integral with rear half of case bolted directly on flywheel. Pump is positively driven by the crankshaft at engine speed at all times.

(2) Turbine (Driven M mber). Splined on converter shaft and transmits drive to transmission.

(3) Secondary Pump. Mounted on primary pump hub with overrunning "free-wheel" clutch which allows this pump to rotate faster than primary pump when unit is operating as a torque converter.

(4 & 5) Primary & Secondary Stators. Mounted on stationary "reaction" shaft (tubular shaft fixed in transmission case) with overrunning "free-wheeling" clutch in each stator hub. Stators are locked or held stationary when unit is operating as a torque converter (reaction members) but free-wheel when torque multiplication not required.

Planetary Unit Description: Planetary unit consists of parts listed below. Operation of unit depends on the position of the Shift Control Valve (linked to control lever on steering column) which directs application of hydraulic pressure in the planetary unit hydraulic mechanism as described below.

Planetary Unit Components

(1) Sun Gears—Consist of two gears in tandem on drive (input) shaft. Front Sun Gear (Low Range Reaction Gear) is integral with the Direct Drive Clutch (locked to shaft when clutch engaged) and meshes with the Reverse Planet Pinions. Rear Sun Gear (Reverse Sun Gear) is splined on the drive shaft (acts as driving gear for Low & Reverse) and meshes with the Low Planet Pinions.

(2) Planetary Pinions—Consist of three Reverse Planet Pinions (larger short gears) and three Low Planet Pinions (smaller long gears) mounted alternately on the Planet Carrier and all meshing together. The Reverse Planet Pinions mesh with the forward sun gear (Low Range Reaction Gear) and with the Reverse Gear (large internal gear con-

CONTINUED ON NEXT PAGE

BUICK DYNAFLOW DRIVE (Cont.)

trolled by the Reverse Brake Band). The Low Planet Pinions mesh with the rear sun gear (Reverse Sun Gear). The Planet Carrier is integral with the output shaft.

(3) Low Range Drum & Clutch—Mounted on drive shaft in front of the planetary pinion. Inner clutch member is splined on drive shaft and rotates with the shaft. Outer clutch member incorporates the Low Range drum and front sun gear (Low Range Reaction Gear) as well as the clutch engaging hydraulic piston and disengaging spring. Clutch engagement is controlled by the High Accumulator which permits rapid initial movement and smooth final engagement. A ball check valve is built in the clutch piston to insure complete draining of oil from the chamber when clutch disengaged for Reverse and Neutral. Check valve is positively closed by contact between ball and steel clutch plate when clutch engaged.

(4) Low Range Brake Band & Engaging Mechanism—Band holds Low Range Drum and front sun gear (Low Reaction Gear) stationary when it is applied by the servo "apply" piston acting through the lever and strut engaging one end of the band (servo action is controlled by the Anchor Piston and "Lo" Accumulator). This action requires a boosted oil pressure of 180 lbs. (normal pressure 90 lbs.) which is secured by boosting the Pressure Regulator Valve spring pressure hydraulically. Low Range operation also requires that the clutch be disengaged and this disengagement is secured by opening the clutch pressure line (Anchor Piston acts in conjunction with Shift Control Valve).

(5) Reverse Brake Band & Engaging Mechanism—Band holds Reverse Gear (internal gear) stationary when it is applied by the servo "apply" piston acting through the lever and struts engaging both ends of the band.

OPERATION: The Torque Converter automatically provides a torque multiplication ranging from an equivalent gear reduction of 2.24-2.4 to 1 (for Starting, Heavy Loads, and Acceleration) to an equivalent "High" 1 to 1 ratio (for Light Loads and Steady Driving when torque converter acts as a simple Fluid Coupling). The Planetary unit is controlled by the driver and provides definite gear ratios (in addition to the varying ratio of the torque converter) depending on the control lever position as follows:

"D" Drive Position—"High Gear" ratio of 1 to 1 for all normal driving (planetary gears locked out).

"L" Emergency Low Position—1.82-1 Ratio through the planetary gears (equivalent to reduction of 4.1-1 with maximum torque converter torque multiplication) for extremely low speeds, heavy grades, or operation in snow, mud, or sand.

"R" Reverse Position—Same gear ratio as Emergency Low (above).

"N" Neutral Position—Planetary gears unlocked and allowed to spin freely so that no drive is transmitted through the transmission.

"P" Park Position—Park mechanism consists of a pawl and ratchet gear at the rear of the transmission case which is entirely independent of the planetary gear unit.

TORQUE CONVERTER OPERATION

Starting, Heavy Load, or Accelerating Operation—Under these conditions, when turbine speed is much less than that of the primary pump, the primary pump absorbs all of the engine torque and transmits this power to the turbine. Both the Primary and Secondary Stators are locked to the reaction shaft and remain stationary furnishing the necessary "reaction" for torque multiplication. During this phase, the Secondary Pump free-wheels at somewhat greater speed than the primary pump (to prevent turbulence which would result if this pump rotated at the same speed as the primary pump).

Medium Load & Light Acceleration Operation—Under these conditions, turbine speed approaches that of the primary pump, the oil flow changes to a smooth rotary flow, and as the reaction forces on the stators decrease, the Secondary Stator free-wheels and less torque multiplication results. Likewise the pressure on the back of the Secondary Pump vanes decrease and this pump tends to slow down to the same speed as the primary pump (when the speeds become equal, overrunning clutch locks secondary pump to primary pump so that both pumps tend to drive the turbine as a unit).

Light Load & Steady Driving Speed Operation—Under these conditions, the primary and secondary pumps are locked and rotate as a unit to drive the turbine. All reaction forces on the stators drop out and both Primary and Secondary Stators free-wheel. The Turbine rotates at same speed as the pumps and the unit functions as a simple fluid coupling to transmit the full torque of the engine.

PLANETARY UNIT OPERATION

Drive Range ("D" Lever Position)—Bands are released and clutch is engaged. This locks the front sun gear to the drive shaft, and as rear sun gear is splined on the drive shaft, no rotation of the gears is possible (both gears meshed with reverse pinions and tend to rotate pinions at two different speeds). The entire planetary gear assembly turns as a unit and the output shaft rotates at the same speed as the input shaft.

Low Range ("L" Lever Position)—Low Range Band is applied and clutch is disengaged (band holds front sun gear stationary). Drive shaft turns rear sun gear which meshes with Low Planet Pinions, and as these pinions also mesh with the Reverse Pinions which mesh with the stationary front sun gear, the reverse pinions "walk" around the sun gear rotating the Planet Carrier and output shaft in the same direction as input shaft but at slower speed to provide a gear reduction of 1.82-1.

Reverse ("R" Lever Position)—Reverse Band is applied and clutch is disengaged (band holds internal Reverse Gear stationary). Drive shaft turns rear sun gear which meshes with Low Planet Pinions, and as these pinions also mesh with the Reverse Pinions which mesh with the stationary internal gear, these Reverse Pinions move around the gear in a direction opposite to their direction of rotation, rotating the Planet Carrier and output shaft in opposite direction to input shaft and at slower speed to provide a gear reduction of 1.82-1.

Neutral ("N" Lever Position)—Both bands are released and clutch is disengaged. With all gears free to spin, no power is transmitted through the planetary unit and output shaft is stationary.

Oil Pumps & Hydraulic System Operation: See Hydraulic Circuit illustration for details of Dynaflow control units. These units operate as follows:

Front Oil Pump—This pump is driven by the engine and is of large capacity to provide necessary pres-

CONTINUED ON NEXT PAGE

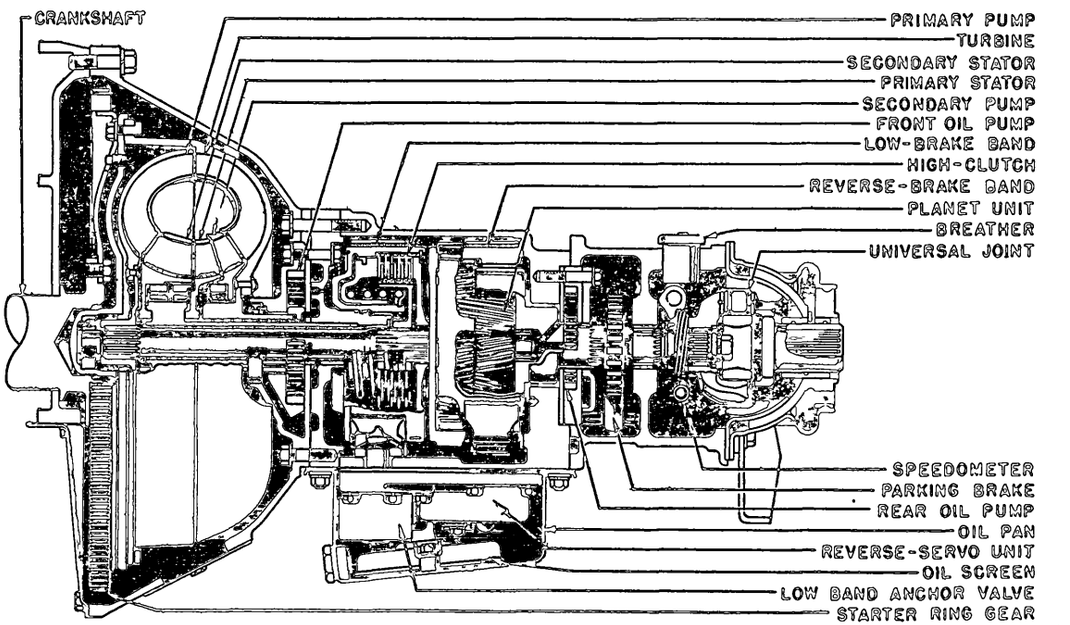

BUICK DYNAFLOW DRIVE

BUICK DYNAFLOW DRIVE (C nt.)

sure and volume of oil for starting, low speed, and reverse operation. At car speeds above 45 MPH., rear pump takes over and front pump idles (oil bypassed back to suction side through oil pressure regulator). A check valve in the pump delivery line prevents oil bleeding back through the idling pump.

Rear Oil Pump—This pump driven from output shaft (driven by rear wheels when car pushed or towed) to operate direct drive clutch and fill torque converter when front pump not operating. Acts in conjunction with front pump at speeds below 45 MPH. and supplies all oil at speeds above 45 MPH. when front pump idles.

Pressure Regulator Valve—Controls pressure in main oil supply line (see Converter & Lubrication Pressure Regulator below) and limits pressure to 90 lbs. (80-90 lbs.) except when pressure boosted for Low Range operation. This boost is effected by supplementing regulator spring pressure with hydraulic pressure (acting on regulator stem piston) which increases pressure in system to 180 lbs. (160-180 lbs.).

Converter & Lubrication Pressure Regulator—Converter is filled with oil from metering orifice in Pressure Regulator Valve and returns to the oil sump through the Oil Cooler and Converter Pressure Regulator which maintains pressure in this circuit at 50 lbs. Oil is bled from this circuit at the regulator for lubrication of the transmission units (front oil line for Low Range Drum Bushing and Clutch Plates, rear oil line for Transmission Rear Bushing, Planetary Gears, Rear Bearing Retainer Bushing, and Universal Joint). Pressure in the lubrication circuits is maintained at 15 lbs. by the regulator.

Shift Control Valve—This valve is controlled by lever on steering wheel and directs oil flow for planetary unit operation (see Planetary Unit Operation above).

Parking Mechanism Operation: Control lever is linked to a stationary pawl anchored in the transmission case. Moving lever to park "P" position, engages pawl with ratchet wheel splined on output shaft in bearing retainer housing at rear of transmission and locks the drive shaft.

►***CAUTION—Parking lock must never be applied with car in motion (lever must be raised to engage this position).***

CHECKING & CHANGING DYNAFLOW DRIVE OIL: Check oil level and add oil as required at 1000 mile intervals, drain and refill at 10000 mile intervals as directed below.

►***CAUTION—Oil must be warm and engine must be idling when checking oil level, warm up oil before draining.***

Checking Oil Level: With oil warm and engine idling in neutral (lever in "N" position), remove cover from floor pan under floor mat on right side, remove gauge rod. Add "Special Buick Oil for Dynaflow Drive" to bring level up to FULL mark on gauge rod.

Draining & Refilling: With oil warm, drain transmission case and torque converter housing by removing drain plug in oil pan and **two** drain plugs in converter case (remove bell housing cover for access to these plugs). Re-install all drain plugs, install 3 quarts of Special Buick Oil for Dynaflow Drive through filler opening in case. Idle engine with control lever in neutral "N" position, add additional 8 quarts of oil, allow engine to idle for several minutes, recheck oil level which must be at FULL mark on gauge rod.

Capacity—11 quarts.

Recommended Oil—Use only "Special Buick Oil for Dynaflow Drive".

LINKAGE ADJUSTMENT: Control units listed below must be adjusted for correct operation of Dynaflow

Throttle Linkage & Dash Pot—Must work freely and smoothly. ***See adjustment data under "Carburetor" on Buick car model page.***

Neutral Safety Switch: Located on control lever linkage at lower end of steering column and connected in starter control circuit so that starter operative only with Dynaflow control lever in Neutral "N" or park "P" position. Switch should be closed in neutral and should remain closed until lever moved toward park position far enough to move outer end of control lever pointer 5/32" (if switch opens with less than ⅛" pointer travel, starter may not operate in neutral; if more than 3/16" pointer travel required to open switch, starter may operate in Drive "D" position and cause starter to move car). Check and adjust switch as follows:

Checking Neutral Switch—Ground coil terminal on distributor so that engine can be cranked without starting. Firmly set parking brake. Place Dynaflow control lever in neutral "N" position (check to see that shift detent is engaged). Place strip of masking tape on control pointer window (leave pointer tip visible), mark tape vertically at two points, 1/8" and 3/16" to right of **right** edge of pointer. Move control lever to Drive "D" position, turn ignition on, depress accelerator pedal, slowly move control lever toward "N". Note position of **right** edge of pointer at instant starter begins to operate. Pointer should be within the two marks (1/8" & 3/16") on control window. If adjustment correct, remove masking tape and distributor jumper wire, otherwise adjust switch as follows:

Adjusting Neutral Switch—Place Dynaflow control lever in position so that **right** side of pointer is exactly midway between marks on masking tape (5/32" from "N" position) and **hold lever in this position while making adjustments.** Loosen two mounting bolts on switch bracket at lower end of steering column, raise switch up as far as possible. With ignition switch turned on and accelerator pedal depressed, tap switch down until starter just begins to operate, recheck control lever position (midway between marks), tighten switch mounting bolts being careful not to change switch position. Recheck switch adjustment.

DYNAFLOW REMOVAL & OVERHAUL: Manufacturer recommends that these operations be performed by factory trained personnel.

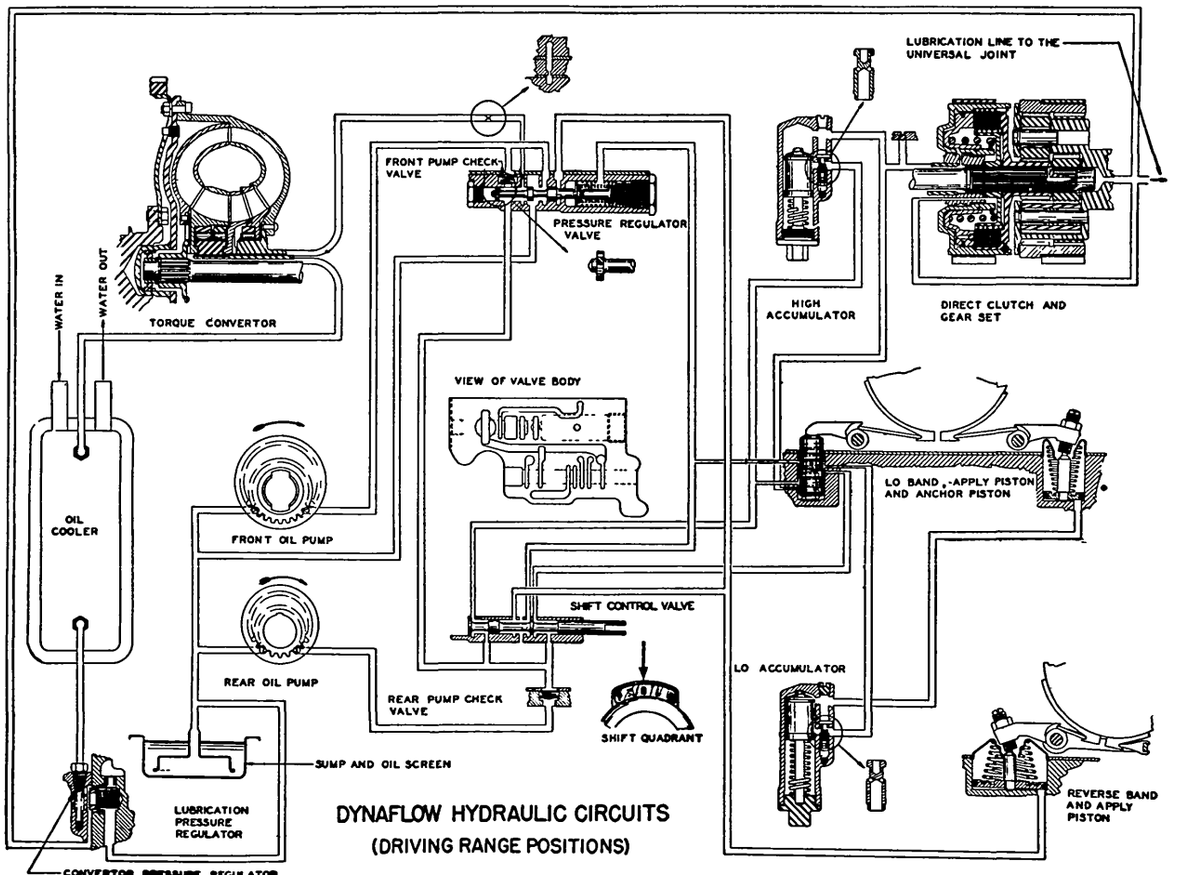

BUICK DYNAFLOW DRIVE HYDRAULIC CIRCUIT—DRIVING RANGE P SITION

1936-37 CADILLAC

V8 & V12, All Series (1936)
V16, All Series (1936-37)

TYPE:—Constant-mesh, synchro-mesh type. Low speed gear is constant-mesh, reverse gear is sliding spur (low gear clutch integral with this gear). Clutch shaft mounted on ball bearing in transmission case which takes gear thrust. Mainshaft mounted on roller bearing (front), ball bearing (rear) which takes gear thrust. Second speed gear and low speed gear mounted on taper roller bearings on mainshaft as an assembly. Counter gear cluster mounted on taper roller bearings each end (no thrust washers used). Gear engagement (second and high) consists of a sliding clutch sleeve splined to mainshaft which engages clutch teeth cut on inside of synchronizing cones on second speed and main drive gear.

Synchronizing Units. Independent unit used for each speed (second and high). Consists of a synchronizing drum splined to the mainshaft which engages cone on gear. Drum actuated by synchronizing yoke pivoted in case. Roller on yoke contacts cam surface on shifter shaft so that yoke is rocked to engage drum and cones when shifter shaft moved to engage gear (roller mounted on plunger in oil filled dashpot and released from contact with cam by escape of oil from cylinder after synchronization completed, yoke then returned to disengaged position by return spring). Yoke pivot pins mounted on pins with eccentric adjustment in transmission case (adjusting quadrants located on outside).

REMOVAL OF TRANSMISSION: *See "Transmission" on car model page.*

SERVICING:—Disassembly. Remove shift lever assembly, transmission cover and shifter shaft assembly. Take out synchronizing yoke quadrant screws, remove quadrants, disconnect yoke return spring, take out yoke stop screws and stop, lift yokes out. Remove propeller shaft extension housing and shaft assembly, take out capscrew in rear end of mainshaft, remove coupling, take out mounting screws and remove speedometer drive housing (rear bearing retainer) and countershaft rear bearing washer. Remove cover on side of case over reverse idler gear, take out locking screw, pull shaft out to rear, remove reverse idler. Take out screws and remove bearing retainer on front end of transmission case. Remove capscrew and retainer on each end of countershaft, tap front end of shaft to remove rear bearing race, rear end to remove front race (roller bearing type) allowing countershaft assembly to drop down in case and unmesh gears. Remove snap ring and pull out rear mainshaft bearing. Remove snap ring and pull out clutch shaft and bearing assembly toward front (do not lose mainshaft front bearing). Pull mainshaft and gear assembly forward and remove through top of case.

Mainshaft & Gear Assembly:—To dismantle mainshaft, remove synchronizing drums and clutch sleeve at forward end, remove reverse gear and splined sleeve at rear. Low and second speed gears and bearings can then be removed from rear end

Low & Second Speed Gear Bearing Adjustment:—Controlled by spacer washers between inner and outer bearing cups in each gear (splined sleeve acts as spacer on shaft to clamp bearings in place when assembled in case with rear coupling nut tight). Gears should turn with slight drag when installed. Adjust by dressing down both spacers slightly with emery cloth on a surface plate (if bearings loose), replace spacers (if bearings tight).

Synchronizing Yoke Assembly:—Dashpot plunger assembly can be removed from yoke cylinder. To dismantle assembly, take out piston pin linking piston and valve assembly to plunger, and valve spring retainer at lower end of valve stem.

Adjustment:—When installing yokes, install adjusting quadrants (yoke pivots) with center-line of scale on quadrant in line with reference mark on housing. To check yoke travel, remove dashpot plunger assembly, install special bar (with locating shoulder to avoid burring oil hole) in yoke cylinder, operate yoke by hand. Adjust quadrants so that yoke travel, from disengaged position against stops to engaged position of synchronizers 3/32-5/32".

Main Drive Gear & Clutch Shaft Bearing:—Bearing held on clutch shaft by nut and locking washer.

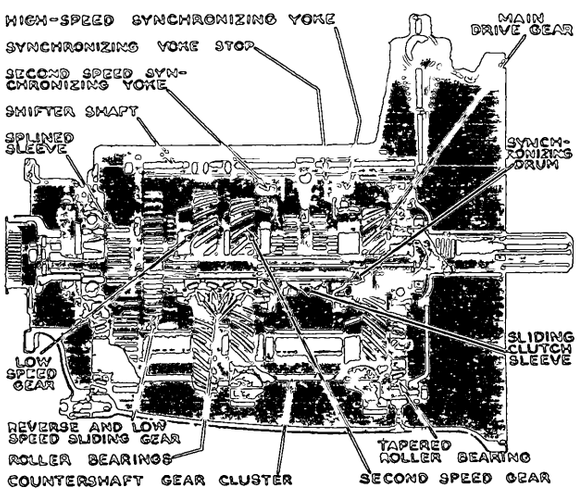

Reverse Idler Gear:—Clearance on shaft should be .002-.0023" (new), .004" (worn limit). Endplay .025" max. When installing new bushings, ream to diameter of .938-.939".

1936 CADILLAC & LA SALLE

Cadillac V8, Series 60 (1936)
LaSalle, Series 36-50 (1936)

TYPE:—Constant-mesh, synchro-mesh (second and high), all helical gear type (sliding gear for low and reverse). Clutch shaft and main drive gear mounted on ball bearing which takes gear thrust. Mainshaft mounted on roller bearing (front), ball bearing (rear) which takes gear thrust. Second speed gear positioned on shaft by shoulder at rear, locking ring at front. Counter gear cluster mounted on roller bearings on stationary shaft with thrust washers at each end. Gears are engaged by sliding clutch splined to mainshaft which engages clutch teeth on inner surface of synchronizing cones on second speed and main drive gear.

Synchronizing Unit. Synchronizing drums assembled loosely on cones by snap rings in groove on cones which engage lugs on drums (waved anti-rattle spring used between drum and cone on second speed gear only). Drums are engaged by detent springs in the mainshaft splines under the sliding clutch and are driven by prongs or cams which engage the slots between the clutch teeth banks on the sliding clutch.

REMOVAL OF TRANSMISSION: *See "Transmission" on car model page.*

SERVICING:—Disassembly. Remove cover assembly, shifter shaft locking springs, interlock plates (first 1935 cars only), shifter shaft assemblies and lock balls and springs. Take off universal joint flange nut, remove flange. Remove rear bearing retainer (on 36-60 with shaft extension, additional bearing located at rear of shaft in housing). Remove countershaft toward rear allowing counter gear cluster to drop down and unmesh gears. Remove front (high speed) synchronizing drum snap ring, push main drive gear forward as much as possible, push mainshaft assembly back to disengage forward end (remove rear bearing), then remove shaft through top of case. Remove clutch shaft bearing snap ring, push assembly back and remove through top of case. To remove reverse idler gear, take out locking screw on left side of case, drive shaft out toward rear.

Mainshaft & Second Speed Gear Assembly:—Remove low speed gear at rear end of shaft, remove sliding clutch at forward end (do not lose six detent springs under clutch, note location and reassemble in same position), free second speed gear synchronizing drum snap ring, remove drum and anti-rattle spring. Remove snap ring in front of second speed gear, remove thrust washers and gear.

NOTE—When installing detent springs, see that long and short springs alternated in splines around mainshaft. Install short springs with shoulder and turned up end toward rear to engage second speed synchronizing drum, long spring in reversed direction to engage high speed drum.

Main Drive Gear & Clutch Shaft Bearing:—Bearing retained on shaft by retainer nut and lock ring. Install bearing with shielded side toward gear.

▷*CAUTION*—To install transmission, engage high gear to maintain alignment of high speed synchronizing drum in mainshaft splines (with transmission out of car, clutch sleeve is free to move sufficiently to disengage synchronizing drum cams). Check synchronizing drum before installing cover to see that cams are meshed in same splineways as the high speed detent springs.

Counter Gear Assembly:—Counter Gear roller bearings are fitted in pockets in each end of countershaft bore. When installing counter gear cluster, see that bronze thrust washer installed at front end, bronze and steel washers at rear end.

Reverse Idler Gear:—Clearance on shaft should be .002-.0035" (new), .008" (worn limit). When new bushings installed, ream to inside diameter of .877-.879". Endplay should be .025" maximum. See that thrust washer installed at each end of gear.

CADILLAC & LA SALLE 1937-48 SYNCHRO-MESH

Cadillac V8, All Series (1937 to 1948)
Cadillac V12, Series 85 (1937)
Cadillac V16, Series 90 (1938-39-40)
LaSalle, All Series (1937 to 1940)

►**Cadillac & LaSalle 1939 Detent Spring Change to Correct Hard Shifting Complaints:** Springs on 1939 cars were .022" thick and were changed on later cars to new type .018" thick (except 39-90). To correct hard shifting complaints on first cars, install the new .018" thick springs (except 39-90).

►**Cadillac 1941-48 Optl. Hydra-Matic Drive**—Synchro-mesh transmission (below) is Std. with Hydra-Matic Drive (automatic transmission with fluid coupling) Optl.
See "Cadillac, Oldsmobile, Pontiac Hydra-Matic Drive."

►**Cadillac 1941 Extension Housing Change**—See Extension Housing data for special type used on first Housing data below for special type used on first 1941 cars which must be replaced to allow installation of special speedometer gears if optional ratio rear axles being installed on these cars.

Gearshift Mechanism (All 1938-48 Models)—New type remote control gearshift with shift lever mounted on steering column used in conjunction with new shifter mechanism on transmission case consisting of separate shift levers and shafts installed in side of transmission case. Special disassembly directions required for this type transmission as given below. Refer to separate Transmission Control article for gearshift adjustment

DESCRIPTION: Constant-mesh, synchro-mesh, all helical gears (low-reverse sliding gear). Main drive gear and shaft mounted on ball bearing in front of case which takes gear thrust. Mainshaft mounted on roller bearing at front end and roller bearing at rear end which takes gear thrust (shaft extension integral with mainshaft with additional ball bearing at rear end of extension housing). Second speed gear positioned on mainshaft by shoulder at rear, thrust washer and snap ring at front. Counter gear cluster mounted on needle bearings on stationary countershaft with thrust washers at each end. Gears are engaged by a sliding clutch sleeve which is splined to the shaft and engages clutch teeth inside the synchronizing cones on the second speed and main drive gears.

Synchronizing Unit. Consists of two synchronizing drums mounted on the ends of three pin cams which extend through cam holes in the center ring of the clutch sleeve. Synchronizing drum assembly is centered on the clutch sleeve by detent springs which engage the notches in the pin cams. The entire assembly moves as a unit when the clutch sleeve is shifted until the synchronizing drums and cones engage, synchronizing unit then rotates (relative to clutch sleeve) until cam surfaces on clutch ring engage pin cams. Drums are driven through this engagement until synchronization is completed.

Interlock Assembly (1939-48)—New type ball seat tube installed in interlock boss in transmission case (spring located within tube, interlock ball in tube at each end). When a gear is engaged, shoulder on shifter shaft quadrant forces tube toward opposite quadrant so that lock ball seated in end of tube and prevented from releasing this shifter shaft.

REMOVAL OF TRANSMISSION: *See "Transmission" on car model page.*

DISASSEMBLY: On 1937 models only, remove two screws in the shifter lever cap, remove shift lever. Remove universal joint flange at the rear end of shaft extension. Take out screws in extension housing flange, remove extension housing and bearing (bearing can be tapped out with soft hammer). Remove speedometer drive gear locking ring, remove gear, take out ball in shaft which acts as gear key (ball will drop out when shaft is tapped). Remove transmission bottom cover. Pull countershaft out toward rear (coverscrew locks shaft in place), remove counter gear cluster and thrust washers. On 1937 models, use puller J-806 to remove low and reverse shifter fork pin out through filler hole in side of case, pull shifter shaft out toward front (turn shaft while withdrawing to free lock ball). Use special punch J-1051 and drive out tapered pin connecting second-and-high shifter shaft and fork. Remove ¼" pipe plug on side of case and take out shifter shaft locking balls, rod and springs. Rotate second-and-high shifter fork ½ turn and remove. Remove locking ring on clutch shaft bearing at front of case. Pull mainshaft assembly to rear and clutch shaft to front as far as possible to free mainshaft at front bearing in main drive gear. Maneuver main drive gear and clutch shaft assembly around mainshaft and withdraw through bottom of case (1937). On 1938 and later models, remove two lockscrews in front of case retaining bearing and shaft assembly, pull assembly out through front end of case. Remove clutch sleeve and synchronizer from front end of shaft and lift out. Take off mainshaft rear bearing lock ring, push mainshaft as far forward in case as possible, use special tool J-1007 to free second speed gear lock ring, remove gear and washer, slide low and reverse gear and shifter fork off front end of mainshaft, remove mainshaft and bearing at rear. To remove reverse idler, pull shaft out toward rear (locked by cover screw), remove gear and washers. On 1938 and later models, remove shifter levers on side of case, tap shifter shafts in through shifter quadrants and remove from case being careful not to lose interlock springs, balls and pins.

REASSEMBLY: Reverse disassembly directions and note following data on sub-assemblies:

Mainshaft & Second Speed Gear Assembly. Cannot be installed as an assembly (to install, reverse disassembly directions above). Use new locking ring for second speed gear. Rear bearing is press fit on shaft and should be removed and installed on an arbor press. Use tool J-1007 to install new second speed gear locking ring, tool J-1170 to install mainshaft front roller bearings in main drive gear (bearing rollers held in place by lock ring). Low speed gear backlash on mainshaft splines should be .004-.007" (new), .010" (worn limit). Synchronizer hub backlash on mainshaft splines should be .0005-.001" (new), .003" (worn limit). Second speed gear clearance on mainshaft should be .001-.0015" (new), .00175" (worn limit), and endplay should be .004-.008" (new), .012" (worn limit).

Shifter Shaft Assembly (1937). Install 2nd & high shifter shaft first, line up shifter fork locking pin hole, use tool J-1005 and install pin (work through shift lever hole on top of case). Use magnetic tool J-1009 and insert second-and-high shifter shaft locking ball, rod and spring, place low-and-reverse locking ball on spring, use special tool J-1008 to hold ball down and install low and reverse shifter shaft. Use tool J-1005 to install pin in low-and-reverse shifter shaft and fork. Install pipe plug in locking ball hole.

NOTE—On first transmissions, shifter lever pin (which engages notch in shifter shaft) had a square head and the notch had square sides. Second type has a tapered screw and slot. All replacement transmissions fitted with new type second-and-high shifter shaft. When installing these transmissions, check shifter lever and install new taper pin Part No.1422051 if necessary. Transmission shifter lever rattle may be corrected by installing new spring

CONTINUED ON NEXT PAGE

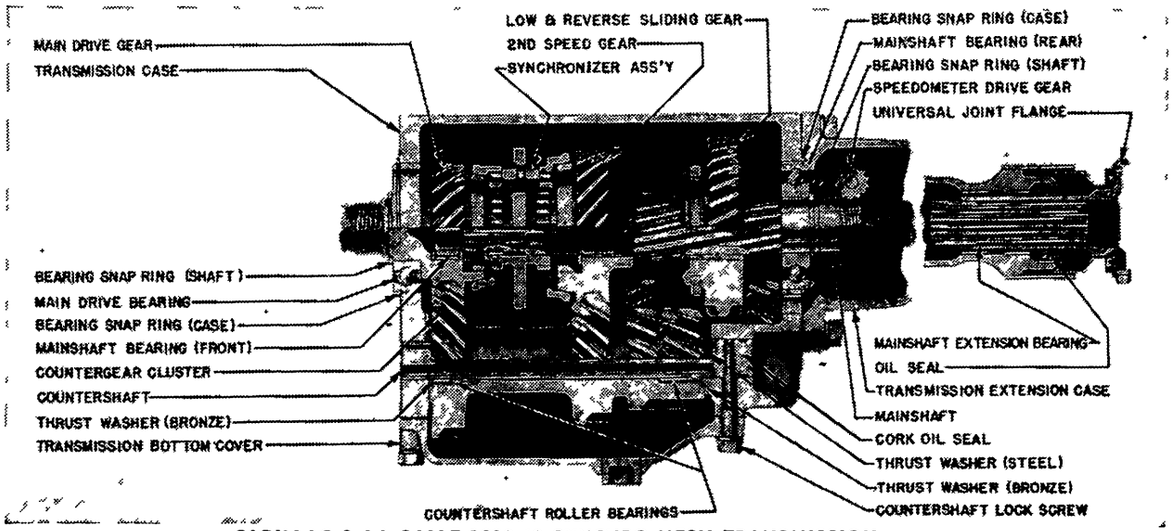

CADILLAC & LA SALLE 1938-48 SYNCHRO-MESH TRANSMISSION

CADILLAC & LA SALLE 1937-48 SYNCHRO-MESH (Cont.)

No. 1420183 and pin No. 1420200 (50, 60, 85), No. 1422110 (65, 70, 75). Install pin with hollow end under one spring coil (larger pin used on first 65, 70, 75 shifter lever must be serviced by same type).

Shifter Shaft Assembly ('38 On):—Install 2nd & high lever and shaft in neutral position making certain that shoe is properly located. Install interlock ball, pin and spring assembly in case, compress spring and locking balls with tool J-1168, install low-and-reverse shaft with sector in neutral position making certain that shoe is in place. Install new cork seals on outer ends of shafts (use tool J-1169), tap shifter levers into place on shafts (brace inner ends).

Synchronizing Unit:—Should not be dismantled and cannot be serviced except for removal of detent springs (installed directly below each pin cam and accessible without dismantling unit).

NOTE—Two types of synchronizing unit used in 1937 (second type had chamfer on high speed end of pin cams). To correct gear clash when shifting into second or high on 1937 cars, install new detent springs, Part No. 1419424.

Main Drive Gear & Clutch Shaft Bearing:—Bearing is press fit on clutch shaft. Use arbor press to remove or install (remove lock ring on shaft in front of bearing first).

Counter Gear Cluster:—Bearings are loose needle type and will fall out when shaft is removed. Use special loading tool J-1006 ('37-38), J-1184 ('39 On), assemble bearings (26 rollers and retaining washer at each end) before installing counter gear. Leave tool in gear until it is pushed out by countershaft when shaft inserted. Install thrust washer at each end with steel spacer between thrust washer and case at rear. See that locking screw hole in countershaft lines up with cover screw hole so that shaft will be locked in place when cover screws installed and that new cork seal installed in groove near rear end of shaft to prevent oil leaks. Countergear endplay should be .005-.012" (new), .018" (worn limit). NOTE—If endplay exceeds .018", install special oversize thrust washers.

Reverse Idler Gear:—Clearance on shaft should be .005-.010" (new), .015" (worn limit). When installing shaft, use special tool J-1010 to align front thrust washer (on 1939 and later models, thrust washers are steel-backed, babbitt faced type), see that thrust washers installed at each end of shaft with clip on rear washer engaging slot in case, use new cork seal in groove on rear end of shaft to prevent oil leaks, align locking screw hole in shaft and case (shaft locked by cover screw). Endplay should be .005-.010" (new), .015" (worn limit).

Extension Housing & Oil Seal (1942-48): Install extension housing on transmission case and tighten screws securely. Then install oil seal in rear end of housing using tool J-1354. Extension housing bushings are not furnished separately and housing should be replaced if bushing requires replacing. NOTE—Extension housing used on approximately first 3500 cars in 1941 permits use of speedometer pinion for standard rear axle ratio only and housing must be replaced if optional rear axle installed. Second type housing (with provision for installation of optional axle ratio speedometer drive pinions) only is furnished for service and is marked 'R' on case under speedometer cable opening. See Cadillac Shop Notes in Car Model Section for data.

BUICK-OLDSMOBILE 1938 SELF-SHIFTING

BUICK SPECIAL EIGHT, MODEL 38-40 (1938)
OLDSMOBILE SIX, MODEL F-38 (1938)
OLDSMOBILE EIGHT, L-37 (1937), L-38 (1938)

NOTE:—Oil Pump Change. New type single unit oil pump (same as 1939 type) used on all transmissions after Serial No. 14039. See 1939 article (following).

IMPORTANT NOTE FOR TOWING CAR:—These instructions supersede previous recommendations:

To Tow Car—Disengage clutch and block in this position. Do not operate engine. Move control lever to second forward or 'high' range.

To Start Car by Towing or Pushing—Disengage clutch, place control lever in second forward or 'high' range. When car speed of 10 MPH. is reached, turn on ignition, engage clutch (drives in 3rd gear).

DESCRIPTION:—Consists of an entirely self-contained unit mounted on clutch housing in place of regular transmission and made up of two separate gear systems: (1) Head Set controlled manually by shift lever under steering wheel, (2) Automatic Planetary system operated by oil pressure, controlled by shift lever, throttle lever and speed governor.

Head Set—Similar to conventional transmission and provides Reverse (Shift lever in 'R' position), Neutral (lever in 'N' or 'Off' position), Forward or Direct Drive (one speed only, head set engagement same for both 'F' positions on Buick, 'L' and 'H' positions on Oldsmobile).

Planetary System—Consists of two planetary gear reduction units (rear unit has double set of planetary gears but operates as a unit) providing four forward speeds automatically. Each planetary unit has a multiple disc clutch (engaged by oil pressure, disengaged by springs) and a brake band operated by a Servo in the bottom of the case (bands applied by springs, released by oil pressure). All four gear ratios are secured by combinations of the two planetary units as follows:

Low—Both planetary units operating in tandem.
Second—Front unit locked, rear unit operating.
Third—Front unit operating, rear unit locked out.
Fourth—Both units locked out, straight drive.

First and second speeds are available with shift lever in first 'F' position on Buick, 'L' position on Oldsmobile (car will start in first with control lever in second 'F' or 'H' position and quickly shift to third but this practise not recommended by manufacturer). Third and Fourth or Direct Drive are available with shift lever in second 'F' position on Buick, 'H' position on Oldsmobile. Particular gear ratio engaged depends on shift lever position, car speed (governor control), and throttle position (accelerator pedal interconnected with governor linkage) so that while the transmission gear ratios normally shift up from first through second and third to fourth automatically as the car speed increases, the shifts can be delayed by a more-than-normal throttle opening and it is possible to shift back from fourth to third at will for acceleration by depressing the accelerator pedal to a position beyond the wide open throttle position (at car speeds below 58-62 MPH., above this speed throttle is locked out so that fourth or direct drive is operative regardless of throttle position).

LUBRICATION:—Check oil level in transmission case every 1000 miles. Keep oil up to full mark on oil level indicator stick (low oil level will allow air to be sucked into system). Add oil through indicator stick hole in top of case (accessible by removing one screw, lifting off hole cover in front floor).

2000 Mile & 10,000 Mile Interval Servicing—At end of first 2000 miles, and at 10000 mile intervals thereafter, remove and thoroughly clean oil pan, adjust Servo Unit Bands, refill with new oil. Use new cork gasket when installing pan. NOTE—To drain oil, remove plug on lower front end of case and hoist rear end of car.

Oil Capacity:—3 qts. refill, 3½ qts. with pan dry.

ADJUSTMENT:—Servo unit bands should be checked and adjusted, if necessary, at end of first 2000 miles and at 10000 mile intervals thereafter.

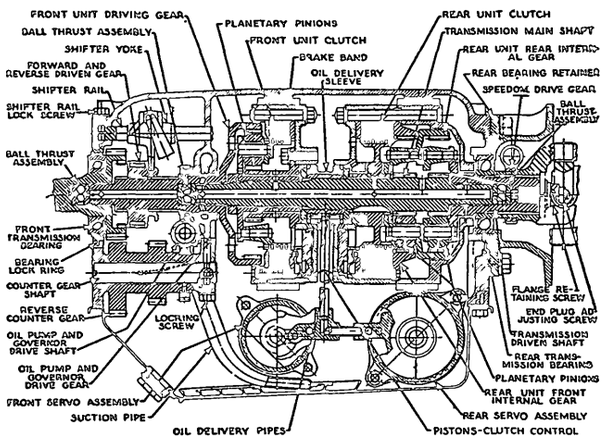

Servo Band Adjustment:—Remove floor mat and front center panel, raise car on lift or jacks, remove transmission case drain plug, drain old oil and remove oil pan. Install special gauge J-1127 on rear servo unit so that prong on gauge hooks over shoulder on servo housing and fork on gauge rests on servo plunger rod. If end of plunger rod extends less than ⅛" beyond gauge, no adjustment is required. If more than ⅛", band should be adjusted (requires two men). Use Servo Cam Release Bar J-1122 and force servo plunger into servo so that end is beyond gauge and, at the same time, loosen locknut and turn down adjusting screw on top of case to take up all slack in servo band. Remove cam release bar, re-install gauge, back off adjusting screw until rear of crown on outer end of plunger rod is flush with outer edge of gauge (plus or minus 1/32"), tighten lockscrew. Important—Final adjustment must be made by backing off screw, not by turning screw down. Adjust front servo unit in the same manner.

Throttle Control Lever Adjustment (Buick Models)—Revolve Cold Idle Cam on carburetor to 'hot' position. Set throttle lever stopscrew (idle speed adjustment) for 5-6 M.P.H. idling speed in third gear, close throttle against cold idle cam. Disconnect trunnion at end of throttle control lever on transmission case, move throttle control lever up until it is against stop in case, hold lever in this position, adjust trunnion on rod until pin will just enter hole in lever, lengthen rod by turning trunnion down an additional two complete turns, lock trunnion by tightening locknut on rod, connect trunnion to lever and check to see that detent

CONTINUED ON NEXT PAGE

BUICK-OLDSMOBILE 1938 SELF-SHIFTING (C nt.)

spring on rod above carburetor throttle lever is at right angles to lever. Depress accelerator pedal fully (stop on lower side contacts floor mat) and note whether overtravel of detent spring on trunnion at carburetor throttle lever is ⅛". Adjust by loosening clip attaching accelerator pedal link to accelerator rod and moving clip up on rod. With correct setting, throttle control lever on transmission will reach limit of downward travel when accelerator pedal touches floor board.

(Oldsmobile Models)—Disconnect throttle control rod from throttle control lever on transmission by removing clevis pin. Depress accelerator pedal fully and block firmly against floor while adjustments are made (do not use hand throttle). Disconnect trunnion on carburetor throttle valve lever, hold throttle lever in wide open position, push accelerator rod back toward dash to limit permitted by overrun mechanism on throttle cross-shaft, hold rod in this position and adjust trunnion so that pin will just enter hole in throttle lever with light finger pressure, tighten trunnion locknut and connect accelerator rod. NOTE—Throttle cracking linkage (starter connection) must be reset after making this adjustment—see directions in Carburetor tune up data on car model page. Release accelerator pedal, rotate fast idle cam to slow or hot idle position and see that it remains in this position while remainder of adjustments are made. Install clevis pin in end of throttle control rod (for use in checking, do not connect rod to transmission throttle control lever). Move throttle control lever to rear against stop, adjust clevis on rod so that pin just rubs against rear face of lug on top of throttle control lever, lock clevis by tightening locknut, assemble rod and lever. Check by noting that slight increase in resistance felt when accelerator pedal depressed to point where throttle is wide open (if car operated, transmission will remain in fourth gear at car speeds above 15 MPH. if pedal not depressed further, but will shift immediately into third gear if pedal depressed to floor).

Manual Control Lever Adjustment (All models):—Move shift lever under steering wheel to 'N' position (Buick), 'Off' (Oldsmobile), disconnect shift lever control rod from forward-and-reverse lever (front lever on left side of transmission case). Make certain that forward-and-reverse lever is in neutral position by moving lever forward as far as possible and then back to point where one notch (detent) is felt. Adjust clevis at forward end of control rod (Buick), rear end (Oldsmobile) until clevis pin will enter hole in forward-and-revere lever without disturbing position of lever or shift lever on steering wheel, lock clevis by tightening locknut ,assemble control rod to lever. Check setting by operating shift lever on steering wheel with button held in depressed position (to cut out action of detents in lever). Move lever up and down from 'N' or 'Off' position and note point where resistance of detents in transmission is felt (resistance to motion will increase when detent leaves 'off' notch). These points should be equally distant from center off position. Move lever down until transmission click is felt indicating that it is in either forward position. Arrow on shift lever should coincide with mark on shift lever box.

SERVICING (ON THE CAR):—Servo units, Governor, Oil Pump, and Oil Pressure Regulator can be adjusted or removed and serviced without removing transmission from the car.

Servo Units:—Rear Servo can be removed without disturbing Front Servo, but whenever Front Servo is taken out, the Rear Servo must be taken out first. To remove Rear Servo, with oil pan off, remove oil pressure line from pump to Front Servo, remove oil suction pipe, loosen locknuts and back off both servo band adjusting screws until bands are loose. Loosen attaching bolts to transmission case on both Servo units, remove bolts at rear Servo only. Slide rear unit toward rear of case until connecting oil pipe between units is free, lower Servo from case. When removing Front Servo, use extreme care to avoid damage to the two oil delivery pipes which enter this unit. Install Servos in same manner making certain that oil delivery pipes are in place and that brake band struts engage actuating levers properly. Adjust brake bands.

Governor Assembly:—To remove Governor, loosen clamp bolts in rear unit cam operating lever (rear lever on left side of case) and throttle control lever (lower lever). pry levers off shafts (not necessary to disconnect rods or to remove front forward-and-reverse lever). Take out bolts and remove transmission side cover. Pull out governor relay shaft upper pivot pin through top of case (pin is free fit in case and locked by side cover screws, lower pivot pin is light press fit in case but need not be removed), move shaft toward rear of transmission to disconnect linkage and clear governor. Take out attaching screws in governor flange, pull governor out of case. NOTE—Do not dismantle governor

Adjustment (Buick):—Set up dial indicator to measure governor travel (contact point on outer end of governor shaft). Set indicator at zero with governor at rest. Slowly spread governor weights by hand and note point where governor controlled valve throws to open position. Travel at this point (indicator reading) should be .200-.220". Slowly release weights and note point where valve closes. Travel should be .040-.030" from opening point (closing point more important, adjust to this dimension, compromising slightly on opening point if necessary). Adjust by changing position of inner nut on shaft (shaft slotted for screwdriver).

Adjustment (Oldsmobile):—Use dial indicator and check governor travel in same manner as on Buick (above). Travel from point where control valve opens to end of first stage (end point can be determined by decided increase in resistance felt at this point) must be equal to travel from point where control valve closes to the 'at rest' end. Adjust in same manner as on Buick. To adjust without using dial indicator, pry open lock plate fingers under outer locknut, hold inner nut with wrench, turn slotted shaft with a screwdriver in clockwise direction until control valve clicks open, then turn screw counter-clockwise until valve just clicks closed, finally turn screw additional ⅞ turn. Tighten locknut and secure lock plate. With this setting opening and closing of valve should occur near center of governor travel.

Oil Pressur Regulator Valve:—Use tool J-1125, remove oil pressure regulator valve plug and spring (spring should remain on plug as top coil is tight fit on plug body, if spring removed, replace with this tight coil up). Use tool HMO-65-6 to remove pressure regulator valve assembly from case.

Oil Pump:—To remove, take out oil pressure regulator valve (see above), remove oil pump attaching screws (six screws around edge of oil pump cover flange on right side of case, two inner screws attach pump cover to pump body and need not be disturbed), remove pump. NOTE—Pump is doweled to case and may need to be pried free, after pump is off dowel do not use excessive force which may damage bronze drive gears, if pump sticks turn propeller shaft slightly to line up double drive gears. To dismantle pump, remove two pump cover attaching screws, take off cover, invert pump and remove internal parts. To dismantle double pump driving gear assembly, press shaft out of outer drive gear (which drives small pump section). Take out pressure regulator valve body attaching bolts, remove regulator body and bronze separator plate. Reassemble in reverse order. When pressing drive gear on shaft, place .010" feeler between two gears on outer end of pump shaft, press gear on shaft until drag is felt on feeler. Make certain that both sections of pump turn freely and that pump cover gasket is in good condition. Oil pressure can be checked with gauge and should be 85 lbs. at 1000 R.P.M. (oil leaks and low pressure will cause faulty transmission operation).

REMOVAL & INSTALLATION: For each model:

Transmission Removal (Buick):—Remove rear axle (see car model pages for directions), push front seat back, remove floor mat and center floor panel, disconnect speedometer cable at transmission, remove two upper transmission-to-flywheel housing bolts. Jack up car slightly at front end. Remove clutch housing underpan and clutch release yoke, disconnect rod on throttle control lever on left side of case and manual shift rod at clevis connection. Install transmission lifting tool J-1129 in front compartment, engage lifting cradle securely under transmission case and hook cables on hoist hook. Tighten hoist cable just enough to support transmission, make certain that hoist is locked, take out two remaining transmission mounting bolts, slide transmission to rear and work clutch release bearing retainer out with transmission assembly.

Transmission Removal (Oldsmobile):—Remove foot accelerator pad, floor mat and center floor pan. Disconnect speedometer cable, front propeller shaft at rear of transmission, take out two upper transmission mounting bolts. Jack up car approximately 20" at front end, 4" at rear. Free center propeller shaft bearing bracket from frame and allow bracket to drop down as far as possible (not necessary to disconnect rear universal). Remove clutch housing underpan and clutch negative return spring bracket. Disconnect throttle linkage at throttle control lever and manual shift rod at forward-and-reverse shift lever on left side of transmission case. Install hoist in front compartment, engage saddle securely under transmission, hook saddle cable to hoist making certain that front cable are looped in front of oil pump (right side), shifter shaft (left side), raise transmission slightly, make certain that hoist is locked, take out lower mounting bolts moving transmission back as left hand bolt strikes clutch throwout yoke (not necessary to remove yoke). Move transmission to rear (turn universal flange horiztonal to clear shaft).

Installation (All Models):—Shellac new gasket on front of housing, aligning oil return hole in gasket with drain hole in transmission, install aligner

CONTINUED ON NEXT PAGE

BUICK-OLDSMOBILE 1938 SELF-SHIFTING (Cont.)

studs in two upper mounting bolt holes in flywheel housing. On Buick models, install clutch release bearing on retainer and place assembly in flywheel housing with gasket and spring washer (special 'waved' type No. 1304037 used instead of regular 'cupped' type). Use hoist to raise transmission and slide it forward on aligner studs being careful that weight is not allowed to rest on driven member hub.

SERVICING (ON THE BENCH):—Disassembly. Use transmission stand to hold transmission in inverted position on bench, remove oil pan (if studs replaced, use new studs of same length and use white lead on threads to prevent oil leaks). Remove control levers on side of case, remove side plate and gasket. On Buick models, remove valve body and linkage leaving capscrew in body to retain dampening valves (take out upper governor shaft pivot pin to free shaft). On Oldsmobile models, manufacturer recommends that valve control bracket and oil control unit not be disturbed under any circumstances. Remove oil pressure regulator, oil pump, and governor (see directions in first servicing section above). Disconnect oil line between pump and servo body, remove pump intake pipe and gasket. Loosen locknuts and back off servo adjusting screws on top of case until screws are free (use pry bar J-1122 to take strain while turning screws). Remove both servo mounting screws evenly and remove servos together being careful not to bend connecting tubes. Remove head set reverse idler and countershaft lockscrews, take out shafts (if shafts stick, use screwdriver in slot at forward end to turn shaft while applying pressure at rear end), mark shafts and replace in same position (shafts are same dimension but are selective fit in case and should not be interchanged). Remove reverse idler gear and counter gear cluster being careful not to lose bronze thrust washer at rear end. Use special tool J-1149 to expand snap ring on clutch gear bearing (insert tool in recess in front end of case), withdraw clutch gear and bearing assembly at front end keeping forward end tilted down to prevent loss of ball thrust bearing in gear hub. Move shifter shaft to reverse position, take out shifter shaft lockscrew, remove shaft (being careful not to lose detent ball), shifter fork, and sliding gear. On Buick, remove ball joint and universal joint (light press fit, no puller required). On Oldsmobile, loosen locknut and remove endplay adjusting screw (in center of shaft at universal yoke), remove joint flange retaining screw (use ⅞" socket holding flange with tool J-1123 meanwhile), remove flange by tapping lightly with hammer. Remove center bearing cap (reverse counter gear bracket) and rear bearing retainer (rear endplate). Rotate servo bands so that ends are at bottom of case and clamp on drums (use modified brake cylinder clamp). To lift planetary unit assembly out of case, use J-1148 (Buick), handle of J-1123 (Oldsmobile) inserted in end of driven shaft to lift assembly up slightly and to rear until driving gear shaft clears front of case, tilt front end up and lift assembly out. NOTE—Front planetary unit driving gear is free on planetary assembly and will pull off if any lifting force applied. All lifting must be at tool on rear end.

Transmission Assembly:—Reverse disassembly directions given above. When installing clutch gear make certain that ball thrust bearing is in place in hub. On Buick models, four snap ring widths are furnished to control end play at front bearing. Select widest snap ring which can be tapped into groove as follows:

Part Number	Width	Color Marking
1304030	.083"	White
1304031	.087"	Yellow
1304032	.071"	Green
1304033	.039"	Red

Adjust main shaft endplay after all units are installed in place with universal joint flange on and retaining screw tightened (on Oldsmobile make certain that cork oil seal on screw is in good condition) by turning adjusting screw in as far as possible and then backing screw off ⅓ turn and lock with locknut. See that clutch gear turns freely.

TROUBLE SHOOTING:—Causes of transmission troubles may be determined from following table.

Transmission Fails to Shift:

1. From High to Low (or shift is delayed) with cold oil—Oil is too heavy, change to lighter oil.
2. From Fourth to Third (or pedal pressure excessive)—Throttle control lever adjustment wrong (rod too long). See Adjustment section above.
3. From Low (shift lever in either low or high position)—No oil, Pressure Regulator sticking, oil pump not working, oil leaking inside case. Check oil level, see that pressure regulator valve is free in body. Check oil pump pressure.
4. No Automatic Shift (1st to 2nd, 3rd to 4th)—High unit or valve not working properly. Valve sticking. Governor defective or linkage binding.

Transmission Shifts Incorrectly:

1. Automatic shifts (1st to 2nd, 3rd to 4th) are erratic or occur at wrong speeds. Governor out of adjustment. See Adjustment section above.
2. Shift from First to Third is severe or violent—Throttle control lever adjustment incorrect (see Adjustment section), clutch plates defective or scored. If this action noted at low speeds after high speed driving, oil may be too light.
3. Transmission slips when shifting from First to Third. Pressure downshift (3rd to 1st) is below 4 M.P.H. with hot oil. Throttle control lever adjustment incorrect. Clutch plates worn.
4. Same as No. 3 except that downshift is too high (10 M.P.H.). Transmission may hunt or shift rapidly between first and third. Internal oil leak in transmission allowing oil pressure to drop at high speeds.

Shift Lever will not move between High and Low while car is operating.

1. Detents in shift lever and transmission not aligned. See Manual control lever adjustment.

Transmission is Noisy:

1. Loud chatter or rattle in transmission with excessive accelerator pedal vibration. Air in system caused by low oil level. Check oil level.
2. Slight buzzing noise in transmission with light pedal vibration. Caused by oil pressure regulator when oil is cold. Not serious. May be corrected by replacing oil pressure regulator or spring, or oil pump assembly.

OLDSMOBILE 1939 SELF-SHIFTING

ALL MODELS (1939)

SERIAL NUMBER:—First No. 18000. All transmissions with serial numbers above 18000 are new 1939 type NOTE—New type single unit oil pump (described below) used also on 1938 units after No. 14039.

SPECIAL TOWING INSTRUCTIONS: To tow or push cars equipped with automatic transmission, proceed as follows: Move manual shift lever to neutral position, keep ignition key turned off (clutch pedal need not be disengaged). If car will operate only in 1st speed and must be towed, rear wheels must be raised clear or drive shaft disconnected.

DESCRIPTION:—Design same as type used on 1938 cars except as follows:

Steering Column Shift Lever—New design used in conjunction with redesigned forward-and-reverse lever. All control adjustments same as for 1938.

Rear Unit Accumulator—Designed to eliminate noise or jerk when transmission shifts from third back to first gear (high range) with hot oil. Accumulator assembled in rear servo and special one way ball check valve installed in oil control unit valve body. When downshift from third to first occurs, oil in compensator system is trapped by check valve (while oil in clutch system allowed to escape freely) so that rear brake band engages gradually until clutch is disengaged. Oil pressure in compensator system is held to 100 lbs. maximum (exhausts through accumulator bleed slot when pressure exceeds 100 lbs.).

New Single Unit Oil Pump—Mounted in same manner as 1938 type, driven by gear on headset mainshaft (operates whenever rear wheels revolving). NOTE—This oil pump used on 1938 transmissions beginning with Serial No. 14039 and interchangeable with two-unit pump used on earlier models.

Oil Control Unit (Valve Assembly)—New type with check valve for Rear Accumulator control. Interchangeable with 1938 type by removing check valve

Governor—Three stage type driven by oil pump gear (in tandem with oil pump).

Mainshaft Front Pilot Bearing—New needle bearing type (changed from plain bushing).

Clutch Brake Washer—Used on all cars with single unit oil pump to prevent clutch spin. Consists of dished bronze friction washer assembled on forward end of front unit drive gear shaft within main drive gear (clutch shaft gear). See servicing data below for washer installation.

LUBRICATION:—Capacity 3 qts. (refill), 3½ qts. (dry—when pan removed and cleaned). Recommended lubricant (engine oil) for all seasons as follows:

Summer	SAE #30
Winter (Below 45° F.)	SAE #20W
Winter (Below 0° F)	SAE #10W

See preceding article for checking, cleaning, and refilling directions.

ADJUSTMENT & SERVICING:—All adjustments and servicing operations same as for 1938 cars except as noted below. *See preceding article for data.*

Governor Adjustment:—Governor controls automatic upshift from 1st to 2nd (10 MPH., 1300 RPM) and 3rd to 4th (1350 RPM., 22 MPH. with minimum throttle) at part throttle and should be adjusted so that these shifts occur at the correct speed in the first stage of the governor travel. To adjust (with transmission side cover removed to expose governor), hold inner shaft with screwdriver and turn nut on outer end of governor shaft counter-clock-

CONTINUED ON NEXT PAGE

OLDSMOBILE 1939 SELF-SHIFTING (C ntinu d)

wise until front unit valve just clicks open, then turn nut clockwise until valve just clicks closed, finally turn nut additional ⅞ turn clockwise. This will bring shift at center of governor travel. Replace lockplate and nut and lock securely.

Oil Pump Servicing:—To remove pump, remove Pressure Regulator Valve, remove oil pump to transmission case attaching bolts (two bolts near center of cover hold pump cover on pump body and need not be removed), remove pump. NOTE—Pump is doweled on case and may need to be pried off dowel pin. With pump free of dowel, do not use force to remove pump which will damage drive gear (use bar or screwdriver to turn front universal joint slightly to line up gears which will allow pump to be pulled out easily).

Oil Pump Disassembly—Remove two pump cover to body screws, lift off cover and gasket. Press oil pump driven gear off shaft (serrated fit on shaft), remove thrust washer and snap ring, invert pump and remove gears and shaft. To disassemble relief valve, remove plug on side of pump cover, remove regulator spring and plunger, take out capscrews mounting regulator valve body on pump, valve body and bronze separator plate.

Oil Pump Assembly—Assemble pressure regulator (tighten mounting screws evenly to prevent distorting valve body) and make certain that regulator valve is free in body after installation. Insert shaft through pump body, assemble snap ring and thrust washer on shaft making certain that snap ring indexed in washer undercut, press driven gear on shaft so that it seats firmly against thrust washer, install pump idler gear on shaft, install plunger, regulator spring and plug in pump cover and make certain that brass sealing gasket in good condition. Use new cover gasket and install pump cover, check gear endplay (should be .001-.003". NOTE—Cover gaskets available in two thicknesses (.005" thick—has 1 notch in edge, .007" thick—no notch), use .005" gasket first and if shaft does not turn freely, install .007" gasket. If shaft still does not turn freely, it is out of alignment (do not use more than .007" gasket thickness under cover).

Oil Pump Pressure Test—Pump pressure should be tested before dismantling transmission when trouble experienced (such as hunting or slipping particularly in 1st to 3rd shift). To check pump pressure, use 200 lb. gauge connected to plug opening in oil pump cover and operate car as follows: With transmission oil hot, shift transmission into high range and slow car speed down until transmission shifts into 3rd speed. In 3rd gear at car speed of 15 MPH., oil pressure should not be less than 78 lbs. If pressure below this figure, check for oil leaks or weak pressure regulator valve spring (see servicing data below). If pressure is above 78 lbs. after replacing spring but transmission performance is unsatisfactory, clutch plates are worn

Pressure Regulator Valve:—Valve serviced separately (Part No. 1305224) and main and bumper springs available in package sets as follows: No. 1394616 (for Transmissions before Serial No. 18000), 1394617 (Serial No. 18000 up). Bumper (cushion) spring should be installed with tight coil on top (this end coil engages valve stem and spring should be removed from valve only for replacement). NOTE—Wrong spring will cause downshift from 3rd to 1st. to occur at higher than normal speed.

Clutch Brake Washer:—Must be used on all cars with single unit oil pump to prevent excessive clutch spin. Install washer on front unit drive gear shaft (tangs or lugs on washer engage slots in shaft) with dished and pointed face forward toward main drive gear (clutch shaft gear).

Rear Unit Accumulator:—Serviced as an assembly only (Part No. 1396935). Mounted as part of rear servo and removed and installed as an assembly

Transmission Disassembly:—Disassembled in same manner as 1938 type. Ball thrust washer in clutch shaft drive gear is retained by pilot needle bearing and snap ring (Transmission Serial No. 18000 up) and will not drop out as gear removed as on earlier models. Brake washer is used on shaft at rear of clutch shaft drive gear on all units with single unit oil pump (see Clutch Brake Washer data above). Reverse idler gear should be installed with pointed side of teeth toward front of transmission.

CADILLAC 1941, OLDSMOBILE 1940-41 HYDRA-MATIC DRIVE

OLDSMOBILE 6 & 8, ALL MODELS (1940-41)
CADILLAC, ALL MODELS (1941)

IMPORTANT SERVICE NOTE:—Towing Car—Control lever must be placed in 'N' (neutral) position if car is being towed.

Starting Engine by Pushing or Towing Car—Control lever should be placed in 'N' (neutral) position until car speed of approximately 20 MPH. is reached, control lever should then be moved to 'HI' position and engine will be cranked through gears.

Parking With Transmission in Gear—To park car in gear (for parking on hills), engine should be stopped with control lever in forward driving position (HI or LO), control lever should then be moved to 'R' reverse position. This locks the drive system so that car will not move.

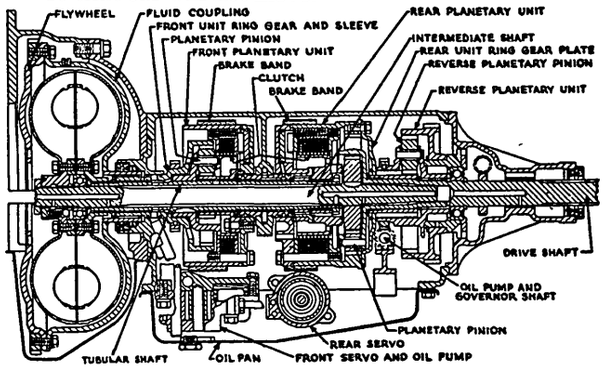

Reverse Shift—To engage reverse, with car completely stopped, control lever should first be moved momentarily to 'LO' position and then quickly and firmly moved to 'R' position.

NOTE:—Hydra-Matic Drive used on all models is similar in design except as noted below (Starter Interlock used on 1941 Oldsmobile models only—not used on 1940 models).

Fluid Coupling—Replaces conventional clutch on Hydra-Matic Drive cars. Refer to Fluid Coupling article in Miscellaneous Section.

Starter Interlock—Consists of a bellcrank linked to the starter motor pinion shift lever which 'kicks' the steering column control lever into the 'N' or neutral position when the starter pedal is depressed to start the engine (if control lever has been left in any other position than neutral). This linkage is adjustable (see Adjustment directions below).

Cadillac Type—Cadillac Hydra-Matic Drive is similar in design to Oldsmobile type except for heavier construction and special double reduction or two-unit rear planetary unit (consists of two sets of planetary gears in tandem). This type also has Interlock device which prevents starting of engine unless control lever is in Neutral.

DESCRIPTION:—The Hydra-matic Drive consists of a Fluid Coupling (replacing clutch used with conventional transmission) combined with a self-shifting transmission which differs from the type used on previous Oldsmobile models as follows:

Fluid Coupling:—Unlike other designs in that driver or impeller (rear set of vanes) is not driven directly by the engine crankshaft. The engine drives the flywheel housing (fluid coupling case bolted on flywheel) and the front planetary unit ring gear. The drive is then taken through the planetary gear set and back to the fluid coupling through a tubular shaft, through the fluid coupling, and back to the transmission through the inner intermediate or transmission mainshaft. Fluid coupling is kept filled with oil from transmission case by forward oil pump and does not require attention.

Planetary Units & Servos:—Design changed and new type Servos used to actuate units as follows:

Front Planetary Unit—Planetary unit is similar to design used on previous self-shifting transmission with actuating brake band and hydraulically operated clutch. Front Servo unit (which controls front planetary unit brake band) is new design in which brake band is applied by hydraulic pressure and is released by spring pressure. Servo unit is combined with front oil pump which is built in servo housing and has the oil pressure regulator assembly mounted on the housing also. This front servo is not adjusted in same manner as on previous models (see Adjustment instructions below).

Rear Planetary Unit—This unit is new design and consists of a single planetary gear set. It is controlled by the Rear Servo unit which is similar to previous type except that band is applied by both spring and hydraulic pressure. The usual hydraulically operated disc clutch is used (all clutches have six pistons instead of three as used on former type). Rear Servo is adjusted in same manner as former type (see Adjustment instructions below).

Reverse Planetary Unit—This unit is entirely new and replaces the "Headset' or mechanically engaged reverse gear used on former models. It consists of an additional planetary gear unit in the transmission case in back of the Rear Planetary Unit. This unit does not have the customary brake band and servo unit and is actuated by a toothed pawl in the right side of the transmission case which engages teeth on the rim of the reverse gear planetary ring gear so as to hold the ring gear stationary when the lever on the steering wheel is placed in the 'Reverse' position.

CONTINUED ON NEXT PAGE

1940-41 HYDRA-MATIC DRIVE (Cont.)

Oil Pumps & Control Valve:—Entirely new design and consist of two separate pumps as follows:

Front Oil Pump:—This pump is built-in front servo housing and is driven by a gear on the front planetary ring gear (drive gear) sleeve. It operates whenever engine is operating and supplies oil for transmission lubrication and for the Fluid Coupling. It also supplies oil for transmission operation (servo and clutch actuation) when car is first started up, this latter function being taken over by rear oil pump as soon as car speed reaches 20 MPH.

Rear Oil Pump:—Mounted as an assembly with the Control Governor and is driven by a gear on the transmission driven shaft (in front of reverse planetary unit). At car speeds above 20 M.P.H this pump develops sufficient pressure to operate planetary gear servos and clutches. At all speeds above this point, front pump provides oil only for transmission lubrication and to keep fluid coupling case filled (fluid coupling has return pipe and control valve through which excess oil is returned to transmission case so as to provide oil circulation for temperature control).

Pressure Regulator Valve—Mounted on front servo housing. Controls oil pressure and delivery from front and rear oil pump as detailed above. See 'Checking Oil Pressure' below for oil pressure checking and servicing data.

Main Oil Control Unit—Mounted on right hand side of transmission case under side cover plate. See Servicing data below for removal and installation

Control Lever on Steering Wheel:—New design lever with four positions—High—Low—Neutral—Reverse. This lever is linked to relay lever and manual shift lever on transmission case by a control rod but does not engage gears as in former designs (no Headset used). Lever case is illuminated by small #51 bulb (see Servicing data below for bulb replacement) and detents are used to locate lever in each position. See Adjustment Section below for Manual Control Lever Linkage adjustments.

Carburetor Throttle Linkage:—Controls speed at which actual gearshifts occur and must be adjusted exactly as detailed below (see Adjustment Section).

OPERATION:—Fluid coupling provides slip at idling speed so that car does not move. When control lever on steering wheel is placed in 'High' or 'Low' position and engine is accelerated, car moves forward and shifts occur automatically as speed increases (in 'low' position, car shifts only from low to second; in 'high' position, car shifts from first to second to third to fourth or direct drive as the speed is increased), the fluid drive transmitting the engine torque with practically no slippage at speeds above idling speed. The speed at which shifts occur is controlled by the Governor with an overriding control by the accelerator linkage by which shifts are delayed or retarded with a wide open throttle so as to provide improved acceleration and power when this is desired. In normal operation the 'Low' range is not used and the lever is moved directly to 'High' position when the car is started up. In this position no further attention is required and car shifts through to direct drive at the proper speed. To reverse the car, the lever is placed in the 'Reverse' position which engages the reverse pawl so that the reverse planetary gear set ring gear is held stationary. Operation of the transmission in each gear ratio is as follows:

First or Low Gear—Brake band of front planetary gear unit is applied by hydraulic pressure and brake band of rear planetary unit is applied by spring and hydraulic pressure. Both planetary unit clutches are released (no oil pressure) and engine drives through both planetary units in tandem providing maximum gear reduction (reverse planetary unit ring gear is released and this unit does not operate).

Second Gear—Front planetary unit brake band is released by hydraulic pressure and clutch is engaged by hydraulic pressure so that this unit is locked and rotates as an assembly. Engine then drives through rear planetary gear unit only.

Third Gear—Engine drives through front planetary gear unit in same manner as for low gear (brake band applied and clutch released) and then drives both the ring gear (directly) and the sun gear (through the fluid coupling) of the rear planetary unit (brake band is released by hydraulic pressure but clutch is also engaged which is unlike low gear operation) so that a gear reduction less than either low or second gear is obtained through the rear planetary unit pinion plate and drive shaft.

Fourth Gear or Direct Drive—Both planetary gear units are locked out (brake bands released, clutches engaged) so that the engine drives straight through the transmission for direct drive to the rear wheels.

Reverse Gear—In reverse gear, the reverse gear planetary ring gear is locked (by reverse pawl engaging teeth on ring gear rim). The engine drives through the front planetary unit in the same manner as for low and then drives both the pinion plate and ring gear of the rear planetary unit (rear unit brake band released by hydraulic pressure). The rear unit ring gear drives the sun gear of the reverse planetary unit and the drive is taken through the reverse unit pinion plate to the transmission drive shaft (shaft is also driven directly by pinion plate of rear planetary unit so that final torque is combination of these two drives).

ADJUSTMENT (OLDSMOBILE):—Linkage should be checked, and adjusted if necessary, whenever it has been disconnected or disturbed by removal of other units, carburetor adjustment, etc. Adjust linkage exactly as follows:

Manual Control Lever Linkage (1940-41):—Take out clevis pin in lower control rod (forward rod) at intermediate lever on lower control relay bracket (on cross-member at left of flywheel housing) and lower control relay rod (rear rod) at shift lever (inner lever) on left side of transmission case. Set control lever on steering wheel in 'R' (reverse) position and make certain that poppet ball engages detent notch. Move intermediate lever so that hole in lever lines up with hole in bracket, insert special gauge No. J-1469 through both holes to hold lever in this position while adjustments are being made. Move manual shift lever on transmission (inner lever on outside of case) toward rear as far as possible (to make certain that lever is in extreme rear position, rotate propeller shaft by hand until pawl is felt to engage and lever is against stop). Adjust lower control relay rod length (loosen locknut and turn clevis on rear end of rod) so that rod can be connected to transmission lever without disturbing lever position, connect rod being certain that waved (anti-rattle) washer is in place and that clevis locknut is tightened. Remove tool J-1469 from intermediate lever, press back on intermediate lever so that rear rod and manual shift lever held in rear position against reverse stop, adjust length of lower control rod (forward rod) by loosening locknut and turning clevis on rear end of rod so that rod can be connected without disturbing position of steering column lever or intermediate lever. Connect rod making certain that waved (anti-rattle) washer is in place and that clevis locknut is tightened. Check control lever in all positions to make certain that it operates freely.

Carburetor Throttle Control Linkage (1940 Models): Determines shifting speeds. Adjust carburetor for idle speed and fast idle throttle opening (see Oldsmobile car model page and Carter WA1 & WDO carburetor articles in 'C' Section for directions). Then disconnect carburetor throttle rod at carburetor, bell crank to throttle cross-shaft rod at bell crank, cross-shaft to transmission rod at transmission case lever. Install special Oldsmobile setting gauge J-1486 on bell crank, adjust trunnion on throttle rod at throttle lever so that, when rod connected and carburetor throttle valve held closed in slow idle position, rod contacts both legs of gauge. Tighten trunnion locknut, connect rod, remove gauge. Install special setting gauge J-1470 between lever on right end of cross-shaft and toeboard to establish correct clearance (CAUTION—Clearance should be 9/16"—6 cyl. cars, 3/8"—8 cyl. cars, make certain that correct end of gauge marked '6' or '8' used on each model). Press back on cross-shaft lever to make certain that gauge is against toeboard, hold carburetor throttle lever closed in slow idle position, adjust trunnion on bell-crank end of cross-shaft rod so that it enters bell-crank freely, tighten locknut, connect rod, remove gauge. Check cross-shaft stopscrew by rotating throttle cracker lever on left end of cross-shaft to limit of cross-shaft travel with carburetor throttle valve wide open, adjust stopscrew to just contact stop on cross-shaft bracket. Tighten locknut and release cross-shaft. Make certain that carburetor throttle closed in slow idle position, press back on throttle lever on side of transmission case so lever against stop, loosen locknut and adjust clevis on end of cross-shaft to transmission lever rod so that rod can be connected without disturbing position of cross-shaft or transmission lever, tighten locknut and connect rod. Check entire throttle linkage for free operation.

Throttle Control Linkage (1941 Models):—Disconnect throttle rod at lever on left side of transmission case (outer lever). Set carburetor throttle stopscrew for 375 RPM engine speed in neutral (hot or slow idle speed—see Oldsmobile article for carburetor adjusting directions). Remove trunnion nut lock on idler lever at rear end of carburetor throttle rod (right side of cylinder head), adjust length of throttle rod by turning trunnion nut until special gauge J-1469 slips freely through holes in accelerator linkage bellcrank and bracket (on left side of engine), tighten trunnion lock and remove gauge. Move transmission throttle lever (outer lever on left side of transmission case) to extreme rear position against idle stop, and with carburetor in slow or hot idle position, adjust length of transmission throttle rod by loosening locknut and turning clevis on rear end of rod so that rod can be conected without disturbing position of levers, then shorten rod by one additional full turn of the clevis, tighten locknut and connect rod by inserting clevis pin

CONTINUED ON NEXT PAGE

1940-41 HYDRA-MATIC DRIVE (C nt.)

and installing cotter pin. Adjust rod connecting accelerator pedal idler lever and bellcrank on left side of engine so that clearance between idler lever and bead on toepan is 3/32-5/32" with carburetor in slow or hot idle position. Adjust Throttle Cracker and Fast Idle (see Carburetor adjusting instructions in Oldsmobile article).

Starter Interlock Adjustment:—This adjustment should be made only after manual control has been properly adjusted (see above). Disconnect battery cable at starter motor (to prevent starter cranking engine), place steering column control lever in 'N' or neutral position, fully depress starter pedal and hold pedal in this position while adjustment is being made. Adjust length of rod linking starter pinion shift lever and interlock bellcrank so that clearance between face of bellcrank and lower face of steering column control shaft shift lever is .030-.060". Check operation by placing steering wheel control lever in all other positions than neutral. If control is not returned to neutral 'N' position in each case, recheck adjustment.

ADJUSTMENT (CADILLAC):—Adjust linkage exactly as directed below.

Manual Control Lever Linkage:—Remove clevis pin from lower end of lower control rod (at transmission manual shift lever). Move steering wheel control lever in Reverse position. Move manual shift lever on transmission to rear as far as possible (Reverse position), check this by rotating propeller shaft by hand until reverse anchor is felt to engage. Adjust clevis on lower end of control rod so that clevis pin can just be inserted without disturbing position of rod or lever, connect rod. Check control lever for free operation in all positions.

Throttle Control Linkage:—Make certain that carburetor set for hot or slow idle speed of exactly 375 RPM (use tachometer such as KMO-298 electric type). See that throttle valve completely closed with stopscrew against low step of fast idle cam. Remove cotter pin and anti-rattle spring from upper end of intermediate throttle rod and disconnect throttle rod at transmission lever (lower lever on transmission case). Snap special adjusting tool J-1653 in place on upper end of intermediate throttle rod at relay shaft lever on front of dash. Loosen locknut and turn adjusting nut on carburetor end of throttle-to-relay rod until the adjusting tool contacts both the relay shaft at the distributor support and the projection on the intermediate throttle rod. See that throttle lever on transmission case is moved to rear as far as possible, adjust trunnion on transmission end of throttle rod so that pin can be installed without moving throttle lever from rear position against stop and without disturbing linkage, connect rod. Remove adjusting tool, re-install cotter pin and anti-rattle spring.

SERVO-BAND ADJUSTMENT (ALL MODELS):—Servo-bands should be adjusted at end of first 5000 miles and at 10,000 mile intervals afterward. Oil must be drained and oil pan must be removed for this adjustment (can be combined with regular draining and refilling operation).

CAUTION—Front and rear servo bands are adjusted differently and each band must be adjusted exactly as directed below. No band is used on the Reverse planetary unit (pawl on case locks ring gear by engaging teeth on rim of gear).

Front Servo Band—Remove transmission case oil pan and snap-in cover in floor pan over adjusting screw. Loosen adjusting screw locknut, install special adjusting tool J-1459 over capscrew in front unit (insert tool from below through oil pan opening), tighten adjusting screw on top of case until front unit drum just cannot be moved in either direction, then **back off adjusting screw exactly 8 turns**, tighten adjusting screw locknut taking care that adjusting screw does not turn. NOTE—It is extremely important that adjusting screw be backed off exactly 8 turns from point where drum just cannot be turned—mark screw position at this point and count turns carefully as screw is backed off.

Rear Servo Band—Remove transmission case oil pan and snap-in cover in floor pan over adjusting screw. Use servo cam release bar and force rear servo plunger into servo beyond servo gauge. Loosen adjusting screw locknut and turn adjusting screw down to take up all slack in servo band. Install special servo gauge J-1460 on bottom of servo, back off adjusting screw until end of servo plunger is flush with outer edge of gauge (plus or minus 1/32"), tighten adjusting screw locknut. Check adjustment by working servo plunger with cam release bar.

LUBRICATION:—Hydra-matic drive case should be drained and refilled with new Hydra-matic Drive Fluid at end of first 5000 miles and at 10000 mile intervals afterward (Oldsmobile), end of first 6000 miles and at 12,000 mile intervals (Cadillac). Servobands can be adjusted at same time with oil pan off—see above. Fluid level should be checked at 1000 mile intervals (Cadillac), 2500 miles (Oldsmobile) and fluid added to keep level at 'full' mark as follows:

Checking Fluid Level—Run engine for several minutes, then stop engine and allow car to stand for at least one minute before checking level (this is important because transmission fluid is supplied to the fluid coupling and fluid coupling must be full of oil when checked). Remove sheet metal cover in floor pan over fluid level indicator (right front corner of transmission case), remove indicator to check level. Keep level at 'Full' mark on indicator.

Draining Hydra-matic Drive—Transmission case and fluid coupling are drained separately. Remove plug at front end of oil pan (to drain transmission), on front face of flywheel (to drain fluid coupling). NOTE—When refilling after draining transmission, add 6 qts. of fluid (Oldsmobile), 8 qts. (Cadillac), run engine for approximately 5 minutes, then add remainder of fluid (see Capacity data below).

Capacity (Cadillac)—11½ qts. when unit has been drained. Use only Cadillac Hydra-Matic Fluid (one type for all-season use).

Capacity (Oldsmobile)—9 qts. (when transmission case and fluid coupling have been drained), 9½ qts. (if oil pan has also been removed for cleaning), 10 qts. (if transmission has been disassembled). Use only Oldsmobile Hydra-Matic Fluid (one type for all-season use). NOTE—For emergency use only, transmission can be operated with good quality SAE. #20W engine oil. Replace oil as soon as possible with genuine Hydra-Matic Fluid.

Oil Pan & Screen—See Servicing directions below for oil pan removal. Clean oil screen when pan removed. CAUTION—When installing pan, make certain that copper washers used on 3 screws on left hand side and 2 screws at rear of case.

CHECKING OIL PRESSURE:—If transmission operation not satisfactory check to make certain that oil pressure sufficient for correct operation as follows:

To Check Oil Pressure—Use special service fixture J-1467 and a reliable 100 lb. oil pressure gauge. Remove the plug on the transmission side cover plate, remove plug from governor sleeve by threading standard ¼" capscrew into plug and removing plug through side cover plate hole. Assemble J-1467 fixture in place in side cover plate and governor housing using extreme care not to cause any bind in governor assembly. Assemble pressure gauge to fixture plugs so that gauge can be read while car being operated. Operate car on road until transmission fluid is hot, see that control lever in high range, allow car speed to drop to 20 MPH and note gauge reading. Oil pressure must not be less than 75 lbs.

Low Oil Pressure Correction—If pressure less than 75 lbs., check for excessive oil leakage in transmission or oil regulator valve assembly, see that oil regulator valve body is tight, check for sticking regulator valve or weak valve spring (substitute new spring and recheck pressure). Inspect for leak in main control valve body or at delivery tube connections. Check oil pumps for worn gears or excessive endplay.

TRANSMISSION REMOVAL (OLDSMOBILE):—Raise car and jack up all four wheels securely approximately 8" above floor. Remove foot accelerator pad, floor mat, center floor pan. Disconnect propeller shaft at rear universal joint, remove by sliding shaft out at splined joint. Remove flywheel housing pan. Drain transmission and flywheel by taking out both drain plugs. Remove outer throttle lever from transmission case, disconnect control rod from manual shift lever. Remove two upper engine mounting bolts, remove master cylinder to brake shaft bracket, disassemble strut from shaft, remove clevis pin from lower control relay rod. Raise engine approximately 1" off mountings with jack just forward of crankcase drain plug (use block of wood on jack). Remove 3 bolts from each side of cross-member at frame side rail, remove cross-member by tipping top toward front of car and moving cross-member forward. Install transmission lifting tool J-1129 in front compartment over floor pan opening (CAUTION—use safety extension legs J-1129-40-1). Place saddle at bottom of transmission, work cables through pan opening and hook both cables onto lifting tool cable snap. Center saddle on transmission pan, hoist transmission just enough to take strain off mounting bolts, remove 5/16" bolts holding fluid flywheel cover on flywheel, remove five ½" bolts holding rear half of bell housing to front half. Lower engine slightly until top of bell housing is flush with top of opening in floor pan, thread two standard transmission bolts into bell housing (on each side just above dowel pins) to force bell housing from dowel pins, then remove these bolts. Remove transmission and rear bell housing as an assembly by moving it toward rear of car and lowering to floor.

TRANSMISSION REMOVAL (CADILLAC):—Raise car and jack up all four wheels securely approximately 8" above floor. Remove floor carpet and pads, front seat cushion, and center floor pan. Disconnect propeller shaft at front universal joint and remove

CONTINUED ON NEXT PAGE

1940-41 HYDRA-MATIC DRIVE (Cont.)

shaft, remove flywheel housing pan. Drain transmission and fluid flywheel by taking out both drain plugs. Support rear end of engine with jack under oil pan (use block of wood on jack). Disconnect engine rear support at transmission extension, remove cross-member and rear support. Remove throttle lever on side of transmission case, disconnect control rod from shift lever, disconnect speedometer cable. Install transmission hoist J-1616 in front compartment over floor pan opening, screw eyebolt securely into top of transmission, attach hoist cable hook to eyebolt, lift transmission just enough to take strain off mounting bolts. Remove 30 5/16" capscrews holding flywheel cover to flywheel. Lower jack under engine until top of bell housing is just flush with top of floor pan opening. Remove 6 bolts holding bell housing to engine crankcase. Remove transmission by shifting it backward and lowering to floor.

SERVICING (ON THE CAR):—Units listed below can be serviced without removing transmission from the car. When removing and installing these units, follow instructions carefully.

Servo Units and Front Oil Pump—Drain oil and remove oil pan. Remove main oil line being certain to hold coupling in valve body while this end of line loosened to avoid damage to front connection. Remove oil pressure regulator valve and body. Remove two oil delivery pipes from front cover. Loosen rear servo adjusting screw only. Take out 4 servo to transmission case mounting screws, lift out front and rear servos and front oil pump as a unit. Adjust servos when re-installed.

Main Oil Control Valve and Body Assembly—Remove side cover on transmission case. Loosen four attaching bolts mounting oil control unit on side of case (CAUTION—withdraw bolts only far enough to free unit from case, leave bolts in holes in body to prevent body separating when removed). Slide control unit toward front of transmission to disengage oil pipes from governor unit, lift unit off using extreme care to prevent body separating. Install in same manner, tighten all screws evenly to avoid distorting case.

Rear Oil Pump and Governor Assembly—Remove main oil control unit (above). Take out attaching bolts and remove reverse linkage and pawl assembly from side of transmission case. Take out mounting bolts and remove oil pump and governor assembly through bottom of case (turn round governor weight toward front of transmission for clearance while unit being withdrawn). Install in same manner.

Steering Column Control Lever Lamp—Lamp bulb in control lever housing is accessible for replacement by taking out 2 screws holding housing to bracket and sliding housing around so that lamp is exposed. To remove lamp, take out screw in lamp socket.

SERVICING:—**Front Servo**—To disassemble after removal from transmission, remove oil suction line, take out pump cover attaching bolts, remove pump cover. Remove servo pistons, springs and oil pump gear from housing. When assembling, install servo piston and sleeve in housing, slip retracting spring over piston shaft. Install oil pump idler gear. Install accumulator piston, booster spring, booster spring retainer in servo unit cover, install cover assembly in servo housing, tighten cover bolts. Install suction line making certain that gasket is in good condition. When installing servo in transmission case, see that plunger enters anchor on brake band. Adjust servo after installation.

Rear Servo—To disassemble after removal from transmission, place servo in arbor press and hold squarely in steady position on baseplate so that tension removed from spring retainer. Remove retainer screws, release pressure slowly and guide accumulator body out of servo, remove all parts. When assembling, install booster piston, booster spring, large initial spring, accumulator and piston body in servo body, centering small ring on booster spring so that it enters accumulator body freely. Hold accumulator in place on servo, install inner and outer servo springs and spring retainer. Compress assembly in arbor press and tighten spring retainer screws. Adjust servo after installation in transmission.

Fluid Coupling—To remove fluid coupling members with transmission off car, place manual shift lever in reverse position, loosen mainshaft locknut washer. Use tool KMO.334 to remove locknut retaining driven member (runner) on front end of mainshaft, slide driven member off. Remove drive member (driver) by gripping vanes with pliers at 2 diametrically opposite points and pulling forward while tapping on end of mainshaft with bronze hammer (CAUTION—do not attempt to remove drive member by pushing or pulling on flywheel cover—this will damage oil seal rings).

1942 CADILLAC & OLDSMOBILE HYDRA-MATIC DRIVE

CADILLAC V8, ALL SERIES (1942)
OLDSMOBILE 6 & 8, ALL MODELS (1942)

IMPORTANT NOTE:—Hydra-Matic Drive design is similar to 1941 type but adjustments on 1942 cars should be made as directed below (not same as 1941 in all instances).

CAUTION FOR TOWING CAR—If car being towed on which Hydra-Matic Drive has been damaged or has run out of fluid (drive knocks, slips, or will not drive car), propeller shaft should be disconnected to avoid further damage to transmission by rotating parts when car is moved.

DESCRIPTION:—Hydra-Matic Drive consists of a Fluid Coupling and 4-speed planetary gear type automatic transmission. Design is same as used on 1941 cars except for new Starting Switch Interlocks and new adjustment directions (linkage changes) as given below.

LUBRICATION:—Check fluid level in transmission case at intervals of 1000 miles (Cadillac), 2500 miles (Oldsmobile), and add fluid to maintain correct level. Drain and replace fluid at end of first 6000 miles (Cadillac), 5000 miles (Oldsmobile) and at intervals of 12000 miles (Cadillac), 10000 miles (Oldsmobile) thereafter.

Checking Fluid Level—Raise right edge of front compartment rug, carefully clean all dirt and lint from around transmission cover hole, remove small sheet metal cover from top of transmission cover. Operate engine for approximately 30 seconds, stop engine and allow car to stand one minute before checking fluid level (this is important to fill fluid coupling so that actual transmission case fluid level can be ascertained). Remove fluid level indicator plunger and check level. Add fluid to bring level up to "Full" mark on indicator.

Draining & Replacing Fluid—Remove flywheel housing underpan, turn flywheel so that drain plug on front face of flywheel is down, remove plug with 3/16" Allen wrench, drain fluid coupling. Remove plug on side of transmission case and drain case. Re-install both plugs. Insert approximately 8 qts. of fluid (Cadillac), 6 qts. (Oldsmobile), run engine for 3-4 minutes (to circulate fluid and fill fluid coupling), then add additional fluid to bring level up to 'Full' mark on indicator (approximately 3½ qts.).

Capacity & Recommended Fluid (Cadillac)—11½ qts. (approx.). Use only 'G.M. Fluid for Cadillac Hydra-Matic Drive.' This is special fluid for all-season use.

Capacity & Recommended Fluid (Oldsmobile)—9½ qts. (refill), 10 qts. (if dismantled). Use only Oldsmobile Hydra-Matic Drive Fluid. NOTE—Transmission can be operated with good grade of 20W Engine Oil in emergency but should be refilled with regular fluid as soon as possible.

ADJUSTMENT (CADILLAC):—Make all adjustments in order and exactly as follows:

Manual Control Lever—Remove clevis pin from lower end of lower control rod (at manual shift lever on transmission case). Move control lever below steering wheel to Reverse position and make certain detent engages. Move manual shift lever on transmission case as far back as possible (Reverse position) and make certain that reverse anchor engages (rotate propeller shaft until anchor engagement is felt). Adjust clevis on rear end of control rod so that clevis pin slips into place freely with shift lever and rod held all the way back, tighten clevis locknut, install pin, check control lever for free operation in all positions.

Throttle Linkage—Adjust carburetor and set idling speed at exactly 375 RPM. (Use Tachometer, tool No. KMO-298) with engine warm so that choke valve wide open and fast idle not operating, check to see that throttle valve closed with stopscrew against low or slow idle step of fast idle cam. Loosen throttle rod adjusting nut at carburetor, insert special .248" dowel pin in relay shaft arm to hold rods in correct position (see illustration), tighten adjusting nuts at carburetor end of carburetor-to-relay rod. Adjust trunnion at throttle valve rod so that pin can be installed freely with throttle lever against its stop, remove dowel pin from relay arm. Check transmission operation. If shifts do not occur in proper ranges, check intermediate throttle rod for bends (see illustration for rod dimensions).

Shift Control Tube & Neutral Switch—If selector lever feels loose, or if rattles occur in shifting mechanism, check shift control tube for excessive endplay and adjust as follows: Remove Neutral Switch from lower end of steering column jacket, loosen clampscrew on lower shift lever, insert .004" feeler between lower face of lever and spring washers, insert small drift or screwdriver in hole in shifting tube and force tube up and lever down, tighten lever clampscrew and remove feeler gauge. Install Neutral Switch and position switch as far as possible toward left side of car with switch connected, tighten mounting bolts just snug (not tight). Connect jumper wire from 'BAT' terminal

CONTINUED ON NEXT PAGE

1942 HYDRA-MATIC DRIVE (C nt.)

of voltage regulator to 'dead' terminal of neutral switch. Set selector lever in neutral, set hand brake, tap neutral switch lightly toward right side of car until starter begins to operate, tighten neutral switch mounting bolts securely and remove jumper wire. Check neutral switch operation to make certain it makes contact with selector lever in neutral but does not make contact with lever in 'Drive' position. Recheck manual control lever adjustment

ADJUSTMENT (OLDSMOBILE):—Make all adjustments in order and exactly as follows:

Manual Control Lever Linkage:—Remove clevis pins to disconnect lower control rod (forward rod) at intermediate lever on lower control relay bracket (on cross-member at left of flywheel housing) and lower control relay rod (rear rod) at shift lever (inner lever) on left side of transmission case. Set control lever on steering wheel in 'R' (reverse) position and make certain that poppet ball engages detent notch. Move intermediate lever so that hole in lever lines up with hole in bracket, insert special gauge No. J-1469 through both holes to hold lever in this position while adjustments are being made.

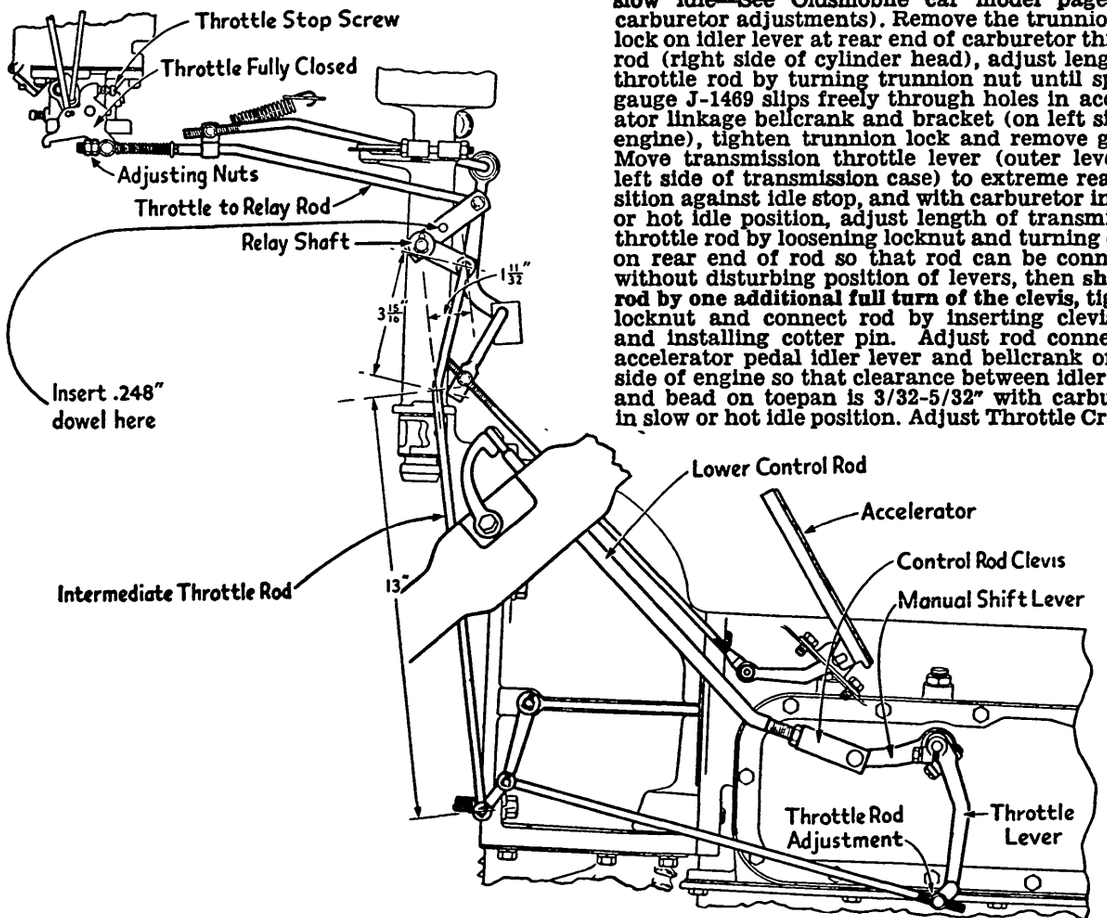

1942 CADILLAC HYDRA-MATIC DRIVE CONTR L LINKAGE

Move manual shift lever on transmission (inner lever on outside of case) toward rear as far as possible (to make certain that lever is in extreme rear position, rotate propeller shaft by hand until pawl is felt to engage and lever is against stop). Adjust lower control relay rod length (loosen locknut and turn clevis on rear end of rod) so that rod can be connected to transmission lever without disturbing lever position, connect rod being certain that waved (anti-rattle) washer is in place and that clevis locknut is tightened. Remove tool J-1469 from intermediate lever, press back on intermediate lever so that rear rod and manual shift lever held in rear position against reverse stop, adjust length of lower control rod (forward rod) by loosening locknut and turning clevis on rear end of rod so that rod can be connected without disturbing position of steering column lever or intermediate lever. Connect rod, see that waved anti-rattle washer in place, tighten locknut. Check for free operation.

Throttle Control Linkage:—Disconnect transmission throttle rod at lever on left side of transmission case (outer lever). Set carburetor throttle stop-screw for 375 RPM engine speed in neutral (hot or slow idle—See Oldsmobile car model pages for carburetor adjustments). Remove the trunnion nut lock on idler lever at rear end of carburetor throttle rod (right side of cylinder head), adjust length of throttle rod by turning trunnion nut until special gauge J-1469 slips freely through holes in accelerator linkage bellcrank and bracket (on left side of engine), tighten trunnion lock and remove gauge. Move transmission throttle lever (outer lever on left side of transmission case) to extreme rear position against idle stop, and with carburetor in slow or hot idle position, adjust length of transmission throttle rod by loosening locknut and turning clevis on rear end of rod so that rod can be connected without disturbing position of levers, then **shorten rod by one additional full turn of the clevis,** tighten locknut and connect rod by inserting clevis pin and installing cotter pin. Adjust rod connecting accelerator pedal idler lever and bellcrank on left side of engine so that clearance between idler lever and bead on toepan is 3/32-5/32" with carburetor in slow or hot idle position. Adjust Throttle Cracker & Fast Idle (see Carburetor on car model pages).

Starter Interlock (Cars with Starter Pedal): With manual control properly adjusted, disconnect battery cable at starter motor, place steering column control lever in neutral 'N' position, fully depress starter pedal and block in this position, adjust interlock rod (linking starter shift lever and interlock lever) so that clearance between other arm on interlock lever and steering column control lever is .030-.060". Check by placing steering column control lever in all other positions than neutral and starting car. Control lever must be moved to neutral when starter pedal is depressed.

Safety Switch (Cars with Starter Pushbutton)—Consists of switch on lower end of steering column control connected in starter solenoid relay circuit which prevents starter operating except when lever is in 'N' (neutral) position. To adjust switch, loosen lockscrew on bracket so that it can be shifted, hold lower end of shift control lever against stop in neutral 'N' position (upper control lever out of neutral detent and slightly to left), shift switch bracket down until vertical switch contact arm is against stop, tighten bracket lockscrew. To check adjustment, move control lever back to neutral detent and check clearance between switch contact arm and stop which should be 1/16".

SERVO BAND ADJUSTMENT:—Front and rear bands are adjusted differently as directed below. No band is used on the Reverse Gear planetary unit.

Rear Servo (All Models)—Install Gauge J-1460 (same as used on 1941 cars) on bottom of rear servo unit so that indicating end of gauge rests on servo plunger. Loosen locknut on servo band adjusting screw on top of case, turn screw until outer end of servo plunger is flush with outer edge of gauge (plus or minus 1/32"), tighten locknut.

Front Servo (Cadillac)—Loosen locknut on front band adjusting screw on top of case and back off adjusting screw. Remove plug in front servo lower cover plate (use Allen wrench), insert tool J-1693 (new 1942 tool), tighten plunger by hand until it is felt to touch servo piston, then tighten plunger 8 full turns additional (6 turns on new bands), tighten front band adjusting screw until knurled washer on tool is just off its seat, tighten adjusting screw locknut securely, remove tool and install plug

Front Servo (Oldsmobile)—Loosen locknut on front band adjusting nut, install tool J-1459 (same as used on 1941 cars) over capscrew of front unit (insert tool from below), tighten adjusting screw to point where front unit drum just cannot be moved in either direction, **back off adjusting screw exactly 7 turns,** tighten locknut.

CHECKING OIL PRESSURE:—If transmission operation not satisfactory check to make certain that oil pressure sufficient for correct operation as follows:

To Check Oil Pressure—Use special service fixture J-1467 and a reliable 100 lb. oil pressure gauge. Remove the plug on the transmission side cover plate, remove plug from governor sleeve by threading standard ¼" capscrew into plug and removing plug through side cover plate hole. Assemble J-1467 fixture in place in side cover plate and governor housing using extreme care not to cause any bind in governor assembly. Assemble pressure gauge to fixture plug so that gauge can be read while car being operated. Operate car on road until transmission fluid is hot, see that control lever in high range,

CONTINUED N NEXT PAGE

1942 HYDRA-MATIC DRIVE (Cont.)

allow car speed to drop to 20 MPH and note gauge reading. Oil pressure must not be less than 75 lbs. To make certain that rear pump is operating satisfactorily, drive car at 40-45 MPH. in Fourth Gear, shift to Neutral and turn off ignition allowing car to coast, note speed at which rear band engages (if above 20 MPH., pump capacity is too low.

Low Oil Pressure Correction—If pressure less than 75 lbs., check for excessive oil leakage in transmission or oil regulator valve assembly, see that oil regulator valve body is tight, check for sticking regulator valve or weak valve spring (substitute new spring and recheck pressure). Inspect for leak in main control valve body or at delivery tube connections. Check for worn gears, excessive endplay.

TRANSMISSION REMOVAL (OLDSMOBILE):—Raise car and jack up all four wheels securely approximately 8" above floor. Remove foot accelerator pad, floor mat, center floor pan. Disconnect propeller shaft at rear universal joint, remove by sliding shaft out at splined joint. Remove flywheel housing pan. Drain transmission and flywheel by taking out both drain plugs. Remove outer throttle lever from transmission case, disconnect control rod from manual shift lever. Remove two upper engine mounting bolts, remove master cylinder to brake shaft bracket, disassemble strut from shaft, remove clevis pin from lower control relay rod. Raise engine approximately ½" off mountings with jack just forward of crankcase drain plug (use block of wood on jack). Remove 3 bolts from each side of cross-member at frame side rail, remove cross-member by tipping top toward front of car and moving cross-member forward. Install transmission lifting tool J-1502 in front compartment over floor pan opening (see Note below for Model 90). Place saddle at bottom of transmission, work cables through pan opening and hook both cables onto lifting tool cable snap. Center saddle on transmission pan, hoist transmission just enough to take strain off mounting bolts, remove 5/16" bolts holding fluid flywheel cover on flywheel, remove five 7/16" bolts holding rear half of bell housing to front half. Lower engine slightly until top of bell housing is flush with top of opening in floor pan, thread two standard transmission bolts into bell housing (on each side just above dowel pins) to force bell housing from dowel pins, then remove these bolts. Remove transmission and rear bell housing by moving it to rear and downward.

Model 90 Note—If top of hoist interferes with lower edge of instrument panel, cut approximately 1" off rear legs of hoist.

TRANSMISSION REMOVAL (CADILLAC):—Raise car and jack up all four wheels securely approximately 8" above floor. Remove floor carpet and pads, front seat cushion, and center floor pan. Disconnect propeller shaft at front and rear universal joints, remove shaft and front universal joint yoke, remove flywheel housing pan. Drain transmission and fluid flywheel by taking out both drain plugs. Support rear end of engine with jack under oil pan (use block of wood on jack). Disconnect engine rear support at transmission extension, remove cross-member and rear support. Remove throttle lever on side of transmission case, disconnect control rod from shift lever, disconnect speedometer cable, remove starter and spark plugs. Install transmission hoist J-1636 in front compartment over floor pan opening, screw eyebolt securely into top of transmission, attach hoist cable hook to eyebolt, lift transmission just enough to take strain off mounting bolts. Remove 30 5/16" capscrews holding flywheel cover to flywheel, marking location of any balancing washers to insure re-installing in same position, push cover to rear to disengage flywheel dowels. Lower jack under engine until top of bell housing is just flush with top of floor pan opening. Remove 6 bolts holding bell housing to engine crankcase. Remove transmission by moving it to rear and downward.

SERVICING:—With transmission removed from car, remove units and disassemble as follows:

Servo Units & Front Oil Pump—Drain oil, remove oil pan, screen, and main oil line taking care to hold oil line front connection in valve body with wrench while loosening line. Remove oil pressure regulator valve, spring, and body. Remove two oil delivery pipes from front cover. On Oldsmobile, take out capscrews holding front cover on transmission case and remove front cover. Loosen rear servo adjusting screw (front adjusting screw on Cadillac), take out four servo-to-transmission screws, remove front and rear servos as a unit.

Main Oil Control Valve Body—Remove side cover on transmission case, take out four oil control valve body attaching screws, slide oil control unit toward front of transmission to disengage oil pipes from governor unit, lift unit off. Install unit in same manner being careful to tighten all mounting screws evenly to avoid distorting valve body.

Rear Oil Pump and Governor Assembly—Remove main oil control unit (above). Take out attaching bolts and remove reverse linkage and pawl assembly from side of transmission case. Take out mounting bolts and remove oil pump and governor assembly through bottom of case (turn round governor weight toward front of transmission for clearance while unit being withdrawn). Install in same manner.

Selector Indicator Bulb Replacement—Remove two screws holding indicator in place, remove indicator, replace bulb (Use No. 51, 1 cp. bulb).

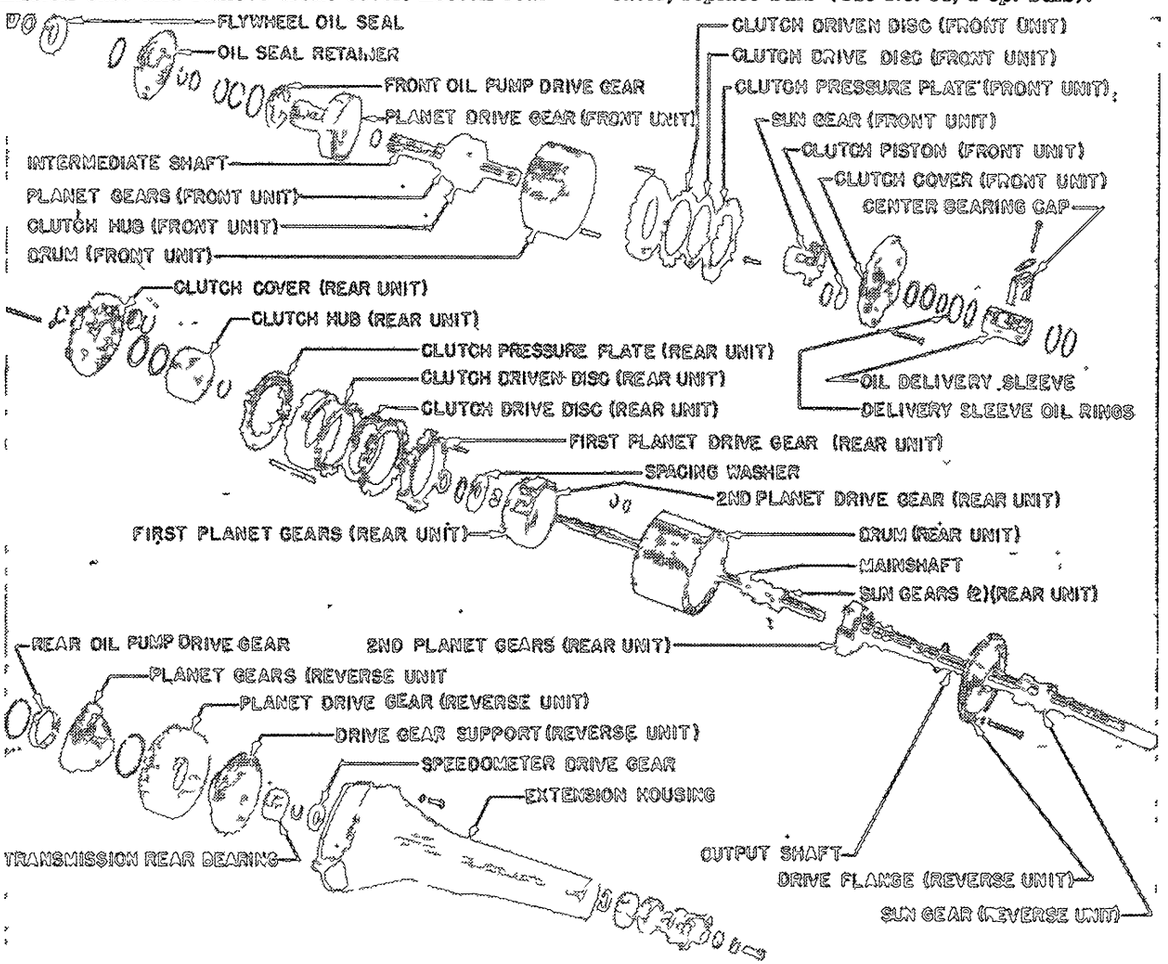

1942 CADILLAC & OLDSMOBILE HYDRA-MATIC DRIVE

CADILLAC, OLDSMOBILE, PONTIAC 1946-48 HYDRA-MATIC DRIVE

Cadillac V8, All Models (1946-47-48)
Oldsmobile 6 & 8, All Models (1946-47-48)
Pontiac 6 & 8, All Models (1948)

PRODUCTION CHANGES AND SPECIAL SERVICE NOTES

IMPORTANT—CAUTION FOR TOWING CARS: If car being towed on which Hydra-Matic Drive has been damaged or which has run out of fluid (evidenced by drive knocking, slipping, or not transmitting power to rear wheels), **disconnect propeller shaft** to avoid rotating transmission parts and causing further damage when car is moved.

►**INSTALLATION OF ALUMINUM (1948) ANNULAR CLUTCH PISTONS TO REPLACE CAST IRON TYPE ON EARLIER OLDSMOBILE MODELS:** Cast aluminum annular pistons as used in production on 1948 cars beginning with Transmission Serial No. 08-8000, furnished for replacement use on 1948 and earlier cars (cast iron type pistons discontinued) as follows:
Front Clutch Annular Piston.....Part No. 8611261
Rear Clutch Annular Piston.....Part No. 8611258

►*ALUMINUM CLUTCH PISTON INSTALLATION CAUTION*—Additional steel clutch plate must be used and installed **next to the aluminum piston** to provide friction. In the event that a cast iron piston from stock is used to replace an aluminum piston, this first steel plate should be removed and discarded so that plate next to cast iron piston is composition type.

►**FRONT & REAR UNIT SERVICING CAUTION (CADILLAC & OLDSMOBILE 1946-48):** First type 6-Driving Pin Type Brake Drums and Clutch Drums (Cover) superseded by new 3-Driving Pin type (On Oldsmobile, both types used in mixed production on late 1947 & early 1948 cars—3-pin type used exclusively beginning with Transmission Serial No. 0-221729). These types **interchangeable as complete assemblies only** except that steel clutch plates still furnished with six slots for interchangeability.

►*CAUTION—Always use 6-pin parts or 3-pin parts together in assemblies as follows:*

Front & Rear Unit Part Nos.

Cadillac & Oldsmobile No.:	Brake Drum	Cover
Front Unit (6-Pin Type)	8608178	8607338
Front Unit (3-Pin Type)	8611446	8611456
Rear Unit (6-Pin Type)	8608790	8608773
Rear Unit (3-Pin Type)	8611445	8611455

►**INSTALLATION OF 1-PIECE FLYWHEEL & TORUS COVER (1948 TYPE) ON 1946-47 OLDSMOBILE MODELS:** This simplified flywheel (1-piece type) used in production on late 1948 cars (see Note below for beginning Serial Nos.) and can be installed on 1946-47 cars providing that all of the following parts are installed together: **Flywheel** No. 8609555, **Fluid Coupling (Torus) Cover** No. 8611257, **Cover Gasket** No. 8611284, **Cover Bolts** (11/16") No. 554303.
NOTE—Above type parts used in production beginning with following 1948 serial numbers: (66, 76) No. 6-189181, (68, 78) No. 8-12778, (98) No. 8-1282.

►**PONTIAC (1948) CORRECTION FOR ENGINE IDLING TOO FAST:** If engine does not return to correct idle speed of 365-385 RPM. as accelerator pedal is gradually released, check accelerator linkage for binding at pivots (excessive paint or misalignment). Disconnect rear rod at outer throttle lever on transmission case, check for misalignment of clevis (if clevis on rod does not pass freely over end of lever, bend rod). Check throttle valves for synchronization and setting (see Carter WA-1 & WCD Carburetor data).

►**PONTIAC (1948) FORCED DOWNSHIFT (4 TO 3) NOT OPERATIVE ON FIRST CARS:** If transmission cannot be shifted down from 4th. to 3rd. Speed by depressing accelerator pedal, and linkage adjustment has been correctly made (see Linkage Adjustment below), **shorten** rear transmission throttle rod by turning clevis up one additional turn on rod and recheck performance. Shorten rod, as required, one-half turn at a time, up to two additional turns (three turns total) until correct performance secured. Check for sufficient clearance between accelerator pedal and floor mat and for sticking of detent plug in outer valve body. If correct adjustment cannot be secured, install latest type Transmission Throttle Rod Idler Lever (may be identified by small hole at center of lever). NOTE—This revised lever used in production on later cars and has same part number as first type lever (No. 510839).

►**PONTIAC (1948) CHANGE IN TRANSMISSION OIL LEVEL & CAPACITY (With New Oil Level Indicator No. 8605800):** Oil level lowered slightly (capacity 1 pint less) to reduce any tendency of oil to foam when hot. New oil level indicator stick has slightly lower F (full) mark (1½ pints between F and L marks instead of 2 pints on old indicator) and this indicator will be furnished as service replacement for first type.
NOTE—New Oil Level Indicator can be identified by part number, 8605800, stamped on stick (no number on first type indicator).

►**PONTIAC (1948) TRANSMISSION REAR OIL PUMP CHANGE:** New "crescent" type rear oil pump, No. 8611366, used in part production on late 1948 cars and supersedes previous gear type oil pump, No. 8607647. These pumps **interchangeable as an assembly.**

►*NOTE—Use gear type pump No. 8607647 as service replacement for both the gear type pump and for the crescent type pump No. 8611366.*

DESCRIPTION

DESCRIPTION: Four-speed planetary type automatic transmission and fluid coupling of same design as used on previous Cadillac & Oldsmobile models except for the following new features:

Oil Pumps—Front pump is new internal-external gear type and is the main high pressure supply. Rear oil pump acts merely as a booster.

Planetary Gear Clutches—Clutches have fewer plates and single concentric actuating piston (see illustration).

Reverse Mechanism—New engaging mechanism used incorporating a blocking valve to resist engagement of anchor while reverse gear is turning.

Front & Rear Unit (3-Driving Pin Type)—Design changed from 6-driving pins to 3-driving pins (pins in drums and registering holes in cover decreased). *See Front & Rear Unit Servicing Caution (above) for data on non-interchangeability of parts.*

Front & Rear Unit Annular Clutch Piston—New cast aluminum type piston used (supersedes cast iron type used previously). *See Installation of Aluminum Annular Pistons and Aluminum Clutch Piston Installation Caution (above) for differences in installation of these two piston types.*

Fluid Coupling (Torus) Cover & Flywheel—On Oldsmobile & Pontiac, new type used similar to Cadillac (See Oldsmobile 1-Piece Flywheel Note above). Bolt holes (30) are equally spaced with two dowels 180° apart and equi-distant between adjacent bolt holes to allow for original selective assembly. In service, cover should always be installed in same position as indicated by marks on cover and flywheel.

►*CAUTION—If original marks not visible, mark both cover and flywheel before disassembly and re-install cover in same position on flywheel.*

Rear Oil Pump (Crescent Type)—Used on some cars. See Pontiac Rear Oil Pump Change Note above.

LUBRICATION

LUBRICATION: Check fluid level every month or each 1000 miles (Cadillac), 2000 miles (Oldsmobile & Pontiac). Add fluid, as required, to maintain level at FULL mark on dip stick. Drain and replace fluid at intervals of 12000 miles (Cadillac), 15000 miles (Oldsmobile & Pontiac) as follows:

Checking Fluid Level—*See car model pages for correct procedure on each car. CAUTION—Engine must be idling when checking fluid.*

Draining & Replacing Fluid—Oil must be warm. Drain both the fluid coupling (remove drain plug in cover accessible after removing flywheel housing underpan) and transmission case (remove drain plug at rear of oil pan on bottom of case). Install approximately 8 qts. of fluid (Cadillac), 7 qts. (Oldsmobile & Pontiac). On Cadillac, run engine for 1½ minutes at 20 MPH. with selector lever in Neutral (N). On Oldsmobile & Pontiac, set hand brake securely, idle engine for several minutes with selector lever in Drive (DR). Then idle engine at normal slow idle speed, check fluid level, add fluid to bring level up to FULL mark on dip stick. This should require approximately 4½ qts. (Cadillac), 4 qts. (Oldsmobile), 3½ qts. (Pontiac—see Pontiac Note above on Change in Transmission Fluid Level & Capacity).

►*CAUTION—Correct fluid level detemined by dip stick mark rather than exact amount of fluid installed.*

Recommended Fluid—Use only Hydra-Matic Drive Fluid as furnished by the car manufacturer.

LINKAGE ADJUSTMENT

ADJUSTMENT (CADILLAC): Make linkage adjustments completely and exactly as follows:

(1) Manual Control Linkage—Disconnect manual control rod from control lever on transmission case, move control lever to extreme rearward (reverse) position (lever will be held in this position by detent ball). Move Selector Lever on steering column to the Reverse "R" Position. Adjust the clevis on the lower end of control rod until clevis pin can just be inserted freely through clevis and control lever, tighten clevis locknut and install clevis pin.

(2) Throttle Control Rod—Set engine idling speed at 375 Engine RPM. with engine warm (fast idle inoperative). Disconnect throttle rod trunnion at carburetor by removing forward end of retracting spring, install gaug pin in hol s in upper relay lever and distributor housing so that lever is locked in position, adjust trunnion on throttle connector rod so that it slides freely into throttle lever without disturbing slow idle position of throttle, install re-

CONTINUED N NEXT PAGE

1946-48 HYDRA-MATIC DRIVE (C nt.)

tracting spring and adjust position of spring clip so that center line of spring hole in clip is exactly 5 15/64" from throttle lever trunnion.

(3) Throttle Control Lower Relay Lever—With upper relay lever locked by gauge pin inserted through lever into hole in distributor housing, disconnect clevis at throttle lever on transmission case and disconnect lower end of vertical rod connecting upper and lower relay levers. Install second gauge pin through hole in lower relay lever and hole in bell housing so that lever is locked in position, adjust vertical rod by bending rod forward or backward at original bend in rod (use Bending Tool J-2029) until it can be connected to lower relay lever freely (use care to maintain original alignment of rod). Connect vertical rod. With correct adjustment, gauge pin in lower relay lever should be free in lever and housing holes. NOTE—Do not remove gauge pins until following adjustments have been made.

(4) Throttle Lever Position—Install special Throttle Lever Checker (Tool J-2239) on rear face of transmission case. Insert clevis pin in end of throttle lever. Pin should enter hole in checking tool marked "46, 47, 48" freely. Bend lever (up to ½") using Tool J-2029 to secure correct position (replace lever if more than ½" bend required). Check center-to-center distance between upper and lower holes on lever. This must be 4¾".

(5) Throttl Lev r Linkage—With gauge pins installed in upper and lower relay levers and with throttle rod disconnected from throttle lever on transmission case, use Spring Scale, Tool J-544, to pull throttle lever against its stop in Reverse (extreme rear) position **using a load of ⅜-½ lb.** as measured by the spring scale. Hold throttle lever in this position, pull lower horizontal rod back to remove all play from lower relay lever, adjust clevis on rod so that pin freely enters holes in clevis and throttle lever, **then screw clevis three complete turns forward on rod,** connect rod, remove gauge pin from lower relay lever.

(6) Upper Relay Lever Position—With upper relay lever locked by gauge pin, disconnect trunnion on horizontal rod connected to upper relay upper lever, adjust trunnion until it will slide freely into relay upper lever when center of hole in lever is exactly 9/16" (Series 60S, 61, 62), 1 5/16" (75, 76) from face of dash (measure from a straightedge placed across pocket in dash—do not measure to bottom of this pocket). Remove gauge pin from relay lever.

(7) Accelerator Pedal Rod—With upper relay lever free (gauge pin removed), disconnect accelerator pedal rod from lower lever of upper relay lever, hold carburetor throttle valve in wide open position and depress accelerator pedal to floor, adjust accelerator pedal rod by turning rod in trunnion until end of rod slips freely into upper relay lower lever, connect rod. CAUTION—Recheck adjustment to make certain that carburetor throttle lever is against its wide open stop when pedal depressed to floor.

Neutral Switch—Mounted on lower end of steering column. Adjust position of switch so that starter operative (switch closed) only when selector lever is in Neutral position. NOTE—When installing switch, make certain that operating pin engages slot in switch lever.

ADJUSTMENT (OLDSMOBILE): Make linkage adjustments completely and exactly as follows:

Manual Control—Disconnect lower control relay rod at lever on side of transmission case and lower control rod at intermediate lever on cross-member bracket (remove clevis pins and spring washers, loosen clevis locknuts). Move manual control lever on transmission to reverse position (all the way back against stop—rotate propeller shaft by hand until anchor engages and lever is against stop). Position intermediate lever so that gaging hole lines up with hole in bracket, insert locking pin (Tool J-1469) through both holes to lock lever in position. Adjust clevis on lower control relay rod so that rod can be connected without disturbing position of transmission lever, connect rod (CAUTION—use spring washer on clevis end to prevent rattles), remove locking pin from intermediate lever. Move manual lever on transmission to "LO RANGE" position (move lever all the way forward to "Neutral", then move lever back to second detent position). Place Selector lever against stop which prevents shifting into reverse (without raising lever) by pulling down on lower control rod until stop is felt. Adjust clevis on lower end of control rod so that clevis pin can be inserted without disturbing position of selector lever or intermediate lever, then lengthen rod by turning clevis one full turn, connect rod to intermediate lever (CAUTION—use spring washer on clevis end to prevent rattles).

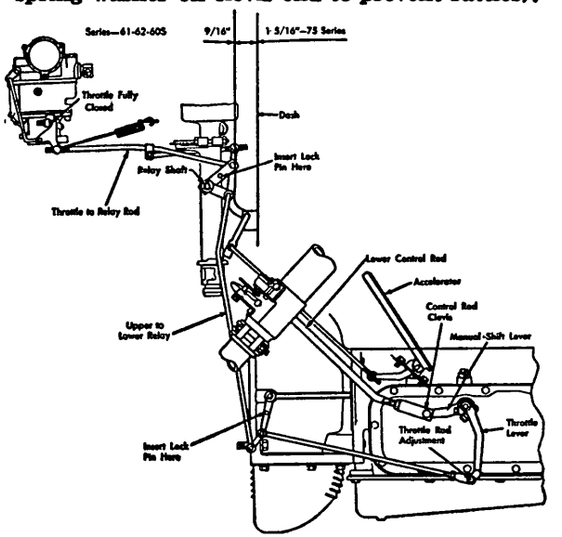

CADILLAC HYDRA-MATIC DRIVE CONTROL LINKAGE

Throttle Control (1946 & Early 1947)—Adjust with engine idling speed properly set at 375 RPM (slow idle speed) and with transmission in Neutral. Remove small spring lock from trunnion on idler lever (on cylinder head above oil filler cap), adjust length of carburetor rod by turning trunnion adjusting nut until locking pin (Tool J-1469) slips freely through holes in bell-crank (on side of engine block below trunnion) and indexing plate with carburetor throttle lever in slow-idle position, tighten trunnion locknut and position adjusting nut so that trunnion spring lock can be replaced. CAUTION—If tightening trunnion locknut changes alignment of gaging holes (recheck alignment with Tool J-1469), loosen locknut and lengthen rod one-half turn, tighten locknut and recheck alignment. Make sure carburetor rod moves freely in idle and full-throttle positions. Install trunnion spring lock.

Throttle Control (Late 1947 & 1948)—Adjust with idling speed properly set at 375 RPM. (slow idle speed with engine warm and selector lever in Neutral). Disconnect throttle control rod at auxiliary bellcrank on cylinder head (6 cyl. cars), at cross-shaft (8 cyl. cars), adjust rod by bending the rod until locking pin (Tool J-1469) slips freely through holes in bellcrank and indexing plate (on side of engine) with rod connected and carburettor throttle closed. Check to see that carburetor rod moves freely throughout travel from idle to full throttle position.

Throttle Lever Position—Position of hole in end of throttle lever on transmission case may change (if valve body, inner throttle lever and shaft assembly, or outer lever replaced) and should be checked. Install Gauge J-2195 (against machined surface on back of case with gauging rod extending forward to throttle lever), disconnect rod at throttle lever on transmission case. Tip of gauge rod should enter hole in end of throttle lever freely. If lever position incorrect, remove lever and bend, as required, for correct position.

Throttle Lever Control Linkage—Disconnect the rod at throttle lever on side of transmission case, move throttle lever all the way back against stop, make certain that carburetor throttle in slow-idle position and adjust clevis on rod so that it can be connected to throttle lever on transmission without disturbing position of lever and linkage, then **shorten rod by turning clevis one full turn,** connect rod to lever. Adjust accelerator pedal rod so that idler lever under toeboard (to which pedal rod connected) will have 3/32-5/32" clearance between lever and rib in body toe pan. CAUTION—This clearance necessary to allow carburetor to return to slow idle position.

Throttle Cracker Adjustment (6 Cyl.)—Must be correctly set for starting. .0625" to .0851" (1/16") clearance between throttle stopscrew and highest step of fast idle cam with starting pedal fully depressed (starter pinion fully meshed). Adjust by loosening locknut and turning adjusting screw on accelerator bellcrank (screw contacts lug on lever linked to starter pinion shift lever).

Throttle Cracker Adjustment (8 Cyl.)—Set for correct throttle opening for starting. To adjust, disconnect starter cable at starter switch (for foot operated starters), disconnect coil lead to distributor (for solenoid operated starters), depress starter pedal or pushbutton to full down position (engine will be turning over on solenoid starter cars) to fully mesh starter pinion, loosen locknut and turn adjusting screw on accelerator bell-crank (screw contacts lug on lever linked to starter pinion shift lever) so that clearance between throttle stopscrew and highest step of fast idle cam is .105-.125" (⅛").

Fourth-to-Third Throttle Downshift—Should be checked whenever linkage adjusted to insure proper operation and prevent damage to linkage. To adjust with engine stopped, pull transmission throttle rod all the way forward until throttle lever on transmission is against stop, hold in this position and bend stop lip on indexing plate (at bell-crank on side of engine) for clearance of 1/16-3/32" between lip and stop on bell-crank.

CONTINUED ON NEXT PAGE

1946-48 HYDRA-MATIC DRIVE (C nt.)

Safety Switch Adjustment—Clearance between switch and stop should be 1/16-3/32" between lever and stop with selector lever in "Neutral" position. To adjust, loosen switch bracket locking screw, adjust switch (bracket is slotted). NOTE—With correct adjustment starter operative only when selector lever placed in Neutral "N" position.

ADJUSTMENT (PONTIAC): Make linkage adjustments completely and exactly as follows:

1. Carburetor Throttle Rod—Disconnect control rod at throttle lever (outer lever) on side of transmission case. Check to make certain that engine idle speed correctly set at 365-385 RPM. hot or slow idle (with engine at 150-160°F., transmission warm, selector lever in Neutral). Disconnect carburetor throttle rod from throttle control intermediate lever (6 cyl.) or from lever on cross-shaft (8 cyl.) on cylinder head. Install Adjusting Pin J-2544 through holes in lever and bracket to position lever. Adjust trunnion on carburetor rod so that trunnion pin will just enter hole in lever without moving carburetor throttle lever stopscrew from against its stop. Tighten trunnion locknut, connect rod. Do not remove Adjusting Pin until following adjustments have been made.

►***CAUTION—On 6 Cyl. cars, position carburetor throttle rod upward away from ignition wires before tightening locknut.***

2. Throttle Control Rear Rod (Acelerator Pedal Intermediate Rod)—With adjusting pin J-2544 installed in lever on cylinder head (1. above), check position of accelerator pedal lever on dash. If second Adjusting Pin J-2544 cannot be inserted freely through holes in levers and bracket, disconnect rod at throttle control idler lever (on side of engine), adjust trunnion on rod until adjusting pin can be inserted freely with rod connected, tighten locknut and connect rod. Leave this adjusting pin in the accelerator pedal lever while making following adjustments.

3. Transmission Throttle Lever Front Rod—With Adjusting Pins in place in lever on cylinder head and in accelerator pedal lever on dash (1. & 2. above), check position of transmission throttle idler lever on lower edge of crankcase under starter. If third Adjusting Pin J-2544 cannot be inserted freely through holes in lever and bracket, disconnect rod at cylinder head lever, adjust rod length by turning upper end fitting until adjusting pin can be inserted freely with rod connected, tighten end fitting locknut. Remove all three adjusting pins so that linkage is free.

4. Transmission Throttle Lever Position—See that clamp bolt in transmission lever (outer lever on side of case) is securely tightened. Check position of lever by installing Throttle Lever Checking Gauge J-2545 flat against rear surface of transmission case with edge of gauge against side cover. With clevis pin installed in lever, hold lever in rear position against stop, move gauge upward. Notch in gauge should pass over pin in lever and inside face of lever should just touch outer face of gauge. Bend lever, as required, using tool J-2807, to secure this position. Recheck lever position.

►***CAUTION—Use extreme care not to twist lever or spring shaft when bending lever for correct position. Check rod alignment with lever for free action without binding.***

5. Transmission Throttle Lever Rod—Hold transmission throttle lever in extreme rear position against stop (see 4. above), adjust clevis on rear end of throttle rod so that clevis pin can just be inserted freely through clevis and hole in lever, then **shorten rod by turning clevis up one full turn,** tighten clevis locknut and connect rod.

6. Manual (Shift Control) Linkage—Hold selector lever down firmly in "Lo" position, tighten control shaft upper bracket clampscrew securely. Move selector lever to Reverse "R" position. Loosen locknuts on trunnion at forward end of forward control rod (at lower end of selector lever shaft), tighten control shaft lower bracket securely. Disconnect rear rod at shift lever (inner lever) on transmission case, tighten shift lever clampscrew securely. Install Adjusting Pin J-2544 through holes in lower control relay lever (to which lower end of forward rod connected) and bracket to lock lever. Move transmission shift lever to extreme rear (Reverse) position (NOTE—rotate propeller shaft by hand to insure reverse engagement). Adjust clevis at lever end of rear rod so that rod can be connected to shift lever without disturbing lever position, connect rod. Remove adjusting pin from relay lever. Move transmission shift lever to "Lo" position (move lever forward until next (Lo) detent is felt to engage). Move selector lever to "Lo" position against stop which prevents further lever movement into reverse (without raising lever). Turn lower locknut on forward control rod (**under** control shaft lever trunnion) up until it contacts trunnion, then **turn locknut up one additional turn.** Tighten upper locknut securely against trunnion.

7. Throttle Cracker Adjustment—Important for satisfactory starting operation. *See "Accelerator Linkage Adjustment" under CARBURETOR on each car model page for complete instructions.*

8. Starter Interlock Adjustment—Must be adjusted so that depressing starter pedal to start engine (with Hydra-Matic selector lever in any other position than Neutral), will move selector lever to Neutral "N" position. To adjust, disconnect battery cable at starter (to prevent starter operating while adjusting), tighten neutralizer lever attaching bolts on starter shift lever. Depress starter pedal fully. Adjust length of interlock rod by turning locknuts at trunnion on lower end of neutralizer lever so that selector lever indicator is in exact neutral "N" position, then **lengthen rod by turning trunnion nuts one additional full turn.** Lock trunnion nuts securely. Check operation by placing selector lever in various positions and noting action when starter pedal depressed fully.

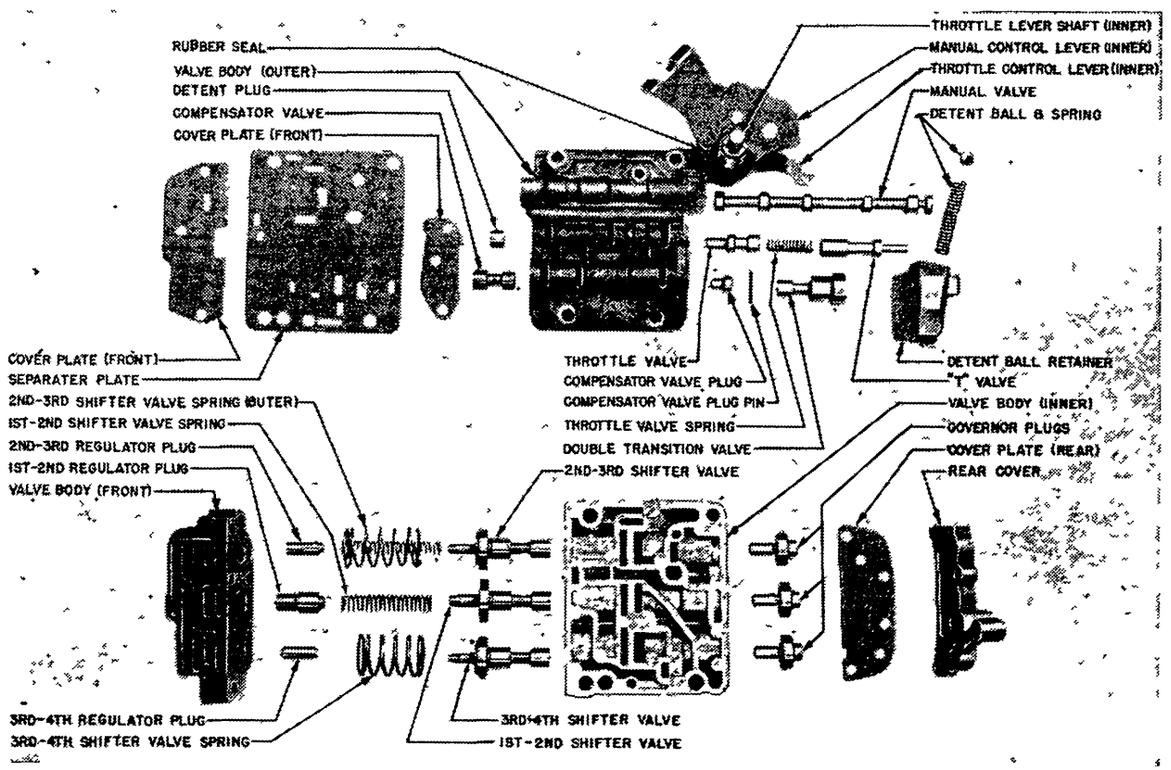

HYDRA-MATIC DRIVE CONTROL VALVE ASSEMBLY

BAND ADJUSTMENT

►**SERVO BAND ADJUSTMENT NOTE:** ***Bands can now be adjusted without draining transmission and removing oil pan by use of Adjusting Tool J-2681 (see illustration) if accurate electrical Tachometer used to check engine RPM. Adjust as follows:***

CONTINUED ON NEXT PA E

1946-48 HYDRA-MATIC DRIVE (Cont.)

Servo Band Adjustment (Tool J-2681 & Tachometer):

▷*CAUTION—Do not attempt to adjust bands by this method (externally) if tool J-2681 and accurate tachometer not available.*

1. Set hand brake firmly and securely block front wheels to prevent car moving while adjusting.

2. Remove front floor mat and adjusting hole cover (to left of transmission) for access to adjusting screws on top of case.

3. Run engine until it reaches normal operating temperature and idles at 375 RPM. (automatic choke and fast idle inoperative).

4. Connect accurate tachomter to engine (electrical type preferably with 1000 RPM. maximum range).

5. Place control lever in Drive "Dr" position.

6. Adjust carburetor idle stopscrew so that engine idles at exactly 700 RPM.

ADJUST FRONT BAND (After Steps 1 to 6):

7F. Engage adjusting tool J-2681 on Front Band Adjusting Screw, loosen adjusting screw locknut (turn long handle while holding short handle stationary).

8F. Loosen front band adjusting screw (turn short handle while holding long handle stationary) until engine speed increases to 900 RPM.

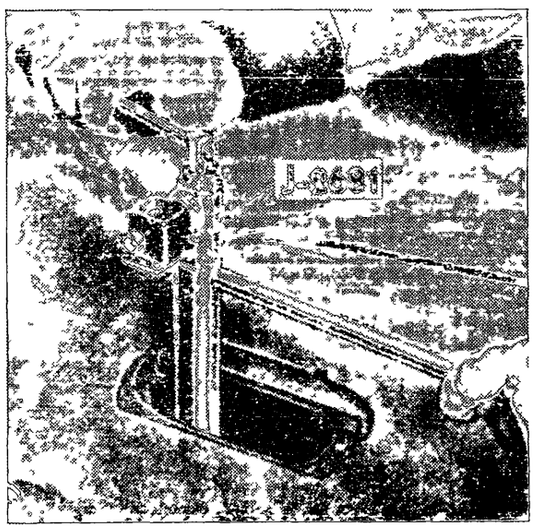

HYDRA-MATIC BAND ADJUSTING TOOL J-2681

▷*NOTE*—If no increase of engine speed noted when adjusting screw loosened, band has probably been slipping in service. Remove oil pan and inspect band and drum for wear or damage. With pan off, adjust band using Tool J-1693 as directed below (in this case, disregard steps 9F and 10F following).

9F. Tighten band adjusting screw slowly until engine speed drops to exactly 700 RPM., then loosen screw until engine speed decreases, finally tighten screw again until engine speed drops to exactly 700 RPM. Watch tachomter for 30 seconds to note any change in engine speed. If engine speed increases, tighten screw 1/10 turn. Repeat this procedure, as necessary, tightening screw 1/10 turn each time until engine speed remains constant at 700 RPM. for at least 30 seconds.

10F. Set adjusting tool counter at 00. Hold locknut stationary, tightem adjusting screw exactly 5½ turns until counter reads 5.5. Hold adjusting screw stationary and tighten locknut securely.

ADJUST REAR BAND (After Steps 1 to 6):

7R. Engage adjusting tool J-2681 on Rear Band Adjusting Screw, loosen adjusting screw locknut.

8R. Loosen rear band adjusting screw until engine speed increases to 900 RPM.

▷*NOTE*—If no increase of engine speed noted when adjusting screw loosened, band has probably been slipping in service. Remove oil pan and inspect band and drum for wear or damage. With pan off, adjust band using Tool J-5071 as directed below (in this case disregarding steps 9R through 13R following).

9R. Tighten band adjusting screw slowly until engine speed drops to exactly 700 RPM., then loosen screw until engine speed increases, finally tighten screw again until engine speed drops to exactly 700 RPM. Watch tachometer for 30 seconds to note any change in engine speed. If engine speed increases, tighten screw 1/10 turn. Repeat this procedure, as necessary, tightening screw 1/10 turn each time until engine speed remains constant at 700 RPM. for at least 30 seconds.

10R. Position selector lever in Neutral "N".

11R. Set adjusting tool counter at 00. Hold band adjusting screw locknut stationary, tightem adjusting screw exactly 2 turns until counter reads 2.0.

12R. Position selector lever in Drive "Dr".

13R. Hold band adjusting screw stationary in final setting position (11R above), tighten locknut securely.

AFTER FRONT & REAR BANDS ADJUSTED: Reset engine idle speed at 375 RPM. (Cadillac & Oldsmobile), 365-385 RPM. (Pontiac) with selector lever in Neutral "N" position.

Servo Band Adjustment (Tools J-1693 & J-5071): Drain transmission case and remove oil pan. Adjust bands as follows:

Front Band Adjustment—Loosen locknut and back off band adjusting screw approximately 5 turns (front screw on top left side of case), center band on drum. Loosen hex-head adjusting screw of Servo Gauge J-1693 until approx. ⅛" of threads exposed above gauge body (screw must not bind in gauge body or it will be difficult to tell when screw contacts plunger when making adjustment). Remove pipe plug from bottom of front servo unit, screw gauge into pipe plug hole, tightening gauge by hand only. Tighten hex-head adjusting screw on gauge by hand until it just touches servo piston, then tighten screw additional six full turns. With gauge set in above position, turn band adjusting screw on top of case down until the knurled washer on gauge adjusting screw is just free on its seat, hold adjusting screw and securely tighten locknut. Remove adjusting gauge from servo and re-install pipe plug.

Rear Band Adjustment—Install Servo Gauge J-5071 on bottom of rear servo unit with short leg of gauge hooked over end of servo accumulator body and longer leg resting on servo stem or plunger rod. Loosen locknut and back off band adjusting screw (rear screw on top left side of case) until face of actuating lever is away from face of gauge, then tighten adjusting screw until face of actuating lever just contacts outer face of gauge, hold adjusting screw from turning, tighten locknut securely, re-check adjustment.

▷*CAUTION—If adjusting screw turned too far when making above adjustment, back screw off several turns and repeat adjustment.*

OIL PRESSURE CHECK

CHECKING OIL PRESSURE: Can be checked with transmission in car. Remove metal plate under front compartment floor mat on left side, remove ⅛" pipe plug on top left side of transmission (between servo band adjusting screws), connect pressure gauge, Tool No. J-1467-M6 (Cadillac & Oldsmobile—use with Adapter J-1467-8 on Oldsmobile), or No. J-2540 (Pontiac), at this point and check oil pressure as follows:

Cadillac—Run engine at half-throttle speed with selector lever in Neutral and car standing. Oil pressure should be 75 lbs. minimum. If less, check front oil pump, regulator, and other points in transmission for leakage. To check rear oil pump (with gauge installed as above), drive car at speed of 40-45 MPH in Fourth Speed, shift selector lever to neutral, turn off ignition and allow car to coast. Oil pressure should be at least 75 lbs. If less, check rear oil pump for worn gears or excessive end play, check other points in transmission for leakage.

Oldsmobile—With engine idling at 375 RPM and transmission oil warm, oil pressure should be 55-85 lbs. If less, check front oil pump, regulator, and other points in transmission for leakage.

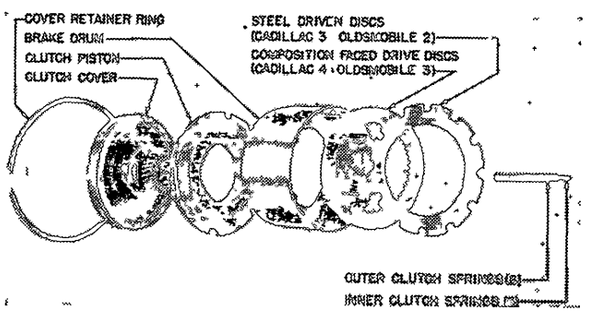

HYDRA-MATIC DRIVE FRONT UNIT
6 DRIVE-PIN TYPE

Pontiac—Operate engine at 1000 RPM. with transmission oil warm. Pressure should be 75-90 lbs. and equal with selector lever in all positions (move lever from N to Dr, Lo, and R).

▷*CAUTION—Apply both hand and foot brakes firmly to prevent car moving while making this test.*

REMOVAL FROM CAR

TRANSMISSION REMOVAL (CADILLAC): Raise car and jack up all four wheels securely approximately 8" above floor. Remove floor carpet and pads, front seat cushion, and center floor pan. Disconnect propeller shaft at rear universal joint, remove shaft and front universal joint and yoke, remove flywheel housing pan. Drain transmission and fluid flywheel by taking out both drain plugs. Support rear end of

CONTINUED ON NEXT PAGE

1946-48 HYDRA-MATIC DRIVE (C nt.)

engine with jack under oil pan (use block of wood on jack) or use special Engine Support Stand, Tool J-2529. Install transmission hoist J-1636B in front compartment over floor pan opening, screw eyebolt securely into top of transmission, attach hoist cable hook to eyebolt, lift transmission just enough to take strain off rear support. Disconnect rear support at transmission extension housing, remove the bracket cross-member carrying the support. Remove throttle rod and manual shift rod from levers on the transmission case, remove both levers and the lower relay lever from flywheel housing. Disconnect speedometer cable at rear of transmission. Remove spark plugs and starter from engine. Remove 30 capscrews holding fluid coupling cover to flywheel, push cover toward rear of car to disengage flywheel dowels (CAUTION—Do not pry cover away from flywheel). Lower the jack under the engine until top of bell housing is flush with top of opening in floor pan. Remove six bolts holding bell housing to engine crankcase. Remove transmission and bell housing as a unit by moving it to the rear and lowering it to the floor.

TRANSMISSION REMOVAL (OLDSMOBILE): Raise car and jack up all four wheels securely approximately 8" above floor. Remove foot accelerator pad, floor mat, center floor pan. Disconnect speedometer cable. Disconnect propeller shaft at rear universal joint, remove by sliding shaft out at splined joint. Remove flywheel housing pan. Drain transmission and flywheel by taking out both drain plugs. Remove outer throttle lever from transmission case, disconnect control rod from manual shift lever. Remove two upper rear engine mounting bolts, remove master cylinder to brake shaft bracket, disassemble strut from shaft, remove clevis pin from lower control relay rod. Raise engine approximately ½" off mountings with jack just forward of crankcase drain plug (use block of wood on jack). Remove 3 bolts from each side of cross-member at frame side rail, remove cross-member by tipping top toward front of car and moving cross-member forward. Install transmission lifting tool J-1502 in front compartment over floor pan opening. Thread special eye-bolt, Tool No. J-1636SA-5, in tapped hole in top of transmisssion case and attach cable hook to eyebolt. Lift transmission just enough to take strain off mounting bolts, remove 30 bolts holding fluid flywheel cover on flywheel, remove five bolts holding rear half of bell housing to front half. Lower engine slightly until top of bell housing is flush with top of opening in floor pan, thread two standard transmission bolts into bell housing (on each side just above dowel pins) to force bell housing from dowel pins, then remove these bolts. Remove transmission and rear bell housing by moving it to rear and downward.

CAUTION—Do not allow end of mainshaft to strike crankshaft bolts (turn flywheel so that shaft passes down between two bolts).

TRANSMISSION REMOVAL (PONTIAC): Raise all four wheels approximately 8" and support car securely on stands. Drain transmission oil pan. Remove accelerator pedal, front floor mat, and transmission hole cover in floor. Disconnect speedometer cable and housing at transmission. Disconnect propeller shaft at rear universal and remove by sliding it to rear and free of transmission output shaft. Remove flywheel housing bottom cover (remove crankcase ventilator outlet pipe and loosen exhaust pipe bracket to aid cover removal). Drain fluid coupling by removing plug in cover. Disconnect hand brake cables at idler lever and remove lever (not required on Convertibles). Disconnect shift lever control rod from inner lever on transmission case, remove throttle control (outer) lever. Remove all (30) torus cover-to-flywheel bolts and lockwashers (work through pan opening in housing). Disconnect two rear engine mountings and reinforcing plates from cross-member, disconnect shift control lever bracket from cross-member. Use a jack under the rear end of the engine oil pan (place 4x4x10" wood block on jack to prevent damage to pan), raise rear end of engine until rear mountings ½" above cross-member (CAUTION—do not raise engine more than necessary for cross-member removal). Take out three cross-member mounting bolts on each side of car, remove reinforcing plates from inside frame side rails, remove cross-member (tap down at both ends until right end rests on exhaust pipe, tap left end down clear of side rail, lift right end over exhaust pipe). Lower rear end of engine until rear flywheel housing attaching bolts accessible through hole in floor. Use hydraulic jack and tool J-2808 (special transmission mounting fixture —fixture must be securely fastened on jack pad) and lift transmission slightly to remove stress on mounting bolts. Take out six rear housing-to-front flywheel housing bolts (two lower bolts on each side also retain engine rear mountings). Thread a 9/16"-12 bolt in center hole in each side of housing (directly above dowel pins) to remove dowel pins from rear housing (remove bolts when dowels are free). On all models except Convertibles (see Convertible Note below), remove transmission by moving it toward the rear and lowering it to the floor (CAUTION—to prevent mainshaft striking flywheel mounting bolts when lowering transmission, turn flywheel so that shaft passes down between two bolts).

Convertible Transmission Removal Note—Use a rope looped around rear end of transmission and extending through floor pan hole to inside of car to guide transmission. Remove speedometer driven gear, shaft, and sleeve assembly. With transmission moved to rear to clear engine, raise rear end of engine as high as possible (CAUTION—do not allow end of transmission main shaft to scrape on face of flywheel). Tilt transmission down at front (lift rear end with guide rope), and remove from beneath car.

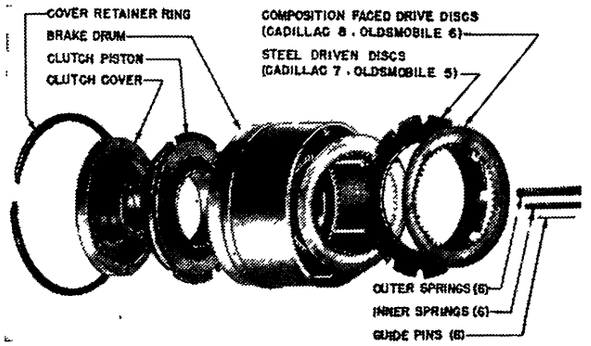

HYDRA-MATIC DRIVE REAR UNIT 6 DRIVE-PIN TYPE

DISASSEMBLY

DISASSEMBLY OF TRANSMISSION: With transmission removed from the car, disassemble and remove sub-assemblies as follows:

Fluid Coupling & Bell Housing: Install manual control lever on transmission case shaft and shift transmission into Reverse (move lever all the way back), then remove lever. Straighten lock plate on main shaft nut, remove nut, using tool KMO-334, or 1 7/16" socket wrench (Pontiac models), remove lock plate. Slide driven member of the fluid coupling off shaft. Remove snap ring retaining driving member on intermediate shaft, remove driving member and fluid coupling cover. CAUTION—Use care not to damage oil seal rings when removing these parts (work fluid coupling cover hub back through oil seals carefully, then remove cover by pulling with a quick jerk). Take out four attaching screws and remove bell housing. Remov horseshoe washer from forward end of mainshaft (use tool J-1458).

Control Units & Servos: Remove filler cap and oil level dip stick, place transmission on bench or stand in inverted position. Remove side cover and gasket.

Oil Pan & Oil Lines—Take out oil pan capscrews Remove oil pan and gasket, remove oil pan screen (lift screen at rear to clear rear oil pipe, slide screen back off front oil pump pipe). Remove front oil pump pipe, capscrews, locks, and gaskets (straighten lock plate ears, lift on pipe as screws loosened and lift out as a unit to prevent dropping screws or locks in case).

Main Oil Control Valve Assembly—Turn manual control lever shaft to "LO" range position, remove four screws holding control valve body on transmission case, slide control valve body forward on transmission case and remove. NOTE—Three oil delivery pipes may come off with valve control body or remain in governor sleeve. Remove pipes by pulling them out of governor sleeve.

Reverse Shifter Assembly—Remove two mounting bolts, lift out reverse shifter bracket, shims, retracting spring, and roller (CAUTION—Do not lose any part of the shim pack, these shims must be replaced when bracket re-installed). Remove reverse anchor support bolt (special retainer bolt on rear of case), withdraw reverse anchor.

Front & Rear Servos—Disconnect rear pump oil discharge pipe coupling at front servo (hold brass fitting with 25/32" wrench, loosen coupling with 11/16" wrench), do not remove pipe until servo mounting screws have been loosened. Loosen front and rear servo adjusting screw locknuts and back off both servo adjusting screws approximately 5 turns. Remove four servo mounting screws, lift out both servos as a unit (NOTE—Rear pump discharge pipe will slide free as servos are lifted out). Remove rear pump discharge pipe. Separate front and rear servos using care not to damage oil connecting pipe. Remove front pump oil delivery pipe (pipe may come out with servos or remain in pump).

Rear Oil Pump & Governor Assembly: The governor run-out can be checked before assembly is removed (see Governor Run-out Note below). Rotate rear planetary unit drum until one of the reverse drive

CONTINUED ON NEXT PAGE

1946-48 HYDRA-MATIC DRIVE (C nt.)

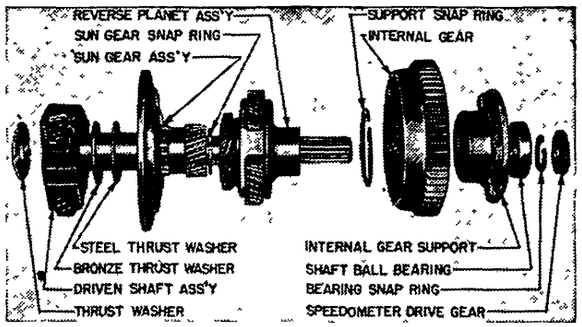

HYDRA-MATIC DRIVE REVERSE UNIT

flange attaching screws points straight upward. Remove two mounting screws in oil pump and governor body flange, lift assembly slightly, turn governor until large round weight points toward front, work assembly inward and upward until it can be lifted clear of the case (CAUTION—Do not lose plug from governor sleeve).

NOTE—Governor Run-out Check—Mount dial indicator on side of transmission case so that indicator spindle contacts oil delivery sleeve near outer end. Rotate output shaft through several revolutions and note run-out as indicated on dial. Total run-out must not exceed .005". If run-out excessive, mark position of governor body on drive flange, remove governor body by taking out two mounting capscrews. Check run-out of governor mounting flange (indicator spindle on flange just inside mounting bolt hole circle). If flange run-out exceeds .002", replace Governor Drive Flange, Gear Set (Pump Shaft), or complete Rear Oil Pump Assembly. If flange run-out less than .002", re-install governor in reversed position (rotate governor 180°), recheck run-out. If run-out still in excess of .005", replace Governor & Oil Delivery Sleeve.

Pressure Regulator Assembly: Loosen pressure regulator plug on lower left side of case at front end, unscrew plug by hand (CAUTION—Hold plug against spring tension while unscrewing, do not allow spring and parts to fly out), withdraw plug, spring, and valve from case.

Front Oil Pump & Front Unit Drive Gear: Mainshaft endplay should be checked before disassembly of mainshaft parts (see Note below). Remove snap ring from mainshaft directly in front of main drive gear, remove steel and bronze thrust washers from shaft (CAUTION—these are special thrust washers and must be re-installed in same position). Remove two front pump retaining capscrews and copper washers (on front face of case at rim of pump body). Remove pump locating washer from counterbore under one of the pump retaining screws (use Snap Ring Pliers), remove front pump, gasket, and front unit drive gear as an assembly (tap out from rear using a brass drift). Remove bronze thrust washer from in front of front planetary gear carrier (washer may come out with front unit drive gear—must be removed before attempting to remove front and rear units).

NOTE—Mainshaft Endplay Check—Install mainshaft centering guide Tool J-2171 (Cadillac & Oldsmobile), Tool J-2587 (Pontiac), on end of mainshaft and intermediate shaft to center shafts, install dial indicator over end of shaft using extension mounting, tool J-1465, in one of bell housing mounting screw holes. Insert screwdriver or tool J-2173 between front drum and center bearing cap to hold planetary units forward, move mainshaft backward and forward and note endplay reading of dial indicator. Endplay should be .006-.016" (Cadillac), .004-.015" (Oldsmobile & Pontiac). This actual endplay should be noted so that correct selective washer can be inserted when transmission reassembled.

Reverse Gear Assembly & Mainshaft: Remove six capscrews mounting reverse drive flange on rear unit drum (hold rear drum steady by applying rear band by means of a screwdriver or by using tool J-2172). Remove five rear bearing retainer capscrews (one screw is reverse anchor support and was removed previously when anchor taken out). Withdraw bearing retainer and reverse assembly through rear of case. CAUTION—Selective washer (which controls mainshaft endplay) may remain in driven shaft counterbore or may stick to mainshaft. Make certain this washer removed when reverse assembly taken out.

Front & Rear Planetary Units: Withdraw mainshaft through rear of case, remove bronze thrust washer from rear clutch hub. Install Clutch Hub Retaining Tool, J-2174, on rear unit brake drum (CAUTION—Use of this retainer important to prevent gear unit clutch plate dropping off hub and being damaged or rear unit drum sliding forward and damaging oil ring lands). Remove two center bearing cap mounting screws and lock plate, remove center bearing cap. On Pontiac models, remove rear band and strut assembly (lift rear unit to allow band to slide clear of drum) and wire front band on front unit drum. Lift both planetary assemblies out as a unit.

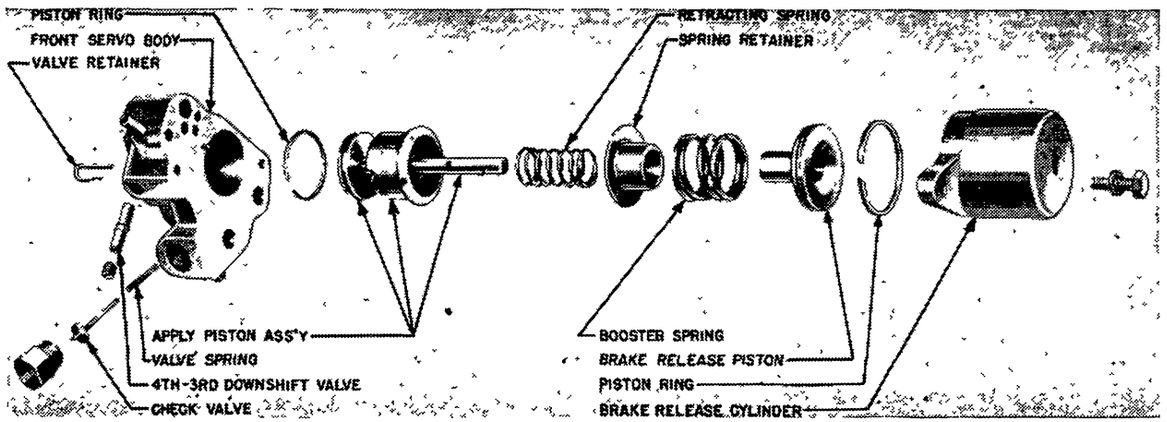

HYDRA-MATIC DRIVE FRONT SERVO

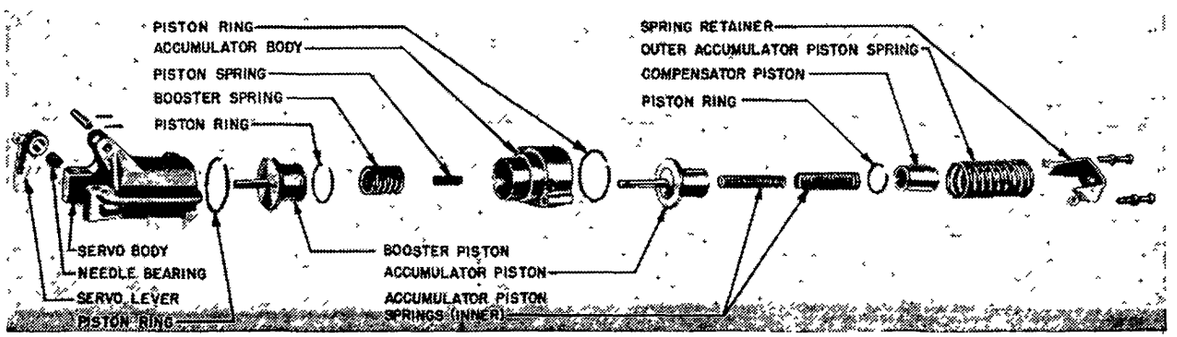

HYDRA-MATIC DRIVE REAR SERVO

CHEVROLET 1936 THREE-SPEED

CONSTANT-MESH TYPE
Standard Model FC, (1936)
SYNCHRO-MESH TYPE
Master Models FA, FD (1936)

TYPE:—Constant mesh (all models), synchro-mesh (some models only), with helical gears for second speed, sliding spur gear for low and reverse. Main drive gear integral with clutch shaft and mounted on ball bearing which takes gear thrust. Mainshaft mounted on cageless roller bearing (front), ball bearing (rear) which takes gear thrust. Second

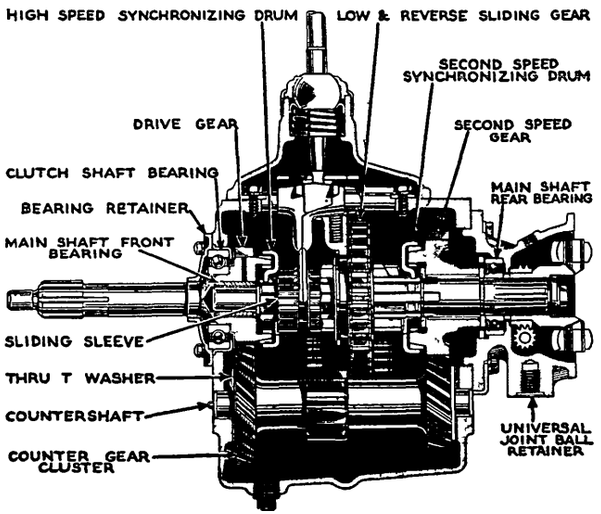

speed gear positioned on shaft at rear of transmission case by washer and locking ring (front), thrust washer in front of bearing (rear). Sliding sleeve, which engages gears, is splined on shaft between drive gear at front and second speed gear at rear. Low speed sliding gear is splined on this sleeve at the center and is held stationery when the sleeve is shifted to engage second or high. Counter gear cluster and reverse idler gear mounted on bronze bushings on stationery shaft with thrust washer at each end.

Synchronizing Unit (Synchro-mesh type):—Consists of synchronizing cones formed integrally with main drive gear and second speed gear and drums positioned loosely on mainshaft by synchronizing springs. Drums are engaged by these cylindrical springs and cams formed on the ends of the sliding sleeve and are driven by prongs which engage slots in sleeve.

REMOVAL OF TRANSMISSION: *See "Transmission" on car model page.*

SERVICING:—**Disassembly.** Remove cover, interlock and shifter fork assemblies, speedometer driven gear and shaft. Take off universal joint capscrew and washer, slide universal yoke off shaft. Remove universal joint ball retainer screws, turn retainer to free countershaft, drive countershaft out toward front end to permit counter gear cluster to drop down and unmesh gears. Pull mainshaft and universal joint retainer assembly out at rear disengaging front synchronizing cone, synchronizing spring, and low speed gear (remove these from above). Take out main drive gear bearing retainer screws (on front of case), remove main drive gear and bearing assembly. To remove reverse idler gear, drive out expansion plug behind shaft, remove shaft lock screw on case at rear shaft boss, drive shaft out toward rear.

Mainshaft & Bearing Assembly:—Remove sliding sleeve and press shaft out of rear bearing in universal joint ball retainer, remove gear and thrust washer. To remove bearing from retainer housing, remove lock ring at front of bearing (on Standard model, expand lock ring with wedge shaped tool). Use special tool HM-520 to remove and install synchronizing springs and second speed gear thrust washer lock ring. Thrust washer behind second speed gear should be installed with oil grooves toward gear.

Synchronizing Springs:—Not interchangeable front and rear (rear springs 1/16" wider in slots). Should be selected so that clearance between spring and spline shaft shoulder is .025" min., .035" max., when installed. Furnished in following sizes and marked for identification:

Type	Size	Marking
Rear	.282"	White
Rear	.292"	Black
Front	.173"	Red
Front	.183"	Yellow
Front	.193"	Green
Front	.203"	Blue
Front	.213"	Brown

Main Drive Gear & Clutch Shaft Bearing:—Bearing is press fit on shaft and is retained by lock ring. When installing assembly in case, tap on outer bearing race only (tapping on shaft will drive shaft through bearing, loosening oil deflector and causing a rattle). Install bearing retainer with mark 'TOP' up.

Counter Gear Cluster:—When installing new bushings, see that longer bushing placed at rear.
NOTE—On Chevrolet, bushings are diamond-bored after installation and are not furnished separately. Clearance on shaft should be .002-.004". Thrust washers formed with tang which must be aligned in case. Install shaft from front. Endplay should be .005-.025" (replace thrust washers if excessive).

CHEVROLET 1937-39 THREE-SPEED

MASTER MODEL GB ('37), HB ('38), JB ('39)
MASTER DELUXE GA ('37), HA ('38), JA ('39)
HALF TON GC ('37), HC ('38), JC ('39)
¾ TON HD ('38), JD, JE ('39)
1 TON MODEL HE (1938)

SPECIAL SERVICE NOTES:—**New Bearing Retainer (1938-39-40 Models)**—A special malleable iron Clutch Gear Bearing Retainer (Front Bearing Retainer) #604227 is available and can be installed on 1938-39 Passenger cars and 1938-39-40 Trucks (½, ¾, ¾ Ton Special) with three speed transmission for severe service. This retainer will prevent lubricant loss due to cracked bearing retainers.

NOTE:—Transmissions used on all models same except as follows:
Master Deluxe JA with Steering Column Gearshift—This transmission identical with that used on other models except for shifter mechanism in transmission case cover. See separate article on Chevrolet Transmission Control for complete adjustment and servicing data.
Half-Ton Models—Same as passenger car type except for extension on case at rear end (to make transmission interchangeable with 4 speed truck type), longer mainshaft and spacer on shaft between rear bearing and universal joint.
¾ & 1 Ton Models—Identical with half ton model except that carburized gears used which have special tooth contour. These gears must not be used with passenger car gears and may be identified as follows: **Reverse Idler Gear**—5/32" blind hole in hub between the two gears, **Counter Gear Cluster**—5/32" blind hole in hub between 15 and 22 tooth gears, **Second Speed & First-and-Reverse Sliding Gears**—5/32" blind hole on side of gears, **Clutch (Main Drive) Gear**—5/32" blind hole on shaft between gear and threaded portion (bearing must be removed to see hole).
NOTE—Transmissions with carburized gears may be identified by 'Y' or 'Z' prefix on transmission assembly number (on boss at rear of cover).

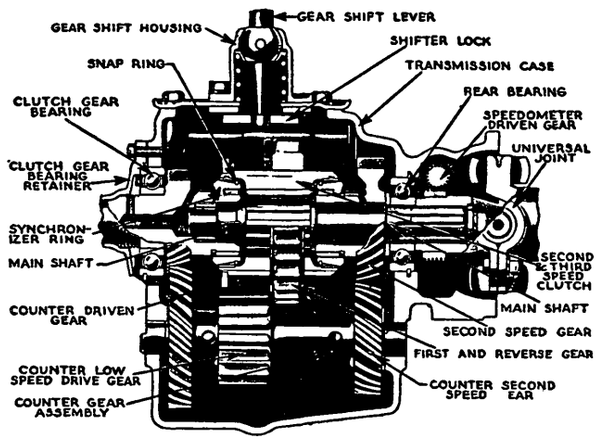

TYPE:—Constant mesh, synchro-mesh, with helical gears for second speed, sliding spur gear for low and reverse.

Synchronizing Unit:—Bronze synchronizing cones are staked in ends of sliding clutch with synchronizing rings assembled loosely within them (held by locking rings on inner ends within clutch). Synchronizing rings have prongs which engage slots on gears (between banks of clutch teeth) and revolve with gears. When clutch shifted to engage gears, ring moves toward gear until prongs strike energizing spring (in groove in gear hub) and spring resistance then engages ring with cone to effect synchronization, cone prongs then slide over spring and enter narrow wedge slots and sliding clutch engages clutch teeth on gear.

REMOVAL OF TRANSMISSION: *See "Transmission" on car model page.*

SERVICING:—**Disassembly.** Remove gear shift lever housing (back screws off evenly to relieve shift lever spring tension), transmission cover, interlock. Drive shifter shafts out toward front (front end of shafts .003" larger), remove shifter yokes, lock balls and springs. Remove universal joint capscrew and washer, slide joint off shaft. Remove drive gear bearing retainer screws on front of case, take off retainer. Mark main drive gear, second speed gear, and both synchronizing rings to insure reassembly in same relative positions. Use special puller, J-937, to remove clutch shaft and main drive gear bear-

CONTINUED ON NEXT PAGE

CHEVROLET 1937-39 3-SPEED (Cont.)

ing, take out 14 loose rollers (mainshaft front bearing). Use special tool, J-938, installed on back of transmission case and push mainshaft out toward front (IMPORTANT—front synchronizer ring must be turned so that lugs line up with slots in splines on mainshaft to avoid damage to lugs and splines), remove mainshaft from front end. Engage second speed gear and clutch sleeve, remove clutch sleeve assembly, low and reverse gear, second speed gear from case as a unit, remove second speed gear thrust washer. Expand rear bearing lock ring into case (use tool J-935), tap bearing out toward front (bearing must be removed before countershaft can be removed). Drive countershaft out toward front. To remove reverse idler, drive idler shaft lockpin into shaft (pin shorter than shaft diameter), drive out expansion plug at rear of case, remove idler shaft through this hole.

Main Drive Gear & Clutch Shaft Bearing:—Bearing retaining nut and oil-slinger are single unit with left hand thread and are staked in hole in shaft. Use special press-plate J-936 to press bearing on or off shaft. Bearing retainer mounting holes on front of case spaced irregularly to insure assembly in correct position (to align oil return holes).

NOTE—Special Malleable Iron Clutch Gear Bearing Retainer, No. 604227, available for installation on all 1938-39 Three-Speed Transmissions for severe service (will prevent lubricant loss due to cracked retainers).

Clutch Sleeve & Synchronizing Rings:—To disassemble rings, turn ring until ends of ring retainer is visible through slot in sleeve, insert special pliers J-932 in slot, expand retainer to free ring, pull ring out. See that synchronizing cones are tight in sleeve (replace clutch sleeve and cone assembly if cones loose or worn). Check rings to see that they do not rock in cones.

Energizing Springs:—Use new spring whenever spring is removed. When installing springs, do not expand more than necessary to clear clutch teeth. Install springs with offset end between fourth and fifth teeth (see Note) of any bank of the clutch teeth (offset prevents spring rotation).

IMPORTANT NOTE—Two types of synchronizer springs—No. 590846 and No. 591288 (new type)—furnished for use on all 1937-41 transmissions. These springs interchangeable but must be installed differently as follows:

No. 590846—Gap is 3/32-7/32". Install in groove with offset locking end between 2nd and 3rd teeth of any one of the three banks of teeth.

No. 591288—Gap is 5/16-7/16". Install in groove with offset locking end between 4th and 5th teeth of any one of the three banks of teeth.

Counter Gear Cluster:—Bushings staked in place and diamond-bored after installation. Not sold separately. Clearance on shaft .002-.004". When installing countershaft, see that thrust washers are in place at each end of counter gear cluster and that flat on forward end of shaft is horizontal and on top (flat engages clutch housing to prevent shaft turning, transmission cannot be installed unless flat properly located).

Reverse Idler Gear:—Remove old lockpin from shaft before installing, line up holes in case and shaft, use new lockpin and drive pin in so that head is approximately 1/16" beyond surface of case, peen hole to prevent pin coming out. Pin must be tight in hole to prevent oil leaks.

1940-48 CHEVROLET THREE-SPEED

Pass. Cars & Sedan Delivery (1940 to 1948)
Half-Ton & ¾ Ton Truck (1940 to 1948)
One-Ton Truck (1940 to 1947)

▷NOTES, CAUTIONS, & CHANGES

▷1940 Pass. Car High Gear Disengagement Complaints—To correct complaints of transmission disengaging in High Gear position, check the following points first: Check Vacuum Cylinder Valve Setting and install No. 3655072 Valve Friction Spring on valve rod (see Chevrolet Transmission Control article for data), check run-out of transmission pilot face on clutch housing and shim between clutch housing and transmission if run-out exceeds .008". If this does not correct complaint, install following parts (furnished in Unit Package No. 605021): Main Shaft, 2nd. & 3rd. Speed Clutch & Synchronizer Assembly, Clutch Gear. New main shaft and clutch are 1941 type with 6 splines (instead of 18) and have ground lands.

▷1940-47 Truck Low Gear Disengagement Complaints (when Replacement Cover Plate assembly installed). May be caused by incorrect assembly of cover plate (shifter interlock guide plate installed upside down). *See Chevrolet Shop Notes (in Car Model Section) for identification of these faulty cover plates.*

▷Serviceable Interlock Lever and Shaft—On late 1940 (and all later models), shifter interlock lever is clamped on shaft by ¼x28x¾" bolt and can be removed so that these parts can be serviced separately (complete cover must be replaced on first type with welded shaft and lever).

▷Truck Countergear Assembly Note—Countergear is mounted on roller bearings and this type countergear only is furnished for service on all models. See special service data below for countergear servicing when roller bearings used.

▷1948 Truck Rear Bearing Support—The universal joint front yoke supported in bearing support assembly secured to rear end of transmission case by a square head pipe plug. Speedometer drive gear mounted on forward end of universal spacer (ahead of universal yoke) with a spacer installed ahead of gear (between front side of gear and rear side of mainshaft ball-bearing).

DESCRIPTION: Constant-mesh, synchro-mesh (2nd & High), sliding gear (Low & Reverse), all helical gear type. Design changed from type used on 1940 models as follows: Shifter interlock lever clamped on shaft by clamp bolt instead of being welded (parts can be serviced separately), mainshaft now has 6 splines instead of 18 and lands between splines ground for more accurate centering of 2nd. and high clutch (see 1940 Special Service Note above), shifter yokes are 'granodized', Reverse Idler Gear bushings staked in place to prevent loosening in service, and speedometer drive gear now mounted on universal joint spacer (instead of on yoke).

Passenger Car Shifter Mechanism—Have special type Shifter Mechanism mounted in side cover on transmission case (no top cover used). All service replacement gears are Carburized type (same as used in Truck transmissions).

Truck (1940-47) Shifter Mechanism—Have conventional shift lever mounted on top cover. All gears are Carburized type (carburized gears furnished for passenger car transmission service also).

Steering Column Gearshift (1948 Trucks)—Mechanical gearshift with shifter levers (directly engaging gears) mounted in cover on side of transmission case. Gear selection shifter gates located in housing mounted at lower end of steering column

Transmission Extension (all models)—All transmissions have extension on rear end so 4 speed transmission can be installed without difficulty on truck models. NOTE—When installing 4 speed transmission on ½ Ton Models, new brake master cylinder must be installed. Special speedometer gear adapter and new speedometer gears must be installed on all models.

Vacuum Power Gearshift (Passenger Cars)—See separate Chevrolet Transmission Control article for complete adjustment, disassembly, and servicing

REMOVAL OF TRANSMISSION: *See "Transmission" on car model page.*

DISASSEMBLY: On Pass. cars & 1948 trucks, take out screws and remove cover on left side of case (see Shifter data below). On other trucks, take out screws and remove gear shift lever and transmission cover assembly (turn screws out evenly to relieve spring pressure), remove shifter shafts and forks (see Shifter servicing data below). On all models, remove universal joint capscrew and washer, slide joint off shaft. Remove drive gear bearing retainer screws on front of case, take off retainer. Mark main drive gear, second speed gear, and both synchronizing rings to insure reassembly in same relative positions. Use special puller, J-937, to remove clutch shaft and main drive gear bearing, take out 14 loose rollers (mainshaft front bearing). Use special tool, J-938, installed on back of transmission case and push mainshaft out toward front (IMPORTANT—front synchronizer ring must be turned so that lugs line up with slots in splines on mainshaft to avoid damage to lugs and splines), remove mainshaft from front end. Engage second speed gear and clutch sleeve, remove clutch sleeve assembly, low and reverse gear, second speed gear from case as a unit, remove second speed gear thrust washer. Expand rear bearing lock ring into case (use tool J-935), tap bearing out toward front (bearing must be removed before countershaft can be removed). Drive countershaft out toward front. To remove reverse idler, drive idler shaft lockpin into shaft (pin shorter than shaft diameter), drive out expansion plug at rear of case, remove idler shaft through this hole.

REASSEMBLY: Reverse disassembly directions (above) and note following data on servicing of all sub-assemblies.

Main Gear Drive & Clutch Shaft Bearing:—Bearing retaining nut and oil-slinger are single unit with left hand thread and are staked in hole in shaft. Use special press-plate J-936 to press bearing on or off shaft. Bearing retainer mounting holes on front of case spaced irregularly to insure assembly in correct position (to align oil return holes).

NOTE—Special Malleable Iron Clutch Gear Bearing Retainer, No. 604932, available for installation on all 1940 and later 3-speed transmissions for severe service (will prevent lubricant loss due to cracked retainers).

Clutch Sleeve & Synchronizing Rings:—To disassemble rings, turn ring until ends of ring retainer is visible through slot in sleeve, insert special pliers

CONTINUED ON NEXT PAGE

1940-48 CHEVROLET 3-SPEED (C nt.)

J-932 in slot, expand retainer to free ring, pull ring out. See that synchronizing cones are tight in sleeve (replace clutch sleeve and cone assembly if cones loose or worn). Check rings to see that they do not rock in cones.

Energizing Springs:—Use new spring whenever spring is removed. When installing springs, do not expand more than necessary to clear clutch teeth. Install springs with offset end between third and fourth teeth of any bank of the clutch teeth (offset prevents spring rotation).

IMPORTANT NOTE—Two types of synchronizer springs—No. 590846 and No. 591288 (new type)—were furnished for all 1937-42 transmissions (new No. 591288 only now furnished). These springs interchangeable but must be installed differently as follows:

No. 590846—Gap is 3/32-7/32". Install in groove with offset locking end between 2nd and 3rd teeth of any one of the three banks of teeth.

No. 591288—Gap is 5/16-7/16". Install in groove with offset locking end between 4th and 5th teeth of any one of the three banks of teeth.

Mainshaft & Rear Bearing:—To install bearing, first install bearing lock ring in case, expand lock ring with tool J-935, tap bearing on outer race with soft steel drift until it is halfway in case, release snap ring, continue to tap bearing until lock ring engages slot in bearing race. Lubricate second speed area of mainshaft, install shaft with lugs on front synchronizer aligned with slots in mainshaft spline (to avoid damage to lugs and splines), use replacing tool J-938 to pull shaft into place. Second speed gear endplay should be .010" with shaft installed.

Rear Bearing Support (1948 Trucks): Support (with bushing) furnished as an assembly to maintain transmission alignment. Replacement of bushing requires replacement of complete Support as follows: Split universal joint, take out transmission support to frame bolts, push front end of propeller shaft up out of the way. Remove universal capscrew and take off yoke. Remove Support Pipe Plug from case and pull Support out through rear of case with hook puller. When installing Support, align pipe plug hole in support with tapped hole in case.

Speedometer Drive Gear (1948 Trucks): Replacement of this gear requires removal of Rear Bearing Support (as given above). With the Support off, Speedometer Drive Gear and Sleeve can be removed after removing Speedometer Driving Gear from case.

►*CAUTION—Speedometer Drive Gear Spacer installed ahead of Speedometer Drive Gear on 1948 Trucks.*

Counter Gear Cluster:—Bushings staked in place and clearance on shaft is .002-.004". When installing countershaft, see that thrust washers are in place at each end of counter gear cluster and that flat on forward end of shaft is horizontal and on top (flat engages clutch housing to prevent shaft turning, transmission cannot be installed unless flat properly located).

Countergear Cluster Bushing Installation—Rear bushing must not close up rear holes in countergear cluster (hole opening must be 3/32" minimum—bushing must project partly over hole to permit staking it in place). These openings necessary to permit oil circulation around shaft for lubrication. When bushings installed, stake bushings in place by expanding bushings into the front and rear holes in countergear cluster. Check rear bushing and if hole opening is not 3/32" minimum, drill 1/8" hole in bushing at each rear hole (drill at front edge of countergear cluster hole to avoid disturbing bushing stakings).

NOTE—Front holes in countergear cluster provided merely for staking bushing and will ordinarily be closed by the bushing when it is installed. These holes are not necessary for lubricant circulation.

Roller Bearing Type—Used on trucks and furnished as service replacement on Passenger cars (Carburized Gear type). To install bearing rollers, install shaft in countergear cluster, coat roller recess with cup grease, install 25 rollers in each end, remove countershaft and install gear cluster in transmission case. Install forward thrust washer between gears and case (lubricate washer), feed assembly tool T-1617 in from front end (tapered end first), lubricate countershaft and install at front end and pushing assembly tool out at rear end (lubricate rear thrust washer and install in case before assembly tool reaches this point). See that flat on forward end of shaft is horizontal and flush with case (not more than 1/64" below face).

Reverse Idler Gear:—Remove old lockpin from shaft before installing, line up holes in case and shaft, use new lockpin and drive pin in so that head is approximately 1/16" beyond surface of case, peen hole to prevent pin coming out. Pin must be tight in hole to prevent oil leaks. Install new expansion plug in shaft hole in rear of case.

Shifter Mechanism (Passenger Cars):—Consists of two shifter forks on 'I' beam type guide bar bolted on inner face of transmission side cover. Forks are operated by toggle lever in cover and one fork is locked by cross-shift lever while the other fork is being moved to engage gears (cross-shift lever has short arc between slots in gears).

Disassembly—With cover off transmission case, remove two bolts holding guide bar and shifter fork assembly on cover, remove assembly, lift shifter yoke lever, anti-rattle spring, and operating shaft out. Slide shifter forks off guide bar being careful not to lose shift lock balls and spring (in hole in guide bar under forks). Wash all parts in gasoline.

Reassembly—Install long shifter fork on guide bar with fork end toward nearest mounting screw hole, line up lock ball recess in fork with hole in guide bar, install one lock ball and spring in hole, start opposite shifter fork on guide bar, assemble other lock ball on spring, use flat tool to compress spring and slide fork into position over lock ball. Check operating shaft cork seal and retainer, replace if worn. Install operating shaft in cover, assemble anti-rattle spring and shifter yoke lever on bell crank end of operating lever, move selector (cross-shift) bell crank over center of shifter yoke lever. Press on outer end of operating shaft so that shifter yoke lever held firmly against selector lever bell crank, make certain that both shifter forks in neutral position on guide bar, then assemble guide bar and shifter fork assembly on cover with low-reverse shifter fork toward bottom (narrow side) of cover. Make certain that selector lever bell crank engages slots in shifter forks and that pins in forks engage slots in end of shifter yoke lever. Bolt guide bar to cover. CAUTION—Low-reverse sliding gear and clutch sleeve must be in neutral position when

CONTINUED ON NEXT PAGE

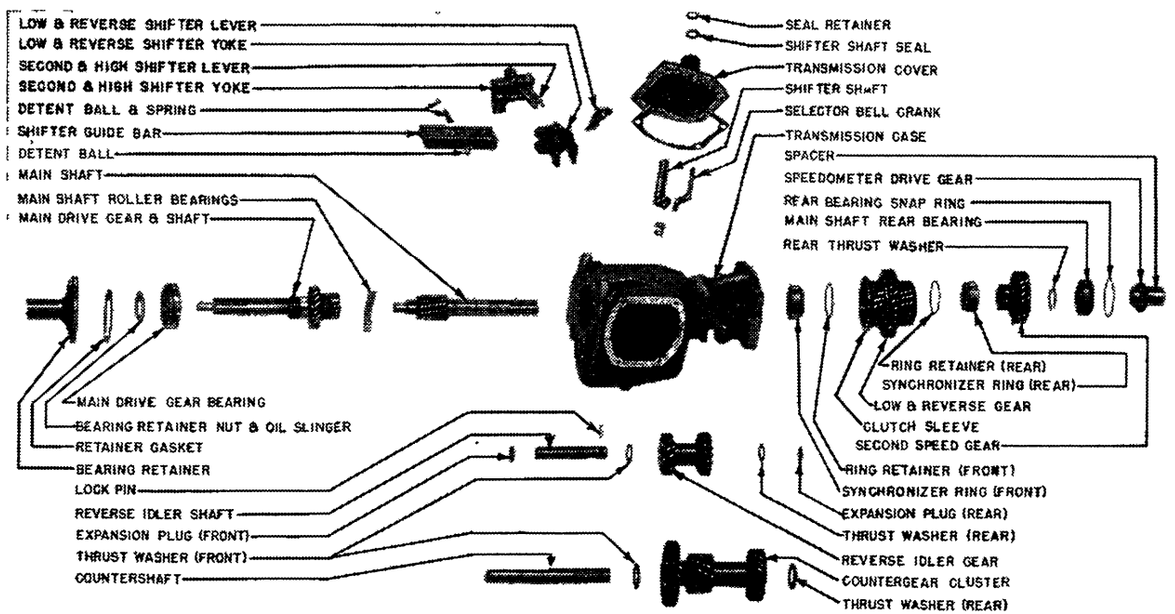

1940-48 CHEVROLET 3-SPEED TRANSMISSION

1940-48 CHEVROLET 3-SPEED (Cont.)

shifter mechanism installed on transmission case. See Chevrolet Vacuum Power Transmission Control for gearshift lever adjustment on the car.

Shifter Mechanism (1940-47 Trucks): Shafts must be removed from front end of case (.003" larger diameter at this end) and can be driven out with a soft steel drift. Shafts are locked in place by two long cover screws which engage holes in shafts (see that holes in case and shafts line up when installed).

Shifter Mechanism (1948 Trucks): Replacement of shifter parts (in Transmission side cover) requires removal of cover as follows: Drain transmission, take out shift lever lock bolts, and pull lever off each shifter shaft. Remove cover from transmission. Take out shifter interlock retainer capscrews, remove retainer which permits removal of shifter shaft and fork assemblies, poppets and springs or interlock from cover.

Cover Installation—Hump on side of First and Reverse Shifter Fork must be toward rear of transmission. Install cover (using new cover gasket) with gears and shifter forks in neutral. Install shift lever on each shifter shaft and tighten lock bolts.

Universal Joint Ball Adjustment: Should be checked each time propeller shaft disconnected (before transmission reinstalled). Remove ball housing from torque tube, clean ball with cleaning solvent, check for roughness and clean up with emery cloth, see that torque tube is clean. Install new torque ball outer retainer seal and packing. Assemble ball housing on back of transmission using same thickness of shims as removed, tighten attaching capscrews securely. Check adjustment by moving rear end of ball housing. If adjustment correct, torque tube ball should be snug fit but should move with hand pressure. If ball housing cannot be moved, add shims under ball retainer flange, if ball housing moves very freely, remove shims at this point until correct adjustment secured.

CHEVROLET TRUCK 4-SPEED (SPUR GEAR)

1½ & 2 Ton Truck Models (1936 to 1947)
Cab-Over-Engine Truck Models (1939 to 1947)

▷Optl. Equipment Note—This transmission is Optl. on ½ & ¾ Ton trucks. Requires special speedometer gear adapter and speedometer gears (all models), new brake main cylinder (½ Ton).

▷Main Drive Gear & Bearing Retainer Change to correct lubricant leakage along drive gear shaft to Clutch. To correct complaints of lubricant seepage along main drive gear shaft, new type main drive gear and new type bearing retainer (serviced as a unit, Part No. 3847311) are available as follows:

Main Drive Gear—Has oil return threads machined on shoulder on shaft and 3/16" oil return hole connecting oil return threads with main shaft pilot bearing cavity. A second oil hole 1/8" in diameter is drilled into the main shaft pilot bearing cavity just forward of the gear teeth. This hole causes a vacuum in the cavity which tends to draw in any lubricant caught in the oil return threads.

Bearing Retainer—Retainer for use with new main drive gear (above) does not have oil return threads on inner diameter as found on previous type retainer. NOTE—This new type retainer furnished separately under Part No. 591605.

▷1941 Truck Low and Reverse Gear Ratio Change: Gear ratio of Low Gear changed from 7.226 to 7.03 to 1, and ratio of Reverse Gear changed from 7.142 to 6.98 to 1 in production (first type same ratio as 1940 and previous transmissions). These new gear ratios used on transmissions beginning with Transmission Serial No. 7108902 (number stamped on left side of case at rear just below cover). New gears in first transmissions (Serial No. 7105902 to 7114663) not marked but can be identified by transmission serial number and fact that low-reverse sliding gear has 42 teeth. Beginning with Serial No. 7114664, gears marked for identification as follows:

Countershaft & Low Speed Gear—Two grooves in shaft at point between low and second speed gears.

Reverse Idler Gear—Two similar grooves on shaft between gears.

Low, Second, Reverse Sliding Gear Assembly—Not marked but may be distinguished by larger low & reverse gear with 42 teeth (first type had 43). CAUTION—Both types of gears furnished for service and care must be taken to install correct type in each transmission.

DESCRIPTION: Four speed, spur gear. Clutch shaft and main drive gear mounted on ball bearing at front end of transmission case. Mainshaft mounted on roller bearing at front, ball bearing at rear. Countershaft mounted on roller bearing at each end. Reverse idler gears mounted on bronze bushing on stationary shaft.

1941-47 Type—All models have Hotchkiss Drive and open propeller shaft and transmission has new type universal joint yoke and oil seal. Disregard universal joint ball housing data and refer to new Universal Joint Yoke & Oil Seal data below when servicing these 1941-42 transmissions.

REMOVAL OF TRANSMISSION: *See "Transmission" on car model page.*

DISASSEMBLY ('36-40): Remove transmission cover, shifter shaft and fork assemblies. Lock transmission by engaging two gears at once, remove speedometer pinion, remove capscrew at rear end of shaft holding universal joint yoke on shaft, pull yoke. Take out universal joint ball retainer mounting screws, remove retainer. Take out mounting screws in main drive gear bearing retainer on front of case, drive out main drive gear and bearing toward front (use soft steel drift to avoid damage to gear teeth). Remove mainshaft front bearing, drive mainshaft and rear bearing out through rear of case, slipping off sliding gears and removing these through top of case. Drive out reverse idler gear shaft toward rear, lift out gears. Drive counter gear to rear until rear bearing clears case, remove bearing and retainer, remove counter gear assembly. Remove front bearing and plug type retainer from case by tapping on outer race.

DISASSEMBLY (1941-47): Remove gearshift lever using K-353 remover tool, engaging tool lugs in gearshift lever retainer slot and turning tool counter-clockwise to disengage retainer, lift lever out (see Cab-Over-Engine Note below). Remove transmission cover assembly. Lock transmission mainshaft by engaging two gears at once, remove speedometer driven gear, remove universal joint retaining screw on rear end of mainshaft, pull universal joint on ½ & ¾ Ton Models (on 1½ Ton model, take out bearing retainer screws and remove universal joint yoke and bearing retainer as an assembly—necessary because speedometer pinion installed on front end of yoke will not permit yoke to be pulled out through oil seal). Remove screws in main drive gear bearing retainer on front end of case, remove retainer, tap drive gear and bearing out through front of case (use soft steel drift to avoid damage to gear teeth). Remove mainshaft

CONTINUED ON NEXT PAGE

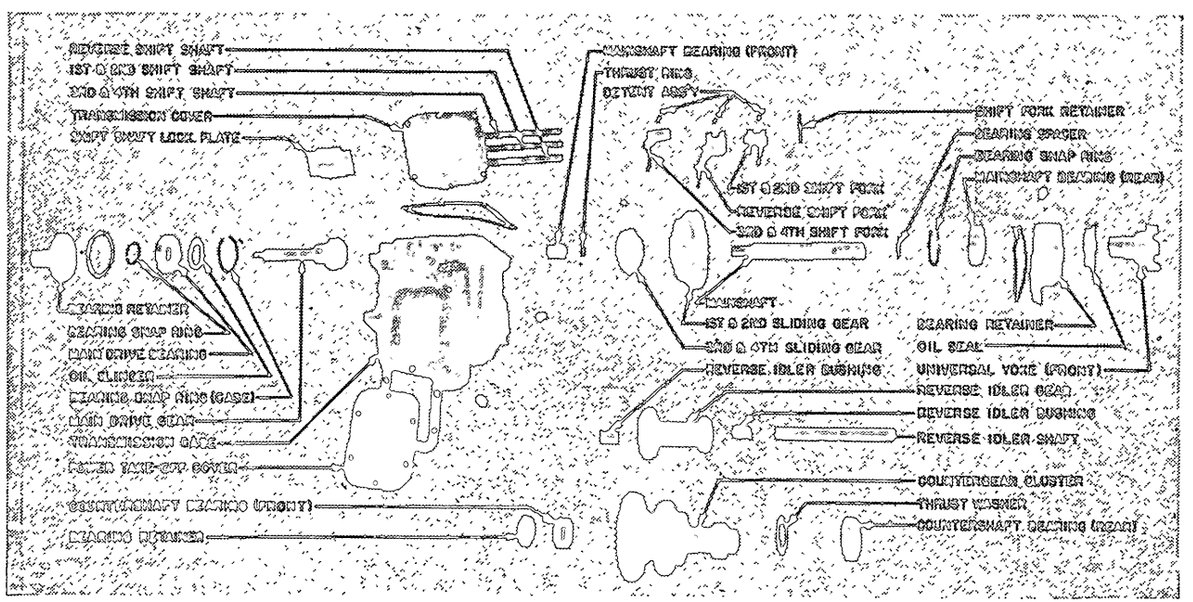

CHEVROLET TRUCK 4-SPEED SPUR GEAR TRANSMISSION

CHEVROLET TRUCK 4-SPEED (C nt.)

pilot bearing from front end of shaft, drive mainshaft and bearing out through rear end of case slipping the sliding gears off the shaft and removing these gears through top of case. Drive reverse gear idler shaft out through rear of case, remove idler gear. Drive counter gear assembly to rear until rear bearing and retainer clear rear of case, remove bearing and retainer, remove countergear through top of case. Drive out front bearing and retainer by tapping around bearing outer race.

NOTE—See Cab-over-Engine Gearshift Removal in Chevrolet Shop Notes in Car Model Section.

REASSEMBLY: Reverse disassembly directions and note following data on sub-assemblies:

Main Drive Gear & Mainshaft Bearings:—Bearings are press fit on shafts and should be removed and installed in an arbor press (remove snap ring from gear hub in front of bearing before pressing bearing off drive gear). When reassembling transmission, see that snap rings are in place in each end of case to retain bearings.

Countergear Assembly:—Low speed gear is integral with shaft, other gears are keyed on shaft with spacers to position each gear. If gears removed from shaft, assemble gears and spacers in this order: Second Speed Gear (chamfered side toward low speed gear), ¼" Spacer, Third Speed Gear (chamfered side away from second speed gear), ⅞" Spacer, Reverse Gear (chamfered side toward third speed gear—chamfered sides of these two gears face each other), 5/32" Spacer, Counter Drive Gear. The round keys should be used to keep keyways lined up while pressing gears on shaft. After gears installed, drive keys down 1/32" below flush with gear, prick-punch keys and remove all burrs.

Countergear Endplay—When installing countergear, check clearance between rear thrust washer and shoulder on gear. Endplay should be .015-.045". If clearance greater than .045", install shims between front bearing and retainer.

Reverse Idler Gear & Bushings:—Use special tool J-1662 to remove old bushings and install new bushings in idler gear. Ream new bushings with KMO-349 Reamer to provide minimum shaft clearance of .002" (bushing size .877-.878").

Shifter Mechanism:—To disassemble, remove two screws and remove shifter shaft lock plate. Turn shifter shafts ½ turn to lift lock balls out of notches in shaft, push shafts out of cover and shifter forks being careful not to lose lock balls and springs in shifter forks. When reassembling cover, install shafts in this order: Reverse Speed, Low Speed, High Speed Shaft. Install lock ball and spring in fork, use special tool to force ball down on spring, turn tool ½ turn to hold ball in place while shaft is being installed.

Rear Oil Seal (1½ Ton):—To remove universal joint yoke from rear bearing retainer, remove oil seal by pressing on front surface inside bearing retainer, press speedometer drive gear off hub of yoke, slip oil seal off. Soak new oil seal in engine oil, install seal in same manner using care to line up bolt holes in seal bolting flange with holes in retainer. Install speedometer drive gear with chamfered face of gear toward front end of yoke.

CHEVROLET TRUCK 4-SPEED HELICAL GEAR (SYNCHRO-MESH)

1, 1½, 2 Ton Truck Models (1948)

►**INSTALLATION ON ½ & ¾ TON TRUCKS:** When this transmission installed on these models (Optl. Equipment), regular Rear Bearing Retainer (No. 591701) must be replaced by No. 591679 Rear Bearing Retainer.

DESCRIPTION: Four speed type with helical constant-mesh, synchro-mesh gears (2nd, 3rd, 4th), sliding spur gears (1st & Reverse). Sliding 1st speed gear serves as the clutch member for engaging the 2nd speed gear. Mainshaft is mounted on pilot roller bearing (front), ball bearing (rear). Countergear cluster shaft mounted on roller bearing (front), ball bearing (rear).

Synchronizer (2nd Speed)—Consists of a loose synchronizer ring retained in 1st speed gear synchronizer cone by a locking ring. Synchronizer ring has two lugs which engage slots in 2nd speed gear. Lugs have wedge angles on end which engage energizing springs on web of 2nd speed gear and provide friction between synchronizer ring and cone to synchronize gears when engaging the 2nd speed gear.

Synchronizer (3rd & 4th Speed)—Conventional "wire bound strut blocking type" synchronizer. Consists of inner and outer clutch sleeves with loose synchronizer ring at each end. Rings are actuated by three struts or keys in slots in clutch hub (struts held in engagement with detent in clutch hub by two wire springs). Keys engage slots in rings and provide friction between ring and cone in gear hub when clutch sleeve shifted to engage 3rd or 4th speed gear.

REMOVAL OF TRANSMISSION: *See "Transmission" on car model page.*

TRANSMISSION DISASSEMBLY: Remove transmission cover assembly (with complete gearshift mechanism) by lifting straight up off case. Take out Reverse Shifter Lever (remove nut, screw bolt out of case, remove lever, bolt spacer, and large flat washer). Remove clutch gear bearing retainer on front end of case, remove clutch gear using J-2669 Remover (CAUTION—index cutout section of clutch gear with countershaft driven gear for clearance). Remove synchronizer ring and roller bearing spacer from end of mainshaft. Remove speedometer pinion from rear bearing retainer. Lock mainshaft by shifting into two gears at once, remove universal flange retaining screw, lockwasher, plain washer, and flange. Take out retaining screws and remove rear bearing retainer. Install J-2667 Remover on rear end of mainshaft and pull shaft to the rear until rear bearing is free of case, use J-1619 Remover to remove bearing from shaft, then remove shaft and gear assembly through top of case (tilt forward end of shaft up, move 1st speed gear as far forward on shaft as possible). Drive reverse gear shaft locking pin through into the shaft (use small punch), then drive shaft out toward rear of case, lift reverse idler gear out of case. To remove countershaft, drive punch through front bearing spacer and pry spacer out. Use brass drift on forward end of countershaft and drive shaft to rear until rear bearing is free of case. Take out rear bearing retainer screws, lift off lock plate and retainer, use TR-278-R (Differential Side Bearing Puller) to remove bearing and oil deflector from shaft. Raise front end of

CONTINUED ON NEXT PAGE

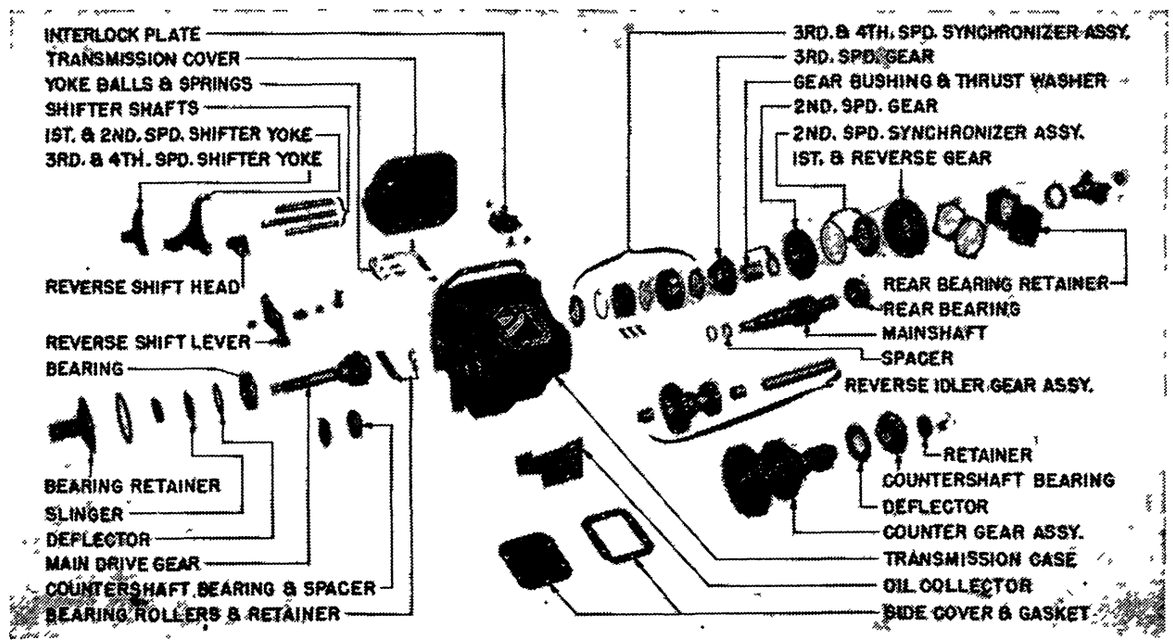

CHEVROLET TRUCK 4-SPEED SYNCHRO-MESH TRANSMISSION

CHEVROLET 4-SPEED (Cont.)

countershaft and remove assembly through top of case. Remove chip collector from bottom of case. Disassemble all sub-assemblies as follows:

Main Drive Gear (Clutch Gear) & Shaft: Lift out mainshaft pilot bearing rollers and roller retainer from recess in shaft. Mount shaft in vise, use special spanner wrench J-2670 to remove retaining nut, remove oil slinger and oil deflector. To remove bearing, use J-2228 press plate mounted in holder to press gear and shaft out of bearing. Install bearing with J-1453 press plate. CAUTION—Make certain oil deflector centered around retainer nut and stake nut after it has been securely tightened.

Mainshaft Assembly: To disassemble, remove retainer ring from pilot end of mainshaft, support assembly on 1st speed sliding gear in arbor press, press shaft out of gear cluster. Remove synchronizer key springs from synchronizer hub, remove outer sleeve from hub (CAUTION—do not lose the 3 keys). Remove synchronizer ring from 3rd speed gear, lift off gear, 2nd speed gear thrust washer, and 2nd speed gear. Remove synchronizing ring retainer from 1st speed gear, remove synchronizing ring. Wash all parts in cleaning solvent and inspect as follows before reassembling:

Synchronizer—Outer sleeve should slide freely on hub but hub should be snug fit on shaft splines. Synchronizer rings and cones must not be scored, excessively worn, or damaged.

3rd Speed Gear—Gear should be running fit on bushing and bushing must be press fit on shaft. Thrust surfaces must not be scored or worn excessively.

2nd Speed Gear & Thrustwasher—Washer and gear must not be scored or worn excessively on thrust surfaces. Replace synchronizer springs if broken or loose (use special rivets). Replace gear if bushing worn excessively. Inspect synchronizing ring for wear and scoring.

1st Speed Gear—Gear must be sliding fit on mainshaft splines. Synchronizer cone in gear must not be scored or worn excessively.

Countershaft Assembly: Gears can be removed from shaft by removing lockring on forward end and pressing shaft out in an arbor press. Install gears on shaft as follows: 2nd Speed Gear (radius end toward rear or low speed gear end), 3rd Speed Gear (may be installed either way), Revere Gear (chamfered end of teeth forward or toward driven gear), Spacer, Driven Gear. Use new Countershaft Drive Pins when installing gears, after all gears in place, drive pins 1/32" past flush with shoulder on driven gear hub. Select lock ring of correct thickness and install on shaft to retain gears.

Countershaft Front Bearing—Press fit in case. To remove bearing for replacement, drive old bearing through into case using J-994 Differential Side Bearing Replacer. Drive new bearing in using same tool until it is flush with inner face of case.

Reverse Idler Gears: Replace bushings if worn. Remove old bushings with tool J-1614 (Pitman Shaft Bushing Remover). Press new bushings in (using same tool) until flush with ends of gear. Stake bushings in place with tool J-2680. (CAUTION—bushings are split type and may creep in service if not properly staked). Line ream bushings using J-2668 Reamer.

TRANSMISSION REASSEMBLY: Assemble in reverse order of disassembly directions given above and note the following points:

Mainshaft Assembly: Install 1st speed gear on shaft with 2nd speed synchronizer forward (synchronizer ring must be held in gear hub by retainer ring), install 2nd speed gear with synchronizer springs toward synchronizer ring and prongs aligned with slots in gear hub, install thrust washer. Press 3rd speed gear bushing on shaft until it bottoms on thrustwasher. Check 2nd speed gear endplay which must be .012" plus or minus .003". Install synchronizer assembly (see data below), pressing clutch hub on shaft until it bottoms against shoulder on shaft. Check 3rd speed gear endplay which must be .012" plus or minus .002". Select lockring of correct thickness and install on forward end of shaft to retain assemblies. NOTE—This lockring furnished in four thicknesses and marked for identification as follows: .083",.087"—Red, .091"—Blue, .095"—Yellow.

Synchronizer Assembly—Install outer sleeve on hub with taper on sleeve toward long shoulder on hub, slip three synchronizer keys in slots, install spring on each side of hub to hold keys out against sleeve (CAUTION—Both springs must be installed in same relative position so that even tension applied on keys). When installing assembly on mainshaft, long shoulder on hub should be out toward pilot end of shaft and synchronizer keys must index with slots in synchronizer rings.

Reverse Idler Shaft & Lockpin: Drive shaft in from rear, aligning lockpin hole in shaft with hole in case. Install lockpin to retain shaft.

Main Drive Gear Bearing Retainer: When installing gear, align cutout portion of clutch gear teeth for clearance with countershaft driven gear. Use new gasket under bearing retainer, use Permatex or other sealing compound on retainer screw threads and tighten these screws to 15-18 ft.lbs.

Mainshaft Rear Bearing Retainer: Use new gasket. Coat retainer screw threads with Permatex or other sealing compound, tighten these screws to 20-25 ft.lbs.

Reverse Shifter Lever: Lever bolt has sleeve which acts as shoulder for lever to pivot on and must be installed as follows: Place reverse shifter lever in position, thread bolt with sleeve and flat washer through lever and into case from inside. Tighten bolt to 25-30 ft.lbs. in case, then install bolt nut and tighten nut to 60-65 ft.lbs.

CHRYSLER, DE SOTO, DODGE, PLYMOUTH 1940-48 SYNCHRO-MESH

Chrysler 6 & 8, All Models (1940 to 1948) See Note

DeSoto, All Models (1940 to 1948)—See Note

Dodge, All Models (1940 to 1948)

Plymouth, All Models (1940 to 1948)

▷OTHER (OPTL.) TRANSMISSIONS: As follows: Chrysler 8 (1941)—*See Pg. 2692 "1941 Chrysler 8 Vacamatic Overdrive" Transmission.*

Chrysler 6 & DeSoto (1941), Chrysler 6 & 8, DeSoto (Early 1942)—*See Pg. 2693 "Chrysler 6 & 8 Vacamatic, DeSoto Simplimatic Underdrive" Transmission.*

Chrysler 6 & 8, DeSoto (Late 1942)—*See Pg. 2696 "Chrysler 6 & 8, DeSoto Simplimatic Underdrive" Transmission.*

Chrysler 6 & 8, DeSoto (1946-47-48)—*See Pg. 2697 "Chrysler Hydraulically Operated, DeSoto Tip-Toe Shift" Transmission.*

▷Chrysler & DeSoto 1940 Optl. Overdrive—Warner R7B Overdrive unit electrical 'kick-down' control is mounted on rear end of Chrysler Transmission (in place of extension housing) as Optional equipment on Chrysler C25, C26 & De Soto S7; Standard equipment on Chrysler C27. *See Pg. 2651 "Warner R6 & R7 Overdrives (With "Kick-down").*

DESCRIPTION: Own Make, constant-mesh synchro-mesh, all helical gear type (sliding gear for low-reverse). Main drive gear and clutch shaft mounted on ball bearing in front of case (retained by retainer bolted on case). Mainshaft mounted on roller bearings (in drive gear pilot hole) at front end, ball bearing in rear of case and additional ball bearing at rear end of transmission case extension. Second speed gear retained on shaft with inner sleeve of synchronizer assembly by snap ring on shaft in front of synchronizer unit. Counter gear cluster mounted on roller bearings on stationary shaft (spacer on shaft between bearings) with thrust washer and plate on each end of cluster.

Synchronizing Unit—Double-blocker, double-spring type. Synchronizer rings are free in ends of inner clutch sleeve and are actuated by three shifting plates or struts fitted in slots in inner clutch sleeve which engage notches in synchronizer rings. Struts are centered in outer clutch sleeve by two wire springs (within struts on either side of inner clutch sleeve web) and move with the outer clutch sleeve to engage the synchronizer rings with the cones on the gear hub. Teeth on the outer rim of the synchronizer rings block or prevent gear engagement until synchronization completed when final movement of outer clutch sleeve causes the clutch teeth on the inner rim of the clutch sleeve to slide past the synchronizer ring teeth and engage the clutch teeth on the gear hub. Inner clutch sleeve is stationary on shaft and does not move during synchronization and gear engagement.

REMOVAL OF TRANSMISSION: *See "Transmission" on car model page.*

OVERDRIVE DISASSEMBLY NOTE: When used, overdrive adapter plate is fastened to overdrive case by special screws installed in recesses in front face of adapter plate. Overdrive and adapter must be removed as an assembly (after taking out capscrews mounting adapter on rear of transmission case) before adapter plate can be removed (use special wrench C-577 to remove the three screws which mount the adapter plate on the overdrive case. *See Warner Overdrive articles for complete Overdrive data.*

DISASSEMBLY OF TRANSMISSION: On cars with Power Shift, disconnect link and remove power shift assembly. Then remove speedometer drive pinion, remove nut on rear end of driveshaft. pull universal joint yoke flange and brake drum assembly. Take out two plugs on transmission side cover, remove detent balls and springs, remove cover and gear selector assembly. Unscrew shifter fork guide rail and remove guide rail through front

CONTINUED ON NEXT PAGE

CHRYSLER, DE SOTO, DODGE, PLYMOUTH 1940-48 SYNCHRO-MESH (Cont.)

end of case. See that gears in neutral, take out lockscrews holding shifter forks on shift rails, remove welch plug in lower shifter rail hole on front of case (collapse plug by striking in center with punch), remove shifter rails through front of case, lift out shifter forks (use care not to lose gear selector balls). Remove interlock plug on top of case (drive plug down into interlock hole), lift out the interlock plunger. Take out the four capscrews in extension housing on transmission case, remove extension and mainshaft assembly through rear of case using care that synchronizer assembly does not slide off shaft. Use special arbor C-578 and soft hammer to drive countershaft out toward rear of case (remove locking key from shaft as soon as it is exposed at rear of case), allowing counter gear cluster to drop down in case. Take out mounting screws and remove main drive gear bearing retainer from front end of case, pull main drive gear and bearing assembly out toward front. Lift counter gear cluster, thrust washers, and bearing rollers out of case. To remove reverse idler, drive shaft out toward rear using special arbor C-464 to retain bearing rollers in gear (remove locking key from shaft when exposed at rear of case), lift out idler gear thrust washers, and bearing rollers.

REASSEMBLY OF TRANSMISSION: Reverse disassembly directions (above) and note following data on servicing of sub-assemblies

Mainshaft & Bearing Assembly:—To remove mainshaft from extension housing, take out snap ring at forward end of synchronizer unit, remove synchronizer assembly, second speed gear, and low speed gear from shaft. Remove snap ring in housing in front of bearing outer race, withdraw shaft from housing, then remove bearing, spacer, and speedometer drive gear from housing. Remove oil seal and bearing from rear end of housing (bearing is press fit in housing and is positioned by spacer on shaft—no snap rings used). When reassembling mainshaft, use new snap rings. If oil seal being replaced, soak leather in thin oil for 30 minutes and work leather with smooth bar. Seal must protrude 7/32" from end of case (use C-579 drift to install seal) to prevent damage to seal and bearing.

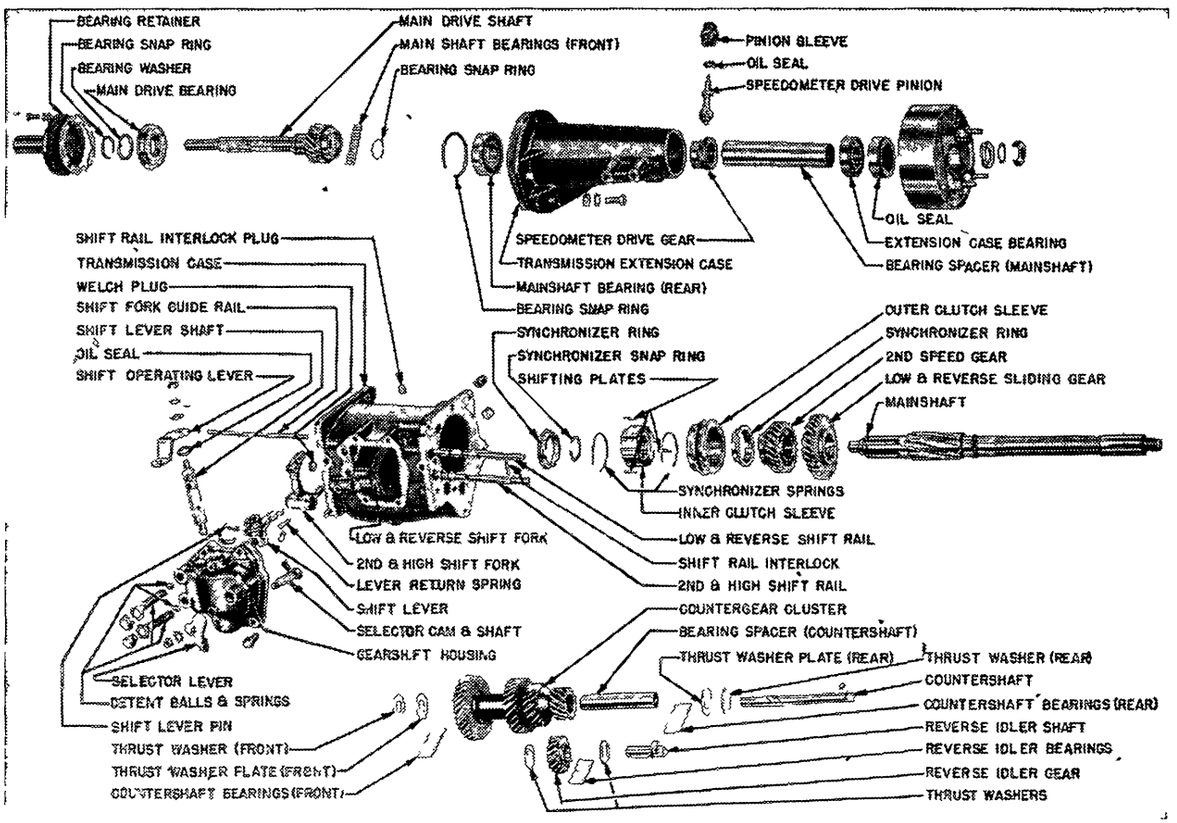

CHRYSLER, DE SOTO, DODGE, PLYMOUTH SYNCHRO-MESH TRANSMISSION

Synchronizer Assembly:—Install struts or shifting plates in slots in inner clutch sleeve with open face of strut in, assemble outer clutch sleeve and synchronizer springs making certain that hooked ends of both springs engage same strut, install synchronizer rings with notches engaging ends of struts. Synchronizer assembly is retained on shaft with second speed gear by single snap ring.

Second Speed Gear:—Gear endplay on shaft should be .003" min., .008" max. To install gear, place gear on shaft, install synchronizer assembly, install snap ring in groove in shaft in front of synchronizer.

Main Drive Gear & Bearing:—Bearing retained on shaft by snap ring and can be removed after snap ring taken out and thrust washer removed. Use new snap ring when re-installing bearing. Mainshaft pilot bearing rollers are retained in drive gear recess by snap ring. Use cup grease to hold rollers in position until mainshaft is installed.

Counter Gear Cluster:—When replacing this assembly, use arbor C-578 to position bearing rollers and pack rollers with cup grease to hold rollers in place. Install steel washer next to gear cluster at each end and bronze thrust washer between steel washer and case. Endplay should be .002" min., .008" max. Adjust by selecting washers of correct thickness (furnished in three thicknesses—'A' thinnest, 'B', 'C' thickest). Make certain that locking key is in place in slot in rear end of countershaft.

Reverse Idler Gear:—Use C-464 arbor to retain bearing rollers when idler gear being installed. See that thrust washer installed at each end of gear and that locking key is in place in rear end of shaft.

Gearshift Mechanism:—To assemble gearshift mechanism, hold shifter forks in position and insert guide rail through front end of case. Install lower shift rail, insert interlock plunger down through hole in top of case so that plunger engages groove in shift rail, then install upper shift rail (see Note below). Lock shifter forks to rails by installing lockscrews and locknuts, make certain that locking washers are crimped in place. Install welch plug in forward end of lower shift rail. CAUTION—This hole is below lubricant level and plug must be installed tightly to prevent lubricant loss. Install two C-590 cover locating pilots in cover screw holes on case, install cover and gear selector assembly, making certain that selector lever enters shifter fork slots. Install two cover capscrews, remove pilots, install remaining cover screws. Install detent balls and springs, tighten retaining plugs. Install new plug in interlock plunger hole (cup shaped plug), driving the plug in with a hammer.

See Chrysler Transmission Control articles for adjustment directions when transmission installed on car.

Shift Rail Note—Rails are similar in appearance but Low-Reverse rail has detent grooves farther apart. This rail should be installed on top.

1941 CHRYSLER 8 VACAMATIC OVERDRIVE

Chrysler 8, Models C30, C33 (1941)

CONTROL BUTTON NOTE: Button marked 'OD' (at left of steering column can be pulled out—but only when car is standing still—to lockout 2nd & 4th Speed (free-wheeling gears) if desired. Button can be pushed in (to make 2nd & 4th Speeds operative) at speeds under 27 MPH (clutch disengaged).

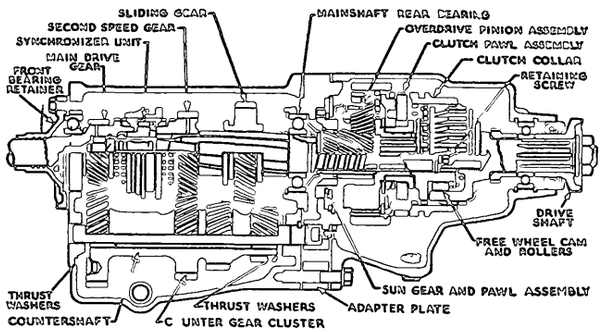

1941 CHRYSLER 8 TRANSMISSION VACAMATIC OVERDRIVE TYPE

Starting Engine by Pushing or Towing Car—Control button must be pulled out to insure transmission being in 1st or 3rd gear (2nd & 4th are free-wheeling and will not crank engine). CAUTION—Above data applies only to Vacamatic Transmission on Chrysler Eights. *See 'Important Note' at beginning of following article for Control Button data on Chrysler Six which operates differently.*

EMERGENCY LOW GEAR NOTE: This Vacamatic Overdrive Transmission has conventional Low Speed Gear in transmission case but this gear ratio is ordinarily not required and a lock plate or collar is used to prevent the steering column gear shift lever being moved to the conventional "Low" position which would engage this low speed gear. If car is being operated in mountainous country, or whenever it is desired to use this Emergency Low Gear, lock-out device can be removed as follows:

Lock-out Plate Removal (First Cars)—Remove nut on lower end of steering column gearshift rod end and remove lock-out plate from rod.

Lock-out Collar Removal (Later Cars)—Collar is attached around steering column to prevent gearshift rod lever moving into conventional low speed position. Remove collar from steering column by taking out attaching screw.

TYPE:—New type 4 Speed & Reverse Transmission consisting of a two-speed manually controlled unit in conjunction with an Automatic Overdrive unit which provides two additional speeds (similar to previous 3 speed and Overdrive models except that conventional Low Speed Gear blocked out (see Emergency Low Gear Note above). Reverse is engaged in the usual manner by shifting the mainshaft sliding gear to the rear so that it meshes with the reverse idler gear. Gearshift lever on steering column has two forward positions—Low (corresponding to conventional 'Second Gear' position) and High—in addition to the usual Reverse position. Each of these lever positions furnishes two gear ratios as follows: Low—1st. (Overdrive inoperative), 2nd. (overdrive operating); High—3rd. (Overdrive inoperative), 4th. (overdrive operating).

OPERATION:—Manual Control—Steering column gearshift lever operates a conventional blocker type synchronizing clutch. With the gearshift lever in 'Low', the synchronizer unit is shifted backward on the mainshaft to engage the intermediate constant mesh gear so that the drive is transmitted through the countergears. When the gearshift lever is moved to the 'High' position, the synchronizer unit is shifted forward to engage the clutch teeth on the clutch shaft main drive gear so that the engine drives straight through without gear reduction (corresponding to the conventional High Gear). Each of these drives is modified by the Overdrive Unit to provide additional gear ratios as follows:

Automatic Overdrive Control:—Overdrive unit is of the conventional 'centrifugal pawl' engagement type and cuts in at approximately 21-25 MPH (if accelerator pedal is released momentarily) to secure 2nd. Speed (with manual control in 'Low'), 4th. Speed (with manual control in 'High'). Overdrive unit has electrical 'kick-down' control (similar to type used on 1940 Chrysler models) so that transmission can be shifted down automatically from 4th. to 3rd. or from 2nd. to 1st. by depressing the accelerator pedal beyond the wide open throttle position.

Lockout Control Button:—'OD' button on left of steering column can be pulled out to lock out 2nd & 4th speeds (car will operate in 1st or 3rd depending on gearshift lever position).

CAUTION—Pull out button only when car standing still. Button can be pushed in at any speed under 27 MPH with clutch disengaged.

ADJUSTMENT:—Throttle Switch Setting—3/32" gap between plunger and contact screw with throttle just wide open (over-travel closes switch contacts).

REMOVAL OF TRANSMISSION: *See "Transmission" on car model page.*

SERVICING:—Transmission—Serviced in same manner as Std. Chrysler Transmission (see preceding article). When disassembling this transmission, take out capscrews holding overdrive and adapter plate on transmission case, remove overdrive and adapter as an assembly by withdrawing mainshaft from rear of transmission case (adapter fastened to overdrive by screws which will prevent overdrive case separating). *See preceding article on Chrysler Synchromesh Transmission for all other transmission servicing data.*

Overdrive Unit:—Overdrive is Warner Type AS1-R7B. *See article on Warner Type R7 Overdrive for all Overdrive servicing data.*

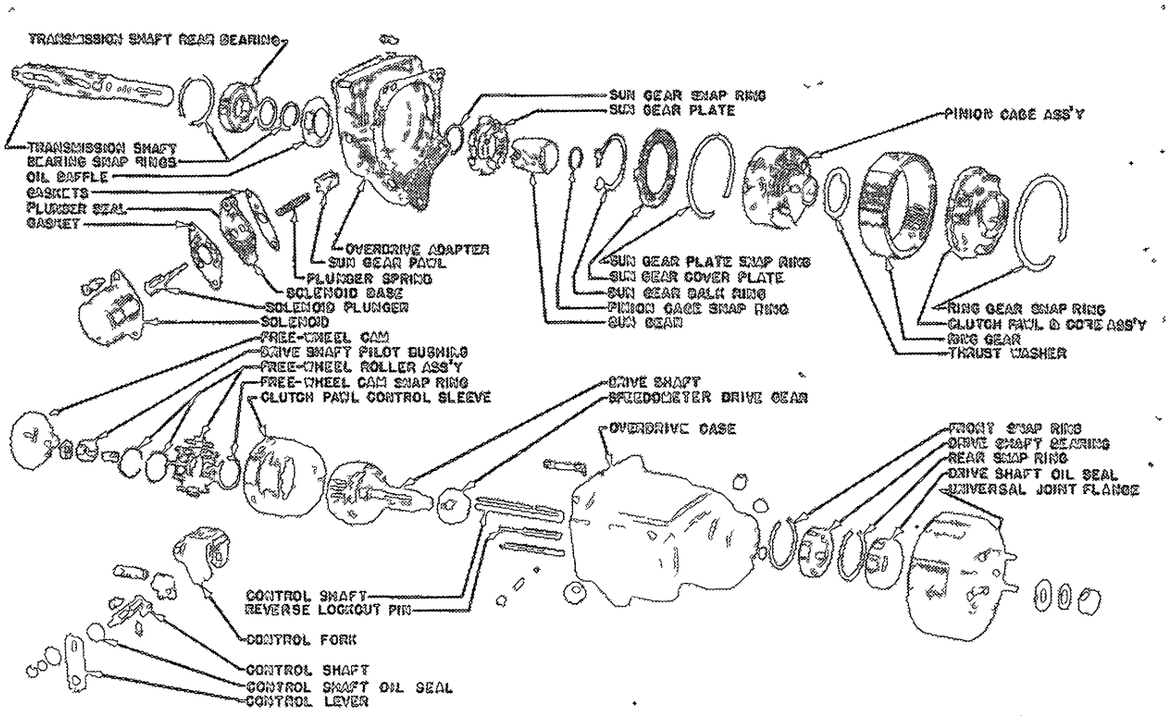

OVERDRIVE USED ON 1941 CHRYSLER 8 VACAMATIC TRANSMISSION

CHRYSLER 6 & 8 VACAMATIC
DE SOTO SIMPLIMATIC
(1941-EARLY 1942 UNDERDRIVE TYPE)

Chrysler 6, C28 Royal & Windsor (1941)
Chrysler 6, C34 Royal & Windsor (Early 1942)
Chrysler 8, Models C36, C37 (Early 1942)
DeSoto, Model S8 (1941), S10 (Early 1942)

LATE 1942 CAR NOTE: Later cars in 1942 have new Piston Type Power Cylinder (replacing first type Diaphragm Type Power Unit). *See following article for data on cars with Piston Type Power Cylinder and control units.*

CONTROL BUTTON NOTE: Lockout control at left of steering column should be used only when it is necessary to start the car by pushing or towing. **Button should never be pulled out at any other time, and must be released (pushed in fully) as soon as engine starts.** To start the engine by pushing or towing car, proceed as follows: Turn on ignition, place gearshift lever in 'High Speed' position, pull out lockout control button at left of steering column, hold lever in this position until engine starts. Disengage clutch, push or tow car with clutch disengaged, when car speed reaches 5 MPH., engage clutch. **Release lockout control button as soon as engine starts.**

SPECIAL SERVICE NOTES:—Interrupter Switch Insulator—To correct complaints of mud and water from road splashing on transmission control interrupter switch which will cut out ignition and cause car to stop, special Interrupter Switch Insulator, No. 870833, can be installed on switch (switch located on underside of vacuum unit assembly at left of transmission).

Transmission Remains in First or Third (No Up-Shift)—Caused by breaking of diaphragm in vacuum power unit. Can be corrected by installing Late 1942 Piston Type Power Cylinder. *Refer to 1942 article (following) for data on this unit.*

TYPE:—This type transmission (Vacamatic—Chrysler 6, Simplimatic—De Soto) is used in conjunction with Fluid Drive. Transmission is entirely new design 4-speed type with a two range manual control (Low-High) and an automatic two speed shift (vacuum and spring operated with accelerator pedal control) within each range (First & Second in Low range, Third & Fourth or Direct in High range). Transmission shifts up from First to Second (above 8 MPH. with gearshift lever in Low range) or from Third to Fourth (above 15 MPH. with gearshift lever in High range) when the accelerator pedal is released momentarily. A step-down or 'kick-down' feature is provided by which a shift from Fourth to Third (at speeds below 53 MPH.), or from Second to First (at speeds below 27 MPH.) occurs automatically when the accelerator pedal is depressed past the wide open throttle position. The manual control (gearshift lever shift between Low-High) operates in exactly the same manner as the Second-High shift on previous transmission. The automatic control is entirely new and operation is described below.

OPERATION: — Manual Control — Gearshift lever has three positions corresponding to previous designs with Low Speed omitted (Low Range secured with lever in customary 'Second' position). This lever controls a conventional synchronizer clutch unit on the mainshaft which locks the Low Speed Gear to the shaft (rear position—Low Range) or the Direct Speed Gear to the shaft (forward position—High Range). The tw speeds in each range are controlled by the automatic synchro-clutch as follows:

Automatic Control:—Consists of a vacuum and spring operated synchro-clutch which locks the mainshaft Direct Speed Gear to the clutch shaft drive gear (for Second and Fourth or Direct Drive with synchro-clutch in forward position). With the synchro-clutch in the rear position, Direct Speed Gear is free to revolve on mainshaft (for First or Low Gear in which drive is transmitted through Low Speed Gear on mainshaft meshing with gear on countergear cluster), or drives mainshaft (for Third Gear when manual synchronizer unit is in forward position). The synchro-clutch shift lever is spring-loaded so that it is in the forward position (Second & Fourth) except when the vacuum unit assembly operates to shift the synchro-clutch to the rear position (First & Third). This vacuum unit assembly operates as follows:

Vacuum Unit Assembly:—Consists of a diaphragm type vacuum unit with solenoid operated valve mounted on a pivot on the side of the transmission case so that the vacuum unit plunger stem operates the synchro-clutch shift lever. With the solenoid not energized, valve is in lower position so that diaphragm chamber is connected to vacuum source (engine manifold). Vacuum causes plunger to move fully to the right until the latch under the solenoid valve engages the notch in the plunger stem holding the plunger in this position with the vacuum diaphragm spring fully compressed (this action permits shift lever spring to move synchro-clutch to forward position). Whenever the solenoid is energized (circuit completed by Governor, Kick-down Switch, or Ignition switch—when turned to "off" as described below), the valve is drawn up, cutting off the vacuum and opening the atmospheric valve so that air is admitted to the diaphragm chamber. This movement of the valve stem also releases the plunger stem latch so that the plunger is free to move to the left to shift the synchro-clutch to the rear position. As the plunger moves to the left, the ridge on the end of the plunger stem rides over the ball of the interrupter switch, closing the switch contacts and cutting out the ignition momentarily, which relieves the torque on the synchro-clutch and allows it to be shifted. As soon as the plunger ridge passes the interrupter switch ball, the switch contacts are opened by a spring and the ignition is restored (this entire action occurs so rapidly that the interruption of the ignition is not apparent).

Control Circuit & Switches:—The vacuum unit solenoid valve is connected through a 30 ampere fuse to the "SF" terminal of the control relay so that the solenoid circuit is 'hot' whenever the ignition switch is turned on through lead from ignition switch), or whenever the generator is rotating at a speed sufficient to close the control relay contacts (through lead from regulator "B" terminal). The solenoid is energized (to operate the transmission power unit) whenever the solenoid circuit is completed to ground in any one of the following ways:

G vernor Switch—Governor switch contacts are closed (so that solenoid is energized) with the car at rest. As the car speed increases, the governor weights move out and open the switch contacts which breaks the solenoid circuit. Governor switch is driven by a special gear of the countergear cluster so that the cut-in and cut-out speeds are twice as high in 'High' range as in 'Low' range.

Carburetor 'Kick-down' Switch—Consists of a stationary contact connected to the solenoid and a movable contact mounted on a vacuum controlled piston in the carburetor. A switch plunger operated by the throttle valve lever completes the circuit to ground (so that solenoid is energized) when the accelerator is depressed past the wide open throttle position at car speeds under 27 MPH. (low range for kick-down to First), 53 MPH. (High range for kick-down to 3rd). Above these speeds, vacuum in carburetor pulls the piston and ground contact up against spring tension so that the plunger does not complete the circuit to ground.

Ignition Switch Ground—A special terminal and ground connection in the ignition switch completes solenoid circuit to ground when ignition turned off.

Control Relay: Auto-Lite Model HRE-4001. Relay is single winding type. Relay winding terminal (A) is connected directly to generator main brush (at regulator "A" terminal) so that winding is energized and relay contacts closed whenever the generator is rotating. This provides an alternate feed for the control relay even though the ignition switch may be turned off.

Ignition Interrupter Switch: This switch does not ground the solenoid circuit but does ground the ignition primary (short-circuiting the breaker contacts) when the switch contacts are closed (this occurs only momentarily during the vacuum unit plunger movement) for synchro-clutch shift.

Lockout Control (For Starting the Engin by Pushing or Towing Car)—Entire vacuum unit assembly is mounted on a pivot on the side of the transmission case and is controlled by a button on the side of the steering column. When button is pulled out, plunger stem end of vacuum unit is tilted down so that it does not contact synchro-clutch shift lever

ADJUSTMENT: Diaphragm Type Vacuum Power Unit. Clearance between end of vacuum unit stem and shift lever must be 5/32" with vacuum unit in latched position. To adjust, make certain that vacuum unit in latched position and that lockout button is all the way in with vacuum unit against stop on mounting bracket, see that synchro-clutch is in engaged position (spring will engage synchro-clutch if clutch driving plate rocked by hand through fluid drive filler plug hole in clutch housing with engine at rest). Loosen jam nut on shift shaft, loosen locknut and turn adjusting screw on shift shaft until clearance between lever and vacuum unit stem is exactly 5/32", tighten locknut and jam nut.

NOTE—Vacuum unit can be "latched" for above adjustment by removing fuse (in lead between control relay and solenoid), starting engine, accelerating slightly, and turning ignition "off". Engine should stop with vacuum unit in latched position. After completing adjustment, replace fuse and turn ignition on (vacuum unit stem should snap out immediately).

Control Relay: Winding resistance is 22.2-26.2 ohms (measured between "A" and "B" terminals).

Contact Gap—.026". Adjust by varying height of stationary contact.

CONTINUED ON NEXT PAGE

VACAMATIC & SIMPLIMATIC 1941-EARLY 1942 UNDERDRIVE (Cont.)

Air Gap—.020-.024" with contacts open (adjust by bending armature stop). With armature sealed against core, gap between armature and yoke should be .008-.012".

Contacts Close—4.0 volts maximum.

Contacts Open—3-.5 volts (with voltage decreasing from 6.0 volts). Adjust by bending armature hinge ears (CAUTION—keep both ears in line).

Governor (First Type): Contact opening and closing points are adjustable. Governor speed must be accurately determined when adjustments are being made. Governor can be mounted on a Distributor Synchroscope or other driving unit with accurate tachometer. Use test lamp and battery connected between governor terminal and ground (governor frame) to check opening and closing (lamp will go out when contacts open, light when contacts close). NOTE—Test lamp should "snap" on and off. If lamp flickers or is dim, governor switch contacts are defective and governor should be replaced.
Contact Opening—460-560 RPM. (12-14 MPH.).
Contact Closing—500-400 RPM. (12-10 MPH.).

To Adjust—Necessary to remove sealing compound from two adjusting screw wells on governor cover. "Ascending Speed Adjusting Screw" is closest to open end of adjusting screw well, "Descending Speed Adjusting Screw" is farther from open end of well. Turn correct screw in or out as follows:
Contact Opening—Turn "Ascending Speed Adjusting Screw" out to increase speed at which contacts open, turn this screw in to decrease speed at which contacts open.

Contact Closing—Turn "Descending Speed Adjusting Screw" out to increase speed at which contacts close, turn this screw in to decrease speed at which contacts close.

IMPORTANT NOTE—After completing governor adjustment, tighten adjusting screw locknuts securely and fill well with sealing compound having melting point higher than 250°F. This is important to prevent moisture leaking past adjusting screws.

Governor (Later Type): Governor is not adjustable and should be replaced if tests indicate that it is not performing correctly.

TESTING: Tests can be made on the car to locate units which are defective or out of adjustment as listed below. Tests should be made with engine warmed up and idling at 450 RPM.

Control Relay: Connect test lamp between relay "SF" terminal and ground. Lamp should light. Speed engine up and turn ignition off. Lamp should remain lighted until engine stops turning and should then go out. Replace relay if performance not correct (first check lead between relay "A" terminal and regulator "A" terminal).

Governor: Connect test lamp between regulator "B" terminal and kick-down switch terminal on carburetor. Lamp should be lighted with engine idling. If lamp is not lighted, check for open-circuit between kick-down switch and governor, and for defective governor (ground lead at governor terminal, if lamp lights, governor is defective). Slowly increase engine speed to 800-1000 RPM. La should go out sharply. If lamp remains lighted, check for ground between kick-down switch and governor (remove lead from governor terminal, if lamp goes out, governor is defective). Slowly decrease engine speed to 675-800 RPM. Lamp should light sharply as governor contacts close. If lamp does not light, or if it is dim or flickering, governor is defective or circuit is open between kick-down switch and governor.

Diaphragm Type Vacuum Power Unit: With engine running, increase and decrease speed between idling and 1000 RPM. points. Vacuum unit should operate in this range (plunger stem should pull in rapidly and snap out quickly. If operation is sluggish, remove and service unit (see Servicing). If operation not satisfactory, connect test lamp leads to the two solenoid valve terminals and check as follows:

Engine Idling at 450 RPM.—Test lamp should be lighted and vacuum unit plunger stem "out." If stem is in "in" position, check for faulty solenoid or valves. If test lamp not lighted, and vacuum unit stem is in "in" position, check for blown fuse, open-circuit between solenoid and governor, or defective governor.

Engine Speed increased to 1000 RPM.—Test lamp should not be lighted and vacuum unit plunger stem should be "in". If plunger stem "out", check vacuum line connections and lines for obstructions (connect vacuum gauge at power unit, gauge reading must be 15" minimum). If vacuum reading correct, check power unit and vacuum valve. If test lamp is lighted and power unit plunger "out", check for ground between governor and solenoid, or between solenoid and kick-down switch. Check governor (contacts not opening).

Engine Speed returned to Idle (450 RPM)—Test lamp should be lighted and power unit plunger stem "out". If lamp not lighted, and plunger stem "in", check for blown fuse, open-circuit between governor and solenoid, or defective governor.

Interrupter Switch: Operation can be checked by disconnecting switch lead at distributor terminal and connecting voltmeter between this lead and the terminal. Run engine at 1000 RPM., press kick-down switch plunger in. Voltmeter should show reading momentarily (as circuit completed through interrupter switch) and pointer should then return to zero.

Kick-down Switch: Connect one test lamp lead to regulator "B" terminal, other test lamp lead to kick-down switch terminal. Lamp should be lighted. Increase engine speed until lamp goes out (governor contacts open). Depress kick-down switch plunger. Lamp should light. To check high speed limit feature of switch, increase engine speed to equivalent of 55 MPH., depress switch plunger. Lamp should not light. If lamp lights, switch piston is sticking. See Kick-down Switch article in Carburetion Equipment Section for switch servicing data.

Carburetor Slow-Closing Throttle: See Slow-Closing Throttle articles in Carburetion Equipment Section

Control Wiring & Fuse: See wiring diagram for proper connection of all units.

Fuse—30 ampere. In Solenoid Valve lead.

REMOVAL OF TRANSMISSION: *See "Transmission" on car model page.*

TRANSMISSION DISASSEMBLY: Remove vacuum power unit. Unscrew and remove governor, remove speedometer pinion. Lock transmission in reverse, shift synchro-clutch sleeve to forward position to lock gears. Remove companion flange nut, take off brake drum, pull oil seal with special puller C-497, remove detent ball retaining screws and springs in gearshift housing, place gearshift levers in neutral, remove gearshift housing. Remove capscrews in brake support, turn support counterclockwise to expose shift rail holes, remove shifting fork and reverse idler shaft retaining screws, slide shift rails out through rear of case (top rail first —use care not to lose detent balls and spacer on lower reverse rail), remove reverse fork. Take off drive pinion bearing retainer, remove main shift fork guide pin (unscrew pin and pull out at front

CONTINUED ON NEXT PAGE

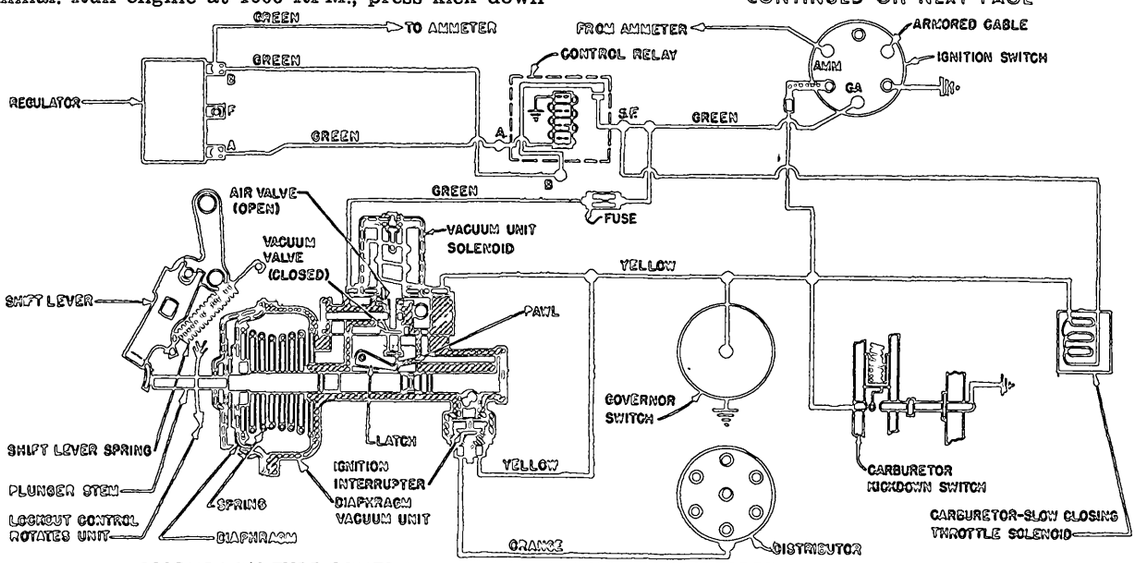

DIAPHRAGM TYPE CONTROL (1941-EARLY 1942) FOR UNDERDRIVE TRANSMISSION

VACAMATIC & SIMPLIMATIC 1941-EARLY 1942 UNDERDRIVE (C nt.)

of case), remove manual shift fork. Use puller C-604 to remove reverse idler shaft through rear of case, lift out reverse idler gear. Use special C-605 arbor to drive countershaft out through rear of case and allow countergears to drop down in case. Pull mainshaft and gear assembly out through rear of case, remove drive pinion and synchro-clutch sleeve, lift out countergear assembly.

Mainshaft Gear Assembly:—Remove blocker ring on forward end of shaft, remove synchro-clutch spreader ring, remove direct speed gear snap ring, remove gear being careful not to lose roller bearings, bronze thrust washer, and roller bearing thrust washer. Remove gear stop ring, thrust washer, clutch sleeve, and shifting plates (synchronizer assembly). Remove brake support housing by tapping rear end of shaft with a lead hammer. Remaining gears can be pressed off shaft in an arbor press or removed with a gear puller. When assembling shaft, use new snap rings, see that low speed and reverse gears installed with long hubs toward rear. Endplay between low speed gear and speedometer drive gear should be .003-.009" with feeler gauge inserted between shoulders of gears (spacers furnished .041", .045", .050", .055" thick for this adjustment). When installing the direct speed (third speed) gear, install 36 rollers in forward end, then install spacer with holes and groove toward rear so that oil holes line up (this is important), then install 36 rollers in rear end, small steel thrust washer next to rollers and bronze thrust washer, then install assembly on shaft (use cup grease to hold rollers in place). Install forward bronze thrust washer with oil groove to rear, steel thrust washer with tapered face to front, use new snap ring. Endplay between steel thrust washer and snap ring should be .003-.009" (adjust by using snap ring of correct thickness—furnished .087", .092", .097", .101" thick).

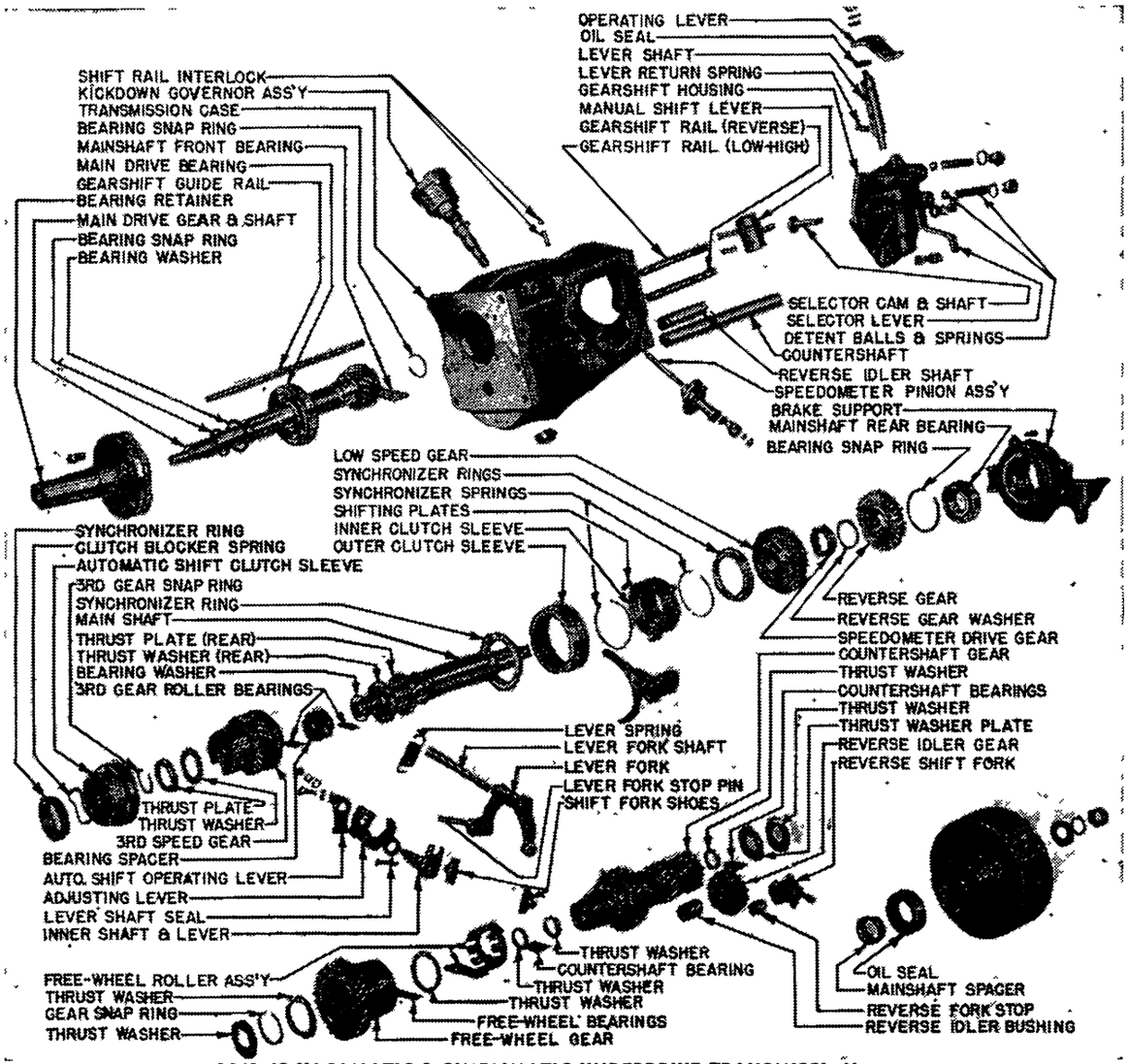

1941-42 VACAMATIC & SIMPLIMATIC UNDERDRIVE TRANSMISSI N

Manual Control Synchroniz r Assembly: When assembling this unit, install new snap ring in forward end of mainshaft spline, install synchronizer hub with long portion of hub toward rear of transmission. Install springs and shifting plates in hub, engaging hook on each spring in same groove.

Automatic Control Synchro-clutch:—When assembling, make certain that teeth on clutch hub mesh with center space of each set of teeth on clutch sleeve (CAUTION—clutch sleeve cannot be shifted unless meshed in this manner). With two capscrews installed in brake support to align mainshaft assembly, install spreader ring and synchro-clutch blocker ring, see that clutch sleeve can be pulled all the way over the dogs of the blocker ring.

Countergear Assembly:—To dismantle free-wheeling gear, remove snap ring in end of cluster gear, remove thrust washer, free-wheeling gear, thrust washer and roller bearings, free-wheeling rollers, roller cage and springs (use care not to lose two springs under the cage). Reassemble in same manner using cup grease to retain free-wheeling rollers, install roller thrust washer with beveled side toward rollers, turn roller cage clockwise and install free-wheeling gear. Install the 36 rollers in forward end of cluster gear for free-wheeling gear (use cup grease to hold rollers in place), install retainer washer and new snap ring. Measure endplay between free-wheeling gear and cluster gear (use feeler stock) which should be .003-.009". Adjust by installing thrust washer of correct thickness (furnished .084", .087" .091" thick). When installing countergear assembly, make certain bronze thrust washer in place on forward end of gear cluster, large steel thrust washer (next to gears) and large bronze thrust washer (next to case) on rear end of gear cluster. Countergear assembly endplay should be .005-.011" (measure with feeler gauge between thrust washer and case at rear). Adjust by installing rear bronze thrust washer of correct thickness (furnished .087", .091", .095", and .098" thick).

SERVICING (VACUUM POWER UNIT): Diaphragm Type. Remove unit from transmission by removing mounting clevis pin. Disassemble unit as follows:

Power Unit Diaphragm: Remove six screws in diaphragm housing (remove screws evenly to relieve spring tension, inspect diaphragm. Replace diaphragm if leaking, or if hardened or spongy. Install diaphragm with mouth toward main body, tighten shaft nut securely and lock nut by staking threads. Clean shaft and cylinder body thoroughly, lubricate shaft with graphite grease or lubriplate.

Solenoid & Valve Assembly: Solenoid can be removed by taking out three mounting screws. Replace solenoid if terminals loose or if winding open-circuited (test for continuity with lamp and battery). Valve washers must be clean and smooth, replace if worn. Lubricate latch and trigger. Do not lubricate solenoid plunger.

CHRYSLER 6 & 8 VACAMATIC
DE SOTO SIMPLIMATIC
(LATE 1942 UNDERDRIVE TYPE)

Chrysler 6, C34 Royal, Windsor, Town & Country (Late 1942) ①
Chrysler 8, C36 Saratoga (Late 1942) ②
Chrysler 8, C36 New Yorker (Late 1942) ③
Chrysler 8, C37 Crown Imperial (Late '42) ④
DeSoto, S11 Custom & Deluxe (Late 1942) ⑤
①—Beginning Serial Number 70,008,211 (Royal), 70,510,807 (Windsor and Town & Country).
②—Beginning Serial No. 6,763,446.
③—Beginning Serial No. 6,679,669.
④—Beginning Serial No. 7,808,650.
⑤—Beginning Engine No. 18,085.

SPECIAL SERVICE NOTES AND PRODUCTION CHANGES:—The transmission control described below (Piston Type Power Cylinder) was used only on Late 1942 cars and replaced earlier type diaphragm cylinder. Diaphragm type cylinder on first 1942 cars used Neoprene diaphragm.

NOTE:—Chrysler Eight Models—Vacamatic Transmission used on 1942 Eights is same as type used on Six Cylinder cars and is not same type used on 1941 Eights (Underdrive type not Overdrive type).

TYPE:—Four speed type transmission with two range manual control (Low-High) and two speed automatic shift in each range (First & Second in Low Range, Third & Fourth or Direct Drive in High Range). Two types of automatic control used on 1942 cars. First type control with diaphragm type vacuum unit is same design as used on 1941 cars. Second type control with piston type vacuum unit is entirely new design and is described below. *Refer to 1941-42 Chrysler Vacamatic & DeSoto Simplimatic Type Transmission article (preceding) for all data on first (Diaphragm Type) control.*

OPERATION:—Automatic Control—Transmission synchro-clutch which controls the automatic Upshift and the 'kick-down' Downshift in each transmission range is same design as used on 1941 cars and operates in the same manner. Synchro-clutch (automatic) shifting is actuated by new design piston type vacuum unit as follows:

Vacuum Unit (Piston Type):—Consists of a piston type power cylinder and plunger assembly mounted on a rigid bracket at the right of the transmission case (not pivot mounted—instrument panel lock-out button operates differently with this type cylinder). Solenoid valve is separately mounted on engine cylinder head near carburetor. Vacuum unit return spring is located within cylinder and a 'holding coil' and Ignition Interrupter unit is built in the rear end of the cylinder. Separate air cleaners are used on the atmospheric vents of the vacuum cylinder unit and the solenoid valve unit (small air cleaner mounted on side of solenoid valve assembly, air cleaner for vacuum cylinder mounted on frame side rail). Vacuum unit operates as follows:

Upshift—When solenoid valve energized (controlled by Governor and throttle kick-down switch through relay), valve opens and admits vacuum to cylinder, piston and plunger are then pulled into cylinder so that spring is free to shift synchro-clutch into Second or Fourth Gear position. Holding coil in vacuum unit is connected in series with valve solenoid and is also energized so that vacuum unit piston is held in the retracted position with the return spring behind the piston compressed. In this position, the rod within the vacuum unit plunger closes the Ignition Interrupter contacts but the ignition is not disturbed because the ignition (lower) contacts of the kick-down relay are open whenever the upper (solenoid valve) contacts are closed.

Downshift—When the kick-down relay is actuated by Governor or Throttle Kick-down Switch to de-energize the solenoid valve and vacuum unit holding coil, the opening of the relay solenoid contacts occurs simultaneously with the closing of the relay ignition contacts which grounds the ignition coil and interrupts the ignition so that the engine coasts momentarily to remove torque from the transmission synchro-clutch. The compressed return spring in the vacuum unit cylinder then moves the piston and plunger out in the vacuum cylinder so that the plunger engages the synchro-clutch shift lever and shifts the synchro-clutch into the First or Third Gear position. As soon as the vacuum unit plunger has moved out slightly, the rod within the plunger stem also moves out allowing the Ignition Interrupter contacts to open and restore the ignition (this action occurs so rapidly that interruption of the ignition is not apparent). These Upshift and Downshift circuits are controlled by the Kick-down Control Relay as follows:

Kick-down Control Relay:—Relay has two sets of contacts and a single coil winding which is controlled by the Governor Switch and Throttle Kick-down Switch as described below. Solenoid Valve (upper) contacts are held closed by spring tension when relay winding is not energized and are opened when the relay coil circuit is completed to ground through either the Governor Switch or Throttle Kick-down Switch. Ignition (lower) contacts of relay operate in a reverse manner (open when upper contacts are closed, close when upper contacts open). A fuse is mounted on the relay 'BAT' feed terminal and an extra 'C' terminal is provided for connection of the carburetor Slow-Closing Throttle (Chrysler 6 & DeSoto). Chrysler Eight has vacuum type Throttle Guard.

Governor Switch—Operates in same manner as type used with 1941-42 type (Diaphragm) control.

NOTE—Governor design changed during 1942 production but new type governor is interchangeable with previous type.

Carburetor Throttle "Kick-down" Switch—Same type and operates in same manner as on 1941-42 (Diaphragm) type control.

NOTE—This type kick-down switch used only on Chrysler 6 & DeSoto with Carter (B&B) Carburetors. Throttle switch on Chrysler 8 is different type

Lock-out Control (For Starting Engine by pushing or towing car)—Synchro-clutch shift lever on transmission case is hinged so that it may be pivoted sideways to disengage from vacuum unit plunger to place transmission in non-free-wheeling Second or Fourth Gear engagement to permit engine to be started by pushing or towing car (new type vacuum unit is rigidly mounted on bracket and does not pivot). When control button on instrument panel is pulled out, the cam lever on the transmission case (connected to control button by adjustable cable) presses in on the spring-loaded section of the synchro-clutch shift lever which carries the plunger contact pad and swings the pad out of engagement with the plunger.

ADJUSTMENT: Piston Type Vacuum Power Unit. Clearance between contact pad on synchro-clutch shift lever and end of vacuum unit plunger should be 1/16" (limits 1/64-3/32") when synchro-clutch engaged (Second or Fourth Gear position) and plunger fully retracted within vacuum cylinder. Adjust by adding or removing shims (1/32" thick) between pad and shift lever. NOTE—This clearance not as critical as on previous diaphragm type vacuum unit.

Throttle Kick-down Switch & Governor Switch—Checked and adjusted in same manner as 1941 type

TESTING (CONTROL UNITS):—Specifications for control units are as follows:

Control Relay (Auto-Lite HRM-4001):—Winding resistance 17.5-19.4 ohms at 77°F.
Contacts Close—2.8-3.6 volts (seals 5.0 volts maximum). Bend lower armature spring hanger.
Contacts Open—0.9-2.5 volts. Adjust by varying height of lower stationary contact support.
Air Gap—.031-.036" with lower contacts open.

Solenoid Vacuum Valve (Auto-Lite SSJ-4001, 1B):—Winding resistance 1.82-1.93 ohms at 77°F.
Operation—Must open manifold valve seat and close atmospheric valve seat with 3.0 volts max. at 77°F (with 20" HG. at manifold connection).
Leakage—No leakage permissible through manifold valve seat (solenoid not energized), or through air intake valve seat (3.0 volts on solenoid) at 77°F.

Governor Switch (Auto-Lite TG-4002R):—Maximum endplay is .003-.010".
Contacts Open—530-600 RPM (on acceleration).
Contacts Close—440-530 RPM (on deceleration).
NOTE—Difference in RPM between opening and closing points must not be less than 80 RPM.

Vacuum Piston Assembly (Auto-Lite VP-4001):—Unit must complete stroke with vacuum of 12" HG. max.
Holding Coil—Must hold piston and plunger at end of stroke with current draw of 1.4 amperes max. at 1.2 volts max. (both ends of cylinder open to atmospheric pressure).
Voltage Drop—Not to exceed .10 volts with 10 amperes (from 'I' terminal to ground on base) with ignition interrupter contacts closed.
Leakage—With holding coil not energized, apply 15" HG. vacuum to complete stroke of piston and spring, shut vacuum off; spring must not move piston more than 1/8" in 10 seconds.

Control Circuits: Check all wiring for loose connections and open-circuits (see wiring diagram).
Fuse—30 ampere. On relay 'BAT' terminal.

TESTING: Tests can be made on the car to locate units which are defective or out of adjustment as listed below. It is recommended that voltmeter (rather than test lamp) be used in making tests.

Kick-down Relay: Check for full voltage at relay by connecting voltmeter from relay fuse (BAT. terminal) to ground. Voltage should be 6-8 volts and battery should be charged if reading less than 4.5 volts. Check fuse block and fuse by connecting voltmeter between relay "C" terminal and ground. Voltage reading should be 6-8 volts. If no reading secured, check for blown fuse or poor contacts. Check relay operation by connecting voltmeter between relay "SOL" terminal and ground with engine idling. Voltmeter reading should be zero (if 6-8 volts, check governor; if governor O.K., replace relay). Increase engine speed to 1000 RPM. Voltmeter reading should be 6-8 volts (if zero, check governor; if governor O.K., replace relay).

CONTINUED ON NEXT PAGE

LATE 1942 UNDERDRIVE (C nt.)

Vacuum Valve & Solenoid: Disconnect lead to vacuum unit at Solenoid valve terminal (both wires are Red —wire leading to vacuum unit must be disconnected). Connect voltmeter from this terminal (at which wire removed) to ground, idle engine. Voltmeter reading should be zero. Increase engine speed to 1000 RPM., voltmeter reading should be 6-8 volts (if voltage reading low at 1000 RPM., check for loose wiring connections between relay and solenoid, defective relay contacts, or defective solenoid). If air leaks noted, check solenoid valve discs.

Piston Type Vacuum Power Unit: Connect voltmeter between vacuum unit terminal on solenoid valve and ground. Idle engine. Voltmeter reading should be zero and power unit plunger stem should be "out." Increase engine speed to 1000 RPM. Voltmeter reading should be approximately 2 volts and plunger stem should snap "in." If voltmeter reading not correct within 1 volt, remove and service power unit (see Servicing). Vary engine speed between idle and 1000 RPM. Power unit plunger stem should snap "in" and "out" rapidly. If action sluggish, check air cleaners for dirt or obstructed air passage, check vacuum and air lines for leaks and obstructions, check solenoid valve.

Governor: Connect voltmeter between relay "TH" terminal and fuse block (relay "BAT" terminal). Idle engine. Voltmeter reading should be 6-8 volts. If reading not correct and steady, check for loose or corroded connections, defective governor contacts. Increase engine speed to 1000 RPM. Voltmeter reading should be zero. If any other reading noted, check for grounds or sticking governor contacts. Reduce engine speed to idling. Voltmeter reading should be 6-8 volts. NOTE—Governor not adjustable.

Interrupter Switch: Idle engine. Short relay "SOL" and "BAT" terminals with short jumper. Engine should stall if interrupter switch and circuit O.K. If engine does not stall, leave jumper in place, ground interrupter switch terminal. If engine stalls, switch is defective. If engine does not stall, leave jumper in place, short relay "INT" and "PRI" terminals with jumper. If engine stalls, relay is defective. If engine does not stall, check wiring for open-circuits.

Kick-down Switch: Connect voltmeter between relay "TH" terminal and fuse block ("BAT" terminal). Operate engine and increase speed to 1000 RPM. Voltmeter reading should be zero. Depress kick-down switch plunger by hand. Voltmeter reading should be 6-8 volts. If readings not correct, disassemble and service switch. To check high speed limit feature of switch, increase engine speed beyond 55 MPH. point, depress kick-down switch plunger by hand. Voltmeter should read zero. If reading obtained, switch piston is sticking.
See "Chrysler & DeSoto Kick-down Switch" in Carburetion Equipment Section.

VACUUM POWER UNIT (PISTON TYPE): Remove unit from transmission for following service operations:

Disassembly of Power Cylinder: Take out screws in cover plate. Clean cylinder walls carefully (replace unit if rough or scored). Clean dirt and gum from piston and holding coil solenoid with alcohol—do not use emery cloth (NOTE—These surfaces must be absolutely clean to insure magnetic attraction between holding coil core and piston, if not, holding coil may release causing incorrect kick-down). Lubricate piston leather ring with neatsfoot oil or shock absorber fluid, apply film of light cup grease to cylinder walls. Remove coil terminal face assembly using extreme care not to break wire, clean all surfaces including contacts with alcohol. When reinstalling this unit, make certain that white (silvery) face of contact disc is toward contacts and turn disc so that new contact surface opposite contacts. When installing piston and stem assembly in cylinder, insert one tablespoon of oil in unit.
Reassembly Check—After reassembling unit, check operation by connecting it to a 6 volt battery with a 21 cp. bulb in series (to limit current). Push plunger stem all the way in. Stem should be held in against spring tension until battery disconnected.

Solenoid Valve Assembly: Disassemble and inspect all parts. Replace coil if terminals loose. Clean plunger with solvent but do not lubricate plunger, make certain that plunger slides freely in coil. Clean and inspect valve seat, replace rubber valve if worn or distorted. Securely tighten all screws when reassembling unit.
Reassembly Check—After reassembling unit, check operation by connecting 6 volt battery across terminals with 21 cp. bulb in series to limit current. Lamp should glow dimly and valve should operate.

REMOVAL OF TRANSMISSION: *See "Transmission" on car model page.*

TRANSMISSION DISASSEMBLY & REASSEMBLY: *See "1941-Early 1942 Underdrive Type" Vacamatic data (preceding).*

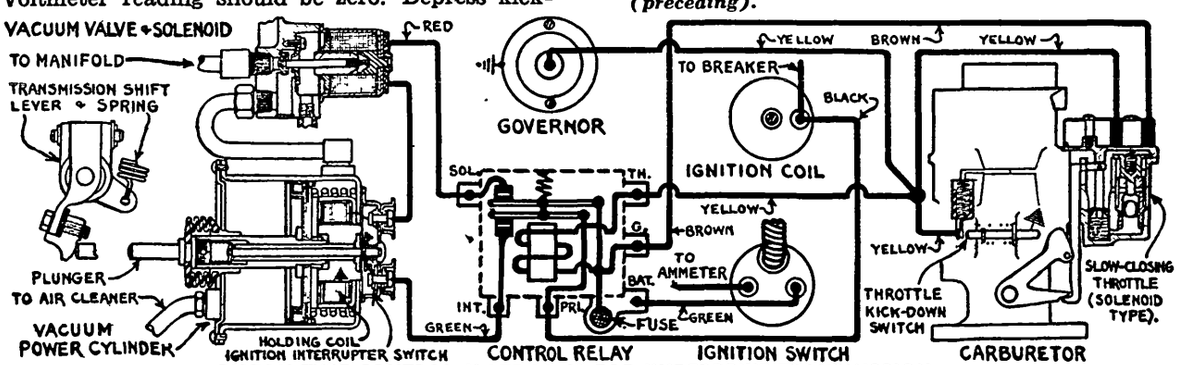

PISTON TYPE CONTROL (LATE 1942) FOR UNDERDRIVE TRANSMISSION
SLOW-CLOSING THROTTLE NOT USED ON CHRYSLER 8 WITH STROMBERG CARBURET R

CHRYSLER HYDRAULICALLY OPERATED AND DE SOTO TIP-TOE SHIFT

Chrysler 6, Model C38 (1946-47-48)
Chrysler 8, Models C39 & C40 (1946-47-48)
DeSoto, Model S11 (1946-47-48)

DESCRIPTION: Own Make, semi-automatic, 4-speed transmission with hydraulic actuation and electrical (governor switch and throttle "kick-down" switch) control. Transmission has "Low Range" and "High Range" controlled by Shift Lever on steering column and two speeds within each range (First & Second in Low Range, Third and Fourth or Direct Speed in High Range) engaged automatically by the hydraulic shift mechanism. Automatic shifting is dependent on car speed and throttle position. Except for new automatic hydraulic shifting mechanism, transmission design is similar to the Vacamatic and Simplimatic "Underdrive" transmission used on previous Chrysler and DeSoto models. A Free-wheel control feature is incorporated in the free-wheeling gear on the countershaft and operates as follows:

Free-Wheel Control—Consists of a sleeve on the countergear cluster which is shifted forward by the movement of the Direct Speed clutch (Second and Fourth Speed position). Sleeve engages a lug on the free-wheel roller cage and rotates rollers to a disengaged position (cage is spring-loaded and re-

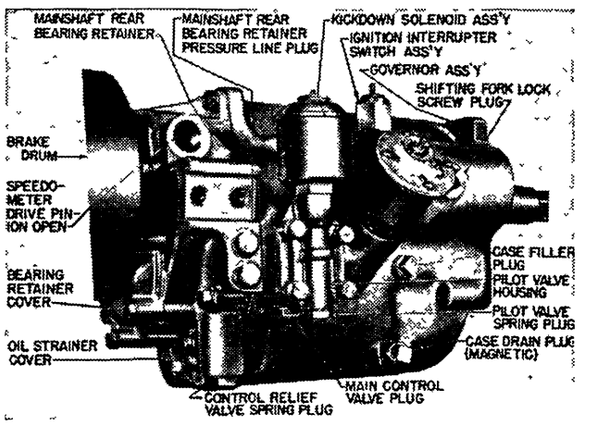

1946-48 CHRYSLER, DE S TO HYDRAULIC TRANSMISSION

turns to normal position when released). This action prevents roller engagement if the Direct Speed Clutch should happen to remain in the engaged (forward) position when the car is stopped.

Hydraulic Shift Mechanism: Consists of a spring-loaded hydraulically actuated piston mounted concentrically on the Direct Speed shift rail. This piston merely compresses the return spring and the engaging spring which perform the actual shifting operation (both springs compressed by initial movement of the piston, expansion of engaging spring moves Direct Speed Clutch forward for Second or Fourth, expansion of return spring moves clutch to rear for First or Third Speeds).

CONTINUED ON NEXT PAGE

CHRYSLER HYDRAULICALLY OPERATED AND DE SOTO TIP-TOE SHIFT (Cont.)

Control Units: Consist of hydraulic system units (Oil Pump, Pressure Regulator, Pilot Valve, and Main Valve), and electrical control units (Relay, Governor, Pilot Valve Solenoid, Ignition Interrupter Switch, Throttle Kick-down Switch).

Oil Pump—Pump is "Gerotor" type (same as engine oil pump) located under rear cover plate in transmission case and is driven from the mainshaft (operates whenever rear wheels are turning). Pressure should be 40 lbs. to approximately 60 lbs. at 15 MPH. (pressure drops when upshift starts).

Oil Pressure Regulator—In transmission case on right side. Set to maintain pump pressure at approx. 50 lbs. Regulator by-passes oil back to inlet side of pump when pressure exceeds this figure.

Pilot Valve Solenoid—Auto-Lite No. SSS-4002. Solenoid pushes pilot valve down when energized. Pilot valve should be in upper position with solenoid inactive or removed and should move freely.

Control Relay—Auto-Lite No. HRM-4102. Relay has two sets of contacts which open and close together (contacts closed when relay coil energized). Fuse on relay is 30 ampere capacity.

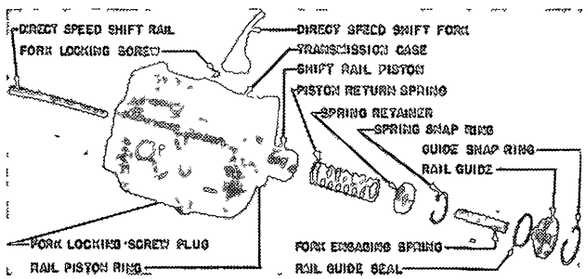

DIRECT SPEED & KICKDOWN MECHANISM

Governor Switch—Auto-Lite No. TG-4202R or TG-4203R. Governor contacts are closed (completing circuit to ground) with car at rest and are opened by action of the centrifugal weights at a car speed of 6-7 MPH (Low Range), 12-14 MPH (High Range).

Accelerator Pedal Kick-down Switch—Built in the carburetor (special carburetors used).

▷*See "Chrysler & DeSoto Kick-down Switch" in Carburetion Equipment Section.*

OPERATION: Manual control (Shift Lever on steering column) operates in the usual manner by shifting the "Manual Clutch Sleeve" on the transmission mainshaft. The automatic (hydraulically operated) control operates as follows:

Automatic Upshift—Governor switch contacts open at car speed of 6-7 MPH. (Shift Lever in "Low Range"), 12-14 MPH. (Shift Lever in "High Range"), de-energizing the control relay and pilot valve solenoid. The pilot valve actuates the main valve which admits oil under pressure from transmission oil pump to the hydraulic cylinder causing the piston in the cylinder to move forward which compresses the return spring and the engaging spring on the shift rail. When the throttle is released momentarily, the engaging spring causes the Direct Speed Clutch to engage the higher gear (Second in "Low Range," Fourth in "High Range").

NOTE—Hydraulic piston actuates Interrupter Switch in moving forward but ignition is not interrupted because circuit is open at upper relay contacts (no interruption required for shifting since transmission "free-wheels" before shift occurs.

Automatic Downshift—When car speed drops to 6-7 MPH ("Low Range"), 12-14 MPH ("High Range"), governor switch contacts close, energizing control relay and pilot valve solenoid. The pilot valve causes the main valve to close, shutting off oil pressure (oil is by-passed into transmission case through pump pressure relief valve) and opening a passage to the case for oil drainage from the hydraulic cylinder. The return spring in the cylinder moves the piston backward and when the piston strikes the shoulder on the shift rail, the rail and Direct Speed Clutch are moved back into the lower gear position (First in "Low Range," Third in "High Range"). NOTE—During the initial movement of the piston, a shoulder on the piston causes the Interrupter Switch to close momentarily, grounding the ignition coil, and interrupting the ignition to relieve the engine torque and allow the shift to occur. Further movement of the piston opens the Interrupter Switch and restores the ignition.

Accelerator Pedal "Kick-down" Downshift—At car speeds under approximately 27 MPH (Low Range), 53 MPH (High Range), the transmission can be shifted down from Second to Low (Low Range), Fourth to Third (High Range) by fully depressing the accelerator pedal which causes the kick-down switch contacts on the carburetor to close and provides an alternative ground for the control relay circuit (governor switch contacts open) and energizes the relay. The downshift then occurs in exactly the same manner as for the Automatic Downshift (above). NOTE—The transmission can not be "kicked-down" at higher speeds since the kick-down contact plunger is held up out of engagement by manifold vacuum.

LUBRICATION: Check oil level in the transmission case every 1000 miles or 30 days, drain and refill with new oil every 10,000 miles or yearly. To check oil level, remove plug on right front side of case (to rear of lower transmission mounting bolt), maintain oil level even with bottom of filler plug hole. CAUTION—Clean magnetic plug (drain plug) and oil pump screen (under cover on lower left rear corner of transmission case) when transmission case drained. *Keep dirt out of transmission.*

Recommended Lubricant—Use only No. 10-W engine oil in this transmission. Capacity 3 pints.

REMOVAL OF TRANSMISSION: *See "Transmission" on car model page.*

DISASSEMBLY OF TRANSMISSION: With transmission off car and Governor assembly and solenoid removed, lift out governor pinion (use long-nosed pliers), remove ignition interrupter switch. Make certain manual gear shift controls in Neutral (selector shaft and gear engagement shaft), remove gearshift housing assembly from left side of case. Move reverse idler gear and clutch gear sleeve back so as to lock mainshaft, remove mainshaft flange nut, brake drum and flange (tool C-452). Take out rear bearing retainer mounting screws, pull out retainer and mainshaft assembly as a unit. Remove main drive gear bearing retainer on front end of case, remove snap ring and withdraw direct speed rail guide (in recess to right of bearing retainer). Remove main control valve plug and gasket, withdraw valve and spring. Remove pilot valve and spring. Remove shifting fork lock screw plug, loosen shifting fork locking screw so that fork is loose on rail (use screwdriver with ¼" blade or tool C-738 inserted through plug hole). Push direct speed gearshift rail out through rear of case, remove fork, clutch sleeve and engaging spring and direct speed blocker ring. Push countershaft out through rear of case with arbor, C-716, allowing countershaft gear assembly to drop down in case (arbor remains in gear cluster to retain bearing rollers). Remove main drive gear assembly (pack recess in gear with grease to retain mainshaft front bearing rollers). Lift countershaft gear assembly out of case (CAUTION—use care that free-wheeling gear does not fall off). Remove reverse idler shaft through rear of case (Puller C-604), lift idler gear out. Remove oil strainer cover and strainer from case. Use Tool C-714 to compress direct speed rail return spring, remove snap ring from case in front of spring, slowly release spring tension, remove tool, lift out spring

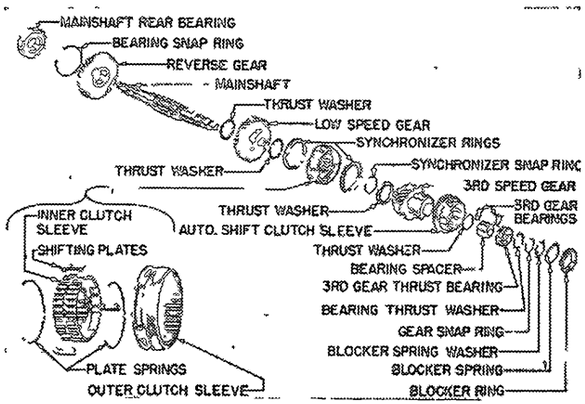

MAINSHAFT DISASSEMBLED

retainer, spring, piston, and piston ring through front of case. This completes transmission disassembly. Disassemble sub-assemblies as required.

REASSEMBLY OF TRANSMISSION: Note the following points when installing transmission parts and sub-assemblies:

Free-wheeling Gear Assembly on Countershaft Gear Cluster—Install control sleeve key and slide control sleeve on countershaft gear. Hook anchor ends of two free-wheeling cam roller retainer springs in holes in countershaft gear so that springs wrap around gear in clockwise direction from anchor end. Install free-wheeling cam roller retainer with lugs over spring anchors, rotate retainer clockwise until lugs are over slots in control sleeve, make certain that spring ends are snapped into grooves in retainer, then press retainer in until lugs fully engage slots in control sleeve. Install free-wheeling cam rollers and thrust washer, then place free-wheeling gear on countershaft gear and install the 45 bearing rollers.

Mainshaft Manual Shift Clutch (Synchronizer) Installation—Install on front of mainshaft with long portion of hub toward rear of shaft, use thickest snap ring which can be installed to retain the clutch (snap rings furnished .087" and .090" thick).

CONTINUED ON NEXT PAGE

CHRYSLER HYDRAULICALLY OPERATED AND DE SOTO TIP-TOE SHIFT (Cont.)

Install shifter plate spring and three shifter plates, then install clutch sleeve with taper of sleeve toward front end of shaft.

Mainshaft Third-and-Direct Speed Gear Installation—Install rear thrust washer with recess side toward rear end of shaft. Assemble bearings in Third Speed Gear as follows: Insert thrust bearing race (one with larger hole) in gear with groove toward forward end of shaft, assemble one set of 36 bearing rollers in forward end of gear, insert bearing spacer, insert second set of 36 bearing rollers in rear end of gear, install needle bearing thrust washer. Install the gear and bearing assembly on mainshaft, install ball thrust bearing and thrust bearing washer, then install gear snap ring using thimble and driver (Tool C-717). Check gear endplay which should be .003-.008". Adjust by installing snap ring of correct thickness (furnished .087", .092", .097", .101" thick).

Main Drive Gear Installation—With main drive gear assembly installed in case, install the bearing retainer **without a gasket** and secure it in place with regular mounting capscrews. Check clearance between bearing retainer flange and front of case with a feeler gauge. Select a gasket of same thickness as feeler gauge clearance (or nearest oversize) and **install this gasket under the bearing retainer.**

Mainshaft Assembly Installation—Use aligning studs (C-730) in case to align mainshaft gear assembly. Mesh gear teeth of Third-and-Direct speed gear hub with center space of each set of teeth on direct speed clutch sleeve. CAUTION—Do not force mainshaft assembly into place. Shaft will enter easily if main drive gear is turned in both directions until lugs on direct speed clutch blocker ring index with slots in direct-and-third speed gear.
NOTE—When installing mainshaft rear bearing retainer screws, use rubber gasket on middle screw on left hand side.

Countershaft Gear Assembly—Make certain that ridge on free-wheeling control sleeve engages groove in direct speed clutch sleeve when raising countergear cluster in position, install bronze thrust washer next to gear and steel thrust washer next to case at each end of gear cluster, check endplay which should be .005-.011". Adjust by selecting bronze thrust washer of correct thickness for installation at rear end of gear cluster (furnished .087", .090", .093", .096" thick).

TESTING (ELECTRICAL CONTROL UNITS): First check oil level in transmission, remove right side of front floor mat and floor panel cover for access to transmission. Inspect wiring and tighten all connections, make certain that engine properly tuned up so that it idles smoothly at 450-475 RPM. Use test lamp and test leads to make following tests in order as given:

Control Relay: (1) Connect one test lamp lead to relay "BAT" terminal, other lead to ground, turn on ignition. Lamp should light. If not, check for open-circuit between ignition switch and relay. (2) With engine idling, connect test lamp between relay "SOL" terminal and ground. Lamp should light. If not, check for blown fuse, or poor fuse contacts. Then ground relay "TH" terminal. If lamp does not light relay is defective. (3) With test lamp connected between relay "SOL" terminal and ground, increase engine speed. Lamp should go out. If lamp remains on, relay contacts are not opening. Disconnect lead at relay "TH" terminal. If lamp does not go out, relay contacts are sticking. (4) With engine idling, ground relay "INT" terminal. Engine should stall. If not, ground "PRI" terminal. If this causes engine to stall, relay contacts are not operating properly. If engine does not stall, check for open-circuit between "PRI" terminal and ignition coil.

Governor & Kick-down Switch: Connect test lamp between relay "SOL" terminal and ground. Idle engine. Lamp should be lighted. If not, ground governor terminal. If lamp lights, governor contacts are sticking open and governor should be replaced or serviced. If lamp does not light, check for open-circuit between relay and governor. Increase engine speed. Lamp should go out. If lamp remains lighted, disconnect lead at kick-down switch on carburetor. If lamp is still lighted, governor contacts are not opening and governor should be replaced or serviced. If governor operation satisfactory with kick-down switch lead disconnected (lamp lighted at idle speed indicating governor contacts closed, lamp out at higher engine speed indicating governor contacts open), kick-down switch is defective and should be repaired or replaced. To check kick-down switch operation, with test lamp connected between relay "SOL" terminal and ground, increase engine speed to point where lamp goes out, depress kick-down switch plunger by hand. Lamp should light with switch plunger pressed in and should go out when plunger released.

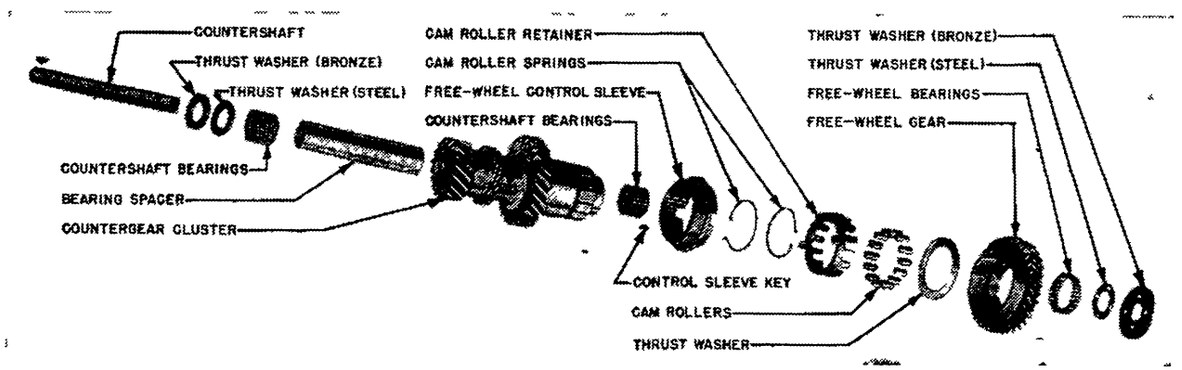

COUNTERSHAFT GEAR ASSEMBLY

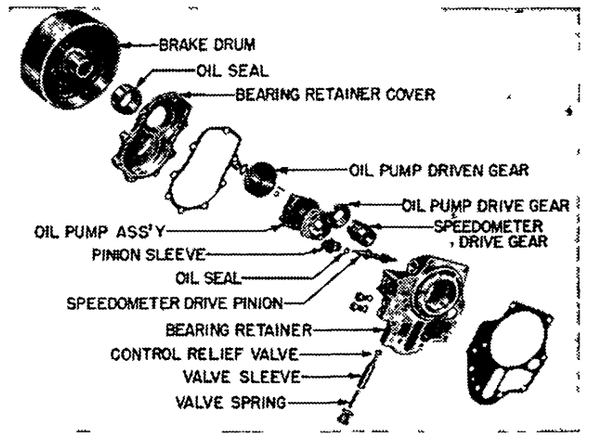

MAINSHAFT REAR BEARING RETAINER

Transmission Valve Solenoid: With engine idling slowly, and with test lamp connected between solenoid terminal and ground, lamp should be lighted and distinct magnetic attraction noted at solenoid cap (test with small steel tools or other objects). If lamp not lighted, check for open-circuit in solenoid lead. If lamp lighted but no magnetic pull noted, solenoid coil is open and should be replaced. To check solenoid, remove solenoid, reconnect lead, turn ignition on, invert solenoid and ground it on transmission. Plunger should snap out. If not, replace solenoid.

Ignition Interrupter: Block rear wheels securely, run engine with transmission in third gear. Disconnect lead from "INT" terminal on relay. Connect test lamp between relay "BAT" terminal and interrupter switch terminal. Lamp should flash when engine speed increased. If lamp does not flash, replace interrupter switch. If lamp remains lighted more than momentarily, interrupter switch is sticking (would cause engine to stall).

TESTING (HYDRAULIC UNITS): Check transmission oil level and fill to filler plug hole level. Then test hydraulic system as follows:

Hydraulic Oil Pressure: Remove "Mainshaft Rear Bearing Retainer Pressure Line Plug" on right side of transmission (see illustration), connect test oil pressure gauge at this point. Block up rear wheels securely, run engine with transmission in high range. Oil pressure should be 40-60 lbs. at 15 MPH. If pressure less than 40 lbs., inspect and service oil pump, check oil pressure relief valve for sticking open, check for dirty or clogged oil pump screen and oil pressure leaks.

NOTE—Pressure will drop momentarily when transmission upshift occurs.

CONTINUED N NEXT PAGE

CHRYSLER HYDRAULICALLY OPERATED AND DE SOTO TIP-TOE SHIFT (Cont.)

Automatic Shift Action: With rear wheels blocked up and engine running with transmission in gear, remove interrupter switch so that movement of hydraulic piston shift rail can be noted. Increase speed above 15 MPH. Piston should move forward and close off interrupter switch hole. If piston does not move forward, check hydraulic valves (see below). If piston moves forward but upshift does not occur, check hydraulic shift mechanism for binding. Stop engine and note if piston is in rear position (interrupter switch hole uncovered). If piston in rear position but transmission does not downshift, check for loose shift fork. If piston does not move to rear (hole remains covered), check for binding of shift rail, direct speed sleeve, or free-wheel control sleeve.

Hydraulic Valves: Check each valve as follows:

Pilot Valve—Remove solenoid assembly. Pilot valve should be up against upper stop and should work freely. If not, remove and clean valve and valve chamber.

Main Control Valve—Remove valve plug on right side of transmission (see illustration). Valve should work freely against spring tension. If not, remove and clean valve and valve chamber.

Control Reli f Valve—Remove plug on right side of transmission (see illustration). Check valve for free movement. If valve is sticking or sluggish check for weak or broken spring, clean valve.

CORD DRIVING UNIT (TRANSMISSION & AXLE)

FRONT DRIVE MODEL 810 (1936), 812 (1937)

NOTE:—Driving Unit consists of a combination transmission and differential assembly in a single case (each unit in a separate compartment, must be lubricated and drained individually). Drive pinion shaft serves as countershaft (counter gear cluster splined on this shaft) and differential adjustments are disturbed by transmission disassembly.

TRANSMISSION CONTROL

TYPE: Bendix electro-pneumatic remote control type. See separate Cord Remote Control Gearshift article

DIFFERENTIAL UNIT.

TYPE:—Spiral bevel type. Drive from differential assembly transmitted directly to universal joint mounted on each side of driving unit by short spline shaft which is integral part of universal joint assembly (these shafts withdrawn when universals removed). Differential assembly mounted on taper roller bearings and adjusted by nuts or sleeves extending through side of case. Pinion shaft (transmission countershaft) mounted on ball bearings.

SERVICING:—Gear Adjustment. Backlash should be .004-.008". See Differential Bearing Adjustment and Pinion Setting below.

Axle Shaft Replacement. Shafts removed with wheel assembly by driving out grooved pin at outer end of inner universal and pulling shaft out to free splined end from inner unlversal. Wheel bearings are double-row ball type (no adjustment).

Inner Universal J ints. To remove (necessary when dismantling differential), take ut 8 capscrews in mounting flange on side of driving unit case, withdraw universal as an assembly to free spline shaft on inner end from differential side gear. Do not lose spacer located between shafts in differential.

OVERHAUL:—Pinion Bearings. In Transmission case. See Transmission servicing directions below.

Pinion Setting:—Controlled by shims between oil pump housing and front end of driving unit case. Add shims to move pinion out or away from ring gear, remove pinion to move pinion in.

Differential Bearing Adjustment:—Mark bearing sleeves before dismantling differential assembly, turn sleeves in to same point when reassembling. Tighten bearing cap bolts securely.

Ring Gear Backlash Adjustment:—Loosen bearing cap bolts slightly, back off one differential bearing adjusting sleeve, tighten opposite sleeve exactly same amount to avoid disturbing bearing adjustment. Backlash should be .004-.008".

TRANSMISSION UNIT.

NOTE:—Bendix electro-pneumatic transmission control is standard equipment. See separate article (Transmission Controls) for data and adjustment

TYPE:—Four speed, constant mesh, synchro-mesh, helical gear type (except low and reverse), sliding spur gear (low and reverse). No direct drive, drive for each speed is from driving gear on mainshaft to driven gear of counter gear cluster splined on pinion shaft (pinion shaft takes place of conventional countershaft). Mainshaft and pinion shaft (counter gear mounting) mounted on double row ball bearing (front), single row ball bearing (rear). Gears are engaged by the sliding clutch of the synchronizing unit on the mainshaft engaging clutch teeth on the driving gear hubs (synchro-mesh gears).

Synchronizing Units. Two similar units used, front unit for second and third speeds (shifts in both directions), rear unit for fourth speed (shifts backward only). Consist of inner sleeve carrying synchronizing cups and splined to mainshaft, outer clutch unit splined to inner sleeve. Inner and outer sleeves move as a unit (spring loaded detent balls in inner sleeve engage groove in outer sleeve) until synchronizing cups engage cones on gears, when synchronization completed, outer sleeve slides on inner sleeve to engage clutch teeth on gear.

Transmission Oil Pump. Oil pump mounted in housing on front end of case and driven by countershaft. Forces oil through hollow mainshaft to gears. Shims under oil pump housing control pinion mesh.

NOTE—Oil pump does not operate when transmission in neutral and engine should not be idled in neutral for long periods particularly when new (may cause mainshaft gear bushings to seize).

REMOVAL OF DRIVING UNIT: *See "Driving Unit" on car model page.*

SERVICING:—Disassembly. Remove differential assembly (back off differential bearing adjusting sleeves to remove bearing tension before removing assembly). Place shifting mechanism in 'neutral'. Remove housing on front end of case containing shifting mechanism, and oil pump housing (do not lose shims between oil pump housing and case which control pinion mesh). Remove transmission case cover. Remove three shifter rails, interlock plungers, lock balls and springs (lock ball and spring for one lower shaft and interlock plunger between this shaft and upper shaft located at front of transmission and inserted in hole at top of case, lock ball and spring for other lower shaft and interlock ball for lower shafts at rear of transmission and inserted through hole on side of case closed by ¼" pipe plug, lock ball and spring for top shaft at rear of transmission and inserted through hole closed by hexagonal headed plug; replace these in same positions when reassembling). Mark all gears, synchronizing units, and shafts with paint to insure reassembling in same positions and meshed with same splines. Remove mainshaft locknut at forward end of case, use copper drift and drive shaft out toward rear end of case, remove mainshaft gear assembly through top of case (gears assembled on sleeve and not disturbed by removal of shaft). Remove locking nut on forward end of pinion shaft, remove speedometer and oil pump drive gear and key, use copper drift and drive shaft out toward rear of case, lift out cluster gear and sliding gear assemblies.

Reassembling:—Remove mainshaft rear bearing by tapping it out of the case and assemble on the mainshaft before installing mainshaft in case. Make certain that all parts are assembled in accordance with paint marks made before disassembly. Thrust washer on end of mainshaft gear assembly next to rear bearing should be installed with taper face toward bearing. Install shims between oil pump housing and case as required for correct pinion mesh with ring gear.

WILLYS 1936

Model 77 (1936)

NOTE:—Clutch bell housing integral with transmission case and must be removed as a unit.

Willys later Models. 1937 and later Willys models equipped with Warner Transmissions. See Warner Transmission articles for complete data.

TYPE:—Sliding spur gear type (all speeds). Mainshaft mounted on bushing in main drive gear with thrust washer on shaft between shoulder on shaft and the main drive gear. Taper roller bearings are used on main drive gear at forward end of transmission and on rear end of mainshaft (entire assembly adjusted by shims under rear bearing retainer). Counter gear cluster mounted on bushings on stationary countershaft. Gears engaged by shifting sliding gears on mainshaft (clutch teeth for direct drive cut inside second speed gear).

REMOVAL OF TRANSMISSION: *See "Transmission" on car model page.*

SERVICING:—Disassembly. Remove shift lever and cover assembly, shifter shafts and forks, lock balls and springs. Take off universal joint flange nut and flange, remove speedometer gear assembly, take off rear bearing retainer (speedometer drive gear housing) and gear, being careful not to lose shims under retainer. Pull mainshaft out toward rear, disengaging low and second speed sliding gears and removing these gears through top of case. Remove bearing retainer on front of case (within bell housing), pull out main drive gear and bearing assembly toward front of case. Drive countershaft out and lift countergear cluster out of case.

Bearing Adjustment: When installing the mainshaft, see that the mainshaft thrust washer in proper place at forward end of mainshaft, tighten front bearing retainer screws securely, install shims between rear bearing retainer and case as required so that mainshaft endplay is .006-.008".

1936-48 FORD, LINCOLN, MERCURY 3-SPEED

Ford 6 & V8, Pass. Cars (1936 to 1948)
Ford Comm'l ½ Ton & ¾ Ton Truck (1940 to 1948)
Ford 1 Ton Truck Models (1940 to 1947)
Lincoln, Zephyr Models (1936 to 1940)
Lincoln, All Models (1941 to 1948)
Mercury, All Models (1939 to 1948)

►NOTES, CAUTIONS, & CHANGES

►**Ford "60" 1937 Transmission Production Change:** On all "60" models, beginning with Engine No. 395343 (10-11-37), tooth pitch of intermediate gears changed from 11 to 9¼. When replacing old type intermediate (second speed) gear and countergear, use new type 74-7103-B (18 tooth) Intermediate Gear and 74-7113-D (19 tooth) Countergear with new type floating bushings. Floating bushings used in countergear assembly beginning with Engine No. 460104. See Countergear Assy. data.

►**Ford, Lincoln, Mercury Passenger Car Gearshift 1940 & Later Cars**—New type consisting of two independent shifting levers and shafts mounted on side cover on transmission case (no top cover used) and linked to gearshift lever on steering column by adjustable rods. Entire gearshift mechanism is removed as an assembly with the side cover and need not be dismantled.

►**Ford Truck Optl. Transmission**—Four-speed type optional on these truck models.
See Pg. 2709 "Ford Truck 4-Speed Transmission."

►**Lincoln 1941-48 Overdrive**—*Special Warner Optl. See Pg. 2704 "1941-48 Lincoln Overdrive (Special Warner R10)."*

►**Lincoln & Mercury 1942 Liquamatic Drive**—Optl. *See Pg. 2702 "1942 Lincoln & Mercury Liquamatic Drive."*

DESCRIPTION: Constant-mesh, synchro-mesh, helical gear (Second & High), sliding gear (Low & Reverse). Main drive gear mounted on ball bearing in case. Mainshaft mounted on roller bearing (front), ball bearing (rear). Countershaft mounted on roller bearings on stationary countershaft with thrust washer at each end. Gears are engaged by a sliding clutch sleeve (outer sleeve or synchronizing unit) which engages clutch teeth on the main drive gear and second speed gear hubs. NOTE—Countershaft on '60' model mounted on bushings pressed in gear assembly (first cars), floating bushings (later). See Countergear data.

Ford '85' Models. Transmissions with sliding spur low-and-reverse gear used on some models. This transmission serviced in same manner as others.

Lincoln-Zephyr (1938-39). Shifter shafts and lever assembly mounted in side cover on transmission case (no top cover used). Serviced in same manner as other types.

Synchronizing Unit: Various types used as follows:

Plain Type (1936-41)—Unit consists of an inner hub splined on the mainshaft with synchronizing rings at each end and outer clutch sleeve splined on this hub. Sleeve is centered on hub by spring-loaded detent balls (mounted in holes in hub, engage groove in sleeve) so that entire synchronizing assembly moves as a unit, when clutch sleeve shifted to engage gears, until synchronizing rings engage synchronizing cones on gear hubs. Clutch sleeve then slides further to engage clutch teeth on gears (synchronizing rings prevent this engagement until synchronization completed).

Ball & Strut Blocking Synchronizer (1937 On)—On this type synchronizer unit, both synchronizer rings are loose in ends of clutch sleeve and are actuated by struts assembled in slots in inner clutch sleeve and engaging notches in synchronizer rings. Struts are centralized in clutch sleeve assembly by the regular poppet balls and springs so that struts move with the outer clutch sleeve during initial movement to engage the synchronizer rings with the cones on the gear hubs. Teeth on outer rim of synchronizer rings block or prevent gear engagement until synchronization completed when the final movement of the outer clutch sleeve causes the clutch teeth on the inner rim of the sleeve to slide through the synchronizer ring teeth to engage clutch teeth on gear hubs. Inner clutch sleeve is stationary on mainshaft (retained as unit with second speed gear by snap ring in groove on shaft).

NOTE—This Ball & Strut type synchronizer can be distinguished from Wire-Bound Strut type synchronizer (below) by absence of shoulder on second speed gear end of outer clutch sleeve.

Wire Bound Strut Blocking Synchronizer (1938-39) Both synchronizer rings are loose in ends of clutch sleeve and are actuated by struts assembled in slots in inner clutch sleeve and engaging notches in synchronizer rings. Struts are centralized in clutch sleeve assembly by lock ring or wire installed in outer clutch sleeve which engages notches on struts. Struts move with the outer clutch sleeve during initial movement to engage synchronizer rings with

CONTINUED ON NEXT PAGE

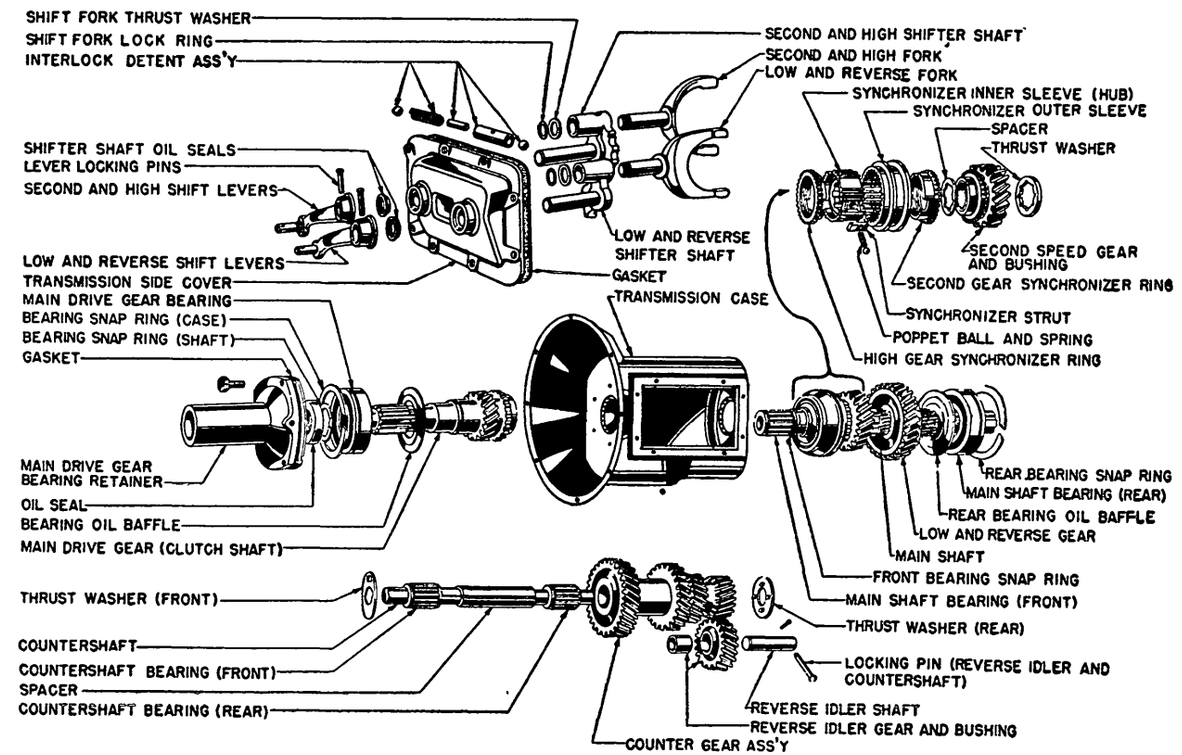

1940-48 FORD, LINCOLN, MERCURY 3-SPEED (BALL & STRUT TYPE SYNCHR NIZER)

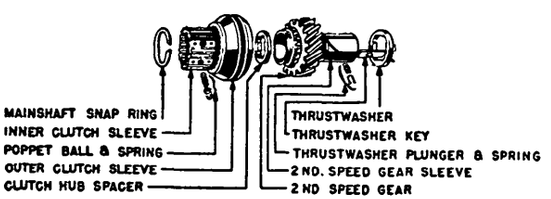

PLAIN TYPE SYNCHRONIZER

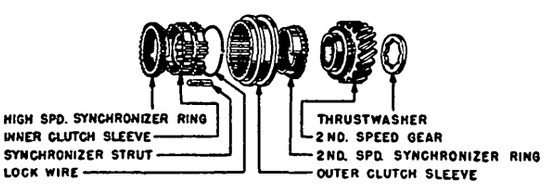

WIRE B UND STRUT TYPE SYNCHR NIZER

1936-48 FORD, LINCOLN, MERCURY 3-SPEED (Continued)

cones on gear hubs. Teeth on outer rim of rings "block" or prevent gear engagement until synchronization completed when the final movement of the clutch sleeve causes clutch teeth on sleeve to slide through the synchronizer ring teeth to engage clutch teeth on gear hubs. Inner clutch sleeve is stationary on mainshaft (retained as unit with 2nd. speed gear by snap ring in groove on shaft).

Gearshift Assy. (1940 & Later Pass. Cars): Consists of two independent shifting levers and shafts mounted on transmission case side cover (rear lever is Low-Reverse, forward lever Second-High). Fork on inner end of lever shaft engages gears directly and no shifter rails are used. Detent balls and interlock mechanism consist of a spring, plunger, and two balls assembled in a tube in a boss within the transmission case so that the balls engage notches in sectors on each of the shifter shafts. The entire gearshift mechanism can be removed as a unit with the side cover by disengaging the forks from the gears. CAUTION—When reassembling cover, make certain that rear fork engages low speed gear, forward fork engages outer sleeve of synchronizer unit.

REMOVAL OF TRANSMISSION: *See "Transmission" on car model page.*

DISASSEMBLY: Remove transmission cover, lever, shifter shaft and fork assembly (1939 and earlier types), remove side cover and shifter mechanism as an assembly (1940 & later). Take out capscrews in universal joint front yoke, remove yoke from shaft. Take out capscrews mounting universal joint housing on rear of case, remove housing. Remove locking pin and drive out countershaft. Take out bearing retainer screws on front of case, withdraw clutch shaft main drive gear and bearing assembly (On Lincoln beginning 1942, gear can be removed without dropping countergear cluster by turning drive gear until "cutout" section of clutch teeth on gear provide clearance for counter gear). Tap mainshaft back in case until rear bearing clears rear face of case, remove snap ring from bearing. Tap mainshaft forward until bearing clears inner face of case, remove mainshaft, synchronizer, and gears from the case as an assembly (lift out bearing end of shaft first). Lift out countergear cluster and thrustwashers. If reverse idler gear to be removed, tap shaft out from rear end of case (retained by same lockpin as countershaft), lift gear out.

REASSEMBLY: Reverse disassembly directions (above) and note following data on servicing of sub-assemblies.

Mainshaft Assembly: See Synchronizer, Second Speed Gear, and Sliding Gear for removal and installation of these parts. Rear bearing should be replaced as follows:

Mainshaft Rear Bearing—Press old bearing off shaft. Install oil baffle on shaft with outer edge of baffle away from bearing, press new bearing on shaft until seated against shoulder.

Synchronizing Unit:—Can be removed from front end of mainshaft without being dismantled. If clutch sleeve is to be removed from the inner clutch hub mark both parts and reassemble in same positions, use extreme care not to lose detent balls and springs (will jump out when parts separated).

Blocking Type Synchronizers—Mark both rings as well as inner and outer clutch sleeves before disassembly to insure reassembling in same relative positions. When installing struts, make certain that they engage poppet balls (Strut Type) or that locking wire engages notches in struts and is installed with hook on open end engaged between two clutch teeth on outer sleeve midway between struts (Wire Bound Strut Type). Wire Bound Strut Type Synchronizer is mounted on mainshaft as an assembly with the second speed gear as shown below.

Second Speed Gear Assembly (With Plain Type Synchronizer): Gear is retained on shaft by thrustwasher at rear and thrustwasher (spacer) at front which are locked in place by locking key and plunger within the gear sleeve. To remove the gear, insert a punch (or wire) through the hole at center of gear, rotate the gear until wire can be pushed through hole in sleeve, depress plunger, until locking key is freed, push key forward to release rear thrust washer, turn washer until prongs (engaged in slot in splines) line up with shaft splines, move washer to rear slightly. Move key back to free front washer (plunger will engage key at center position and must be depressed again to allow key to be shifted further), withdraw wire and move second speed gear back to expose front thrust washer, turn washer until prongs are freed from splines, remove washer and gear. When installing gear, make certain that both thrust washers are turned so that prongs engage slots in splines (to prevent endwise movement) and that key engages both washers and that key is locked by plunger.

Gear Endplay—.004-.008" (new), .020" (worn limit). Controlled by thrustwashers furnished in following thicknesses:

Front (Spacer)—B-7069—.183-.184" (new), .179" (worn limit).

Rear (Thrustwasher)—68-7071—.1875" (new), .1825" (worn limit).

Second Speed Gear Assembly (With Blocker Type Synchronizer): Gear and inner sleeve or hub of synchronizer are mounted as an assembly on the mainshaft with a thrustwasher (spacer) between the gear and synchronizer. Assembly is retained on shaft by snap ring at forward end of synchronizer clutch sleeve. To dismantle assembly, remove snap ring from groove at forward end of shaft, withdraw synchronizer assembly, thrustwasher, and second speed gear. NOTE—Gear and bushing are furnished as an assembly.

Gear Endplay—(1937-48) .004-.008" (new), .020" (worn limit). (1948 Half-Ton) .003-.011" (new), .023" (worn limit). Install spacer (front thrustwasher) of correct thickness for this endplay. This spacer furnished in two thicknesses as follows: 81A-7069-A—.0630-.06355" (new), .060" (worn limit). 81A-7069-B—.068-.071" (new), .066" (worn limit). Rear thrustwasher furnished in one thickness only: 81A-7071—.184-.185" (new), .179" (worn limit).

▷Wire Bound Blocking Synchronizer Note—Front thrustwasher or spacer not used with this type synchronizer.

Countergear Assembly:—Counter shaft is retained by locking pin driven in through hole in case and rear end of shaft (pin also locks reverse idler gear shaft in place) and shaft can be driven out after pin removed. Gear cluster is mounted on roller bearings with spacer on shaft between bearings. When installing gear cluster, make certain that tongue on thrust washer at forward end engages slot in case and that rear thrust washer prongs engage gear. NOTE—On '60' models, floating bushings are used. Spacer (74-7115) installed between bushings.

Countergear Endplay—Endplay must not exceed following specifications (replace thrustwashers if excessive):

1936-48 Pass. Cars—.005-.017" (new), .025" (worn).

1936-47 Trucks—.005-.017" (new), .025" (worn).

1948 Half-Ton—.0045-.0185" (new), .0265" (worn).

1948 Other Trucks—.006-.020" (new), .028" (worn).

Reverse Idler Gear:—Shaft retained by countershaft locking pin, may be removed after pin driven out. Install gear with shoulder toward rear of case. See that locking pin hole in shaft lined up with hole in case and install locking pin after countershaft installed (same pin locks both shafts).

Gearshift Assembly (Pass. Cars):—To dismantle the shift assembly, remove lockrings on shifter shaft ends of forks, remove forks from shifter shafts. Drive out locking pins in lever at outer ends of shifter shafts, withdraw shafts from inside of cover using extreme care not to lose detent balls, spring, and plunger. Reassemble shifter mechanism in same manner. See that oil seal in recess in cover at outer end of each shifter shaft is in good condition. See Ford & Lincoln Transmission Control articles for adjustment directions.

1942 LINCOLN & MERCURY LIQUAMATIC DRIVE

MERCURY PASSENGER CARS (1942)—SEE NOTE
LINCOLN ZEPHYR, CUSTOM, CONT'L. (1942)

MERCURY NOTE:—Liquamatic Drive, as offered on Mercury cars, is similar to type used on Lincoln except that Overdrive is not used.

DESCRIPTION:—Liquamatic Drive consists of a Fluid Coupling, conventional Single Plate Clutch, new design 3-speed Transmission with automatic shifting between Second & High Gear, and an Overdrive Unit (Lincoln only) with Governor control.

Fluid Coupling—This unit is similar to other Fluid Couplings and consists of a driving member and a driven member within a housing mounted on the rear end of the engine crankshaft. Engine torque is transmitted through the fluid with which the case is filled and the fluid coupling eliminates vibration, insures smooth starting, and makes manual clutch disengagement unnecessary.

Automatic Transmission—Warner AS1-T94 (Mercury), T94A with R10A Overdrive (Lincoln). Special design with free-wheel unit or overrunning clutch incorporated in the drive gear on countershaft so that Second Gear or High Gear effective (depending on car speed and consequent position of automatic shift mechanism) with steering column gearshift lever in 'High' position. Transmission can

CONTINUED ON NEXT PAGE

LIQUAMATIC DRIVE (C nt.)

be 'kicked down' from High Gear to Second Gear at car speeds below 35 MPH. by fully depressing the accelerator pedal (accelerator pedal action also controls Overdrive on Lincoln as described below). With the gearshift lever in the 'Second' position, overrunning clutch is locked out and transmission remains in second gear (automatic shift inoperative) so that engine can be used as a brake.

Overdrive Unit (Lincoln)—Same design as used on other Lincoln models (Warner Type R10). *See "1941-48 Lincoln Overdrive (Special Warner R10)."*

OPERATION:—Mercury Transmission—The gearshift lever on the steering column is normally left in the High position (for starting and running) but transmission automatically shifts down to Second Gear (without gearshift lever change) at car speeds below 11 MPH. so that all starts are made in Second. When accelerator pedal is depressed to accelerate engine, fluid coupling transmits torque and car starts in normal manner. At car speeds above 11 MPH., transmission automatically shifts to High Gear when accelerator pedal is released momentarily (second speed gear is not disengaged but freewheels on countershaft) and transmission remains in High until car speed decreases to 11 MPH. or accelerator pedal is fully depressed for 'kick-down' downshift to Second for acceleration (transmission will return to High when pedal released). This kick-down downshift does not occur at car speeds above 38 MPH. and transmission remains in High.

Lincoln Overdrive Transmission—Lincoln transmission shifts in same manner as Mercury (above) when engine accelerated normally and shift from Second to High occurs between 12 & 23 MPH. whenever the pedal is released momentarily. However, if car is accelerated beyond 23 MPH. without releasing the pedal, Overdrive engages when the pedal is released so that transmission is in Second-Overdrive. At the next release of the pedal, High is automatically engaged so that transmission is in High-Overdrive (normal position at speeds above 23 MPH.). Likewise, when accelerator pedal is fully depressed for 'kick-down' downshift at speeds between 23 & 35 MPH. (with transmission in High-Overdrive), Overdrive remains engaged and transmission shifts down to Second-Overdrive. The second full depression of the pedal disengages Overdrive so that the transmission is in Second Gear. At car speeds above 35 MPH., this 'kick-down' disengages Overdrive only so that transmission is in High Gear (Second Gear downshift inoperative above 35 MPH.). When the gearshift lever is moved to Second Gear position (in order to use engine as a brake), Overdrive lockout button on instrument panel must be operated to lock out overdrive.

Transmission Gearshift Mechanism:—Automatic shift mechanism consists of a special sliding clutch collar on the hub of the Second Speed Gear on the transmission mainshaft which locks this gear to the clutch gear (main drive gear) for High Gear or direct drive operation (Second Speed Gear will be locked to mainshaft by manually controlled sliding clutch collar directly behind gear when the steering column gearshift lever is in the High Gear position). This direct drive is permitted by the 'freewheel' unit in the countershaft driving gear(countershaft gear cluster overruns this driving gear as it is being driven at faster speed by the second speed gear on the mainshaft when transmission is in High). The automatic shift sliding clutch collar is operated by the vacuum power cylinder as described below. When clutch collar is shifted to rear (second speed gear free) transmission will be in Second Gear, when clutch collar shifted forward (second speed gear locked), transmission in High.

Transmission Control Vacuum Cylinder:—Consists of a piston type vacuum power cylinder and solenoid valve assembly mounted on the right hand side of the transmission case with the piston rod linked to the automatic shift clutch collar shift lever (see above). A large return spring is located within the vacuum cylinder behind the piston (downstroke or outward movement of piston rod is spring actuated, upstroke or inward movement of the piston rod only is vacuum actuated) and a 'holding solenoid' coil and Ignition Shorting Switch is built in the end of the vacuum cylinder. When the solenoid valve is energized, valve opens and admits vacuum to power cylinder so that piston and rod are drawn into cylinder shifting the transmission into Second Gear. Piston and rod are held in this inner position by the 'holding coil' in the cylinder which is connected in series with the valve solenoid and is likewise energized. In this inner position, the piston actuates the Ignition Shorting Switch plunger and closes the switch contacts but the ignition is not shorted out because right hand (ignition) contacts in control relay are normally open. When the left hand contacts of the control relay open to de-energize the solenoid valve and vacuum cylinder holding coil (actuated by Governor, Throttle Kick-down Switch, or Interlock Switch as described below), the right hand (ignition) contacts also open and, as the ignition shorting switch contacts in the vacuum cylinder are likewise open, the ignition coil is grounded and engine ignition is cut out momentarily allowing engine to coast and relieving the torque from the automatic shift clutch collar. The return spring in the vacuum cylinder then pushes the piston and rod outward to shift the automatic shift clutch collar into Second Speed position (balk ring in clutch collar prevents engagement until torque has been relieved). As soon as the vacuum cylinder piston has moved out 3/8", the contacts in the ignition shorting switch open and ignition is restored (this entire action occurs so fast that this cutting out not noticed.

Transmission Control Relay:—Relay has two sets of contacts and when relay winding is energized, left hand (solenoid valve & holding coil circuit) contacts will be closed and right hand (ignition) contacts will be open. When relay winding is de-energized by opening of the control switch contacts, left hand contacts open and right hand contacts close. Relay is controlled as follows:

Governor—Governor is mounted on right side of transmission and driven from a special gear of the countergear cluster. Governor is two-stage type. At car speeds below 11 MPH. both sets of contacts are open. At 11 MPH., low speed contacts close to actuate relay and energize solenoid valve and vacuum cylinder holding coil so that transmission shifts to High Gear. At 38 MPH., the high speed contacts close and transmission remains in High.

Throttle Kick-down Switch—Throttle Kick-down switch is connected in Governor low speed contact circuit and is normally closed so that transmission operation is controlled by the governor. Whenever the accelerator pedal is fully depressed for 'kick-down' to Second (at car speeds between 11 and 38

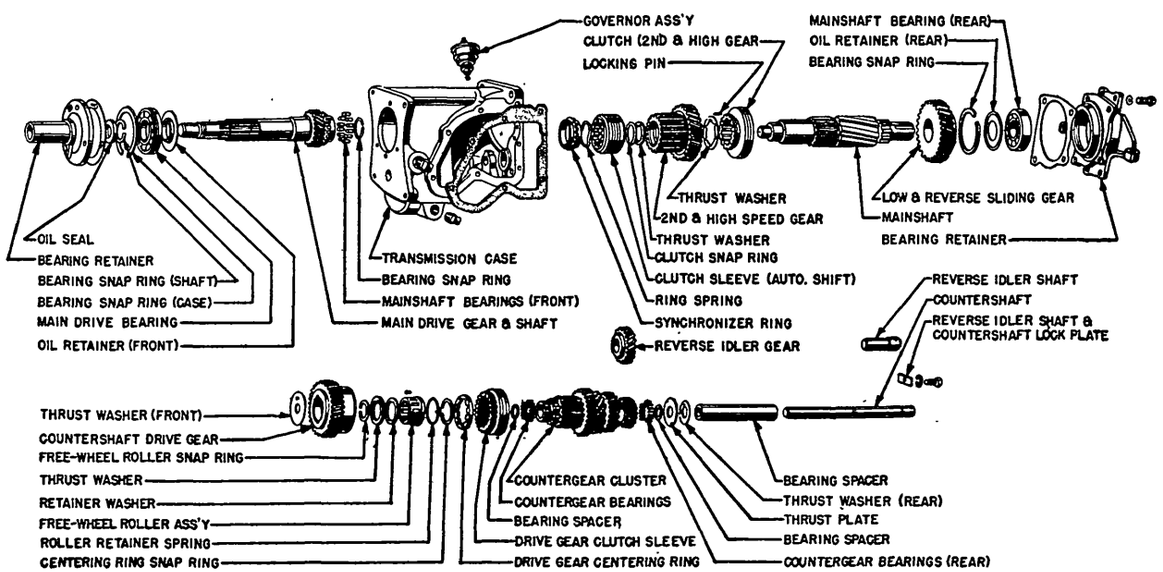

MERCURY LIQUAMATIC DRIVE (LINCOLN SAME WITH OVERDRIVE)

CONTINUED ON NEXT PAGE

LIQUAMATIC DRIVE (Continued)

MPH.), throttle switch contacts open and break the circuit to ground (through governor low speed contacts) so that solenoid valve and vacuum cylinder holding coil are de-energized and downshift to Second occurs. At speeds above 38 MPH., circuit is completed through governor high speed contacts and throttle switch operation has no effect.

Interlock Switch—Mounted on left hand side of transmission. Switch is connected in circuit between relay and governor and is normally closed. Whenever gearshift lever is moved to any other position than High Gear, interlock switch contacts open so that automatic shift is inoperative.

SERVICING & ADJUSTMENT:—Fluid Coupling—Fluid coupling is filled with SAE #10W oil which is correct for all operating conditions and need never be changed. Check fluid level at 5000 mile intervals.

CAUTION——Never remove fluid coupling plug to check oil level when oil hot (check at 70°F).

Checking Oil Level—Remove hand hole cover on top of clutch housing (left side on Mercury). Turn fluid coupling until plug in coupling cover is opposite lower mark on clutch housing (Lincoln), centered between two marks or ribs on housing (Mercury), remove plug (see Caution above). Fill coupling to point even with bottom of filler hole with SAE #10W engine oil, replace plug and tighten securely. Fluid Coupling must be turned so that plug position is correct (above) to avoid overfilling.

Capacity—10½ quarts (Lincoln).

Vacuum Cylinder Piston Rod Adjustment:—Adjust rod length so that there is slight tension on rod in Second Gear position (rod adjustment set a maximum of one turn long from point where it has no backlash in second speed position). Incorrect adjustment will cause sluggish kick-down from high to second speed or failure to kick-down.

Throttle Kick-down Switch Adjustment:—Kicker on throttle rod should be set so that switch contacts open when throttle rod extended beyond wide open throttle position. Incorrect switch adjustment will cause failure of kick-down from high to second.

FUSE:—Fuse is 15 ampere. Located in lead between ignition switch and #1 relay terminal.

TROUBLE SHOOTING:—If transmission does not operate satisfactorily, check for trouble as follows:

Sluggish High Gear Upshift—Accelerator linkage binding or sticking, engine idle speed too fast (set engine idle speed at 350 RPM when warm.

Remains in Second Gear (No High Gear Upshift). Check for burned out fuse, accelerator linkage sticking or engine idling too fast (set idle speed at 350 RPM.), check vacuum lines and connections for leaks, check automatic shift clutch lever engaging spring tension, check relay, governor, interlock and throttle kick-down switches, check vacuum valve, check all wires for loose connections and breaks.

Remains in High Gear (No Second Gear Downshift). Check relay and governor operation, check circuit between center terminal at bottom of relay and governor low-speed terminal for grounds.

Sluggish Kick-down to Second Gear. Check vacuum cylinder piston rod adjustment (above), check for loose connections at distributor primary terminal, vacuum cylinder center terminal, and relay terminals, check wiring for open-circuits.

Remains in High Gear (No Kick-down to Second). Check vacuum cylinder piston rod adjustment and throttle kick-down switch adjustment (above), check relay, ignition shorting switch (on vacuum cylinder), and circuit between ignition shorting switch and distributor primary terminal. Check ignition shorting switch spring tension (contacts should close with 6-8 ozs. pressure on plunger).

Second Gear Kick-down occurs above 38 MPH. Check relay, check high speed contacts in governor (contacts should close at 38 MPH.).

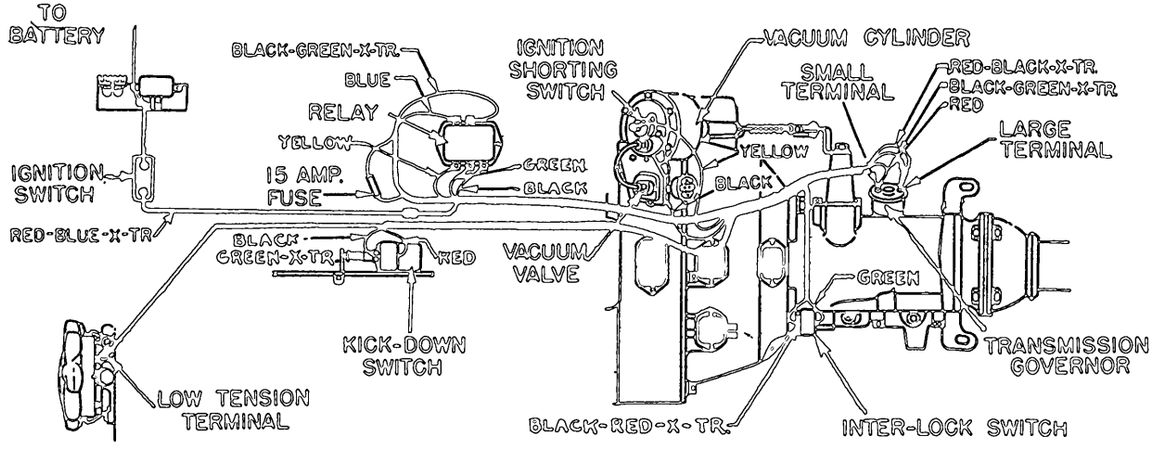

LIQUAMATIC DRIVE CONTROL (MERCURY SHOWN—LINCOLN SIMILAR)
SEE 1942 LINCOLN CAR WIRING DIAGRAM FOR OVERDRIVE WIRING

1941-48 LINCOLN OVERDRIVE (SPECIAL WARNER R10)

Car Model	Warner Model
Lincoln, All Models (1941-42)	AS1-R10
Lincoln, All Models (1946-47)	AS2-R10
Lincoln, All Models (1947-48) ①	AS3-R10

①—After approximately March 1, 1947.

▷Overdrive on Liquamatic Drive Cars—Overdrive is a part of the Liquamatic Drive (Liquamatic Drive consists of Fluid Coupling, Automatic Transmission and Overdrive on Lincoln—no Overdrive used with Mercury Liquamatic Drive) and may also be found on cars with Std. synchro-mesh transmission. Refer to separate article for all data on Liquamatic Drive except Overdrive servicing data which is given below.

▷Overdrive Solenoid Removal & Installation—Solenoid is special type and solenoid pawl rod has 2 "flats" on ball end to permit solenoid to be removed and installed without disassembling the overdrive unit. Manufacturer recommends that solenoid be installed only after overdrive installed on transmission to avoid damage to solenoid. *Refer to Overdrive Servicing data (below) for complete instructions.*

DESCRIPTION: Warner special R10. New design overdrive unit with solenoid control (no centrifugal clutch pawls). This R10 type similar to Type R9 (Hudson, Packard models) except for control circuits and lockout mechanism which are entirely new design as described below. Solenoid pushes sun gear pawl in (to engage Overdrive), withdraws pawl (for Direct Drive). Solenoid is controlled by Governor Switch (Overdrive does not engage above cut-in speed until accelerator pedal released momentarily) and has 'kick-down' direct drive feature.

Lockout Mechanism—Consists of a shift collar positioned on the sun gear by snap rings so that the sun gear can be shifted to the rear to engage clutch teeth in a lock plate mounted on the planetary pinion assembly so that the planetary gears are locked together for direct drive. CAUTION—This lockout action can only take place with overdrive in direct drive (sun gear and lockplate turning at same speed) and overdrive must be 'kicked-down' to direct drive (see "Control" article following).

Lockout Switch (AS1-R10, AS2-R10). Switch is mounted on side of overdrive case (retained by setscrew and locknut directly ahead of switch) with switch plunger contacting rear end of overdrive control shaft.

Lockout Switch (AS3-R10). Switch mounted on side of case and retained by two screws in switch base plate. Switch plunger extends through base into hole in overdrive case and is actuated by ball riding on overdrive control shaft.

CAUTION—When removing and installing this switch, make certain that switch ball is in place in plunger recess in case.

REMOVAL OF OVERDRIVE: *See "Overdrive" on car model page.*

TRANSMISSION DISASSEMBLY & REASSEMBLY: See "Ford-Lincoln-Mercury 3-Speed" Transmission (transmission is same as std. type without overdrive) except that mainshaft is extended back into overdrive case and has pinion assembly and freewheel cam mounted on this extension.

SOLENOID REMOVAL & INSTALLATION: Disconnect wires at terminals, take out mounting screws

CONTINUED ON NEXT PAGE

1941-48 LINCOLN OVERDRIVE (C ntinued)

in base flange, **rotate solenoid approximately 60° to right** to disengage pawl rod from pawl (this will line up flats on end of rod with slot in pawl), withdraw solenoid and pawl rod assembly. To install solenoid, insert pawl rod in adapter with flats horizontal, make certain that short pilot on end of solenoid body enters counterbore in adapter casting, **rotate solenoid approximately 60° to left to engage pawl rod end in pawl** and line up solenoid flange with mounting holes. Check engagement of pawl rod and pawl by attempting to pull solenoid off (solenoid should not come out and resistance of solenoid spring should be felt). Install solenoid mounting screws and connect wires at terminals.

CAUTION—Solenoid must be installed with wire terminals "up".

ASSEMBLY OF OVERDRIVE: Install rear bearing on transmission shaft, install bearing lock ring (see end play note below), install oil baffle, transmission shaft and bearing in adapter plate, install bearing snap ring (see bearing endplay note below), install sun gear plate and balk ring assembly in adapter, install pawl in adapter slot. Install cover plate with tongue over pawl, install cover plate snap ring. Install interlock plunger in hole between pawl and shifter shaft, install shifter shaft assembly. Slide sun gear in place on transmission shaft and enter shifting fork in sun gear groove. Assemble overrunning clutch on pinion cage assembly and fasten with retainer, then install assembly on rear end of transmission shaft and install retainer on rear end of overrunning clutch. Install rear shaft assembly over pinion cage assembly and push it forward until overrunning clutch enters its outer race (use a rubber band to hold clutch rollers in place and rotate shaft counter-clockwise to facilitate assembly). Install shifter shaft retractor spring in housing, install housing and attach to adapter plate using gasket 16H-7661. Install governor gear and spacer on shaft. Install rear bearing and bearing snap ring (see Overdrive rear bearing endplay note below). Install oil seal and spacer at rear of case. Install universal joint yoke and tighten mounting screw securely. Install governor, lock-out switch (fasten with setscrew), and solenoid grease retainer. Install shift lever in bushing, install grease retainer in hexagonal end of bushing, place lever in position and install in overdrive case with lever "up." Install solenoid (see Solenoid data above).

Transmission Rear Bearing Endplay—When installing bearing on shaft, select snap ring of correct clearance so that there is no endplay but bearing turns freely. Snap ring supplied in following thicknesses: .087"—16H-7667A, .090"—16H-7667B, .093"—16H-7667C, .096"—16H-7667D, .102"—16H-7667E. Snap ring which retains this bearing in adapter plate should also be selected to control endplay and is furnished in following thicknesses: .087"—16H-7669A, .090"—16H-7669B, .093"—16H-7669C, .096"—16H-7669D.

Solenoid Pawl Interlock—Consists of a short plunger installed in hole in adapter plate between pawl and shifter shaft. Install plunger in hole before installing shifter shaft assembly.

Overdrive Rear Bearing Endplay—Endplay is controlled by thickness of snap ring which retains bearing in overdrive case. Snap rings furnished as follows: .062"—16H-7656A, .065"—16H-7656B, .068"—16H-7656C, .071"—16H-7656D.

Governor Drive Gear—Gear is free on overdrive shaft and will turn with universal joint yoke not tightened on shaft (gear clamped in place by yoke when yoke retaining screw is properly tightened).

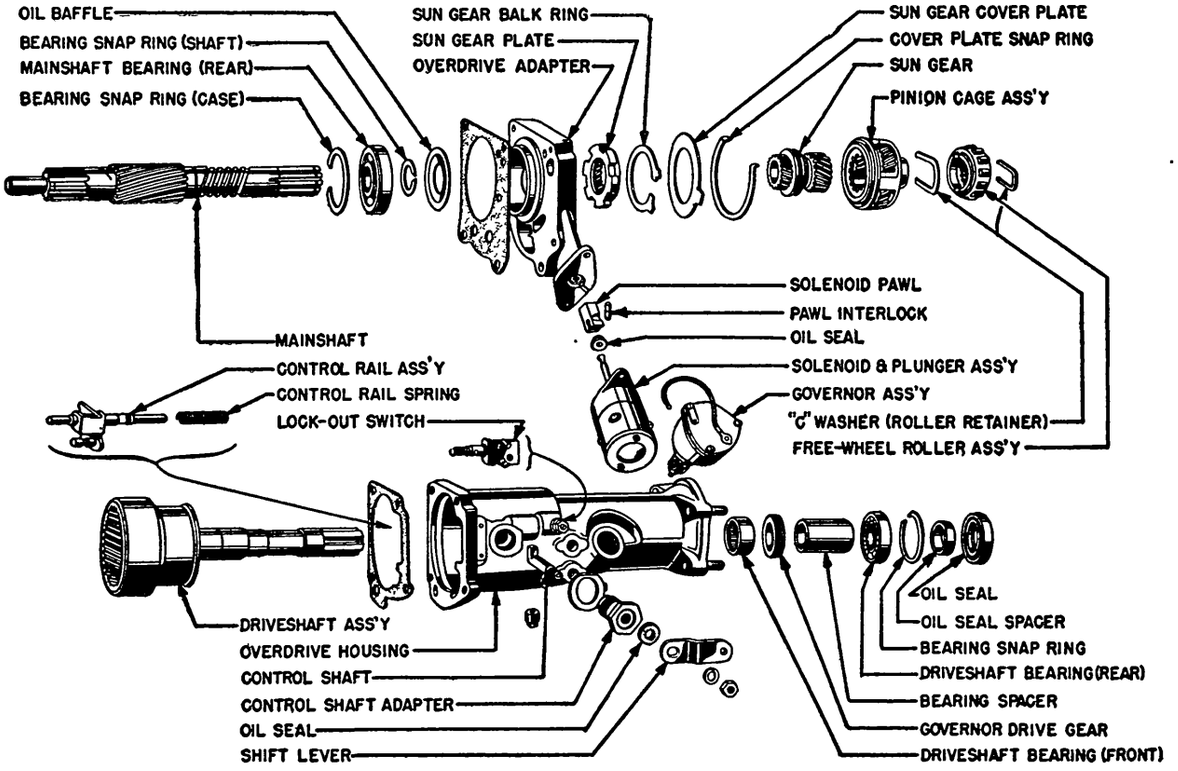

1941-48 LINCOLN OVERDRIVE (SPECIAL WARNER R10)

1941-48 LINCOLN OVERDRIVE CONTROL

Lincoln, All Models (1941 to 1948)

►NOTES, CAUTIONS, & CHANGES

►**Relay Mounting Change (Recomm nded for First 1941 Cars)**—On first cars with overdrive relay mounted on engine dash with terminals 4, 5, 6 upward, it is advised that relay be dismounted and reversed with terminals 1, 2 upward. Any foreign material lodged on terminals should be carefully cleaned off. Grounding of terminal #5 will prevent overdrive releasing and may damage transmission

►**Throttle Kick-down Switch Caution (First 1941 Cars)**—If floor tunnel screws removed, use care to install special short screw immediately ahead of kick-down switch. If regular length screw installed in this hole, screw may contact upper switch terminals and cause ground in circuit at this point.

NOTE—Kick-down switch location changed on later cars and special short screw not required.

►**Control Wiring Change on 1941 Cars**—Wiring was changed after Nov. 10, 1940 (see illustration). "First Type" wiring diagram applies before this date, "Second Type" diagram applies after this date.

Control Wiring (1942-48)—See car wiring diagrams in Car Model Section for overdrive control wiring on each car model.

DESCRIPTION: Note—Overdrive operates similarly to R9 type with "push type" solenoid controlled by Governor Switch and throttle operated kick-down switch as described below. A lock-out switch is also provided which is operated by the overdrive lock-out mechanism.

Control Mechanism—Overdrive operating solenoid is controlled by a Control Relay mounted on the dash, a Governor Switch mounted on the overdrive case extension and driven from the driveshaft, a Lockout Switch mounted on the overdrive case and operated by the lockout shift rail which is linked to the lockout control button on the instrument panel, and a Kickdown Switch operated by the accelerator pedal. See wiring diagram for wiring circuits for these units. NOTE—Since ignition system for each bank of cylinders is independent,

CONTINUED ON NEXT PAGE

1941-48 LINCOLN OVERDRIVE CONTROL (Cont.)

two separate ignition cut-out circuits (for momentary cutting out of ignition to permit kick-down direct drive to be engaged) are required and these ignition connections are shown in the diagram.

OPERATION & ADJUSTMENT:—Lockout Control—If dash control button is to be pulled out (to lockout overdrive), accelerator pedal should first be fully depressed (to place overdrive in direct drive), button then pulled out, and accelerator pedal released. NOTE—Lockout will not engage unless overdrive in direct drive (sun gear teeth will strike lock plate clutch teeth causing 'buzzing' sound) and accelerator pedal must be fully depressed to complete lockout engagement.

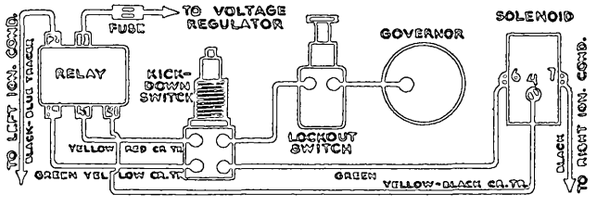

FIRST TYPE

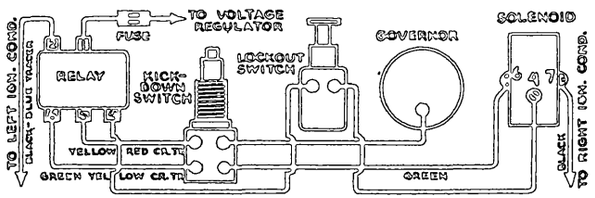

SECOND TYPE

Adjustment—If dash control button cable is adjusted too short, buzzing sound will be noticed when button pushed all the way in. Noise will disappear when operated with engine pulling car below cut-in speed and will reappear when accelerator pedal released. To adjust cable, turn adjusting nuts at end of cable where it is attached to lever.

Cut-in Speed—25 MPH (governor switch contacts close). Overdrive does not engage until accelerator pedal released momentarily. Overdrive cuts out at 22 MPH (or at any speed if 'kick-down' operated). No cut-in speed adjustment provided.

TROUBLE SHOOTING:—If overdrive does not operate satisfactorily after adjustments have been made correctly, determine trouble as follows:

Overdrive remains engaged, Will not 'kick-down', Car will not roll backward in Neutral—Caused by ground in lead between #5 relay terminal and governor switch. Check by disconnecting lead at #5 terminal and noting if relay 'clicks' when wire touched to terminal (click indicates ground or other defect). Check lead, relay terminals, and kickdown switch for grounds (see Special Service Notes above). To check relay, remove fuse. If relay 'clicks' as fuse removed, relay is defective.

IMPORTANT NOTE—If attempt made to reverse car under above conditions (ground in #5 circuit), overdrive unit may be seriously damaged.

Ignition Cuts Out—If left cylinder bank cuts out when idling, check for grounded relay (internally or at terminals #2 & 6), ground between #6 relay terminal and kickdown switch or in kickdown switch, ground in lead between #2 terminal and distributor or within distributor (if ignition restored when lead disconnected from #2 relay terminal, this lead and distributor are not at fault). If right cylinder bank cuts out when idling, check for ground in lead between #7 solenoid terminal and distributor, in solenoid, and in distributor (if ignition restored when lead disconnected from #7 solenoid terminal, this lead and distributor not at fault). If one bank of cylinders cuts out when overdrive engaged, check for defective solenoid or ground between solenoid terminal #6 and kickdown switch lower terminals.

Overdrive will not engage—Check for open-circuit between relay terminal #5 and governor switch. Check by grounding #5 relay terminal (relay and solenoid should 'click' simultaneously). If relay does not click, check for blown fuse or defective relay. If relay clicks but solenoid does not, check for defective relay, defective solenoid or open-circuit between #4 relay and solenoid terminals. If both relay and solenoid click but overdrive will not engage, check for jammed solenoid or damage within overdrive unit.

Overdrive will not kick-down—Check for ground between relay and kick-down switch or at upper terminals of kickdown switch (see Special Service Note above). Check for open-circuit between relay terminal #2 and ignition condenser, solenoid terminal #7 and ignition condenser, solenoid terminal #6 and kick-down switch, relay terminal #6 and kick-down switch, or within relay. Check for defective kick-down switch.

FUSE:—15 ampere. In connector in control relay lead. Serviced with 20 ampere capacity fuse.

1949 FORD, LINCOLN, MERCURY TRANSMISSIONS

Ford 6 & V8, Pass. Car Models (1949)
Lincoln, Model 9EL (1949)—See Note
Lincoln Cosmopolitan, 9EH (1949)—See Note
Mercury, Model 9CM (1949)

▷NOTES, CAUTIONS, & CHANGES

▷Lincoln Transmission Note—Transmission is Warner Type AS1-T85B (No Overdrive), AS2-T85B (With Overdrive).

Data below applies to these transmissions.

▷Ford Transmission Locking In Reverse Complaints (Transmission without Overdrive)—May be caused by mainshaft drive gear snap ring or mainshaft rear bearing snap ring not correctly installed (see illustration). Correct by disassembling transmission (remove mainshaft assembly from extension housing) and checking these snap rings.

See Disassembly & Reassembly data below.

▷Ford Overdrive Transmission on First Cars Inoperative in Reverse (Reverse Lock-out Inoperative)—May be due to use of wrong Reverse Shifter Fork Cam & Shaft (8A-7282-A instead of 8A-7282-B). Check and correct this condition as follows:

To Check—Place gearshift lever in Reverse position. Release hand brake. Push car forward. If car rolls freely, this indicates wrong cam installed.

To Correct—Disassemble Overdrive and install new No. 8A-7282-B Reverse Shifter Fork Cam & Shaft which provides automatic lock-out for Reverse Gear.

See "1949 Ford, Lincoln, Mercury Overdrive" (following) for disassembly directions.

▷Ford Overdrive Transmission Noisy in Operation—May be caused by interference between overdrive case and rear engine support. Correct this as follows:

(1) Interference between Rear Engine Support Bolt and Overdrive Case—Correct by grinding off head of bolt for clearance. Thin head bolt No. 355519-S2 used at this point on later cars.

▷*CAUTION—Bolt head thickness must not be less than ⅛".*

(2) Interference between Rear Engine Support & Overdrive Case—Case is grooved for clearance at flanges on support. If grooves in case not deep enough (particularly at ends where casting flash protrudes), clean up this flash and deepen grooves by filing.

DESCRIPTION: Three-speed, all helical gear type with constant-mesh, synchro-mesh (Second & High), sliding gear (Low & Reverse). Overdrive is optional. Std. transmission has extension housing at rear which has rear engine mounting. Mainshaft extends through extension housing with splines at rear end for propeller shaft engagement (front universal yoke hub slides on shaft—no slip-joint used on propeller shaft).

Synchronizing Unit—Wire bound strut blocking type. Synchronizer rings are free in ends of inner clutch sleeve and are actuated by three struts which fit in slots in inner clutch sleeve and engage notches in the rings. Struts are centered in outer clutch sleeve by a locking wire or ring engaging notches in the struts and move with the clutch sleeve to force the synchronizer rings against the cones on the gear hubs for synchronization. Teeth on the outer rim of the synchronizer rings block or prevent gear engagement until synchronization completed when final movement of outer clutch sleeve causes clutch teeth on rim of sleeve to slide past teeth on rings and engage clutch teeth on gear hubs. Inner clutch sleeve is stationary on shaft and does not move during synchronization and gear engagement.

REMOVAL OF TRANSMISSION: *See "Transmission" on car model page.*

OVERDRIVE SERVICING NOTE: On transmission with Overdrive, overdrive unit can be disassembled and serviced separately without disturbing transmission.

▷*See "1949 Ford, Lincoln, Mercury Overdrive (Warner R10)."*

TRANSMISSION DISASSEMBLY: Take out mounting screws and remove gearshift housing (side cover) assembly. Drive countershaft and reverse idler shaft pin out through case side (Ford & Mercury, Lincoln shafts locked by separate key in rear end of each shaft). Take out extension housing screws, rotate extension housing ¼ turn to expose end of countershaft, drive countershaft to rear until it clears front of case, use Tool 7121-N (or counter shaft cut to length of countergear cluster) to push countershaft out through rear of case (leave tool or dummy shaft in gear cluster to retain bearing rollers), drop gear cluster to bottom of case. Tap lightly on extension housing to loosen it from case, withdraw housing and mainshaft assembly from case (CAUTION—use care not to lose mainshaft pilot bearing rollers). Lift countergear cluster and

CONTINUED ON NEXT PAGE

1949 FORD, LINCOLN, MERCURY TRANSMISSIONS (C nt.)

thrustwashers from case, remove tool and take out bearing retainers, rollers, and spacer. Take out capscrews in bearing retainer on front of case, remove retainer and gasket. Tap main drive gear assembly out through front of case, using a soft hammer. To remove reverse idler gear, use brass drift to drive shaft out, lift gear out. Disassemble and service subassemblies as follows:

Mainshaft & Extension Housing Assembly: Remove snap ring in front of rear bearing in extension housing, use a soft hammer to tap mainshaft and bearing out of housing. Remove snap ring on forward end of mainshaft, pull or press synchronizer assembly, 2nd speed gear, and sliding gear off shaft. On Lincoln, remove speedometer gear snap rings, remove speedometer gear and woodruff key. On all models, remove bearing snap ring from groove in shaft (on Ford & Mercury, this snap ring retains speedometer gear also—note position of shoulder on gear to insure correct reassembly—remove gear and woodruff key). Press rear bearing off shaft.

Extension Housing Oil Seal & Bushing: Oil seal and bushing can be replaced after mainshaft removed from housing.

TRANSMISSION REASSEMBLY: Assemble all subassemblies as noted below and install in transmission by reversing the disassembly directions given above.

Reverse Idler Gear: Ford & Mercury gear has bushing, Lincoln gear has 25 bearing rollers and thrust washer at each end. Install gear with chamfered end of teeth forward, see that locking pin hole in line with hole in case (Ford & Mercury), install key in slot in rear end of shaft (Lincoln).

Countergear Cluster: Place bearing spacer in gear cluster, insert tool 7121-N (or dummy countershaft cut to length of gear cluster), install bearing rollers in each end (on Lincoln, two sets of 20 bearing rollers used at each end with retainer washer at outer end of each set). Coat thrustwashers with grease to hold them in position, install bearing retainer in each end of gear cluster. Install front thrust washer so that tongue will enter groove in case when assembly installed, place rear thrust washer with slotted hole on gear cluster with babbitted face out toward steel washer which must be next to case. Place this assembly in the case and **after** mainshaft installed, raise assembly and insert countershaft from rear, pushing dummy shaft out at front of case. On Ford & Mercury, align locking pin hole in shaft with hole in case, install locking pin through reverse idler and countershafts. On Lincoln, install locking key in slot in rear end of shaft before shaft fully inserted in case. On Ford & Mercury, countergear endplay should be .0045-.0085" (new), .0265" (worn limit).

Main Drive Gear Assembly: Install oil baffle and drive gear bearing on shaft, press bearing in place firmly, install snap ring in shaft groove (see Lincoln Note below). Install snap ring in groove in bearing. Install main drive gear in case. Use new gasket with retainer (Lincoln gasket furnished in thicknesses of .010", .015", .020", .025" for selective fitting), make certain oil drain groove in retainer is at bottom.

Lincoln Snap Ring Note—This shaft snap ring furnished in thicknesses of .086-.088", .089-.091", .092-.094", .095-.097" for selective fitting).

Synchronizer Assembly: Install synchronizer springs at each end of hub with spring openings staggered. Install three struts on hub, slide outer clutch sleeve over the assembly. Place synchronizer ring on each end of assembly making certain that struts engage slots in rings.

Mainshaft Assembly: Use special press tool 7699-N to install new bushing in rear end of extension housing, install oil seal. Press rear bearing in place on mainshaft. On Ford & Mercury, install speedometer gear key and gear (on Lincoln, speedometer gear is mounted separately on shaft). Select snap ring of correct thickness and install in groove in shaft. This snap ring furnished in following thicknesses: (Ford & Mercury) .090", .093", .096", .100". On Lincoln, install speedometer gear on shaft with woodruff key in gear and snap ring in shaft groove. Install sliding gear, 2nd. speed gear, and synchronizer assembly on shaft, install snap ring in shaft groove to retain assemblies. Check 2nd. speed gear endplay which should be .003-.011" (new), .023" (worn limit) on Ford & Mercury.

Mainshaft & Extension Housing Installation: Install mainshaft assembly in extension housing, seating rear bearing firmly in housing recess (Ford and Mercury), against bearing rear snap ring (Lincoln). Select snap ring for correct fit—this ring furnished in following sizes (Ford & Mercury) Thin .086-.088", Medium .089-.091", Thick .092-.094", Extra Thick .095-.097", (Lincoln) .087-.089", .090-.092", .093-.095", .096-.098", .099-.101" for selective fitting, install ring in housing to retain bearing. Make certain pilot bearing rollers in place in recess in main drive gear (use cup grease to hold rollers in place), use new gasket on extension housing, insert mainshaft assembly through rear of case and enter shaft in pilot bearing. Turn extension housing to permit countershaft to be installed (see Countergear Cluster above), install extension case washers and capscrews.

►***CAUTION—On Ford & Mercury, use lead washers on two lower extension case capscrews and secur these screws with lockwire.***

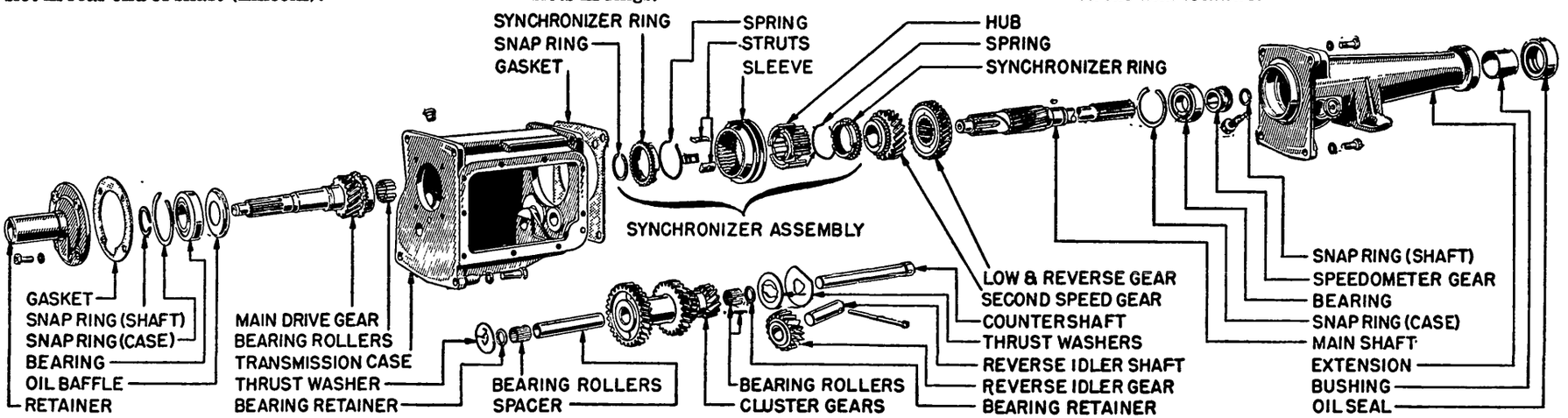

1949 FORD & MERCURY TRANSMISSION (1949 LINCOLN SIMILAR)

1949 FORD, LINCOLN, MERCURY OVERDRIVE (WARNER R10)

Car Model	Warner Model
Ford 6 & V8 Pass. Cars (1949)	①AS1-R10E
Ford Sta. Wgn. & Convt. (1949)	①AS3-R10E
Lincoln, Models 9EL, 9EH (1949)	②AS2-T85B
Mercury, Model 9CM (1949)	①AS1-R10C

①—Overdrive unit only (Ford Transmission).
②—Transmission with Type R10 Overdrive.

DESCRIPTION: Solenoid operated type similar in design to other Warner Type R10 Overdrives except for different overdrive case and rear bearing construction which requires different disassembly directions as given below. Overdrive used on Ford Station Wagons and Convertible models has special solenoid and adapter as follows:

Ford Solenoid Assemblies: Special type Solenoid, Ford No. 8A-6916 (used with 8A-6925 Adapter on AS3-R10E Overdrives) can be distinguished from std. solenoid Ford No. 8M-6916 (used with AS1-R10E Overdrive) by location of pawl flats on solenoid plunger as follows:

8A-6916—Flats are 5° counter-clockwise from line at right angles to center line through mounting screw holes.

8M-6916—Flats are 35° counter-clockwise from center-line through mounting screw holes.

▷*CAUTION—These solenoids not interchangeable.*

Ford Solenoid Adapter (AS3-R10E Overdrive): Ford No. 8A-6925. Consists of a case bolted on the overdrive housing providing for offset mounting of solenoid (for clearance in special "X" type frame). Adapter has idler lever and plunger which engages sun gear pawl (solenoid actuates lever).

REMOVAL OF OVERDRIVE: *See "Overdrive" on car model page.*

DISASSEMBLY OF OVERDRIVE: Remove Lock-out Switch and switch operating balls, remove governor and speedometer drive pinion. Remove solenoid by taking out mounting screws and rotating solenoid 55° clockwise (85° on Convertible & Station Wagon) to disengage plunger from pawl, then pull solenoid and plunger out. Drive out tapered pin holding control lever shaft in overdrive case, pull shaft out as far as possible to disengage operating cam from shift rail. Take out four mounting screws holding overdrive case and adapter on transmission case. Remove small rectangular cover plate on top of case by taking out two screws. Working through slot under this plate, spread bearing snap ring with special pliers 7059-N to free rear bearing. Withdraw overdrive case while pressing forward on rear end of shaft to prevent shaft coming off with housing (this would allow free-wheeling rollers to drop out). CAUTION—Do not allow adapter plate to separate from transmission case. Disassemble overdrive parts as follows:

Overdrive Case & Control Mechanism: Remove reverse lock-up spring from case. Remove lever on end of control shaft, push shaft through and remove from within housing, remove shaft oil seal from case. Compress rear bearing snap ring (insert pliers through slot in case), remove ring. Bushing and oil seal at rear end of case are similar to regular transmission. *See Extension Housing data in Ford-Lincoln-Mercury Transmission article.*

Driveshaft & Gear Assembly: Install one screw to retain adapter plate on transmission case, pull driveshaft off to rear (CAUTION—catch free-wheel rollers as they drop out). If bearing to be removed from shaft, take out snap ring and remove speedometer gear taking care not to lose woodruff key from gear (on Lincoln, remove both speedometer gear snap rings and additional snap ring at rear of bearing), remove bearing. Take out retaining clip ("C" washer) at rear of free-wheel cam, withdraw free-wheel unit and pinion assembly (these two parts can be separated by removing "C" washer ahead of free wheel cam). Remove overdrive sun gear and shift rail assembly as a unit by sliding them off rear of shaft.

Adapter Plate & Sun Gear Mounting: Remove large snap ring from adapter plate, withdraw sun gear cover plate, balk ring blocker assembly, and solenoid pawl.

NOTE—Adapter plate is removed as a unit with transmission mainshaft. Do not disturb unless transmission being disassembled.

REASSEMBLY OF OVERDRIVE: Assemble in reverse order of disassembly directions above. Note the following important points:

Sun Gear Balk Ring, Pawl & Solenoid: After balk ring installed, insert pawl with notch on side downward (Ford), upward (Lincoln & Mercury—on Mercury, interlock plunger engages this notch), position cover plate with tongue over pawl, install large snap ring (this ring furnished in three thicknesses for selective fitting). When installing solenoid (after assembly completed), insert plunger stem with solenoid rotated clockwise 55° (85° on Convertible & Station Wagon) from mounted position to align plunger flats with pawl slot, then rotate solenoid counter-clockwise until mounting screw holes aligned. This will engage plunger in pawl.

Free-wheel Assembly: If free-wheel roller retainer and springs removed from cam, first note position of springs and replace in exact same positions. Springs must place tension on cam so that it is normally rotated counter-clockwise in retainer (viewed from rear) with rollers on "high" ends of

Overdrive Pinion & Free-wheel Assemblies: With these parts installed and retaining clips in place, insert free-wheel rollers in retainer and use rubber band to hold them in place while mainshaft being installed.

Overdrive Mainshaft: Bearing should be installed on shaft with snap ring groove toward front (Ford & Mercury), toward rear (Lincoln), speedometer and governor drive gear must be keyed on shaft and placed with long shoulder on gear toward bearing (Ford & Mercury only—gear installed separately on Lincoln). Snap ring behind gear (directly behind bearing on Lincoln) must be tight fit and prevent all endplay in shaft. This snap ring furnished in four thicknesses for selective fit. When installing shaft over free-wheel cam & roller assembly, rotate shaft counter-clockwise to move rollers to low or disengaged position.

CONTINUED ON NEXT PAGE

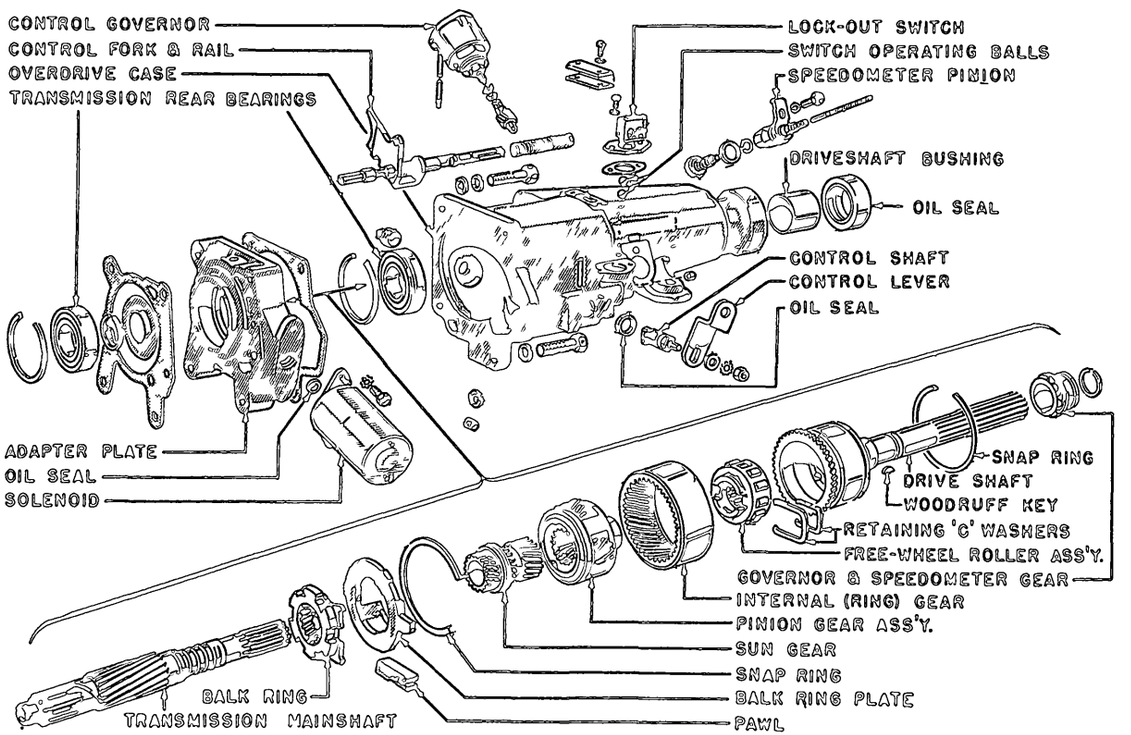

WARNER OVERDRIVE (1949 FORD & MERCURY—1949 LINCOLN SIMILAR)
▷1949 FORD CONVERTIBLE & STATION WAGON USE OFFSET MOUNTED SOLENOID

1949 FORD, LINCOLN, MERCURY OVERDRIVE (C nt.)

Overdrive Case & Control Mechanism: Install bearing outer snap ring in groove in case with lugs on ring toward slot in housing and expand ring with pliers inserted through slot while case is being pushed on over mainshaft. Insert control shaft in case before case installed on shaft but do not install shaft lock-pin until after assembly completed and cam on shaft engaged in slot in shift rail. Install new oil seal on control shaft and position control lever upward (Ford & Lincoln), downward (Mercury). When installing mounting bolts, carefully align adapter plate and transmission case bolt holes.

OVERDRIVE CONTROL: *See Warner Type R10 Overdrive Control article.*

TRANSMISSION DISASSEMBLY & REASSEMBLY: *See Ford-Lincoln-Mercury Transmission article.*

FORD TRUCK 4-SPEED

All Trucks except ½ & ¾ Ton (1936 to 1948)

►**Half-Ton & ¾ Ton Transmission Note**—This Four-Speed Transmission Optl. on these models.

DESCRIPTION: Four-speed, sliding spur gear type. Main drive gear and shaft mounted on ball bearing **at front end of transmission case. Mainshaft mounted on roller bearing in main drive gear at front end, ball bearing in case at rear. Counter gear cluster mounted on roller bearings on stationary countershaft. Reverse idler gears mounted on bronze bushing on stationary shaft.**

1936-39 Models—Trucks have Torque Tube Drive and rear bearing retainer is flanged for mounting of front propeller shaft cover. Retainer also serves as rear engine mounting.

1940 & Later Models—Trucks have Hotchkiss Drive and shaft mounted hand brake. Transmission modified to provide mounting for hand brake mechanism (brake drum mounted on front universal joint yoke). With these exceptions, transmission is same design as used on previous models and is serviced in the same manner. NOTE—Refer to Ford Truck car pages for hand brake adjustment.

REMOVAL OF TRANSMISSION: *See "Transmission" on car model page.*

DISASSEMBLY: Remove gearshift housing (transmission cover) assembly and gasket. Remove the clutch release bearing spring, release bearing, and retainer. Take out screws in bearing retainer on front end of case, remove retainer, withdraw clutch shaft main dive gear and bearing assembly (tap main drive gear with a brass hammer if required). Remove mainshaft front (roller) bearing and spacer from mainshaft. Take off nut on rear end of main shaft and remove universal joint flange and brake drum. Take out screws in bearing retainer on rear nd of case, remove retainer, withdraw speedometer gear and spacer from shaft. Remove speedometer driven gear bearing and gear from retainer. Withdraw mainshaft and bearing out through rear of case (use brass hammer and tap on front end of shaft until bearing free of case) and remove sliding gears out through top of case. Take out cotter pin from front end of reverse idler, shifter shaft on left side of transmission and drive shaft out through rear of case and lift out shifter fork. Take off reverse idler retainer (lock plate) on rear of case and pry out reverse idler shaft with screwdriver engaging slot in end of shaft, lift out reverse idler gear. Drive countershaft out through rear of case, lift out cluster gear. Remove bearings and spacer from cluster gear.

CLEARANCES & PARTS CHECK: Replace gears if worn excessively or teeth chipped or broken. Replace bearings discolored by overheating or if binding or looseness noted when rotating bearing on shaft by hand. Replace parts worn beyond the following limits:

Countergear Cluster: Endplay .009-.021" (new), .025" (worn limit). Measure between gear and case. Inside diameter 1.6255-1.6265" (new), 1.630" (worn).

Countershaft: Diameter .9995-1.0000" (new), .9945" (worn limit).

►***CAUTION—Do not measure slotted end (.003" greater diameter at this point for press fit in case).***

Reverse Idler Gear: Inside diameter .9890-.9900" (new), .991" (worn limit). If bushing worn, replace gear. Do not remove bushing from gear (gear furnished with bushing installed).

Revers Idler Shaft: Diameter .9872-.9877" (new), .986" (worn limit).

Mainshaft Assembly: 3rd & High Gear—Fit to shaft correct if gear does not slide down splines of own weight.

First & Second Gear—Backlash limit .003".

Mainshaft—Pilot (front) end diameter .8110-.8115" (new), .806" (worn limit).

Mainshaft Bearing—Use arbor press to press shaft out of bearing. When pressing on new bearing, first place bearing washer and oil baffle (with outer edge away from bearing) on shaft.

Main Drive Gear Assembly: Gear end inside diameter 1.312-1.313" (new), 1.316" (worn limit).

Main Drive Gear Bearing—To replace bearing, remove snap ring (on front side of bearing), tap on outer race evenly to remove bearing. When installing new bearing, first install oil baffle with outer edge away from bearing. Press bearing on main drive gear, install lock ring.

REASSEMBLY: Assemble in reverse order of disassembly directions given above and note following points:

Mainshaft Assembly: Install first and second gear and third and fourth gear with shifter fork channels facing each other (first and second facing toward front, third and fourth channel facing rear).

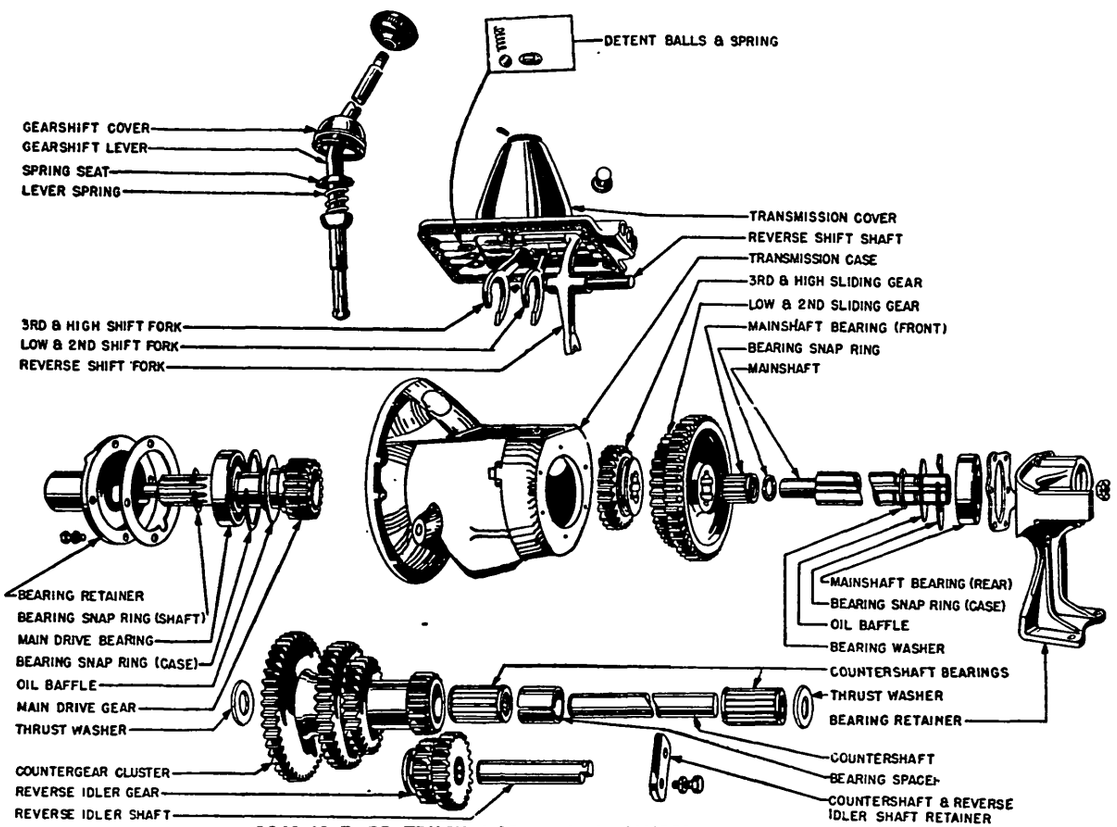

1940-48 F RD TRUCK 4-SPEED TRANSMISSI N

HUDSON 1936-40

Hudson 6 & 8, All Models (1936 to 1940)
Terraplane, All Models (1936-37-38)

OVERDRIVE TRANSMISSION NOTE (1940):—Warner Overdrive unit, Model AS13-R6, with electrical 'kick-down' control optional on all 1940 models (used with Hudson transmission). *See Warner Type R6 & R7 Overdrive for complete data on this unit.*

NOTE:—Transmission used with Electric Hand (optional on all models except '112') similar to standard model except for special shifter mechanism and mounting of Electric Hand units on transmission case (Power Unit, Gear Abutment Shift Rail Switch, Clutch Pedal Circuit Breaker). See article on Electric Hand for servicing and adjustment of these units. Transmission serviced in same manner as standard model below.

Handy Shift (1939-40). Transmission case cover modified to include a selector plate (sliding on two guide pins in cover) and actuated by the selector cable to shift the gear engagement shift finger back and forth between the low-reverse and second-high shifter forks at neutral, and a gear engagement lever to which the shift finger is linked. See separate article for Handy-Shift Transmission Control

Electric Hand:—Bendix type transmission control optional on all models beginning with 1935. See separate article (Transmission Controls) for complete data and adjustments for this Electric Hand.

Hudson '112' Model. Shifter rail lock bars not used on Model 89 (1938). Single lock bar used for Second-High only on Models 90, 98 (1939).

TYPE:—Constant-mesh, helical gear (second and high), sliding spur gear (low and reverse). Main drive gear and clutch shaft mounted on ball bearing. Mainshaft mounted on needle bearings at forward end, ball bearing at rear end. Mainshaft end thrust taken by a ball thrust bearing at the forward end of the shaft. Second speed gear mounted on the main drive gear clutch hub and positioned by thrust washer at each end. Low speed gear is fixed on mainshaft by a lock ring (this gear does not move, low engaged by shifting gear on countershaft). Counter gears splined to countershaft which revolves in bushings in bearing cap at each end of transmission case. Reverse idler assembly consists of stationary gear mounted on bushings on stationary shaft and sliding gear splined to stationary gear sleeve (this gear shifted in conjunction with low speed sliding gear to engage reverse). Second and high speeds engaged by sliding clutch sleeve splined to mainshaft which engages main drive gear or second speed gear clutch teeth (within second speed gear assembly).

1940 Type:—Standard transmission design changed from previous type and transmission modified for Overdrive application as follows:

Standard Transmission—New type low and reverse gears used (gears have thicker case hardening and longer life). Air vent now located on transmission case cover (vent is larger and has loose fitting cap).

Overdrive Transmission—For overdrive, regular transmission is modified as follows: New retainer used on mainshaft low-and-reverse gear consisting of conical shaped pressed steel cap fitted ver lock ring and pressed into place in groove in gear. New countershaft rear bearing cap, reverse gear cap, main shaft shift sleeve, and low-reverse shift rail used. Transmission case is heavier and oil tube is assembled in rear wall of case to convey oil to mainshaft bearing.

REMOVAL OF TRANSMISSION: *See "Transmission" on car model page.*

SERVICING:—**Disassembly.** Remove transmission cover and shift lever assembly. Disconnect shift rail lock bar links, remove links and lock bars. Remove clutch housing (if taken off car as assembly with transmission). Use puller J-820 and remove universal joint flange. Remove speedometer drive gear housing and gear. Remove lock ball spring caps (on shifter rail lock brackets), take out lock ball springs, balls, plungers, remove brackets (do not lose shims). Take out shifter lock screws and remove shifter rails and forks. Remove three capscrews in main drive gear bearing retainer in front of case, remove retainer (tap with soft hammer if necessary). Drive low and reverse gear on mainshaft back slightly (rear bearing will move with gear) to expose locking ring, use special drift (Tool Number J-786) to remove the locking ring. Use special puller Tool J-352 (with J-788 adapter for 1940 cars) to remove mainshaft and rear bearing through rear of case, lift low speed gear and clutch sleeve out through top of case, remove main drive gear and second speed gear assembly out through top of case.

Reverse Gear Removal (1936-40). Take out two capscrews in reverse shaft cap on rear of case, remove cap and shaft (shaft pinned in cap). Lift out gear assembly.

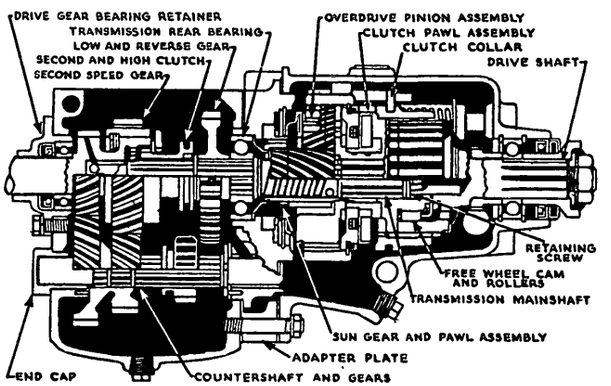

Counter Gear Removal. Take out capscrews in rear bearing cap, remove bearing cap, spacer and thrust washer (do not lose shims under bearing cap flange). Use special drift J-786, insert beveled edge between countershaft drive and second gears (at front of case), separate gears, forcing countershaft back until drive gear slips off splines at forward end of shaft, remove lock ring from shaft in front of second speed gear, turn gear so that splines butt against shaft splines, insert drift through rear bearing hole in case, drive second speed driving gear forward on shaft (do not drive gear entirely off shaft). Move countershaft to one side, move low and reverse shifter lever to neutral position. Hold countershaft gears together and remove countershaft from case at the rear. Remove low and reverse intermediate shift lever stud and take out lever. Take out small Allen setscrew on right hand side of case, drive low and reverse shifter fork shaft out of case. Remove cotter pin and castellated nut on bottom of case, take out reverse gear shifter lever fulcrum, pickup lever, shifter lever, shifter, pickup plunger and plunger spring.

Main Drive Gear, Second Speed Gear & Clutch Shaft Bearing:—Mainshaft front bearing loose in main drive gear and can be lifted out (26 needle rollers for main bearing, 7 balls for thrust bearing), after mainshaft has been removed. To disassemble second speed gear, insert one jaw of lock ring remover J-449 (1939 and previous models), new tool J-448-1 (1940) through milled opening in gear to grip lock ring, place opposite jaw just above lock ring. Compress lock ring and lift one side out of groove, use blunt punch to tap other side out. Remove second speed gear and thrust washers. Use bearing puller J-782 to remove clutch shaft bearing from shaft, tool J-779 to re-install bearing. When replacing needle roller retaining ring use tool J-780. Second speed gear bushing (steel-backed, babbitt-lined) diamond bored and gear should be replaced if clearance excessive. Shaft clearance .0005". Endplay .003-.011". When installing this gear, place the bakelite thrust washer on first, install gear, then install outer thrust washer with babbitt face in, install retainer with gap in ring ¼ turn away from second speed gear slots, use tool J-448-5 to seat snap ring in groove. Use cup grease to hold mainshaft thrust balls and rollers until mainshaft is entered.

Mainshaft & Low Speed Gear:—To install, assemble bearing loosely on rear of shaft, install low speed gear and sliding clutch (collar to rear) on shaft inside case, place low speed gear locking ring in groove using cup grease to hold parts in place, hold shaft firmly against thrust bearing balls, use tool J-779 to drive bearing forward on shaft (this will drive gear in place against lock ring). Install speedometer gear, gear housing (rear bearing retainer), universal joint yoke, cork gasket, washer, and capscrew. Tighten screws securely. When installing main drive gear bearing retainer, install sufficient shims between retainer and transmission so that mainshaft endplay is .008-.012" (check with a dial indicator). NOTE—Make certain that oil seals installed with lip on leather pointing in (toward rear on front seal, toward front on rear seal).

Counter Gear Assembly:—Use tool J-450 to remove old bushings, J-780 to install new bushings and line ream with bearing caps in place in case (expansion plugs removed). Use tool J-781 to install second gear retainers in groove. Install spacer on rear end of countershaft with oil groove toward rear, bronze thrust washer on front end of rear bearing cap. See that cap gasket in good condition, install rear bearing cap and thrust washer placing sufficient shims between rear bearing and case so that countershaft endplay is .005-.009" (check with dial indicator). Shaft clearance in bushings .0005".

Reverse Gear Assembly:—Remove and install bushings in an arbor press or with J-488 hand bushing press. New bushings finished to size and do not require reaming. Clearance should be .003". Install sliding gear on stationary gear sleeve with collar toward front. See that shaft pinned to bearing cap before cap installed on case.

Shifter Rail Lock Bar Adjustment. Use second type with bar stock lock bars to service the first type. When installing lock bar guides, shim between guides and case to secure .005" clearance between lock bars and outer ends of plungers. Adjust links so that bar is drawn down sufficiently to release plunger (bar slot aligned with plunger) with clutch pedal depressed one half.

Gearshift Mechanism (1939-40):—See separate Hudson Handy Shift Transmission Control article for adjustment directions when transmission installed

HUDSON 1941-47

Hudson 6 & 8, All Models (1941 to 1947)

►**Overdrive Transmission Note**—Overdrive Transmission is optional on all models. Overdrive unit is Warner Type AS1-R9B and is used in conjunction with a Hudson transmission for which data is given below. *See Warner Type R9 Overdrive article for complete data on this unit and controls used with it.*

Transmission Controls—Steering column mounted gearshift is standard on all models. *Refer to separate Hudson Transmission Control article for adjustment and servicing data.*

Drive-master Transmission—Optional on all models. Consists of a special automatic gearshift mechanism mounted on the transmission case. Refer to separate Drive-Master article (preceding) for all data on this equipment.

DESCRIPTION: New constant-mesh, synchro-mesh (Second & High), sliding gear (Low & Reverse), all-helical gear type. Main drive gear is integral with clutch shaft and is mounted on ball bearing in front of case. Mainshaft is mounted on roller bearing in main drive gear hub (front), ball bearing in rear of case or in adapter plate on overdrive models (rear). Countergear cluster is mounted on bushings on stationary countershaft with thrust washers at each end. Second speed gear is retained on mainshaft as an assembly with the synchronizer unit by a snap ring installed in a groove in the shaft directly in front of the synchronizer inner clutch sleeve.

Synchronizer Unit — Double-blocker, double-spring type. Synchronizer rings are free in ends of inner clutch sleeve and are actuated by three shifting plates or struts which fit in slots in inner clutch sleeve and engage notches in rings. Struts are centered in outer clutch sleeve by two wire springs (within struts on each side of inner clutch web) and move with outer clutch sleeve to engage with cones on gear hubs for synchronization. Teeth on rings block or prevent gear engagement until synchronization completed. Inner clutch sleeve is stationary on shaft and does not move (retained by second speed gear snap ring in shaft groove.

1942 & Later Models: Transmission design changed from 1941 type (above) as follows:

Synchronizer Unit—New larger synchronizing rings, shifter sleeve, shifter sleeve hub, and mainshaft gears are used (these parts must be used together). Shifter struts or plates also increased in height to .270" (were .220").

Second & High Shift Rail Stop—Consists of a new stopscrew installed on left side of case so as to engage milled flat on forward end of shifter rail. Screw provides positive stop for rail when shifted into Second or High Gear (screw must be taken out to remove this shifter rail).

REMOVAL OF TRANSMISSION: *See "Transmission" on car model page.*

OVERDRIVE DISASSEMBLY: On car models with overdrive, overdrive unit can be disassembled and serviced without disturbing transmission providing that adapter plate is not disturbed (must not be allowed to separate from transmission case). *See "Warner Type R9 Overdrive."*

DISASSEMBLY OF TRANSMISSION: On Vacumotive Drive cars, unscrew the Governor from housing. Remove transmission cover screws, lift cover off carefully to prevent detent ball spring flying out, tilt transmission case to one side and remove spring and detent ball. Remove front universal joint companion flange nut, lockwasher, plain washer. Use puller J-820 to remove companion flange. Take out screws in speedometer gear housing (rear bearing retainer), remove housing and speedometer gear using care not to damage oil seal in housing. Remove low & reverse shift fork lockscrew and shifter lockscrew, slide low & reverse shift rail out through front of case, remove shift fork and reverse shifter from case. Tilt case and remove interlock plunger from hole in side of case. Remove second & high shift fork lockscrew and lock bolt and washer on left side (1942 on), slide shift rail out, lift fork out of case, tilt case and remove detent ball and spring. Slide mainshaft and gear assembly back so that rear bearing is free of case, tilt front end of shaft up, remove snap ring in shaft directly in front of synchronizer inner clutch sleeve (use special pliers J-1575). Slide synchronizer unit, second speed gear, low speed gear, off shaft and remove through top of case, then withdraw mainshaft and bearing through rear of case. Remove countershaft lockplate screw on rear of case, drive out plate with a drift, drive countershaft out through rear of case using Driver J-1574, remove countergear cluster and thrust washers. Pull main drive gear out through front of case (use driver J-1574 if necessary—gear will be free with clutch housing and bearing retainer removed). Use driver J-1574 inserted through main drive gear bearing hole to drive out reverse idler gear shaft.

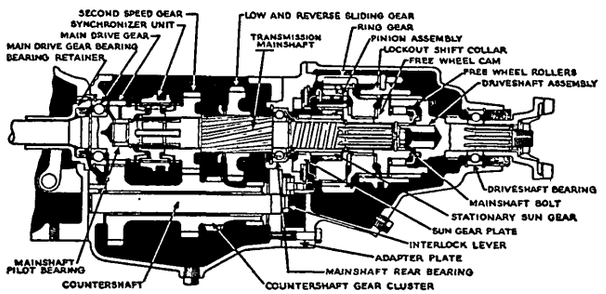

REASSEMBLY OF TRANSMISSION: Reverse disassembly directions given above and note following special instructions: Install sliding low speed gear on mainshaft with shift fork flange toward front and make certain that four oil holes in flange groove line up with grooves in shaft. Install second speed gear with tapered side of hub toward front, install synchronizer unit with tapered side of shift sleeve toward front, select lock ring of correct thickness (furnished .087", .090", .093", .097" thick) so that synchronizer has no appreciable endplay when lock ring installed. See that detent balls and springs correctly installed (low & reverse spring at top is heavier than second & high spring at bottom and springs must not be interchanged). Install second and high shift rail stop screw making certain that lockwasher in place under screw head (stopscrew used on 1942 and later cars only).

CAUTION—If lockwasher not used on stopscrew, screw will bottom on shift rail preventing gear engagement.

Mainshaft & Rear Bearing Assembly:—Use special puller J-1134H to remove bearing from shaft. To install bearing, see that locking ring on bearing is toward rear of shaft, use replacer tool J-1570 to drive bearing in place.

Main Drive Gear & Bearing Assembly:—To remove bearing, remove lock ring in groove in shaft with J1575 pliers, use puller J-1134-H to remove bearing from shaft (bearing will be damaged if driven off). When installing bearing, see that shielded side is toward gear (to rear when installed), use replacer tool J-1570 to drive bearing in place. Use lock ring of correct thickness (furnished in thicknesses of .090", .093", .096") so that lock ring is snug fit in groove and there is no appreciable endplay. Use grease to retain mainshaft bearing rollers in drive gear hub until mainshaft installed. If oil seal in bearing retainer being replaced, use remover J-1576 to tap old seal out, press new seal in place with J-1569 seal replacer tool. Use new gasket when installing retainer on case. NOTE—Retainer locating pin engages hole in clutch housing so that retainer can only be installed with throw-out bearing oil holes lined up properly.

Synchronizer Unit:—If synchronizer unit being dismantled, mark inner and outer clutch sleeves and rings to insure reassembly in same positions. Install struts with open face toward inner clutch sleeve, install springs with hooked end of each spring in same strut with free ends running in opposite directions. See that undercut on inner sleeve points toward rear of transmission and install synchronizer on mainshaft with tapered side of outer sleeve toward front.

IMPORTANT NOTE—Two types of synchronizer rings and sleeves used in production and must not be interchanged. Rings with 110° chamfer on face of teeth are marked '110' on flange face and must be used with 110° clutch sleeves which are marked by groove on outside face. 90° chamfer rings and sleeves not marked. CAUTION—90° parts must not be used with 110° parts.

Countergear Assembly: Countergear bushings can be renewed by using J-1573 puller to remove old bushings, J-1572 replacer to install new bushings, and then reaming bushing with KMO-338 bushing reamer (pilot reamer on guide installed in other end of gear cluster while reaming each bushing). When installing countergears in transmission, coat bronze thrust washers with chassis lubricant, install washers in case so that they engage retaining pins in case, install steel thrust washer between gear cluster and rear thrust washer. See that both countershaft and reverse idler shaft are locked in place by lockplate and that lockplate screw tightened securely.

Shifter Shafts & Levers:—Selector shaft can be removed from within case after taking off nut, washers, and lever on outer end of shaft. Bushing is withdrawn from outside after bushing setscrew has been loosened. When removing shift shaft, first punchmark inner lever and shaft to insure correct reassembly (if position lost, use indexing tool J-1571 to re-install inner lever). Remove nut on outer end of shaft, remove lever. Drive out pin in shaft boss on side of case, remove inner lever, withdraw shaft and felt seal. Install levers in same manner.

1948 HUDSON

Hudson 6 & 8, All Models (1948)

►**OVERDRIVE TRANSMISSION NOTE:** Optional on all models. Consists of Warner Type R10D Overdrive used with Hudson transmission for which data is given below. *See Warner Type R10 Overdrive article for data on this unit and controls used with it.*

►**DRIVE-MASTER TRANSMISSION NOTE:** Optional on all models. Consists of special automatic gear-shift mechanism used with transmission for which data is given below. *See Drive-Master article for data on Drive-Master Control.*

DESCRIPTION: Three-speed, all helical gear type. Constant-mesh, synchro-mesh (Second & High), sliding gear (Low & Reverse). Transmission is similar to design used on previous Hudson models.

OVERDRIVE SERVICING NOTE: On transmissions with Overdrive, overdrive unit can be disassembled and serviced separately without disturbing transmission.
See "Warner R10 Overdrive."

REMOVAL OF TRANSMISSION: *See "Transmission" on car model page.*

TRANSMISSION DISASSEMBLY: On cars with Governor (for Vacumotive Drive, Drive-Master, or Overdrive Control), remove governor from rear bearing retainer. Remove nut on end of driveshaft, pull universal joint flange. Take out capscrews in transmission cover, lift cover off carefully to prevent loss of shift rail spring (tip cover up on left side, remove spring and lock ball, lift cover off). Take out retaining capscrews and remove rear bearing retainer, slide speedometer drive gear off shaft. Remove 2nd & High shift rail stopscrew on left side of case. Remove lockscrew from Low Speed Shifter Fork and from Low Speed Shifter (use straight blade screwdriver which bottoms in screw slot—do not use taper blade screwdriver), slide shift rail out at front of case, lift out shift fork and shifter. Remove interlock plunger. Remove setscrew from 2nd & High Shift Fork, slide shift rail out through front of case. Remove spring and lock ball from case (tip case up). Take out retaining screw on rear of case, remove lock plate to free countershaft and reverse idler shaft. Drive countershaft out through rear of case, using bronze Driver J-1574, lower countergear cluster to bottom of case. Pull mainshaft rearward by hand until puller can be engaged behind bearing or snap ring (if necessary, re-install universal flange, tap on flange to move shaft). Remove bearing from shaft with Puller J-1134-H. Pull mainshaft to rear until forward end clears pilot bearing in main drive gear, then tilt forward end up, move synchronizer and sliding gear to rear as far as possible, remove mainshaft assembly through top of case. Pull main drive gear forward until bearing retainer snap ring is free, remove snap ring, tap drive gear into case and remove through top of case. Remove shift shaft inner lever, lift countergear cluster and thrustwashers out. Drive out reverse idler shaft (use driver J-1574 inserted through mainshaft

CONTINUED ON NEXT PAGE

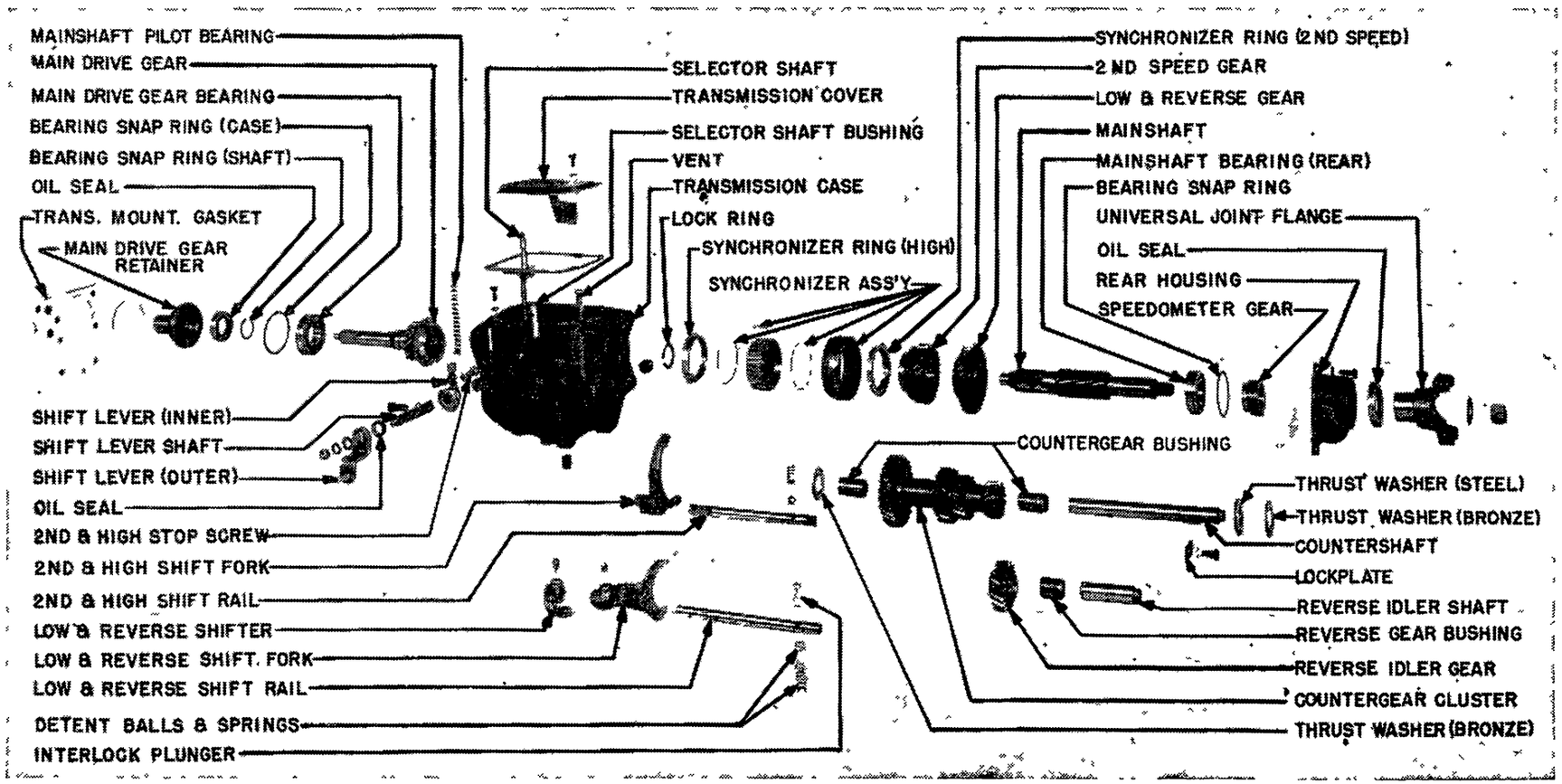

1948 HUDSON 6 & 8 TRANSMISSION (NO OVERDRIVE)

1948 HUDSON (Continu d)

bearing hole in front of case), lift reverse idler gear out. Remove nut and washer on upper end of shift selector shaft, lift off lever, take out setscrew in side of shaft, remove shaft from within case, pull bushing straight up and out. Remove nut and washers on outer end of shifter shaft, remove outer lever, drive out tapered lockpin in side of shaft (use pin punch, withdraw shifter shaft and seal. Disassemble all sub-assemblies as follows:

Mainshaft Assembly: Remove sliding gear, take out lock ring in groove ahead of synchronizer hub, slide synchronizer assembly and 2nd speed gear off shaft. If synchronizer disassembled, note location of parts and reassemble in same positions (install springs with one end of each in same groove of strut with free end of springs running in opposite directions). When reassembling, make certain that oil holes in gear hub register with shaft spline oil channels (four splines have oil channel at front end). Install 2nd speed gear with the ground tapered hub end toward front of shaft, see that synchronizer struts engage slots in synchronizer rings, use new lock ring in shaft groove and carefully fit ring in groove. Check 2nd speed gear endplay which should be .003-.016".

Countergear Cluster: Examine bushings for wear and replace if clearance greater than .005". Install new bushings with Replacer J-1572 (position bushings with annular groove nearest end of shaft, draw both bushings in until end .015" beyond thrust face of gears). Ream bushings to .865" using KMO-338 Reamer (pilot reamer in bushing at opposite end of gear and ream each bushing in succession). When installing assembly in case, place thin thrust washer in case at each end (bronze surface out toward gear, washers engaging retaining pins in case), place steel washer on rear face of cluster gear with tongue engaging slot in end of gear.

Reverse Idler Gear: Replace bushing if clearance exceeds .005". Install bushing with Replacer J-1572. Ream to inside diameter of .865" using Reamer KMO-338 and pilot. Clearance should be .001-.0025".

Main Drive Gear: To remove bearing, take out lock ring in shaft groove, use Puller J-1134-H. Install bearing with Replacer J-1570, install lock ring in shaft groove but do not install retainer ring in bearing groove until after assembly installed in transmission case.

TRANSMISSION REASSEMBLY: After all sub-assemblies completed, reassemble transmission by reversing disassembly directions except as noted below:

Main Drive Gear Installation: Insert gear and bearing assembly through cover opening in case, push through hole in front of case until retaining ring groove in bearing exposed at front of case, install retainer ring. Install pilot bearing rollers in recess in gear hub (use viscous grease to hold rollers until mainshaft installed).

Mainshaft Assembly Installation: With shaft in place in case, place rear bearing and bearing retainer on end of the shaft, use three special bolts ½" longer than regular capscrews to pull retainer up against housing and push bearing on shaft (draw bolts up evenly). Remove bearing retainer, use regular capscrews when retainer finally installed (after speedometer gear installed).

Countershaft Installation: After mainshaft installed, lift countergear cluster up in case (use care not to dislodge thrustwashers), insert beveled end of countershaft at rear of case, drive countershaft in with a soft hammer (coat last 1½" section with red lead for sealing) making certain that shaft turned so that locking plate can be engaged. Install locking plate to lock countershaft and reverse idler shaft.

Reverse Idler Shaft Installation: Make certain that shaft turned to proper position for lock plate engagement, tap shaft into case, coating outer section with red lead or other sealer, drive shaft into place with a soft hammer. Install locking plate (see Countershaft Installation).

Shifter Shaft: Two types of oil seal used—correct type must be used with each type case (see below). To install shift shaft, lubricate shaft with engine oil, insert shaft in case, lock in place by driving lock pin in hole in case (pin engages groove in shaft). Install rubber sealing washer, outer shift lever, plain washer, shakeproof washer, tighten nut securely. Check by rotating shaft. If more than slight drag noted, check oil seal for interference.

►**Oil Seal Change**—*Two types used. Not interchangeable. Correct type must be used as follows:*

	Shift Shaft Seal	Transmission Case
First Type①	163251	300423③, 300917④
Second Type②	301495	301841③, 301838④

①—(Cars without Overdrive with 15x7.10 Tires)—Before Serial No. 7354 & No. 7498 to 7603 incl. (Cars without Overdrive with 15x7.60 Tires)—Before Serial No. 6324. (Cars with Overdrive)—Before Serial No. 21666 & No. 21910 to 22052 incl.

②—Cars after above serial numbers.

③—Without Overdrive. ④—With Overdrive.

Shifter Rail Lock Balls & Springs: 2nd & High spring and lock ball should be inserted in case first, install 2nd & High shift rail, then insert interlock plunger, install Low & Reverse shift rail, finally insert Low & Reverse lock ball and spring. See spring data below.

►*CAUTION—Different type springs used in each type transmission—correct type spring must be used to insure transmission not jumping out of gear.*

Shift Rail Springs

	Low & Reverse	Second & High
Std. Trans.	9 lbs. (41151)	9 lbs. (41151)
With O.D.	30 lbs. (41236)	19 lbs. (163442)
With HDM	19 lbs. (163442)	19 lbs. (163442)
With O.D. & HDM	30 lbs. (41236)	19 lbs. (163442)

O.D.—Overdrive. HDM—Hudson Drive-Master.

LINCOLN V12

Lincoln V12, All Models (1936 to 1940)

TYPE:—Constant-mesh, synchro-mesh (Second and High) helical gear type with sliding helical gear for Low and Reverse. Clutch shaft and main drive gear mounted on ball bearing in front end of case. Mainshaft mounted on roller bearing at front, ball bearing at rear. Shaft extends through into free wheel case with integral free wheel cam on the rear end (cars with free wheeling). Counter gear cluster mounted on roller bearings on stationary countershaft with ball thrust washer at each end.

Synchronizing Unit:—This unit consists of an inner hub splined on the mainshaft with synchronizing rings at each end and outer clutch sleeve splined on this hub. Sleeve is centered on hub by spring-loaded detent balls (mounted in holes in hub, engage groove in sleeve) so that entire synchronizing assembly moves as a unit, when clutch sleeve shifted to engage gears, until synchronizing rings engage synchronizing cones on gear hubs.

Strut Type Blocking Synchronizer. Synchronizer rings are loose and are actuated by three struts assembled in slots in inner clutch sleeve which engage notches in the rings. Struts are centered in the synchronizer assembly by the regular poppet balls and springs (ball and spring entered through hole in center of strut). Struts move with sleeves during initial movement to engage synchronizer rings. Teeth on rings block or prevent gear engagement until synchronization completed when clutch teeth on outer clutch sleeve slide through synchronizer to engage gear hub clutch teeth.

REMOVAL OF TRANSMISSION: *See "Transmission" on car model page.*

SERVICING:—Main Drive Gear & Bearing Assembly. To remove, take off bearing retainer on front of case, withdraw assembly. Bearing retained on shaft by locking nut and locking ring. Oil baffle is assembled in front of bearing (inner ring clamped between bearing inner race and locknut on shaft, outer ring between outer race and retainer.

Synchronizing Unit:—Should be removed from shaft as a unit and dismantled in special fixture, Part No. 16Z-58861. Fixture allows detent balls and springs to be removed one at a time and lessens chance of losing these parts. When installing unit, see that internal groove in inner sleeve (at end), and extended hub of outer clutch sleeve are toward front Strut Type Synchroniz r. Inner and outer clutch sleeves marked by etched line. Make certain that these marks lined up when reassembling and that synchronizer rings replaced in same relative positions. See that struts engage poppet balls and springs and that balls are free in struts so that they engage groove in outer clutch sleeve. Backlash between inner and outer sleeves should be .000-.001" (selective fit). Force required to break poppets (so that outer sleeve slides on inner sleeve) should be 6-8 lbs. with struts held stationary on inner sleeve.

Second Speed Gear Assembly:—Gear mounted on taper roller bearings on mainshaft and is locked in place on bearing cup (single unit for both bearings) by locking ring screwed in gear hub at rear. Bearing cones are held in position on mainshaft by locking ring at forward end with spacer between cones.

NASH & NASH-LAFAYETTE 1936-38

Nash 6 & 8, All Models (1936-37-38)
Nash-Lafayette, All Models (1936-37-38)

NOTE:—Warner Transmission and Warner Overdrives used on some models. See Warner Transmission 1938 Models. Evans Vacuum type Gear Shift Control is optional. See separate article (Transmission Controls for data on this equipment). Transmissions are same design as those used on other models

TYPE:—Constant-mesh, synchro-mesh, helical gear (second and high), sliding spur gear (low and reverse). Mainshaft mounted on roller bearing in main drive gear with thrust balls in bearing recess ahead of shaft. Entire assembly mounted on taper roller bearing at each end of transmission case with bearing adjustment at rear end (shims under rear bearing retainer flange) or on ball bearings (no adjustment). Countershaft mounted on bronze or babbitted bushings on stationary shaft with thrust washers at each end.

Synchronizing Unit. Consists of synchronizing cones on hubs of main drive gear and second speed gear and drums on ends of sleeve splined to mainshaft. This sleeve is centered within the outer clutch sleeve by spring-loaded detent balls so that they slide as a unit when outer clutch sleeve is shifted to engage gears until synchronizing drums and cones engage. After synchronization completed, clutch sleeve slides further to engage gear.

REMOVAL OF TRANSMISSION: *See "Transmission" on car model page.*

SERVICING:—Disassembly. Remove shift lever, cover, shifter shaft and fork assemblies, taking care not to lose balls and springs. Remove gear bearing retainer, being careful not to lose bearing adjusting shims. Take off nut on end of countershaft, drive countershaft out. Remove bearing retainer on front end of case, withdraw clutch shaft main drive gear and bearing assembly. Withdraw mainshaft assembly.

Synchronizing Unit:—Can be removed from mainshaft without being dismantled. If unit is disassembled, mark both sleeves (to insure reassembly in same positions), and use extreme care not to lose detent balls and springs which will spring out when inner synchronizing sleeve is freed from outer clutch sleeve.

Second Speed Gear Assembly:—Gear positioned by thrust washer bearing against shoulder on mainshaft at rear (not used on all models), thrust washer turned so that prongs on inner edge engage slots in splines (locked by locking plunger and spring) at front. To remove gear, depress plunger with wire (hole provided in gear hub through which to insert wire on some models), turn front thrust washer so that prongs line up with splineways on mainshaft, remove washer and gear. When installing gear, see that washer is turned so that prongs are engaged in notches in splines and securely locked by plunger. Gear endplay controlled by thrust washer (furnished in various thicknesses).

Mainshaft & Bearing Assembly:—When installing, see that thrust plate and thrust balls are in place in mainshaft bearing pocket in main drive gear, tighten front bearing retainer screws securely and adjust taper roller bearings by installing shims as required under rear bearing retainer.

Counter Gear Assembly:—See that thrust washers are in place at each end of counter gear cluster to control endplay.

NASH & NASH-LAFAYETTE 1939-40

Nash 6 & 8, All Models (1939-40)
Nash-Lafayette, All Models (1939-40)

NOTE:—Steering Column Gear Shift—See separate Nash Transmission Control article.

OVERDRIVE TRANSMISSION NOTE:—1939 Models—Warner Model R6 is optional. Disassembly directions for Overdrive are given below.
See "Warner R6 Overdrive (No Kick-down)."

1940 Models—Warner Model AS12-R6 Overdrive with Electrical 'Kick-down' Control is optional. This type is not same design as used on 1939 cars (similar to 1941 and later types).
See "Warner R6 & R7 Overdrives (With Kick-down)."

DESCRIPTION: Constant-mesh (all gears), synchro-mesh (2nd. & High), all helical gear type. Low & reverse gears are free to revolve on mainshaft (these gears always in mesh with countershaft gears) and are engaged by a sliding clutch sleeve splined on the mainshaft which engages clutch teeth on the gear hubs. Main drive gear (clutch shaft gear) mounted on ballbearing in front end of case. Mainshaft is mounted on pilot roller bearing in drive gear hub (at front), ball bearing in

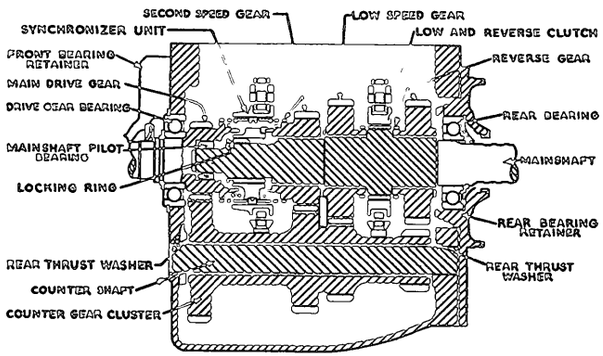

case (rear) and extends through into overdrive case. Shifter mechanism consists of a yoke on a vertical shaft within the transmission case on the right side which controls the sliding clutch sleeve (rear shaft of low-and-reverse, forward shaft for second-and-high). Detents consist of spring loaded plungers on underside of shifter plate which engage sectors on the shafts. A two-plunger interlock is located in a boss between the two shafts. Adjustment screws which serve as stops for the front (second-and-high) shaft are located in front and right sides of transmission case. A reverse lockout lever for the overdrive unit is located at the rear of the transmission case.

Synchronizing Unit (Second-and-High)—Wire-bound Strut Type Blocking design. Synchronizer rings are loose in ends of inner clutch sleeve and are actuated by struts assembled in slots in inner clutch sleeve and engaging recesses in synchronizer rings. Struts are centralized by locking wire or ring within outer clutch sleeve so that struts move with outer sleeve to engage synchronizer rings during initial movement of sleeve (inner sleeve is stationary on shaft and has no part in synchronizing operation). Teeth on outer rim of synchronizer rings block or prevent gear engagement until synchronization completed when clutch teeth on inner rim of sleeve slide through synchronizer ring teeth to engage teeth on gear hubs.

REMOVAL OF TRANSMISSION: *See "Transmission" on car model page.*

TRANSMISSION DISASSEMBLY NOTE: Overdrive can be removed & disassembled (for work on this unit only without disturbing transmission assembly or transmission can be disassembled (for work on transmission only) without disturbing overdrive assembly (see disassembly directions below).

OVERDRIVE DISASSEMBLY (without disturbing Transmission): Remove U-joint flange at rear of overdrive case, loosen screws holding overdrive unit on rear of transmission case, move overdrive toward rear and drive shaft toward front (into overdrive case) to prevent free-wheeling unit pulling apart and use extreme care to prevent adapter plate (rear bearing retainer) from moving away from transmission case—if bearing retainer allowed to move ¼" toward rear, synchronizer will come apart requiring complete dismantling of transmission. As soon as overdrive has been separated from transmission sufficiently, install one bolt to retain adapter on transmission case, remove overdrive case, pull out reverse release pin. Pull rear shaft off, using rubber band to retain free-wheel rollers, remove retaining screw and washer (in recess in free-wheel cam), remove cam and front thrust washer. Remove clutch and planet gear assembly (do not disassemble unless required—planet gears are split type and must be properly meshed in clutch gear. Sun gear cannot be removed without dismantling transmission.

TRANSMISSION DISASSEMBLY (without disturbing Overdrive): Remove shift levers on top of transmission case, transmission cover and gasket. Install spacer or large nut on each shifter shaft, re-install shaft nuts and washers (this will prevent dis-assembly of shafts and detent and interlock plungers). Straighten locks on fork stud nuts (on top of shaft lugs above forks), remove nuts. Lift both shafts and mounting plate out through top of case as an assembly leaving forks in case. Remove forks being careful not to drop the two fork shoes on each fork in case (remove overdrive oil trough before taking out rear fork). Remove countershaft by removing plug on lower rear face of overdrive case, inserting special SE-568 countershaft pilot and washer retainer tool through this hole and hole in rear end of transmission case and driving countershaft out through front of case (allow tool to remain in gear cluster until shaft re-installed). This will allow the counter gear cluster to drop down in case. Remove overdrive mounting bolts on rear of transmission case, separate adapter plate (rear bearing retainer) from transmission case and withdraw complete overdrive assembly, adapter plate, and mainshaft assembly through rear of case as a unit (use bolt to hold adapter plate and overdrive case together to prevent overdrive coming apart). Disassemble mainshaft units as directed below. Take out front bearing cap mounting screws on front of case, withdraw bearing cap, main drive gear, and

CONTINUED ON NEXT PAGE

NASH & NASH-LAFAYETTE 1939-40 (C ntinu d)

bearing assembly through front of case. Lift out counter gear cluster and thrust washers. To remove reverse idler gear, drive shaft out toward rear being careful not to lose key in shaft which engages transmission case.

TRANSMISSION REASSEMBLY: Reverse disassembly directions above and note following data on sub-assemblies:

Mainshaft Assembly:—Parts are assembled on each end of shaft in distinct groups (serviced separately as directed below) as follows: **Rear End**—Reverse Gear, Rear Main Bearing, and Bearing Retainer. **Front End**—Low Speed Gear, Second Speed Gear, and Synchronizer.

Reverse Gear & Rear Main Bearing—To disassemble (with overdrive removed from shaft), free snap ring on front face of retainer at bearing outer race, press shaft and bearing out of retainer toward front (retainer has oil seal or oil shedder in bearing recess and sun gear is mounted on rear face—see note below). Remove snap ring on shaft at rear of bearing, press speedometer gear (plain type transmission only) and bearing off shaft, remove snap ring (this ring holds bearing in retainer and cannot be taken off until after bearing removed from shaft), remove thrust washer and reverse gear. Assemble parts in same order and make certain that one end of bearing snap ring coincides with notch in retainer, use pry bars or screwdrivers to seat snap ring firmly in groove.

Second Speed & Low Speed Gears and Synchronizer Assembly—Entire assembly retained by snap ring on shaft in front of synchronizer unit inner sleeve (1939), locking washer retained by spring loaded plunger in hole in shaft (1940). To disassemble, remove snap ring (1939), use pointed tool to depress plunger so locking washer is free and turn washer so that prongs line up with splines in shaft, withdraw washer and remove all synchronizer unit parts (mark to insure reassembly in same relative positions), thrust washer and key, second speed gear, thrust washer, low speed gear, low-and-reverse clutch sleeve. Reassemble in same manner and note particularly the following points: low speed gear thrust washer lug must be located in gear slot, second speed gear thrust washer must be installed with oil groove toward gear and key installed to retain washer, second speed synchronizer ring must be installed first, then drive synchronizer assembly on shaft (use sleeve SE-589), install snap ring in groove in shaft (1939), install locking washer and turn washer so that prongs engage splines to lock washer in place, see that locking plunger in shaft hole engages washer so that it can not turn.

CAUTION—Synchronizer ring must be turned sc notches align with struts in synchronizer sleeve or assembly will be damaged when driven on shaft. Synchronizer strut lock ring must be installed with hook on end midway between two struts and engaged between two teeth n outer clutch sleeve (synchronizer will not operate if gap in ring placed at strut so that strut is free to move endwise).

NOTE—Synchronizer assembly will be facilitated if three 2" lengths of .003" shim stock (tapered to ¾" at ends) are inserted directly above struts to retain lock wire in strut notches while spring is compressed to allow assembly of outer clutch sleeve

Mainshaft Installation & Endplay Adjustment—Mainshaft assembly should be installed in transmission with main drive gear (and pilot bearing) in place and counter gear cluster in case but suspended on assembling mandrel (see Counter Gear Assembly below). With high speed gear synchronizing ring in place (struts engaging notches in ring), insert mainshaft through rear of case so that forward end enters pilot bearing in main drive gear. Hold mainshaft so that rear bearing retainer is tight against rear face of case, check endplay of synchronizer bronze clutch ring. Total endplay should be .020". Adjust by installing steel shims between rear bearing retainer and transmission case (1-3 shims normally, more if necessary).

Endplay Adjustment (1940). When installing the rear bearing retainer, install SE-612 gauge between rear face of main drive gear and high speed synchronizer ring, install correct shim thickness between transmission case and rear bearing retainer so that, when mounting screws tightened, gauge clearance will be from .0 to .016" (if gauge tight, add additional shim). CAUTION—Rear bearing retainer must be tight when this check made.

Main Drive Gear & Bearing Assembly:—Bearing retained on shaft by washer and snap ring and can be removed after snap ring has been freed. When assembling drive gear, make certain that oil seal in retainer is in good condition and saturate with engine oil, see that snap ring in place on bearing outer race, assemble in transmission case and install sufficient gaskets between retainer and case so that snap ring held firmly in place without any clearance between retainer and face of case. Mainshaft pilot bearing is retained in gear hub by lock ring.

Counter Gear Assembly:—Install gears in case with thrust washers at each end (washer tongues must engage notches in case above shaft hole) using assembling mandrel SE-568 inserted through front end of case. After mainshaft assembly installed, drive countershaft in through front of case so that mandrel driven out at rear (use wire loop to lift counter gear, if necessary for shaft alignment). Shaft prevented from rotating by setscrew in forward end which engages notch in case.

Reverse Gear:—To assemble, lubricate gear, install with shoulder on gear toward front, drive shaft in from rear with key lined up with notch in case.

Shifter Assembly Installation & Adjustment:—Lubricate fork shoes before installing, make certain that lower ends of vertical shafts engage pivot plugs in bottom of transmission case and that shift fork stud nuts are securely locked after being tightened. Use sealing compound on gasket under shift plate and see that plate is located by two dowels on transmission case (dowel pins must not project above top surface of plate). Adjust as follows:

Shifter Fork Adjustment. When installing shift mechanism mounting plate assembly, adjust shift forks before tightening shift fork nuts as follows: Use SE-612 gear spacing gauge placing narrow section of handle between low speed gear and clutch sleeve. Make certain that shifter shaft in neutral position, tighten rear shift fork nut, bend up lock plate on nut. Use two SE-612 gauges placing large end of one gauge between main drive gear and high speed synchronizer ring, second gauge between second speed gear and second speed synchronizer ring. See that shifter shaft in neutral position, tighten front shift fork nut, bend up lock plate on nut. Adjust Second & High Synchronizer Clutch Stops **Low-and-Reverse Clutch**—Install operating lever on upper end of shaft and check operation. With lever in neutral position (detent plunger engaging center notch on sector), outer clutch sleeve should be centered on shaft gear and fork shoes should be free in clutch groove. To adjust, loosen fork stud nut, shift position of fork in relation to lever on shaft. Tighten nut securely and lock with lock plate **Second & High Synchronizer Clutch Stops.** Install lever on forward shaft, place lever in neutral position (detent plunger engaging center notch in sector), check to see that outer clutch sleeve centered so that both synchronizer rings free and that play is equal. Adjust in same manner as low-reverse clutch by loosening fork stud nut and shifting fork in relation to shaft. Operate lever to engage second speed and check gear engagement and detent and interlock operation. Detent plunger should engage second speed notch in shaft sector and interlock plunger should be seated fully in notch with low-reverse shaft sector with slight clearance and should prevent operation of this shaft. Adjust by loosening locknut and turning limit adjustment screw on side of transmission case which limits front shaft travel. Engage high speed and check in same manner (adjusted by turning limit adjustment screw on front of case in same manner).

Overdrive lockout (Reverse release)—Lever at rear of case pivots on pivot pin which is mounted on fulcrum stud in rear of case. To check operation, place transmission in reverse gear and overdrive in conventional position. When rear shaft lever is moved, lockout pin should have slight (.005") movement.

OVERDRIVE UNIT

Disassembly (1939): *See "Warner R6 Overdrive (No Kick-down)."*

Disassembly (1940): *See "Warner R6 & R7 Overdrive (With Kick-down)."*

ADJUSTMENT:—Manufacturer recommends that no attempt be made to adjust overdrive cut-in speed (pawl adjustment) unless accurate spring scale used to measure pawl spring tension and assure equal and correct adjustment of both pawls. Pawls are adjusted by removing plug on top of overdrive case and turning shaft so that holes in clutch collar and pawl in which adjusting screws located line up. Each screw (two screws—one for each pawl) should be adjusted equally. Turn screws in to raise cut-in point, out to lower cut-in point, being certain that both screws are adjusted equally and turned so that they **do not interfere with the clutch collar.** Cut-in speed should be as follows:

Car Model	Cut-in Speed
Nash & Nash Lafayette ('39)	38-42 MPH.
Nash & Nash-Lafayette ('40)	33 MPH.

NOTE—One pawl adjusting screw has single slot in head, opposite screw has double slot to avoid possibility of adjusting the same screw twice.

1946-48 NASH "600"

"600", All Series (1946 to 1948)

▷1946-47 TRANSMISSION SHIFTER SHAFT & FORK CHANGE (To correct gear disengagement caused by distortion of Fork or Quadrant): On cars before Serial No. K-140220, check clearance between rear face of synchronizer shift collar and front face of 2nd. speed gear with transmission 2nd. speed gear fully engaged. If clearance less than .028" (use feeler gauge), install new type Shifter Fork and Shaft Assemblies (forged quadrants pressed on steel shafts with larger pivots on forks and larger holes in shafts). New type parts replace original design (quadrants brazed on shafts).

▷*NOTE—Only new type parts furnished for service. Install complete unit package (High & Second and Low & Reverse Shafts and Forks).*

OVERDRIVE TRANSMISSION NOTE: These transmissions serviced in same manner as standard type (below) except for Overdrive (Warner R10B). *See "Warner R10 Overdrive."*

DESCRIPTION: Three-speed, all helical gear type with constant-mesh, synchro-mesh (Second & High), sliding gear (Low & Reverse).

Synchronizer Unit—Special design spring-and-ball type. Outer clutch sleeve (shifting collar) is centered on inner hub by six poppet balls and springs fitted in holes in hub. Synchronizing rings are loose in ends of sleeve and are driven by the Clutch Ring Driver splined on shaft (installed at rear of hub with notched lugs in recesses in hub which engage prongs on synchronizer rings). After synchronization completed, clutch sleeve slides on hub (over synchronizer driver and rings) to engage clutch teeth on 2nd. speed gear or main drive gear hubs.

REMOVAL OF TRANSMISSION: *See "Transmission" on car model page.*

TRANSMISSION DISASSEMBLY: Remove transmission case cover and gasket. Remove shifter shaft nut, washer, and lever from Low & Reverse shifter shaft, drive lockpin out to free shaft (drive pin up), drive shaft out of case as far as possible (use brass drift on inner end) to provide clearance for gear removal (NOTE—Not necessary to drive out Second & High shifter shaft). Remove capscrews in rear bearing retainer, rotate retainer to expose countershaft lock, drive lock out to free shaft. Use Countershaft Aligning Tool J-1413 to drive countershaft out through rear of case allowing countergear cluster to drop down on small diameter of aligning tool. Take out capscrews in bearing retainer on front of case, remove retainer, withdraw main drive gear assembly through front of case, lift out front synchronizer ring. Withdraw rear bearing retainer and mainshaft assembly through rear of case (synchronizer unit will remain hanging in shift fork). Turn synchronizer assembly at right angles and lift it from case

(CAUTION—Shifter shoes will drop out as synchronizer removed from fork—remove shoes from case). If reverse idler gear being removed, drive shaft out through rear of case using a long punch (CAUTION—do not damage shaft or gear), lift gear out. Remove forks from shifter shaft quadrants. Remove lever on outer end of Second & High shift shaft, drive out lockpin. Remove both shifter shaft assemblies from within case. Remove Second & High speed finder poppet (plunger & spring) from within case, Low & Reverse speed finder poppet from plug hole at bottom of case. Remove Interlock poppet from boss in case between shifter shaft holes. Lift out countergear cluster and thrustwashers. Dismantle and service sub-assemblies as follows:

Main Drive Gear: Remove snap ring from shaft groove in front of bearing, press bearing off shaft. Check mainshaft pilot bearing rollers in gear recess for wear (jar gear lightly on block of wood, if rollers fall out, install new rollers and make certain that retainer ring installed in recess). Press bearing on shaft with snap ring groove toward front, install ring in this groove (ring .077" thick—not variable). Install snap ring in shaft groove making certain that snap ring is snug fit in groove (selective fit—this ring furnished .092", .095", .098" thick).

Mainshaft Assembly: Remove clutch ring driver from front end of shaft, rotate 2nd. speed gear thrust washer until tongues on washer line up with spline grooves, remove washer, slide synchronizer ring, 2nd. speed gear, and low-reverse sliding gear off shaft. Remove snap ring from rear bearing retainer (in front of bearing), tap shaft and bearing out of retainer toward front using a brass drift. To remove bearing, remove snap ring from shaft at rear of speedometer gear, remove gear, lift out gear woodruff key, press bearing off. Inspect all parts for wear. Reassemble in following order:

Mainshaft Rear Bearing—Press bearing on shaft with closed end forward and tight against shoulder on shaft. Install speedometer gear (and woodruff key) install snap ring in shaft groove, selecting ring for snug fit (this ring furnished .087", .090", .093" thick). Install shaft and bearing assembly in rear bearing retainer with bearing seated firmly in retainer recess, install snap ring in retainer groove, selecting ring for snug fit so that shaft has no endplay (this ring furnished .062", .065", .068", .071" thick).

Low-reverse Sliding Gear—Shift collar must be toward rear and gear must slide freely on splines.

Second Speed Gear—Gear synchronizer cone must be forward and gear turn freely on shaft. Push thrust washer on shaft against gear, revolve washer until tongues engage groove in shaft splines so that washer is locked in place (washer will be held in place by clutch ring driver). Check gear endplay with feeler between rear face of gear and shoulder on shaft. Endplay should be .002-.010".

Synchronizer Ring & Driver—Engage synchronizer ring in gear cone (prongs forward), engage Clutch Ring Driver on shaft splines with short lugs toward 2nd. speed gear and in line with notches in gear thrust washer. Turn synchronizer ring so that prongs line up with notches in driver, push driver into place against gear (driver locks thrustwasher in place).

Synchronizer Assembly: If necessary to dismantle these parts, mark hub and clutch sleeve to insure reassembly in same position, slide sleeve off hub be-

CONTINUED ON NEXT PAGE

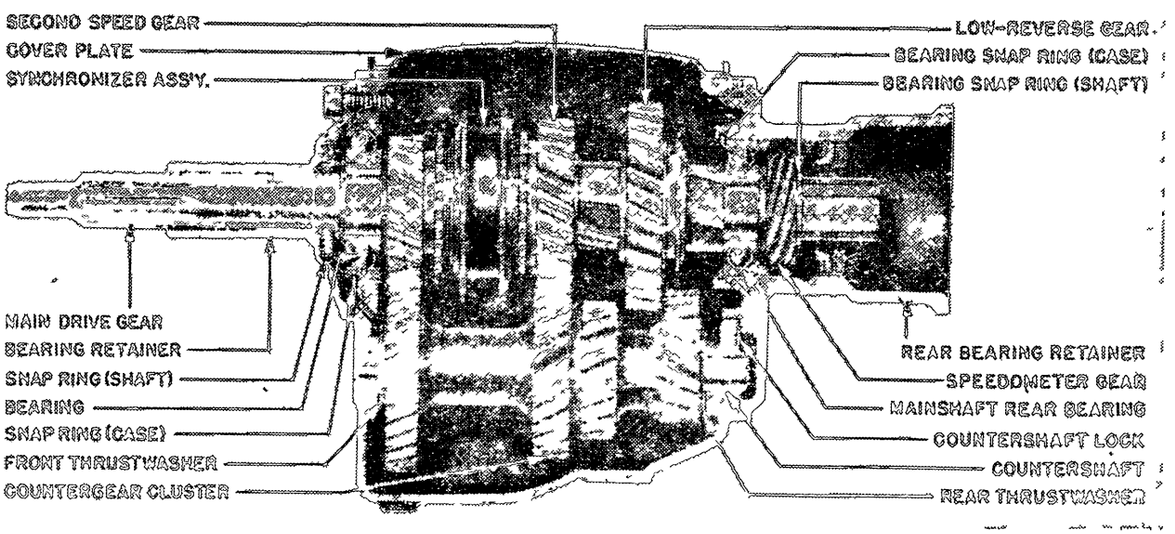

1946-48 NASH "600" TRANSMISSION (NO OVERDRIVE)

1946-48 NASH "600" (Cont.)

ing careful not to lose six poppet balls and springs which will fly out of hub holes. When reassemblying, use piston ring compressor to retain springs and balls in hub, slide sleeve on hub with chamfered side of sleeve toward long end of hub.

Rear Bearing Retainer Oil Seal: Use driver J-1556 to install new oil seal. Seal should be inserted with lip on leather toward front.

TRANSMISSION REASSEMBLY: After all sub-assemblies serviced as above, reassemble transmission by reversing disassembly directions and note the following important points:

Reverse Idler Gear: Beveled side of gear teeth must be forward. Drive the shaft in from rear until lock slot is flush with rear face of case (slot should face countershaft).

Countergear Cluster: Use heavy lubricant on thrustwashers, insert gear cluster and front thrustwasher in case (lip on washer lined up with slot in case), install rear thrustwasher through hole in case, insert J-1413 aligning tool to retain parts while remainder of transmission assembled. After all parts installed, tap countershaft in through rear of case (take care not to damage thrustwashers) until lock slot flush with rear face of case, install lock plate in slots in countershaft and reverse idler shaft.

Shifter Shaft Assemblies: Inspect needle bearings in case before installing second-high shifter shaft, replace nedle bearings, if necessary, with special driver. After installing speed finder poppets and springs, and interlock poppet, insert shaft from inside case but do not install lock pins and levers until transmission completely reassembled. Install synchronizer assembly in second-high fork (use heavy grease to retain fork shoes).

Main Shaft & Rear Bearing Retainer: Place standard .010" shim (with gasket on each side) on face of rear bearing retainer, insert assembly through rear of case and work shaft through synchronizer assembly hanging in shift fork, being careful to **line up clutch hub recesses with clutch ring driver prongs.** Line up low & reverse shift fork with collar on low-reverse gear. **After main drive gear installed,** check synchronizer ring clearance by inserting special clearance gauge, Tool J-1542, at each end of synchronizer sleeve while holding rear bearing retainer tight against case. If clearance not equal to gauge thickness (.105"), adjust by increasing or decreasing shim thickness at rear bearing retainer. Rear bearing retainer capscrews can be installed after this adjustment completed.

Main Drive Gear: When installing gear in case, line up synchronizer ring prongs with slots in clutch ring driver. Install bearing retainer with new gasket and line up oil return holes in retainer and case. When tightening capscrews, note whether retainer contacts bearing before contacting case and correct this condition by **installing additional gaskets under retainer.** Main drive gear endplay must not exceed .005" and should preferably be .000".

Transmission Cover Plate: Vent hole in gasket and cover plate must be open and toward front end of case.

1941-48 NASH AMBASSADOR 6 & 8

Ambassador Six, All Series (1941 to 1948)
Ambassador Eight, All Series (1941-42)

►NOTES, CAUTIONS, & CHANGES

►**1947 TRANSMISSION SHIFTER SHAFT & FORK CHANGE After Serial No. R-444510 (Std. Trans), R-443972 (Overdrive Trans.):** New type heavier Shifter Shafts, Forks, and Sleeves used beginning with above serial numbers. These new parts furnished for service on earlier cars and **entire group of new parts** must be installed as an assembly (cannot be installed singly on earlier cars).

►*IDENTIFICATION NOTE*—New design parts have **forged** quadrants which are pressed on machined steel shafts.

►**1942-47 REPLACEMENT SHIFTER SHAFT & FORK ASSEMBLIES:** New type parts (see Identification Note below) are furnished in group package for installation on models listed below. Previous type parts are not furnished for service and **new type parts must be installed as complete assemblies** (cannot be used singly with previous type parts). This change applies to following cars:

Series 4260, 4280, 4660.....All Cars
4760 (No Overdrive).....Before Serial No. R-444510
4760 (With Overdrive).....Before Serial No. R-443972

►*IDENTIFICATION NOTE*—New design parts have **forged** quadrants pressed on machined steel shafts, larger diameter pivots and pivot holes, deeper interlock notches, and two annular grooves in shaft sleeves (sleeves have larger I. D. to fit larger shafts).

►**1947 TRANSMISSION MAIN DRIVE GEAR, BEARING RETAINER & LOCK RING CHANGE (Starting Serial No. R-432468 Std. Trans., R-432167 Overdrive Trans.):** Lock ring in bearing changed from .065" thick to .077" and new type main drive gear and bearing retainer used.

Main Drive Gear—New type gear can be identified by absence of oil hole (first type gear has oil hole drilled in shaft from point in front of bearing to recess in front of mainshaft pilot bearing rollers).

Front Bearing Retainer—New type retainer has lock ring counterbore 3 5/32" in diameter and .064-.067" deep (first type retainer counterbore 3 7/64" diameter and .078" deep).

►*CAUTION—New and previous design parts must not be interchanged and each type must be installed differently (see Transmission Asembly direction).*

OVERDRIVE TRANSMISSION NOTE: These transmissions serviced in same manner as standard type (below) except for Overdrive Unit which is Warner Type R7C (1941-46), Type R10 (1946-48).

See "Warner R6 & R7 Overdrive (With Kick-down)" and "Warner R10 Overdrive."

DESCRIPTION: Three-speed, all helical gear type. Constant-mesh, synchro-mesh (Second & High), sliding gear (Low & Reverse). Main drive gear mounted on ball bearing in front of transmission case (see Production Change above). Mainshaft is mounted on roller bearing in main drive gear (front), ball bearing in retainer cap on case (rear). Countergear cluster is mounted on roller bearings on stationary shaft with thrust washers at each end. Second speed gear is retained on mainshaft as an assembly with the synchronizer unit by a splined locking washer retained by a spring-loaded lock plunger installed in the shaft directly in front of the synchronizer inner hub.

Synchronizer Unit — Double-blocker, double-spring type. Synchronizer rings are free in ends of inner clutch sleeve and are actuated by three shifting plates or struts which fit in slots in inner clutch sleeve and engage notches in synchronizer rings. Struts are centered in outer clutch sleeve by two wire springs (within struts on either side of inner clutch web) and move with outer clutch sleeve to engage with cones on gear hubs for synchronization. Teeth on rings block or prevent gear engagement until synchronization completed. Inner clutch sleeve is stationary on mainshaft and does not move (retained with second speed gear by locking washer and plunger on forward end).

Transmission Interlock (1942 On): Consists of a cam lever riveted to a tubular pin which is a slide fit in the hole directly behind the speed finder plunger locating screw so that notches in top of lever engage shift yoke pins on back of yokes. When either yoke moves to engage a gear, the yoke pin engages a cam on the interlock lever so that lever is rocked to lock opposite yoke in neutral position.

REMOVAL OF TRANSMISSION: *See "Transmission" on car model page.*

TRANSMISSION DISASSEMBLY: Remove cover capscrews, lift off cover and baffle, remove mounting capscrew and lift oil trough out. Move both shifter shaft levers away from each other slightly so that speed finder plungers move out of notches in quadrants, tighten speed finder lockscrew (on outside of case between lever shafts) to hold plungers away from quadrants. Mark shift levers and shafts to insure correct reassembly, remove levers, drive shaft lockpins up and out of bosses in case. Use soft drift to drive shifter shafts toward outside of case as far as possible, lift off oil seals, retainers, and shaft sleeves which will be pushed out of case. Remove low-reverse shifter fork, remove interlock, remove second-high shifter fork (work pivot end toward rear as fork slips out of collar). Remove low-reverse shifter shaft (move sliding gear toward rear of case for clearance) and second-high shifter shaft (slide clutch sleeve to rear for clearance, turn shifter shaft so that pivot hole is downward, pass quadrant under synchronizer until end of shaft free from hole in case). Remove capscrew and washer on rear end of mainshaft, pull companion flange (Puller J-1412). Remove capscrews in rear bearing retainer and rotate retainer to expose countershaft hole in rear face of case (on Overdrive Transmissions, merely take out pipe plug at rear of overdrive case). Use Countershaft Aligning Tool J-1415-A to drive countershaft out at front of case so that countergear cluster drops down on small diameter of tool. Remove capscrews and nuts retaining rear bearing retainer cap (or adapter plate on overdrive transmissions), withdraw mainshaft and gears through rear of case as an assembly (CAUTION—On overdrive models, use extreme care that adapter plate does not separate from overdrive case which would require dismantling of overdrive to reassemble freewheel rollers—install one screw to hold adapter

C NTINUED ON NEXT PAGE

1941-48 NASH AMBASSADOR 6 & 8 (Continued)

plate and overdrive case together while off transmission). To remove main drive gear, take out screws in bearing retainer on front of case, withdraw gear and bearing as assembly. Lift countergear cluster and thrust washers out of case. To remove reverse idler gear, use long brass drift inserted through front of case to drive shaft out toward rear. Dismantle and service sub-assemblies as follows:

Main Drive Gear: Remove snap ring from shaft, press bearing off in arbor plate using J-1298-N bearing plate. Check mainshaft pilot bearing rollers in recess for wear (jar gear lightly on block of wood, if roller falls out, install new rollers and make certain that retainer ring installed in recess). Press bearing on shaft with snap ring groove toward front, use tool J-1416 to install snap ring in shaft groove making certain ring is snug fit in groove (selective fit—furnished .087", .090", .092", .093", .096" thick). Large snap ring installed in bearing groove should be .065" thick (first type gear with oil hole in shaft), .077" (later type gear without oil hole).
See Production Change Note above for data on this parts change.

Synchronizer & Second Speed Gear:—To dismantle assembly, depress locking plunger under lock ring in front of synchronizer inner clutch sleeve with a sharp pointed tool, revolve lock ring one spline so that it is free and withdraw from shaft, remove synchronizer, bronze thrustwasher, second speed gear, steel thrustwasher. Sliding gear can then be removed from shaft. Install assembly in same manner selecting retainer washer of correct thickness so that second gear endplay is .002-.004" with retainer installed. See that retainer turned so that it is locked in place in mainshaft splines and that locking plunger prevents retainer from turning.

▷*CAUTION*—Install second speed gear steel thrustwasher with chamfer toward rear end and tongue in line with notch on spline shaft, install bronze thrustwasher with tongues toward front of shaft and rotate washer so that tongues engage notches in splines (see that washer does not slip out of place when installing synchronizer).

Synchronizer Unit—Inner and outer clutch sleeves and rings should be marked before disassembly to insure reassembly in same positions. Install struts with open face toward inner clutch sleeve and hooked end of each spring wire engaged in the same strut (free end of this spring will be between this strut and next strut in clockwise direction).

Mainshaft Rear Bearing: Remove snap ring from recess in rear bearing retainer (in front of bearing), tap shaft and bearing out of retainer toward front using a brass drift. To remove bearing, slide speedometer gear off shaft, press bearing off. Install bearing with closed side forward. On overdrive cars, overdrive unit must be dismantled and snap ring on shaft behind overdrive sun gear removed, then press shaft out (will not disturb sun gear assembly).

Reverse Idler Gear:—Idler gear should be removed by driving shaft out toward rear. When installing idler gear, see that chamfered edge of gear teeth is toward front of case.

Countergear Assembly:—When installing countergear cluster, install thrust washer at each end with tongue in line with slot in case (washers may be held by grease while installing gears. Allow gears to hang down on small diameter of tool J-1415-A while main drive gear and mainshaft are being assembled then push out tool by inserting countershaft at forward end of case. CAUTION—Use care not to damage thrust washers.

TRANSMISSION REASSEMBLY: After all sub-assemblies serviced as directed above, reassemble transmission by reversing disassembly directions and note the following important points:

Mainshaft Rear Bearing Retainer Installation: Install same number and thickness of shims (as removed when transmission disassembled) on face of retainer with new gasket on each side of shim pack. Bolt retainer in place and after assembly completed, check and adjust mainshaft endplay as follows:
Mainshaft Endplay—Controlled by thickness of shims between rear of transmission case and rear main bearing cap or overdrive adapter. With transmission assembled, install shift collar centering gauge tool J-1410 (.075" thick) between front face of high speed synchronizer ring and rear face of main drive gear, place second gauge similarly between second speed synchronizer ring and second speed gear. Gauges should slip into position freely and will center the synchronizer sleeve. Front gauge should be from a tight fit to .015" clearance (corresponding to .000-.015" endplay). Adjust by adding or removing shims from between rear bearing retainer and face of transmission case (above).

Main Drive Gear & Bearing Retainer Installation:

▷*CAUTION—Make certain that correct type parts used together (see Production Change Note above).* Check thickness of snap ring in bearing groove (.065" thick for first type gear with oil hole in shaft, .077" thick for later type gear without oil hole), and make certain that correct type bearing retainer used for each type gear. Install main drive gear in front end of case, install each type bearing retainer exactly as follows:

First Type Retainer (with .078" deep lock ring counterbore)—This type retainer must be fitted when installed on case (inner face of counterbore contacts front face of bearing and forces lock ring against case). Press retainer firmly in place against bearing, use feeler gauge to measure clearance between face of retainer and transmission case, install sufficient gasket thickness at this point to take up clearance (gaskets furnished in various thicknesses). With retainer bolted in place, drive gear endplay must not exceed .015" (.000" preferred).

Later Type Retainer (with .064-.067" deep lock ring counterbore)—With this type retainer, lock ring is clamped between counterbore and face of transmission case. Use a new gasket under the retainer and make certain that oil return hole is at bottom with retainer installed on case. Drive gear endplay must not exceed .015" (.000" preferred).

Shifter Shafts: When installing shifter shaft forks, see that low and reverse fork installed with longer segment at top. Cork oil seals and retainers are installed on outer ends of shafts and shaft bushing retaining pins should be installed from the top.
NOTE—Use tool J-2633 to install oil seals.
Speed Finder Locating Screw—Located on side of transmission case between shifter shafts. Need not be disturbed to remove detent plungers but if removed, screw should be adjusted so that inner end engages flattened portion of plungers to prevent plungers turning but must not cause plungers to bind. Lock adjustment with locknut.

▷*CAUTION*—After transmission assembly completed, screw should be backed off just enough so that speed finder plungers operate freely, lock adjustment by tightening locknut.

Transmission Cover: With oil trough installed in case and mounting capscrew tight, install baffle with vent louvre at rear of case, install cover with vent on right side. NOTE—Use gasket on each side of baffle.

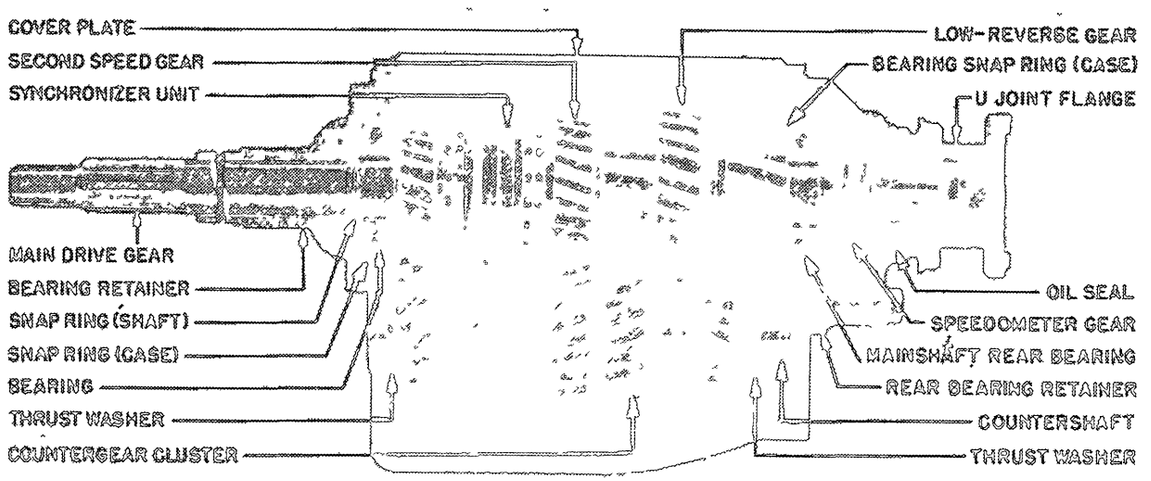

1941-48 NASH AMD. 6 & 8 TRANSMISSION (NO OVERDRIVE)

PACKARD SIX & EIGHT 1936-38

Six, All Models (1937-38)
Eight, All "120" Models (1936-37-38)

TYPE:—Constant-mesh, synchro-mesh, all helical gear type (sliding gear for low and reverse). Main drive gear mounted on shielded ball bearing. Mainshaft mounted on roller bearing (front), ball bearing (rear). Second speed gear mounted on double row ball bearing on mainshaft. Counter gear cluster mounted on roller bearings on stationary countershaft with thrust washer at each end. Gears are engaged by sliding clutch sleeve (outer member of synchronizing unit) which engages clutch teeth cut on main drive gear and second speed gear hubs.

Synchronizing Unit. Consists of inner sleeve with bronze synchronizing cups and splined to mainshaft, outer clutch sleeve splined on the inner sleeve. Inner and outer sleeves move as a unit (spring loaded detent balls in inner sleeve engage groove in outer sleeve) until synchronizing cups engage cones on gears. When synchronization completed, outer clutch sleeve slides on inner sleeve to engage clutch teeth on gears.

REMOVAL OF TRANSMISSION: *See "Transmission" on car model page.*

SERVICING:—Disassembly. Remove cover, shift lever, shifter shaft and fork assembly. Mark gears, sliding clutch and synchronizing sleeves to insure reinstalling in same position on shaft. Take off universal joint flange nut, pull flange, remove speedometer pinion, rear bearing retainer, and lock plate on rear of case. Remove main drive gear bearing retainer on front of case. Drive out countershaft toward rear allowing cluster gears to drop down in case and unmesh gears. Pull main drive gear and bearing assembly out toward front. Pull mainshaft to rear until bearing is freed from case, then remove mainshaft assembly through top of case, lift out counter gear cluster.

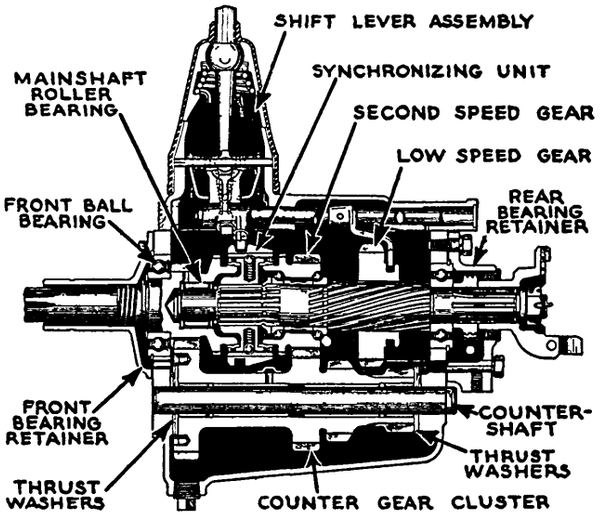

NOTE—Gears should not be shifted with cover removed (synchro-mesh balls and springs will jump out). If this occurs, use clamp band type ring compressor or Packard Clamp ST-5014 to reinstall.

Mainshaft & Second Speed Gear:—Do not disassemble (serviced as an assembly only).

Synchronizing Unit:—Serviced as an assembly with sliding clutch sleeve. Do not disassemble. See note above for re-installing detent balls and springs.

Counter Gear Cluster:—Use tapered dummy shaft or arbor (Packard ST 5015 and 5043) to align roller bearings when installing countershaft. See that cluster gear has no perceptible endplay in case and that lugs on bronze thrust washers at each end line up with slots in case.

for adjacent ball bearings in each gear) with inner races for end bearings positioned by spacers on shaft. Do not dismantle these gear assemblies.

Shifter Mechanism:—Yokes on horizontal shafts in cover engage synchronizer clutch sleeve (front shaft), low speed gear clutch and reverse gear (rear shaft) directly without intermediate linkage. Spring-loaded ball type detents are located in bracket on side of cover and engage sectors on shafts. Entire shifter mechanism located in cover and need not be dismantled when cover removed.

High-Gear Shifter Lever Travel—Clearance between lug on shifter lever and transmission case cover must be correctly set to prevent excessive lever travel which will allow synchronizer poppet balls and springs to jump out in high gear position. To adjust, shift into high gear, remove transmission cover and measure clearance between lug on forward side of lever and cover. Clearance should be .005-.010". If more than .010", bend lug up.

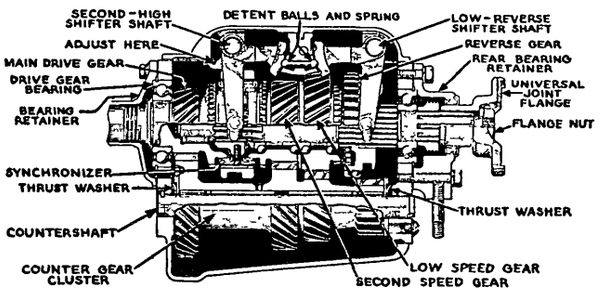

OVERDRIVE UNIT

See separate article on Warner Type R6 & R7 Overdrive for complete servicing and adjustment data. Note the following special instructions:

Transmission Mainshaft Endplay—Mainshaft should fit in overdrive adapter plate without perceptible endplay. Endplay controlled by mainshaft rear bearing front snap ring (which engages groove in adapter plate), spacer and rear snap ring behind bearing (this snap ring engages groove in shaft. These snap rings furnished in .003" steps as follows: No. 338472, 3, 4, 5 (Front Snap Ring—thinnest to thickest). No. 338458, 9, 338460, 1 (Rear Snap Ring—Thinnest to thickest).

Overdrive Unit Rear Bearing—Two types used. First type has compressible spacer sleeve on shaft between bearings with bearing pre-load controlled by universal joint flange nut on rear end of shaft. This type bearing assembly should be changed to second type (with bearing adjustment controlled by Belleville type spring washer between bearings) whenever overdrive unit disassembled or bearings removed, by installing Solid Spacer No. 341264, Belleville Spring Washer No. 341266.

CAUTION—On models with this first type bearing, universal joint flange nut must not be loosened which will disturb bearing adjustment. If bearings dismantled or adjustment lost by changing nut position, re-adjust bearings as directed in Warner Overdrive article. NOTE—On later cars with Belleville type washer between bearings, universal joint nut should be kept tight (nut does not control bearing adjustment). These cars may be identified by letter 'M' stamped on side of universal joint flange.

PACKARD SIX & EIGHT 1939

Six, Eight, & Super Eight Models (1939)

TYPE:—Design same as for 1938 Six and Eight except as follows:

Econo-Drive (Overdrive)—Warner type overdrive unit mounted on rear of transmission case. Optional *See "Warner R6 & R7 Overdrive (With Kick-down)" for overdrive and overdrive control data.*

Constant-Mesh Low Gear—New type helical gear mounted on double ball bearings on main shaft (same type mounting as for second speed gear) and engaged by clutch teeth cut on inner rim of sliding spur type reverse gear (this gear acts as clutch only in engaging low speed gear).

REMOVAL OF TRANSMISSION: *See "Transmission" on car model page.*

SERVICING:—Disassembly (without Overdrive). Take off nut on rear end of mainshaft, remove universal joint flange. Take out mounting screws in rear bearing retainer, remove retainer and lockplate. Take out mounting screws and remove front bearing retainer. Drive countershaft out (see Note below), remove main drive gear and bearing through front of case. Move mainshaft assembly to rear until rear bearing free of case, tap bearing off shaft, then remove mainshaft through top of case. Lift counter gear cluster and thrust washer out. To remove reverse idler gear, drive shaft out to rear.

Overdrive Models. Drive countershaft out toward front (see Note below). Take out mounting screws and remove front bearing retainer, remove main drive gear and bearing through front of case. Slide synchronizer assembly off front end of mainshaft. Take out mounting screws in overdrive adapter plate. Pull entire overdrive, adapter, and mainshaft assembly out through rear of case using extreme care not to allow overdrive case to separate from adapter (must be dismantled and reassembled).

Countershaft Note—Shaft must be driven out toward front (key in forward end of shaft engages slot in front end of transmission case). Use S.T. 5043 Roller bearing assembly bar to drive shaft out and leave tool in counter gear cluster to retain bearing rollers until re-installed. Overdrive Model—Remove overdrive case drain plug (on rear end of case at bottom) and insert S.T. 5043 tool through this hole to drive countershaft out, remove main drive gear and synchronizer unit, then pull overdrive assembly and transmission mainshaft and gears out through rear of transmission case as a unit.

Low & Second Speed Gear Assembly:—Mounted as an assembly on mainshaft (same inner race used

PACKARD 1940-48

Six, All Models (1940 to 1947)
Eight, All Models (1940 to 1948)
Super & Cust. Eight, All Models (1940 to 1948)

OVERDRIVE TRANSMISSION NOTE:—Econo-drive or Aero-drive (Overdrive) Optl. on all models. Overdrive unit is Warner Type R9 (Six, Eight, Clipper), R9A (Super & Custom 8) and is used with the Packard transmission described below. *See "Warner R9 Overdrive."*

TYPE:—Constant-mesh, synchro mesh (2nd & High), constant mesh (Low), sliding gear (Reverse), all helical gear type. Same design as used on previous models except for new type Overdrive unit (optional on all models).

REMOVAL OF TRANSMISSION: *See "Transmission" on car model page.*

OVERDRIVE TRANSMISSION DISASSEMBLY: Transmissions with overdrive can be disassembled without disturbing overdrive unit as follows: Remove overdrive drain plug (on lower rear end of case), transmission cover and shifter mechanism, main drive gear bearing retainer (on front of transmission case). Insert special ST-5043 roller bearing assembly bar through overdrive drain plug hole and hole in front end of case, drive countershaft out through front end of transmission case leaving the assembly bar in the counter gear cluster to retain the bearings until the gear cluster is removed. Take out two short capscrews holding adapter plate to transmission case (do not disturb screws bolting overdrive case to adapter). Remove main drive gear and bearing through front of case, slide synchronizer assembly off front end of mainshaft. Withdraw overdrive unit, adapter plate, and mainshaft assembly from rear end of transmission case as a unit. CAUTION—Do not permit adapter plate to separate from overdrive case which will require complete disassembly of overdrive.

TRANSMISSION (NO OVERDRIVE) DISASSEMBLY: Remove transmission case cover and shifter mechanism, take off nut on rear end of shaft, pull universal joint flange, take out screws and remove rear bearing cap, remove countershaft lock plate, remove main drive gear bearing retainer on front of case. Use ST-5043 roller bearing assembly bar as a drift and drive countershaft out through front of case (leave bar in counter gear cluster to retain bearing rollers). Remove main drive gear and bearing through front of case. Move mainshaft and gear assembly to rear until rear bearing clears case, tap bearing off shaft, then remove mainshaft assembly through top of case. Lift out counter gear cluster, thrust washers, and bearing rollers. To remove reverse idler gear, drive shaft out toward rear.

Synchronizer Unit:—Conventional poppet ball and spring type. Unit can be dismantled by sliding outer clutch sleeve off inner sleeve using extreme care not to lose poppet balls and springs which will fly out (mark inner and outer sleeves and replace in same position). Use band type ring compressor or ST-5014 clamp to re-install balls and springs.

Synchronizer Travel Adjustment—Check clearance between lug on second-high shifter fork and stop on cover with shift lever in High Gear position. Clearance should be .005" min., .010" max. Adjust by bending lug. CAUTION—If clearance greater than .010", outer clutch sleeve may move too far forward which will allow synchronizer balls and springs to fly out (requiring removing cover & reassembling).

Mainshaft, Low & Second Speed Gear Assembly:—Both low and second speed gears are furnished as an assembly with the mainshaft and should not be removed. These gears are constant-mesh type and are mounted on double row ball bearings on shaft

Gearshift Mechanism:—Same design as used on previous models with shifter shafts and forks mounted in cover (not disturbed by cover removal).

PACKARD "SENIOR LINE" 1936-39

Eight (exc. "120"), All Models (1936)
Super Eight, All Models (1936-37-38)
Twelve, All Models (1936 to 1939)

NOTE:—Steering Column Gear Shift (1939). Used on some cars. *See "Packard Handi-Shift."*

TYPE:—Constant-mesh (except reverse), synchro-mesh (second and high), sliding spur gear for reverse (this gear acts as low speed engaging clutch when shifted forward). Main drive gear mounted on ball bearing. Mainshaft mounted on roller bearing (front), ball bearing (rear). Low and second speed gears mounted on double row ball bearings on mainshaft. Counter gear cluster mounted on double row ball bearing (front), roller bearing (rear). Low gear is engaged by shifting reverse gear on mainshaft forward to engage internal clutch teeth on gear with clutch teeth on low speed gear hub. Second and high engaged by sliding clutch sleeve splined on mainshaft which engages clutch teeth on inside of synchronizing cones on gears.

Synchronizing Unit. Consists of synchronizing drums splined on mainshaft which engage synchronizing cones on gears. Drums actuated by synchronizing yoke pivoted in case. Plunger in dashpot on yoke contacts cam on shifter shaft so that yoke is rocked to engage drum and cones when shifter shaft moved to engage gear (escape of oil from dashpot allows plunger to disengage from cam after synchronization completed, yoke then returned to disengaged position by centralizing springs so that drum drawn out of engagement).

REMOVAL OF TRANSMISSION: *See "Transmission" on car model page.*

SERVICING:—Check synchronizing yoke travel (see Yoke Adjustment below) before dismantling transmission, and note this figure for yoke adjustment

Disassembly. Remove shift lever and cover, backing switch on rear end of case, shifter shaft and fork assemblies, lock balls and springs. Take off front bearing retainer and countershaft front nut (inside clutch housing). Take off universal joint flange nut, remove flange, take out screws and remove rear bearing retainer. Remove synchronizing yoke lock plates and screws (one on each side of case), and centralizing pin (left side). Remove main drive gear bearing nut. Drive countershaft out toward rear. Remove clutch shaft and main drive gear assembly out toward front. Pull mainshaft assembly to rear until bearing clears case, align slots in sliding clutch sleeve and synchronizing yoke, remove front synchronizing drum, yoke, bronze yoke links, sliding clutch sleeve and rear synchronizing drum through top of case. Move shaft forward and remove reverse sliding gear, spline sleeve (on which reverse gear slides) through top of case. Remove mainshaft and low and second speed gear assembly through top of case. Remove counter gear cluster through top of case. To remove reverse idler gear, take out shaft lockscrew on left side of case, drive shaft out toward rear.

Mainshaft Assembly:—Low and second speed gear bearing adjustment controlled by spacer washers on shaft between inner races of bearings in each gear. These spacers furnished .1875", .1885", .1895" thick. Bearing assemblies retained by reverse sliding gear spline sleeve which acts as spacer when universal flange nut is tightened. Install thrust washer on mainshaft front bearing shoulder with taper face toward rear. Shim on mainshaft between reverse sliding gear spline sleeve and rear bearing (these spacers furnished .0725 to .1105" thick in .002" steps) used to control yoke travel in conjunction with spacer between main drive gear and front bearing furnished .222" to .256" thick in .002" steps.

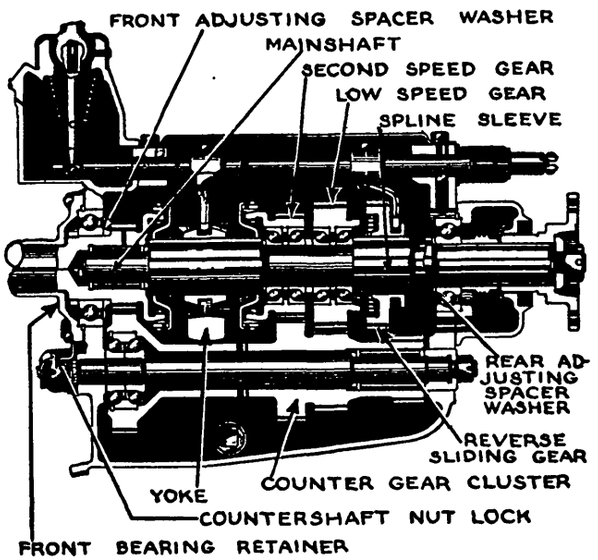

Synchronizing Yoke Assembly:—Install synchronizing yoke bronze links (drum connection) on each side with relieved side up (latest type has word 'Top' cast in link at this point). See that centralizing screw is engaged between springs in yoke.

Yoke Travel & Adjustment. To check yoke travel, set up dial indicator so that finger contacts yoke at point adjacent to centralizing screw and measure yoke travel in either direction from center disengaged position. Shift transmission into second and high and note yoke travel in each case back to center. Should be .140" minimum, .160" maximum. This travel will provide correct clearance of .018" between synchronizing drums and cones. Adjust by adding or removing spacers between reverse sliding gear spline shaft and rear bearing on mainshaft, or between main drive gear and bearing at front of case (see Mainshaft Assembly above). Change of .006" in spacer thickness changes yoke travel .040".

Counter Gear Cluster Assembly:—Backlash at 19 and 29 teeth gears should be .003-.004". Install countershaft with mark 'L' on flat at front end toward reverse idler.

TYPE OF EQUIPMENT

	Page
Bendix Constant-velocity Type	2806
Buick (Own Make)	2807
Chevrolet (Own Make)	2807
Detroit 200 Series	2802
Detroit 4100, 4200, 4400 Series	2802
Detroit 4251 Series	2802
Detroit 4283 Series	2803
Detroit 5150, 5200, 5350 Series	2803
Detroit 7200, 7300 Series	2803
Mechanics 1½R, 2CR, 3CR Types	2804
Mechanics 1½C, 2C, 3C, 4C Roller Bearing Type	2804
Pontiac (Own Make)	2807
Rzeppa Constant-velocity Type	2806
Spicer Needle Bearing Types	2805
Spicer (Ford) Type	2805
Thompson	2806

CAR APPLICATION

	Page
AUBURN	
1936-37	2804
BANTAM	
1937-41	2802
BUICK	
1936-38 All Series	2807
1939 Series 40, 60	2804
1939 Series 80, 90	2807
1940 All Series	2807
1941-42 Series 40, 50 (part)	2805
1941-48 All Series	2807
CADILLAC	
1936-48	2804
CHEVROLET	
1936-48 Passenger Cars	2807
1936-48 Trucks (Own)	2807
1941-48 Trucks (Spicer)	2805
CHRYSLER	
1936 Six	2803
1937-39 Six	2802
1940-48 Six	2803
1936-38 Eight	2803
1938-39 Eight (Imperial)	2802
1939-48 Eight	2803
CROSLEY	
1941-48	2805
DE SOTO	
1936	2803
1937-39	2802
1940 Except 7 Pass. Cars	2802
1940 7 Passenger Cars	2803
1941-42 Except 7 Pass. Cars	2804
1941-42 7 Passenger Cars	2803
1946-48	2803
DODGE	
1936-39 All Models	2802
1940-42 Except 7 Pass. Cars	2802
1940-48 7 Pass. Cars	2803
1946 (Early)	2803
1946-48 (Later)	2802
FORD	
1936-48 Pass. Cars	2805
1949 Passenger Cars	2804
1936-48 Trucks	2805
FRAZER	
1947-48 (Mechanics)	2804
1947-48 (Detroit)	2802
GRAHAM	
1936 All Models	2805
1937 Except Crusader	2802
1937 Crusader Model	2805
1938-39 All Models	2802
1940 Except Hollywood	2802
1940-41 Hollywood Models	2805
HUDSON	
1936-48	2805
HUPMOBILE	
1936-40 Six	2805
1936-39 Eight	2803
JEEP	
1942-45 (Driveshaft)	2805
1942-45 (Front Axle Shaft)	2806
KAISER	
1947-48 (Mechanics)	2804
1947-48 (Detroit)	2802
LA SALLE	
1936-40	2804
LINCOLN	
1936-40, V12	2805
1936-40, Zephyr	2805
1941-49	2805
MERCURY	
1939-48	2805
1949	2804
NASH	
1936-48	2804
NASH-LAFAYETTE	
1936-40	2804
OLDSMOBILE	
1936-48	2804
PACKARD	
1937-40 Six	2804
1941-42 Six except Clippers	2802
1941-42 Six Clippers	2804
1946-48 Six	2804
1935-36 Eight except "120"	2803
1935-37 "120" Eight	2804
1938 "120" Eight	2803
1939-48 Eight	2804
1942 Eight (Detroit)	2802
1935-36 Super Eight	2805
1937-38 Super Eight	2803
1939-48 Super & Cust. Eight	2804
1936 Twelve (Spicer Type)	2805
1936 Twelve (Detroit Type)	2803
1937-39 Twelve	2805
PIERCE ARROW	
1936-38	2803
PLYMOUTH	
1936-39 All Models	2802
1940-42 Except 7 Pass. Cars	2802
1940-48 7 Pass. Cars	2803
1946 (Early)	2803
1946-48 (Later)	2802
PONTIAC	
1936 (Early)	2807
1937-48	2804
STUDEBAKER	
1936 Dictator	2805
1937 Dictator	2806
1939-48 Champion	2805
1938 Commander	2806
1939-48 Commander	2805
1936-42 President	2805
TERRAPLANE	
1936-38	2805
WILLYS	
1936-42 All Models	2802
1946-48 Jeep (Driveshaft)	2805
1946-48 Jeep (Front Axle Shaft)	2806
1946-48 Jeep (Power Take-off)	2802
1946-48 Jeep Sta. Wagon 4-63	2805
1946-48 Jeep Sedan Del. 4-63	2805
1948 Jeep Sta. Sdn. 6-63 (Detroit)	2802
1948 Jeep Sta. Sdn. 6-63 (Spicer)	2805
1948 Jeepster	2805
1947-48 Jeep Truck 2T	2802
1947-48 Jeep Truck 4T (Driveshaft)	2805
1947-48 Jeep Truck 4T (Front Axle)	2806
1947-48 Jeep Tr. 4T (Pwr. Take-off)	2802

DETROIT 200, 4100, 4200, 4400 SERIES

SERIES 200 (PLAIN BUSHING TYPE)

Willys, Model 77 (1936), 37 (1937)
Willys, Pass. Cars Before #88008 (1938)

SERIES 4100 (ROLLER BEARING TYPE)

Bantam, Model 60 (1937-38-39)
Bantam Super Four, Model 65 (1940-41)
Willys, Pass. Cars After #88008 (1938)
Willys, Comm. Models (1938)
Willys-Overland, Model 39 (1939)
Willys, All Pass. Cars & Comm'l (1939-42)
③Willys Jeep, Universal CJ-2A (1946-47-48)
④Willys Jeep, Truck Model 2T (1947-48)
③Willys Jeep, Truck Model 4T (1947-48)
⑥Willys Jeep Sta. Sedan 6-63 (1948) Later Cars

SERIES 4200 (ROLLER BEARING TYPE)

Chrysler 6, Royal Models (1937-38-39)
DeSoto, All Models (1937-38-39)
②DeSoto, Model S7 (1940)—except 7 Pass.
Dodge, All Models (1936 to 1939)
①Dodge, All Models exc. 7 Pass. (1940-42)
①Dodge, Model D24 (Late '46 & 1947-48) exc .7 Pass.
⑤Frazer, All Models (1947-48)
Graham Cavalier, Model 95 (1937).
Graham Supercharger, Models 116, 120 (1937).
Graham, Std. & Spec. Model 96 (1938-39)
Graham, Supercharger Model 97 (1938-39)
Graham, Model 108, Schgr. 107 (1940)
⑤Kaiser, All Models (1947-48)
Plymouth, All Models (1936 to 1939)
①Plymouth, All Models exc. 7 Pass. (1940-42)
①Plymouth, P15 (Late 1946 & 1947-48) exc. 7 Pass.

SERIES 4400 (ROLLER BEARING TYPE)

Chrysler Imperial, Models C19 ('38), C23 ('39)

①—Series 7200 universals used on 7 pass. Sedans.

②—Detroit Series 7200 used on some Coupes and 5 Pass. Sedans and all 7 Passenger Sedans. See Detroit 7200 Series article following.

③—Used on Power Take-off Shaft only. Driveshaft Universals (front & rear) are Spicer Needle Bearing type (see Spicer article for data).

④—Two universals (one-piece shaft) used on first trucks, three universals (front & rear shaft with intermediate bearing) used on later trucks.

⑤—Mechanics 2CR Universals used on some Overdrive equipped cars.

⑥—Serial No. 11494 Up. Spicer Needle Bearing Universals used on earlier cars.

NOTE:—Series 200. Plain bushings are used (not roller Bearing). Service data below applies to these models with exception of data on roller bearings.

Series 4100, 4200, 4400. Roller bearing type. These series same except for size and serviced in same manner.

DESCRIPTION:—Ball and Trunnion type with Roller Bearings. Consists of a body or housing bolted to companion flange which has two parallel ball slides machined on its inner surface. Ball head on shaft has cross pin with ball at each end which engages ball slide in housing. Ball mounted on loose rollers on pin which are retained by centering button at outer end of pin. Ball head centered by spring retained by cover (spring seat and grease retainer) clipped to housing flange. Leather boot on opposite end of housing is clamped to housing and shaft to retain grease.

1941-48 Dodge & Plymouth. These models equipped with a new type rubber boot. See Universal Joint Boot section following.

DISCONNECTING UNIVERSAL:—Take out bolts which mount housing to companion flange. Do not disturb cover clipped to housing flange (cover has notation 'Do not remove cover') unless joint is to be disassembled.

SERVICING:—**Disassembly**—Bend back three lugs only on one side of grease cover, slide cover off sideways, push housing back on shaft, remove centering buttons and balls (CAUTION—do not lose roller bearings out of balls). Wash all parts and inspect for wear. If balls or rollers show wear, replace with complete ball and roller assembly. Check housing, raceways for ball impressions which result in backlash, replace housing if unduly worn. Press out pin in ballhead only if pin or housing is to be replaced. CAUTION—Location of pin in ball head is extremely important to maintain balance. If pin replaced, make certain that it is centered in ball head with not more than .006" difference in pin length on each side of head (check with dial indicator while rotating shaft on vee blocks).

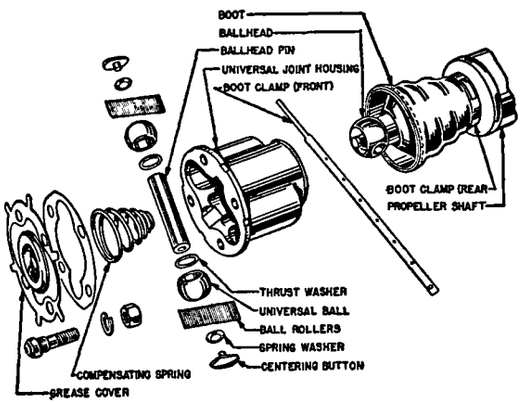

DETROIT BALL-AND-TRUNNION TYPE

Assembling—First slip housing over ballhead, press pin in place being sure that equal amount of pin extends through each side of ball head—THIS IS IMPORTANT. Place 1/16" washers over ends of pin, install ball & roller assemblies, then install centering buttons with 1/64" spring washers next to pin ends. Pull housing forward to hold parts in place. Apply 1¼ ozs. of fibre grease across face of balls. Install conical spring, being certain that small end of spring rests over pilot on end of ballhead, new gasket, and grease cover, bend down lugs on grease cover. IMPORTANT—When connecting universal, use new lockwashers and **tighten nuts holding universal to companion flange securely.**

NOTE—Grease capacity is 1¼ ozs. (4100, 4200), 1½ ozs. (4400).

UNIVERSAL JOINT BOOTS:—Original equipment boot is seamless type secured by a clamp on each end. To remove boot, remove clamps and cut off ld boot (see Notes below for boot design changes on 1937-41 Car Models). Install service boot which is hook-on type and can be installed without removing shaft from car, pressing metal hooks down tight to close longitudinal seam and twisting wires tight on each end.

1937-41 Cars—Universal joints on these car models factory equipped with a boot having a leather cone extending into the housing. When removing outer cover, use care not to disturb this cone, leaving cone in place and installing new hook-on boot over it. If cone is destroyed, install special combination cone and outer boot which is available for service.

1941-48 Dodge & Plymouth Rear Universals. A new synthetic rubber boot (not affected by heat, cold, oil or water) with an inner cone formed at housing end is used in place of leather boot to exclude dirt. Boot is secured by means of a flat steel clamp at each end. NOTE—Rubber boot is of one piece construction and can only be used in service where universal has been disconnected. If boot to be replaced without disconnecting universal joint, use leather hook-on type replacement boot described above.

DETROIT 4251 SERIES

Packard '110' Six, Model 1900 (1941)
Packard Taxicab, Model T1900 (1941), 2030 (1942)
Packard Six, 2000, 2010, 2020 (1942) See Note
Packard Eight, 2001, 2011 (1942)—See Note

NOTE: Mechanics Type 3CR Universal Joints may also be used on these models (and on other Packard 1942 models). See Mechanics Universal article for data on this type.

DESCRIPTION:—Roller bearing type. Transmission end equipped with Series 4200 universal (see preceding article for data). Axle end equipped with Series 5150 universal, consisting of conventional cross with individual bearings on cross trunnions. One pair of bearings is pressed into propeller shaft yoke ends and retained by locking rings on inner face of yoke. Other pair of bearings engage half holes in companion flange and are secured by locking rings on inner face of companion flange. Two bolts pass through two U-shaped clamps and companion flange to secure assembly.

DISCONNECTING UNIVERSAL:—Remove two bolts and U-clamp to free assembly from companion flange, taking care not to drop the two free bearings. CAUTION—On Packard models, rear universal flange nut controls rear axle pinion shaft bearings pre-load. Refer to Packard Rear Axle article in the Rear Axle Section for complete data.

SERVICING:—**Disassembly**—With U-clamp removed, one pair of bearings will slide off cross trunnion, locking rings remain permanently on these two bearings. Press out other two bearings after removing locking rings.

Servicing—Thoroughly clean all parts. Examine for wear and replace worn or damaged parts. Clean out lubricant holes in ends of cross trunnion, repack holes and bearings with approved lubricant.

Assembling—Reverse disassembling directions as given above.

DETROIT 4283 SERIES

Dodge, Model D24 (Early 1946) exc. 7 Pass.
Plymouth, Model P15 (Early 1946) exc. 7 Pass.

NOTE: Dodge & Plymouth Late 1946 Cars—Detroit Series 4200 Ball-and-Trunnion Universal Joints used on these models. See separate article for data.

DESCRIPTION: Roller bearing type. This assembly consists of different type universal joints at front and rear of propeller shaft as follows:

Front Universal—Detroit Series 4200 Ball-and-Trunnion type. See preceding article for description and service data on this type.

Rear Universal—Special "cross" type consisting of conventional cross with individual bearing assemblies (needle roller bearings, dust shield, seal and washer) assembled in rounded bearing cup on each leg of cross. These bearing cups fit into slots in ends of "U" shaped flange or yoke and are retained by individual caps mounted on yoke by two capscrews.

DISCONNECTING UNIVERSAL: Take out retaining screws in rear universal rear yoke, free cross and bearing assembly from rear yoke. CAUTION—Do not allow bearing cups to slip off cross (loose bearing rollers will drop out).

SERVICING (FRONT UNIVERSAL): See separate article on Detroit Series 4200 Ball-and-Trunnion type for complete data.

SERVICING (REAR UNIVERSAL): Disassembly—Remove retaining screws in universal yokes, free cross and bearing assembly from yokes. Remove bearing cup, bearing rollers, washer, seal, and dust shield from each leg of the cross.

Servicing—Thoroughly clean all parts, examine for wear, replace all worn parts. Clean out inner lubrication port holes in cross (blow out with air).

Reassembly—Apply thin film of heavy short-fibre grease to bearing rollers, pack lubrication port holes in cross with same grease (remove all excess). Place dust shield on cross, install new seal, install thrust washer (tapered side first), install bearing roller and cup assemblies. Use new ball retaining caps when installing universal joint.

CAUTION—If necessary to re-use old retaining caps when re-installing universal joint, caps should be re-installed in same position as removed in order to insure proper fitting of parts. It is recommended that new caps be used.

DETROIT 7200, 7300 SERIES

SERIES 7200

②**Chrysler 6, All Models (1940 to 1948)**
①**DeSoto, Model S7 Some Cars, All 7 Pass. (1940)**
③**De Soto, 7 Pass. Models Only (1941-42)**
②**De Soto, All Models (1946-47-48)**
③**Dodge, All 7 Pass. Models (1940 to 1948)**
③**Plymouth, All 7 Pass. Models (1940 to 1948)**

SERIES 7300

Chrysler 8, All Models (1940 to 1948)

①—Detroit Series 4200 used on some Coupe and 5 Passenger Sedans. See preceding article.

②—Two universal joints used on Std. Models, three universals (with center bearing) used on 7 Passenger Models only.

③—Three universals used (intermediate universal at center bearing on frame cross member).

DESCRIPTION:—Cross and roller bearing type with conventional cross and individual bearings on cross ends. Bearings consist of loose rollers held in place in bearing cups (propeller shaft yoke ends) and bearing blocks (companion flange ends) by retainer at open (inner) end. Bearing cups assembled directly in holes in ends of propeller shaft yoke and are retained by locking ring on inner face of yoke which engages recess in bearing cup. 2 bearing blocks (one for each end) attached to companion flange by screws and are retained by tie spring clipped to bearing block retainer assembled in groove at open (inner) end of each bearing block (spring prevents bearing blocks dropping off cross when attaching screws removed). Dust seal and seal retainer assembled between bearing cups (and blocks) and shoulder on cross to retain lubricant.

DISCONNECTING UNIVERSAL:—Bearing blocks attached to companion flange by screws. Take out screws and lockwashers in blocks to free shaft.

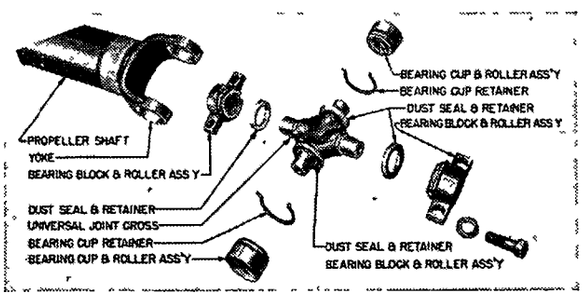

DETROIT "CROSS" TYPE

SERVICING:—**Disassembly**—Remove tie spring holding bearing blocks on cross. Remove bearing blocks, dust seals and retainers. Take out locking rings from bearing cups in yoke. Tap on outer end of one bearing cup to start opposite cup out, withdraw bearing cup, tap on end of cross to start opposite bearing cup. Remove dust seals and retainers.

Servicing—Thoroughly clean all parts. Examine for wear and replace all worn or damaged parts. Clean out lubricant holes in cross, repack entire assembly with correct type lubricant.

Assembling—Use new dust seals. Reverse disassembly data above. When shaft installed, arrow on shaft and yoke must be in alignment.

DETROIT 5150, 5200, 5350 SERIES

SERIES 5150

Chrysler Six, Model C7 (1936)
Chrysler Airstream Eight, Model C8 (1936)
Chrysler Airflow, Model C9 (1936)
Chrysler Imperial, Model C14 (1937)
Chrysler Imperial, C23 (1939) Later O. D. Cars
DeSoto, S1 Airstream, S2 Airflow (1936)
Hupmobile Eight, Model 621-N (1936)
Hupmobile Eight, 825-H ('38), 925-H ('39)
Packard Eight, Models 1601, 1A, 2 (1938)

SERIES 5200

See Note for description of this type.

SERIES 5350

Chrysler Imperial, Model C10 (1936)
Chrysler Cust. Imp. C11 ('36), C15 ('37)
Chrysler Airflow, Model C17 (1937)
Chrysler Cust. Imperial, C20 ('38), C24 ('39)
Packard Eight, 1200,1,2 ('35), 1400, 1,2 ('36)
Packard Super Eight, 1500, 1, 2 (1937)
Packard Super Eight, 1603, 4, 5 (1938)
Packard Twelve, Models 1407, 8 (1936)
Pierce Arrow Eight, All Models (1936-37-38)
Pierce Arrow Twelve, All Models (1936-37-38)

NOTE:—Series 5200 Universal Joint. This Universal consists of a Roller Bearing Assembly retained by a dovetail lockbar assembled on each yoke end. Joint is disassembled by driving out the lock bars. Service data given below applies to these models with exception of data on locking rings which should be disregarded.

DESCRIPTION:—Roller bearing type. Universal has conventional cross with individual bearings on cross ends. Bearings consist of loose rollers held in place in bearing cup by retainer at pen (inner) end. Bearing cups assembled directly in holes in ends of yokes and are retained by locking ring on inner face of yoke which engages recess in bearing cup. Cork washer and dustcap installed between bearing cup and shoulder on cross to retain lubricant.

DISCONNECTING UNIVERSAL:—End yoke flange is bolted to companion flange. Take out bolts in flange to free shaft and universals.

SERVICING:—**Disassembly**—Take ut locking rings from opposite bearing cups. Tap on outer end of one bearing cup to start opposite cup out, withdraw bearing cup, tap on end of cross to start opposite bearing cup. Remove dustcap and cork gasket.

Servicing—Thoroughly clean all parts. Examine for wear and replace all worn r damaged parts. Clean out lubricant holes in cross, repack entire assembly with correct type lubricant.

Assembling—Use new cork gasket. Reverse disassembling directions above.

NOTE—When installing shaft, see that arrows on shaft and universal yoke at splined j int are lined up.

MECHANICS 1½C, 2C, 3C, 4C

TYPE 1½C

①Cadillac V8, 70, 75 ('36); 75 ('37-38-39-40)
①Cadillac V12, 80, 85 ('36); 85 ('37)
①Cadillac V16, Series 90 (1938-39-40)

TYPE 2C

Buick, Series 40, 60 (1939)—SEE NOTE
Nash Ambass. 6, All Models (1937 to 1940)
②Nash Ambass. 8, Model 3780 (1937)
Nash-Lafayette, All Models (1937 to 1940)
Oldsmobile 6 & 8, All Models (1936 to 1940)
③Oldsmobile 6 & 8, All Models (1941 to 1947)
Packard Six, 115C ('37), 1600 ('38), 1700 ('39)
Packard '110' 6, 1800 (1940)—Without Overdrive
①Pierce Arrow 12, Models 1602, 3 (1936)
Pontiac 6 & 8, All Models (1937 to 1940)
③Pontiac 6 & 8, All Models (1941 to 1947)

TYPE 3C

Auburn Six, Model 654 (1936-37)
Auburn Eight & Schgd. 852 (1936-37)
Cadillac V8, All Series (1936 to 1948)
Cadillac V12, All Series (1936-37)
Cadillac V16, All Series (1938-39-40)
La Salle, All Series (1936 to 1940)
Nash Ambass. 6, Model 3620 (1936)
Nash "400" 6, Models 3640, 3640A (1936)
Nash Ambass. 8, All Models (1936 to 1940)
Nash-Lafayette, Model 3610 (1936)
Packard 6, 1700 ('39), 1800 ('40) Overdrive Cars
Packard "120" 8, All Models (1936 to 1940)
Packard Super 8, 1703,3A,5 (1939)
Packard '160' 1803,3A,4,5; '180' 1806,7,8 (1940)
④Packard Eight & Super 8, 1901A,3A,5,8 (1941)

TYPE 4C

Cadillac V16, All Series (1936-37)

①—Steering column joint.
②—One 2C and one 3C joint used.
③—Mechanics Type 2CR used on some cars.
④—Used on front shaft only, Type 3CR on rear.

NOTE:—Buick Series 40, 60 (1939)—Universal joint on these models is enclosed in a frame mounted Torque Ball. Rear Axle and Torque Tube Assembly (including Front Torque Tube and Front Propeller Shaft) must be removed from car for access to universal j int (refer to 1939 Buick car model pages for Rear Axle Removal—Note instruction for disconnecting Torque Ball from frame without disturbing Rear Axle and Engine Alignment). With assembly removed from car, disconnect front torque tube from torque ball, disconnect front propeller shaft at universal joint, remove screw securing universal to rear shaft, remove universal.

DESCRIPTION:—Roller bearing type. Universal has conventional cross with individual trunnion bearings on cross ends. Two types of trunnion bearings used: 1) Wing Type bolted to yokes or flanges by capscrew in each trunnion boss, 2) Round Type fitting directly in hole in yoke ends and retained by bushing plate clamped on bearing hole by capscrew. Trunnion bearings are cup-shaped and retain loose rollers which must be assembled before trunnion bearing installed on cross. Cork packing washers used between trunnion bearing and shoulder on cross to retain lubricant.

DISCONNECTING UNIVERSAL:—Turn down locks and take out two capscrews in pposite trunnion bearings on companion flange, wire trunnions together to prevent them coming off ends of cross (unless joint is to be disassembled), tap trunnions lightly with soft hammer to disengage drive lugs (lugs on trunnion bearing engage slot in flange and flange end is turned up to retain trunnions). NOTE—This data applies to Wing type trunnion bearings only. Wing type trunnion bearings used at rear universal only on Oldsmobile & Pontiac and shaft can be removed on these cars by disconnecting rear universal and pulling shaft free of slip joint at transmission. See Disassembly directions below for servicing Round Type trunnions.

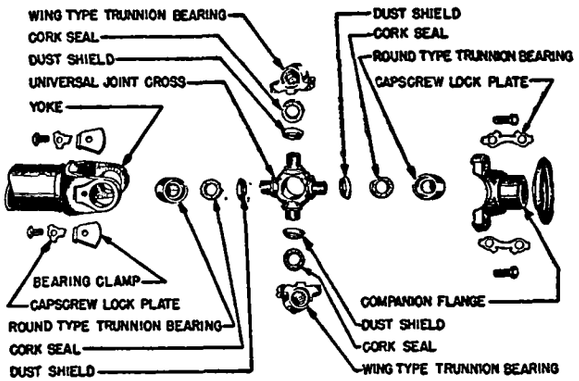

MECHANICS "WING" & "ROUND" TYPE

SERVICING:—Disassembly—Wing type trunnion bearings may be pulled directly off universal joint cross after mounting capscrews have been removed (d not lose loose rollers in bearing). To remove Round type trunnion bearings, shaft must be removed to the bench. Clamp yoke or drive shaft tube (at weld) in vise, take out screws and remove bearing end plates (both sides). Use flat end drift slightly smaller in diameter than bearing, drive on outer end of one bearing, driving bearing in until shoulder on cross strikes inside of yoke lug. This will start opposite bearing out. Grip this bearing in vise (use brass or copper jaws) work shaft back and forth until bearing comes out. Drive other bearing out in same manner (using drift against end of cross).

Servicing—Wash all parts in gasoline. Clean out lubricant passage in cross. Replace worn parts (examine cross journal, trunnion bearing and rollers for wear), repack all space with semi-fluid chassis lubricant or SAE. #160 oil.

Assembling—Use new cork seal or packing washers. Reverse disassembling directions above. When installing Round type bearings, tap bearings in place or if arbor press used, see that pressure is not great enough to spring yoke ends. On Wing type bearings, use new lock plate and see that ears on lock plate turned up against capscrews after screws are securely tightened.

MECHANICS 1½R, 2CR, 3CR

TYPE 1½R

Nash "600", All Series (1941 to 1948)

TYPE 2CR

DeSoto, All Models except 7 Pass. (1941-42)
Ford 6, Model 8HA Pass. Cars (1949)
Ford V8, Model 8BA Pass. Cars (1949)
Mercury, Model 9CM (1949)
Frazer, All Models (1947-48)—Some Cars
Kaiser, All Models (1947-48)—Some Cars
Nash Ambass. 6, All Models (1941 to 1948)
Nash Ambass. 8, Model 4280 (1942)
①Oldsmobile 6 & 8, All Models (1941 to 1948)
①Pontiac 6 & 8, All Models (1941 to 1948)

TYPE 3CR

Nash, Ambassador Eight, Model 4180 (1941)
Packard Clipper, Model 1951 (1941)
Packard Clipper 6, Models 2000, 10 (1942)
Packard Clipper 6, Models 2100, 30 (1946-47)
Packard '120' 8, Model 1901 ('41), 2021 ('42)
Packard Clipper 8, Models 2001, 11, 21 (1942)
Packard Clipper 8, Models 2101, 11 (1946-47)
②Packard Clipper 8, Models 2201, 11 (1948)
Packard Comm'l., 1901A, 3A ('41), 2001A, 3A ('42)
Packard Super 8, Models 1903, 4, 5 (1941)
Packard Super 8, Models 2003, 23, 4, 5, 55 (1942)
Packard Super 8, Models 2103, 2123 (1946-47)
②Packard Super 8, Models 2202, 22, 32 (1948)
Packard Custom Super 8, Models 1906, 7, 8 (1941)
Packard Custom Super 8, Models 2006, 7, 8 (1942)
Packard Custom Super 8, 2106, 2126 (1946-47)
②Packard Cust. Super 8, 2206, 26, 33 (1948)

①—Mechanics Type 2C also used on some cars.
②—Mechanics Type 3C used at front end on long wheelbase cars (with three universals).

DESCRIPTION:—Roller bearing type with conventional cross and individual trunnion bearings fitted on cross ends. Two types of trunnion bearings used: 1) Wing or Flanged type secured to fitting yokes by two capscrews, 2) Round type fitted into bore in yoke arms and retained by snap ring fitted in groove on bearing on inner side of yoke arms.

DISCONNECTING UNIVERSAL:—Remove four capscrews securing wing type bearings to companion flange at each end of shaft (wire bearings to prevent them falling off) and remove shaft (NOTE—On cars with flange type bearings at rear only, pull shaft free of slip joint at transmission. NOTE—On Nash '600' rear axle assembly must be removed to expose universal.

SERVICING:—Disassembly—Clamp propeller shaft in vise and remove flange type bearings. To remove Round type bearings, use punch and drive out snap rings on all bearings, place cross on vise and strike yoke with hammer until bearing protrudes, repeat operation for opposite bearing, clamp protruding end of bearing in vise and strike yoke with hammer to free yoke from bearings, repeat operation until all bearings removed. Remove cross from yoke.

Servicing—If parts show signs of wear, replace with a new cross and four complete bearing assemblies. Care should be taken that no dirt gets into bearings before joint assembled.

Assembling—Use new cork seals on each trunnion (check bearings for lubricant). Install bearing in one yoke with open end flush with insid of yoke fork, insert cross and assemble bearing in opposite yoke, rest assembly n ne bearing and drive n opposite bearing until both bearings approximately flush with utside of yoke, insert snap rings on inner end of each bearing, strike end bearing with hammer to centralize assembly on yoke.

SPICER (FORD) TYPES

Ford, All Pass. Car & Comm'l (1936 to 1948)
Ford Trucks, All Models (1936 to 1939)
Lincoln V12, All Models (1936 to 1940)
Lincoln Zephyr, All Models (1936 to 1940)
Lincoln, Zephyr, Cont'l & Cust. (1940 to 1948)
Mercury, All Models (1939 to 1948)

NOTE:—These models have Torque Tube Drive with a single universal within a ball housing at the rear of the transmission case. Ball housing flange mounting screws must be taken out and axle assembly pulled back to expose universal.

Ford Truck Models (1935-39). These models have additional universal mounted at intermediate bearing on frame cross-member. Both universals are needle bearing type (see Needle Bearing Service Note below).

NOTE—Rear yoke of front universal integral with a companion flange which is bolted to flange on splined sleeve which engages front propeller shaft. After cover screws are taken out and cover pushed back on shaft, screws can be taken out of companion flange and splined sleeve pushed back on shaft (against spring tension) to disconnect front driveshaft. This will allow transmission to be removed without disturbing intermediate universal joint or rear propeller shaft.

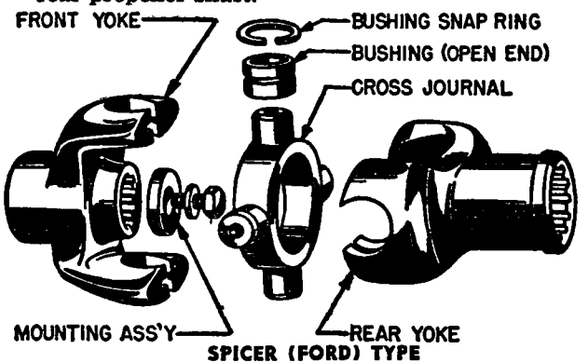

SPICER (FORD) TYPE

Ford Truck Models (1940-48). Hotchkiss drive is used. These trucks are equipped with Spicer Needle Bearing type universals. See Spicer Needle Bearing universal joint article (following) for complete data.

Lincoln Models (1938-48). Universal joint is needle bearing type. See Needle Bearing Service Note below for data on this universal joint.

Lincoln Models (1949). Hotchkiss drive is used and universal joints are Spicer Needle Bearing type. See Spicer Needle Bearing Universal Joint article (following) for data on this type.

DESCRIPTION:—Universal has conventional cross or spider. Special bearing bushings are installed individually in ends of yokes on cross journals. Bushings are retained in yokes by locking rings (yokes are open end type and locking rings are inserted in yoke ends to engage recess in bushing and yoke).

Needle Bearing Types. These types have loose needle bearings assembled in retainer cup or bushing which is retained in yoke end by locking ring in same manner as bushing on hardened-bushing types. Serviced in same manner except that loose needle bearings will fall out of retainer cup when removed and care must be taken not to lose them.

REMOVAL:—Rear axle ordinarily removed by pulling drive shaft out f splined joint at rear of universal after ball housing flange bolts have been taken out (rear universal yoke integral with stub splined shaft, front yoke bolted directly on end of transmission main shaft). Universal can be disassembled or removed by taking out mounting bolt in front yoke (accesible through hole in cross).

SERVICING:—Disassembly—Remove locking ring from each yoke bushing. Drive out bushings with flat nosed punch inserted from opposite side of yoke being careful to keep bushing lined up with cross journal so that bearing surface will not be marred.

NOTE—On needle bearing types take care not to loose needle bearings which will fall out of bearing retainers or bushing when removed from cross journal. Pack needle bearings with grease before installing.

Assembly—Tap bushings in place with soft nosed hammer being careful to keep bushings lined up with cross journal to avoid marring cross journals. Line up locking ring groove in yoke and bushing, install locking rings. If universal front yoke has been removed, see that transmission rear bearing is against shoulder on shaft and that yoke shoulder is against bearing. Tighten mounting screw securely and see that washer under screw head is seated in counterbore in yoke. When correctly assembled, transmission main shaft should have no endplay.

NOTE—Universal is not oiled from transmission case and should be lubricated with special universal lubricant after assembly completed.

SPICER NEEDLE BEARING TYPES

Buick, Series 40, 50 (1941-48)—See Note
Chevrolet Trucks, ¾, 1, 1½, 2 Ton (1941-48)
Chevrolet C-O-E Trucks, All (1940-48)—See Note
Crosley, All Models (1941 to 1948)—See Note
Ford Trucks, All Models (1940 to 1948)
Graham Crusader, 80, 80A (1936), 85 (1937)
Graham Cavalier, 90, 90A (1936)
Graham Supercharger 110 (1936)
Graham Hollywood, 109, 113 (1940-41)
Hudson 6 & 8, All Models (1936 to 1948)
Hupmobile Six, All Models (1936 to 1940)
①Jeep, Ford & Willys Army Model (1942-45)
Lincoln & Cosmopolitan, 9EL & 9EH (1949)
Packard Super 8, All Models (1936)
Packard Twelve, All Models (1936 to 1939)
Studebaker Dictator, Model 3A, 4A (1936)
Studebaker Champion, All Models (1939 to 1948)
Studebaker Commander, All Models (1939 to 1948)
Studebaker President, All Models (1936 to 1942)
Terraplane, All Models (1936-37-38)
①Willys Jeep, Universal CJ-2A (1946-47-48)
Willys Jeep, Sta. Wgn. & Sed. Del. 4-63 (1946-47-48)
Willys Jeepster, Model VJ-2 (1948)
②Willys Jeep, Station Sedan 6-63 (1948) First Cars
①Willys Jeep Truck, Model 4T (1947-48)

①—Spicer Universals used on both Front and Rear Driveshafts (four-wheel drive).

②—Before Serial No. 11494. Detroit Series 4100 Universals used on later cars.

NOTE:—Buick—Spicer Model 202-5, Spicer Model 202-13 or Buick Type are used on these models. Refer to Buick Type Universal Joint article (following) for service data on all of these types.

1940 Chevrolet WC School Bus—Spicer universal used on front shaft only. Chevrolet type used on rear shaft. See Chevrolet Type universal article following for data on rear universal.

Chevrolet 1941-48 Truck Models. Hotchkiss Drive is used with Spicer needle bearing type universals at front and rear ends of propeller shafts and additional universal (with spline joint) at intermediate support bearing on frame. See Chevrolet Shop Notes in Car Model Section for complete data on Support Bearing.

Chevrolet 1941-48 ¾ Ton Truck Models. A Chevrolet type Universal Joint is used at transmission end of propeller shaft. Spicer Universals are used at front and rear ends of rear propeller shaft. Refer to separate article on Chevrolet Type Universal Joint for data on front Universal.

Chevrolet Cab-Over-Engine 109" WB. Trucks—No intermediate universal joint used on this model (single propeller shaft with Spicer needle bearing type universal at each end).)

Crosley—Spicer #102 conventional universal joint used with Spicer #98-1182-X torque tube assembly. Universal is enclosed in ball housing secured to adapter at rear of transmission. Universal is plain bushing type (not needle bearing).

Ford 1940-48 Trucks. All models have Hotchkiss Drive with an intermediate Universal Joint on the frame on long wheelbase models only.

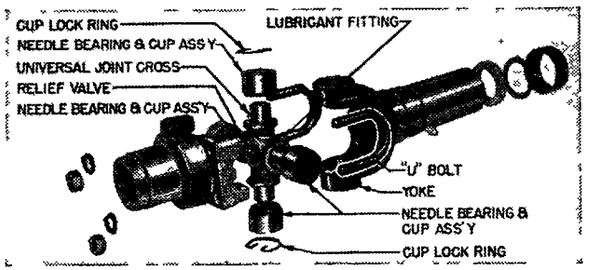

SPICER "CROSS" NEEDLE BEARIN TYPE

1948 Hudson Models. Two propeller shafts used with intermediate Universal Joint and support bearing on frame cross-member.

1940 Studebaker Champion—On cars with standard transmission (no overdrive) a one piece propeller shaft is used with slip joint formed ahead of front universal.

1941-46 Studebaker Models—All models are equipped with a one-piece propeller shaft which has a slip joint formed ahead of the front universal (front universal yoke shaft slides on splines of transmission tail shaft).

1947-48 Studebaker Models. All models have two propeller shafts (front and rear shafts) with additional universal at support bearing on frame cross-member. See Studebaker Shop Notes in Car Model Section for complete data on Propeller Shafts and Support Bearing.

DESCRIPTION:—Needle bearing type. Universal has conventional cross or spider with individual bearings on cross ends. Bearings consist f loose needle rollers held in place in bearing cup by retainer and assembled with cork gasket and dustcap between bearing cup and shoulder on cross to retain lubricant. Bearing cups fit directly in holes in yoke ends and are retained by locking ring in yoke at outer end or by bearing cap held in place on yoke end over

CONTINUED ON NEXT PAGE

SPICER NEEDLE BEARING (C nt.)

bearing cup by two capscrews. On some models, bearing cups are bolted directly to trunnions on companion flange by 'U' bolt passing completely through flange with nuts on opposite side.

DISCONNECTING UNIVERSAL:—Take out bolts in companion flange or remove nuts on U bolts mounting bearing cups on flange and remove U bolts. When disconnecting this type see that bearing cups do not fall off universal cross.

SERVICING:—**Disassembly**—Remove locking rings or take out capscrews and remove bearing cups. Tap or press on outer end of one bearing cup until cup on opposite side has been forced out of yoke end. Turn universal joint over and press first bearing cup out (applying pressure on exposed end of universal cross). Bearing cups are light press fit in yoke lugs.

Servicing—Wash all parts in gasoline. Clean out lubricant holes in cross. Examine all parts for wear.

Assembly—Place cross in yoke, install needle rollers in bearing cups, assemble retainer, new cork gasket, and dustcap, pack bearing cup and lubricant passage in cross with SAE. #160 oil, insert bearing cup in yoke end on cross. Use special clamp to press bearing cups in and compress sufficiently so that locking rings can be installed. See that locking rings are firmly seated in recess in yoke. On types using bearing caps, use new lock plate under screw heads, turn up lock tang against capscrew after screws have been securely tightened. On U bolt types, see that lockwashers installed under nuts.

NOTE—When shaft installed, arrows on shaft and yoke at slip joint must line up.

THOMPSON

Studebaker Dictator, Models 5A, 6A (1937).
Studebaker Six, Commander, State Commander, Models 7A, 8A (1938)

DESCRIPTION:—Rubber bushed type. Assembly consists of four rubber spools compressed within a steel cage which is riveted together. Steel bushings inset in the rubber spools serve as guides for yoke bolts. Shaft yoke and end yoke are bolted rigidly to these steel trunnions or spool bushings by bolts which pass entirely through assembly (head on universal cage side, nut on yoke side). No splined or slip joint used and shaft tube welded directly to yokes at both ends.

DISCONNECTING UNIVERSALS:—Remove nuts on bolts in end yokes (if universals to be removed with shaft), or on shaft yokes (to remove shaft only), push bolts out. Do not attempt to remove steel bushings.

SERVICING:—Universal joint cannot be disassembled and no service work is required.

INSTALLING DRIVE SHAFT:—One leg of shaft yoke at each end of drive shaft marked by punch marks (single mark at front end, double mark at rear end). Shoulder of one steel bushing in front and rear universals similarly marked. When installing shaft see that these punch marks are lined up. See that lockwashers are installed under bolt nuts and tighten bolts securely.

BENDIX CONSTANT-VELOCITY

Jeep, Ford & Willys Army Model (1942-45)
Willys Jeep, Universal CJ-2A (1946-47-48)
Willys Jeep Truck, Model 4T (1947-48)

NOTE: This "constant velocity" universal joint used only on front axle shafts (at each front wheel). Propeller shaft (front & rear) universals are Spicer needle bearing type. See separate article for data on Spicer universals.

Rzeppa Universals—Rzeppa constant velocity universals used instead of Bendix on some cars. See separate Rzeppa universal article.

TYPE: Constant velocity type. Consists of "U" shaped yokes on ends of inner and outer axle shafts with ball raceways formed in sides of yokes. Torque is transmitted from one yoke to the other through four balls (one in each raceway) which are positioned by center ball pinned in end of outer axle shaft.

SERVICING: With axle shaft assembly removed from housing, service universal as follows:

Disassembly: Drive out retainer pin locking center ball pin in outer axle shaft (pin located within shaft end yoke—use pin punch). Strike outer end of axle shaft on block of wood to cause center ball

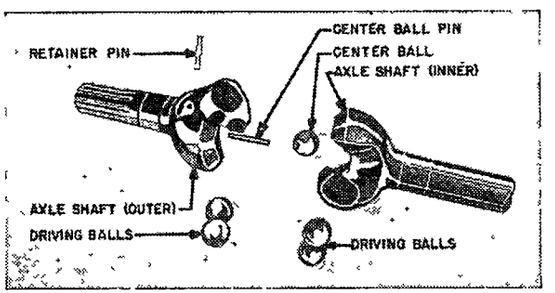

BENDIX CONSTANT-VELOCITY TYPE

pin to move into recess in shaft and free center ball. Pull halves of joint apart as far as possible and bend shafts at sharp angle. Rotate center ball until grooved side lines up with one of the ball raceways, move adjacent ball past center ball and remove from joint. Remaining balls (including center ball) will then drop out.

Inspection & Servicing: Inspect raceways for wear, replace complete axle shaft and universal assembly if badly worn. Inspect center ball pin for wear, inspect all balls, replace balls if rough, grooved or with flat spots. CAUTION—If one or more balls being replaced, measure old ball with micrometer and replace with ball of exact same size unless larger balls needed to take up play. See Ball Service note following Reassembly (below).

Reassembly: If original balls not being re-used, see Ball Servicing Note below for selection of correct size balls. Clamp inner axle shaft in vise with universal yoke upward, place center ball in socket in end of shaft with groove and pin turned to one side. Drop center ball pin in recess in end of outer (wheel end) axle shaft, position this shaft on center ball, insert balls in three raceways. Bend shafts at sharp angle, turn center ball until groove lines up with fourth raceway, insert ball. Straighten shafts, turn center ball to align hole with center ball pin, install retainer pin, prick punch ends of pin to hold it in place securely. CAUTION—always use new retainer pin.

Ball Servicing Note: Standard balls are .875" in diameter. If universal worn so that play evident, and raceways are in good condition, one or two larger balls (preferably .001", not more than .002" larger) may be used to take up play. Measure old ball with micrometer (std. diameter .875"). Balls are furnished in .001" steps from .003" undersize to .003" oversize. If all balls not same size, install larger balls diametrically opposite each other. CAUTION—all balls used must be within .001" of same size and total variation should not exceed .002".

INSTALLATION: When axle shafts installed in car, correct shim pack must be installed under wheel driving flange on outer end of axle shaft to provide universal joint clearance. See Front Axle Shaft Endplay Adjustment on car model pages for instructions.

RZEPPA CONSTANT-VELOCITY

Jeep, Ford & Willys Army Model (1942-45)
Willys Jeep, Universal CJ-2A (1946-47-48)
Willys Jeep Truck, Model 4T (1947-48)

NOTE: This "constant velocity" universal joint used only on front axle shafts (at each front wheel). Propeller shaft (front & rear) universals are Spicer needle bearing type. See separate article for data on Spicer universals.

Bendix Universals—Bendix constant velocity universals used instead of Rzeppa on some cars. See separate Bendix universal article.

TYPE: Constant velocity type. Consists of inner race splined on end of inner axle shaft and outer race integral with outer axle shaft. Both races have axial raceways and torque is transmitted from one shaft to the other through six balls installed in these raceways. A cage is used to position the balls.

SERVICING: With axle shaft assembly removed from housing, service universal as follows:

Disassembly: Remove three screws retaining inner axle shaft in universal inner race, pull shaft out (retainer can be removed from shaft by taking out retainer ring on shaft). Lift out axle centering pin. Manipulate inner race and cage until all six balls have been taken out. Rotate inner race and cage assembly until pilot cup is exposed, lift pilot cup out. Turn cage until two of the bosses on outer race drop into elongated holes in cage, lift cage and inner race out. Remove inner race by rotating it until one boss drops into one of the elongated holes in the cage, shift race to one side and lift it out.

Inspection & Servicing: Inspect all parts for wear. Replace balls if rough, chipped, or with flat spots.

Reassembly: Reverse disassembly directions given above. Do not force parts into place which may cause damage.

INSTALLATION: When axle shafts installed in car, install .060" shim pack (Willys Jeep) under wheel driving flange on outer end of axle shaft to provide correct clearance for universal joint.

BUICK (OWN MAKE)

Buick, All Series (1936 to 1938)
Buick, Series 80, 90 (1939)—See 40, 60 Note
Buick, All Series (1940 to 1948)

NOTE:—These models have Torque Tube drive and have a single universal within a ball housing at the rear of the transmission. Universal can be exposed by taking out ball housing flange bolts and sliding ball housing back on shaft.

Buick 40, 60 (1939). These models equipped with Mechanics Model 2C needle bearing type universal. See Mechanics Universal article for data.

Spicer Universal Joints. Used on some Buick cars. Design similar to Buick type and all service data below applies to these universal joints also.

Buick 1938-39 Models. Universals have new type lubricating feed consisting of slot in bearing retainer below transmission rear main bearing (40), shelf in transmission case which collects lubricant and feeds to universal through drilled hole in bearing retainer (60, 80, 90) with larger drain holes to allow surplus lubricant to drain back to transmission case and oil groove and return hole in rear yoke bushing (this bushing installed in rear end of ball housing). This new type ball and bushing assembly may be installed on previous car models. Ball is marked "TOP" to insure correct installation.

Buick 1940-48 Models. Universals have new type lubricating feed consisting of drilled hole in top of rear bearing retainer (40, 50), by a groove in top of Low-Reverse shift rail through drilled hole in retainer (60, 70, 80, 90) with large drain holes to allow surplus lubricant to drain back to transmission case. On Series 60, 70 (1940-42) and on All Series (1946 on) leather oil seal is assembled at rear of yoke bushing (installed in rear end of ball housing). On Series 80, 90, this yoke bushing grooved allowing oil to pass through to lubricate bearing at steady rest and an oil seal is installed to rear of this bearing. Ball carries mark "TOP" for correct installation.

DESCRIPTION:—Conventional cross type with hardened bushings on cross ends retained in holes in yokes by dowel pins or retainer rings.

DISCONNECTING UNIVERSALS:—Rear yoke is integral with stub (splined) shaft and front yoke is bolted directly on rear end of transmission main shaft (speedometer drive gear is cut on yoke shoulder and speedometer drive must be disassembled before yoke is removed). Rear axle should be removed by taking out bolts in torque tube flange at rear end of ball housing and pulling shaft out of stub shaft. If universal is to be removed, special wrench can be inserted through opening in splined shaft and mounting screw removed from front yoke, or universal can be dismounted.

SERVICING:—**Disassembly** — Remove dowel pins or snap rings to free yoke bushings. Drive out bushings from inner side with flat nosed punch.

Buick '34-39 Specifications. Clearance between cross journals and bushings should be .002-.005" (40), .0025-.004" (60, 80, 90). Bushing clearance in yoke should be .004-.006". Backlash r clearance of drive shaft splines in splineways in universal rear yoke should be .001-.004" (40), .0015-.004" (60, 80, 90).

Buick 1940-48 Specifications. Clearance of the cross journals and bushings should be .002-.004". Bushing clearance in yoke should be .004"-.006". Backlash or clearance of driveshaft splines in splineways in universal rear yoke should be .0005-.0045".

Assembly—Tap bushings in place with soft nosed hammer, being careful to keep bushings lined up so that bearing surface on cross journals is not marred. Install dowel pins or snap rings.

UNIVERSAL BALL HOUSING:—Cork oil seal used at rear end of outer retainer. Inner and outer retainers and universal ball are plated. To correct oil leaks past oil seal, disconnect rear axle, remove cork oil seal, adjust ball housing by removing shims from between inner and outer retainer until joint can be moved by hand at outer end (if bar must be used, housing is too tight), re-install cork seal.

Buick Note (1937 On). Oil seal (at rear end of outer universal ball retainer) used on these models consists of a Duprene rubber bonded cork oil seal with a Belleville type spring washer installed behind oil seal.

CHEVROLET & PONTIAC (OWN MAKE)

Chevrolet, All Pass. Car Models (1936 to 1939)
Chevrolet Truck, Half-Ton Models (1936 to 1939)
Pontiac 6 & 8, All Models (1936)

NOTE:—These models have Torque Tube Drive with a single Universal within a ball housing at the rear of the transmission. Universal can be exposed by taking out ball housing flange bolts and sliding ball housing back on shaft.

Chevrolet (Standard Model FC)—Riveted type assembly used but design changed over earlier models by addition of bronze bushing installed in

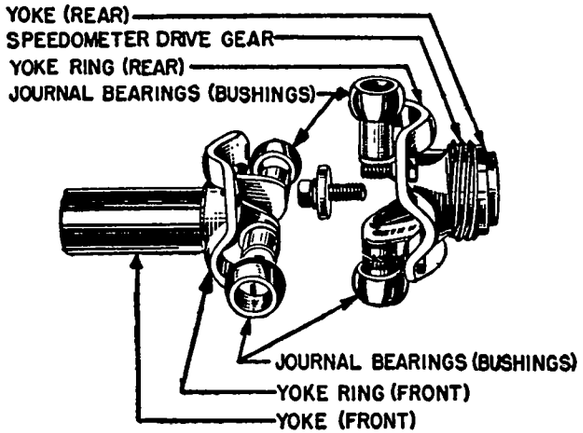

CHEVROLET CLAMP RING TYPE

front end of propeller shaft housing in which the rear yoke of the universal joint is guided. Rear yoke neck is ground full length (earlier type not ground) and only a 1936 type universal can be installed on this model.

Pontiac (1937 & Later Models)—Mechanics 3C or 3CR Types used. Refer to Mechanics articles (preceding) for data on these universal joints.

DESCRIPTION:—No cross used. Bearing journals formed directly on ends of yokes. Bearing bushings are installed individually on yoke journals and clamped in two-piece circular ring. Universal is 'split' by taking out bolts which clamp these rings together. Rear yoke is integral with stub (splined) shaft and front yoke is bolted directly on end of transmission main shaft. Speedometer drive gear is mounted on universal front yoke and speedometer drive should be disassembled before universal removed to avoid damage to gears.

Chevrolet Standard Model Note—Riveted type joint used (no bolts used). This universal serviced as an assembly.

REMOVAL:—Rear axle ordinarily removed by pulling torque tube and drive shaft out of splined joint at rear of universal. If universal is to be removed, special wrench can be inserted through hole in rear yoke and mounting screw removed from front yoke.

SERVICING:—No special disassembly directions required. Bearing bushings can be lifted off after bolts have been taken out of circular retainer ring. When installing bushings see that beveled side is installed toward inside of yoke. After universal joint installed on car and ball housing in place, fill ball with transmission lubricant through pipe plug on top of universal ball retainer (1936), through the battery ground strap hole at rear of transmission case (1937-39). Front universal oiled from transmission case when car is in operation. On truck models, pressure lubricant fitting located on rear universal ball and on side of front propeller shaft housing. These fittings lubricate rear universal and front propeller shaft bushing and must be given attention at 1000 mile intervals.

CHEVROLET (OWN MAKE)

Passenger Cars, All Models (1940 to 1948)
Half-Ton Truck, All Models (1940 to 1948)
3/4 Ton Truck, All Models (1938-39-40)
¾ Ton Truck, All (1941 to 1948)—Front Only
1 & 1½ Ton Trucks, All Models (1936 to 1940)

NOTE:—These models have Torque Tube Drive with a single Universal within a ball housing at the rear of the transmission. Universal can be exposed by taking out 4 retaining collar capscrews and sliding ball housing back on shaft.

¾, 1, 1½ Ton Trucks—These trucks have an additional universal joint mounted at intermediate frame cross-member.

Cab-Over-Engine Truck WD '40 (107⅝" W.B.)—Hotchkiss drive used on this model with Spicer Needle Bearing Type universals. See Spicer Needle Bearing Type article (preceding) for data.

School Bus WC '40—Chevrolet type universals used except for front universal which is a Spicer Needle Bearing type. Refer to Spicer article (preceding) for data on front universal.

3/4 Ton Truck Models ('41 & Later). These models have Hotchkiss Drive with front Universal Joint of Chevrolet type for which data is given below. Both Universal Joints on rear propeller shaft are Spicer Needle Bearing Type. Refer to separate article for data on Spicer Universal Joints.

CONTINUED ON NEXT PAGE

CHEVROLET (OWN MAKE) C nt.

1940 ¾, 1 & 1½ Ton Trucks—Rear universal joint on these models is Chevrolet Needle Bearing type.

1941-48 Trucks. All models equipped with Hotchkiss drive and all are fitted with Spicer Needle Bearing type universal joints (see 3/4 Ton Truck Note above). Refer to Spicer Needle Bearing type universal joint article (preceding) for data on these models.

DESCRIPTION:—Roller bearing type (Pass. Cars and ½ Ton; Trucks—rear only), hardened steel bushing type (Trucks—front only). Universals have conventional cross with individual bearings on cross ends.

Hardened Steel Bushing Type—Bushings are installed individually in ends of yokes on cross and are retained in yokes by locking rings (yokes are open sided type and rings inserted through side opening to engage recess in bushing and yoke).

Needle Bearing Types—Two types of trunnion bearings used: 1) Wing type bolted to each yoke by two capscrews in each trunnion (used on front yoke of passenger cars only), 2) Round type fitted directly in yoke ends and retained by locking ring at inner end. NOTE—See Service Replacement Floating Bushing Note below for Passenger Cars, Sedan Delivery, and Half-Ton Trucks.

Service Replacement Floating Bushings (1940-42 Passenger Cars, Sedan Delivery, ½ Ton Trucks—Floating trunnion bushings available for replacing roller bearings on these models, where cars are subject to severe service. These bushings can be installed in trunnions in place of rollers. The yoke caps (small rolled sheet metal cap fitted over inner shoulder of each trunnion) should be removed when these floating bushings installed.

SERVICING:—Disassembly (Pass.Car&½ Ton). Remove 4 capscrews from universal joint ball collar, slide ball and collar back on shaft housing. Take out 4 capscrews in trunnion bearings on front yoke, remove trunnons (use care not to los rollers—19 rollers used in each trunnion). Slide rear y ke off shaft and remove lock rings from bearings. Tak off bearing caps by placing yoke in vise and driving down on center of cross with punch until cross seats on yoke, raise cross, insert 15/16" flat washer over bearing and continue to tap on cross until cap removed (do not lose rollers).

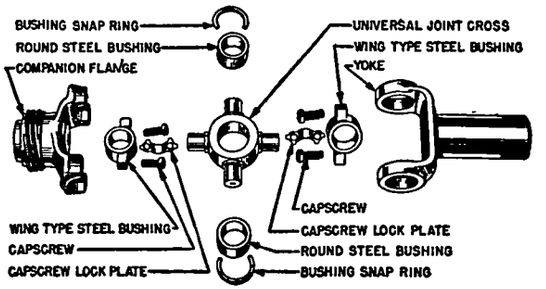

CHEVROLET "CROSS" TYPE

Trucks—Same as for passenger cars (above) except that hardened steel bushings in front universal must be driven out after locking rings removed. Rear universal trunnion bearings are roller type and retained by lock rings which are removed in same manner as for rear yoke on passenger cars.

Servicing—Thoroughly clean all parts. Examine for wear and replace all worn or damaged parts.

NOTE—See Service Replacement Floating Bushing Note above for replacement of roller bearings on Passenger Cars, Sedan Delivery and ½ Ton Trucks.

Assembling—Reverse disassembling directions above. When installing needle bearing caps, Round type should be pressed on yoke just far enough to install snap ring, Wing type caps should be fitted to openings in front yoke. Universals and front propeller shaft (trucks) should be filled with transmission lubricant. NOTE—Pack needle bearings with grease before installing.

CAR APPLICATION

	Page
BUICK	
1936-48	2902
CADILLAC	
1936-48 V8	2903
1936-37 V12	2903
1936-40 V16	2903
CHEVROLET	
1936-38 Passenger Cars	2903
1938-48 Passenger Cars	2904
1936-38 Trucks	2903
1938-48 Trucks	2904
CHRYSLER	
1936-48 Six	2905
1936-37 Eight	2905
1938-42 Eight	2904
1946-48 Eight	2905
CROSLEY	
1947-48	2906
DE SOTO	
1936 Airstream Model	2905
1936 Airflow Model	2906
1937-48 All Models	2905
DODGE	
1936-48	2905
FORD	
1941-49 6 Cyl. Pass. Cars	2907
1936-48 V8 Passenger Cars	2908
1949 V8 Passenger Cars	2909
1941-42 4 Cyl. Trucks	2907
1941-48 6 Cyl. Trucks	2907
1936-47 V8 Trucks	2908
1948 V8 Trucks	2909
FRAZER	
1947-48	2910
GRAHAM	
1936-41	2909
HUDSON	
1936-47	2909
1948	2910
HUPMOBILE	
1936-40 Six	2910
1936-39 Eight	2910
JEEP	
1942-45 Army Models	2916
KAISER	
1947-48	2910
LA SALLE	
1936	2902
1937-40	2903
LINCOLN	
1936-40 V12	2911
1936-40 Zephyr	2911
1941-49	2911
MERCURY	
1939-48	2908
1949	2909
NASH	
1936-48	2912
NASH-LAFAYETTE	
1936-40	2912
OLDSMOBILE	
1936-48	2912
PACKARD	
1937 Six	2913
1938-48 Six	2914
1936-37 Eight	2913
1938-48 Eight	2914
1936-38 Super Eight	2913
1939-48 Super & Custom 8	2914
1936-39 Twelve	2913
PLYMOUTH	
1936-48	2905
PONTIAC	
1936-48	2912
STUDEBAKER	
1936-37 Dictator	2915
1938-42 Commander	2915
1936-40 President	2915
1941-42 President	2914
1939-48 Champion	2914
1947-48 Commander	2914
TERRAPLANE	
1936-38	2909
WILLYS	
1936-39	2915
1939 Overland	2916
1940-42 All Models	2916
1946-48 All 4 & 6 Cyl. Models	2916

BUICK & LA SALLE (1936)

Buick, All Series (1936)
La Salle, 36-50 (1936)

NOTE: LaSalle pump same design as Buick models with bushing at forward end of shaft and is serviced in same manner as Buick Series 40.

TYPE:—Adjustable packing type. Shaft mounted on two oil-retaining bushings (40), bronze bushing at rear and sealed ball bearing at front end (60, 80, 90). Packing installed under adjusting nut in front of rear bushing within fan pulley.

SERVICING:—Packing Adjustment. New split type packing rings can be installed without dismantling pump. Make certain that joints in adjacent packing rings are placed 120-180° apart to prevent leaks.

Lubrication. On Model 40, oiler provided for each bearing. Lubricate with engine oil at 1000 mile intervals. On Models 60, 80, 90 use special G2½ water pump lubricant in rear bearing oiler. Front ball bearing is packed with lubricant and requires no attention.

OVERHAUL:—Disassembly. Take out four capscrews in fan pulley hub, remove fan and pulley. Remove rear cover on water pump housing. Impeller and pulley hub can then be removed from shaft. On Models 60, 80, 90, front ball bearing is retained in housing by snap ring at forward end. Rear bushing on this type pump is staked to prevent bushing rotating in service.

Clearances (Buick). Shaft clearance in bushings should be .0025-.004" (40), .0015-.003" (60, 80, 90). Impeller endplay should be .004-.008" (40), .004-.012" (60, 80, 90).

Clearances (LaSalle)—Shaft clearance in new bushings should be .0015-.0032" (rear bushing), .0005-.0022" (front bushing), worn limit .005" (all bushings). Impeller clearance in pump housing should be .055-.070" (new), .080" (worn limit).

BUICK (1937-38)

40, 60, 80, 90 (1937); 80, 90 (1938)
40 (1938) BEFORE ENGINE NO. 43535259
60 (1938) BEFORE ENGINE NO. 63524449

NOTE:—Pump used on Model 40 not interchangeable with type used on Models 60, 80, 90. Packing assembly bushings and shaft are interchangeable.

Replacement Pumps. Latest type packless, ball-bearing pump furnished as replacement units for these cars.

TYPE:—Self-adjusting type (no adjustment required in service). Packing is installed on shaft between bushings with spring at forward end of assembly. Bushings are special oil-retaining type and are lubricated from oil reservoir in pump body. NOTE—Pump reservoir should be filled with No. 10-W engine oil at 1000 mile intervals.

OVERHAUL:—Disassembly. Remove fan blade and pulley assembly, pull hub (using puller J-679A) and remove any burrs on shaft, remove rear cover plate, withdraw impeller and shaft at rear of housing.

Bushing & Packing Assembly—Bushings must be removed in order to renew packing assembly. Use puller J-999 and pull rear bushing (leave front bushing in to pilot new rear bushing), remove packing assembly. Install new rear bushing (use tool J-684). Pull front bushing (use tool J-999) install packing assembly before installing new bushing. Lubricate all parts of packing assembly with chassis lubricant, then install in following order: two chevron packing rings with convex side toward rear bushing (insert one at a time, edgewise until past openings in body, then turn up into place), duprene rubber spacer, two additional chevron packing rings with convex side toward front, steel spring seat, packing spring, then install new front bushing (tool J-684) so that end is flush with front edge of pump body.

Assembly—Enter impeller and shaft assembly through rear bushing until hub end is flush with spring seat (shaft through packing but with packing spring still exposed), fill packing spring chamber with chassis lubricant, push pump shaft through into place. Press pump shaft hub on shaft leaving .004-.006" clearance between hub and pump body for end play. Use new gasket and install rear cover plate.

BUICK (1939-48)

Series 38-40 (1938)—After Eng. No. 43535259
Series 38-60 (1938)—After Eng. No. 63524449
All Series (1939 to 1947)
①All Series except Dynaflow (EARLY 1948)

①—Pump body casting no. 1330139 (on left front face).

REPLACEMENT PUMP NOTE: Replacement parts not furnished for this pump. Latest type pump can be installed as a complete assembly.

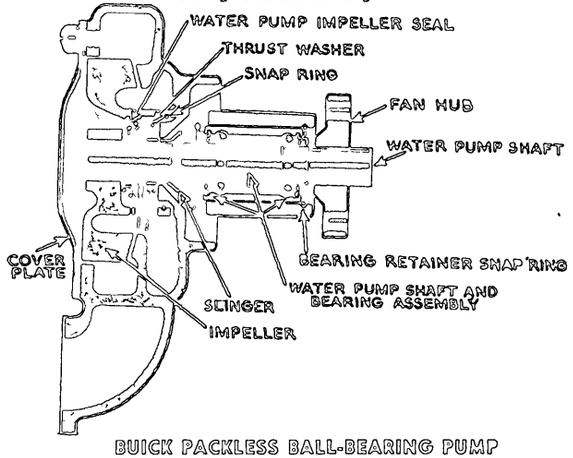

BUICK PACKLESS BALL-BEARING PUMP

TYPE:—Ball-bearing, packless type. Seal consists of spring-loaded rubber seal and carbon block assembled in impeller hub and retained by snap ring. Bearing consists of a double row ball bearing permanently assembled on shaft (shaft serves as inner race and cannot be removed), factory lubricated and sealed (requires no attention in service). Bearing and shaft assembly retained in pump body by snap ring at forward end of bearing hub.

OVERHAUL:—Disassembly. Remove fan and fan pulley, use special puller to remove fan hub, take out rear cover screws and remove cover, remove bearing snap ring at forward end of pump body. Support pump in arbor press, press shaft out of impeller, lift impeller out, press shaft and bearing assembly out of pump body toward front.

Seal Assembly. Manufacturer recommends that seal not be disassembled (seal and impeller serviced as assembly). Carbon disc is ground convex on one surface and assembled with this face toward body.

Assembly. See that face of pump which contacts carbon seal is smooth (replace pump body if rough or burred). Use arbor press to install bearing and shaft assembly supporting pump body on press and applying pressure to bearing outer race only (do not press on shaft or bearing seal), install bearing snap ring. Press fan hub on shaft (support impeller end of shaft allowing pump to float on shaft so that bearings will not be damaged) until shaft projects beyond front face of hub exactly ⅜" (Series 40 '39-40, 50 '40), 3/16" (60,80,90 '39-40, 70 '40), 13/64" (All 1941-48). Apply cup grease lightly on the impeller end of shaft, face of pump body and face of carbon disc, press impeller on shaft so that it is flush with end of shaft (support shaft at fan hub end allowing pump to float on shaft while installing impeller).

BUICK (1948)

①All Roadmaster Dynaflow Series 70 (1948)
①All Series with Synchro-Mesh Trans. (LATE 1948)

①—Pump casting no. 1336756 (on left front face).

TYPE: Similar to preceding type except seal assembly:

Seal Assembly. Consists of brass sleeve, helical spring, rubber bellows, and carbon washer. Sleeve is pressed in hub of pump body with spring pressing end of bellows against sleeve (at front) and opposite end of bellows and carbon washer against impeller hub. Inner diameter of sleeve notched which engage similar notches on carbon washer to hold washer stationary.

REPLACEMENT PUMP: This type pump furnished for replacement of other types used on earlier cars.

DISASSEMBLY: For Renewing Seal. Take pump off engine. Remove fan blade and pulley from pump shaft hub. Take off pump cover. Pull impeller off shaft using 2 hook or 3 hook puller with puller screw contacting end of pump shaft. Take out carbon washer, spring, and bellows from brass sleeve (NOTE—If sleeve in good condition, do not remove sleeve). Sleeve can be removed by driving sharp punch through bottom and prying out. Clean pump body *(CAUTION—Pump should not be soaked in gasoline—may destroy lubricant in sealed bearing)*.

REASSEMBLY: Installing New Seal. Install sleeve as an assembly using a thick walled tube to press on flange of sleeve. If old sleeve not removed, soak new seal assembly in hot water to separate parts. Install bellows, spring, and carbon washer (low shouldered side to outside). Two notches in washer must engage dents in sleeve. Coat face of washer and impeller hub with rust preventive (or Seco Oil). Press impeller on end of shaft until rear face flush with end of shaft (support pump on fan end of shaft). Use new cover gasket and install pump cover. Install pump on engine.

Replacement Pump Installation Directions. Fan pilot ring must be pressed on shaft in front of fan hub to the pilot fan on 1936 cars. To install pilot ring, remove rear cover plate on pump, support impeller end of shaft in arbor press, press pilot ring on until it just contacts fan hub (do not disturb fan hub position). Fan hub has double set of fan mounting bolt holes to fit all fans. NOTE—Discard this pilot ring (furnished in all pump packages) when installing pump on 1937-38 models.

CADILLAC V8 & LA SALLE

CADILLAC V8, ALL SERIES (1936 to 1948)
LA SALLE V8, SERIES 50 (1937-38-39-40)

TYPE:—Self-adjusting type (no packing adjustment required in service). Packing rings installed at each end of rear bushing with packing spring located between bushing and front packing ring. Shaft mounted on bushing at rear and sealed type ball bearing at front end.

Lubrication. Grease fitting provided for rear bushing and packing assembly. Should be filled with water pump grease (G-13) every 1000 miles (front bearing requires no attention).

OVERHAUL:—Disassembly. Remove nut and lockwasher on front of pump pulley, remove pulley and woodruff key in shaft. Remove bearing snap ring in front end of housing, push impeller to rear to expose split washer in back of front bearing, remove washer. Remove snap ring at forward end of rear bushing assembly, withdraw impeller and shaft through rear end of housing. Remove rear bushing assembly toward front noting location of spring, spring seats, bushing and packing rings to insure correct reassembly. If necessary, press front bearing out of housing toward front, press bushing out of bearing.

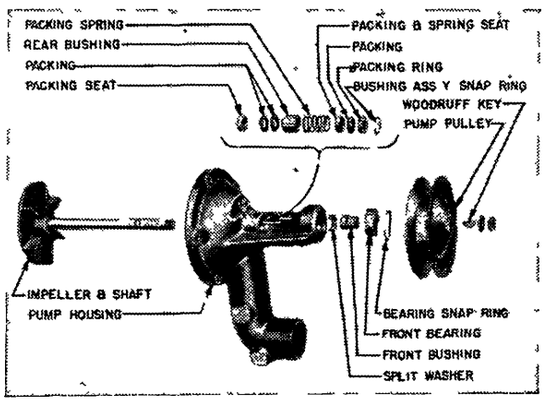

CADILLAC V8 & LA SALLE PUMP

Bushing & Packing Assembly. To assemble packings on shaft, install special pilot, No. J-831, on end of shaft, insert shaft in pump housing, wind washer groove on shaft with string to avoid damage to packing rings. Coat packing rings with water pump grease, install packing, spring, and bushing parts in same order as removed from pump (make certain that bushing installed with grooved side toward rear packing rings).

Packing Spring—Spring free length should be 1¼" and spring should show no set when compressed so that coils touch.

Pump Assembly. Reverse disassembly directions given above. Make certain that split washer and snap rings correctly installed and that fan pulley key is in place in shaft before tightening pulley nut.

Clearances—Shaft clearance in bushing should be .0010-.0025" (new), .0035" (worn limit). Impeller clearance in pump body should be .050-.092".

CADILLAC V12 & V16

CADILLAC V12, ALL SERIES (1936-37)
CADILLAC V16, ALL SERIES (1936-37)

TYPE:—Self-adjusting type (no packing adjustment required). Packing is installed on shaft at outer ends of bushings with loading spring in housing between bushings. Shaft mounted on two floating bushings in housing with thrust button at impeller end (in rear face of pump body). Shaft bushings are oilite type and should be lubricated with water pump grease (G13) through pressure fitting on top of pump body.

OVERHAUL:—Disassembly. Remove nuts on front cover bolts, withdraw front cover and impeller assembly from pump body. Withdraw impeller from cover toward rear. Take out snap ring at forward end of shaft hub, remove packing rings, bushings and spring at forward end. Note order so that pump can be reassembled in same manner.

Packing & Bushing Assembly. Use special pilot J-831 installed on end of shaft and wind string on recess near end of shaft before installing packing rings to avoid damage to rings. Coat chevron packings with water pump grease, install rear packings with convex side forward, then insert rear bushing with grooved side toward packings, install spring, front bushing with convex side out, front packings with convex side out, snap ring.

Assembly. Reverse disassembly directions given above. Shaft clearance in bushings should be .001-.003" (front—new), .001-.0025" (rear—new), .005" (worn limit). Endplay should be .0065-.025" (new), .050" (worn limit).

CADILLAC V16

CADILLAC V16, SERIES 90 (1938-39-40)

NOTE:—Two pumps used, one pump mounted at forward end of each cylinder bank. Both pumps driven in tandem with fan and generator by dual belts. Both pumps are same design and serviced in same manner.

Fan Hub Assembly Balance. Fan hub is balanced and should be marked when disassembled so that all parts will be replaced in same position (first cars). On later cars, 1/16" hole drilled through all parts and holes should be lined up when assembled.

TYPE:—Packless type with spring-loaded rubber and carbon disc seal assembled in housing in front of impeller. Shaft mounted on two sealed ball bearings in housing. Bearings require no attention in service and should not be disassembled (replace shaft and bearings as a unit).

OVERHAUL:—Disassembly. Take out four pulley capscrews and remove pulleys. Support pulley drive flange in arbor press, press impeller shaft out of flange. Remove bearing lock ring in front end of pump housing, support front end of housing in arbor press, press pump shaft out of impeller, remove shaft and bearing assembly from housing. Remove lock ring at rear end of housing, withdraw carbon seal, rubber seal, spring and spring retainers noting location so that these parts can be replaced in same position.

Seal Assembly. Coat contact surfaces of rubber seal and carbon ring with water pump grease, install front spring retainer (concave side out), spring, rear spring retainer (with shoulder in toward spring), rubber seal, and carbon seal in pump housing, install locking ring.

Pump Assembly. Reverse disassembly directions given above. When pressing impeller on shaft, see that clearance between front face of impeller and pump housing is .015" minimum, .025" maximum.

NOTE—If new pump, or rebuilt pump with new seal, leaks slightly, this may be caused by carbon seal not seating properly on face of impeller and should correct itself after short period of operation.

CHEVROLET (1936)

Chevrolet, All Models (1936)

TYPE:—Adjustable packing type. Packing consists of two pre-formed spiral-wound metallic rings assembled with a spacer between them (lubricant is fed into this space). Shaft mounted on two bushings in pump body.

SERVICING:—Packing Adjustment & Renewal. When limit of packing adjusting nut is reached, back off nut, install special split packing rings without removing old packing. When pump again requires packing, remove spacer and add packing at rear end also.

Lubrication. Fill grease cup above rear bushing with #2½ water pump grease and turn down at 1000 mile intervals. Use engine oil only in front bushing oiler.

OVERHAUL:—Disassembly. Remove fan, use special puller to remove fan pulley. Withdraw impeller and shaft assembly through rear end of pump. Use special pilot driver to press out old bushings in pump body.

Assembly. Use special pilot to press new bushings in pump body. Make certain that thrust washer is installed between impeller and pump body. See that spacer installed between the two packing sections and fill spacer recess with water pump grease.

CHEVROLET (1937-38)

ALL MODELS (1937), FIRST CARS (1938)

NOTE:—1937 Pumps changed in production as follows:
Engine Nos. 1 to 38076. Original pumps did not have oil hole in lower part of oil reservoir in center of bore between bushings. Replace all pumps without this hole with later type.

Engine Nos. 38076 to 427405. Felt wick installed in hole in lower part of oil reservoir in center of bore between bushings. Only felt wick must be used for replacement (see Overhaul data below).

Engine Nos. 427405 Up. Copper graphite wick with spring (no spring used with felt wick) used instead of felt wick. Use only same type wick for replacement.

CONTINUED ON NEXT PAGE

CHEVROLET 1937-38 (Cont.)

1938 Later Cars—Equipped with ball-bearing packless type pump. See following article for data.

TYPE:—Self-adjusting type (no packing adjustment required in service). Chevron type packing rings installed on shaft at inner end of each bushing with spring between packing ring assemblies. Bushings are porous bronze type and lubricated from oil reservoir which surrounds pump body. Packing rings lubricated by oil metered by bronze oil wick in body which extends down into oil reservoir.

Lubricati n. Reservoir should be kept filled with SAE. No. 20 or 20-W oil (water pumps not in service should be kept filled to prevent bushings drying out, and new bushings must be soaked in oil before being installed).

OVERHAUL:—N te. Manufacturer recommends that pump not be dismantled for servicing unless special pump packing tools (bushing and packing drivers and installing sleeve, and oil reservoir replacer) used. New 1938 tools can be used on previous pump model but 1937 tools cannot be used on 1938 water pumps.

Disassembly. Remove two flat headed screws on rear cover plate, remove plate and gasket. Place pump assembly in arbor press and press rotor shaft out of fan and pulley assembly, remove rotor and shaft through rear of pump body. Screw threaded bushing puller into inner (rear) bushing, press bushing out of housing. Remove front bushing in same manner. Remove packing rings, spring seats, and spring. To remove oil reservoir, clamp pump housing in vise (use copper jaws), drive reservoir off body using chisel with flat face. Do not disturb bronze oil wick.

Oil Wick Installation. Oil wick type may be checked by rem ving oil reservoir cover (see above). Use only same type wick for replacement (felt or copper-graphite—replace pumps without this wick, see note above). Install felt wick by pushing it through hole and flaring end over in bushing bore in housing. Install copper graphite wick by pressing it into hole within 1/16" of inner surface of bushing bore (use this type only in pumps with wick spring).

Bushing & Packing Assembly. Soak new bushings in light engine oil before installing. Use special bushing driver and press front bushing into pump body. Insert packing installing sleeve in rear bushing bore, install two packing rings (dip rings in 20 oil), with grooved side toward front bushing, use packing driver to press packing rings firmly against front bushing, withdraw sleeve, install spring seat (with open 'V' toward packing), spring, second spring seat (with open 'V' toward rear). Use packing sleeve and driver, install 4 ('37), 3 ('38) packing rings (dip in oil, groove side toward rear). Use bushing driver and install new rear bushing (driver pilots in front bushing) in arbor press so that rear end of bushing is flush with end of housing.

Pump Assembly. Use special driver to install oil reservoir n housing (press on in arbor press). Install new thrust washer on shaft, fill space in housing between packing rings with No. 20 oil, insert impeller and shaft, press pulley and fan assembly on shaft so that clearance or endplay is .003-.095". Install rear cover plate using new gasket and staking screws with center punch to prevent loosening.

CHEVROLET (1938-48)

Chevrolet, All Models (Late 1938 to 1948)

PUMP REPAIR KIT: Part No. 3690932 can be used to service 1937 to 1948 pumps. Parts included are: 1—Seal Assembly, 1—Seal Washer, 1—Bearing Retainer, 1—Plate Gasket (1937-40), 1—Plate Gasket (1941-48).

TYPE:—Ball bearing, packless type. Seal consists of a spring-loaded rubber seal and thrust washer assembled in impeller hub (spring and spring cups are integral part of rubber seal). Bearing consists of a double row ball bearing permanently assembled on shaft (shaft serves as inner race and cannot be moved) factory lubricated and sealed so that no lubrication required in service. Bearing and shaft assembly is retained in housing by a metal cap which is a press fit on the forward end of the housing. Pulley and impeller are press fit on shaft.

1941-48 Type: New type two-outlet pump (water is discharged along both sides of cylinders in block) which is ¼" longer than previous type. This pump serviced in same manner as previous types (see data below.) NOTE—This pump may be identified by casting number, 839403, on pump body.

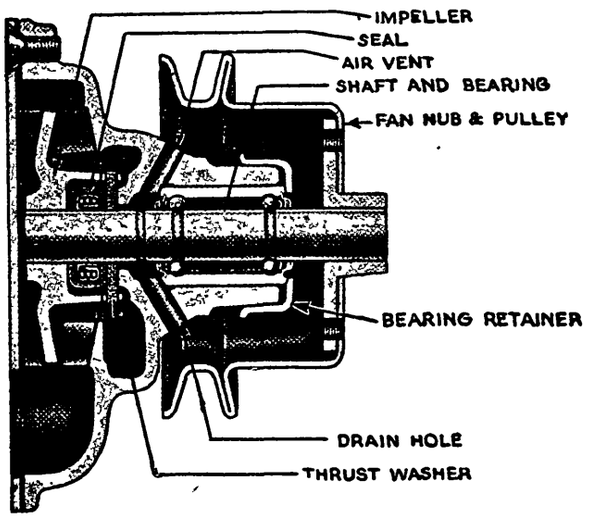

CHEVROLET PACKLESS BALL-BEARING PUMP

OVERHAUL:—Disassembly—Remove screws and rear cover plate. Use puller to remove fan pulley from shaft, remove bearing retainer cap. Support pump housing in arbor press, press bearing and shaft assembly out of impeller and housing toward forward end, lift off impeller and remove thrust washer and rubber seal from impeller recess. Do not attempt to remove bearing from shaft.

NOTE—Puller tool J-1226 used for removal of fan hub and pulley.

Seal Assembly—Install rubber seal in impeller hub (spring is integral part of seal), place thrust washer on seal with lugs on washer engaging slots in impeller so that washer bears against ground face of pump housing when impeller installed.

Assembly—Assemble pump in reverse order from disassembly. When installing pump on engine, make certain that correct fan installed for each model.

NOTE—When installing impeller, there should be .010-.035" clearance between impeller and pump body.

CAUTION—Fan used on Truck models is larger than Passenger Car type. Fans are not interchangeable.

CHRYSLER EIGHT (1938-42)

Chrysler 8, All Models (1938 to 1942)

TYPE:—Packless type with ball bearing shaft. Seal is same type used on other Chrysler models (see 1939 Seal Note below). Shaft mounted on factory lubricated and sealed ball-bearing (requires no lubrication in service). NOTE—1941-42 type pumps have lubrication fitting for seal lubrication.

SERVICING:—Lubrication—Single fitting on pump body for seal lubrication (shaft bearing is sealed type and does not require lubrication in service). Lubricate pump with Water Pump Grease at 2000 mile intervals. NOTE—This fitting not used on models prior to 1941.

OVERHAUL:—Disassembly—Use special puller C-498 to remove impeller from shaft (back cover normally left on engine when pump removed). Remove lock ring in impeller hub and withdraw seal parts. Drive out pin in fan pulley hub and remove hub with Puller C-412 (discard both impeller and hub when removed from shaft, old parts cannot be re-installed). Remove bearing lock ring from groove in pump body hub, pull shaft and bearing assembly out of housing (do not attempt to remove bearing from shaft, these parts furnished as an assembly).

Seal Assembly—See directions above for other Chrysler models. Always use new impeller whenever impeller removed from shaft (old impeller will not fit tightly on shaft if re-installed).

1939 Seal Assembly—Consists of 'U' section seal with spring in center. Cannot be disassembled.

Pump Assembly—Install shaft and bearing assembly in pump body (press on outer bearing race only) so that groove in bearing is in line with groove in body and install bearing locking ring. Use special tool C-551 to reface thrust washer bearing face on pump body piloting tool on pump shaft and using flat (90°) end of tool only to form perfectly flat surface in pump body for thrust washer bearing. Press the new impeller and seal assembly on shaft so that endplay is .0025-.0045" (measure between fan pulley hub and front face of pump body). If fan pulley hub has been removed, press new hub on shaft, drill hub and shaft and install locking pin.

CHRYSLER EIGHT (1946-48)

Chrysler 8, All Models (1946-47-48)

TYPE: Packless type with ball bearing shaft. Bearings are new type (two individual ball bearings) which can be removed from shaft and serviced separately. Seal is bellows type. Pumps fitted with lubricant fitting (for seal lubrication), grease fitting (for bearing lubrication).

SERVICING: Lubrication—Two lubricant fittings provided (rear fitting for seal lubrication, front fitting for bearing lubrication). Lubricate with Water Pump Grease at 1000 mile or 30 day intervals.

OVERHAUL: With pump removed from engine (spacer or back cover remains on engine block), disassemble and service pump as follows:

Disassembly: Drive out fan pulley hub pin, pull hub using special puller C-412. Remove bearing snap ring (in groove in housing ahead of front bearing) with special pliers C-760. Remove impeller and shaft assembly through rear of pump housing. Remove seal washer lock ring from groove in impeller hub, remove seal parts from impeller. Drive out impeller pin, press impeller off shaft. Withdraw ball bearing assemblies and bearing spacer from pump housing.

CAUTION—Fan pulley hub and impeller must not be re-used after having been removed from shaft.

Reassembly: Reface seal seat in pump body with cutter tool C-551 (use pilot DD-811 to insure cutter forming a perfectly flat seal bearing surface). Install bearings in pump body with spacer between bearings, install front bearing snap ring. Press new impeller on shaft (if old impeller removed), install impeller lock pin. Install seal parts in impeller hub, install seal lock ring. Insert impeller and shaft assembly in pump. Press new fan pulley hub on forward end of shaft, install hub lock pin. Check pump assembly for free rotation by spinning shaft.

CAUTION—Lubricate pump seal and bearing fittings while spinning shaft.

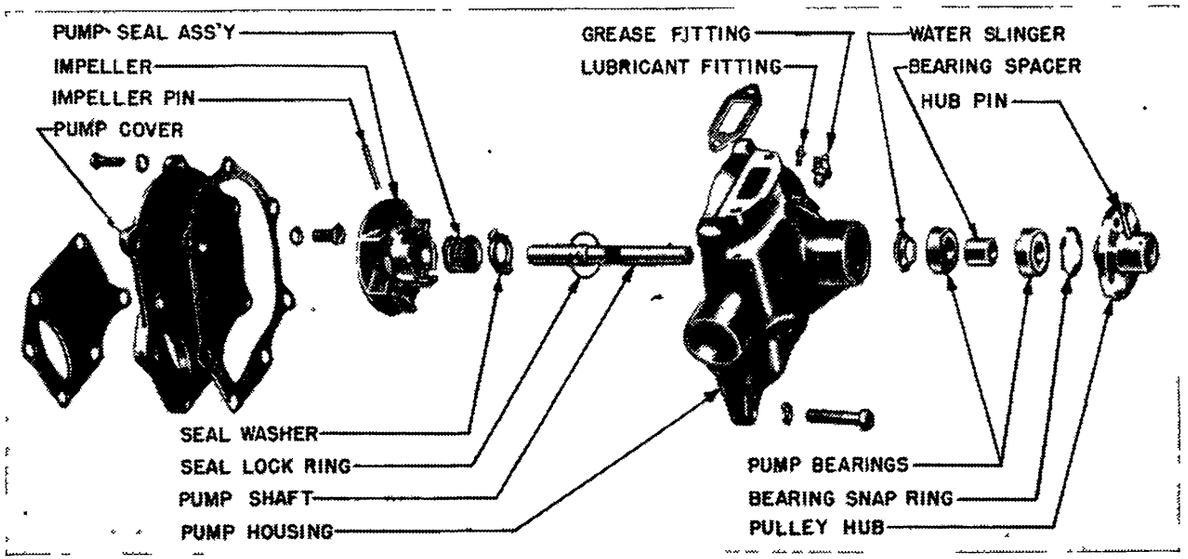

CHRYSLER 8 (1946-48) PACKLESS, BALL-BEARING TYPE PUMP

CHRYSLER, DE SOTO, DODGE, & PLYMOUTH

Chrysler Six, All Models (1936 to 1948)
Chrysler 8, C8 ('36), Imp. & Cust. Imp. 8 ('36-37)
D Soto, Airstream Six S1 (1936)
DeSoto, All Models (1937 to 1948)
Dodge, All Models (1936 to 1948)
Plymouth, All Models (1936 to 1948)

TYPE:—Packless type. Shaft mounted on two bushings in front of impeller. Lubricated by single lubricant fitting on upper side of housing. Seal consists of spring-loaded rubber seal and washer assembly within impeller hub. Several types of seal retainers have been used as follows:

1936 & Later Models—Retainer consists of a metal cup installed on the thrust spring (impeller) end of the seal. The separate seal washer (spring seat washer) is not used with this type retainer.

1942 & Later Seal Thrust Spring Note—Spring is installed with large end in toward impeller (reversed from 1941 and previous types).

Chrysler C38 and DeSoto S11 Seal Change—Bellows type seal (similar to 1946 Chrysler 8) used after engine no. C38-26622 and S11-29106. Separate seal thrust spring and seal retainer are not used with this new seal.

SERVICING:—Lubrication—Single grease fitting provided on lower left side of pump body. Keep reservoir filled with water pump grease (lubricate at 2000 mile intervals).

OVERHAUL:—Disassembly. Drive out fan pulley hub pin, pull hub (use puller C-412), remove capscrews on rear cover plate and remove cover, pull impeller and shaft assembly out of pump. Drive out pin holding impeller on shaft, remove impeller and dismantle seal assembly. To remove bushings, drive front bushing pin into shaft hole to free bushing in housing, use puller C-373 and pull both bushings and thrust washer out at forward end.

Servicing—If new bushings installed, use special tool C-373 (same puller used when removing bushings) to press bushings in place. See that thrust washer installed between bushings with slotted side or large diameter hole toward rear of pump. Install locking pin in hole in pump body and make certain that pin engages hole in front bushing to prevent bushing turning in service. Burnish bushings and reface pump body with special tool C-384. Insert tool through rear end of pump, turn tool evenly in clockwise direction until cut has been taken on rear face of pump body, withdraw tool while it is still being turned (this is important to prevent tool leaving ridge on housing).

Tool C-373 Note—When using this tool to install new pump bushings, clamp puller screw upright in vise, install special tool bushing No. 3 with the large diameter against the small hexagonal nut on the puller screw, start rear bushing in pump body, assemble the complete body on the puller screw, install pump thrust washer on puller screw with flat side up (toward front of pump), assemble pump front bushing, install tool thrust bearing and large hexagonal nut on puller screw, tighten the nut to draw pump bushings into place until top face of nut lines up with lower edge of groove in puller screw which will give required 3/32" clearance between face of seal thrust washer and snap ring when pump is assembled (see Assembly directions below for directions on checking this clearance).

Bushing Pin Drill Note—Use No. 13 drill (.185") to drill front bushing for pin using hole in body as guide for drill. Remove drill burr from inside of bushing and install pin so that outer end is flush with pump body.

Seal Assembly—Install seal parts on shaft within impeller hub in following order: Thrust Spring with small end in toward impeller ('41 and previous car models), large end toward impeller ('42 & later car models), seal retainer (not used with bellows type seal), seal using tool C-528 to install seal on shaft, seal retainer washer (with ears on washer engaging notches in impeller hub), and locking ring. Make certain that locking ring is seated in groove in impeller hub.

Seal Note—When installing seal retainer (not used with bellows type seal), solid end of retainer should be toward spring and cupped end toward seal.

Assembly—Press impeller on shaft so that back of impeller is flush with end of shaft but do not install pin (assembly must be checked in housing first). Install seal assembly (see data above), slide impeller and shaft assembly into place in pump body, aligning the shaft and washer. Push shaft assembly into pump body firmly so as to compress seal and spring. Sight through water inlet and note clearance between face of seal retainer washer and lock ring in impeller hub. If clearance less than 3/32", remove assembly and press impeller further on shaft, recheck clearance. When correct clearance of not less than 3/32" secured, drill shaft and install

CONTINUED ON NEXT PAGE

CHRYSLER, DE SOTO, DODGE AND PLYMOUTH (Continued)

impeller pin. Install impeller and shaft assembly. When installing new fan hub (below), press hub on until clearance between hub and front bushing is

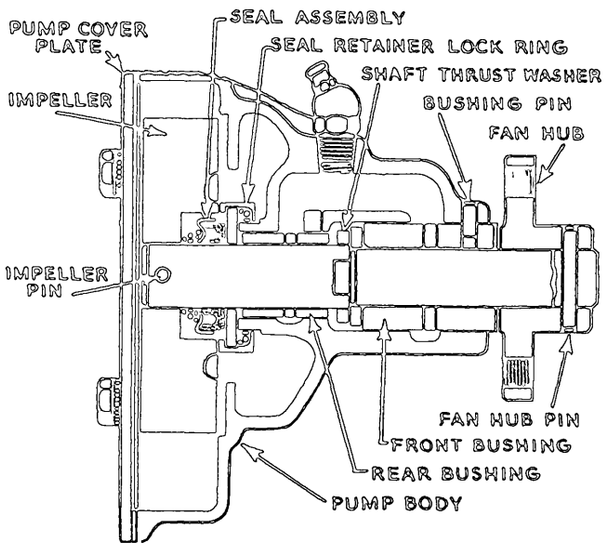

CHRYSLER, DE SOTO, DODGE, PLYMOUTH PACKLESS, PLAIN BUSHING TYPE PUMP

.005" (before '39), .003" ('39 and later cars). Use new gaskets when installing pump cover and when installing pump on engine.

Fan Hub Installation—New fan hub must always be used when pump overhauled (old hub will not have satisfactory tight fit on shaft after having been removed. Mark location of old fan hub pin hole on end of shaft before installing new hub, drill new pin hole at right angles to old hole through both hub and shaft, install new pin (pin should not project from hub at either end).

Fan Hub Drill Note—Use No. 22 (.157") drill to drill fan hub and shaft for locking pin. When re-installing old shaft, make certain that hole is drilled at right angles to old hole in shaft.

CAUTION—Do not re-install old fan hub. Use new fan hub whenever fan hub removed from shaft.

Pump Housing Cover—When installing cover plate on back of pump housing, use plain washer (not lockwasher) on screw which projects through housing into water passage.

CROSLEY (ADJUSTABLE TYPE)

PART NO. C-207187 (Used with "GDZ" generator)
Crosley CC (1947-48)

TYPE:—Adjustable packing type with packing located under adjusting nut at forward end of pump. Shaft operates in flanged bushing installed behind pump packing.

Lubrication. Pump bushing requires one to two shots of waterproof grease every 1000 miles. Use hand gun.

OVERHAUL:—Disassembly. Take off cover. Withdraw shaft and impeller out through pump opening. If bushing to be replaced, take off packing nut and packing ring, and working through opening in pump, press bushing out through the packing gland.

Reassembly: Reverse disassembly data given above. When installing bushing, align oil hole in bushing with oil hole in pump. Cover gasket should be coated on both sides with #3 permatex or similar paste. Do not overtighten packing nut or shaft may be damaged.

DE SOTO AIRFLOW

DE SOTO, AIRFLOW MODEL S2 (1936)

TYPE:—Packless type. Shaft mounted on two ball bearings in pump housing in front of impeller. Seal assembly same type used on other DeSoto models.

OVERHAUL:—Disassembly. Remove fan, drive out pulley hub pin, pull hub off shaft, withdraw impeller and shaft assembly through rear end of housing. To remove bearings, take out locking ring in forward end of housing in front of bearing outer race, withdraw front bearing, spacer and rear bearing.

Assembly. Install impeller and shaft (with seal assembly) in housing, install rear ball bearing on shaft and in housing so that it seats against shoulder in housing. Slide bearing spacer in place on shaft, install front bearing so that it contacts spacer, install locking ring. Install pulley and hub, pressing hub on shaft until it contacts front bearing inner race. Drill hub and shaft for locking pin, install pin and peen ends over before installing fan.

CROSLEY (PACKLESS TYPE)

PART NO. C-205175 (Used with "GAS" generator)
Crosley CC (1947-48)

TYPE:—Packless type with shaft mounted in flanged bushing seated in pump body. Seal washer bears against flanged end of bushing with spring loaded seal between washer and impeller. Impeller end of shaft bears against carbon thrust button mounted on cover plate.

Lubrication. Pump bushing requires one to two shots of waterproof grease every 1000 miles. Use hand gun.

OVERHAUL:—Disassembly. Take out cover screws, remove cover. Pull out shaft assembly, seal assembly and washer.

Pump Bushing. If new bushing being installed, press out old bushing and press new bushing in place with oil hole in bushing and pump body aligned. Line ream and face bushing to following dimensions: Finished inside diameter .623-.624", and distance between face of bushing flange and cover mounting face of pump body should be 1.630-1.640".

Seal Assembly. Check seal length to following specifications, seals not close to these limits should be replaced: Length of new seal 41/64" ± .015". Length compressed with 8-12 lbs. pressure ½" ± .015".

Reassembly: Reverse disassembly data given above and check the following: There should be slight tension on cover when held in place—required for proper sealing action. If tension too great, excessive wear on carbon thrust button on cover will result. Large diameter of front end of shaft should extend out of bushing approx. 1/32" with cover held in place. Use new washers and gasket, and coat both sides of gasket with #3 permatex or similar paste.

Water Pump (Generator Bracket) Alignment: Required on this pump only whenever generator bracket mounting bolts disturbed. *See "Cooling System" in Crosley Shop Notes.*

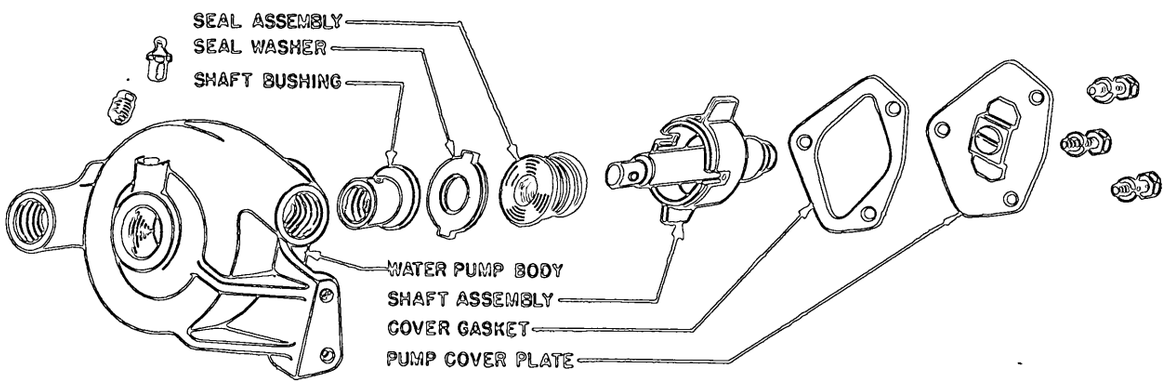

CROSLEY PACKLESS PUMP NO. C-205175 USED WITH "GAS" GENERATOR

FORD 4 & 6 CYL. (1941-47)

FORD NO. 9N-8501
Ford 4 Cyl., Comm'l & Truck (1941-42)
FORD NO. 2GA-8501
Ford 6 Cyl. "G", All Models (1941-42)
FORD No. 5GA-8501
Ford 6 Cyl. "G", All Models (1946-47)

TYPE:—Ball bearing, packless type with non-adjustable seal assembled on shaft within impeller hub. Pump on 4 Cylinder models is same design in 1941 and 1942. 6 Cylinder pump design is different in 1941 than on 1942 and later models (1942 and 1946 types similar except for pump pulley and hub). These pumps have following features:

4 Cyl. Pump—Pump is ball bearing type (similar to '79' type) and is mounted on front end of engine block with a back cover plate mounted on the pump body by capscrews. Fan is bolted on shaft in front of water pump pulley. This pump serviced in same manner as '79' type except that screws must be taken out and cover removed for access to impeller.

1941 6 Cyl. Pump—Pump same design as '78' type used on V8 Engines with shaft mounted on porous bronze bushing and seal assembled in impeller hub recess. This pump not lubricated from engine oiling system and reservoir in pump body should be kept filled with oil.

1942-47 6 Cyl. Pump—Bearing is integral with shaft and furnished as an assembly. Pulley hub is retained on shaft by snap ring on forward end of shaft with pulley and fan blades bolted to hub by four capscrews. Seal is similar to type used on Ford V8 models.

SERVICING:—Lubrication (6 Cyl. Pump only)—Keep oil reservoir in pump body filled with engine oil through oiler on top of body behind pulley.

OVERHAUL:—Disassembly (6 Cyl.)—Take out capscrews and remove fan blades and pulley from pulley hub, remove snap ring on forward end of pump housing, press impeller off shaft, press shaft and bearing assembly out of housing. Remove bearing snap ring from shaft, press shaft and bearing assembly out of pulley hub. Remove snap ring from impeller hub, withdraw seal parts.

CAUTION—Do not attempt to remove bearing from shaft. These parts are furnished as an assembly.

Seal Assembly—Install seal parts in impeller hub in following order: Seal Spring (large end out toward spring guide), Seal Clamp Ring, Spring Guide (tangs out toward seal), Seal (smaller end in and lugs engaged in slots in impeller hub), Seal Washer (lugs engaging slots in impeller hub), install snap ring to retain seal assembly.

Pump Assembly—Press shaft and bearing assembly into housing. Assemble seal in impeller hub (see above), press impeller on shaft until it is flush with end of shaft. Place bearing snap ring on pulley hub, press pulley hub on shaft until groove in shaft is flush with end of hub. Install bearing snap ring on end of shaft, install snap ring in housing.

Pump Installation—Use new gasket when installing pump back cover (4 Cyl.), use new gasket when installing pump on engine (all models).

FORD 6 CYLINDER (1947-49)

FORD NO. 5GA-8509-A
Ford 6 Cyl. "H", All Models (Late 1947-48)
FORD NO. 8HA-8509
Ford 6 Cyl., 8HA Pass. Car (1949)

TYPE:—Packless type with sealed double row ball-bearing shaft (shaft serves as inner race for bearing). Bearing and shaft furnished as an assembly and cannot be dismantled. Pulley hub mounted on forward end of shaft with fan pulley and blades bolted to hub.

OVERHAUL:—Disassembly. Take off fan blades and pulley from hub. Pull hub with puller off front end of shaft. Take out bearing snap ring from slot in pump body. Press shaft and bearing assembly out through rear of pump body. Use care when pressing shaft and bearing out, if assembly not being replaced. Press shaft out of impeller exposing seal assembly.

Reassembly: Carefully press new seal assembly (with slinger) in pump body. Press shaft and bearing into pump body from front until groove in bearing aligned with slot in pump body, and insert bearing snap ring. Press pulley hub on front end of shaft until flush with end of shaft. Press impeller on rear end of shaft.

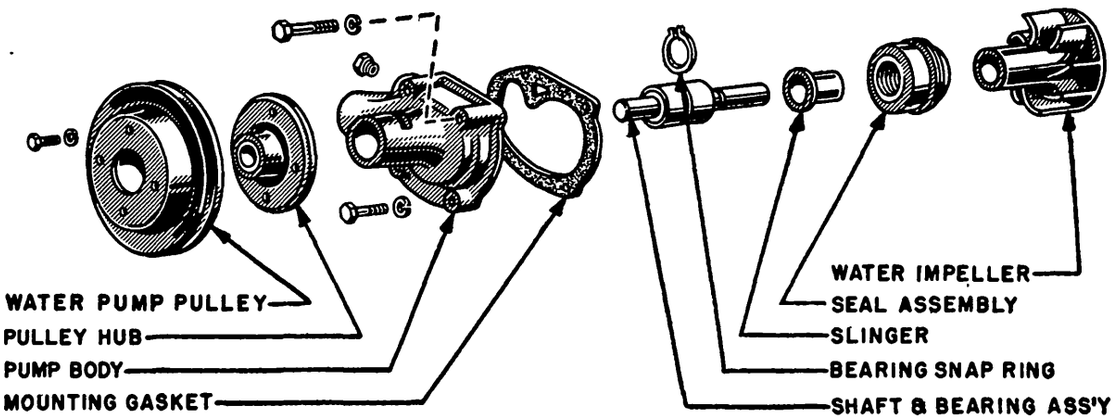

FORD SIX-CYLINDER PUMP (LATE 1947-1949 TYPE)

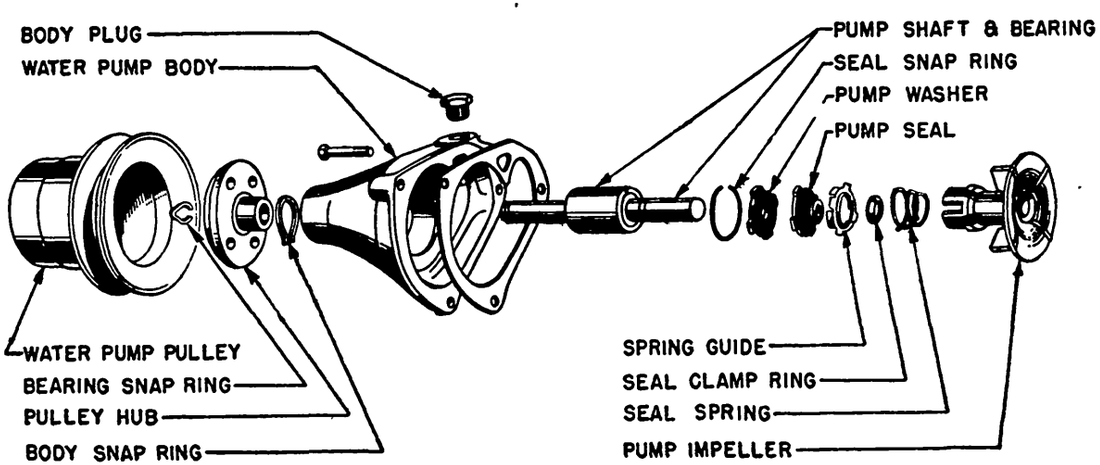

FORD SIX-CYLINDER PUMP (1942-47 TYPE)

FORD V8 (1936)

Ford V8, All Models (1936)

SPECIAL SERVICE NOTE:—Other types of pumps used on these models (oil reservoir type, etc.) but parts not furnished for replacement. If other types of pumps found on cars in service, replace complete unit with this 'Pressure Gun Grease Type'.

TYPE:—Packless type. Shaft mounted on bushing in pump housing with opening at grease reservoir (see Special Truck Type below). Lubricated by single pressure gun fitting on side of housing. Seal consists of packing spring, packing washer, packing, and thrust washer installed in recess in impeller hub. Special felt packing is installed in pulley hub (retained by special felt retainer). Pulley and impeller are both pinned to shaft.

Special Truck Type. Same design as above except that shorter bushing used and roller bearing mounted on forward end of shaft. Serviced in same manner as passenger car type.

SERVICING:—**Lubrication**—Use ordinary pressure gun lubricant (special water pump lubricants not required or recommended for these pumps).

OVERHAUL:—**Disassembly**—Drive out pin in pulley hub, press pulley off shaft, withdraw impeller and shaft assembly through rear of pump housing, remove seal parts from impeller hub.

Bushing Installation—Use V-13 driver to install new bushing in pump housing.

Seal Assembly—Install seal parts in impeller hub in following order: Packing Spring (large end out toward packing washer), Packing Washer (cupped side out toward packing), Packing, Rear Thrust Washer (see that thrust washer ears engage slots in impeller hub).

Reassembly—Install impeller and seal assembly in pump housing, install front thrust washer on shaft in front of forward bushing, install pulley and felt assembly on shaft, install pin in pulley hub and peen pin to prevent loosening in service.

FORD V8 "60"

No. 52-8501-B (R.H. & L.H.)
Ford V8 "60", First Cars Only (1937)
No. 52-8501-C—See Note
Ford V8 "60", All Models (1938 to 1940)

FORD '60' NOTE:—This pump differs from 52-8501B type (used on first '60' Engines) in that pump body is not conical (inner gasket seats against shoulder on body) and no separate retaining nut is used (outer gasket seats against pump body flange). Except for these points, all '60' pumps are serviced in same manner.

TYPE:—Packless type. Pump is special design with conical body which fits into recess in engine front cover (mounting bracket and gear cover) and is retained by large nut directly behind pulley. Pump interchangeable for right and left hand mounting. Impeller is driven by shaft through tongue-and-slot coupling and is retained by spring running through shaft to retainer button under rubber cap on forward end. Shaft mounted on bushing (rear), and ball bearing (front) which is part of shaft assembly (bearing is single row ball type with shaft serving as inner race). Pump lubricated by engine oiling system through oil lead at center of body (body sealed by gasket at each side of oil channel).

OVERHAUL:—Special service tool set recommended for pump servicing (includes spring tools to remove impeller without damaging spring and drivers to install shaft and bearing assembly).

Disassembly. Remove rubber cap on forward end of pulley, use tool S-221 to pull retainer button out slightly so that wedge S-222 can be inserted between spring coils to hold spring (do not pull spring out further than necessary to avoid stretching it), unhook retainer button, remove impeller and spring at rear end. Mount pump in S-225 holder in arbor press, press pulley off shaft, remove locking ring at forward end of body, press shaft and bearing out. Press out old bushing, ream new bushing after it is pressed in place.

Assembly—Reverse disassembly directions. When installing shaft and bearing assembly, use S-226 and S-226-B drivers as a combination to prevent damage to ball bearing. Assemble spring to impeller and use S-223 tool to pull spring through shaft so that retainer button can be assembled. Use new gaskets on body when installing pump (these gaskets seal oil channel). Tighten large retainer nut securely.

FORD V8 & MERCURY (1937-48)

No. 78-8501 (R.H.), 78-8502 (L.H.)
Ford V8 '90' & '100', Pass. Cars (1937 to 1948)
Ford V8 '90' Comm'l Models (1937 to 1941)
Ford V8 '90' Truck Models (1940-41)
Ford V8 '90' & '100' Truck Models (1942 to 1947)
Mercury, All Models (1939 to 1948)

No. 79-8501 (R.H.), 79-8502 (L.H.)
Ford V8 '90' Truck Models (1937-38-39)
Ford V8 '100' Truck Models (1939-40-41)
Ford V8 Cab-over-Engine Trucks (1940-41)

►***CAUTION—These 78-8501, 2 pumps must not be used on 1948 8RT V8 Truck Engine or 1949 8BA Pass. Car Engines. No means for lubricating pumps.***

FORD TRUCK MODEL NOTE:—This 78-8501 & 2 type pump is used on 1942 Cab-over-Engine models only. 1941 and previous Cab-over-Engine Trucks are equipped with 79-8501 & 2 type pumps.

4 & 6 Cyl. Models—These models have different type pumps with ball bearing shaft. Refer to separate article for data on these types.

TYPE:—Packless type with shaft mounted on bronze bushing ('78' types), sealed ball bearings packed with grease ('79' types). Bronze bushing is porous type and shaft lubricated by oil seepage through bushing (lubricated from engine oiling system), both types requiring no attention in service. Seal is assembled in recess in impeller hub and retained by snap ring in groove in hub. All models serviced in same manner except for shaft and bearing removal (see special directions below).

OVERHAUL:—**Disassembly.** Place pump in arbor press, press impeller and shaft assembly out of pulley (see note below for '79' types), lift off pulley and front thrust washer, remove impeller and shaft through rear of housing. Press old bushing out of housing. To dismantle seal, remove snap ring within impeller hub at forward end, remove seal parts (note order and assemble in same positions).

NOTE FOR '79' PUMPS. Shaft and bearing assembly must be pressed out of housing toward forward end (bearing seats against shoulder in housing at rear).

Seal Assembly. When installing seals, install parts in following order: Spring (small end in toward impeller), Spring Guide (tangs out), Seal Clamp Ring, Seal (with projecting face in, and lugs engaging slots in impeller hub), Thrust Washer (engage lugs in impeller hub slots), Snap Ring.

Pump Assembly—Use special tool V-247 to reface front and rear thrust faces of pump housing (necessary to prevent excessive thrust washer wear). Assemble pump by reversing disassembly instructions.

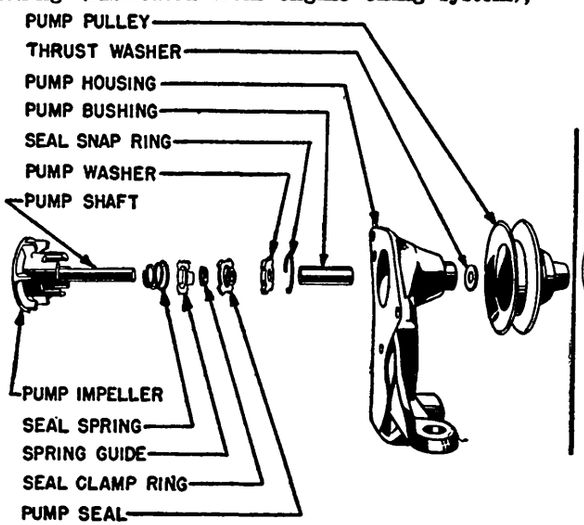

PASSENGER CARS
FORD V8 & MERCURY '78' TYPE PUMP

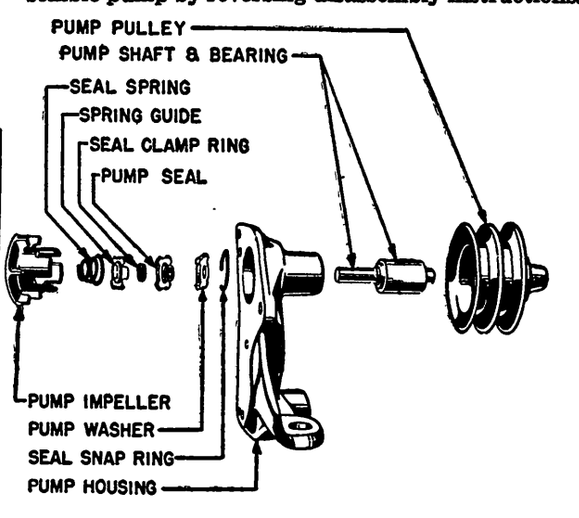

TRUCKS
FORD V8 TRUCK '79' TYPE PUMP

FORD V8 & MERCURY (1949)

No. 8RT-8501 (R.H.), 8RT-8502 (L.H.)
Ford Truck, Series F-1, 2, 3, 4 ,5, 6 (1948)
NO. 8BA-8501-B (R.H.), 8BA-8502-B (L.H.)
Ford Passenger Car, 8BA (1949)
NO. 8CM-8501-B (R.H.), 8CM-8502-B (L.H.)
Mercury 9CM (1949)

TYPE:—Packless type with sealed single-row ball-bearing in forward end of pump body with bronze bushing pressed in body next to seal. Front bearing retained by snap ring in groove in shaft on rear side, and by snap ring installed in front end of pump body on front side. Bushing lubricated by means of oil reservoir in pump body with oil cup at top. Seal seats in recess in pump body.

LUBRICATION:—***CAUTION—When installing new pump on engine, fill oil reservoir with SAE #20 engine oil. Use a piece of wire inserted in oil cup to allow air trapped in reservoir by wicking to escape.***

Regular Lubrication—Fill oil reservoir through oil cup at top of pump (SAE 20 oil every 1000 miles).

OVERHAUL:—**Disassembly.** Remove pulley from shaft (use Puller Tool No. 8505-N). Remove bearing snap ring from front of pump body. Remove impeller from shaft (use Puller Tool No. 8505-N). Press shaft and bearing out through front of pump body, and press bushing and seal out through rear of pump If required, press ball-bearing off shaft.

►***CAUTION—Use new impeller, seal, shaft, and bearing whenever water pump disassembled.***

Reassembly: Press new bushing in pump body with .5925" arbor (inside diameter of bushing installed should be .5920-.5925"). Press new seal in pump body with Tool No. 8564-P. Insert bearing snap ring on shaft and install bearing. Use Tool No. 8530 and press shaft and bearing into pump body (must press on outer race of bearing to avoid damaging bearing). Insert bearing snap ring in front of pump body. Support rear end of shaft and press pulley on front end until it bottoms against inner race of ball-bearing. Press impeller on rear end of shaft (clearance between impeller blades and pump body must be .030-.040"). Fill oil reservoir with #20 engine oil.

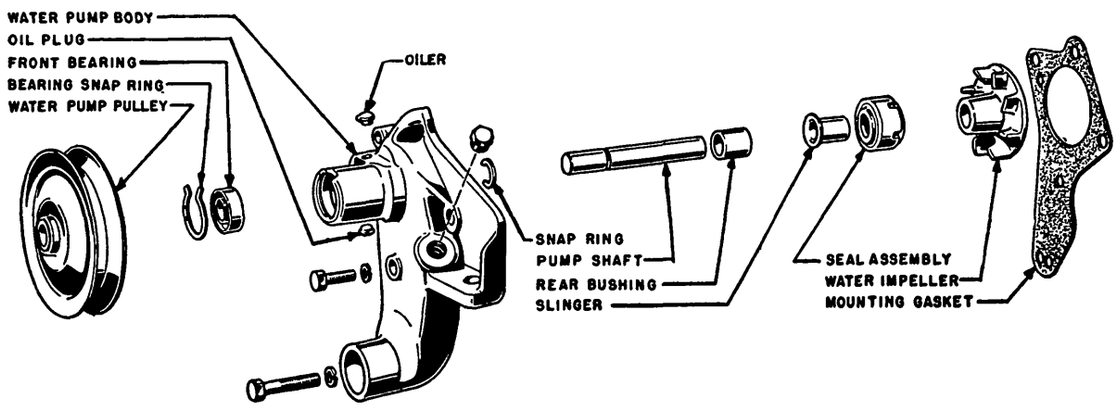

1949 MERCURY PUMP (1949 FORD V8 SIMILAR)

GRAHAM (1936)

GRAHAM CAVALIER, MODELS 90, 90A (1936)
GRAHAM SUPERCHARGER, MODEL 110 (1936)

TYPE:—Packless type with spring-loaded carbon disc type seal assembled in recess in impeller hub at rear end of pump. Shaft mounted on two ball bearings assembled on shaft (spacer between bearings, assembly retained by bearing nut at rear end).

SERVICING:—**Lubrication.** Pressure fitting provided on top of housing. Use light chassis lubricant only (do not use water pump grease).

OVERHAUL:—**Disassembly.** Take out capscrews on shaft flange, remove fan and fan pulley, take out 'U' shaped snap ring at forward end of pump housing, press shaft forward out of impeller, remove shaft and bearing assembly through forward end of housing. To dismantle bearings, bend up locking washer ears, remove bearing nut on rear end of shaft, remove bearings and spacer from shaft.

Assembly. Reverse disassembly directions. Make certain that locking washer ears are turned over on nut before inserting shaft assembly in pump.

GRAHAM (1937-41)

①GRAHAM, ALL MODELS (1937 to 1941)
①—Used on 1936 80, 80A after eng. no. 308875.

TYPE:—Packless type with spring-loaded rubber and carbon disc type seal assembled in recess in impeller hub at rear end of pump with special double-row sealed ball-bearing shaft held by locking ring in slot in housing hub. Shaft and bearing cannot be dismantled. Replace as an assembly.

OVERHAUL:—**Disassembly.** Take out capscrews and remove rear cover plate, remove bearing locking wire from housing (end of locking wire visible in slot in housing hub at center of bearing assembly). Support pump housing in arbor press, press shaft out of impeller and shaft and bearing assembly out of housing toward front end.

Seal Assembly. Install seal in same order as when taken out (carbon disc next to housing, rubber seal with larger diameter against carbon disc, spring retainer with dished side toward rubber seal, spacer, and spring with large end toward rubber seal).

Pump Assembly. Reverse disassembly directions

HUDSON & TERRAPLANE (1936-47)

Hudson 6 & 8, All Models (1936 to 1947)
Terraplane, All Models (1936-37-38)

TYPE:—Packless type. Requires no adjustment in service. Seal consists of spring-loaded rubber seal and thrust washer assembled in impeller hub and retained by locking ring at forward end of hub. Shaft mounted on two bushings with lubricant reservoir in housing between bushings (single fitting on top of housing, should be filled with water pump grease). Pump assembly consists of two major parts, front housing or pump body with shaft and impeller assembly, rear impeller housing which is bolted to engine and forms pump chamber.

Pumps with By-Pass—Pumps on cars with by-pass (for water re-circulation during warm-up) have a 2nd water inlet with hose to cylinder head outlet.

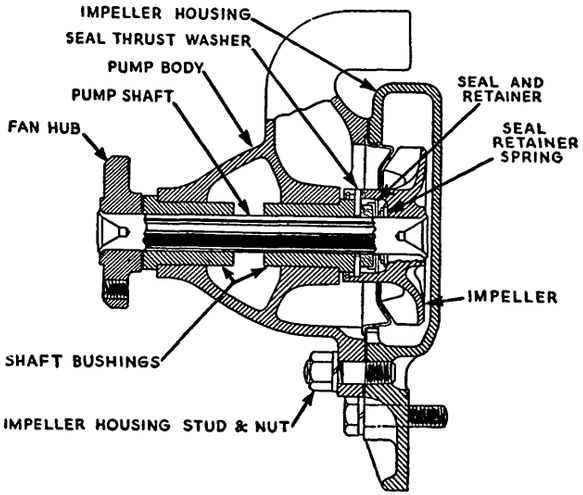

HUDSON & TERRAPLANE PUMP

1939 Water Pump Seal—New cupped seal retainer is used at impeller end of rubber seal which retains rubber seal under compression so that tighter fit secured at shaft which prevents leaks at this point. Seal is installed in same manner as previous type.
1939 Later Cars—Beginning with car #40780, new impeller assembly used with new shaft seal compression spring washer (spring reversed so that small end against washer and large end against impeller). NOTE—This new Impeller Assembly No. 158937 may be installed on 1938 and early 1939 cars.
1940-47 Cars—Seal is same type used on Late 1939

SERVICING:—**Lubrication**—Water pump grease fitting is special type with spring-loaded plunger which cuts off grease inlet when reservoir is filled to prevent overfilling. Lubricate at 1000 mile intervals using only an aluminum soap base grease.

OVERHAUL:—Pump shaft is peened over at each end to retain impeller and fan hub. Manufacturer recommends use of special Tool Set J-733B consisting of special body to be bolted to pump in place of impeller housing, pullers and pushers (for bushing service), and cutter (to remove burr on shaft).

Disassembly:—Remove fan and pulley, take out screws and remove impeller housing. Clamp pump

CONTINUED N NEXT PAGE

HUDSON & TERRAPLANE (1936-47) Cont.

upright in vise (grip fan hub in vise jaws), mount tool set body on pump, assemble cutter and thumbscrew and cut burr off shaft at impeller end (turn cutter with wrench while applying pressure with thumbscrew). Install driver and press shaft through impeller, remove shaft from forward end. Lift off impeller and baffle plate, pull old bushings (rear bushing toward rear, front bushing toward front). Take out seal lock ring, remove seal.

Bushing Installation—New bushings have inside diameter of .6205-.6208" which is reduced to .6185-.6190" when bushing pressed in place. Bushings cannot be reamed and special bushing pilot must be used to press bushings in (driving bushings with hammer cause bushings to collapse). Shaft clearance .0015-.0025" if bushings properly installed.

NOTE—Thrust face of rear bushing must be burnished smooth and flat to prevent thrust washer wear. Use burnishing tool J-733A-8 (spin burnishing tool with socket wrench with thumbscrew 'finger tight' to supply pressure, release pressure while turning tool—this is important).

Assembly—Press new bushings into place. Assemble seal in following order: compression spring, seal retainer, seal, thrust washer, locking ring (see that it engages groove in impeller hub). Install shaft assembly, place baffle and new impeller assembly on shaft, peen impeller end of shaft (use ball peen hammer) until endplay as measured between pulley flange and front bushing face is .005-.009" (first type impeller), .010-.014" (1939 and later type impeller). Assemble impeller housing on pump body, fill reservoir with aluminum soap base grease.

HUDSON (1948)

Hudson Six & Eight, All Models (1948)

TYPE:—Packless type with special double-row sealed ball-bearing shaft held by locking ring in housing. Bearing and shaft must be replaced as an assembly. The pulley hub is not part of the shaft and must be removed from old shaft and installed on the new shaft. A brass slinger is located on the shaft behind the bearing to prevent moisture traveling along shaft into bearing. Seal consists of spring-loaded rubber seal and washer in recess in impeller hub.

OVERHAUL:—Disassembly. Remove locking ring from slot in housing, pump rear cover and gasket. Place pump assembly in "Water Pump Holding Fixture J-2778," and using shaft driver, press out pump shaft and bearing assembly with pulley hub attached. Check pump body bore with an inside micrometer. If this dimension greater than 1.1015", replace water pump body. Also check pump body and if impeller has been scraping body, it indicates excessive end thrust (replace complete pump).

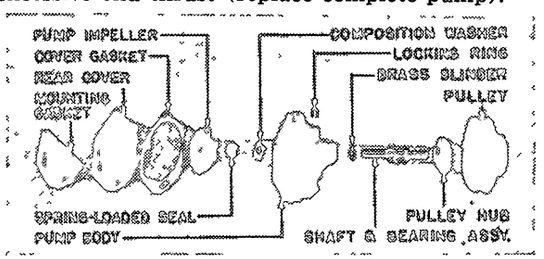

1948 HUDSON 6 & 8 PUMP

Reassembly: Assemble the shaft and bearing in pump body. Bearing should be slight press fit into pump body, and assembled so that the groove on outer race is aligned with locking ring slot in pump body bore. When pressing bearing and shaft in housing, press against face of outer race, not against shaft. Install fan pulley hub. Proper pulley spacing should be 5-5/32" from front face of hub to cover face on rear of pump body. Assemble seal, composition washer and brass slinger in impeller, and install impeller. Impeller must extend out .007-.017" beyond cover face of pump body. Install bearing locking ring, new cover gasket and install pump cover.

FRAZER & KAISER

Frazer & Kaiser, All Models (1947-48)

▷PRODUCTION CHANGE:—Cast-iron impeller used on later cars. Replaces brass blade and steel hub impeller used on earlier cars.

TYPE: Packless type with special double row ball bearing shaft (shaft serves as inner race, bearing is sealed type and packed with lubricant at assembly). A brass sleeve is located on the shaft behind the bearing to prevent moisture traveling along shaft into bearing. CAUTION—Do not attempt to remove bearing from shaft (replaced as an assembly).

OVERHAUL:—Disassembly. Take off fan blades and pulley. Remove pump cover and gasket. Take out bearing snap ring from slot in top of pump body. If brass impeller blades used, drill two ¼" holes in hub next to shaft, spread hub and remove with puller (if necessary use torch and separate blades from impeller and then pull impeller hub off shaft). If cast-iron impeller used, press shaft out of impeller. Then take out pump seal and washer. Drive out shaft and bearing assembly.

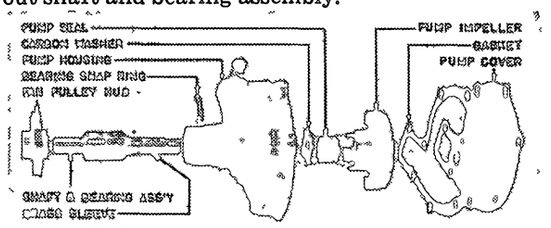

FRAZER & KAISER PUMP

NOTE—Check seal surface in pump body and reface to smooth surface if necessary.

Reassembly: If new shaft, bearing and sleeve assembly being installed, use new fan hub and press on shaft until hub 5/64" beyond end of shaft. Apply cup grease on shaft, sleeve, carbon washer, and seal surface in pump body. Install shaft assembly in pump body and lock in place with bearing snap ring. Place washer and seal on shaft, press impeller on shaft flush with end of shaft (rear of impeller will be 1/32" below pump cover and clearance between impeller and pump body should be 1/16"). Install cover using new gasket.

HUPMOBILE SIX

Hupmobile Six, All Models (1936 to 1940)

TYPE:—Adjustable packing type. Packing located under adjusting nut on pump housing (at rear of front bearing assembly) and consists of two packing sections separated by a drilled separator (separator lines up with grease channel and distributes grease to shaft). Shaft is mounted on ball bearing (front), bushing in housing (rear) and fan hub and impeller are pressed on shaft.

ADJUSTMENT:—Packing Adjustment. Turn down grease cup first, turn up packing nut until shaft is locked, then back nut off one-fourth turn, operate engine. This procedure should be repeated several times to secure good packing seat on pump shaft.

Lubrication. Fill rear bushing grease cup with water proof grease and turn down every 1000 miles. Plug in housing above front ball bearing should be removed and bearing lubricated at 20,000 miles intervals with high melting point ball bearing grease such as Keystone No. 44.

OVERHAUL:—Disassembly. Back off packing nut, remove snap ring in front of front ball bearing in forward end of pump housing. Support pump housing in arbor press, press shaft out of impeller, remove shaft and ball bearing at forward end of housing. Press old bushing out of pump housing. Remove all old pump packing and separator, clean grease out of separator groove and holes.

Assembly. Press new rear bushing into pump housing, coat new packing assemblies with heavy graphited oil before installing in housing. Front ball bearing should be packed with high melting point lubricant. Assemble by reversing disassembly directions above. Impeller and fan hub must be tight press fit on shaft and pressed on so that shaft is flush with end of hub. Install ball bearing with shielded side out toward fan and make certain that retaining snap ring is installed in front of bearing.

HUPMOBILE EIGHT

Hupmobile Eight, All Models (1936 to 1939)

TYPE:—Packless type with spring-loaded cork and bakelite seal assembled on shaft in recess in impeller. Impeller shaft mounted on two ball bearings in pump housing. Bearings are packed with grease at assembly and require attention at 40,000 mile intervals only or whenever pump disassembled.

OVERHAUL:—Disassembly. Take out screws and remove rear cover, remove nut and lockwasher on forward end of impeller shaft, remove fan and pulley hub, take out woodruff key. Remove impeller and shaft assembly through rear end of housing. Take out capscrews in bearing retainer on front end of pump housing, remove retainer, bearings and bearing spacer. Disassemble seal in impeller recess on shaft (note order and replace in same position).

Seal Assembly. Thrust washer and springs are lead plated. To assemble seal, install spring with small end toward impeller, spring washer, cork seal, bakelite seal, and snap ring in impeller recess.

Pump Assembly. Install ball bearings with sealed side out, pack bearings and housing hub with Keystone #44 grease. Make certain that spacer is in place between bearings and that front bearing washer is in place in housing behind outer race.

LINCOLN-ZEPHYR (1937-40), LINCOLN (1941-48)

No. H-8501B (R.H.), H-8502B (L.H.)
Lincoln, Zephyr Models H (1936), HB (1937)
No. 86H-8501A (R.H.), 86H-8502A (L.H.)
Lincoln, Zephyr Model 86H (1938)
No. 86H-8501B (R.H.), 86H-8502B (L.H.)
Lincoln, Zephyr Models 86H (1938), 96H (1939)
No. 06H-8501A (R.H.), 06H-8502A (L.H.)
Lincoln, Zephyr & Cont'l 06H (Early 1940)
No. 06H-8501B (R.H.), 06H-8502B (L.H.)
Lincoln, Zephyr & Cont'l 06H (Late 1940)
Lincoln, All Models (1941 to 1948)
(R.H.)—Right hand pump. (L.H.) Left hand pump.

IMPORTANT PUMP CHANGES:—Two different pumps used on 1940 cars as listed below. All 1940 pumps have new pump body for left hand pump only (Part No. 06H-8504) and some parts are not interchangeable between the different 1940 types.

Type 06H-8501-A (RH), 06H-8502-A (LH)—These pumps are same design as used on previous cars and parts are interchangeable except for new left hand pump body (06H-8504) and new impeller No. 06H-8512-A (used with 4 27/32" shaft H-8511-B).

Type 06H-8501-B (RH), 06H-8502-B (LH)—These pumps have new 5" shaft (06H-8511) and other new parts used with this shaft only as follows: Seal Cage No. 06H-8559 (4 prong type, old cage had 6 prongs), Thrust Washer Disc No. 06H-8557 (4 prong type, old disc had 6 prongs).

TYPE:—Packless type. Shaft mounted on ball bearing (front) bronze bushing (rear) with oiler for rear bearing only (front ball bearing packed with grease and requires no attention). Pumps are same design except for change in 1940 production (see Note).

SERVICING:—Lubrication—Oiler provided for rear bushing. Lubricate with engine oil at 1000 mile intervals. Front ball bearing requires no attention.

OVERHAUL: With pumps removed from engine, disassemble and service both pumps as follows:

Disassembly: Press out pin in impeller hub, press impeller off pump shaft, remove seal cage and seal parts (spring, packing retainer, packing, packing disc) from shaft. Press locking pin out of pump pulley, press pulley off shaft. Press shaft and bushing out at rear of housing ("C" washer in shaft groove will push bushing out). Remove bearing retainer snap ring from within forward end of housing, press bearing assembly (inner spacer, felt packing, packing retainer, bearing, and bearing spacer out at forward end of housing.

Inspection & Servicing—Replace housing if cracked or otherwise damaged. Replace shaft and bushing if clearance exceeds .004" (shaft clearance in new bushing .0006-.0019"). Replace ball bearing if rough, worn, chipped, or cracked.

Seal Assembly—Seal is assembled in cage which fits on shaft in front of impeller. To assemble seal, install parts in cage in following order: Packing Spring (large end seated in cage), Packing Retainer Washer or cup (cupped end out to receive packing), Seal Packing (fits in cupped end of retainer), Disc or thrust washer. NOTE—Ears on thrust washer disc must engage slots in cage. Disc is 6 pronged type (early 1940 type), 4 pronged type (late 1940 and all models beginning 1941).

Reassembly: Install inner bearing spacer, felt packing, and packing retainer in bearing recess in housing, press bearing and bearing spacer in housing, install bearing snap ring. Install "C" washer in groove on shaft, press shaft and bushing in pump housing. Install seal assembly on shaft (see seal data above), press impeller on shaft until locking pin hole in impeller and shaft are aligned, install locking pin. Press pulley on shaft and align locking pin hole in pulley and shaft, install locking pin.

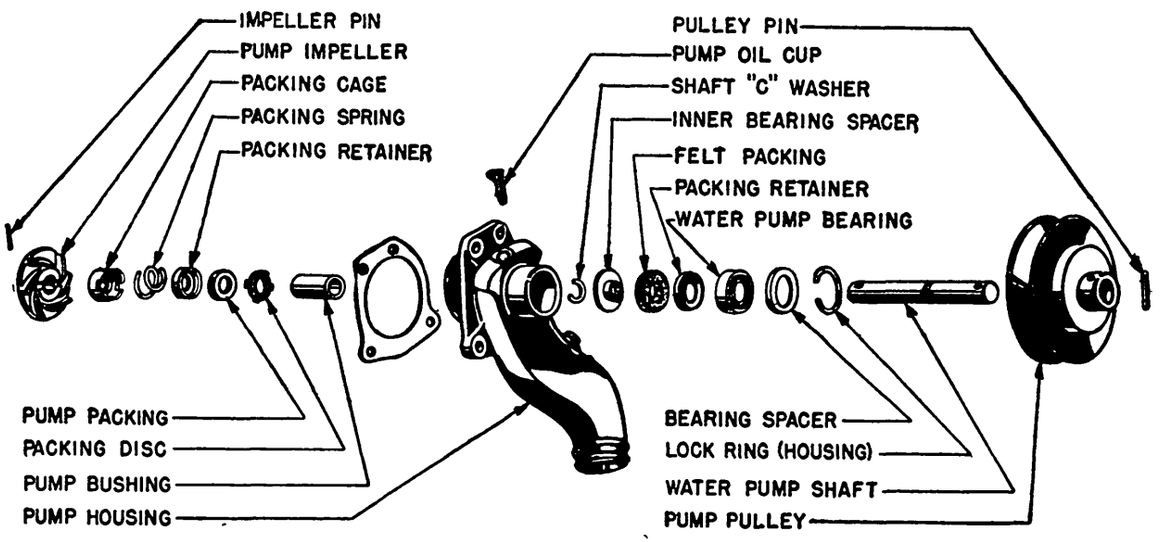

LINCOLN 1940-48 PUMP (EARLIER ZEPHYR PUMP SIMILAR)

LINCOLN (1949)

No. 8EL-8501-B (R.H.), No. 8EL-8502-B (L.H.)
Lincoln, 9EH, 9EL (1949)

TYPE:—Packless type with sealed double row ball-bearing shaft (shaft serves as inner race for bearing). Bearing and shaft furnished as an assembly and cannot be dismantled. Shaft retained by locking ring in slot in pump body engaging groove in bearing outer race.

OVERHAUL:—**Disassembly.** Remove pulley from shaft (use Puller Tool No. 8505-N). Remove bearing snap ring from slot in pump body. Press shaft and bearing out through rear of pump body (use Tool No. 8564-N). Press impeller off shaft and take off seal assembly.

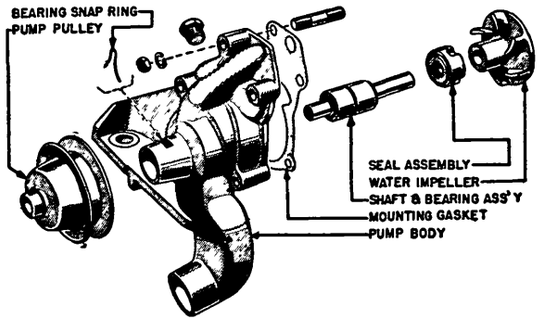

1949 LINCOLN V8 PUMP

Reassembly: Carefully press new seal assembly in pump body (use Tool No. 8564-P). Press shaft and bearing into pump body from front (use Tool No. 8564-N) until groove in bearing aligned with slot in pump body, insert bearing snap ring. Press pulley on front end of shaft until pulley flush with end of shaft. Press impeller on rear end of shaft, impeller must be flush to .010" under pump body rear face.

LINCOLN V12

Lincoln V12, All Models (1936 to 1940)

TYPE:—Adjustable packing type. Impeller is mounted on center of shaft with bronze-bushed bearing in cover plate at rear of pump. This bearing lubricated by lubricant connection in plug at rear end of shaft. Packing is installed under packing adjusting nut on forward end of pump housing behind generator (pump driven through flexible coupling by generator armature shaft).

SERVICING:—Packing Adjustment. Adjusted in usual manner by turning up packing adjusting nut.

Lubrication. Lubricate fitting on rear end of pump at 1000 mile intervals using gear lubricant.

OVERHAUL:—Disassembly. Press drive fitting off forward end of pump shaft, remove rear cover plate, withdraw impeller and shaft through rear of pump housing. Impeller is retained on shaft by pin in hub at forward end. Thrust washers on face of pump housing and cover plate are pinned in place.

Pump Assembly. Reverse disassembly directions as given above.

NASH

Nash Six, All Models (1936 to 1948)
Nash Eight, All Models (1936 to 1942)
Nash-Lafayette, All Models (1936 to 1940)

NOTE:—Pumps on all models are similar design but have slight differences in construction (cover plate at rear on some models, at front on shaft on others). All models serviced in same manner.

TYPE:—Adjustable packing type with 'floating impeller'. Pump is mounted on side of engine block and driven by flexible coupling from generator armature shaft. Packing adjusting nut provided on shaft on forward end of pump. Shaft operates in bronze bushing pressed in pump body.

SERVICING:—Packing Adjustment. Adjusted in usual manner by turning up packing adjusting nut. Make adjustment with engine running and turn up nut only enough to stop leaks.

Lubrication. Pressure fittings on housing at rear of packing nut. Lubricate with water pump grease at 2000 mile intervals (1942 and earlier cars), 3000 mile intervals (1946-47-48 cars). CAUTION—Lubricate sparingly—do not use high pressure grease gun.

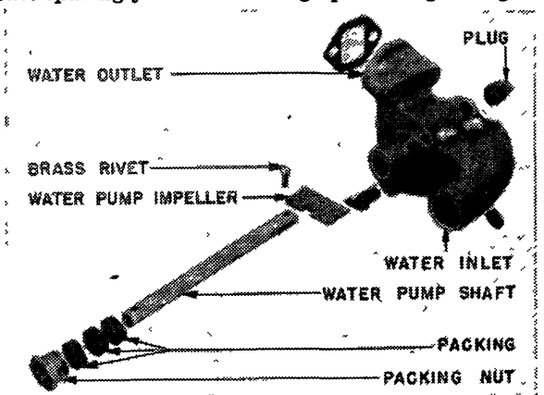

NASH PUMP

OVERHAUL:—**Disassembly.** Remove impeller by taking out plug in pump and drive out brass rivet while supporting shaft through water outlet. Remove packing nut and withdraw shaft. If bushing removal required, use Water Pump Bushing Remover and Replacer Tool J-1419.

Reassembly: If new bushing being installed, use Replacer Tool J-1419 and ream bushing with Bushing Reamer KMO-314. Install shaft in pump, place impeller on shaft with rivet holes aligned, peen rivet (supporting shaft through water outlet). Install packing rings (3 total) one at a time and draw each one down with packing nut (do not set packing nut tight until pump on engine and allowed to run in).

OLDSMOBILE & PONTIAC (1936-37)

Oldsmobile 6 & 8, All Models (1936)
Pontiac 6 & 8, All Models (1936-37)—See Note

NOTE:—Pontiac 1937 Models. This type pump used on first 1937 cars only. See following article for pump used on cars after Engine No. 6-262194 (Six), 8-95994 (Eight).

TYPE:—Adjustable packing type. Packing installed under adjusting nut at forward end of rear bushing (bushing threaded for nut). Shaft mounted on two bushings in housing (shoulder on rear bearing takes impeller thrust). Oilers provided for both bushings.

Pontiac 1937 Models. Special needle roller bearing used instead of bushing at forward end of pump (rollers retained by cage which serves as outer race, no inner race used). Pressure gun fitting provided to lubricate this bearing.

SERVICING:—Lubrication. Use engine oil only in oiler for each bushing (chassis lubricant in grease fitting for front bearing on 1937 Pontiac models).

Packing Replacement. Shaft must be removed from pump (see Disassembly directions below). Coat new packings and shaft with engine oil before replacing.

OVERHAUL:—Disassembly. Take out capscrews and remove fan (fan hub integral with shaft). Remove cover plate on rear face of pump housing, loosen packing nut. Support pump housing in arbor press, press shaft out of impeller, lift out impeller, remove shaft at forward end of housing. Press out old bearings (either bushing may be removed without disturbing opposite bushing). NOTE—On 1937 Pontiac, front needle bearing is retained by retainer installed in recess in housing at rear of bearing.

Servicing (Oldsmobile). If new bushings installed use tool J-613 and press rear bushing in first (tool will burnish bushing while pressing it into place). Screw packing nut in place on bushing to retain it and press tool out. Use same tool to install front bushing. Always oil burnishing portion of tool when installing bushings. Bushings should be burnished to inside diameter of .487-.488" and shaft clearance should be .0005-.002".

Servicing (Pontiac). Press new bushings in place and ream with special expansion reamer OR-108 (.483"). Shaft clearance should be .0005-.002".

Assembly. Coat both packing and shaft with engine oil, install packing and packing nut, insert shaft and press impeller on shaft until slightly more than flush with hub. Check endplay. Should be .008-.014".

OLDSMOBILE & PONTIAC (1937-48)

Oldsmobile 6 & 8, All Models (1937 to 1948)
Pontiac 6, 37-26CA (1937)—Eng. No. 6-262194 Up
Pontiac 8, 37-28CA (1937)—Eng. No. 8-95994 Up
Pontiac 6 & 8, All Models (1938 to 1948)

SPECIAL SERVICE NOTES:—1941 Pontiac Pump Shaft & Bearing Assemblies—1941 pumps serviced by 1942 type shaft and bearing assembly which is furnished with brass moisture slinger (as used in 1942 pumps) installed on shaft. When installing this type shaft in 1941 pump, remove brass moisture slinger from shaft (use pliers) and install neoprene bearing shield (included separately in all service packages) in pump instead. CAUTION—1941 pumps not counter-bored for brass slinger clearance and slinger must not be used in these pumps.

1939 PUMP PRODUCTION CHANGES:—Special Neoprene seal, No. 503282, used on late 1939 Oldsmobile pumps and Pontiac pumps after the following Engine Nos. 6-505121 (Six), 8-164131 (Eight). This seal furnished with pump parts packages for installation on pumps in service and is designed to protect shaft bearing from moisture. See Bearing Shield Installation data below. NOTE—This Neoprene Shield used on 1940-41 Pontiac Pumps but new type brass moisture slinger used on 1940-41 Oldsmobile models (see Oldsmobile Moisture Slinger data below).

TYPE—Packless type with special factory-lubricated and sealed ball bearing shaft. Requires no adjustment or lubrication in service. Bearing cannot be disassembled and must be replaced as unit with shaft (shaft serves as inner race). Seal consists of carbon graphite washer and spring loaded rubber sealing cup in recess in housing at impeller end of pump (retained by locking ring on Oldsmobile models only). On Pontiac models, no locking ring is used and graphite washer is prevented from turning by "ears" on the washer which engage slots in the housing (1938-42), or by two stainless steel pins in the housing which engage notches in the graphite washer ears (1946-47-48).

Late 1939 Pumps—Neoprene bearing shield added on these models. See Production Change Note above and special Bearing Shield service data below.

1940-48 Oldsmobile—New type Brass Moisture Slinger used instead of Neoprene bearing shield. See special Moisture Slinger service data below. Fan pulley hub is ⅛" shorter than type used on 1939 cars and earlier type cannot be used on these cars.

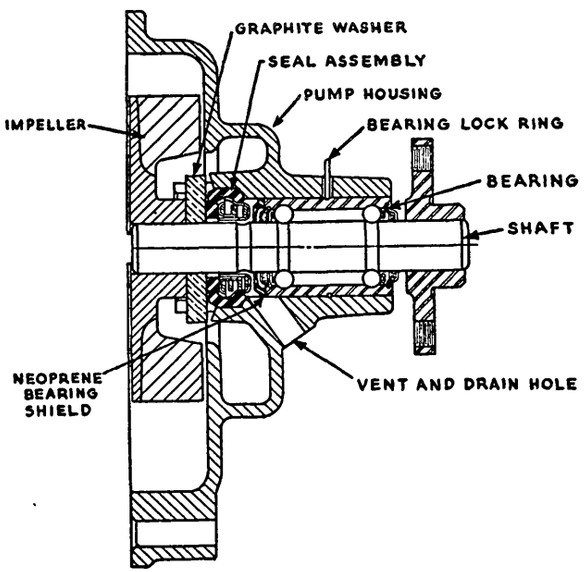

OLDSMOBILE & PONTIAC PUMP (NEOPRENE BEARING SHIELD TYPE)

NOTE—By-pass to cylinder head is not used on 1942 Eight Cylinder models (by-pass on all 1942 models is similar to type used on 1941 and previous Six Cylinder Models). See Installation Note below for new type gaskets required for 1942 Eights.

1940-41 Pontiac—All models have same type Neoprene bearing shield as used on late 1939 pumps. See Bearing Shield service data below.

1942 Pontiac—Neoprene bearing shield is not used and new type brass moisture slinger is installed on all 1942 Pontiac Pumps (similar to type used on Oldsmobile). All service shaft and bearing

CONTINUED ON NEXT PAGE

OLDSMOBILE & PONTIAC (1937-48) Continu d

assemblies are furnished with brass moisture slinger installed. Refer to Special Service Note above for removal of slinger when using 1942 type shafts for replacement on 1941 Pontiac Pumps.

1946-48 Pontiac—Brass Moisture Slinger on shaft (see 1942 data above) is longer and extends through the seal and carbon washer to protect surface of shaft from corrosion. Service shaft and bearing assemblies are furnished with the moisture slinger installed.

OVERHAUL:—Disassembly. Remove fan and pulley, and cover plate on rear of pump housing. Take out shaft retainer wire (bearing lock ring) in slot at top center of bearing hub on housing. Support front face of pump housing in arbor press, press shaft and bearing assembly out of impeller and housing toward front end. Remove seal assembly from housing (On Oldsmobile models, first take out locking ring in seal recess at rear of housing). If shaft and bearing assembly being replaced, press fan hub off old shaft and install on new shaft.

Servicing—If bearing retainer wire worn (indicating that bearing rotates and has excessive end thrust), or if impeller scrapes on housing due to excessive end thrust, pump assembly should be replaced. If bearing is rough or bearing seals loose in outer race so that they can be turned by hand, replace bearing and shaft assembly. Carbon washer, rubber seal, and spring are furnished as a package unit.

Neoprene Bearing Shield (1939 Oldsmobile, 1939-40-41 Pontiac)—Install shield in bearing bore in pump housing with smaller diameter end toward impeller and larger diameter end toward bearing before installing shaft and bearing assembly in housing.

Brass Moisture Slinger (1942-48 Pontiac). Service shaft and bearing assemblies are furnished with this slinger installed and there should be no occasion to remove slinger unless shaft is being used for replacement on 1941 Pumps (refer to Special Service Note above). NOTE—Slinger on 1946-48 pumps is longer type and extends through washer and seal.

Brass Moisture Slinger (1940 to 1948 Oldsmobile). Install slinger on shaft before shaft and bearing assembly installed in pump housing. Start slinger on shaft with flared end toward bearing, stand shaft and bearing assembly in arbor press with slinger end up, use special tool J-1446 to press slinger down on shaft until slight drag felt on .025" feeler placed between end of bearing and slinger, then install assembly in pump housing. CAUTION—This .025" clearance between slinger and bearing necessary for proper protection of bearing without danger of slinger dragging on bearing which will cause noise.

Seal Assembly—Machined seal seat in pump housing must be smooth and clean to insure good seating of seal. Clean seat with thinner to remove all dirt and gum and wipe dry (seal seat inthe pump body can be cleaned by using special Pump Body Cleaning Reamer No. J-1455). Install seal assembly in pump housing in following order: Inner Spring Cup (cupped side out), Spring, Outer Spring Cup (flanged end out toward seal), Rubber Seal (smaller diameter out—make certain that flared portion of inner spring cup enters seal so that it is retained in housing when installed), Graphite Seal Washer (polished side toward impeller). On Oldsmobile models, install locking ring in groove in housing to retain seal parts. Make certain that all seal parts are properly seated and do not hang up on sides of casting. On Pontiac, make certain that ears on graphite washer engage slots in body (1938-42), or that notches in ears of graphite washer engage the pins in the body (1946-47-48).

NOTE—On Oldsmobile models, tool #J-1456 should be used to install seal. Installation will be facilitated by wetting housing with soap solution.

Pump Assembly—Insert shaft and bearing from front, lining up retainer grooove with slot in housing (if bearing is press fit in housing, remove fan hub install bearing in arbor press applying pressure on outer race only, re-install fan hub applying pressure to impeller end of shaft and allowing housing to float on bearing so that no pressure exerted on bearing or races). Press impeller on shaft (support assembly on fan end of shaft) until clearance between rear face of impeller and face of cover plate flange on housing is 1/32" (Oldsmobile), 9/64" (Pontiac '37-38), 3/64" (Pontiac '39 & later). Install shaft retainer wire through slot in housing, use new gasket when installing pump rear cover plate.

NOTE—Pontiac 3/64" clearance specification for 1939-40-41 models supersedes 9/64" originally specified for these models.

Installation (Oldsmobile only)—Use new rubber grommet between water pump and by-pass port in cylinder head to prevent leaks at this point when pump installed on engine. NOTE—This bypass not used on 1939-42 Six Cylinder or 1942 Eight Cylinder Models. Refer to following note for 1942 Eight Cylinder Gasket data.

Oldsmobile 1942 Pump Note—New type by-pass on 8 cylinder models consists of hole in rear cover plate opening into hole in front face of block. Requires new type gaskets as follows:

Pump Cover Gasket (1942 6 & 8).....No. 416432①
Pump-to-Block Gasket (1942 6 & 8).....No. 416433②

①—May be used on all 1939-40-41-42 6 & 8 cylinder models. Previous type gasket No. 411045 may be used on 1942 8 cyl. cars by punching hole for by-pass.

②—May be used on all 1939-40-41-42 6 & 8 cylinder models. Previous type gasket No. 411046 may be used on 1942 6 cyl. cars but cannot be used on 1942 8 cyl. cars.

PACKARD SENIOR LINE

Eight, All Models (1936)
Super Eight, All Models (1936 to 1938)
Twelve, All Models (1936 to 1939)

NOTE:—These pumps are similar in design except for slight differences in bearing assembly. All other servicing instructions apply equally to both models.

TYPE:—Adjustable packing type. Packing located under adjusting nut on pump cover (at rear of bearing assembly). Shaft mounted on two ball bearings in recess in housing (space between bearings forms oil reservoir and is packed with oil-soaked felt). Fan hub is integral with pulley and is keyed on shaft and held by nut at forward end.

ADJUSTMENT:—Original packing is continuous ring type. Split type packing rings furnished for service and can be installed without removing pump shaft (back off nut and install service packing ring when limit of adjusting nut travel is reached).

Lubrication—Both bearings lubricated by single oiler on top of bearing housing. Use SAE. No. 30 (summer), 20-W (winter) engine oil.

OVERHAUL:—Disassembly. Remove fan, take off pulley retaining nut at forward end of shaft, pull pulley, remove key from shaft. Shaft and impeller can then be withdrawn toward rear. Impeller mounted on shaft by pointed setscrew in hub which controls clearance between impeller vanes and housing.

Bearing Assembly (Super Eight)—Bearings positioned by snap ring in housing at inner end of each bearing outer race (front bearing retained by cover plate on forward end of housing). Shaft endplay adjusted by using gaskets as shims under this cover plate and should be .005-.010". Rear bearing inner race is seated against shoulder on shaft at rear end, spacer installed between bearings, and assembly is clamped together by pulley hub when nut at forward end of shaft is tightened. When installing bearings, soak felt packing in housing with SAE No. 50 engine oil and make certain that packing washer installed at each end with cupped side out toward bearing.

Bearing Assembly (Twelve)—Same as for Super Eight except that snap rings not used in housing and rear bearing outer race seated against shoulder in housing (both bearings must be removed at front).

Pump Assembly—Reverse disassembly directions. See that clearance between face of impeller blades and pump body is .010-.034" (Super Eight), .025-.042" (Twelve). This clearance controlled by impeller setscrew which engages hole in shaft.

PACKARD 6 & 8 (1936-37)

PACKARD SIX, MODEL 115C (1937)
PACKARD EIGHT, MODEL 120B ('36), 120C ('37)

TYPE:—Adjustable packing type. Packing located under adjusting nut at forward end of rear bushing (bushing threaded for adjusting nut). Shaft mounted on two bushings inserted in pump housing. Oiler provided in housing for each bushing.

SERVICING:—Lubrication. Fill each oiler with SAE. #30 engine oil at 2000 mile intervals. Front oil reservoir has felt filler which retains oil.

Packing Renewal. Original packing is continuous ring type. When limit of adjustment reached, remove fan and pulley, backing off adjusting nut, remove old packing, install special split ring type service packing.

OVERHAUL:—Disassembly. Take out capscrews and remove fan and pulley, remove pump housing rear cover. Heat impeller in boiling water, press shaft out of impeller, remove shaft at forward end. Press out old bushings (rear bushings must be removed through rear opening, this bushing has shoulder which takes impeller thrust).

Assembly. Reverse disassembly directions. Heat impeller in boiling water before installing, press on shaft until clearance between front face of impeller and pump housing is .021-.029". Clearance between rear face of impeller hub and pump cover must be .005-.015". Use new gasket when installing cover plate.

PACKARD (1939-48)

Six & Eight, All Models (1939 to 1948)
Super & Custom Eight, All Models (1939 to 1948)

TYPE:—Packless type with ball-bearing shaft similar to 1938 design except that oiler and oil wick not used and bearing permanently packed with lubricant during assembly (no lubrication required in service).

OVERHAUL:—Note—Rebuilt pumps available from factory on 'exchange' basis. To service pumps proceed as follows:

Disassembly—Remove fan and pulley, take out bearing locking ring in slot in bearing hub on housing. Support pump housing in arbor press, press impeller off shaft, remove shaft and bearing assembly through front of housing. To remove seal, take out locking ring in impeller hub, withdraw composi-

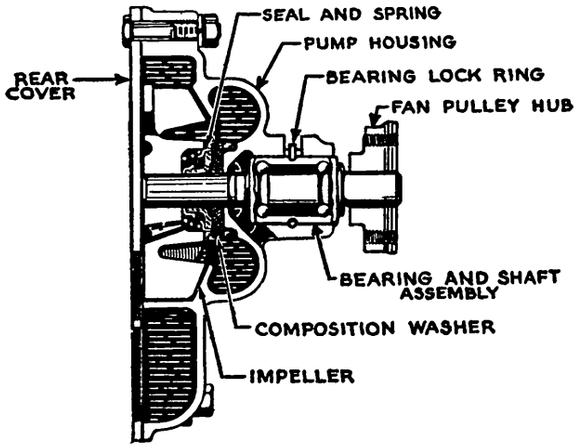

PACKARD PACKLESS, BALL-BEARING PUMP

tion thrust washer, rubber seal, spring cup and spring. NOTE—Do not remove fan pulley hub or attempt to remove bearing from shaft. Shaft, bearing, and pulley hub serviced as an assembly.

Seal Assembly—When installing seal in impeller, make certain that small end of spring in toward impeller, coat inner surface of seal with glycerine and install with larger flanged face out toward composition washer, install composition thrust washer with smooth (convex) face out toward pump housing, install locking ring.

NOTE—Machined face of pump body on which seal washer bears must be smooth and flat. If this surface rough or scored, resurface face or replace pump body.

Assembly—Install shaft and bearing assembly in pump housing making certain that locking ring groove in bearing lines up with slot in pump housing. Coat impeller end of shaft with glycerine (to prevent damage to seal when impeller pressed on. Heat impeller in water just under boiling point for 1½ minutes, press impeller on shaft until clearance between impeller vanes and housing is .012-.074". Coat pump cover gaskets with Perfect Seal Grade A gasket paste when installing cover. Make certain that bearing locking ring installed in pump housing slot.

PACKARD 6 & 8 (1938)

PACKARD SIX, SERIES 1600 (1938)
PACKARD EIGHT, SERIES 1601, 1602 (1938)

TYPE:—Packless type with special double-row ball bearing shaft. Requires no adjustment in service. Bearing and shaft must be replaced as an assembly (shaft serves as inner race and cannot be dismantled). Bearing oiled by wick in plug in lower side of pump housing (wick extends through outer race to contact shaft). Seal consists of spring loaded rubber seal and composition washer in recess in impeller hub (held by locking ring at forward end of hub).

OVERHAUL:—Disassembly. Remove fan and pulley. Unscrew oil wick plug on underside of housing, remove cover plate on rear of pump housing. Support pump housing in arbor press, press shaft and bearing assembly out of impeller and housing. To dismantle seal assembly, take out locking ring in forward end of impeller hub, withdraw seal parts.

Servicing:—Bearing and shaft must be replaced as an assembly. When renewing seal, install spring with large end out, seal with flange out, composition washer with convex side out and install locking ring in hub groove.

Assembly:—Reverse disassembly directions above. Heat impeller in water just below boiling point before installing. Press impeller on shaft until clearance between edge of vanes and housing is .030-.050". Coat gaskets with Perfect Seal Grade A paste, make certain that gasket on oil wick plug is in good condition and tighten plug securely to prevent oil leaks (fill reservoir with SAE. No. 30 engine oil).

STUDEBAKER 1939-48 (PACKLESS TYPE)

Champion, All Models (1939 to 1948)
Commander, All Models (1947-48)
President, Models 7C (1941), 8C (1942)

TYPE:—Packless type with spring-loaded rubber seal and fiber thrust washer assembled within recess in impeller. Shaft mounted on special sealed double row ball bearing which is an integral assembly with the shaft (bearing cannot be removed and assembly serviced as a unit). Pump requires no lubrication in service.

Champion 1947-48. New type seal used, consisting spring cups, and rubber seal are separate parts and must be installed in correct order as directed in Overhaul section below. Entire seal assembly retained in impeller hub by locking ring installed in groove in hub.

Champion 1947. New type seal used. Seal consists of a rubber bellows with a spring installed on the outer circumference and bearing on the ends of the seal to maintain seal contact on impeller and thrust washer faces.

President 1941-42. This pump new packless type with ball-bearing shaft. Similar to design used on Champion except that impeller located within pump housing. Serviced in same manner as Champion pump except that rear cover plate must be removed from housing before pump can be disassembled. Use new gasket when replacing cover plate.

Commander 1947-48. Seal is shown in illustration below. Pump has rear cover (adapter plate).

OVERHAUL:—Disassembly—Remove bearing lock ring from slot in housing hub at center of bearing. Support housing in arbor press, press shaft and bearing assembly out of impeller and housing toward front end, lift off impeller and remove seal and thrust washer from impeller recess. Support fan hub in arbor press and press shaft out of hub (new hub must be used when reassembling pump—old hubs will not be sufficiently tight fit on shaft).

Servicing—Impeller assembly must be replaced as a unit. If seal thrust washer bearing surface in pump body is rough or scored, resurface with special Pump Facing Tool J-1501.

Seal Assembly (1939-40)—Spring and cups are located within rubber seal. Install rubber seal in impeller hub and place fiber thrust washer on rubber seal so that ears engage slots in impeller and washer contacts face of water pump housing when impeller installed.

CONTINUED ON NEXT PAGE

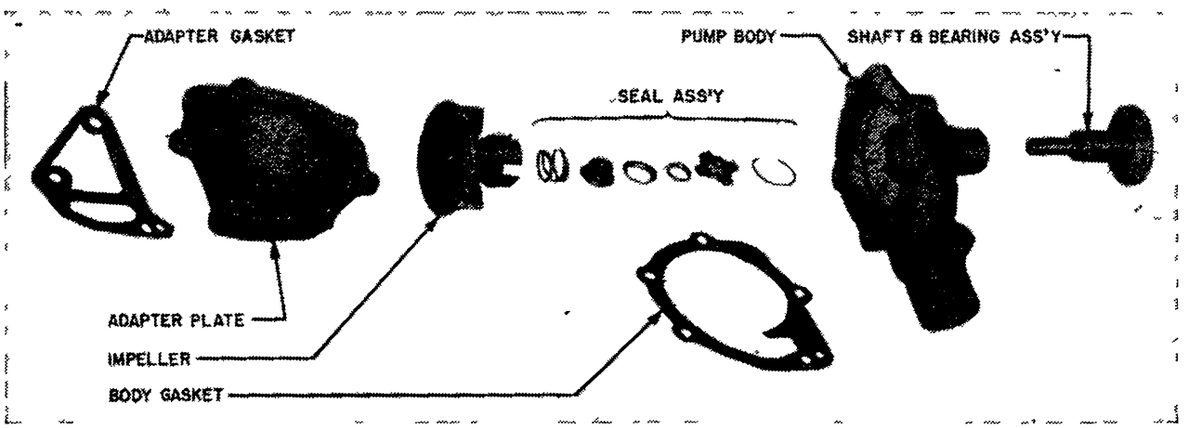

STUDEBAKER C MMANDER (1947-48) PUMP

STUDEBAKER 1939-48 (C nt.)

Seal Assembly (1941-42)—Install seal parts in impeller hub in same order as removed. See that ears on spring plate, seal, and thrust washer engage slots in impeller hub, install locking ring in hub and see that ring properly seated in grooves.

Seal Assembly (1946-48)—See that spring properly installed on seal, install seal and thrust washer within impeller hub making certain that thrust washer ears engage slots in hub, install locking ring to retain seal assembly in hub.

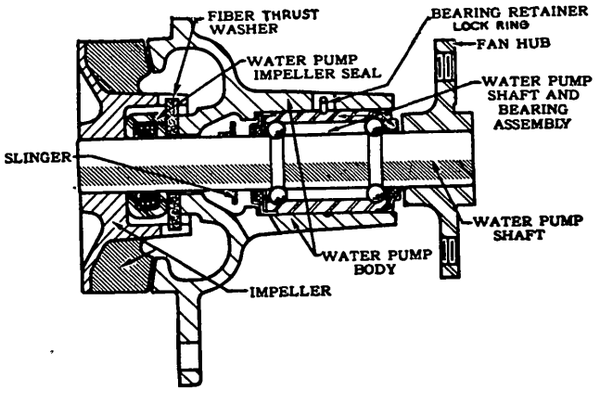

STUDEBAKER PACKLESS TYPE PUMP (1940 TYPE SEAL SHOWN)

Pump Assembly—Press new fan hub on shaft so front face is flush with end of shaft, install shaft and bearing assembly in pump housing so that groove in bearing lines up with locking ring notch in housing, install locking ring. Press impeller on shaft until clearance between edge of impeller vanes and the pump body is .015-.031". On the Commander & President models, use new gasket when installing pump rear cover plate (no cover used on Champion).

STUDEBAKER

ADJUSTABLE PACKING TYPE

Dictator, All Models (1936-37)
Commander, All Models (1938 to 1942)
President, All Models (1936 to 1940)

NOTE:—President Models (1941-42). These models have new type packless ball bearing pump. Refer to preceding article for data.

TYPE:—Adjustable packing type. Packing located under adjusting nut at forward end of rear bushing. Shaft mounted on two bushings in pump housing (front bushing within fan pulley).

ADJUSTMENT:—Adjust packing by turning up adjusting nut (insert screwdriver between pulley and pump housing). Packing is grapho-metal ring type and requires more pressure than ordinary packing. To renew packing, thoroughly clean out old packing, install four new packing rings, one at a time, tightening adjusting nut down on each ring as it is installed. This special ring packing prevents shaft scoring (with more than ordinary adjusting nut pressure) and gives longer service.

Lubrication: Differs for the various models as follows:

Dictator 1936-37—Pressure gun fitting provided for front bushing (use chassis lubricant), grease cup for rear bushing (use Kasson or other waterproof grease).

President (1936-37)—Grease cup provided at each bushing. Use Kasson or other water proof grease.

Commander '38-42, President '38-40—Pressure gun fitting provided for front bushing (use chassis lubricant), grease cup provided for rear bushing (use Kasson or other water pump lubricant).

OVERHAUL:—Disassembly. Remove fan and pulley (on models where these are mounted directly on water pump shaft), take off rear cover plate on pump housing, drive out pin on the fan hub (Dictator 1936-37), press fan hub or coupling off shaft. Withdraw impeller and shaft through rear of pump housing (impeller pinned to shaft). Remove packing nut and packing, press rear bushing out to rear (see Note), front bushing out toward front end.

NOTE—On President 1936-37 models, rear bushing is inserted in blind hole in pump rear cover behind impeller.

Bushing Installation—Press new bushings in and check clearance on shaft. Should be .001-.003" (bushings need not be reamed if clearance is correct).

Assembly—Reverse disassembly directions. Make certain that thrust washer installed on shaft next to impeller before installing in pump housing. When pressing fan hub on shaft, see that clearance between hub and flange on forward bushing is .003-.005" for correct endplay. See Packing renewal instructions under Adjustment above.

Fan Hub Servicing—New fan hub should be installed whenever hub removed from water pump shaft. Hub must be tight fit on serrated end of shaft and will be loosened by removal so that tight fit cannot be secured if hub re-installed.

WILLYS (1936-39)

Willys, All Models (1936 to 1939)

NOTE:—See Packing Installation in Servicing Section below for directions for installing new type packing on previous pump models.

Willys-Overland 39 (1939) & Later Willys Models—These models have new type packless pump with ball-bearing shaft. See following article for data on this type.

TYPE:—Adjustable packing type. Packing consists of two opposed tapered packing rings assembled in recess in forward end of pump bushing and in adjusting nut. Shaft is mounted on ball bearing (front) and bronze bushing (rear). Impeller is pressed on shaft, Pulley and fan hub is keyed on shaft and retained by nut at forward end.

SERVICING:—Packing Adjustment—Adjusted in usual manner by turning up packing nut. Pumps can be packed in service by installing regular (#112367) packing between the two tapered packing halves.

Installing New Type Packing in Old Pumps:—The new style tapered packing rings (fitting in recess in forward end of bushing and in recess in packing nut) can be installed in previous type pumps by installing new Water Pump Shaft Bushing #636457 (which has recess in end for packing), Pump Packing Retainer #636459 (this is bushing to fit in packing nut and provide tapered recess for packing), Two Water Pump Packings #636458. See Overhaul data below for bushing installation.

Pump Lubrication:—Use Kasson waterproof grease in rear grease cup, engine oil in front bearing oiler. Make certain that grease reservoir around bushing is filled (requires one grease cup full of grease to fill channels when empty).

OVERHAUL:—Disassembly. Remove nut on forward end of shaft, pull fan pulley and hub, remove key in shaft. Front bearing retained in housing by end cap on pump body and positioned on shaft by spacer (front), retainer in notch on shaft (rear). Pump shaft rear bushing retained in housing by pin driven in through hole in bushing at bottom (drive pin out to free bushing). Impeller is press fit on shaft (furnished as an assembly).

Bushing Installation. Bushings furnished slightly undersize to insure good fit on worn shafts. Clearance between bushing and shaft should be .0025" minimum. Press bushing into place in pump body, drill dowel pin hole (at bottom), grease channel hole (through bushing at top), install dowel pin.

Pump Assembly. Make certain that oil seal at rear of front ball bearing is in good condition, install ball bearing with shielded side toward front. Clearance between impeller vanes and pump body should be .030" (.020" to .050") with pump assembled and fan pulley nut tight. When installing pump packings, see that wide edges are together (narrow edge of each ring in recess in bushing and packing nut).

WILLYS 4 CYLINDER (1939-48)

J ep, Ford & Willys Army Model (1942-45)
Willys, Overland Model 39 (1939)
Willys, All Pass. Cars & Comm'l (1940 to 1942)
Willys Jeep, Model CJ-2A (1946-47-48)
Willys Jeep Sta. Wgn. & Sedan Del. 4-63 (1946-47-48)
Willys Jeepster VJ-2 (1948)
Willys Jeep Truck, Models 2T, 4T (1947-48)

NOTE:—Willys 1939 & Earlier Models—Adjustable packing type pump used on these models. See preceding article for data on this type.

TYPE:—Packless type with special double row ball bearing shaft (shaft serves as inner race, bearing is sealed type and packed with lubricant at assembly). Shaft and bearing cannot be dismantled and serviced as an assembly. No lubrication required in service. Seal consists of spring-loaded rubber seal in recess in impeller hub and bakelite washer which bears against pump housing face.

1939-42 Seal Assembly—Consists of a rubber seal of inverted 'U' section (with spring within seal) and a bakelite washer which bears against the face of the pump housing. Spring maintains seal contact against the impeller and washer faces.

1946-48 Seal Assembly—Similar to the 1942 type (above) except that rubber seal is bellows type with spring assembled on outer circumference of seal. Spring acts in same manner (maintains seal contact against impeller and washer faces).

OVERHAUL:—Disassembly—Use special W-116 puller and pull impeller off shaft, lift out bakelite seal washer. Remove bearing lock ring from slot in bearing hub on pump housing, support pump housing in arbor press, press shaft and bearing assembly out of pump housing toward forward end. To remove fan pulley from shaft, use any regular puller (special W-115 puller furnished for this purpose) to pull pulley off shaft. Do not attempt to remove bearing from shaft (shaft and bearing serviced as assembly).

Servicing—If rear face of pump housing (on which bakelite seal washer bears) is not smooth and flat, reface with special tool W-114.

Seal Assembly—Rubber seal is of 'U' section with spring in recess in seal. Install seal in recess in impeller hub, place bakelite thrust washer on seal, engaging ears on washer in slots in impeller hub.

Pump Reassembly: Install shaft and bearing assembly in pump housing (long end of shaft to rear) so that outer end of bearing is flush with front end of housing. Install seal assembly in impeller (dip seal parts in brake fluid before installing), press impeller on shaft until end of shaft is flush with face of impeller hub. Press fan pulley on forward end of shaft until end of shaft is flush with face of pulley. Check location of locking ring groove in bearing with respect to slot in housing, align groove and slot, install bearing locking wire.

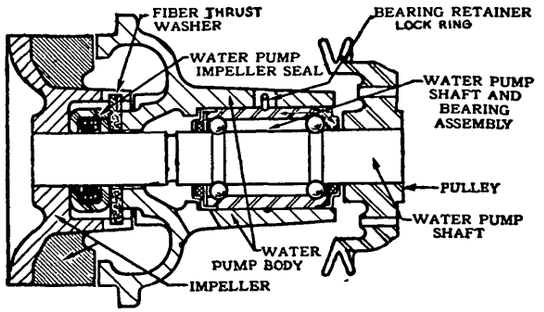

WILLYS PACKLESS, BALL-BEARING PUMP (1939-42 TYPE SEAL SHOWN)

WILLYS 6 CYLINDER

Willys Six Jeep Station Sedan 6-63 (1948)

TYPE:—Similar to 4 Cylinder type except for seal assembly as follows:

Seal Assembly. Consists of sleeve seated in recess in pump body with a rubber seal ("U" section with spring within "U") and seal washer between seal and impeller. A slinger is used on shaft just behind bearing.

OVERHAUL:—Disassembly. Take out bearing snap ring from hole or slot in pump body (pulley may have to be removed for access to snap ring). Pull impeller off shaft. Take out seal washer. Press shaft and bearing assembly out through forward end of pump.

Reassembly: Carefully seat new seal assembly in pump body. Press shaft assembly into pump until front face of bearing aligned with front end of pump. See that seal washer in place and press impeller on rear end of shaft until flush with end of shaft. Install bearing snap ring in pump body (align groove in bearing with slot in pump body). Press pulley on front end of shaft if removed.

MISCELLANEOUS SECTION INDEX

FLUID DRIVES & COUPLINGS — Page

Cadillac, Oldsmobile, Pontiac ... 3018
Chrysler, DeSoto, Dodge ... 3017
Lincoln, Mercury Liquamatic ... Transmission Sec. 2702

IL PRESSURE GAUGES

Hudson Teleflash ... Electrical Equip. Sec. 1802
King-Seeley Electric ... 3004

POWER OPERATED TOPS

Auto-Lite Electric ... 3014
Delco-Remy Electric ... 3013
Hydro-Electric (Reversible Motor) ... 3012
Hydro-Lectric (Non-reversible Motor) ... 3011
Studebaker Electric ... 3015
Vacuum Power ... 3016

CAR APPLICATION (Power Operated Tops)

Buick, Cadillac, Chevrolet 1940-41 ... 3016
Buick, Cadillac, Chevrolet 1942 ... 3013
Buick, Cadillac, Chevrolet 1946-48 ... 3011
Chrysler, DeSoto, Dodge 1940 ... 3016
Chrysler, DeSoto, Dodge 1941-48 ... 3014
Ford 1940 ... 3016
Ford 1941-48 ... 3014
Ford 1949 ... 3011
Ford, Mercury (Sportsman) 1946-48 ... 3011
Hudson 1941-47 ... 3012
Hudson 1948 ... 3011
LaSalle 1940 ... 3016
Lincoln, Mercury 1940 ... 3016
Lincoln, Mercury 1941-48 ... 3014
Lincoln, Mercury 1949 ... 3011
Oldsmobile, Pontiac 1940-41 ... 3016
Oldsmobile, Pontiac 1942 ... 3013
Oldsmobile, Pontiac 1946-48 ... 3011
Packard 1941 ... 3016
Packard 1948 ... 3011
Plymouth 1939-48 ... 3016
Studebaker 1947-48 ... 3015

SUPERCHARGERS

Graham ... 3008

TEMPERATURE GAUGES — Page

AC Electric ... 3006
AC Thermo ... 3007
Auto-Lite (Motometer) ... 3007
King-Seeley Electric ... 3005
King-Seeley Electric (Special Ford & Mercury) ... 3005
King-Seeley Liquid ... 3006

VALVE LIFTERS

Cadillac V8, LaSalle 1936-48 ... 3003
Cadillac V12, V16 1936-37 ... 3002
Cadillac V16 1938-40 ... 3003
Lincoln 1937-49 ... 3003
Packard Eight ... 3003
Packard V12 ... 3002
Pierce Arrow ... 3003

WINDOW REGULATORS

Hydro-Electric (Reversible Motor) ... 3009
Hydro-Lectric (Non-reversible Motor) ... 3010

CAR APPLICATION (Window Regulators)

Buick, Cadillac 1946-48 ... 3010
Chrysler 1941 ... 3009
Chrysler 1942-48 ... 3010
Ford, Mercury (Sportsman) 1946-48 ... 3010
Hudson 1948 ... 3010
Lincoln 1941-42 ... 3009
Lincoln 1946-49 ... 3010
Mercury 1949 ... 3010
Oldsmobile 1946-48 ... 3010
Packard 1941-47 ... 3009
Packard 1948 ... 3010

WINDSHIELD WIPERS

Auto-Lite Electric 'EW' ... 3018
Auto-Lite Electric 'EWB' ... 3020
Auto-Lite Electric 'EWD', 'EWE', 'EWH' ... 3021
Stewart-Warner Electric (1941-47) ... 3022
Vacuum Wipers (Dual)
- Cable Operated ... 3025
- Link & Chain Transmission ... 3024
- Link & Crank Arm ... 3023

WINDSHIELD WIPERS (continued) — Page

CAR APPLICATION

Buick 1939-42 ... 3024
Buick Series 40 1946-48 ... 3024
Buick Series 50, 70 1946-48 ... 3025
Cadillac 1938-47 ... 3024
Cadillac 60S, 61, 62 1948 ... 3025
Cadillac 75, 76 1948 ... 3024
Chevrolet 1937-48 ... 3024
Chrysler, DeSoto 1938 ... 3024
Chrysler, DeSoto, Dodge 1939 (Electric) ... 3018
Chrysler, DeSoto, Dodge 1940 (Electric) ... 3020
Chrysler, DeSoto, Dodge 1941-48 (Electric) ... 3021
DeSoto (Deluxe & Taxi) 1940-42 ... 3023
DeSoto (Taxi) 1946-48 ... 3025
Dodge (Deluxe) 1941-48 ... 3023
Dodge (Convertible) 1941-42 ... 3024
Ford (Convt. & Sta. Wagon) 1937-39 ... 3024
Ford 1939 ... 3023
Ford 1940 ... 3024
Ford 1941-49 ... 3023
Frazer, Kaiser 1947-48 ... 3025
Hudson 1937-47 ... 3024
Hudson 1948 ... 3025
LaSalle 1937-40 ... 3024
Lincoln Zephyr 1937-48 ... 3024
Lincoln Zephyr 1941-42 (Electric) ... 3022
Lincoln 1949 ... 3023
Lincoln Cosmopolitan ... 3025
Mercury 1939-49 ... 3023
Nash 1937-48 ... 3023
Oldsmobile 1937-48 ... 3024
Oldsmobile 98 1948 ... 3025
Packard 1938-39 ... 3024
Packard 1940-41 6 & 8 (Electric) ... 3022
Packard 1940-41 Super 8 ... 3024
Packard 1942-47 All ... 3022
Packard 1948 ... 3025
Plymouth 1936-48 ... 3023
Plymouth 1941 (Electric) ... 3021
Plymouth (Convt. & Sta. Wagon) 1941-48 ... 3024
Pontiac 1937-48 ... 3024
Studebaker 1938-39 ... 3024
Studebaker 1939 (Electric) ... 3018
Studebaker 1940 (Electric) ... 3020
Studebaker 1941-42 (Electric) ... 3021
Studebaker 1941-46 ... 3023
Studebaker 1947-48 ... 3025
Willys 1941-42 ... 3023
Willys (Sta. Wagon) 1946-48 ... 3025

CADILLAC V12 & V16 TYPE

DESCRIPTION:—Automatic take-up is a spring-loaded plunger in a dashpot at the pushrod end of the rocker arm which bears against a cam on the eccentric sleeve. The double springs below the plunger (single spring used on first models) force the plunger up and rotate the eccentric, shifting the rocker arm to take up all clearance. The dashpot is filled with oil and resists the downward movement of the plunger when the valve is opened (the slow escape of oil around the plunger is sufficient to allow the plunger to move down enough to compensate for expansion of the valve gear as the engine warms up).

SERVICING:—The Automatic Take-up mechanism does not require any service operations. A spring-loaded check valve within the plunger allows the free passage of oil into the dashpot below the plunger and prevents the escape of oil when the engine is running. Plungers are a selective fit in the dashpot and should not be interchanged (plungers have a stamped identification mark on the top shoulder and should be installed in cylinders stamped with this same mark on the top). Complete assemblies consisting of plungers, springs, and plunger cylinder or dashpot are furnished for service only (assembly consists of take-up mechanism for two adjacent cylinders as dashpot cylinders are cast in pairs). The initial clearance for the take-up mechanism must be set whenever valves are ground or replaced.

ADJUSTMENT:—**First Models.** With camslide on heel of cam, use special plunger releasing tool (#109624) to release oil pressure under plunger and hold plunger down at end of stroke with spring compressed (plunger must be held in this position while making the adjustment). Rotate eccentric sleeve so that cam rests on top of plunger. Use special combination screwdriver and wrench (#109627-T) and turn adjusting setscrew on pushrod end of rocker arm until clearance between rocker arm and valve stem is .030". This adjustment can be made with engine running or, if engine is not running, turn engine over until piston is at firing position to make certain that camslide is on heel of cam. Lock adjustment with adjusting setscrew locknut. Check to see that plunger is down at bottom of stroke with eccentric sleeve cam in contact with top of plunger. This is important to provide sufficient plunger stroke to take up clearance when engine is operated.

Later Models. On models with a shoulder just below the hole in the top of the plunger, adjustment can be made by releasing oil pressure in dashpot cylinder (by pressing down on check valve) and pushing plunger down in cylinder until the bottom of the hole in the upper end is below the top edge of dashpot. Use special combination screw driver and wrench #109627T and turn adjusting screw on pushrod end of rocker arm down until all clearance taken up. Release plunger and back adjusting screw off until top of shoulder on plunger is even with top edge of dashpot (see illustration), tighten adjusting screw locknut.

PACKARD TWELVE TYPE

DESCRIPTION:—On these models, valve actuating mechanism consists of a rocker arm mounted above the camshaft with a cam follower on the lower end of the arm and upper end of arm contacting the valve stem. Rocker arm is mounted on an eccentric sleeve which is rotated by the Automatic Take-Up mechanism so that all clearance is taken up between the rocker arm and the valve stem under ordinary running conditions. Pressure is not sufficient to hold the valve off its seat and take-up mechanism backs off enough to compensate for expansion of valve mechanism as the engine warms up (permitted by slight leakage of oil from plunger cylinder). Rocker arm and cam follower are mounted on needle bearings and no provision is made for manual adjustment of the tappet clearance (see Checking Clearance directions below). The automatic take-up consists of a spring loaded plunger in a cylinder above the rocker arm which bears on a cam on the eccentric sleeve. A spring above the plunger forces the plunger down and rotates the eccentric sleeve to take up all clearance between the rocker arm and the valve stem. The dashpot within the plunger is filled with oil and resists the upward movement of the plunger when the valve opens (slow escape of oil around piston allows plunger to move up enough to compensate for expansion of valve gear as engine warms up).

A spring-loaded check-valve on the dashpot piston stem allows the free passage of oil into the dashpot and prevents the escape of oil when the engine is running.

SERVICING:—The Automatic Take-up does not require any servicing operations. All parts are a selective fit and should not be disturbed or interchanged. Whenever valves are ground it will be necessary to bleed the take-up to allow valves to seat with valve springs removed, and the valve clearance or stroke of the mechanism must be checked when valves reassembled.

Bleeding Take-up Mechanism (Grinding Valves)—With valve springs removed, valve should be held approximately .028" off seat by rocker arm. Bleed Automatic Take-up mechanism by inserting ⅛" round rod in bleeder hole in top and pressing down on rod to open check valve. Press rocker arm lever back away from valve stem (do not force lever) and hold in this position by installing wedge (#ST-879) between lever and crankcase while valve is being ground. Do not crank engine with these wedges in place.

Checking Clearance (Installing Valves)—With valve refaced and reseated ready for installation, check clearance by installing valve in engine with clearance gauge (#ST-865) in place between valve and cylinder and centered on valve. Make certain that rocker lever roller or cam follower is on low side of cam by cranking engine over until valve is fully open, and then turning engine over one additional revolution. **Do not crank engine with wedges in place.** Remove wedges and hold rocker arm as far away from valve stem as possible by hand while engine is being turned over. Use feeler gauge and check clearance between valve stem and rocker arm. Clearance must be .002" minimum (providing .040" automatic take-up) to .015" maximum (providing .025" automatic take-up). If clearance is not within these limits, the end of the valve stem can be ground off to provide .015" clearance. The plunger is designed for a stroke of ⅛" downward, 3/32" upward to provide an average automatic take-up of .040" plus or minus .010" on new engines.

SPECIFICATIONS:—The take-up plunger clearance within the cylinder barrel is held to .0015-.0025". Clearance of check-valve seat cylinder and inner wall of plunger is .0007" plus or minus .0001". Clearance between dashpot piston and dashpot is .006-.008". The check-valve seat is ground and the check valve burnished to provide an oil-tight seat.

NOTE ON VALVE GRINDING:—A split type valve retaining key was used on the first cars and care should be taken in removing them to prevent them dropping into the crankcase. Valve springs should be installed with the japanned end down toward rocker arm. The spring has a closer-spaced first coil at the upper end.

CADILLAC.

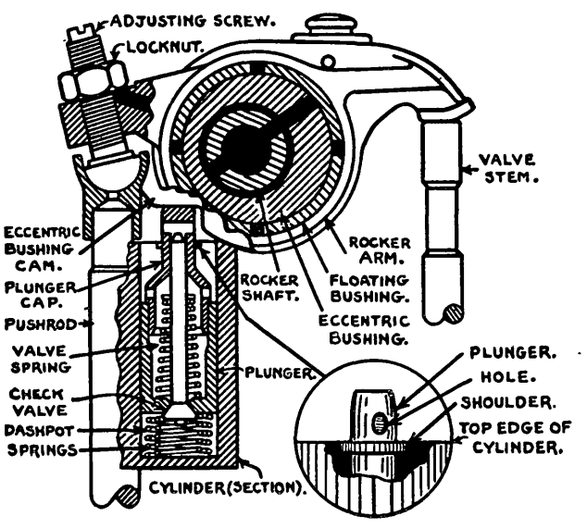

PACKARD.

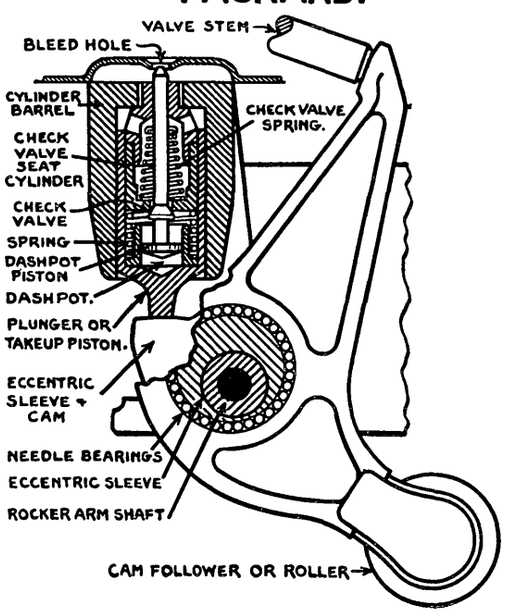

HYDRAULIC VALVE LIFTERS
(AUTOMATIC TAPPET TAKE-UP)

①**Cadillac V8, All Series (1936 to 1948)**
Cadillac V16, All Series (1938-39-40)
LaSalle V8, All Series (1937 to 1940)
Lincoln V12, All Models (1937 to 1940)
②**Lincoln (Zephyr) All Models (1938 to 1948)**
Lincoln & Cosmopolitan 9EL & 9EH (1949)
Packard Super Eight, All (1940 to 1947)
Packard Custom Eight (1948)
Pierce Arrow 8 & 12, All Models (1936 to 1938)

①—1948 Cadillac use Wilcox-Rich "two-piece" (body and plunger) type, same as used on 1947 and earlier, or new "unit" type with matched cylinder and lifter body (serviced only as an assembly).

②—On '40-48 Lincoln (Zephyr), hydraulic lifters are either Wilcox-Rich (two-piece) type or Johnson (one-piece) type. Lifters are similar in design but all service operations are not identical. See service data below on both types.

DESCRIPTION:—This type automatic take-up is hydraulically operated and is built inthe valve lifter or tappet (engines are 'L' head type). The conventional tappet clearance adjusting screw is not used and the lifter plunger contacts the end of the valve stem directly. The lifter is made in two parts; a lower or lifter section (mushroom or barrel type) which contacts the camshaft cam, and an upper or plunger section which contacts the end of the valve stem. The plunger fits into a cylinder in the head of the lifter body and is raised to contact the valve stem end by a spring under the plunger head. Oil from the pressure lubricating system of the engine flows through the oil reservoir in the lifter bracket and the oil passage in the lifter body to fill the cylinder below the lifter plunger. When the lifter is raised by the cam to open the valve, the ball check valve in the bottom of the cylinder closes, preventing the escape of oil from the cylinder and the cam motion is transmitted directly through the lifter to open the valve. The combination of plunger spring (to take up any clearance between lifter and valve stem end) and oil trapped in the plunger cylinder by the check valve (so that cam pressure is transmitted solidly through the lifter assembly) result in an entirely automatic take-up with positive valve opening action.

1948 Cadillac "Unit" Lifter. This lifter does not have coil spring around plunger. Operates in similar manner to "two-piece" type described above. **Plunger and body are fitted in pairs and must not be mismated.** Ball retainer at lower end of plunger held by spring seated in body. Cap seated in upper end of plunger and retained by lock ring seated on inner diameter of body. A lock ring is used on outer diameter of body at upper end.

Pierce Arrow Note—Lifters are of different design with ball check valve retained by pin in lower end of plunger and coil spring mounted on lower end of plunger and engaging counterbore in body.

SERVICING (Wilcox-Rich "two-piece" Type): These lifters furnished in both mushroom and barrel type.

Removal: On cars with mushroom type lifters in removable brackets, disconnect oil supply tube (when external oil line used), take out capscrews in each lifter bracket, lift bracket out taking care that lifters do not fall out of bracket (on some installations, lifters prevented from falling through bracket by locking ring at upper end of cylinder). On barrel type lifters which operate in guide holes in block (no guide brackets), lifters may be removed from upper end after valves and springs removed. NOTE—Mushroom type lifters are used on Cadillac, '49 Lincoln, Packard, Pierce Arrow Barrel type lifters on Lincoln V12 and Lincoln (Zephyr) engines.

Disassembly. On mushroom types, remove locking ring at top of cylinder, withdraw lifter unit from below. Pull plunger and cylinder assembly out of lifter body. Unlock plunger spring by twisting plunger, pull plunger and spring out of cylinder (plunger is selective fit in cylinder and must be re-installed in same cylinder). Ball check valve in bottom of cylinder may be unseated by inserting small wooden stick in inlet hole to permit oil to drain if plunger cannot be removed otherwise.

Servicing—Wash all parts in solvent, wipe with soft cloth or dry with air (air hose must not be held closer than 2"). If plunger or cylinder scored or clearance excessive, replace as a unit (old lifter body may be used if clearance in bracket or block guide holes not excessive). Check ball check valve tightness (see Testing). Ball should rattle when unit is shaken. Clean out oil reservoir and oil passages in brackets and engine block. See that plunger spring has sufficient tension so that force of 6-7 lbs. required to compress spring (valve unit must be dry when making this test—see also 'Plunger Fit in Cylinder' in Testing section below).

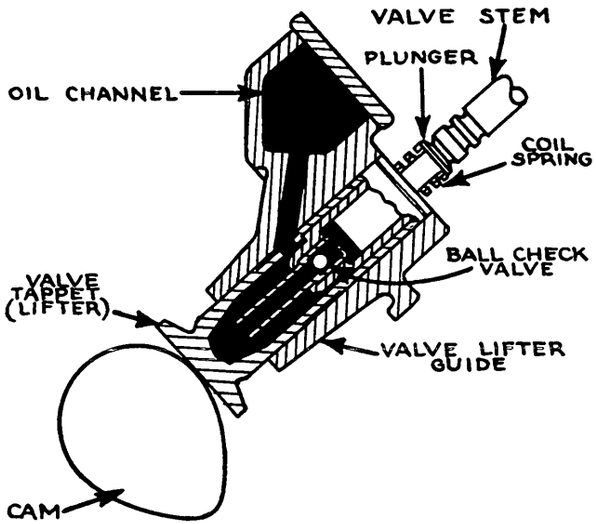

WILCOX-RICH "TWO-PIECE" LIFTER

Reassembly—Place plunger spring on plunger, insert plunger in cylinder, lock spring in cylinder by twisting plunger. Make certain that same plunger and cylinder used together (plungers must not be interchanged). Install plunger and cylinder assembly in lifter, insert lifter assembly in bracket and install locking ring at upper end of lifter body above bracket (when used).

Installation—Valve lifters should be installed without oil in the cylinder (mechanical clearance must be checked if new parts installed or valves serviced) and engine should be run to quiet valve action (may require running for as long as an hour, if oil seals off air escape between plunger and cylinder before all air expelled, valve may not quiet until oil is warm—if more than one hour required to quiet valves, check as directed under Trouble Shooting below). Connect oil supply pipes at supply end only and crank engine until all air expelled and pipes filled with oil before connecting to lifter brackets.

Cadillac Note—Lifters can be installed in engine filled with oil if special tool J-827 used which prevents pumping and introduction of air while lifters being installed. Oil should be applied to tops of lifter assemblies after they are installed.

Pierce Arrow Note—After installing lifter bracket assemblies on engine, see that lifters spin in brackets when engine is running. If they do not, loosen bracket mounting bolts, shift bracket to front or rear slightly, tighten bolts. Do not overtighten bolts which will distort brackets and cause lifters to bind. See that gasket oil holes aligned with bracket.

Checking Clearance—When new parts installed or valves reseated, check clearance between plunger and valve stem with plunger held down at bottom of stroke (no oil in cylinder). Clearance must be .030-.070". If clearance less than .030", grind off lower end of valve stem slightly.

Cadillac V8 Note—Use tool J-1055 to check valve stem length before installing lifters (measures distance from heel of cam to valve stem). Grind off end of valve stem until tool slides into place. Use tool J-827 to compress plunger springs when installing lifter bracket assemblies.

Pierce Arrow Note—Clearance between plunger cap and valve stem must be .015" with lifter dry. If clearance less than this amount, remove plunger from plunger body, grind off lower end of plunger slightly using care not to grind into ball check retaining pin.

SERVICING ('48 Cadillac "Unit" type): Similar to "two-piece" instructions given above except as follows:

Removal. With lifter brackets removed as described above, take out lock ring on outer diameter of body at upper end and slide lifter out of bracket.

Disassembly. Press down on cap, take out lock ring in inner diameter of body. Turn lifter over and slide out cap, plunger, ball retainer, ball, and spring.

Reassembly. Hold plunger upside down, install ball in seat in lower end of plunger, ball retainer and spring over ball. Install body over this assembly. Turn assembly over and fill plunger with oil, move ball off its seat with piece of wire, permitting oil to drain out of plunger into body. Refill plunger with oil. Install cap and insert lock ring (CAUTION—do not press cap beyond groove in plunger when installing lock ring to avoid losing oil).

SERVICING (Johnson "one-piece" Type): Lifters used on Lincoln (Zephyr) are barrel type and can be lifted out after valve assembly removed.
after valve assembly removed.

Disassembly—Force piston down slightly with screwdriver handle or other plunt tool, pry out retainer ring in upper end of lifter body (see note for first type without retainer ring), pull piston out of lifter body, remove return spring and valve assembly. CAUTION—Keep all parts of each lifter assembly together. Parts must not be interchanged.

Piston Removal Note (First type without retainer ring)—To remove piston on this type, clamp piston head in vise, twist body until it comes off.

CONTINUED ON NEXT PAGE

HYDRAULIC VALVE LIFTERS
(AUTOMATIC TAPPET TAKE-UP) Cont.

Servicing—Clean all parts with solvent, dry parts immediately after cleaning. Examine lifter body and piston for nicks, scores, or excessive wear. To check for wear or excessive clearance between piston and body, install valve assembly in body but do not install spring. Start piston in body, depress piston with a finger and release it quickly. Piston should bounce back (if not, replace assembly).

Reassembly—Install valve assembly in lifter body, position spring on valve, install piston, depress piston and install retainer ring.

TESTING (Wilcox-Rich "two-piece" Type): With unit clean and dry, pull the plunger up to release spring from counterbore in cylinder, raise plunger as high as possible while still guided in cylinder, push plunger down into cylinder quickly and release. If unit holds air to extent that plunger tends to bounce back when released, clearance is satisfactory. Plungers are selective fit in cylinders and must not be interchanged (clearances cannot be measured).

Check Valve Tightness. Check by filling cylinder with kerosene and noting rate at which this leaks past the ball check valve. Maximum allowable leakage is 1 drop per second.

Cadillac Note—This leak-down rate may be tested with special tester J-1297 and adapter J-1297-41. To make this test install adapter J-1297-41 in right hand socket of tester, fill reservoir with #1 grade kerosene, release ball check and pump tester in inverted position until all air expelled. Insert special master unit in left socket of tester and engine unit being tested in right socket. Rest tester handle weight on beam pilot and set indicator at zero. Press down quickly on handle several times and note indicator reading. Pointer must stay at zero or move up (indicating engine unit equal or better than master unit). If pointer goes down (leak-down rate greater than master unit), replace lifter.

Engine Oil Pressure. Oil pressure at lifters not ordinarily indicated by instrument panel oil pressure gauge (reduced by metering restriction, etc. in oil lead to lifters). Pressure at lifters should be 4 lbs. minimum at idling speed, 12 lbs. minimum at high speed. Pressure in excess of 55 lbs. may cause noisy valve operation. Check by connecting pressure gauge in lifter oil line (where external oil lines to lifters used, disconnect line; on Lincoln Zephyr remove plug between banks at rear of engine.

TROUBLE SHOOTING:—Make following checks:

ALL VALVES ARE NOISY

1. Oil Level Low—May allow air to enter pump.
2. Oil Level High—If above 'Full' may cause foaming.
3. Oil Pressure Low—Oil supply to lifters will be inadequate. Must be sufficient to replace normal relief leakage between plunger and cylinder. Check oil pressure (See Testing above).
4. Oil Pressure High—High pressure may lift entire hydraulic unit against plunger spring tension causing excessive wear. If noise particularly noticeable when oil is hot, check pressure in oil supply line at lifter assembly (See Testing above).
5. Oil Supply Insufficient—Examine supply pipes and connections for leaks or restrictions preventing proper flow of oil to lifters. Check for dirt or sludge clogging oil lines and clean out all oil channels.

VALVES NOISY WHEN HOT

1. Oil Pressure Low—Check oil pressure at lifter units (connect gauge in oil line at lifter bracket).

ONE OR MORE VALVES NOISY

1. Incorrect Clearance—Check mechanical clearance for particular unit (see directions above). Check clearance between plunger and cylinder (if parts interchanged, replace as a unit), check clearance between cylinder and lifter body.
2. Sticking Caused by Dirt or Grit—Disassemble and clean units as directed above. Drain crankcase, clean oil pan, flush engine, refill crankcase with new oil to prevent repetition of trouble.
3. Weak Plunger Springs—Will permit excessive plunger movement and wear. Disassemble lifter unit and check spring. See Testing above.

KING-SEELEY ELECTRIC OIL PRESSURE GAUGES

DESCRIPTION:—This is an electric oil pressure gauge comprising an engine unit, and a dash or recording unit connected by a wire. The dash unit is also connected to the ignition switch (gauge operative only with engine turned on) and the gauge circuit is completed to ground through the engine unit contacts. The dash unit consists of a thermostatic bi-metal arm linked to the instrument pointer around which is wound a heating coil. The engine unit has a similar bi-metal arm and heating coil. One of the engine unit contacts is mounted on this bi-metal arm and the other contact is mounted on a diaphragm which is deflected when oil pressure is built up in the engine so as to increase the contact pressure and lengthen the time period over which the contacts are closed. The diaphragm contact completes the gauge circuit to ground.

OPERATION:—When the engine is operated and oil pressure is built up, the pressure deflects the diaphragm in the engine unit and, with the contacts closed, a current flows through the heating coils of the dash and engine unit. The heating effect of the coil in the dash unit tends to bend the bi-metal arm which is linked to the pointer and record a reading on the gauge. At the same time, the heating coil in the engine unit causes the bi-metal arm to flex to a point where the contacts open and the current is interrupted. When this occurs the bi-metal arm in the engine unit flexes in the opposite direction and again closes the contacts. Contact pressure and length of time (amount of flexing necessary to open contacts) is directly proportionate to the oil pressure in the engine, and as this determines the amount of current flowing in the gauge circuit and the deflection of the bi-metal arm in the dash unit, the dash unit indicates the oil pressure. Contacts open and close at approx. 120 cycles per min. with 25 lbs. pressure.

SERVICING:—No service operations are necessary other than to see that connections are tight and that lead is properly connected to engine unit. If readings unsatisfactory, check Trouble Shooting Table and Testing (All Units). NOTE—Manufacturer recommends replacement of defective units.

Trouble Shooting Table

1. Gauge pointer is erratic. Engine unit probably defective.
2. Gauge reading inaccurate. Engine unit probably defective.
3. Gauge does not register. Engine unit defective or dash unit burnt out as result of short-circuit in lead between units.
4. Gauge registers with engine not running (ignition on). Short-circuit in lead between dash unit and engine unit or short-circuit in dash unit (a short-circuit of this type will usually result in dash unit burning out, resulting in no reading).

TESTING (ALL UNITS):—Use a gasoline gauge tank unit which is known to be OK. for test purposes. Connect flexible test lead to terminal on this test unit and second lead to test unit mounting flange (for ground circuit). Make tests in order as given below before removing units from car.

Testing Dash Unit Receiver. Disconnect engine unit Sender, connect test unit terminal lead to this wire, ground test unit to engine block. Turn on ignition switch. With float of test unit at bottom (tank empty) position, dash unit receiver pointer should be even with lowest mark on dial. Move test unit float rod up to top position. Dash unit receiver pointer should move to top mark on dial (allow one minute for pointer to come to rest). If dash unit receiver does not operate satisfactorily, see that connections at receiver and ignition switch are tight, check line to ignition switch and line to engine unit, then replace receiver. NOTE—When testing temperature gauges, readings will be reversed (Hot reading with test unit float at bottom, Cold reading with float at top).

Testing Engine Unit Sender. If receiver tests OK. (above), see that motor unit is well grounded, disconnect and check radio condenser (shorted condenser will cause high reading on dash unit). Then replace engine unit sender, connect to dash unit receiver and note performance.

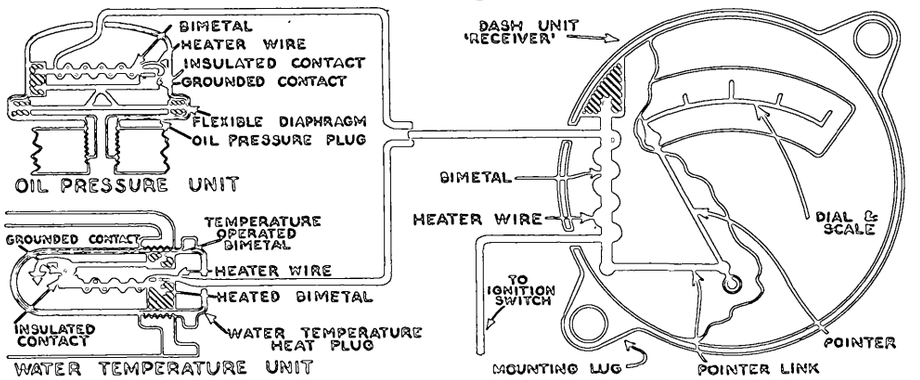

KING-SEELEY ELECTRIC TEMPERATURE GAUGES

IMPORTANT PRODUCTION CHANGES:—Engine Unit—Two different types of engine units have been used—**No. 7000**—1939 & Later, **Nos. 5700 & 6540**—1938 and before. These units operate differently and must be used with the particular type of Dash Unit designed to be used with them. Earlier type engine units are not furnished for service and when it is necessary to replace them the new type (No. 7000) Engine unit must be installed. This requires installation of a ½"-⅜" No. 7113 adapter bushing. CAUTION—New type Dash Unit must be installed whenever the engine unit is changed to the new type. Service Kits are furnished which include a new type Dash Unit, replacement type Engine Unit, and Adapter Bushing.

IMPORTANT NOTE:—1939 & Later Models—Gauge will read "HOT" or 212° with the ignition switch turned off (engine not running). This reading does not mean that gauge is defective and is caused by the linkage design which is designed to conserve current (less current consumed when engine is at normal running temperatures). Gauge readings should only be taken with the ignition switch turned on.

Ford V8 & Mercury 1941 Models. A temperature switch King-Seeley No. 8355, Ford No. 01A-10990, is used in the temperature gauge circuit (between the dash unit and the engine unit) so that temperature can be measured in both engine blocks. The regular engine unit or heat plug King-Seeley No. 7000, Ford No. 99A-10884, is used in conjunction with this temperature switch.

Willys 48 1939. Temperature gauge on this model consists of a tell-tale light on the instrument panel which is controlled by a thermostatic type engine unit similar in appearance to those used on other King-Seeley gauges. This engine unit must never be used with regular thermostatic type dash units (as used on Willys Overland Model 39) as it will result in the dash unit burning out.

NOTE—These engine units may be identified by groove around hexagonal head of the engine unit plug. Regular type engine unit for Willys-Overland Model 39 is not marked by these grooves.

DESCRIPTION:—Dash unit or Receiver same design as for Oil Pressure Gauge. Two types of Engine Units have been used. Both types consist of a heat bulb which is designed to be screwed in the engine block so that cooling water temperature actuates the bi-metal arms within the bulb. A heating coil (connected to dash unit) is wound on the bi-metal arm and connected to the insulated contact at the free end of the arm. The ground contact is mounted on the free end of a second bi-metal arm (Types 5700 & 6540), or on a stationary support (Type 7000). Contacts are normally closed (with arms not flexed) and gauge circuit is completed through heating coil and contacts to ground when the ignition is turned on.

OPERATION:—**Types 5700 & 6540.** When heating coil in engine unit is energized, the temperature rise tends to flex the arm and open the contacts. This interrupts current flow, allows bi-metal arm to cool off and flex back so that contacts are again closed. This action is extremely rapid and arm has a vibrating motion. Second bi-metal arm is longer and thinner than heater arm so that flexing action, as engine temperature increases, is greater and tends to increase contact pressure and length of time contacts are closed. Consequently current flow in gauge circuit increases in proportion to the rise in engine temperature and this increased current produces a greater deflection of the dash unit bi-metal arm so that a higher reading is indicated on the dial.

Type 7000. This type operates similarly to earlier types (above) except that contact pressure and current are at maximum when engine unit is cold. Increase in engine unit bulb temperature (as engine warms up) tends to flex the bi-metal arm away from the stationary contact support so that contact pressure and length of time contacts are closed tend to decrease. The consequent decrease of current in the gauge circuit causes the dash unit pointer to move toward the "hot" end of the scale.

TESTING & SERVICING:—Manufacturer recommends use of a regular Gasoline Gauge Tank Unit as a test "Sender" to check operation of units which do not operate satisfactorily. Make tests as directed below.

CAUTION—When testing later type temperature gauges (with No. 7000 Engine Unit), dash unit readings will be reversed (HOT with tank unit float in "empty" position, COLD with tank unit float in "full" position).

Testing Sender:—Disconnect lead of Sender unit on car, connect this lead to test Sender and ground this Sender to the car frame. Turn on ignition, move Sender float up to 'full' position and note reading on Receiver. If Receiver reading is correct (after 10-15 seconds time), check following points before replacing Sender unit:

1. **Ground.** Sender is grounded through case. See that all paint and grease are removed under flange and both surfaces make good contact.
2. **Radio By-pass Condenser Shorted.** If by-pass condenser is connected at Sender on cars with radio, test for short-circuit by disconnecting condenser and noting gauge operation. If gauge is satisfactory, replace condenser.

If reading secured with test Sender is same as that with Sender on car, check wire connecting Sender and Receiver. Replace if open-circuited or grounded.

Testing Receiver—Disconnect wires on Receiver on car and connect to same terminals on test Receiver. Turn on ignition switch and note reading on gauge. If test Receiver reading is correct, replace Receiver on car. If test Receiver reading is same as car Receiver, repeat tests on Sender and wiring.

SERVICING:—No service operations are required other than to see that wires are properly connected and terminals are tight. No repair operations are possible and defective Senders and Receivers should be replaced.

KING-SEELEY ELECTRIC TEMPERATURE GAUGE (FORD V8 & MERCURY)

NOTE:—The Temperature Gauge Switch listed below was furnished as an accessory in Temperature Gauge Kit, King-Seeley No. 8464, Ford No. 11A-18381, and will be found installed on Ford and Mercury Pass. Cars and Ford Trucks. This Temperature Switch was Std. Equipment starting on late 1941 V8 models.

DESCRIPTION:—This special Temperature Gauge installation is designed to detect overheating of the cylinder bank in which the regular temperature gauge Engine Unit is not installed (Engine Unit normally installed in one bank of Vee type engines and will not detect overheating occurring in the other cylinder bank only). Installation consists of a special Temperature Gauge Switch installed in one cylinder bank and connected in series with the regular Temperature Gauge Engine Unit installed in the other cylinder bank.

Temperature Gauge Switch—This unit resembles a conventional engine unit in appearance but differs in internal construction. One contact is mounted on a stationary insulated arm with the other contact mounted on a special bimetal insulated arm. A lead is connected to each arm so that the contacts are in series in the circuit between the Temperature Gauge Dash Unit and regular Engine Unit (see illustration).

Temperature Gauge Engine Unit—This unit is same type used on other gauges with movable contact mounted on bimetal arm on which the heating coil is wound and grounded contact mounted on a stationary arm.

OPERATION:—At all normal temperatures, the contacts of the special Temperature Gauge Switch are closed and engine temperature is recorded by the regular Engine Unit in the usual manner. When the temperature in cylinder bank in which the Temperature Gauge Switch is mounted reaches the point for which the unit is set, the flexing of the bimetal arm opens the contacts and breaks the temperature gauge circuit. This causes the dash unit to read 'hot'. The switch is merely a circuit breaker which opens the circuit at this predetermined temperature so that the dash unit reads hot, it does not control dash unit operation at temperatures below this point.

Setting—Temperature Gauge Switch contacts open at 195°F. (plus or minus 5°). NOTE—A special switch designed for use with a special cooling liquid opens at 240°F.

SERVICING:—No servicing required. Replace defective units.

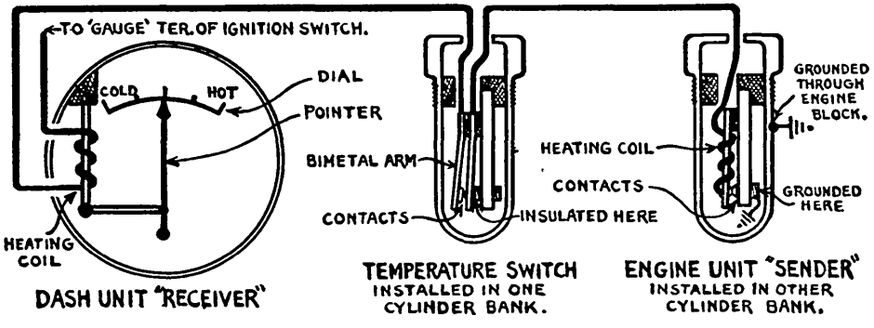

AC ELECTRIC TEMPERATURE GAUGE

SPECIAL SERVICE NOTE:—1939-40 Pontiac. When a sealed type pressure cooling cap installed on these cars, a thermogauge adapter (#1510965 resistor unit) is installed on 'ENG' terminal of dash unit. This unit lowers reading on temperature gauge 16° at 212° to compensate for increased boiling point caused by pressure cap. Temperature gauge will then indicate boiling point correctly. This adapter installed at factory on cars equipped with pressure type cap. On cars where pressure cap is installed in the field, this adapter is packaged with the replacement cap, and should be installed on thermogauge dash unit to avoid incorrect gauge reading (if this adapter not installed and a pressure cap is used, gauge will read 212° although cooling water will not be at boiling point).

DESCRIPTION:—This is an Electric gauge of the 'balanced coil' type and consists of a Dash Unit or recording gauge and an Engine Unit or temperature reacting unit mounted in the cylinder head or engine block in contact with the cooling water in the engine. Dash unit is connected to the 'Gauge' side of the ignition switch (controlled by switch and operative only with switch on) and to the engine unit and each unit is grounded (see wiring diagram). Dash unit consists of two coils at a 90° angle with an armature (on which the pointer is mounted) at the intersection of the coil axis. One coil is connected directly between the 'IGN' (feed) terminal and ground on the gauge case, the other coil being connected between the two gauge terminals (in series with the engine unit). Engine unit consists of a fixed resistance unit which has a high resistance value Cold and a relatively low resistance value Hot (gauge operated by this change in resistance due to temperature changes in the engine—gauge engine unit has no moving parts).

Pressure Cooling Note—Gauges used on cars with pressure cooling (pressure valve in radiator filler cap) are calibrated so that dash unit reads 212° (boiling point) when the cooling system water is actually at the temperature at which water boils with the pressure at which the system is designed to operate (boiling point increase with increase in pressure) which will be somewhat higher than 212°. This is done so that the dash unit will not indicate 'boiling' before the cooling water actually reaches the boiling point and must be kept in mind if the gauge is tested by immersing the engine unit in a heated pan of water.

OPERATION:—When the ignition switch is turned on with the engine cold, current flows directly through coil 'A' to ground. The high resistance of the engine unit causes a relatively smaller current to flow through coil 'B' (which is connected in series with this resistance) so that the pointer is deflected toward the 'Low' or coil 'A' side of the scale. As the engine warms up, the resistance of the engine unit decreases, allowing an increasingly greater current flow through coil 'B' so that the pointer is drawn over toward the 'High' end of the scale. The balanced action of the two coils compensates for battery voltage variations and in addition an inertia dampener is built in the armature assembly to prevent pointer vibration on rough roads, etc.

SERVICING:—All defective units should be replaced.

TROUBLE SHOOTING:—If gauge operation not satisfactory, check as directed under correct heading in following table, being careful to turn ignition switch off when disconnecting or re-connecting leads on terminals and using extreme care not to reverse connections at dash unit terminals. Do not allow dash unit to be placed in strong electric field which will affect magnetic armature.

CONNECTION NOTE—Left hand (small diameter) terminal on dash unit should be connected to ignition switch, right hand (large diameter) terminal connected to engine unit. Terminals marked for identification.

Gauge does not register with Ignition Switch turned on:

1. Lead between Ignition Switch and Dash Unit broken or grounded (open or short-circuit). Check by connecting test lead between these two points with regular lead disconnected at both ends.

Gauge register 'Cold' under all conditions:

1. Lead between Dash Unit and Engine Unit broken (open-circuit). Check by connecting test lead between these two units.
2. Coil 'B' (right hand coil) in dash unit defective or lead to coil broken.

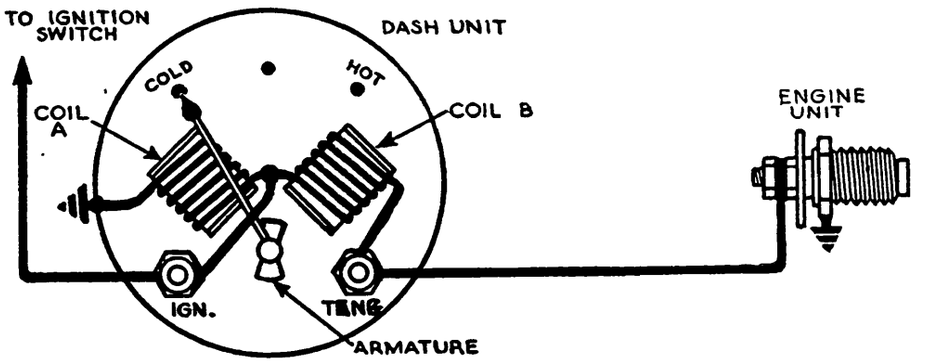

Gauge registers 'Hot' under all conditions:

1. Lead between Dash Unit and Engine Unit short-circuited. Check by disconnecting this lead at engine unit terminal and noting gauge reading. If gauge still reads high, this lead is shorted. If gauge reads low, engine unit is shorted and must be replaced.
2. Dash Unit not grounded. Clean all paint from under dash unit mounting flange, tighten mounting screws.
3. Engine Unit burned out. See check under (1) above or install replacement engine unit and note operation.
4. Coil 'A' (left hand coil) in dash unit defective or lead to coil broken.

Gauge registers Inaccurately:
To check, disconnect lead at engine unit terminal, remove engine unit, ground engine unit shell to car frame with test lead, re-connect engine unit, immerse inner end of unit in pan of water at known temperature (use reliable thermometer and heat water as required), note gauge reading.
CAUTION—When making this test, do not completely immerse engine unit in water which may allow leakage within shell or short-circuit lead on terminal.

KING-SEELEY HEAT INDICATOR

DESCRIPTION:—The K-S Heat Indicator or temperature gauge is a thermometer in which the glass tube or indicator (dash unit) and the bulb (engine unit) are connected by a sealed copper tube. The entire device is assembled as a unit and the copper tubing must not be cut or the joints broken.

OPERATION:—The liquid with which the bulb and tubing are filled expands evenly with temperature increases and rises into the glass tube so that a reading is obtained when the engine warms up. The location of the bulb in the cylinder head is selected to accurately indicate the cooling water temperature and should not be changed.

SERVICING:—No service operations are necessary. The entire unit must be replaced if found to be defective as a result of mutilation or breakage.
Removal of Bulb from Engine—To disconnect gauge when removing cylinder head, loosen corrosion or sediment around bulb by tapping on cylinder head with a ball-pein hammer, take out compression nut, withdraw bulb. If bulb cannot be withdrawn without great effort, pry gently with a screwdriver. Bulb must not be distorted and must retain its original round shape in order to read correctly.

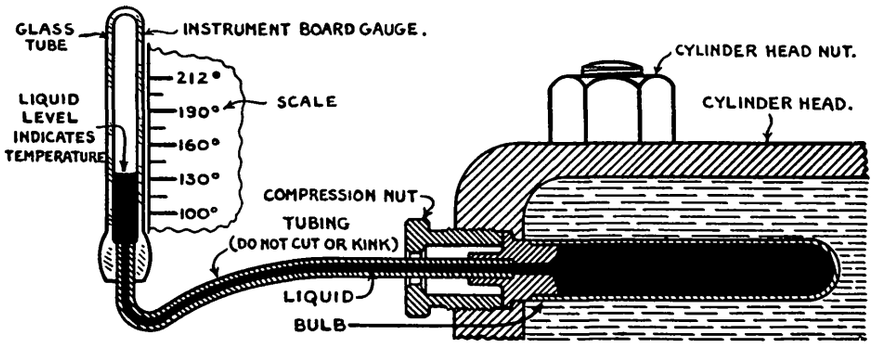

AC TEMPERATURE GAUGE (NOT ELECTRIC)

DESCRIPTION:—A.C. Temperature Gauges are of the Bourden tube type and consist of a dash unit in which the Bourden tube is mounted, together with the gauge pointer and connecting mechanism, and an engine unit or bulb. The units are connected by a hermetically sealed copper tube and the entire assembly is filled with a special liquid. The engine unit is mounted on the cylinder head and is immersed in the cooling water. As the temperature of the water increases the liquid in the bulb is vaporized causing a pressure to be exerted in the Bourden tube. The Bourden tube consists of a curved tube mounted rigidly at one end and connected to the gauge pointer through a crank mechanism or gear system at the other. The pressure within the Bourden tube results in a movement of the free end causing the pointer to move across gauge dial which is calibrated in degrees.

INSTALLATION:—Gauges are made in three types: Gearless, in which the gauge pointer is connected to the Bourden tube through a simple crank mechanism; Gear Type,, employing a smaller Bourden tube which is connected to the pointer through a sector and pinion gear system to amplify the tube movement, and a Gear Type Heavy Duty design.

Engine unit bulbs are designed in three sizes although for automotive use with a capillary tube length of less than 8 feet the smallest size, .365 inch in diameter and 1⅜ inches long, is used. Capillary tubing between the two units is completely armored or partially armored (at each unit). The engine bulb plug has a ⅝-18 N.F.-3 thread and may be screwed directly into a tapped hole in the cylinder head although it is recommended that an adapter be used in the hole in the cylinder head.

SERVICING:—No service operations required and units cannot be repaired. Replace all defective gauges as an assembly (dash unit and engine unit).
CAUTION—Do not cut tubing or attempt to disconnect dash unit or engine unit. The entire assembly is a sealed unit and will not operate satisfactorily if disturbed.

REMOVAL & INSTALLATION:—When removing gauge for work on engine or other parts of car, use extreme care not to kink or damage connecting tubing or to distort engine unit bulb which would cause dash unit to read incorrectly. Tubing should not be bent at sharp angles (loop tubing where change in direction required) and must not be flattened or kinked. When installing new gauge do not attempt to remove excess tubing (form tubing into fairly large loop).

AC THERMO (TEMPERATURE) GAUGES.

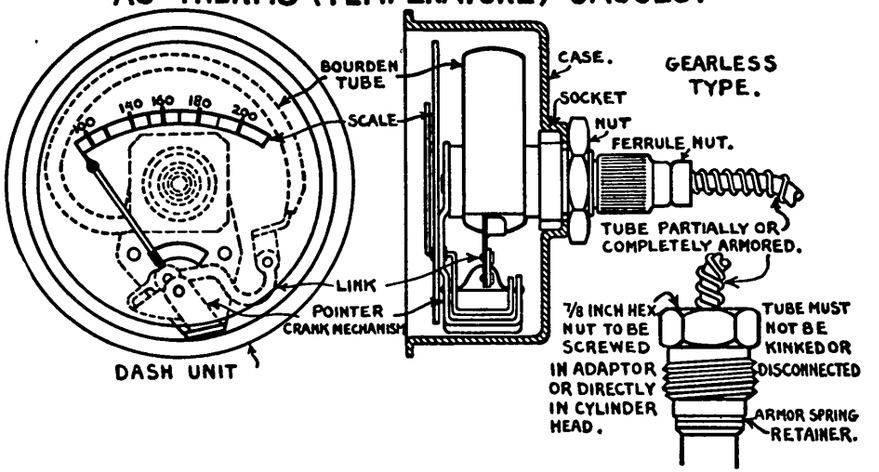

AUTO-LITE (MOTOMETER) TEMPERATURE GAUGE

DESCRIPTION:—These Motometer Temperature Gauges are of the Vapor Tension type. They consist of a dash unit calibrated to read in degrees of engine temperature, an operating bulb or engine unit, and a capillary tube connecting the dash unit with the engine unit. The engine unit bulb mounted in a special cylinder head nut or screwed into the engine block in place of the special half inch plug which is provided for this purpose on some engines. The bulb of the engine unit is filled with a liquid and the remainder of the system (capillary tubing and dash instrument) is evacuated. For this reason the capillary tubing must never be disconnected from the bulb or the dash unit and must not be cut or kinked.

OPERATION:—The bulb is exposed to the heat of the engine block (or the water in the cooling system in the Type N and L gauge) and the liquid in the system is raised to the same temperature. The pressure which results from this increase in temperature causes the dash unit to indicate a reading which is calibrated in degrees.

SERVICING:—Servicing is by replacement only. These gauges cannot be repaired and must be replaced whenever they are found to be defective.

Installation—When installing gauge, tubing must be supported in such a manner as not to kink or place a strain upon it. Surplus tubing should be looped. Do not cut tube or disconnect it from dash gauge or operating bulb. Cutting or disconnecting tube will destroy the instrument.

Lamp Bulb Replacement—Lamp can be replaced by removing two screws holding the bottom case at the rear of the gauge, and inserting a 6-8 volt, 2 cp. single contact bulb. If this provides too much light, a 12 volt bulb can be used.

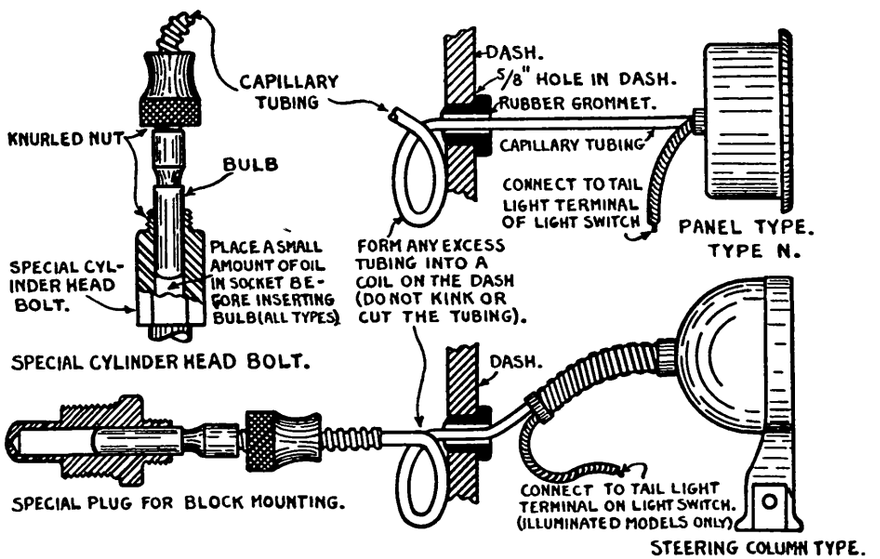

GRAHAM SUPERCHARGER

Graham, All Supercharger Models (1936 to 1941)

NOTE: The Supercharger is a separate unit mounted on the side of the engine with a separate drive. Drive consists of a separate shaft driven by a special chain (1936), twin "Vee" belts (1937 and later models). All supercharger units are similar with the exception of the drive.

TYPE:—Centrifugal type. Consists of a blower vane or rotor mounted at the upper end of a vertical shaft and driven by worm-and-wheel gearing from a horizontal cross-shaft. Carburetor is mounted directly on upper cover so that fuel mixture is sucked into supercharger by rotor and delivered to manifold under pressure. Supercharger cover and cross-tube connection to manifold are water-jacketed for temperature control. Worm gear ratio is 4.8-1 and total drive ratio 5.75-1 so that rotor speed is 23,000 RPM. at 4000 RPM. of engine. Gears are special 'cone' type worm and worm gear designed for long life and quiet operation. All bearings are bronze-backed babbitt lined and pressure lubricated from engine oiling system by external oil line.

ADJUSTMENT:—No adjustment required (see car model page for drive chain adjustment on first models). Vertical shaft endplay can be adjusted (required only after long service) and oil retainer at top of vertical shaft and on drive or cross-shaft can be renewed without dismantling supercharger or removing unit from car. All other service work requires complete dismantling of the unit (see Service Caution below).

Vertical Shaft Endplay Adjustment:—Remove cover at lower end of vertical shaft, mount dial indicator on housing with pin against end of shaft. Pry shaft up and down and read endplay on indicator. If endplay more than .002", remove nut and first thrust washer, install thicker washer (this washer furnished from .140" to .160" thick in .001" steps) so that endplay is .002", replace nut and cover. Use micrometer to measure washer thickness and be certain that endplay is between .001-.002".

Vertical Shaft Oil Retainer:—On upper end of shaft under rotor. Worn or loose retainer will allow air leak into manifold (may cause high-pitched whistle or make it impossible to adjust carburetor) or cause oil to be drawn into engine (engine will smoke badly). To renew oil retainer, disconnect throttle linkage, choke, gasoline line and vacuum advance tube at carburetor, take out supercharger cover screws and remove cover and carburetor as unit. Remove nut at vertical shaft top, pull rotor (use special puller) or hold rotor up by gripping two opposite rotor blades with large pliers, place wooden block on end of shaft and tap sharply with small hammer. Do not use bar to pry up on edge of rotor or shaft will be bent. Remove old retainer. Use new gasket with new retainer, center retainer carefully on shaft before tightening screws (retainer hole is .808-.809" and will provide .0005-.001" clearance on shaft—retainer must not touch shaft). Install rotor, being careful that both keys are in place, and tighten nut securely.

Cross-shaft Oil Retainer:—Renew retainer if oil leaks out around shaft. Remove drive shaft between couplings, take off nut on end of shaft and remove drive flange, take out screws in retainer cover, remove cover and old retainer. Install new oil retainer, replace drive flange before tightening retainer cover screws (to center retainer on shaft).

NOTE—When installing flexible coupling nuts, tighten nuts only so that distance from edge of coupling flange to edge of washer against opposite flange is 5/8" (excessive tightening will crush rubber bushings).

SERVICING:—Caution. Because of precision design and high speed at which supercharger operates, manufacturer strongly recommends that unit not be dismantled for servicing unless all special tools are used and extreme care taken that all clearances held to exact specifications. Use new worm and worm gear (matched set) whenever unit is rebuilt. Follow directions below carefully to insure correct fitting of each part.

Installing New Bushings:—Drive out old bushings (except cross-shaft rear bushing held by two screws), drive in new bushings (use special drivers) in following order: 1. Vertical shaft lower bushing (see that oil groove is at end of housing), 2. Intermediate bushing, 3. Upper bushing, 4. Cross-shaft front bushing in cover (press new bushing into cover from inside, see that cover fits squarely against housing and install in place), 5. Cross-shaft rear bushing (slip fit in housing and held in place by two machine screws). Line-ream upper and lower vertical shaft bushings in one operation (use special tandem reamer), then ream intermediate bushing (use special reamer). Set special adjustable reamer to cut hole size of exactly .751", ream both cross-shaft bushings. Remove side cover and rear bushing so that worm gear position can be checked.

Worm Gear Setting:—Assemble parts on cross-shaft (from rear or gear flange end forward) as follows: .032" shim thickness against shoulder, thrust washer (see that it engages dowel pins on flange). Install this assembly in side cover and continue assembly at outer end of shaft as follows: Thrust washer (see that it engages dowel pins on cover), .022" shim thickness, thrust washer (plain), drive flange and nut. Tighten nut securely and check endplay. Add or remove shims (outer .022" group) until there is no endplay. Bolt special gauge on cross-shaft flange (worm gear not installed), install cover assembly on supercharger housing making certain that lead gasket is in place under cover flange, install rear bushing to locate shaft. Install vertical shaft, check gap between gauge and vertical shaft (use feelers). This gap must be exactly .010". If gap not correct, remove vertical shaft and cross shaft assembly, dismantle cross-shaft assembly and add or remove shims from first (.032") shim pack located on shaft against worm gear flange. Recheck shaft endplay (adjust by adding or removing shims from outer (.022") shim pack, assemble and recheck gap. With gap exactly .010", add shims at outer shim pack to provide .002" endplay in shaft (check with two .002" feelers, placing one on each side of shaft between outer thrust washers). Remove nut and driving flange, install oil retainer assembly on cover, replace driving flange and tighten nut securely. Complete cross-shaft assembly by installing worm gear.

Worm Gear Installation:—Clean worm gear and mounting flange thoroughly, heat gear in hot water (will not clear flange unless heated), bolt gear on flange using special mounting screws and lockwashers (tighten all screws evenly and securely), wire screws together in pairs. Check gear runout on centers with dial indicator. Runout must not exceed .001".

Worm Setting & Installation:—Mount rotor on vertical shaft (not necessary to install keys) and tighten nut securely. Install shaft in housing, threading shaft down through special gauge at lower end (turn shaft until gauge is against shoulder on shaft—cross-shaft assembly must be out of housing to permit gauge installation). Place special plate gauge on housing cover flange and install rear cross-shaft bushing to locate gauge plug (gauge must be held firmly in place). Hold vertical shaft down, check clearance between two gauges with feelers. This must be determined accurately—incorrect measurement will cause noisy operation. Remove gauge, install shim thickness exactly equal to clearance (as measured above) on shaft against shoulder, install worm, special lockwasher and nut, tighten nut securely and turn down lockwasher ears against nut. Use dial indicator to check concentricity at each end of worm. Must check within .0005". Install special thrust washer (furnished from .122" to .128" thick in .001" steps) making certain that it engages dowel pins in housing, floating or plain thrust washer, second special thrust washer (furnished from .140" to .160" thick in .001" steps), castellated nut. Tighten nut securely. Mount dial indicator on housing and check vertical shaft endplay. Must be between .001-.002". Adjust by changing thickness of special thrust washer. Install cotter pin on nut, install lower cover and gasket. Pull rotor and install gasket and oil retainer at upper end (see Adjustment section for complete directions).

Final Assembly:—When installing worm gear and cross-shaft assembly in housing, see that screw with slotted head is used opposite worm (other screws will strike worm). Lead gasket must be in place under cover flange. On first type with mounting flange, line up flange with straightedge before tightening cover screws. Make certain that oil tube for upper bushing is in place and that entire assembly turns freely.

POWER WINDOW REGULATORS HYDRO-ELECTRIC TYPE

Chrysler Crown Imperial Model (1941)
Lincoln, Custom Models (1941-42)
Packard, Some Models (1941-47)

NOTE:—On some models, only the partition glass (at rear of front seat) is provided with automatic control, on other models, both front and rear door windows have automatic control with duplicate control buttons in front and rear compartments.

DESCRIPTION & OPERATION:—Windows are operated by hydraulic cylinders and assistor springs in each door which are supplied with oil under pressure by a motor driven pump from a central supply tank.

Motor & Oil Pump—Motor is similar to starter motor except that field consists of two opposed sets of two coils each. Energizing one set of field coils causes motor to rotate in one direction (supplying oil to window cylinders to raise windows), energizing opposed set of field coils causes motor to revolve in opposite direction (withdrawing oil from cylinders to lower windows). Oil reservoir consists of tank which must be kept filled with hydraulic brake fluid. Oil pump is conventional gear type and is built on one end of motor housing. A non-adjustable spring-loaded maximum pressure regulating valve is built in the pump cover with a dashpot to prevent chatter. This pressure valve by-passes the fluid when the window reaches the upper limit of its travel or when the window strikes an obstruction and prevents damage to the window and the operating mechanism.

Relay—Consists of a set of contacts controlled by a single winding and connected in the circuit so as to protect the motor when several control buttons are operated at once. Relay contacts open when winding is energized.

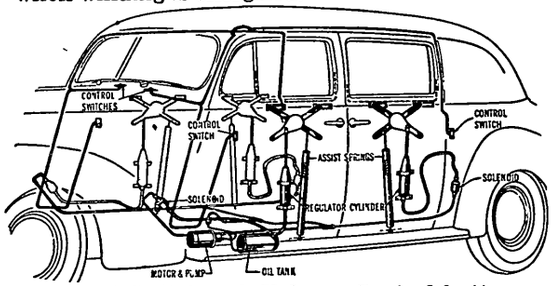

Control Switches & Valves—Control buttons are two-way type and when operated turn on the pump motor for desired rotation (to raise or lower window) and also actuate the solenoid valve to direct oil to particular window. Relay prevents closing switches for both up and down operation at one time and is designed to give control to down operation (if up and down switches closed simultaneously, both windows will move down).

Window Operating Cylinders—Consist of a long hydraulic cylinder and assistor spring in each door which are linked to the window operating mechanism. When window is raised, oil is pumped into cylinder and remains trapped in cylinder to hold window closed. To lower window, motor driven pump is reversed to withdraw oil from cylinder (solenoid valve opens to permit oil to flow out). The piston in the window operating cylinder is connected to the piston rod through a calibrated compression spring which prevents pressure building up in system due to heat expansion of the fluid in the cylinders and the lines with the windows closed.

SERVICING:—**Supply Tank Oil Level**—Check level with all windows down (some fluid will be trapped in cylinders and oil level goes down when windows closed). Tank will overflow if filled when windows or partition glass are raised. Use only genuine brake fluid to fill the window regulator system.

CAUTION—Mineral oil will ruin rubber parts in system and require replacement of all rubber parts.

Motor & Oil Pump—Requires no attention other than oiling of armature end bearing at 3000 mile intervals. Pump should deliver pressure of 120-130 lbs. (in one direction) and vacuum of 15-18" (in opposite direction). Check only with combination pressure-vacuum gauge. When overhauling pump, use care not to interchange end thrust plates (these plates and gears ground to close-fit and will not operate satisfactorily if interchanged). Remove all traces of old gasket and use only correct type new gasket when reassembling pump. CAUTION—Reuse of old gaskets or installation of gaskets of incorrect thickness will cause leakage, binding of pump gears, or loss of pressure.

Relay—Auto-Lite Model HRD-4001 Relay specifications are as follows:

Contacts Open—3.5-4.5 volts. Adjusted by bending lower spring hanger to increase or decrease armature spring tension.

Contacts Close—1.0-1.8 volts below opening voltage (after voltage has been increased to 6 volts). Adjusted by turning brass cam on contact side of yoke (apply drop of air-drying varnish to cam after completing adjustment).

Contact Gap—.005" minimum.

Air Gap—.044-.046". Measure at center of core with contacts closed. Adjust by raising or lowering stationary (upper) contacts.

Window Cylinders—When disassembling cylinder, use care not to damage piston rod boot. Use only correct type replacement piston spring (piston rod connection) and piston sealing ring. Power cylinder will not operate satisfactorily if other parts installed. Pour one ounce of brake fluid into cylinder above piston when reassembling (necessary to lubricate upper end of piston).

Window Glass Replacement—When replacing window, attach regulator arm to lower glass channel without connecting piston rod. Move window up and down by hand to make certain that it moves freely without binding. Adjust piston rod length so that window is supported by piston resting on bottom of cylinder when fully lowered. To make this adjustment, loosen locknut and turn piston rod in or out of connector rod as required. Use great care not to damage rubber boot or allow dirt to drop into cylinder while adjusting, tighten locknut and make certain that washer and hairpin lock are in place to prevent connector rod being disconnected from regulator arms in service. Assistor spring tension should not be changed and spring should be serviced by replacement.

Control Valves, Switches, & Lin s—Valves and switches should be serviced by replacement. When connecting lines at solenoid valves, motor or cylinders, hold connection with wrench while tightening line to prevent damage. Solenoid valves are grounded through mounting clamp and clean, tight connections must be made at this point.

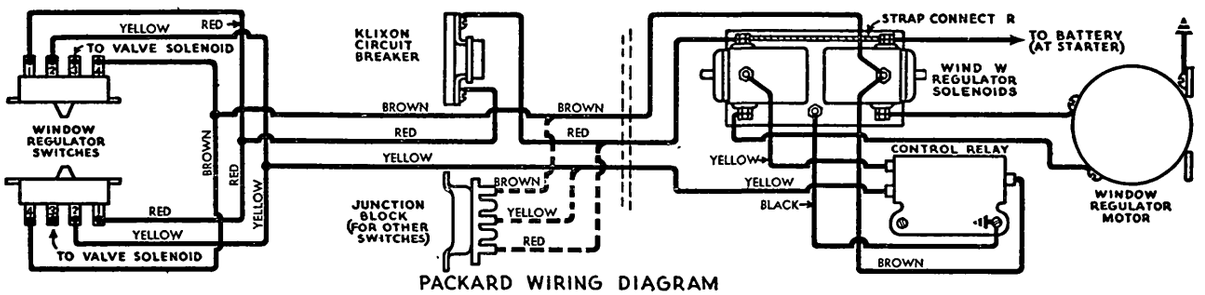

PACKARD WIRING DIAGRAM

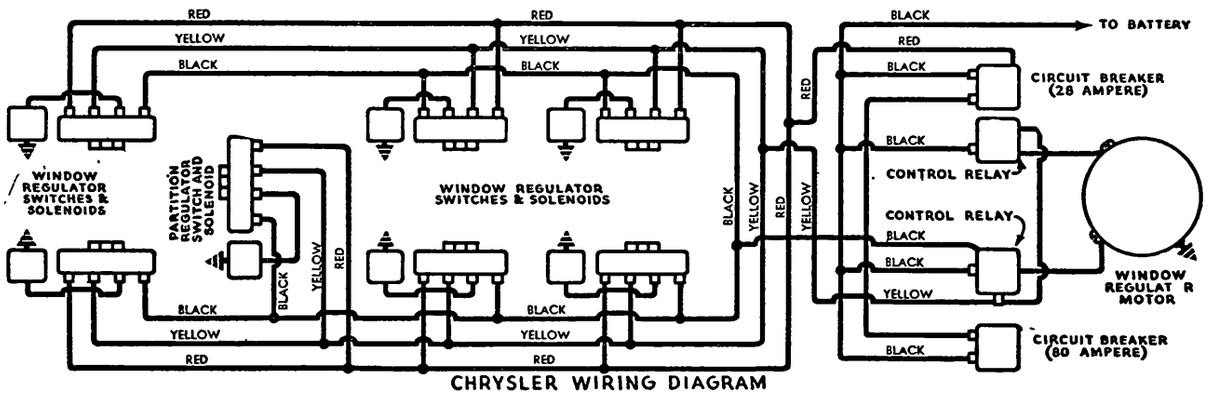

CHRYSLER WIRING DIAGRAM

POWER WINDOW REGULATORS HYDRO-LECTRIC TYPE

1946-48—Buick, Cadillac, Oldsmobile
1942-48—Chrysler Crown Imperial—See Note
1946-48—Ford & Mercury Sportsman
1946-49—Lincoln
1948 —Hudson, Packard Models
1949 —Mercury

▷PRODUCTION CHANGE:—Two different pumps have been used, a low pressure pump (200-210 p.s.i.), and a high pressure pump (250-260 p.s.i.). These pumps can be identified by relief valve plug at rear of pump: low pressure has cadmium plated plug, high pressure a copper plated plug.

CHRYSLER 1942 NOTE: Window regulator system used on these cars is "Dump Valve" type and not same as type used on 1946-48 cars as described below. Service operations are similar and service data given below applies to these 1942 cars as well as later models.

DESCRIPTION: This type control consists of an electric motor with direct-connected hydraulic pump which supplies fluid under pressure to a single acting power cylinder incorporated for each window regulator used (additional cylinder located under front seat for front seat adjustment on some models). Fluid is pumped into the cylinders by the motor to raise the windows (switch closes motor circuit and operates solenoid valve in cylinder), but windows are lowered by a spring hooked to the regulator and the motor does not operate (switch only operates solenoid valve in cylinder). When the switch is in the "off" or center position, the solenoid valve is closed and fluid is trapped in the cylinder to hold windows in desired position. The system is made up of the following control uits:

Power Unit—Consists of motor, hydraulic pump, and fluid reservoir assembly. This unit is same as type used for Convertible Top Control on these same cars (See Hydro-Lectric Top Control article for complete description).

Control Switches: Consist of simple two-way switches (one for each window—duplicate switches for rear window control located in drivers compartment). Switch lever is normally in "off" or center position and must be held in the "up" or "down" position while the window is operating. In the "up" position, switch completes motor circuit (actuates magnetic switch on power unit), and opens solenoid valve in cylinder to permit fluid to flow into cylinder to raise window. In the "down" position, switch merely opens solenoid valve in cylinder which permits window regulator spring to lower window and force fluid out of cylinder and back to fluid reservoir (motor does not operate).

Window Regulator Cylinder—Single acting cylinder in window well with piston rod linked to window regulator arm. Fluid flow into and out of the cylinder is controlled by a simple solenoid-actuated valve at the lower end (valve is normally closed and is opened when the solenoid is energized).

REMOVAL: Control units can be removed for servicing or replacement as follows:

Power Unit: Removed in same manner as power unit used on Convertibles with top control (see preceding article on Hydro-Lectric Top Control for complete data).

Window Regulators (including Power Cylinder): Remove units on each model as follows:

Chrysler Crown Imperial—Lower the window, remove door trim panel. Disconnect battery cable as a safety precaution, disconnect and tape solenoid valve lead at cylinder, disconnect hydraulic line at cylinder and cap the line. Take out three studs mounting frame assembly on door panel, loosen two screws in window frame roller channel, slide rollers out of channel. Raise window by hand until it clears, remove regulator frame assembly through elongated hole in lower part of door panel. Re-install in same manner making certain that frame assembly is properly aligned (⅛" clearance between window glass and channel as glass is raised).

Buick, Cadillac, Oldsmobile Models—Lower the window fully, disconnect battery cable as a safety precaution. Remove door inside locking rod knob and window garnish molding, door ventilator regulator handle, door belt finish molding on some cars only (push in and up to disengage molding from concealed attaching screws), door lock remote control handle, and door arm rest. Disconnect control switches involved, disconnect and tape wires (NOTE—Switches held in place by snap-on clips and can be pulled out). Remove door trim pad. Disconnect solenoid wire at bottom of cylinder and tape this wire. Disconnect hydraulic line at cylinder and cap the line. Loosen two cam assembly-to-sash channel attaching screws, raise glass by hand, slide cam assembly forward to disengage it from lift pins. Remove window lift assembly attaching nuts at bottom support and remove the unit. Reinstall in same manner. Make certain that assembly correctly aligned (NOTE—glass should move up and down freely by hand with hydraulic line not connected).

Lincoln Models—Lower the window, remove switch by prying spring clips at top and bottom and pulling out, disconnect wires. Remove handle, window moulding, and trim panel. Disconnect hydraulic line at cylinder and cap line. Loosen 2 nuts securing regulator to window channel, slide window up by hand. Remove 2 door nuts at bottom of regulator and nut at aligning screw. Disconnect solenoid wire, remove regulator.

Packard Models—Lower the window, remove window moulding, inside door handle, and door lock knob. Unclip lower edge of trim panel, disconnect panel just enough to release arm rest clip (door switch need not be removed). Remove 2 stop brackets attached to bottom of window frame. Remove 3 screws holding rear channel to window frame and slide channel to front and remove. Loosen 2 nuts in slotted brackets and remove window from door. Disconnect hydraulic line and wire from valve at lower end of cylinder. Remove regulator lower retaining nuts and remove regulator. Re-install in same manner.

SERVICING: Filling Fluid Reservoir—Lower all windows completely (where seat adjuster cylinder used, place seat in extreme rear position also). Check fluid level in reservoir under power unit and fill to ½" below top with brake fluid (see Fluid Recommendation Note. Operates windows up and down at least a dozen times to remove all air from the lines and cylinders, then recheck fluid level. It is not necessary to bleed the hydraulic lines.

Service Period—Once each year—Fall recommended (for General Motors cars). Every 5000 miles—each

CONTINUED ON NEXT PAGE

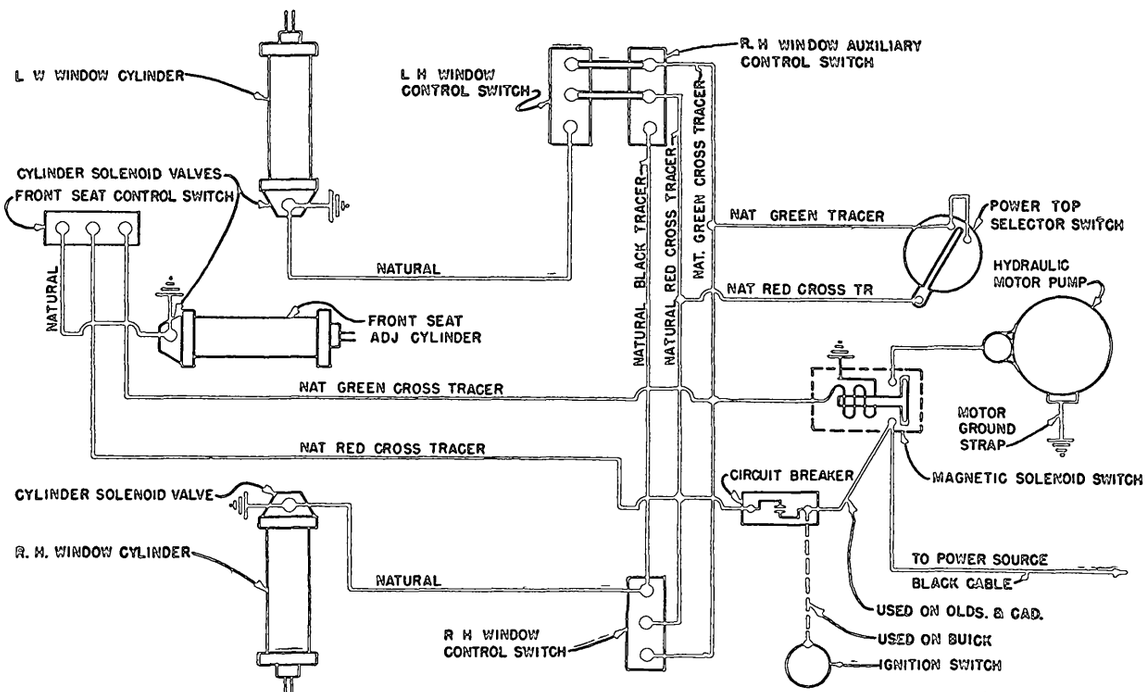

BUICK, CADILLAC, OLDSMOBILE (SHOWING 2 DOOR WINDOWS & SEAT ADJUSTERS)

POWER WINDOW REGULATORS HYDRO-LECTRIC TYPE (C nt.)

spring and fall (Ford, Lincoln, Mercury, Packard).
Fluid Recommendation—Delco Super No. 9 or No. 11 brake fluid (for General Motors cars), Ford M-4835 brake fluid (for Ford, Lincoln, Mercury), Packard Brake fluid (for Packard).

PRESSURE REGULATOR VALVE: Pressure in system is controlled by combination maximum pressure relief and flow control valve in power unit.

►*CAUTION*—**Two different valves used:** Check color of relief valve plug at rear of pump.

1—Cadmium plated plug. Valve set for maximum pressure of 210 lbs. for use with low pressure pump.
2—Copper plated plug. Valve set for maximum pressure of 260 lbs. for use with high pressure pump. See PRODUCTION CHANGE NOTE above.
These valves are not interchangeable.
NOTE—If plug removed and washers are used under plug, these same washers must be reinstalled on reassembling plug.

POWER OPERATED TOPS HYDRO-LECTRIC TYPE

Used On Convertible Models:
1946-48—Buick, Cadillac, Chevrolet, Oldsmobile, Pontiac Models
1946-48—Ford & Mercury Sportsman
1948 —Hudson, Packard Models
1949 —Ford, Lincoln, Mercury

►**PRODUCTION CHANGE:**—Two different pumps have been used, a low pressure pump (200-210 p.s.i.), and a high pressure pump (250-260 p.s.i.). These pumps can be identified by relief valve plug at rear of pump: low pressure has cadmium plated plug, high pressure a copper plated plug.

DESCRIPTION: This type control consists of an electric pump with direct-connected hydraulic pump which supplies fluid under pressure to two double-acting hydraulic cylinders which raise and lower the top. Motor operation and directional control (to raise or lower top) is controlled by a button on the instrument panel. Top design is conventional with top bows and side-irons modified for power actuation. On cars listed above, **motor is not reversible** and selective control (to raise or lower top) is secured by use of a hydraulic valve by which the fluid is directed to the bottom of the hydraulic cylinders (to raise the top), or to the top of the cylinders (to lower the top). Opposite end of cylinder is vented to fluid reservoir through valve.

Power Unit—Consists of motor, hydraulic pump, and fluid reservoir assembly on front of dash with magnetic motor switch on side of motor and thermostatic relay type circuit breaker (for motor circuit protection) is mounted near the motor.

Control Valve & Switch—Mounted in back of instrument panel or dash and operated by button on panel. Consists of two separate units in one assembly: (1) Hydraulic Valve by which fluid is directed to top or bottom of hydraulic cylinders to lower or raise top, (2) Motor Switch by which the motor is turned on when top operation is desired. Both units are controlled by a single control button on the instrument panel.

Power Cylind rs—Double acting type, two used. Mounted on each side of car body, at rear, with piston rod linked to top mechanism. Cylinders are mounted on pivot bracket to permit rocking action as top is raised and lowered and the hydraulic tubing is looped at the pivot to permit this movement. Cylinders are plain piston type and cylinder ends are crimped in place to provide a fluid tight assembly (upper end rubber piston rod seal and also provides bearing for piston rod).

ADJUSTMENT (TOP CONTROL): No adjustment required other than adjustment of control rod to provide proper operation of the control valve.

Control Valve Rod Adjustment—Should be set to provide ⅛" over-travel in each direction. To adjust, loosen setscrew holding control rod in control valve lever, position control rod so that distance from ferrule on control support bracket at instrument panel to forward end of control rod knob (this is distance along shaft from bracket ferrule to knob) is 1 3/32" maximum, tighten operating valve setscrew. NOTE—If control rod is not long enough to permit this adjustment, rod can be lengthened by removing retaining nut at bracket, and removing entire control rod assembly from the bracket. Clamp control rod securely in vise, loosen locknut and unscrew control knob assembly from rod as necessary.

ADJUSTMENT (CONVERTIBLE TOP): If top not correctly positioned in up or down position, adjust as follows:

Forward-and-Backward Adjustment (Clearance at windshield header when top up)—If top is too far forward or does not move far enough forward to permit windshield header dowels to enter dowel holes in roof rail, adjust as follows: Raise top slightly above windshield header, loosen attaching bolts in corner braces at front end of side roof rail, move front roof rail forward or backward to align dowels and dowel holes (attaching bolt holes are slotted to permit this adjustment), tighten attaching bolts.

Up & Down Adjustment (Clearance at top of door and quarter window)—If side roof rail too high or too low when top is up, unlatch top at windshield and raise top approximately halfway. Remove rear seat cushion and back, and quarter trim panel, loosen three plate attaching screws in top adjusting plate at rear quarter section of body, move adjusting plate down to raise side roof rail or up to lower side roof rail (attaching screw holes are slotted to permit this adjustment).

PACKARD NOTE—For above adjustment, loosen 3 retaining nuts which are accessible without removing rear quarter trim panels.

Folded Top Position Adjustment—If top does not contact bumper in each side of top compartment when lowered, loosen attaching screws in top adjusting plate (see Up-and-down adjustment above), and move plate to rear slightly but **do not raise or lower the plate.** Moving plate to rear will allow top to lower further into the top compartment.

Side Rail Center Hinge Hump or Sag Adjustment (on Packard)—If side rail humped or sagged above door window, adjust by means of slotted screw and locknut under arm at pivot. Ends of side rail at pivot should be slightly **above** horizontal. Turning screw in lowers rails, turning out raises rails.

Rear Quarter Window Fit Adjustment (Packard)—If top fit along quarter window incorrect, adjust by means of two adjusting screws at rear quarter of body (provide stop for short curved arm at this point). Turning screws in moves top away from window, turning screws out closes gap at windows.

REMOVAL: Units can be removed for replacement or servicing as follows:

Power Unit—Disconnect battery cable as a safety precaution (hydraulic fluid is inflammable). Disconnect ground strap and wire at motor. Disconnect hydraulic tubing at pump and cap ends (CAUTION—fluid is inflammable—soak up spilled fluid with absorbent cloths). Remove bolts from rubber mountings (one at top, two at bottom—on Buick and Cadillac it will be necessary to remove fluid reservoir for access to bottom bolts). Lift out unit.

Control Valve—Disconnect battery cable as a safety precaution. Disconnect control rod at operating lever by removing setscrew. Disconnect two switch wires. Disconnect hydraulic tubing and cap ends of tubing (CAUTION—fluid is inflammable—soak up spilled fluid with absorbent cloths). Remove screws holding valve on mounting bracket.

Power Cylinders—Remove nut on bolt linking piston rod to top mechanism while top is up but do not remove the bolt. Lower the top (see note below). Disconnect battery cable as a safety precaution. Remove rear seat cushion and back, remove rear quarter trim panel assemblies (dome lamp switch must be loosened and wires disconnected to remove right panel). Disconnect hydraulic tubing at tees located at right center of body, cap ends of tubing (CAUTION—fluid is inflammable, soak up spilled fluid with absorbent cloths). Remove bolt linking piston rod to top mechanism (from which nut previously removed), take out clevis pin and remove lower mounting bolt from anchorage plate. Free hydraulic tubing from retaining clips. Work cylinder back and forth until free from mounting bracket, lift cylinders and tubing out as an assembly.

SERVICING:—Cleaning and Filling Fluid Reservoir. On cars with power operated windows and front seat, lower all windows and set seat in full rear position. Remove reservoir at bottom of power unit, clean with alcohol and refill to within ½" of top with brake fluid (see Fluid Recommendation Note below). After replacing reservoir, operate top several times to remove all air from lines. It is not necessary to bleed the lines.

Service Period—Once each year—Fall recommended (for General Motors cars). Every 5000 miles—each spring and fall (Ford, Lincoln, Mercury, Packard).
Fluid Recommendation—Delco Super No. 9 or No. 11 brake fluid (for General Motors cars), Ford M-4835 brake fluid (for Ford, Lincoln, Mercury), Packard Brake fluid (for Packard).
CAUTION—Do not use a mineral base oil in the system nor lubricate piston rod stem with mineral oil. If necessary to lubricate piston rod stem or seal, use castor oil or brake fluid.

PRESSURE REGULATOR VALVE: Pressure in system is controlled by combination maximum pressure relief and flow control valve in the power unit.

►*CAUTION*—**Two different valves used:** Check color of relief valve plug at rear of pump.

1—Cadmium plated plug. Valve set for maximum pressure of 210 lbs. for use with low pressure pump.
2—Copper plated plug. Valve set for maximum pressure of 260 lbs. for use with high pressure pump. See PRODUCTION CHANGE NOTE above.
These valves are not interchangeable.
NOTE—If plug removed and washers are used under plug, these same washers must be reinstalled on reassembling plug.

POWER OPERATED TOPS
HYDRO-ELECTRIC TYPE

Used On Convertible Models:
1941-47—Hudson Six & Eight Models.

NOTE:—This hydro-electric control not same as 'Electric' type where separate electric motors are geared directly to power screws linked to the top mechanism on each side of the car. See separate article (preceding) for data on Electric Top Controls.

DESCRIPTION:—This type control consists of an electric motor and pressure pump assembly which supplies fluid under pressure to two double acting hydraulic cylinders which raise and lower the top.

Top Motor—Consists of a reversible motor mounted as an assembly under rear seat on left side of car with oil pump, oil reservoir, and solenoid switches. Motor field is divided into two sections connected to separate terminals on motor frame (each section connected to one solenoid switch).

Pump & Valve Unit—Pump and valve assembly is built-in motor endplate. Pump is conventional gear type with driving gear mounted directly on armature shaft. Valve assembly consists of a double spring-loaded disc type valve which allows fluid flow from pump to one end of cylinders and at the same time allows the fluid displaced from the other end of cylinders to flow to fluid reservoir. Valves are correctly adjusted during assembly and adjustment should not be changed.

Control Switch—Switch is two-way type and is spring-loaded so that it returns normally to the center 'off' position. Switch button should be pulled out to raise top or pushed in to lower top and must be held in or out until the operation is completed.

Power Cylinders—Double acting type, 2 used. One cylinder is mounted on each side of car between trim panel and body panel with piston rod linked to the top upper hinge brace through a connector yoke. Cylinders are mounted on a pivot bracket on the car floor with flexible connections from upper and lower ends of cylinders to pressure lines on car frame which connect to valve outlets on motor and pump assembly. Same ends of both cylinders are connected to the same pressure line (upper ends to one line, lower ends to second line).

OPERATION:—Top can be raised or lowered with engine running or stopped but the control should be operated only with car standing still to avoid damage to top. When control switch is pulled out (and held out) to raise top, this actuates one solenoid switch which completes motor circuit through correct field section so that motor and pump operates to supply fluid to line connected to lower end of each power cylinder (left hand or lower connection on valve assembly). Fluid forces piston and rod up in each cylinder and raises the top (fluid displaced from top of cylinder flows back to reservoir through valve assembly). Top header should approach within ½" of top of windshield and top should then be pulled down over locating dowels by hand and the 3 attaching clamps fastened. When top is to be lowered, attaching clamps should first be freed (free center clamp first) and top raised free of locating dowels. Then, when control switch is pressed in (and held in), this actuates the other solenoid switch and completes motor circuit through the other field section so that the motor and pump revolve in the reverse direction to supply fluid to line connected to tops of power cylinders (right hand or upper connection on valve assembly). This causes piston and rod to move down in cylinder and lower top.

TESTING:—If top does not operate or operation is not satisfactory check as follows:

Top does not Raise or Lower Freely. When raising top, see that top is free and not obstructed or binding on body. When lowering top, make certain that header is free of locating dowels (top must be raised off dowels by hand). Check following points:

1. Top Mechanism. See that all joints in top irons are free and not binding (disconnect power cylinder piston rods and operate top by hand).
2. Power Cylinders. Check piston alignment in upper end plate (disconnect piston rod at yoke, see that rod not sprung when connecting yoke). Check cylinder floor mounting, see that cylinder free to move on bracket pivot and that pivot aligned so that cylinder and top control pivot in same place as top raised and lowered.
3. Pressure Lines. Check all lines and fittings for loose connections and fluid leaks. Check all lines and hoses for kinked or obstructed opening. Check fluid level in reservoir and make certain that tank is at least one-half full.

Top does not raise or Lower—Make certain that top not binding or obstructed in raised or lowered position (see above). Check following points:

1. If motor operates satisfactorily, check fluid level in reservoir (must be at least one-half full), check all lines and fittings for damaged pipes and fluid leaks.
2. If motor operates in one direction only, check the other solenoid switch, control switch and motor field lead, and motor field for grounds or open-circuits.
3. If motor operates slowly or not at all, check battery condition, check feed wire from ignition switch 'GA' terminal to control switch, and wires from control switch to solenoid switches and from solenoid switches to motor. See that motor grounded, check motor for worn or sticking brushes, dirty or burnt commutator, grounded or open field coils and armature coils.

SERVICING:—Power Cylinder—Power cylinder parts not supplied separately and cylinder should be serviced by replacement. To remove power cylinder, remove rear quarter trim panels, disconnect hose connections at top and bottom of cylinder (place hoses in container to prevent fluid running out on floor), disconnect piston rod yoke by taking out attaching screw, disconnect cylinder from floor mounting bracket by taking out cotter pin, plain washer, and clevis pin, lift cylinder out. Install cylinder in same manner and make certain that lower connection is free so that cylinder pivots freely on bracket and that hose connections securely fastened and not kinked. Expel air from cylinder by raising top part way and then working top back and forth slightly by manipulating control switch.

Power Unit—To remove complete power unit, remove rear seat cushion, disconnect flexible hose connections at valve assembly, take out bolts attaching power unit to floor, lift unit out. Disconnect pipe from reservoir to valve assembly.

Valve Assembly—Remove four Phillips head screws attaching valve assembly to pump body, remove assembly. To disassemble valve, remove large end fittings (power cylinder connections), gaskets, check valve springs, and check valve assemblies. See that valve seats in housing are smooth and not nicked or burred (will cause loss of pressure). CAUTION—Valves are adjusted during assembly and adjustment should not be changed.

Pump Assembly—To remove pump, take off rear mounting bracket, remove four screws and lockwashers mounting pump housing on end of motor Pull the oil pump assembly off the end of the motor housing (armature will come out with pump). Pump drive gear is keyed to armature shaft and can be removed by tapping on end of shaft, then remove gear and key. Lift driven gear off shaft. If oil seal is being replaced, old seal should be turned out in a lathe and a new seal pressed in place. Reassemble pump in same manner using all new gaskets.

Motor—Motor is Auto-Lite unit similar to starter motors (except for special field) and is serviced in same manner as starter motors.

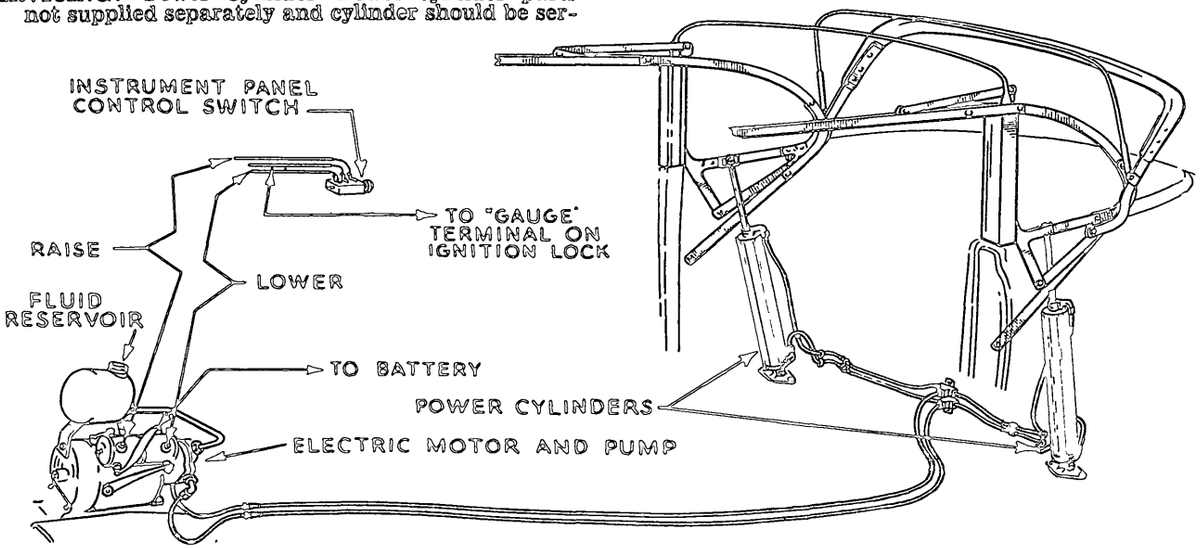

POWER OPERATED TOPS
ELECTRIC TYPE

Used On Convertible Models:
1942—Buick, Cadillac, Chevrolet, Oldsmobile and Pontiac.

BODY NOTE:—Two types of Convertible Bodies are used. 'A' type on Buick 44C, Chevrolet, Oldsmobile 66, 68; Pontiac 25, 27. 'C' type on Buick 56C, 76C; Cadillac 62, and Oldsmobile 98. 'C' type top equipment uses Assist or Booster Spring on worm shaft, a single locking handle at center to locktop to windshield header. 'A' type do not use the Assist Spring and have three locking handles.

►**PRODUCTION CHANGE:**—Late 'C' type bodies are equipped with motors with heavier winding and can be distinguished from early motors by a daub of red paint on one end. This motor is part of Power Top Lift Assembly which carries new part No. 4140184 (original part No. 4133604 used on all 'A' bodies and early 'C' bodies with motor painted black). Motors are not serviced separately (part of Power Top Lift Assembly).

CAUTION—When replacing power assemblies use same type unit as was removed.

DESCRIPTION:—This type top control consists of a Top Lift and Motor Assembly mounted on floor behind rear quarter trim on each side of car. The Top Lift and Motor Assembly is made up of an electric motor with a gear reduction unit, a worm shaft and a tubular operating arm. A centrifugal clutch is provided between motor and reduction gear which allows for manual operation of top if required. The motors are reversible and are controlled by a switch on the instrument panel operating through a magnetic switch (one for 'up,' one for 'down' operation) so that they operate to raise or lower top when panel switch is actuated with the ignition switch turned 'On'.

Motors—Series wound type with field connected in two sections to separate terminals on motor frame. When the 'Up & Down' switch is actuated, one half of the field is energized which causes the motor to revolve in the correct direction to raise or lower the top. The motors operate through a centrifugal clutch to the reduction gears which in turn are geared directly to the worm shaft which operates in a tubular shaft connected to the top frame.

Up and Down Control Switch—Consists of a two-way switch which is spring-loaded so that it is normally in the 'Off' position and must be held in the 'Up' or 'Down' position while the top control is operating.

Magnetic Switches—Two magnetic switches are used and are located on floor between the motors. One switch controls 'Up' position utilizing half the field in each motor, other switch controls 'Down' position causing motors to revolve in opposite direction and lower the top. These magnetic switches are controlled by the instrument panel 'Up' and 'Down' Control Switch.

Circuit Breaker—On inside of dash on right side (Buick), on left side (Cadillac, Oldsmobile), on dash to pillar brace on left side (Chevrolet), on dash to instrument panel brace on left side (Pontiac). The circuit breaker in the motor feed wire protects motors from overload. When contacts open, circuit breaker will make an audible 'clicking' noise and contacts will remain open for approx. 24 seconds. Circuit breaker is 'Klixon' type and not adjustable.

Fuse—A 9 ampere fuse protects 'Up' and 'Down' switch and is inserted in switch feed wire circuit behind instrument panel.

OPERATION:—Car should be standing still and engine stopped with the ignition turned on when top control is operated. CAUTION—Do not raise or lower top with the car in motion.

Lowering Top—Unlatch top from windshield header (3 handles on 'A' bodies, 1 handle at center on 'C' bodies), raise top slightly so that top is freed from locating dowels, **turn on ignition switch**, press in on **'D'** button of control switch and hold in this position until top completely lowered.

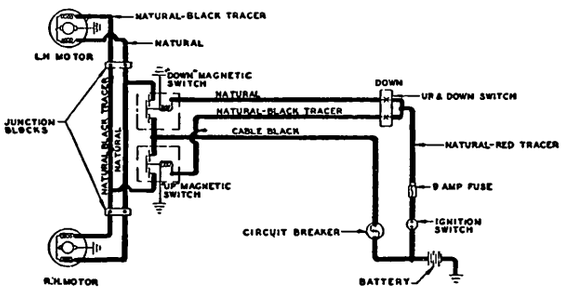

Raising Top—Remove top boot and release hold-down strap at center of top. **Turn on ignition switch,** press in on **'U'** button of control switch and hold in this position until top is raised. Top should come to rest within 1-2" of windshield header and side rails should be straight (see Adjustment following).

Hand Operation Note—Top can be raised or lowered by hand (centrifugal clutches at each motor permit this movement). When operating top by hand a steady but firm pressure (without jerking) must be used.

ADJUSTMENT:—Top Fit (Forward and Back)—If Top fit at windshield header incorrect, loosen two attaching bolts in each front corner brace (at front end of each side roof rail). Braces can be moved toward the front or rear (bolt holes slotted) until proper fit with dowels on top of windshield header is obtained, tighten bolts.

Top Fit (Up and Down)—If Top fit at side roof rail with top of door and rear quarter window incorrect proceed as follows: Raise top approx. one-half open, remove rear seat cushion and back, and rear quarter trim panel exposing top adjusting plate (has pivoted arm attached) on rear quarter section. Loosen three attaching screws, raise plate to lower side roof rail or lower plate to raise side roof rail until proper fit with door obtained, tighten screws.

Top Fit (Lowered Position)—If Top fit in lowered or folded position incorrect, top can be adjusted to contact rubber bumper on each side of top compartment by loosening three adjusting plate screws (see above) and moving plate to the rear without disturbing up and down position of plate, tighten screws.

Top Fit (Rear Quarter Window)—Top fit with curved rear portion of Rear Quarter Window can be adjusted to obtain correct spacing in one of the following ways: (1) By adjusting window. Remove rear quarter trim for access to two adjusting screws (at upper front corner of panel adjacent to window pivot bolt) and move window to front or rear until proper fit obtained with the top and the glass channel on the door. (2) By removing wooden filler section of rear quarter pillar (attaching screws on rear side of pillar) and inserting waterproof cardboard shim behind filler to take up excessive space. (3) By loosening two attaching screws in base of metal upright (hinge fulcrum with rubber bumper on upper end, accessible after rear seat cushion and back, and rear quarter trim panel have been removed) and shifting upright to front or rear for correct top fit with window. Screw holes in upright are slotted.

Power Unit Rattle Correction—Rattles caused by sideplay or slap between sides of anchor bracket and eyelet on underside of gear case can be corrected by removing clevis pin, inserting fibre washers between gear case and bracket, and installing proper size bolt and nut (replacing clevis pin), and tightening nut to prevent up and down movement or sideplay.

Rear Quarter Water Deflector ('C' Bodies)—A rear quarter water deflector, Part No. 4146448, can be installed to prevent water entering body at rear quarter belt section just to rear of window on early cars as follows: Take off small triangular finishing plate at lower front side quarter of top, fold lower edge of top up out of the way, install water deflector (small angular piece of sheet metal) with inner end against rubber bumper beneath No. 1 bow and outer end against pinch weld flange of rear quarter panel, scribe screw hole locations with pointed tool, lower top, drill screw holes for ⅛" sheet metal screw (use .112 or .115" diameter drill), install water deflector with upturned edge to rear and tighten attaching screws, raise top and replace lower rear quarter trim and finishing plate.

Rear Quarter Window Weatherstrip Guide—To correct weatherstrip lip along edge of top being turned out on wrong side of window when window raised, a rear quarter window weatherstrip guide (spring steel 'hair-pin' design), Part No. 4146478 (right), No. 4146479 (left) can be installed as follows: Insert guide at upper front corner of window between inside of glass frame and weatherstrip on window with loop turned out toward side of car. As window is raised, loop end of guide pilots window along proper side of weatherstrip on top.

Center Locking Handle Operation ('C' Bodies)—Allen set screw on inner corner of handle must be

CONTINUED ON NEXT PAGE

POWER OPERATED TOPS ELECTRIC TYPE (C nt.)

flush with surface of handle (use ⅛" Allen wrench to tighten). If screw loosens, lock may bind or operate stiffly.

SERVICING:—Important Note—Power Unit serviced only as an assembly (parts not furnished separately) and can be removed and installed as follows:

Power Unit Removal and Installation—To remove unit, remove rear seat cushion and back, and rear quarter trim panel (top must be in raised position and locked to windshield header), disconnect motor ground wire and wires to magnetic switches (note wire connections for correct replacement), take out clevis pin in floor bracket (pin secured by cotter pin), remove screw from top (yoke end) of tubular operating shaft where it is attached to top linkage, lift power unit assembly out. When replacing power unit, top must be raised and locked in position, and power units synchronized as follows: With power units in place and upper end of tubular shaft disconnected check alignment of screw holes in end of shaft and top linkage, if screw holes not in alignment turn clutch cup under motor by hand until screw holes are properly aligned, **do not unscrew tubular shaft when making this adjustment.** Install attaching screw in shaft and top linkage, connect wiring (see illustration for wire colors).

SERVICE PARTS:—Part numbers for Power Top Mechanism are as follows:

Folding Top Control Switch—4144455 (Buick), 4144787 (Cadillac), 4143873 (Chevrolet), 4143875 (Oldsmobile), 4143874 (Pontiac).

Power Top Lift Assembly—4133604 (All 'A' body types, and early 'C' body types), 4140184 (late 'C' body types). NOTE—See Body Note & Production Change Note for complete data.

Magnetic Switches—No. 4133602 (2 used).

Circuit Breaker—No. 4133598.

Fuse—No. 147684. 9 ampere capacity.

TROUBLE SHOOTING:—Top Fails to Operate—When operating top make sure ignition switch is on, and that top is free of windshield header (when lowering top), and free of hold-down strap (when raising top). If top still fails to operate check the following points:

Blown Fuse—Check fuse in 'Up' and 'Down' Control Switch feed wire behind instrument panel.

Grounded Switches—Magnetic switches under rear seat should be checked for metal housing cover grounding on terminals or battery cable. 'Up' and 'Down' Control switch on instrument panel broken or shorted. Service on these switches is by replacement only. Switches are not adjustable.

Shorts in Wiring—Check wiring as follows: Pinched wires under sill plate at bottom of door opening. See that ground wires tight and surfaces are clean for good contact. Check wiring at motors and magnetic switches, these wires are taped and clipped in place to prevent coming in contact with worm shaft (if these wires removed or disconnected replace tape and clip in original position when connecting wires).

POWER OPERATED TOPS AUTO-LITE ELECTRIC TYPE

Used On Convertible Models:
Chrysler, De Soto, Dodge (1941-48)
Ford, Lincoln, Mercury ('41-48)—except Sportsman

CHRYSLER, DE SOTO, DODGE
(Auto-Lite Equipment List)

Year	Top Motor	Control Relay
1941	EWG-4002	HRF-4001
1942-46	EWG-4003	———
1947-48	EWG-4004	———
1947-48	EWG-4005, 6	①

①—Each motor grounded through separate 30-ampere thermal circuit breakers.

DESCRIPTION & OPERATION:—This type control control consists of two electric motors each mounted as a unit with its worm-and-gear type power screw at sides of car with the power screw linked directly to the top frame (conventional top bows and braces are modified for this power connection). Motors are reversible and are controlled directly by a switch on the instrument panel so that they operate to raise or lower the top when the switch is actuated.

Motors—Series wound type with field connected in two sections to separate terminals on motor frame. When the control switch is actuated one-half of the field is energized which causes the motor to revolve in the correct direction to raise or lower the top. The motors are geared directly to the power screw which is connected to the top frame.

Control Switch—Consists of a two-way switch which is spring-loaded so that it is normally in the 'off' position and must be held in the 'up' or 'down' position while the top control is operating.

Control Relay (for EWG-4002 motors). Two opposed windings, 1 connected in series with each top one of which is connected in series with each top control motor. This results in relay contacts remaining closed as long as load and current of each motor is equal. A differential of 20-30 amperes between the two motor circuits (caused by binding or obstruction on one side of top) causes relay contacts to open so that the motors stop.

Circuit Breakers (for EWG-4005, 6 motors). 30-ampere circuit breakers (one for each motor). One motor brush grounded through this breaker, cricuit is broken when current draw greater than 30 amperes. Used to equalize operation of both motors.

Circuit Breaker—On control switch. Protects motors and relay from overload. Circuit breaker kicks out in 1 min. or less with current of 80 amps.

SERVICING:—To check operation of top, disconnect top from power screw, see that folding arm assembly works freely without binding at any point. Check control switch to make certain that circuits are completed through switch in 'up' and 'down' positions. To check power screw for sticking or binding, remove motor (see below) and operate screw by inserting screwdriver in slot in pinion shaft. Shaft should turn easily and freely. If it does not, check for bent power screw. See that power assembly is not binding on base pivot.

Power Unit—To replace power unit, remove trim side panels in rear seat compartment, disconnect motor wires, remove bolt linking power screw to top and pivot bolt in mounting bracket, lift out power screw and gear box assembly. Install new assembly in same manner, taking great care not to kink or bend the power screw and see that power screw installed in top bracket so that it is perfectly straight between top attaching bolt and body mounting pivot bolt. Connect motor leads and check top operation before replacing trim panels.

TESTING:—If top control does not operate satisfactorily, test each unit as follows:

Control Switch—Disconnect motor leads at switch. Connect one test lamp lead to ground, touch other lead to switch 'up' terminal, place switch in 'up' position. Lamp should light. Test 'down' terminal in same manner.

Top Motor—Disconnect guide mechanism from top slat irons and operate motors. If motors do not run freely when disconnected, check motor brushes for sticking or wear, see that commutator clean check field coils for grounds and open-circuits.

Motor Performance

Torque	R.P.M.	Volts	Amperes
2 oz. ft.	4000-5000	6.0	29-34

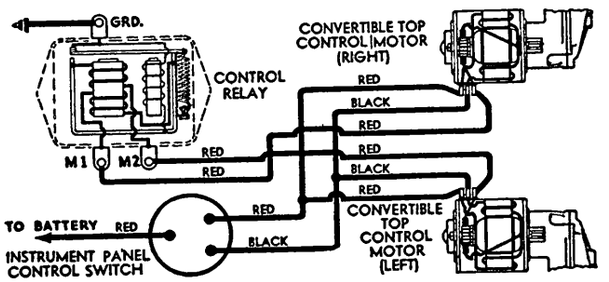

EWG-4002 MOTORS WITH HRF-4001 RELAY

Control Relay—If motor does not operate with switch in up or down position, ground relay terminals. If motors run, check relay contacts. If contacts are open and motors run when contacts held closed, check motors for unequal load (relay should operate in this manner if motor loads unequal). If relay buzzes and contacts do not hold open, check relay voltage coil for open-circuit.

Relay Specifications
(Auto-Lite HRF-4001)

Contacts Open—25-35 amperes through either series winding at 5.0 volts (or 20-30 ampere differential between both coils). Opening amperage for each coil must be equal within 2 amperes. Adjust by bending lower spring hanger.
Contacts Close—.2 volt minimum.
Air Gap—.030-.034" with contacts closed. Measure between current coil (series winding) core and armature. Adjust by shifting upper stationary contact up or down. CAUTION—See that both sets of contacts open and close simultaneously.
Contact Servicing—Clean contacts with strip of clean linen tape moistened with carbon tetrachloride and then rub with clean dry tape (draw tape through between contacts). If contacts burned or pitted, resurface by filing lightly with very fine contact file (ST-290) parallel and lengthwise of armature and then clean contacts as directed above. See that no lint is left on contact surfaces.
Voltage (Shunt) Winding—Winding resistance is 4.68-5.18 ohms. Measure between stationary contact and movable contact with contact points held open.

POWER OPERATED TOPS
STUDEBAKER ELECTRIC TYPE

1947-48—Champion 6G, 7G; Commander 14A, 15A

DESCRIPTION: Consists of two worm-and-gear type power screws pivoted on floor brackets inside rear quarter panels, one on each side of car. Gear boxes coupled together through flexible drive shaft.

Motor—Reversible type. **Drives left gear box** through rubber and steel coupling with engaging slot in motor shaft and gear box shaft at right angles to each other.

Control Switch—Two-way type under left edge of instrument panel. Move lever to left to raise top, to right to lower.

Circuit Breaker—75 ampere. On engine side of dash.

REMOVAL OF POWER UNIT: Lower top. Disconnect battery ground. Remove rear seat (cushion and back) and trim panel. Remove spacer and bolt (secured by cotter pin and castellated nut) at upper end of lift shaft. Disconnect motor ground strap from body brace. Disconnect and remove flexible drive shaft from side of gear box. Take out clevis pin in floor bracket under gear box. Disconnect green and black wires from junction block on motor. Lift out power unit assembly.

INSTALLATION OF POWER UNIT: Reverse removal directions above, connecting green wires to top terminal and black wires to middle terminal on motor junction block.

►***CAUTION—Check Worm Screw Adjustment, No. 3 under Top Adjustment (following) when Power Unit reinstalled.***

REMOVAL OF MOTOR: Disconnect battery ground. Remove rear seat (cushion and back) and trim panel. Take off two nuts and lock washer from each motor-to-gear box through bolts (2 used). Lift motor (with through bolts) off gear box.

MOTOR COUPLING REPLACEMENT: Remove motor (see above). Take out coupling. Install coupling with slot in gear box shaft at right angles to slot in motor shaft.

INSTALLATION OF MOTOR: Reverse removal directions above (align slot in motor shaft with coupling).

MOTOR JUNCTION BLOCK WIRE TERMINALS:
Top Terminal—Green wires.
Middl Terminal—Black wires.

ADJUSTMENT OF TOP: Three adjustments provided:

1—Top Balance Link Adjustment (clearance at top of door and quarter windows and top tension). Support side rails, lift top off windshield header bolts, loosen master adjustment bolt (secured by serrated nut) at top balance link (see illustration). Move top toward front or rear for proper fit (bow assembly slotted to permit this adjustment).

2—Header Adjustment (clearance at top of windshield). 3 bolts in slotted holes at front end of side rail on each side. Loosen these bolts, move header to front or rear for proper fit.

3—Worm Screw Adjustment (one sid rail higher than the other). Equalize worm screw length using special crank tool (see below) inserted in gear box at flexible drive shaft connection on side to be adjusted (requires removal of rear seat and back, and trim panel). Load must be equalized on each worm without putting a strain on top linkage.

Special Crank Tool. Use 3/16" rod stock, file one end to ⅛" male square, ¾" back from end. Bend 1" throw in rod about 2" long for handle. Use a 3/16" I.D. piece of tubing 2½" long, hammer over squared end of rod to give ⅛" square I. D. 1" long on one end of tube. Take tube off rod, insert round end of tube on opposite end of rod and weld in place. Over-all length of tool approx. 7".

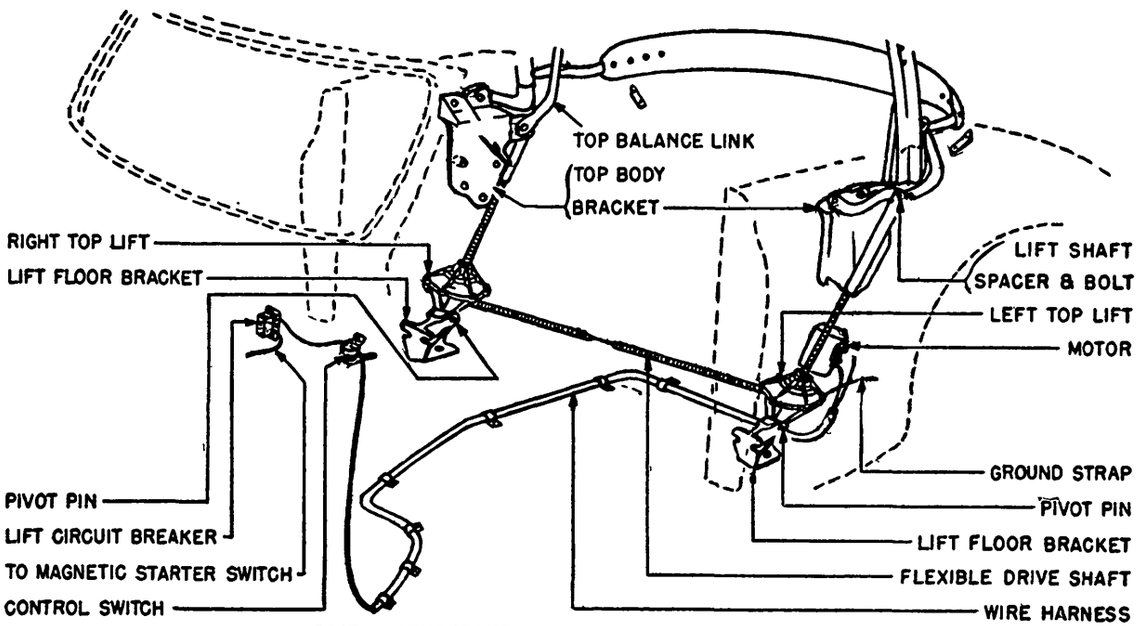

1947-48 STUDEBAKER ELECTRIC POWER TOP

POWER OPERATED TOPS
VACUUM POWER TYPE

Used On Convertible Models:

1939—Plymouth.
1940—Buick, Cadillac, Chevrolet, Chrysler, DeSoto, Dodge, Ford, LaSalle, Lincoln Zephyr, Mercury, Oldsmobile, Plymouth, Pontiac.
1941—Buick, Cadillac, Chevrolet, Oldsmobile, Packard, Plymouth, Pontiac.
1942-48—Plymouth

NOTE:—Power tops on all cars are of similar design with differences in power cylinder mounting, linkage design and control hook-up as noted below.

Electric & Hydro-electric Types—These types also used. See separate articles for data.

DESCRIPTION:—Convertible tops used on cars with power actuation have the conventional top bows and braces modified for connection of the vacuum power cylinders and are equipped with counterbalancing springs. Two vacuum power cylinders are mounted at sides of car behind seat trim (one on each side) and are linked to the top frame. Each cylinder is double acting type, with vacuum line hose connection to upper and lower end, and operate when control valve button on dash is manipulated to connect either end of cylinder to engine manifold vacuum line (both strokes of cylinder piston rod are positive and top is both raised and lowered by vacuum power). Control valve is double acting type and is normally centered in the 'off' position by a spring within the valve. When the control valve button is pushed in, or pulled out, vacuum connection is made through the valve to one end or the other of both power cylinders. Button must be held in or out during entire time cylinders are operating to raise or lower top.

OPERATION:—Engine should be running (idle engine with closed throttle) and car should be stopped when top control is operated. CAUTION—Do not raise or lower top with car in motion.

Lowering Top—Unlatch top from widshield header on both sides, raise top slightly so that locating dowels or pins are free of header, press in or pull out on control valve button (pull out on button on Buick, Cadillac, Chevrolet, Ford, La Salle, Lincoln-Zephyr, Mercury, Oldsmobile, Packard, Pontiac; in, Chrysler, DeSoto, Dodge, Plymouth) **hold in this position** until top is completely lowered. In this position, control valve connects lower end of each cylinder to engine manifold vacuum line and opens upper end of each cylinder to atmospheric pressure.

Raising Top—See that top straps or boots are removed so that top is free. Press in on control valve button (Buick, Cadillac, Chevrolet, Ford, La Salle, Lincoln-Zephyr, Mercury, Oldsmobile, Packard, Pontiac; pull out, Chrysler, DeSoto, Dodge, Plymouth) & **hold in this position** until the top is raised. Top should come to rest within 1-2" of windshield header and side rail should be straight (see Adjustment).

ADJUSTMENT:—**Chevrolet**—If top does not come to rest within 1-2" of windshield header and side rails do not straighten out when top is raised, or if top travel is excessive so that it comes to rest on windshield header, adjust as follows: Lower top, remove mounting screws and take out rear quarter trim panels. Loosen two nuts anchoring adjustment plate on control link bracket (directly above and forward of top of vacuum power cylinder on each side of car), tap adjustment plate down ⅛" (if travel insufficient), up ⅛" (if travel excessive), tighten anchor nuts. **Adjust both sides of car exactly alik** . Check performance, repeat adjustment until correct operation secured. 1940 NOTE—If anchor bolts loosen and back out of nut in service, drill 3/32" hole in end of bolt for cotter pin, assemble flat washer on bolt against back of bracket, install ⅜-24 castellated nut and secure with cotter pin (discard original nut and lockwasher).

Top Alignment—Top alignment to insure correct registering of locating dowels or pins and sockets on top and windshield header can be adjusted by shimming body at mounting bolts.

SERVICING:—**Vacuum Cylinder**—To remove vacuum cylinder, remove rear quarter trim panel, take out bolt linking piston rod to top, disconnect both connections, remove bolt mounting cylinder on body bracket at lower end (on General Motors cars, remove locknut on end of bolt, then remove bolt with a 5/16" Allen setscrew wrench), lift cylinder out.

Lubricating Vacuum Power Cylinder—If piston is tight in cylinder, lubricate with half-and-half mixture of Neatsfoot Oil and Kerosene by submerging hose connection at upper end of cylinder (hose removed) in 1 oz. glass of lubricant and operating piston downward which will draw lubricant into cylinder. Work piston up and down several times.

Control Valve—To remove valve, disconnect and tag hose connections (to insure correct reassembly), remove mounting nut and withdraw valve assembly. To disassemble valve, remove large nut on stem end of valve and withdraw plunger. On General Motor cars, air cleaner (retained by locking ring) mounted under perforated plate on end of valve.

Vacuum Line Connections (Buick, Cadillac, Chevrolet, La Salle, Oldsmobile, Pontiac)—Rubber tubing should extend over ends of metal tubing connections 1" or more (except at control valve which should be ½"). Joints should be cemented tight with rubber cement such as Fisher F.S. 621.

TROUBLE SHOOTING:—If top does not operate satisfactorily, check the following points:

Vacuum Lines—Check all connections for leaks, see that hose connections and metal tubing are not kinked or broken. NOTE—Lines can be checked with vacuum gauge by noting gauge reading at engine manifold, and then connecting gauge to each hose connection at cylinder (hose to opposite cylinder must be plugged, and control valve button must be operated to open valve in order to secure gauge reading). See Vacuum Line connections above.

Vacuum Power Cylinder—Check piston rod for binding or tightness caused by lack of lubrication (see Cylinder Lubrication in Servicing section above). To check cylinder, disconnect bolt linking piston rod to top, see that piston moves freely in cylinder. Check alignment by raising top in stages, and checking piston rod in each position. Check piston rod seal for damage caused by misalignment or binding of the piston rod. A leak at the seal will cause sluggish action or failure to raise top.

IMPORTANT NOTE—Cylinder rocks on pivot bolt as top is raised and lowered. Any mis-alignment caused by top and bottom mounting bolts not being in same plane (so that cylinder or piston rod cocked sideways) will cause binding and faulty operation.

Top Mechanism—See that top folding arm assembly operates freely without binding. This can be checked by operating top with vacuum cylinders disconnected, or by operating top manually with engine not running (operate control valve in usual manner so as to permit piston to move up or down in vacuum cylinder).

'40 Chevrolet Note—On 1st cars if looseness develops between vacuum piston rod yoke and top frame linkage, remove yoke clevis pin and install special washer between yoke and linkage. Washer must be made up to following specifications: Outside Diam. ⅞", Thickness .015", Hole Size 33/64". NOTE—This washer installed on later cars at factory.

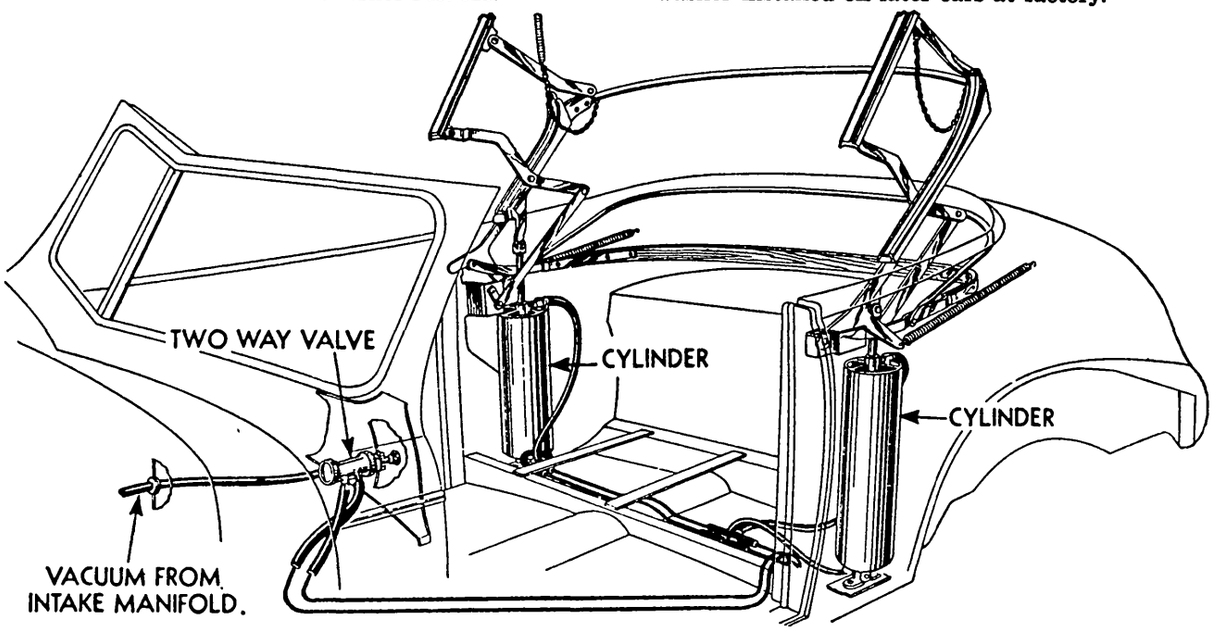

CHRYSLER, DE SOTO, DODGE

Chrysler Six, All Models (1941 to 1948)
Chrysler Eight, all Models (1939 to 1948)
De Soto, All Models (1941 to 1948)
Dodge, All Models (1941 to 1948)

SPECIAL SERVICE NOTES: Installation of Fluid Drive Seal Damper on Early 1946 Chrysler 6 & 8, DeSoto, and Dodge cars with carbon type Fluid Drive Seal. To correct complaints of a "squeal" in this seal, install seal damper as follows: With Fluid Drive unit removed from car (see directions below), remove clutch plate nut using tool C-607. Pull clutch plate using tool C-665. Remove snap ring and seal spring (use sleeve C-613 and clutch plate nut to relieve spring tension). Install damper (consists of a ribbed sleeve) on inner end of spring, re-install spring, spring retainer, and snap ring. Reassemble fluid drive unit and re-install in car.

NOTE—This Seal Spring Damper installed on Chrysler cars in production beginning with the following 1946 Serial Numbers: C38S Royal—70,020,706; C38W Windsor—70,539,906; C38W Town & Country—71,000,004; C39K Saratoga—6,765,678; C39N New Yorker—7,029,848; C39 Town & Country—7,400,513.

DESCRIPTION & OPERATION:—The Fluid Drive (Fluid Coupling) Assembly consists of a self-contained, factory-sealed assembly which is mounted on the rear end of the crankshaft in place of the conventional flywheel (unit has ring gear for starter mesh on outer rim and separate clutch driving plate for clutch mounting bolted on end of runner shaft at rear end). The case and integral 'driver' vanes rotate with the crankshaft and transmit power to the 'runner' or free vane assembly within the case without any mechanical connection through the oil with which the case is filled. The 'Runner' is integral with the hub (short hollow shaft extending through rear of case with clutch driving shaft mounted on rear end) and is mounted on a large ball bearing within the fluid drive case at the forward end and piloted on the clutch shaft at the rear end (clutch shaft mounted on needle bearings within runner hub at each end). Oil leakage is prevented by spring-loaded Sylphon Assembly or bellows and Sealing Ring (press fit type on 1939 models). On 1940 and later models, seal ring is a floating carbon-graphite type. See Seal Ring Renewal data under Servicing (below).

1939 Note—Rubber grommets on mounting bolts (fitted in recess on front face of case) and thin gasket between fluid drive case and crankshaft flange used to seal fluid drive unit and prevent leakage at these points.

1940 & Later Note—A Driver Flange Plug is installed in the forward end of the driver hub (or the fluid drive case is continuous at this point) to prevent leakage and no rubber grommets are required on the mounting bolts. Fluid drive housing is provided with cooling fins.

Chrysler 6, DeSoto, Dodge Note—On these cars, Runner Hub Nut, which retains clutch driving plate is threaded in end of hub (no leather oil seal used). A leather type oil seal is installed within the retainer nut on Chrysler 8 Cylinder cars to prevent leakage at this point.

FLUID DRIVE ASSEMBLY REMOVAL & INSTALLATION: Fluid drive unit should be removed as an assembly and all service work should be performed on the bench with the unit off the car.

Removal (All Models): Remove transmission (see Transmission Removal on car model pages), remove clutch release bearing, clutch housing pan, and dust shield. Remove clutch (see Clutch Removal on car model pages). Take off nuts on mounting bolts on front face of crankshaft flange (use special box wrench C-589), pull fluid drive unit back free of the crankshaft flange and remove from below.

Installation (1939): Use new grommets on mounting bolts, seating grommets in recess in front face of fluid drive case. Carefully clean face of crankshaft flange and fluid drive unit case (remove all traces of old gasket and any burrs which might prevent flat, even contact of mounting faces). Coat both sides of new .010" thick gasket with shellac, install gasket on fluid drive case (one bolt hole 4° out of line to insure installation in correct position), install fluid drive assembly on crankshaft flange threading mounting bolts through holes in flange, install nuts on mounting bolts, tighten nuts evenly

Installation (1940 & Later Cars): Clean back face of crankshaft flange and mating face of fluid drive unit thoroughly (remove all burrs, dirt and other particles), place fluid drive unit in position on crankshaft flange and install mounting nuts, tighten nuts evenly to torque of 135-145 ft. lbs.

SERVICING:—Unit is sealed and no adjustment required. Service operations are restricted to keeping unit filled with oil (inspect at end of first 1000 miles and at 10000 mile intervals in service) and to renewal of sylphon seal and sealing ring to correct oil leakage.

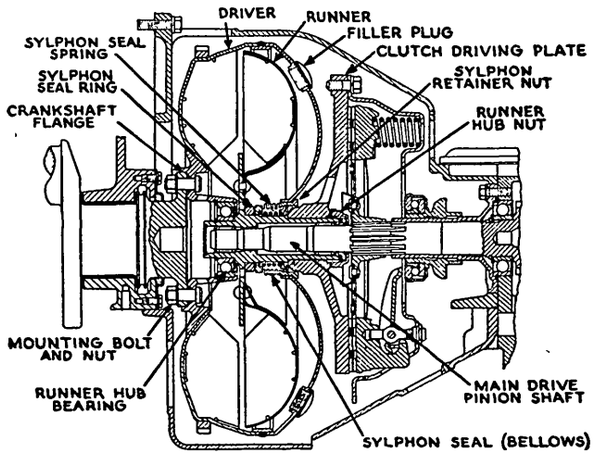

Checking Oil Level & Adding Fluid:—Recommended at end of first 1000 miles and 10000 mile intervals. **Fluid drive case is filled to approximately 80% of volume and level should be checked as follows to prevent overfilling. Turn crankshaft until one fluid drive filler (2 plugs—180° apart) is at filler hole in upper right hand surface of clutch housing, remove filler plug. Fluid level should be even with bottom of filler plug opening. Add fluid as required Capacity—9 qts. (C24), 8 (Other 8's), 6 (6's).**
NOTE—Use only Mopar Fluid Drive Fluid.

Sylphon (Bellows) Assembly & Seal Ring Renewal: Remove fluid drive unit (see Removal above) and drain. Bend down tab on lockwasher, use special socket wrench C-607 (Chrysler 6, DeSoto, Dodge), C-541 (Chrysler 8) and remove clutch driving plate retainer nut. Mark one spline on runner hub and mating spline on clutch driving plate (to insure reassembly in correct position), use special puller C-665 (Chrysler 6, DeSoto, Dodge), C-692 (Chrysler 8) to remove clutch driving plate. Use special bellows seal spring compressing sleeve C-613 (Chrysler 6, DeSoto, Dodge), C-614 (Chrysler 8) to compress spring within bellows (use clutch driving plate retainer nut to push sleeve in to compress spring), remove spring retainer snap ring, remove nut, sleeve, and spring (CAUTION—Spring must be removed before bellows seal removed or seal will be damaged). Use special spanner wrench C-545 to unscrew bellows seal, remove bellows seal and floating seal ring (floating seal ring used on 1940 and later models only, do not disturb inner ring on 1940 cars). Use special puller to remove press-fit type seal ring on 1939 cars. NOTE—Floating seal ring bears against inner ring (1940), or runner hub (1941 and later models). If surface of inner ring or hub is damaged, fluid drive unit should be replaced. IMPORTANT NOTE—Bearing surfaces on Sylphon and Sealing Ring must be smooth and show continuous line of contact over entire circumference. Replace Sylphon and Sealing Ring if surfaces damaged in any manner (rough, scratched, or marred).

Installation—Install sealing ring and sylphon seal (see that gasket in place), tighten bellows retainer securely. Install seal spring (and damper—see Seal Spring Damper Note below), and retaining snap ring (use sleeve to compress spring so that retainer can be installed), install clutch driving plate making certain that marks on plate and runner hub are lined up, tighten clutch driving plate retainer nut securely. Fill unit with fluid (see directions above. Install Fluid Drive unit on car.

1939 Note—To install press fit type sealing ring, screw ring in special installing tool, heat ring in boiling water, shake free of water and quickly push ring snugly in place against ground face of runner

Seal Spring Damper Note (All Cars with Carbon type Seal)—Damper consists of a ribbed sleeve which should be installed on inner end of spring before spring is installed in bellows. Damper will prevent seal developing a squealing noise in service.

Fluid Drive Bushing Replacement (Chrysler 6, DeSoto, Dodge): To remove old bushings (with fluid drive unit on the bench), remove clutch driving plate nut (special socket wrench C-607). **Do not remove clutch driving plate.** Pull outer hub bushing with special puller, sleeve, and expansion jaw (C-680 tool kit). Remove inner bushing similarly using puller and expansion jaw without sleeve. Clean inside of hub thoroughly.

Bushing Installation—Place new Inner and Outer Oilite Bushings on special drift C-708. Position drift in fluid drive hub, drive bushings into hub with a mallet until bushings firmly seated. Then lineburnish both bushings with special burnishing tool (part of C-680 kit). Lubricate bushings with small amount of fibre grease. Re-install clutch driving plate nut and lock nut by bending tab of lockwashers against nut.

Fluid Drive Bearing Replacement (Chrysler 8): If original needle roller bearings on these models being replaced, install new Oilite Bushings (same as used on Chrysler 6). Remove old bearings, and install new bushings, in same manner as on Chrysler 6 (see instructions above).

CADILLAC, OLDSMOBILE, PONTIAC

(Cars with Hydra-Matic Drive)
Cadillac V8, All Series (1941 to 1948)
Oldsmobile 6 & 8, All Models (1940 to 1948)
Pontiac 6 & 8, All Models (1948)

DESCRIPTION:—This Fluid Coupling replaces the conventional clutch on cars with Hydra-matic drive (no clutch used and clutch pedal omitted). Design is unlike other Fluid Drives in that, although the assembly is mounted in a case bolted on the engine flywheel, the drive is not direct from the engine crankshaft through the fluid drive (see Operation below). Fluid drive case is kept filled with same oil used in transmission case and oil is pumped into case by the transmission front oil pump. A return line and control valve allows the oil to circulate between the fluid drive and the transmission.

OPERATION:—The engine drives the fluid coupling case which is bolted on the flywheel. The case is splined on a sleeve integral with the ring gear (drive gear) of the front planetary gear unit so that this gear is driven positively by the engine. This gear drives the planetary gear pinions and pinion plate (which is keyed on tubular intermediate shaft) and the rear unit or driver of the fluid coupling which is bolted on a mounting flange splined on the forward end of this tubular shaft. At idling speed, the driver rotates freely and does not transmit engine torque to the forward unit or runner of the fluid coupling. As soon as the engine speed is increased slightly (when accelerator pedal depressed to start car in motion), the fluid coupling driver causes the runner to rotate (driving through the oil with which the case is filled). The runner is bolted on a mounting flange which is splined on the forward end of the intermediate shaft (within the tubular shaft) and the engine torque is transmitted back through this shaft through the transmission to rear wheels. NOTE—See Hydra-Matic Drive Transmission in Transmission Section.

SERVICING:—Lubrication—Fluid Coupling case is kept filled with oil, and oil is automatically circulated, by pump in transmission case. Fluid coupling case is sealed and requires no attention. Fluid level of Transmission should be checked every 1000 miles (Cad.), 2000 miles (Olds. & Pont.), and fluid added, if required, to maintain correct fluid level. Unit should be drained and refilled with new fluid at end of first 6000 miles and every 12000 miles aferward (Cadillac), every 15,000 miles (Oldsmobile & Pontiac). Check fluid as directed below (see Hydra-Matic Drive Transmission for draining, refilling, and capacities).

Checking Fluid Level ('40-42). Raise right edge of front compartment rug, remove all dirt from around inspection hole so that it cannot fall into transmission case, remove small sheet metal cover from top of transmission cover over indicator stick. Run engine for at least 1 minute, stop engine and wait 1 minute, then check level with indicator stick. Add fluid as required, to bring level up to 'Full' mark

1946-48 Cadillac. Similar to data given above except that engine should be idled 1½ minutes at 20 MPH with lever at "N," then reduced to slow idle and level checked while engine running at slow idle.

1946-48 Oldsmobile. Similar to 1940-42 data above except that engine must be running at slow idle when checking Hydra-Matic fluid level.

1948 Pontiac. Oil must be hot (idle engine for 2 minutes with hand brake set and control lever in "DR" position). Check level with engine idling, hand brake set, and control lever in "DR" position.

CAUTION—Use only genuine Hydra-Matic Drive fluid.

AUTO-LITE WINDSHIELD WIPER "EW" TYPES

Car Model	Year	①Windshield Wiper No.
Chrysler C22, C23, C24	1939	EW-5001, 5101
DeSoto S6, Dodg D11	1939	EW-5001, 5101
Stud baker Comm. 9A	1939	EW-5003
Studebaker Pres. 5C	1939	EW-5003

①—Includes Links, Pivots, Wiper Arms, etc.

Assembly No.	Motor No.
EW-5001, EW-5002	EW-4001, EW-4101 (See Note).
EW-5003	EW-4002, EW-4102 (See Note).

NOTE—EW-4001 and EW-4002 motors were original design and have been superseded by improved design Models EW-4101 and EW-4102.

IMPORTANT CHRYSLER, DE SOTO, AND DODGE CHANGES:—See Special Servicing Notes below for production changes and corrections which should be made on first cars.

WIPER FUSE:—14 ampere (Chrysler, De Soto, Dodge), 20 ampere (Studebaker) in lead between ignition switch and wiper control switch (on switch on later Chrysler, De Soto, Dodge cars). Do not substitute any other capacity fuse.

DESCRIPTION:—Windshield wiper consists of a two-pole shunt wound motor driving a crank arm through worm gearing. Crank arm is linked to left hand windshield wiper pivot arm (right and left pivot arms connected in tandem by additional link) so that rotation of the crank arm imparts the usual wiping action to the blade attached to each pivot arm. The motor is controlled by a two-position switch on the instrument panel with special circuits so that relay and cam-operated contacts in control box on motor housing return the wiper blades to the off or parking position when the control switch is turned off. A friction clutch is incorporated in each pivot assembly to allow blades to be moved by hand when cleaning windshield and to prevent stalling of motor when blades blocked by heavy snow or sleet (motor will operate independently). Clutches will slip with pull of 1¾-2¾ lbs. at end of wiper arm.

OPERATION:—'On' or Running. When control switch button is pulled out to the 'on' position, circuit is completed through the motor armature and also through the relay winding '2' (see illustration). Relay contacts then close which completes the motor field circuit so that the motor runs as a shunt wound machine to operate the windshield wiper blades. With motor running, contacts '3' and '4' (see illustration) are alternately opened and closed by the cam on the motor crank arm but this has no effect on the motor operation since the contact circuits are not in use.

'Off' or Parked. When control switch button is pushed in to the 'off' position, motor continues to run until the parking position is reached when cam 'D' on crank arm opens contacts '4' and closes contacts '3' (motor circuit is completed through contacts '4' from terminal 'B' to terminal 'C' even though switch is in the off position). Closing of contacts '3' ground the armature through relay winding '1'. This action causes the motor to operate as a dynamic brake and retards the opening of the relay contacts (which breaks the field circuit) so that the motor is brought to a positive stop in the park position. This park position is adjustable by changing the relation of the crank arm cam 'D' and the movable contact arm 'E'.

ADJUSTMENT:—Park Position. Angle between motor crank arm and line parallel to armature shaft with motor stopped under load (control switch pushed in to 'off' position) is shown in table below. This angle must be correctly set to insure proper position of wiper blades on windshield when not operating.

Windshield Wiper Model	Park Angle
EW-4001, EW-4101	21°
EW-4002, EW-4102	14°
EWA-4001, EWA-4101	21°
EWA-4002, EWA-4102	14°

To adjust Park position, remove relay cover, loosen lockscrew 'F' (see illustration), turn eccentric adjusting screw 'G' to secure correct angle. After making this adjustment, check contact gap '4' (.025" minimum with motor stopped in park position), and contact pressure (2 ozs. minimum).

SERVICING:—Motor. Bearings (commutator and drive end) do not require lubrication in service and no oilers provided. Gear box should be filled ¾ full with special Auto-Lite ST-294 gear grease before assembly and crank arm cross shaft should be coated for entire length with this same grease before assembly in housing. Use extreme care to prevent grease getting on commutator and points.

Bearing Alignment—After motor completely assembled (but before running) strike frame several sharp blows with rawhide hammer to align bearings at commutator and drive end of shaft.

Armature Endplay—Must not be less than 1/32" (measure by removing gear case cover and moving crank arm back and forth. If necessary to reduce endplay to eliminate noise caused by excessive end motion, install thrust washers but make certain that endplay not less than 1/32".

Motor Specifications

Starting (Under Load)—4 volts min. (all 6 volt units), 8 volts min. (all 12 volt units).

Running (Light)—3.0-4.5 amperes at 5.8 volts (all 6 volt units), 1.5-2.25 amperes at 11.6 volts (all 12 volt units).

Field Current—1.5-1.7 amperes at 6.0 volts (all 6 volt units), .7-.9 amps. at 12 v. (12 volt units).

Relay Specifications

Closing Voltage—4 volts max. (all 6 volt units), 8 volts max. (all 12 volt units).

Opening Voltage—.2 volt min., .5 volt max. (all 6 volt units), .25-1.0 volt (all 12 volt units).

Contact Gap—.020" min., .025" max. Adjust by bending stop 'H' as required. Do not disturb relay armature hinge lug.

Air Gap—Armature should be sealed flat against top of core with contacts closed.

CONTINUED ON NEXT PAGE

AUTO-LITE WINDSHIELD WIPER "EW" TYPES (C ntinu d)

TROUBLE SHOOTING:—If operation not satisfactory, check as directed below (see Chrysler Special Servicing directions for corrections on first cars).

Motor will not Start or Run

1. **Fuse Blown.** Check following possible causes before replacing fuse. Use only correct capacity fuse for replacement—14 ampere (Chrysler, De Soto, Dodge), 20 ampere (Studebaker).

2. **Loose Connections in Wiper Circuit.** Check all wiring. Tighten connections at Windshield Wiper, Control Switch, and Ignition Switch.

3. **Crank Arm Shaft Binding.** If necessary, replace drive end head. Make certain that cross shaft greased for entire length with special ST-294 grease before installing and that all wire connections are clean and tight.

4. **Linkage Binding.** Make certain that linkage between crank arm and pivot arms is not binding and that wiper blades and pivot arms operate freely.

Motor Stops with Blades in Wrong Position

1. Park angle incorrectly set. See adjustment section above.

Motor Will Not Stop

1. **Loose connections at switch.** Examine and tighten connections at Control Switch 'A' terminal and ground connection.

2. **Parking mechanism out of adjustment.** Check Park adjustment (see Adjustment section above) and particularly contact gap (contacts '4').

3. **Relay Operation Incorrect.** Check relay and adjust to specifications given in Service section above. Replace relay if satisfactory performance cannot be secured by adjustment.

Overtravel of Right hand Blade.

1. **Pivot Assembly defective.** See that right hand pivot assembly does not move in mounting and that bearing clearance of pivot assembly is not excessive. See special servicing notes below for new pivot installation directions.

2. **Insufficient Wiper Blade Tension.** Check wiper blade tension on glass (measure with spring scale at instant wiper blade leaves the glass). Increase tension to 5-6 ozs. by bending lower spring holding lug.

3. **Excessive sideplay between arm and blade.** Wiper blade should be press fit in arm. Adjust by pressing the two blade holding fingers together.

►**CHRYSLER DE SOTO DODGE SPECIAL SERVICING NOTES:**—Improved pivot assemblies and special support assembly welded to body designed to correct excessive motor movement on bracket or pivot assemblies moving in mountings were put in production on all cars beginning with the following serial numbers:

Chrysler Royal Model C22	7574866
Chrysler Royal Windsor Model C22	6948303
Chrysler Imperial Model C23	6742485
Chrysler New Yorker Model C23	6609905
* De Soto Model S6	5634616
Dodge Special Model D11	4278375
Dodge Deluxe Model D11	30105170

**Service Pivot Support Assembly installed on all cars before this Serial Number.

On all cars before these serial numbers, if windshield wiper fails to operate, if blade travel is incorrect, or if cowl panel flexes and motor moves excessively on bracket when operating, check following table for possible causes and install new pivot assemblies (Part No. EW-1089B—left hand, EW-2172—right hand) and special Service Pivot Support (Chrysler Part No. 837954) as directed below.

Motor Stalls Causing Fuse to Blow

1. **Inoperative Pivot Clutches.** Clutches should slip with pull of 1¾-2¾ lbs. applied at end of wiper arm. If clutches do not slip, any obstruction preventing wiper blade movement will stall motor.

2 **Binding or Seizure of Pivot Shafts.** May be caused by improper lubrication, incorrect assembly (square sleeve not properly entered in washers when assembled), improper adjustment of motor and pivot link, stiff pivot clutches, bent pivot shafts. NOTE—Binding or sticking of pivot shafts may cause distortion of linkage as well as motor stalling.

3. **Connecting Links Binding.** May cause erratic operation or complete failure.

Incorrect Wiper Blade Travel

1. **Pivot Shaft Bearing Clearance Excessive.** Excessive bearing clearance at right hand pivot will cause under or overtravel of the wiper blade.

2. **Pivot Shaft Assembly Moving in Mounting.** Movement of right hand pivot assembly will cause incorrect travel and may allow blades to strike lower edge of windshield or center dividing strip.

NOTE—Check connecting link binding complaints by disconnecting motor link (between motor and left hand pivot assembly) and operating wiper by hand. If binding caused by incorrect pivot alignment or linkage distortion, new pivot assemblies, or new linkage should be installed as follows:

New Support & Pivot Assembly Installation: Remove windshield wiper blades, pivots, and connecting links (On cars with radio, remove glove compartment box to facilitate assembly). Cut off end of center instrument panel-to-belt bar screw flush with bar. Place new support assembly (Chrysler No. 837954) over pivot and arm assembly (EW-2172—R.H., EW-1089B—L.H.) by removing cotter pin from left hand pivot assembly. Connect pivot link assembly (EW-100) with pivot arm pointing toward right. Install lockwasher over square shank of each pivot and arm assembly and install in position in car with bowed section of support toward front, filing cowl ventilator hinge flange if required to provide clearance for connecting link. Install fiber washer (EW-160), plain washer (EW-159), and nut (EW-81) on pivot support. Tighten nut securely and make certain that square holes on washers are properly engaged on square shank of each pivot shank. This is very important for correct wiper operation. See that motor and crank arm are in parked position (motor will stop in this position automatically if operated with regular control switch), connect motor to pivot link and to left hand pivot and arm assembly. Adjust motor to pivot assembly connecting link (loosen adjusting nut and slide connector end in link) so that end of link slips freely over pin on crank arm. With correct adjustment, gap between left hand pivot clutch spring and motor connecting link should be 1/16" with pivot arm at end of travel away from motor. Install windshield wiper blades.

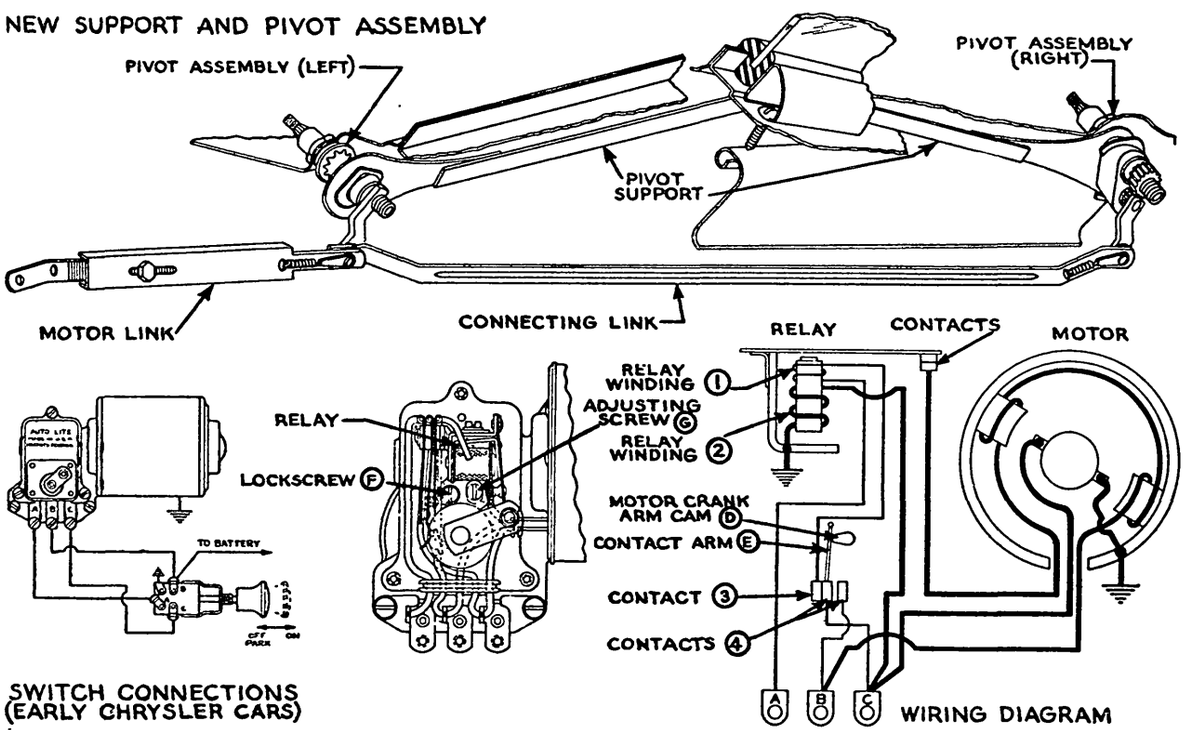

AUTO-LITE WINDSHIELD WIPER "EWB" TYPES

Car Model	Year	Model No.
Chrysler C25, C26, C27	1940	EWB-4001
De Soto S7, Dodge D14	1940	EWB-4001
Studebaker 10A, 6C	1940	EWB-4002

MODEL NOTATION:—Model number given above Windshield Wiper Motor. Wiper Pivots, Links, and Arms are serviced separately and have separate part numbers.

DESCRIPTION & OPERATION:—Same as for 1939 type (see preceding pages) except for new Two-Speed motor and control circuit, and independent drive crank for each wiper arm as follows:

Two-speed Motor Control—Wiper motor is two pole shunt wound type (new armature & field windings but same design as used on 1939 types) with a field resistance mounted on the control switch (Chrysler), or on motor frame (Studebaker). This resistance is cut in or out of the field circuit by the switch and provides low speed operation (resistance cut out) or high speed operation (with resistance cut in series with field). See wiring diagram for circuits.

Wiper Drive Cranks—Second crank arm has been added so that each wiper arm is driven independently by a separate gear and crank. Drive gear for each crank is driven by worm gear on motor shaft.

CIRCUIT BREAKER:—Chrysler Models—Wiper is protected by a thermostatic type circuit breaker mounted on the control switch. Circuit breaker operates when current reaches 12 amperes.

Studebaker Models—No circuit breaker used. Wiper is protected by regular 20 ampere accessory fuse on fuse block.

ADJUSTMENT:—Park Angle—Crank arms must stop at correct parking angle to insure wiper blades being parked in proper position on windshield (see illustration for 'park angle' measurement).

Car Model	Parking Angle
Chrysler, De Soto, Dodge	26°
Studebaker	12½°

Note—Parking angle as shown in illustration is correct for EWB-4001 (Chrysler) models. On Model EWB-4002 (Studebaker), crank arms point outward and to left of crankshaft center line in parked position.

To Adjust—Remove relay cover, loosen parking angle lockscrew, and turn parking angle adjusting screw (see illustration), with correct adjustment, contact gap of right hand control contacts should be .025" minimum and contact pressure of left hand control contacts should be 2 ozs. minimum (contacts closed) with wiper motor stopped in park position.

SERVICING:—Motor Lubrication—No oilers provided and motor bearings do not require lubrication in service. Gear box should be filled ¾ full with special Auto-Lite ST-295 gear grease (do not use any other type) before assembly and both crank cross-shafts should be coated for entire length with this same grease before installed in housing. Use care not to get grease on motor commutator or control contacts. CAUTION—See that both crank arms are installed in correct position so that parking angle is correct (parking angle controlled by left hand crank only, right hand crank operates independently).

Bearing Alignment—After motor completely assembled (but before running), strike frame several sharp blows with rawhide hammer to insure correct alignment of bearings with armature shaft.

Armature Endplay—Must be .005" minimum, .010" maximum. To adjust endplay, remove gear housing cover, expand or contract armature stop button support arms (in housing at end of armature shaft).

Motor Specifications

Starting (Under Load)—4.0 volts (6 volt units), 8.0 volts (12 volt units) with control switch in High Speed position.

Current Draw—Depends on motor speed (less at high speed) as follows:

		Amperes	
	Voltage	Low Speed	High Speed
6 Volt Units	5.8 volts	4.5 max.	4.0 max.
12 Volt Units	11.6 volts	2.25 max.	2.0 max.

Field Current—2.4-2.75 amperes at 6 volts (6 Volt Units), 1.2-1.4 amperes at 12 volts (12 Volt Units).

Relay Specifications

Closing Voltage—4 volts maximum (6 Volt Units), 8 volts maximum (12 Volt Units). Armature should be sealed flat against top of core with contacts closed.

Opening Voltage—.2 volt min., .5 volt max. (6 Volt Units), .25 volt min., 1.0 volt max. (12 Volt Units).

Contact Gap—.020" min., .025" max. Adjust by bending armature stop. CAUTION—Do not bend relay armature hinge lug.

Air Gap—Armature should be sealed flat against top of core with contacts closed.

Relay Windings—At 80°F., relay winding resistances should be as follows: Shunt Coil—21-25 ohms (6 Volt Units), 42-50 ohms (12 Volt Units). Series Coil —.035 ohm (6 & 12 Volt Units).

TROUBLE SHOOTING:—If wiper action not satisfactory, check as follows:

Motor Will Not Start or Run

1. Fuse Blown (Studebaker only). Before replacing blown fuse, check following possible causes: Check all connections, examine relay contacts and clean if dirty, check motor ground, check all motor leads for grounds.

2. Loose Connections in Wiper Circuit. Check all wiring. Tighten connections at Windshield Wiper, Control Switch, and Ignition Switch.

3. Crank Arm Shafts Binding. Make certain that cross shafts greased for entire length with special ST-295 grease before installing and that all wire connections are clean and tight.

4. Linkage Binding. Make certain that linkage between crank arm and pivot arms is not binding and that wiper blades and pivot arms operate freely.

Motor Stops with Blades in Wrong Position

1. Park angle incorrectly set. See adjustment section above.

Motor Will Not Stop

1. Loose connections at switch. Examine and tighten connections at Control Switch 'A' terminal and ground connection.

2. Parking mechanism out of adjustment. Check Park adjustment (see Adjustment section above).

3. Relay Operation Incorrect. Check relay and adjust to specifications given in Service section above. Replace relay if satisfactory performance cannot be secured by adjustment.

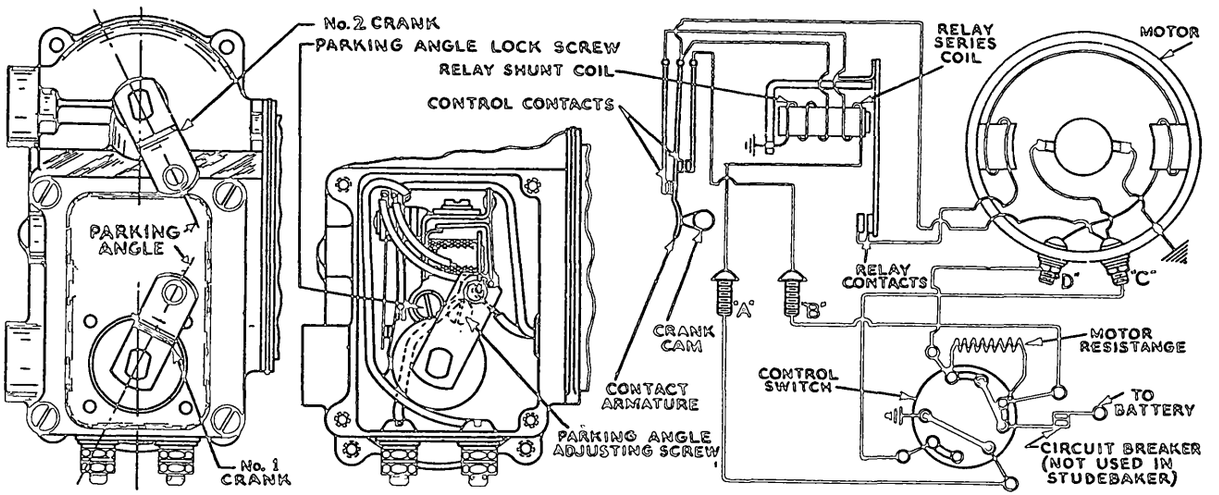

AUTO-LITE WINDSHIELD WIPER "EWD", "EWE", "EWH" TYPES

Car Model	Windshield Wiper No.
Chrysler 6 & 8 (1941)	①EWD-5001, EWD-5003
Chrysler 6 & 8 (1942-48)	①EWH-5001, EWH-5003
DeSoto S8 (1941)	①EWD-5001, EWD-5003
DeSoto All (1942-48)	①EWH-5001, EWH-5003
Dodge D19 (1941)	①EWD-5001, EWD-5003
Dodge All (1942-48)	①EWH-5001, EWH-5003
Plymouth P11, P12 (1941)	①EWD-5001, EWD-5003
Studebaker Comm. 11A (1941)	EWD-5002
Studebaker Pres. 7C (1941)	EWD-5003
Studebaker Comm. 12A, Pres. 8C (1942)	EWH-5004

①—EWD-5003 and EWH-5003 used on Convertible Coupe models only.

DESCRIPTION & OPERATION:—Two speed type of same general design as 'EWB' type used on 1940 car models except for new wiring diagram (see illustration) and new "Parking" mechanism as follows:

Parking Switch—Consists of a simple pushbutton type switch mounted on a bracket on the drive gear housing and actuated by a cam on one of the crank-arm shafts. When control switch is turned 'off' motor circuit is completed through parking switch and motor continues to operate until the blades reach the parking position when the cam strikes the pushbutton and opens the switch. Switch bracket is adjustable (see Parking Angle Adjustment below).

Motor Resistor—Consists of a carbon block resistor in the drive gear housing (see illustration) which is connected in the field circuit. In the low speed position, the resistor is short-circuited by the switch, while in the high speed position, the resistor is in series with the motor field.

CIRCUIT BREAKER:—Chrysler, DeSoto, Dodge, Plymouth Models—Windshield wiper is protected by a thermostatic type circuit breaker mounted on the back of the control switch. Circuit breaker begins to operate when the current reaches 12 amperes and vibrates to prevent an excessive current flow.

Studebaker 1941 Models—Circuit breaker is not used. Windshield wiper is protected by a 14 ampere fuse in a connector in the feed wire between the control switch and the regular car fuse block.

Studebaker 1942 Models—Circuit breaker is same as on Chrysler models (above).

ADJUSTMENT:—Park Angle—Crank arms must stop at correct parking angle to insure wiper blades being parked in correct position on windshield. See illustration for 'park angle' measurement on each model.

CarModel	Parking Angle
Chrysler, DeSoto, Dodge, Plymouth	26°
Studebaker	18°
EWE (12 volt Types)	26°

To Adjust—Remove motor cover, loosen lockscrew 'E' (see illustration), turn parking switch bracket as required so that cam on crank arm opens switch contacts with crank arm in correct parking position, tighten lockscrew securely.

SERVICING:—Armature & Gear Replacement—Complete armature and gear set must be installed together if either armature or gears requires replacement. Armature shaft worm gear and crank arm gears are run-in at the factory.

Crank Gear Assembly—When installing crank arms and gears, use Crank Aligning Tool ST-298 to insure correct position of crank arms. Turn crank arms so that they point toward each other, slip aligning tool over both arms so that pivot pins at ends of arms fit into holes in fixture, hold arms in this position and assemble gears on cross-shafts. See that gears are assembled with punchmark up and that the slot in the lockplate lines up with the flats on the side of the cross-shaft and that ears on ends of lockplate fit in holes in gears.

Bearing Alignment—After motor completely assembled (but before running), strike frame several sharp blows with rawhide hammer to insure correct alignment of bearings with armature shaft.

Armature Endplay—Must be .005" minimum, .010" maximum. To adjust endplay, remove gear housing cover, expand or contract armature stop button support arms (in housing at end of armature shaft).

Motor Lubrication—No oilers provided and motor bearings do not require lubrication in service. Gear box should be filled ¾ full with special Auto-Lite ST-295 gear grease (do not use any other type) before assembly and both crank cross-shafts should be coated for entire length with this same grease before installed in housing. Use care not to get grease on motor commutator or control contacts. CAUTION—See that both crank arms are installed in correct position.

Motor Specifications

Starting (Under Load)—4.0 volts (6 volt units), 8.0 volts (12 volt units) with control switch in High Speed position.

Current Draw—Depends on motor speed (less at high speed) as follows:

	Amperes		
Voltage		Low Speed	High Speed
6 Volt Units	7.0 volts	5.0 max.	4.0 max.
12 Volt Units	14.0 volts	2.5 max.	2.0 max.

Field Current—2.45-2.85 amperes at 6.0 volts (6 volt units), 1.25-1.45 amperes at 12 volts (12 volt units).

Motor Speed (Full Load)—32-40 crank RPM. (Low speed), 55-60 crank RPM. (High Speed).

TESTING:—Control Switch—Use a test lamp with one lead connected to a 'hot' terminal (such as the ammeter), connect other lead as follows: With all wires disconnected from control switch, and switch turned off, connect test lamp lead to switch 'A' terminal and ground 'F' terminal. Lamp should light. Turn switch to Low Speed position, connect test lamp lead to switch 'B' terminal. Lamp should light when either 'A' or 'F' terminal grounded. Turn control switch to High Speed position, connect test lamp lead to switch 'B' terminal and ground 'A' terminal. Lamp should light.

Parking Switch—With control switch wires disconnected, connect test lamp lead to park switch lead (green wire), ground other park switch lead (black wire on Chrysler—on Studebaker, touch ground wire to other park switch terminal). Lamp should go out when parking switch contact button is pressed in and should light when button released (crank arms must not be in park position when this test made).

Motor—Connect wire from negative terminal of 6 volt test battery to black wire disconnected from control switch, ground positive terminal of battery to motor frame. Motor should operate at full speed. If motor does not run, check for open armature or field circuit, worn or stuck motor brushes, binding or jammed armature or gears (armature and gears should turn freely by hand).

TROUBLE SHOOTING:—If wiper action not satisfactory, check as follows:

Motor Will Not Start or Run

1. **Fuse Blown (When Fuse used).** Before replacing blown fuse, check following possible causes: Check all connections, check motor ground, check all motor leads for grounds and open-circuits.
2. **Loose Connections in Wiper Circuit.** Check all wiring. Tighten connections at Windshield Wiper, Control Switch, and Ignition Switch.
3. **Crank Arm Shafts Binding.** Make certain that cross shafts greased for entire length with special ST-295 grease before installing.
4. **Linkage Binding.** Make certain that linkage between crank arm and pivot arms is not binding and that wiper blades and pivot arms operate freely.

Motor Stops with Blades in Wrong Position

1. **Park angle incorrectly set.** See adjustment section above.

Motor Will Not Stop

1. **Parking mechanism out of adjustment.** Check Park adjustment (see Adjustment section above).

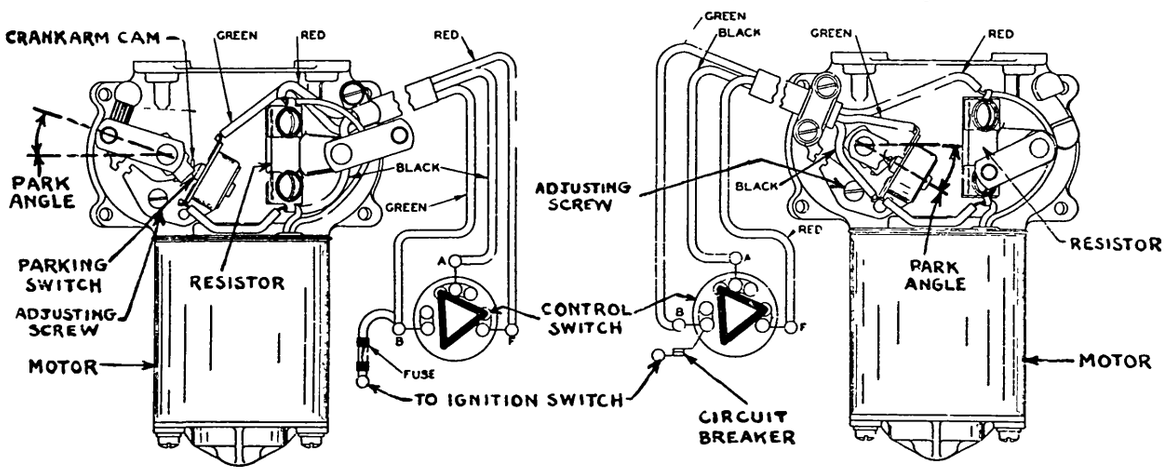

STEWART-WARNER WINDSHIELD WIPER 1940-41 TYPE

Lincoln, Zephyr 16H ('41), Custom 168H ('41)
Lincoln, Zephyr 26H (1942)
Series 645
Packard Six, '110' Model 1800 (1940)
Packard Eight, '120' Model 1801 (1940)

DESCRIPTION:—Windshield wiper consists of an electric motor and gear driven crank arm linked to two wiper arm assemblies mounted on cowl at lower edge of windshield. Each wiper arm assembly consists of a wiper arm and a transmission assembly which transmits the reciprocating motion of the motor driven-link to the wiper arm and blade. Motor assembly includes an off-on switch and a Dynamic Breaker which causes the motor to stop in the correct 'parking' position when switch is turned off so that blades are moved down to the edge of the windshield and out of the way.

Wiper throw-out Safety Clutches—Wiper arms are connected through safety clutches which will prevent damage to mechanism if arms frozen or operation is interrupted.

WINDSHIELD WIPER FUSE:—A 14 ampere fuse is mounted in a holder on the Dynamic Breaker housing of the motor assembly. Do not use any other than 14 ampere fuse at this point.

ADJUSTMENT:—**Parking Position**—Both blades should park evenly at base of windshield when switch is turned off (within several strokes after switch turned off). If blades do not park properly or if blades are not synchronized, adjust linkage as follows:

Linkage Adjustment—Remove both wiper blades and arms (see Removal Note below), loosen two adjusting screws clamping wiper arm transmission link to motor link at each wiper arm assembly. Adjust right unit by pressing transmission link toward motor (center of car) as far as possible, then pull link back 1/16" and lock adjusting screws. Adjust left hand unit by pulling transmission link out or away from motor as far as possible, then push link back 1/16" and tighten adjusting screws. Reassemble wiper arms and blades.

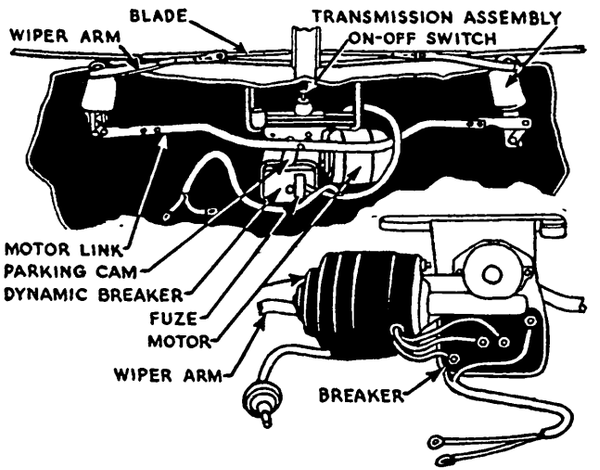

Transmission Connector Slack Adjustment—To remove slack from connectors in each wiper arm transmission housing, disconnect adjusting screws clamping transmission link to motor link, make certain that rods are hooked into connectors. Loosen adjusting nut on lower end of transmission housing, press down on link or press down on connectors on both sides of housing until all slack removed, tighten adjusting nut before releasing link. NOTE—Transmission housing need not be removed to make this adjustment.

Wiper Blade Installation—Use care not to damage spring within wiper arm when replacing blades. To remove blade, hold arm away from windshield glass and pull blade out toward end.

SERVICING:—**Lubrication**—No lubrication required in service. Motor bearings are oilless type and gears are lubricated for life when assembled.

Dynamic Breaker—Can not be adjusted or repaired in the field and should be serviced by replacement only. Do not dismantle Dynamic Breaker assembly.

Transmission Housing Gear Renewal—Gears can be renewed as an assembly as follows: Remove wiper blade and arm, take out adjusting screws and free transmission link from motor link, remove upper mounting screw on transmission housing (do not disturb lower slack adjusting nut), remove assembly. When new assembly installed, adjust to remove slack from internal connectors as directed above.

Motor—Motor can be disconnected from gear housing by disconnecting lead and taking off nuts on mounting studs. Average motor current consumption is 4 amperes.

STEWART-WARNER WINDSHIELD WIPER (1941-47 TYPES)

Model 645-H
Packard Clipper, '110' 2000, 10 (1942)
Packard Clipper Six, 2100, 2130 (1946-47)
Packard Clipper, '120' 2001, 11 (1942)
Packard Clipper Eight, 2101, 2111 (1946-47)
Packard Clipper, '160' 2003, '180' 2006 (1942)
Packard Super Eight, 2103, 2123 (1946-47)
Packard Custom Super 8, 2106, 2126 (1946-47)
Model 645-E
Packard Clipper, Model 1951 (1941)
Packard '110' Six, Models 1900 ('41); 2020,30 ('42)
Packard '120' Eight, 1901, 1A ('41); 2001A, 21 ('42)
Packard '160', Model 2023,4,5,55 (1942)
Packard '180', Model 2007,8 (1942)

DESCRIPTION:—Windshield wiper consists of an electric motor and gear driven crank arm linked to two wiper arm assemblies mounted on the cowl at the lower edge of the windshield. Motor assembly includes an off-on control switch, a Dynamic Breaker mechanism which causes motor to stop in the correct parking position when the switch is turned off, and a new Klixon type circuit breaker to protect the motor and circuits. Control switch provides two-speed operation (first 'ON' position of switch is High Speed, second 'ON' position is Low Speed and is intended for use in light rain or snow

Klixon Circuit Breaker—Thermostatic type circuit breaker mounted on dynamic breaker housing.

ADJUSTMENT:—**Parking Position**—Both blades should park evenly at base of windshield when control switch is turned 'off' (within several strokes after switch operated). If blades do not park properly or are not synchronized, adjust linkage as follows:

Parking Adjustment—Loosen each wiper arm nut several turns to free arm on shaft. With control switch turned off, move each wiper blade to correct parking position and tighten slotted head nut securely. CAUTION—Some clearance should be provided between blades and edge of windshield at bottom to prevent pounding when operating.

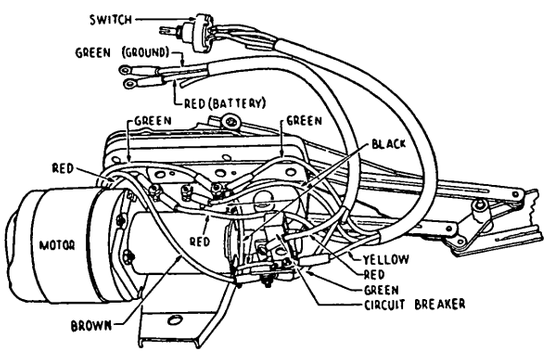

Wiper Blade Replacement—To remove blades, hold arm away from glass slightly and pull blade out. Install new blade in same manner.

CAUTION—Do not move arm away from glass further than required to remove blade to avoid damage to spring within wiper arm.

WINDSHIELD WIPER ASSEMBLY REMOVAL & INSTALLATION:—Entire assembly should be removed for any service work or replacement of parts.

Removal—Pull off control switch knob on instrument panel, remove switch mounting nut. Disconnect feed and ground wires. Take out slotted head nuts and remove wiper arms (see Wiper Blade Replacement above). Remove octagonal nut and lift off fibre washer, spacer, and rubber gasket. Take off nut on wiper unit mounting stud, remove complete wiper unit assembly.

Installation—Install wiper unit assembly by reversing removal instructions. Adjust wiper blade parking position (see Parking Adjustment above) and check wiper for correct operation after installation completed.

SERVICING:—**Lubrication**—No lubrication required in service. Motor bearings are oilless type and gears are lubricated for life when assembled. If Bracket, Driven Gear, and Crank Assembly being replaced, put a small amount of 5% graphite grease on the fibre driven gear (use care not to over-lubricate, grease may run out and drip down in front compartment). At yearly intervals, lubricate felt washers at linkage bearings with a few drops of oil.

Dynamic Breaker—Can not be adjusted or repaired in the field and should be serviced by replacement only. Do not dismantle Dynamic Breaker

Motor—Motor can be disconnected from gear housing by disconnecting lead and taking off nuts on mounting studs. Average motor current consumption is 4 amperes.

VACUUM WINDSHIELD WIPER LINK & CRANK ARM

DeSoto, Deluxe & Taxicab Models (1940-42)
Dodge, Deluxe Models (1941-48)
Ford, All except Convt. & Sta. Wgn. (1939)
Ford, All Models (1941-49)
Lincoln, Model 9EL (1949)
Mercury, All Models (1939-49)
①**Nash, All Models (1937-48)**
Plymouth, Convertible Models (1936-38)
Plymouth, All except Convt. & Sta. Wgn. (1941-48)
Studebaker Champion, Custom Deluxe (1941-46)
Willys, All Models (1941-42)

①—Except 1941 "600" (two single wipers).

DESCRIPTION: Wiper consists of a single motor unit connected to left and right hand wiper arm shafts by flat metal links. Motor control valve is built-in or separate (see illustration).

Wiper Motor—Half-round or cylindrical type. Motors with built-in valve have single manifold hose connection, motors used with separate control valve have two hose connections.

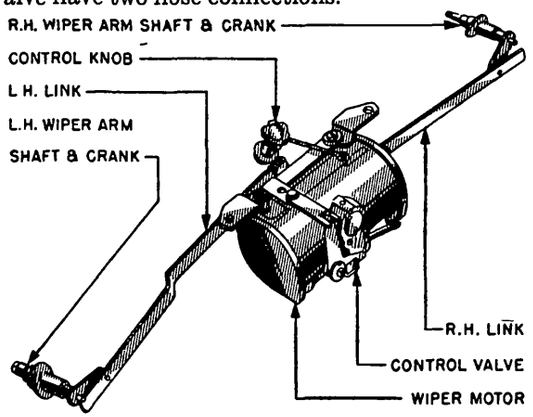

LINK-AND-CRANK ARM WIPER (CYLINDRICAL MOTOR)

Windshield Washer Connection—Vacuum line connection provided on some motors for washer operation (capped if washer not used).

Wiper Arm Shaft & Link Assembly—Left and right (non-interchangeable) assemblies consisting of arm shaft and crank connected to the motor arm by a flat metal link. Assembly is not adjustable.

Separate Control Valve—Mounted separately behind instrument panel and connected to motor by two vacuum lines (in addition to manifold vacuum line) as follows: 1) Running or operating vacuum line (large hose), 2) Parking vacuum line (small hose).

►***CAUTION—These hose connections must not be interchanged.***

REMOVAL & INSTALLATION: Wiper units can be serviced separately as follows:

Wiper Arm: Various types of retainers used. Remove each type as follows:

Retainer Nut—Remove nut on arm at outer end of wiper shaft, pull arm off shaft.

Lock Wire—Disengage lock wire from recess in shaft at back of arm, pull arm off serrated end of shaft.

Flat Spring Lock—Pull blade end of arm out or away from windshield to disengage spring from recess in shaft, pull hub end of arm straight off serrated end of shaft.

Wiper Arm Shaft & Link Assembly: ***CAUTION—See special removal instructions required for cars listed below.***

Removal—See special car data below. Remove wiper arm (above), disconnect link at motor shaft arm (free spring lock or remove clip, pull link off motor arm pin). Unscrew retainer nut (remove driver or "burr" from end of shaft if nut will not clear), remove cover and gasket. Pull shaft and link assembly out to rear and remove from beneath instrument panel.

Ford & Mercury (1948-49)—Do not disconnect motor links. After removing shaft retaining nuts and covers, **remove shafts and links as an assembly with the motor** (see Motor Removal below).

Lincoln 9EL (1949)—Same as Ford & Mercury (above).

Nash (1937-40)—Do not disconnect motor links. After removing shaft retaining nuts and covers, **remove shaft and links as an assembly with the motor** (see Motor Removal below).

Motor: ***CAUTION—See special removal instructions required on cars listed below.***

Removal—See special car data below. Disconnect vacuum line hoses at motor, disconnect links at motor shaft arm (free spring lock, pull links off arm pin), take out motor mounting screws, lift motor out and disengage control valve link (types with built-in control valve).

Ford & Mercury (1941-42)—On cars with radio, drop radio for access to motor as follows: Disconnect radio feed wire at fuse block. Unscrew and remove wing nuts attaching radio to underside of instrument panel. Disconnect antenna lead. Hold radio up in position, unscrew coupling on upper part of panel, then lower radio downward and to right to clear ventilator handle.

Ford & Mercury (1946-47)—Do not remove motor mounting screws—take out bracket mounting screws and **remove motor and bracket as an assembly.**

Ford & Mercury (1948-49)—After removing wiper arm shaft retaining nuts (above), disconnect wiper motor vacuum hose, disconnect control valve cable (1949 models only), pull entire wiper assembly to rear (motor, links, shaft & arms, and mounting arm) until shafts clear cowl, then remove assembly from beneath instrument panel.

Lincoln 9EL (1949)—Same as 1949 Ford & Mercury (above).

Nash (1937-40)—After removing wiper arm shaft retaining nuts (above), disconnect wiper motor vacuum hose, pull entire wiper assembly to rear (motor, links, shafts, and mounting arm) until shafts clear cowl, then remove assembly from beneath instrument panel.

Nash (1942-48)—On cars with radio, lower radio from position to provide access to wiper motor.

Installation—Install motor but do not fully tighten mounting screws, connect vacuum lines and links. With motor control "off", operate engine to supply vacuum which will cause wiper motor to centralize itself, then tighten motor mounting screws securely. Install the arms and blades, check operation (see Adjustment data below), adjust arms if required.

Separate Control Valve: ***CAUTION—See special removal instructions required on cars listed below.***

Removal—See special car data below. Disconnect all vacuum line hoses, remove control knob, use spanner wrench to remove nut and washer on valve stem, remove valve from behind instrument panel.

CONTINUED ON NEXT PAGE

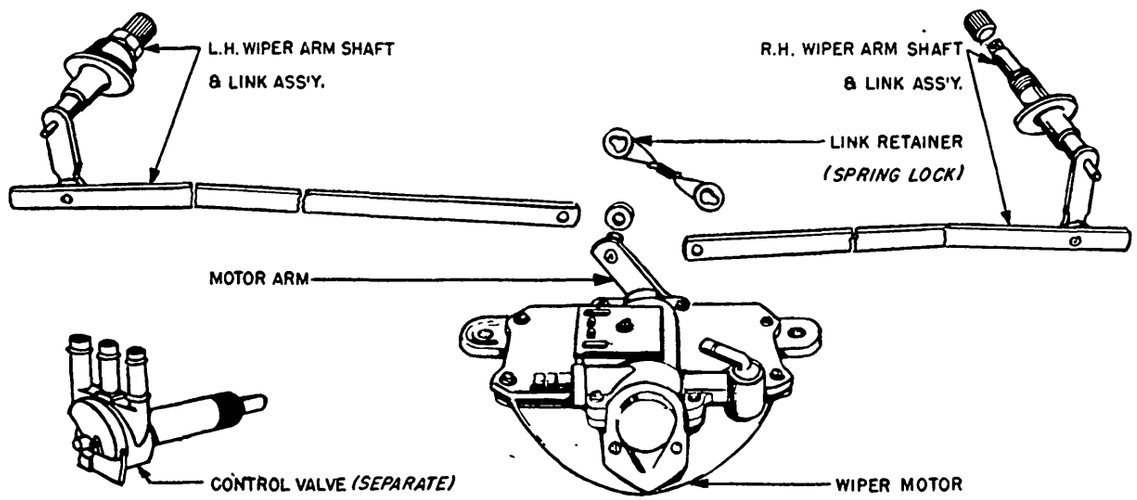

LINK-AND-CRANK ARM WINDSHIELD WIPER (WITH SEPARATE CONTROL VALVE)

VACUUM WINDSHIELD WIPER LINK & CRANK ARM (C nt.)

Installation—Make certain that vacuum line hoses are correctly connected at control valve.

►*CAUTION—Hose connections must not be interchanged.*

ADJUSTMENT: Wiper blades can be adjusted for correct "park" position and for desired sweep or travel of the blades on the windshield. Motor can be adjusted to correct uneven blade travel.

Park Position of Blades: Operate wiper with arms and blades removed (see Wiper Arm Removal), turn wiper off to establish the "off" or park position of arm shafts, install arm so that blade just clears molding at lower edge of windshield glass.

Sweep or Travel of Blades: If arm stroke not uniform (one blade has longer travel than other), loosen wiper motor mounting screws, shift motor in direction of arm which has shorter travel. If necessary, change arm position on shaft (see Park Adjustment above).

VACUUM WINDSHIELD WIPER LINK & CHAIN TRANSMISSION

Buick, All Series (1939-42), 40 (1946-48)
Cadillac, All Series (1938-47), 75 & 76 (1948)
Chevrolet, All Models (1937-48)
Chrysler & DeSoto, All Models (1938)
Dodge, Convt. & Suburban (1941-42)
Ford, Convt. & Sta. Wgn. (1937-39), All (1940)
Hudson 6 & 8, All Models (1937-47)
LaSalle, All Series (1937-40)
①Lincoln (Zephyr), All Models (1937-48)
②Oldsmobile 6 & 8, All (1937-48)
Packard, All Models (1938-39), Super 8 (1940-41)
Plymouth, Convt. & Sta. Wgn. (1941-48)
Pontiac 6 & 8, All Models (1937-48)
③Studebaker, All Models (1938-39)
Terraplane, All Models (1937-38)

①—Except Stewart-Warner Electric on Zephyr (1941-42) and Custom (1941).
②—Except Cable Operated on Futuramic 98 (1948).
③—Auto-Lite Electric Type EW also used on 1939 Commander & President.

DESCRIPTION: Wiper consists of a single motor unit connected to left and right hand wiper arm shafts (Transmission Assemblies) by flat metal links. Motor control valve is built-in or separate (see illustrations).

Wiper Motor—Half-round type. Motors with built-in valve have single manifold hose connection, motors used with separate control valve have two hose connections (see illustrations).

►**Windshield Washer Connection**—Vacuum line connection provided on some motors for washer operation (capped if washer not used).

Transmission Assembly (Wiper Arm Shaft)—Left and right (non-interchangeable) assemblies with upper (wiper arm) and lower (link connector arm) sprockets connected by a chain which transmits power to the wiper arm. Adjustment provided to take up slack in chain (see ADJUSTMENT).

Separate Control Valve—Mounted separately behind instrument panel and connected to motor by two vacuum lines (in addition to manifold vacuum line) as follows: 1) Running or operating vacuum line (large hose), 2) Parking vacuum line (small hose).

►*CAUTION—These hose connections must not be interchanged.*

REMOVAL & INSTALLATION: Wiper units can be serviced separately as follows:

Wiper Arm: Various types of retainers used. Remove each type as follows:

Retainer Nut—Remove nut on arm at outer end of wiper shaft, pull arm off shaft.

Lock Wire—Disengage lock wire from recess in shaft at back of arm, pull arm off serrated end of shaft.

Flat Spring Lock—Pull blade end of arm out or away from windshield to disengage spring from recess in shaft, pull hub end of arm srtaight off serrated end of shaft.

Transmission Assembly (Wiper Arm Shaft & Link):

►*CAUTION—See special removal instructions required on cars listed below.*

Removal—See special car data below. Remove wiper arm (above). Disconnect link at motor shaft arm (free spring lock, pull link off arm pin). Disconnect washer hose (if used) at transmission. Remove capscrew, lockwasher, and retainer from back of transmission assembly under cowl. Lift transmission and link assembly up and out of cowl from outside. Remove old gasket, thoroughly clean old gasket cement from cowl and transmission mounting flange.

Buick (1946-48)—For access to transmission mounting screw and retainer, remove screws in bottom section of garnish molding, pull molding away from glass, remove screw from defroster funnel, unhook opposite side and remove funnel.

Cadillac & Pontiac (1942-48), Oldsmobile (1946-48)—Same as Buick (above).

Installation—Coat mounting surfaces of cowl, new rubber gasket, and transmission assembly with rubber cement, install gasket on cowl, and use extreme care that gasket does not slip out of position while installing transmission.

►*CAUTION—Correct positioning and cementing of gasket important to prevent water leaks.*

Motor: *CAUTION—See special removal instructions required on cars listed below.*

Removal—See special car data below. Disconnect vacuum line hoses at motor, disconnect links at motor shaft arm (free spring lock, pull links off arm pin), take out motor mounting screws, lift motor out and disengage control valve link (types with built-in control valve).

Hudson (1941-47)—Remove radio grille by taking out screws accessible from underneath panel. On cars with radio, remove radio for access to motor as follows:

1946-47 Radio Removal—Remove ashtray, disconnect antenna lead (work through ashtray opening), disconnect radio feed wire at fuse socket. Remove accessory switch bracket, Radio Speaker unit, and support bracket assembly. Disconnect cable from speaker and socket, disconnect foot control cable plug. Remove radio left end mounting bracket, loosen right end bracket, remove control knobs and bushing nuts. Push radio receiver backward, raise rear slightly until shafts clear grille and slide through slots below shaft openings in panel, lift rear of radio up and rotate it clockwise until it can be lowered between instrument panel and air hopper.

Lincoln (1941-42) with centrally mounted Radio—Remove radio for access to motor as follows: Disconnect radio feed wire at fuse block, unscrew wing nuts attaching radio set to underside of instrument panel, disconnect antenna lead. Hold radio up in position, unscrew coupling, lower radio toward right to clear cowl ventilator handle.

CONTINUED ON NEXT PAGE

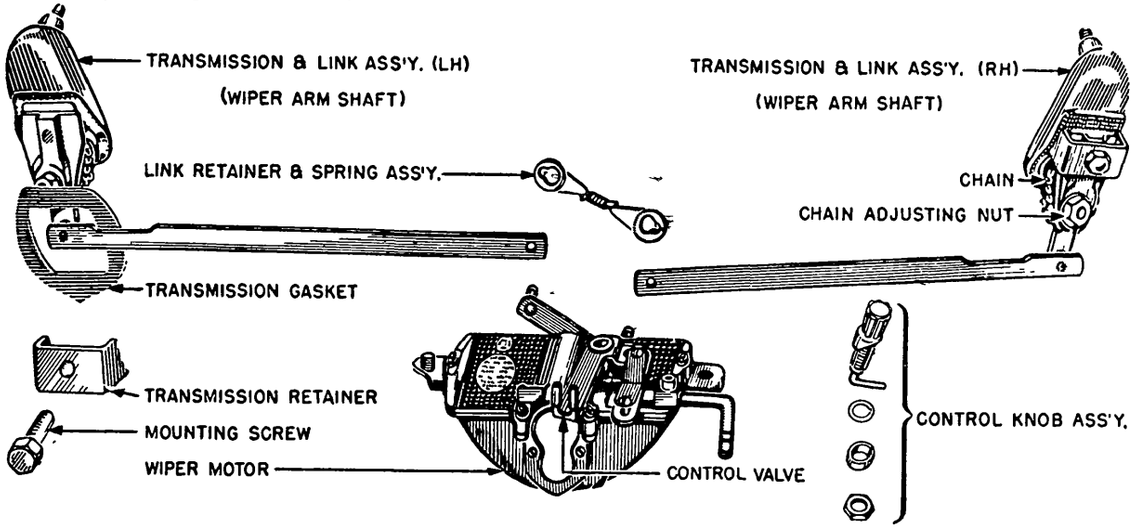

LINK-AND-CHAIN TRANSMISSION WINDSHIELD WIPER (WITH BUILT-IN CONTROL VALVE)

VACUUM WINDSHIELD WIPER LINK & CHAIN TRANS. (C nt.)

Installation—Install motor but do not fully tighten mounting screws, connect vacuum lines and links. With motor control "off", operate engine to supply vacuum which will cause wiper motor to centralize itself, then tighten motor mounting screws securely. Install the arms and blades, check operation (see Adjustment data below), adjust arms if required.

Separate Control Valve: ***CAUTION—See special removal instructions required on cars listed below.***

Removal—See special car data below. Disconnect all vacuum line hoses, remove control knob, use spanner wrench to remove nut and washer on valve stem, remove valve from behind instrument panel.

Pontiac (1942-48) With Radio—Radio must be dropped for access to control valve as follows: Remove radio knobs, locknuts, and face plate. Loosen mounting bolts and tilt radio set back at the top, then remove windshield wiper control valve by working through radio opening in instrument panel.

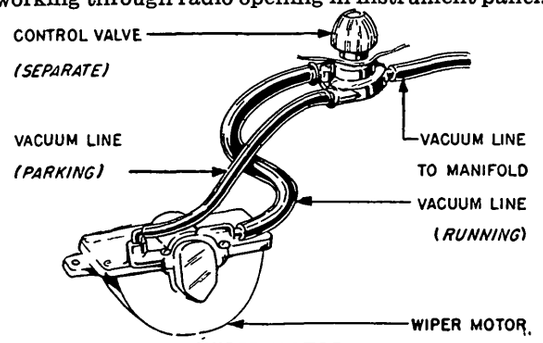

WIPER MOTOR SEPARATE CONTROL VALVE

Installation—Make certain that vacuum line hoses are correctly connected at control valve.

►***CAUTION—Hose connections must not be interchanged.***

ADJUSTMENT: Wiper arms can be adjusted for correct "park" position and for desired sweep or travel of the blades on the windshield. Motor and transmission can be adjusted to correct uneven blade travel or short choppy strokes or noise caused by excessive play.

Park Position of Blades: Operate wiper with arms and blades removed (see Wiper Arm Removal), turn wiper off to establish "off" or park position of arm shaft, install arm so that blade just clears molding at lower edge of windshield glass.

Sweep or Travel of Blades: Check and adjust transmission chain (below). If arm stroke not uniform (one blade has longer travel than other), loosen wiper motor mounting screws, shift motor in direction of arm which has shorter travel. If necessary, change arm position on shaft (see Park adjustment above).

Transmission Chain: Loosen hexagonal nut on lower end of transmission assembly (accessible from under instrument panel—nut on back of transmission), move bolt and nut downward to take up play or slack in the transmission chain, tighten nut securely.

►***CAUTION—Do not overtighten chain (nut can be moved upward to loosen chain).***

CABLE OPERATED VACUUM WINDSHIELD WIPER

Buick Series 50, 70 (1946-47-48)
Cadillac Series 60S, 61, 62 (1948)
DeSoto Taxi (1946-47-48)
Frazer, All Models (1947-48)
①Hudson 6 & 8, All Models (1948)
Kaiser, All Models (1947-48)
Lincoln Cosmopolitan 9EH (1949)
Oldsmobile 8, Futuramic 98 (1948)
Packard, All Models (1948)
Studebaker, All Models (1947-48)
Willys Station Wagon 4-63 (1946-47-48)
Willys Station Sedan 6-63 (1948)

①—Driver Assembly (see illustration) not used.

DESCRIPTION: Cable drive wipers using one vacuum wiper motor on engine side of dash.

Wiper Motor. Half-round vacuum type with built-in slide type control valve. Motor mounted on Driver Assembly attached to engine side of dash.

►**Windshield Washer Connection**—Vacuum line connection provided on some motors for washer operation (capped if washer not used—see illustration).

Driver Assembly. Mounted on engine side of dash. Provides motor mounting and through-dash drive for motor (motor shaft engages front end of Driver Shaft Lever through Rubber Saddle). Cables attached to Cable Connectors on rear end of Driver Shaft Lever.

Cable Tensioners. Consist of spring loaded adjustable pulley mounting attached to bracket on dash (stamped "L" and "R"—one on each side of car). Provides adjustment for correct cable tension and removal of cable slack (see ADJUSTMENT following).

Wiper Arm Shaft & Cable Assembly (Cable Linkages). Consists of two idler pulleys on shaft housing with a driven pulley mounted on wiper shaft. One on each side of car—stamped "L" and "R".

►**Windshield Washer Piping.** Washer piping provided on some housings for washer operation.

Control Valve. Slide type built-in wiper motor and operated by remote control knob on instrument panel (this same knob operates windshield washer on some cars).

REMOVAL & INSTALLATION OF WIPER UNITS:

►***CAUTION—Whenever cables disconnected, battery should be disconnected first to prevent cables contacting "hot" wires.***

Wiper Arm: Pull arm out or away from windshield to disengage spring lock from burr on shaft, pull arm off shaft. Re-install by reversing removal procedure.

CONTINUED ON NEXT PAGE

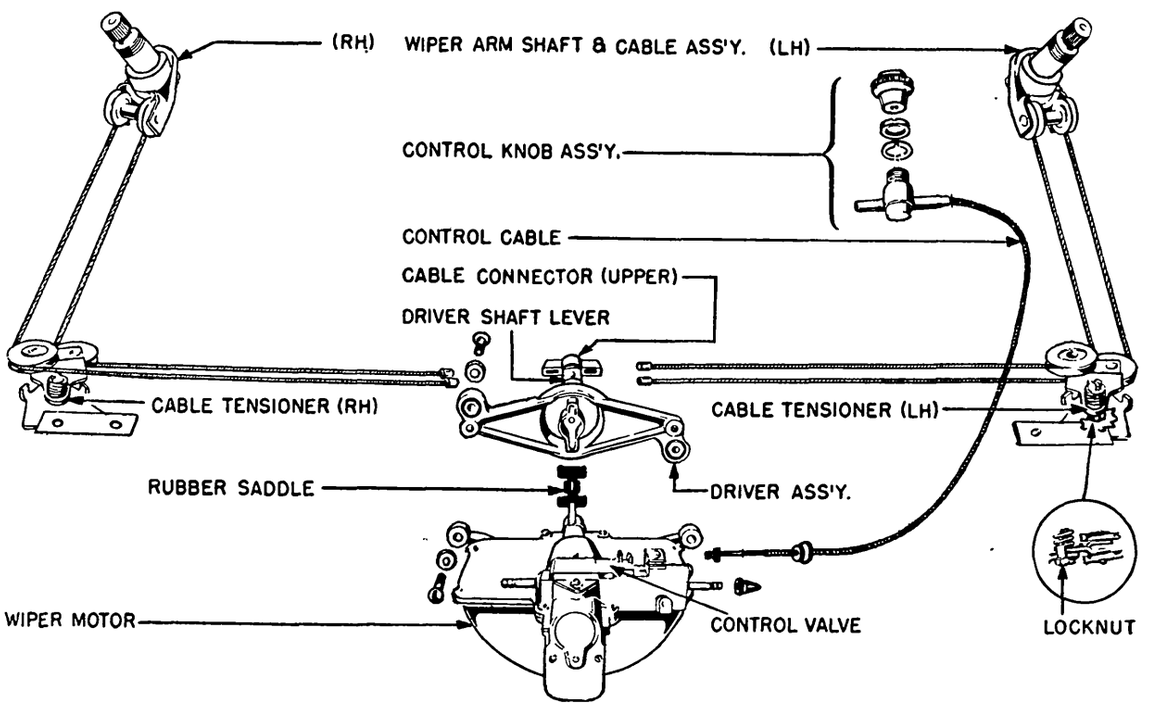

CABLE OPERATED WINDSHIELD WIPER
►NOTE—DRIVER ASSEMBLY N T USED ON 1948 HUDS N

VACUUM WINDSHIELD WIPER CABLE OPERATED (C nt.)

Wiper Arm Shaft & Cable Assembly (Cable Linkage):

►*CAUTION—Various types of Wiper Arm Shaft & Cable Assembly mountings used.*

Removal—Take off wiper arm (see above). Slack off cables by loosening locknut at each cable tensioner, push pulley mounting toward center of car and hold in this position by tightening locknut. Disconnect cables at Cable Connectors. Wiper Arm Shaft & Cable Assembly mountings for the various car models can then be removed as follows:

'46-48 Buick 50, 70; and 1948 Hudson. Remove capscrew and clamp on underside of cable linkage inside car. Withdraw cable linkage (with cables) from the outside.

►*BUICK CAUTION*—Defroster vent under cowl must be disconnected and lowered for access to clamp. On right side, glove compartment must be removed.

1948 Cadillac, and 1948 Oldsmobile 8 Futuramic. Burr on outer end of wiper arm shaft must be removed first. Use Remover and Replacer Tool No. J-2682 (shaft must be held stationary while removing burr to prevent damage to cables). Take off Washer Nozzle (if used). Working inside car under cowl, disconnect Washer Hose. Take out 2 cable linkage retaining screws lower assembly out (do not bend shaft or washer tube).

►*CADILLAC CAUTION*—To remove left cable assembly, instrument panel cluster and small lower left panel must be removed. To remove right assembly, lower right panel of instrument panel and Ventilating Defroster Heater assembly must be removed.

All Other Cars. Wiper Arm Shaft & Cable Assembly retained by spanner nut or threaded ring on outer end of wiper arm shaft. After taking this nut off, cable linkage can be removed from inside car under cowl.

Installation—Reverse removal instructions given above and note following special data on individual cars:

'46-48 Buick 50, 70, and 1948 Hudson. Gasket between wiper housing and cowl must be centered and coated with sealer which has set to become "tacky" to prevent slippage when installing assembly.

1948 Cadillac and 1948 Oldsmobile 8 Futuramic. New wiper arm shaft burr must be used (install with Tool No. J-2682). Seal wiper arm shaft and windshield washer tube opening from outside with 3 M sealer after housing installed.

Cable Tensioners: Slack off cables by loosening locknut at each cable tensioner. Disconnect cables at Cable Connectors. Take out cable tensioners mounting screws. When installing tensioners, right hand cable from Wiper Arm Shaft & Cable Assembly runs on upper pulley on each side. Cables must be centered in pulleys, if adjustment required bend tensioner mounting bracket up or down.

►*BUICK CAUTION*—On early cars, cowls have a depression at tensioner mounting position and a plate was used between cowl and tensioner mounting flange. This plate must be re-installed on these cars to prevent pulleys cocking and cables contacting cowl.

Motor: Disconnect vacuum tube (and washer tube if used) and control valve cable. Take out 2 motor mounting capscrews. Withdraw motor assembly and take off rubber saddle. When installing motor, wet the rubber saddle and make certain saddle correctly seated on motor shaft and driver shaft. Connect control valve cable with motor valve in full "on" position and wire pulled all the way out. Insert small washer on cable between posts on valve, tighten conduit clamp screw (conduit must not extend beyond edge of pad). Check control cable action and adjust cable conduit if required.

Driver Assembly: Remove motor (see above). Disconnect cables at Cable Connectors. Take out Driver Assembly mounting screws from inside car, lift assembly off cowl. When installing Driver Assembly, check condition of rubber bushings in mounting holes in driver. These bushings used to insulate noise from inside car.

ADJUSTMENT OF WIPER UNITS:

Sweep or Travel of Blade—Adjustment made by shifting position of wiper arm on wiper arm shaft burr until correct sweep or travel secured.

Wiper Cable Adjustment (Cable Tension)—All slack must be removed for proper wiper action. To adjust, loosen locknut under cable tensioner (see illustration), tap bolt to loosen lockwasher permitting spring to move pulleys away from center of car to take up cable slack (CAUTION—do not pry pulley mounting, may cause over-tension). Hold pulley mounting bracket in this position while tightening locknut. Repeat adjustment at other cable tensioner for opposite side of car. Cables must run in center of pulley grooves and not contact any part of cowl.

LUBRICATION: Use light oil on pulley bearings at tensioners and wiper housings. Coat cables with light grease only on portions traveling over pulleys.